ABBREVIATIONS USED IN THIS MANUAL

ABS	Anti–Lock Brake System
A/C	Air Conditioner
ALR	Automatic Locking Retractor
APPROX.	Approximation
A/T, ATM	Automatic Transmission
ATF	Automatic Transmission Fluid
BTDC	Before Top Dead Center
BVSV	Bimetal Vacuum Switching Valve
CALIF.	Vehicles Sold in California
CB	Circuit Breaker
DOHC	Double Over Head Cam
DP	Dash Pot
ECT	Electronic Controlled Transmission
ECU	Electronic Controlled Unit
EFI	Electronic Fuel Injection
EGR	Exhaust Gas Recirculation
ELR	Emergency Locking Retractor
EPR	Evaporator Pressure Regulator
ESA	Electronic Spark Advance
EVAP	Evaporative (Emission Control)
EX	Exhaust (manifold, valve)
Ex.	Except
FIPG	Formed in Place Gasket
FL	Front Left
FL	Fusible Link
FPU	Fuel Pressure Up
FR	Front Right
FR, Fr	Front
HAC	High Altitude Compensation
IG	Ignition
IN	Intake (manifold, valve)
INT	Intermittent
ISC	Idle Speed Control
J/B	Junction Block
LED	Light Emitting Diode
LH	Left–Hand
LHD	Left–Hand Drive
LLC	Long Life Coolant (Year Around Coolant)
Max.	Maximum
Min.	Minimum
MP	Multipurpose
N	Neutral
OD, O/D	Overdrive
O/S	Oversize
P & BV	Proportioning and Bypass Valve
PCV	Positive Crankcase Ventilation
PS	Power Steering
RH	Right–Hand
RL	Rear Left
RR	Rear Right
RR, Rr	Rear
SRS	Supplemental Restraint System
SSM	Special Service Materials
SST	Special Service Tools
STD	Standard
SW	Switch
TDC	Top Dead Center
TDCL	Total Diagnostic Communication Link
Temp.	Temperature
TRAC	Traction Control System
TWC	Three–Way Catalyst
VSV	Vacuum Switching Valve
VTV	Vacuum Transmitting Valve
w/	With
w/o	Without

WhereEverybodyKnowsYourName

STANDARD BOLT TORQUE SPECIFICATIONS

HOW TO DETERMINE BOLT STRENGTH

	Mark	Class
Hexagon head bolt	Bolt head No. 4– 5– 6– 7– 8– 9– 10– 11–	4T 5T 6T 7T 8T 9T 10T 11T
	No mark	4T
Hexagon flange bolt w/ washer hexagon bolt	No mark	4T
Hexagon head bolt	Two protruding lines	5T
Hexagon flange bolt w/ washer hexagon bolt	Two protruding lines	6T
Hexagon head bolt	Three protruding lines	7T
Hexagon head bolt	Four protruding lines	8T

	Mark	Class
Stud bolt	No mark	4T
	Grooved	6T
Welded bolt	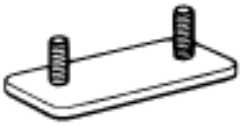	4T

WhereEverybodyKnowsYourName

SPECIFIED TORQUE FOR STANDARD BOLTS

Class	Diameter mm	Pitch mm	Specified torque					
			Hexagon head bolt			Hexagon flange bolt		
			N·m	kg·cm	ft·lb	N·m	kg·cm	ft·lb
4T	6	1	5	55	48 in.·lb	6	60	52 in.·lb
	8	1.25	12.5	130	9	14	145	10
	10	1.25	26	260	19	29	290	21
	12	1.25	47	480	35	53	540	39
	14	1.5	74	760	55	84	850	61
	16	1.5	115	1,150	83	–	–	–
5T	6	1	6.5	65	56 in.·lb	7.5	75	65 in.·lb
	8	1.25	15.5	160	12	17.5	175	13
	10	1.25	32	330	24	36	360	26
	12	1.25	59	600	43	65	670	48
	14	1.5	91	930	67	100	1,050	76
	16	1.5	140	1,400	101	–	–	–
6T	6	1	8	80	69 in.·lb	9	90	78 in.·lb
	8	1.25	19	195	14	21	210	15
	10	1.25	39	400	29	44	440	32
	12	1.25	71	730	53	80	810	59
	14	1.5	110	1,100	80	125	1,250	90
	16	1.5	170	1,750	127	–	–	–
7T	6	1	10.5	110	8	12	120	9
	8	1.25	25	260	19	28	290	21
	10	1.25	52	530	38	58	590	43
	12	1.25	95	970	70	105	1,050	76
	14	1.5	145	1,500	108	165	1,700	123
	16	1.5	230	2,300	166	–	–	–
8T	8	1.25	29	300	22	33	330	24
	10	1.25	61	620	45	68	690	50
	12	1.25	110	1,100	80	120	1,250	90
9T	8	1.25	34	340	25	37	380	27
	10	1.25	70	710	51	78	790	57
	12	1.25	125	1,300	94	140	1,450	105
10T	8	1.25	38	390	28	42	430	31
	10	1.25	78	800	58	88	890	64
	12	1.25	140	1,450	105	155	1,600	116
11T	8	1.25	42	430	31	47	480	35
	10	1.25	87	890	64	97	990	72
	12	1.25	155	1,600	116	175	1,800	130

WhereEverybodyKnowsYourName

INTRODUCTION

WhereEverybodyKnowsYourName

HOW TO USE THIS MANUAL

INDEX

An INDEX is provided on the first page of each section to guide you to the item to be repaired.
To assist you in finding your way through the manual, the Section Title and major heading are given at the top of every page.

ALPHABETICAL INDEX

An ALPHABETICAL INDEX is also provided at the end of this manual so that you can rapidly find the item and page you are searching for.

GENERAL DESCRIPTION

At the beginning of each section, a General Description (Precautions) is given that pertains to all repair operations contained in that section.

Read these precautions before starting any repair task.

TROUBLESHOOTING

TROUBLESHOOTING tables are included for each system to help you diagnose the problem and find the cause.
The fundamentals of how to proceed with trouble–shooting are described on page IN–15. Be sure to read this before performing troubleshooting.

PREPARATION

Preparation lists the SST (Special Service Tools), recommended tools, equipment, lubricant and SSM (Special Service Materials) which should be prepared before beginning the operation and explains the purpose of each one.

REPAIR PROCEDURES

Most repair operations begin with an overview illustration. It identifies the components and shows how the parts fit together.

Example:

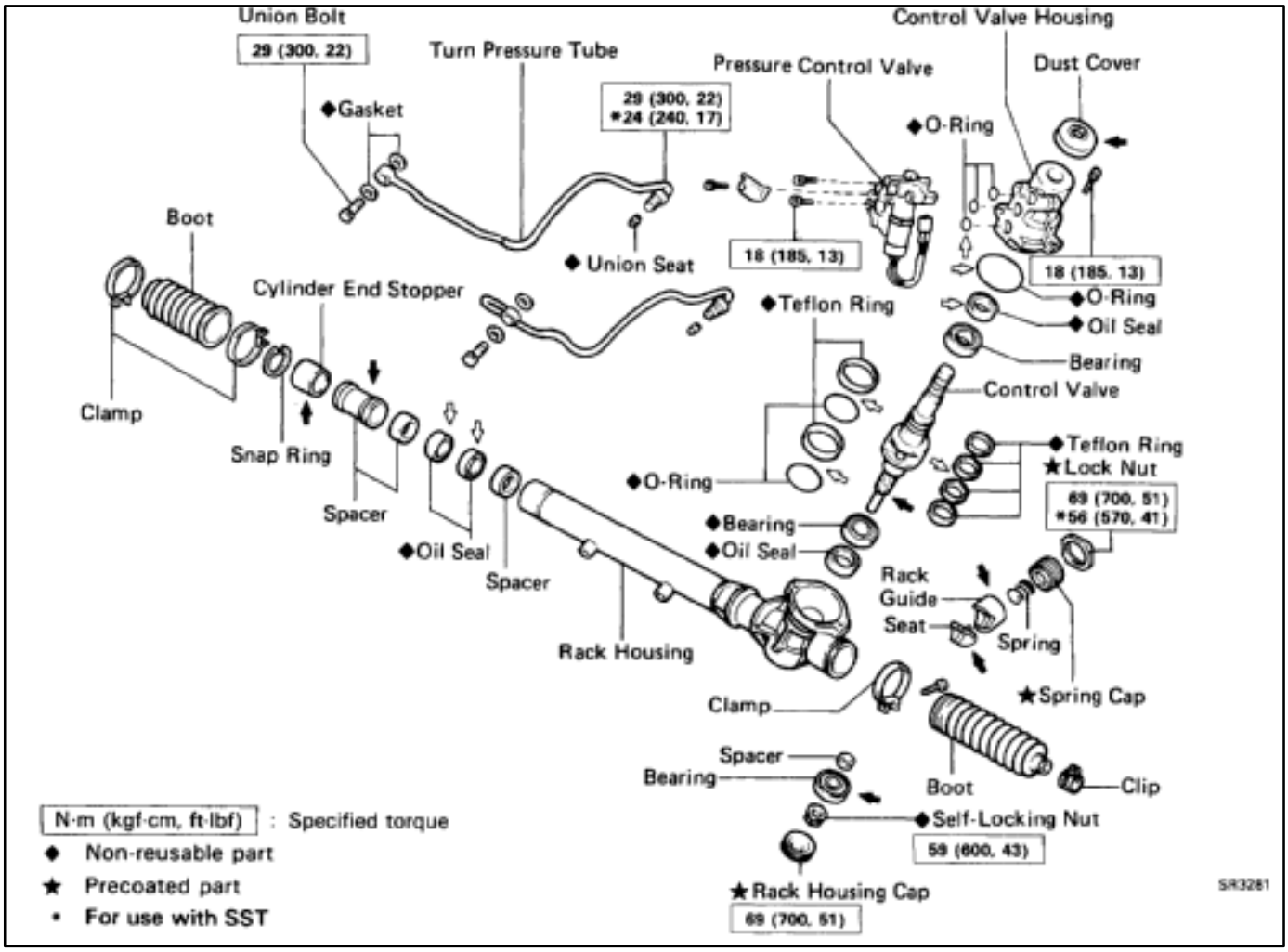

WhereEverybodyKnowsYourName

The procedures are presented in a step–by–step format:

- The illustration shows what to do and where to do it.
- The task heading tells what to do.
- The detailed text tells how to perform the task and gives other information such as specifications and warnings.

Example:

Illustration: what to do and where

Task heading: what to do

21. CHECK PISTON STROKE OF OVERDRIVE BRAKE

(a) Place SST and a dial indicator onto the overdrive brake piston as shown in the figure.

SST 09350-30020 (09350-06120)

Set part No *Component part No.*

Detailed text: how to do task

(b) Measure the stroke applying and releasing the compressed air (4 — 8 kg/cm², 57 — 114 psi or 392 — 785 kPa) as shown in the figure.

Piston stroke: 1.40 — 1.70 mm (0.0551 — 0.0669 in.)

Specification

This format provides the experienced technician with a FAST TRACK to the information needed. The upper case task heading can be read at a glance when necessary, and the text below it provides detailed information. Important specifications and warnings always stand out in bold type.

REFERENCES

References have been kept to a minimum. However, when they are required you are given the page to refer to.

SPECIFICATIONS

Specifications are presented in bold type throughout the text where needed. You never have to leave the procedure to look up your specifications. They are also found at the end of each section, for quick reference.

CAUTIONS, NOTICES, HINTS:

- CAUTIONS are presented in bold type, and indicate there is a possibility of injury to you or other people.
- NOTICES are also presented in bold type, and indicate the possibility of damage to the component being repaired.
- HINTS are separated from the text but do not appear in bold. They provide additional information to help you efficiently perform the repair.

SI UNIT

The UNIT given in this manual are primarily expressed with the SI UNIT (International System of Unit), and alternately expressed in the metric system and in the yard/pound system.

Example:

Torque: 30 N·m (310 kgf·cm, 22 ft·lbf)

WhereEverybodyKnowsYourName

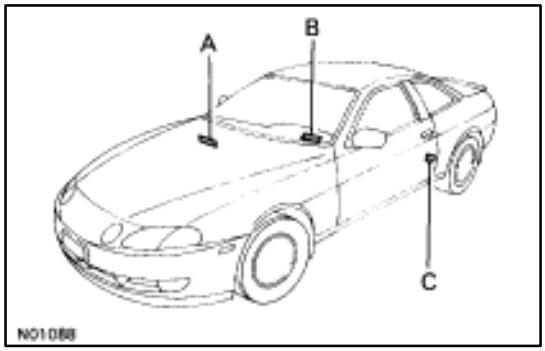

IDENTIFICATION INFORMATION

VEHICLE IDENTIFICATION NUMBER

This number is stamped on the vehicle identification number plate at the top of the left instrument panel and is also on the certification regulation label.

A: Vehicle Identification Number
B: Vehicle Identification Number Plate
C: Certification Regulation Label

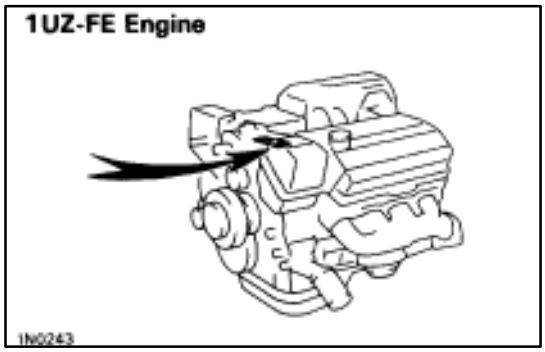

ENGINE SERIAL NUMBER

The engine serial number is stamped on the engine block as shown.

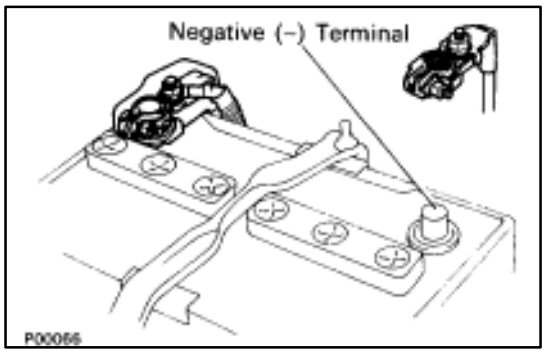

GENERAL REPAIR INSTRUCTIONS

1. Use fender seat and floor covers to keep the vehicle clean and prevent damage.
2. During disassembly, keep parts in the appropriate order to facilitate reassembly.
3. Observe the following:
   - **(a) CAUTION: Work must be started after approx. 20 seconds or longer from the time the ignition switch is turned to the "LOCK" position and the negative (–) terminal cable is disconnected from the battery (See page AB–2).**
   - (b) Before performing electrical work, disconnect the negative cable from the battery terminal.
   - (c) If it is necessary to disconnect the battery for inspection or repair, always disconnect the cable from the negative (–) terminal which is grounded to the vehicle body.
   - (d) To prevent damage to the battery terminal post, loosen the terminal nut and raise the cable straight up without twisting or prying it.
   - (e) Clean the battery terminal posts and cable terminals with a shop rag. Do not scrape them with a file or other abrasive object.
   - (f) Install the cable terminal to the battery post with the nut loose, and tighten the nut after installation. Do not use a hammer to tap the terminal onto the post.
   - (g) Be sure the covers for the positive (+) terminal and negative (–) terminal are properly in place.
4. Check hose and wiring connectors to make sure that they are secure and correct.

WhereEverybodyKnowsYourName

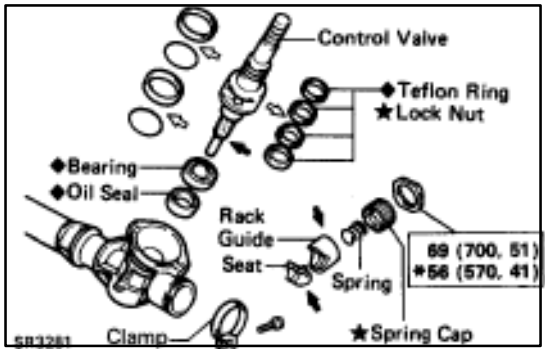

5. Non–reusable parts
   (a) Always replace cotter pins, gaskets, O–rings and oil seals etc. with new ones.
   (b) Non–reusable parts are indicated in the component illustrations by the "2 " symbol.

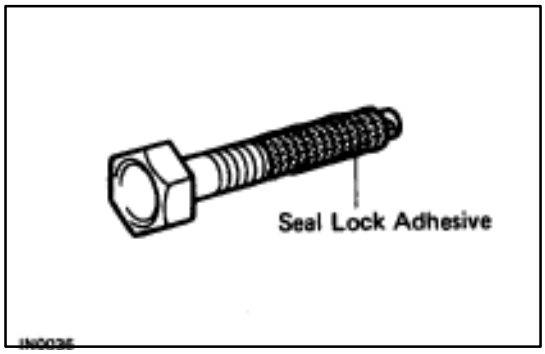

6. Precoated parts
   Precoated parts are bolts and nuts, etc. that are coated with a seal lock adhesive at the factory.
   (a) If a precoated part is retightened, loosened or caused to move in any way, it must be recoated with the specified adhesive.
   (b) Recoating of precoated parts
      (1) Clean off the old adhesive from the bolt, nut or threads.
      (2) Dry with compressed air.
      (3) Apply the specified seal lock adhesive to the bolt or nut threads.
   (c) Precoated parts are indicated in the component illustrations by the "▼ symbol.

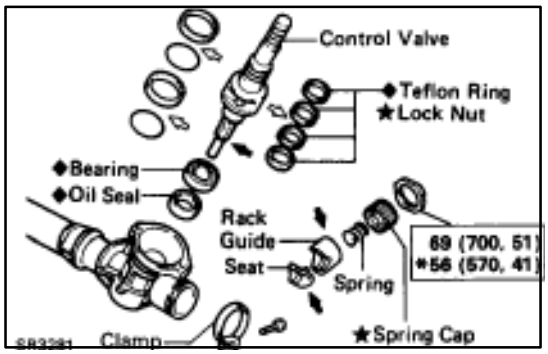

7. When necessary, use a sealer on gaskets to prevent leaks.
8. Carefully observe all specifications for bolt tightening torques. Always use a torque wrench.
9. Use of special service tools (SST) and special service materials (SSM) may be required, depending on the nature of the repair. Be sure to use SST and SSM where specified and follow the proper work procedure. A list of SST and SSM can be found in the preparation part at the front of each section in this manual.

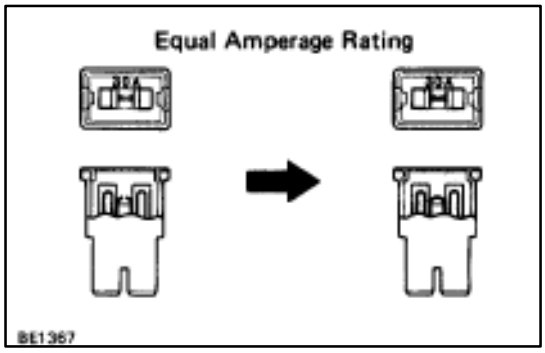

10. When replacing fuses, be sure the new fuse has the correct amperage rating. DO NOT exceed the rating or use one with a lower rating.

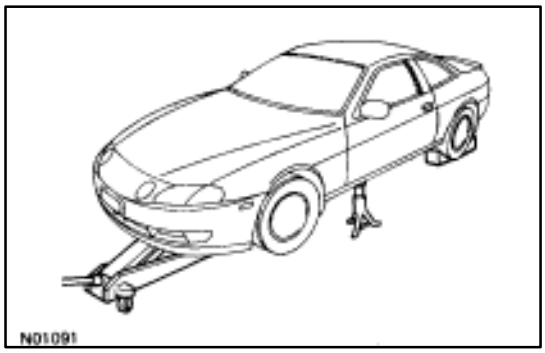

11. Care must be taken when jacking up and supporting the vehicle. Be sure to lift and support the vehicle at the proper locations (See page IN–33).
   (a) If the vehicle is to be jacked up only at the front or rear end, be sure to block the wheels at the opposite end in order to ensure safety.
   (b) After the vehicle is jacked up, be sure to support it on stands. It is extremely dangerous to do any work on a vehicle raised on a jack alone, even for a small job that can be finished quickly.

WhereEverybodyKnowsYourName

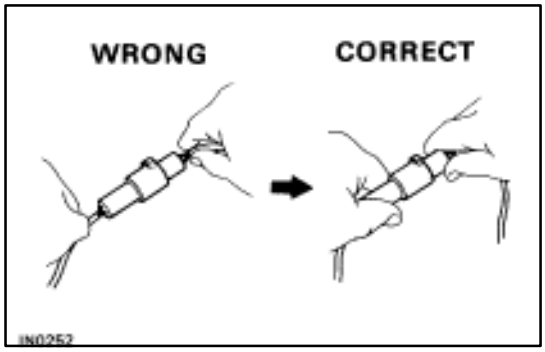

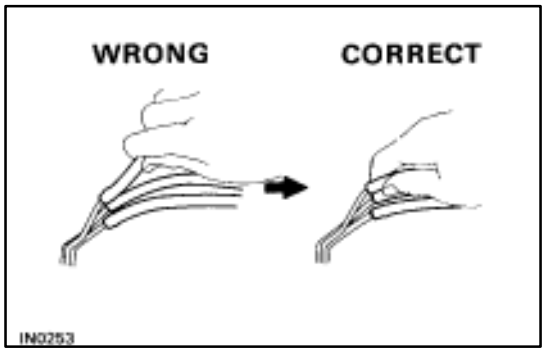

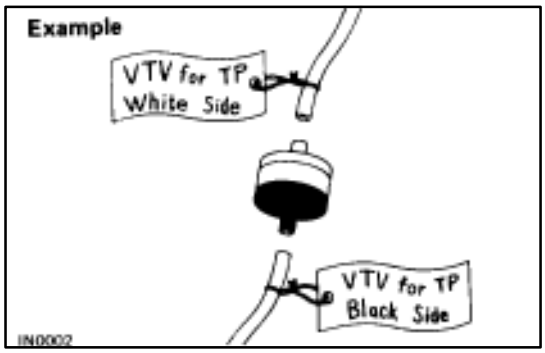

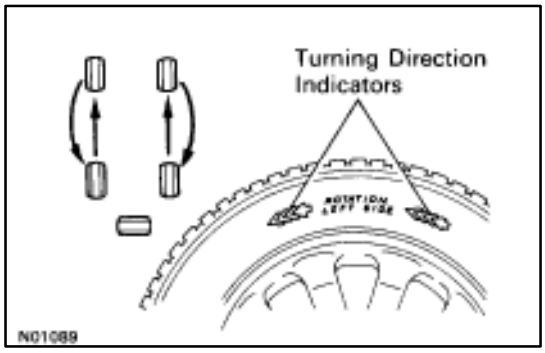

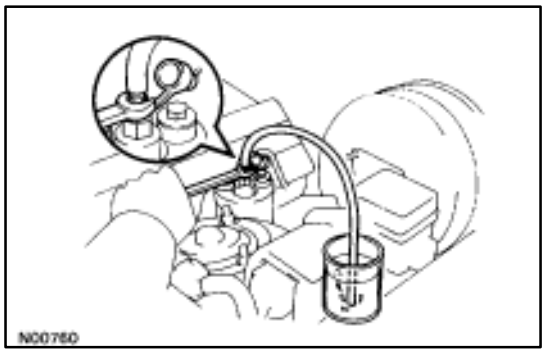

12. Observe the following precautions to avoid damage to the parts:
    (a) Do not open the cover or case of the ECU unless absolutely necessary (If the IC terminals are touched, the IC may be destroyed by static electricity.).
    (b) To pull apart electrical connectors, pull on the connector itself, not the wires (See page BE–2).
    (c) Be careful not to drop electrical components, such as sensors or relays. It they are dropped on a hard floor, they should be replaced and not reused.
    (d) When checking continuity at the wire connector, insert the tester probe carefully to prevent terminals from bending.
    (e) To disconnect vacuum hoses, pull on the end, not the middle of the hose.
    (f) When steam cleaning an engine, protect the distributor, coil and air filter from water.
    (g) Never use an impact wrench to remove or install temperature switches or temperature sensors.
    (h) When using a vacuum gauge, never force the hose onto a connector that is too large. Use a step–down adapter instead. Once the hose has been stretched, it may leak.

13. Tag hoses before disconnecting them:
    (a) When disconnecting vacuum hoses, use tags to identify how they should be reconnected.
    (b) After completing a job, double check that the vacuum hoses are properly connected. A label under the hood shows the proper layout.

14. Installation of wheels
    The wheel assemblies are of the uni–directional type and must be rotated only between the front and rear as illustrated. Wheels are marked with turning direction indicators.
    When installing the wheels, check the marks carefully and install the wheel correctly.

15. Bleeding of traction control system
    When repairing the brake master cylinder or TRAC system, bleed the air out of the TRAC system (See page BR–7).
    CAUTION: Since the fluid is under high pressure, it could spray out with great force, so be careful.

WhereEverybodyKnowsYourName

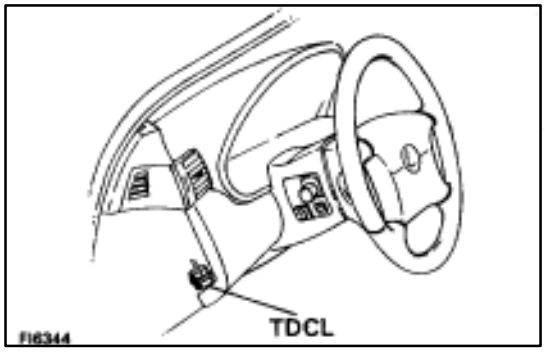

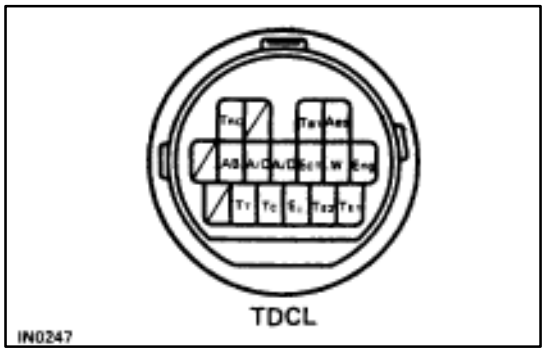

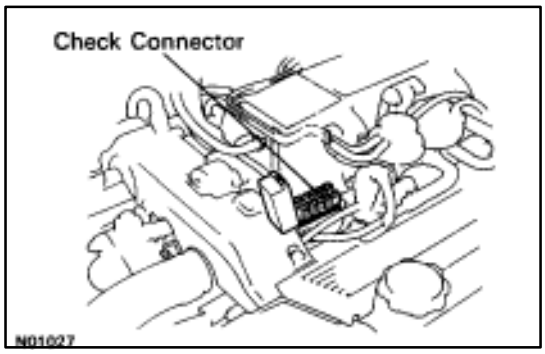

TOTAL DIAGNOSTIC COMMUNICATION LINK (TDCL)

The TDCL is provided inside the cabin (located under the left side instrument panel) as a connector exclusively for diagnosis of data from the engine, ECT, ABS, A/C, Airbag and Cruise Control System to improve serviceability. The check connector inside the engine compartment is used for engine adjustment.

Connecting the following terminals of the TDCL to terminal E1 selects the diagnosis mode shown.
NOTICE: Never make a mistake with the terminal connection position as this will cause a malfunction.

Terminal	System
T_{E1}	Engine and ECT (Normal mode)
T_{E2} and T_{E1}	Engine and ECT (Test mode)
T_c	ABS, A/C, Airbag, Traction Control and Cruise Control System
T_T	ECT

Refer to the respective system for the inspection method.
HINT: By connecting the TDCL up to a monitor specifically designed for use with the TDCL, the diagnosis result for each system can be read easily.

WhereEverybodyKnowsYourName

PRECAUTIONS FOR VEHICLES EQUIPPED WITH SRS AIRBAG

The LEXUS SC400 is equipped with an SRS (Supplemental Restraint System) airbag.

Failure to carry out service operations in the correct sequence could cause the airbag system to unexpectedly deploy during servicing, possibly leading to a serious accident.

Further, if a mistake is made in servicing the airbag system, it is possible the airbag may fail to operate when required.

Before performing servicing (including removal or installation of parts, inspection or replacement), be sure to read the following items carefully, then follow the correct procedure described in this manual.

Locations of Airbag Components

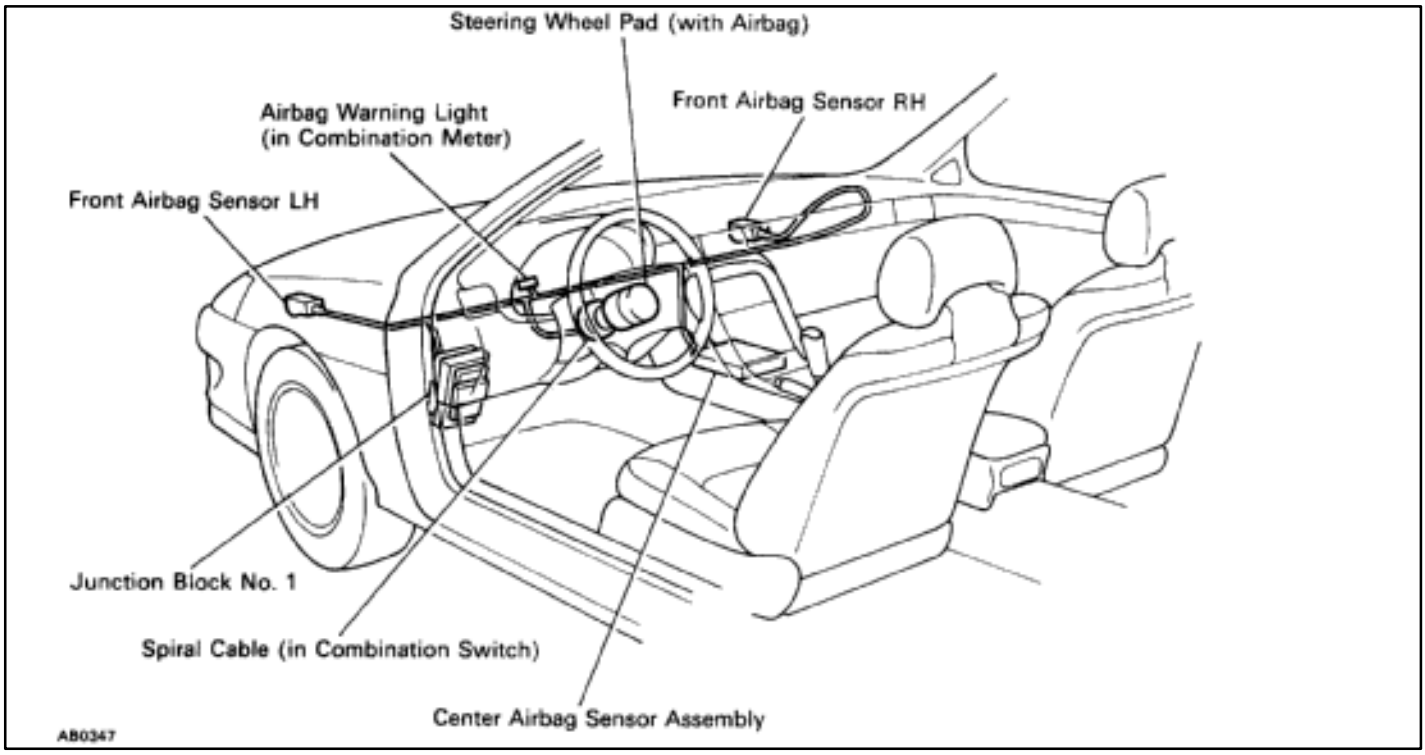

1. Malfunction symptoms of the airbag system are difficult to confirm, so the diagnostic codes become the most important source of information when troubleshooting.
   When troubleshooting the airbag system, always inspect the diagnostic codes before disconnecting the battery. (See page AB–25)
2. **Work must be started after approx. 20 seconds or longer from the time the ignition switch is turned to the LOCK position and the negative (–) terminal cable is disconnected from the battery.**
   (The airbag system is equipped with a back–up power source so that if work is started within 20 seconds of disconnecting the negative (–) terminal cable of the battery, the airbag may be deployed.)

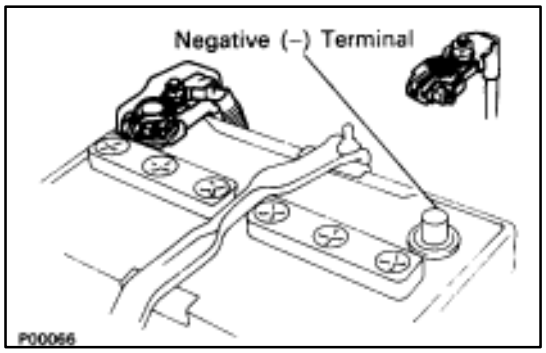

WhereEverybodyKnowsYourName

When the negative (–) terminal cable is disconnected from the battery, memory of the clock and audio systems will be cancelled. So before starting work, make a record of the contents memorized by each memory system. Then when work is finished, reset the clock and audio systems as before.
When the vehicle has power tilt and power telescopic steering, power seat, power outside rear view mirror and power shoulder belt anchorage, which are all equipped with memory function, it is not possible to make a record of the memory contents. So when the operation is finished, it will be necessary to explain this fact to the customer, and ask the customer to adjust the features and reset the memory.
To avoid erasing the memory of each memory system, never use a back–up power supply from outside the vehicle.

3. Even in cases of a minor collision where the airbag does not deploy, the front airbag sensors and the steering wheel pad should be inspected. (See page AB–9)
4. Never use airbag parts from another vehicle. When replacing parts, replace them with new parts.
5. Before repairs, remove the airbag sensors if shocks are likely to be applied to the sensors during repairs.
6. The center airbag sensor assembly contains mercury. After performing replacement, do not destroy the old part. When scrapping the vehicle or replacing the center airbag sensor assembly itself, remove the center airbag sensor assembly and dispose of it as toxic waste.
7. Never disassemble and repair the front airbag sensors, center airbag sensor assembly or steering wheel pad in order to reuse it.
8. If the front airbag sensors, center airbag sensor assembly or steering wheel pad have been dropped, or if there are cracks, dents or other defects in the case, bracket or connector, replace them with new ones.
9. Do not expose the front airbag sensors, center airbag sensor assembly or steering wheel pad directly to hot air or flames.
10. Use a volt/ohmmeter with high impedance (10 kΩ/V minimum) for troubleshooting of the electrical circuit.
11. Information labels are attached to the periphery of the airbag components. Follow the notices.
12. After work on the airbag system is completed, perform the airbag warning light check (See page AB–30).

WhereEverybodyKnowsYourName

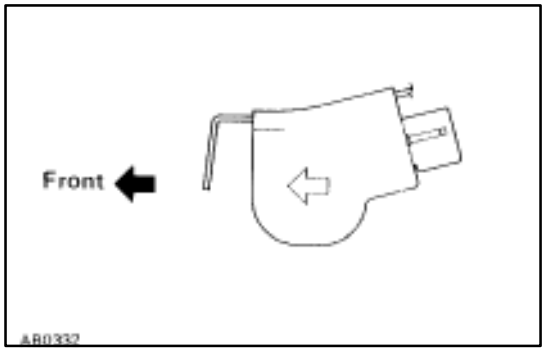

FRONT AIRBAG SENSOR

1. Never reuse the front airbag sensors involved in a collision when the airbag has deployed. (Replace both the left and right airbag sensors.)
2. Install the front airbag sensor with the arrow on the sensor facing toward the front of the vehicle.
3. The front airbag sensor set bolts have been anti–rust treated. When the sensor is removed, always replace the set bolts with new ones.
4. The front airbag sensor is equipped with an electrical connection check mechanism. Be sure to lock this mechanism securely when connecting the connector. If the connector is not securely locked, a malfunction code will be detected by the diagnosis system (See page AB–10).

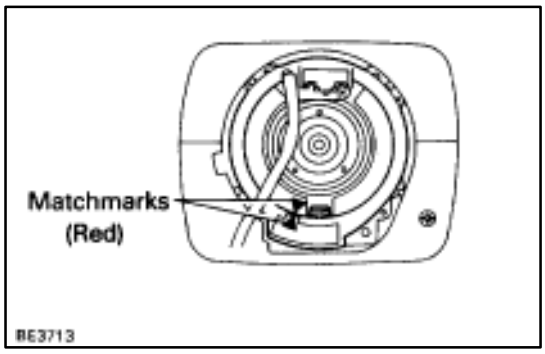

SPIRAL CABLE (IN COMBINATION SWITCH)

The steering wheel must be fitted correctly to the steering column with the spiral cable at the neutral position; otherwise cable disconnection and other troubles may result. Refer to page AB–15 of this manual concerning correct steering wheel installation.

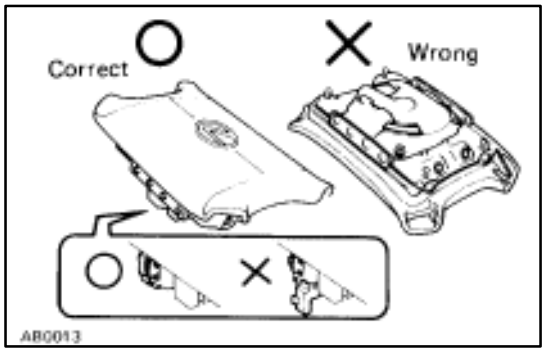

STEERING WHEEL PAD (WITH AIRBAG)

1. **When removing the steering wheel pad or handling a new steering wheel pad, it should be placed with the pad top surface facing up.**
   In this case, the twin–lock type connector lock lever should be in the locked state and care should be taken to place it so the connector will not be damaged. And do not store a steering wheel pad on top of another one. (Storing the pad with its metallic surface up may lead to a serious accident if the airbag inflates for some reason.)
2. **Never measure the resistance of the airbag squib. (This may cause the airbag to deploy, which is very dangerous.)**

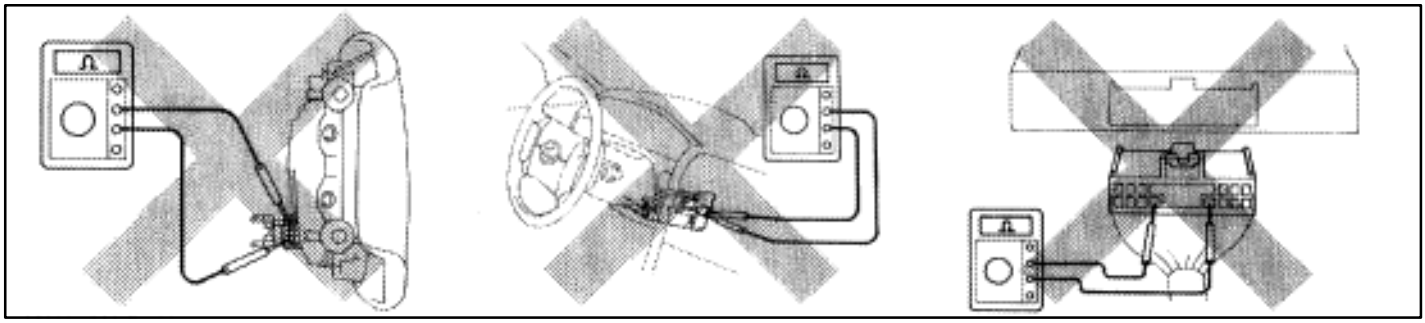

WhereEverybodyKnowsYourName

3. Grease should not be applied to the steering wheel pad and the pad should not be cleaned with detergents of any kind.
4. Store the steering wheel pad where the ambient temperature remains below 93°C (200°F), without high humidity and away from electrical noise.
5. When using electric welding, first disconnect the airbag connector (yellow color and 2 pins) under the steering column near the combination switch connector before starting work.
6. **When disposing of a vehicle or the steering wheel pad alone, the airbag should be deployed using an SST before disposal (See page AB–91). Perform the operation in a place away from electrical noise.**

CENTER AIRBAG SENSOR ASSEMBLY

The connector to the center airbag sensor assembly should be connected or disconnected with the sensor mounted on the floor. If the connector is connected or disconnected while the center airbag sensor assembly is not mounted to the floor, it could cause undesired ignition of the airbag system.

WIRE HARNESS AND CONNECTOR

The airbag system's wire harness is integrated with the cowl wire harness assembly. The wires for the airbag wire harness are encased in a yellow corrugated tube. All the connectors for the system are also a standard yellow color. If the airbag system wire harness becomes disconnected or the connector becomes broken due to an accident, etc., repair or replace it as shown on page AB–22.

WhereEverybodyKnowsYourName

PRECAUTIONS FOR VEHICLES EQUIPPED WITH A CATALYTIC CONVERTER

CAUTION: If large amounts of unburned gasoline flow into the converter, it may overheat and create a fire hazard. To prevent this, observe the following precautions and explain them to your customer.

1. **Use only unleaded gasoline.**
2. **Avoid prolonged idling.**
   Avoid running the engine at idle speed for more than 20 minutes.
3. **Avoid spark jump test.**
   (a) Perform spark jump test only when absolutely necessary. Perform this test as rapidly as possible.
   (b) While testing, never race the engine.
4. **Avoid prolonged engine compression measurement.**
   Engine compression tests must be done as rapidly as possible.
5. **Do not run engine when fuel tank is nearly empty.**
   This may cause the engine to misfire and create an extra load on the converter.
6. **Avoid coasting with ignition turned off and prolonged braking.**
7. **Do not dispose of used catalyst along with parts contaminated with gasoline or oil.**

WhereEverybodyKnowsYourName

PRECAUTIONS FOR VEHICLES EQUIPPED WITH TRACTION CONTROL (TRAC) SYSTEM

When using a rear wheel two–wheel drum tester such as a speedometer tester or chassis dynamometer, etc., or jacking up the rear wheels and driving the wheels, always push in the TRAC cut (”TRAC OFF”) switch and turn the TRAC system OFF.

CONFIRM TRAC SYSTEM IS OFF

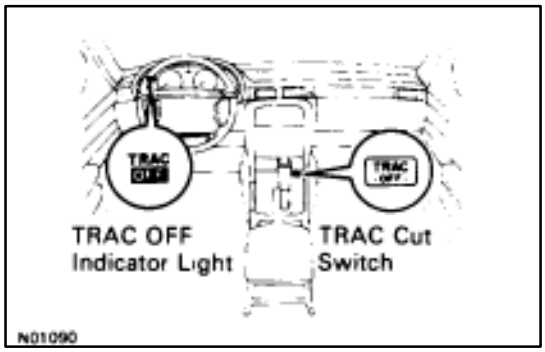

1. Press the TRAC cut (”TRAC OFF”) switch.
2. Check that the TRAC OFF indicator light comes on when the TRAC system is turned off by the TRAC cut switch.

HINT: The TRAC indicator light should always operate right after the engine is restarted.

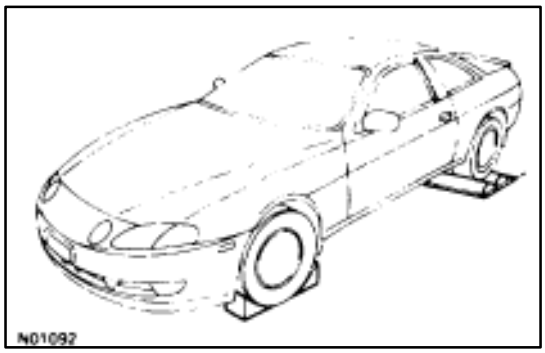

3. Begin measurements.

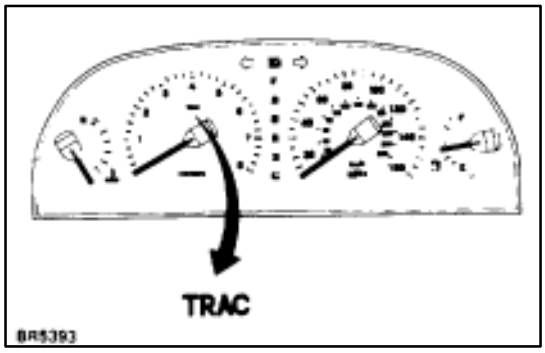

4. Press the TRAC cut switch again to change the TRAC to operative and check that the TRAC OFF indicator light goes off.

HINT: The TRAC indicator light blinks when the TRAC system is operative.

WhereEverybodyKnowsYourName

INSPECTION AND ADJUSTMENT OF JOINT ANGLE DURING REMOVAL AND INSTALLATION OF PROPELLER SHAFT

When performing operations which involve the removal and installation of the propeller shaft be sure to check the joint angle. Make adjustment if necessary (See page PR–13).

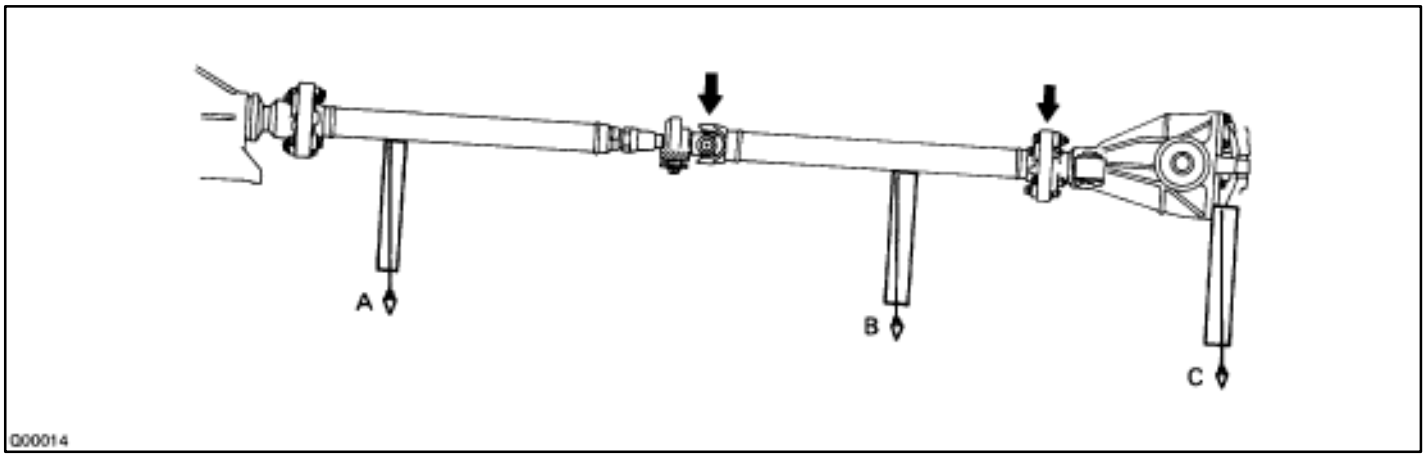

WhereEverybodyKnowsYourName

HOW TO TROUBLESHOOT ECU CONTROLLED SYSTEMS

A large number of ECU controlled systems are used in the LEXUS SC400. In general, the ECU controlled system is considered to be a very intricate system requiring a high level of technical knowledge and expert skill to troubleshoot. However, the fact is that if you proceed to inspect the circuits one by one, troubleshooting of these systems is not complex. If you have adequate understanding of the system and a basic knowledge of electricity, accurate diagnosis and necessary repair can be performed to locate and fix the problem. This manual is designed through emphasis of the above standpoint to help service technicians perform accurate and effective troubleshooting, and is compiled for the following major ECU controlled systems:

Repair Manual	System	Page
Vol. 1	1. Engine	TR–1
	2. Automatic Transmission	AT–33
	3. Anti–Lock Brake	BR–43
	4. Traction Control	BR–139
Vol. 2	5. Steering Column Electronic Control	SR–22
	6. SRS Airbag	AB–25
	7. Power Seat Control	BE–265
	8. Door Lock Control	BE–347
	9. Theft Deterrent	BE–381
	10. Wireless Door Lock Control	BE–425
	11. Cruise Control	BE–459
	12. Air Conditioner	AC–21

The troubleshooting procedure and how to make use of it are described on the following pages.

WhereEverybodyKnowsYourName

HOW TO PROCEED WITH TROUBLESHOOTING

Carry out troubleshooting in accordance with the procedure on the following page. Here, only the basic procedure is shown. Details are provided in each section, showing the most effective methods for each circuit. Confirm the troubleshooting procedures first for the relevant circuit before beginning troubleshooting of that circuit.

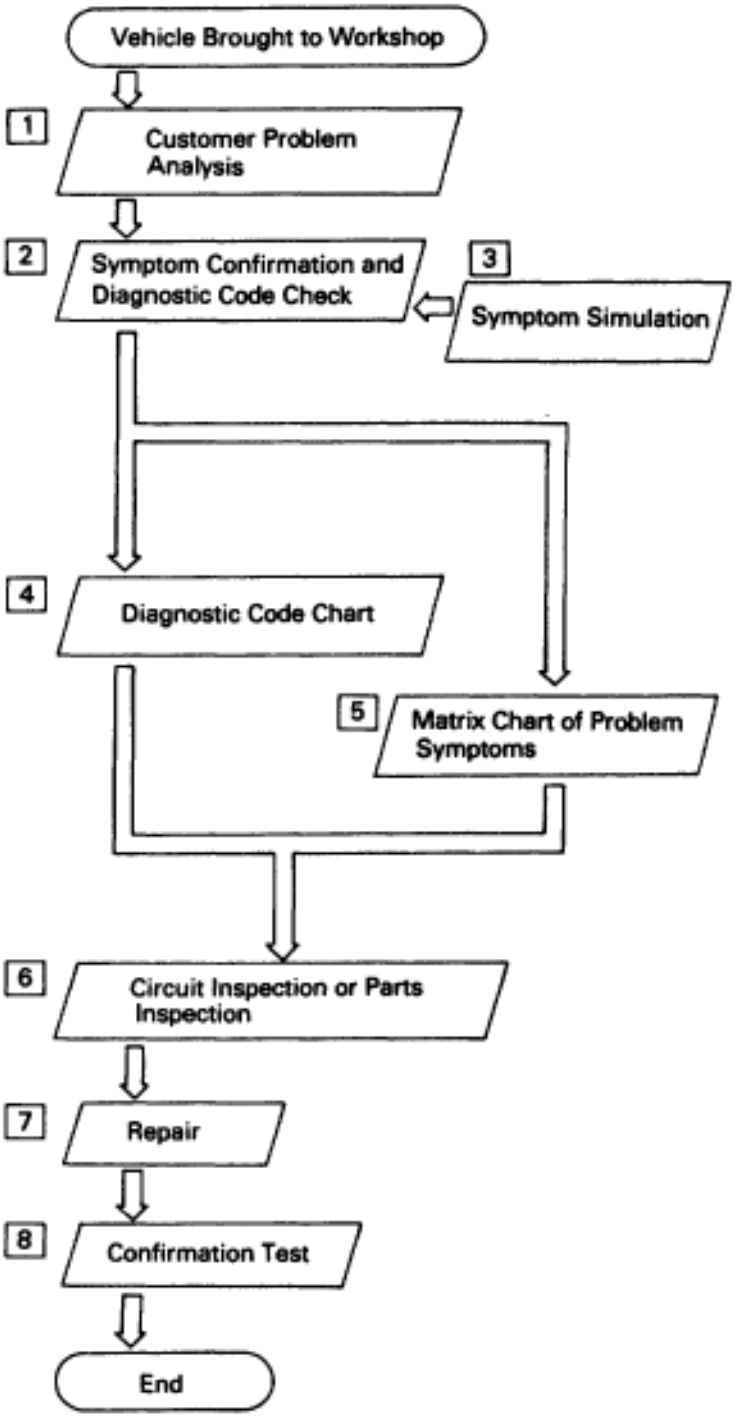

▼

Ask the customer about the conditions and the environment when the problem occurred.

2 2

Confirm the symptoms and the problem conditions, and check the diagnostic codes. (When the problem symptoms do not appear during confirmation, use the symptom simulation method described later on.)

10 5 6

Check the result obtained in Step 2, then confirm the inspection procedure for the system or the part which should be checked using the diagnostic code chart or the matrix chart of problem symptoms.

7

Check and repair the affected system or part in accordance with the instructions in Step 6.

9

After completing repairs, confirm that the problem has been eliminated.
(If the problem is not reproduced, perform the confirmation test under the same conditions and in the same environment as when it occurred for the first time.)

WhereEverybodyKnowsYourName

[1] CUSTOMER PROBLEM ANALYSIS

In troubleshooting, the problem symptoms must be confirmed accurately and all preconceptions must be cleared away in order to give an accurate judgment. To ascertain just what the problem symptoms are, it is extremely important to ask the customer about the problem and the conditions at the time it occurred.

Important Points in the Problem Analysis

The following 5 items are important points in the problem analysis. Past problems which are thought to be unrelated and the repair history, etc. may also help in some cases, so as much information as possible should be gathered and its relationship with the problem symptoms should be correctly ascertained for reference in troubleshooting. A customer problem analysis table is provided in the troubleshooting section for each system for your use.

Important Points in the Customer Problem Analysis

- What — Vehicle model, system name
- When — Date, time, occurrence frequency
- Where — Road conditions
- Under what conditions? — Running conditions, driving conditions, weather conditions
- How did it happen? — Problem symptoms

(Sample) Engine control system check sheet.

CUSTOMER PROBLEM ANALYSIS CHECK SHEET

ENGINE CONTROL System Check Sheet

Inspector's Name _____

Customer's Name		Registration No.	
		Registration Year	/ /
		Frame No.	
Date Vehicle Brought In		Odometer Reading	km Miles

Date of Problem Occurrence		
Frequency of Problem Occurrence		☐ Constant ☐ Sometimes (times per day/month) ☐ Once only ☐ Other ( )
Conditions at Time of Problem Occurrence	Weather	☐ Fine ☐ Cloudy ☐ Rainy ☐ Snowy ☐ Various/Other
	Outdoor Temperature	☐ Hot ☐ Warm ☐ Cool ☐ Cold (Approx. °F (°C))
	Place	☐ Highway ☐ Suburbs ☐ Inner City ☐ Hill (☐ Up, ☐ Down) ☐ Rough road ☐ Other ( )
	Engine Temp.	☐ Cold ☐ Warming up ☐ After warming up ☐ Normal ☐ Other
	Engine Operation	☐ Starting ☐ Just after starting ☐ Idling ☐ Racing without load ☐ Driving (☐ Constant speed ☐ Acceleration ☐ Deceleration ☐ Other ( ))

Symptoms	☐ Engine does not Start	☐ Engine does not crank ☐ No initial combustion ☐ No complete combustion
	☐ Difficult to Start	☐ Engine cranks slowly ☐ Other ( )
	☐ Poor Idling	☐ [illegible] ☐ Idling rpm is abnormal [☐ High ☐ Low (rpm)])
	[illegible]	[illegible] (after fire) ☐ [illegible]

WhereEverybodyKnowsYourName

[2] SYMPTOM CONFIRMATION AND DIAGNOSTIC CODE CHECK

The diagnostic system in the LEXUS SC400 fulfills various functions. The first function is the Diagnostic Code Check in which a malfunction in the signal circuits to the ECU is stored in code in the ECU memory at the time of occurrence, to be output by the technician during troubleshooting. Another function is the Input Signal Check which checks if the signals from various switches are sent to the ECU correctly.
The air conditioner system has an Actuator Check function whereby the ECU automatically operates the actuators of the damper and blowermotor, etc. to check the operation. The cruise control system has a Cancel Signal Check function which memorizes and displays what sort of signal it was that last cancelled the cruise control. By using these check functions, the problem areas can be narrowed down quickly and troubleshooting can be performed effectively. Diagnostic functions are incorporated in the following systems in the LEXUS SC400.

System	Diagnostic Code Check	Input Signal Check (Sensor Check)	Other Diagnosis Function
Engine	○ (with Test Mode)	○	
Automatic Transmission	○ (with Test Mode)	○	
Anti–Lock Brake	○	○	
Traction Control (Option)	○		
SRS Airbag	○		
Power Seat (only vehicles with memory function)		○	
Wireless Door Lock Control		○	
Cruise Control	○	○	Cancel Signal Check
Air Conditioner	○	○	Actuator Check

In diagnostic code check, it is very important to determine whether the problem indicated by the diagnostic code is still occurring or occurred in the past but returned to normal at present. In addition, it must be checked in the problem symptom check whether the malfunction indicated by the diagnostic code is directly related to the problem symptom or not. For this reason, the diagnostic codes should be checked before and after the symptom confirmation to determine the current conditions, as shown in the table below. If this is not done, it may, depending on the case, result in unnecessary troubleshooting for normally operating systems, thus making it more difficult to locate the problem, or in repairs not pertinent to the problem. Therefore, always follow the procedure in correct order and perform the diagnostic code check.

DIAGNOSTIC CODE CHECK PROCEDURE

Diagnostic Code Check (Make a note of and then clear)	Confirmation of Symptoms	Diagnostic Code Check	Problem Condition
Trouble Code Display	Problem symptoms exist	Same trouble code is displayed	Problem is still occurring in the diagnostic circuit.
		Normal code is displayed	The problem is still occurring in a place other than in the diagnostic circuit. (The trouble code displayed first is either for a past problem or it is a secondary problem.)
	No problem symptoms exist		The problem occurred in the diagnostic circuit in the past.
Normal Code Display	Problem symptoms exist	Normal code is displayed	The problem is still occurring in a place other than in the diagnostic circuit.
	No problem symptoms exist	Normal code is displayed	The problem occurred in a place other than in the diagnostic circuit in the past.

WhereEverybodyKnowsYourName

Taking into account the above points, a flow chart showing how to proceed with troubleshooting using the diagnostic code check is shown below. This flow chart shows how to utilize the diagnostic code check effectively, then by carefully checking the results, indicates how to proceed either to diagnostic code troubleshooting or to troubleshooting of problem symptoms.

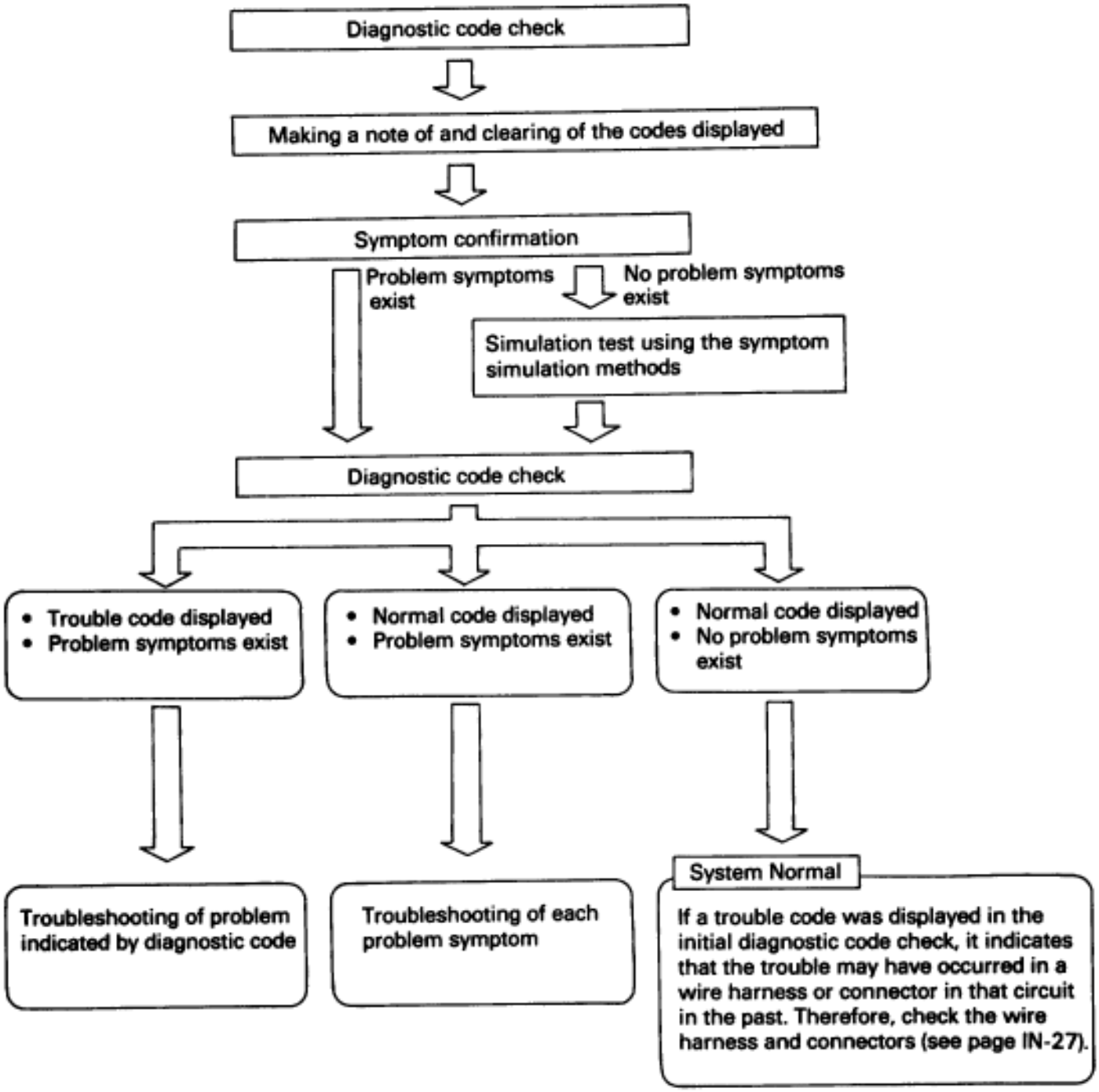

WhereEverybodyKnowsYourName

[3] SYMPTOM SIMULATION

The most difficult case in troubleshooting is when there are no problem symptoms occurring. In such cases, a thorough customer problem analysis must be carried out, then simulate the same or similar conditions and environment in which the problem occurred in the customer's vehicle. No matter now much experience a technician has, or how skilled he may be, if he proceeds to troubleshoot without confirming the problem symptoms he will tend to overlook something important in the repair operation and make a wrong guess somewhere, which will only lead to a standstill. For example, for a problem which only occurs when the engine is cold, or for a problem which occurs due to vibration caused by the road during driving, etc., the problem can never be determined so long as the symptoms are confirmed with the engine hot condition or the vehicle at a standstill. Since vibration, heat or water penetration (moisture) are likely causes for problems which are difficult to reproduce, the symptom simulation tests introduced here are effective measures in that the external causes are applied to the vehicle in a stopped condition.

Important Points in the Symptom Simulation Test

In the symptom simulation test, the problem symptoms should of course be confirmed, but the problem area or parts must also be found out. To do this, narrow down the possible problem circuits according to the symptoms before starting this test and connect a tester beforehand. After that, carry out the symptom simulation test, judging whether the circuit being tested is defective or normal and also confirming the problem symptoms at the same time. Refer to the matrix chart of problem symptoms for each system to narrow down the possible causes of the symptom.

[1] VIBRATION METHOD: When vibration seems to be the major cause.

CONNECTORS

Slightly shake the connector vertically and horizontally.

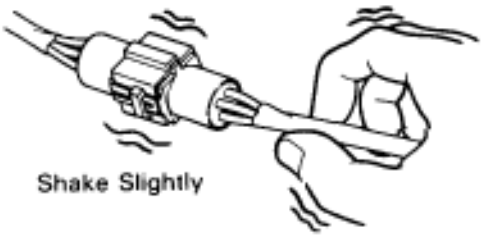

WIRE HARNESS

Slightly shake the wire harness vertically and horizontally. The connector joint, fulcrum of the vibration, and body through portion are the major areas to be checked thoroughly.

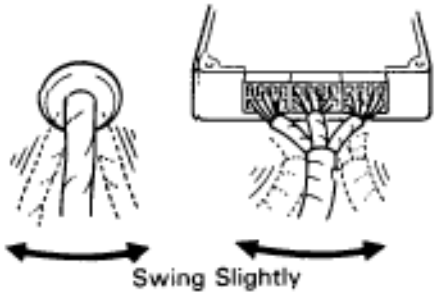

FI2331
FI2332

PARTS AND SENSORS

Apply slight vibration with a finger to the part of the sensor considered to be the problem cause and check if the malfunction occurs.

HINT: Applying strong vibration to relays may result in open relays.

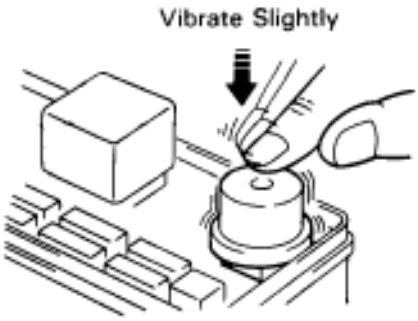

FI2330

WhereEverybodyKnowsYourName

[2] HEAT METHOD: When the problem seems to occur when the suspect area is heated.

Heat the component that is the likely cause of the malfunction with a hair dryer or similar object. Check to see if the malfunction occurs.

NOTICE:

(1) Do not heat to more than 60˚C (140˚F). (Temperature limit that no damage is done to the component).

(2) Do not apply heat directly to parts in the ECU.

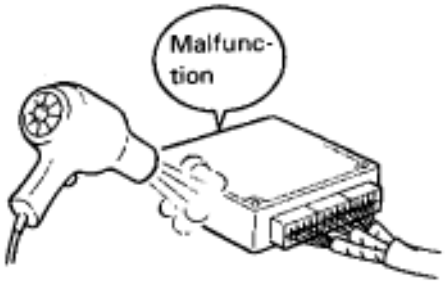

FI2334

[3] WATER SPRINKLING METHOD: When the malfunction seems to occur on a rainy day or in a high–humidity condition.

Sprinkle water onto the vehicle and check to see if the malfunction occurs.

NOTICE:

(1) Never sprinkle water directly into the engine compartment, but indirectly change the temperature and humidity by applying water spray onto the radiator front surface.

(2) Never apply water directly onto the electronic components.

(Service hint)

If a vehicle is subject to water leakage, the leaked water may contaminate the ECU. When testing a vehicle with a water leakage problem, special caution must be used.

BE4059

[4] OTHER: When the malfunction seems to occur when electrical load is excessive.

Turn on all electrical loads including the heater blower, head lights, rear window defogger, etc. and check to see if the malfunction occurs.

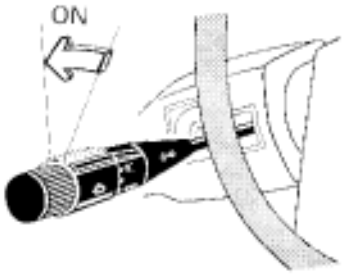

FI2336

WhereEverybodyKnowsYourName

[4] DIAGNOSTIC CODE CHART

The inspection procedure is shown in the table below. This table permits efficient and accurate troubleshooting using the trouble codes displayed in the diagnostic code check. Proceed with troubleshooting in accordance with the inspection procedure given in the diagnostic chart corresponding to the trouble codes displayed. The engine diagnostic code chart is shown below as an example.

- Code No.
  Indicates the diagnostic code.

- Circuit to be Checked
  Indicates the circuit or part which needs to be checked.

DIAGNOSTIC CODE CHART

HINT: Parameters listed in the chart may not be exactly same as your reading due to type of the instruments or other factors.

- Diagnostic Code Detecting Condition
  Indicates the diagnostic code set parameter.

Code No.	Number of Check Engine Blinks	Circuit	Diagnostic Code Detecting Condition
–	01390	Normal	No code is recorded.
12	01390	RPM Signal	No "NE" or "G1" and "G2" signal to ECU within 2 sec. after cranking.
			No NE signal to ECU for 0.1 sec. or more at 1,000 rpm or more.
13			[illegible] signal between G1 and G2

- Trouble Area
  Indicates the suspect area of the problem.

- Page or Instructions
  Indicates the page where the inspection procedure for each circuit is to be found, or gives instructions for checking and repairs.

If a malfunction code is displayed during the diagnostic code check in test mode, check the circuit for that code listed in the table below (Proceed to the page given for that circuit).

Trouble Area	"CHECK" Engine Warning Light*1		Memory*2	See Page
	Normal Mode	Test Mode		
———	——	——	———	———
• Open or short in engine speed sensor, No. 1, No. 2 cam position sensor circuit. • Engine speed sensor • No. 1, No. 2 cam position sensor • Starter • ECU	ON	N.A.	○	TR-48
• Open or short in engine speed sensor circuit. • Engine speed sensor • ECU	ON	N.A.		
Open or short in engine speed sensor circuit [illegible] system malfunction (sh[illegible]				

WhereEverybodyKnowsYourName

[5] MATRIX CHART OF PROBLEM SYMPTOMS

The suspect circuits or parts for each problem symptom are shown in the table below. Use this table to troubleshoot the problem when a ”Normal” code is displayed in the diagnostic code check but the problem is still occurring. Numbers in the table indicate the inspection order in which the circuits or parts should be checked.

HINT: When the problem is not detected by the diagnostic system even though the problem symptom is present, it is considered that the problem is occurring outside the detection range of the diagnostic system, or that the problem is occurring in a system other than the diagnostic system.

- **Page**
  Indicates the page where the flow chart for each circuit is located.

- **Problem Symptom**

- **Circuit or Part Name**
  Indicates the circuit or part which needs to be checked.

MATRIX CHART OF PROBLEM SYMPTOMS

When the malfunction code is not confirmed in the diagnostic code check and the problem still can not be confirmed in the basic inspection, then proceed to this step and perform troubleshooting according to the numbered order given in the table below.

The circuits indicated by ✱ on the matrix chart can be inspected using the TCCS checker.

	See page	TR-88	TR-100	TR-108	TR-118	TR-122	TR-124	TR-130	TR-132	TR-136	TR-140	TR-114	TR-142	AC-84	ST-24	IG-6	IG-7	IG-9	IG-24	EM-30	AT-66	BE-381	IN-32
	Suspect area	✱ Air flow meter circuit	✱ Starter signal circuit	EGR System	Switch condition signal circuit	✱ Neutral start switch circuit	ECU power source circuit	Back up power source circuit	✱ Injector circuit	Cold start injector circuit	ISC valve circuit	Fuel pump control circuit	Fuel pressure control VSV circuit	✱ A/C signal circuit (Compressor circuit)	Starter and Starter relay	Ignition signal circuit (Spark test)	Spark plug	Ignition coil	Distributor	Compression	ECT faulty	Theft deterrent ECU	Engine & ECT ECU
Does not start	Engine does not crank					2									1							3	
	No initial combustion						1		5	6		3				2	4						
	No complete combustion								6	7		1				5	4	2	3				
Difficult to start	Difficult to start normally		1						8	9	2	3					6	4	5	7			
	Difficult to start cold		1						5	3	2	4					8	6	7				
	Difficult to start hot		1						5	6	2	4	3				9	7	8				
Poor idling	Incorrect first idle				1						2												
	High engine idle speed					5	4	6			2			3									
	Low [illegible]					4		8	6		1	5		2									
	[illegible]									[illegible]	2	8				6	11	[illegible]					

- **Circuit Inspection, Inspection Order**
  Indicates the circuit which needs to be checked for each problem symptom. Check in the order indicated by the numbers.

WhereEverybodyKnowsYourName

6 CIRCUIT INSPECTION

How to read and use each page is shown below.

- Diagnostic Code No. and Circuit Name

- Circuit Description
  The major role and operation, etc. of the circuit and its component parts are explained.

Diag. Code	24	Intake Air Temp. Sensor Circuit

CIRCUIT DESCRIPTION

The intake air temp. sensor is built into the air flow meter and senses the intake air temperature.
The structure of the sensor and connection to the ECU is the same as in the water temp. sensor shown on page TR-68.
If the ECU records the diagnostic code "24", it operates the fail safe function, keeping the intake air temperature at a constant 20°C (68°F).

Code No.	Diagnostic Code Detecting Condition	Trouble Area
24	Open or short in intake air temp. sensor circuit for 0.5 sec. or more.	• Open or short in intake air temp. sensor circuit • Intake air temp. sensor • ECU

- Indicates the diagnostic code, diagnostic code set parameter and suspect area of the problem.

DIAGNOSTIC CHART

HINT: If diagnostic codes "22" (water temperature sensor circuit), "24" (intake air temperature sensor circuit) and "41" (throttle position sensor circuit) are output simultaneously, E2 (sensor ground) may be open.

1. Check voltage of sensor. — OK → Check for momentary interruption (See page TR-23).
   NG ↓
2. Check resistance of sensor. — NG → Replace intake air temp. sensor.
   OK ↓
3. Check for open and short in harness and connector between ECU and intake air temp. sensor. — NG → Repair or replace harness or connector.
   OK ↓
   Check and replace ECU.

- Diagnostic Chart
  The troubleshooting procedure for the circuit is shown in a flow chart.
  Use it to determine if the circuit is normal or abnormal, and, if it is abnormal, use it to determine whether the problem is located in the sensors, actuators, wire harness or ECU. For details of each inspection, the page number of the related "Inspection Procedure" is included.

WIRING DIAGRAM

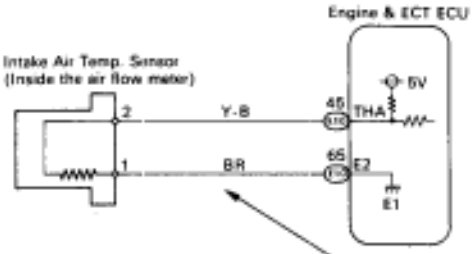

- Wiring Diagram
  This shows a wiring diagram of the circuit. Use this diagram together with the location of connectors to thoroughly understand the circuit.

WhereEverybodyKnowsYourName

Location of Connectors in Engine Compartment

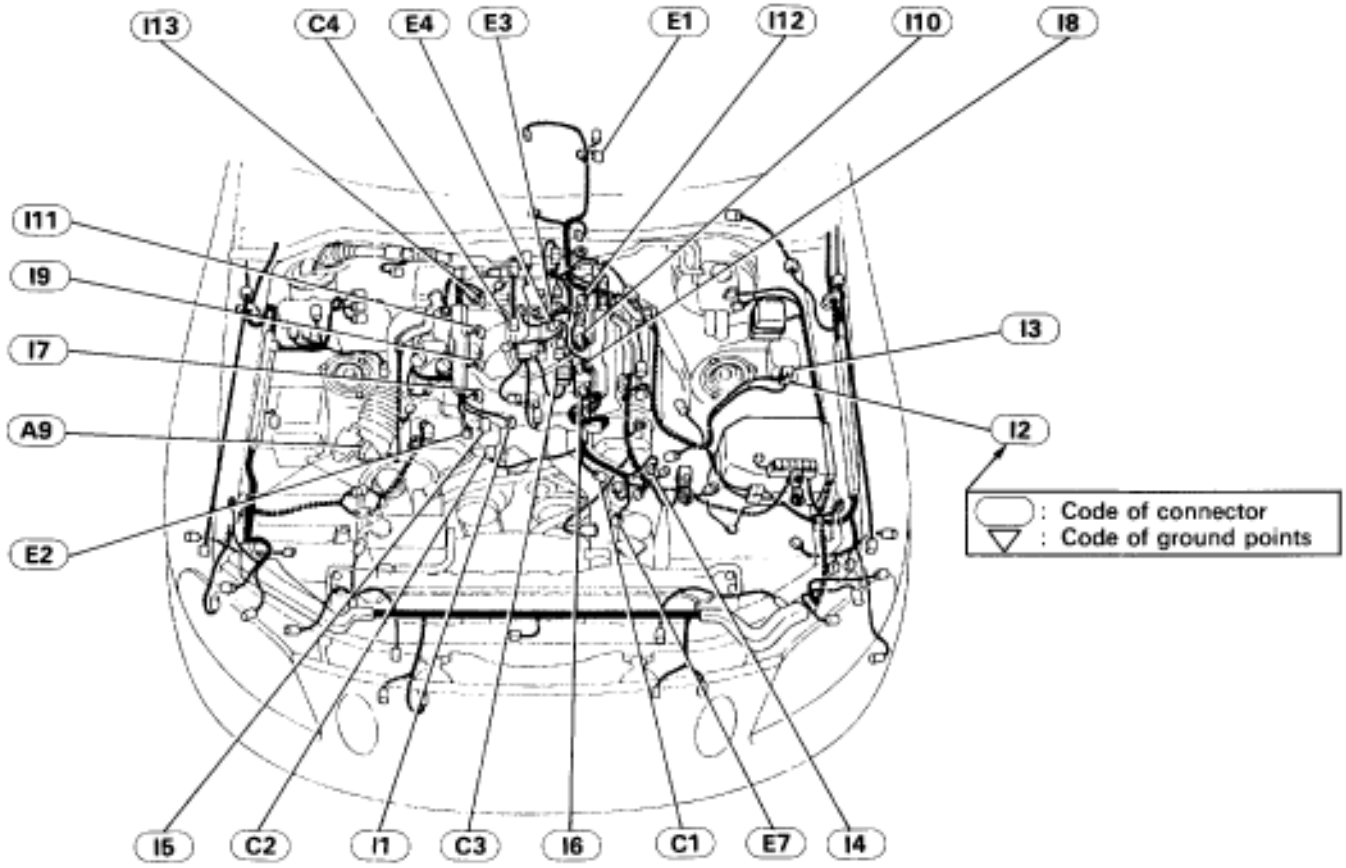

BE6630

- Location of connectors
  This diagram shows the wire harnesses and connectors used in one system.
  The connector shows the harness side connector, so when checking the part side connector (sensor, actuator, etc.), be careful not to mistake the terminal positions.

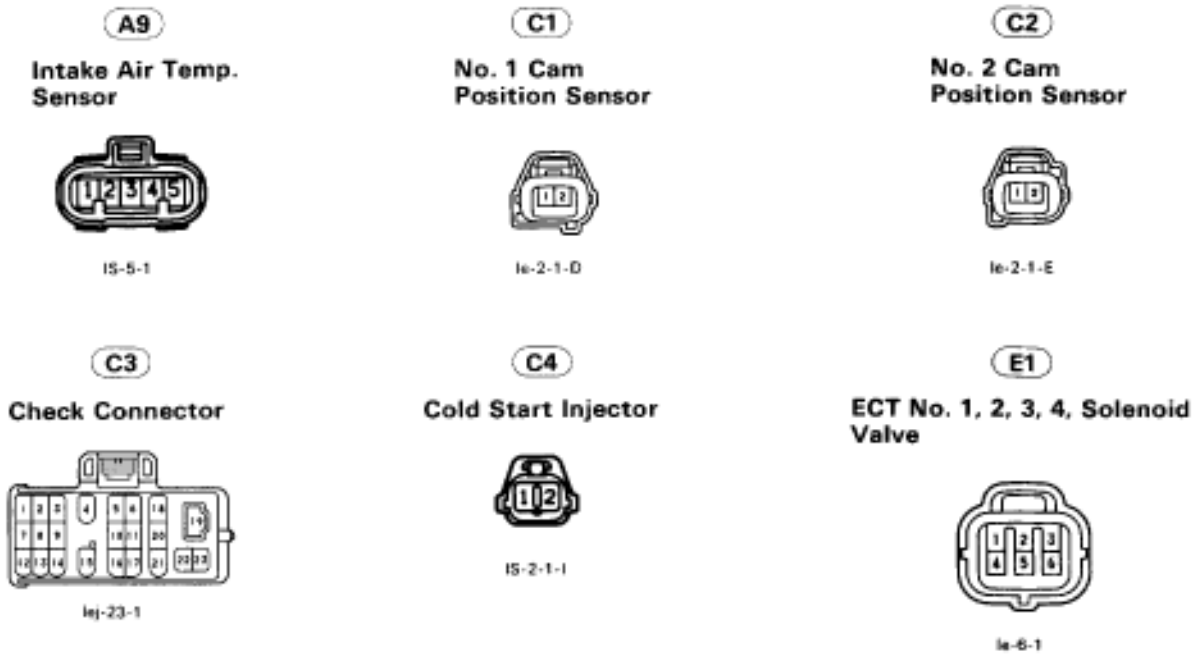

WhereEverybodyKnowsYourName

- Indicates the position of the ignition switch during the check.

OFF Ignition Switch OFF
ON Ignition Switch ON
STA Ignition Switch STA
ACC Ignition Switch ACC

- Inspection Procedure
  This shows the inspection procedure on the diagnostic chart in detail.

BRAKE SYSTEM – Traction Control System (TRAC)

INSPECTION PROCEDURE

1 Check voltage between terminals IG and GND of TRAC ECU connector.

IG ON

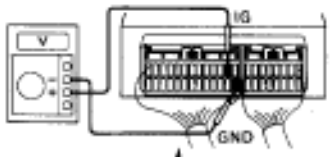

P 1. Remove TRAC ECU with connectors still connected.
2. Turn ignition switch on.

C Measure voltage between terminals IG and GND of TRAC ECU connector.

Voltage: 10 – 14 V

OK When diag. code 41 is displayed, check and replace TRAC ECU.

NG

2 Check cont... ...inal GND of TRAC ECU c... and b...

- P Preparation
- C Check

- Indicates the place to check the voltage or resistance.
- Indicates the connector position to be checked, from the front or back side.

Check from the connector back side. (with harness)

Check from the connector front side (without harness)
In this case, care must be taken not to bend the terminals.

- Indicates the condition of the connector of ECU during the check.

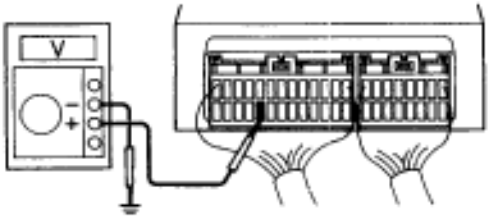

Connector being checked is connected.

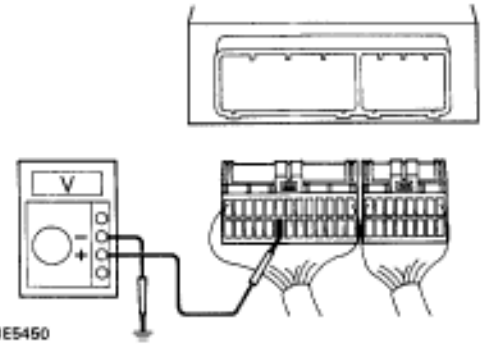

Connector being checked is disconnected.

WhereEverybodyKnowsYourName

HOW TO USE THE DIAGNOSTIC CHART AND INSPECTION PROCEDURE

1. For troubleshooting, diagnostic code charts or problem symptom charts are provided for each circuit with detailed inspection procedures on the following pages.
2. When all the component parts, wire harnesses and connectors of each circuit except the ECU are found to be normal in troubleshooting, then it is determined that the problem is in the ECU.
   Accordingly, if diagnosis is performed without the problem symptoms occurring, the instruction will be to check and replace the ECU, even if the problem is not in the ECU. So, always confirm that the problem symptoms are occurring, or proceed with inspection while using the symptom simulation method.
3. The instructions ”Check wire harness and connector” and ”Check and replace ECU” which appear in the inspection procedure, are common and applicable to all diagnostic codes. Follow the procedure outlined below whenever these instructions appear.

Check Wire Harness and Connector

The problem in the wire harness or connector is an open circuit or a short circuit.

OPEN CIRCUIT:

This could be due to a disconnected wire harness, faulty contact in the connector, a connector terminal pulled out, etc.

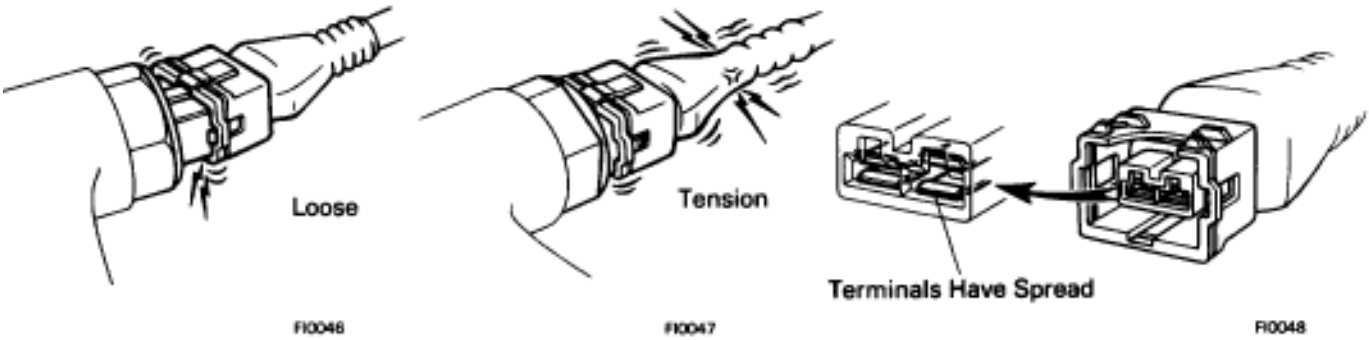

HINT:

1. **It is rarely the case that a wire is broken in the middle of it. Most cases occur at the connector. In particular, carefully check the connectors of sensors and actuators.**
2. **Faulty contact could be due to rusting of the connector terminals, to foreign materials entering terminals or a drop in the contact pressure between the male and female terminals of the connector. Simply disconnecting and reconnecting the connectors once changes the condition of the connection and may result in a return to normal operation.**

Therefore, in troubleshooting, if no abnormality is found in the wire harness and connector check, but the problem disappears after the check, then the cause is considered to be in the wire harness or connectors.

SHORT CIRCUIT:

This could be due to a short circuit between the wire harness and the body ground or to a short inside the switch, etc.

HINT:

- When there is a short between the wire harness and body ground, check thoroughly whether the wire harness is caught in the body or is clamped properly.

WhereEverybodyKnowsYourName

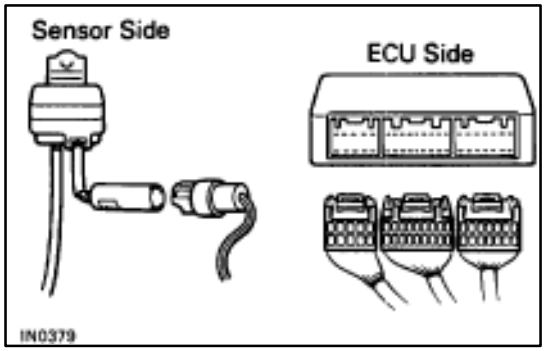

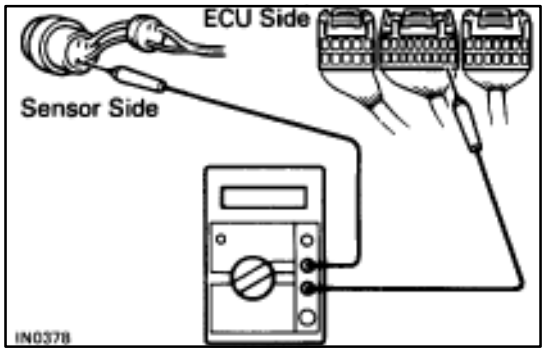

1. CONTINUITY CHECK (OPEN CIRCUIT CHECK)

(1) Disconnect the connectors at both ECU and sensor sides.

(2) Measure the resistance between the applicable terminals of the connectors.

Resistance: 1 ? or less

HINT:

- Measure the resistance while lightly shaking the wire harness vertically and horizontally.
- When tester probes are inserted into a connector, insert the probes from the back. For waterproof connectors in which the probes cannot be inserted from the back, be careful not to bend the terminals when inserting the tester probes.

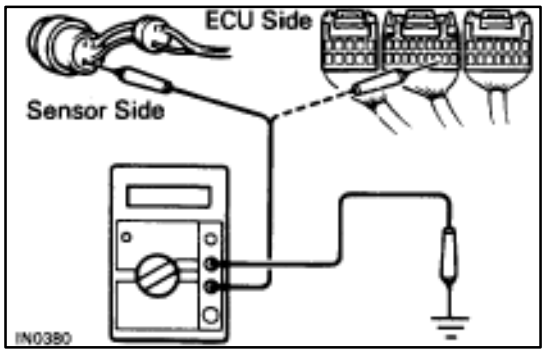

2. RESISTANCE CHECK (SHORT CIRCUIT CHECK)

(1) Disconnect the connectors at both ends.

(2) Measure the resistance between the applicable terminals of the connectors and body ground. Be sure to carry out this check on the connectors on both ends.

Resistance: 1 M? or higher

HINT: Measure the resistance while lightly shaking the wire harness vertically and horizontally.

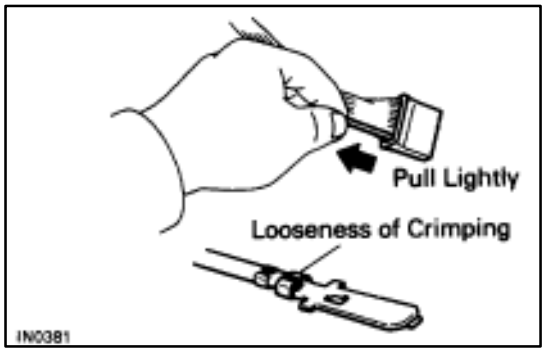

3. VISUAL CHECK AND CONTACT PRESSURE CHECK

(a) Disconnect the connectors at both ends.

(b) Check for rust or foreign material, etc. on the terminals of the connectors.

(c) Check crimped portions for looseness or damage and check if the terminals are secured in the lock position.

HINT: The terminals should not come out when pulled lightly.

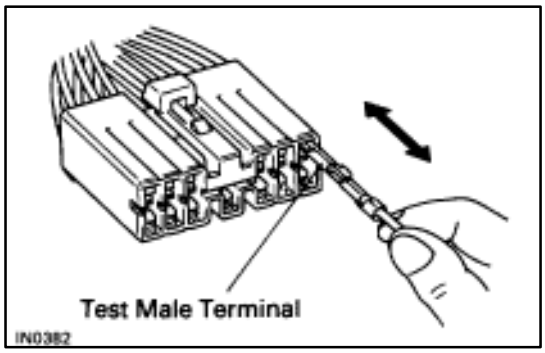

(d) Prepare a test male terminal and insert it in the female terminal, then pull it out.

HINT: When the test terminal is pulled out more easily than others, there may be poor contact in that section.

WhereEverybodyKnowsYourName

Actual examples of the inspection method for open circuit and short circuit are explained below.

1. OPEN CIRCUIT CHECK

For the open circuit in the wire harness in Fig. 1, perform ”(a) Continuity Check” or ”(b) Voltage Check” to locate the section.

Fig. 1.

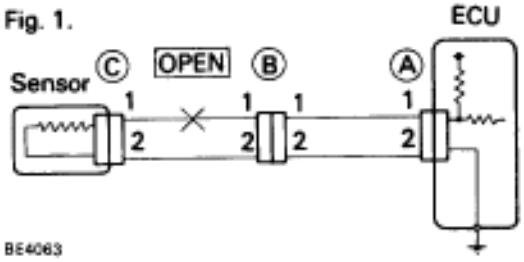

(a) Continuity Check

(1) Disconnect connectors (A) and (C) and measure the resistance between them.
In the case of Fig. 2,
Between terminal 1 of connector (A) and terminal 1 of connector (C) –> No continuity (open)
Between terminal 2 of connector (A) and terminal 2 of connector (C) –> Continuity
Therefore, it is found out that there is an open circuit between terminal 1 of connector (A) and terminal 1 of connector (C).

Fig. 2

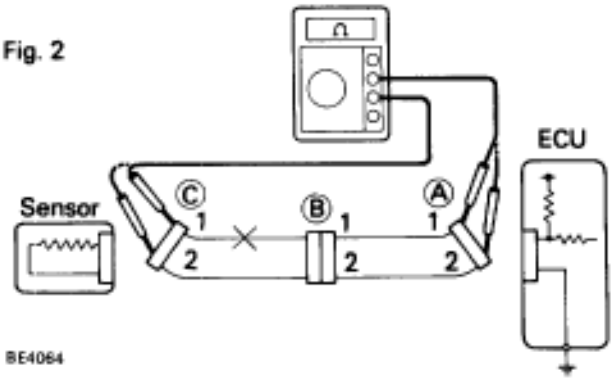

(2) Disconnect connector (B) and measure the resistance between connectors (A) and (B), (B) and (C).
In the case of Fig. 3,
Between terminal 1 of connector (A) and terminal 1 of connector (B) –> Continuity
Between terminal 1 of connector (B) and terminal 1 of connector (C) –> No Continuity (open)
Therefore, it is found out that there is an open circuit between terminal 1 of connector (B) and terminal 1 of connector (C).

Fig. 3

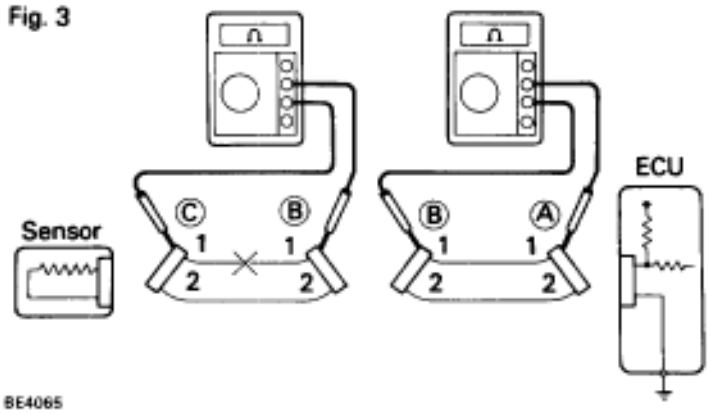

WhereEverybodyKnowsYourName

(b) Voltage Check

In a circuit in which voltage is applied (to the ECU connector terminal), an open circuit can be checked for by conducting a voltage check.

(1) As shown in Fig. 4, with each connector still connected, measure the voltage between body ground and terminal 1 of connector (A) at the ECU 5V output terminal, terminal 1 of connector (B), and terminal 1 of connector (C), in that order.

If the results are:

5 V: Between Terminal 1 of connector (A) and Body Ground

5 V: Between Terminal 1 of connector (B) and Body Ground

0 V: Between Terminal 1 of connector (C) and Body Ground

then it is found out that there is an open circuit in the wire harness between terminal 1 of (B) and terminal 1 of (C).

Fig. 4

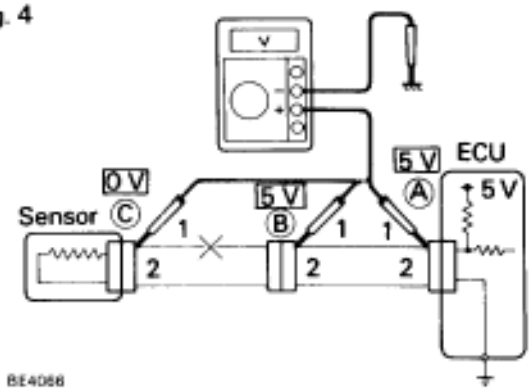

2. SHORT CIRCUIT CHECK

If the wire harness is ground shorted as in Fig. 5, locate the section by conducting a ”continuity check with ground”.

Fig. 5

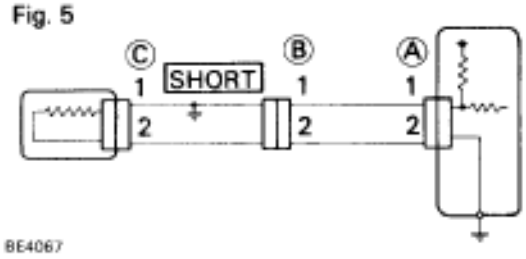

WhereEverybodyKnowsYourName

(a) Continuity Check with Ground

(1) Disconnect connectors (A) and (C) and measure the resistance between terminals 1 and 2 of connector (A) and body ground.
In the case of Fig. 6,
Between terminal 1 of connector (A) and body ground –> Continuity
Between terminal 2 of connector (A) and body ground –> No continuity (open)
Therefore, it is found out that there is a short circuit between terminal 1 of connector (A) and terminal 1 of connector (C).

Fig. 6

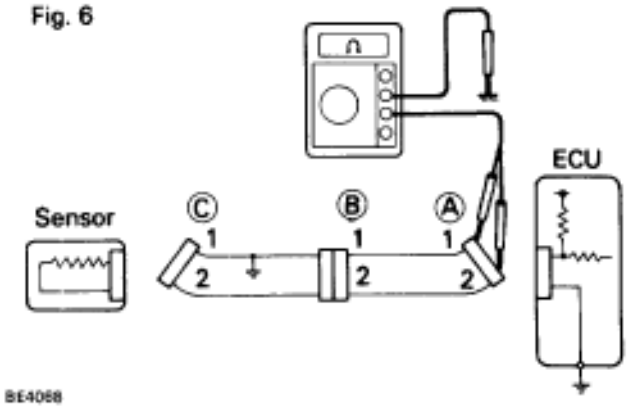

(2) Disconnect connector (B) and measure the resistance between terminal 1 of connector (A) and body ground, and terminal 1 of connector (B) and body ground.
Between terminal 1 of connector (A) and body ground –> No continuity (open)
Between terminal 1 of connector (B) and body ground –> Continuity
Therefore, it is found out that there is a short circuit between terminal 1 of connector (B) and terminal 1 of connector (C).

Fig. 7

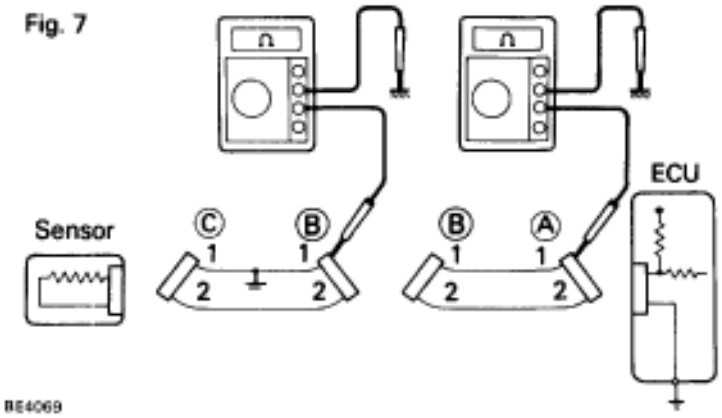

WhereEverybodyKnowsYourName

Check and Replace ECU

First check the ECU ground circuit. If it is faulty, repair it. If it is normal, the ECU could be faulty, so replace the ECU with a known good one and check if the symptoms appear.

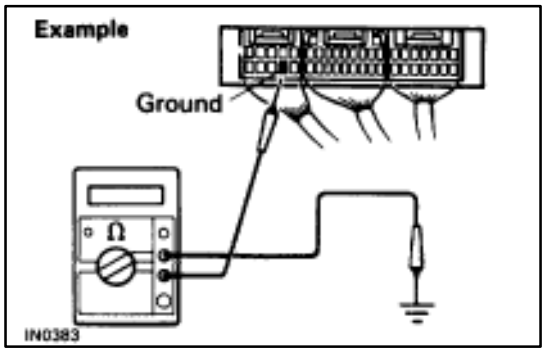

(1) Measure the resistance between the ECU ground terminal and the body ground.

Resistance: 1 or less

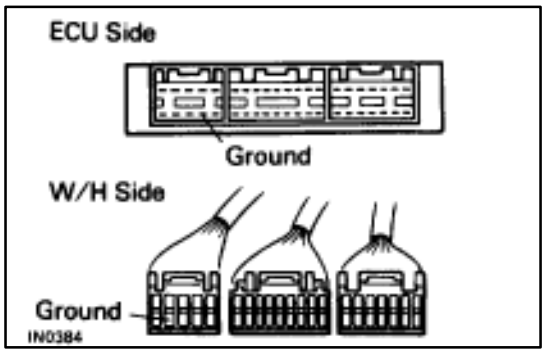

(2) Disconnect the ECU connector, check the ground terminals on the ECU side and the wire harness side for bend and check the contact pressure.

WhereEverybodyKnowsYourName

VEHICLE LIFT AND SUPPORT LOCATIONS

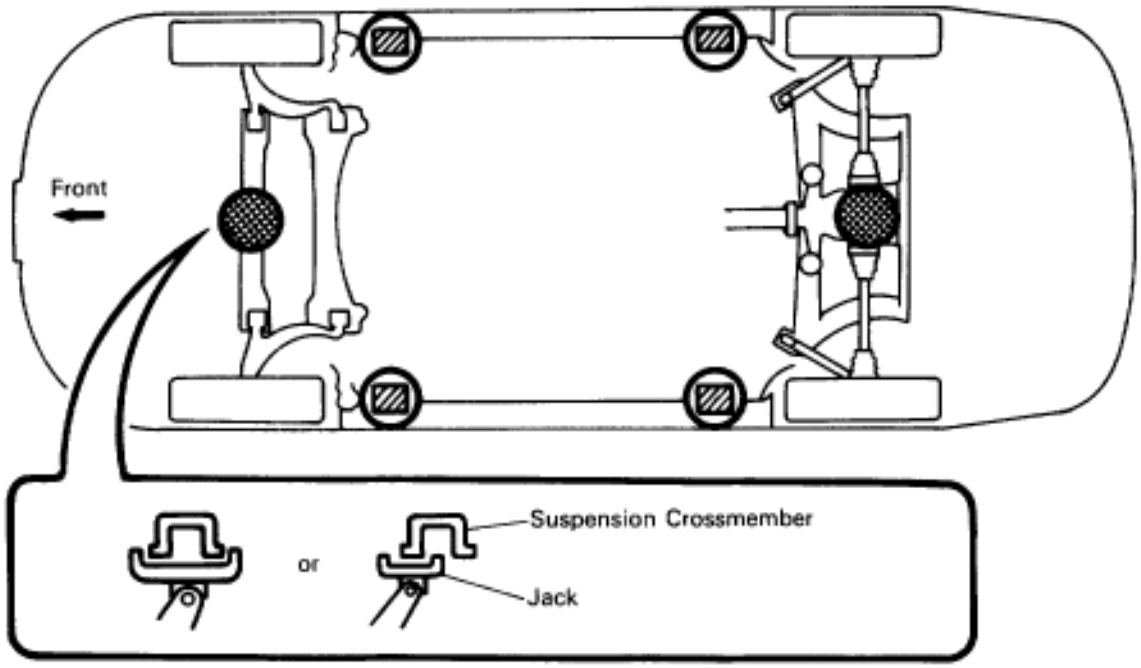

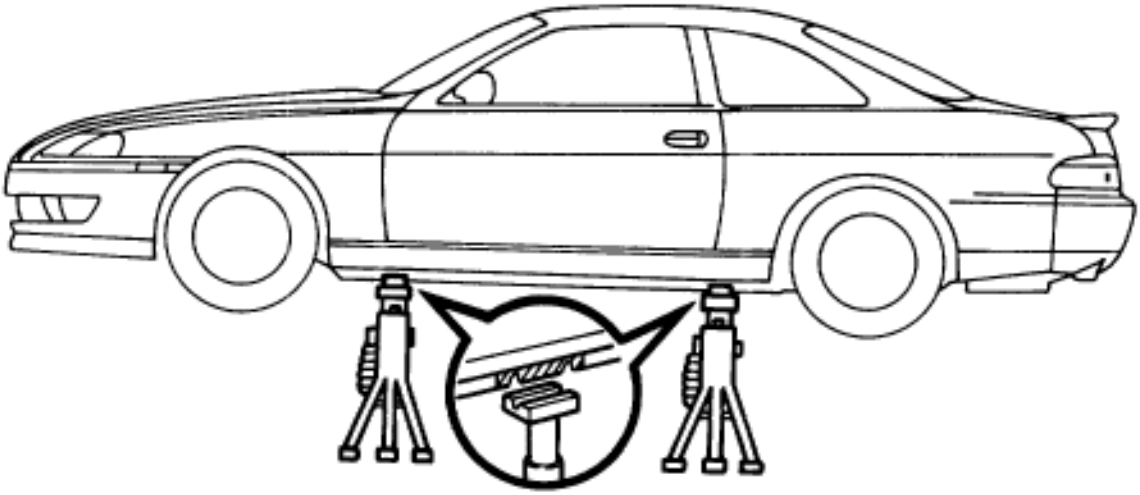

JACK POSITION ●

Front ..... Center of suspension crossmember
Rear ..... Jack up support of differential carrier

PANTOGRAPH JACK POSITION ○

SUPPORT POSITION

Safety stand or swing arm type lift .....

WhereEverybodyKnowsYourName

SERVICE SPECIFICATIONS

SERVICE DATA

Idle speed	Magnetic clutch no engaged	Approx. 700 rpm	
	Magnetic clutch engaged	Approx. 700 rpm	
Magnetic clutch clearance		0.5 ± 0.15 mm	0.020 ± 0.006 in.

TORQUE SPECIFICATIONS

Part tightened		N·m	kgf·cm	ft·lbf
Suction hose X Compressor		25	250	18
Discharge hose X Compressor		25	250	18
Compressor X Engine	Bolt	49	500	36
	Nut	29	300	22
Liquid tube X Receiver		10	100	7
Liquid tube X Condenser		10	100	7
Discharge tube X Condenser		10	100	7
Expansion valve X Evaporator		5.4	55	48 in.·lbf
Suction tube X A/C Unit		10	100	7
Liquid tube X A/C Unit		10	100	7
Equalizer tube X EPR		25	250	18
Pressure switch X Liquid tube		10	100	7

WhereEverybodyKnowsYourName

LEXUS

Technical Service Information Bulletin

April 3, 1998

TSIB

Title:

R-12 AIR CONDITIONER SYSTEM RETROFIT

Models:

'90–'93 ES 250/300, SC 400/300, LS 400

Introduction

The following information should be used for guidance when retrofitting vehicle air conditioning systems from R–12 to R134a refrigerant.

Affected Vehicles

- **1990–1992** model year **LS 400, 1990–1991** model year **ES 250, 1992–1993** model year **ES 300, 1992–1993** model year **SC 300, 1992–1993** model year **SC 400**

Parts Information

All parts required for retrofit are available through the normal parts system:

IDENTIFICATION		REQUIRED PARTS & MATERIALS			
MODEL	COMPRESSOR	RETROFIT SET	RECEIVER	ND OIL 8	CHARGE
LS 400	10PA20	88840–33020 (1) plus 90099–14044 (2) 90099–14045 (1)	88471–16050	170 cc	1000 g
ES 250	10PA17V		88471–12040	100 cc	650 g
ES 300	10PA17		88471–16050	150 cc	900 g
SC 300					
SC400					

NOTE:

Retrofit Set 88840–33020 includes:

88374–33010	**Low pressure side service fitting adaptor (7/16–20 UNF)**
88374–33020	**High pressure side service fitting adaptor (3/8–20 UNF)**
88723–20040	**R134a "USE ONLY" label (ND Oil 8 for 10P, 10PA compressor)**
88723–33050	**Retrofit Caution Label**
90099–14046	**Piping O–rings for discharge hose (quantity 2)**

Required for all models (not included in set):

90099–14044	**Receiver O–rings (quantity 2)**
08885–09107	**ND–Oil 8**

Also available as needed:

88374–33040	**L–shaped low pressure side service fitting adaptor**
88374–33050	**L–shaped high pressure side service fitting adaptor**

Warranty Information

OP CODE	NWC	DESCRIPTION	TIME	OPN	T1	T2
Not Applicable to Warranty						

Table of Contents

Affected Vehicles ..... **page 1**
Service Precautions ..... **page 3**
Retrofit Kit Parts ..... **page 1**
Required Parts ..... **page 2**
Required Tools & Materials ... **page 2**
Retrofitting Overview ..... **page 2**
Repair Procedures ..... **page 3**
Warranty Information ..... **page 1**

WhereEverybodyKnowsYourName

Required Tools & Materials

A. Required Equipment:

1. R–12 recovery/recycling/recharging equipment
2. R134a recovery/recycling/recharging equipment
3. Measuring cylinder (for compressor oil)
4. Valve core remover for service valves
5. Air conditioner service tool set
6. Torque Wrench Set, P/N 00002–50284–01, includes the following*:
   - 14 mm 00002–51410–01
   - 17 mm 00002–51710–01
   - 22 mm 00002–52216–01
   - 27 mm 00002–52724–01

B. Required Parts & Materials: **

1. R134a Refrigerant
2. Service Fitting Adaptors
3. Caution Labels
4. ND–OIL 8 compressor oil (PAG type oil)
5. Receiver
6. O–Rings for compressor, line & hose connections ***
7. Loctite 262 or equivalent

* required size dependent upon model.
** see parts information section of this bulletin on page 1.
*** it is **not** necessary to replace any O–rings on ES 300, SC 300 and SC 400 models.

Retrofitting Overview

A. Refrigerant and Oil Charges

- Oil and refrigerant charge amounts are different after the R–12 system has been retrofitted to R134a. Refrigerant charge amounts are less, while oil charge amounts are greater, compared to R–12 system requirements. Refer to the **ND OIL 8** and **CHARGE** columns in “Parts Information” table on page 1 for proper amounts.

B. System Performance

- A slight decrease in system performance may be noticed on some vehicles under certain operating conditions.

C. Refrigerant Pressures

- R134a high side pressures are greater than that of R–12 above ambient temperatures of 68˚F.

D. Flushing Requirements

- There is no need to remove or flush R–12 mineral oil from the system. Simply charge the system with the specified amount of ND–Oil 8 to provide proper lubrication.

E. Use of Sight Glass

- Mineral based R–12 oil remains and circulates in the A/C system and does not dissolve in R134a refrigerant. This results in a cloudy appearance at the sight glass making it impossible to judge the refrigerant charge amount by using the sight glass method. To prevent misdiagnosis on retrofit vehicles, apply black paint to the sight glass on block–joint (FF) type Receivers. Union–nut joint (BAG) type retrofit Receivers are manufactured without a sight glass.

WhereEverybodyKnowsYourName

Service Precautions

A. Refrigerant handling
   1. Do not handle refrigerant in an enclosed area or near an open flame.
   2. Always wear eye protection.
   3. Avoid getting liquid refrigerant in your eyes or on your skin.
   4. Never heat a container with an open flame.
   5. Keep containers below 104˚F.
   6. When heating a refrigerant can with water, keep the valve above water.
   7. Never reuse empty service cans.

B. Replacing parts
   1. Plug off any open connections to prevent the entry of moisture and dust.
   2. Do not remove plugs from Receiver ports until it is ready for installation.

C. Tightening connecting parts
   1. Apply a few drops of ND–Oil 8 compressor oil to O–ring fittings before tightening.
   2. Avoid twisting refrigerant piping when installing R134a service fitting adapters.
   3. Tighten all fittings to specified torque.

D. Recharging with A/C “on”
   1. Never open the high side valve with the engine running.
   2. Never run the A/C system when low on refrigerant as compressor damage may occur.
   3. Never charge the system with liquid refrigerant with the engine running.
   4. Be careful not to overcharge the system.

NOTE:
Oil removed during R–12 evacuation should not be used with an R134a System.

Repair Procedure

A. Vehicle Inspection:
   - Ensure the integrity of the A/C system before proceeding with retrofit.

B. Recover R–12 using R–12 recovery/recycling/recharging equipment:
   - Follow Lexus recommended procedure.

C. Install R134a service fitting adapters:
   1. Remove valve cores from R–12 service fittings and discard.
   2. Clean external threads of the R–12 service fittings.
   3. Apply adhesive to threads (Loctite 262 or equivalent), screw on R134a adapter fittings, and tighten to **13** ft–lb.

NOTE:
Vehicles with more than 2 service fittings will require the installation of additional adaptors. All service fittings must have R134a adaptors installed.

D. Replace piping and hose O–rings:
   1. Disconnect discharge hose from compressor.
   2. Remove and discard old O–rings.
   3. Lubricate with ND–Oil 8 and install **new** O–rings.
   4. Disconnect discharge hose from condenser.
   5. Lubricate and install retrofit O–rings with ND–Oil 8.
   6. Reconnect hoses and torque to specification. (Specifications can be found in applicable manuals/guides.)

WhereEverybodyKnowsYourName

Repair Procedure (continued)

E. Replace Receiver
   1. Remove original R–12 Receiver and discard.
   2. Measure oil and pour 1/2 of specified amount of oil into the **"OUT"** side of new Receiver (see table on page 1 for amount).
   3. Black out the sight glass on block – joint – type Receiver with black paint.
   4. Lubricate and install the O–rings on the Receiver connections.
   5. Install Receiver.

F. Using **R134a** Recovery equipment, evacuate, charge, and leak test the system (Use equipment manufacturer's recommended procedure).
   1. Evacuate for 45 minutes.
   2. Vacuum check.
   3. If vacuum check is OK, add remaining 1/2 compressor oil using the recovery equipment.
      - Using recovery / recycling / recharging equipment charge the system with the remaining ½ of the specified amount of oil from step **E2**.
   4. Charge system with specified amount of **R134a**. (reference table on page 1).
   5. Perform a gas leak check.

G. Confirm cooling performance of Air Conditioning system.

H. Install retrofit labels:
   1. Choose **R134a "USE ONLY"** label for proper oil type (**ND–OIL 8**).
   2. Using a ball point pen, enter the proper retrofit refrigerant and oil charges on the caution label.
   3. Cross out unused type of compressor oil on caution label.
   4. Affix labels in a prominent location such as radiator support, underside of hood, or suspension tower area.
   5. Remove any R–12 labels.

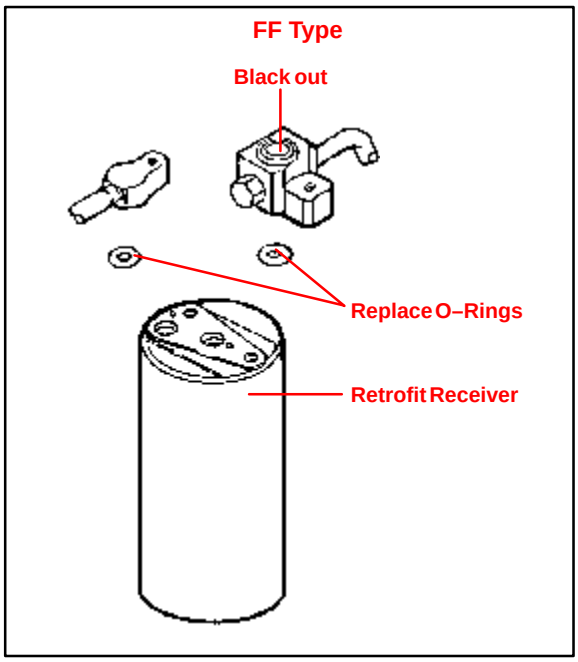

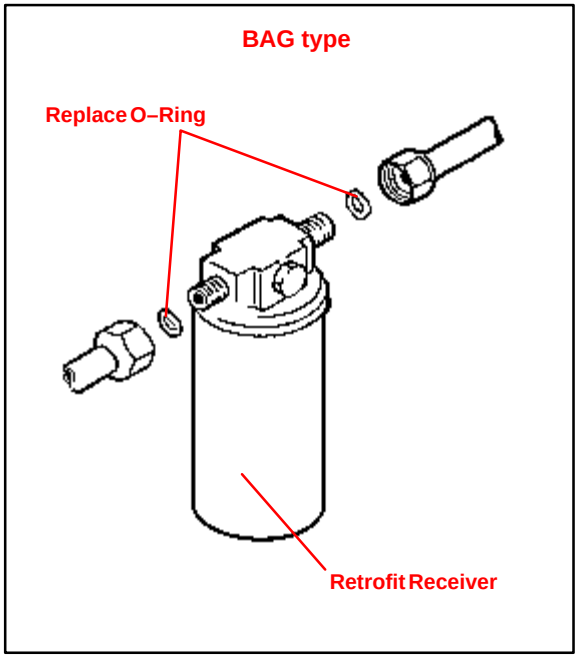

WhereEverybodyKnowsYourName

AIR CONDITIONING SYSTEM

WhereEverybodyKnowsYourName

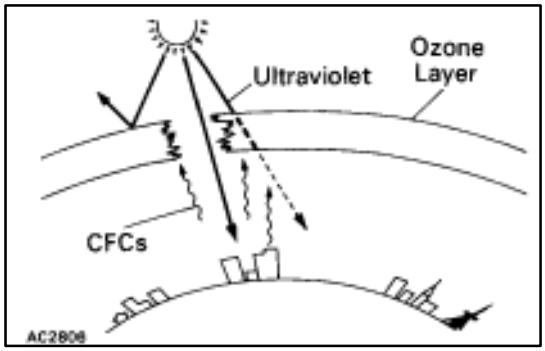

GENERAL DESCRIPTION

REFRIGERATION SYSTEM

Prevention of Refrigerant Release and Excessive Quantities

Refrigerant (CFCs) for automobile air conditioners is believed to cause harm by depleting the ozone layer which helps to protect us from the ultraviolet rays of the sun.

Therefore, it is necessary to prevent release of refrigerant to the atmosphere and to use minimum amount when servicing the air conditioner.

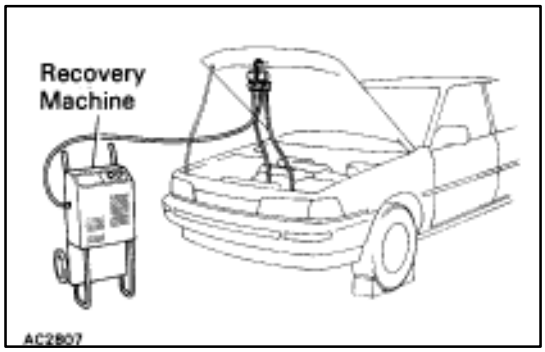

1. USE RECOVERY MACHINE TO RECOVER REFRIGERANT

When discharging refrigerant from the system as follows, use a recovery machine to recover the refrigerant.

- Before replacing parts on the refrigerant line.
- When moisture or air gets in the refrigerant line.
- When excess refrigerant is charged.

NOTICE:

- **When handling the recovery machine, always follow the directions given in the instruction manual.**
- **After recovery, the amount of compressor oil removed must be measured and the same amount added to the system.**

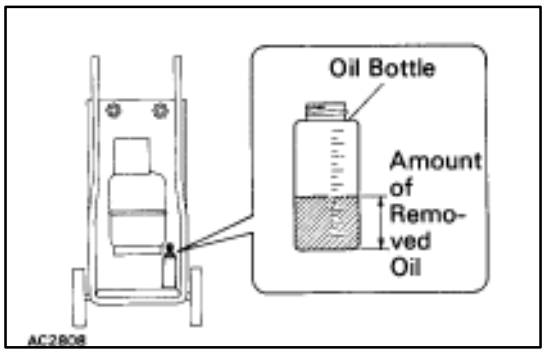

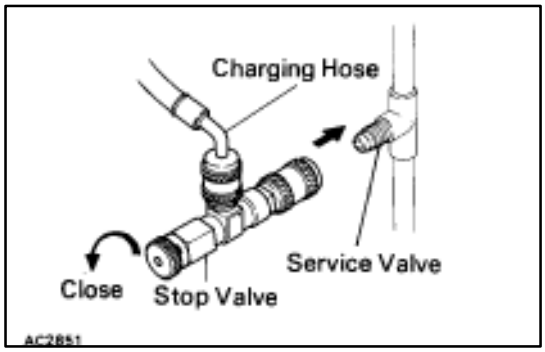

2. USE CHARGING HOSES WITH STOP VALVE WHEN INSTALLING MANIFOLD GAUGE SET

To prevent release of refrigerant, using charging hoses with a stop valve when installing the manifold gauge set to the service valves on the refrigerant line.

3. TIGHTEN CONNECTING PARTS SECURELY

Follow the notices about tightening connecting parts in step 6 on page AC–4.

4. PROPERLY EVACUATE AIR FROM REFRIGERANT SYSTEM

To prevent release and wasteful use of refrigerant, evacuate air with care from refrigeration system as follows:

- Do not evacuate before recovering refrigerant in system.
- Do not perform repeat evacuation of system.

WhereEverybodyKnowsYourName

- **Do not perform repeat evacuation of system**

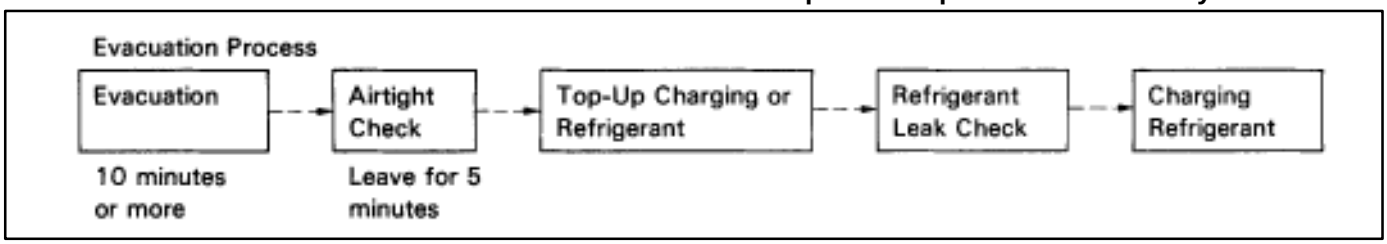

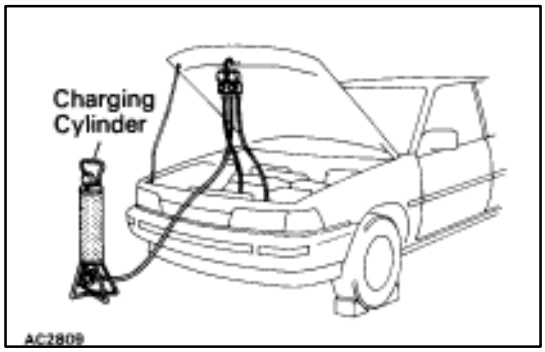

5. USE CHARING CYLINDER TO CHARGE PROPER AMOUNT OF REFRIGERANT

To prevent excessive use of refrigerant due to overcharging, use a charging cylinder to charge the proper amount of refrigerant.

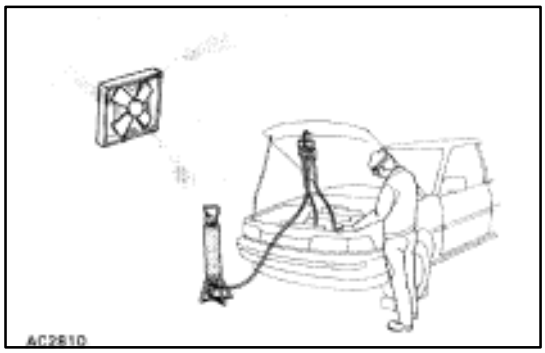

Handling Precautions for Refrigerant

1. **DO NOT HANDLE REFRIGERANT IN AN ENCLOSED AREA OR NEAR AN OPEN FLAME**
2. **ALWAYS WEAR EYE PROTECTION**

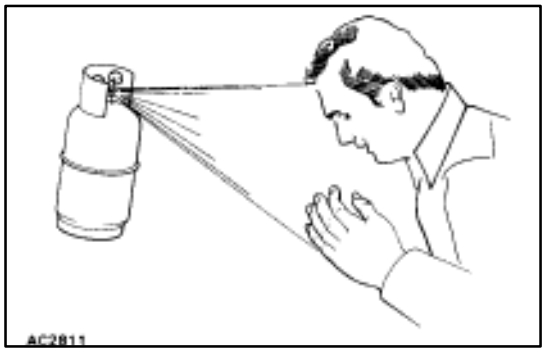

3. **BE CAREFUL THAT LIQUID REFRIGERANT DOES NOT GET IN YOUR EYES OR ON YOUR SKIN**

   If liquid refrigerant gets in your eyes or on your skin:

   (a) Wash the area with lots of cool water.

   CAUTION: Do not rub your eyes or skin.

   (b) Apply clean petroleum jelly to the skin.

   (c) Go immediately to a physician or hospital for professional treatment.

   CAUTION: Do not attempt to treat yourself.

Handling Precautions for Refrigerant Container

1. **NEVER HEAT CONTAINER OR EXPOSE IT TO NAKED FLAME**
2. **BE CAREFUL NOT TO DROP CONTAINER AND NOT TO APPLY PHYSICAL SHOCKS TO IT**

WhereEverybodyKnowsYourName

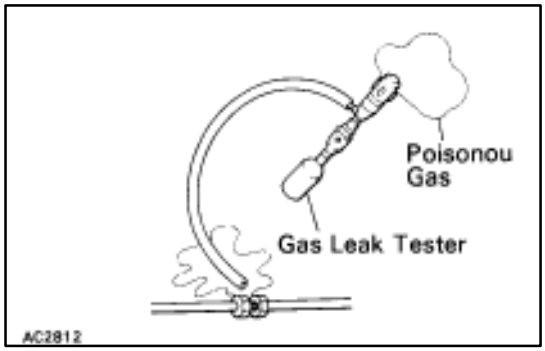

Handling Precautions for Gas–Cylinder Type Gas Leak Tester

1. **BEFORE USING TESTER MAKE SURE THAT THERE ARE NO FLAMMABLE SUBSTANCES NEARBY**
2. **BE CAREFUL NOT TO INHALE POISONOUS GAS**
   If refrigerant gas comes in contact with flame, a poisonous gas is prodused. During leak tests, do not inhale any gas.

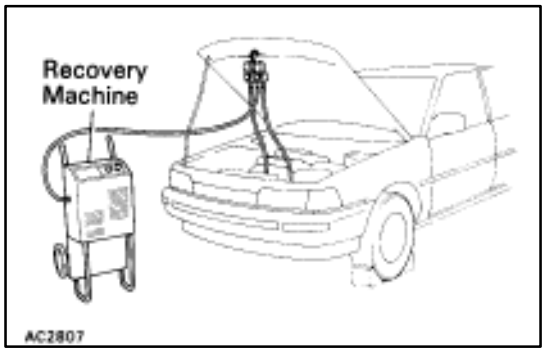

Precautions When Replacing Parts in Refrigerant Line

1. **RECOVER REFRIGERANT IN SYSTEM BEFORE REMOVING PARTS**
   Using a recovery machine, recover refrigerant in system before removing the parts.
   NOTICE: Do not release refrigerant to atmosphere.

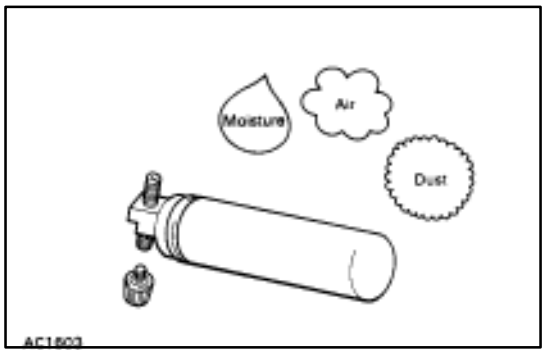

2. **INSERT PLUG IMMEDIATELY IN DISCONNECTED PARTS**
   Insert a plug immediately in the disconnected parts to prevent the entry of moisture and dust.
3. **DO NOT REMOVE PLUG FROM NEW PARTS UNTIL IMMEDIATELY BEFORE INSTALLATION**
4. **DO NOT USE BURNER FOR BENDING OR LENGTHENING OPERATIONS ON TUBE**

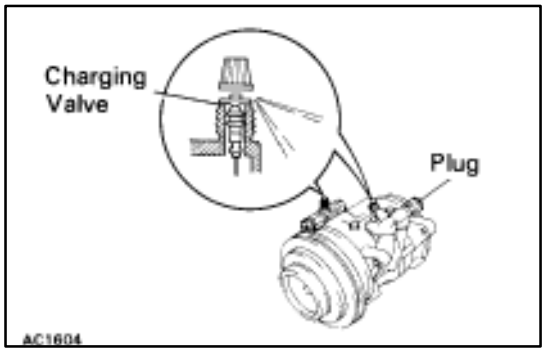

If the tubes are heated with a burner, a layer of oxidation forms inside the tube, causing the same kind of trouble as an accumulation of dust.

5. **DISCHARGE GAS IN NEW COMPRESSOR FROM CHARGING VALVE BEFORE INSTALLING IT**
   If the gas in new compressor is not discharged first, compressor oil will spray out with gas when the plug is removed.

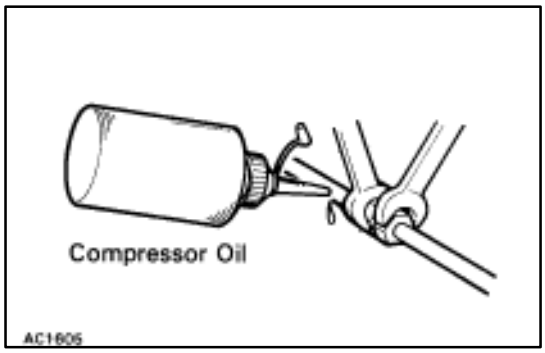

6. **TIGHTEN CONNECTING PARTS SECURELY**
   Securely tighten the connecting parts to prevent leaking of refrigerant gas.
   - Apply a few drops of compressor oil to O–ring fittings for easy tightening and to prevent leaking of refrigerant gas.
   - Tighten the nuts using two wrenches to avoid twisting the tube.

WhereEverybodyKnowsYourName

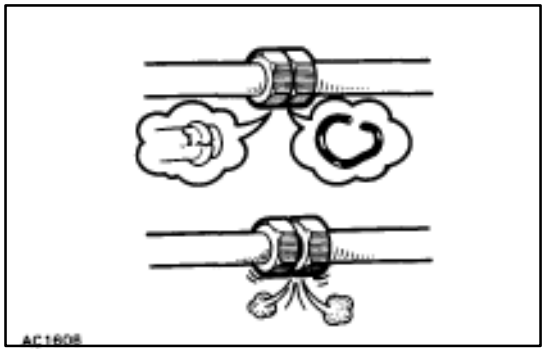

- Tighten the O–ring fittings or the bolted type fittings to the specified torque.

Precautions When Charging Refrigerant

1. **DO NOT OPERATE COMPRESSOR WITHOUT ENOUGH REFRIGERANT IN REFRIGERANT CYCLE**
   If there is not enough refrigerant in the refrigerant cycle, oil lubrication will be insufficient and compressor burnout may occur, so take care to avoid this.

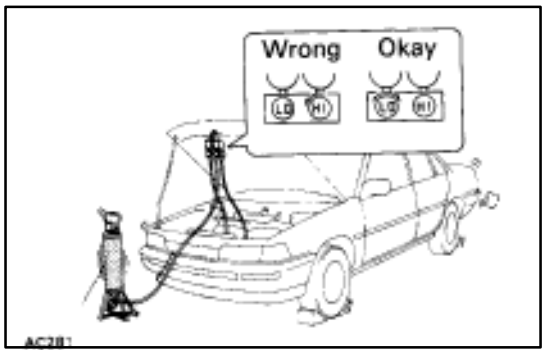

2. **DO NOT OPEN HIGH PRESSURE VALVE OF MANIFOLD GAUGE WITH COMPRESSOR OPERATING**
   If the high pressure valve is opened, refrigerant flows in the reverse direction and could cause the charging cylinder to rupture, so open and close the low pressure valve only.
3. **BE CAREFUL NOT TO OVERCHARGE WITH REFRIGERANT IN SYSTEM**
   If refrigerant is overcharged, it causes trouble such as insufficient cooling, poor fuel economy, engine overheating etc.

Electrical Parts

Before removing and inspecting the electrical parts, set the ignition switch to the LOCK position and disconnect the negative (–) terminal cable from the battery.
CAUTION: Work must not be started until after at least 20 seconds or longer from the time the negative (–) terminal cable is disconnected.

SRS Airbag System

Failure to carry out service operations in the correct sequence could cause the airbag system to deploy, possibly leading to a serious accident.
When removal or installation of the parts and the yellow wire harness and connector for the airbag is necessary, refer to the precautionary notices in the AB section before performing the operation.

WhereEverybodyKnowsYourName

DESCRIPTION

FEATURES

The microprocessor controlled automatic air conditioner is a system which controls the the cabin air conditioning automatically using a microcomputer.

The microcomputer senses the air temperature outside and inside the cabin, the amount of sunlight, the compressor operating condition and temperature setting, etc. and maintains the optimum blower air temperature and air flow at the intakes and outlets automatically.

PARTS LOCATION

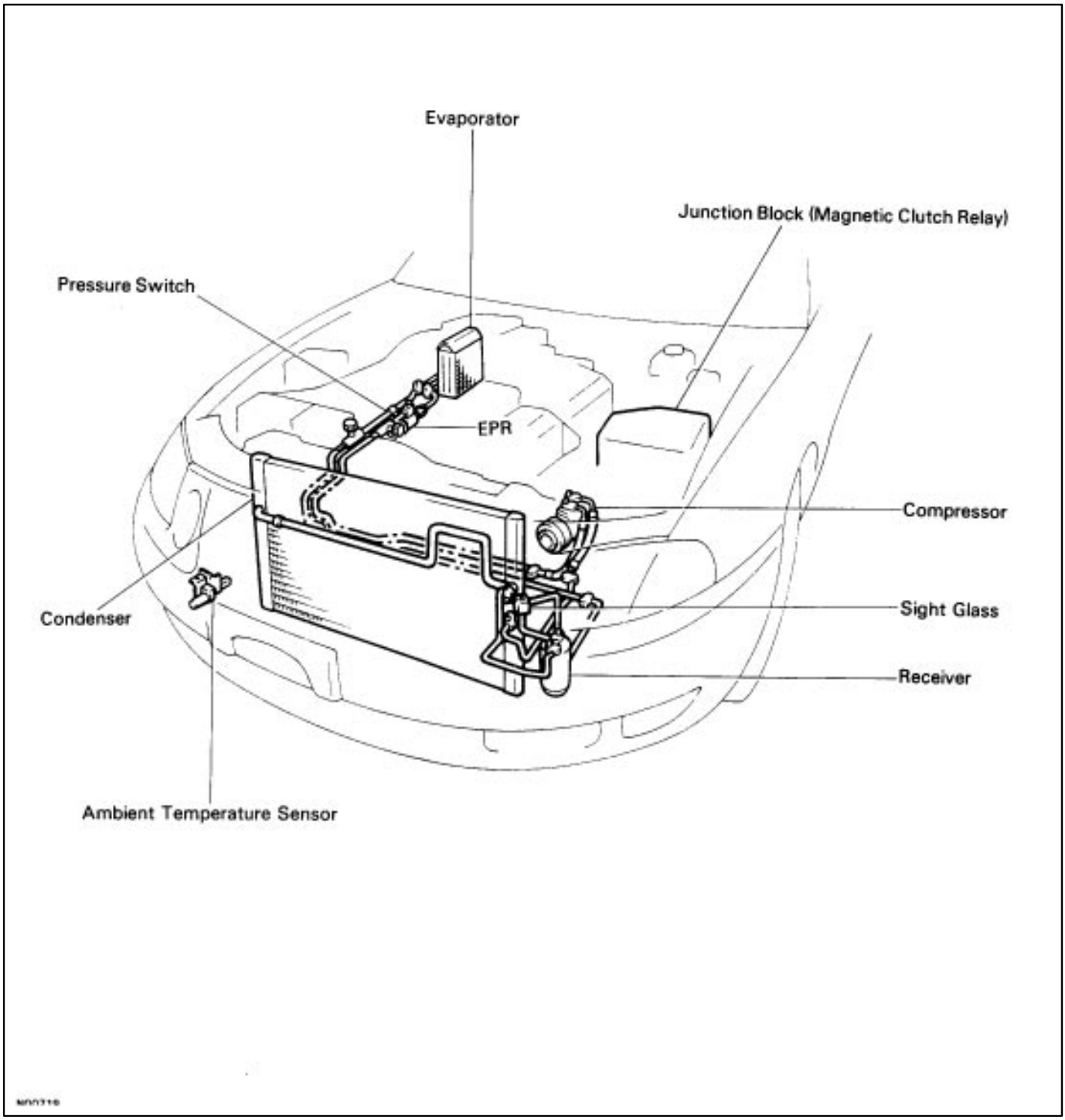

WhereEverybodyKnowsYourName

PARTS LOCATION (Cont'd)

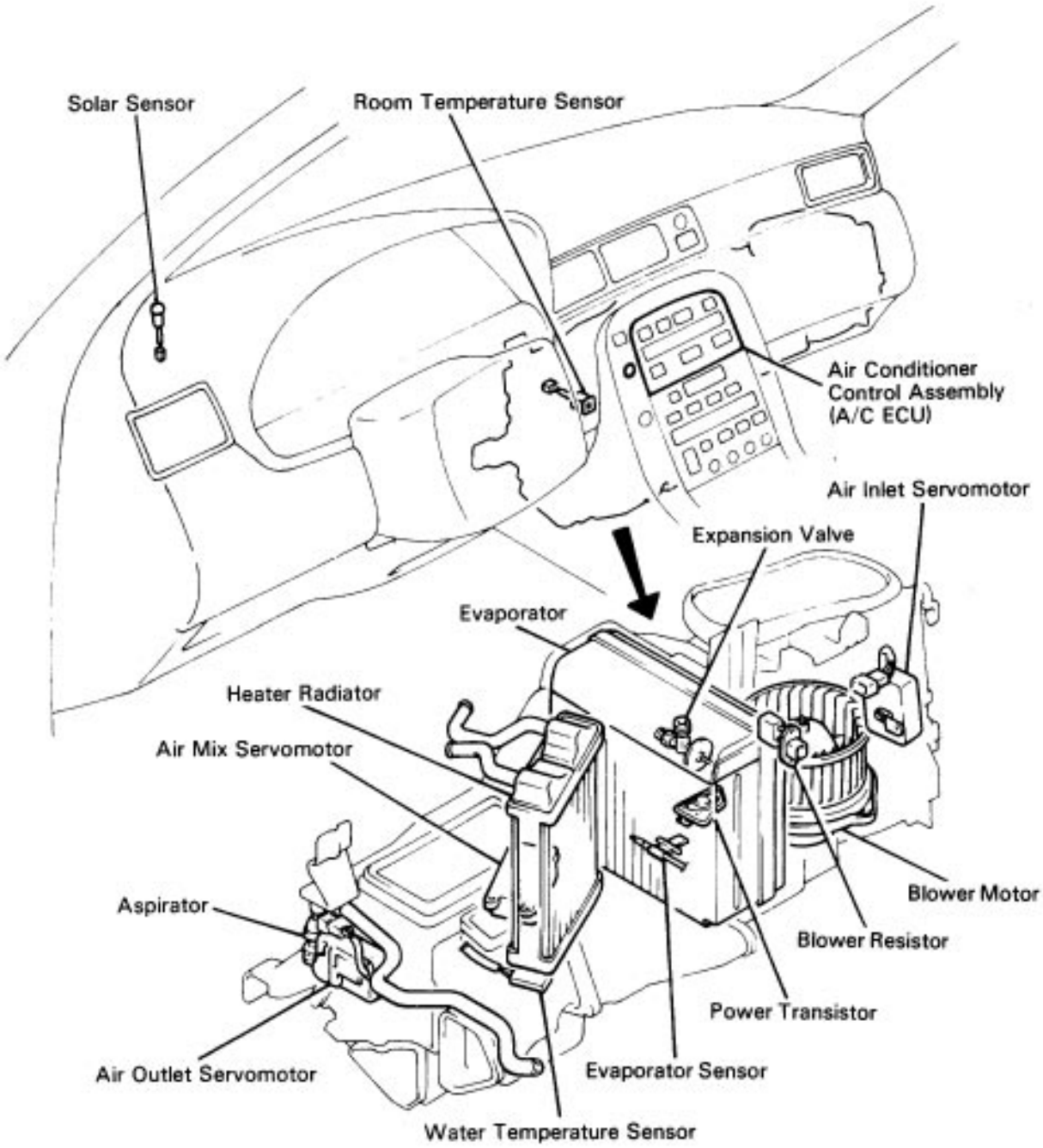

N00718

WhereEverybodyKnowsYourName

OPERATION OF DAMPERS

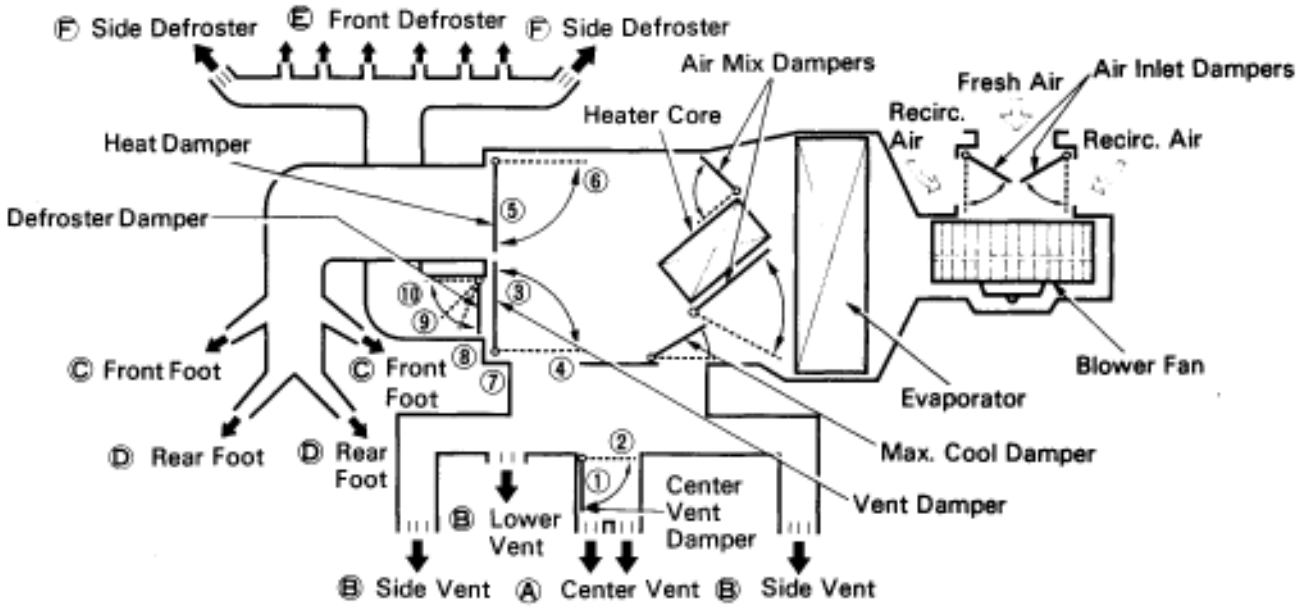

N01189

Air Outlet Mode		Mode Control Damper Position	Vent		Foot		Defroster	
			Ⓐ Center	Ⓑ Side	Ⓒ Front	Ⓓ Rear	Ⓔ Front	Ⓕ Side
Face		① ③ ⑤ ⑦	○	○				
Bi-level		① ③ ⑥ ⑦	○	○	○	○		
Foot*	I	② ④ ⑥ ⑧		○	○	○	○	○
	II	② ④ ⑥ ⑦		○	○	○		
Foot Defroster		② ④ ⑥ ⑨		○	○	○	○	○
Defroster		② ④ ⑤ ⑩		○			○	○

The size of the circle ○ indicates the proportion of air flow volume.

* Foot I indicates the status during automatic control and Foot II indicates the status during manual control.

0018E

WhereEverybodyKnowsYourName

CONTROL FUNCTIONS
Interior Room Temperature Control System

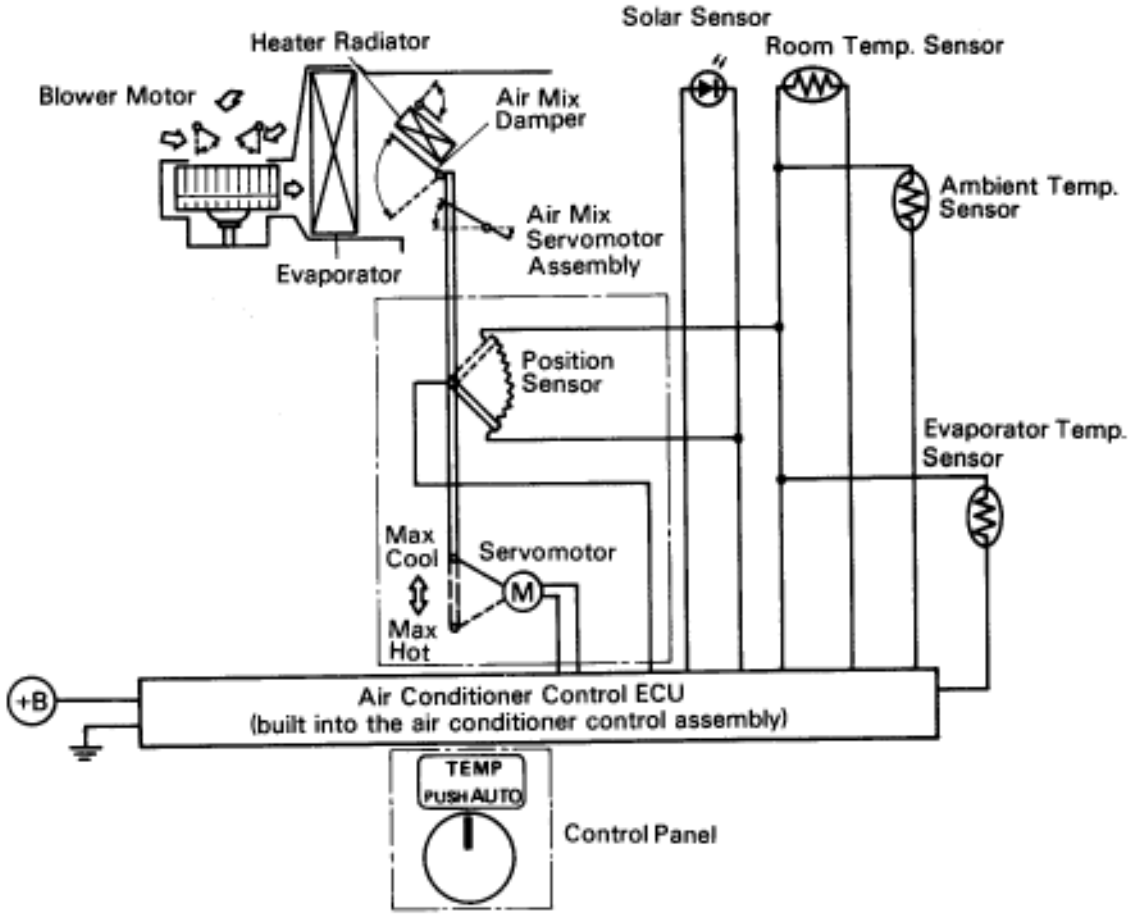

(a) The desired temperature is set using the TEMP switch.

(b) From the input signals (room temperature sensor, ambient temperature sensor, evaporator temperature sensor and solar sensor) and the temperature setting, the air conditioner control ECU determines the air flow volume and outputs signals to the air mix servomotor.

(c) When it receives signals from the ECU, the air mix servomotor opens or closes the air mix damper to change the air flow temperature. When the temperature reaches the specified temperature, it is detected by the air mix damper position sensor and the ECU stops the servomotor.

HINT: If the desired temperature setting is 65˚F, the ECU forcedly sets the air mix damper to the Max Cool position. If it is set at 85˚F, the ECU forcedly sets the air mix damper to the Max Hot position.

WhereEverybodyKnowsYourName

Blower Fan Speed Control System

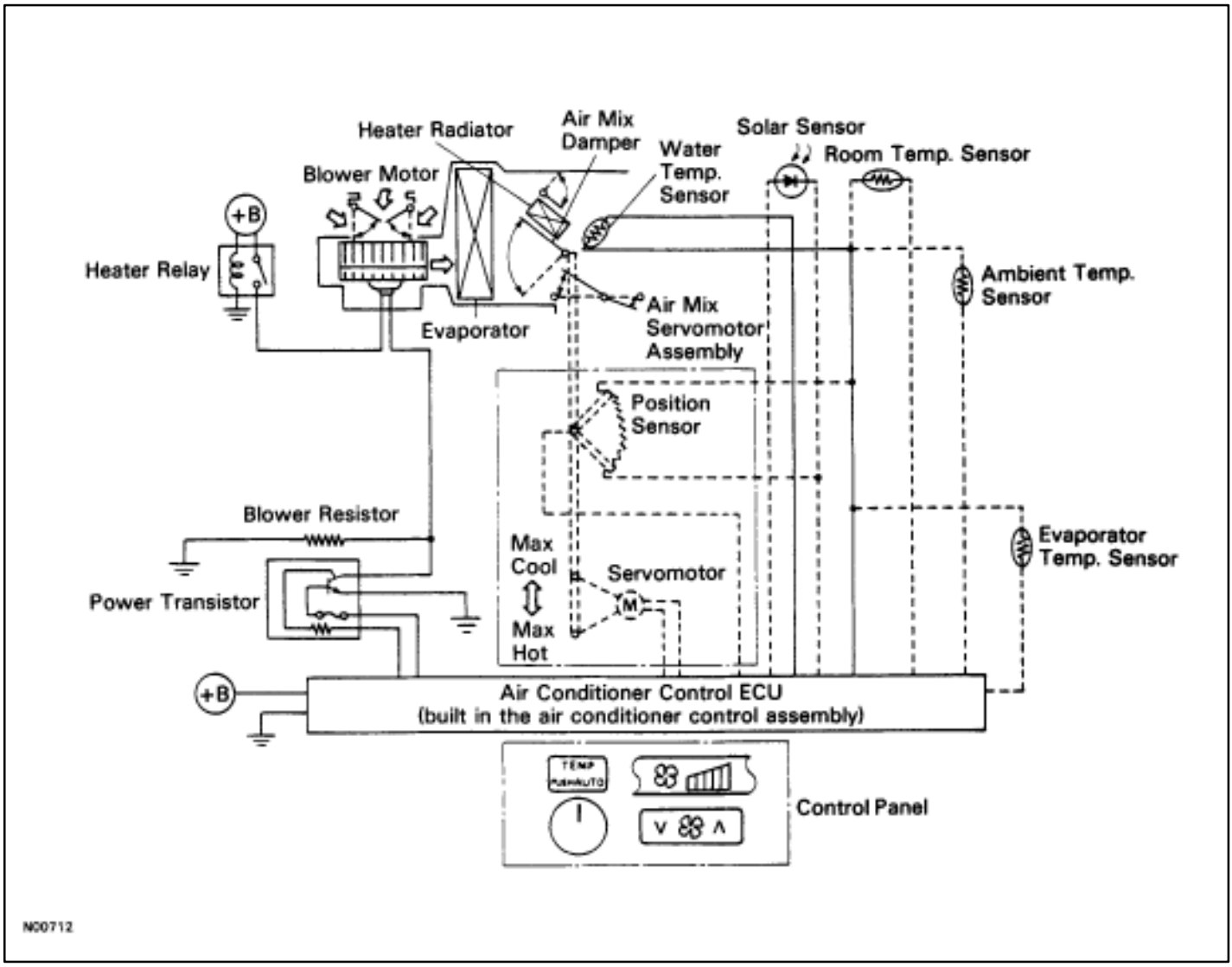

(When AUTO Switch is ON)

(a) The desired temperature is set using the TEMP switch.

(b) From the input signals (room temperature sensor, ambient temperature sensor and solar sensor) and the temperature setting, the air conditioner control ECU determines the air flow volume and outputs signals to the power transistor.

(c) When it receives signals from the ECU, the power transistor increases or reduces the blower motor speed to control the air flow volume.

(When AUTO Switch is OFF)

The ECU turns the power transistor increasing or reducing the blower motor speed fixing the air flow volume in accordance with the position of the Manual switch.

WhereEverybodyKnowsYourName

Air Flow Mode Control System

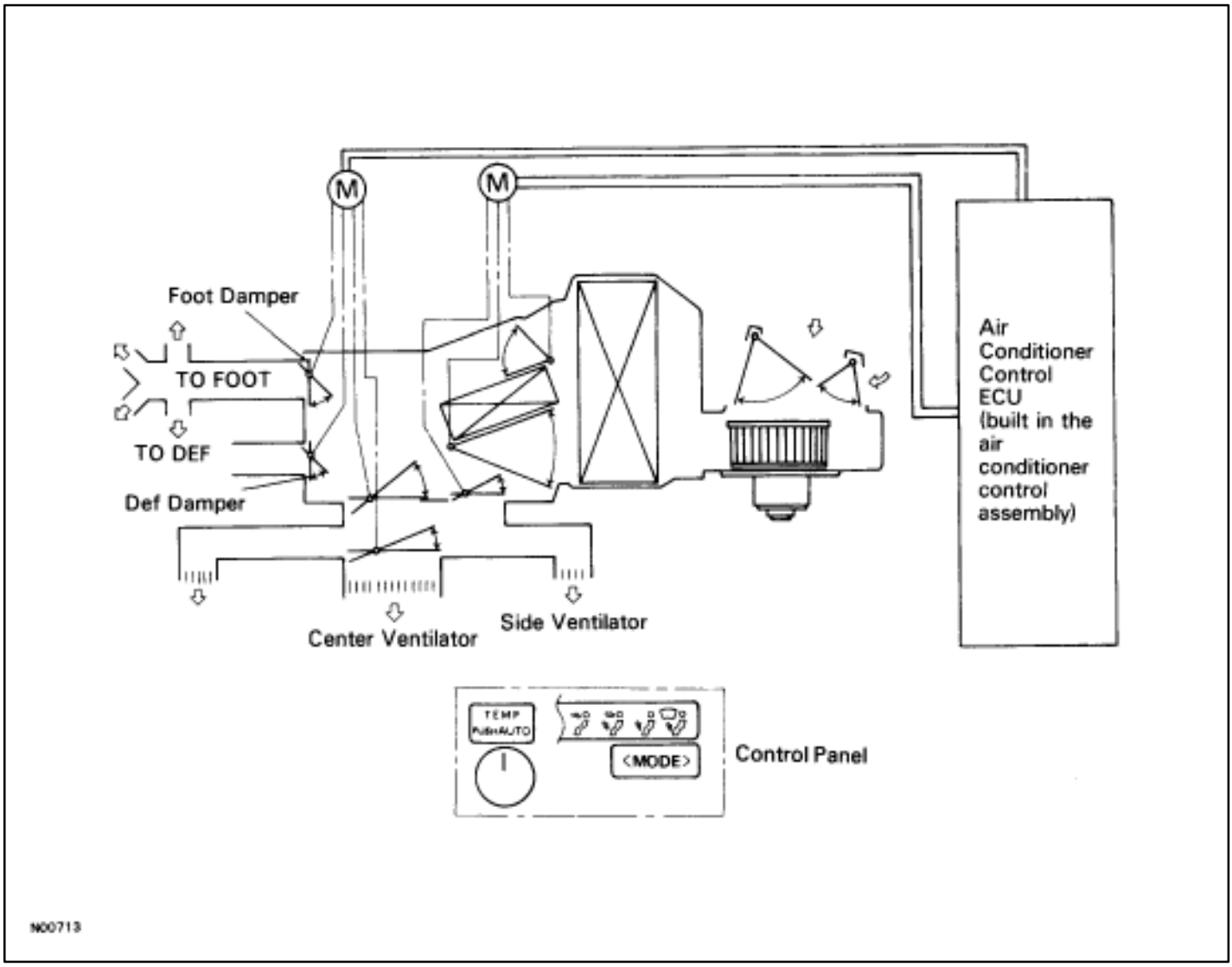

(When the AUTO Switch is ON)

(a) The desired temperature is set using the TEMP switch.

(b) From the input signals (room temperature sensor, ambient temperature sensor and solar sensor) and the temperature setting, the air conditioner control ECU determines the air flow mode and outputs signals to the mode servomotor and max cool servomotor.

(c) When it receives signals from the ECU, the servomotors open or close each of the dampers to change the air flow mode.

(When the AUTO Switch is OFF)

The ECU fixes the air flow mode in accordance with the Manual switch position.

(When the Engine is Cold)

If the Mode is set on B/L or FOOT, the ECU forcedly changes the air vent to DEF if cold signals are input from the water temperature sensor.

WhereEverybodyKnowsYourName

Air Inlet Control System

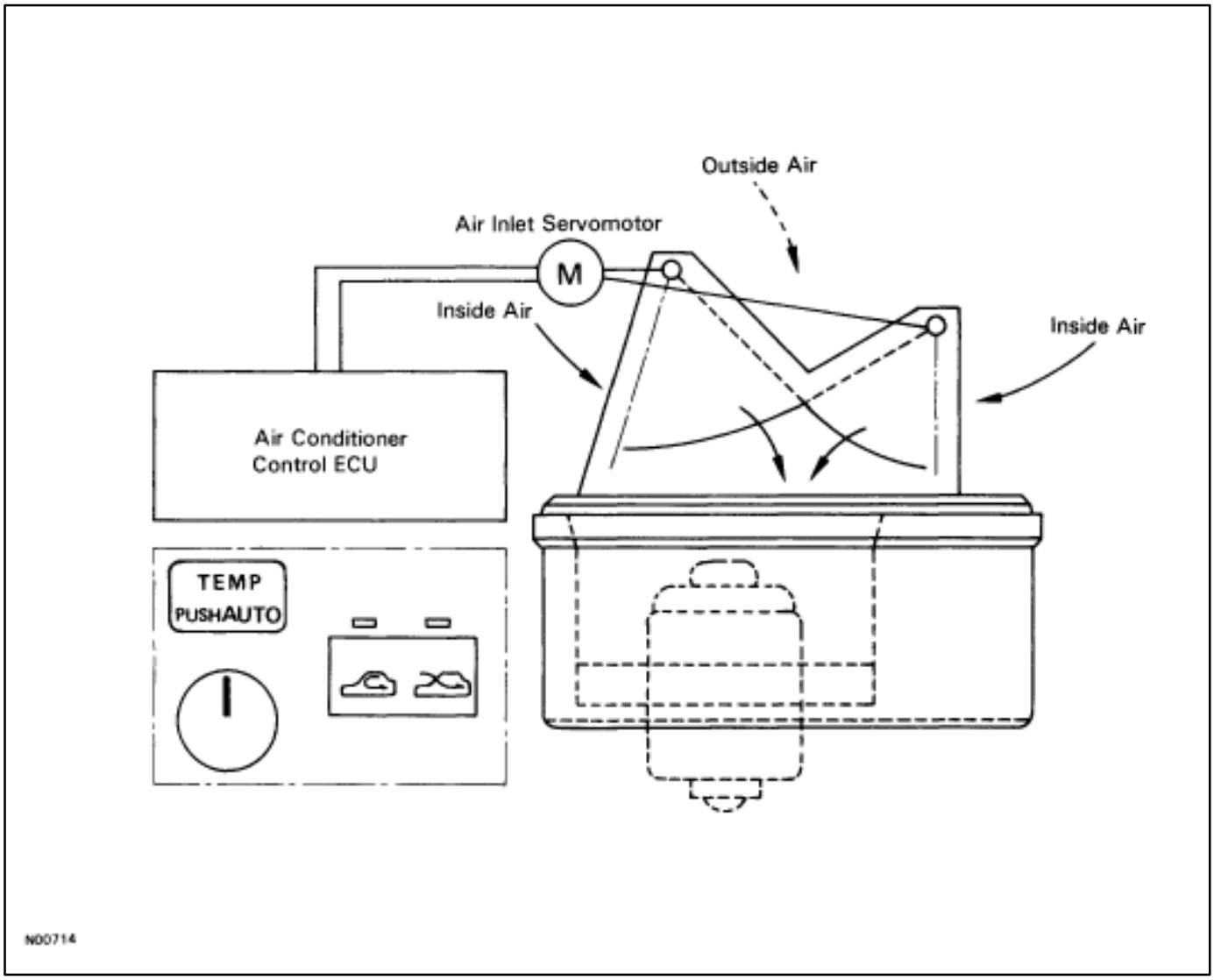

(When the AUTO Switch is ON)

(a) The desired temperature is set using the TEMP switch.

(b) From the input signals (room temperature sensor, ambient temperature sensor and solar sensor) and the temperature setting, the air conditioner control ECU determines the air inlet and outputs signals to the air inlet servomotor assembly.

(c) When it receives signals from the ECU, the air inlet servomotor opens or closes the damper to change the air inlet. When the air inlet is changed to the desired setting, it is detected by the air inlet damper position sensor and the ECU stops the servomotor.

HINT: If the Mode switch is set on DEF, the ECU forcedly changes the air inlet to FRS.

(When the AUTO Switch is OFF)

The ECU fixes the air inlet according to the position of the manual switch.

WhereEverybodyKnowsYourName

PREPARATION

SST (SPECIAL SERVICE TOOLS)

Illustration	Part No.	Part Name	Note
	07110-58011	Air Conditioner Service Tool Set	
	(07117-58010)	(Refrigerant Drum Service Valve)	
	(07117-78011)	(Refrigerant Charging Gauge)	
	(07117-88013)	(Refrigerant Charging Hose)	Green Color
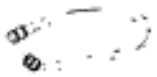	(07117-88022)	(Refrigerant Charging Hose)	Blue Color
	(07117-88040)	(Refrigerant Charging Hose)	Orange Color
	–	(Stop Valve)	
	07110-58040	Charging Hose Kit. w/Stop Valve	If you require a stop valve, please order this kit.
	07112-66040	Magnetic Clutch Remover	
	07112-76060	Magnetic Clutch Stopper	
	07114-82020	Snap Ring Pliers	
	07117-48050	Vacuum Pump Assy	Rated voltage AC220V

Illustration	Part No.	Part Name	Note
	09082-00015	TOYOTA Electrical Tester	Measure voltage currant and resistance

WhereEverybodyKnowsYourName

EQUIPMENT

Part Name	Note
Voltmeter	Measures voltage
Ammeter	Measures current
Ohmmeter	Measures resistance

LUBRICANT

Item	Capacity		Classification
	cc	fl. oz	
Compressor oil			ND OIL 6,
When replacing receiver	20	0.7	SUNISO No. 5GS or equivalent
When replacing condenser	40–50	1.4–1.7	
When replacing evaporator	40–50	1.4–1.7	

WhereEverybodyKnowsYourName

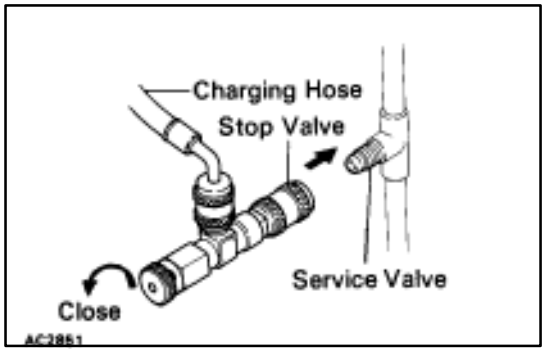

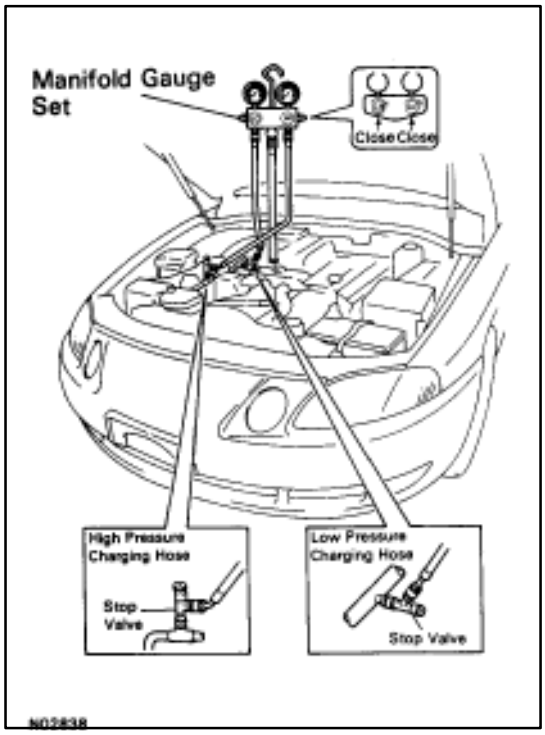

USE OF MANIFOLD GAUGE SET

INSTALLATION OF MANIFOLD GAUGE SET

HINT: To prevent releasing refrigerant, use charging hoses with a stop valve when installing the manifold gauge set to service valves on the refrigerant line.

1. **CONNECT CHARGING HOSES WITH A STOP VALVE TO MANIFOLD GAUGE SET**
   Tighten the nuts by hand.
   CAUTION:
   - **Do not connect the wrong hoses to the high pressure and the low pressure sides.**
   - **To prevent loosening the nuts, do not apply compressor oil to seat of the connection.**
2. **CLOSE HAND VALVES OF BOTH STOP VALVES**
3. **CLOSE BOTH HAND VALVES OF MANIFOLD GAUGE SET**
4. **REMOVE CAPS FROM SERVICE VALVES ON REFRIGERANT LINE**
5. **CONNECT STOP VALVES TO SERVICE VALVES**
   Tighten the nuts by hand.
   CAUTION:
   - **Do not connect the wrong hoses to the high pressure and the low pressure sides.**
   - **To prevent loosening the nuts, do not apply compressor oil to seat of the connection.**
6. **OPEN HAND VALVES OF BOTH STOP VALVES**

REMOVAL OF MANIFOLD GAUGE SET

1. **CLOSE BOTH HAND VALVES OF MANIFOLD GAUGE SET**
2. **CLOSE HAND VALVES OF BOTH STOP VALVES**
3. **DISCONNECT STOP VALVES FROM SERVICE VALVES ON REFRIGERANT LINE**
4. **INSTALL CAPS TO SERVICE VALVES ON REFRIGERANT LINE**

WhereEverybodyKnowsYourName

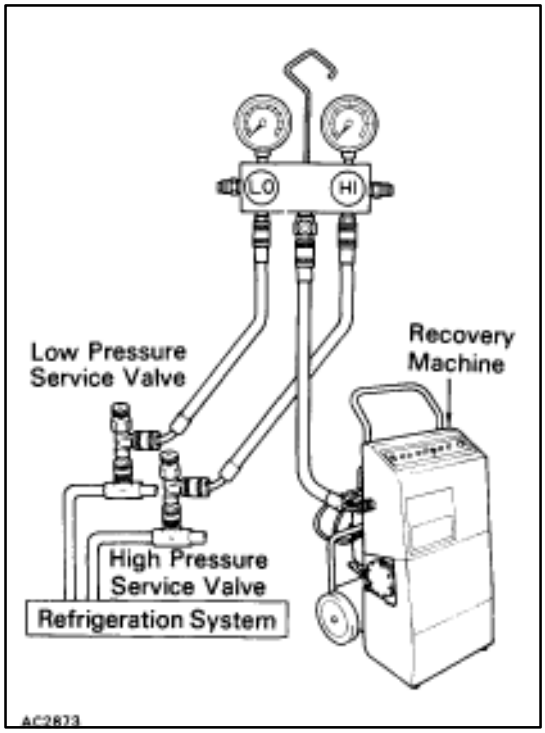

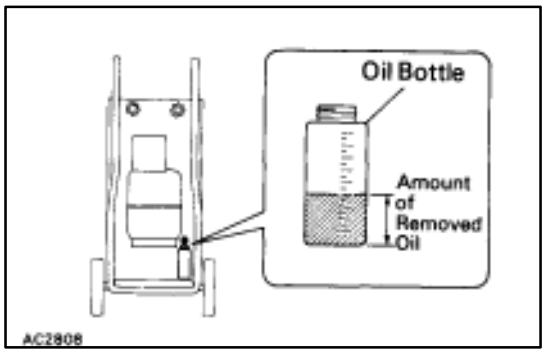

RECOVERING OF REFRIGERANT IN REFRIGERANT SYSTEM

When discharging refrigerant from the system as follows, use a recovery machine to recover the refrigerant.

Before replacing parts on the refrigerant line.
When moisture or air gets in the refrigerant line.
When excess refrigerant is charged.

NOTICE:

- **When handling the recovery machine, always follow the directions given in instruction manual.**
- **After recovery, the amount of compressor oil removed must be measured and same amount added into the system.**

1. **INSTALL MANIFOLD GAUGE SET TO SERVICE VALVES**
   See page AC–15
2. **RECOVER REFRIGERANT FROM REFRIGERATION SYSTEM**
   (a) Connect the center hose to recovery machine.
   (b) Operate the recovery machine.
   (c) Open both high and low hand valves of manifold gauge set.
3. **STOP RECOVERY MACHINE WHEN RECOVERING HAS FINISHED**
4. **REMOVE MANIFOLD GAUGE SET FROM SERVICE VALVES**
   See page AC–15

WhereEverybodyKnowsYourName

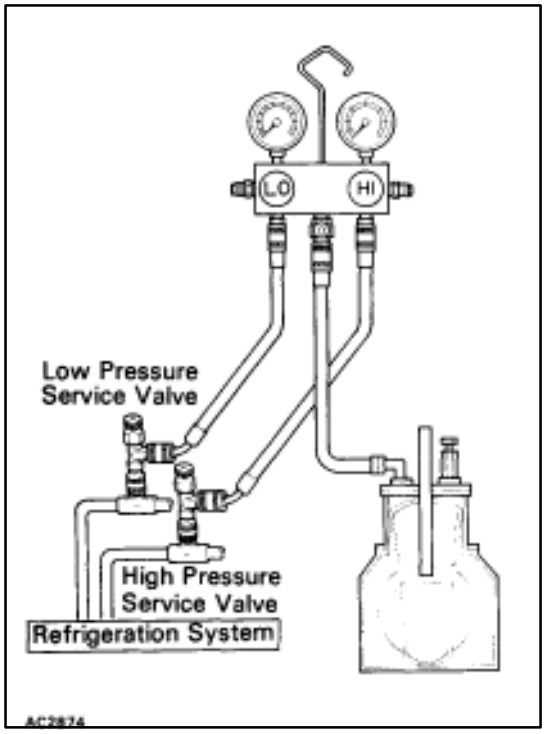

EVACUATING AIR IN REFRIGERATION SYSTEM AND CHARGING WITH REFRIGERANT

HINT: Before charging the system with refrigerant, be sure carry out a complete evacuation of the system.

1. **INSTALL MANIFOLD GAUGE SET TO SERVICE VALVES**
   See page AC–15
2. **EVACUATE AIR IN REFRIGERATION SYSTEM**
   (a) Connect the center hose of the manifold gauge set to the vacuum pump.
   (b) Open both the high and low hand valves and run the vacuum pump.

   HINT: If opening the low pressure hand valve pulls the high pressure gauge into the vacuum range, there is no blokage in the system.

   (c) After ten minutes or more, check that the low pressure gauge indicates 99.99 kPa (750 mmHg, 29.53 in.Hg) or more of vacuum.

   HINT: If the reading is not 99.99 kPa (750 mmHg, 29.53 in.Hg) or more of vacuum, close both the high and low hand valves of the manifold gauge set and stop vaccum pump. Then, check the system for leaks and repair as necessary.

   (d) Close both the high and low hand valves and stop the vacuum pump.
   (e) Leave the system in this condition for five minutes or longer and check that there is no change in the gauge indicator.

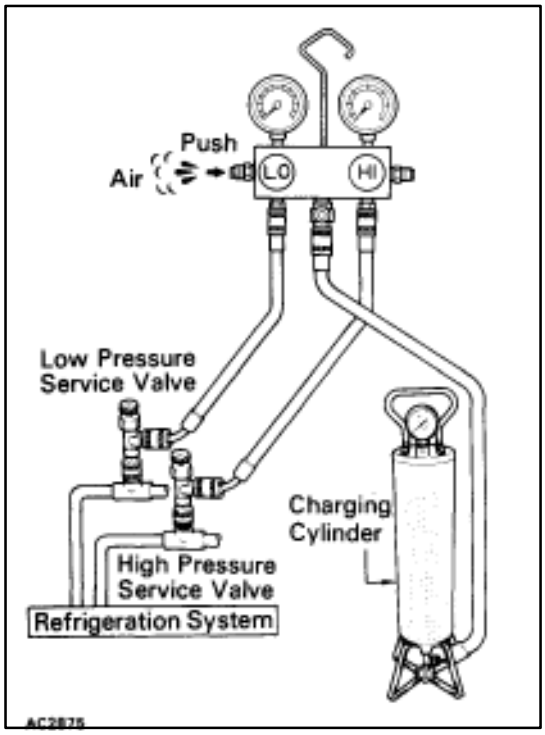

3. **INSTALL CHARGING CYLINDER**

   NOTICE: When handling the charging cylinder, always follow the directions given in the instruction manual.

   (a) Charge the proper amount of refrigerant in charging cylinder.
   (b) Connect the center hose to charging cylinder.

   NOTICE: Do not open both high and low hand valves of manifold guage set.

   (c) Press on the schrader valve on the side of manifold gauge and expel the air inside of the center hose.

WhereEverybodyKnowsYourName

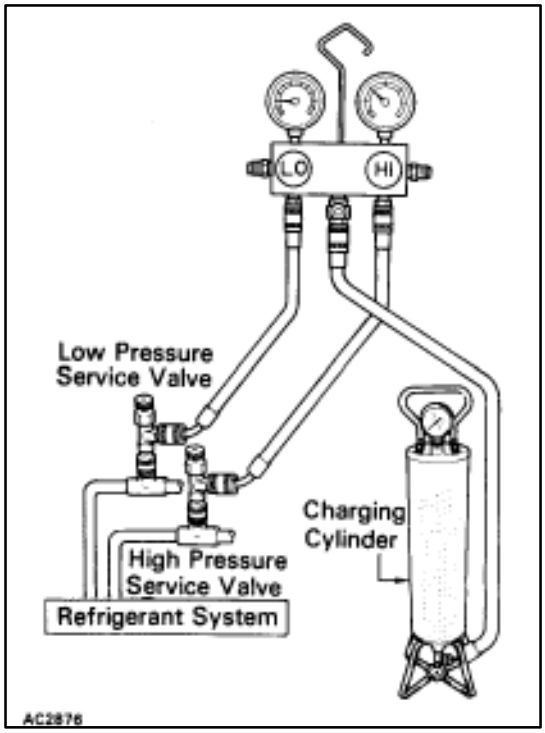

4. INSPECT REFRIGERATION SYSTEM FOR LEAKS

HINT: After evacuating the air in system, check the system for leakage.

(a) Open the high pressure hand valve to charge the system with refrigerant.

(b) When the low pressure gauge indicates 98 kPa (1 kgf/cm, 14 psi), close the high pressure hand valve.

(c) Using a gas leak tester, check the system for leakage.

If leak is found, repair the faulty component or connection.

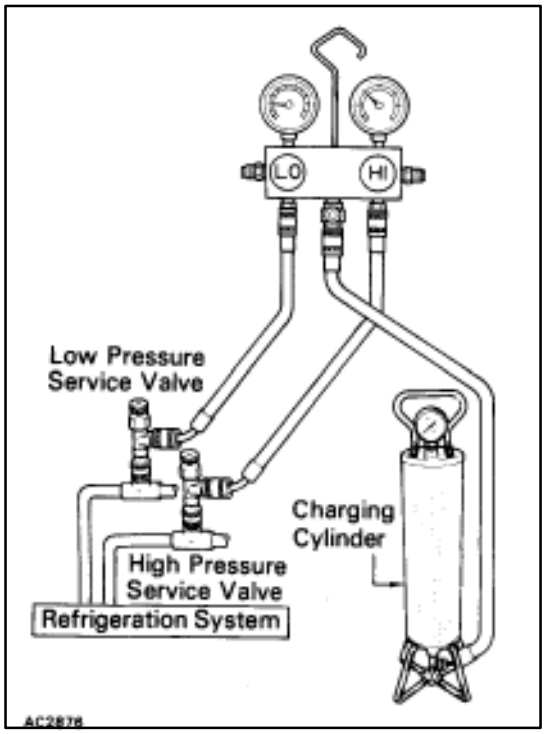

5. CHARGE EMPTY REFRIGERATION SYSTEM WITH REFRIGERANT (LIQUID)

HINT: This step is used to charge an empty system through the high pressure side with refrigerant in a liquid state.

NOTICE:

- **Never run the engine when charging the system through the high pressure side with refrigerant in a liquid stae.**
- **Do not open the low pressure hand valve when the system is being charged with liquid refrigerant.**

(a) Open the high pressure hand valve fully.

(b) Charge the system with specified amount of refrigerant, then close the high pressure hand valve.

HINT:

- A fully charged system is indicated by the sight glass being free of any bubbles.
- If the low pressure gauge does not show a reading, the system is clogged and must be repaired.

WhereEverybodyKnowsYourName

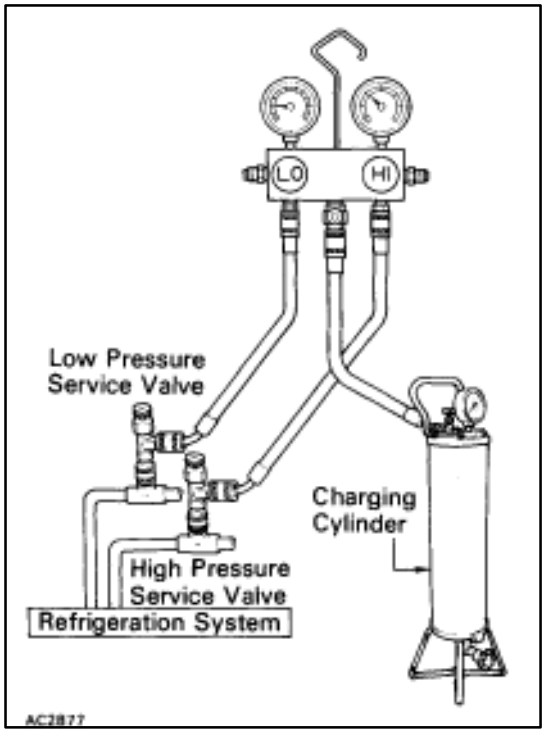

6. CHARGE PARTIALLY REFRIGERATION SYSTEM WITH REFRIGERANT (VAPOR)

HINT: This step is used to charge the system through the low pressure side with refrigerant in a vapor state.

NOTICE: Do not open the high pressure hand valve when running the engine.

(a) Run the engine at ideling speed and operate the air conditioner.

(b) Open the low pressure hand valve.

NOTICE: Adjust the hand valve so that the low pressure gauge does not indicate over limited pressure of charging cylinder.

(c) Close the low pressure hand valve when the sight glass is free of any bubbles and stop the engine.

NOTICE: Be careful not to overcharge the system with refrigerant as it may cause of troubles.

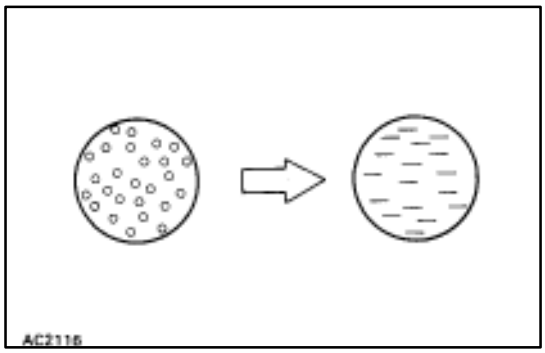

7. REMOVE MANIFOLD GAUGE SET FROM SERVICE VALVES

See page AC–15

WhereEverybodyKnowsYourName

TROUBLESHOOTING

WhereEverybodyKnowsYourName

HOW TO PROCEED WITH TROUBLESHOOTING

Perform troubleshooting in accordance with the procedure on the following page.

[1] CUSTOMER PROBLEM ANALYSIS

Using the customer problem analysis check sheet for reference, ask the customer in as much detail as possible about the problem. A subjective complaint such as ”poor air conditioner efficiency” is also considered in the air conditioner complaints.

Therefore, in ”Customer Problem Analysis” and ”Problem Symptom Confirmation”, check carefully to determine whether the level of performance is the actual (normal) level or whether it is abnormal. Then perform troubleshoot accordingly.

[2] CHECK AND CLEAR THE DIAGNOSTIC CODES (PRECHECK)

First check the diagnostic codes to see if there are any malfunction codes stored in memory. If there are malfunction codes, make a note of them, then clear them and proceed to [3] problem Symptom Confirmation”.

[3] PROBLEM SYMPTOM CONFIRMATION, [4] SYMPTOM SIMULATION

Confirm the problem symptoms. If the problem does not reappear, be sure to simulate the problem by mainly checking the circuits indicated by the diagnostic code in step [2], using ”Problem Simulation Method”.

[5] DIAGNOSTIC CODE CHECK

Check the diagnostic codes. Check for problems with the sensors or the wire harness.

[6] DIAGNOSTIC CODE CHART

If a malfunction code is confirmed in the diagnostic code check, proceed to the check procedure indicated by the matrix chart for each diagnostic code.

[7] MATRIX CHART OF PROBLEM SYMPTOMS

If the normal code is confirmed in the diagnostic code check, perform inspection in accordance with the inspection order in the matrix chart of problem symptoms.

[8] CIRCUIT INSPECTION

Proceed with diagnosis of each circuit in accordance with the inspection order cofirmed in [6] and [7]. Determine whether the cause of the problem is in the sensor, actuators, wire harness and connectors, or the ECU.

[9] ACTUATOR CHECK

Check actuators for proper operation. Instructions for this diagnosis are given in the flow chart for each circuit.

[10] REPAIRS

After the cause of the problem is located, perform repairs by following the inspection and replacement procedures in this manual.

[11] CONFIRMATION TEST

After completing repairs, confirm not only that the malfunction is eliminated, but also perform diagnostic code check and actuator check, etc. again to make sure the entire air conditioning system is operating correctly.

WhereEverybodyKnowsYourName

Items inside ▱ are titles of pages in this manual, with the page number indicated in the bottom portion. See the indicated pages for detailed explanations.

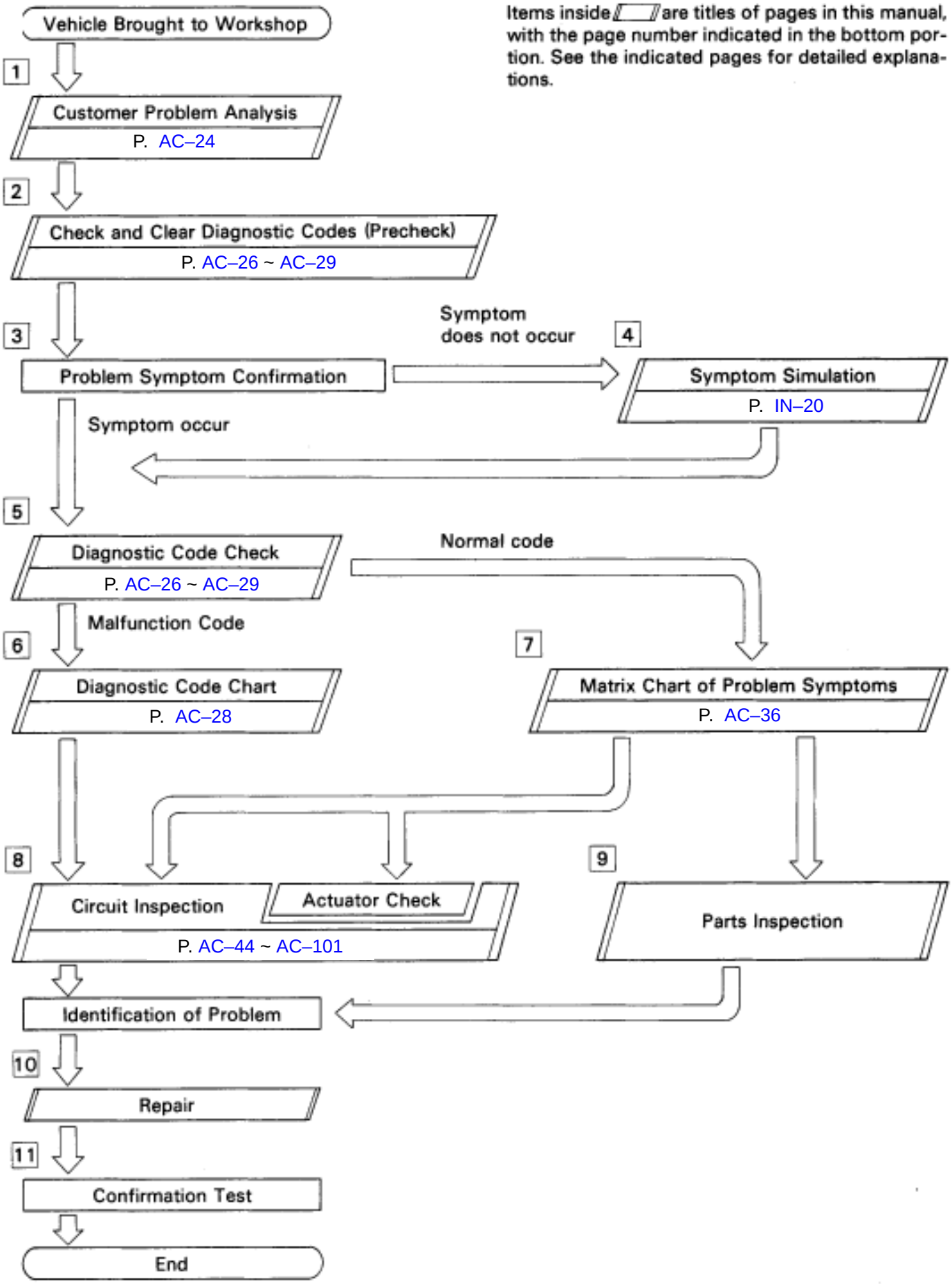

WhereEverybodyKnowsYourName

CUSTOMER PROBLEM ANALYSIS CHECK SHEET

AIR CONDITIONING SYSTEM Check Sheet

Inspector's Name :

Customer's Name		Registration No.	
		Registration Year	/ /
		Frame No.	
Date Vehicle Brought In	/ /	Odometer Reading	Km Miles

Conditions of Problem Occurrence	Data of Problem Occurrence	/ /
	How Often does Problem Occur?	☐ Continuous ☐ Intermittent (times a day)
	Weather	☐ Fine ☐ Cloudy ☐ Snowy ☐ Various/Other
	Outdoor Temperature	☐ Hot ☐ Warm ☐ Cool ☐ Cold (Approx. °F °C)

Symptoms	Air Flow Control is Faulty	☐ Blower motor does not operate ☐ Blower motor speed not change (Always Hi, Always Med, Always Lo)
	Temperature Control is Faulty	☐ Cabin temperature does not go down ☐ Cabin temperature does not rise ☐ Response is slow
	Air Inlet Control is Faulty	☐ Cannot change between FRS and REC (Always Fresh or always Recirculating)
	Air Outlet Control is Faulty	☐ Air outlet mode will not change ☐ Will not enter the desired air outlet mode

Diagnostic Code Check	1st Time	☐ Normal Code ☐ Malfunction Code (Code)
	2nd Time	☐ Normal Code ☐ Malfunction Code (Code)

WhereEverybodyKnowsYourName

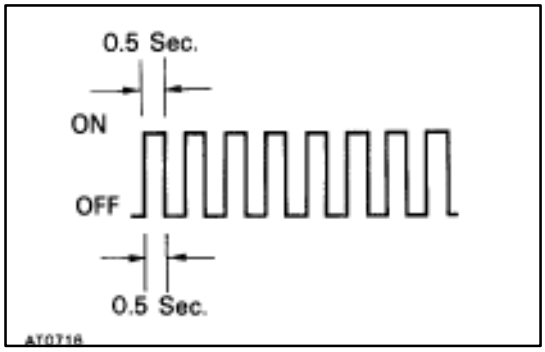

DIAGNOSIS SYSTEM

Warning for A/C compressor lock

If compressor lock occurs during air conditioner operation, the (A/C) switch indicator on the air conditioner control assembly starts blinking to warn the driver.
When this occurs, check for compressor lock (code 22) using diagnostic code check then proceed to inspect the circuit or the component.
Compressor lock sensor circuit page AC–54.

LIST OF OPERATION METHODS

By operating each of the air conditioner control switches as shown in the diagram below, it is possible to enter the diagnosis check mode.

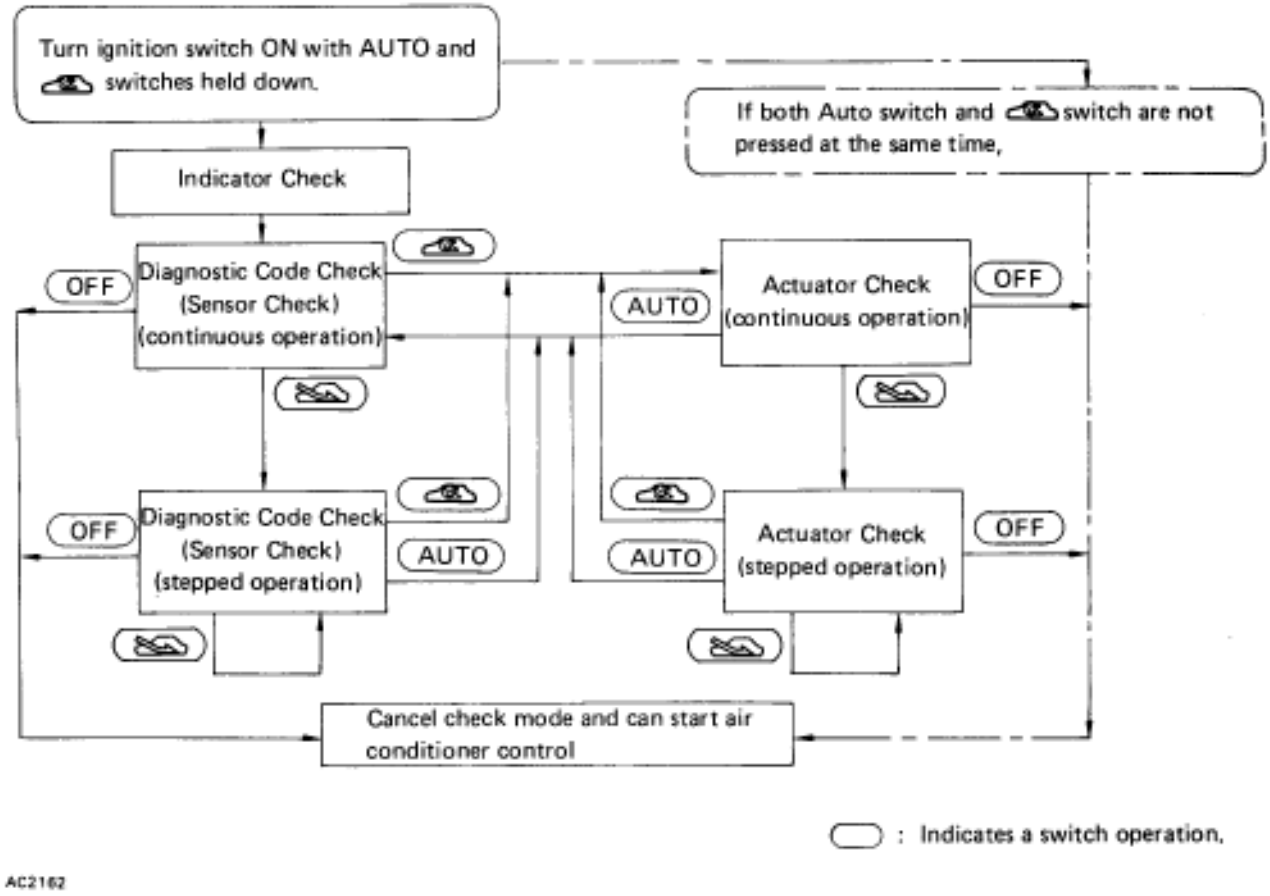

WhereEverybodyKnowsYourName

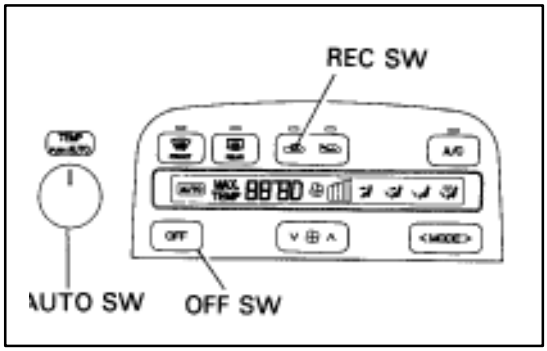

INDICATOR

1. Turn the ignition switch on while pressing the ari conditioner control AUTO switch and REC swich simultaneously.

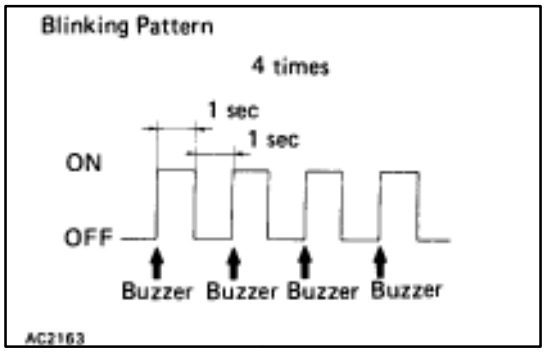

2. Check that all the indicators light up and go off at 1 second intervals 4 times in succession.
3. Check that the buzzer sounds when the indicators light up in 2.

   HINT:
   - After the indicator check is ended, the diagnostic code check begins automatically.
   - Press the OFF switch when desiring to cancel the check mode.

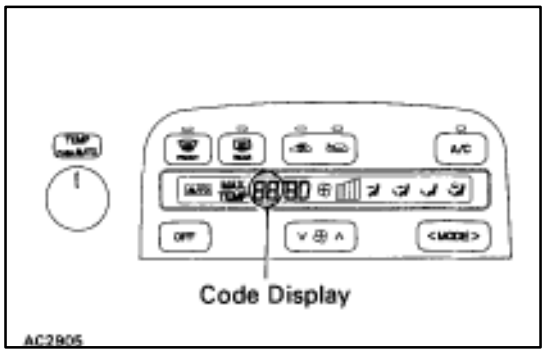

DIAGNOSTIC CODE CHECK (SENSOR CHECK)

1. Perform an indicator check. After the indicator check is completed, the system enters the diagnostic code check mode automatically.
2. Read the code displayed on the panel. Refer to the list of codes on page AC–28 when reading the codes. (Codes are output at the temperature display.)

   If the slower display ped is desired, press the FRS switch and change it to stepped operation. Each time the FRS switch is pressed, the display changes by 1 step.

   HINT:
   - If the buzzer sounds when a code is being read, it means the trouble indicated by that code continues to occur.
   - If the buzzer does not sound when a code is being read, it means the trouble indicated by that code occurred earlier (such as poor connector contacts, etc.)

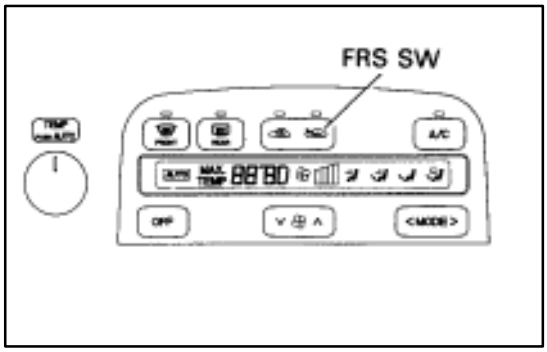

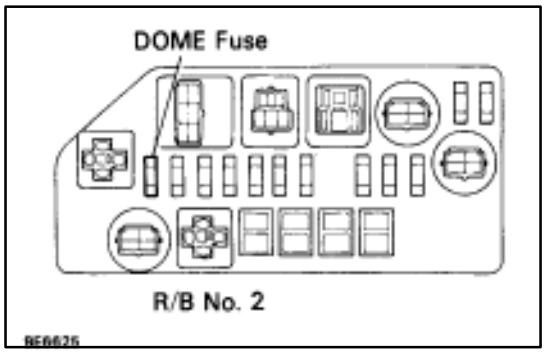

CLEARING DIAGNOSTIC CODES

1. Pull out the DOME fuse in Relay Block No. 2 for 10 sec. or longer to clear the memory of diagnostic codes.
2. After reinserting the fuse, check that the normal code is output.

WhereEverybodyKnowsYourName

DIAGNOSTIC CODE CHART

If a malfunction code is displayed during the diagnostic code check (sensor check), check the circuit listed for that code in the table below (Proceed to the page given for that circuit.)

Code No.	Diag. Code Detecting Condition
00	2 Normal
11*1	2 Open or short in room temperature sensor circuit.
12	2 Open or short in ambient temperature sensor circuit.
13	2 Open or short in evaporator temperature sensor circuit.
14*2	2 Open or short in water temperature sensor circuit.
21*3	2 Open in solar sensor circuit.
	2 Short in solar sensor circuit.
22*4	2 All conditions below are detected for 3 secs. or more. 2 (a) Engine rpm : 450 rpm or more. 2 (b) Ratio between engine and compressor rpm deviates 20% or more in comparison to normal operation.
23	2 Open in pressure sensor circuit. 2 Abnormal refrigerant pressure below 206 kPa (2.1 kgf/cm, 30 psi) over 2,650 kPa (27 kgf/cm, 385 psi)
31	2 Short to ground or power source circuit in Air Mix Damper position sensor circuit.
32	2 Short to ground or power source circuit in Air Inlet Damper position sensor circuit.
33	2 Short to ground or power source circuit in Air Outlet Damper position sensor circuit.
41	2 Air mix damper position sensor value does not change even if ECU operates air mix servomotor.
42	2 Air inlet damper position sensor value does not change even if ECU operates air inlet servomotor.
43	2 Air outlet damper position sensor value does not change even if ECU operates air outlet servomotor.

HINT: *1 If the room temp. is approx. –20˚C (–4˚F) or lower, code 11 may be output even though the system is normal.

*2 If the ambient temperature is approx. –50˚C (–58˚F) or lower, a malfunction code may be output even though the system is normal.

*3 If the check is being performed in a dark place, diagnostic code 21 (solar sensor circuit abnormal) could be displayed.
In this case, perform diagnostic code check again while shining a light, such as an inspection light, on the solar sensor.
If code 21 is still displayed, there could be trouble in the solar sensor circuit

WhereEverybodyKnowsYourName

Trouble Area	Memory*5	See page
–	–	–
2 Room temp. Sensor 2 Harness or connector between room temp. sensor and A/C control assembly 2 A/C control assembly	O (8.5 min. or more)	AC–44
2 Ambient temp. sensor 2 Harness or connector between ambient temp. sensor and A/C control assembly 2 A/C control assembly	O (8.5 min. or more)	AC–46
2 Evaporator temp. sensor 2 Harness or connector between evaporator temp. sensor and A/C control assembly 2 A/C control assembly	O (8.5 min. or more)	AC–48
2 Water temp. sensor 2 Harness or connector between water temp. sensor and A/C control assembly 2 A/C control assembly	O (8.5 min. or more)	AC–50
2 Solar sensor 2 Harness or connector between sensor and A/C control assembly 2 A/C control assembly	– O (8.5 min. or more)	AC–52
2 Compressor drive belt 2 Compressor lock sensor 2 Compressor 2 Harness and connector between A/C control assembly and compressor, 2 compressor lock sensor 2 A/C control assembly	–	AC–54
2 Pressure switch 2 Harness or connector between pressure switch and A/C control assembly 2 Refrigerant pipe line 2 A/C control assembly	–	AC–56
2 Air mix damper position sensor A/C control assembly 2 Harness or connector between air mix damper position sensor and A/C control assembly	O (1 min. or more)	AC–58
2 Air inlet damper position sensor 2 A/C control assembly 2 Harness or connector between air inlet damper position sensor and A/C control assembly	O (1 min. or more)	AC–62
2 Air outlet damper position sensor 2 A/C control assembly 2 Harness or connector between air outlet damper position sensor and A/C control assembly	O (1 min. or more)	AC–66
2 Air mix servomotor 2 Air mix damper position sensor 2 Harness and connector between A/C control assembly and air mix position sensor 2 Harness and connector between A/C control assembly and air mix servomotor.	O (15 secs. or more)	AC–58 AC–60
2 Air inlet servomotor 2 Air inlet damper position sensor 2 Harness and connector between A/C control assembly and air inlet position sensor. 2 Harness and connector between A/C control assembly and air inlet servomotor.	O (15 secs. or more)	AC–62 AC–64
2 Air outlet servomotor 2 Air outlet damper position sensor 2 Harness and connector between A/C control assembly and air outlet position sensor. 2 Harness and connector between A/C control assembly and air outlet servomotor. 2 A/C control assembly	O (15 secs. or more)	AC–66 AC–68

HINT: *4 Compressor lock (Diag. code 22) is indicated only for a currently occuring malfunction. (See page AC-54)
To confirm diagnostic code 22, preform the following steps.
(1) With the engine ON, enter the diagnostic code check mode.
(2) Press the switch to enter actuator check mode, and set the operation to Step No. 3.
(3) Press the AUTO switch to return to diagnostic code check mode.
(4) The diagnostic code is displayed after approx. 3 secs.

*5 The ECU memorizes the diag. code of the respective malfunction when it has occurred for the period of time indicated in the brackets.

WhereEverybodyKnowsYourName

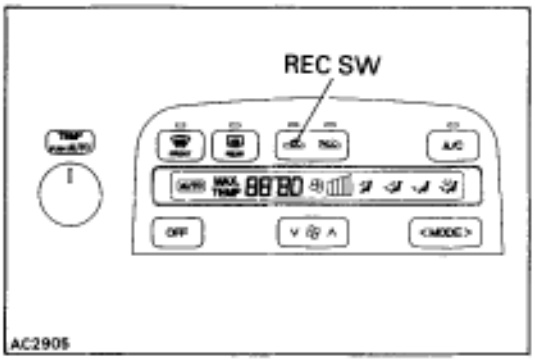

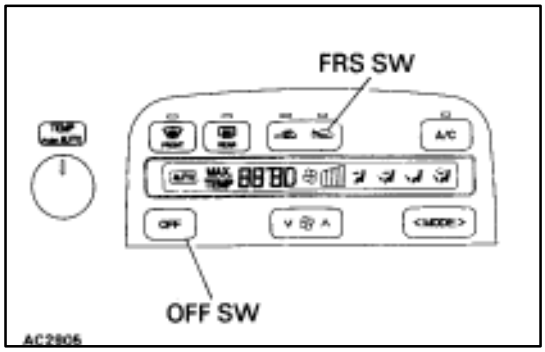

ACTUATOR CHECK

1. After entering the diagnostic code check mode sensor check mode, press the REC switch.

2. Since each damper, motor and relay automatically operates at 1 second intervals beginning in order from 20 in the temperature display, check the temperature and air flow visually and by hand.

   If the slower display is desired, press the FRS switch and change it to step operation. Each time the FRS switch is pressed, the display changes by 1 step.

HINT:

- The buzzer sounds when the display code changes.
- Codes are displayed in order from the smaller to the larger numbers.
- To cancel the check mode, press the OFF switch.

Step No.	Display code	Conditions					
		Water valve VSV	Blower motor	Air flow vent	Air inlet damper	Magnet clutch	Air mix damper
1	20	OFF	OFF ( )	(FACE)	(FRESH)	OFF	Cool side (0% Open)
2	21	↑	1 ( )	↑	(F/R)	↑	↑
3	22	↑	2 ( )	↑	(RECIRC)	ON	↑
4	23	ON	3 ( )	(BI-LEVEL)	(FRESH)	↑	Cool/Hot (50% open)
5	24	↑	↑	(FOOT)	↑	↑	↑
6	25	↑	4 ( )	↑	↑	↑	Hot side (100% open)
7	26	↑	↑	(F/D)	↑	↑	↑
8	27	↑	5 ( )	(DEF)	↑	↑	↑

WhereEverybodyKnowsYourName

TERMINALS OF ECU

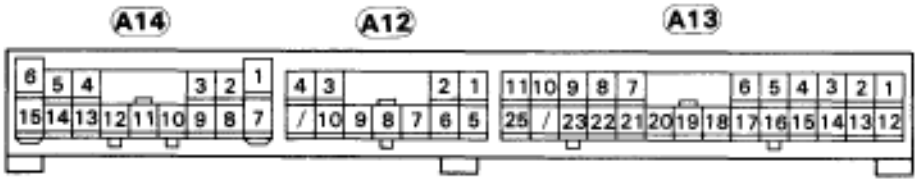

B66351

Terminal No.	Symbol	Connection/Terminal Name	Terminal No.	Symbol	Connection/Terminal Name
A14–1	+B	Back-up Power Source	A13–1	IGN	No. 1 Igniter
A14–2	MH	Air Mix Servomotor	A13–2	A/C IN	Compressor
A14–3	MC	Air Mix Servomotor	A13–3	LCK I	Lock Sensor
A14–4	MFRS	Air Inlet Servomotor	A13–4	SAUTO	Temperature and Automatic Control Switch
A14–5	MREC	Air Inlet Servomotor	A13–5	LP	Pressure Switch
A14–6	IG+	ECU Power Source	A13–6	DIN	TDCL, Check Connector
A14–7	E	ECU Ground	A13–7	TR	Room Temp. Sensor
A14–8	MFACE	Air Outlet Servomotor	A13–8	TAM	Ambient Temp. Sensor
A14–9	MDEF	Air Outlet Servomotor	A13–9	TE	Evaporator Temp. Sensor
A14–10	—	—	A13–10	TW	Water Temp. Sensor
A14–11	—	—	A13–11	TS	Solar Sensor
A14–12	—	—	A13–12	SET1	Temperature and Automatic Control Switch
A14–13	—	—	A13–13	SET2	Temperature and Automatic Control Switch
A14–14	—	—	A13–14	SET3	Temperature and Automatic Control Switch
A14–15	ACC	Power Source	A13–15	SET4	Temperature and Automatic Control Switch
A12–1	—	—	A13–16	SET5	Temperature and Automatic Control Switch
A12–2	REOST	Rheostat	A13–17	DOUT	TDCL
A12–3	WV	Water Valve VSV	A13–18	S5	Sensor Power Source
A12–4	MGC	Engine & ECT ECU	A13–19	—	—
A12–5	TC	Rheostat	A13–20	SG	Sensor Ground
A12–6	TAIL	Taillight Relay	A13–21	—	—
A12–7	LV	Power Transistor	A13–22	TP	Air Mix Damper Position Sensor
A12–8	BLR	Power Transistor	A13–23	TPI	Air Inlet Damper Position Sensor
A12–9	HR	Heater Relay	A13–24	—	—
A12–10	RDFGR	Defogger Relay	A13–25	TPM	Air Outlet Damper Position Sensor

WhereEverybodyKnowsYourName

STANDARD VALUE OF ECU TERMINAL

Terminals	Symbols	WiringColor	Condition		StandardValue
A14–1∞A14–7	B∞E	R∞W–B	IG OFF		10 ~ 14 V
A14–2∞A14–3	MH∞MC	V∞R–Y	IG OFF		13 ~ 19 ?
A14–4∞A14–5	MFRS∞MREC	G∞G–R	IG OFF		13 ~ 19 ?
A14–6∞A14–7	IG+∞E	R–L∞W–B	IG ON		10 ~ 14 V
A14–7∞ Body Ground	E∞ Body Ground	W–B∞ Body Ground	Always		Below 1 ?
A14–8∞A14–9	FACE∞DEF	W∞Y–L	IG OFF		13 ~ 19 ?
A14–15∞A14–7	ACC∞E	L–R∞W–B	Turn ignition switch ACC		10 ~ 14 V
A12–2∞A14–7	REOST∞E	W–G∞W–B	IG ON and turn headlight control SW to TAIL position. Turn Rheostat volume from most right to left position.		Most Right : 0 ~ 14 V ⊖ Most Left : 10 ~ 14 V
A12–3∞A14–7	WV∞E	B–Y∞W–B	Start the engine	Temp. Control Switch: MAX COLD	Below 1 V
				Temp. Control Switch: MAX HOT	10 ~ 14 V
A12–4∞A14–7	MGC∞E	L–R∞W–B	Start the engine and push AUTO SW	A/C switch ON	Below 1 V
				A/C switch OFF	10 ~ 14 V
A12–5∞A14–7	TC∞E	L∞W–B	IG ON H.L.C. SW : TAIL position	Rheostat Most Volume Right :	Below 1 V
				Rheostat Turn Volume Left :	10 ~ 14 V
A12–6∞A14–7	TAIL∞E	G∞W–B	Turn the light control switch to TAILposition		10 ~ 14 V
A12–7A14–7	LVE	YW–B	IG ON	Push blower SW to change the blower speed from 1 to 10.	Speed 1: 10 ~ 14 V ⊖ Speed 10: Below 2 V
A12–8∞A14–7	BLR∞E	B–R∞W–B	IG ON	Turn the blower motor	Below 1.5 V
A12–9∞A14–7	HR∞E	L–W∞W–B	IG ON	Turn the blower motor	Below 1 V
				Don’t turn the blower motor	10 ~ 14 V
A12–10∞A14–7	RDFGR∞E	R–Y∞W–B	IG ON	Rear defogger switch ON	Below 1 V
				Rear defogger switch OFF	10 ~ 14 V
A13–1∞A14–7	IGN∞E	∞BW–B	Start the engine		10 ~ 14 V

WhereEverybodyKnowsYourName

Terminals	Symbols	Wiring Color	Condition		Standard Value
A13-2↔A14-7	A/C IN↔E	L-Y↔W-B	Operate the compressor		10 ~ 14 V
			Not operate the compressor		Below 1 V
A13-3↔A14-7	LOCK IN↔E	G-Y↔W-B	IG OFF	at 25°C (77°F)	530 ~ 650 Ω
				at 100°C (212°F)	670 ~ 890 Ω
A13-4↔A14-7	SAUTO↔E	V-W↔W-B	IG ON	AUTO switch ON	Below 1 V
				AUTO switch OFF	10 ~ 14 V
A13-5↔A14-7	LP↔E	L-B↔W-B	IG ON		Below 1 V
A13-6↔A14-7	DIN↔E	P-B↔W-B	IG ON	Connect Tc and E1 of TDCL, Check connector	Below 1 V
				Other than above condition	10 ~ 14 V
A13-7↔A13-20	TR↔SG	Y-L↔BR	IG ON	Cabin temp.: 25°C (77°F)	1.8 ~ 2.2 V
				Cabin temp.: 40°C (104°F)	1.2 ~ 1.6 V
A13-8↔A13-20	TAM↔SG	P↔BR	IG ON	Ambient Temp.: 25°C (77°F)	1.35 ~ 1.75 V
				Ambient Temp.: 40°C (104°F)	0.85 ~ 1.25 V
A13-9↔A13-20	TE↔SG	L-Y↔BR	IG ON	Evaporator ambient temp.: 0°C (32°F)	2.0 ~ 2.4 V
				Evaporator ambient temp.: 15°C (59°F)	1.4 ~ 1.8 V
A13-10↔A13-20	TW↔SG	LG-R↔BR	IG ON	Water temp.: 0°C (32°F)	2.8 ~ 3.2 V
				Water temp.: 40°C (104°F)	1.8 ~ 2.2 V
				Water temp.: 70°C (158°F)	0.9 ~ 1.3 V
A13-11↔A13-20	TS↔SG	Y-G↔BR	IG ON	Sensor subjected to electric light	1 V or more
				Sensor covered by a cloth	Below 1 V
A13-12↔A13-20	SET1↔SG	V-R↔BR	IG ON	Turn temp. control SW from most left to right position	Change 5 V and 0 V 11 times (15 times)*
A13-13↔A13-20	SET2↔SG	G-O↔BR			Change 5 V and 0 V 5 times (8 times)*
A13-14↔A13-20	SET3↔SG	Y↔BR			Change 5 V and 0 V 2 times (4 times)*
A13-15↔A13-20	SET4↔SG	B-R↔BR			Change 5 V and 0 V 2 times
A13-16↔A13-20	SET5↔SG	B-Y↔BR			Change 5 V and 0 V Once

*: Canada spec only

WhereEverybodyKnowsYourName

STANDARD VALUE OF ECU TERMINAL (Cont'd)

Terminals	Symbols	Wiring Color	Condition		Standard Value
A13-18↔A13-20	SS↔SG	BR-W↔BR	IG ON		4 – 6 V
A13-20↔Body Ground	SG↔Body Ground	BR↔Body Ground	Always		Below 1 Ω
A13-22↔A13-20	TP↔SG	G-W↔BR	IG ON	Set temp.: Max Cool	3.5 – 4.5 V
				Set temp.: Max Hot	0.5 – 1.8 V
A13-23↔A13-20	TP1↔SG	GR↔BR	IG ON	Push REC switch	3.5 – 4.5 V
				Push FRS switch	0.5 – 1.8 V
A13-25↔A13-20	TPM↔SG	Y-R↔BR	IG ON	Air outlet : FACE	3.5 – 4.5 V
				Push Front DEF SW	0.5 – 1.8 V

WhereEverybodyKnowsYourName

WIRING DIAGRAM

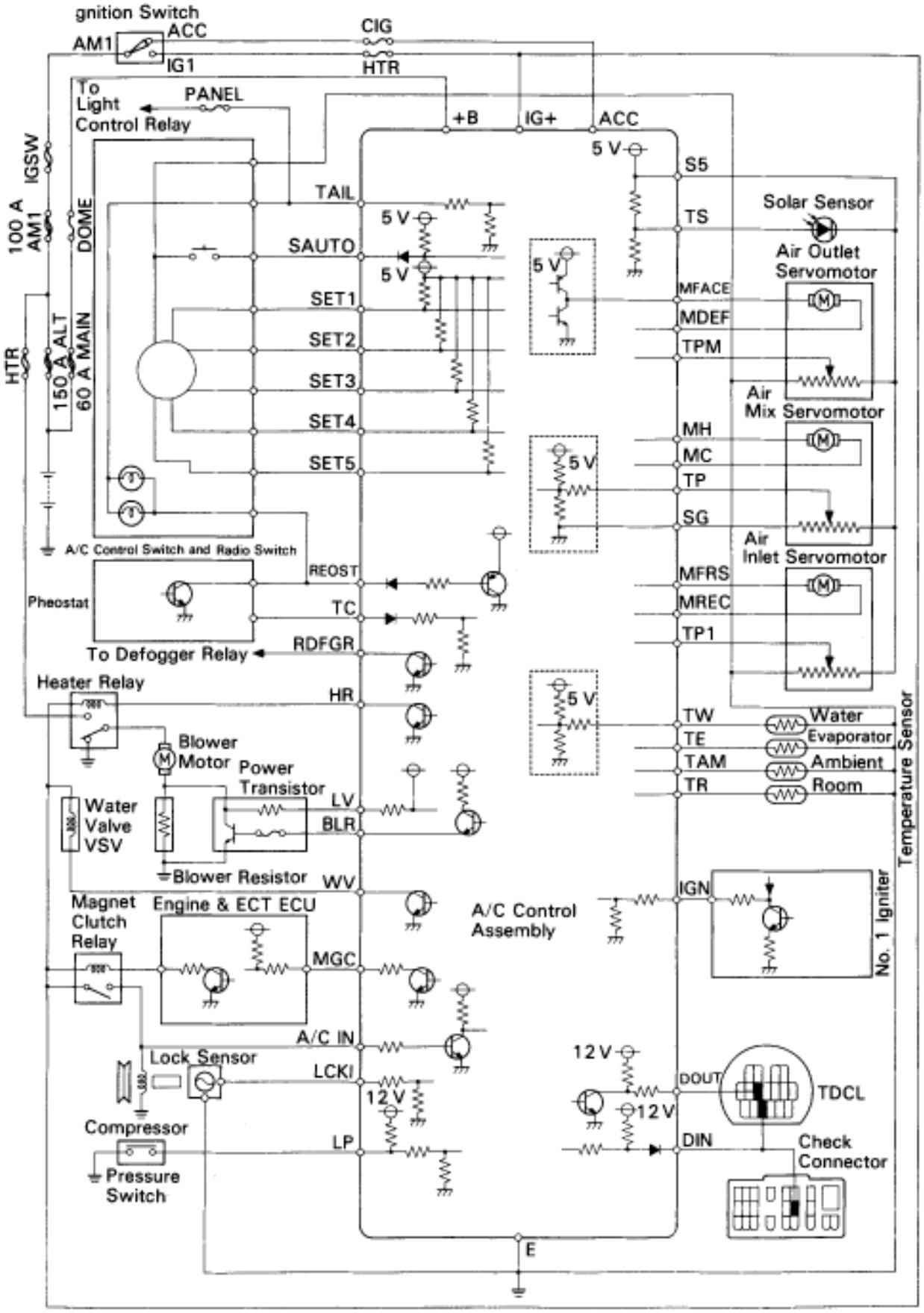

WhereEverybodyKnowsYourName

MATRIX CHART OF PROBLEM SYMPTOMS

If a normal code is displayed during the diagnostic code check (sensor check) but the trouble still occurs (reappears), perform out troubleshooting for each problem symptom, checking the circuits for each symptom in the order given in the table below (Proceed to the page given for each circuit).

See page		AC–44	AC–46	AC–48	AC–50	AC–52	AC–54	AC–56	AC–58	AC–60	AC–62	AC–64	AC–66
Suspect Area / Symptom		Room temp. sensor circuit	Ambient temp. sensor circuit	Evaporator temp. sensor circuit	Water temp. sensor circuit	Solar sensor circuit	Compressor lock sensor circuit	Pressure switch circuit	Air mix damper position sensor circuit	Air mix servomotor circuit	Air inlet damper position sensor circuit	Air inlet servomotor circuit	Air outlet damper position sensor circuit
Whole functions of the A/C system does not operate.													
Air Flow Control	No blower operation				3								
	No blower control												
	Insufficient air flow												
Temperature Control	No cool air comes out	10	11				4	6	9	8			
	No warm air comes out	5	4	6					3	2			
	Output air is warmer or colder that the set temperature or response is slow	4	5	6	9	7			8	10			
	No temperature control (only Max. cool or Max. warm)								1	2			
No air inlet control											1	2	
No air outlet control													1
Engine idle up does not occur, or is continuous													
Blinking of A/C indicator						1							
Set temp. value displayed does not match up with operation of temp. control switch.													
Unable to access the diagnosis mode.													
Diagnostic code not recorded. Set mode is cleared when IG switch is turned off.													

WhereEverybodyKnowsYourName

HINT:

- If the instruction ”Proceed to next circuit inspection shown on matrix chart” is given in the flow chart for each circuit, proceed to the circuit with the next highest number in the table to continue the check.
- If the trouble still reappears even though there are no abnormalities in any of the other circuits, then check or replace the air conditioner control assembly (contains the ECU).

Air outlet servomotor circuit (AC–68)	IG power source circuit (AC–70)	ACC power source circuit (AC–72)	Backup power source circuit (AC–74)	Heater main relay circuit (AC–76)	Power transistor circuit (AC–78)	Blower motor circuit (AC–80)	Igniter circuit (AC–82)	Compressor circuit (AC–84)	Water valve VSV circuit (AC–90)	Temperature control switch circuit (AC–92)	Automatic control switch circuit (AC–96)	Communication line with cooling fan ECU (AC–98)	Diagnosis circuit (AC–108)	ECU (A/C control assy) (IN–32)	Inspection refrigeration system with manifold gauge set (AC–100)	Refrigerant volume (AC–103)	Drive belt tension (AC–104)	Condenser (AC–120)	Receiver (AC–118)	Evaporator (AC–122)	Heater radiator (AC–125)	Expansion valve (AC–126)
	2	3									1			4								
	4	5		1		2								6								
	3			4	2	1																
						1																
							7	5						12	3	1	2					
									1					7								
									11					18	3	1	2	12	13	14	15	16
														3								
														3								
2														3								
							2	1						3								
														2								
										1				2								
													1	2								
			1											2								

WhereEverybodyKnowsYourName

LOCATION OF CONNECTORS

LOCATION OF CONNECTORS IN ENGINE COMPARTMENT

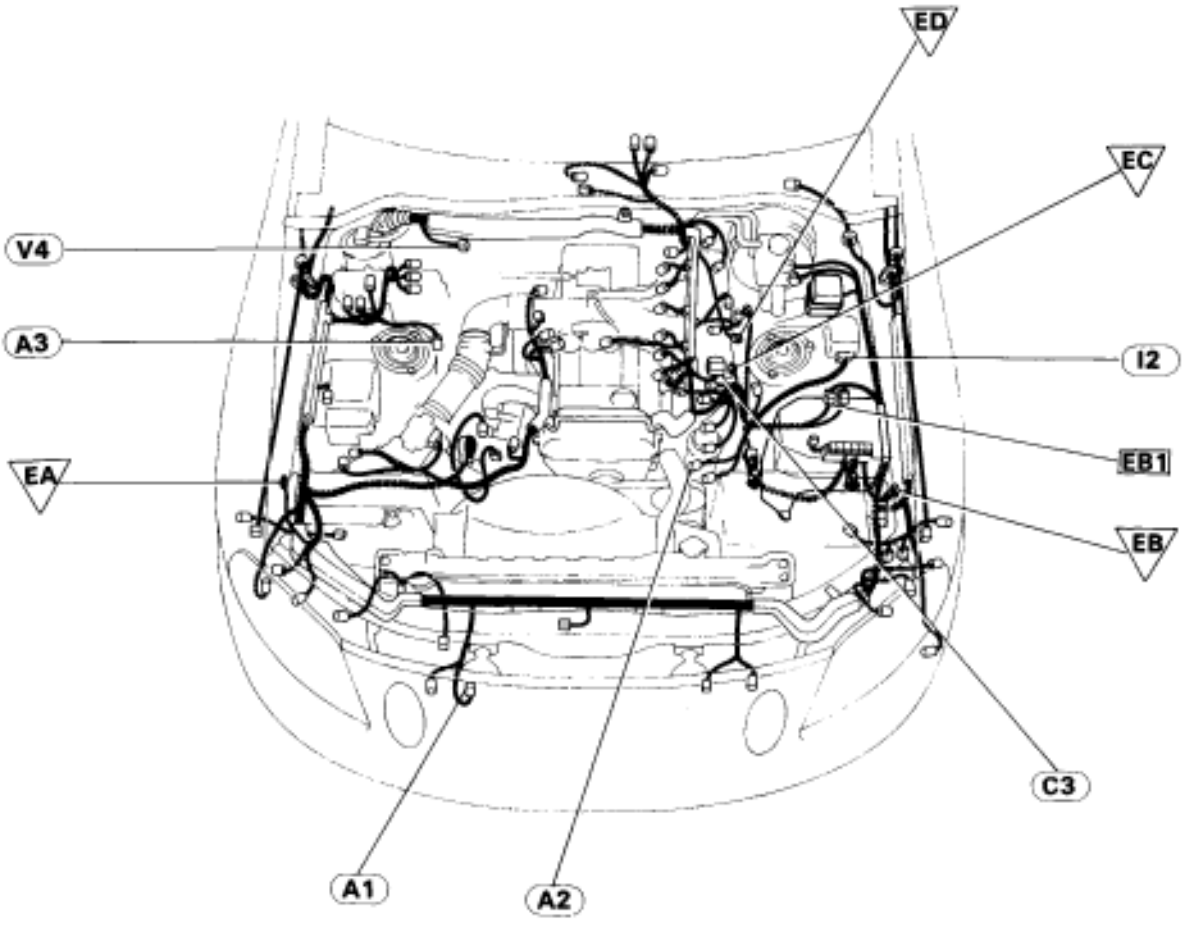

WhereEverybodyKnowsYourName

A1

A/C Ambient Temp. Sensor

Ie-2-1-S

A2

A/C Lock Sensor and A/C Magnetic Clutch

Ie-4-1

A3

A/C Pressure SW and A/C High Pressure SW

Ie-4-1-A

C3

Check Connector

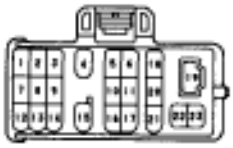

Iej-23-1

I2

Igniter

Ie-5-1

V4

VSV (for water valve)

Ie-2-1-S

EB1

Ie-8-1-A

Ie-8-2-A

R/B NO. 2

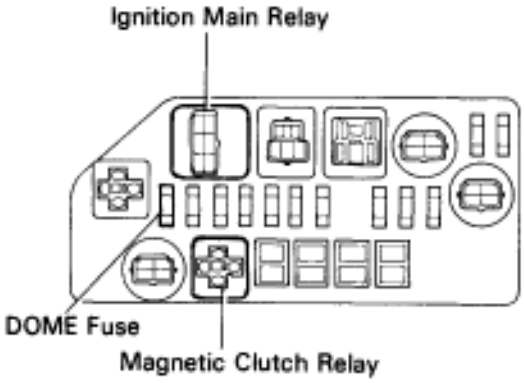

8E6625

WhereEverybodyKnowsYourName

LOCATION OF CONNECTORS IN INSTRUMENT PANEL

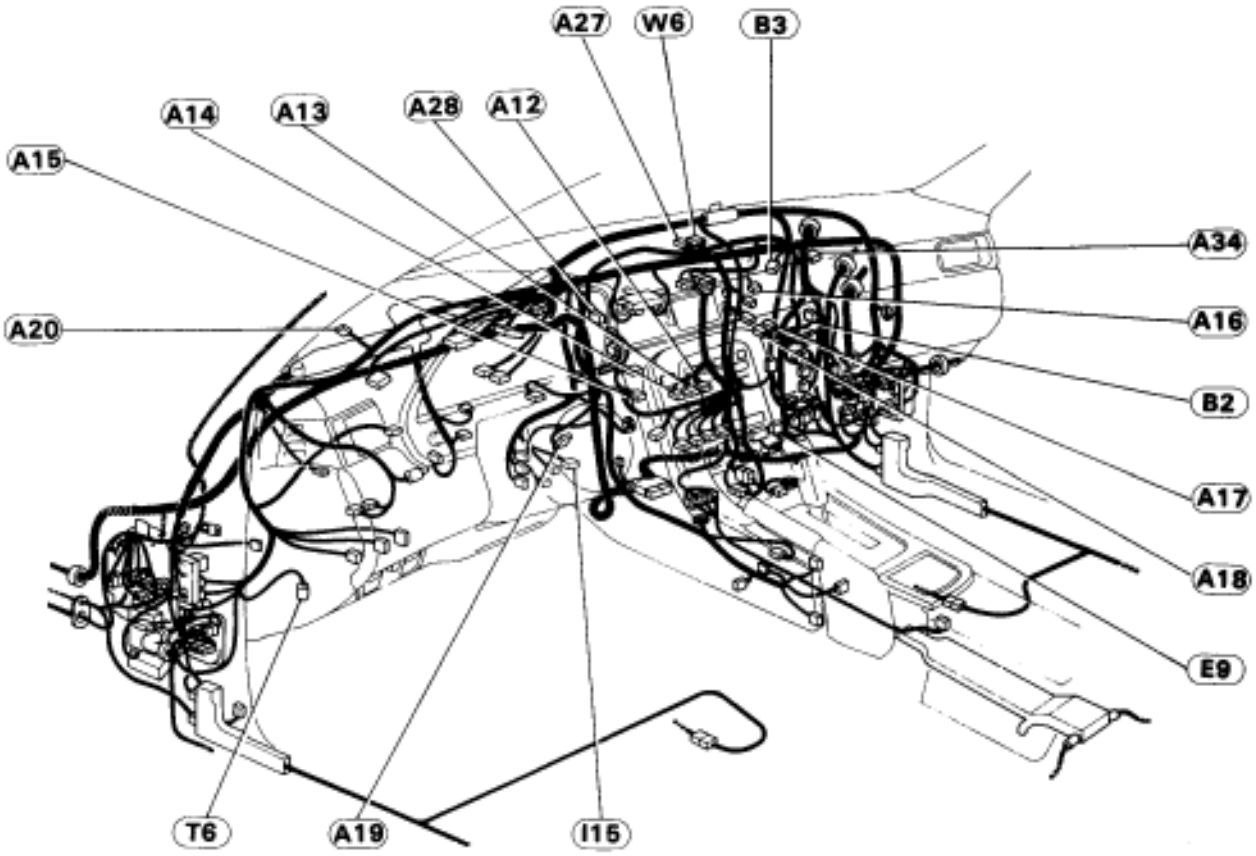

BE6674

WhereEverybodyKnowsYourName

A12

A/C Control Assembly

h-11-1

A13

A/C Control Assembly

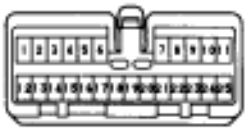

h-25-1

A14

A/C Control Assembly

eh-15-1

A15

A/C Control SW and Radio SW

e-14-1-A

A16

A/C Evaporator Temp. Sensor

GA-2-1-C

A17

A/C Power Transistor

GA-2-1-C

A18

A/C Power Transistor

G-2-1-B

A19

A/C Room Temp. Sensor

e-2-1-H

A20

A/C Solar Sensor

e-2-2-J

A27

Air Mix Control Servo Motor

S-6-1

A28

Air Vent Mode Control Servo Motor

S-6-1

A34

RECIRC/FRESH Control Servo Motor (for Air Inlet Control)

S-6-1

B2

Blower Motor

G-2-1-A

B3

Blower Resister (for Low Speed)

G-2-1

E9

Engine and ECT ECU

id-40-1

I15

Ignition Switch

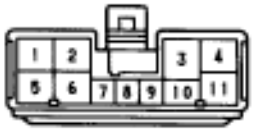

eg-11-1

T6

TDCL (Total Diagnostic Communication Link)

S-17-1

W6

Water Temp. Sensor (for A/C System)

S-4-1-B

WhereEverybodyKnowsYourName

LOCATION OF CONNECTORS IN INSTRUMENT PANEL

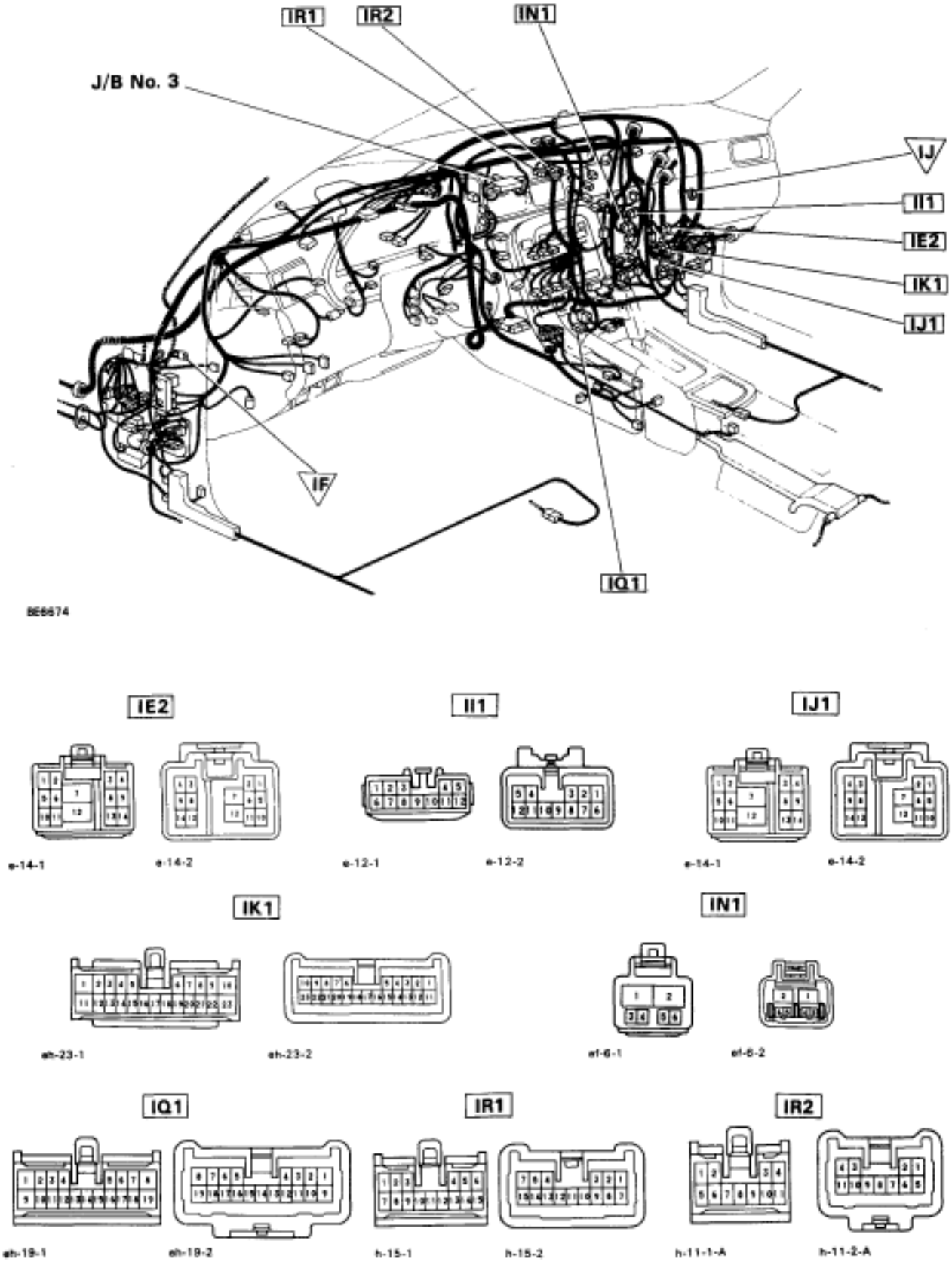

WhereEverybodyKnowsYourName

J/B No. 1

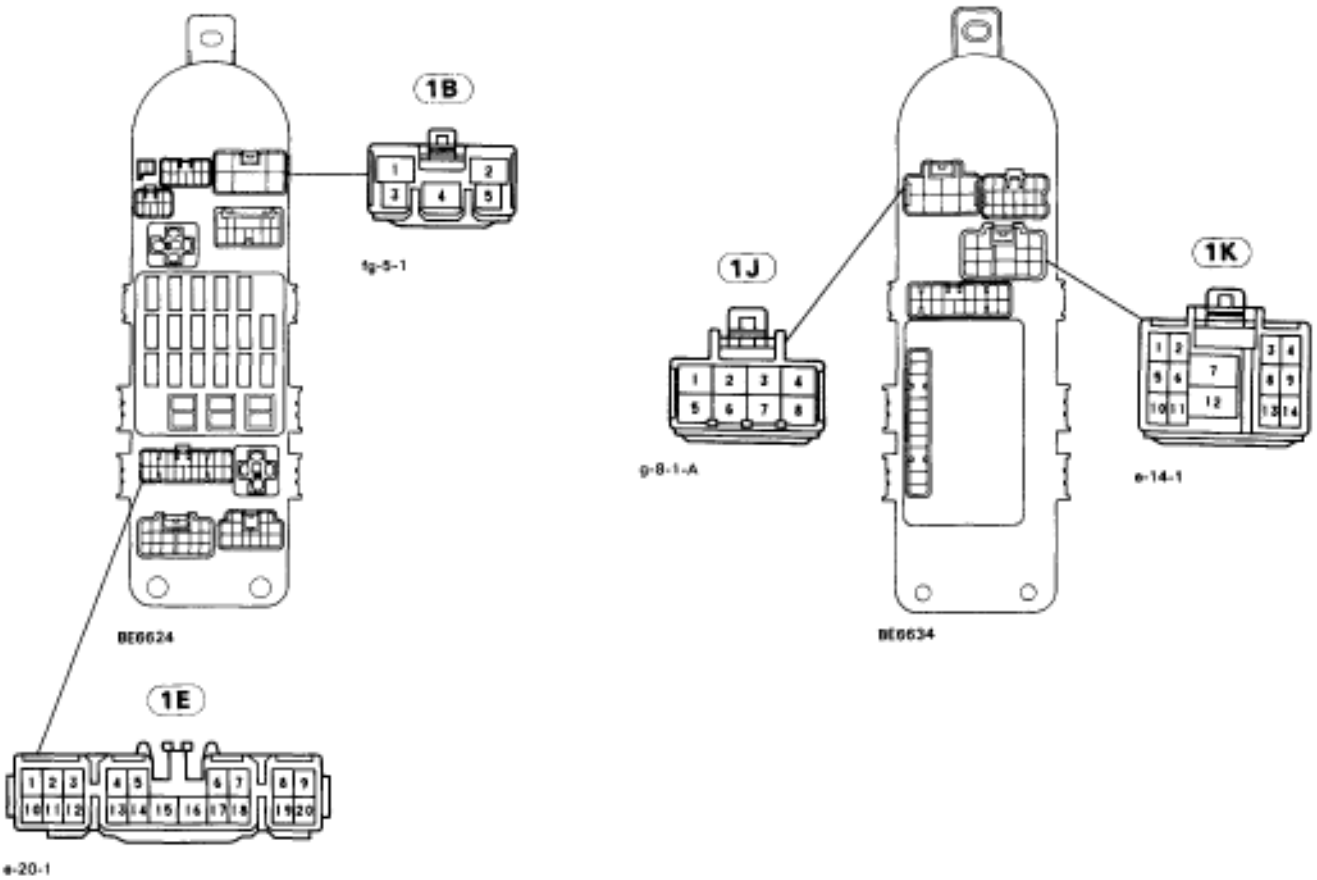

J/B No. 3

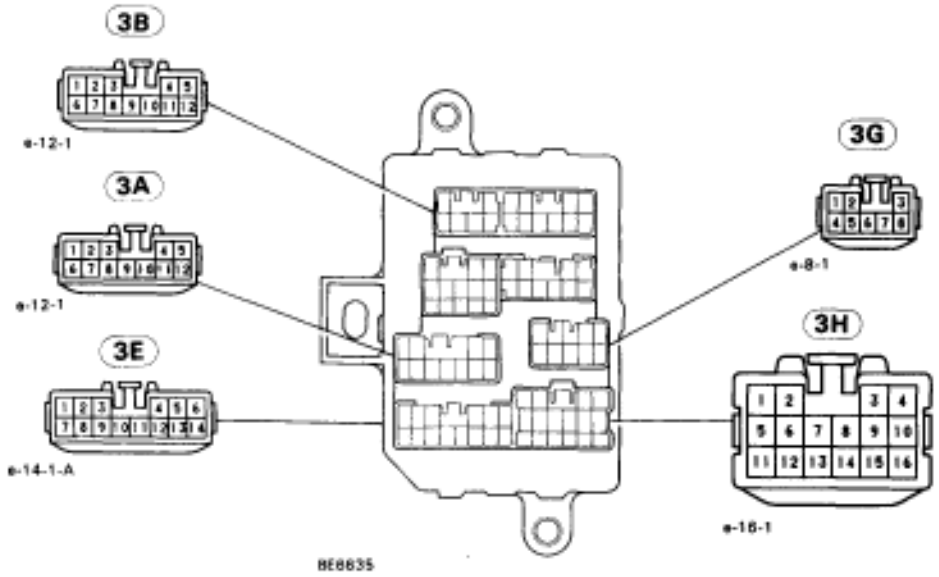

WhereEverybodyKnowsYourName

CIRCUIT INSPECTION

Diag. Code 11	Room Temperature Sensor Circuit

CIRCUIT DESCRIPTION

This sensor detects the temperature inside the cabin and sends the appropriate signals the A/C control assembly.

Code No.	Diag. Code Detecting Condition	Trouble area
11	Open or short in room temperature sensor circuit.	▼ Room temperature sensor. ▼ Harness or connector between room temp. sensor and A/C control assembly. ▼ A/C control assembly.

DIAGNOSTIC CHART

1 Check voltage between terminals TR and SG of air conditioner assembly connector.

OK → Proceed to next circuit inspection shown on matrix chart (See page AC-36).However, when Diag. code 11 is displayed, check and replace air conditioner control assembly.

NG ↓

2 Check room temperature sensor.

NG → Replace room temperature sensor.

OK ↓

3 Check harness and connector between air conditioner control assembly and room temperature sensor (See page IN-27).

NG → Repair or replace harness or connector.

OK ↓

Check and repair air conditioner control assembly.

WIRING DIAGRAM

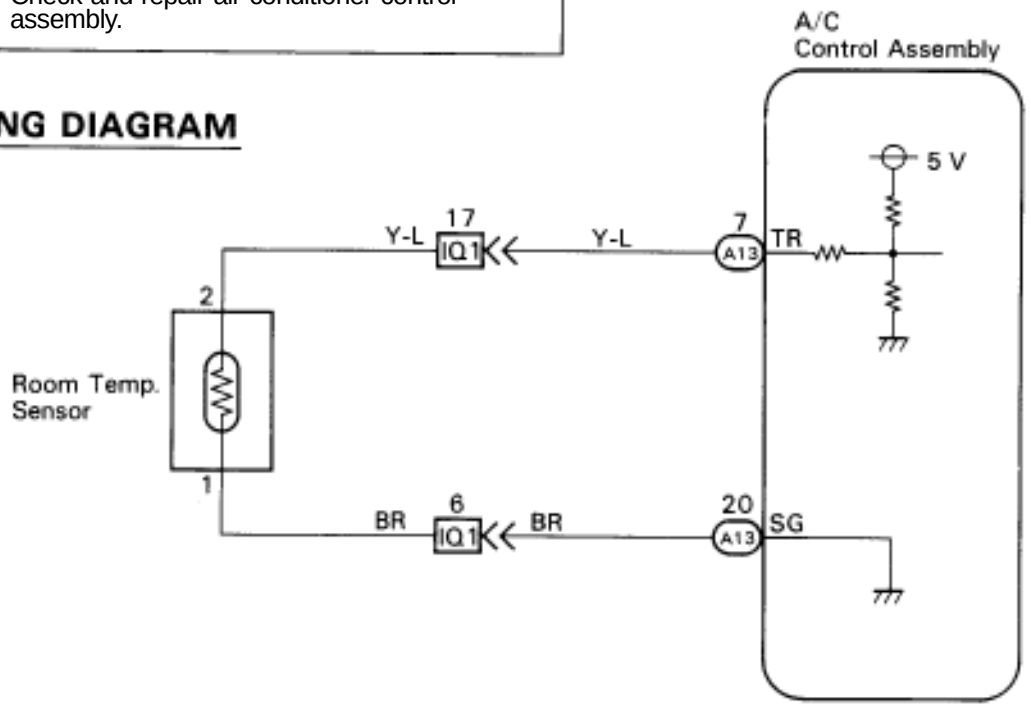

WhereEverybodyKnowsYourName

INSPECTION PROCEDURE

1 Check voltage between terminals TR and SG of air conditioner control assembly connector.

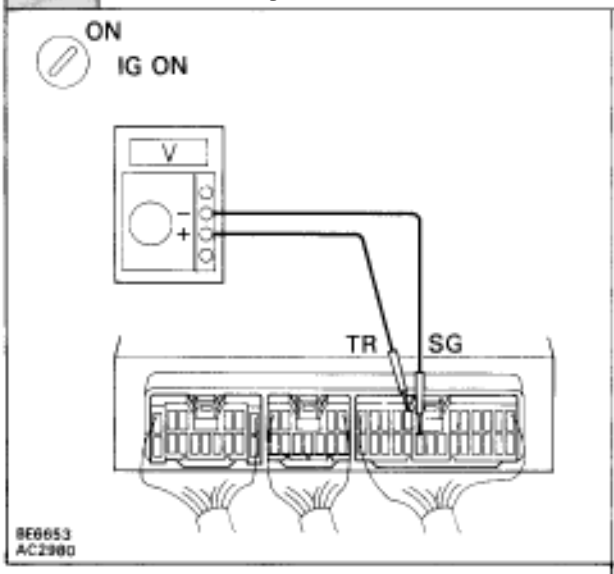

P

(1) Remove console upper panel. (See page BO-111)

(2) Remove A/C Control Assembly with connectors still connected.

(3) Turn ignition switch ON.

C

Check voltage between terminals TAM and SG of air conditioner control assembly connector at each temperature.

OK

Voltage

at 25°C (77°F) : 1.8~2.2 V
at 40°C (104°F) : 1.2~1.6 V

In addition, as the temperature increases, the voltage decreases gradually.

NG

OK **Proceed to next circuit inspection shown on matrix chart (See page AC-36).However, when Diag. code 11 is displayed, check and replace air conditioner control assembly.**

2 Check room temperature sensor.

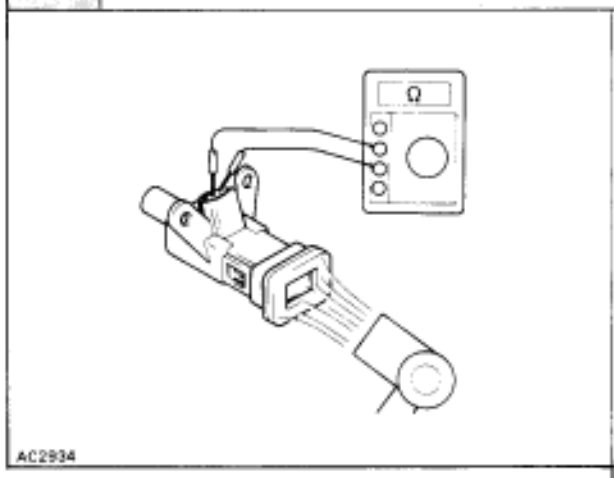

P

(1) Remove instrument finish lower No. 1 panel. (See page Be-103).

(2) Disconnect room0 temperature sensor connector.

C

Check voltage between terminals 1 and 2 of room temperature sensor connector at each tem–perature.

OK

Resistance

at 25°C (77°F) : 1.6~1.8k?
at 50°C (122°F) : 0.5~0.7k?

In addition, as the temperature increases, the voltage decreases gradually.

OK

NG **Replace room temperature sensor.**

3 Check for open and short in harness and connector between air conditioner control assembly and room temperature sensor (See page IN-27).

OK

NG **Repair or replace harness or connector.**

Check and repair air conditioner control assembly.

WhereEverybodyKnowsYourName

Diag. Code 12 | Ambient Temperature Sensor Circuit

CIRCUIT DESCRIPTION

This sensor detects the ambient temperature and sends the appropriate signals to the A/C control assembly.

Code No.	Diag. Code Detecting Condition	Trouble area
12	Open or short in ambient temperature sensor circuit.	▼ Ambient temperature sensor. ▼ Harness or connector between ambient temperature sensor and A/C control assembly. ▼ A/C control assembly.

DIAGNOSTIC CHART

1 Check voltage between terminals TAM and SG of air conditioner control assembly connector.
- OK → Proceed to next circuit inspection shown on matrix chart (See page AC-36). However, when Diag. code 12 is displayed, check and replace air conditioner control assembly.
- NG ↓

2 Check ambient temperature sensor.
- NG → Replace ambient temperature sensor.
- OK ↓

3 Check harness and connector between air conditioner control assembly and ambient temperature sensor. (See page IN-27).
- NG → Repair or replace harness or connector.
- OK ↓

Check and replace air conditioner control assembly.

WIRING DIAGRAM

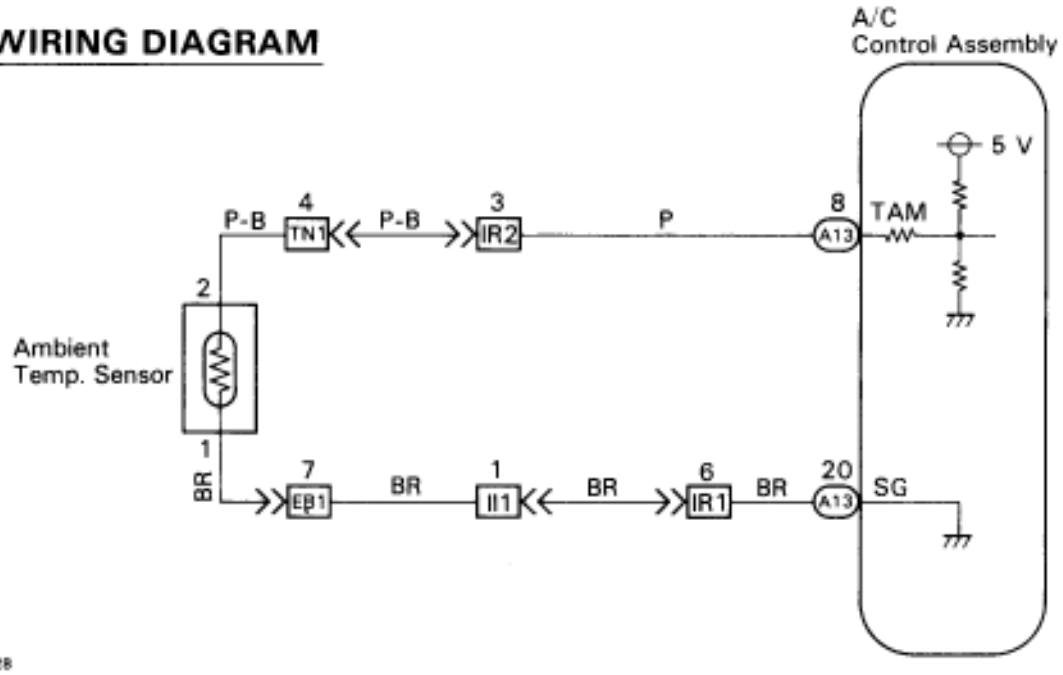

WhereEverybodyKnowsYourName

INSPECTION PROCEDURE

1 Check voltage between terminals TAM and SG of air conditioner control assembly connector.

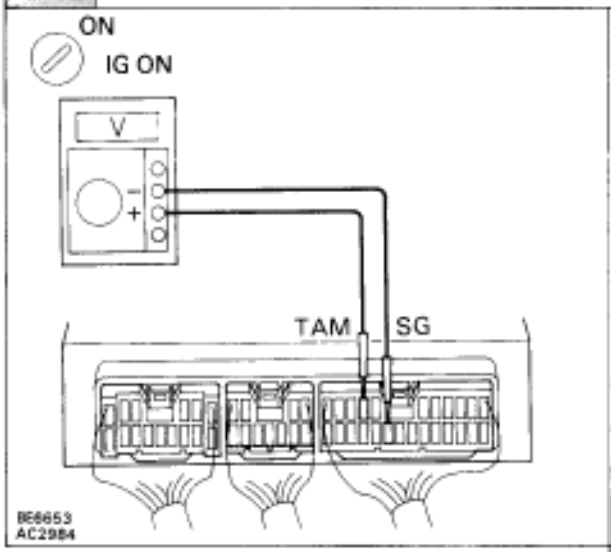

P
(1) Remove console upper panel. (See page BO-111)
(2) Remove A/C control assembly with connectors still connected.
(3) Turn ignition switch ON.

C
Check voltage between terminals TAM and SG of air conditioner control assembly connector at each temperature.

OK
Voltage
at 25°C (77°F) : 1.35~1.75 V
at 40°C (104°F) : 0.85~1.25 V

In addition, as the temperature increases, the voltage decreases gradually.

NG

OK
Proceed to next circuit inspection shown on matrix chart (See page AC-36).However, when Diag. code 11 is displayed, check and replace air conditioner control assembly.

2 Check ambient temperature sensor.

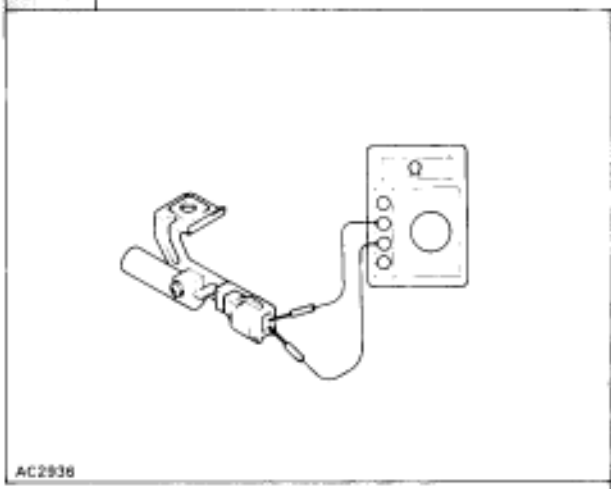

P
(1) Remove under cover
(2) disconnect ambient temperature sensor connector.

C
Check resistance between terminals 1 and 2 of ambient temperature sensor connector at each temperature.

OK
Resistance
at 25°C (77°F) : 1.6~1.8k?
at 50°C (122°F) : 0.5~0.7k?

In addition, as the temperature increases, the voltage decreases gradually.

OK

NG
Replace ambient temperature sensor.

3 Check for open and short in harness and connector between air conditioner control assembly and ambient temperature sensor (See page IN-27).

OK

NG
Repair or replace harness or connector.

Check and repair air conditioner control assembly.

WhereEverybodyKnowsYourName

Diag. Code 13 — Evaporator Temperature Sensor Circuit

CIRCUIT DESCRIPTION

This sensor detects the temperature inside the cooling unit and sends the appropriate signals to the air conditioner control assembly.

Code No.	Diag. Code Detecting Condition	Trouble area
13	Open or short in evaporator temperature sensor circuit.	▼ Evaporator temperature sensor. ▼ Harness or connector between evaporator temperature sensor and A/C control assembly. ▼ A/C control assembly.

DIAGNOSTIC CHART

1 Check voltage between terminals TE and SG of air conditioner control assembly

- OK → Proceed to next circuit inspection shown on matrix chart (See page AC-36). However, when Diag. code 13 is displayed, check and replace air conditioner control assembly.
- NG ↓

2 Check evaporator temperature sensor.

- NG → Replace evaporator temperature sensor.
- OK ↓

3 Check harness and connector between air conditioner control assembly and evaporator temperature sensor (See page IN-27).

- NG → Repair or replace harness or connector.
- OK ↓

Check and replace air conditioner control assembly.

10

WIRING DIAGRAM

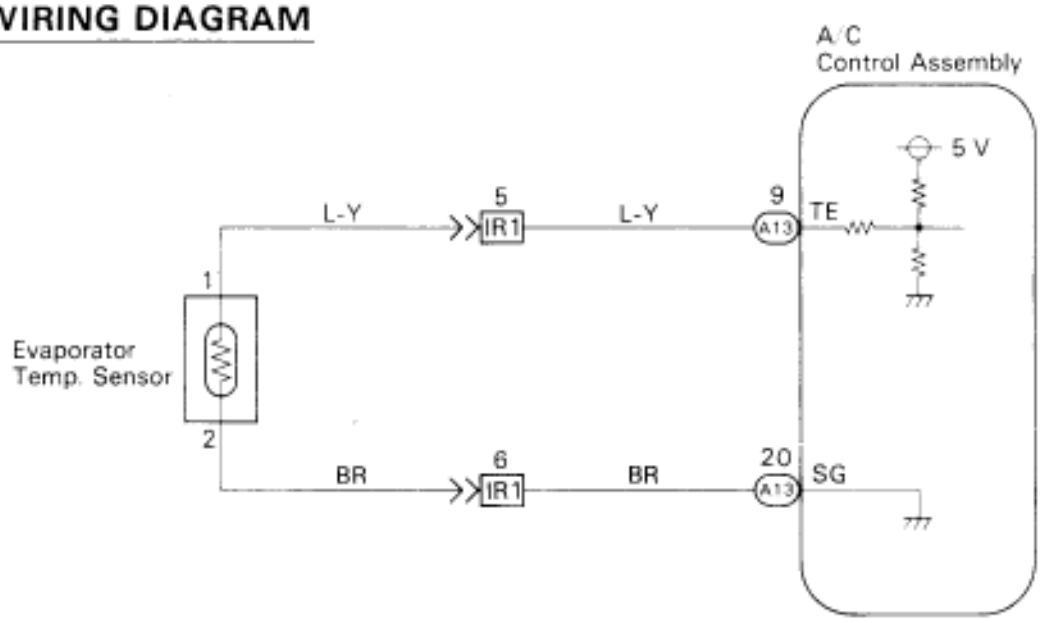

WhereEverybodyKnowsYourName

INSPECTION PROCEDURE

1 Check voltage between terminals TE and SG of air conditioner control assembly connector.

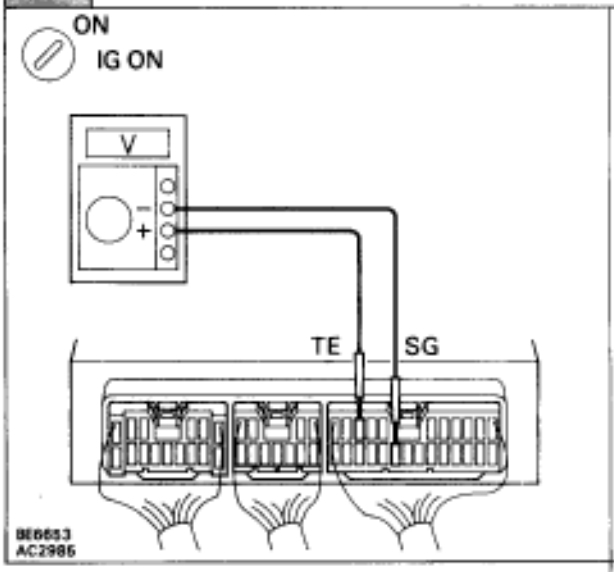

P (1) Remove console upper panel. (See page BO–111)
(2) Remove A/C Control Assembly with connectors still connected.
(3) Turn ignition switch ON.

C Measure voltage between terminals TE and SG of air conditioner control assembly connector at each temperature.

OK **Voltage**

at 0°C (32°F) : 2.0~2.4 V
at 15°C (59°F) : 1.4~1.8 V

In addition, as the temperature increases, the voltage decreases gradually.

NG

OK **Proceed to next circuit inspection shown on matrix chart (See page AC-36).However, when Diag. code 11 is displayed, check and replace air conditioner control assembly.**

2 Check evaporator temperature sensor.

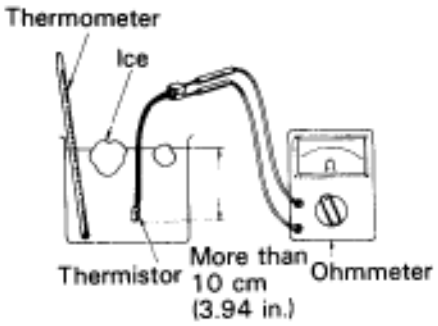

P Remove evaporator temperature sensor(See page AC-124).

C Check resistance between terminals 1 and 2 of evaporator temperature sensor connector at each temperature.

OK **Resistance**

at 0°C (32°F) : 4.6~5.1k?
at 15°C (59°F) : 2.1~2.6k?

In addition, as the temperature increases, the voltage decreases gradually.

OK

NG **Replace evaporator temperature sensor.**

3 Check for open and short in harness and connector between air conditioner control assembly and evaporator temperature sensor (See page IN-27).

OK

NG **Repair or replace harness or connector.**

Check and replace air conditioner control assembly.

WhereEverybodyKnowsYourName

Diag. Code 14 | Water Temperature Sensor Circuit

CIRCUIT DESCRIPTION

This sensor detects the coolant temperature and sends the appropriate signals to the air conditioner control assembly. These signals are used for warm up control when the engine is cold.

Code No.	Diag. Code Detecting Condition	Trouble area
14	Open or short in water temperature sensor circuit.	▼ Water temperature sensor. ▼ Harness or connector between water temperature sensor and A/C control assembly. ▼ A/C control assembly.

DIAGNOSTIC CHART

1 Check voltage between terminals TW and SG air conditioner control assembly connector.
- OK → Proceed to next circuit inspection shown on matrix chart (See page AC-36). However, when Diag. code 14 is displayed, check and replace air conditioner control assembly.
- NG ↓

2 Check water temperature sensor.
- NG → Replace water temperature sensor.
- OK ↓

3 Check harness and connector between air conditioner control assembly and water temperature sensor.(See page IN-27).
- NG → Repair or replace harness or connector.
- OK ↓

Check and replace air conditioner control assembly.

WIRING DIAGRAM

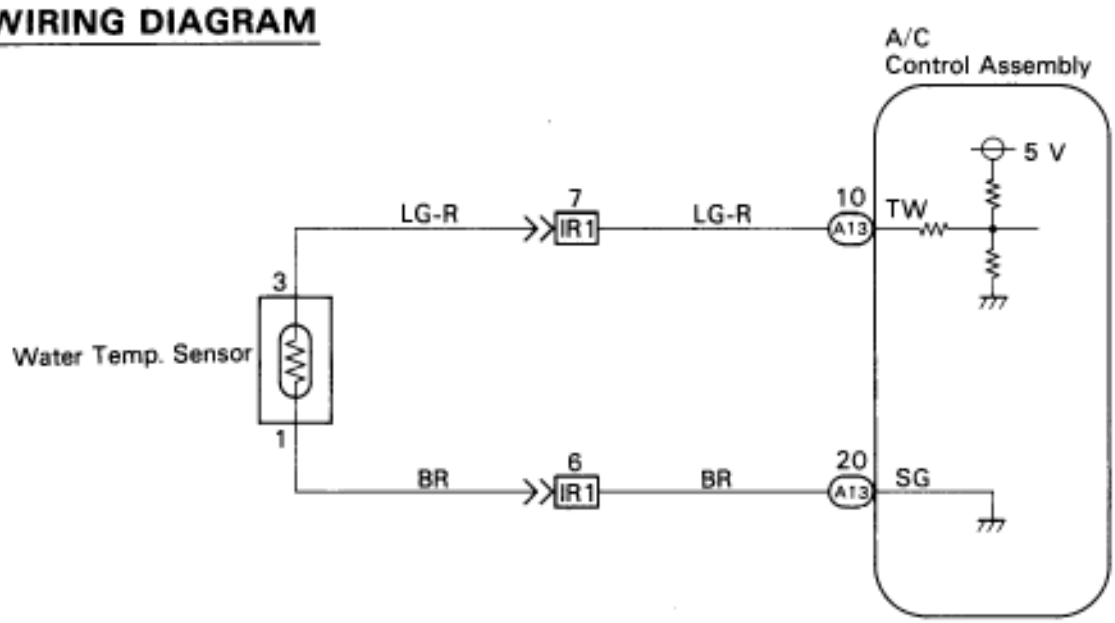

WhereEverybodyKnowsYourName

INSPECTION PROCEDURE

1 Check voltage between terminals TW and SG of air conditioner control assembly connector.

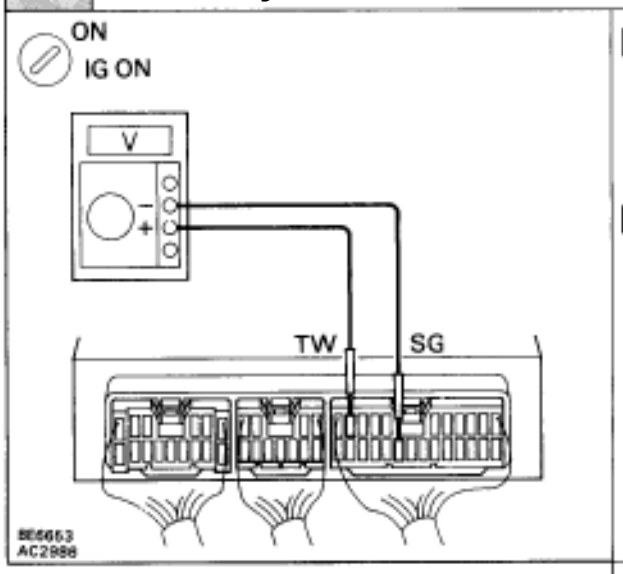

P (1) Remove console upper panel. (See page BO–111)

(2) Remove A/C Control Assembly with connectors still connected.

(3) Turn ignition switch ON.

C Measure voltage between terminals TW and SG of air conditioner control assembly connector at each temperature.

OK **Voltage**

at 0˚C (32˚F) : 2.8~3.2 V
at 40˚C (104˚F) : 1.8~2.2 V
at 70˚C (158˚F) : 0.9~1.3 V

In addition, as the temperature increases, the voltage decreases gradually.

NG

OK **Proceed to next circuit inspection shown on matrix chart (See page AC-36).However, when Diag. code 14 is displayed, check and repair air conditioner control assembly.**

2 Check water temperature sensor.

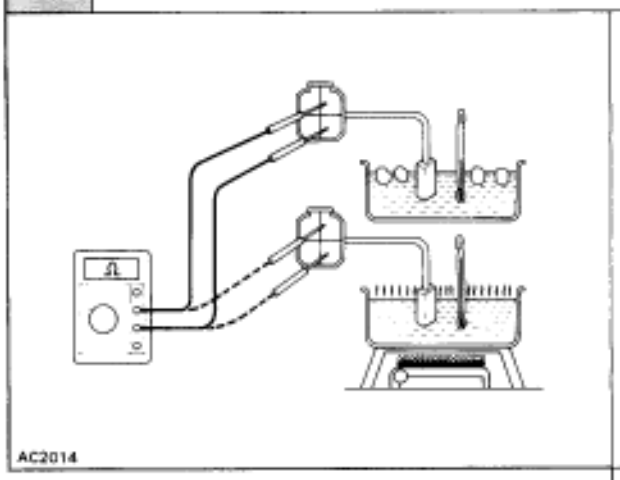

P (1) Remove heater unit.

(2) Remove water temperature sensor.

C Measure resistance between terminals 1 and 3 of water temperature sensor connector at each temperature.

OK **Resistance**

at 0˚C (32˚F) : 16.5~17.5 k?
at 40˚C (104˚F) : 2.4~2.8 k?
at 70˚C (158˚F) : 0.7~1.0 k?

In addition, as the temperature increases, the voltage decreases gradually.

OK

NG **Replace water temperature sensor.**

3 Check for open and short in harness and connector between air conditioner control assembly and water temperature sensor (See page IN-27).

OK

NG **Repair or replace harness or connector.**

Check and replace air conditioner control assembly.

WhereEverybodyKnowsYourName

Diag. Code 21 | Solar Sensor Circuit

CIRCUIT DESCRIPTION

A photo diode in the solar sensor detects solar radiation and sends signals to the air conditioner control assembly.

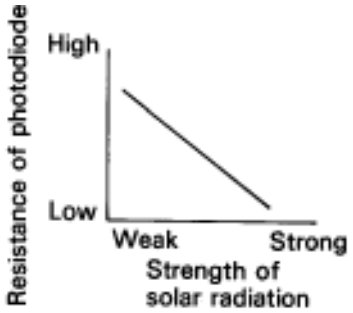

Code No.	Diag. Code Detecting Condition	Trouble area
21	Open or short in solar sensor circuit. (Please note that display of diagnostic code 21 is not abnormal when the sensor is not receiving solar radiation)	▼ Solar sensor. ▼ Harness or connector between solar sensor and A/C control assembly. ▼ A/C control assembly.

DIAGNOSTIC CHART

1 Check voltage between terminals S5 and TS of air conditioner control assembly connector.
- OK → Proceed to next circuit inspection shown on matrix chart (See page AC-36). However, when Diag. code 21 is displayed, check and replace air conditioner control assembly.
- NG ↓

2 Check solar sensor.
- NG → Replace solar sensor.
- OK ↓

3 Check harness and connector between air conditioner control assembly and solar sensor (See page IN-27).
- NG → Repair or replace harness or connector.
- OK ↓

Check and replace air conditioner control assembly.

WIRING DIAGRAM

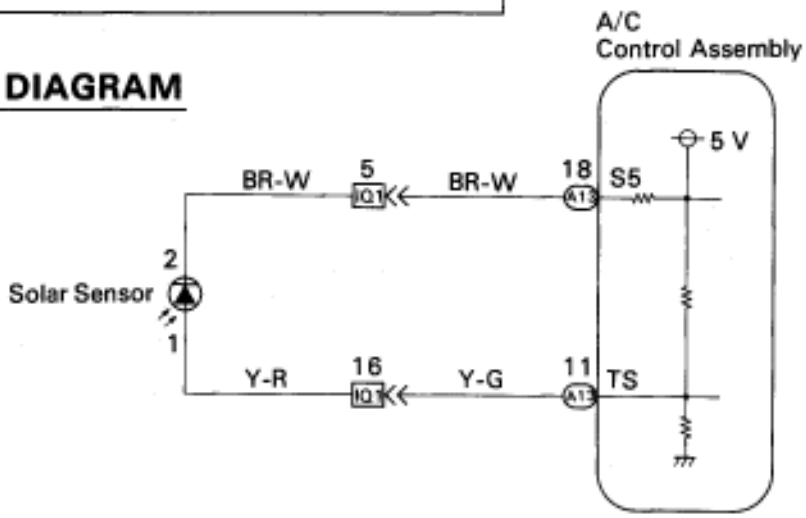

WhereEverybodyKnowsYourName

INSPECTION PROCEDURE

1 Check voltage between terminals S5 and TS of air conditioner control assembly connector.

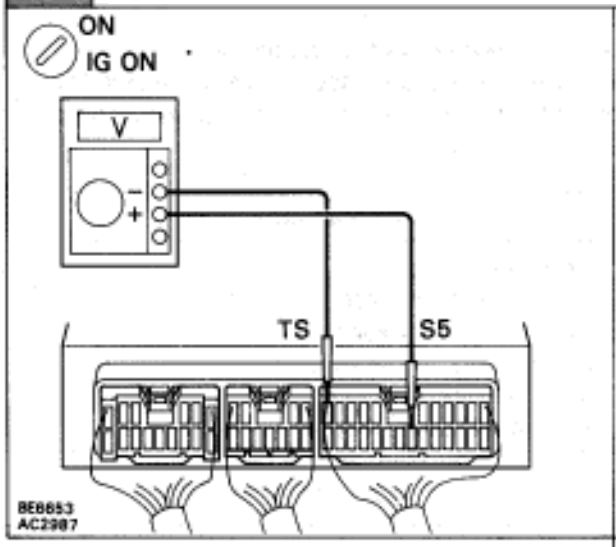

P
(1) Remove console upper panel. (See page BO-111)
(2) Remove A/C control assembly with connectors still connected.
(3) Turn ignition switch ON.

C
Measure voltage between terminals S5 and TS of air conditioner control assembly connector when the solar sensor is subjected to an electric light, the sensor is covered by a cloth.

OK

Condition	Voltage
Sensor subjected to electric light	Below 4 V
Sensor covered by a cloth	4 –4.5 V

In addition, when the inspection light is gradually moved away from the sensor, the voltage increases.

NG

OK

Proceed to next circuit inspection shown on matrix chart (See page AC-36).However, when Diag. code 21 is displayed, check and replace air conditioner control assembly.

2 Check solar sensor.

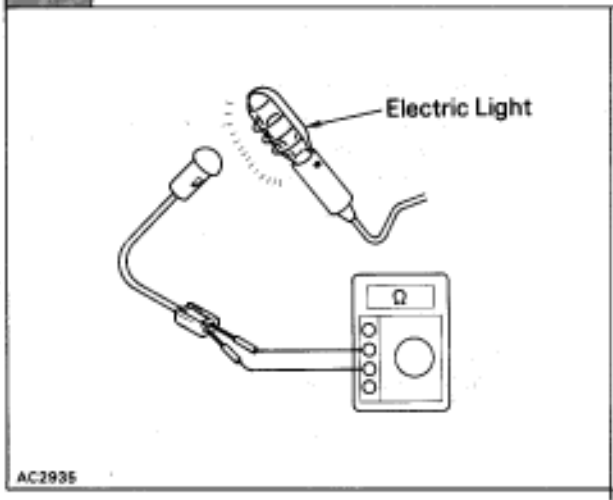

P
(1) Remove solar sensor from dashboard.
(2) disconnect solar sensor connector.

C
(1) Cover the sensor by a cloth.
(2) Measure resistance between terminals 1 and 2 of solar sensor connector.

Hint
Connect positive (+) lead of ohmmeter to terminal 2 and negative (–) lead to terminal 1 of the solar sensor.

P
(1) Remove the cloth from the solar sensor and subject the sensor to electric light.
(2) Measure resistance.

OK
Resistance: Approx, 4 k? (continuity)
In addition, as the electric light is moved gradually away from the sensor the resistance increases.

OK

NG

Replace solar sensor.

3 Check for open and short in harness and connector between air conditioner control assembly and solar sensor (See page IN-27).

OK

NG

Repair or replace harness or connector.

Check and replace air conditioner control assembly.

WhereEverybodyKnowsYourName

Diag. Code 22 — Compressor Lock Sensor Circuit

CIRCUIT DESCRIPTION

This sensor sends 4 pulses per engine revolution to the air conditioner control assembly.
If the number ratio of the compressor speed, divided by the engine speed is smaller that a predetermined value, the air conditioner control assembly turns the compressor off. And, the indicator flashes at about 1 second intervals.

Code No.	Diag. Code Detecting Condition	Trouble area
22	All conditions below are detected for 3 secs. or more. (a) Engine rpm: 450 rpm or more (b) Ratio between engine and compressor rpm deviates 20% or more in comparison to normal operation.	▼ Compressor ▼ Compressor drive belt. ▼ Compressor lock sensor. ▼ Harness and connector between compressor and A/C control assembly. ▼ A/C control assembly.

DIAGNOSTIC CHART

1 Check compressor.
- NG → Adjust drive belt tension or repair compressor.
- OK ↓

2 Check compressor lock sensor.
- NG → Replace compressor lock sensor.
- OK ↓

3 Check harness and connectors between air conditioner control assembly and compressor sensor (See page IN-27).
- NG → Repair or replace harness or connector.
- OK ↓

Proceed to next circuit inspection shown on matrix chart (See page AC-36). However, when Diag. code 22 is displayed, check and replace air conditioner control assembly.

WIRING DIAGRAM

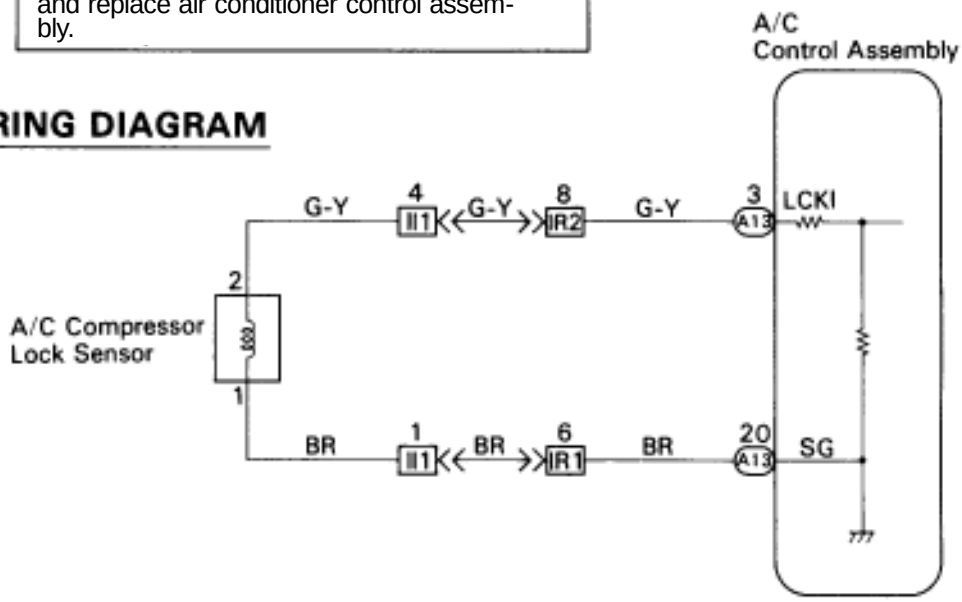

N02981

WhereEverybodyKnowsYourName

INSPECTION PROCEDURE

1 Check compressor

P (1). Check compressor drive belt tension (See page AC-104).
(2). Check if the compressor does not lock during with engine started and blower switch and A/C switch ON.

OK

NG **Adjust drive belt tension or repair compressor.**

2 Check compressor lock sensor.

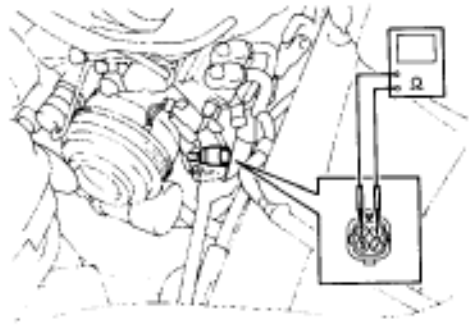

P Disconnect compressor lock sensor connector.

C Measure resistance between terminals 1 and 2 of compressor lock sensor connector.

OK **Resistance:** **at 25°C (77°F) : 530 –650?**
at 100°C (212°F) : 670 –890?

OK

NG **Replace compressor lock sensor.**

3 Check for open and short in harness and connectors between air conditioner control assembly and compressor lock sensor (See page IN-27).

OK

NG **Repair or replace harness or connector.**

Proceed to next circuit inspection shown on matrix chart (See page AC-36).However, when Diag. code 22 is displayed, check and replace air conditioner control assembly.

WhereEverybodyKnowsYourName

Diag. Code 23 — Compressor Lock Sensor Circuit

CIRCUIT DESCRIPTION

The pressure switch sends the appropriate signals to the air conditioner control assembly when the air conditioner refrigerant pressure drops too low or rises too high. When the air conditioner control assembly receives these signals, it outputs signals via the Engine & ECT ECU to switch off the compressor relay and turns the magnet clutch off.

Code No.	Diag. Code Detecting Condition	Trouble area
23	▼ Open in pressure sensor circuit. ▼ Abnormal refrigerant pressure. [below 206 kPa (2.1 kgf/cm^2, 30 psi) over 2,650 kPa (27 kgf/cm^2, 385 psi)]	▼ Pressure switch. ▼ Harness or connector between pressure switch and ECU. Refrigerant pipe line. ▼ ECU.

DIAGNOSTIC CHART

1 Check voltage between terminals LP of air conditioner control assembly and body ground.
- OK → Proceed to next circuit inspection shown on matrix chart (See page AC-36).
- NG ↓

2 Check pressure switch.
- NG → Replace pressure switch
- OK ↓

3 Check harness and connector between air conditioner control assembly and pressure switch and body ground (See page IN-27).
- NG → Repair or replace harness or connector.
- OK ↓

Check and replace air conditioner control assembly.

WIRING DIAGRAM

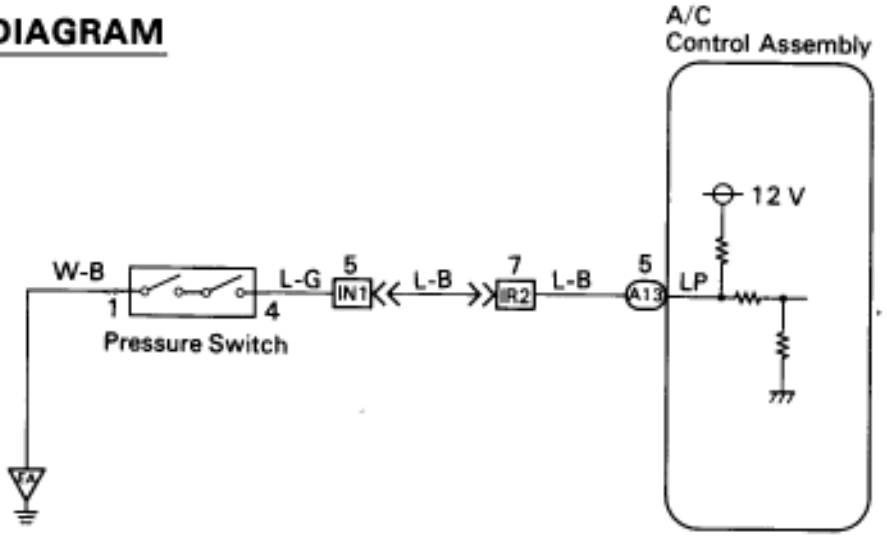

WhereEverybodyKnowsYourName

INSPECTION PROCEDURE

1 Check voltage between terminals LP of air conditioner control assembly and body ground.

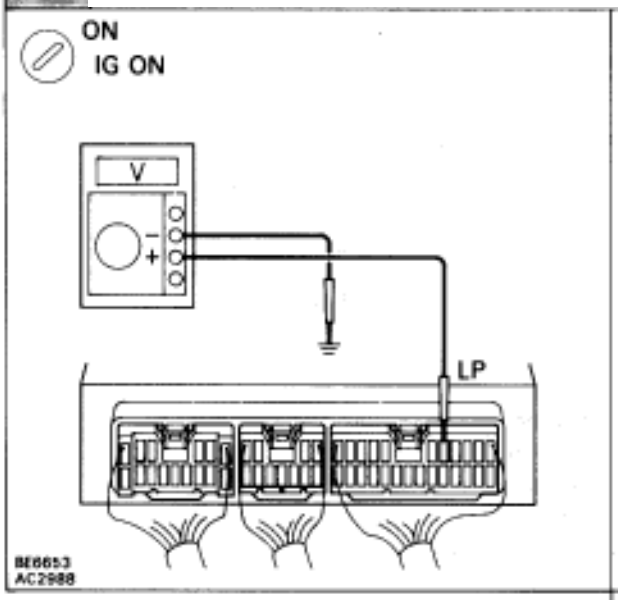

P (1) Install the manifold gauge set.
(See page AC-15).
(2) Turn ignition switch ON.

C Check voltage between terminals LP of air conditioner control assembly connector and body ground when the air conditioner gas pressure is changed.

OK **The voltage changes with gas pressure, as shown in the diagram below.**

Low Pressure Cut Side	<Reference> High pressure Cut Side
ON (0 V) 225 kPa (2.3 kgf/cm²)	ON (0 V) 2,060 kPa (21 kgf/cm²)
OFF (12 V) 207 kPa (2.1 kgf/cm²)	OFF (12 V) 2,660 kPa (27 kgf/cm²)

NG

OK **Proceed to next circuit inspection shown on matrix chart (See page AC-36).**

2 Check pressure switch.

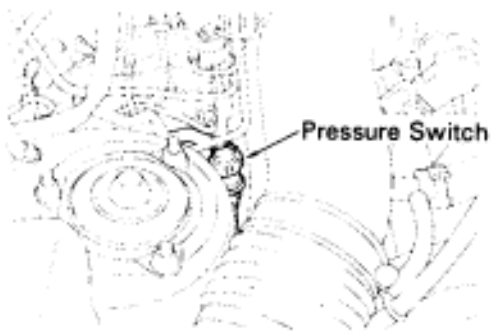

P Disconnect pressure switch connector.

C Check continuity between terminals 1 and 4 of pressure switch when air conditioner gas pressure is changed.

OK **The continuity changes with gas pressure as shown below.**

Low Pressure Cut Side	<Reference> High pressure Cut Side
ON (continuity) 225 kPa (2.3 kgf/cm²)	ON (continuity) 2,060 kPa (21 kgf/cm²)
OFF (no continuity) 207 kPa (2.1 kgf/cm²)	OFF (no continuity) 2,660 kPa (27 kgf/cm²)

OK

NG **Replace pressure switch**

3 Check for open and short in harness and connector between air conditioner control assembly and pressure switch, pressure switch and body ground (See page IN-27).

OK

NG **Repair or replace harness or connector.**

Check and replace air conditioner control assembly.

WhereEverybodyKnowsYourName

Diag. Code 31, 41 | Air Mix Damper Position Sensor Circuit

CIRCUIT DESCRIPTION

This sensor detects the position of the air mix damper and sends the appropriate signals to the air conditioner control assembly.
The position sensor is built into the air mix servo-motor assembly.

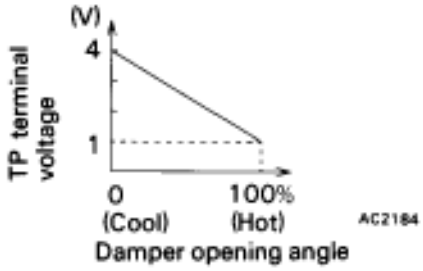

Code No.	Diag. Code Detecting Condition	Trouble area
31	Short to ground or power source circuit in air mix damper position sensor circuit.	▼ Air mix damper position sensor ▼ Harness or connector between air mix servomotor assembly and A/C control assembly. ▼ A/C control assembly
41	Air mix damper position sensor value does not change even if A/C control assembly operates air mix servomotor.	

DIAGNOSTIC CHART

1 Check voltage between terminals TP and SG of air conditioner control assembly connector.
- OK → Proceed to next circuit inspection shown on matrix chart (See page AC-36). However, when Diag. code31 or 41 is displayed, check and replace air conditioner control assembly.
- NG ↓

2 Check air mix damper position sensor.
- NG → Replace air mix servomotor assembly.
- OK ↓

3 Check harness and connector between air conditioner control assembly and air mix servomotor assembly (See page IN-27).
- NG → Repair or replace harness or connector.
- OK ↓

Check and replace air conditioner control assembly.

WIRING DIAGRAM

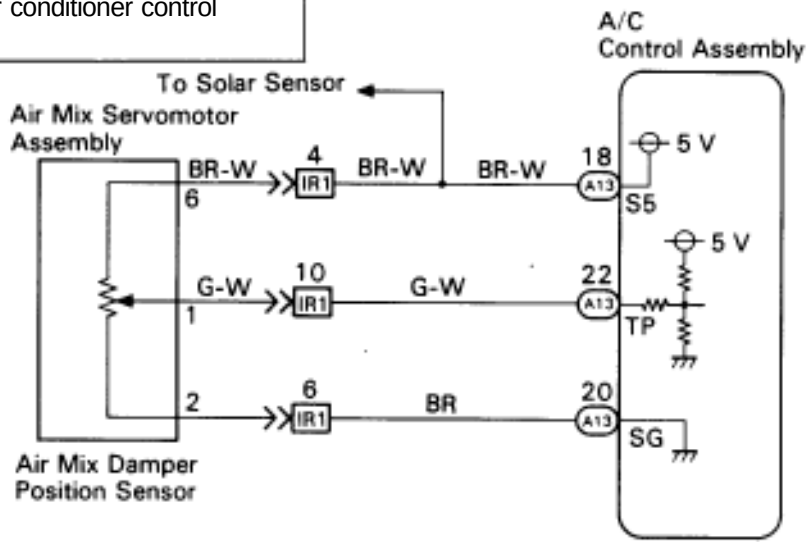

WhereEverybodyKnowsYourName

INSPECTION PROCEDURE

1 Check voltage between terminals TP and SG of air conditioner control assembly connector.

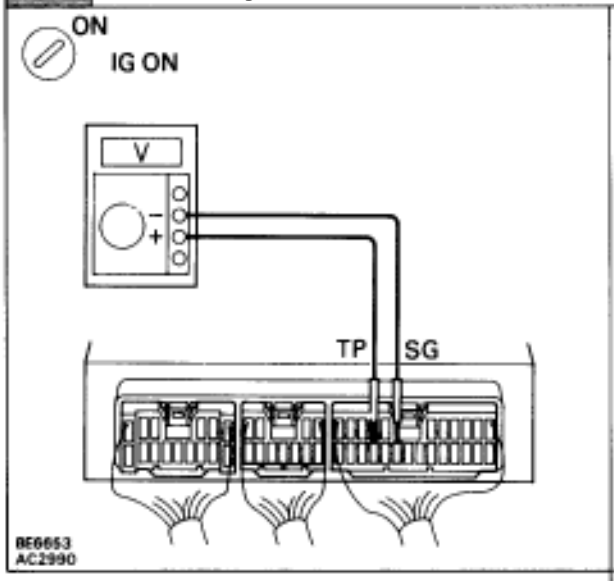

P (1) Remove console upper panel. (See page BO–111).
(2) Remove A/C control assembly with connec– tors still connected.
(3) Turn ignition switch ON.

C **Change the set temperature to activate the air mix damper, and measure the voltage between terminals TP and SG of air conditioner control assembly connector each time when the set temperature is changed.**

OK

Set Temperature	Voltage
Max. cool	3.70– 4.27 V
Max. hot	0.88 – 1.16 V

In addition, as the set temperature increases, the voltage decreases gradually without interruption.

NG

OK **Proceed to next circuit inspection shown on matrix chart (See page AC-36).However, when Diag. code 31 or 41 is displayed, check and replace air conditioner control assembly.**

2 Check air mix damper position sensor.

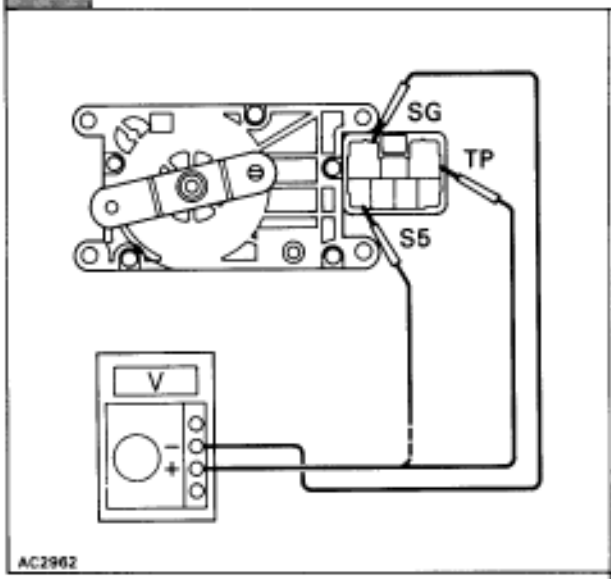

P (1) Remove heater unit. (See page AC-125)
(2) Disconnect air mix servomotor assembly connector.

C Measure resistance between terminals S5 and SG of air mix servomotor assemblv connector.

OK **Resistance: 4.7~7.2 k?**

C **While operating air mix servomotor as in the procedure on page AC-61, measure resistance between terminals TP and SG of air mix servomotor assembly connector.**

OK

Position	Resistance
Max. cool	3.76 ~ 5.76 k?
Max. warm	0.94 ~ 1.44 k?

As the air mix servomotor moves from cool side to warm side, the resistance decreases gradually without interruption.

OK

NG **Replace air mix servomotor assembly.**

3 Check for open and short in harness and connector between air conditioner control assembly and air mix servomotor assembly (See page IN-27).

OK

NG **Repair or replace harness or connector.**

Check and replace air conditioner control assembly.

WhereEverybodyKnowsYourName

Diag. Code 41 | Air Mix Servomotor Circuit

CIRCUIT DESCRIPTION

The air mix servomotor is controlled by the A/C control assembly and moves the air mix damper to the desired position.

Code No.	Diag. Code Detecting Condition	Trouble area
41	Air mix damper position sensor value does not change even if A/C control assembly operates air mix servomotor.	▼ Air mix servomotor. ▼ Air mix damper position sensor. ▼ Harness or connector between A/C controlassembly and A/M servomotor, A/M damperposition sensor. ▼ A/C control assembly.

DIAGNOSTIC CHART

1 Actuator check.
- OK → Proceed to next circuit inspection show on matrix chart (See page AC-36).
- NG ↓

2 Check air mix servomotor.
- NG → Replace air mix servomotor assembly.
- OK ↓

3 Check harness and connector between air conditioner control assembly and air mix servomotor assembly (See page IN-27).
- NG → Repair or replace harness or connector.
- OK ↓

Check and replace air conditioner control assembly.

WIRING DIAGRAM

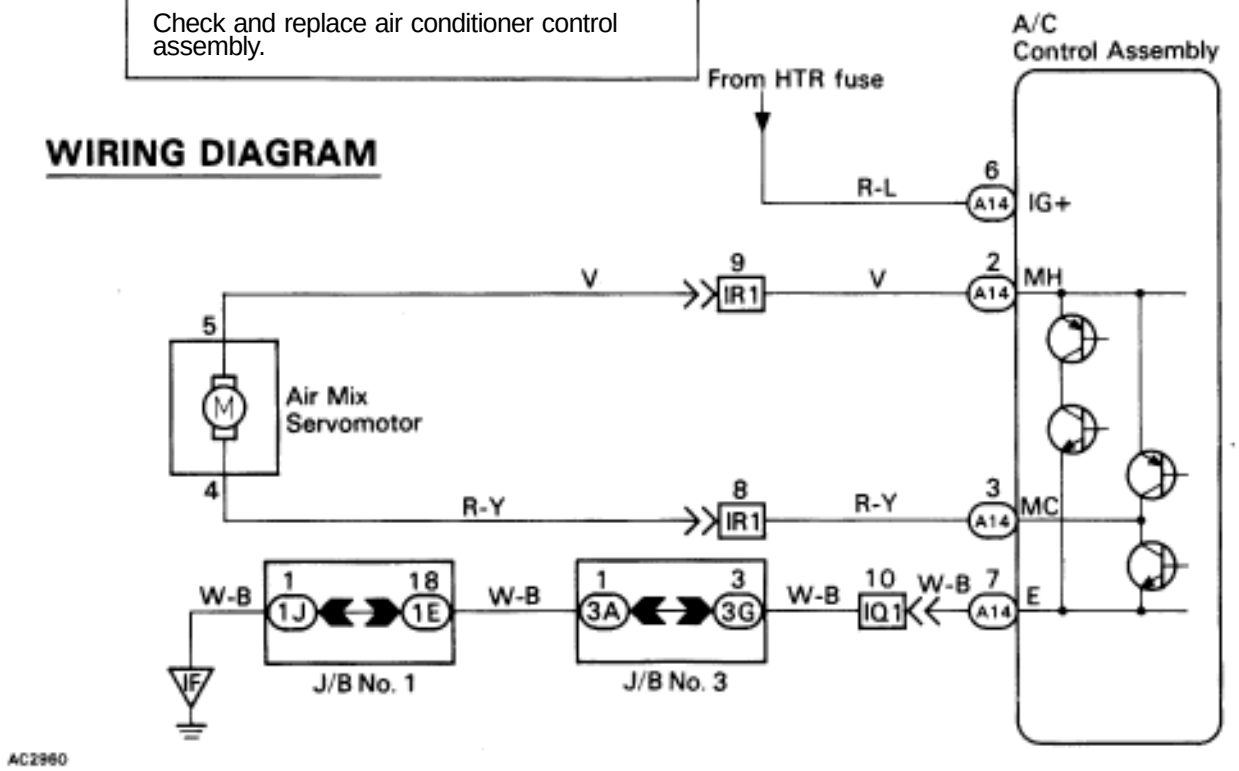

WhereEverybodyKnowsYourName

INSPECTION PROCEDURE

1 Actuator check.

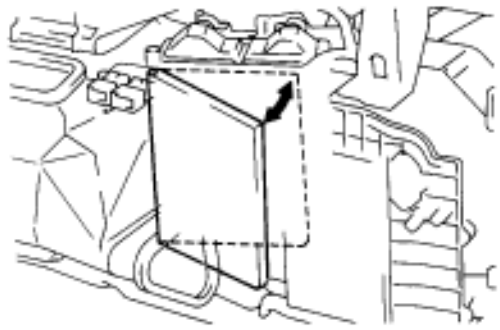

P
(1) Warm up the engine.
(2) Set to the actuator check mode (See page AC-30).
(3) Press the FRS switch and change it to step operation.

C
Press the FRS switch and check the operation of the air mix damper and the condition of the blower.

OK

Display Code	Air Mix damper	Condition
20 ~ 22	0% (Fully closed)	Cool air comes out
23 ~ 24	50%	
25 ~ 27	100% (Fully opened)	Warm air comes out

NG

OK → **Proceed to next circuit inspection shown on matrix chart (See page AC-36).**

2 Check air mix servomotor.

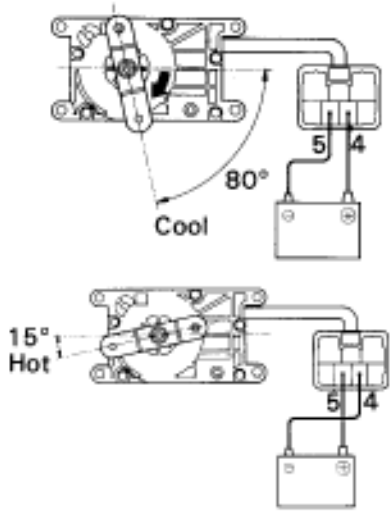

P Remove heater unit.

C Connect positive ⊥ lead to terminal 4 and negative ⊖ lead to terminal 5.

OK The lever turns smoothly to cool side.

C Connect negative ⊖ lead to terminal 4 and positive ⊥ lead to terminal 5.

OK The lever turns smoothly to hot side.

OK

NG → **Replace air mix servomotor assembly.**

3 Check for open and short in harness and connector between air conditioner control assembly and air mix servomotor assembly (See page IN-27).

OK

NG → **Repair or replace harness or connector.**

Check and replace air conditioner control assembly.

WhereEverybodyKnowsYourName

Diag. Code 32, 42 | Air Inlet Damper Position Sensor Circuit

CIRCUIT DESCRIPTION

This sensor detects the position of the air inlet damper and sends the appropriate signals to the air conditioner control assembly.
The position sensor is built into the air mix servomotor assembly.

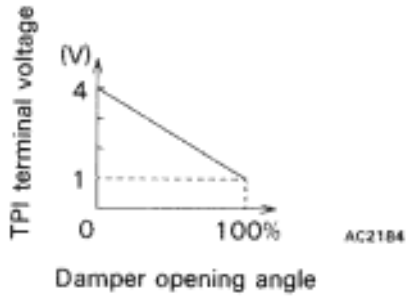

Code No.	Diag. Code Detecting Condition	Trouble area
32	Short to ground or power source circuit in air inlet damper position sensor circuit.	▼ Air inlet damper position sensor. ▼ Harness or connector between air inletservomotor assembly and A/C controlassembly ▼ A/C control assembly
42	Air inlet damper position sensor value does not change even if A/C control assembly operates air inlet servomotor.	

DIAGNOSTIC CHART

1 Check voltage between terminals TP1 and SG of air conditioner control assembly connector.
- OK → Proceed to next circuit inspection shown on matrix chart (See page AC-36). However, when Diag. code 32 or 42 is displayed, check and replace air conditioner control assembly.
- NG ↓

2 Check air inlet damper position sensor.
- NG → Replace air inlet servomotor assembly.
- OK ↓

3 Check harness and connector between air conditioner control assembly and air inlet servomotor assembly (See page IN–27).
- NG → Repair or replace harness or connector.
- OK ↓

Check and replace air conditioner control assembly.

WIRING DIAGRAM

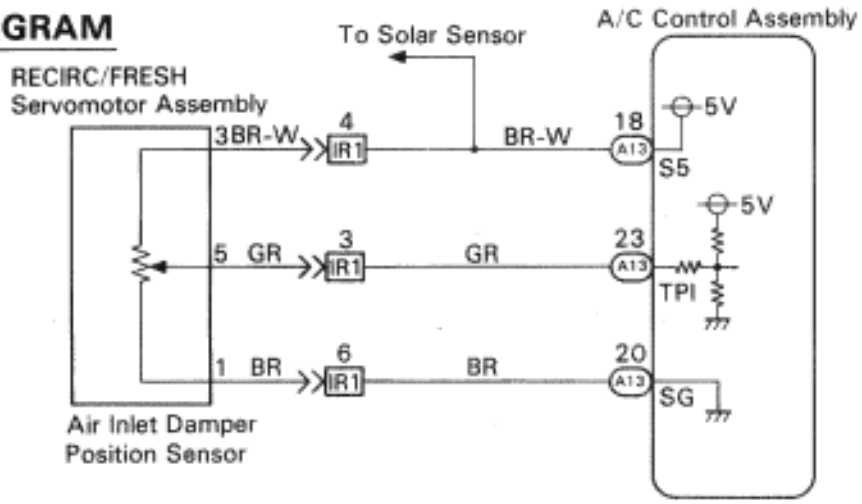

WhereEverybodyKnowsYourName

INSPECTION PROCEDURE

1 Check voltage between terminals TP1 and SG of air conditioner control assembly connector.

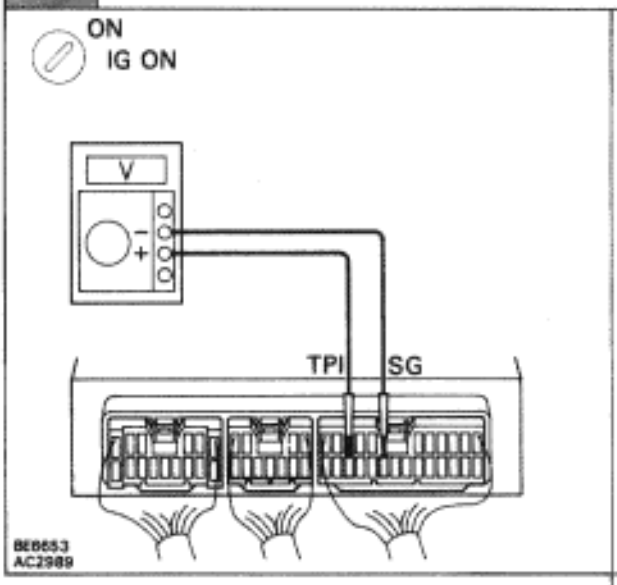

P
(1) Remove console upper panel. (See page BO-111).
(2) Remove A/C control assembly with connec– tors still connected.
(3) Turn ignition switch ON.

C
Press REC/FRS switch to change the air inlet between fresh and recirculation air, and measure voltage between terminals TP1 and SG of air conditioner control assembly when the air inlet servomotor operates.

OK

FRS-REC Switch	Voltage
REC	3.70 ~ 4.27 V
FRS	0.88 ~ 1.16 V

In addition, as the air inlet servomotor is moved from REC side to FRS side, the voltage de- creases gradually without interruption.

NG

OK
Proceed to next circuit inspection shown on matrix chart (See page AC-36).However, when Diag. code 32 or 42 is displayed, check and replace air conditioner control assem- bly.

2 Check air inlet damper position sensor.

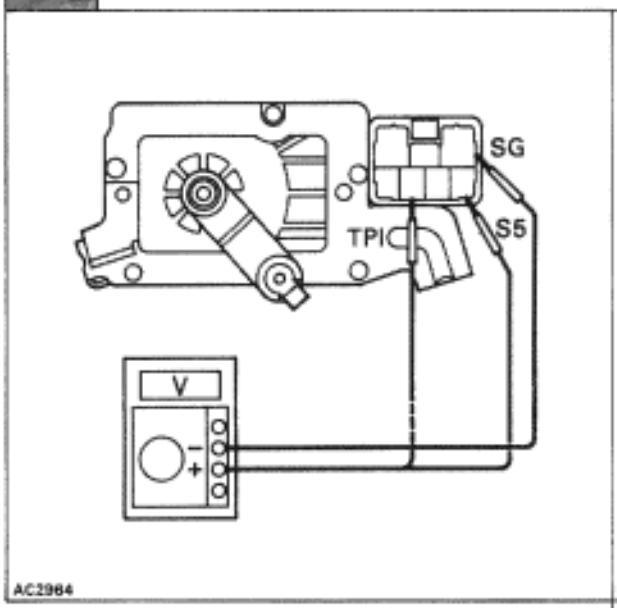

P
(1) Remove heater unit. (See page AC-127)
(2) Disconnect air inlet servomotor assembly connector.

C
Measure resistance between terminals S5 and SG of air inlet servomotor assembly connector.

OK
Resistance: 4.7~7.2 k?

C
While operating air inlet servomotor as in the procedure on page AC-65, measure resistance between terminals TP1 and SG of air inlet servo- motor assembly connector.

OK
Resistance:

Damper Position	Resistance
REC side	3.76 ~ 5.76 kΩ
FRS side	0.94 ~ 1.44 kΩ

As the air inlet servomotor moves from REC side to FRS side, the resistance decreases gradually without interruption.

OK

NG
Replace air inlet servomotor assembly.

3 Check for open and short in harness and connector between air conditioner control assembly and air inlet servomotor assembly (See page IN-27).

OK

NG
Repair or replace harness or connector.

Check and replace air conditioner control assembly.

WhereEverybodyKnowsYourName

Diag. Code 42 | Air Inlet Servomotor Circuit

CIRCUIT DESCRIPTION

The air inlet servomotor is controlled by the air conditioner control assembly and moves the air inlet damper to the desired position.

Code No.	Diag. Code Detecting Condition	Trouble area
42	Air inlet damper position sensor value does not change even if A/C control assembly operated air inlet servomotor	▼ Air inlet damper position sensor. ▼ Harness or connector between air inlet servomotor assembly and A/C control assembly. ▼ A/C control assembly

DIAGNOSTIC CHART

1 Actuator check.
- OK → Proceed to next circuit inspection shown on matrix chart (See page AC-36).
- NG ↓

2 Check air inlet servomotor.
- NG → Replace air inlet servomotor assembly.
- OK ↓

3 Check harness and connector between air conditioner control assembly and air inlet servomotor assembly (See page IN-27).
- NG → Repair or replace harness or connector.
- OK ↓

Check and replace air conditioner control assembly.

WIRING DIAGRAM

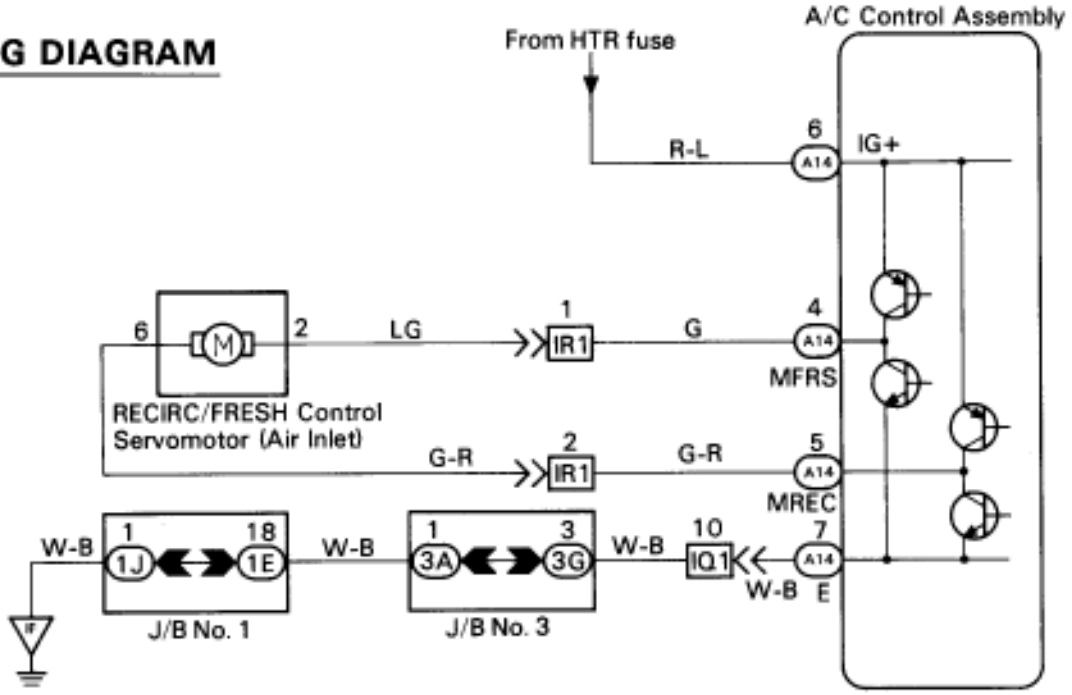

AC2998

WhereEverybodyKnowsYourName

INSPECTION PROCEDURE

1 Actuator check.

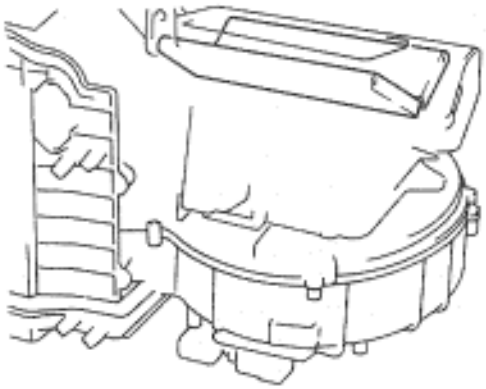

P (1) Remove glove box to see and check the air inlet damper operation
(2) Set to the actuator check mode (See page AC–30.
(3) Press the FRS switch and check it to step operation.

C Press the FRS switch and change it to step operation.

OK

Display Code	Air Inlet Damper
20	FRS
21	F/R
22	REC
23 ~ 27	FRS

NG

OK **Proceed to next circuit inspection shown on matrix chart (See page AC-36).**

2 Check air inlet servomotor.

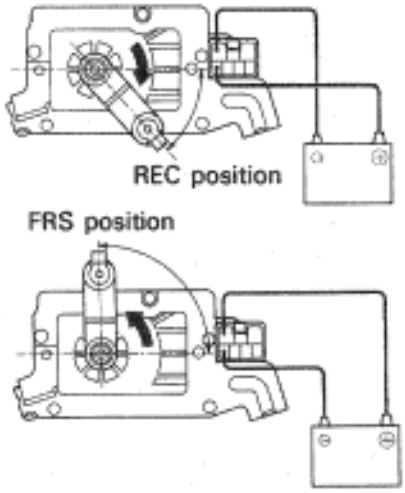

P Remove cooling unit.

C Connect positive ⊥ lead to terminal 6 and negative ⊖ lead to terminal 2.

OK The lever moves smoothly to REC position.

C Connect negative ⊖ lead to terminal 6 and positive ⊥ lead to terminal 2.

OK The lever moves smoothly to FRS position.

OK

NG **Replace air inlet servomotor assembly.**

3 Check for open and short in harness and connector between air conditioner control assembly and air inlet servomotor assembly (See page IN-27).

OK

NG **Repair or replace harness or connector.**

Check and replace air conditioner control assembly.

WhereEverybodyKnowsYourName

Diag. Code 33, 34 | Air Outlet Damper Position Sensor Circuit

CIRCUIT DESCRIPTION

This sensor detects the position of the air outlet damper and sends the appropriate signals to the air conditioner control assembly.
The position sensor is built into the air outlet servomotor assembly.

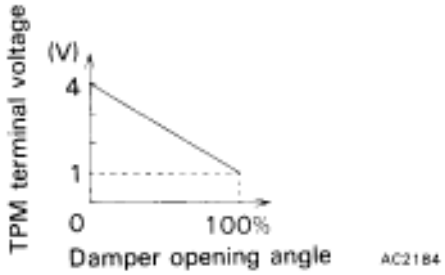

Code No.	Diag. Code Detecting Condition	Trouble area
33	Short to ground or power source circuit in air outlet damper position sensor circuit.	▼ Air outlet damper position sensor. ▼ Harness or connector between air outlet servomotor assembly and A/C control assembly ▼ A/C control assembly
43	Air outlet damper position sensor value does not change even if A/C control assembly operates air outlet servomotor.	

DIAGNOSTIC CHART

1 Check voltage between terminals TPM and SG of air conditioner control assembly connector.
- OK → Proceed to next circuit inspection shown on matrix chart (See page AC-36). However, when Diag. code 33 or 43 is displayed, check and replace air conditioner control assembly.
- NG ↓

2 Check air outlet damper position sensor.
- NG → Replace air outlet servomotor assembly.
- OK ↓

3 Check harness and connector between air conditioner control assembly and air outlet servomotor assembly (See page IN–27).
- NG → Repair or replace harness or connector.
- OK ↓

Check and replace air conditioner control assembly.

WIRING DIAGRAM

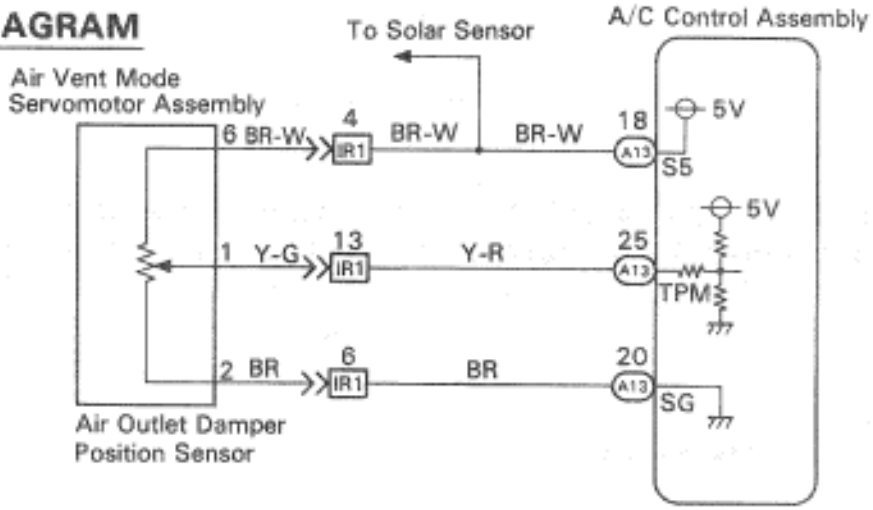

WhereEverybodyKnowsYourName

INSPECTION PROCEDURE

1 Check voltage between terminals TPM and SG of air conditioner control assembly connector.

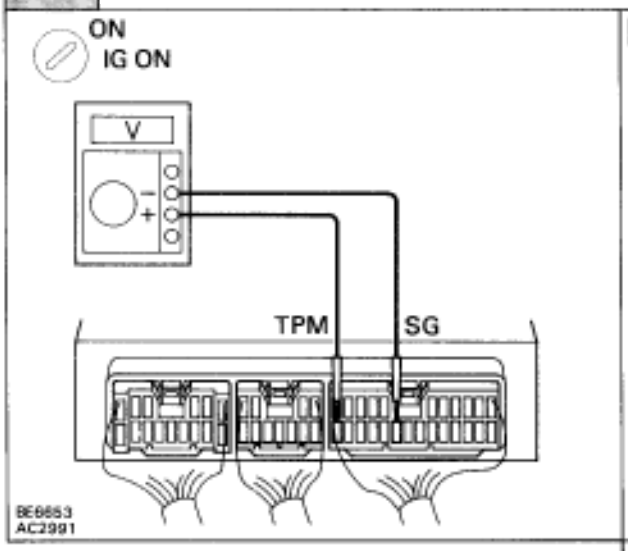

P
(1) Remove console upper panel.(See page BO-111).
(2) Remove A/C control assembly with connectors still connected.
(3) Turn ignition switch ON.

OK

FRS-REC Switch	Voltage
FACE	3.70 ~ 4.27 V
DEF	0.88 ~ 1.16 V

In addition, as the air outlet servomotor is moved from REC side to FRS side, the voltage decreases gradually without interruption.

NG

OK → **Proceed to next circuit inspection shown on matrix chart (See page AC-36).However, when Diag. code 32 or 42 is displayed, check and replace air conditioner control assembly.**

2 Check air outlet damper position sensor.

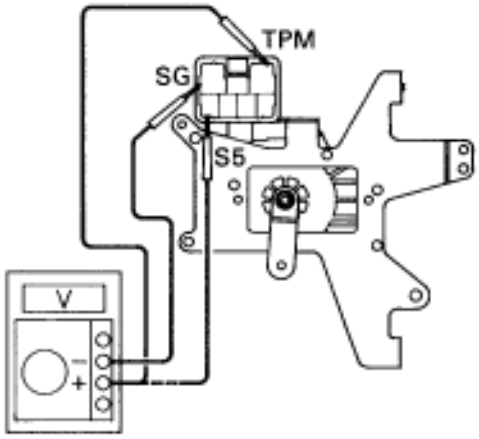

P
(1) Remove heater unit. (See page AC-127)
(2) Disconnect air outlet servomotor assembly connector.

C
Measure resistance between terminals S5 and SG of air outlet servomotor assembly connector.

OK
Resistance: 4.7~7.2 k?

C
While operating air outlet servomotor as in the procedure on page AC-69, measure resistance between terminals TP1 and SG of air outlet servomotor assembly connector.

OK
Resistance:

Damper Position	Resistance
DEF	3.76 ~ 5.76 kΩ
FACE	0.94 ~ 1.44 kΩ

As the air inlet servomotor moves from DEF side to FACE side, the resistance decreases gradually without interruption.

OK

NG → **Replace air outlet servomotor assembly.**

3 Check for open and short in harness and connector between air conditioner control assembly and air outlet servomotor assembly (See page IN-27).

OK

NG → **Repair or replace harness or connector.**

Check and replace air conditioner control assembly.

WhereEverybodyKnowsYourName

Diag. Code 43 | Air Outlet Servomotor Circuit

CIRCUIT DESCRIPTION

This circuit turns the servomotor and changes each mode damper position by the signals from the A/C control assembly. When the AUTO switch is on, the A/C control assembly changes the mode automatically between (FACE), (BI-LEVEL) and (FOOT) according to the temperature setting.

Code No.	Diag. Code Detecting Condition	Trouble area
43	Air outlet damper position sensor value does not change even if A/C control assembly operated air outlet servomotor.	▼ Air outlet servomotor. ▼ Air outlet damper position sensor. ▼ Harness or connector between A/C control assembly air outlet servomotor, air outlet damper position sensor. ▼ A/C control assembly

DIAGNOSTIC CHART

1 Actuator check.
- OK → Proceed to next circuit inspection show on matrix chart (See page AC-36).
- NG ↓

2 Check air outlet servomotor.
- NG → Replace air outlet servomotor .
- OK ↓

3 Check harness and connector between air conditioner control assembly and air outlet servomotor, air outlet servomotor and battery, air outlet servomotor and body ground. (See page IN-27).
- NG → Repair or replace harness or connector.
- OK ↓

Check and replace air conditioner control assembly.

WIRING DIAGRAM

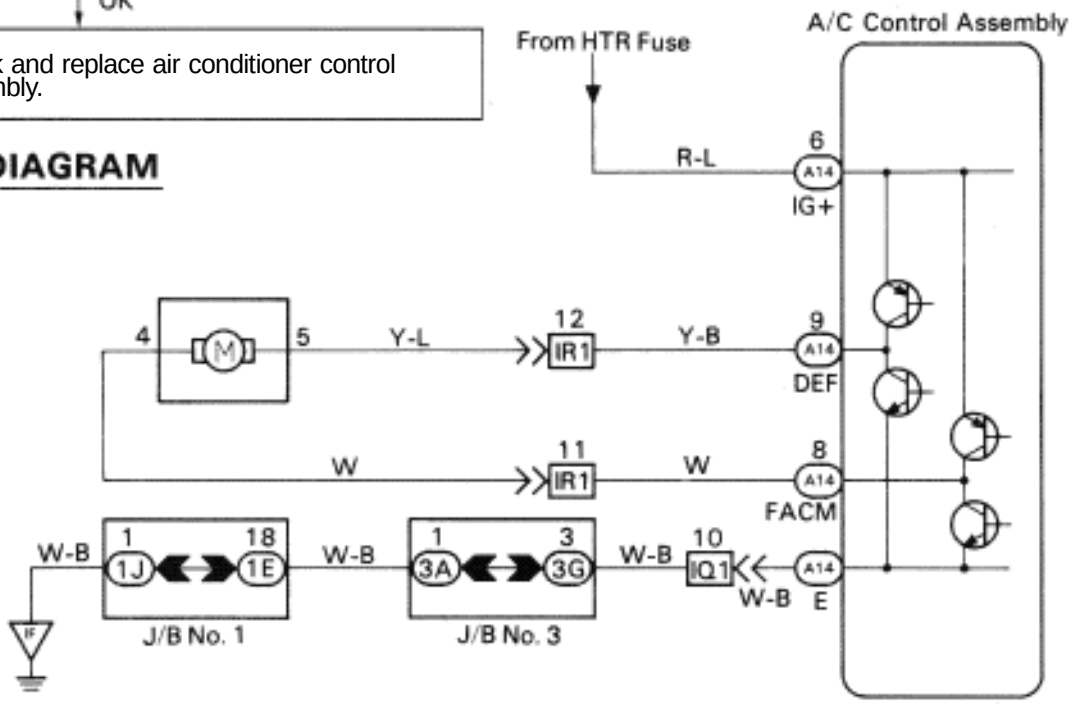

WhereEverybodyKnowsYourName

INSPECTION PROCEDURE

1 Actuator check.

Display Code	Air Flow
20 ~ 22	FACE
23	BI-LEVEL
24 ~ 25	FOOT
26	FOOT DEF
27	DEF

P (1) Set to the actuator check mode (See page AC-30).
(2) Press the FRS switch and change it to step operation.

C **Press FRS switch and check the condition of the flow.**

OK **The mode changes with the change in the temperature display as shown in the table.**

NG

OK **Proceed to next circuit inspection shown on matrix chart (See page AC-36).**

2 Check air outlet servomotor.

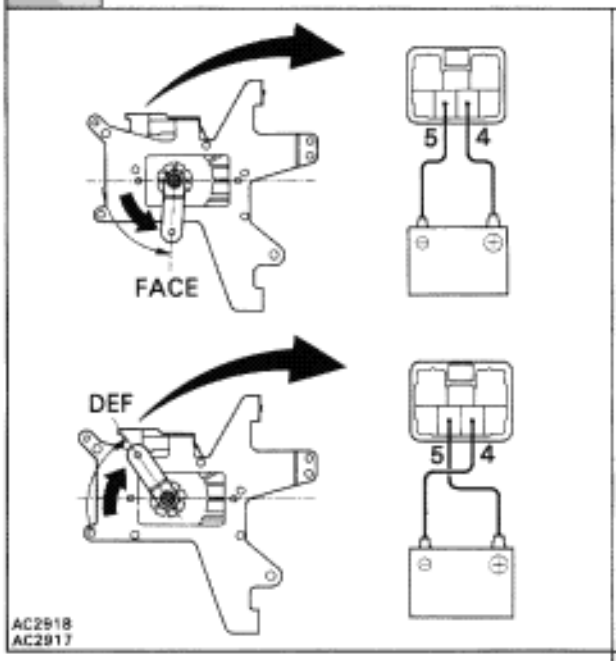

P Remove heater unit.(See page AC-125).

C Connect positive ⊥ lead to terminal 4 and negative ⊖ lead to terminal 5.

OK The lever turns smoothly to FACE position.

C Connect negative ⊖ lead to terminal 4 and positive ⊥ lead to terminal 5.

OK The lever moves smoothly to DEF position.

OK

NG **Replace air outlet servomotor.**

3 Check for open and short in harness and connector between air conditioner control assembly and outlet servomotor, outlet servomotor and battery, outlet servomotor and body ground.(See page IN-27).

OK

NG **Repair or replace harness or connector.**

Check and replace air conditioner control assembly.

WhereEverybodyKnowsYourName

IG Power Source Circuit

CIRCUIT DESCRIPTION

This is the power source for the air conditioner control assembly (contains the A/C control assembly) and servomotor, ect.

DIAGNOSTIC CHART

1 Check voltage between terminals IG+ and E of air conditioner control assembly connector.
- OK → Proceed to next circuit inspection shown on matrix chart (See page AC-36).
- NG ↓

2 Check continuity between terminal E of air conditioner control assembly and body ground.
- NG → Repair or replace harness or connector.
- OK ↓

3 Check HTR fuse.
- NG → Check for short in all the harness and components connected to the HTR fuse (See attached wiring diagram).
- OK ↓

Check harness and repair and connector between air conditioner control assembly and battery

WIRING DIAGRAM

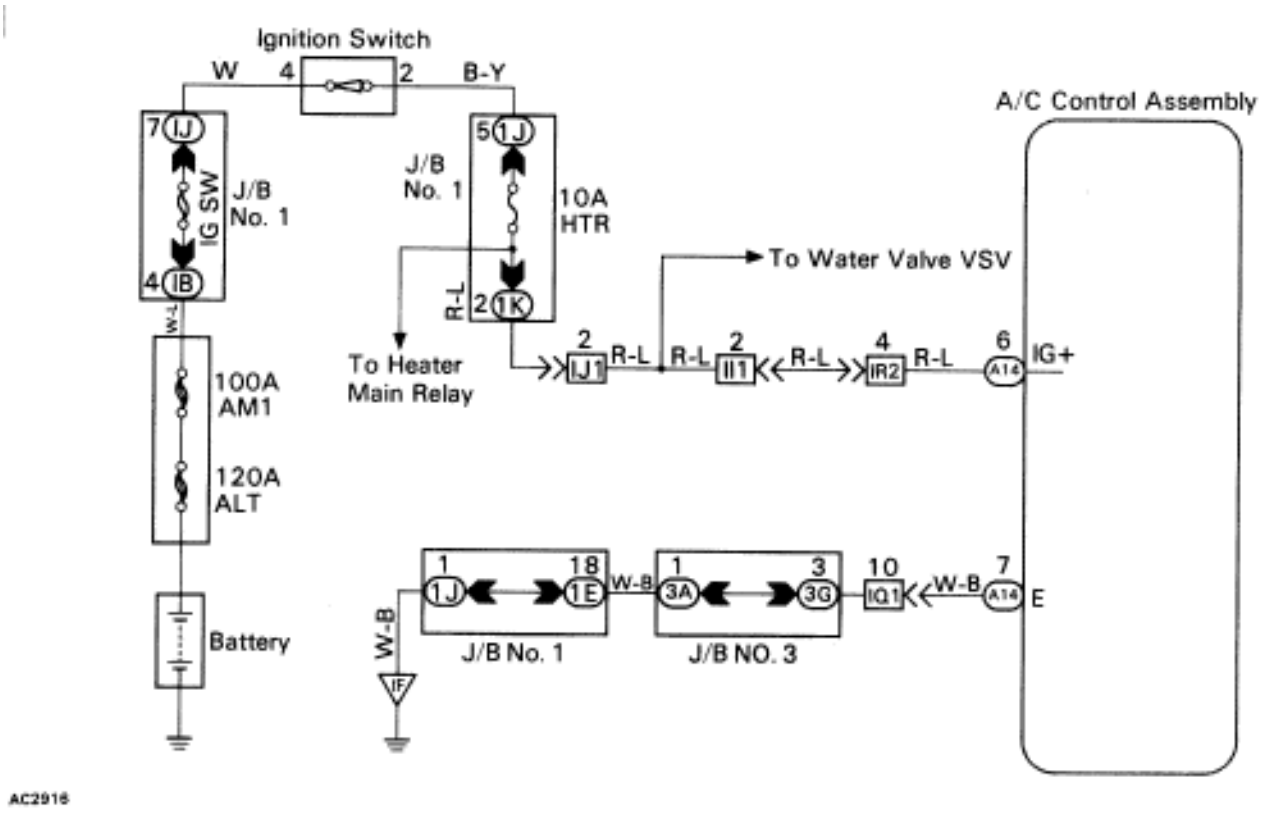

WhereEverybodyKnowsYourName

INSPECTION PROCEDURE

1 Check voltage between terminals IG+ and E of air conditioner control assembly connector.

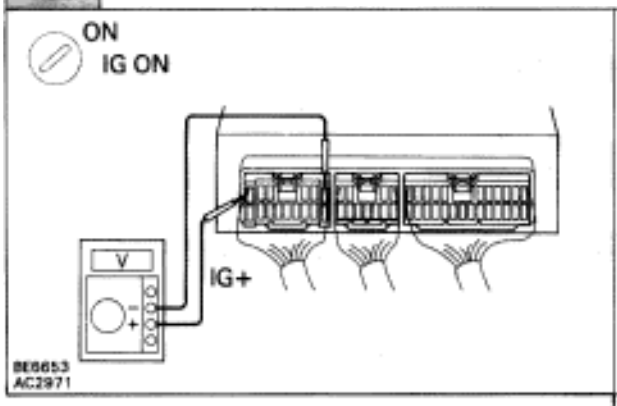

P (1) Remove console upper panel.(See page BO-111).
(2) Remove A/C control assembly with connec– tors still connected.
(3) Turn ignition switch ON.

C Measure voltage between terminals IG+ and E of air conditioner control assembly.

OK **Voltage: 10 –14 V**

NG

OK **Proceed to next circuit inspection shown on matrix chart (See page AC-36).**

2 Check continuity between terminals E of air conditioner control assembly and body ground.

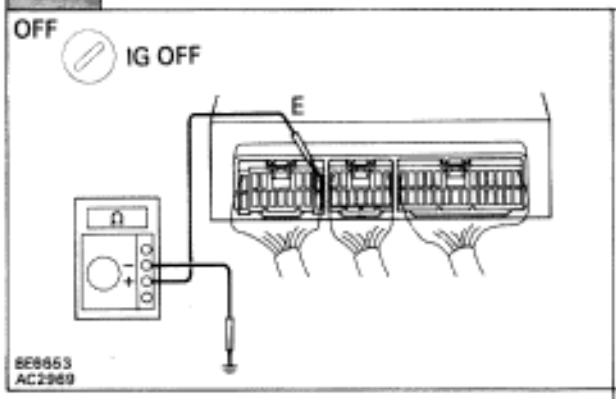

C Measure resistance between terminals E of air conditioner control assembly and body ground.

OK **Resistance: 1 or less**

OK

NG **Repair or replace harness or connector.**

3 Check HTR fuse.

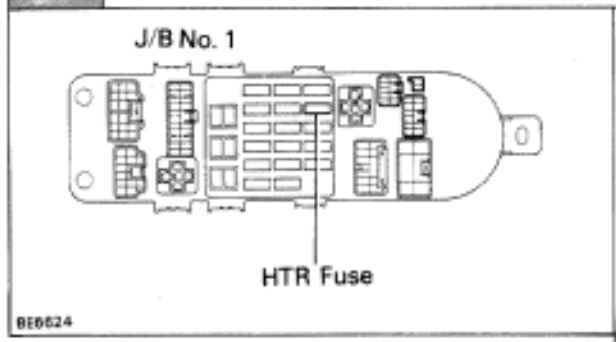

P Remove HTR fuse from J/B No. 1.

C Check continuity of HTR fuse

OK Continuity

OK

NG **Check for short in all the harness and components connected to the HTR fuse See attached wiring diagram).**

Check and repair harness and connector between air conditioner control assembly and battery.

WhereEverybodyKnowsYourName

ACC Power Source Circuit

CIRCUIT DESCRIPTION

This circuit supplies power to the air conditioner control assembly (contains the A/C control assembly).

DIAGNOSTIC CHART

1 Check voltage between terminals ACC of air conditioner control assembly connector and body ground.

- OK → Proceed to next circuit inspection shown on matrix chart (See page AC-36).
- NG ↓

2 Check RADIO No. 2 fuse.

- NG → Check for short in all the harness and components connected to the RADIO No. 2 fuse (See attached wiring diagram).
- OK ↓

Check and repair harness and connector between air conditioner control assembly and battery.

WIRING DIAGRAM

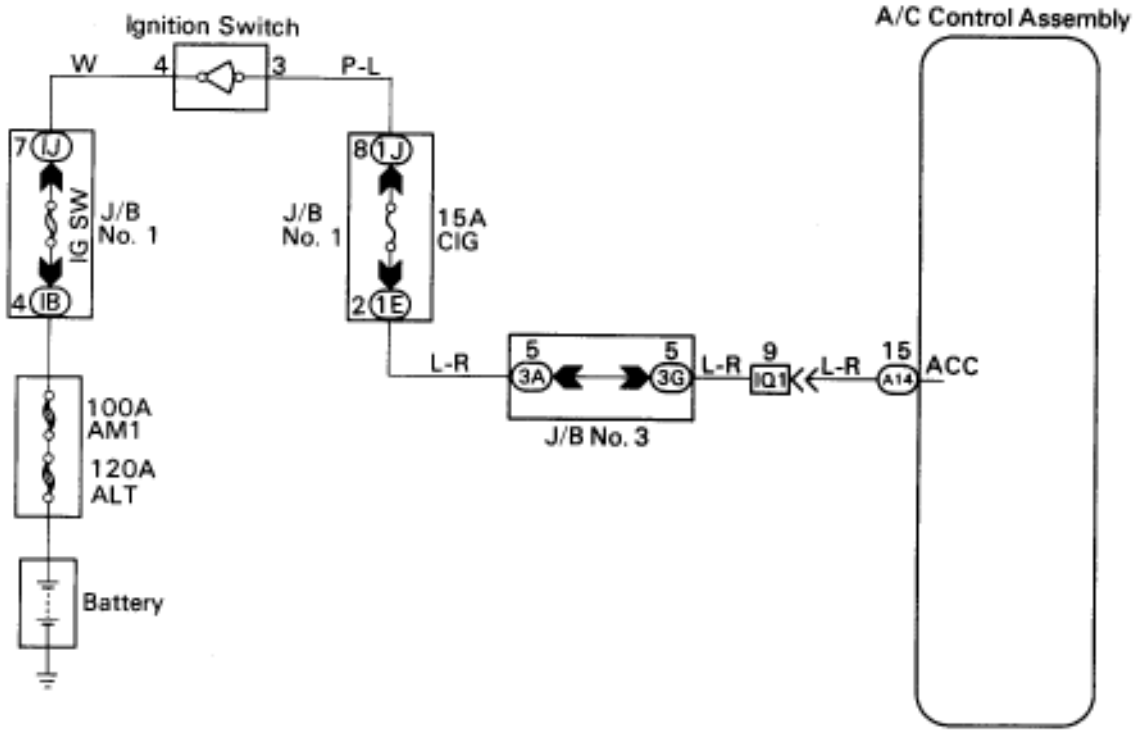

WhereEverybodyKnowsYourName

INSPECTION PROCEDURE

1 Check voltage between terminals ACC of air conditioner control assembly connector and body ground.

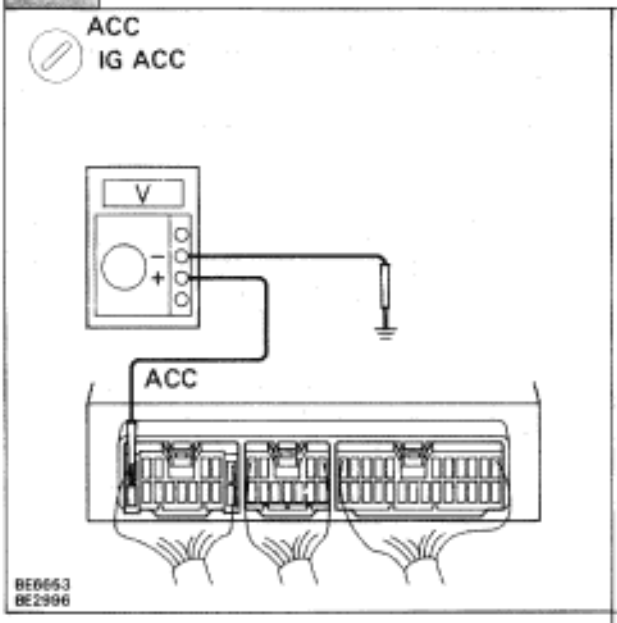

P (1) Remove console upper panel.(See page BO-111).
(2) Remove A/C control assembly with connec–tors still connected.
(3) Turn ignition switch ON.

C Measure voltage between terminals ACC of air conditioner control assembly connector and body ground.

OK **Voltage: 10 – 14 V**

NG

OK **Proceed to next circuit inspection shown on matrix chart (See page AC-36).**

2 Check RADIO No. 2 fuse.

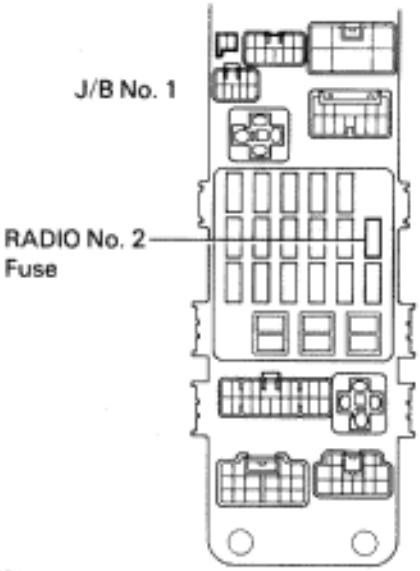

P Remove RADIO No. 2 fuse from J/B No. 1.

C Check continuity of RADIO No. 2 fuse.

OK Continuity.

OK

NG **Check for short in all the harness and components connected to the RADIO No. 2 fuse (See attached wiring diagram).**

Check and repair harness and connector between air conditioner control assembly and battery.

WhereEverybodyKnowsYourName

Back–up Power Source Circuit

CIRCUIT DESCRIPTION

This is the backup power source for the air conditioner control assembly. Power is supplied even when the ignition switch is off and is used for diagnostic code memory, etc.

DIAGNOSTIC CHART

1 Check voltage between terminal B of air conditioner control assembly connector and body ground.

- OK → Proceed to next circuit inspection shown on matrix chart (See page AC-36).
- NG ↓

2 Check DOME fuse.

- NG → Check for short all in the harness and components connecteds to the DOME fuse (See attached wiring diagram)
- OK ↓

Check and repair harness and connector between air conditioner control assembly and battery.

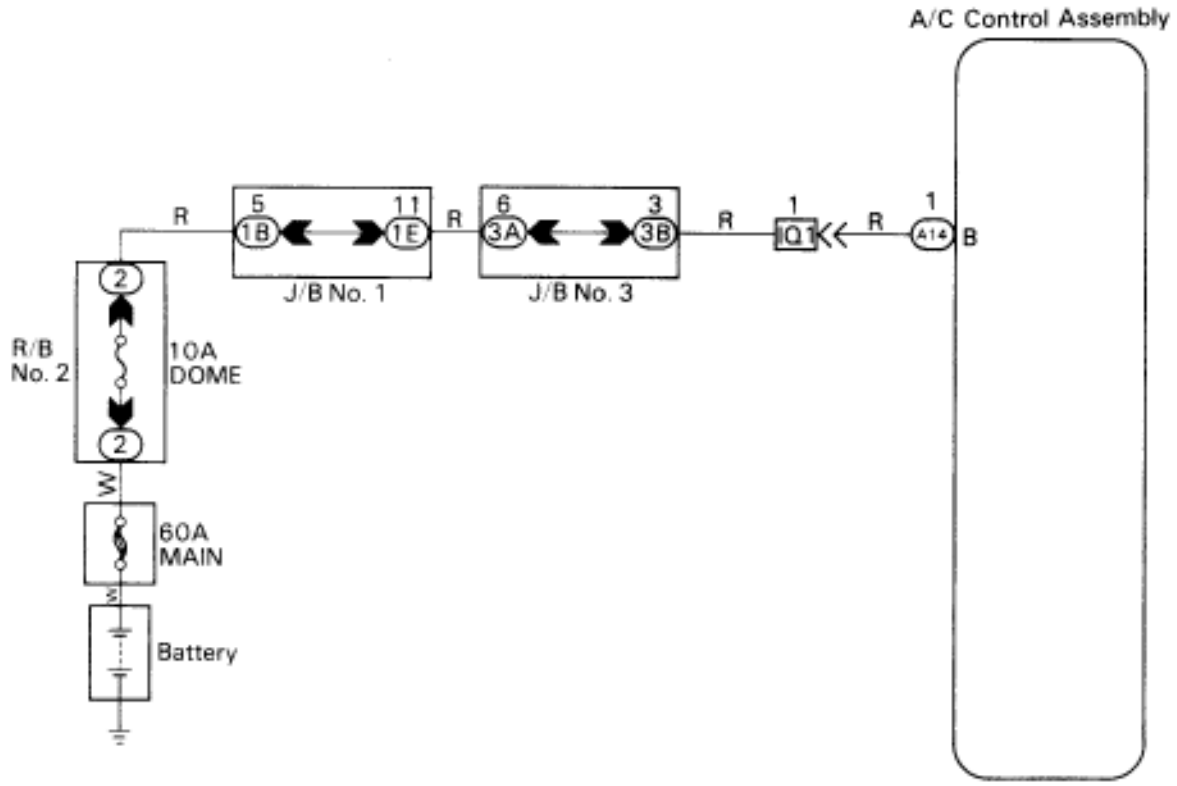

AC2914

WhereEverybodyKnowsYourName

INSPECTION PROCEDURE

1 Check voltage between terminals B of air conditioner control assembly connector and body ground.

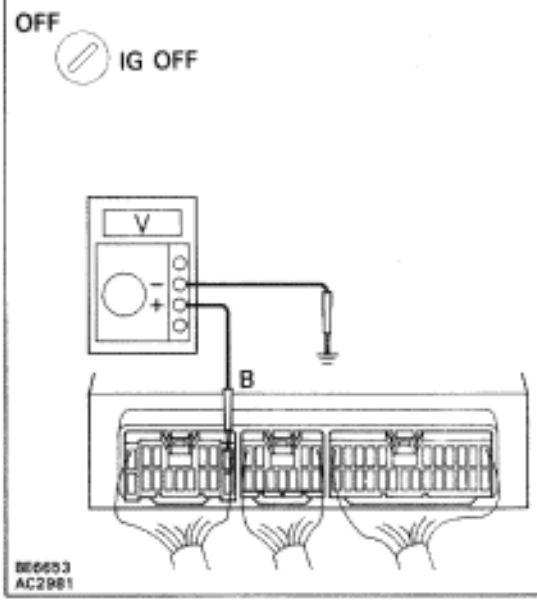

P (1) Remove console upper panel.(See page BO-111).
(2) Remove A/C control assembly with connec–tors still connected.

C Measure voltage between terminals B of air conditioner control assembly connector and body ground.

OK **Voltage: 10 – 14 V**

NG

OK **Proceed to next circuit inspection shown on matrix chart (See page AC-36).**

2 Check DOME fuse.

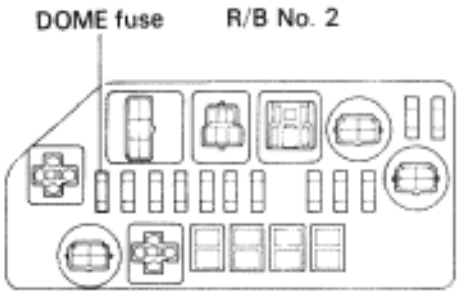

P Remove DOME fuse from R/B No. 2.

C Check continuity of DOME fuse.

OK Continuity.

OK

NG **Check for short in all the harness and components connected to the DOME fuse (See attached wiring diagram).**

Check and repair harness and connector between air conditioner control assembly and battery.

WhereEverybodyKnowsYourName

Heater Main Relay Circuit

CIRCUIT DESCRIPTION

The heater main relay is switched on by signals from the air conditioner control assembly.
It supplies power to the blower motor.

DIAGNOSTIC CHART

1 Check voltage between terminals HR of air conditioner control assembly connector and body ground.
- OK → Proceed to next circuit inspection shown on matrix chart (See page AC-36).
- NG ↓

2 Check heater main relay.
- NG → Replace heater main relay.
- OK ↓

3 Check HTR fuse.
- NG → Check for short in all the harness and components connected to the HTR fuse (See attached wiring diagram).
- OK ↓

Check and repair harness and connector between air conditioner control assembly and battery.

WIRING DIAGRAM

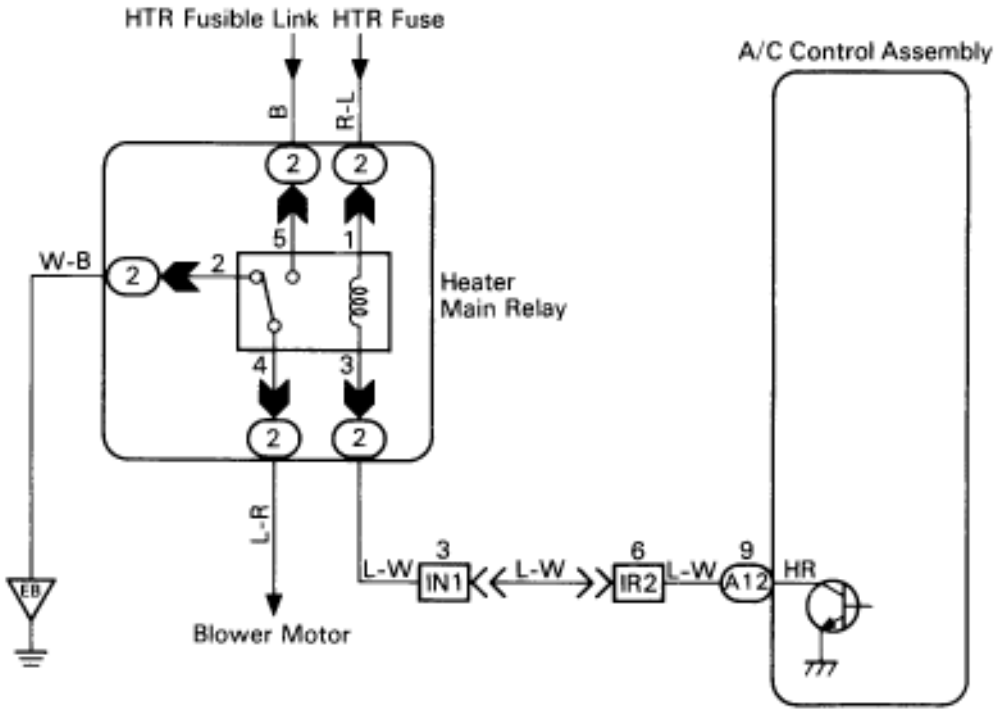

AC2913

WhereEverybodyKnowsYourName

INSPECTION PROCEDURE

1 Check voltage between terminals HR of air conditioner control assembly connector and body ground.

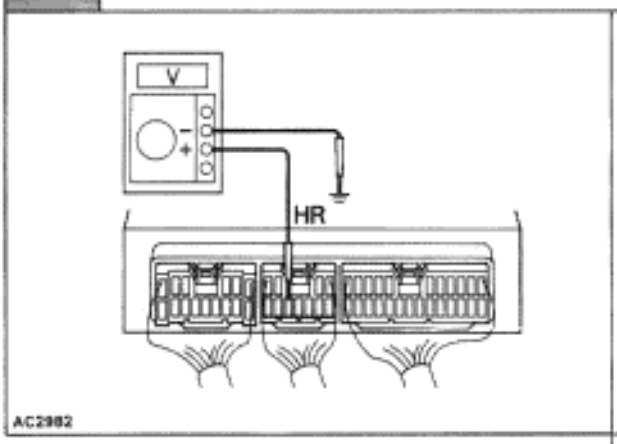

P (1) Remove console upper panel.(See page BO-111).

(2) Remove A/C control assembly with connec– tors still connected.

C Measure voltage between terminals HR of air conditioner control assembly and body ground when ignition switch is on and off.

OK

Ignition Switch	Voltage	
OFF	0 V	
ON	Blower ON	0 V
	Blower OFF	10 – 14 V

NG

OK **Proceed to next circuit inspection shown on matrix chart (See page AC-36).**

2 Check heater main relay.

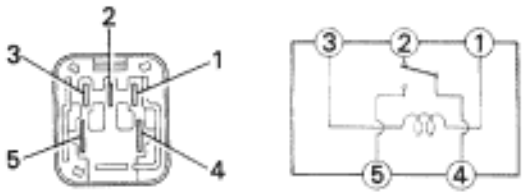

C Check continuity between each pair of terminals of heater main relay shown below.

OK

Terminals 4 and 5	Open
Terminals 1 and 3 Terminals 2 and 4	Continuity

P (1) Apply battery voltage between terminals 1 and 3

(2) Check continuity between each pair of ter– minal shown below.

OK

Terminals 2 and 4	Open
Terminals 4 and 5	Continuity

OK

NG **Replace heater main relay.**

3 Check HTR fuse.

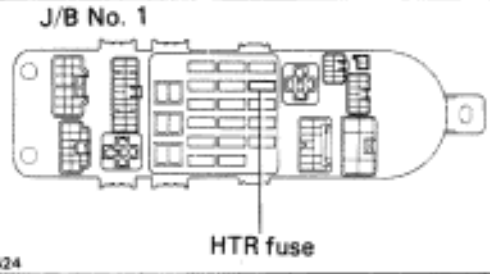

P Remove HTR fuse from J/B No. 1.

C Check continuity of HTR fuse

OK Continuity

OK

NG **Check for short in all the harness and components connected to the HTR fuse See attached wiring diagram).**

Check and repair harness and connector between air conditioner control assembly and battery.

WhereEverybodyKnowsYourName

Power Transistor Circuit

CIRCUIT DESCRIPTION

The air conditioner control assembly controls the blower speed by varying the voltage at terminal BLW which applies the base current to the power transistor.
The air conditioner control assembly also monitors the power transistor collector voltage at terminal VM, to control blower air volume precisely.

DIAGNOSTIC CHART

1 Check power transistor.
- NG → Replace power transistor.
- OK ↓

2 Check harness and connector between air conditioner control assembly and power transistor (See page IN–27).
- NG → Repair or replace harness or connector.
- OK ↓

Proceed to next circuit inspection shown on matrix chart (See page AC-36).

WIRING DIAGRAM

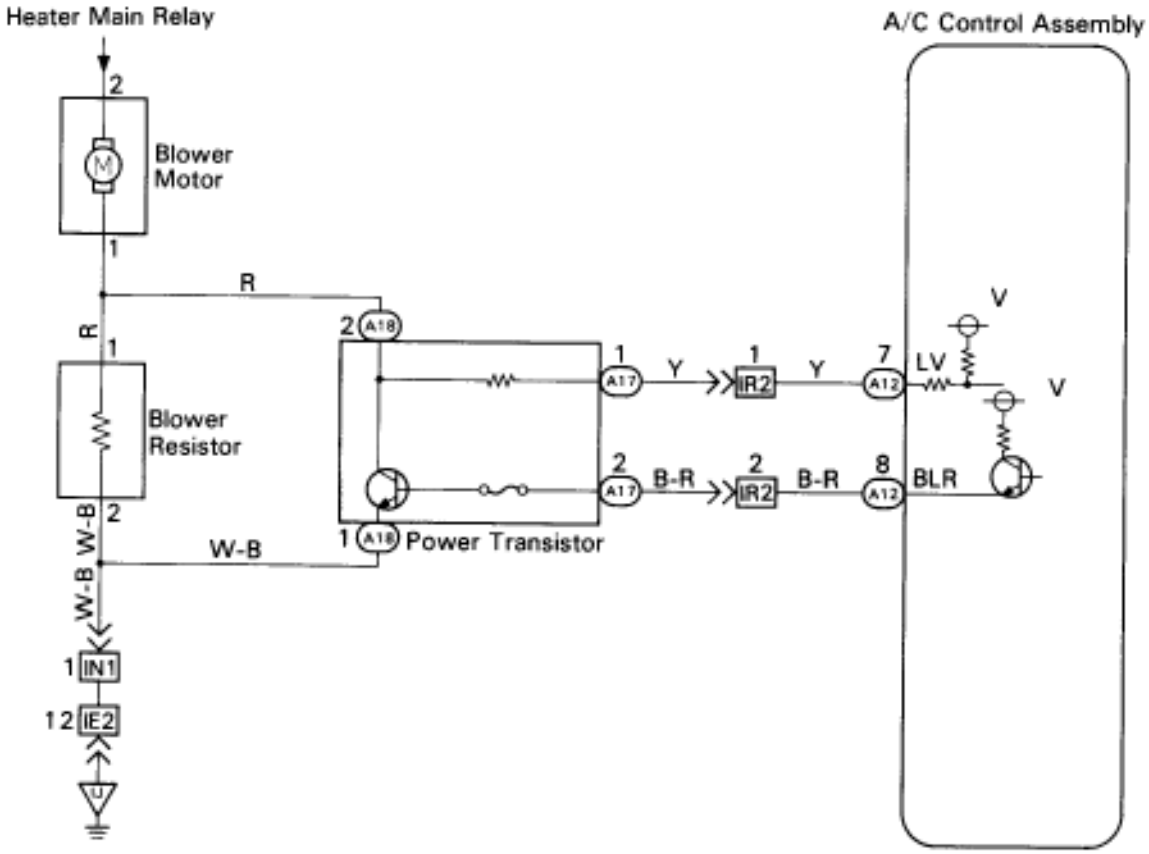

WhereEverybodyKnowsYourName

INSPECTION PROCEDURE

1 Check power transistor.

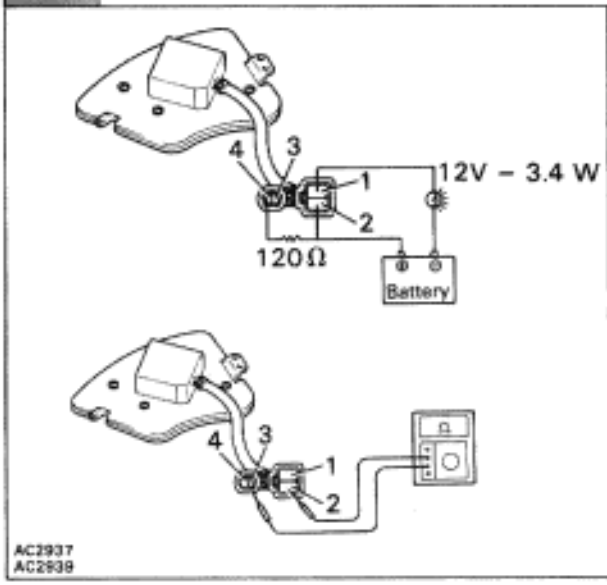

P
(1) Remove cooling unit (See page BO-107).
(2) Disconnect power transistor connector.

C
(1) Check test bulb lights up when battery and resistor are connected to power transistor connector as left illustration shows.
(2) Measure resistance between terminal 2 and 3

OK
(1) The bulb lights up.
(2) **Resistance: 2.0– 2.4 k**

OK → **NG** → **Replace power transistor.**

2 Check for open and short in harness and connector between air conditioner control assembly and power transistor (See page IN-27).

OK → **NG** → **Repair or replace harness or connector.**

Proceed to next circuit inspection shown on matrix chart (See page AC-36).

WhereEverybodyKnowsYourName

Blower Motor Circuit

CIRCUIT DESCRIPTION

This is the power source for the blower motor.

DIAGNOSTIC CHART

1 Check blower motor. — NG → Replace blower motor.

OK ↓

2 Check blower resistor. — NG → Replace blower resistor.

OK ↓

3 Check harness and connector between battery and blower motor, blower motor and body ground (See page IN–37). — NG → Repair or replace harness or connector.

OK ↓

Proceed to next circuit inspection shown on matrix chart (See page AC-36).

WIRING DIAGRAM

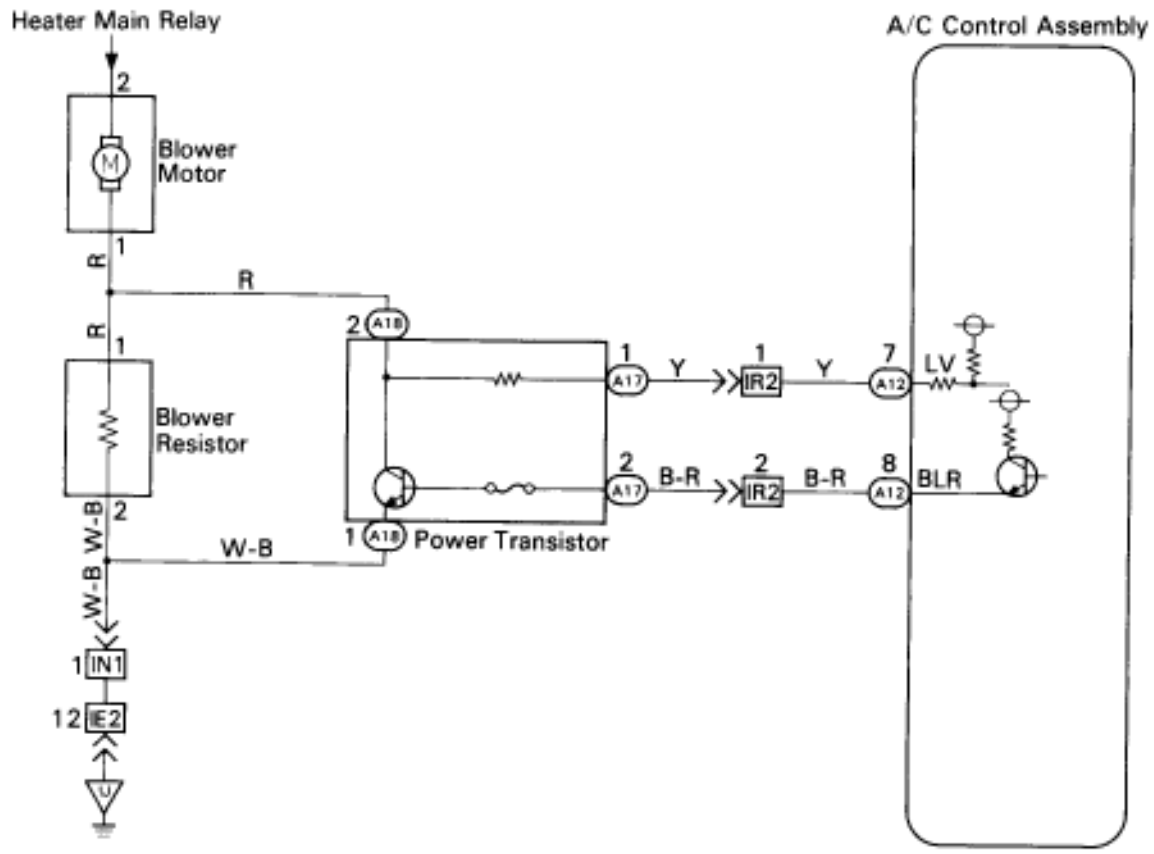

WhereEverybodyKnowsYourName

INSPECTION PROCEDURE

1 Check blower motor.

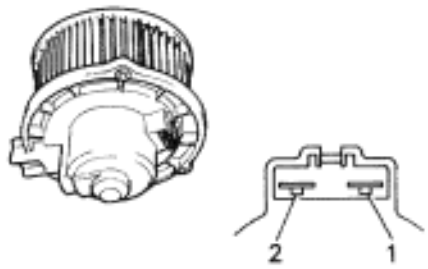

P Remove blower motor.(See page AC-129).

C Connect positive ⊥ lead connected to terminal 2 of blower motor connector, negative ⊖ lead to terminal 1.

OK **Blower motor operates smoothly.**

OK

NG **Replace blower motor.**

2 Check blower resistor.

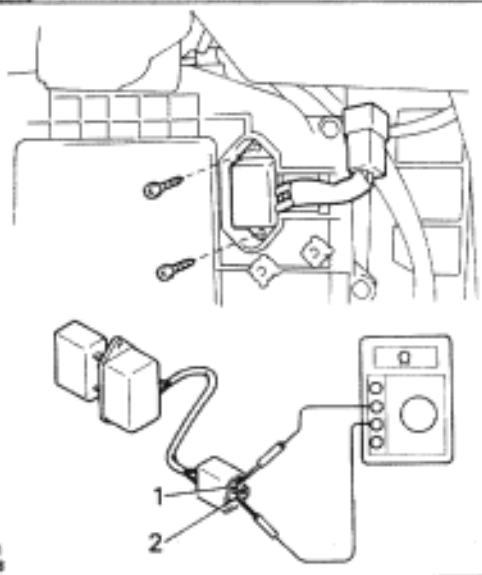

P Disconnect blower resistor connector.

C Measure resistance between terminals 1 and 2 of blower resistor connector.

OK **Resistance: 2.6 – 3.0 ?**

OK

NG **Replace blower resistor.**

3 Check for open short in harness and connector between battery and blower motor, blower motor and body ground (See page IN-27)

OK

NG **Repair or replace harness or connector.**

Proceed to next circuit inspection shown on matrix chart (See page AC-36**).**

WhereEverybodyKnowsYourName

Igniter Circuit

CIRCUIT DESCRIPTION

The air conditioner control assembly monitors the engine speed through signals sent from the igniter. The air conditioner control assembly uses these signals and compressor speed signals to detect the compressor lock condition.

DIAGNOSTIC CHART

1 Check operation of tachometer.

- NG → Proceed to combination meter troubleshooting (See page BE-125).
- OK ↓

2 Check harness and connector between air conditioner control assembly and igniter (See page IN-27).

- NG → Repair or replace harness or connector.
- OK ↓

Proceed to next circuit inspection shown on matrix chart (See page AC-36).

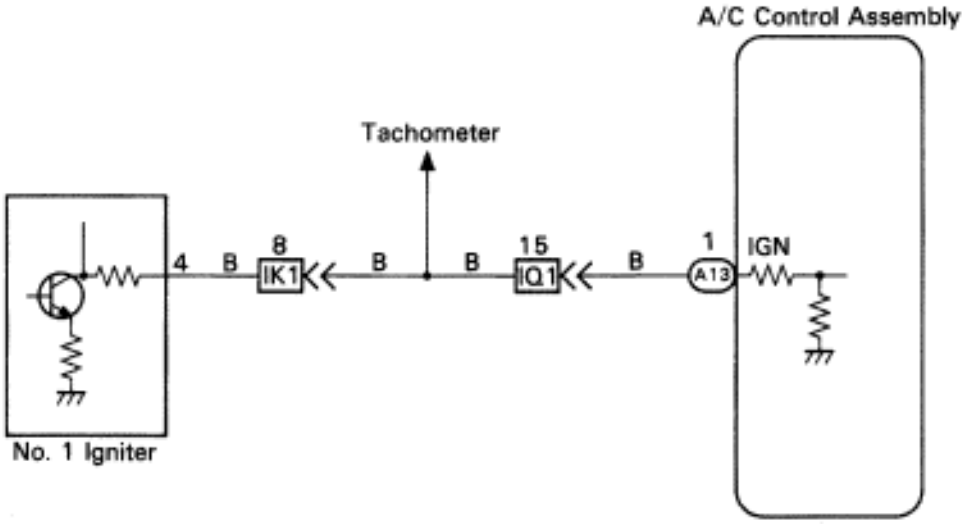

AC2912

WhereEverybodyKnowsYourName

INSPECTION PROCEDURE

1 Check power transistor.

P Check that the tachometer operates normally.

OK

NG → **Proceed to combination meter troubleshooting (See page BE-125).**

2 Check for open and short in harness and connector between air conditioner control assembly and igniter (See page IN-27).

OK

NG → **Repair or replace harness or connector.**

Proceed to next circuit inspection shown on matrix chart (See page AC-36).

WhereEverybodyKnowsYourName

Compressor Circuit

CIRCUIT DESCRIPTION

The air conditioner control assembly outputs the magnetic clutch ON signal from terminal MGC to the Engine & ECT ECU.
When the Engine & ECT ECU receives this signal, it sends a signal from terminal ACMG and switches the air conditioner magnetic clutch relay on, thus turning on the air conditioner compressor magnetic clutch.
The air conditioner control assembly also monitors at terminal A/C IN whether or not power is being supplied to the magnetic clutch.

DIAGNOSTIC CHART

See next page for the Diagnostic Chart.

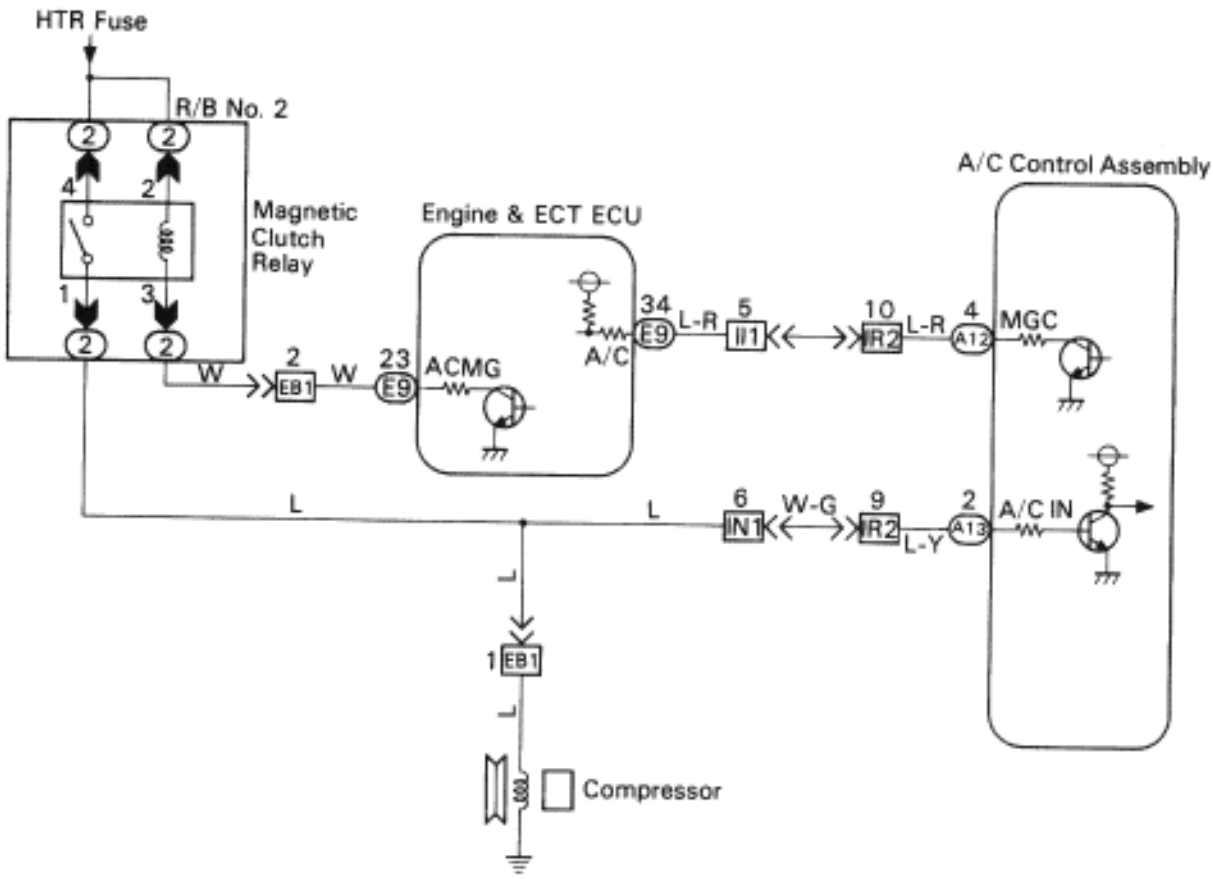

WhereEverybodyKnowsYourName

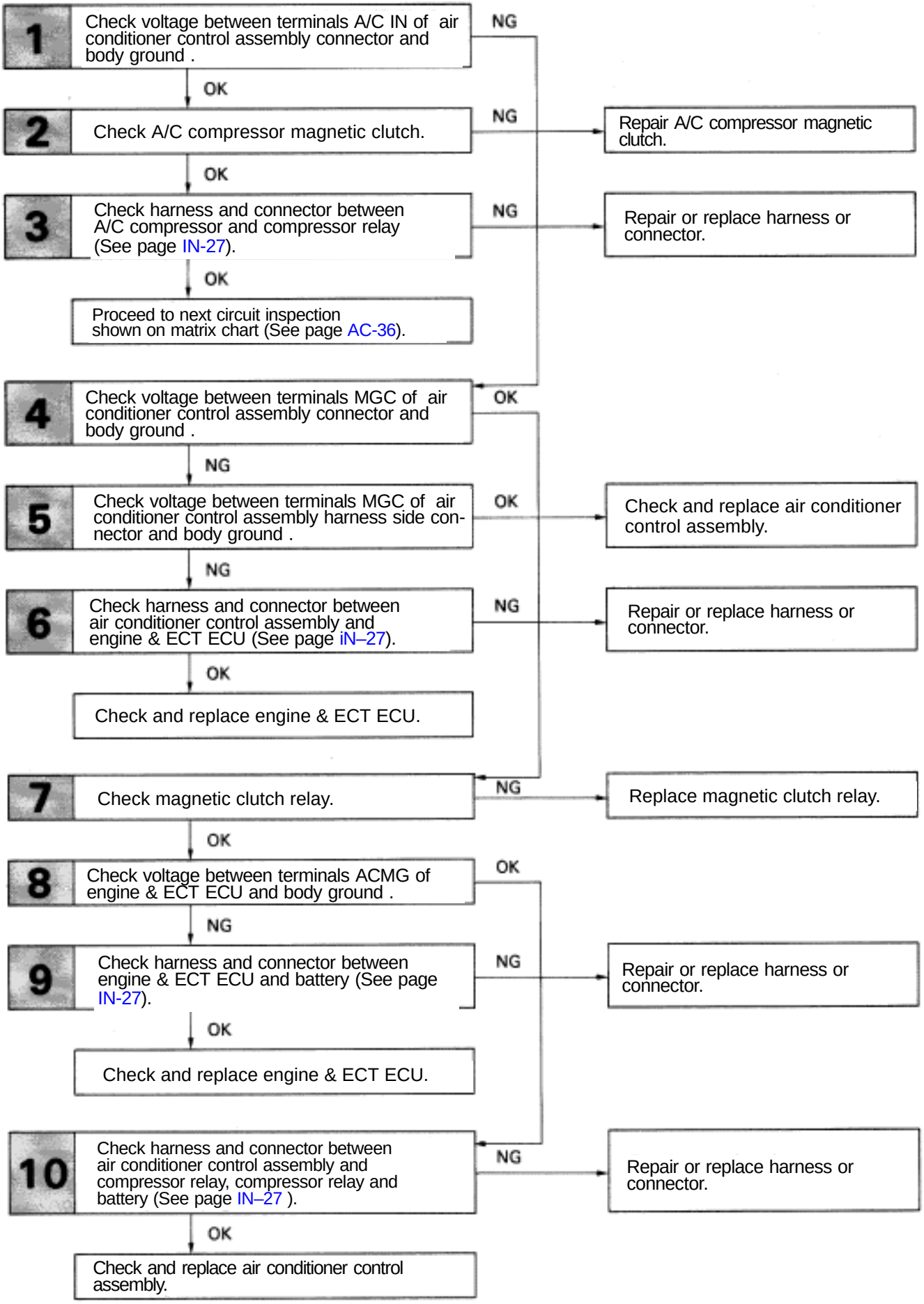

WhereEverybodyKnowsYourName

INSPECTION PROCEDURE

1 Check voltage between terminals A/C IN of air conditioner control assembly connector and body ground.

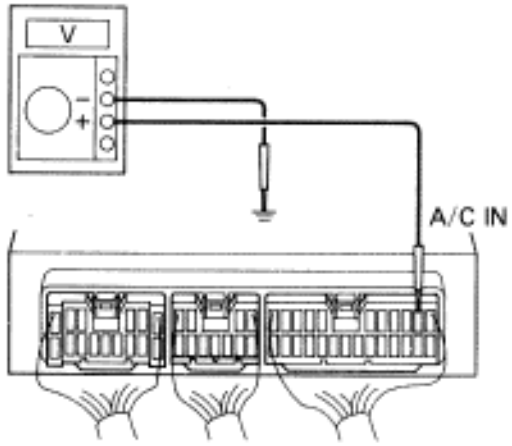

AC2883

P

(1) Remove console upper panel.(See page BO-111).

(2) Remove A/C control assembly with connectors still connected.

(3) Start the engine.

C

Check voltage between terminals A/C IN of air conditioner control assembly and body ground when magnetic clutch is on and off by A/C switch

OK

Magnetic Clutch	Voltage
ON	10 – 14 V
OFF	Below 1 V

OK

NG Go to step (4).

2 Check air conditioner compressor magnetic clutch.

AC2930

P Disconnect magnetic clutch connector.

C Connect positive ± lead connected to battery to magnetic clutch connector terminal 3.

OK Magnetic clutch is energized.

OK

NG Repair air conditioner compressor magnetic clutch.

3 Check for open and short in harness and connecter between air conditioner compressor and compressor relay (See page IN-27).

OK

NG Repair or replace harness or connector.

Proceed to next circuit inspection shown on matrix chart (See page AC-36).

WhereEverybodyKnowsYourName

4 Check voltage between terminals MGC of air conditioner control assembly connector and body ground.

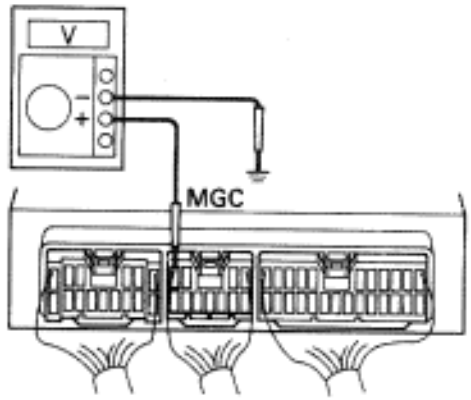

P (1) Remove console upper panel.(See page BO-111).
(2) Remove A/C control assembly with connec–tors still connected.
(3) Start the engine.

C Check voltage between terminals MGC of air conditioner control assembly connector and body ground when magnetic clutch is on and off by A/C switch.

OK

Magnetic Clutch	Voltage
ON	Below 1 V
OFF	4 – 6 V

NG

OK → **Go to step (7).**

5 Check voltage between terminals MGC of air conditioner control assembly harness side connector and body ground.

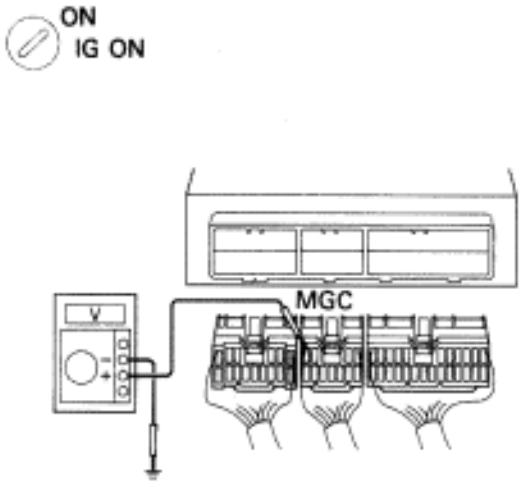

P (1) Disconnect air conditioner control assembly connector.
(3) Turn ignition switch ON.

C Check voltage between terminals MGC of air conditioner control assembly harness side connector and body ground.

OK **Voltage: 4 – 6 V**

NG

OK → **Check and replace air conditioner control assembly.**

6 Check for open and short in harness and connector between air conditioner control assembly and engine & ECT ECU (See page IN-27).

OK

NG → **Repair or replace harness or connector.**

Check and replace engine & ECT ECU.

WhereEverybodyKnowsYourName

7 Check magnetic clutch relay.

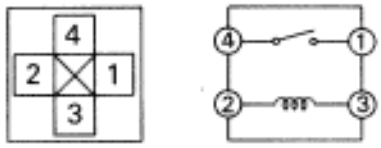

AC2933

P **C** Remove magnetic clutch relay from R/B No. 2
Check continuity between each pair of terminals shown below of magnetic clutch relay.

OK

Terminals 2 and 3	Approx. 75 Ω
Terminals 4 and 1	Open

P
(1) Apply battery voltage between terminals 2 and 3
(2) Check continuity between terminals 4 and 1

OK

Terminals and	

OK → **NG** → **Replace magnetic relay.**

8 Check voltage between terminal ACMG of engine & ECT ECU and body ground.

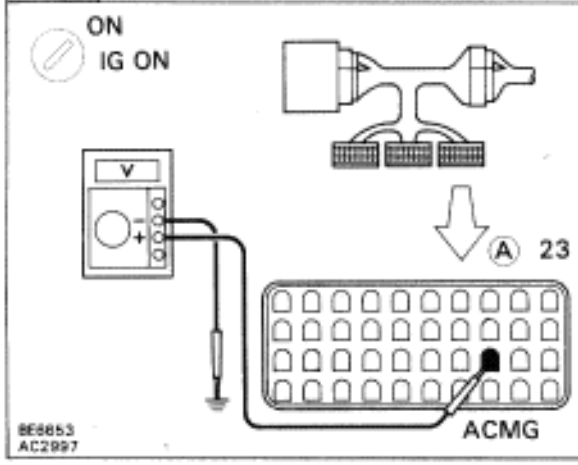

8E6853
AC2997

P
(1) Remove engine & ECT ECU with connectors still connected.
(2) Turn ignition switch ON.

C
(1) Push one of the fan speed control switches (Lo, Med or Hi).
(2) Measure voltage between terminal ACMG of engine & ECT ECU connector and body ground.

OK

A/C Switch	Voltage
ON	Approx. 1.3 V
OFF	Battery voltage ~ 1.3 V

NG → **OK** → **Go to step (10).**

9 Check for open and short in harness and connector between engine & ECT ECU and battery (See page IN-27).

OK → **NG** → **Repair or replace harness or connector.**

Check and replace engine & ECT ECU.

10 Check for open and short in harness and connector between air conditioner control assembly and compressor relay, compressor relay and battery (See page IN-27).

OK → **NG** → **Repair or replace harness or connector.**

Check and replace air conditioner control assembly.

WhereEverybodyKnowsYourName

Water Valve VSV Circuit

CIRCUIT DESCRIPTION

If the target air mix damper position is on the hot side beyond a predetermined level, the A/C control assembly turns ON Tr inside the A/C control assembly.
This turns the water valve VSV ON so that engine coolant flows to the heater core.
If the target air mix damper position is on the cool side beyond a predetermined level, the A/C control assembly OFF Tr inside the A/C control assembly.
This turns OFF the VSV and stops circulation of engine coolant to the heater core, thus increasing the cooling performance.

DIAGNOSTIC CHART

1 Check voltage between terminal WV of A/C control assembly connector and body ground .
- OK → Proceed to next circuit inspection shown on matrix chart (See page AC-36).
- NG ↓

2 Check water valve VSV.
- NG → Replace water valve VSV.
- OK ↓

3 Check for open and short in harness and connector between VSV and A/C control assembly .
- NG → Repair or replace harness or connector.
- OK ↓

Check and replace A/C control assembly.

WIRING DIAGRAM

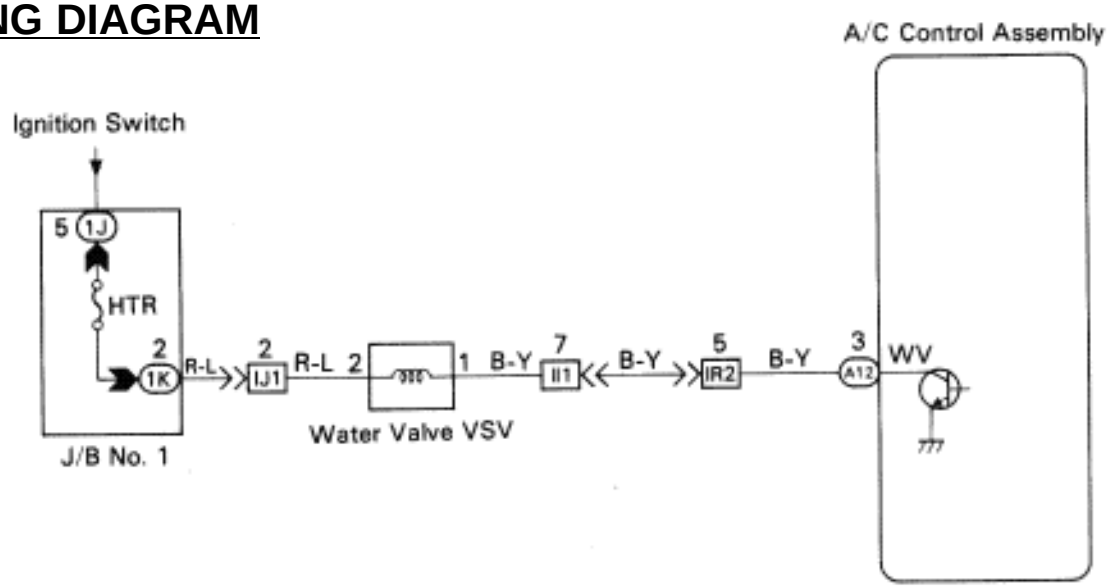

AC2967

WhereEverybodyKnowsYourName

INSPECTION PROCEDURE

1 Check voltage between terminal WV of A/C control assembly connector body ground.

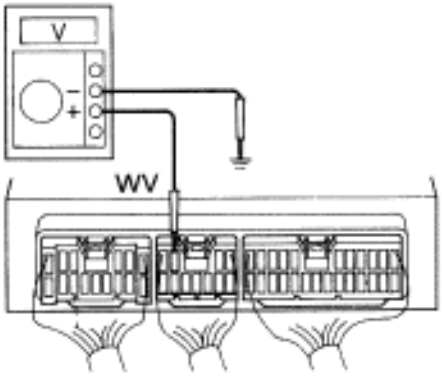

P

(1) Remove console upper panel.(See page BO-111).

(2) Remove A/C control assembly with connec– tors still connected.

(3) Start the engine.

C

Measure voltage between terminals WV of A/C control assembly connector and body ground when the set temp. is not set to MAX COLD and MAX HOT.

OK

Set Temp.	Voltage
MAX COLD	10 – 14 V
MAX HOT	Below 1 V

NG

OK **Proceed to next circuit inspection shown on matrix chart. (See page AC-36).**

2 Check water valve VSV.

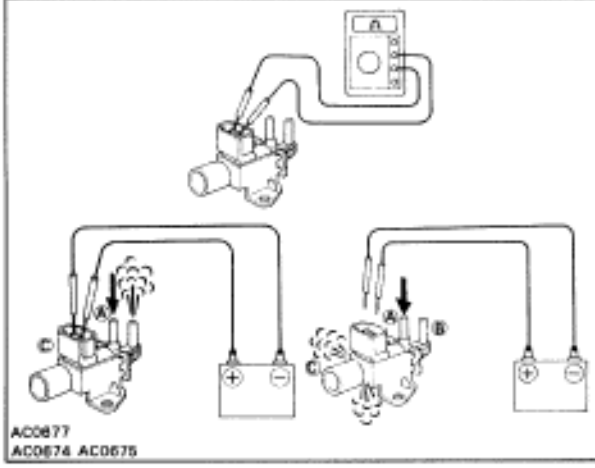

P

Water valve VSV connector.

C

Measure resistance between terminals of VSV connector.

OK

Resistance: 37 – 47 ? at 20°C (68°F)

C

Check operation of water valve VSV when battery voltage is applied to terminals of VSV connector or not.

OK

▼Battery voltage is applied:
The air from A is flowing out through B.

▼Battery voltage is not applied:
The air from A is flowing out through air filter.

OK

NG **Replace water valve VSV.**

3 Check for open and short in harness and connector between VSV and A/C control assembly (See page IN-27).

OK

NG **Repair or replace harness or connector.**

Check and replace A/C control assembly.

WhereEverybodyKnowsYourName

Temperature Control Switch Circuit

CIRCUIT DESCRIPTION

By turning the temp. control switch, the set temperature of the A/C can be adjusted in steps of 1˚F (USA) or 0.5˚C (Canada). Turning the switch fully will set the A/C to MAX. COLD or MAX. HOT.
The ECU calculates the set temperature from the combination of Hi (5 V) or Low (0 V) terminals SET 1 ~ 5 of the temp. control SW and displays the set temperature on the LCD display.
If a malfunction occurs in the temp. control SW circuit, malfunctions such as not being able to set the desired temperature occur.

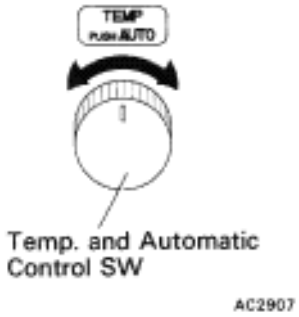

DIAGNOSTIC CHART

1 Check voltage between terminal SET 1 ~ 5 and SG of A/C control assembly.
- OK → Proceed to next circuit inspection shown on matrix chart (See page AC-36).
- NG ↓

2 Check temp. control switch.
- NG → Replace temp. control switch.
- OK ↓

3 Check for open and short in harness and connector between A/C control assembly and temp. control SW.
- NG → Repair or replace harness or connector.
- OK ↓

Check and replace A/C control assembly.

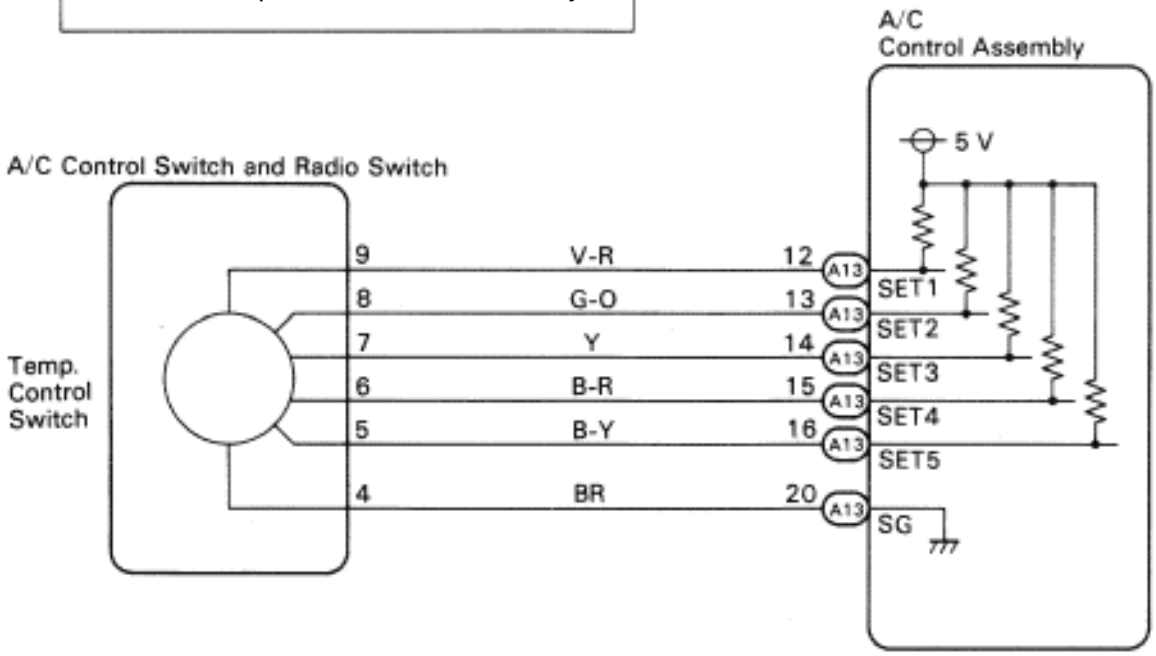

WhereEverybodyKnowsYourName

INSPECTION PROCEDURE

1 Check voltage between terminal SET 1 ~ 5 and SG of A/C control assembly

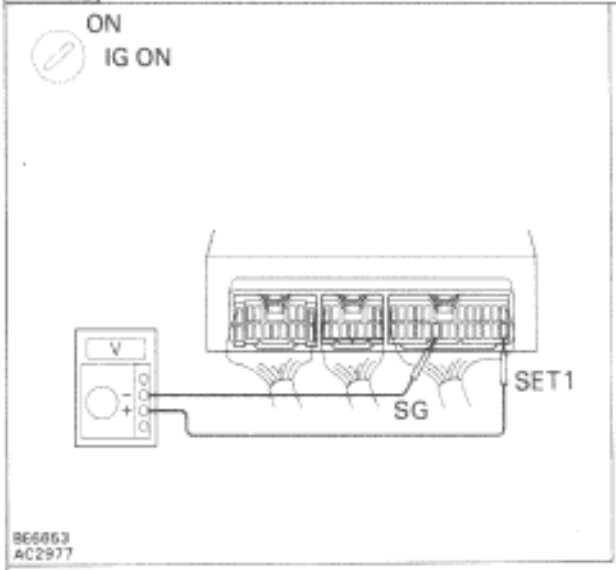

P

(1) Remove A/C control assembly with connectors.(See page AC-138).

(2) Turn ignition switch ON.

C

Measure voltage between terminals SET 1 ~ 5 and SG of temp. control switch is turned from most left to right position.

OK **for USA spec.**

SW Position / terminal	Most Left → Most Right
SET1	0→5→0→5→0→5→0→5→0→5→0→5
SET2	0 → 5 → 0 → 5 → 0 → 5
SET3	0 → 5 → 0
SET4	5 → 0 → 5
SET5	5 → 0

Unit [V]

OK **for Canada spec.**

SW Position / terminal	Most Left → Most Right
SET1	0→5→0→5→0→5→0→5→0→5→0→5→0→5→0→5
SET2	5→0→5→0→5→0→5→0→5
SET3	5 → 0 → 5 → 0 → 5
SET4	5 → 0 → 5
SET5	5 → 0

Unit [V]

NG

Go to step (2).

OK

Proceed to next circuit inspection shown on matrix chart. (See page AC-36).

WhereEverybodyKnowsYourName

2 Check temp. control switch.

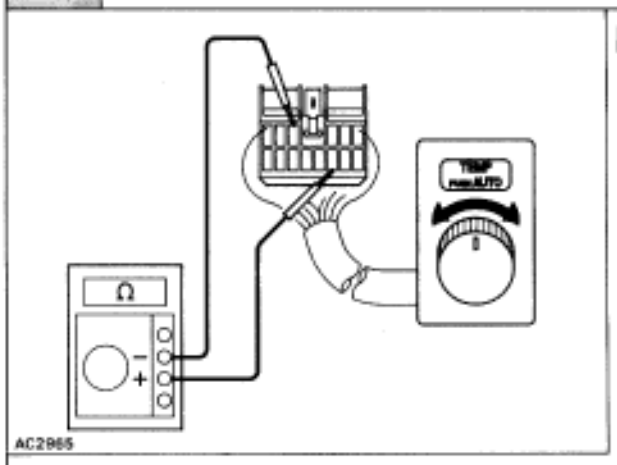

P Disconnect temp. control switch connector.

C Measure resistance between terminals SET 1 ~ 5 and SG of temp. control switch is turned from most left to right position.

OK **for USA spec.**

SW Position / terminal	Most Left → Most Right
SET1	0→∞→0→∞→0→∞→0→∞→0→∞→0→∞
SET2	0 → ∞ → 0 → ∞ → 0 → ∞
SET3	0 → ∞ → 0
SET4	∞ → 0 → ∞
SET5	∞ → 0

Unit [Ω]

OK **for Canada spec.**

SW Position / terminal	Most Left → Most Right
SET1	0→∞→0→∞→0→∞→0→∞→0→∞→0→∞→0→∞→0→∞
SET2	∞→0→∞→0→∞→0→∞→0→∞
SET3	∞ → 0 → ∞ → 0 → ∞
SET4	∞ → 0 → ∞
SET5	∞ → 0

Unit [Ω]

OK

NG **Replace temp. control switch.**

3 Check for open and short in harness and connector between A/C control assembly and temp. control switch (See page IN-27).

OK

NG **Repair or replace harness or connector.**

Check and replace A/C control assembly.

WhereEverybodyKnowsYourName

Automatic Control Switch Circuit

CIRCUIT DESCRIPTION

The SW contact is ON while the automatic control SW is pushed, and turns OFF when automatic control SW is released. When the SW is turned ON, the voltage at the SAUTO terminal of A/C control assembly is almost 0 V and the ECU begins fully automatic control of the blower speed, air inlet, air outlet and compressor operation.

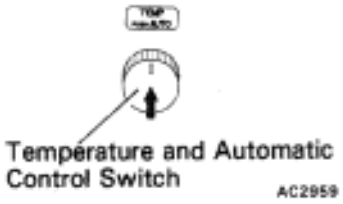

DIAGNOSTIC CHART

1 Check voltage between terminal SAUTO and SG of A/C control assembly.
- OK → Proceed to next circuit inspection on matrix chart(See page AC-36).
- NG ↓

2 Check automatic control SW.
- NG → Replace automatic control SW.
- OK ↓

3 Check for open and short in harness and connector between automatic control SW and ECU.
- NG → Repair or replace harness or connector.
- OK ↓

Check and replace A/C control assembly.

WIRING DIAGRAM

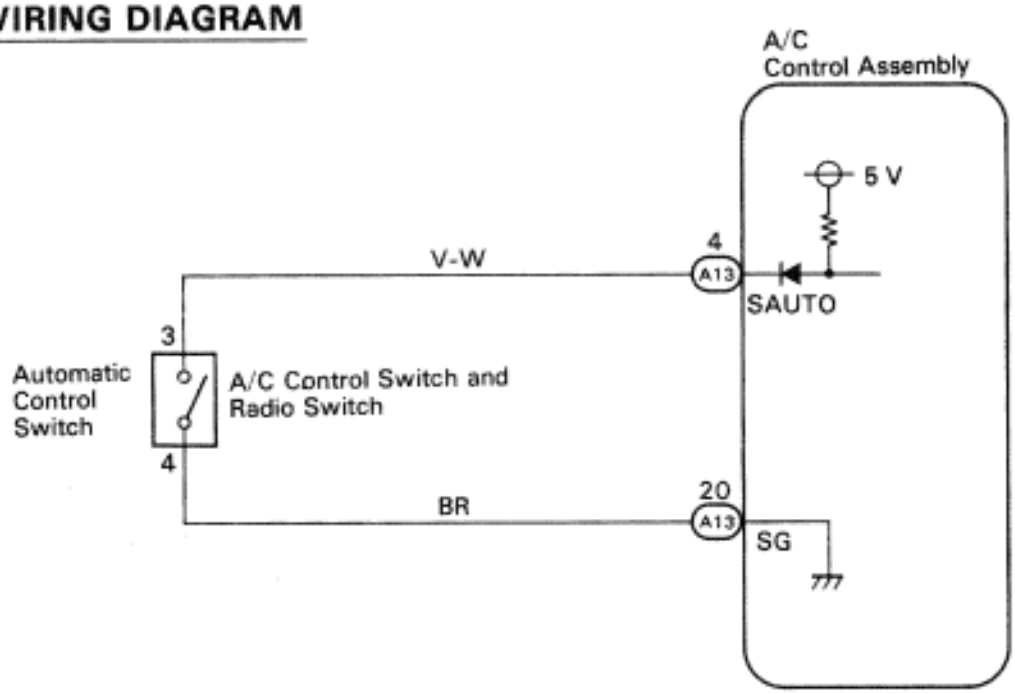

WhereEverybodyKnowsYourName

INSPECTION PROCEDURE

1 Check voltage between terminal SAUTO and SG of A/C control assembly.

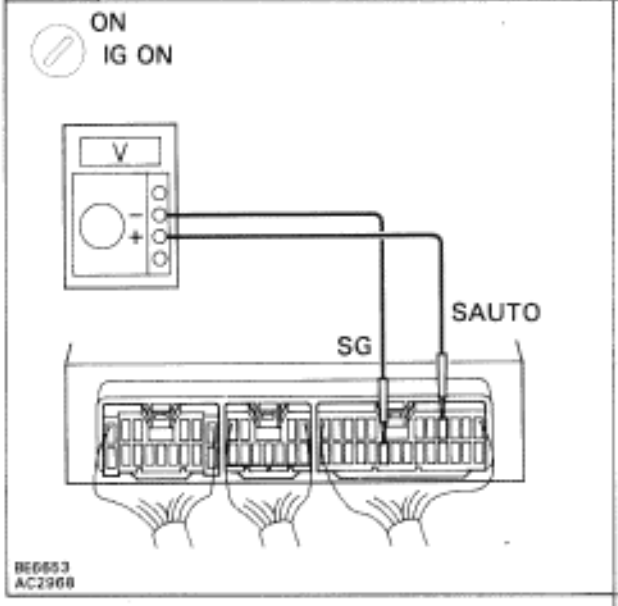

P
(1) Remove console upper panel. (See page BO–111).
(2) Remove A/C control assembly with connectors still connected.
(3) Turn ignition switch on.

C
Measure voltage between terminal SAUTO and Sg of A/C control assembly when automatic control SW is operated.

OK

Condition	Voltage
During SW is pushed	Below 1 V
During SW is not pushed	4 – 6 V

NG

OK → **Proceed to next circuit inspection shown on matrix chart. (See page AC-36).**

2 Check automatic control switch.

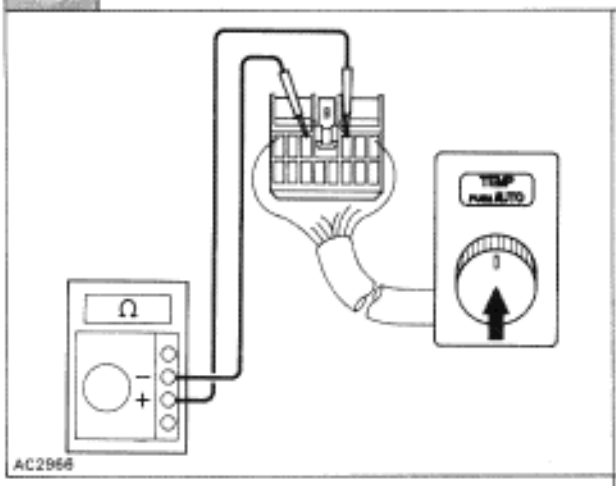

P
Disconnect automatic control switch connector.

C
Measure resistance between terminal and of automatic control switch connector when it is is operated.

OK

Condition	Resistance
During SW is pushed	Below 500 Ω
During SW is not pushed	Open

OK

NG → **Replace automatic control switch.**

3 Check for open and short in harness and connector between switch and A/C control assembly (See page IN-27).

OK

NG → **Repair or replace harness or connector.**

Check and replace A/C control assembly.

WhereEverybodyKnowsYourName

Diagnosis Circuit

CIRCUIT DESCRIPTION

This circuit sends signals to the A/C control assembly requesting output of diagnostic codes.

DIAGNOSTIC CHART

1 Check voltage between terminals Tc and E1 of TDCL.

- OK → Proceed to next circuit inspection shown on matrix chart (See page AC-36).
- NG ↓

2 Check harness and connector between air conditioner control assembly and TDCL and body ground.

- NG → Repair or replace harness or connector.
- OK ↓

Check and replace air conditioner control assembly.

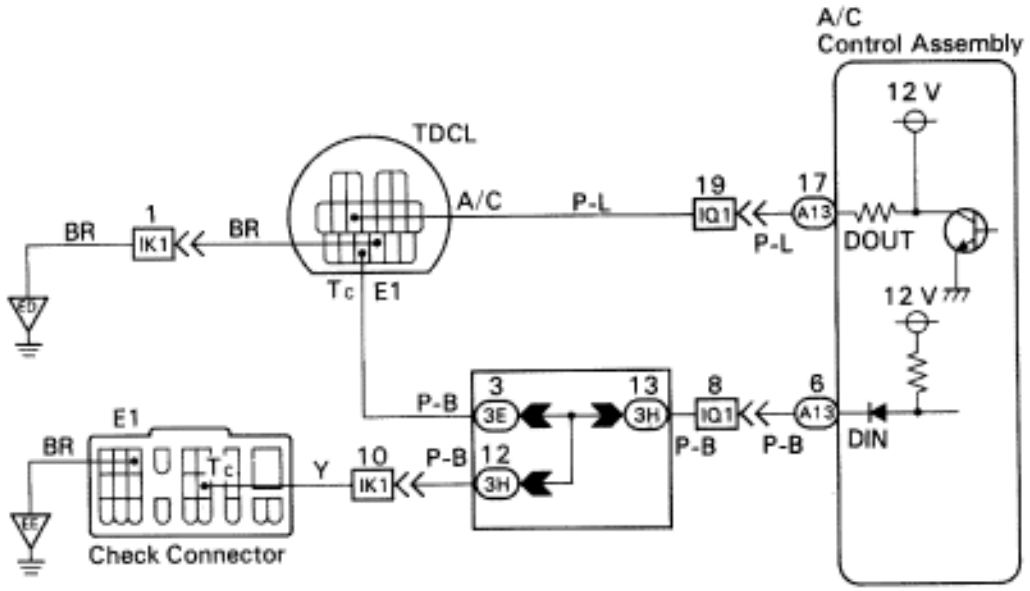

AC290B

WhereEverybodyKnowsYourName

INSPECTION PROCEDURE

1 Check voltage between terminal Tc and E1 of TDCL.

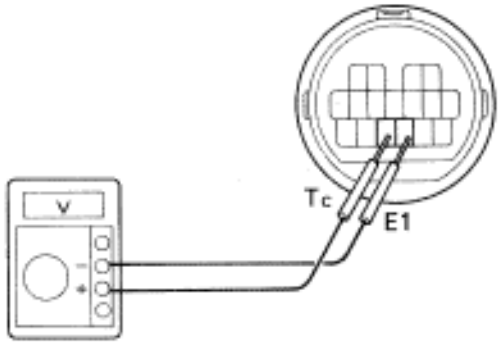

C
(1) Turn ignition switch on.
(2) Check voltage between terminals Tc and E1 of TDCL.

OK
Voltage: 10 – 14 V

NG

OK → **Proceed to next circuit inspection shown on matrix chart. (See page AC-36).**

2 Check for open and short in harness and connector between air conditioner control assembly and TDCL, TDCL and body ground.(See page IN-27).

OK

NG → **Repair or replace harness or connector.**

Check and replace air conditioner control assembly.

WhereEverybodyKnowsYourName

Inspection of Refrigeration System with Manifold Gauge Set

This is a method in which the trouble is located by using a manifold gauge set. (See ”Installation of Manifold Gauge Set” on page AC–15) Read the manifold gauge pressure when the following conditions are established:

(a) Temperature at the air inlet with the switch set at RECIRC is 30–35˚C (86–95˚F).
(b) Engine running at 2,000 rpm.
(c) Blower fan speed control switch set at high speed.
(d) Temperature control switch set at max. cool side.

HINT: It should be noted that the gauge indications may vary slightly due to ambient temperature conditions.

NOTICE:

- **Always recover refrigerant before removing the parts in the refrigerant line and evacuating air.**
- **Evacuate air and charge proper amount of purified refrigerant after installing the parts in the refrigerant line.**

No.	Gauge reading kPa (kgf/cm^2, psi)	Condition	Probable cause	Remedy
1	LO: 1.5 – 2.0 (21 –28, 147 –196) HI: 14.5 – 15.0 (206 –213, 1422 –1471) 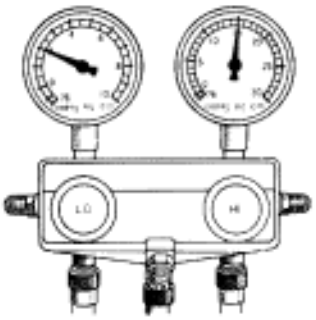 AC0067	Normal cooling	Normally functioning system	
2	During operation, pressure at low pressure side sometimes becomes a vacuum and sometimes normal. 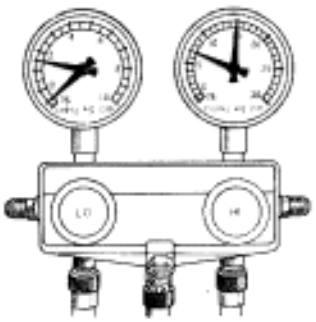 AC0068	Periodically cools and then fails to cool.	Moisture present in refrigeration system.	(1). Replace receiver (2). Remove moisture in system through repeatedly evacuating air

WhereEverybodyKnowsYourName

NOTICE:

- **Always recover refrigerant before removing the parts in the refrigerant line and evacuating air.**
- **Evacuate air and charge proper amount of purified refrigerant after installing the parts in the refrigerant line.**

No.	Gauge reading kPa (kgf/cm^2, psi)	Condition	Probable cause	Remedy
3	Pressure low at both low and high pressure sides 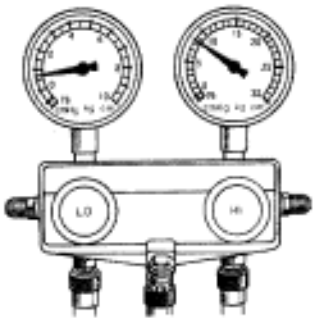 AC0069	▼ Insufficient cooling ▼ Bubbles seen in sight glass	Insufficient refrigerant	(1) Check for gas leakage with gas leak tester and repair if necessary (2) Add refrigerant until bubbles disappear
		▼ Insufficient cooling ▼ Frost on tubes from receiver to unit	Refrigerant flow obstructed by dirt in receiver	Replace receiver
4	Pressure too high at both low and high pressure sides 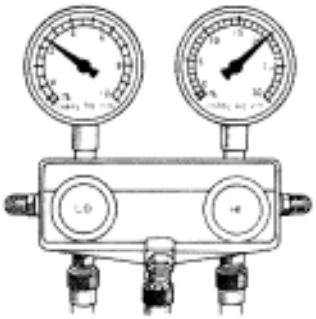 AC0070	Insufficient cooling	Insufficient cooling of condenser	(1). Clean condenser (2). Check fan motor operation
5			Refrigerant overcharged	(1). Check amount of refrigerant If refrigerant is overcharged (2). Recover refrigerant (3). Evacuate air and charge proper amount of purified refrigerant
6			Air present in system	(1). Replace receiver (2). Check compres-sor oil to see if dirty (3). Remove air in system through repeatedly evacuating air
7		▼ Insufficient cooling ▼ Frost in Large amount of dew on piping at low pressure side	Expansion valve improperly mounted, heat sensing tube defective (Open too wide)	(1) Check heat sensing tube installation condition If (1) is normal (2) Check expansion valve and replace if defective

HINT at 6:
These gauge indication are for when the refrigeration system has been opened and the refrigerant charged without evacuating air.

WhereEverybodyKnowsYourName

NOTICE:

- **Always recover refrigerant before removing the parts in the refrigerant line and evacuating air.**
- **Evacuate air and charge proper amount of purified refrigerant after installing the parts in the refrigerant line.**

No.	Gauge reading kPa (kgf/cm2, psi)	Condition	Probable cause	Remedy
8	Vacuum indicated at low pressure side, very low pressure indicated at high pressure. 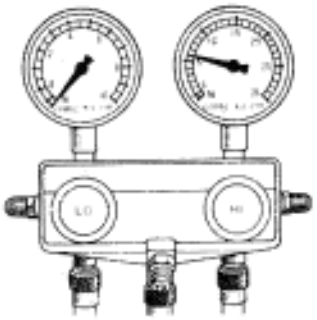 AC0156	▼ Does not cool (Cools from time to time in some cases) ▼ Frost or dew seen on piping before and after receiver or expansion valve	Refrigerant does not circulate	(1) Check heat sensing tube for gas leakage and replace expansion If (1) is normal (2) Clean out dirt in expansion valve by blowing with air if not able to remove dirt replace expansion valve (3) Replace receiver
9	Pressure too high at low pressure sides, pressure too low at high pressure side. 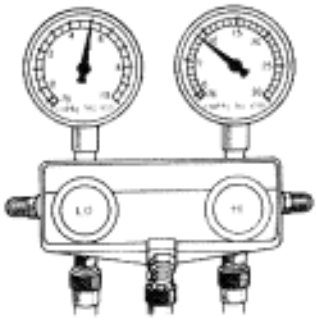 AC0157	Does not cool	Insufficient compression	Repair or replace compressor

WhereEverybodyKnowsYourName

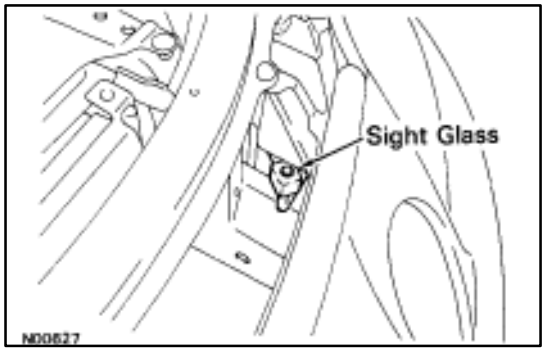

REFRIGERANT VOLUME

INSPECTION OF REFRIGERANT VOLUME

1. **RUN ENGINE AT IDLE SPEED**
2. **OPERATE A/C AT MAXIMUM COOLING FOR A FEW MINUTES**
3. **INSPECT AMOUNT OF REFRIGERANT**
   Observe the sight glass on the liquid tube.

Item	Symptom	Amount of refrigerant	Remedy
1	Bubbles present in sight glass	Insufficient*	(1) Check for gas leakage with gas leak tester and repair if necessary (2) Add refrigerant until bubbles disappear
2	No bubbles present in sight glass	None, sufficient or too much	Refer to items 3 and 4
3	No temperature difference between compressor inlet and outlet	Empty or nearly empty	(1) Check for gas leakage with gas leak tester and repair if necessary (2) Add refrigerant until bubbles disappear
4	Temperature between compressor inlet and outlet is noticeably different	Proper or too much	Refer to items 5 and 6
5	Immediately after air conditioner is turned off, refrigerant in sight glass stays clear	Too much	(1) Recover refrigerant (2) Evacuate air and charge proper amount of purified refrigerant
6	When air conditioner is turned off, refrigerant foams and then stay clear	Proper	–

*: Bubbles in the sight glass with ambient temperatures higher can be considered normal if cooling is sufficient.

REFRIGERANT CHARGE VOLUME

Specified amount: 950 ± 50 g (33.44 ± 1.76 oz)

WhereEverybodyKnowsYourName

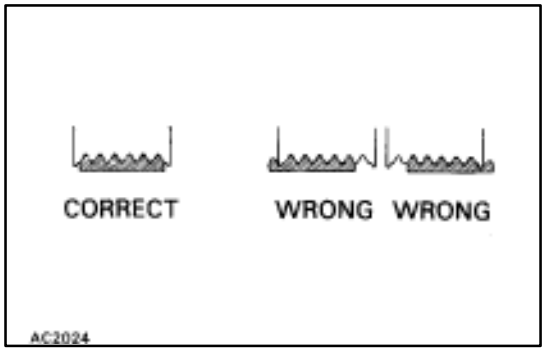

DRIVE BELT TENSION

INSPECTION OF DRIVE BELT TENSION

1. INSPECT DRIVE BELT'S INSTALLATION CONDITION

Check that the drive belt fits properly in the ribbed grooves.

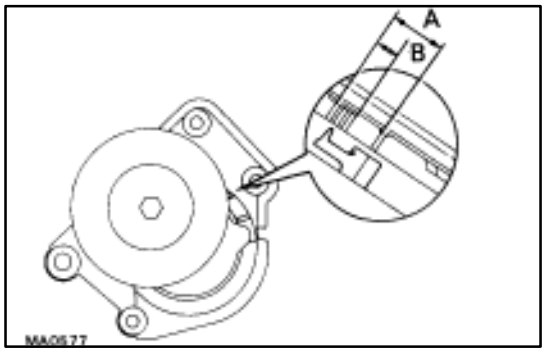

2. INSPECT DRIVE BELT TENSION

Check that the tension is within the A range on the auto tensioner scale.

If the tension is not within the A range on the scale, replace the belt with a new one.

HINT: When replacing the drive belt with a new one, the belt's tension should be within the B range on the belt tensioner scale.

IDLE–UP SPEED

INSPECTION OF IDLE SPEED

1. WARM UP ENGINE

2. INSPECT IDLE SPEED

Trans–mission	Magnetic clutch condition	Standard idle speed (rpm)
A/T (N range)	No engaged	650 rpm
	Engaged	800 rpm
M/T	No engaged	700 rpm
	Engaged	900 rpm

WhereEverybodyKnowsYourName

REFRIGERANT LINES

TIGHTENING TORQUE OF REFRIGERANT LINES

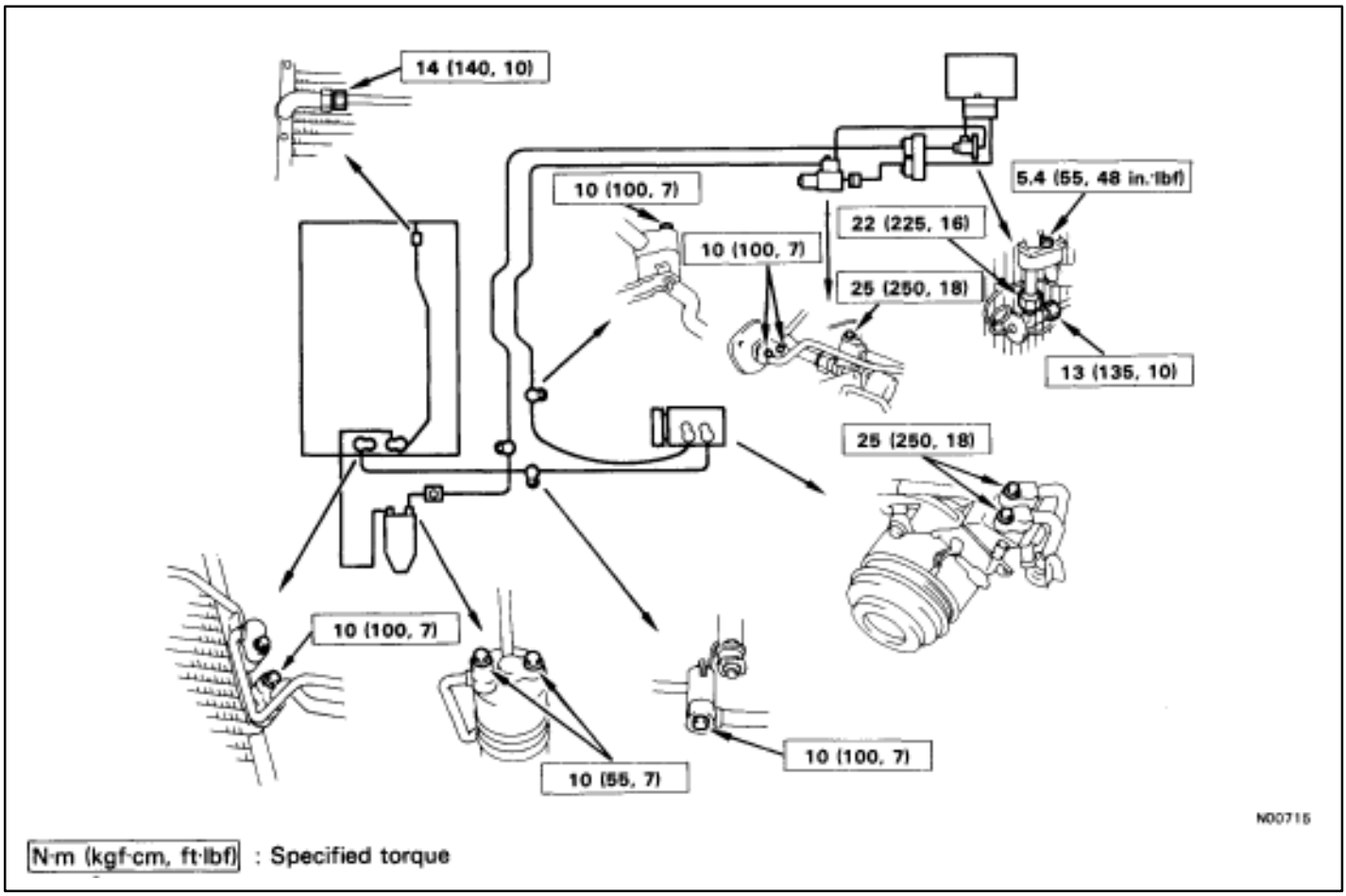

ON–VEHICLE INSPECTION

1. **INSPECT HOSES AND TUBES FOR LEAKAGE**
   Use a gas leak tester. Replace if necessary.

2. **INSPECT HOSE AND TUBE CONNECTIONS FOR LOOSENESS**

WhereEverybodyKnowsYourName

REPLACEMENT OF REFRIGERANT LINES

1. **RECOVER REFRIGERANT IN REFRIGERATION SYSTEM**
   See page AC–16
2. **REPLACE FAULTY TUBE OR HOSE**
   NOTICE: To prevent the intrusion of moisture or dirt, caps should be placed on hose or tube ends immediately.
3. **TORQUE CONNECTIONS TO SPECIFIED TORQUE**
   NOTICE: Connections should not be torque tighter than the specified torque.
4. **EVACUATE REFRIGERATION SYSTEM AND CHARGE WITH REFRIGERANT**
   See page AC–17
   Specified amount: 950 ± 50 g (33.44 ± 1.76 oz)
5. **INSPECT FOR LEAKAGE OF REFRIGERANT**
   Using a gas leak tester, check for leakage of refrigerant.
6. **INSPECT A/C OPERATION**

WhereEverybodyKnowsYourName

A/C UNIT

REMOVAL OF A/C UNIT

1. **RECOVER REFRIGERANT IN SYSTEM**
   See page AC–16
2. **REMOVE ENGINE**
   See page EM–118
3. **REMOVE WATER VALVE**
   See page AC–127
4. **REMOVE BRAKE TUBES BRACKET MOUNTING BOLTS FROM DUSH PANEL**
5. **REMOVE EVAPORATOR**
   See page AC–122

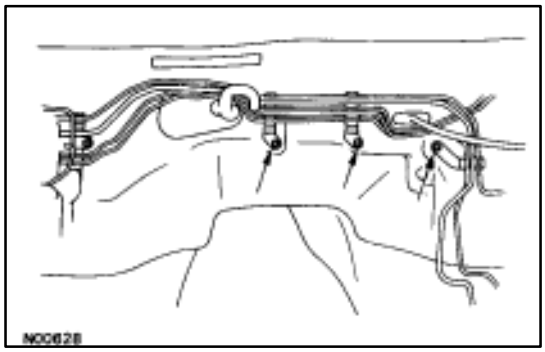

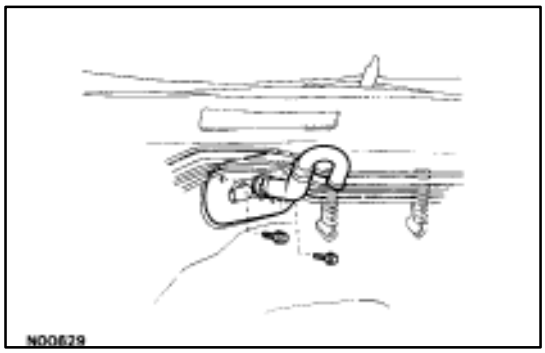

6. **REMOVE WATER HOSE FROM HEATER RADIATOR**
7. **REMOVE INSULATOR RETAINER**
   Remove the two bolts and the retainer.
8. **REMOVE INSTRUMENT PANEL REINFORCEMENT**
   See page BO–109
9. **REMOVE FLOOR CARPET**
   See page BO–118

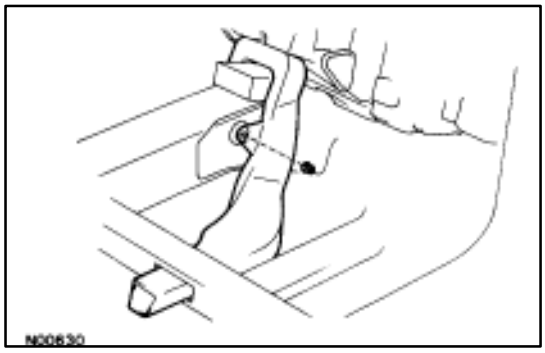

10. **REMOVE REAR AIR DUCTS**
    Remove the nut and the air duct.

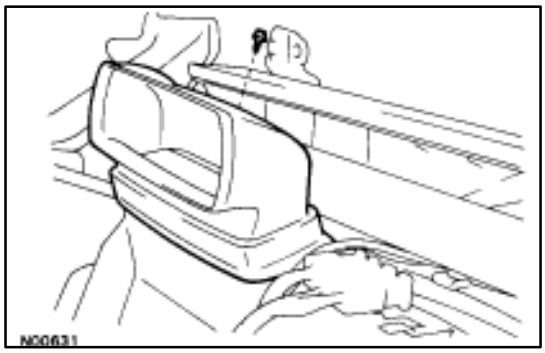

11. **REMOVE HEATER TO RESISTER NO. 3 DUCT**
    Remove the screw and the duct.

WhereEverybodyKnowsYourName

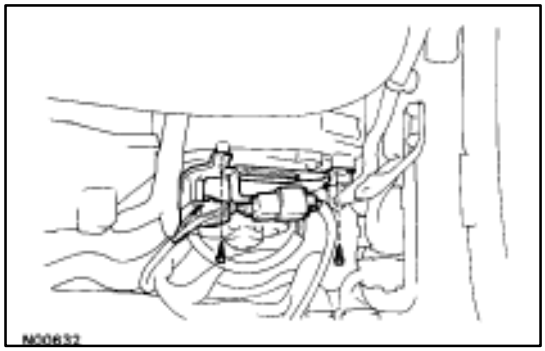

12. REMOVE CONNECTOR BRACKET FROM UNDER SIDE OF BLOWER MOTOR

Remove the two screws and the bracket.

13. REMOVE A/C UNIT

(a) Disconnect connectors from the unit.

(b) Remove the six bolts and the A/C unit.

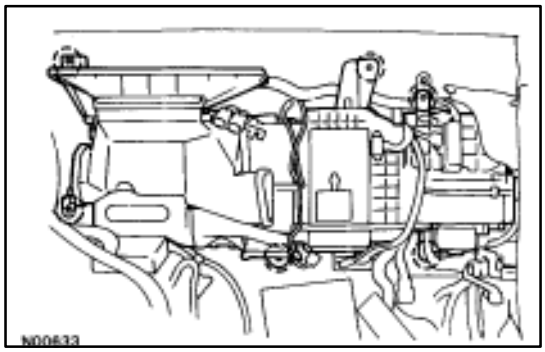

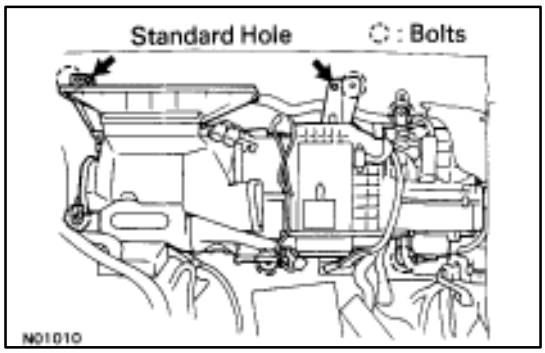

INSTALLATION OF A/C UNIT

1. INSTALL A/C UNIT

(a) Match the standard holes of the A/C unit with those on the vehicle.

HINT:

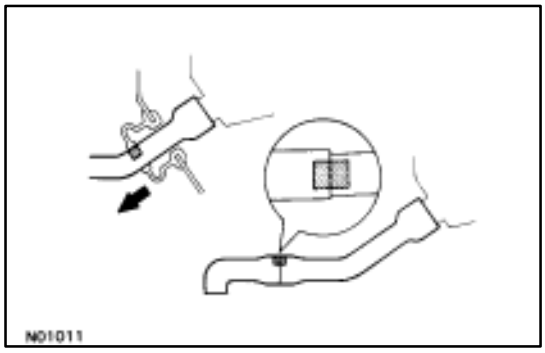

- V
  Pull the drain hose of the A/C unit forward until the yellow paint on the hose is visible in the engine compartment.
- V
  Insert the drain hose into the engine compartment hose until the match marks are aligned.

(b) Tighten six bolts.

2. INSTALL CONNECTOR BRACKET

3. INSTALL HEATER TO RESISTER NO. 3 DUCT

4. INSTALL REAR AIR DUCTS

5. INSTALL FLOOR CARPET

6. INSTALL INSULATOR RETAINER

7. INSTALL WATER HOSE TO HEATER RADIATOR

8. INSTALL BRAKE TUBE BRACKET MOUNTING BOLTS

9. INSTALL WATER VALVE

See page AC–127

WhereEverybodyKnowsYourName

9. INSTALL EVAPORATOR

See page AC–124

10. INSTALL INSTRUMENT PANEL REINFORCEMENT

11. INSTALL ENGINE

See page EM–167

12. EVACUATE AIR IN REFRIGERATION SYSTEM AND CHARGE WITH REFRIGERANT

See page AC–17

Specified amount: 950 ± 50 g (33.44 ± 1.76 oz)

13. INSPECT FOR LEAKAGE OF REFRIGERANT

Using a gas leak tester, check for leakage of refrigerant.

WhereEverybodyKnowsYourName

COMPRESSOR

INSPECTION OF COMPRESSOR (Magnetic Clutch)

See page AC–86

(Compressor)

1. **INSTALL MANIFOLD GAUGE SET**
   See page AC–15

2. **START ENGINE**

3. **INSPECT COMPRESSOR FOR METALLIC SOUND**
   Check that there is metallic sound from the compressor when the A/C switch is turned on.
   If a metallic sound is heard, replace the compressor assembly.

4. **INSPECT PRESSURE OF REFRIGERATION SYSTEM**
   See ”Inspection of Refrigeration System with Manifold Gauge Set” on page.

5. **STOP ENGINE**

6. **INSPECT VISUALLY FOR LEAKAGE OF REFRIGERANT FROM SAFETY SEAL**
   If there is any leakage, replace the compressor assembly.

WhereEverybodyKnowsYourName

REMOVAL OF COMPRESSOR

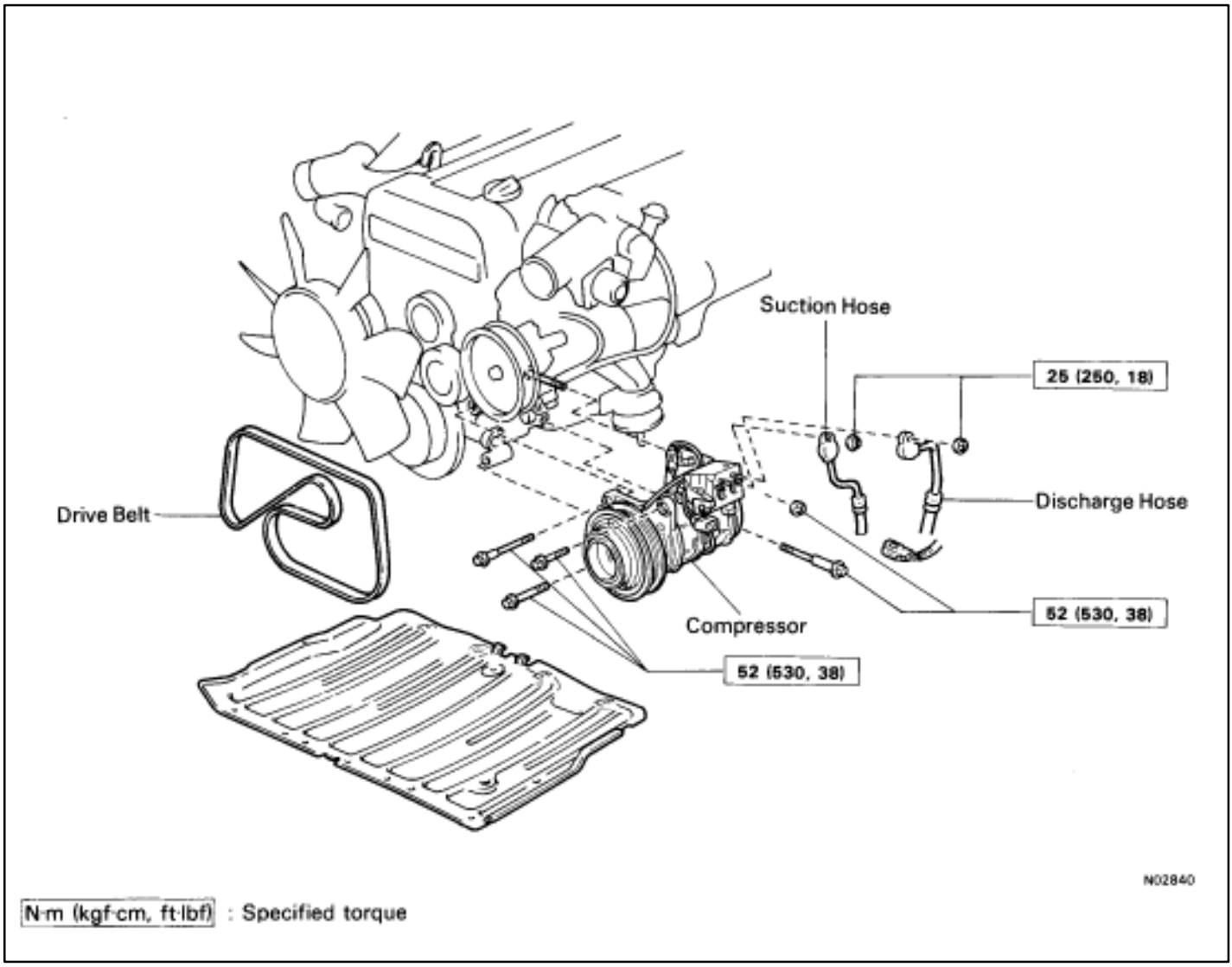

1. **RUN ENGINE AT IDLE SPEED WITH A/C ON FOR APPROX. TEN MINUTES**
2. **STOP ENGINE**
3. **DISCONNECT NEGATIVE (–) CABLE FROM BATTERY**
4. **RECOVER REFRIGERANT FROM REFRIGERATION SYSTEM**
5. **DISCONNECT DISCHARGE HOSE AND SUCTION HOSE FROM COMPRESSOR**

   NOTICE: Cap the open fittings immediately to keep moisture out of the system.
6. **DISCONNECT CONNECTOR FROM MAGNETIC CLUTCH**
7. **REMOVE DRIVE BELT**

   See step 6 on page EM–118.

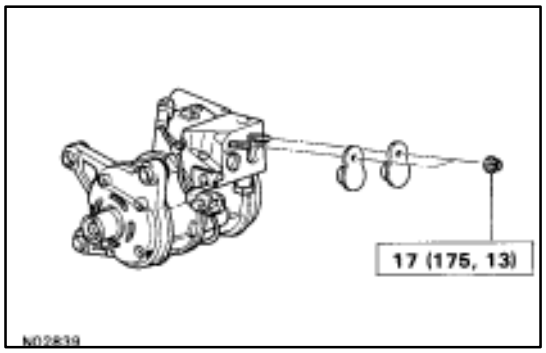

WhereEverybodyKnowsYourName

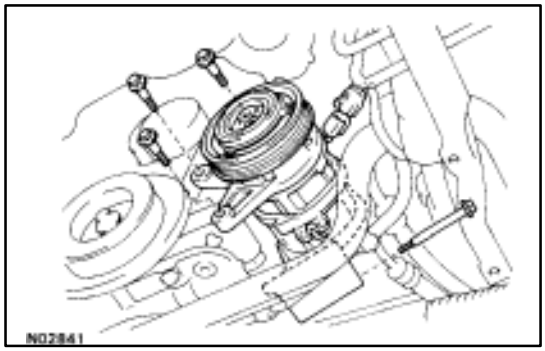

8. REMOVE COMPRESSOR

(a) Remove under cover.
(b) Remove harness from the clamp.
(c) Remove the earth wire harness set bolt.
(d) Remove the nut, three bolts, bracket and the compressor.

DISASSEMBLY OF MAGNETIC CLUTCH

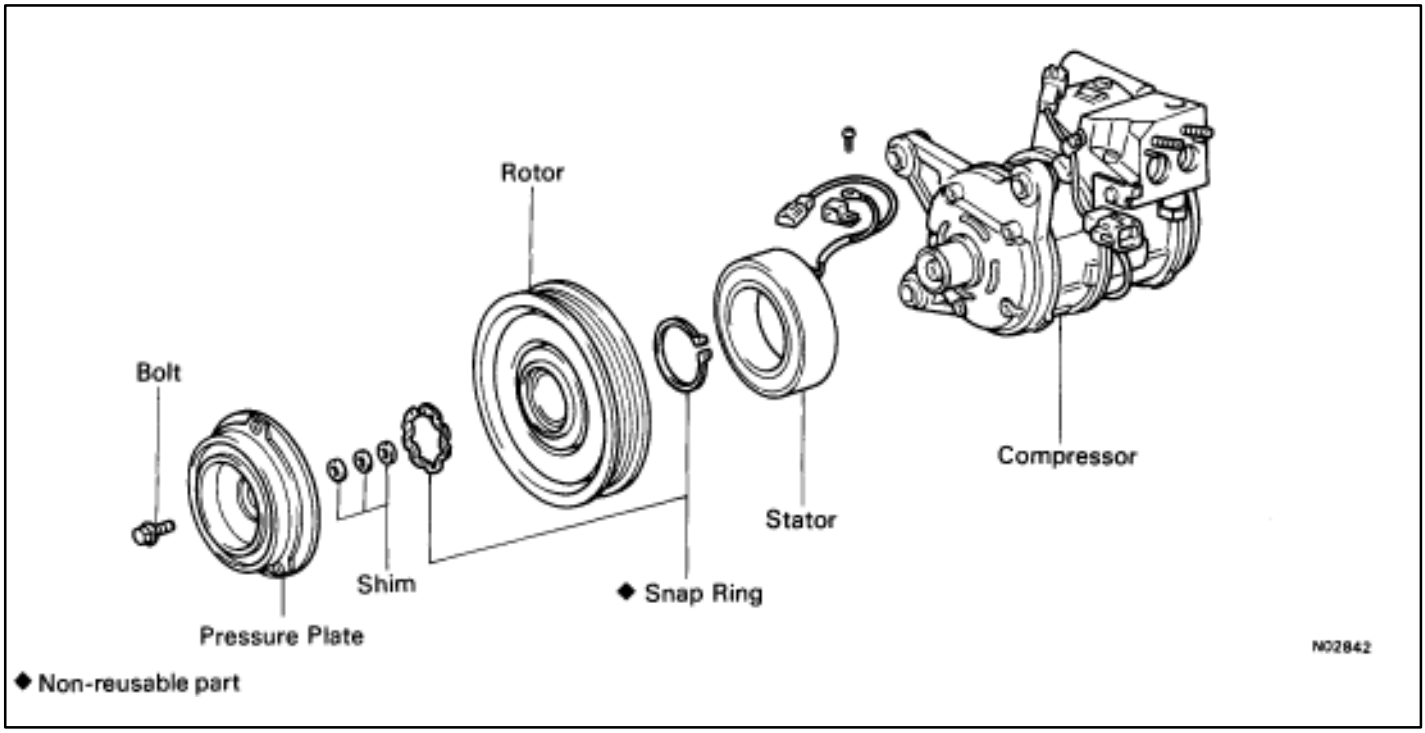

WhereEverybodyKnowsYourName

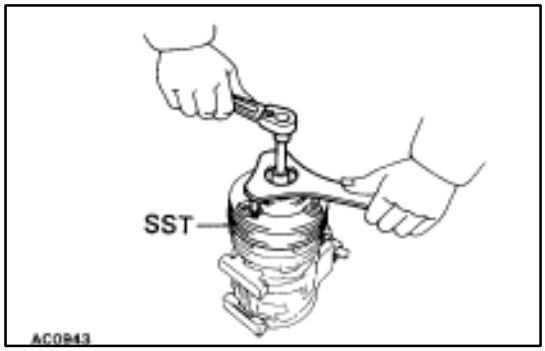

1. REMOVE PRESSURE PLATE

(a) Using a SST and socket wrench, remove the shaft bolt.
SST 07112–76060

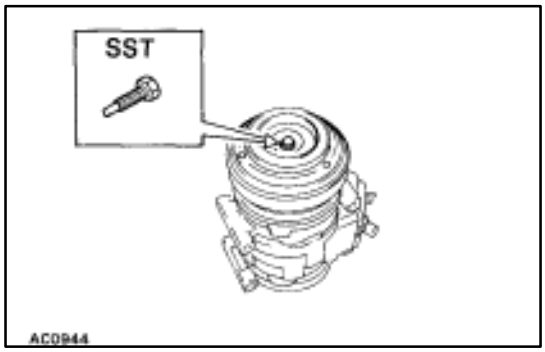

(b) Install a SST on the pressure plate.
SST 07112–66040

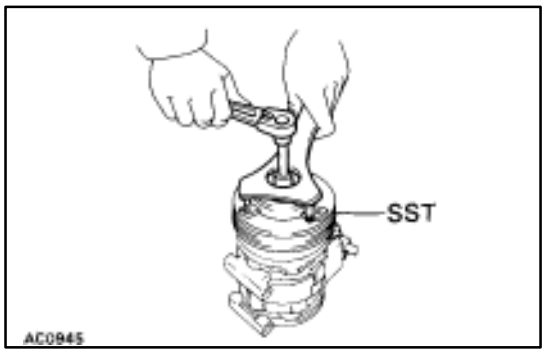

(c) Using a SST and socket wrench, remove the pressure plate.
SST 07112–76060

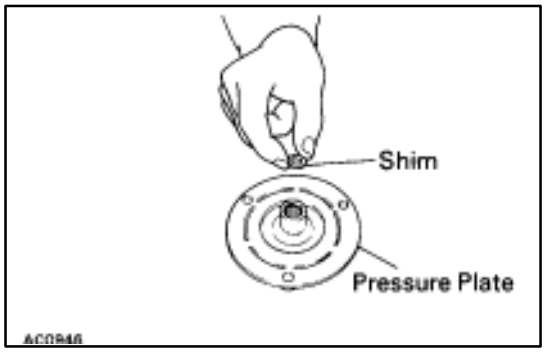

(d) Remove the shims from the pressure plate.

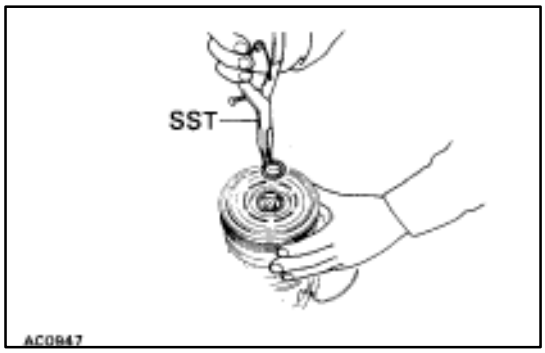

2. REMOVE ROTOR

(a) Using a SST, remove the snap ring.
SST 07114–84020

WhereEverybodyKnowsYourName

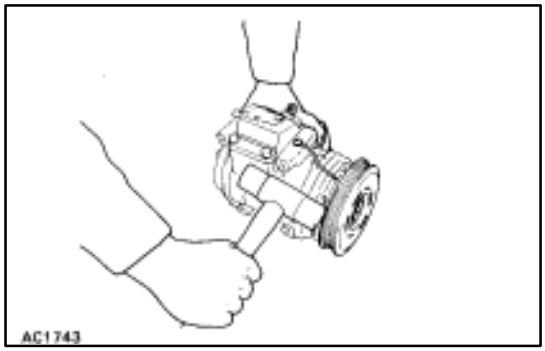

(b) Using a plastic hammer, tap the rotor off the shaft.

NOTICE: Be careful not to damage the pulley when tapping on the rotor.

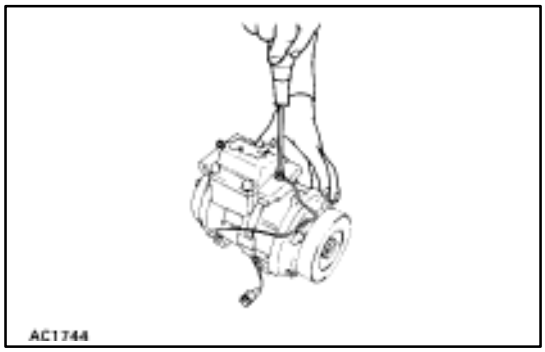

3. REMOVE STATOR

(a) Disconnect the stator lead wire from the compressor housing.

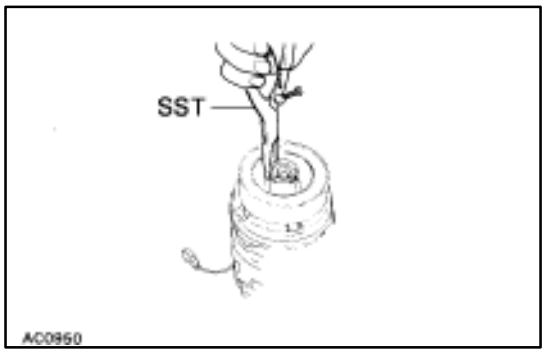

(b) Using a SST, remove the snap ring.

SST 07114–84020

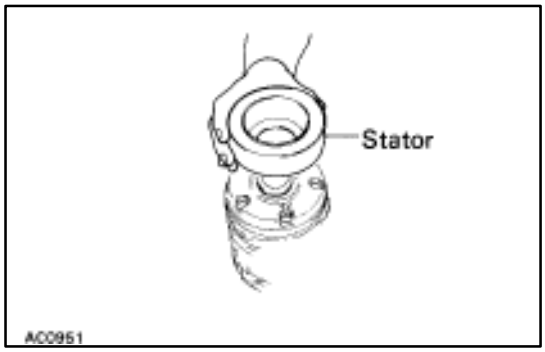

(c) Remove the stator.

WhereEverybodyKnowsYourName

ASSEMBLY OF MAGNETIC CLUTCH

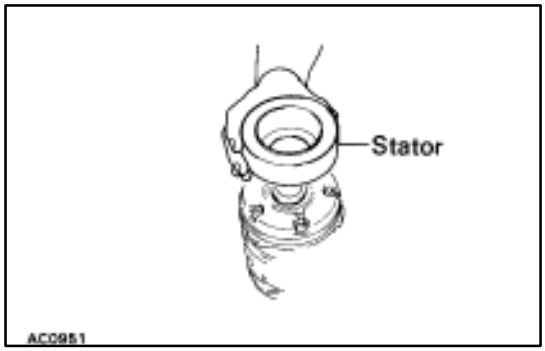

1. INSTALL STATOR

(a) Install the stator on the compressor.

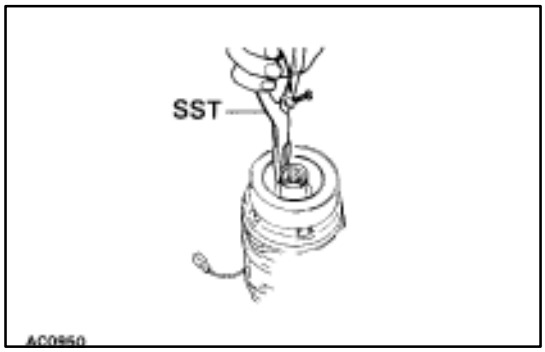

(b) Using a SST, install the snap ring.

SST 07114–84020

NOTICE: The snap ring should be installed so that its beveled side faces up.

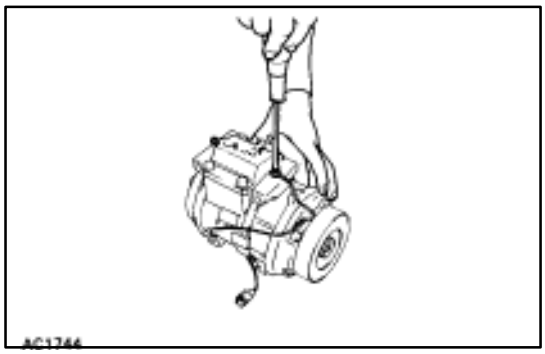

(c) Connect the stator lead wires to the compressor housing.

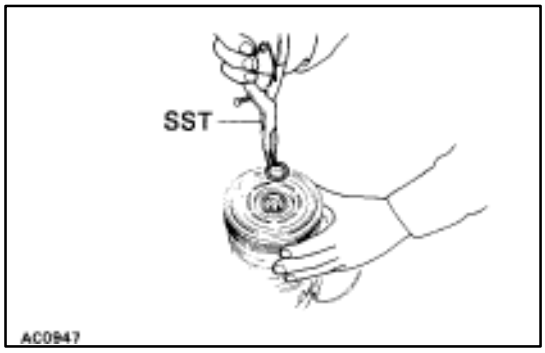

2. INSTALL ROTOR

(a) Install the rotor on the compressor shaft.

(b) Using a SST, install the snap ring.

SST 07114–84020

NOTICE: The snap ring should be installed so that its beveled side faces up.

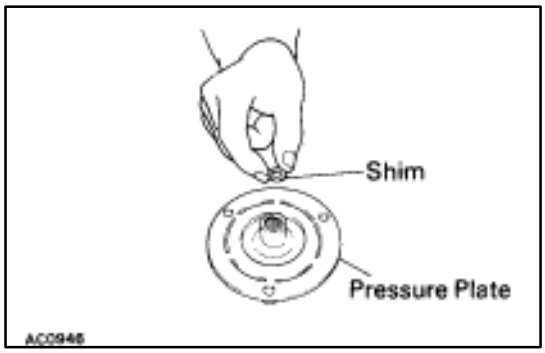

3. INSTALL PRESSURE PLATE

(a) Put the shims to the pressure plate.

WhereEverybodyKnowsYourName

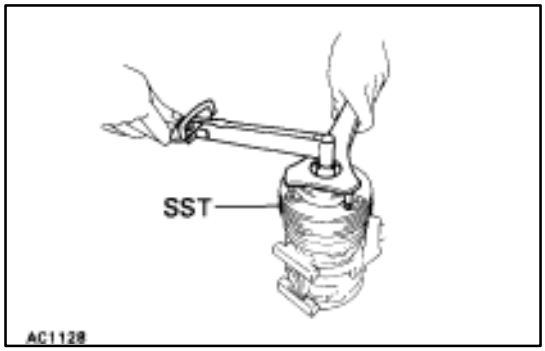

(b) Using SST and torque wrench, install the shaft bolt.
SST 07112–76060
Torque: 14 N·m (140 kgf·cm, 10 ft·lbf)

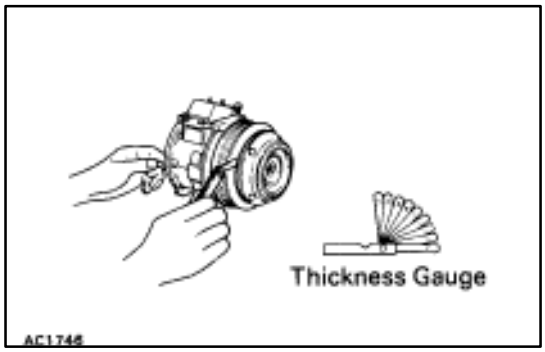

4. CHECK CLEARANCE MAGNETIC CLUTCH

Check the clearance between the pressure plate and rotor using thickness gauge.

Standard clearance: 0.5 ± 0.15 mm
(0.020 ± 0.006 in.)

If the clearance is not within tolerance, change the number of shims to obtain the standard clearance.

WhereEverybodyKnowsYourName

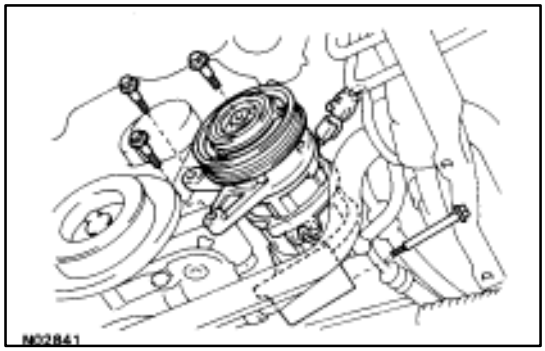

INSTALLATION OF COMPRESSOR

1. INSTALL COMPRESSOR

(a) Install the compressor with the bracket, nut and the three bolts.

Specified torque:

Bolts 51 N·m (530 kgf·cm, 38 ft·lbf)

(b) Install the earth wire harness with the bolts.

(c) Install the wire harness to the clamp.

2. INSTALL DRIVE BELT

See step 32 on page EM–177.

3. CONNECT CONNECTOR TO MAGNETIC CLUTCH

4. CONNECT DISCHARGE HOSE AND SUCTION HOSE TO COMPRESSOR

NOTICE: Hoses should be connected immediately after the caps have been removed.

Specified torque: 25 N·m (250 kgf·cm, 18 ft·lbf)

5. EVACUATE AIR IN REFRIGERATION SYSTEM AND CHARGE WITH REFRIGERANT

See page AC–17.

Specified amount: 950 ± 50 g (33.44 ± 1.76 oz)

6. INSPECT FOR LEAKAGE OF REFRIGERANT

Using a gas leak tester, check for leakage of refrigerant.

If there is leakage, check the tightening torque at the joints.

7. INSPECT A/C OPERATION

WhereEverybodyKnowsYourName

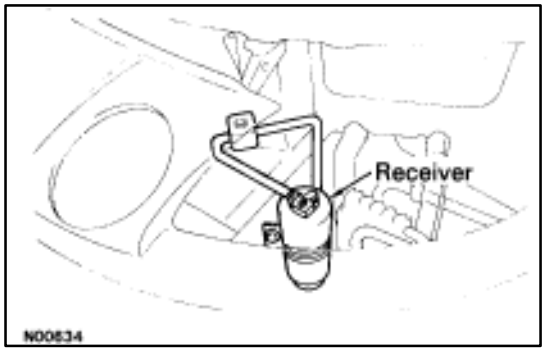

RECEIVER

ON–VEHICLE INSPECTION

1. **REMOVE THE HEADLIGHT ON THE VEHICLE'S LEFT SIDE**
   See page BE–37
2. **INSPECT FITTINGS FOR LEAKAGE**
   Using a gas leak tester, check for leakage.
   If there is leakage, check the tightening torque at the joints.
3. **INSTALL HEADLIGHT**
   See page BE–37

REMOVAL OF RECEIVER

1. **REMOVE THE HEADLIGHT ON THE VEHICLE'S LEFT SIDE**
   See page BE–37
2. **RECOVER REFRIGERANT IN REFRIGERATION SYSTEM**
   See page AC–16

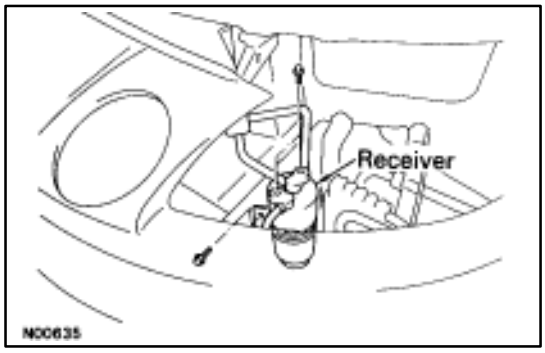

3. **REMOVE TWO LIQUID TUBES FROM RECEIVER**
   Remove the two bolts and both the tubes from the receiver.
4. **REMOVE RECEIVER FROM RECEIVER HOLDER**
   Remove the bolt, then remove the receiver from the receiver holder.

NOTICE: Cap the open fittings immediately to keep moisture out of the system.

WhereEverybodyKnowsYourName

INSTALLATION OF RECEIVER

1. INSTALL RECEIVER IN RECEIVER HOLDER

Install the receiver in the receiver holder with the one bolt.

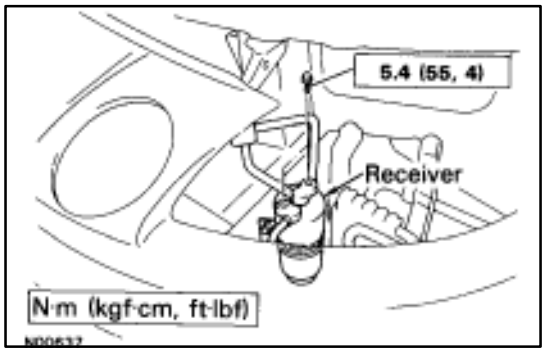

2. INSTALL TWO LIQUID TUBES ON RECEIVER

Install the two liquid tubes on the receiver with the two bolts.

Specified torque: 5.4 N·m (55 kgf·cm, 4 ft·lbf)

NOTICE: Do not remove the caps until the tubes are connected.

3. REPLENISH COMPRESSOR OIL IF RECEIVER HAS BEEN REPLACED

Add 20 cc (0.7 fl.oz.)

Compressor oil: ND OIL 6,
SUNISO NO. 5 GS or equivalent

4. EVACUATE AIR IN REFRIGERATION SYSTEM AND CHARGE WITH REFRIGERANT

See page AC–17

Specified amount: 950 ± 50 g (33.44 ± 1.76 oz)

5. INSPECT FOR LEAKAGE OF REFRIGERANT

Using a gas leak tester, check for leakage of refrigerant.
If there is leakage, check the tightening torque at the joints.

6. INSPECT A/C OPERATION

7. INSTALL HEADLIGHT

See page BE–37

WhereEverybodyKnowsYourName

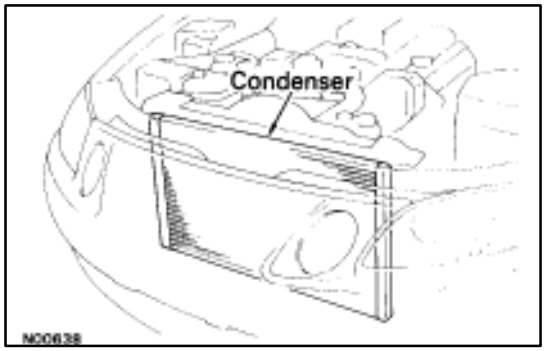

CONDENSER

ON–VEHICLE INSPECTION

1. **INSPECT CONDENSER FINS FOR BLOCKAGE OR DAMAGE**
   If the fins are clogged, wash them with water and dry with compressed air.
   NOTICE: Be careful not to damage the fins.
   If the fins are bent, straighten them with a screwdriver or pliers.
2. **INSPECT CONDENSER AND FITTINGS FOR LEAKAGE**
   Using a gas leak tester, check for leakage.
   If there is leakage, check the tightening torque at the joints.

REMOVAL OF CONDENSER

1. **RECOVER REFRIGERANT IN REFRIGERATION SYSTEM**
   See page AC–16

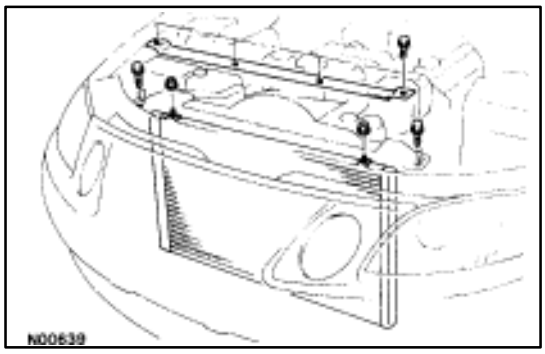

2. **REMOVE BATTERY**
3. **REMOVE CONDENSER UPPER COVER AND RADIATOR FITTING BOLT**
4. **REMOVE UNDER COVER AND AIR FLOW COVER**
5. **REMOVE LIQUID TUBE AND SUCTION TUBE**
   Remove two bolts and both tubes.
   NOTICE: Cap open the fittings immediately to keep moisture out of the system.

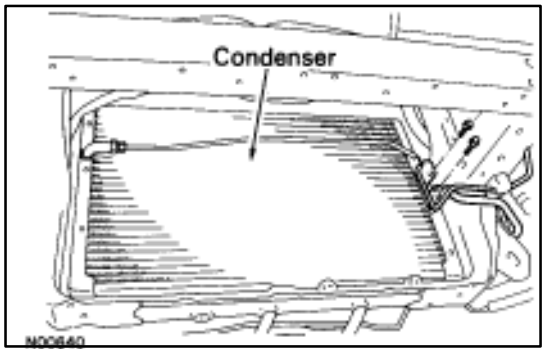

6. **REMOVE CONDENSER**
   Remove two nuts and lean the radiator backward, then remove the condenser.

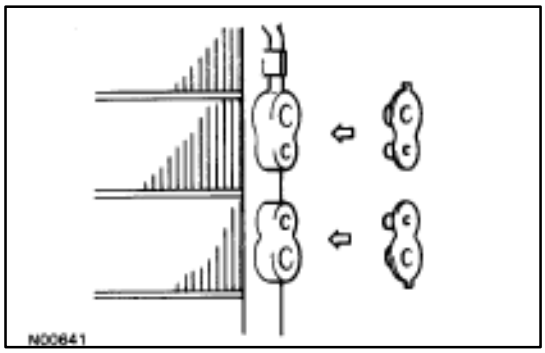

WhereEverybodyKnowsYourName

INSTALLATION OF CONDENSER

1. INSTALL CONDENSER

Install the condenser with two nuts.

2. INSTALL LIQUID TUBE AND DISCHARGE TUBE

Install both tubes with two bolts.

Specified torque:

Discharge tube 10 N·m (100 kgf·cm, 7 ft·lbf)

Liquid tube 10 N·m (100 kgf·cm, 7 ft·lbf)

NOTICE: Don't remove caps until the tube is installed.

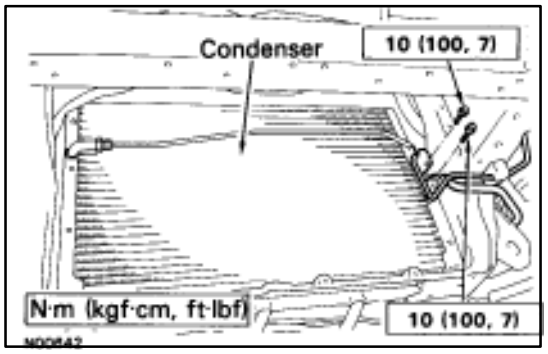

3. IF CONDENSER WAS REPLACED, ADD COMPRESSOR OIL TO COMPRESSOR

ADD 40–50 cc (1.4–1.7 ft.oz.)

Compressor oil: ND OIL 6,

SUNISO NO. 5 GS or equivalent

4. EVACUATE AIR IN REFRIGERATION SYSTEM AND CHARGE WITH REFRIGERANT

See page AC–17

Specified amount: 950 ± 50 g (33.44 ± 1.76 oz)

5. INSPECT FOR LEAKAGE OF REFRIGERATN

Using a gas leak tester, check for leakage of refrigerant.

6. INSTALL REMOVAL PARTS

Install the removal parts in reverse order of removal procedure.

WhereEverybodyKnowsYourName

EVAPORATOR

REMOVAL OF EVAPORATOR

1. **DISCONNECT NEGATIVE (–) CABLE FROM BATTERY**
2. **RECOVER REFRIGERANT IN REFRIGERATION SYSTEM**
   See page AC–16
3. **REMOVE ABS ACTUATOR**
   See page BR–48
4. **REMOVE LIQUID TUBE AND SUCTION TUBE**
   Remove two bolts and both tubes.
5. **REMOVE EQUALIZER TUBE FROM EPR**
   Remove the bole and the tube.
   NOTICE: Cap the open fittings immediately to keep moisture out of the system.

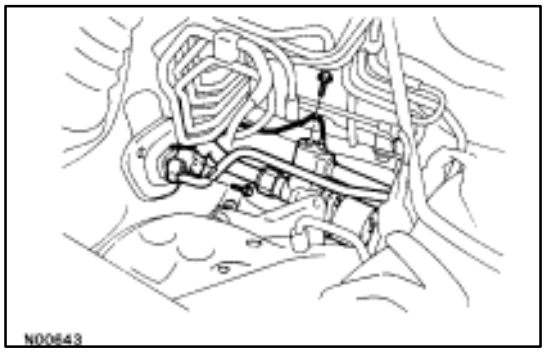

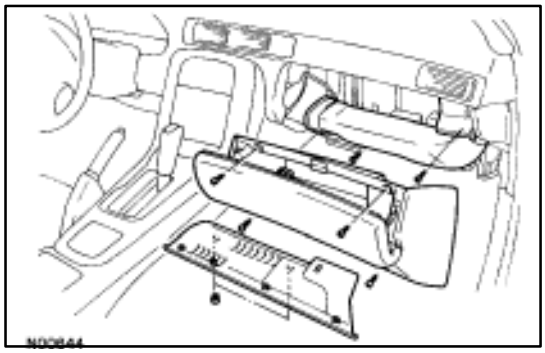

6. **REMOVE UNDER COVER GLOVE BOX AND SIDE AIR DUCT**

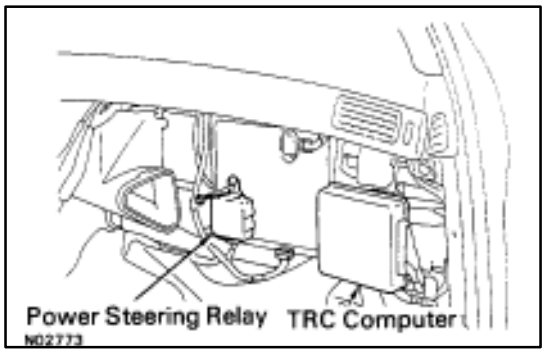

7. **DISCONNECT CONNECTORS AND REMOVE POWER STEERING RELAY BOX COOLING FAN COMPUTER AND TRC COMPUTER**

WhereEverybodyKnowsYourName

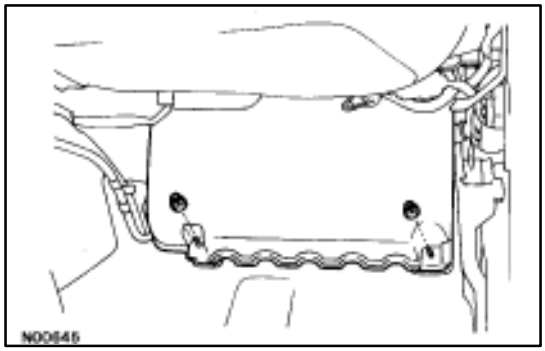

8. PULL FLOOR CARPET DOWN AND REMOVE COMPUTER COVER

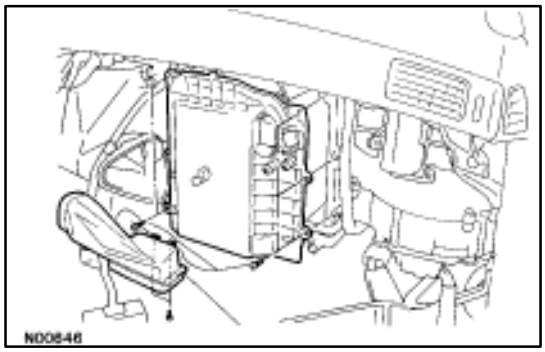

9. REMOVE EVAPORATOR COVER AND FOOT AIR DUCT BOLT

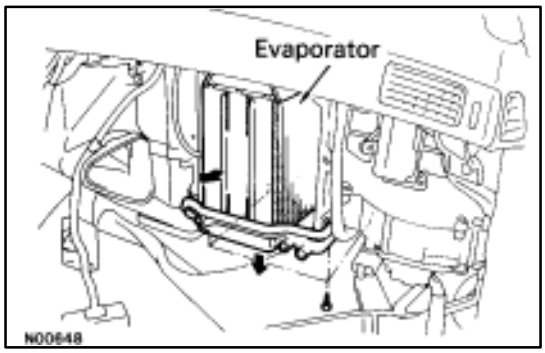

10. REMOVE EVAPORATOR

(a) Remove six bolts and down the lower case.
(b) Pull and remove the evaporator.

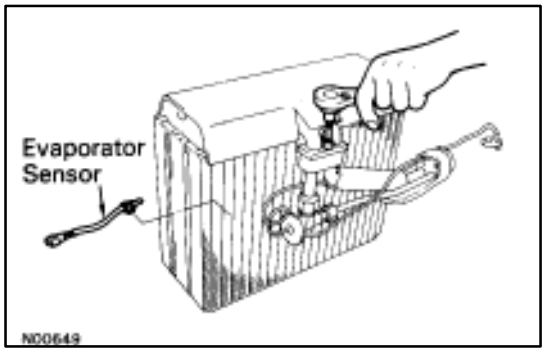

(c) Pull out the evaporator sensor from the evaporator fins.
(d) Remove two bolts using a hexagon wrench and separate the evaporator and expansion valve.

INSPECTION OF EVAPORATOR

1. INSPECT FINS FOR BLOCKAGE

If the fins are clogged, clean them with compressed air.
NOTICE: Never use water to clean the evaporator.

2. INSPECT FITTINGS FOR CRACKS OR SCRATCHES

Repair as necessary.

WhereEverybodyKnowsYourName

INSTALLATION OF EVAPORATOR

1. INSTALL REMOVAL PARTS

Install the removal parts in reverse order of removal procedure.

HINT:

- The tightening torque for the bolt used to install the expansion valve on the evaporator is shown below.

Specified torque: 5.4 N·m (55 kgf·cm, 48 ft·lbf)

- The tightening torque for the bolts used to install the liquid tube and suction tube to the cooling is shown below.

Specified torque: 10 N·m (100 kgf·cm, 7 ft·lbf)

- The tightening torque specified for the bolt used to install the equalizer tube to EPR is shown below.

Specified torque: 25 N·m (250 kgf·cm, 18 ft·lbf)

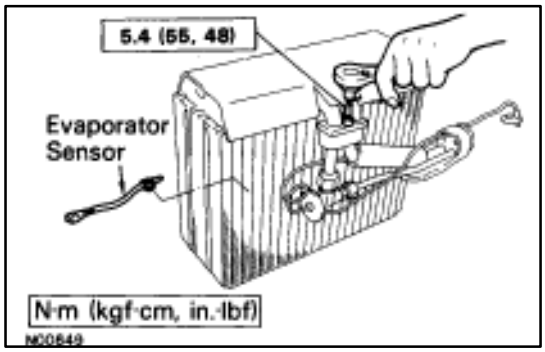

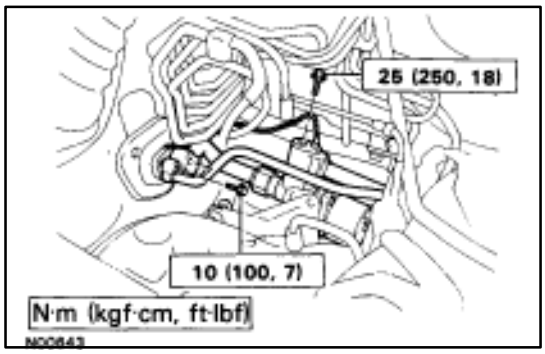

2. IF EVAPORATOR WAS REPLACED, ADD COMPRESSOR OIL TO EVAPORATOR

Add 40–50 cc (1.4–1.7 fl.oz)

Compressor oil: ND OIL 6,
SUNISO NO. 5 GS or equivalent

3. EVACUATE AIR IN REFRIGERATION SYSTEM AND CHARGE WITH REFRIGERANT

Specified amount: 950 ± 50 g (33.44 ± 1.76 oz)

4. INSPECT FOR LEAKAGE OF REFRIGERANT

Using a gas leak tester, check for leakage of refrigerant.

WhereEverybodyKnowsYourName

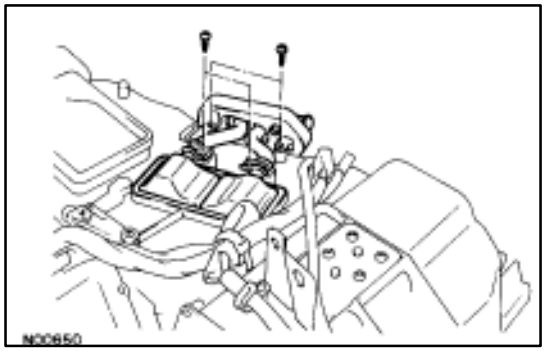

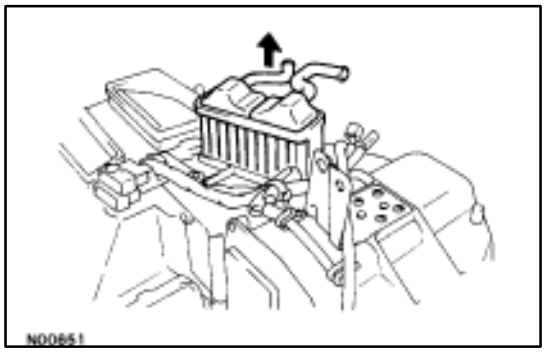

HEATER RADIATOR

REMOVAL OF HEATER RADIATOR

1. SET TEMPERATURE CONTROL SWITCH TO MAX COOL

2. REMOVE A/C UNIT

See page AC–107

3. REMOVE HATER RADIATOR

(a) Remove the two screws and the plate.

(b) Remove the two screws and the clamps.

(c) Pull the radiator out.

INSPECTION OF HEATER RADIATOR

INSPECT FINS FOR BLOCKAGE

If the fins are clogged, clean them with compressed air.

INSTALLATION OF HEATER RADIATOR

1. INSTALL HEATER RADIATOR TO A/C UNIT

(a) Put the radiator in the A/C until.

(b) Install the clamps with two screws.

(c) Install the plate with two screws.

2. INSTALL A/C UNIT

See page AC–108

WhereEverybodyKnowsYourName

EXPANSION VALVE

ON–VEHICLE INSPECTION

1. **CHECK QUANTITY OF GAS DURING REFRIGERATION CYCLE**
2. **INSTALL MANIFOLD GAUGE SET**
3. **RUN ENGINE**

   Run the engine at 2,000 rpm for at least 5 minutes. Then check that the high pressure reading is 1,275–1,471 kPa (13–15 kgf/cm, 185–213 psi).
4. **CHECK EXPANSION VALVE**

   If the expansion valve is faulty, the low pressure reading will drop to 0 kPa (0 kgf/cm, 0 psi), otherwise it is OK.

   HINT: When the low pressure drops to 0 kPa (0 kgf/cm, 0 psi), feel the receiver's IN and OUT sides for no temperature difference.

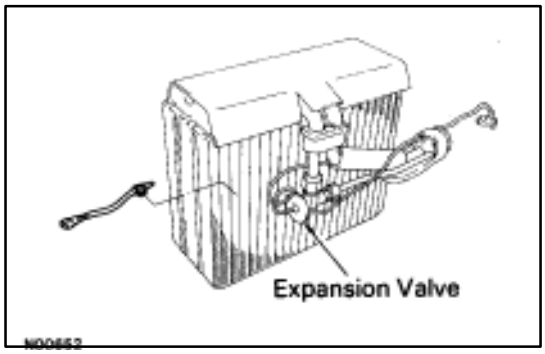

REMOVAL OF EXPANSION VALVE

1. **REMOVE EVAPORATOR**

   See page AC–124.
2. **REMOVE EQUALIZER TUBES**
3. **REMOVE EXPANSION VALVE**

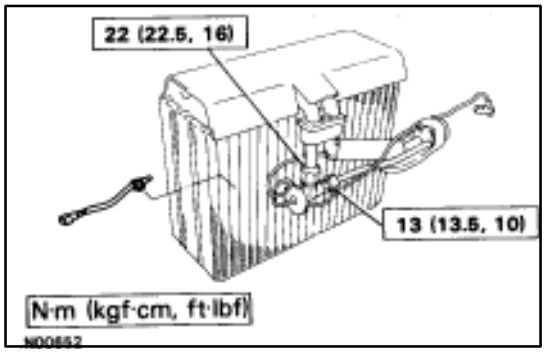

INSTALLATION OF EXPANSION VALVE

1. **INSTALL EXPANSION VALVE**

   Specified torque:

   0.31 inch tube 13 N·m (135 kgf·cm, 10 ft·lbf)

   0.50 inch tube 22 N·m (225 kgf·cm, 16 ft·lbf)
2. **INSTALL EQUALIZER TUBES**
3. **INSTALL EVAPORATOR**

   See page AC–124

WhereEverybodyKnowsYourName

WATER VALVE

REMOVAL OF WATER VALVE

1. DISCONNECT FOLLOWING PARTS FROM WATER VALVE

- Water hose
- acuum hose
- Connector

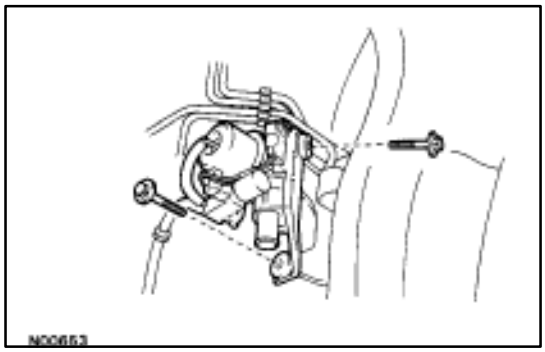

2. REMOVE WATER VALVE

(a) Remove the two bolts.

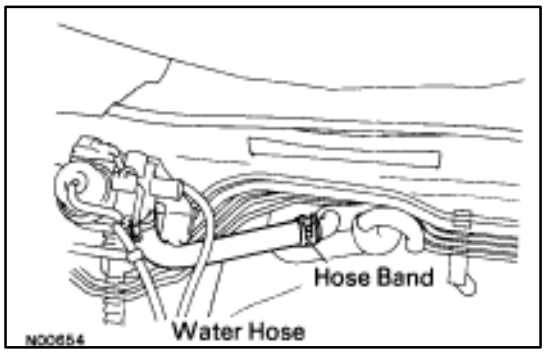

(b) Loosen the hose band, then pull off the water hose.

INSPECTION OF WATER VALVE VSV

See page AC–90

WhereEverybodyKnowsYourName

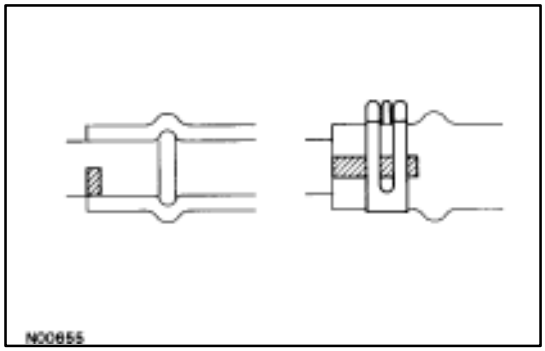

INSTALLATION OF WATER VALVE

1. INSTALL WATER VALVE

(a) Push the water hose for the heater unit onto the pipe until the pipe's markings are hidden.

(b) Install the hose clip in a position where about 1 mm (0.039 in.) of the marking on the hose can bee seen.

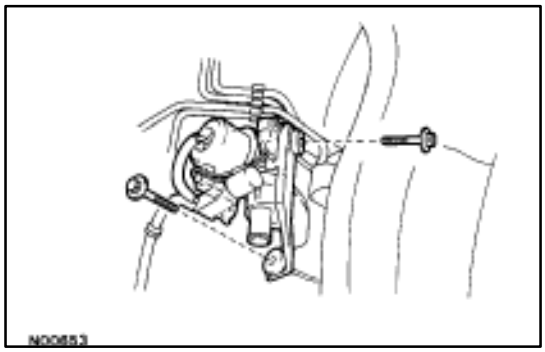

(c) Install the water valve with two screws.

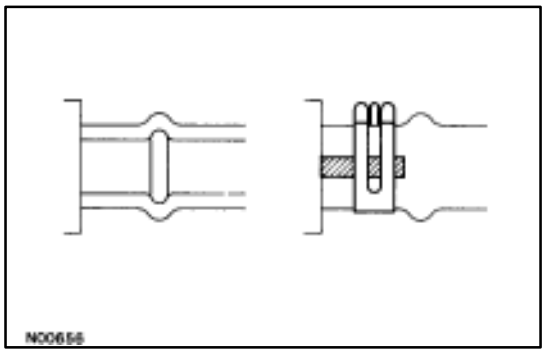

2. INSTALL FOLLOWING PARTS TO WATER VALVE

- Connector
- Vacuum hose
- Water hose

HINT:

- Push the water hose onto the water valve pipe until the pipe is completely hidden.
- Install the hose clip in a position where about 1 mm (0.039 in.) of the marking on the hose can bee seen.

WhereEverybodyKnowsYourName

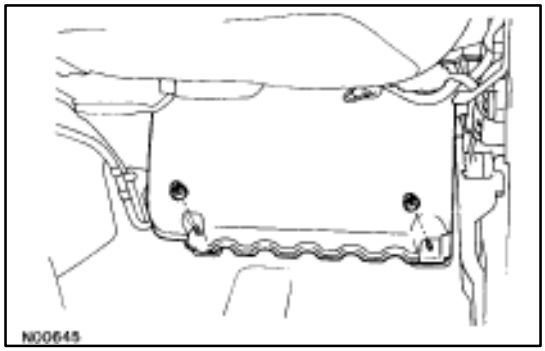

BLOWER MOTOR

REMOVAL OF BLOWER MOTOR

1. **REMOVE GLOVE BOX**
   See page BO–112
2. **REMOVE ECU COVER**
   (a) Lift up the front end of the carpet on the passenger side.
   (b) Remove the two nuts and the cover.

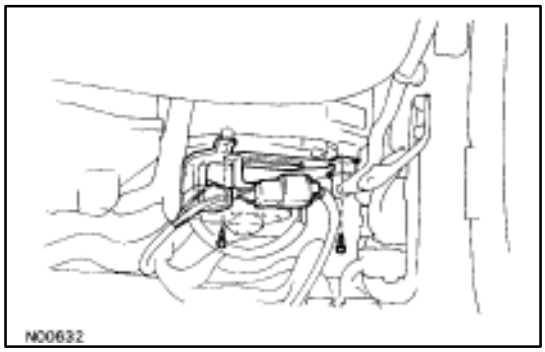

3. **REMOVE CONNECTOR BRACKET**
   Remove the two screws and the bracket.

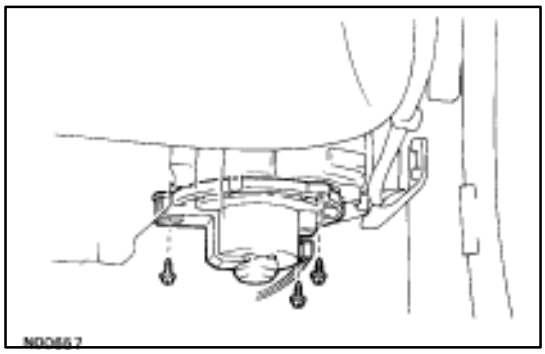

4. **REMOVE MOTOR**
   (a) Disconnect the connector.
   (b) Remove the three screws and the motor.

INSPECTION OF BLOWER MOTOR

See page AC–81

INSTALLATION OF BLOWER MOTOR

1. **INSTALL MOTOR**
   (a) Install the motor with three screws.
   (b) Connect the connector.
2. **INSTALL CONNECTOR BRACKET**
3. **INSTALL ECU COVER**
4. **INSTALL GLOVE BOX**

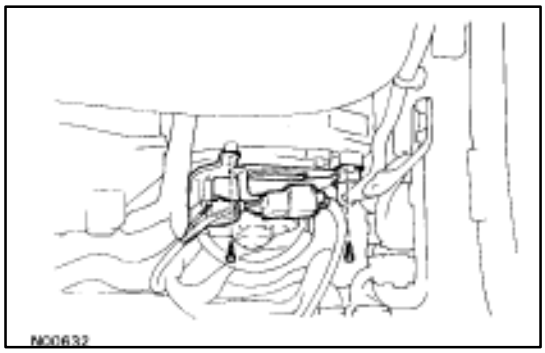

WhereEverybodyKnowsYourName

AIR INLET SERVOMOTOR

REMOVAL OF AIR INLET SERVOMOTOR

1. REMOVE INSTRUMENT PANEL REINFORCEMENT

See page BO–109

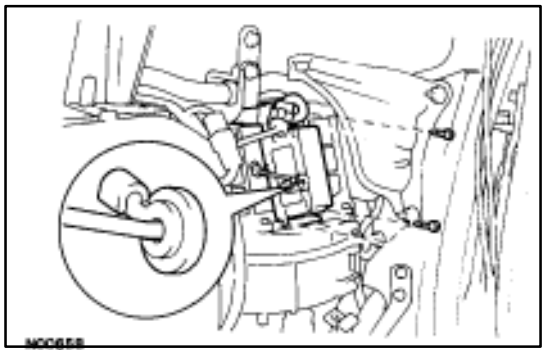

2. REMOVE SERVOMOTOR

(a) Disconnect the connector.
(b) Disconnect the control link.
(c) Remove the three screws and the servomotor.

INSPECTION OF AIR INLET SERVOMOTOR

See page AC–64

AIR INLET SERVOMOTOR INSTALLATION

1. INSTALL SERVOMOTOR

(a) Install the servomotor with three screws.
(b) Connect the control link.
(c) Connect the connector.

2. INSTALL INSTRUMENT PANEL REIFORCEMENT

See page BO–109

WhereEverybodyKnowsYourName

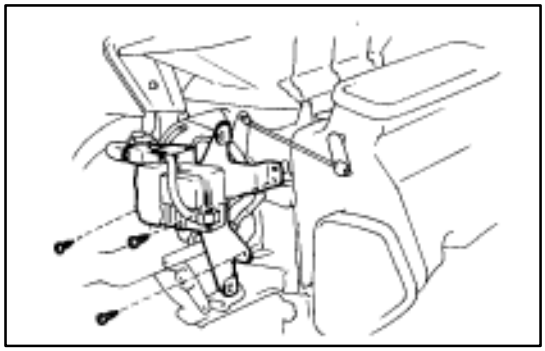

AIR OUTLET SERVOMOTOR

REMOVAL OF AIR OUTLET SERVOMOTOR

1. REMOVE INSTRUMENT PANEL REINFORCEMENT

See page BO–109

2. REMOVE SERVOMOTOR

(a) Disconnect the connector.

(b) Remove the four screws and the servomotor.

INSPECTION OF AIR OUTLET SERVOMOTOR

See page AC–68

INSTALLATION OF AIR OUTLET SERVOMOTOR

1. INSTALL SERVOMOTOR

(a) Install the servomotor with four screws.

(b) Connect the connector.

2. INSTALL INSTRUMENT PANEL REINFORCEMENT

See page BO–109

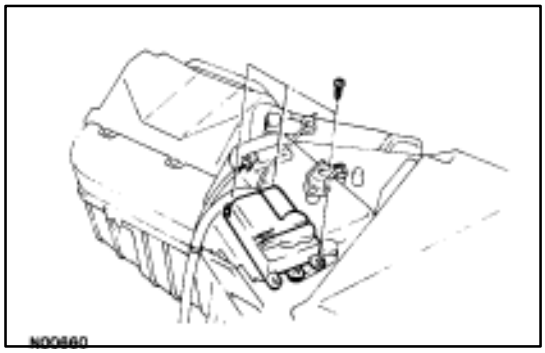

AIR MIX SERVOMOTOR

REMOVAL OF AIR MIX SERVOMOTOR

1. REMOVE A/C UNIT

See page AC–107

2. REMOVE SERVOMOTOR

(a) Disconnect the connector.

(b) Remove the three screws and the servomotor.

INSPECTION OF AIR MIX SERVOMOTOR

See page AC–60

INSTALLATION OF AIR MIX SERVOMOTOR

1. INSTALL SERVOMOTOR

(a) Install the servomotor with three screws.

(b) Connect the connector.

2. INSTALL A/C UNIT

See page AC–108

WhereEverybodyKnowsYourName

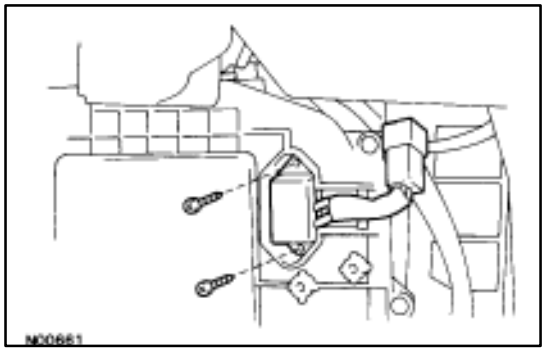

BLOWER RESISTOR

REMOVAL OF BLOWER RESISTOR

1. REMOVE GLOVE BOX

See page BO–112

2. REMOVE RESISTOR

(a) Disconnect the connector.

(b) Remove the two screws and the resistor.

INSPECTION OF BLOWER RESISTOR

See page AC–80

INSTALLATION OF BLOWER RESISTOR

1. INSTALL RESISTOR

(a) Install the resistor with two screws.

(b) Connect the connector.

2. INSTALL GLOVE BOX

See page BO–112

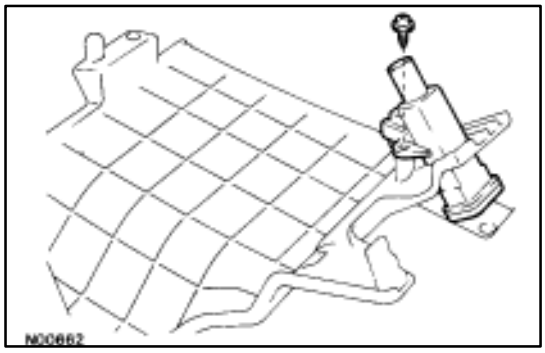

ROOM TEMPERATURE SENSOR

REMOVAL OF ROOM TEMPERATURE SENSOR

1. REMOVE NO. 1 LOWER FINISH PANEL

See page BO–112

2. REMOVE SENSOR

Remove the screw and the sensor.

INSPECTION OF ROOM TEMPERATURE SENSOR

See page AC–44

INSTALLATION OF ROOM TEMPERATURE SENSOR

1. INSTALL SENSOR

Install the sensor with one screw.

2. INSTALL NO. 1 LOWER FINISH PANEL

See page BO–112

WhereEverybodyKnowsYourName

AMBIENT TEMPERATURE SENSOR

REMOVAL OF AMBIENT TEMPERATURE SENSOR

1. REMOVE ENGINE UNDER COVER

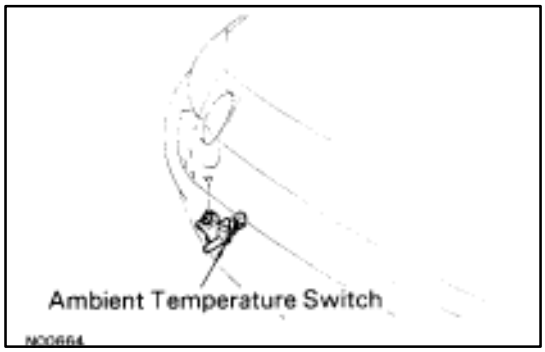

2. REMOVE SENSOR

(a) Remove the clip and the sensor.

(b) Disconnect the connector.

INSPECTION OF AMBIENT TEMPERATURE SENSOR

See page AC–46

INSTALLATION OF AMBIENT TEMPERATURE SENSOR

1. INSTALL SENSOR

(a) Connect the connector.

(b) Install the sensor with the clip.

2. INSTALL ENGINE UNDER COVER

WhereEverybodyKnowsYourName

SOLAR SENSOR

REMOVAL OF SOLAR SENSOR

1. **REMOVE NO. 1 DEFROSTER GARNISH**
   See page BO–109
2. **REMOVE SENSOR**
   Push out the sensor from the garnish.

INSPECTION OF SOLAR SENSOR

See page AC–52

INSTALLATION OF SOLAR SENSOR

1. **INSTALL SENSOR TO NO. 1 DEFROSTER GARNISH**
2. **INSTALL NO. 2 DEFROSTER GARNISH**
   See page BO–109

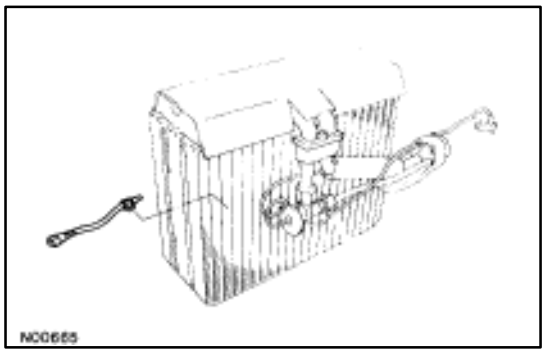

EVAPORATOR TEMPERATURE SENSOR

REMOVAL OF EVAPORATOR TEMPERATURE SENSOR

1. **REMOVE EVAPORATOR**
   See page AC–122
2. **REMOVE SENSOR FROM EVAPORATOR**

INSPECTION OF EVAPORATOR TEMPERATURE SENSOR

See page AC–48

INSTATION OF EVAPORATOR TEMPERATURE SENSOR

1. **INSTALL SENSOR TO EVAPORATOR**
2. **INSTALL EVAPORATOR**
   See page AC–124

WhereEverybodyKnowsYourName

REVOLUTION DETECTING SENSOR

INSPECTION OF REVOLUTION DETECTING SENSOR

See page AC–55

REMOVAL OF REVOLUTION DETECTING SENSOR

1. REMOVE COMPRESSOR

See page AC–111

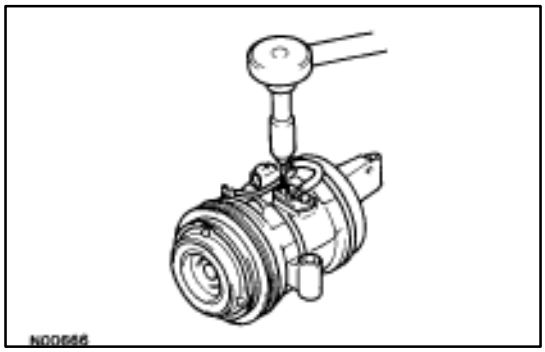

2. REMOVE SENSOR

Remove the two bolts and the sensor.

INSTALLATION OF REVOLUTION DETECTING SENSOR

1. INSTALL SENSOR

Using a torque wrench, tighten the bolts.

Specified Torque: 6 N·m (60 kgf·cm, 4 ft·lbf)

2. INSTALL COMPRESSOR

See page AC–117

WhereEverybodyKnowsYourName

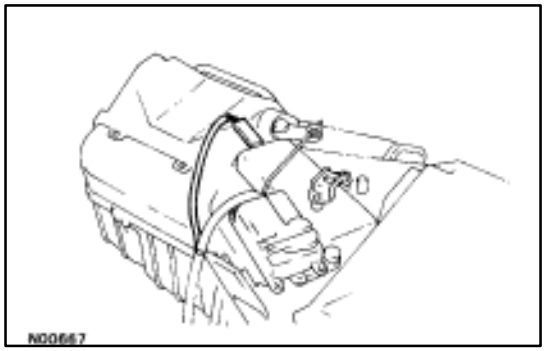

WATER TEMPERATURE SENSOR

REMOVAL OF WATER TEMPERATURE SENSOR

1. **REMOVE A/C UNIT**
   See page AC–107
2. **REMOVE SENSOR**
   After taking off the clamp, take out the sensor.

INSPECTION OF WATER TEMPERATURE SENSOR

See page AC–51

INSTALLATION OF WATER TEMPERATURE SENSOR

1. **INSTALL SENSOR TO A/C UNIT**
   Install the sensor with the clamp.
2. **INSTALL A/C UNIT**
   See page AC–108

PRESSURE SWITCH

INSPECTION OF PRESSURE SWITCH

See page AC–57

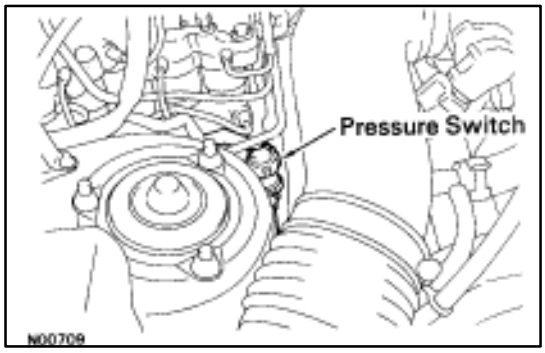

REMOVAL OF PRESSURE SWITCH

1. **RECOVER REFRIGERANT IN REFRIGERANT SYSTEM**
   See page AC–16
2. **REMOVE PRESSURE SWITCH**

(a) Disconnect the connector.

(b) Remove the pressure switch from the liquid tube.
HINT: Lock the switch mount on the tube with an open end wrench, being careful not to deform the tube, and remove the switch.

WhereEverybodyKnowsYourName

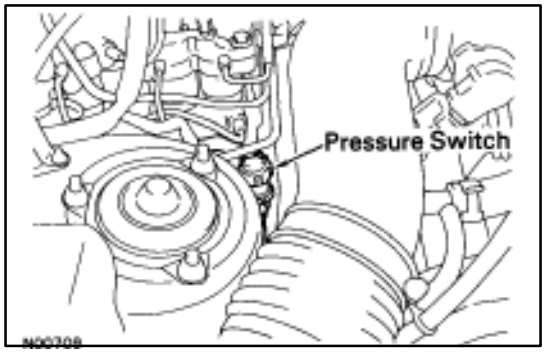

INSTALLATION OF PRESSURE SWITCH

1. INSTALL PRESSURE SWITCH

(a) Install the pressure switch to the liquid tube.
Specified torque: 10 N·m (100 kgf·cm, 7 ft·lbf)
HINT: Lock the switch mount on the tube with an open end wrench, being careful not to deform the tube, and install the switch.

(b) Connect the connector.

2. EVACUATE AIR IN REFRIGERATION SYSTEM AND CHARGE WITH REFRIGERANT

See page AC–17
Specified amount: 950 ± 50 g (33.44 ± 1.76 oz)

3. INSPECTION FOR LEAKAGE OF REFRIGERANT

Using a gas lead tester, check for leakage of refrigerant from the pressure switch mount.

4. INSPECT A/C OPERATION

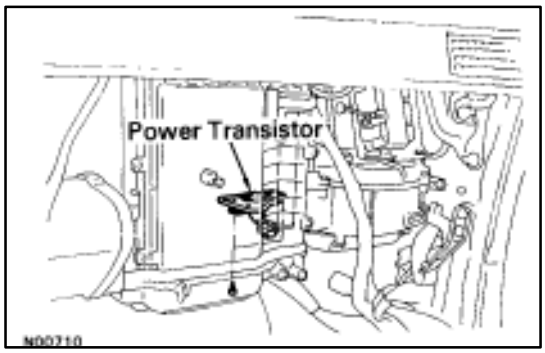

POWER TRANSISTOR

REMOVAL OF POWER TRANSISTOR

1. REMOVE GLOVE BOX

2. REMOVE POWER TRANSISTOR

(a) Disconnect connectors.

(b) Remove the two screws and the power transistor.

INSPECTION OF POWER TRANSISTOR

See page AC–79

INSTALLATION OF POWER TRANSISTOR

1. INSTALL POWER TRANSISTOR

(a) Install power transistor with two screws.

(b) Connect connectors.

2. INSTALL GLOVE BOX

See page BO–112

WhereEverybodyKnowsYourName

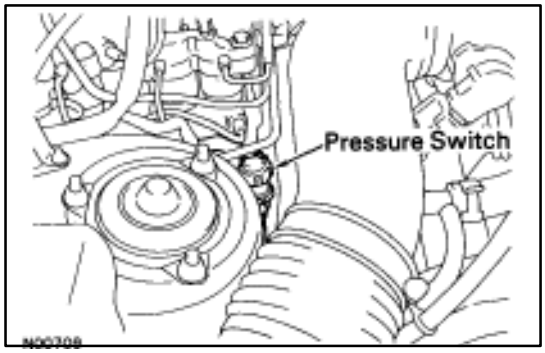

INSTALLATION OF PRESSURE SWITCH

1. INSTALL PRESSURE SWITCH

(a) Install the pressure switch to the liquid tube.
Specified torque: 10 N·m (100 kgf·cm, 7 ft·lbf)
HINT: Lock the switch mount on the tube with an open end wrench, being careful not to deform the tube, and install the switch.

(b) Connect the connector.

2. EVACUATE AIR IN REFRIGERATION SYSTEM AND CHARGE WITH REFRIGERANT
See page AC–17
Specified amount: 950 ± 50 g (33.44 ± 1.76 oz)

3. INSPECTION FOR LEAKAGE OF REFRIGERANT
Using a gas lead tester, check for leakage of refrigerant from the pressure switch mount.

4. INSPECT A/C OPERATION

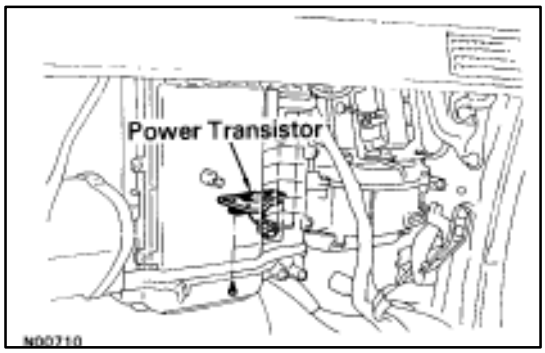

POWER TRANSISTOR

REMOVAL OF POWER TRANSISTOR

1. REMOVE GLOVE BOX

2. REMOVE POWER TRANSISTOR

(a) Disconnect connectors.

(b) Remove the two screws and the power transistor.

INSPECTION OF POWER TRANSISTOR

See page AC–79

INSTALLATION OF POWER TRANSISTOR

1. INSTALL POWER TRANSISTOR

(a) Install power transistor with two screws.

(b) Connect connectors.

2. INSTALL GLOVE BOX
See page BO–112

WhereEverybodyKnowsYourName

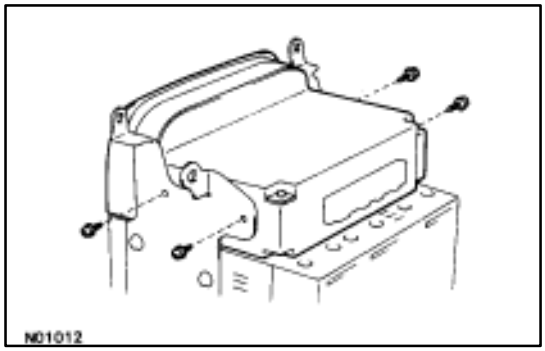

A/C CONTROL ASSEMBLY (A/C ECU)

REMOVAL OF A/C CONTROL ASSEMBLY

1. **REMOVE RADIO AND A/C CONTROL ASSEMBLY**
   See page BO–112
2. **REMOVE A/C CONTROL ASSEMBLY**
   Remove four screws and the A/C control assembly.

INSPECTION OF A/C CONTROL ASSEMBLY

Judge whether the system is satisfactory or not based on the ”Troubleshooting” procedure on page AC–21.

INSTALLATION OF A/C CONTROL ASSEMBLY

1. **INSTALL A/C CONTROL ASSEMBLY TO RADIO**
   Install the A/C control assembly to the radio with four screws.
2. **INSTALL RADIO AND A/C CONTROL ASSEMBLY**
   See page BO–112

WhereEverybodyKnowsYourName

SERVICE SPECIFICATIONS

SERVICE DATA

Idle speed	Magnetic clutch no engaged	Approx. 700 rpm	
	Magnetic clutch engaged	Approx. 700 rpm	
Magnetic clutch clearance		0.5 ± 0.15 mm	0.020 ± 0.006 in.

TORQUE SPECIFICATIONS

Part tightened		N·m	kgf·cm	ft·lbf
Suction hose X Compressor		25	250	18
Discharge hose X Compressor		25	250	18
Compressor X Engine	Bolt	49	500	36
	Nut	29	300	22
Liquid tube X Receiver		10	55	7
Liquid tube X Condenser		10	100	7
Discharge tube X Condenser		10	100	7
Expansion valve X Evaporator		5.4	55	48 in.·lbf
Suction tube X A/C Unit		10	100	7
Liquid tube X A/C Unit		10	100	7
Equalizer tube X EPR		25	250	18
Pressure switch X Liquid tube		10	100	7

WhereEverybodyKnowsYourName

Diag. Code 14	Open in Squib Circuit

DIAGNOSTIC CHART

The squib circuit consists of the center airbag sensor assembly, spiral cable and the steering wheel pad (squib). It causes the airbag to deploy when the airbag deployment conditions are satisfied.
For details of the function of each component, see FUNCTION OF COMPONENTS on page AB–5.
Diagnostic code 14 is recorded when an open is detected in the squib circuit.

Code No.	Diagnosis
14	2 Open circuit in D+ wire harness or D wire harness of squib. 2 Squib malfunction. 2 Spiral cable malfunction. 2 Center airbag sensor assembly malfunction.

WhereEverybodyKnowsYourName

DIAGNOSTIC CHART

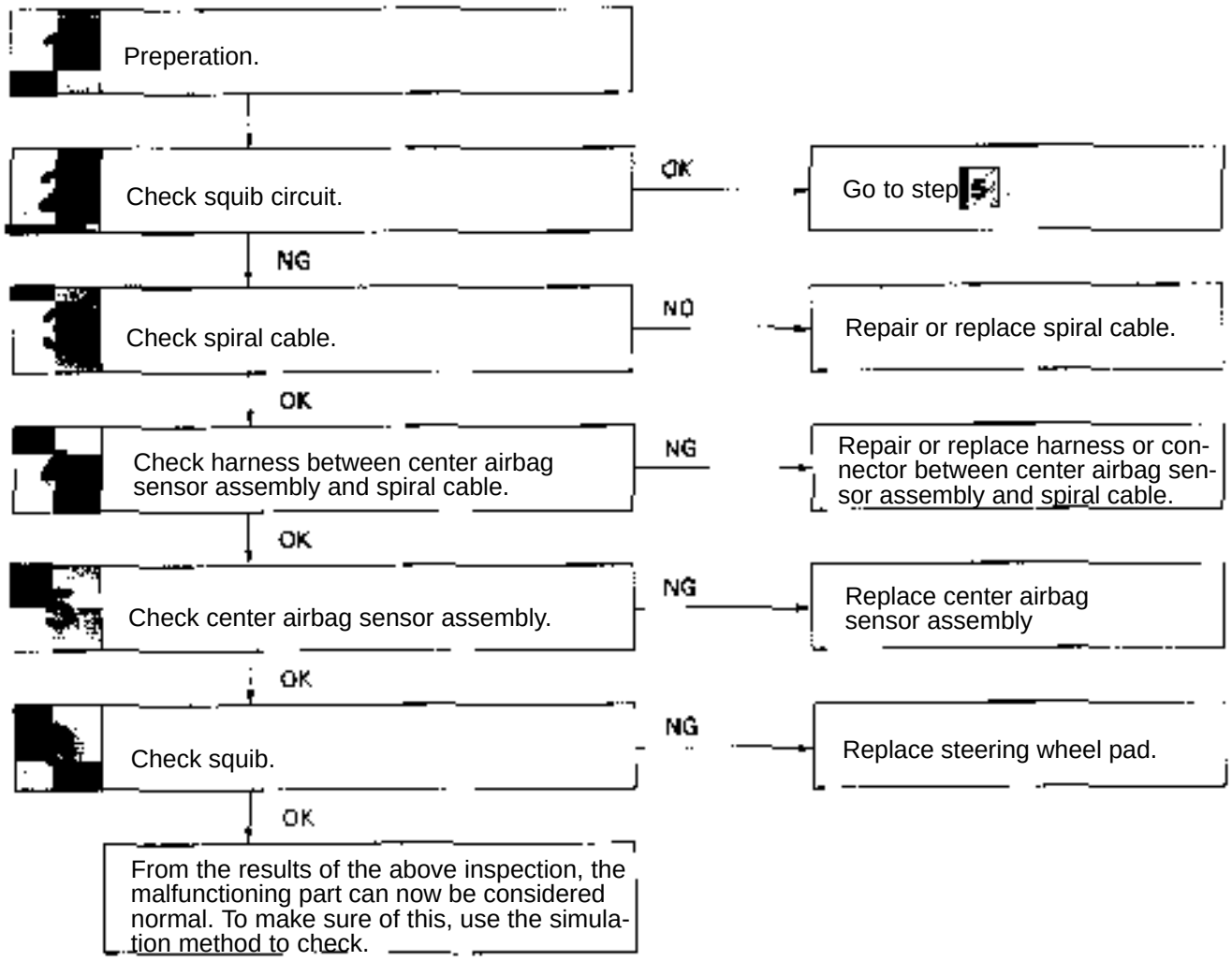

WIRING DIAGRAM

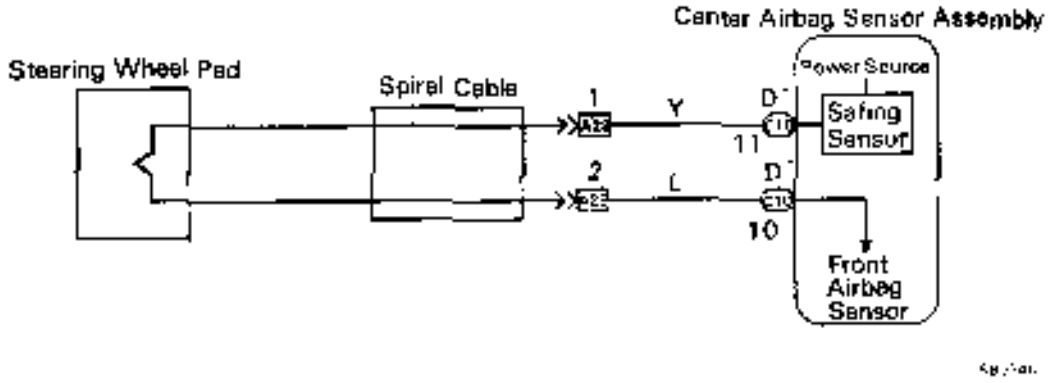

WhereEverybodyKnowsYourName

INSPECTION PROCEDURE

1 Preparation.

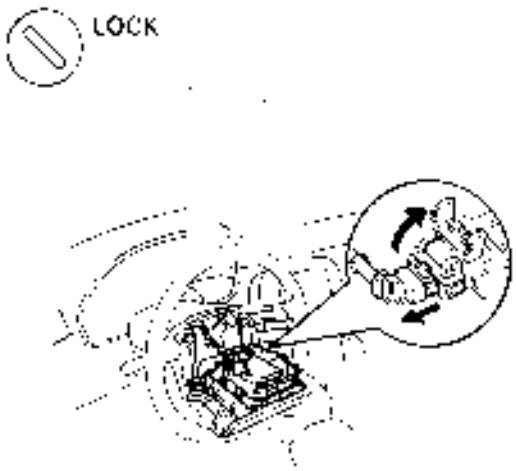

P

(1) Disconnect battery negative (–) terminal cable, and wait at least 20 seconds.
(2) Remove steering wheel pad (See page AB–14).

When storing steering wheel pad, keep upper surface fo the pad facing upward.

2 Check squib circuit.

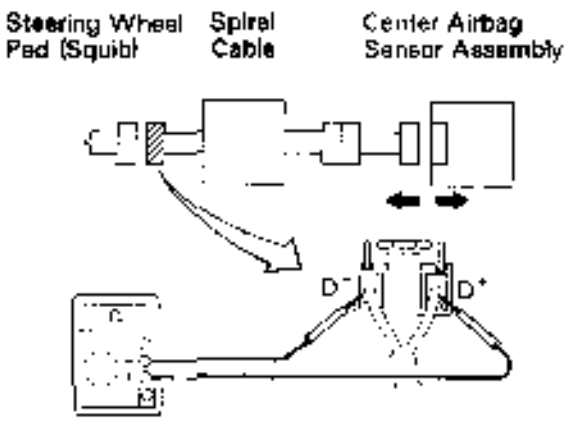

1 Disconnect center airbag sensor assembly connector.

C Measure resistance between D+ and D– on spiral cable side of connector between spiral cable and steering wheel pad.

OK **Resistance: Below 1**

NG

OK **Go to step 5.**

WhereEverybodyKnowsYourName

3 Check spiral cable.

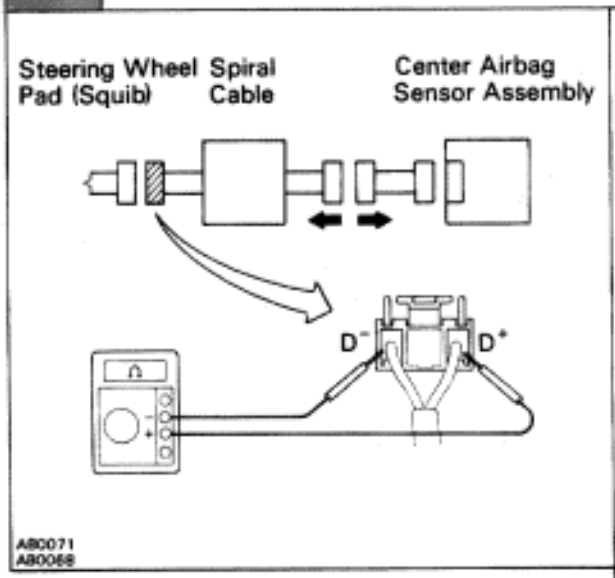

P Disconnect connector between center airbag sensor assembly and spiral cable.

C Measure resistance between D+ and D– on spiral cable side of connector betweenspiral cable and steering wheel pad.

OK **Resistance: Below 1**

OK

NG **Repair or replace spiral cable.**

4 Check harness between center airbag sensor assembly and spiral cable.

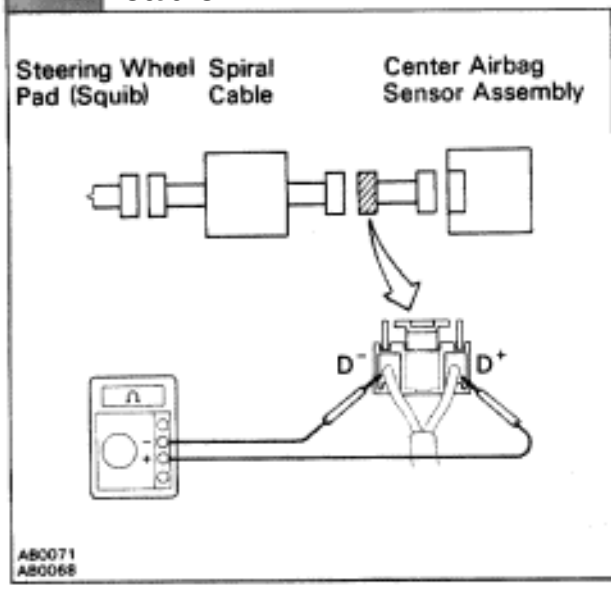

C Measure resistance between D+ and D– on center airbag sensor assembly side of connector between center airbag sensor assembly and spiral cable.

OK **Resistance: Below 1**

OK

NG **Repair or replace harness or connector between center airbag sensor assembly and spiral cable.**

WhereEverybodyKnowsYourName

Check center airbag sensor assembly.

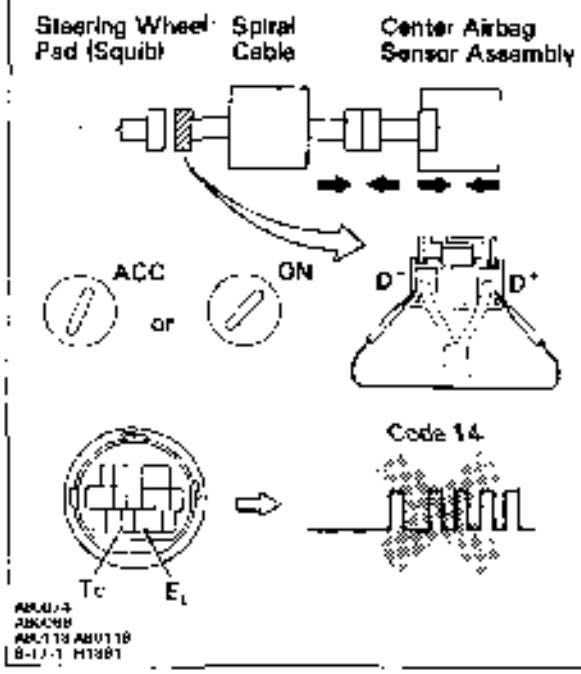

F

(1) Connect connector to center airbag sensor connector.
(2) Connect connector between center airbag sensor assembly and spiral cable.
(3) Using a service wire, connect D+ and D– on spiral cable side of connector between spiral cable and steering wheel pad.
(4) Connect negative (–) terminal cable to battery, and wait at least 2 seconds.

G

(1) Turn ignition switch ACC or ON, and wait at least 20 seconds.
(2) Using SST, connect terminals Tc and E1 of TDCL.
SST 09843–18020
(3) Check diagnostic code.

OK **Diagnostic code 14 is not output.**

HINT Codes other than code 14 may be output at this time, but this is not relevant to this check

OK

NG **Replace center airbag sensor assembly.**

Check squib.

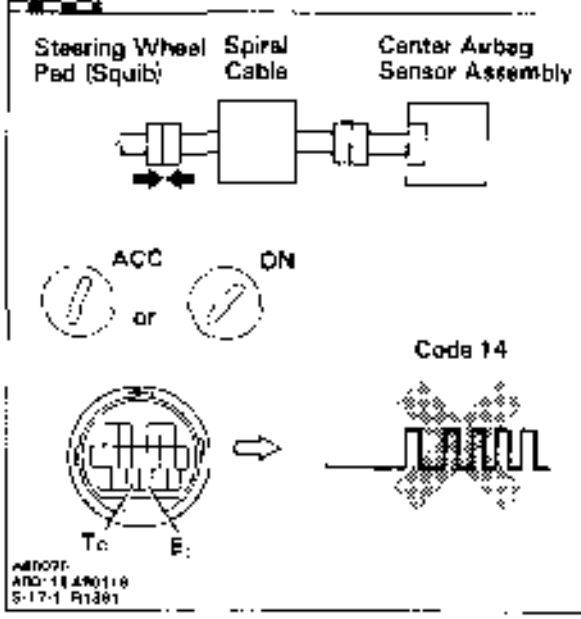

F

(1) Turn ignition switch LOCK.
(2) Disconnect battery negative (–) terminal cable, and wait at least 20 seconds.
(3) Connect steering wheel pad (squib) connector.
(4) Connect negative (–) terminal cable to battery, and wait at least 2 seconds.

G

(1) Turn ignition switch ACC or ON, and wait at least 20 seconds.
(2) UsingSST, connect terminals Tc and E1 of TDCL.
SST 09843–18020
(3) Check diagnostic code.

OK **Diagnostic code 14 is not output.**

HINT Codes other than code 14 may be output at this time, but this is not relevant to this check

OK

NG **Replace steering wheel pad.**

From the results of the above inspection, the malfunctioning part can now be considered normal. To make sure this, use the simulation method to check.

WhereEverybodyKnowsYourName

MEMO

WhereEverybodyKnowsYourName

Diag. Code 15	Open in Front Airbag Sensor Circuit

CIRCUIT DESCRIPTION

The front airbag sensor detects the deceleration force in a frontal collision and is located in the front fender on the left and right sides.
For details of the function of each component, see FUNCTION OF COMPONENTS on page AB–5.
Diagnostic code 15 is recorded when an open is detected in the front airbag sensor circuit.
NOTICE: The front airbag sensor connector is equipped with an electrical connection check mechanism for the purpose of detecting an open in the front airbag sensor (See page AB–7). This mechanism is constructed so that when the terminals of the front airbag sensor have been connected (when the connector housing lock is in the locked condition), the connection detection pin on the wire harness side connects with the terminals for diagnosis use on the sensor side. If the connector is not properly connected, the diagnosis system may detect only a malfunction code, even though the airbag system is functioning normally. When connecting the front airbag sensor connector, make sure it is connected properly. If diagnostic code 15 is displayed after the front airbag sensor connector has been connected, check again that it is properly connected.

Code No.	Diagnosis
15	▼Open circuit in +S wire harness or –S wire harness of front airbag sensor. ▼Front airbag sensor malfunction. ▼Malfunction of electrical connection check mechanism of front airbag sensor. ▼Center airbag sensor assembly malfunction.

WhereEverybodyKnowsYourName

DIAGNOSTIC CHART

1 Preperation.

[redacted] Check front airbag sensor circuit. (Measure resistance between terminals +SR and –SR, +SL and –SL of center airbag sensor assembly connector.)

NG → Go to step [redacted]

OK

3 Check center airbag sensor assembly.

NG → Replace center airbag sensor assembly.

OK

From the results of the above inspection, the malfunctioning part can now be considered normal. To make sure of this, use the simulation method to check.

[redacted] Check front airbag sensor.

NG → Replace front airbag sensor.

OK

5 Check harness between center airbag sensor assembly and front airbag sensor.

NG → Repair or replace harness or connector between center airbag sensor assembly and front airbag sensor (See page AB–20).

OK

Replace front airbag sensor connector (See page AB–20).

WIRING DIAGRAM

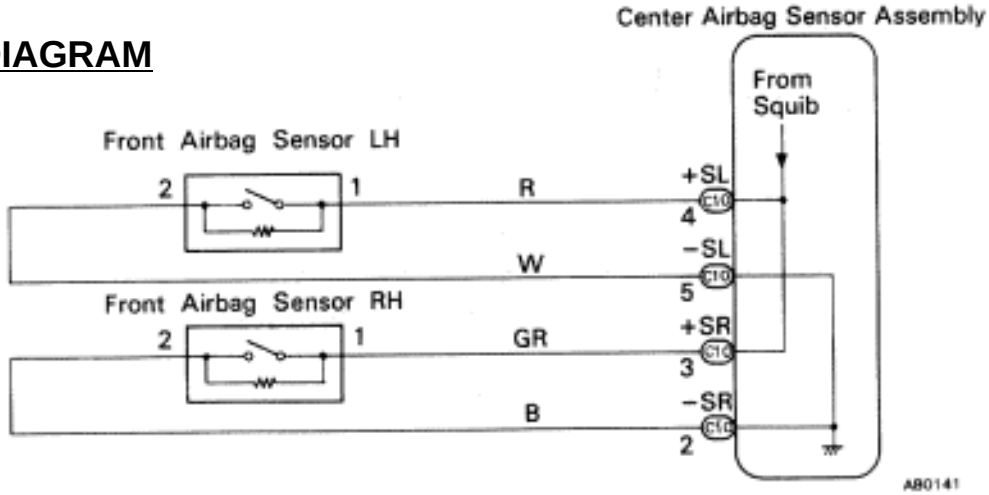

WhereEverybodyKnowsYourName

INSPECTION PROCEDURE

1 Preparation.

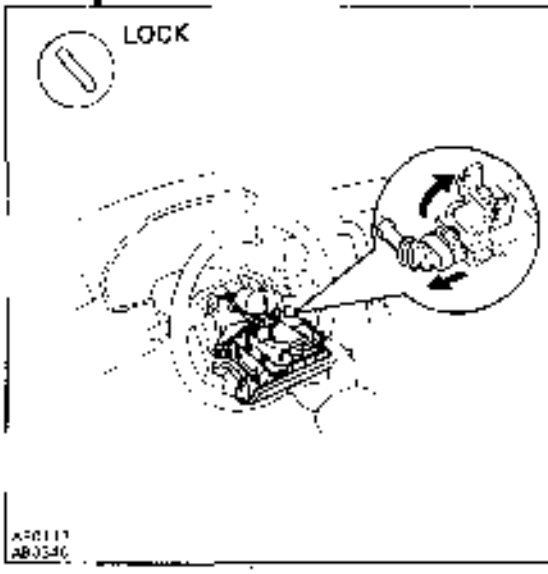

P (1) Disconnect battery negative (–) terminal cable, and wait at least 20 seconds.
(2) Remove steering wheel pad (See page AB–14).

When storing steering wheel pad, keep upper surface of pad facing upward.

2 Check front airbag sensor circuit (Measure resistance between terminals +SR and –SL and –SL of center airbag sensor assembly connector.).

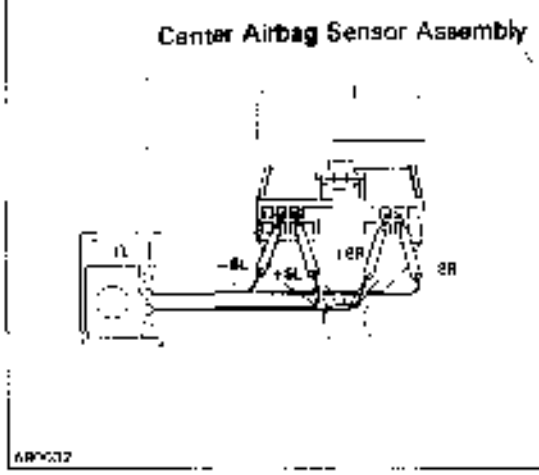

Disconnect center airbag sensor assembly connector.

C Measure resistance between terminals +SR and –SR, +SL and –SL of harness side connector of center airbag sensor assembly.

OK **Resistance: 755 – 885**

OK

NG Go to step 4

WhereEverybodyKnowsYourName

3 Check center airbag sensor assmbly.

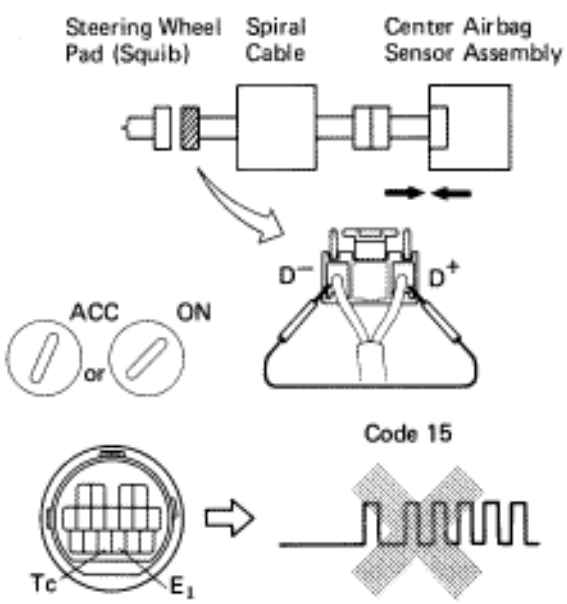

P (1) Connect connector to center airbag sensor assembly.
(2) Using a service wire, connect D+ and D– on spiral cable side of connector between spiral cable and steering wheel pad.
(3) Connect negative (–) terminal cable to battery, and wait at least 2 seconds.

C (1) Turn ignition switch ACC or ON, and wait at least 20 seconds.
(2) Using SST, connect terminals Tc and E_1 of TDCL.
SST 09843–18020
(3) Check diagnostic code.

OK **Diagnostic code 15 is not output.**

Hint Codes other than code 15 may be output at this time, but this is not relevant to this check.

OK

NG **Replace center airbag sensor assembly.**

From the results of the above inspection, the malfunctioning part can now be considered normal.
To make sure of this, use the simulation method to check.

4 Check front airbag sensor.

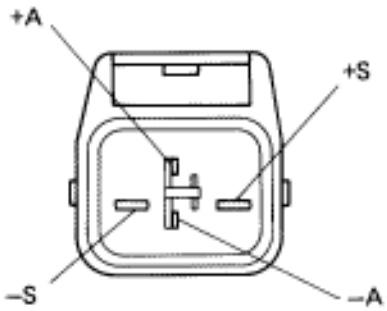

P Disconnect front airbag sensor connector.

C Measure resistance between each terminal of front airbag sensor.

OK

Terminal	Resistance
+S – +A	755 Ω –885 Ω
+S – –S	1 MΩ or higher
–S – –A	Below 1 Ω

Notice

- **Do not touch ohmmeter probes strongly against terminals of front airbag sensor.**
- **Make sure the front airbag sensor connector is properly connected.**

OK

NG **Replace front airbag sensor.**

WhereEverybodyKnowsYourName

5 Check harness between center airbag sensor assembly and front airbag sensor.

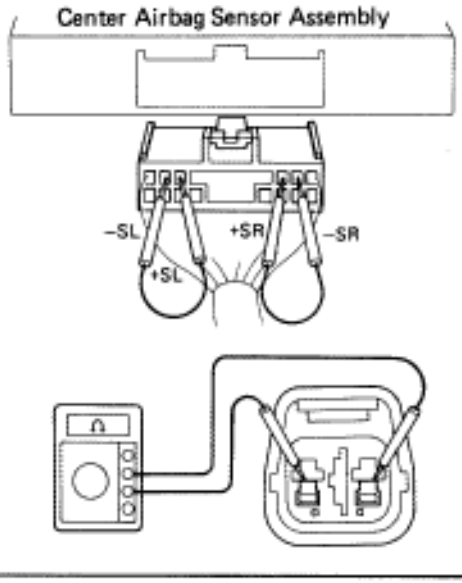

P (1) Disconnect center airbag sensor assembly connector.

(2) Using service wires, connect +SR and –SR, +SL and –SL on the wire harness side of the center airbag sensor assembly connector.

C Measure resistance between terminals +SR and –SL, +SL and –SL of harness side connector of front airbag sensor.

Notice

- **Lightly touch ohmmeter probes at position shown in illustration.**
- **Make sure the front airbag sensor connector is properly connected.**

OK **Resistance: Below 1**

NG **Repair or replace harness or connector between center airbag sensor assembly and front airbag sensor (See page AB–20).**

OK

Replace front airbag sensor connector (See page AB–20)

WhereEverybodyKnowsYourName

MEMO

WhereEverybodyKnowsYourName

Diag. Code 22	Airbag Warning Light System Malfunction

CIRCUIT DESCRIPTION

The airbag warning light is located on the combination meter.
When the airbag system is normal, the airbag warning light lights up for approx. 6 seconds after the ignition switch is turned from LOCK position to ACC or ON position, and then turns off automatically.
If there is a malfunction in the airbag system, the airbag warning light lights up to inform the driver of the abnormality.
When terminals Tc and E of the TDCL are connected, the diagnostic code is displayed by the blinking of the airbag warning light.
The airbag warning light circuit is equipped with an electrical connection check mechanism which detects when the connector to the center airbag sensor assembly is not properly connected.
If the connector to the center airbag sensor assembly is not properly connected, the airbag warning light will not light up.
Diagnostic code 22 is recorded when a malfunction occurs in the airbag warning light system.
If an OPEN malfunction occurs in the airbag warning light system, the airbag warning light does not light up, so that until the malfunction is repaired, the diagnostic codes (including code 22) cannot be confirmed.

Code No.	Diagnosis
22	▼ Open circuit in airbag warning light system. ▼ Center airbag sensor assembly malfunction.

WhereEverybodyKnowsYourName

DIAGNOSTIC CHART

Troubleshooting for this system is different for when the airbag warning light does not light up and for when diagnostic code 22 is output. Confirm the problem symptoms first before selecting the appropriate troubleshooting procedure.

HINT: If airbag warning light does not light up, perform the following troubleshooting:

1 Check ECU –B fuse.
- NG → GO to step **6**.
- OK ↓

2 Check connection of center airbag sensor assembly connector.
- NG → Repair.
- OK ↓

3 Preparation.
↓

4 Check airbag warning light circuit.
- NG → Repair airbag warning light circuit (See page BE–150).
- OK ↓

5 Does airbag warning light come on?
- NO → Check terminal LA of center airbag sensor assembly and electrical connection check mechanism. If normal, replace center airbag sensor assembly.
- YES ↓ From the results of the above inspection, the malfunctioning part can now be considered normal. To make sure of this, use the simulation method to check.

6 Is new ECU –B fuse burnt out again?
- NO → Using simulation method, reproduce malfunction symptoms (See page IN–20).
- YES ↓ Check harness between ECU –B fuse and airbag warning light, and ECU–B fuse and center airbag sensor assembly.

WhereEverybodyKnowsYourName

DIAGNOSTIC CHART

HINT: If diagnostic code 22 is output, perform the following troubleshooting:

1 Is diagnostic code 22 output again?

→ Using simulation method, reproduce malfunction symptoms (See page IN–20).

↓ Replace center airbag sensor assembly.

WIRING DIAGRAM

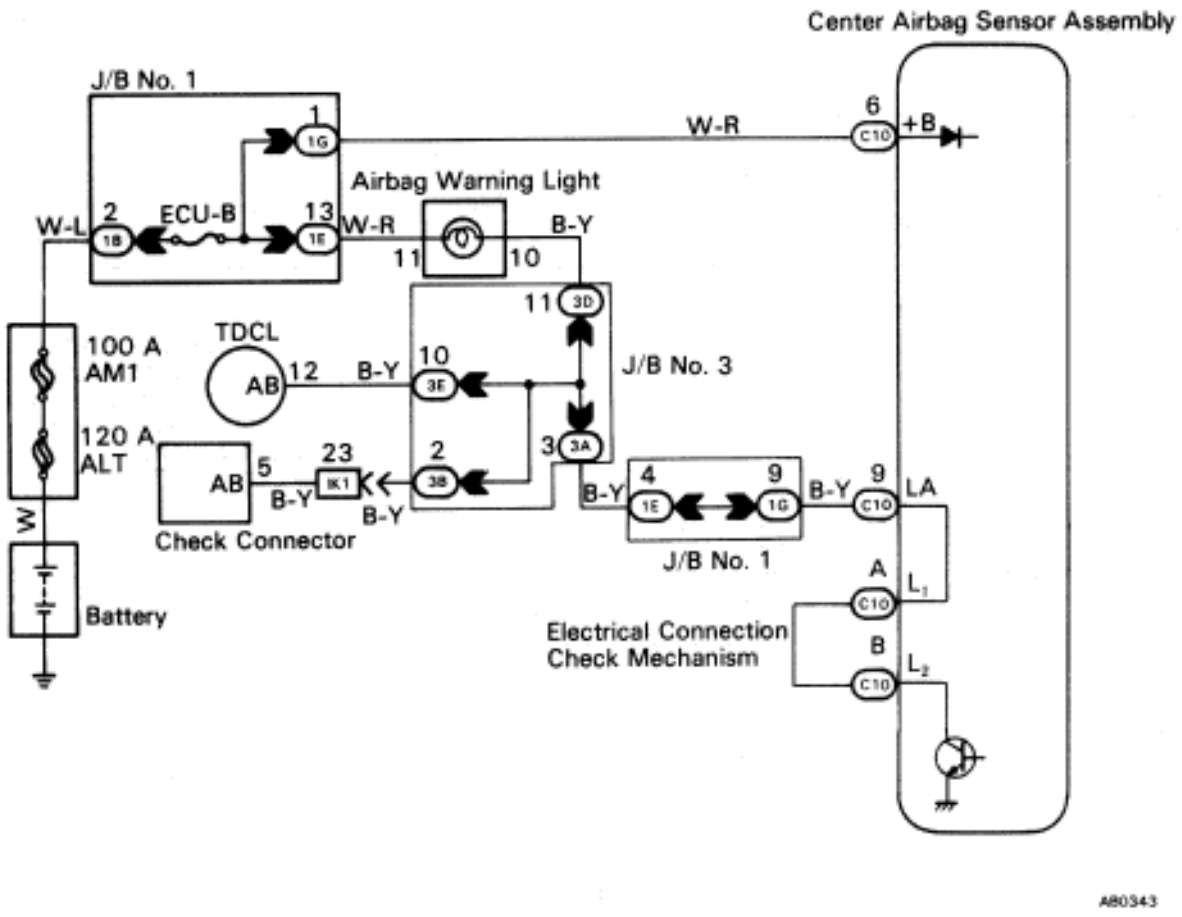

WhereEverybodyKnowsYourName

INSPECTION PROCEDURE

HINT: If airbag warning light does not light up, perform the following troubleshooting:

1 **Check ECU–B fuse.**

OK

NG → **Go to step 6.**

2 **Check connection of center airbag sensor assembly connector.**

OK

NG → **Repair.**

3 **Preparation.**

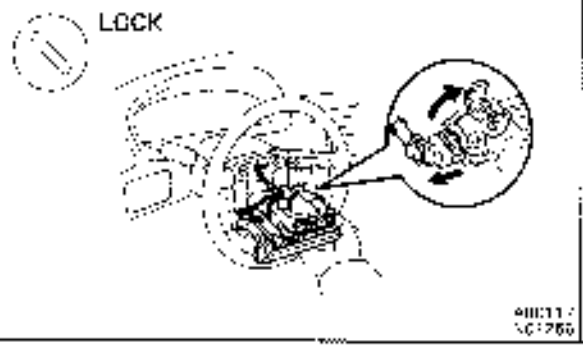

P (1) Disconnect battery negative (–) terminal cable, and wait at least 20 seconds.

(2) Remove steering wheel pad (See page AB–14).

Caution

When storing steering wheel pad, keep upper surface of pad facing upward.

WhereEverybodyKnowsYourName

4 Check airbag warning light circuit.

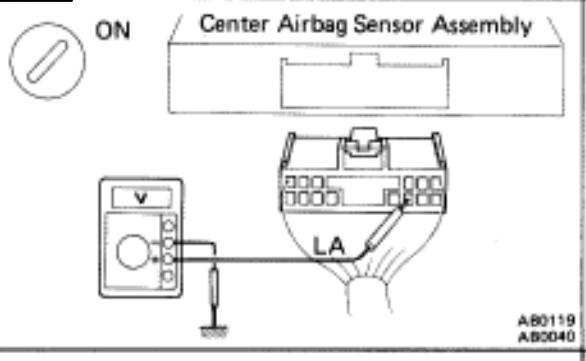

P
(1) Disconnect center airbag sensor assembly.
(2) Connect negative (–) terminal cable to battery.
(3) Turn ignition switch ACC or ON.

C Measure voltage LA terminal of harness side connector of center airbag sensor assembly.

OK **Voltage: 10–14 V**

OK

NG **Repair airbag warning light circuit (see page BE–150).**

5 Does airbag warning light come on?

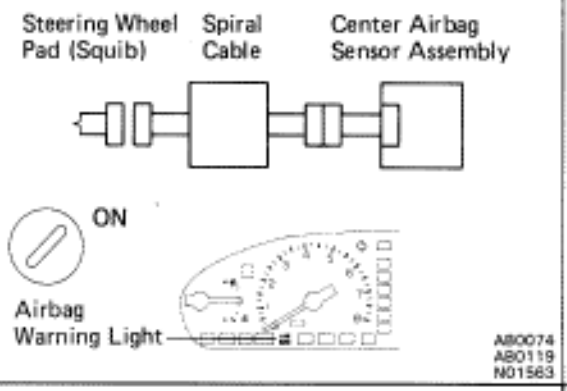

P
(1) Disconnect negative (–) terminal cable from battery.
(2) Connect center airbag sensor assembly.
(3) Connect negative (–) terminal cable to battery.
(4) Turn ignition switch ACC or ON.

C Check operation of airbag warning light.

OK

NG **Check terminal LA of center airbag sensor assembly and electrical connection check mechanism. If normal, replace center airbag sensor assembly.**

From the results of the above inspection, the malfunctioning part can now be considered normal. To make sure of this, use the simulation method to check.

6 Is new ECU–B fuse burnt out again?

OK

NG **Using simulation method, reproduce malfunction symptoms (See page In–20).**

Check harness between ECU–B fuse and airbag warning light, and ECU–B fuse and center airbag sensor assembly.

WhereEverybodyKnowsYourName

HINT: If diagnostic code 22 is output, perform the following troubleshooting:

1 Is diagnostic code 22 output again?

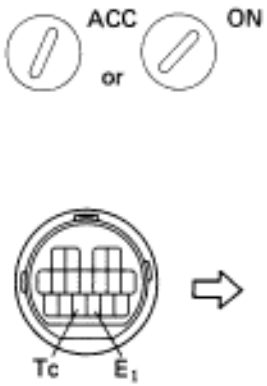

P Clear malfunction code 41 stored in memory (See page AB–35).

C (1) Turn ignition switch LOCK, and wait at least 2 seconds.
(2) Turn ignition switch ACC or ON, and wait at least 20 seconds.
(3) Using SST, connect terminals Tc and E_1 of TDCL.
SST 09843–18020
(4) Check diagnostic code.

YES

NO **Using simulation method, reproduce malfunction symptoms (See page IN–20).**

Replace center airbag sensor assembly.

WhereEverybodyKnowsYourName

Diag. Code 31 — Center Airbag Sensor Assembly Malfunction

CIRCUIT DESCRIPTION

The center airbag sensor assembly consists of a center airbag sensor, safing sensors, ignition control and drive circuit, diagnosis circuit, etc.
It receives signals from the airbag sensors, judges whether or not the airbag must be activated, and diagnoses system malfunction.
Diagnostic code 31 is recorded when occurrence of a malfunction in the center airbag sensor assembly is detected.

Code No.	Diagnosis
31	Center airbag sensor assembly malfunction.

DIAGNOSTIC CHART

HINT: When a malfunction code other than code 31 is displayed at the same time, first repair the malfunction indicated by the malfunction code other than code 31.

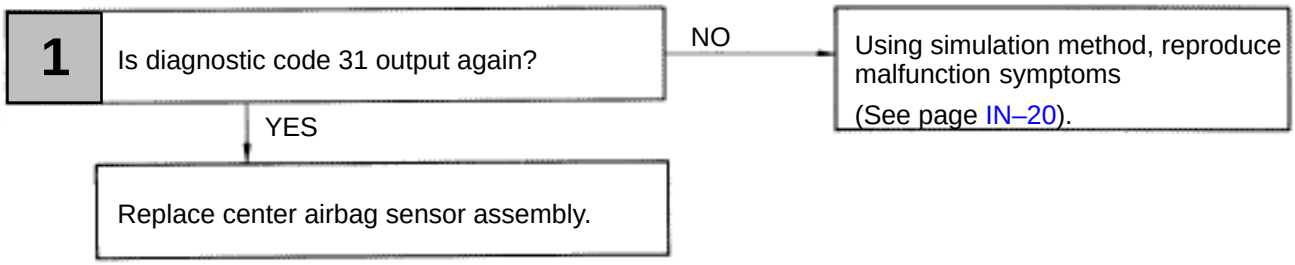

WhereEverybodyKnowsYourName

INSPECTION PROCEDURE

HINT:When a malfunction code other than code 31 is displayed at the same time, first repair the malfunction indicated by the malfunction code other than code 31.

1 Is diagnostic code 31 output again?

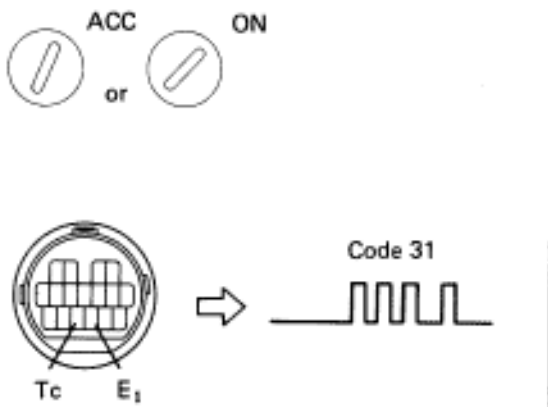

P Clear malfunction code stored in memory (See page AB–32).

C (1) Turn ignition switch LOCK, and wait at least 20 seconds.
(2) Turn ignition switch ACC or ON, and wait at least 20 seconds.
(3) Repeat operation in step (1) and (2) at least 5 times.
(4) Using SST, connect terminals Tc and E_1 of TDCL.
SST 09843–18020
(5) Check diagnostic code.

OK

NG **Using simulation method, reproduce malfunction symptoms (See page IN–20).**

Replace center airbag sensor assembly.

WhereEverybodyKnowsYourName

Diag. Code 41 — Malfunction Stored in Memory

CIRCUIT DESCRIPTION

If a malfunction occurs in the airbag system, malfunction codes 11 to 31 may be output, and when the battery is disconnected after the malfunction is repaired, malfunction codes 11 to 31 will be cleared, but code 41 will be output instead.
So long as the cancellation operation for a malfunction stored in memory (See page AB–32) is not performed, code 41 is stored in the center airbag sensor assembly and the airbag warning light remains lit up.

Code No.	Diagnosis
41	▼Malfunction recorded in memory. ▼Center airbag sensor assembly malfunction.

DIAGNOSTIC CHART

1 Check operation of airbag warning light.
- OK → System is normal.
- NG ↓

2 Is diagnostic code 41 output again?
- YES → Check harness between ECU–B fuse and center airbag sensor assembly. If normal, replace center airbag sensor assembly.
- NO ↓

Perform troubleshooting according to malfunction code output.

WIRING DIAGRAM

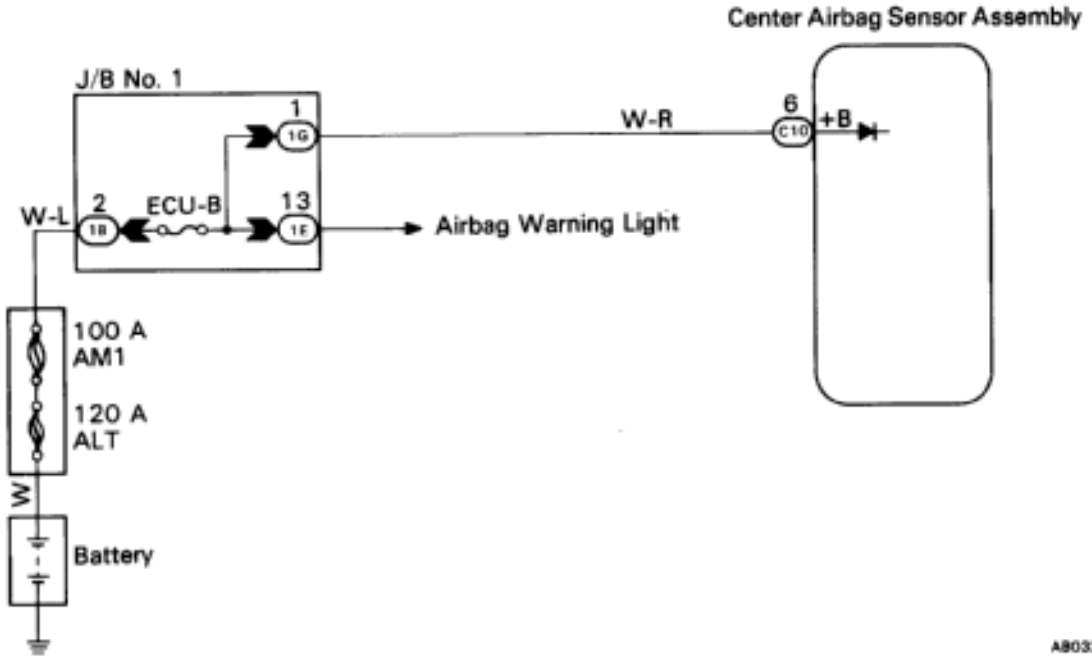

WhereEverybodyKnowsYourName

INSPECTION PROCEDURE

1 Check operation of airbag warning light.

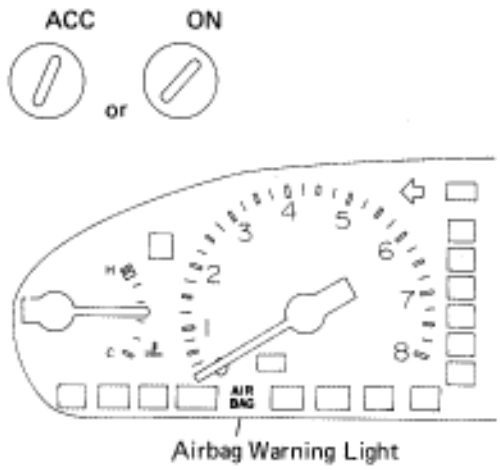

AB0118 AB0119
AB0326 N01563

P Clear malfunction code 41 stored in memory (See page AB–32).

C (1) Turn ignition switch LOCK, and wait at least 2 seconds.
(2) Turn ignition switch ACC or ON, and wait at least 20 seconds.
(3) Check operation of airbag warning light.

OK **Airbag warning light turns off.**

OK

NG **System is normal.**

2 Is diagnostic code 41 output again?

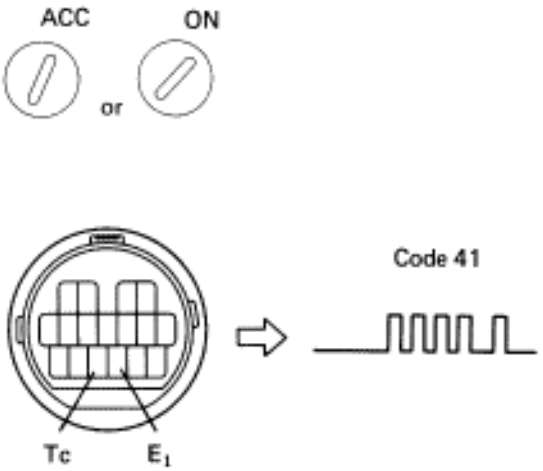

AB0118 AB0119
S-17-1 F11396

C (1) Turn ignition switch ACC or ON, and wait at least 20 seconds.
(2) Using SST, connect terminals Tc and E_1 of TDCL.
SST 09843–18020
(3) Check diagnostic code.

OK

NG **Check harness between ECU–B fuse and center airbag sensor assembly. If normal, replace center airbag sensor assembly.**

Perform troubleshooting according to malfunction code output.

WhereEverybodyKnowsYourName

Airbag Warning Light System (Always Lit Up)

CIRCUIT DESCRIPTION

The airbag warning light is located on the combination meter.
When the airbag system is normal, the airbag warning light lights up for approx. 6 seconds after the ignition switch is turned from LOCK position to ACC or ON position, and then turns off automatically.
If there is a malfunction in the airbag system, the airbag warning light lights up to inform the driver of the abnormality.
When terminals Tc and E of the TDCL are connected, the diagnostic code is displayed by the blinking of the airbag warning light.

DIAGNOSTIC CHART

1 Does airbag warning light turn off?

NO → Check airbag warning light circuit or terminal AB circuit of TDCL or check connector.

YES → Replace center airbag sensor assembly.

WIRING DIAGRAM

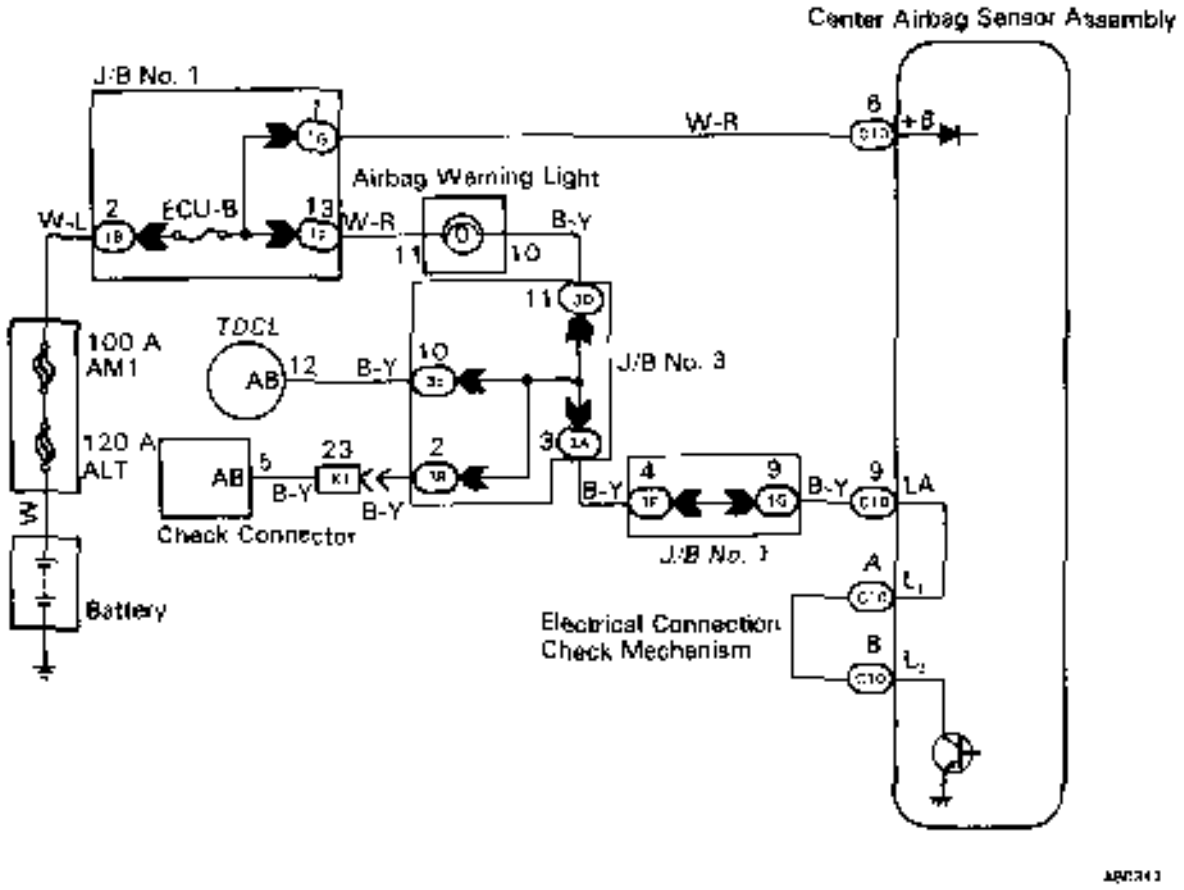

WhereEverybodyKnowsYourName

INSPECTION PROCEDURE

1 Does airbag warning light turn off?

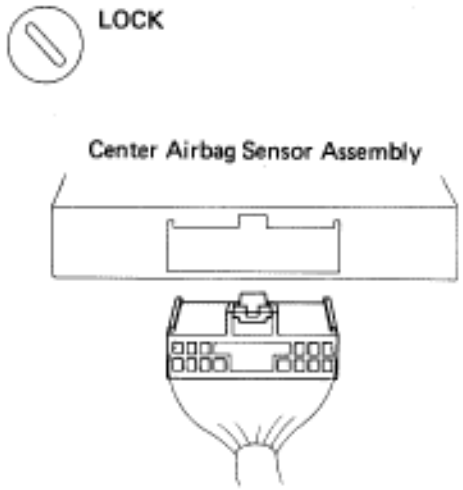

P

(1) Turn ignition switch LOCK.
(2) Disconnect negative (–) terminal cable from battery.
(3) Disconnect center airbag sensor assembly connector.
(4) Connect negative (–) terminal cable to battery.

C Check operation of airbag warning light.

YES

Replace center airbag sensor assembly.

NG

Check airbag warning light circuit or terminal AB circuit of TDCL or check connector.

WhereEverybodyKnowsYourName

Tc Terminal Circuit

CIRCUIT DESCRIPTION

By connecting terminals Tc and E of the TDCL or check connector, the center airbag sensor assembly is set in the diagnostic code output mode. The diagnostic codes are displayed by the blinking of the airbag warning light.

DIAGNOSTIC CHART

Troubleshooting for this system is different depending on whether the diagnostic code is not displayed or is continuously displayed. Confirm the problem symptoms first before selecting the appropriate troubleshooting procedure.

HINT: If the diagnostic code is not displayed, perform the following troubleshooting:

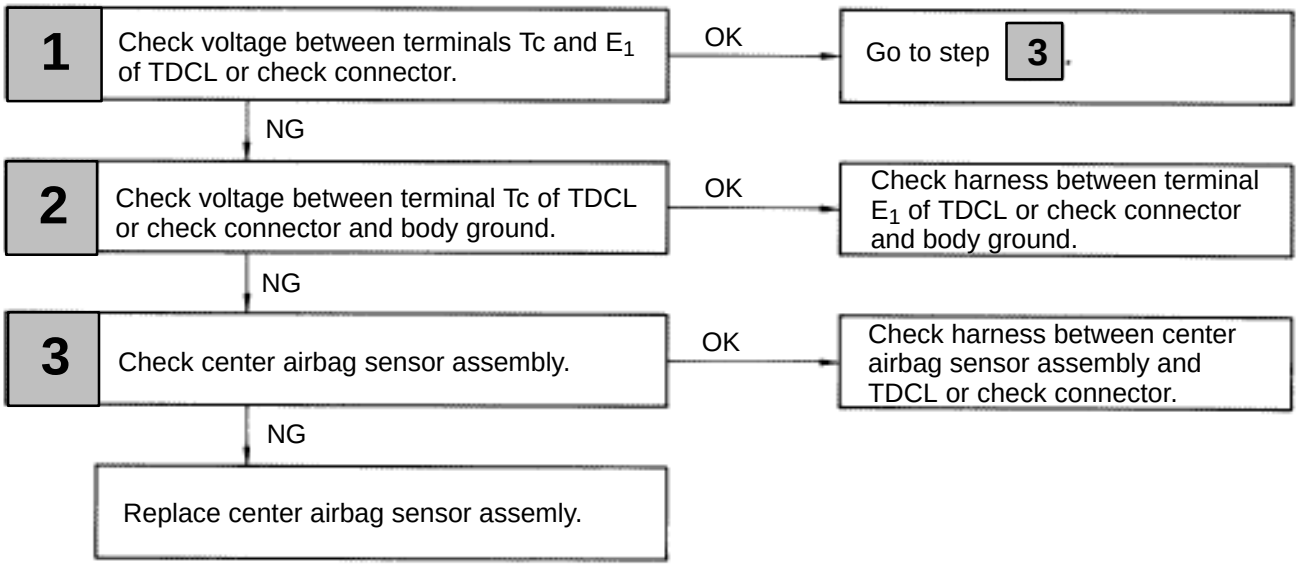

HINT: If the diagnostic code is continuously displayed, perform the following troubleshooting:

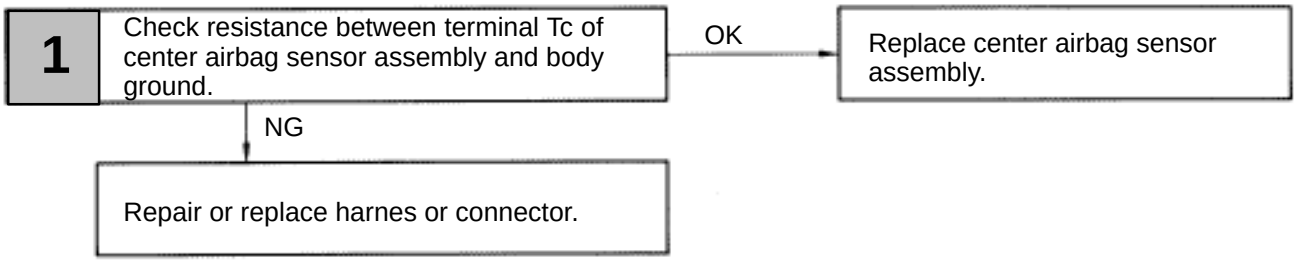

WhereEverybodyKnowsYourName

DIAGNOSTIC CHART

WIRING DIAGRAM

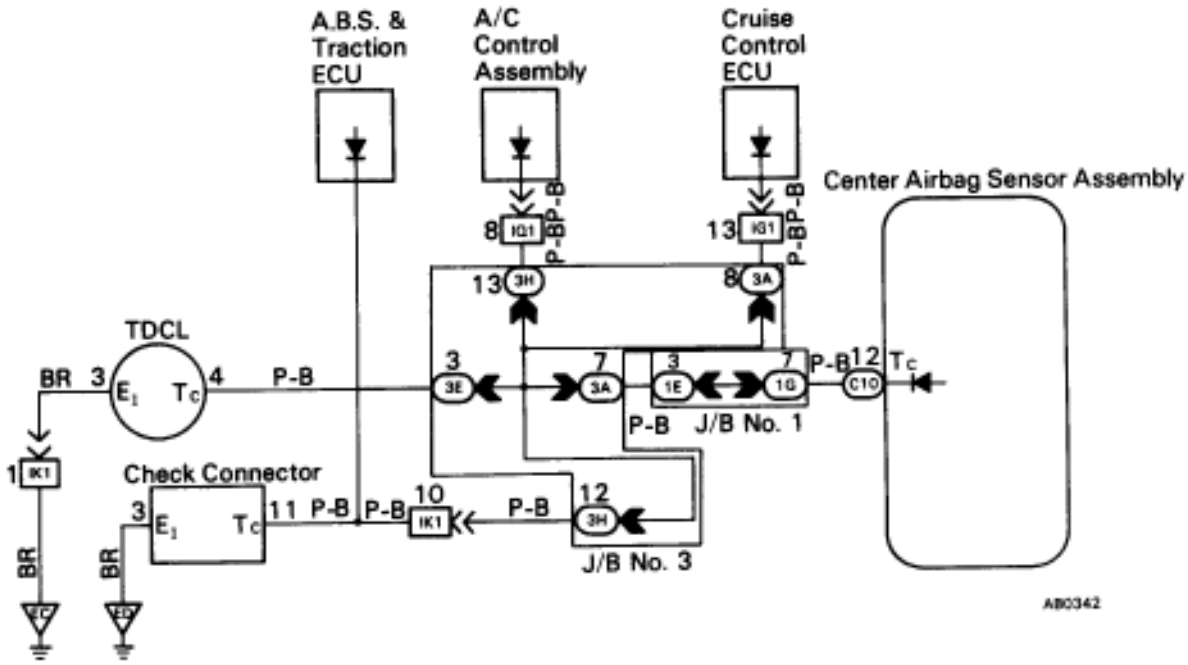

WhereEverybodyKnowsYourName

INSPECTION PROCEDURE

HINT: If the diagnostic code is not displayed, perform the following troubleshooting:

1 Check voltage between terminals Tc and E_1 of TDCL or check connector.

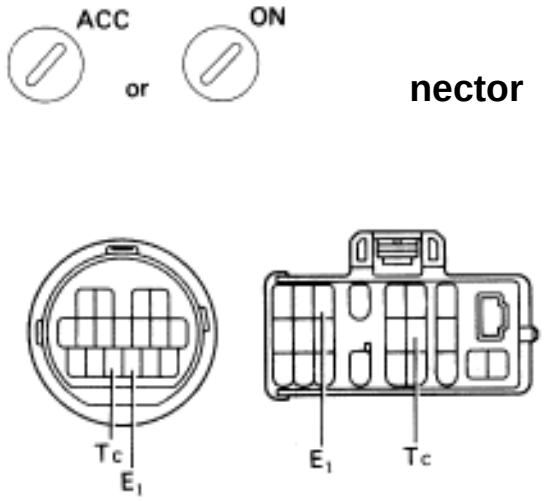

P Turn ignition switch ACC or ON.

C Measure voltage between terminals Tc and E_1 of TDCL or check connector.

OK **Voltage: 10 – 14 V**

NG

OK → **Go to step 3.**

2 Check voltage between terminals Tc or TDCL or check connector and body ground.

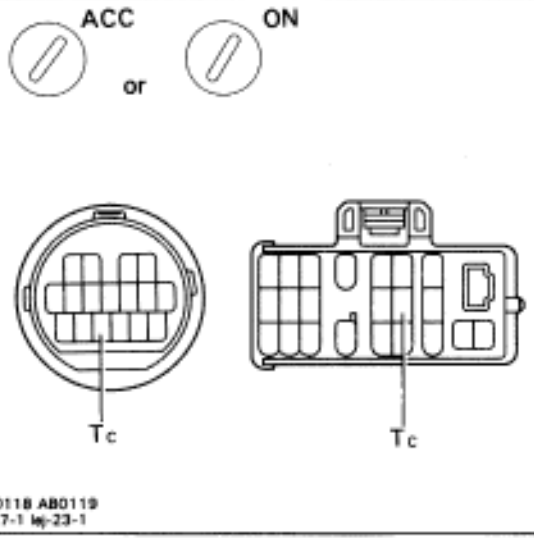

C Measure voltage between terminal Tc of TDCL or check connector and body ground.

OK **Voltage: 10 – 14 V**

NG

OK → **Check harness between terminal E1 of TDCL or check connector and body ground**

WhereEverybodyKnowsYourName

3 Check center airbag sensor assembly.

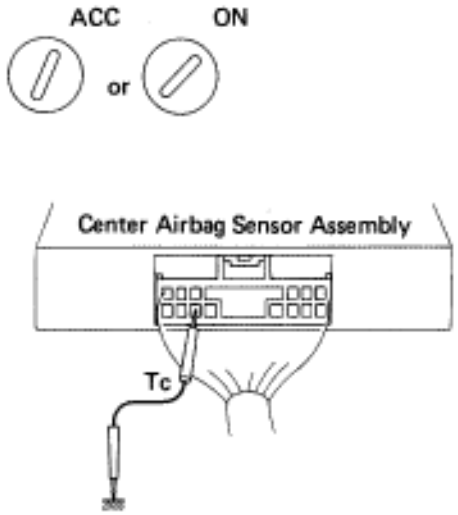

P

(1) Disconnect negative (–) terminal cable from battery, and wait at least 20 seconds.
(2) Turn ignition switch lock.
(3) Disconnect center airbag sensor assembly connector.
(4) Using a service wire, connector terminal Tc of center airbag sensor assembly connector to body ground.
(5) Install the center airbag sensor assembly.
(6) Connect negative (–) terminal cable to battery.
(7) Turn ignition switch ACC or ON.

C

Check operation of airbag warning light.

OK

Airbag light comes on.

Caution

Never turn ignition switch ACC or ON and never connect negative (–) terminal to battery before the center airbag sensor assembly is installed.

NG

Replace center airbag sensor assembly.

OK

Check harness between center airbag sensor assembly and TDCL or check connector.

WhereEverybodyKnowsYourName

HINT: If the diagnostic code is continuously displayed, perform the following troubleshooting.

1 **Check resistance between terminal Tc of center airbag sensor assembly and body ground.**

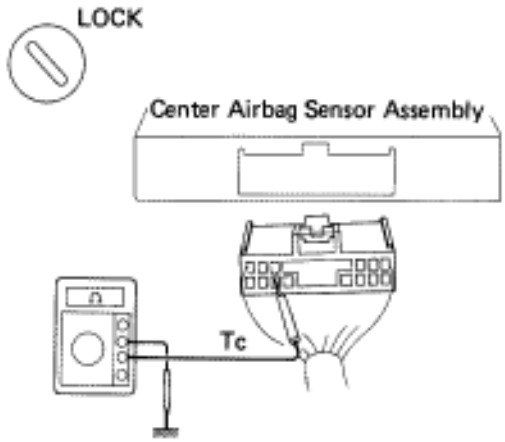

P (1) Turn ignition switch LOCK.
(2) Disconnect center airbag sensor assembly connector.

C Check resistance between terminal Tc of center airbag sensor assembly and body ground.

OK **Resistance: 1M or higher**

OK → **Replace center airbag sensor assembly.**

NG → **Repair or replace harness or connector.**

WhereEverybodyKnowsYourName

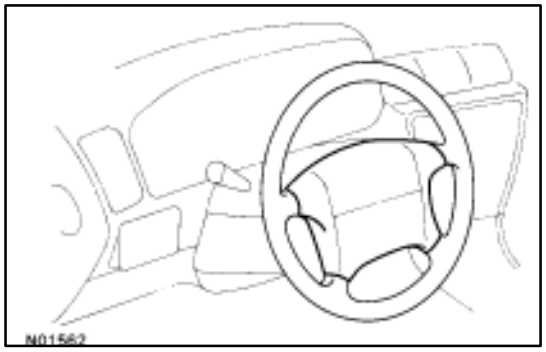

DISPOSAL OF STEERING WHEEL PAD (WITH AIRBAG)

When scrapping vehicles equipped with an airbag system or disposing of a steering wheel pad (with airbag), always first deploy the airbag in accordance with the procedure described below.
If any abnormality occurs with the airbag deployment, contact the SERVICE DEPT. of TOYOTA MOTOR SALES, U.S.A., INC..
Never dispose of a steering wheel pad which has an undeployed airbag.
When disposing of a steering wheel pad with an airbag deployed in a collision, follow the same procedure given under “AIRBAG DEPLOYMENT PROCEDURE (WHEN SCRAPPING THE VEHICLE), part 5, DISPOSAL OF STEERING WHEEL PAD (WITH AIRBAG)” (See page AB–93).

PRECAUTIONS FOR AIRBAG DEPLOYMENT

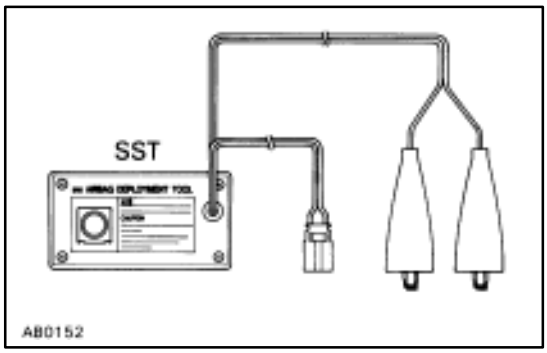

1. **The airbag produces a sizeable exploding sound when it deploys, so perform the operation out–of–doors and where it will not create a nuisance to nearby residents.**
2. **When deploying the airbag, always use the specified SST; SRS AIRBAG DEPLOYMENT TOOL (SST 09082–00700). Perform the operation in a place away from electrical noise.**
3. **When deploying an airbag, perform the operation from at least 10 m (33 ft) away from the steering wheel pad.**
4. **The steering wheel pad is very hot when the airbag is deployed, so leave it alone for at least 30 minutes after deployment.**
5. **Use gloves and safety glasses when handling a steering wheel pad with deployed airbag.**
6. **Always wash your hands with water after completing the operation.**
7. **Do not apply water, etc. to a steering wheel pad with deployed airbag.**

AIRBAG DEPLOYMENT PROCEDURE (WHEN SCRAPPING VEHICLE)

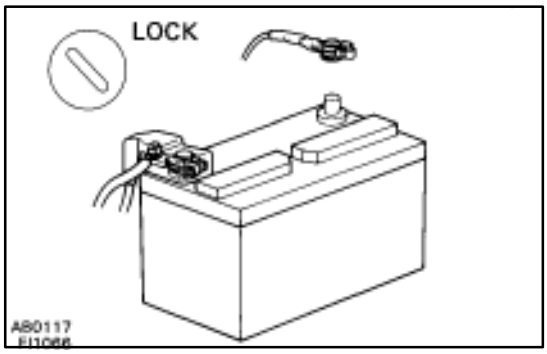

HINT: Have a battery ready as the power source to deploy the airbag.

1. **DISCONNECT NEGATIVE (–) TERMINAL CABLE FROM BATTERY**
   CAUTION: Work must be started after approx. 30 seconds or longer from the time the ignition switch is turned to the LOCK position and the negative (–) terminal cable is disconnected from the battery **(See page AB–2)****.**

WhereEverybodyKnowsYourName

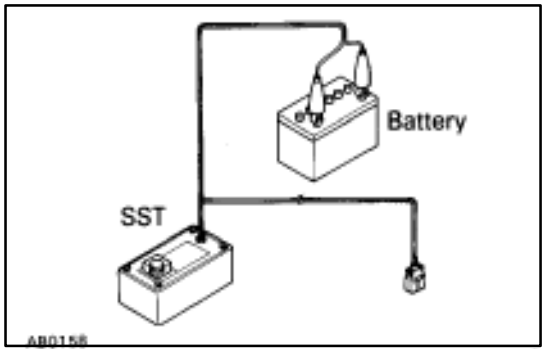

2. CONFIRM FUNCTIONING OF SST (See page AB–97)

SST 09082–00700

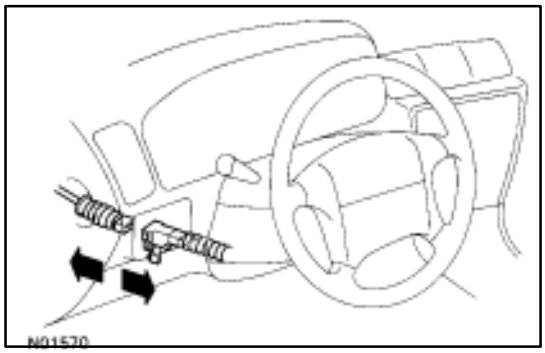

3. INSTALL SST

CAUTION: Check that there is no looseness in the steering wheel and steering wheel pad.

(a) Remove the No. 1 under cover.

(b) Disconnect the airbag connector of the spiral cable.

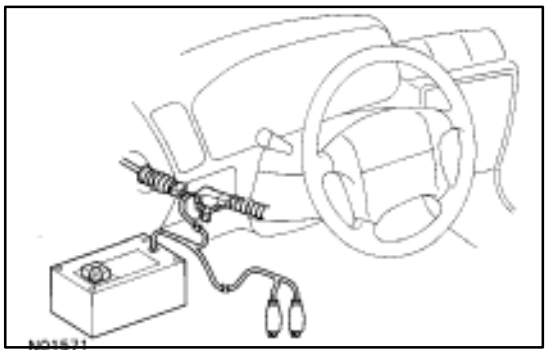

(c) Connect the SST connector to the airbag connector of the spiral cable.

SST 09082–00700

(d) Move the SST to at least 10 m (33 ft) from the front of the vehicle.

(e) Close all the doors and windows of the vehicle.

NOTICE: Take care not to damage the SST wire harness.

(f) Connect the SST red clip to the battery positive (+) terminal and the black clip to the battery negative (–) terminal.

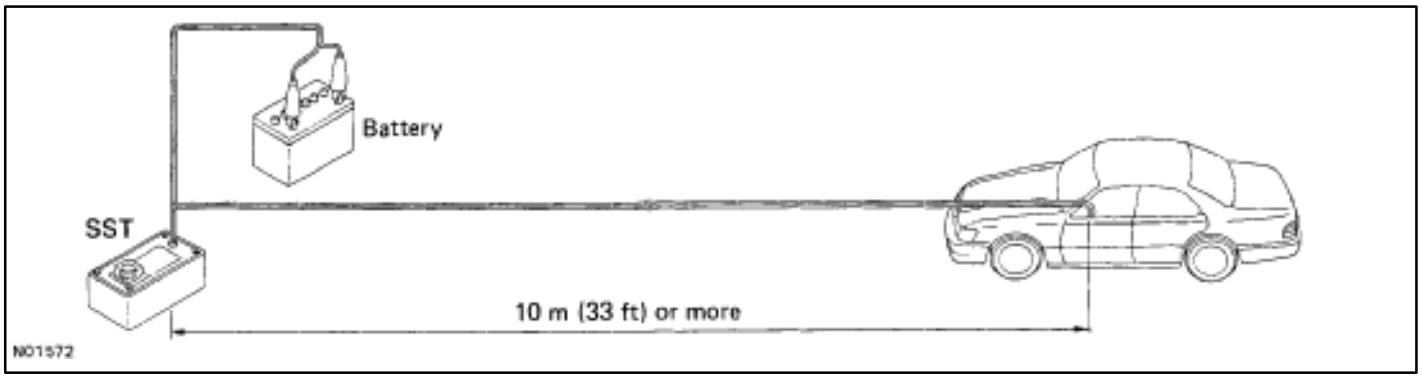

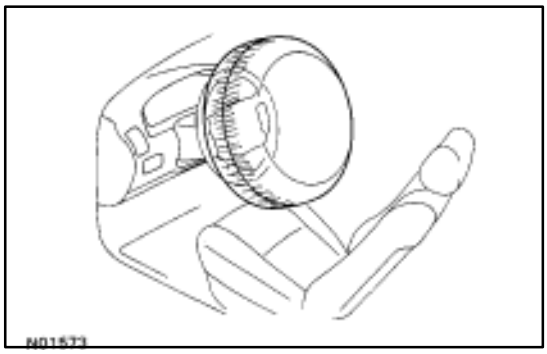

4. DEPLOY AIRBAG

(a) Confirm that no–one is inside the vehicle or within 10 (33 ft) of the vehicle.

(b) Press the SST activation switch and deploy the airbag.

HINT: The airbag deploys simultaneously as the LED of the SST activation switch lights up.

WhereEverybodyKnowsYourName

5. DISPOSAL OF STEERING WHEEL PAD (WITH AIRBAG)

CAUTION:

- **The steering wheel pad is very hot when the airbag is deployed, so leave it alone for at least 30 minutes after deployment.**
- **Use gloves and safety glasses when handling a steering wheel pad with deployed airbag.**
- **Do not apply water, etc. to a steering wheel pad with deployed airbag.**
- **Always wash your hands with water after completing the operation.**

(a) When scrapping a vehicle, deploy the airbag and scrap the vehicle with the steering wheel pad still installed.

(b) When moving a vehicle for scrapping which has a steering wheel pad with deployed airbag, use gloves and safety glasses.

AIRBAG DEPLOYMENT PROCEDURE (PROCEDURE FOR DISPOSAL OF STEERING WHEEL PAD ONLY)

When disposing of the steering wheel pad (with airbag) only, never use the customer's vehicle to deploy the airbag.

Remove the steering wheel pad from the vehicle and be sure to follow the procedure given below when deploying the airbag.

HINT: Have a battery ready as the power source to deploy the airbag.

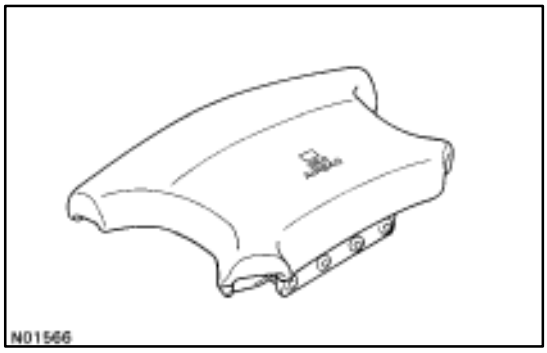

1. REMOVE STEERING WHEEL PAD (SEE PAGE AB–16)

CAUTION:

- **When removing the steering wheel pad (with airbag), work must be started after approx. 30 seconds or longer from the time the ignition switch is turned to the LOCK position and the negative (–) terminal cable is disconnected from the battery.**
- **When storing the steering wheel pad, keep the upper surface of the pad facing upward.**

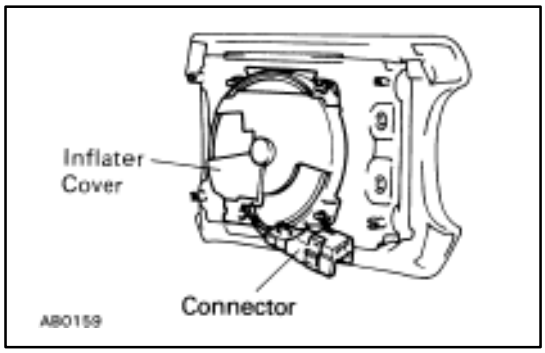

2. REMOVE STEERING WHEEL PAD CONNECTOR

Remove the connector on the steering wheel pad rear surface from the inflater cover.

WhereEverybodyKnowsYourName

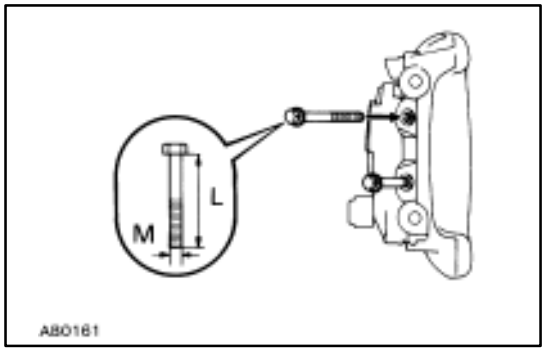

3. FIX STEERING WHEEL PAD TO DISC WHEEL WITH TIRE

(a) Install bolts with washers in the four bolt holes in the steering wheel pad.

Bolt:	L	35.0 mm (1.4 in.)
	M	6.0 mm
	Pitch	1.0 mm

NOTICE: Tighten the bolts by hand until the bolts become difficult to turn.
Do not tighten the bolts too much.

(b) Using a service–purpose wire harness for vehicle, tie down the steering wheel pad to the disc wheel.

Wire harness: Stripped wire harness section 1.25 mm or more (0.002 in. or more)

HINT: To calculate the square of the stripped wire harness section –

$$\text{Square} = \frac{3.14 \times (\text{Diameter})^2}{4}$$

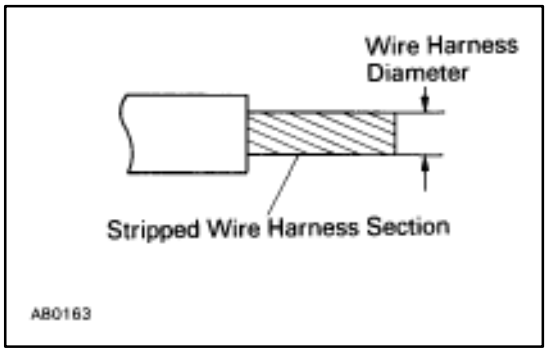

CAUTION: If a wire harness which is too thin or some other thing is used to tie down the steering wheel pad, it may be snapped by the shock when the airbag is deployed, this is highly dangerous. Always use a wire harness for vehicle use which is at least 1.25 mm (0.002 in.).

(c) Using 3 wire harnesses, wrap the wire harnesses at least 2 times each around the bolts installed on the left and right sides of the steering wheel pad.

CAUTION: Tightly wind the wire harness around the bolts so that there is no slack.
If there is slackness in the wire harness, the steering wheel pad may come loose due to the shock when the airbag is deployed, this is highly dangerous.

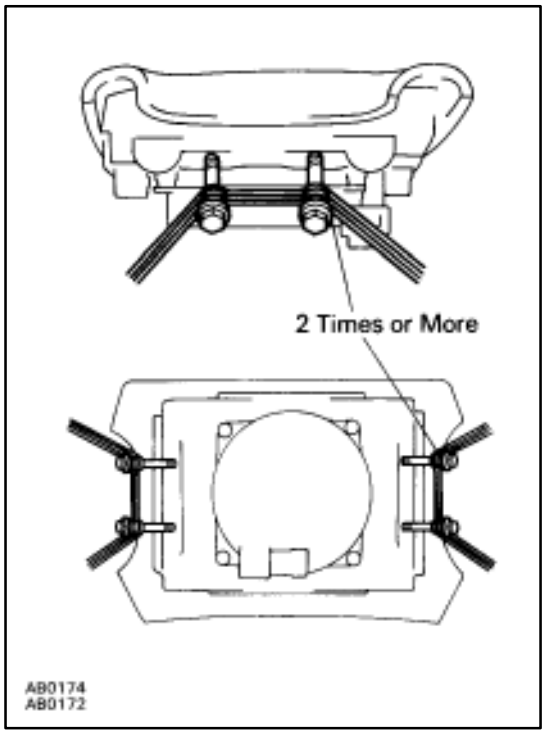

(d) Face the upper surface of the steering wheel pad upward. Separately tie the left and right sides of the steering wheel pad to the disc wheel through the hub nut holes. Position the steering wheel pad connector so that it hangs downward through a hub hole in the disc wheel.

CAUTION:

- **Make sure that the wire harness is tight. It is very dangerous if looseness in the wire harness results in the steering wheel pad coming free through the shock of the airbag deploying.**

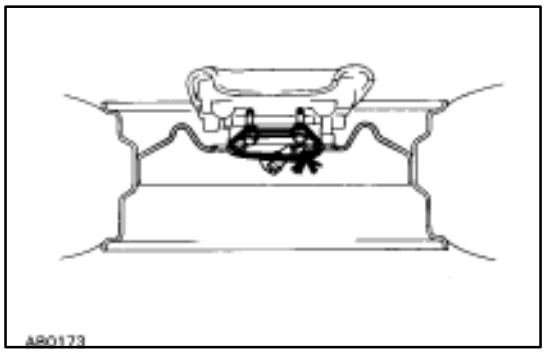

WhereEverybodyKnowsYourName

- **Always tie down the steering wheel pad with the pad side facing upward. It is very dangerous if the steering wheel pad is tied down with the metal surface facing upward as the wire harness will be cut by the shock of the airbag deploying and the steering wheel pad will be thrown into the air.**

HINT:

- The disc wheel will be marked by airbag deployment, so use a redundant disc wheel.

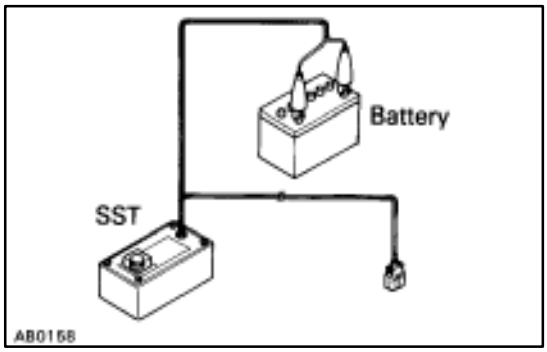

4. CONFIRM FUNCTIONING OF SST (SEE PAGE AB–94)

SST 09082–0700

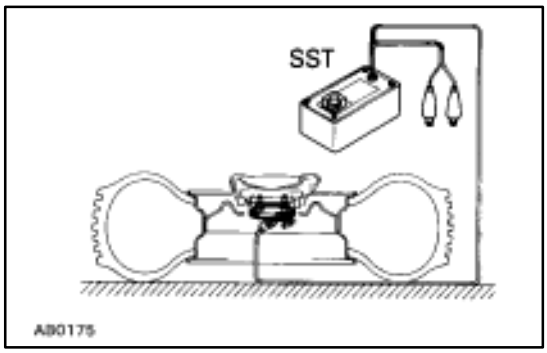

5. INSTALL SST

CAUTION: Place the disc wheel on level ground.

(a) Connect the SST connector to the steering wheel pad connector.

SST 09082–00700

NOTICE: To avoid damaging the SST connector and wire harness, do not lock the secondary lock of the twin lock. Also, provide some slack for the SST wire harness inside the disc wheel.

(b) Move the SST to at least 10 m (33 ft) away from the steering wheel pad tied down on the disc wheel.

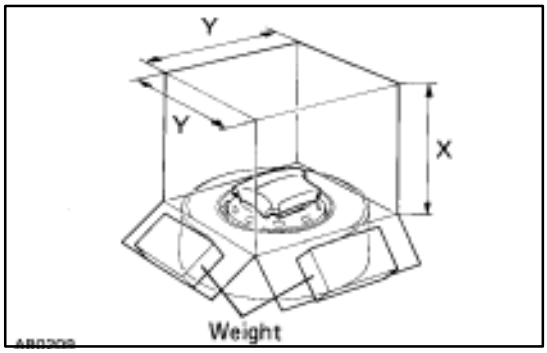

6. COVER STEERING WHEEL PAD WITH CARDBOARD BOX OR TIRES

(Covering Method Using Cardboard Box)

Cover the steering wheel pad with the cardboard box and weigh the cardboard box down in four places with a at least 20 kg (44 lb, 196 N).

Size of cardboard box: Must exceed the following dimensions –

x = 460 mm (18.11 in.)

When dimension y of the cardboard box exceeds the diameter of the disc wheel with tire the steering wheel pad is tied to–

x = 460 mm (18.11 in.) + width of tire

y = 650 mm (25.59 in.)

NOTICE: If a cardboard box smaller than the size specified is used, the cardboard box will be broken by the shock of the airbag deployment.

WhereEverybodyKnowsYourName

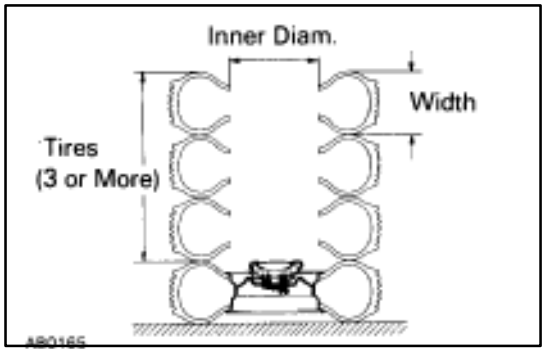

(Covering Method Using Tires)

Place at least three tires without disc wheel on top of the disc wheel with tire to which the steering wheel pad is tied.

Tire size: Must exceed the following dimensions –

Width	185 mm (7.28 in.)
Inner diam	360 mm (14.17 in.)

CAUTION: Do not use tires with disc wheels.

NOTICE: The tires may be marked by the airbag deployment, so use redundent tires.

7. AIRBAG DEPLOYMENT

(a) Connect the SST red clip to the battery positive (+) terminal and the black clip to the battery negative (–) terminal.

(b) Confirm that no–one is within 10 m (33 ft) of the disc wheel the steering wheel pad is tied to.

(c) Press the SST activation switch and deploy the airbag.

HINT: The airbag deploys simultaneously as the LED of the SST activation switch lights up.

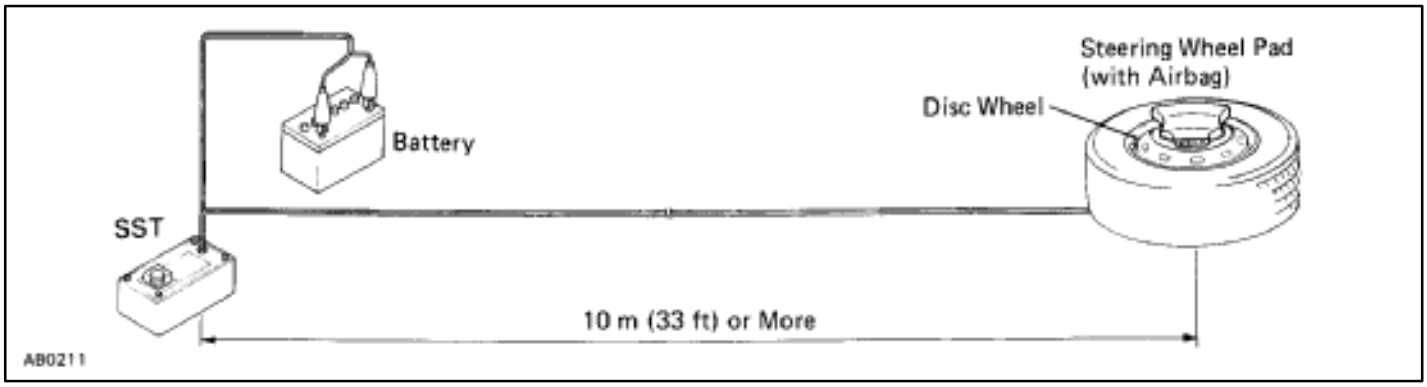

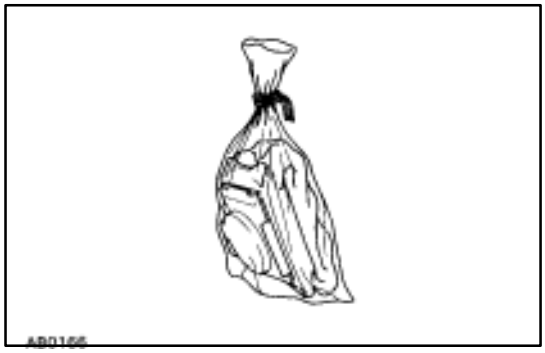

8. DISPOSAL OF STEERING WHEEL PAD (WITH AIRBAG)

CAUTION:

- **The steering wheel pad is very hot when the airbag is deployed, so leave it alone for at least 30 minutes after deployment.**
- **Use gloves and safety glasses when handling a steering wheel pad with deployed airbag.**
- **Do not apply water, etc. to a steering wheel pad with deployed airbag.**
- **Always wash your hands with water after completing the operation.**

(a) Remove the steering wheel pad from the disc wheel.

(b) Place the steering wheel pad in a vinyl bag, tie the end tightly and dispose of it the same way as other general parts.

WhereEverybodyKnowsYourName

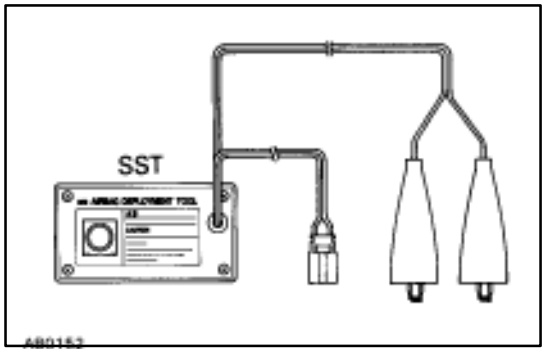

CONFIRM FUNCTIONING OF SST

When deploying the airbag, always use the specified SST:
SRS AIRBAG DEPLOYMENT TOOL.
SST 09082–00700

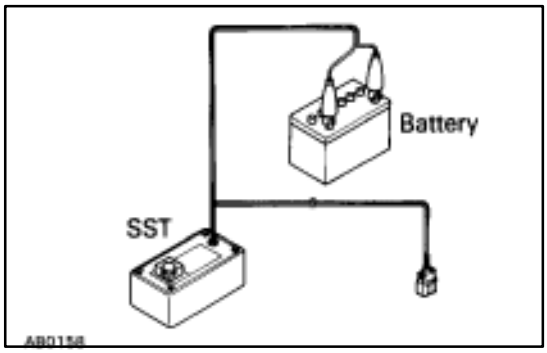

1. CONNECT SST TO BATTERY

Connect the red clip of the SST to the battery positive (+) terminal and the black clip to the battery negative (–) terminal.
HINT: Do not connect the yellow connector which connects with the airbag system.

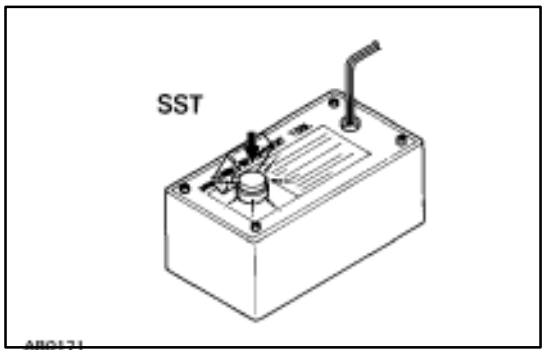

2. CONFIRM FUNCTIONING OF SST

Press the SST activation switch, and confirm the LED of the SST activation switch lights up.
CAUTION: If the LED lights up when the activation switch is not being pressed, SST malfunction is probable, so definitely do not use the SST.

WhereEverybodyKnowsYourName

SERVICE SPECIFICATIONS

SERVICE DATA

Terminal	Front airbag sensor resistance
⊥S – ⊥A	755–885 ?
⊥S – ⊖S	∞
⊖S – ⊖A	Less than 1?

TORQUE SPECIFICATIONS

Part tightened	N·m	kgf·cm	ft·lbf
Steering wheel	35	360	26
Steering wheel pad	7.4	75	65 in.·lbf
Front airbag sensor	25	260	19
Center airbag sensor assembly	13	130	9

WhereEverybodyKnowsYourName

SRS AIRBAG

WhereEverybodyKnowsYourName

GENERAL DESCRIPTION

The LEXUS SC400 is equipped with an SRS (Supplemental Restraint System) airbag.
Failure to carry out service operations in the correct sequence could cause the airbag system to unexpectedly deploy during servicing, possibly leading to a serious accident.
Further, if a mistake is made in servicing the airbag system, it is possible the airbag may fail to operate when required.
Before performing servicing (including removal or installation of parts, inspection or replacement), be sure to read the following items carefully, then follow the correct procedure described in the repair manual.

1. Malfunction symptoms of the airbag system are difficult to confirm, so the diagnostic codes become the most important source of information when troubleshooting.
   When troubleshooting the airbag system, always inspect the diagnostic codes before disconnecting the battery (See page AB–25).
2. **Work must be started after approx. 20 seconds or longer from the time the ignition switch is turned to the LOCK position and the negative (–) terminal cable is disconnected from the battery. (The airbag system is equipped with a back–up power source so that if work is started within 20 seconds of disconnecting the negative (–) terminal cable of the battery, the airbag may be deployed.)**
   When the negative (–) terminal cable is disconnected from the battery, memory of the clock and audio systems will be cancelled. So before starting work, make a record of the contents memorized by the audio memory system. Then when work is finished, reset the audio systems as before and adjust the clock. When the vehicle has power tilt and power telescopic steering, power seat, power outside rear view mirror and power shoulder belt anchorage, which are all equipped with memory function, it is not possible to make a record of the memory contents. So when the work is finished, it will be necessary to explain this fact to the customer, and ask the customer to adjust the features and reset the memory. To avoid erasing the memory of each memory system, never use a back–up power supply from outside the vehicle.
3. **Even in cases of a minor collision where the airbag does not deploy, the front airbag sensors and the steering wheel pad should be inspected (See page AB–9).**
4. **Never use airbag parts from another vehicle. When replacing parts, replace them with new parts.**
5. **Before repairs, remove the airbag sensors if shocks are likely to be applied to the sensors during repairs.**
6. **Never disassemble and repair the front airbag sensors, center airbag sensor assembly or steering wheel pad in order to reuse it.**
7. **If the front airbag sensors, center airbag assembly or steering wheel pad have been dropped, or if there are cracks, dents or other defects in the case, bracket or connector, replace them with new ones.**
8. **Do not expose the front airbag sensors, center airbag sensor assembly or steering wheel pad directly to hot air or flames.**
9. **Use a volt/ohmmeter with high impedance (10 kW/V minimum) for troubleshooting of the electrical circuit.**
10. **Information labels are attached to the periphery of the airbag components. Follow the instructions on the notices.**
11. **After work on the airbag system is completed, perform the airbag warning light check (See page AB–30).**

WhereEverybodyKnowsYourName

FRONT AIRBAG SENSOR

1. Never reuse the front airbag sensors involved in a collision when the airbag has deployed. (Replace both the left and right airbag sensors.)
2. Install the front airbag sensor with the arrow on the sensor facing toward the front of the vehicle.
3. The front airbag sensor set bolts have been anti–rust treated. When the sensor is removed, always replace the set bolts with new ones.

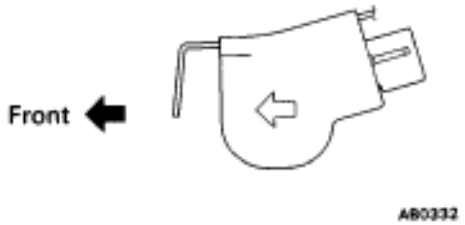

4. The front airbag sensor is equipped with an electrical connection check mechanism. Be sure to lock this mechanism securely when connecting the connector. If the connector is not securely locked, a malfunction code will be detected by the diagnosis system (See page AB–7).

SPIRAL CABLE (in COMBINATION SWITCH)

The steering wheel must be fitted correctly to the steering column with the spiral cable at the neutral position, otherwise cable disconnection and other troubles may result. Refer to page AB–17 of this manual concerning correct steering wheel installation.

STEERING WHEEL PAD (with AIRBAG)

1. **When removing the steering wheel pad or handling a new steering wheel pad, it should be placed with the pad top surface facing up.**
   In this case, the twin–lock type connector lock lever should be in the locked state and care should be taken to place it so the connector will not be damaged. And do not store a steering wheel pad on top of another one. (Storing the pad with its metallic surface up may lead to a serious accident if the airbag inflates for some reason.)

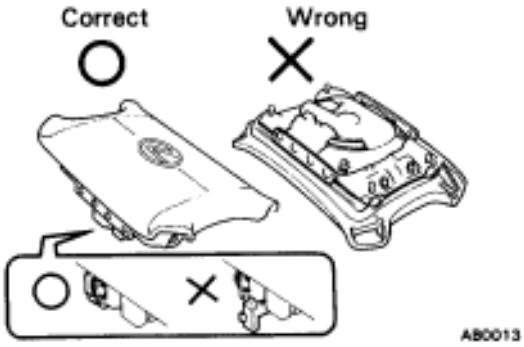

2. **Never measure the resistance of the airbag squib.**
   (This may cause the airbag to deploy, which is very dangerous.)

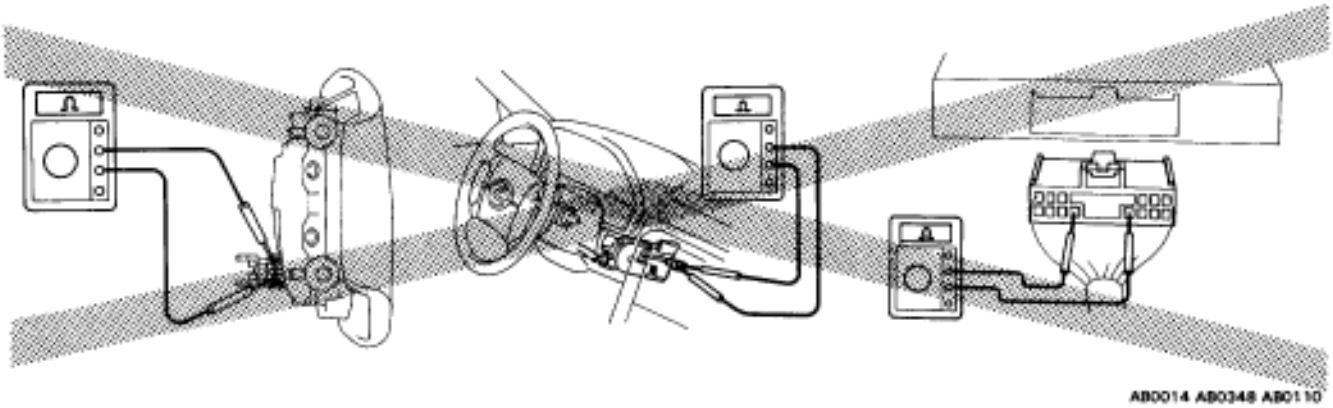

WhereEverybodyKnowsYourName

3. Grease should not be applied to the steering wheel pad and the pad should not be cleaned with detergents of any kind.
4. Store the steering wheel pad where the ambient temperature remains below 93˚C (200˚F), without high humidity and away from electrical noise.
5. When using electric welding, first disconnect the airbag connector (yellow color and 2 pins) under the steering column near the combination switch connector before starting work.
6. When disposing of a vehicle or the steering wheel pad alone, the airbag should be deployed using an SST before disposal (See page AB–91). Perform the operation in a place away from electrical noise.

CENTER AIRBAG SENSOR ASSEMBLY

The connector of the center airbag sensor assembly should be connected or disconnected with the sensor mounted on the floor. It the connector is connected or disconnected while the center airbag sensor assembly is not mounted to the floor, it could cause undesired ignition of the airbag system.

WIRE HARNESS AND CONNECTOR

The airbag system wire harness is integrated with the cowl wire harness assembly. The wires for the airbag wire harness are encased in a yellow corrugated tube. All the connectors for the system are also a standard yellow color. If the airbag system wire harness becomes disconnected or the connector becomes broken due to an accident, etc., repair or replace it as shown on page AB–20.

WhereEverybodyKnowsYourName

OPERATION

FUNCTION OF COMPONENTS

1. FRONT AIRBAG SENSOR

A front airbag sensor is mounted inside each of the front fenders. The sensor unit is a mechanical type. When the sensor detects deceleration force above a predetermined limit in a collision, the contacts in the sensor make contact, sending a signal to the center airbag sensor assembly. The sensor cannot be disassembled.

AB0333

2. SPIRAL CABLE (in COMBINATION SWITCH)

A spiral cable is used as an electrical joint from the vehicle body side to the steering wheel.

AB0024

3. STEERING WHEEL PAD (with AIRBAG)

The inflater and bag of the airbag system are stored in the steering wheel pad and cannot be disassembled.
The inflater contains a squib, igniter charge, gas generant, etc., and inflates the bag in case of a frontal collision.

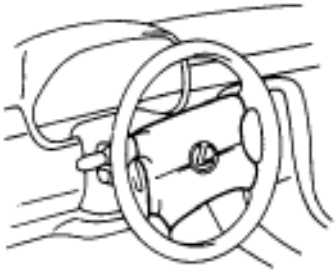

AB0324

4. AIRBAG WARNING LIGHT

The airbag warning light is located on the combination meter. It goes on to alert the driver of trouble in the system when a malfunction is detected in the center airbag sensor assembly self–diagnosis. In normal operating condition when the ignition switch is turned to the ACC or ON position, the light goes on for about 6 seconds and then goes off.

AB0326

5. CENTER AIRBAG SENSOR ASSEMBLY

The center airbag sensor assembly is mounted on the floor inside the center cluster. The center airbag sensor assembly consists of a center airbag sensor, safing sensors, ignition control and drive circuit, diagnosis circuit, etc. It receives signals from the airbag sensors, judges whether the airbag must be activated or not and diagnoses system malfunctions.

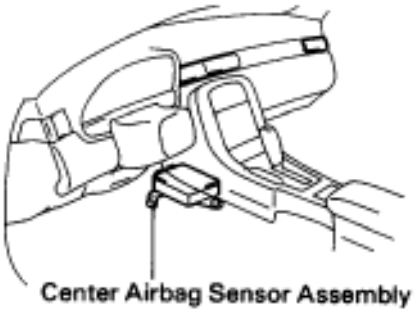

AB0323

WhereEverybodyKnowsYourName

6. AIRBAG CONNECTORS

All connectors in the airbag system are colored yellow to distinguish them from other connectors. Connectors having special functions and specifically designed for airbags are used in the locations shown below to ensure high reliability. These connectors use durable gold–plated terminals.

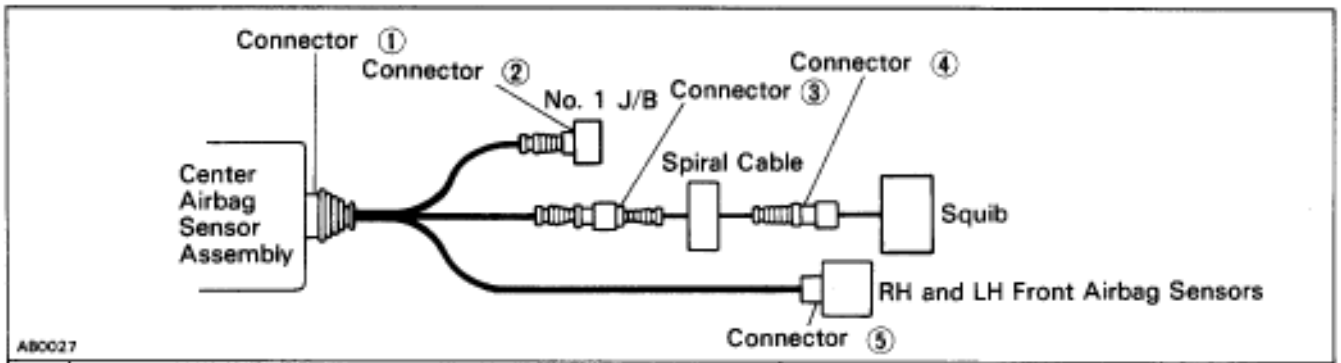

No.	Item	Application
(1)	Terminal Twin–Lock Mechanism	Connectors ①, ②, ③, ④, ⑤
(2)	Airbag Activation Prevention Mechanism	Connectors ①, ③, ④
(3)	Electrical Connection Check Mechanism	Connectors ①, ⑤
(4)	Connector Twin–Lock Mechanism	Connectors ②, ③, ④

(1) Terminal Twin–Lock Mechanism

Each connector has a two–piece construction consisting of a housing and a spacer. This design secures the locking of the terminal by two locking devices (the spacer and the lance) to prevent terminals from coming out.

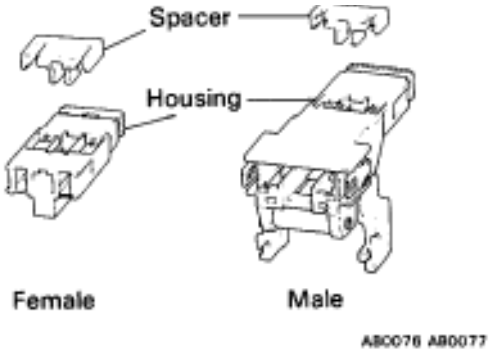

(2) Airbag Activation Prevention Mechanism

Each connector contains a short spring plate. When the connector is disconnected, the short spring plate automatically connects the power source and grounding terminals of the squib.

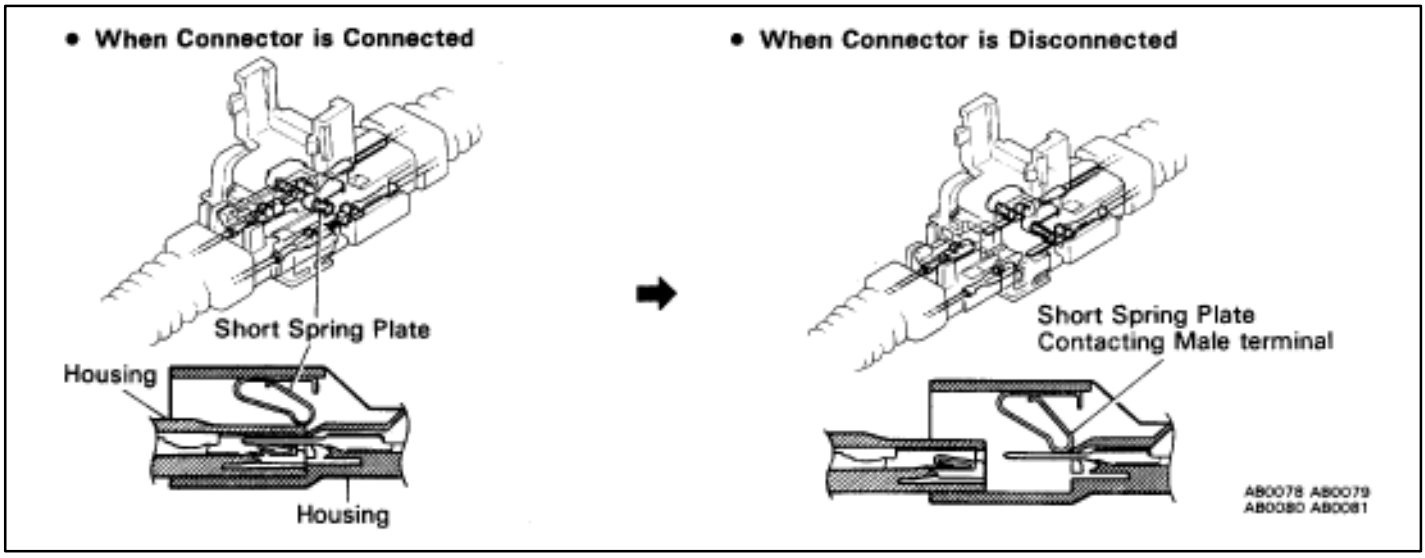

WhereEverybodyKnowsYourName

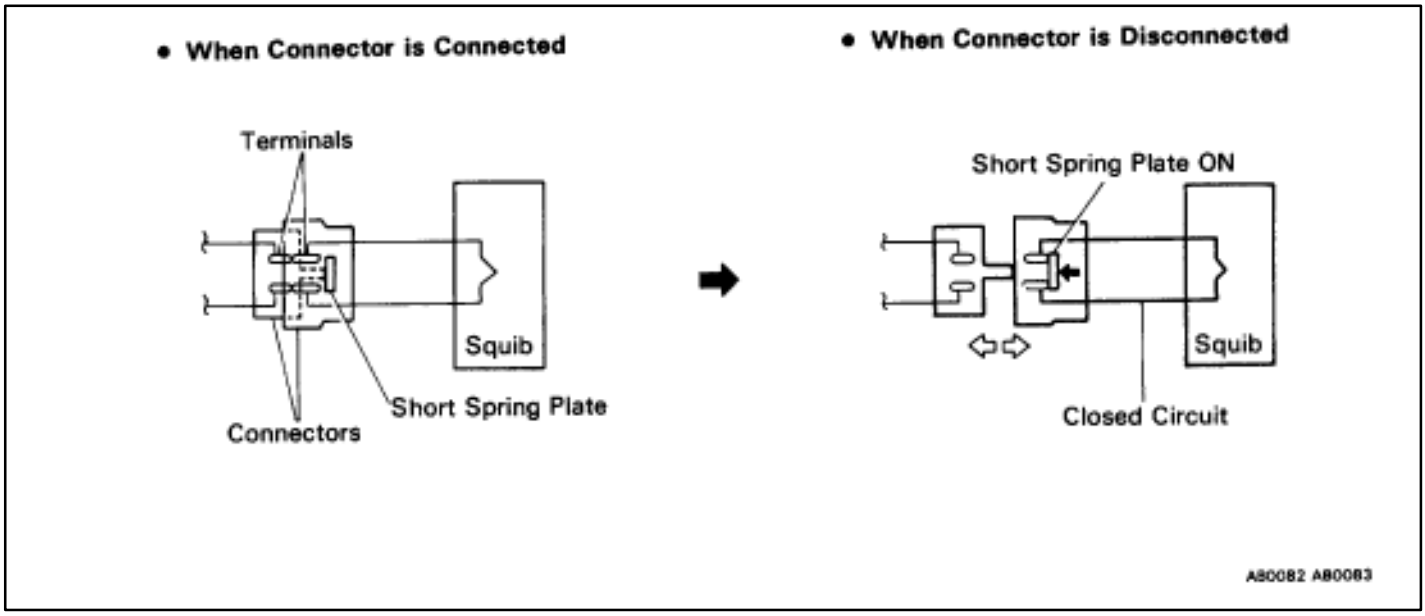

HINT: The illustration shows connectors (3) and (4). Connector (1) has a short spring plate on the female terminal side, but the operating principle is the same.

(3) Electrical Connection Check Mechanism
This mechanism is designed to electrically check if connectors are connected correctly and completely.
The electrical connection check mechanism is designed so that the connection detection pin connects with the diagnosis terminals when the connector housing lock is in the locked condition.

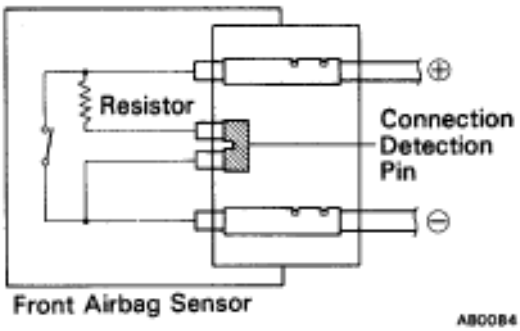

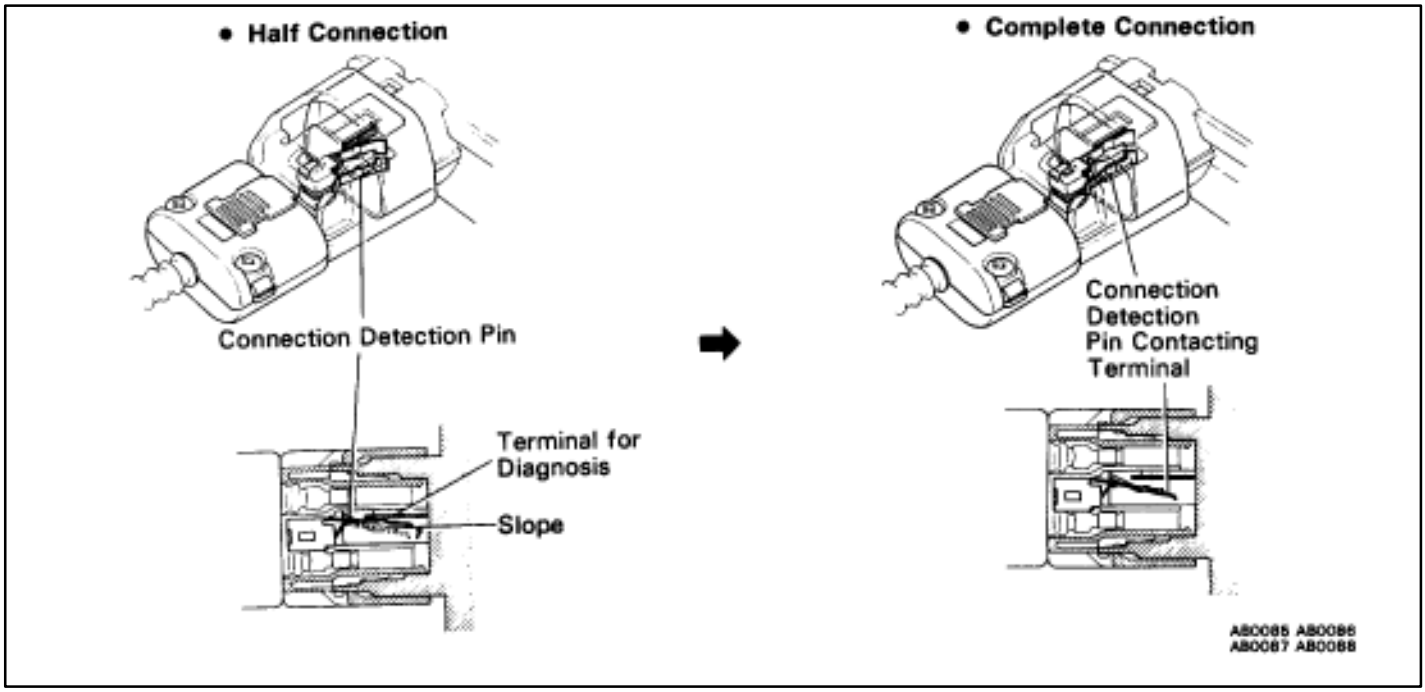

HINT: The illustration shows connector (5). Connector (1) also has the same operating principle.

WhereEverybodyKnowsYourName

(4) Connector Twin–Lock Mechanism

With this mechanism connectors (male and female connectors) are locked by two locking devices to increase connection reliability. If the primary lock is incomplete, ribs interfere and prevent the secondary lock.

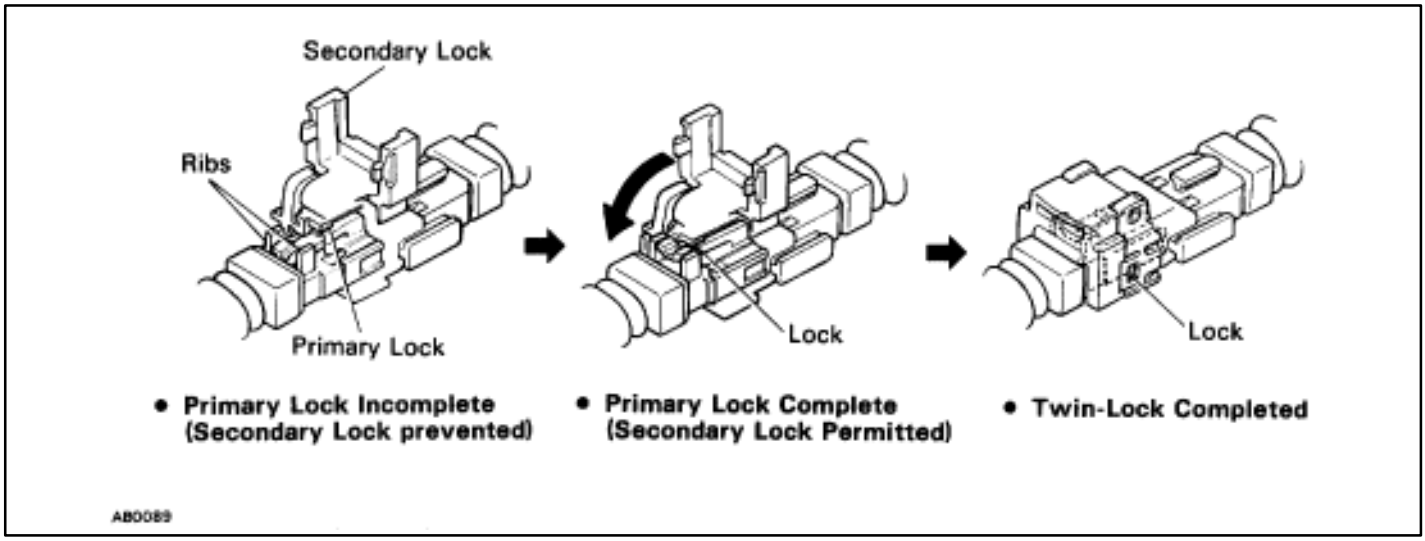

When the vehicle is involved in a frontal collision in the hatched area (Fig. 1) and the shock is larger than a predetermined level, the airbag is activated automatically. Safing sensors are designed to go on at a smaller deceleration rate than the front and center airbag sensors. As illustrated in Fig. 2 below, ignition is caused when current flows to the squib, which happens when a safing sensor and a front airbag sensor and/or the center airbag sensor go on simultaneously.

When a deceleration force acts on the sensors, it causes the squib to ignite. Gas is then generated, increasing the pressure inside the bag rapidly. The inflated bag breaks open the steering wheel pad. Bag inflation then ends, and the gas is discharged through discharge holes provided behind the bag. The bag becomes deflated as a result.

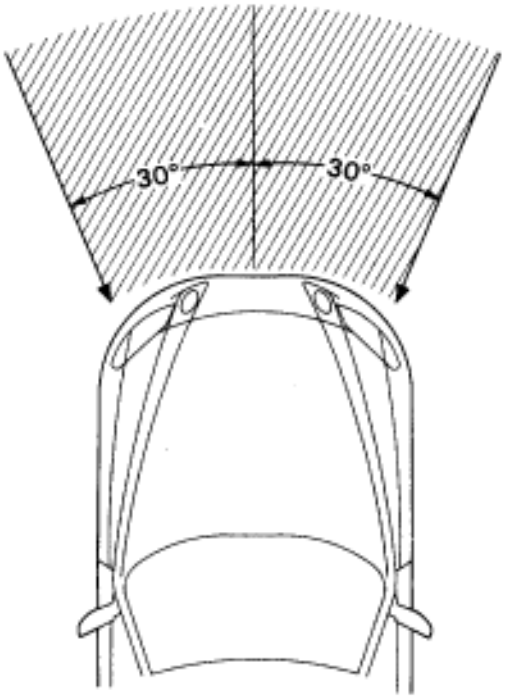

Fig. 1

AB0331

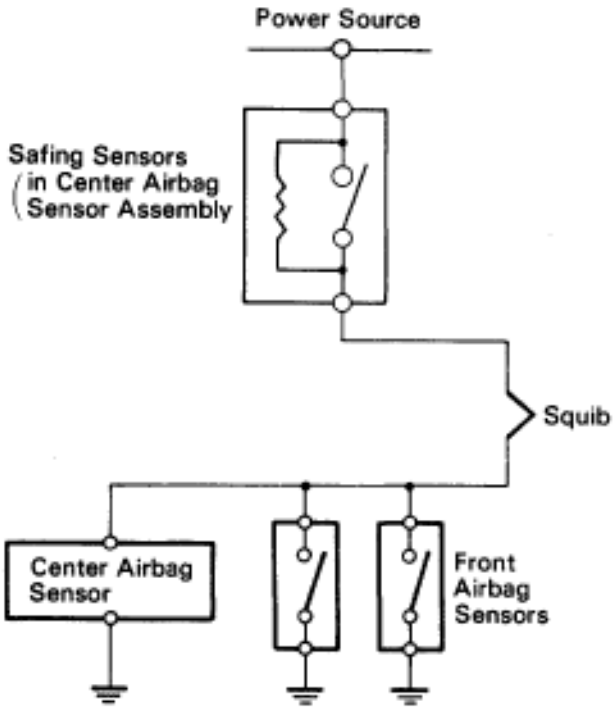

Fig. 2

AB0307

WhereEverybodyKnowsYourName

INSPECTION ITEMS AND REPLACEMENT REQUIREMENTS

If a Vehicle is brought in for an airbag system inspection, or if a vehicle which has been involved in a collision is inspected, perform the inspection in accordance with the following procedure. If any problems are discovered, replace the affected part with a new one.

Steering Wheel Pad (with Airbag), Steering Wheel and Spiral Cable

INSPECTION ITEMS

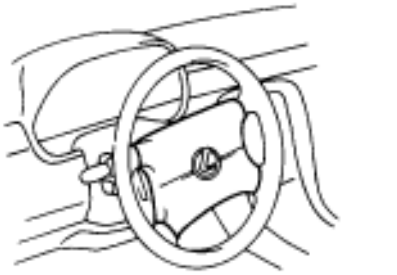
A80324

1. VEHICLES NOT INVOLVED IN A COLLISION

(a) Perform a diagnostic system check (See page AB–30).

(b) Perform a visual check which includes the following items with the steering wheel pad (with airbag) installed in the vehicle.

- Check for cuts, minute cracks or marked discoloration of the steering wheel pad top surface and grooved portion.

A80303

2. VEHICLES INVOLVED IN A COLLISION
IF THE AIRBAG IS NOT DEPLOYED

(a) Perform a diagnostic system check (See page AB–30).

(b) Perform a visual check which includes the following items with the steering wheel pad (with airbag) removed from the vehicle.

- Check for cuts or cracks in, or marked discoloration of the steering wheel pad top surface and grooved portion.
- Check for cuts and cracks in, or chipping of connectors and wire harnesses.
- Check for deformation of the horn button contact plate of the steering wheel.

HINT:

- If the horn button contact plate of the steering wheel is deformed, never repair it. Always replace the steering wheel assembly with a new one.
- There should be no interference between the steering wheel pad and the steering wheel, and the clearance should be uniform all the way around when the new steering wheel pad is installed on the steering wheel.

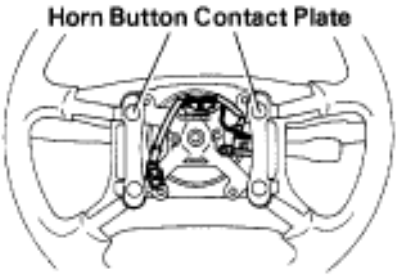

A80334

CAUTION: For removal and installation of the steering wheel pad, see page AB–14, “REMOVAL AND INSTALLATION” and be sure to follow the correct procedure.

IF THE AIRBAG IS DEPLOYED

(a) Perform a diagnostic system check (See page AB–30).

(b) Perform a visual check which includes the following items with the steering wheel pad (with airbag) removed from the vehicle.

- Check for deformation of the horn button contact plate of the steering wheel.
- Check for damage to the spiral cable connector and wire harness.

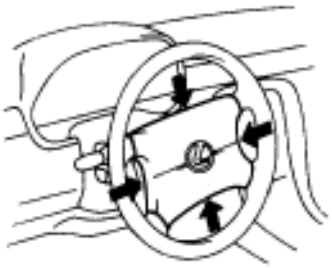
A80337

WhereEverybodyKnowsYourName

HINT:

- If the horn button contact plate of the steering wheel is deformed, never repair it. Always replace the steering wheel assembly with a new one.
- There should be no interference between the steering wheel pad and the steering wheel, and the clearance should be uniform all the way around when the new steering wheel pad is installed on the steering wheel.

REPLACEMENT REQUIREMENTS

In the following cases, replace the steering wheel pad, steering wheel or spiral cable.

CAUTION: For replacement of the steering wheel pad, see page AB–16, "REMOVAL AND INSTALLATION" and be sure to follow the correct procedure.

- If the airbag has been deployed.
- If the steering wheel pad or spiral cable has been found to be faulty in troubleshooting.
- If the steering wheel pad, steering wheel or spiral cable has been found to be faulty during the check in item 1–(b) or 2–(b).
- If the steering wheel pad has been dropped.

Front Airbag Sensor

INSPECTION ITEMS

1. VEHICLES NOT INVOLVED IN A COLLISION

- Perform a diagnostic system check (See page AB–30).

2. VEHICLES INVOLVED IN A COLLISION

(a) Perform a diagnostic system check (See page AB–30).

(b) If the front fender of the car or its periphery is damaged, perform visual check for damage to the front airbag sensor, which includes the following items even if the airbag was not deployed:

- Bracket deformation.
- Peeling of paint from the bracket.
- Cracks, dents or chips in the case.
- Cracks and dents in, or chipping and scratches of the connector.
- Peeling off of the label or damage to the series number.

Also refer to the body dimension drawings on page BO–133 and check the dimensions and mounting surface angle of the body area where the front airbag sensors are mounted.

AB0308

AB0333

WhereEverybodyKnowsYourName

REPLACEMENT REQUIREMENTS

In the following cases, replace the front airbag sensor.

NOTICE: For replacement of the front airbag sensor, see page AB–16, "REMOVAL AND INSTALLATION".

- If the airbag has been deployed in a collision.
  (Replace both the left and right airbag sensors.)
- If the front airbag sensor has been found to be faulty in troubleshooting.
- If the front airbag sensor has been found to be faulty during the check in item 2–(b).
- If the front airbag sensor has been dropped.

Center Airbag Sensor Assembly

INSPECTION ITEMS

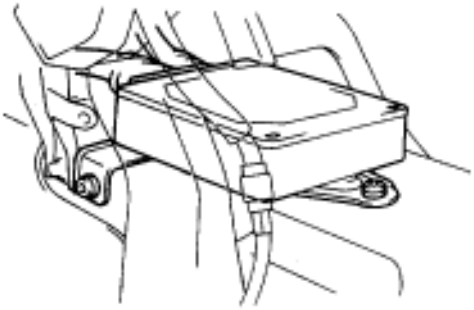

1. VEHICLES NOT INVOLVED IN A COLLISION

- Perform a diagnostic system check (See page AB–30).

VEHICLES INVOLVED IN A COLLISION

IF THE AIRBAG IS NOT DEPLOYED

- Perform a diagnostic system check (See page AB–30).

IF THE AIRBAG IS DEPLOYED

- Replace the airbag sensor assembly certainly.

WhereEverybodyKnowsYourName

Wire Harness and Connector

HINT: The wires for the airbag wire harness are encased in a yellow corrugated tube and all the connectors in the system are a standard yellow color.

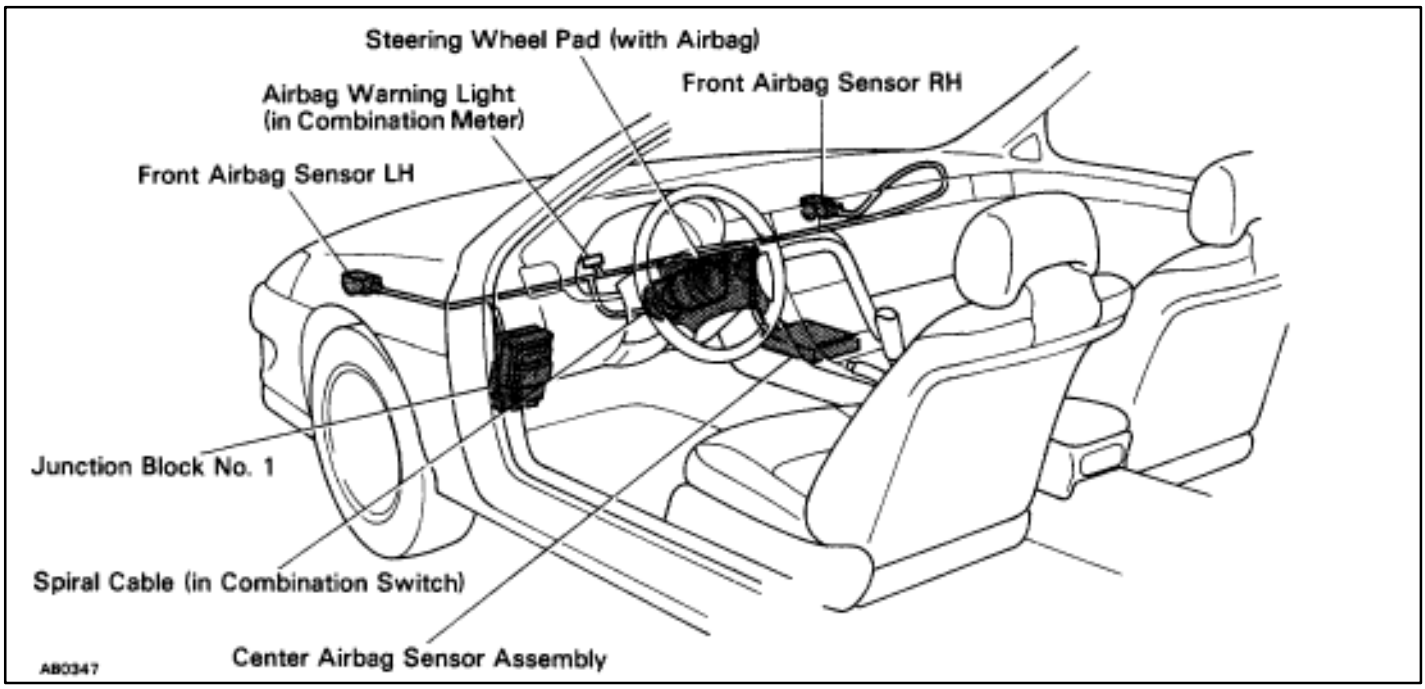

INSPECTION ITEMS

1. VEHICLES NOT INVOLVED IN A COLLISION

- Perform a diagnostic system check (See page AB–30).

2. VEHICLES INVOLVED IN A COLLISION

(a) Perform a diagnostic system check (See page AB–30).

(b) If there is a break in any of the wires in the airbag system wire harness, or if conductors are exposed.

(c) If the airbag system wire harness connectors are cracked or chipped.

REPLACEMENT REQUIREMENTS

In the following cases, replace the wire harness or connector.

- If any part of the airbag system wire harness or any connector has been found to be faulty in trouble-shooting.
- If any part of the airbag system wire harness or any connector has been found to be faulty during the check in item 2–(b) or (c).

NOTICE: If the wire harness used in the airbag system is damaged, replace the whole wire harness assembly.

When the connector to the airbag front sensors can be repaired alone (when there is no damage to the wire harness), use the repair wire specially designed for the purpose (See page AB–20).

WhereEverybodyKnowsYourName

PREPARATION

SST (SPECIAL SERVICE TOOLS)

Illustration	Part No.	Part Name	Note
	09082–00700	SRS Airbag Deployment Tool	
	09213–31021	Crankshaft Pulley Puller	Steering wheel
	09843–18020	Diagnosis Check Wiring	

RECOMMENDED TOOLS

Illustration	Part No.	Part Name	Note
	09042–00010	Torx Socket T30	Steering wheel pad
	09042–00020	Torx Socket T30	Center airbag sensor assembly
	09082–00015	TOYOTA Electrical Tester	

EQUIPMENT

Part Name	Note
Torque wrench	

WhereEverybodyKnowsYourName

REMOVAL AND INSTALLATION OF COMPONENT PARTS

Steering Wheel Pad and Spiral Cable

Removal and install the parts as shown.

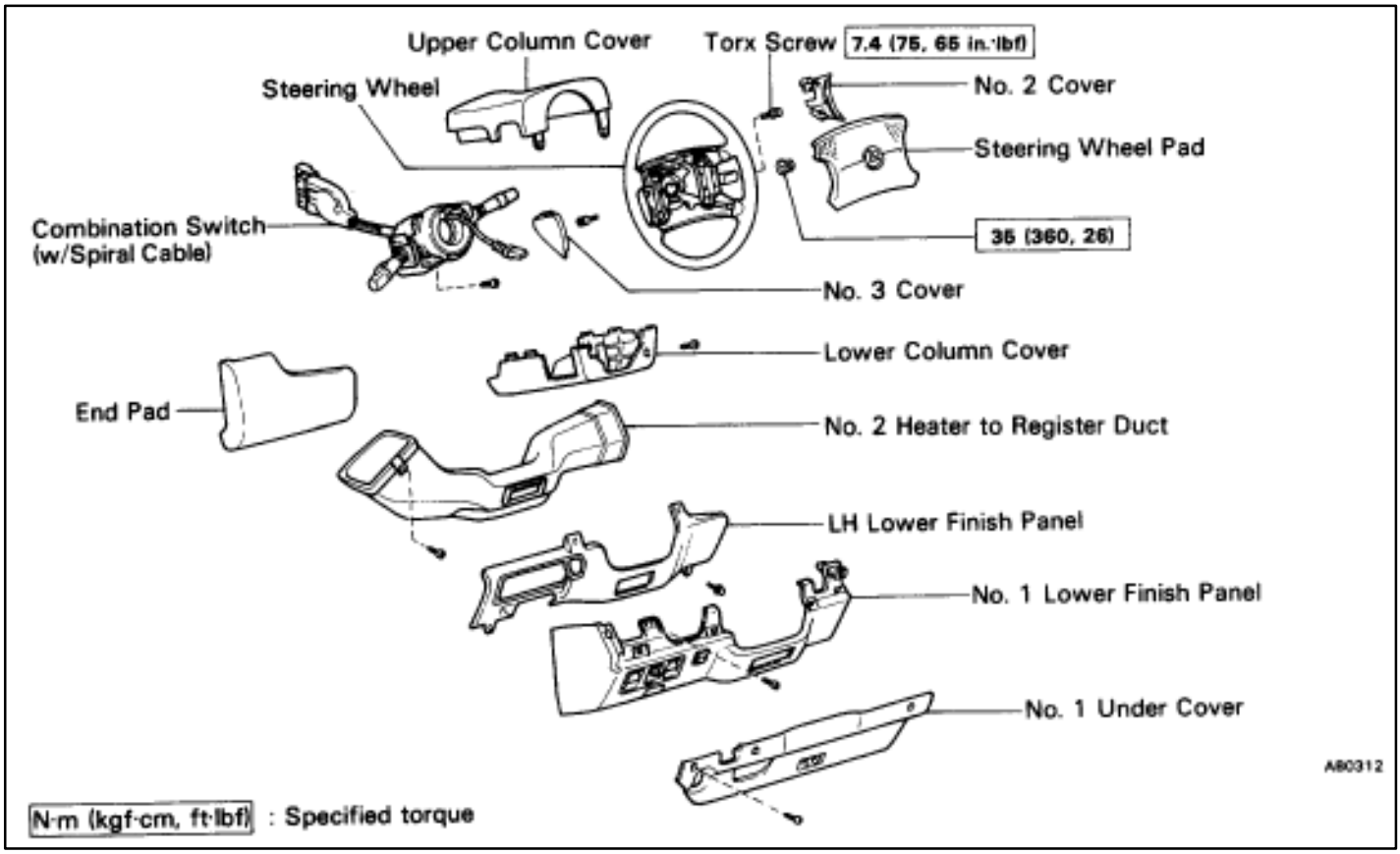

(MAIN POINTS OF REMOVAL AND INSTALLATION)

CAUTION: Work must be started after approx. 20 seconds or longer from the time the ignition switch is turned to the LOCK position and the negative (–) terminal cable is disconnected from the battery (See page AB–2).

NOTICE:

- **If the wiring connector of the airbag system is disconnected with the ignition switch at ON or ACC, diagnostic codes will be recorded.**
- **Never use airbag parts from another vehicle. When replacing parts, replace with new parts.**

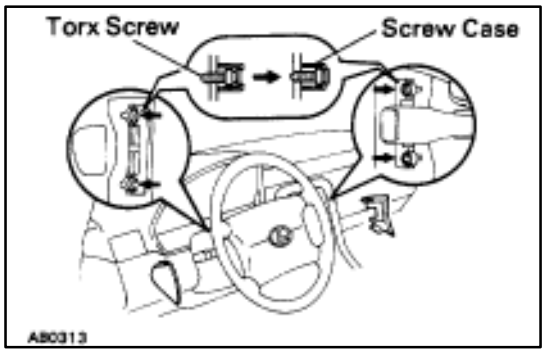

1. REMOVE STEERING WHEEL PAD

(a) Remove negative terminal (–) from the battery.

(b) Place the front wheels facing straight ahead.

(c) Using a torx wrench, loosen the four screws.

Torx wrench: T30 (Part No. 09042–00010 or locally manufactured tool)

(d) Loosen the torx screws until the groove along the screw circumference catches on the screw case.

WhereEverybodyKnowsYourName

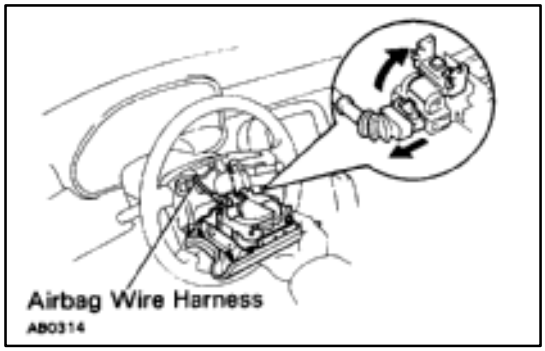

(e) Pull the wheel pad out from the steering wheel and disconnect the airbag connector.

NOTICE: When removing the wheel pad, take care not to pull the airbag wire harness.

CAUTION:

- **When storing the wheel pad, keep the upper surface of the pad facing upward (See pages AB–3, 4).**
- **Never disassemble the wheel pad.**

2. REMOVE STEERING WHEEL

(a) Disconnect the connector.
(b) Remove the set nut.
(c) Place matchmarks on the steering wheel and main shaft.
(d) Using SST, remove the steering wheel.

SST 09213–31021

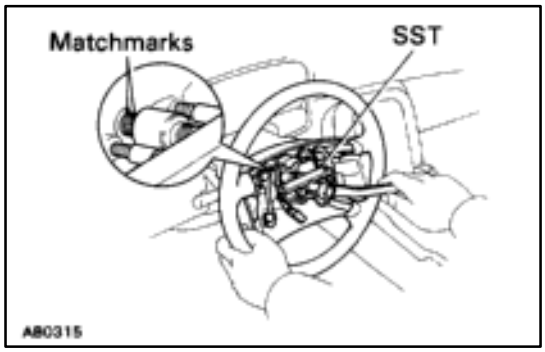

3. REMOVE AND INSTALL SPIRAL CABLE FROM/TO COMBINATION SWITCH (See page BE–41)

NOTICE: Do not disassemble the spiral cable or apply oil to it.

4. CENTER SPIRAL CABLE

(a) Check that the front wheels are facing straight ahead.
(b) Turn the spiral cable counterclockwise by hand until it becomes harder to turn the cable.
(c) Then rotate the spiral cable clockwise about 3 turns to align the red mark.

HINT: The spiral cable will rotate about 3 turns to either left or right of the center.

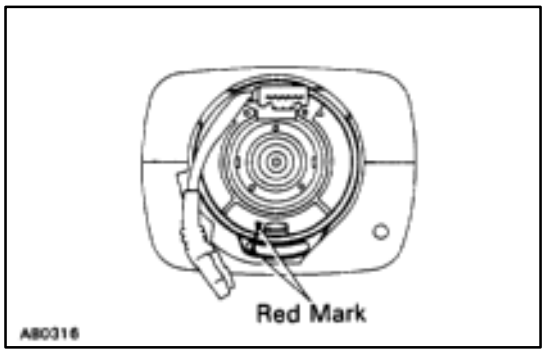

5. INSTALL STEERING WHEEL

(a) Align matchmarks on the steering wheel and main shaft, and install the steering wheel to the main shaft.
(b) Install and torque the set nut.

Torque: 35 N·m (360 kgf·cm, 26 ft·lbf)

(c) Connect the connector.

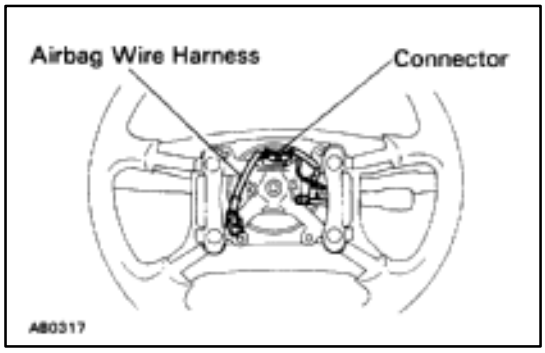

6. INSTALL STEERING WHEEL PAD

(a) Connect the airbag connector.
(b) Install the wheel pad after confirming that the circumference groove of the torx screws is caught on the screw case.
(c) Using a torx wrench, tighten the four screws.

Torque: 7.4 N·m (75 kgf·cm, 65 in.·lbf)

NOTICE:

- **Make sure the wheel pad is installed to the specified torque.**
- **If the wheel pad has been dropped, or there are cracks, dents or other defects in the case or connector, replace the wheel pad with a new one.**
- **When installing the wheel pad, take care that the wirings do not interfere with other parts and are not pinched between other parts.**

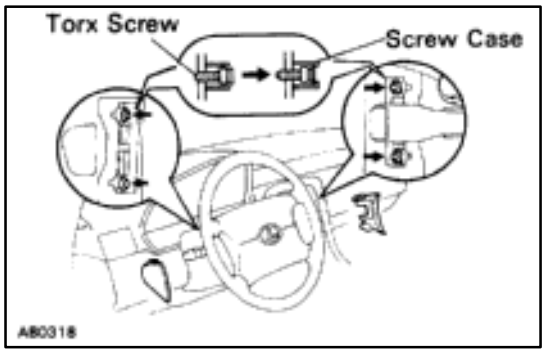

7. CHECK STEERING WHEEL CENTER POINT

WhereEverybodyKnowsYourName

Front Airbag Sensor

Remove and install the parts as shown.

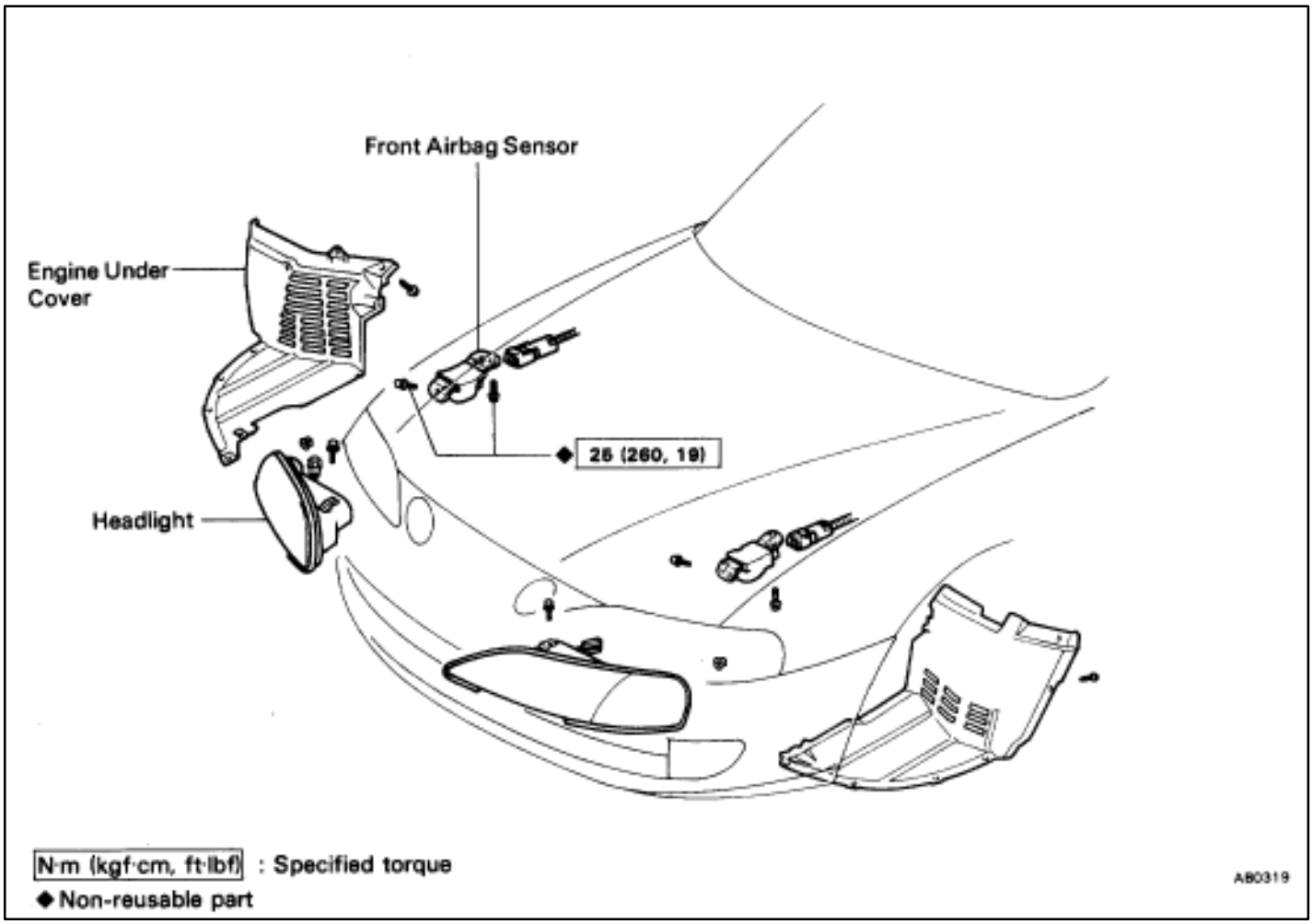

(MAIN POINTS OF REMOVAL AND INSTALLATION)

CAUTION: Work must be started after approx. 20 seconds or longer from the time the ignition switch is turned to the LOCK position and the negative (–) terminal cable is disconnected from the battery (See page AB–2).

NOTICE:

- **If the wiring connector of the airbag system is disconnected with the ignition switch at ON or ACC, diagnostic codes will be recorded.**
- **Never use airbag parts from another vehicle. When replacing parts, replace with new parts.**
- **Never reuse the sensor involved in a collision when the airbag has deployed.**
- **Never repair a sensor in order to reuse it.**

WhereEverybodyKnowsYourName

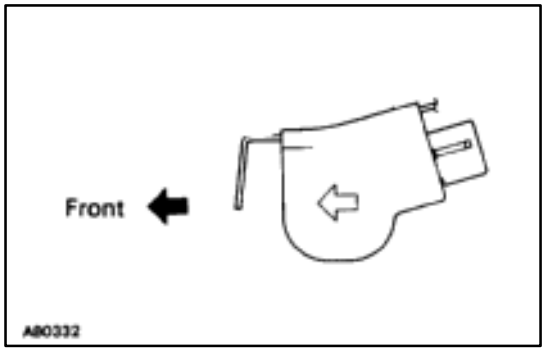

INSTALL FRONT AIRBAG SENSOR

Install the sensor with the arrow on the sensor facing toward the front of the vehicle.

Torque: 25 N·m (260 kgf·cm, 19 ft·lbf)

NOTICE:

- **Make sure the sensor is installed to the specified torque.**
- **If the sensor has been dropped, or there are cracks, dents or other defects in the case, bracket or connector, replace the sensor with a new one.**
- **The sensor set bolts have been anti–rust treated. When the sensor is removed, always replace the set bolts with new ones.**
- **After installation, shake the sensor to check that there is no looseness.**
- **The front sensor is equipped with an electrical connection check mechanism. Be sure to lock this mechanism securely when connecting the connector. If the connector is not securely locked, a malfunction code will be detected by the diagnosis system.**
- **Check that the dimensions of the body where the front airbag sensor is installed match those in the body dimension drawings on page BO–133.**
  (The airbag may malfunction, or may not work, if the mounting angle or dimensions of the sensor mount are not correct.)

WhereEverybodyKnowsYourName

Center Airbag Sensor Assembly

Remove and install the parts as shown.

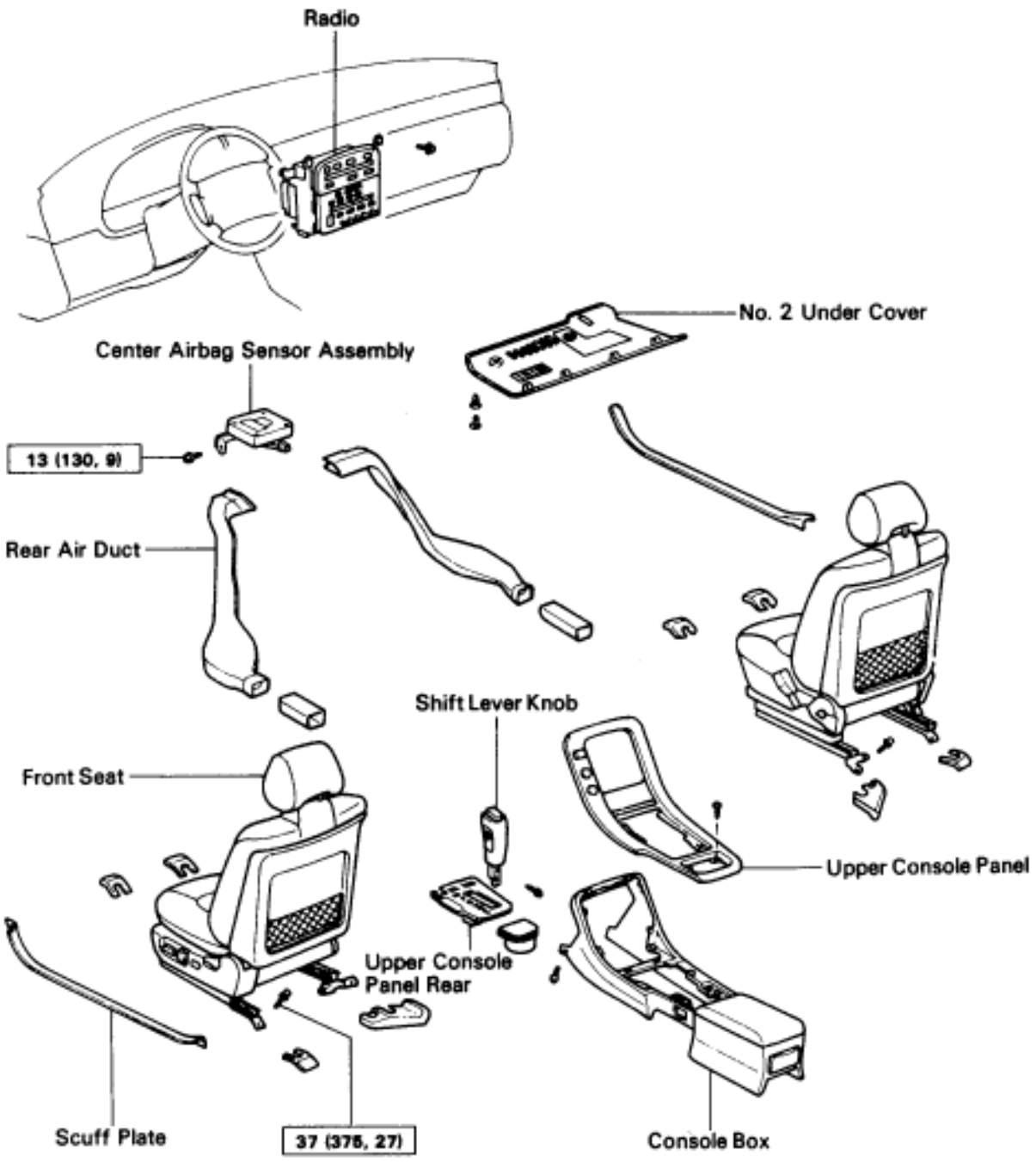

N·m (kgf·cm, ft·lbf) : Specified torque

WhereEverybodyKnowsYourName

(MAIN POINTS OF REMOVAL AND INSTALLATION)

CAUTION: Work must be started after approx. 20 seconds or longer from the time the ignition switch is turned to the LOCK position and the negative (–) terminal cable is disconnected from the battery (See page AB–2).

NOTICE:

- **Do not open the cover or the case of the ECU and various computers unless absolutely necessary. (If the IC terminals are touched, the IC may be destroyed by static electricity.)**
- **Never use airbag parts from another vehicle. When replacing parts, replace with new parts.**
- **Never reuse the center airbag sensor assembly involved in a collision when the airbag has deployed.**
- **Never repair a sensor in order to reuse it.**

REMOVE AND INSTALL CENTER AIRBAG SENSOR ASSEMBLY

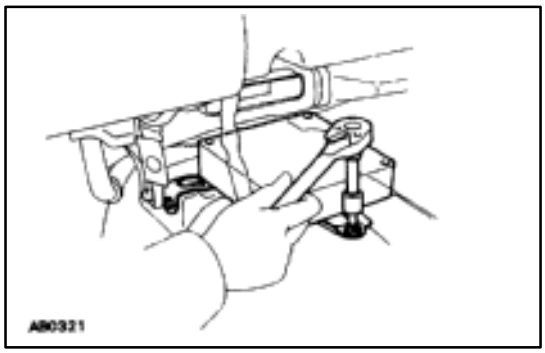

(a) Using a torx wrench, loosen and tighten the three screws.

Torx wrench: T40 (Part No. 09042–00020 or locally manufactured tool)

Torque: 13 N·m (130 kgf·cm, 9 ft·lbf)

NOTICE:

- **Make sure the sensor assembly is installed to the specified torque.**
- **If the sensor assembly has been dropped, or there are cracks, dents or other defects in the case, bracket or connector, replace the sensor assembly with a new one.**
- **When installing the sensor assembly, take care that the airbag wiring does not interfere with other parts and is not pinched between other parts.**
- **After installation, shake the sensor assembly to check that there is no looseness.**

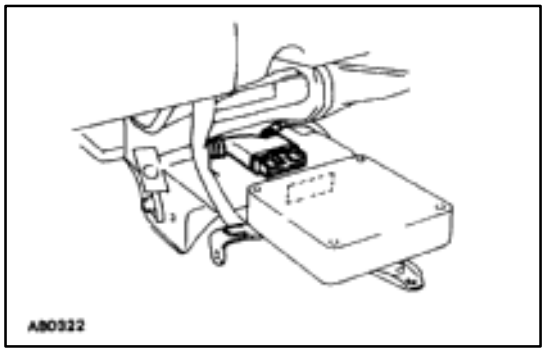

(b) Disconnect the connector.

WhereEverybodyKnowsYourName

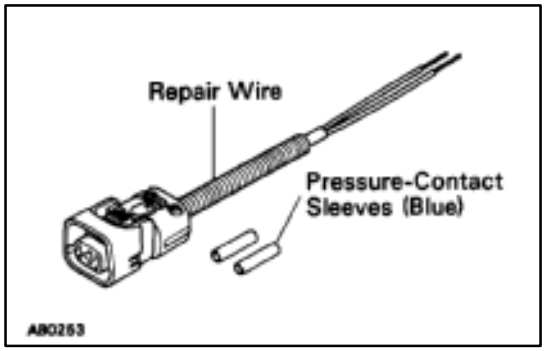

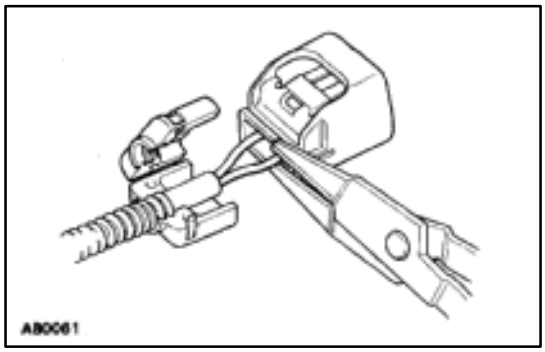

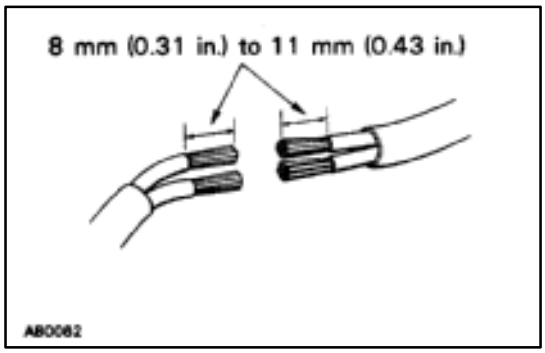

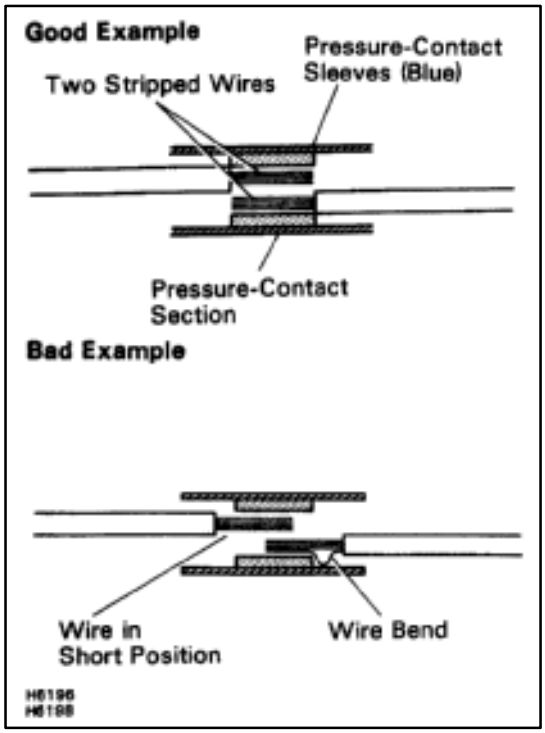

REPLACEMENT OF REPAIR WIRE FOR FRONT AIRBAG SENSOR

Repair wire with two pressure–contact sleeves (Part No. 82988–50010) has been prepared for exclusive use in repairing connector damage etc. caused by frontal collision of the vehicle. When repairing the front airbag sensor connector on the wire harness side, always use the special repair wire.

NOTICE: Do not replace the connector housing or terminal only.

REPLACEMENT OF AIRBAG REPAIR WIRE

CAUTION: Work must be started after approx. 20 seconds or longer from the time the ignition switch is turned to the "LOCK" position and the negative (–) terminal cable is disconnected from the battery.

1. DISCONNECT WIRE HARNESS AT VEHICLE SIDE

(a) Remove the cover at the rear of the connector housing and expose the wire harness.

(b) Cut the wire harness behind the connector housing.

HINT: The operation is performed more easily if the wire harness is left as long as possible.

2. CONNECT FRONT AIRBAG SENSOR WIRE HARNESS AT VEHICLE SIDE AND REPAIR WIRE

(a) Start stripping at least 8 mm (0.31 in.) to 11 mm (0.43 in.) away from the end of the existing harness at vehicle side and also from the end of the repair wire.

NOTICE: Take care not to damage the wire when stripping the wire harness lead. After finishing the operation, visually inspect the wire. If there is any damage, perform the operation again.

(b) Overlap the two stripped wire ends inside of the pressure–contact sleeve as illustrated in the left.

HINT: The blue pressure–contact sleeve (Part No.

WhereEverybodyKnowsYourName

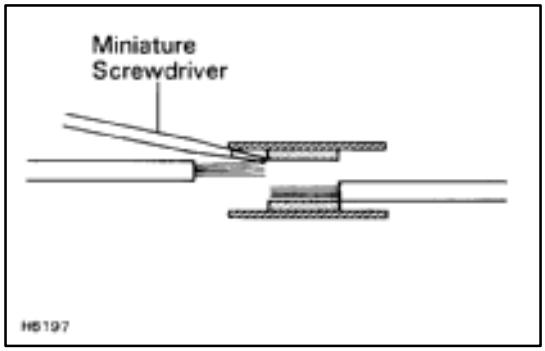

HINT: You might find it easier if you use a miniature screwdriver as a guide as you insert wires into the sleeve.

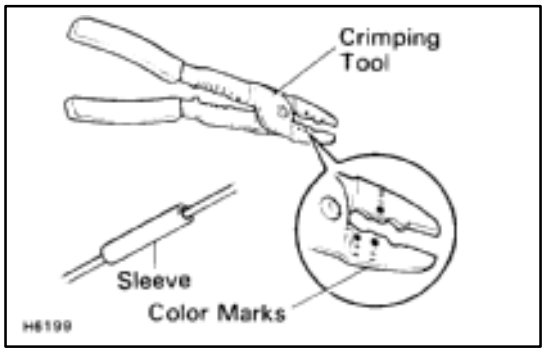

(c) The crimping tool (AMP Part No. 169060) has color marks on it. Place the sleeve in the correct section of the tool according to the color of the sleeve itself.

HINT: As the crimping tool, AMP “Part No. 169060” is convenient to use.

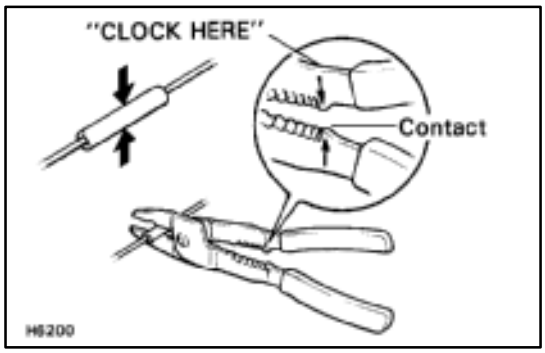

(d) With the center of the sleeve correctly placed between the crimping jaws, squeeze the crimping tool until either end comes into contact at the section marked by “CLOSE HERE”.

HINT: Check to see that the sleeve and wires are still in the correct position before closing the crimping tool ends with steady pressure.

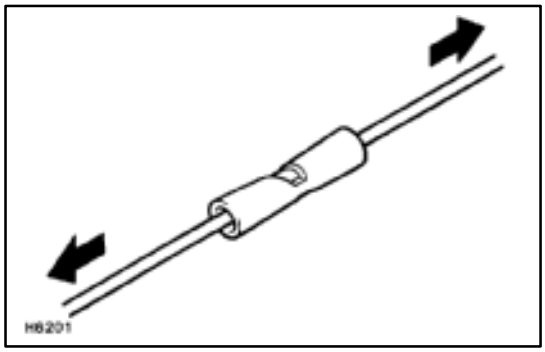

(e) Pull the joined wires to either end. Make sure that they are jointed firmly by the sleeve.

NOTICE: If the jointed wires come loose the splice is defective, so replace the sleeve and repeat the procedure.

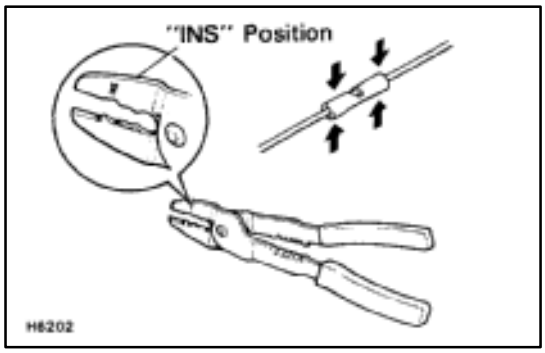

(f) Crimp both ends of the sleeve with the crimping tool at the “INS” position.

WhereEverybodyKnowsYourName

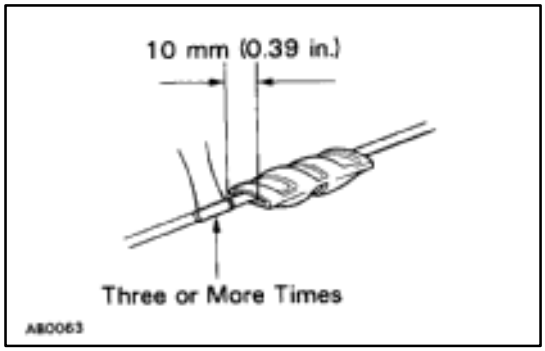

3. PROTECT JOINED SECTION

Wrap silicon tape around the joins to protect them from water.

HINT:

- Before starting the operation, thoroughly wipe dirt and grease off the sections to be joined.
- If the adhesive surfaces of two tapes come in contact they will stick together and will not come apart, so do not remove the backing film except when using the tape.
- Do not let oil and dust, etc. get on the tape surface.

(a) Ready about 100 mm (3.94 in.) of silicon tape (Part No. 08231–00045) and peel off the film.

(b) Stretch the silicon tape until its width is reduced by half.

(c) About 10 mm (0.39 in.) from the end of the pressure–contact sleeve, wrap the silicon tape around the sleeve three or more times while stretching the tape.

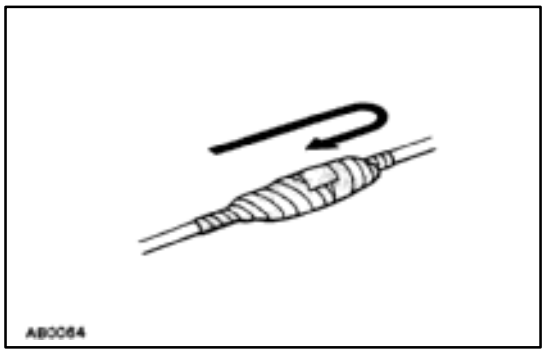

(d) Wrap the remaining part of sleeve with half of the tape overlapping at each turn.

(e) Firmly wrap the tape two times or more about 10 mm (0.39 in.) from the other end of the pressure–contact sleeve, then wrap the tape back towards the start again and firmly finish winding the tape around the center of the sleeve.

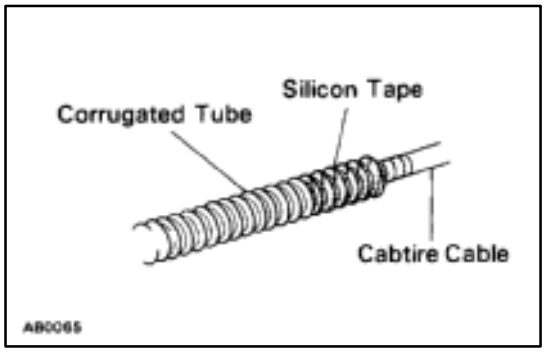

(f) Fix the corrugated tube to the cabtire cable using silicon tape.

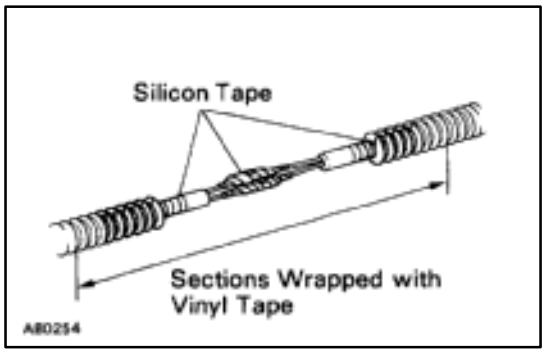

(g) After applying the silicon tape, apply vinyl tape on the corrugated tube of repair wire side over to the corrugated tube of vehicle wire harness side.

WhereEverybodyKnowsYourName

TROUBLESHOOTING

WhereEverybodyKnowsYourName

Description

The SRS (Supplemental Restraint System) airbag, together with the seat belt, is designed to help protect the driver. In a collision, the airbag sensors detect the shock, and if the front–to–rear shock is greater than a specified value, an airbag stored in the steering wheel pad is inflated instantaneously to help reduce the shock to the driver.

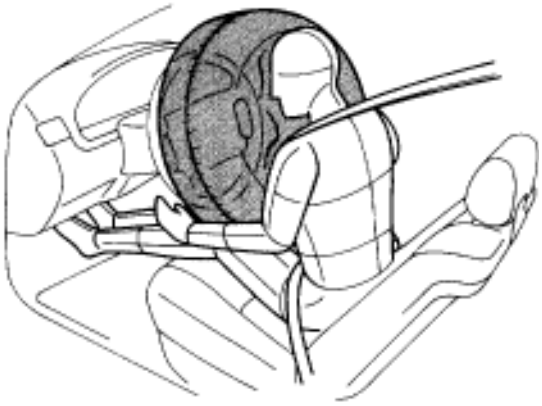

LOCATION OF COMPONENTS

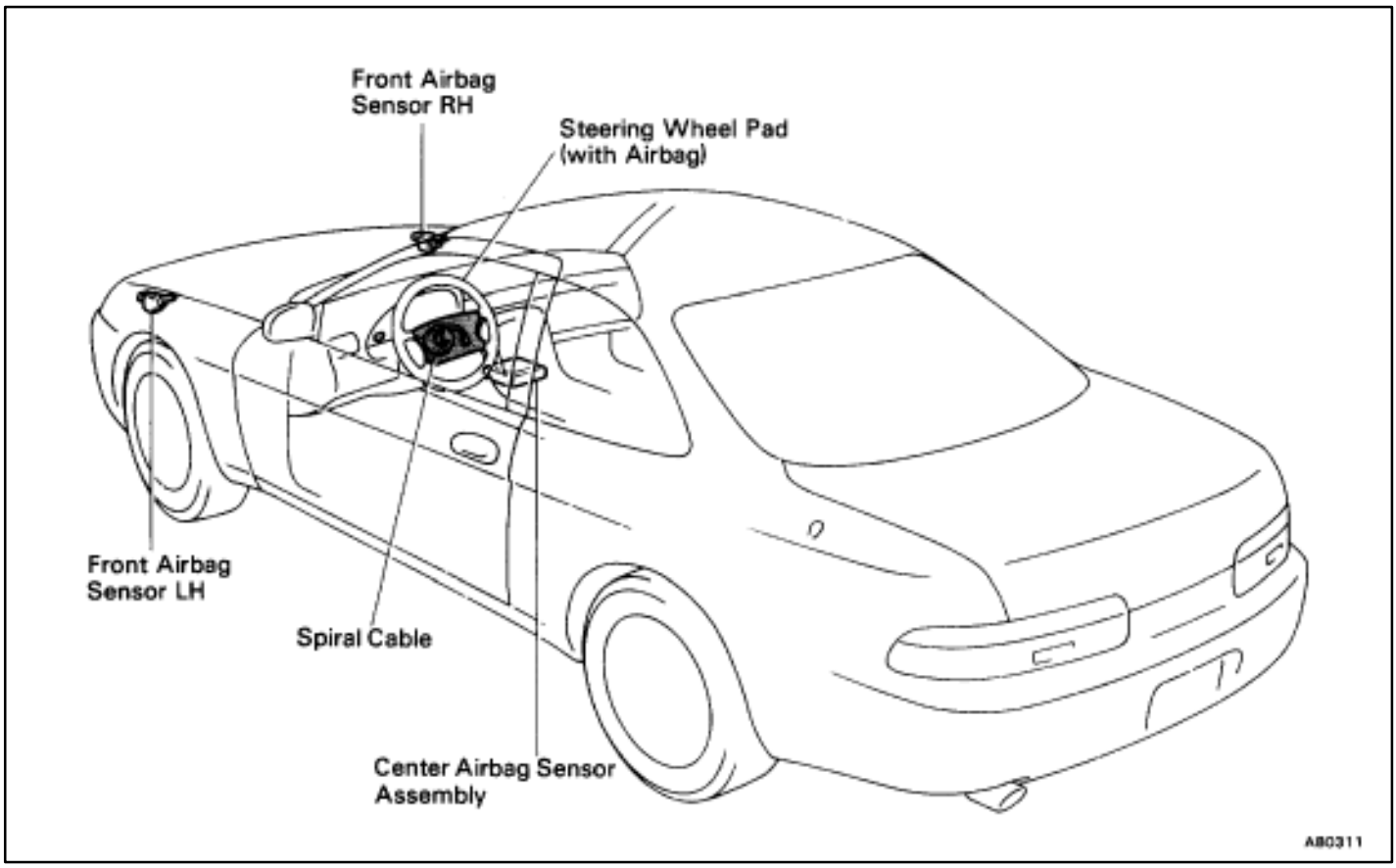

WhereEverybodyKnowsYourName

How To Proceed With Troubleshooting

Malfunction symptoms of the airbag system are difficult to confirm, so the diagnostic codes become the most important source of information when troubleshooting. Perform troubleshooting of the airbag system in accordance with the following procedure:
HINT: Do not disconnect the battery negative (–) terminal cable until step [3], Diagnostic Code Check and Recording, has been completed.

1. CUSTOMER PROBLEM ANALYSIS

Using the CUSTOMER PROBLEM ANALYSIS CHECK SHEET (See page AB–29) for reference, ask the customer in as much detail as possible about the problem.

2. WARNING LIGHT CHECK

Check the airbag warning light. If the light remains on, a malfunction is stored in the center airbag sensor, assembly, so proceed to step [3]. If the airbag warning light is not on, a malfunction has occurred in the airbag warning light circuit, so perform troubleshooting for code 22.
HINT: Code 22 is recorded when a malfunction occurs in the airbag warning light system.
If an open malfunction occurs in the airbag warning light system, the airbag warning light does not light up, so that until the malfunction is repaired, the diagnostic codes (including code 22) cannot be confirmed.

3. DIAGNOSTIC CODE CHECK AND RECORDING

Check the diagnostic codes and make a note of any malfunction codes which are output. If a normal code is output, an abnormality in the power source circuit may have occurred, so perform troubleshooting for source voltage in step [8].
If code 22 is output, skip steps [4] and [5] and proceed to step [7].

4. CLEARING OF MALFUNCTION CODE (EXCEPT CODE 41)

Clear the malfunction code.
HINT: The malfunction code output in step [3] indicates that a malfunction has occurred in the circuit designated by the malfunction code, but does not indicate whether the malfunction is still occurring or whether it was in the past.
Accordingly, it is necessary to find out the present condition of the malfunction occurrence by clearing the malfunction code and performing the diagnostic code check again. If this operation is neglected and troubleshooting is performed using only the malfunction code confirmed in step [3], isolating the problem component becomes difficult and invites mistaken diagnosis.

5. DIAGNOSTIC CODE CHECK AND RECORDING [6] SYMPTOM SIMULATION

After repeating ignition switch ON–OFF operation (ON: wait 20 secs., OFF: wait 20 secs.) 5 times, check the diagnostic codes. If any code other than code 41 is output, the malfunction is still occurring, so proceed to step [7].
If code 41 only is output, the following three cases are possible:

- Intermittent trouble occurred previously, but it is now normal.
- The problem has been corrected, but clearing of code 41 has been forgotten.
- There is a malfunction in the circuit for code 41.

Focusing on the circuit of the malfunction code stored in step 3, use the simulation method in step [6] in order to simulate the malfunction. If the malfunction occurs, proceed to step [7]; if not, proceed to step. [12].

WhereEverybodyKnowsYourName

NOTICE: When connecting the battery after clearing the malfunction code, always do it with the ignition switch in LOCK position. When the battery has been reconnected, turn the ignition switch to ACC or ON position after at least 2 seconds have elapsed.
If the battery is reconnected with the ignition switch in ACC or ON position, or the ignition switch is turned to ACC or ON within 2 seconds of connecting the battery, it is possible that the diagnosis system will not operate normally.
HINT: Determine the malfunction in the airbag system in step [6] by whether or not a malfunction code other than code 41 is output.

7. DIAGNOSTIC CODE CHART
Proceed to the appropriate flow chart in step [8] in accordance with the malfunction code found in step [5] or [6].

8. CIRCUIT INSPECTION [9] REPAIR
Find out if the problem lies in a sensor, actuator or wire harness and connector, and repair the problem. After the problem part is repaired, reinstall the disassembled parts. Do not start work until at least 20 seconds after the ignition switch is turned to the LOCK position and the negative (–) terminal cable is disconnected.
CAUTION: If incorrect procedure is used, a malfunction may occur in the system or there is the danger that airbag may be accidentally activated during the repair operation. Carefully read the GENERAL DESCRIPTION (See page AB–2) and the cautions for each operation, and perform repairs in the correct order using the correct methods.
HINT: The following illustration for the CIRCUIT INSPECTION shows each connector for the circuit from the center airbag sensor assembly to the steering wheel pad (squib).

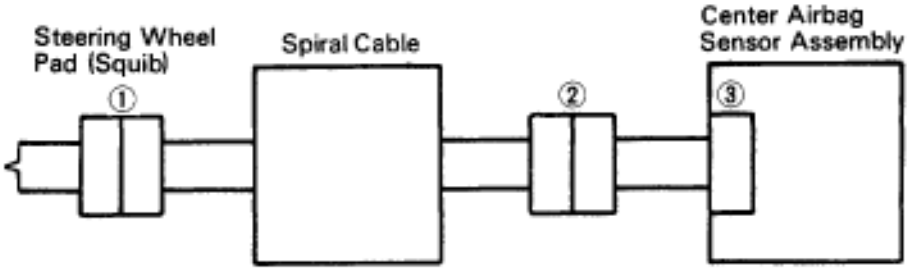

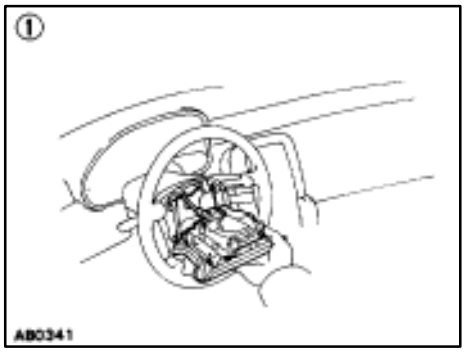

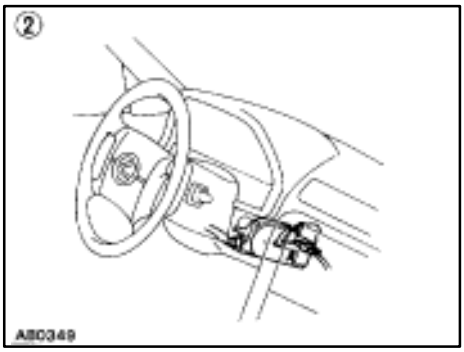

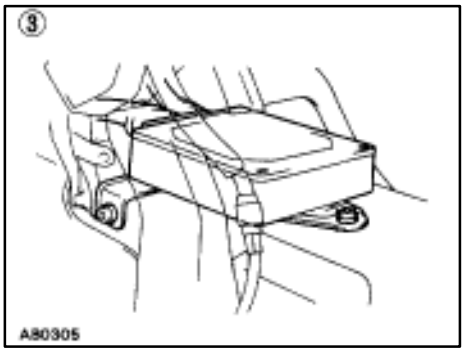

10 CLEARING OF MALFUNCTION CODE (EXCEPT CODE 41)
When all the malfunction codes found in steps [5] and [6] have been repaired, clear the malfunction codes.

WhereEverybodyKnowsYourName

11. DIAGNOSTIC CODE CHECK

After repeating ignition switch ON–OFF operation (ON: wait 20 secs., OFF: wait 20 secs.) 5 times, check the diagnostic codes. If only code 41 is displayed, proceed to step [12]. If a code other than code 41 is displayed, return to step [7] and troubleshoot the displayed malfunction code.

NOTICE: When connecting the battery after clearing the malfunction code, always do it with the ignition switch in LOCK position. When the battery has been reconnected, turn the ignition switch to ACC or ON position after at least 2 seconds have elapsed.

If the battery is reconnected with the ignition switch in ACC or ON position, or the ignition switch is turned ACC or ON within 2 seconds of connecting the battery, it is possible that the diagnosis system will not operate normally.

12. CLEARING OF MALFUNCTION CODE 41 STORED IN MEMORY

Clear malfunction code 41 stored in memory. This operation is not necessary only in case that the power source voltage returns to normal.

13. CONFIRMATION TEST

Check the warning light again and confirm that all the malfunctions have been repaired. If the warning light indicates an abnormality, repeat the operation again from step [2]. If code 41 is output at step [3], skip steps [4] and [5] and proceed to step [7].

WhereEverybodyKnowsYourName

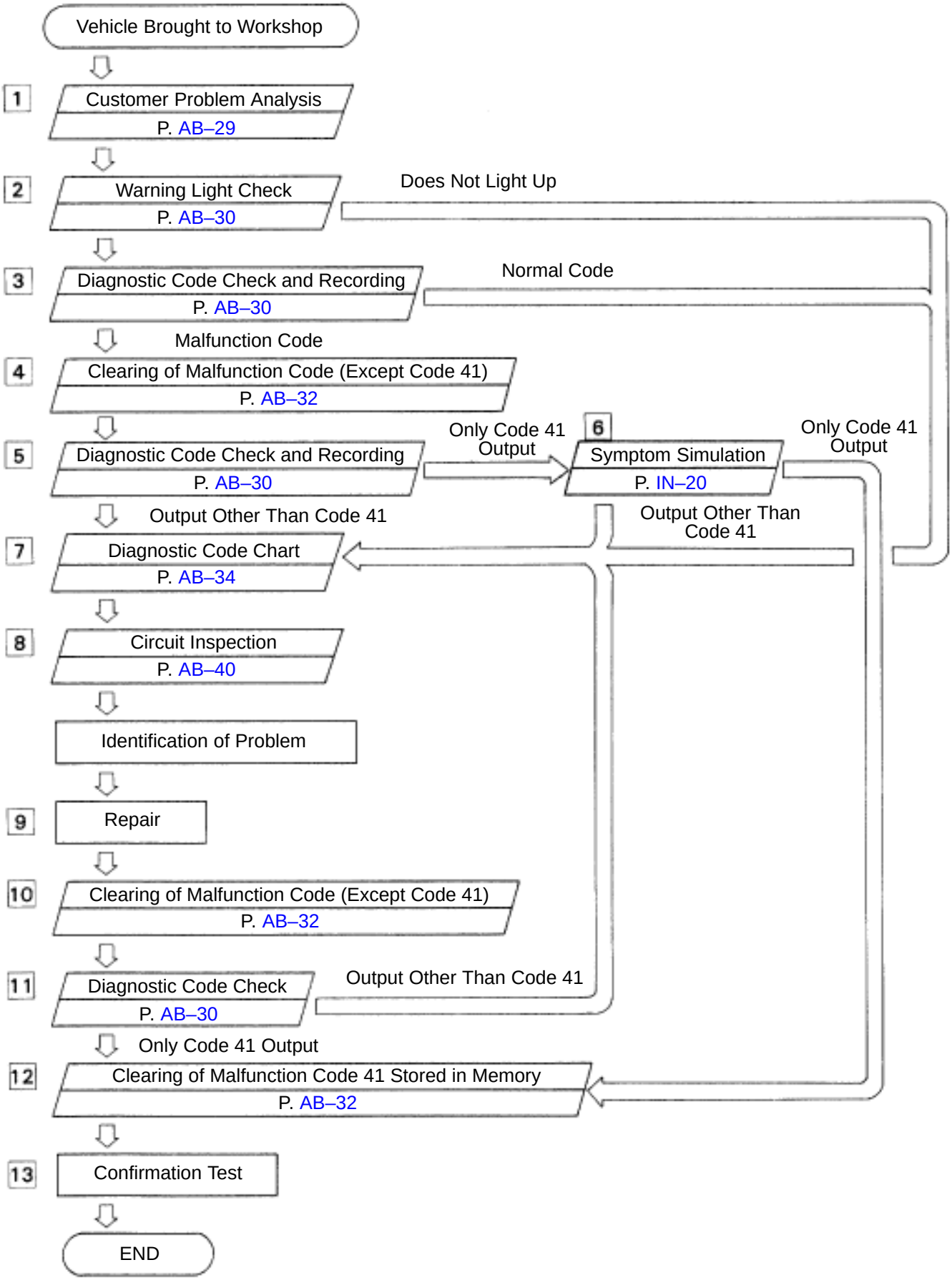

WhereEverybodyKnowsYourName

Customer Problem Analysis Check Sheet

SRS AIRBAG System Check Sheet

Inspector's Name:

Customer's Name		**Registration No.**	
		Registration Year	/ /
		Frame No.	
Date Vehicle Brought In	/ /	**Odometer Reading**	Km Miles

Date of Problem Occurrence		/ /
Conditions at Time of Problem Occurrence	**Weather**	2 Fine 2 Cloudy 2 Rainy 2 Snowy 2 Various/Other
	Outdoor Temperature	2 Hot 2 Warm 2 Cool 2 Cold (Approx. ▼C (▼F))
	Vehicle Operation	2 Starting 2 Idling 2 Driving [2 Constant speed 2 Acceleration 2 Deceleration 2 Other]
	Condition of road	

Details of Problem	
Vehicle Inspection, Repair History Prior to Occurrence of Malfunction (Including Airbag System)	

(Diagnosis System Inspection)

Airbag Warning Light Inspection	**1st Time**	2 Remain On 2 Sometimes Lights Up 2 Does Not Light Up
	2nd Time	2 Remain On 2 Sometimes Lights Up 2 Does Not Light Up
Diagnostic Code Inspection	**1st Time**	2 Normal Code 2 Malfunction Code [Code.]
	2nd Time	2 Normal Code 2 Malfunction Code [Code.]

WhereEverybodyKnowsYourName

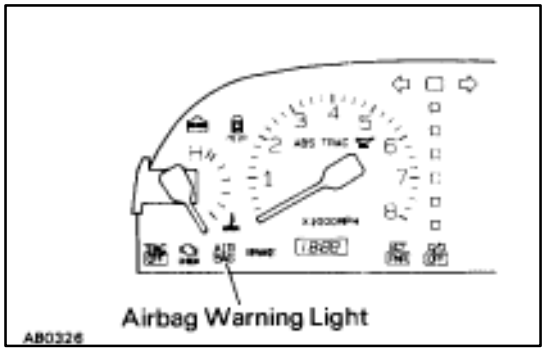

Diagnosis Inspection

AIRBAG WARNING LIGHT CHECK

(a) Turn the ignition switch to ACC or ON and check that the airbag warning light lights up.

(b) Check that the airbag warning light goes out after approx. 6 seconds.

HINT:

- When the ignition switch is at ACC or ON and the airbag warning light remains on, the center airbag sensor assembly has detected a malfunction code.
- If, after approx. 6 seconds have elapsed, the airbag warning light sometimes lights up or the airbag warning light lights up even when the ignition switch is OFF, a short in the airbag warning light circuit can be considered likely. Proceed to Airbag warning light system (always lit up) on page AB–84.

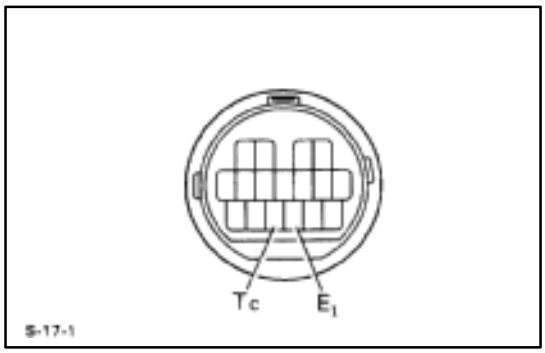

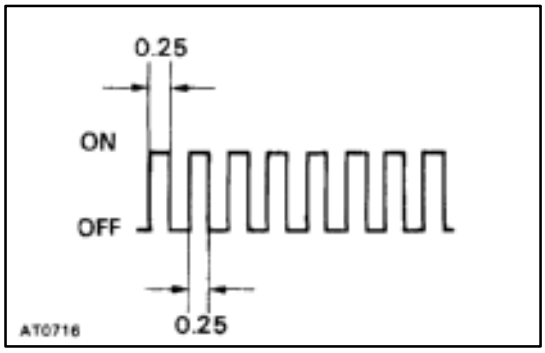

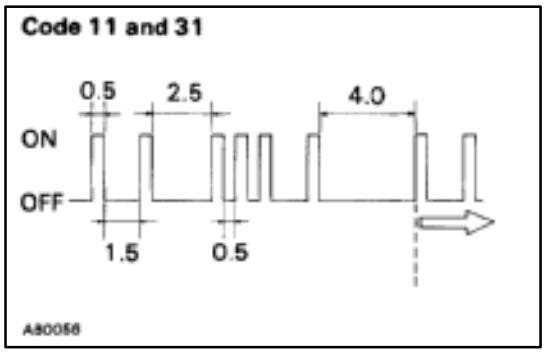

DIAGNOSTIC CODE CHECK

1. OUTPUT DIAGNOSTIC CODE

(a) Turn the ignition switch to ACC or ON position and wait approx. 20 seconds.

(b) Using SST, connect terminals Tc and E_1 of the TDCL.

SST 09843–18020

NOTICE: Never make a mistake with the terminal connection position as this will cause a malfunction.

2. READ DIAGNOSTIC CODE

Read the diagnostic code as indicated by the number of times the airbag warning light blinks.

- Normal code indication

The light will blink 2 times per second.

- Malfunction code indication

  In the event of a malfunction, the light will blink. The first number of the code No. will equal the first digit of a 2–digit diagnostic code, and after a 1.5 second pause, the 2nd number of the code No. will equal the 2nd digit. If there are two or more codes, there will be a 2.5 second pause between each.

After all the codes have been output, there will be a 4.0 second pause and they will all be repeated.

HINT:

- In the event of a number of trouble codes, indication will begin from the smaller numbered code to the larger.
- If a diagnostic code is not output or is continuously output, proceed to the TC terminal circuit inspection on page AB–86.

WhereEverybodyKnowsYourName

DIAGNOSTIC CODES

Code No.	Blink Pattern	Diagnosis	Trouble Area	AIRBAG Warning Light
(Normal)	FI1401	▼System normal	–	OFF
		▼Source Voltage drop	▼Battery ▼Center airbag sensor assembly	ON
11	AB0057	▼Short in squib circuit (to ground) ▼Front airbag sensor malfunction ▼Flower sensor malfunction	▼Steering wheel pad (squib) ▼Front airbag sensor ▼Spiral cable ▼Center airbag sensor assembly ▼Wire harness	ON
12	FI1389	▼Short in squib circuit (to +B)	▼Steering wheel pad (squib) ▼Front airbag sensor ▼Spiral cable ▼Center airbag sensor assembly ▼Wire harness	ON
13	FI1390	▼Short in squib circuit (between D^+ wire harness and D^- wire harness)	▼Steering wheel pad (squib) ▼Spiral cable ▼Center airbag sensor assembly ▼Wire harness	ON
14	FI1391	▼Open in squib circuit	▼Steering wheel pad (squib) ▼Spiral cable ▼Center airbag sensor assembly ▼Wire harness	ON
15	AB0058	▼Open in front airbag sensor circuit	▼Front airbag sensor ▼Center airbag sensor assembly ▼Wire harness	ON
22	FI1392	▼Airbag warning light system malfunction	▼Airbag warning light ▼Center airbag sensor assembly ▼Wire harness	ON
31	FI1394	▼Center airbag sensor assembly malfunction	▼Center airbag sensor assembly	ON
41	FI1396	▼Malfunction stored in memory	▼(Center airbag sensor assembly)	ON

HINT:

- When the airbag warning light remains lit up and the diagnostic code in the normal code, this means a source voltage drop.
  This malfunction is not stored in memory by the center airbag sensor assembly and if the power source voltage returns to normal, after approx. 10 seconds the airbag warning light will automatically go out.
- Code 22 in recorded when a malfunction occurs in the airbag warning light system. If an open malfunction occurs in the airbag warning light system, the airbag warning light does not light up, so that until the mal–function is repaired, the diagnostic codes (including code 22) cannot be confirmed.
- When a malfunction occurs in the airbag system, malfunction codes 11 to 31 are output. After repairing the malfunction indicated by malfunction codes 11 to 31, codes 11 to 31 are cleared from the memory, but code 41 is output instead. Once the malfunction has been detected, the airbag warning light will remain lit up until code 41 is cleared, even though the malfunction has been repaired.
- When 2 or more codes are indicated, the lowest numbered code will appear first.
- If a code not listed on the chart is displayed, then the center airbag sensor assembly is faulty.

WhereEverybodyKnowsYourName

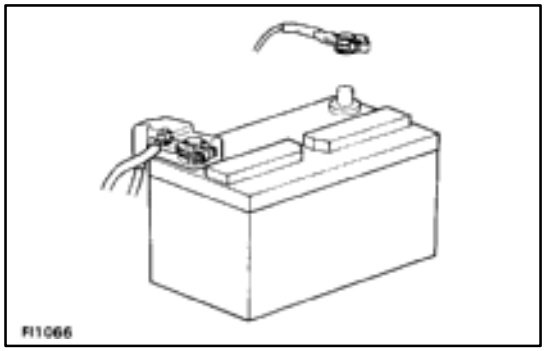

CLEARING OF DIAGNOSTIC CODE

1. CLEARING OF MALFUNCTION CODE (EXCEPT CODE 41)

Remove the battery negative (–) terminal or ECU–B fuse for 10 seconds or more with the ignition switch OFF.

NOTICE: When connecting the battery after cancelling the malfunction code, always do it with the ignition switch in LOCK position. If the battery is connected with the ignition switch in ACC or ON position, there are cases when the diagnosis system does not operate normally.

HINT:

- Code 41 cannot be cleared by this method.
- The lower the temperature, the longer the battery negative (–) terminal must be left off.
- Other memory systems (clock, audio system) will also be cancelled out (See page AB–2).

2. CLEARING OF MALFUNCTION CODE 41 STORED IN MEMORY

(a) Connect service wires to terminals Tc and AB of the TDCL.

(b) Turn the ignition switch ACC or ON and wait approx. 6 seconds.

(c) Starting with the Tc terminal, apply body ground alternately to terminal Tc and terminal AB twice each in cycles of 1.0 ± 0.5 seconds. Finally, keep applying body ground to terminal Tc.

HINT: When alternating between body ground of terminals Tc and AB release one from body ground while applying it to the other terminal. The time interval in between must be within the following conditions. If it is out of the conditions, code 41 will not be cleared.

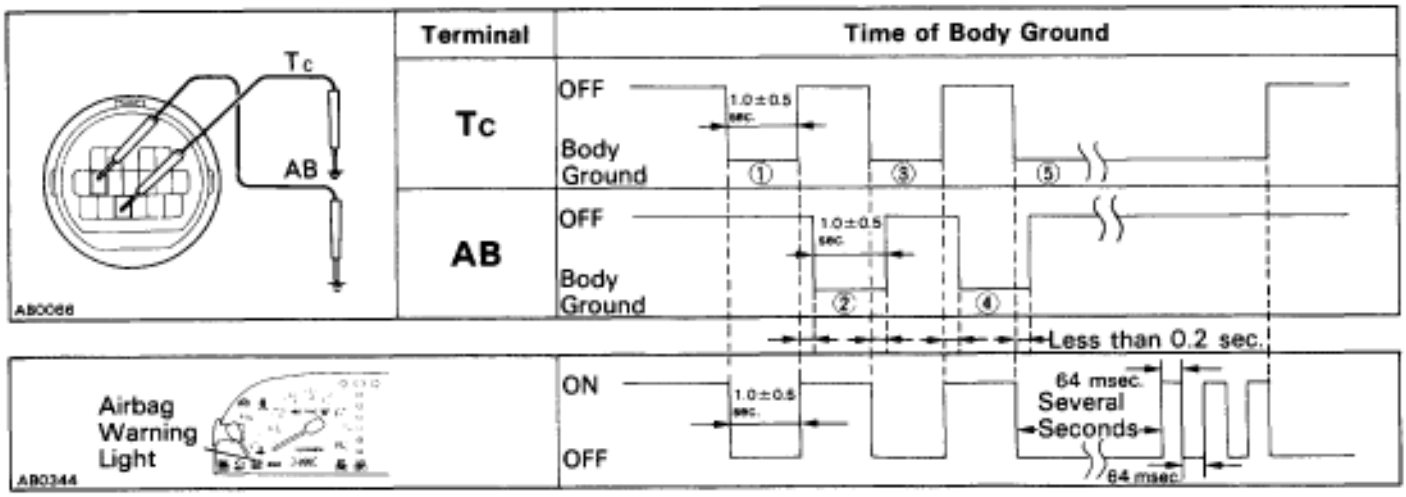

(d) After several seconds, when the airbag warning light starts to blink in a 64 msec. cycle, cancellation is completed.

HINT: This method clears not only code No. 41, but also other malfunction codes all at once.

Except when instructed by the troubleshooting procedure, use this method only when the repair procedure is completed (See page AB–25).

WhereEverybodyKnowsYourName

Wiring Diagram

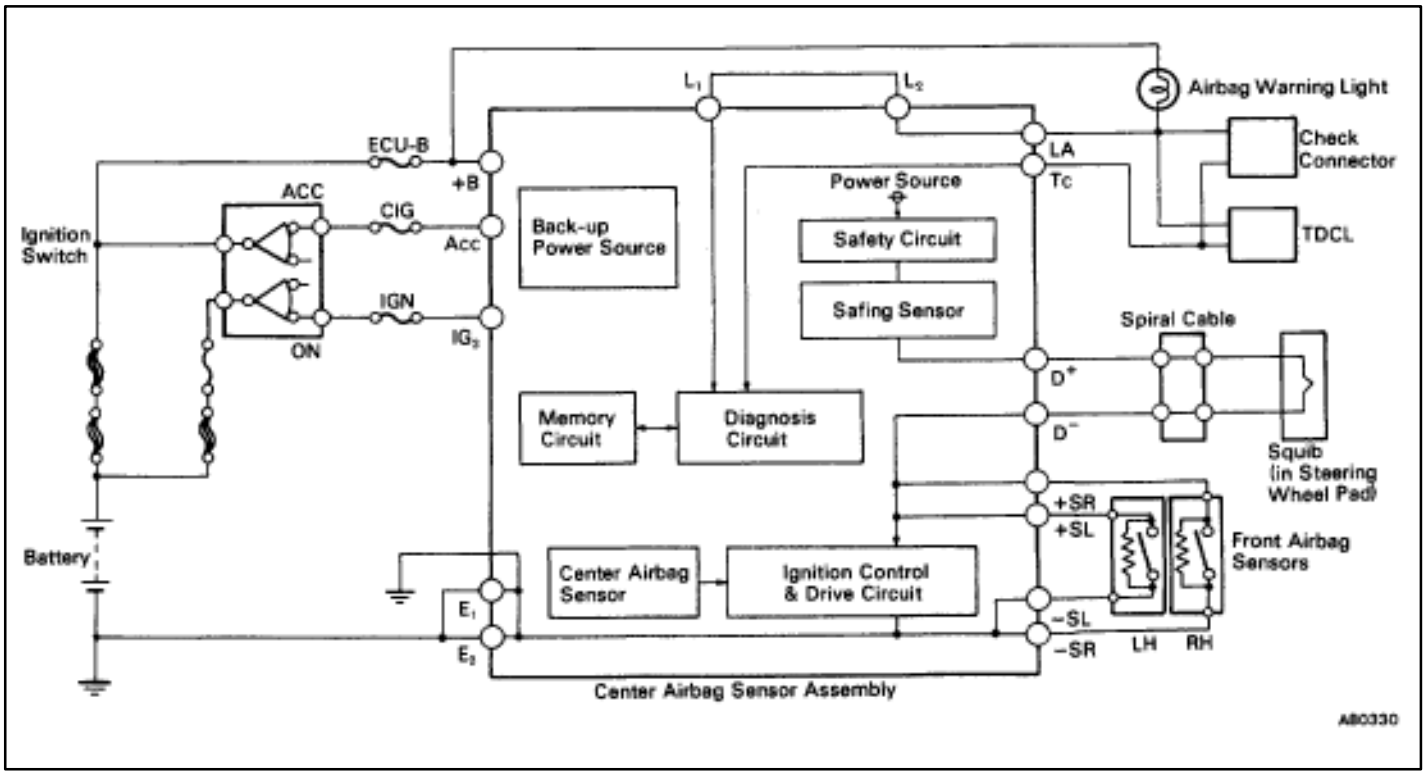

CENTER AIRBAG SENSOR ASSEMBLY CONNECTOR

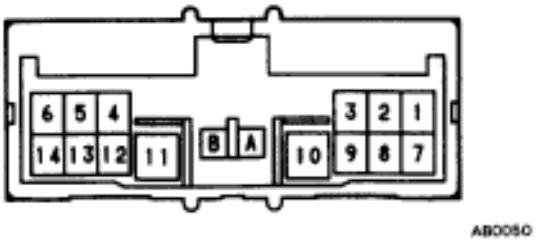

No.	Symbol	Terminal Name	No.	Symbol	Terminal Name
1			8	E_2	Ground
2	–SR	RH Front Airbag Sensor (–)	9	LA	Airbag Warning Light
3	+SR	RH Front Airbag Sensor (+)	10	D^-	Squib (–)
4	+SL	LH Front Airbag Sensor (+)	11	D^+	Squib (+)
5	–SL	LH Front Airbag Sensor (–)	12	Tc	Diagnosis
6	+B	Battery (ECU–B Fuse)	13	E_1	Ground
7	IG_2	Power Source (IGN Fuse)	14	Acc	Power Source (CIG Fuse)
A	L1	Electrical Connection Check Mechanism	B	L_2	Electrical Connection Check Mechanism

WhereEverybodyKnowsYourName

Diagnostic Code Matrix Chart

If a malfunction code is displayed during the diagnostic code check, check the circuit listed for that code in the table below (Proceed to the page given for that circuit).

Code No.	Diagnosis	Page
(Normal)*1	Source voltage drop	AB–40
11	Short in squib circuit or front airbag sensor circuit (to ground)	AB–42
12	Short in squib circuit or front airbag sensor circuit (to +B)	AB–48
13	Short in squib circuit (between D+ wire harness and D– wire harness)	AB–54
14	Open in squib circuit	AB–62
15	Open in front airbag sensor circuit	AB–68
22*2	Airbag warning light system malfunction	AB–74
31	Center airbag sensor assembly malfunction	AB–80
41*3	Malfunction stored in memory	AB–82

HINT:

*1 When the airbag warning light remains lit up and the diagnostic code is the normal code, this means a source voltage drop.

*2 Code 22 is recorded when a malfunction occurs in the airbag warning light system. If an open malfunction occurs in the airbag warning light system, the airbag warning light does not light up, so that until the malfunction is repaired, the diagnostic code (including code 22) cannot be confirmed.

*3 When a malfunction occurs in the airbag system, malfunction codes 11 to 31 are output. After repairing the malfunction indicated by malfunction codes 11 to 31, codes 11 to 31 are cleared from the memory, but code 41 is output instead. Once the malfunction has been detected, the airbag warning light will remain lit up until code 41 is cleared, even though the malfunction has been repaired.

Problem Symptom Chart

Proceed with troubleshooting of each circuit in the table below.

Problem Symptom	Inspection Item	Page
▼With the ignition switch at ACC or ON, the airbag warning light sometimes lights up after approx. 6 seconds have elapsed. ▼Airbag warning light lights up even when ignition switch is in the LOCK position.	▼Airbag warning light system (Always lit up)	AB–84
▼Diagnostic code not displayed. ▼Diagnostic code continuously displayed.	▼Tc terminal circuit	AB–86

WhereEverybodyKnowsYourName

MEMO

WhereEverybodyKnowsYourName

Location of Connectors

LOCATION OF CONNECTORS IN INSTRUMENT PANEL

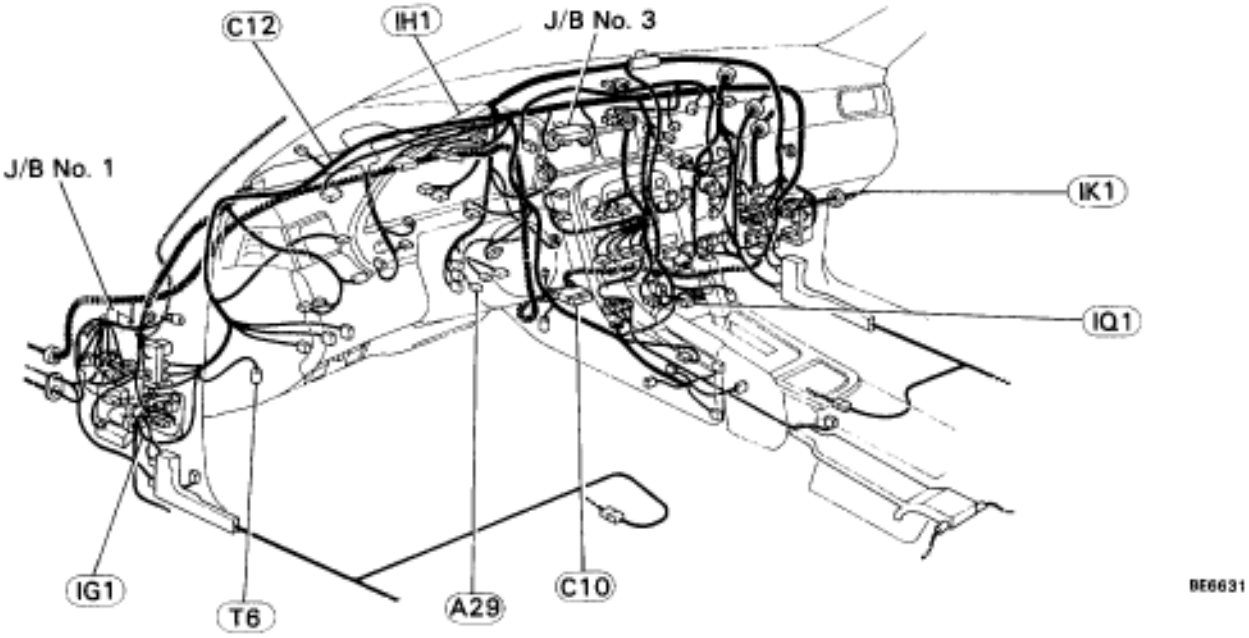

A29

Airbag Squib

e-2-1-C

C10

Center Airbag Sensor Assembly

e-14-1-D

C12

Combination Meter

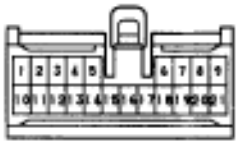

h-21-1

T6

TDCL (Total Diagnostic Communication Link)

IG1

eh-23-1

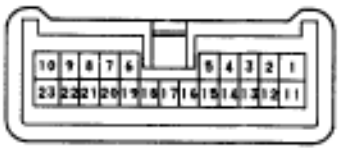

eh-23-2

IH1

e-2-1

e-2-2

IK1

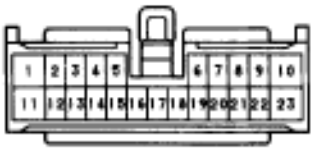

eh-23-1

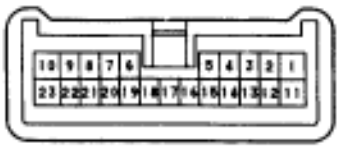

eh-23-2

WhereEverybodyKnowsYourName

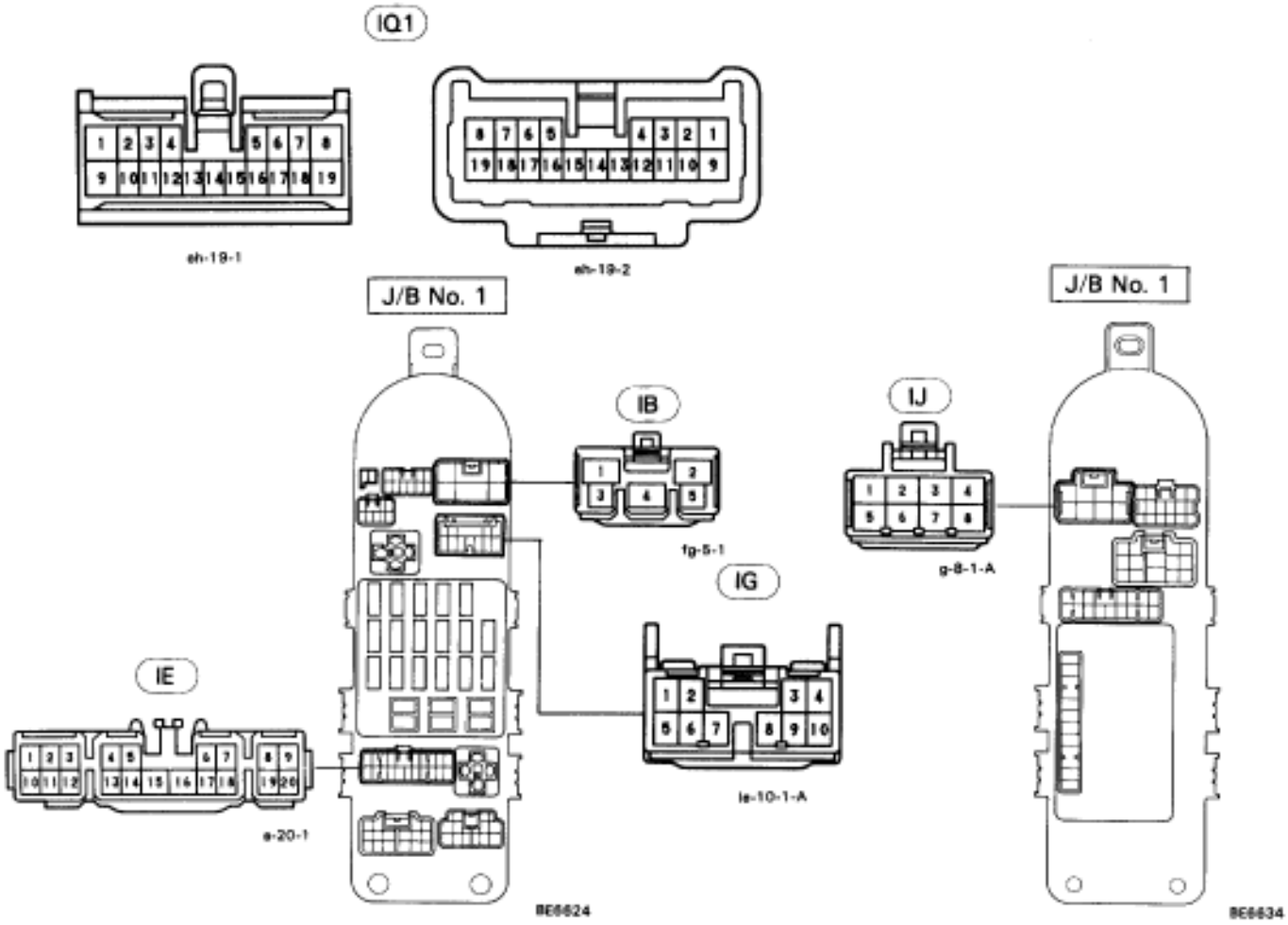

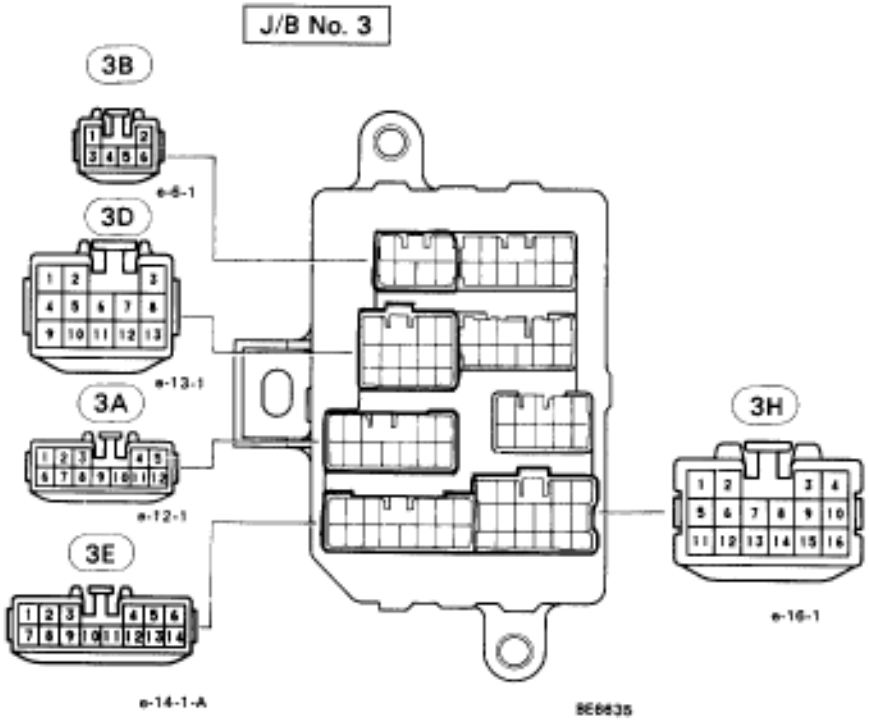

WhereEverybodyKnowsYourName

LOCATION OF CONNECTORS IN ENGINE COMPARTMENT

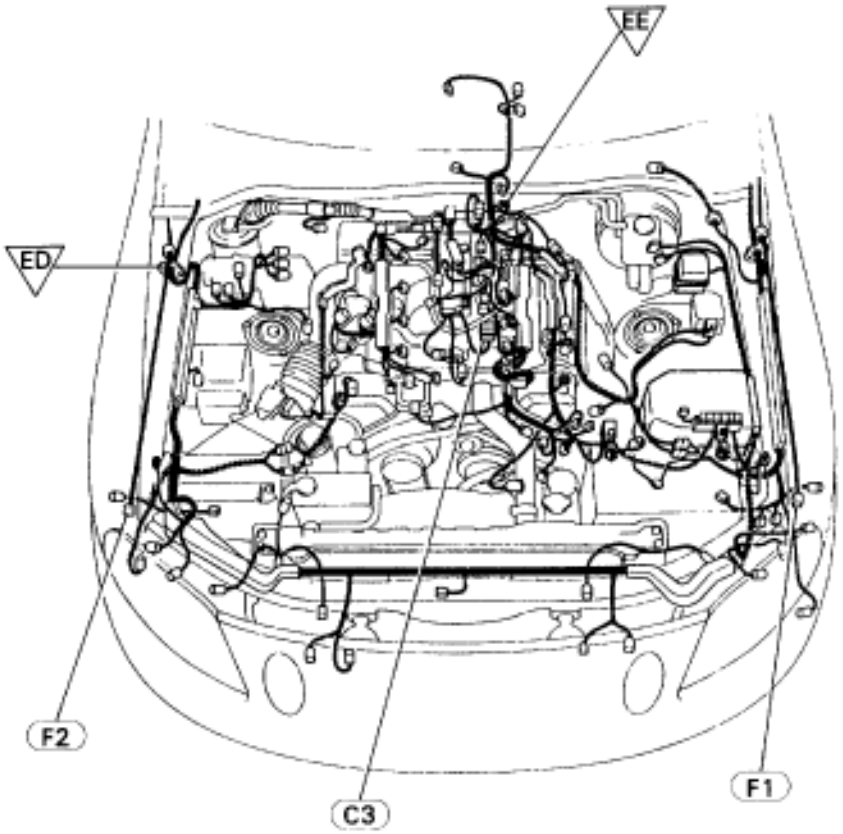

RE6830

C3
Check Connector

F1
Front Airbag Sensor LH

F2
Front Airbag Sensor RH

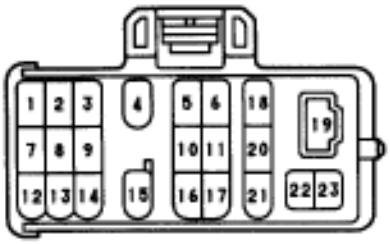

Ie-23-1

Ie-2-1-8

Ie-2-1-8

WhereEverybodyKnowsYourName

MEMO

WhereEverybodyKnowsYourName

Circuit Inspection

Diag. Code (Normal)	Source Voltage Drop

CIRCUIT DESCRIPTION

The airbag system is equipped with a voltage–increase circuit (DC–DC converter) in the center airbag sensor assembly in case the source voltage drops.
When the battery voltage drops, the voltage–increase circuit (DC–DC converter) functions to increase the voltage of the airbag system to normal voltage.
The diagnosis system malfunction display for this circuit is different to other circuits–when the airbag warning light remains lit up and the diagnostic code is a normal code, source voltage drop is indicated.
Malfunction in this circuit is not recorded in the center airbag sensor assembly, and approx. 10 seconds after the source voltage returns to normal, the airbag warning light automatically goes off.

Code No.	Diagnosis
(Normal)	Source voltage drop.

DIAGNOSTIC CHART

1 Preparation.

2 Does airbag warning light turn on after approx. 10 seconds?

No → Check diagnostic code, and if a malfunction code is output, perform troubleshooting according to malfunction code.
If a normal code is output, replace center airbag sensor assembly.

Yes → Check battery and charging system (See page CH–1).

WIRING DIAGRAM

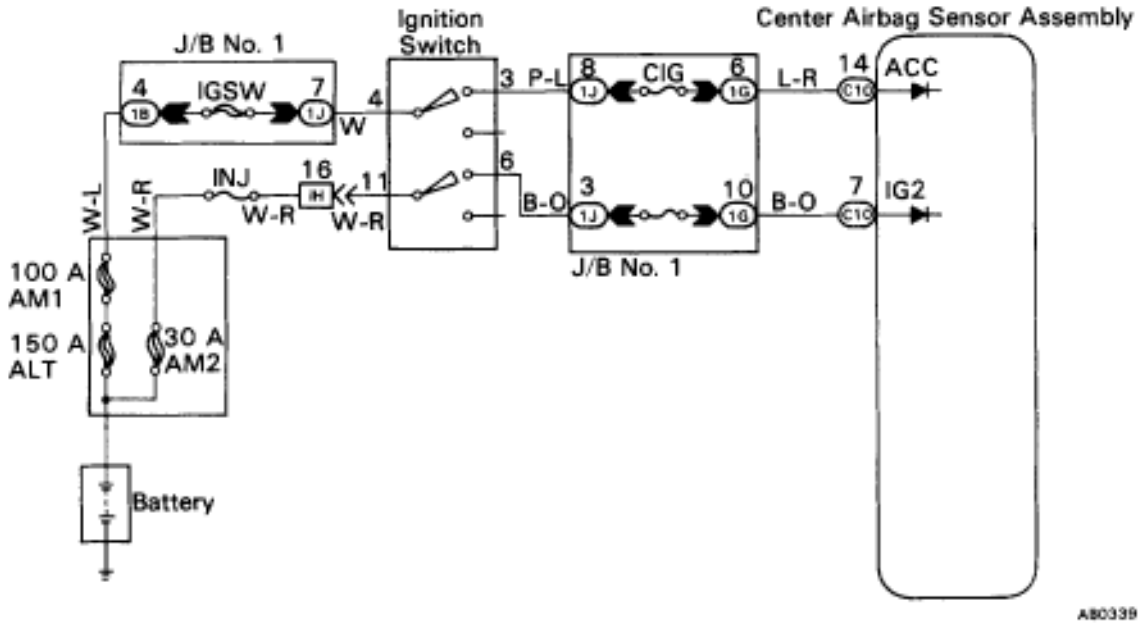

WhereEverybodyKnowsYourName

INSPECTION PROCEDURE

1 Preparation.

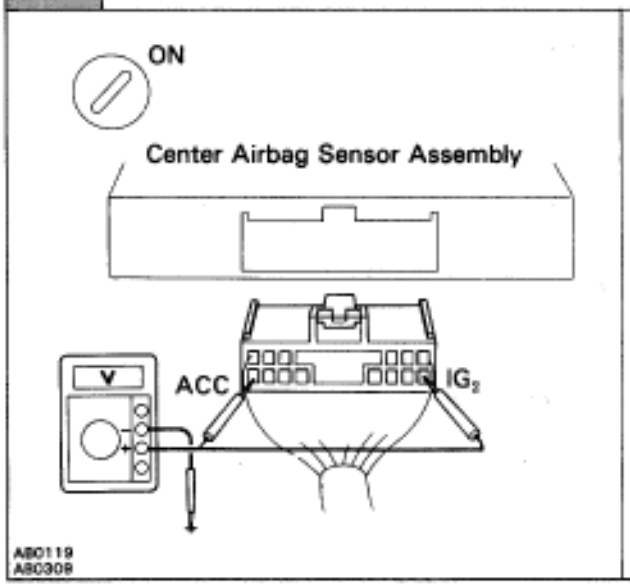

P
(1) Turn ignition switch LOCK.
(2) Disconnect center airbag sensor assembly connector.
(3) Turn ignition switch ON. But do not start engine.
(4) Measure voltage at IG_2 or ACC on connector wire harness side of center airbag assembly and operate electric system (defogger, wiper, headlight, heater, blower, etc.).
Voltage: 6 V – 11.5 V at IG_2 and ACC.
(5) Turn electric system switch OFF.
(6) Turn ignition switch LOCK.
(7) Remove voltmeter and connect center airbag sensor assembly.

2 Does airbag warning light turn off after approx. 10 seconds?

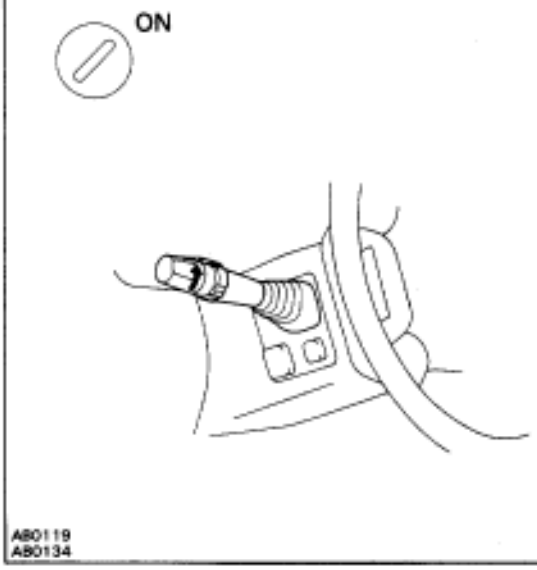

P Turn ignition switch ON.

C Operate electric system checked in [1] (4) and check that airbag warning light goes off after approx. 10 seconds.

YES

NO → **Check diagnostic code, and if a malfunction code is output, perform troubleshooting according to malfunction code. If a normal code is output, replace center airbag sensor assembly.**

Check battery and charging system
(See page CH–1)

WhereEverybodyKnowsYourName

Diag. Code 11	Short is Squib Circuit or Front Airbag Sensor Circuit (to Ground)

CIRCUIT DESCRIPTION

The squib circuit consists of the center airbag sensor assembly, spiral cable and the steering wheel pad (squib). It causes the airbag to deploy when the airbag deployment conditions are satisfied.
The front airbag sensor detects the deceleration force in a frontal collision and is located in the front fender on the left and right sides.
For details of the function of each component, see FUNCTION OF COMPONENTS on page AB–5.
Diagnostic code 11 is recorded when occurrence of ground short is detected in the squib circuit or front airbag sensor circuit.

Code No.	Diagnosis
11	▼Short circuit in squib wire harness (to ground). ▼Squib malfunction. ▼Short circuit in front airbag sensor +S wire harness (to ground). ▼Front airbag sensor malfunction. ▼Short circuit between +S wire harness and –S wire harness of front airbag sensor. ▼Spiral cable malfunction. ▼Center airbag sensor assembly malfunction.

DIAGNOSTIC CHART

1 Preparation.

↓

2 Check front airbag sensor circuit. (Measure resistance between terminals +SR and –SR, +SL and –SL of center airbag sensor assembly connector.
- NG → Go to step [7] on next page.
- OK ↓

3 Check front airbag sensor circuit. (Measure resistance between terminals +SR, +SL of center airbag sensor assembly connector and body ground.
- NG → Repair or replace harness or connector between center airbag sensor assembly and front airbag sensor (See page AB–20).
- OK ↓

4 Check squib circuit.
- NG → Go to step [8] on next page.
- OK ↓

5 Check center airbag sensor assembly.
- NG → Replace center airbag sensor assembly.
- OK ↓

6 Check squib.
- NG → Replace steering wheel pad.
- OK ↓

From the results of the above inspection, the malfunctioning part can now be considered normal. To make sure of this, use the simulation method to check.

WhereEverybodyKnowsYourName

DIAGNOSTIC CHART (Cont'd)

7 Check front airbag sensor.

NG → Replace front airbag sensor.

OK → Repair or replace harness or connector between center airbag sensor assembly and front airbag sensor (See page AB–20).

8 Check spiral cable.

NG → Repair or replace spiral cable.

OK → Repair or replace harness or connector between center airbag sensor assembly and spiral cable.

WIRING DIAGRAM

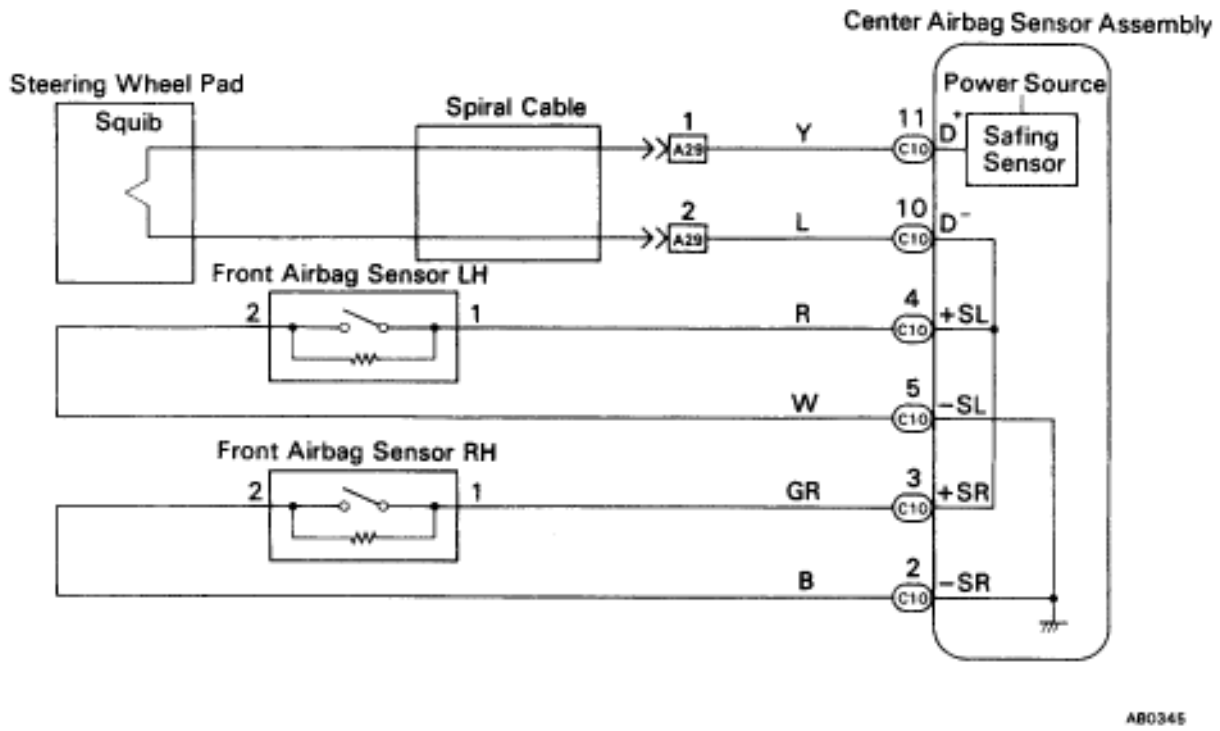

WhereEverybodyKnowsYourName

INSPECTION PROCEDURE

1 Preparation.

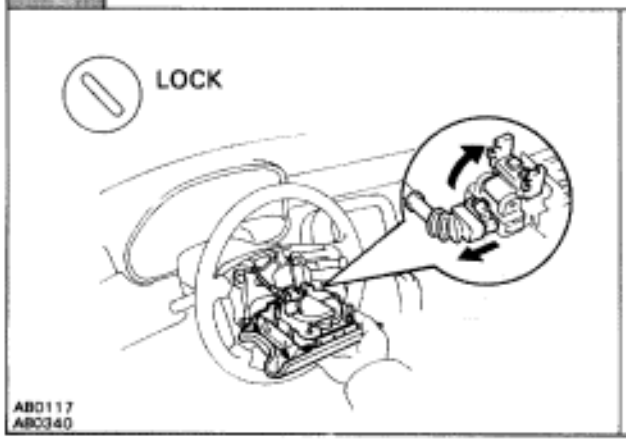

P (1) Disconnect battery negative (–) terminal cable, and wait at least 20 seconds.

(2) Remove steering wheel pad (See page AB–16).

Caution

When storing steering wheel pad, keep upper surface of the pad facing upward.

2 Check front airbag sensor circuit. (Measure resistance between terminals +SR and –SR, +SL and –SL of center airbag sensor assembly connector.

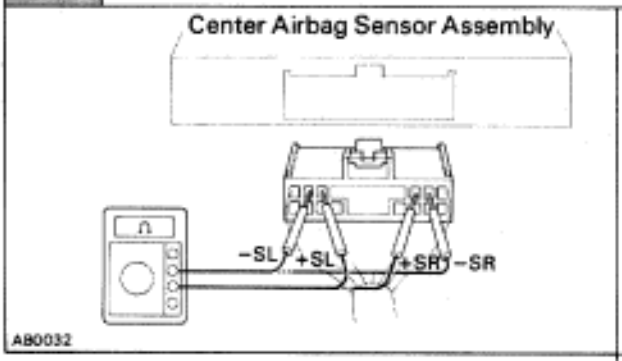

P Disconnect center airbag sensor assembly connector.

C Measure resistance between terminals +SR and –SR, +SL and –SL of harness side connector of center airbag sensor assembly.

OK **Resistance: 755 ? – 855 ?**

OK

NG **Go to step [7].**

3 Check front airbag sensor circuit. (Measure resistance between terminals +SR and +SL of center airbag sensor assembly connector and body ground.

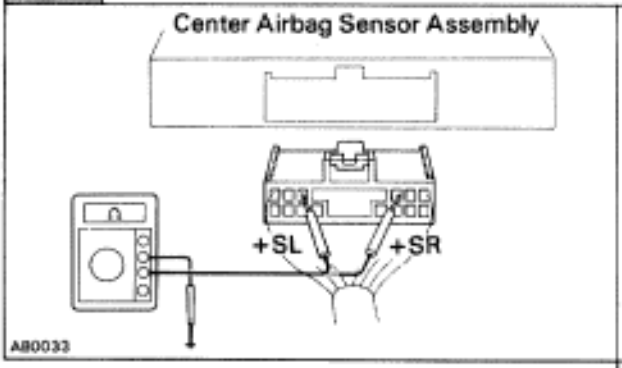

C Measure resistance between terminals +SR, +SL of harness side connector of center airbag sensor assembly and body ground.

OK **Resistance: 1 M ? or higher**

OK

NG **Repair or replace harness or connector between center airbag sensor assembly and front airbag sensor (See page AB–20).**

WhereEverybodyKnowsYourName

4 Check squib circuit.

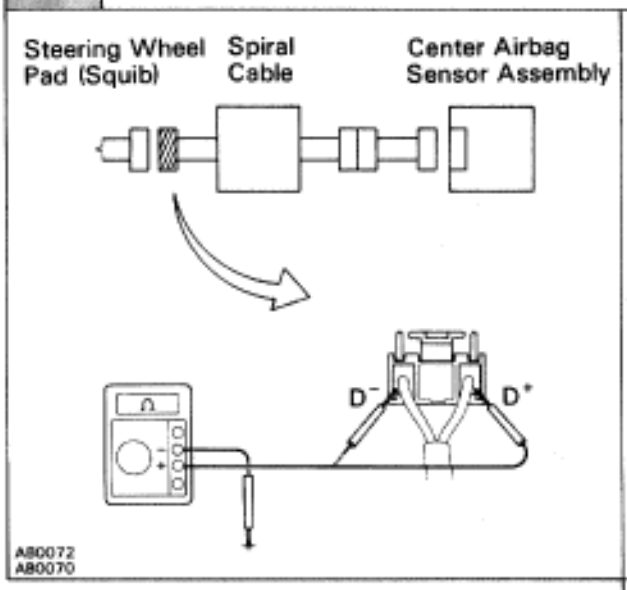

C Measure resistance between D^+, D^- on spiral cable side of connector between spiral cable and steering wheel pad and body ground.

OK **Resistance: 1 M ? or higher**

OK

NG **Go to step [8].**

5 Check center airbag sensor assembly.

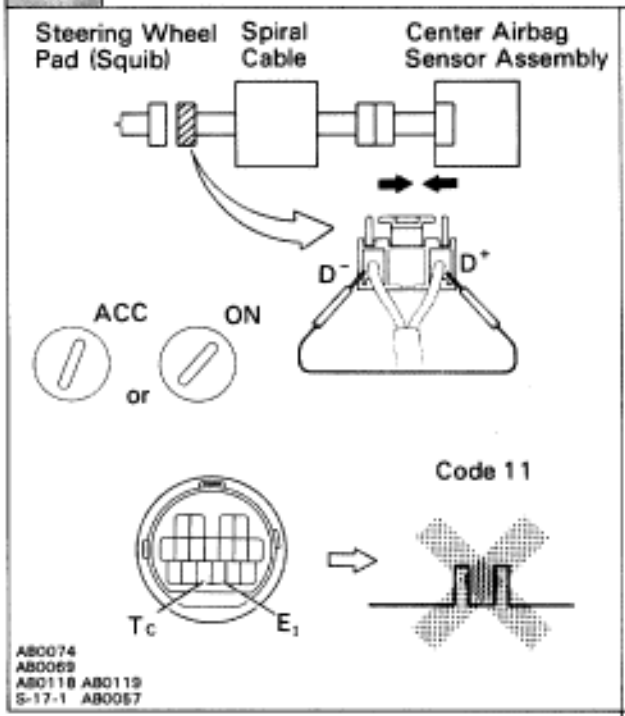

P
(1) Connect connector to center airbag sensor assembly.
(2) Using a service wire, connect D^+, D^- on spiral cable side of connector between spiral cable and steering wheel pad.
(3) Connect negative (–) terminal cable to battery, and wait at least 2 seconds.

C
(1) Turn ignition switch ACC or ON and wait at least 20 seconds.
(2) Using SST, connect terminals Tc and E_1 of TDCL.
SST 09843–18020
(3) Check diagnostic code.

OK **Diagnostic code 11 is not output.**

Hint Codes other than code 11 may be output at this time, but this is not relevant.

OK

NG **Replace center airbag sensor assembly.**

WhereEverybodyKnowsYourName

6 Check squib.

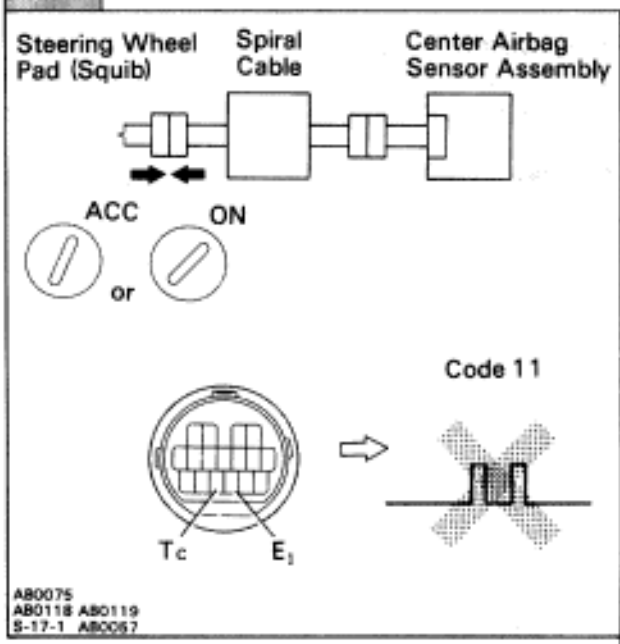

P
(1) Turn ignition switch LOCK.
(2) Disconnect battery negative (–) terminal cable, and wait at least 20 seconds.
(3) Connect steering wheel pad (squib) connector.
(4) Connect negative (–) terminal cable to battery, and wait at least 2 seconds.

C
(1) Turn ignition switch ACC or ON, and wait at least 20 seconds.
(2) Using SST, connect terminals Tc and E_1 of TDCL.
SST 09843–18020
(3) Check diagnostic code.

OK **Diagnostic code 11 is not output.**

Hint Codes other than code 11 may be output at this time, but this is not relevant.

OK

NG **Replace steering wheel pad.**

From the results of the above inspection, the malfunctioning part can now be considered normal. To make sure of this, use the simulation method to check.

7 Check front airbag sensor.

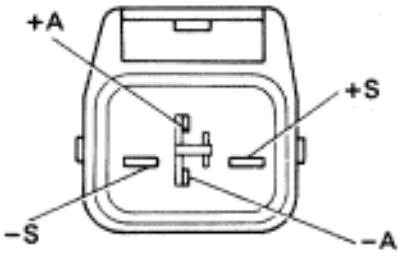

P Disconnect front airbag sensor connector.

C Measure resistance between each terminal of front airbag sensor.

OK

Terminal	Resistance
+S – +A	755 Ω – 885 Ω
+S – –S	1 MΩ or higher
–S – –A	Below 1 Ω

Notice
- Do not touch ohmmeter probes strongly against terminals of front airbag sensor.
- Make sure the front airbag sensor connector is properly connected.

OK

NG **Replace front airbag sensor.**

Repair or replace harness or connector between center airbag sensor assembly and front airbag sensor (See page AB–20).

WhereEverybodyKnowsYourName

8 Check squib circuit.

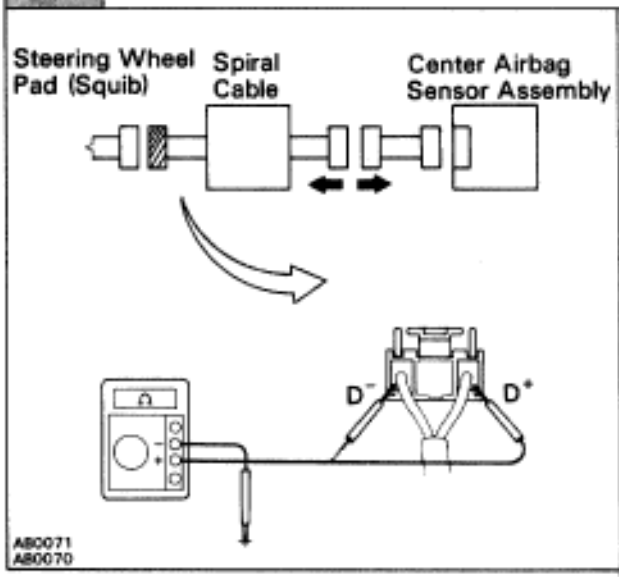

P Disconnect connector between center airbag sensor assembly and spiral cable.

C Measure resistance between D+, D– on spiral cable side of connector between spiral cable and steering wheel pad and body ground.

OK **Resistance: 1 M ? or higher**

OK

NG **Repair or replace spiral cable.**

Repair or replace harness or connector between center airbag sensor assembly and spiral cable,

WhereEverybodyKnowsYourName

Diag. Code 12	Short in Squib Circuit or Front Airbag Sensor Circuit (to +B)

CIRCUIT DESCRIPTION

The squib circuit consists of the center airbag sensor assembly, spiral cable and the steering wheel pad (squib). It causes the airbag to deploy when the airbag deployment conditions are satisfied.
The front airbag sensor detects the deceleration force in a frontal collision and is located in the front fender on the left and right sides.
For details of the function of each component, see FUNCTION OF COMPONENTS on page AB–5.
Diagnostic code 12 is recorded when a +B short is detected in the squib circuit or the front airbag sensor circuit.

Code No.	Diagnosis
12	▼Short circuit in squib wire harness (to +B) ▼Squib malfunction. ▼Short circuit in front airbag sensor +S wire harness (to +B). ▼Open circuit in RH and LH front airbag sensor harness. ▼Spiral cable malfunction. ▼Center airbag sensor assembly malfunction.

WhereEverybodyKnowsYourName

DIAGNOSTIC CHART

1 Preparation.

↓

2 Check front airbag sensor circuit.
(Measure resistance between terminals +SR and –SR, +SL and –SL of center airbag sensor assembly connector).

NG → Go to Code 15 (See page AB–68).

OK ↓

3 Check front airbag sensor circuit.
(Measure voltage between terminal +SR or +SL of center airbag sensor assembly connector and body ground).

NG → Repair or replace harness or connector between center airbag sensor assembly and front airbag sensor (See page AB–20).

OK ↓

4 Check squib circuit.

NG → Go to step [7].

OK ↓

5 Check center airbag sensor assembly.

NG → Replace center airbag sensor assembly.

OK ↓

6 Check squib.

NG → Replace steering wheel pad.

OK ↓

From the results of the above inspection, the malfunctioning part can now be considered normal. To make sure of this, use the simulation method to check.

7 Check spiral cable.

NG → Repair or replace spiral cable.

OK ↓

Repair or replace harness or connector between center airbag sensor assembly and spiral cable.

WIRING DIAGRAM

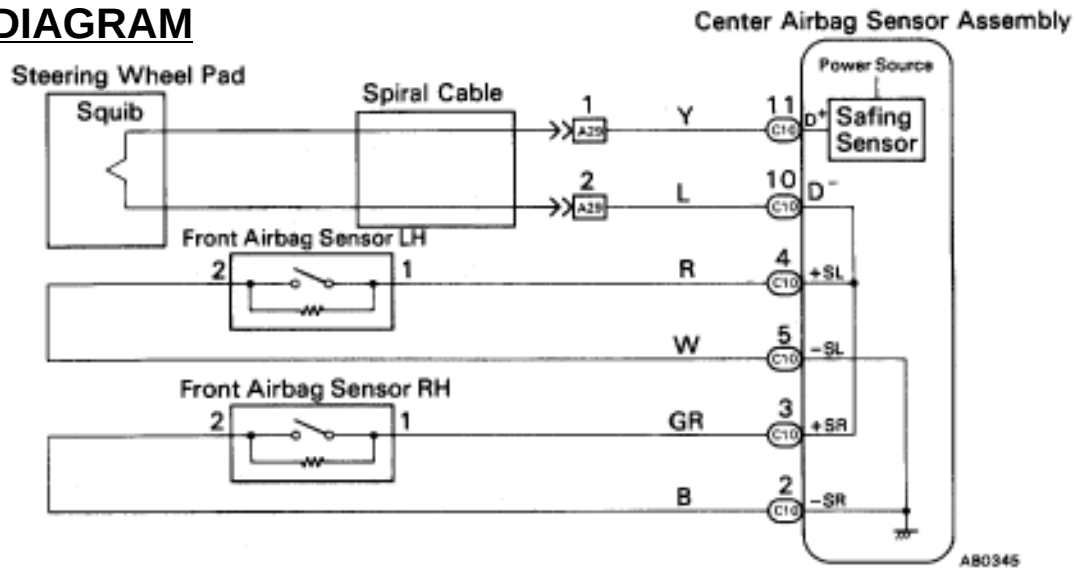

WhereEverybodyKnowsYourName

INSPECTION PROCEDURE

1 Preparation.

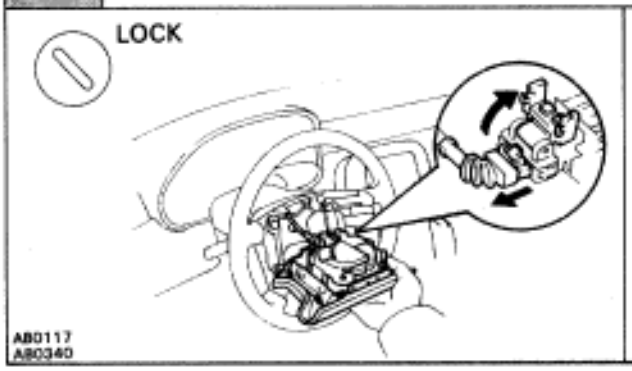

P (1) Disconnect battery negative (–) terminal cable, and wait at least 20 seconds.

(2) Remove steering wheel pad (See page AB–14).

Caution

When storing steering wheel pad, keep upper surface of the pad facing upward.

2 Check front airbag sensor circuit. (Measure resistance between terminals +SR and –SR, +SL and –SL of center airbag sensor assembly connector.

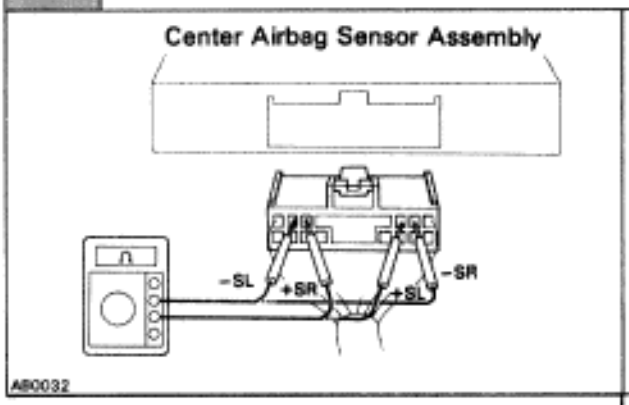

P Disconnect center airbag sensor assembly connector.

C Measure resistance between terminals +SR and –SR, +SL and –SL of harness side connector of center airbag sensor assembly.

OK **Resistance: 755 ? – 855 ?**

OK

NG **Go to Code 15 (See page AB–68).**

3 Check front airbag sensor circuit. (Measure voltage between terminal +SR or +SL of center airbag sensor assembly connector and body ground.

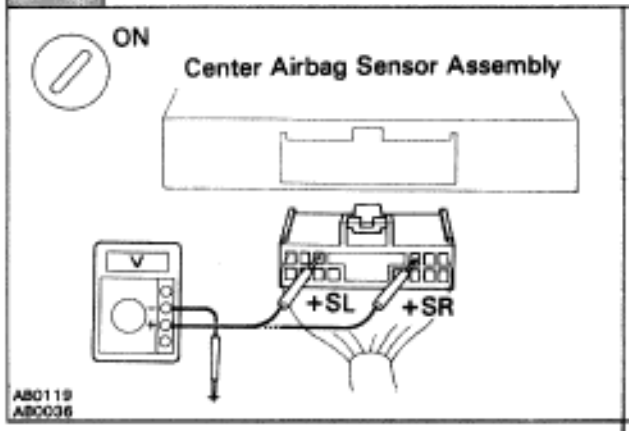

P (1) Connect negative (–) terminal cable to battery.

(2) Turn ignition switch ON.

C Measure voltage between terminals +SR or +SL of harness side connector of center airbag sensor assembly and body ground.

OK **Resistance: 1 V**

OK

NG **Repair or replace harness or connector between center airbag sensor assembly and front airbag sensor (See page AB–20).**

WhereEverybodyKnowsYourName

4 Check squib circuit.

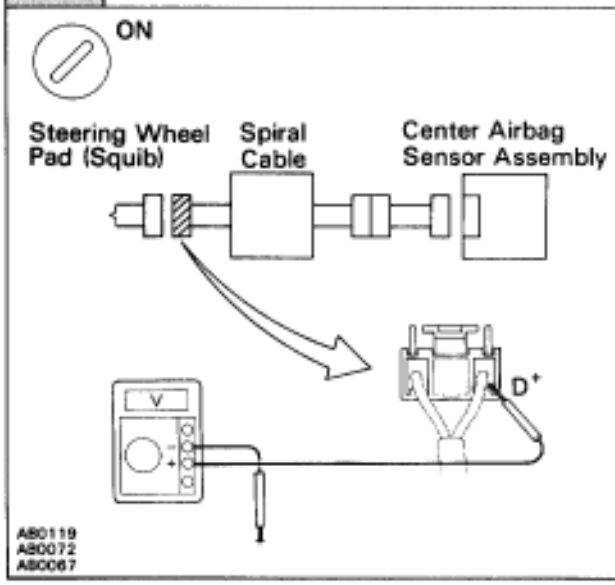

C Measure voltage at D^+ on spiral cable side of connector between spiral cable and steering wheel pad.

OK **Resistance: 1 V**

OK

NG **Go to step [7].**

5 Check center airbag sensor assembly.

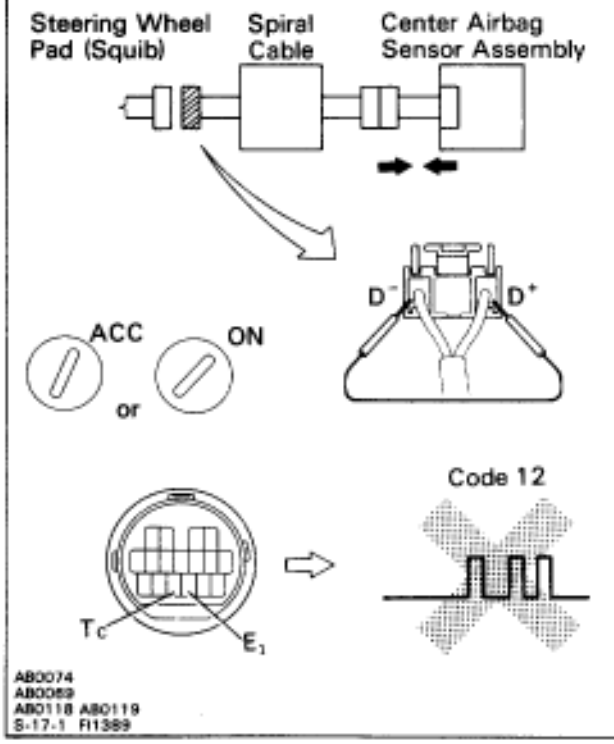

P
(1) Turn ignition switch LOCK.
(2) Disconnect negative (–) terminal cable from battery.
(3) Connect connector to center airbag sensor assembly.
(4) Using a service wire, Connect D^+ and D^- on spiral cable side of connector between spiral cable and steering wheel pad.
(5) Connect negative (–) terminal cable to battery, and wait at least 2 seconds.

C
(1) Turn ignition switch ACC or ON and wait at least 20 seconds.
(2) Using SST, connect terminals Tc and E_1 of TDCL.
SST 09843–18020
(3) Check diagnostic code.

OK **Diagnostic code 12 is not output.**

Hint Codes other than code 12 may be output at this time, but this is not relevant.

OK

NG **Replace center airbag sensor assembly.**

WhereEverybodyKnowsYourName

6 Check squib.

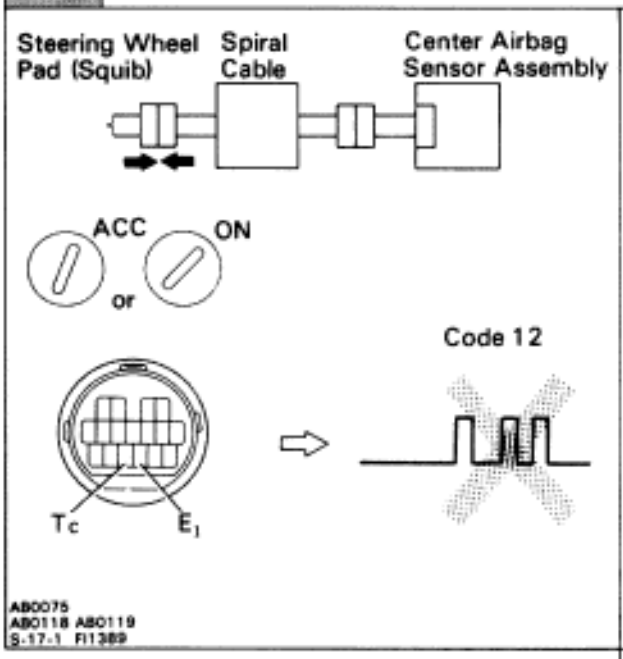

P
(1) Turn ignition switch LOCK.
(2) Disconnect battery negative (–) terminal cable, and wait at least 20 seconds.
(3) Connect steering wheel pad (squib) connector.
(4) Connect negative (–) terminal cable to battery, and wait at least 2 seconds.

C
(1) Turn ignition switch ACC or ON, and wait at least 20 seconds.
(2) Using SST, connect terminals Tc and E_1 of TDCL.
SST 09843–18020
(3) Check diagnostic code.

OK **Diagnostic code 12 is not output.**

Hint Codes other than code 12 may be output at this time, but this is not relevant.

OK

NG **Replace steering wheel pad.**

From the results of the above inspection, the malfunctioning part can now be considered normal. To make sure of this, use the simulation method to check.

7 Check spiral cable.

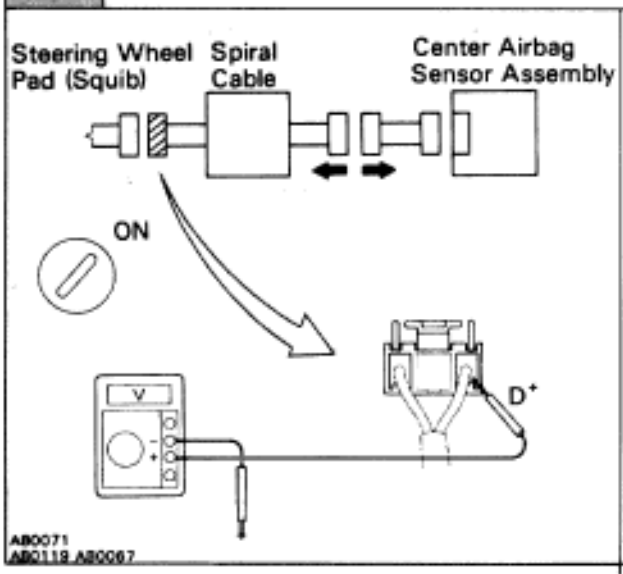

P
(1) Turn ignition switch LOCK.
(2) Disconnect connector between center airbag sensor assembly and spiral cable.
(3) Turn ignition switch ON.

C Measure voltage at D^+ on spiral cable side of connector between spiral cable and steering wheel pad.

OK **Voltage: Below 1 V**

OK

NG **Repair or replace spiral cable.**

Repair or replace harness or connector between center airbag sensor assembly and spiral cable.

WhereEverybodyKnowsYourName

MEMO

WhereEverybodyKnowsYourName

Diag. Code 13	Short in Squib Circuit (Between D+ Wire Harness and D– Wire Harness)

CIRCUIT DESCRIPTION

The squib circuit consists of the center airbag sensor assembly, spiral cable and the steering wheel pad (squib). It causes the airbag to deploy when the airbag deployment conditions are satisfied.
For details of the function of each component, see FUNCTION OF COMPONENTS on page AB–7.
Diagnostic code 13 is recorded when a short is detected in the D+ wire harness and D– wire harness of the squib circuit.

Code No.	Diagnosis
13	▼Short circuit between D+ wire harness and D– wire harness of squib. ▼Squib malfunction. ▼Spiral cable malfunction. ▼Center airbag sensor assembly malfunction.

DIAGNOSTIC CHART

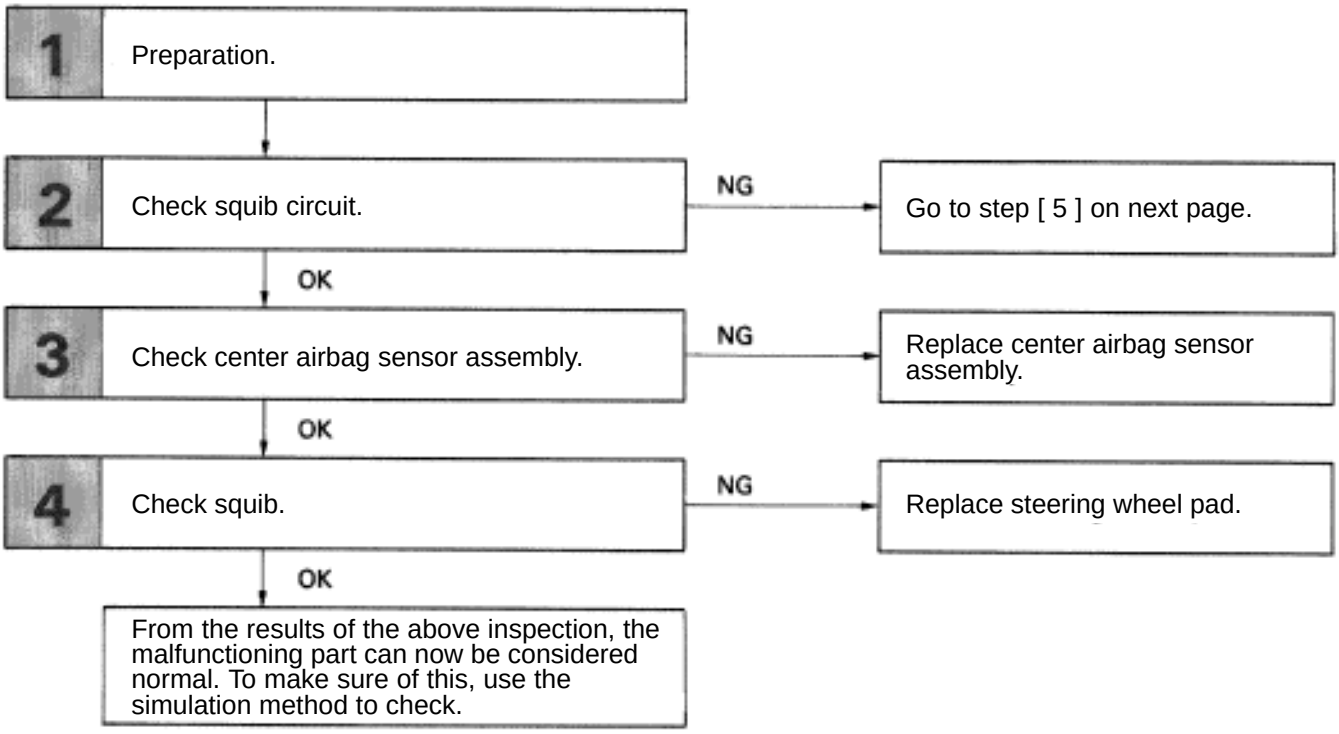

WhereEverybodyKnowsYourName

DIAGNOSTIC CHART (Cont'd)

5 Check spiral cable.
- NG → Repair or replace spiral cable.
- OK ↓

6 Check harness between center airbag sensor assembly and spiral cable.
- NG → Repair or replace harness or connector between center airbag sensor assembly and spiral cable.
- OK ↓

7 Check center airbag sensor assembly.
- NG → Replace center airbag sensor connector.
- OK ↓

From the results of the above inspection, the malfunctioning part can now be considered normal. To make sure of this, use the simulation method to check.

WIRING DIAGRAM

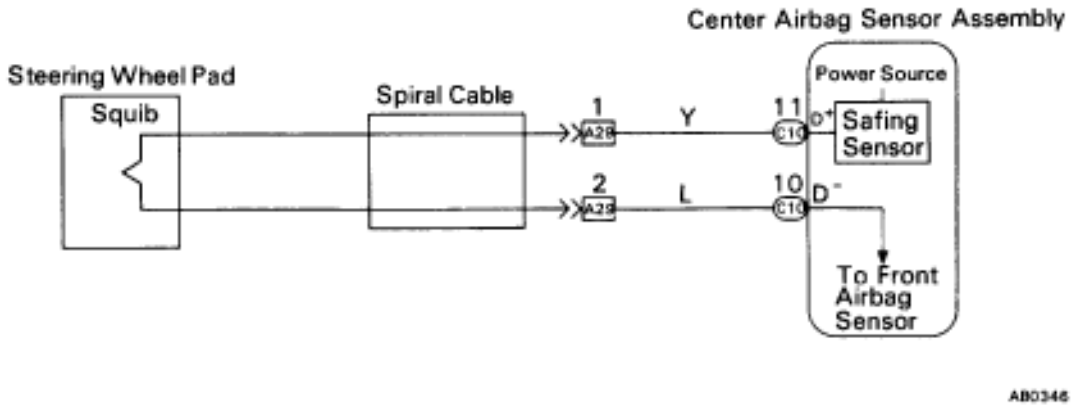

WhereEverybodyKnowsYourName

INSPECTION PROCEDURE

1 Preparation.

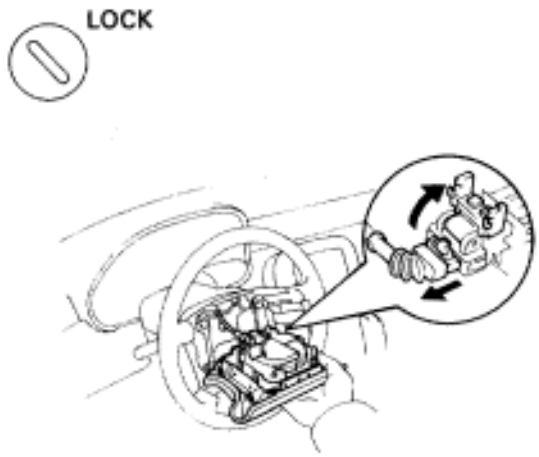

P (1) Disconnect battery negative (–) terminal cable, and wait at least 20 seconds.

(2) Remove steering wheel pad (See page AB–14).

Caution

When storing steering wheel pad, keep upper surface of the pad facing upward.

2 Check squib circuit.

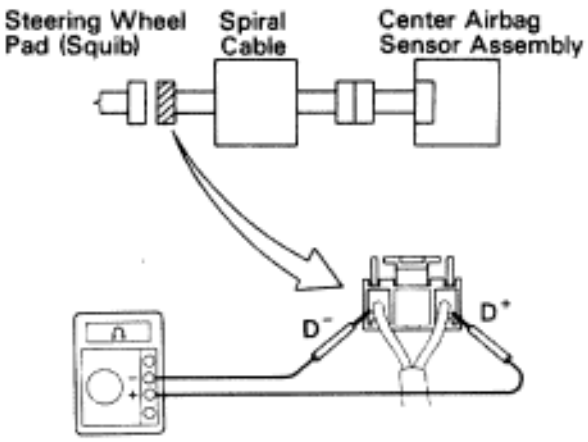

C Measure resistance between D^+ and D^- on spiral cable side of connector between spiral cable and steering wheel pad.

OK **Resistance: 1 k ? or higher**

OK

NG **Go to step [5].**

WhereEverybodyKnowsYourName

3 Check center airbag sensor assembly.

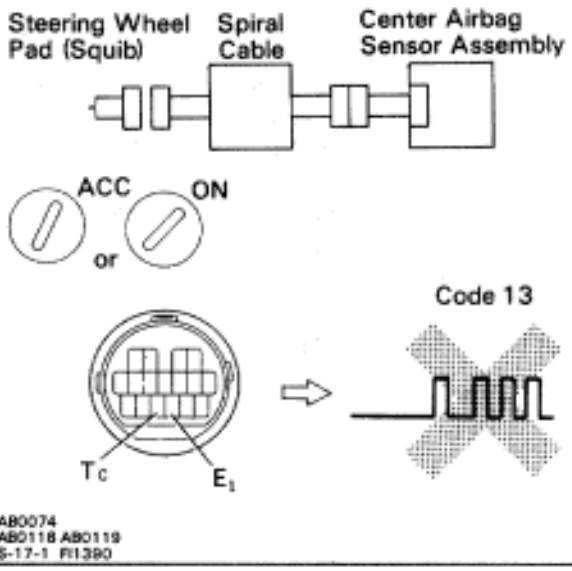

P
(1) Connect negative (–) terminal cable to battery.
(2) Clear malfunction code 41 stored in memory (See page AB–32).

C
(1) Turn ignition switch LOCK, and wait at least 2 seconds.
(2) Turn ignition switch ACC or ON, and wait at least 20 seconds.
(3) Using SST, connect terminals Tc and E_1 of TDCL.
SST 09843–18020
(4) Check diagnostic code.

OK **Diagnostic code 13 is not output.**

Hint Codes other than code 13 may be output at this time, but this is not relevant to this check.

OK

NG **Replace center airbag sensor assembly.**

4 Check squib.

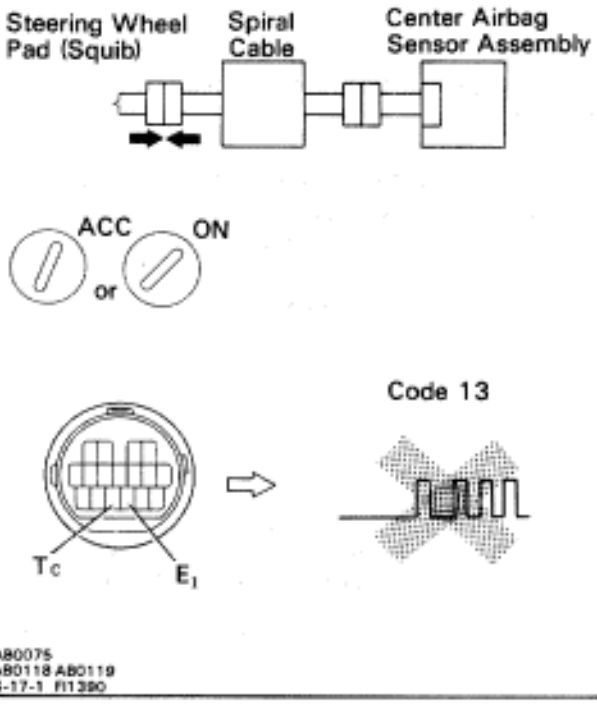

P
(1) Turn ignition switch LOCK.
(2) Disconnect battery negative (–) terminal cable, and wait at least 2 seconds.
(3) Connect steering wheel pad (squib) connector.
(4) Connect negative (–) terminal cable to battery.
(5) Clear malfunction code 41 stored in memory (See page AB–32).

C
(1) Turn ignition switch LOCK, and wait at least 2 seconds.
(2) Turn ignition switch ACC or ON, and wait at least 20 seconds.
(3) Using SST, connect terminals Tc and E_1 of TDCL.
SST 09843–18020
(4) Check diagnostic code.

OK **Diagnostic code 13 is not output.**

Hint Codes other than code 13 may be output at this time, but this is not relevant to this check.

OK

NG **Replace steering wheel pad.**

From the results of the above inspection, the malfunctioning part can now be considered normal. To make sure of this, use the simulation method to check.

WhereEverybodyKnowsYourName

5 Check squib.

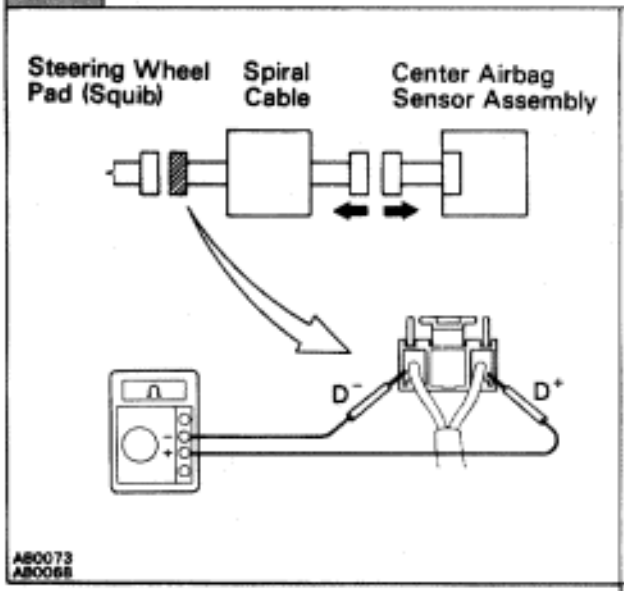

P (1) Disconnect connector between center airbag sensor assembly and spiral cable.
(2) Release airbag activation prevention mechanism on center airbag sensor assembly side of spiral cable connector (See page AB–60).

C Measure resistance between D^+ and D^- on spiral cable side of connector between spiral cable and steering wheel pad.

OK **Resistance: 1 M ? or higher**

OK

NG **Repair or replace spiral cable.**

6 Check harness between center airbag sensor assembly and spiral cable.

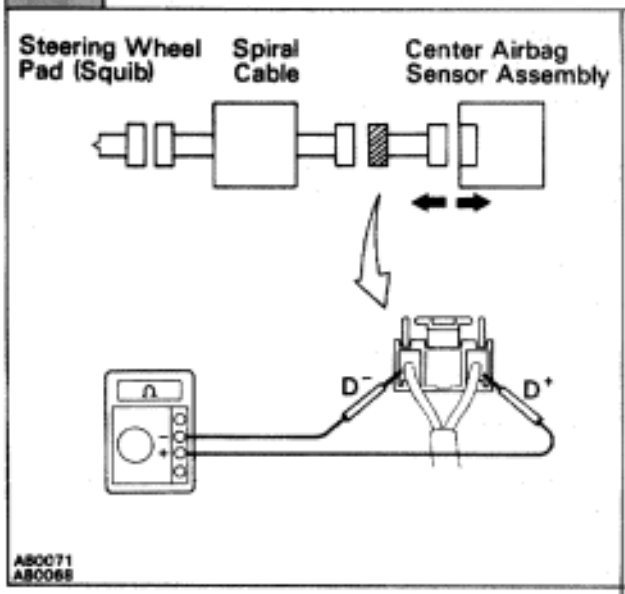

P (1) Disconnect center airbag sensor assembly connector.
(2) Release airbag activation prevention mechanism on center airbag sensor assembly connector (See page AB–60).

C Measure resistance between D^+ and D^- on center airbag sensor assembly side of connector between center airbag sensor assembly and spiral cable.

OK **Resistance: 1 M ? or higher**

OK

NG **Repair or replace harness or connector between center airbag sensor assembly and spiral cable.**

WhereEverybodyKnowsYourName

7 Check center airbag sensor assembly.

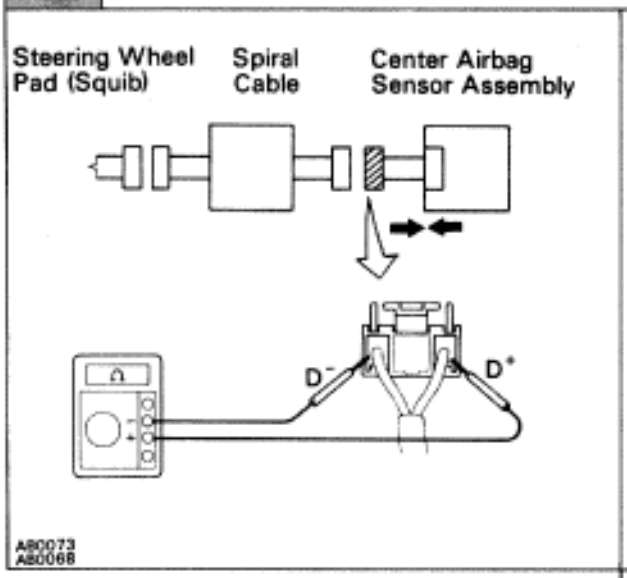

P Connect center airbag sensor assembly connector.

C Measure resistance between D^+, D^- on center airbag sensor assembly side of connector between center airbag sensor assembly and spiral cable.

OK **Resistance: 1 k？ or higher**

OK

NG **Replace center airbag sensor assembly.**

From the results of the above inspection, the malfunctioning part can now be considered normal. To make sure of this, use the simulation method to check.

WhereEverybodyKnowsYourName

RELEASE METHOD OF AIRBAG ACTIVATION PREVENTION MECHANISM

An airbag activation prevention mechanism is built into the connector for the squib circuit of the airbag system. When release of the airbag activation prevention mechanism is directed in the troubleshooting procedure, as shown in the illustration of the connectors (1) and (2) below, insert paper which is the same thickness as the male terminal, between the terminal and the short spring.

CAUTION:

- **NEVER RELEASE the airbag activation prevention mechanism on the steering wheel pad connector.**

NOTICE:

- **Do not release the airbag activation prevention mechanism unless specifically directed by the troubleshooting procedure.**
- **If the paper inserted is too thick the terminal and short spring may be damaged, so always use paper the same thickness as the male terminal.**

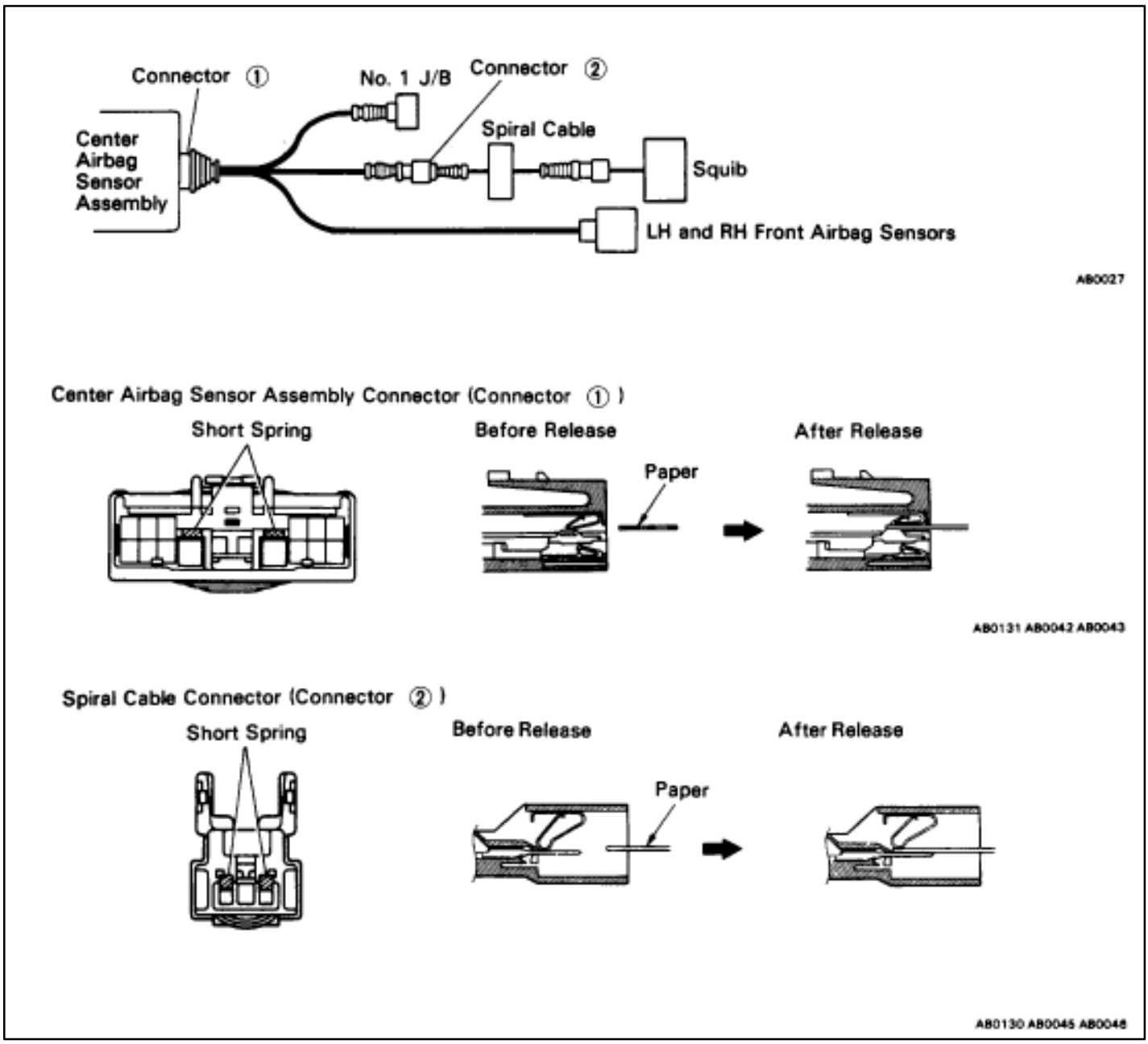

WhereEverybodyKnowsYourName

MEMO

WhereEverybodyKnowsYourName

CUSTOMER PROBLEM ANALYSIS

AT09Q–0A

Electronically – controlled Automatic Transmission Check Sheet

Inspector's Name :

Customer's Name		Registration No.	
		Registration Year	/ /
		Frame No.	
Date Vehicle Brought In	/ /	Odometer Reading	km Mile

Date of Problem Occurrence	/ /
How Often does Problem Occur?	☐ Continuous ☐ Intermittent (times a day)

Symptoms	☐ Vehicle does not move. (☐ Any range ☐ Particular range)
	☐ No up-shift (☐ 1st → 2nd ☐ 2nd → 3rd ☐ 3rd → O/D)
	☐ No down-shift (☐ O/D → 3rd ☐ 3rd → 2nd ☐ 2nd → 1st)
	☐ Lock-up malfunction
	☐ Shift point too high or too low.
	☐ Harsh engagement (☐ N → D ☐ Lock-up ☐ Any drive range)
	☐ Slip or shudder
	☐ No Kick-Down
	☐ Others ( )

Check Item	CHECK engine warning light	☐ Normal ☐ Remains ON)

Diagnostic Code Check (O/D OFF Indicator Light)	1st Time	☐ Normal Code ☐ Malfunction Code (Code)
	2nd Time	☐ Normal Code ☐ Malfunction Code (Code)

WhereEverybodyKnowsYourName

–Memo–

WhereEverybodyKnowsYourName

DIAGNOSIS SYSTEM

AT09R–07

The electronically controlled transmission system has built–in self–diagnostic functions. If the malfunction occurs in the system, the ECM stores the malfunction code in memory and the O/D OFF (Overdrive OFF) indicator light blinks to inform the driver. The diagnostic trouble code stored in memory can be read out by the following procedure.

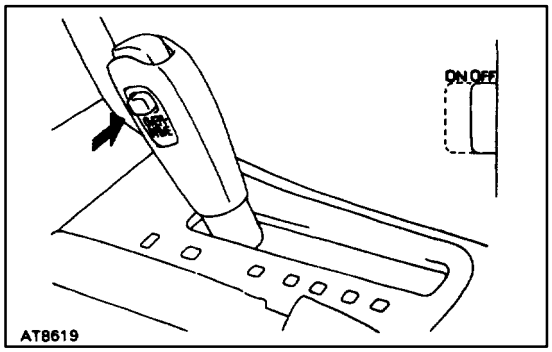

O/D OFF INDICATOR LIGHT INSPECTION

AT09S–07

1. **Turn the ignition switch to ON.**
2. **Check if the O/D OFF indicator light lights up when the O/D main switch is pushed out to OFF and goes off when the O/D main switch is pushed in to ON.**
   HINT:
   - If the O/D OFF indicator light does not light up or stay on all the time, carry out the check for “O/D OFF Indicator Light Circuit” on page AT–112.
   - If the O/D OFF indicator light blinks, a trouble code is stored in the ECM memory.

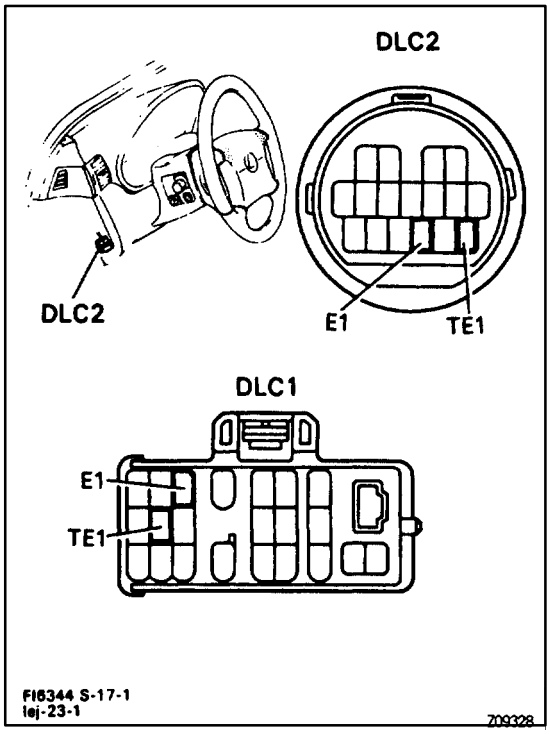

DIAGNOSTIC TROUBLE CODE CHECK

AT0A3–07

1. **Turn the ignition switch ON, but do not start the engine.**
2. **Push in the O/D main switch to ON.**
   HINT: Warning and diagnostic trouble codes can be read only when the O/D main switch is ON. If it is OFF, the O/D OFF indicator lights up continuously and will not blink.
3. **Using SST, connect terminals TE1 and E1 of the DLC2 or DLC1.**
   SST 09843–18020

WhereEverybodyKnowsYourName

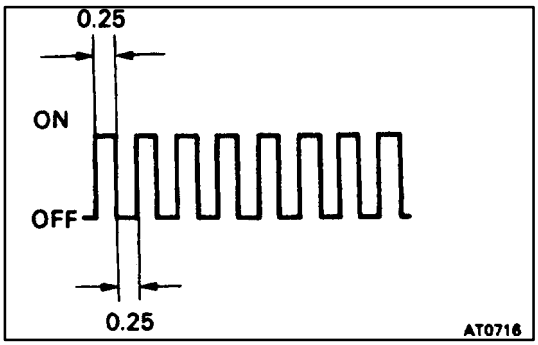

4. **Read the diagnostic trouble code indicated by the number of times the O/D OFF indicator light blinks.**
HINT: If the system is operating normally, the light will blink 2 times per second.

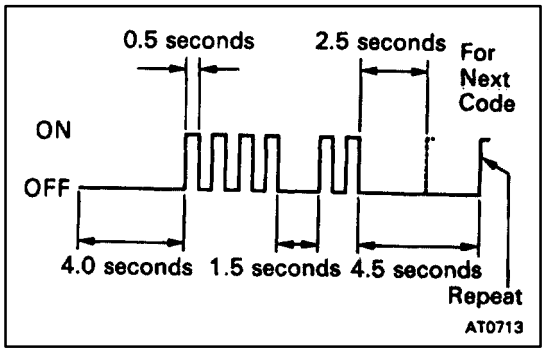

The malfunction code is indicated as shown in the illustration at left (Diagnostic trouble code “42” is shown as an example).
HINT: When 2 or more trouble codes are stored in memory, the lower–numbered code is displayed first.
If no diagnostic trouble code is output, or if a diagnostic trouble code is output even though no diagnostic trouble code output operation is performed, check the TE1 terminal circuit on page AT–118.

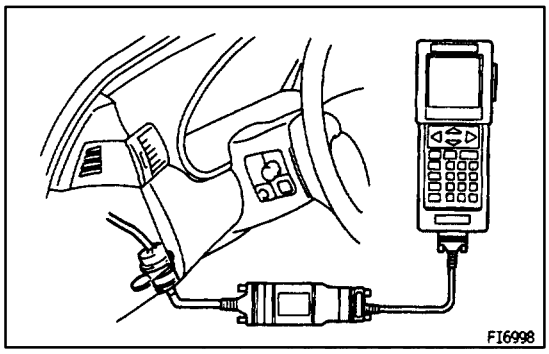

DIAGNOSTIC TROUBLE CODE CHECK BY USING LEXUS HAND–HELD TESTER

AT0RD–01

1. **Hook up the LEXUS hand–held tester to the DLC2.**
2. **Read the diagnostic trouble codes by following the prompts on the tester screen.**
Please refer to the LEXUS hand–held tester operator’s manual for further details.

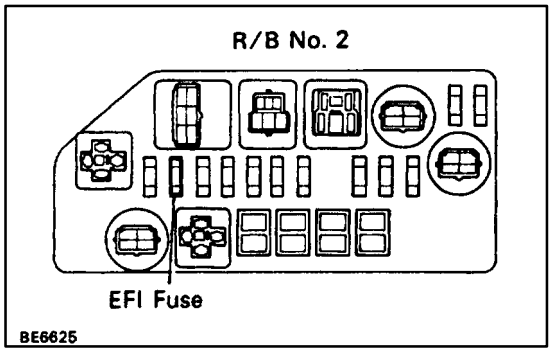

CANCELING DIAGNOSTIC TROUBLE CODE

AT09T–07

After repair of the trouble area, the diagnostic trouble code retained in the ECM memory must be canceled out by removing the EFI fuse for 10 seconds or more, with the ignition switch off.
Check that the normal code is output after connecting the fuse.

WhereEverybodyKnowsYourName

CHECK TERMINAL T_T OUTPUT VOLTAGE

AT00R–01

When a voltmeter is connected to the DLC1, the following items can be checked.

1. Throttle position sensor signal
2. Brake signal
3. Shift position signal

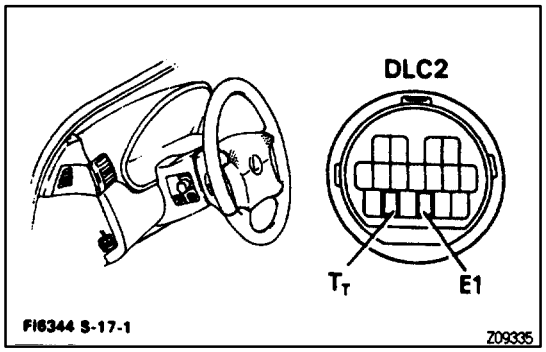

1. VOLTMETER CONNECTION

Connect the positive (+) probe of the voltmeter to terminal T_T and the negative (–) probe to terminal E1 of the DLC2.

HINT: If a voltmeter with small internal resistance is used, the correct voltage will not be indicated, so use a voltmeter with an internal resistance of at least 10 k? .

2. TURN IGNITION SWITCH TO ON (DO NOT START THE ENGINE)

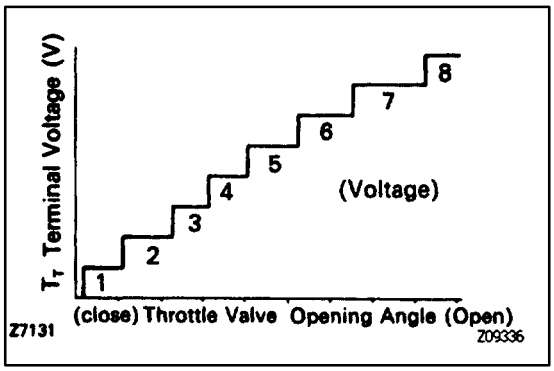

3. CHECK THROTTLE POSITION SENSOR SIGNAL

Check if the voltage changes from approximately 0 V to approximately 8 V when the accelerator pedal is gradually depressed from the fully closed position.

4. CHECK BRAKE SIGNAL (LOCK–UP CUT SIGNAL)

(a) Open the throttle valve fully to apply approximately 8 V to terminal T_T.

(b) In this condition, check terminal T_T voltage when the brake pedal is depressed and released.

T_T terminal voltage:

0 V (When brake pedal is depressed)

8 V (When brake pedal is released)

5. START ENGINE

6. CHECK SHIFT POSITION SIGNAL (VEHICLE SPEED ABOVE 60 KM/H OR 37 MPH)

Check up–shifting together with terminal T_T voltage.

HINT: Check for light shocks from up–shifting and for changes in the tachometer.

Gear Position	Terminal T_T output voltage
1st Gear	Below 0.5 V
2nd Gear	1.5 ~ 2 6 V
3rd Gear	3.5 ~ 4.6 V
3rd Lock–up	4.5 ~ 5.9 V
O/D	5.5 ~ 6.9 V
O/D Lock–up	6.5 ~ 7.9 V

If terminal T_T output voltage check cannot be performed, perform the check of terminal T_T circuit on page AT–120.

WhereEverybodyKnowsYourName

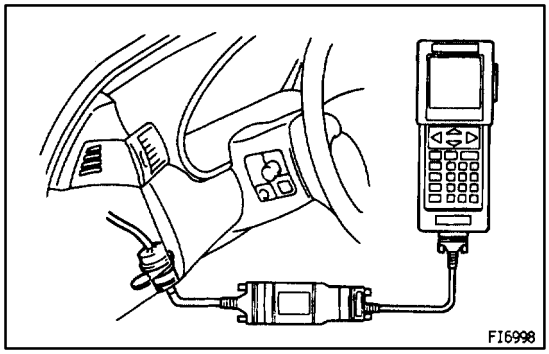

ECM DATA MONITOR BY USING LEXUS HAND–HELD TESTER

AT0RE–01

1. **Hook up the LEXUS hand–held tester to the DLC2.**
2. **Monitor the ECM data by following the prompts on the tester screen.**
   HINT: LEXUS hand–held tester has a “Snapshot” function which records the monitored data.
   Please refer to the LEXUS hand–held tester operator’s manual for further details.

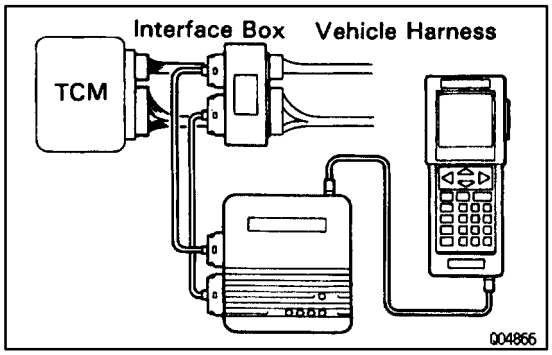

ECM TERMINAL VALUES MEASUREMENT BY USING LEXUS BRAKE–OUT BOX AND LEXUS HAND–HELD TESTER

AT0RF–01

1. **Hook up the LEXUS brake–out box and LEXUS hand–held tester to the vehicle.**
2. **Read the ECM input/output values by following the prompts on the tester screen.**
   HINT: LEXUS hand–held tester has a “Snapshot” function. This records the measured values and is effective in the diagnosis of intermittent problems.
   Please refer to the LEXUS hand–held tester/LEXUS brake–out box operator’s manual for further details.

WhereEverybodyKnowsYourName

PROBLEM SYMPTOM CONFIRMATION

AT09U–07

Taking into consideration the results of the customer problem analysis, try to reproduce the symptoms of the trouble. If the problem is that the transmission does not up–shift, does not down–shift, or the shift point is too high or too low, conduct the following road test referring to the automatic shift schedule and simulate the problem symptoms.

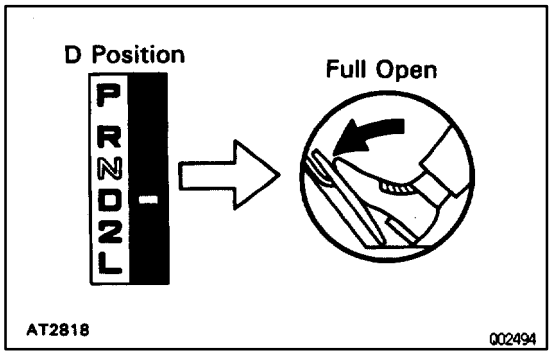

ROAD TEST

AT09V–05

NOTICE: Perform the test at normal ATF operating temperature 50–80 °C (122–176°F).

1. D POSITION TEST (NORM AND PWR PATTERN)

Shift into the D position and fully depress the accelerator pedal and check the following points:

(a) Check up–shift operation

1→2, 2→3 and 3→O/D up–shift takes place, and shift point should conform to those shown in the automatic shift schedule (See page AT–45)

Conduct a test under both Normal and Power patterns.

HINT:

- O/D up–shift or lock–up will not occur when the engine coolant temp. is below 60▼C (140▼F) and speed is under 60 km/h (37 mph), or if there is a 10 km/h (6 mph) difference between the set cruise control speed.
- 3rd up–shift or lock–up will not occur when engine coolant temp. is below 35▼C (95▼F) and speed is under 40 km/h (25 mph).

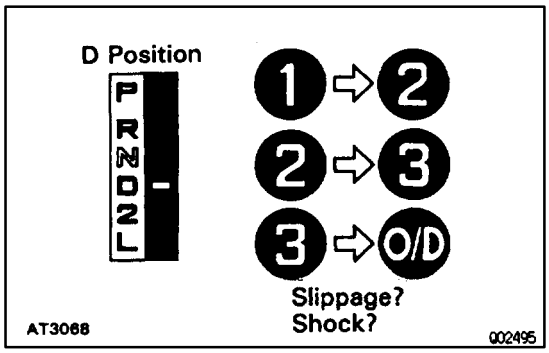

(b) Check for shift shock and slip.

In the same manner, check the shock and slip at the 1→2, 2→3 and 3→O/D up–shifts.

WhereEverybodyKnowsYourName

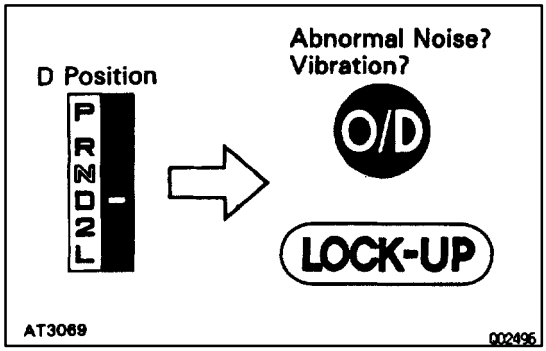

(c) Check for abnormal noise and vibration.
Run at the D position lock–up or O/D gear and check for abnormal noise and vibration.
HINT: The check for the cause of abnormal noise and vibration must be performed very thoroughly care as it could also be due to loss of balance in the propeller shaft, differential, torque converter clutch, etc..

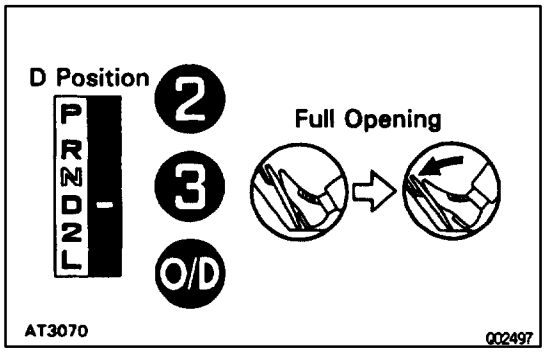

(d) Check kick–down operation
While running in the D position, 2nd, 3rd and O/D gears, check to see that the possible kick–down vehicle speed limits for 2→1, 3→2 and O/D→3 kick–downs conform to those indicated on the automatic shift schedule. (See page AT–45)

(e) Check abnormal shock and slip at kick–down.

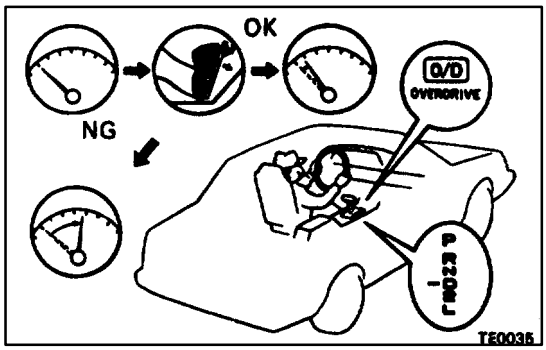

(f) Check the lock–up mechanism.
(1) Drive in D position, O/D gear, at a steady speed (lock–up ON) of about 58 km/h (36 mph).
(2) Lightly depress the accelerator pedal and check that the engine RPM does not change abruptly.
If there is a big jump in engine RPM, there is no lock–up.

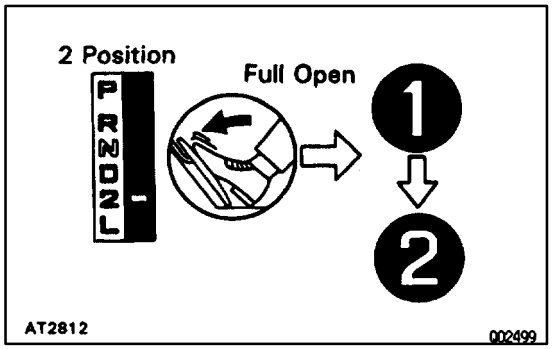

2. 2 POSITION TEST

Shift into the 2 position and fully depress the accelerator pedal and check the following points:

(a) Check up–shift operation
Check to see that the 1→2 up–shift takes place and that the shift point conforms to that shown on the automatic shift schedule. (See page AT–45)
HINT:
- There is no O/D up–shift and lock–up in the 2 position.

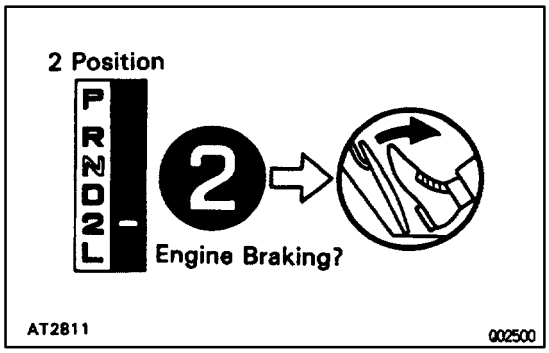

(b) Check engine braking
While running in the 2 position and 2nd gear, release the accelerator pedal and check the engine braking effect.

WhereEverybodyKnowsYourName

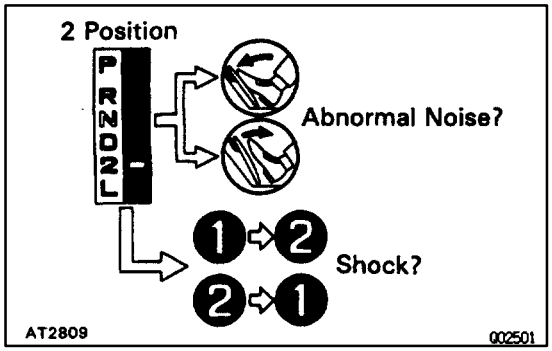

(c) Check for abnormal noise during acceleration and deceleration, and for shock at up–shift and down–shift.

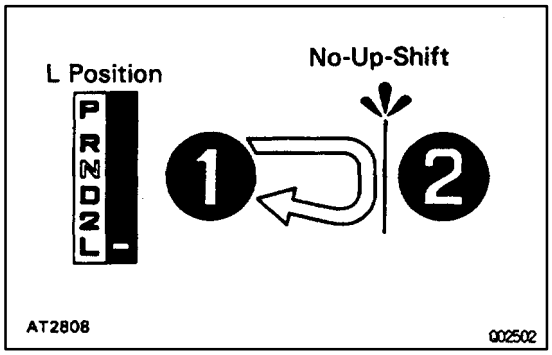

3. L POSITION TEST

Shift into the 2 position and fully depress the accelerator pedal and check the following points:

(a) Check no up–shift

While running in the L position, check to see that there is no up–shift to 2nd gear.

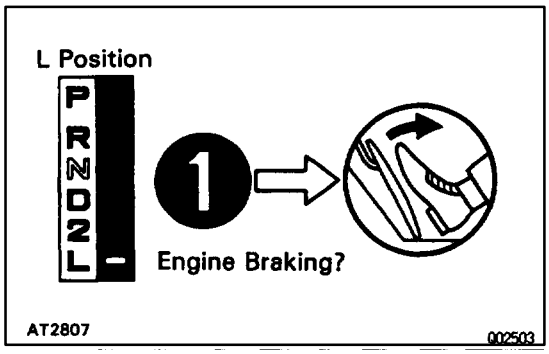

(b) Check engine braking

While running in the L position, release the accelerator pedal and check the engine braking effect.

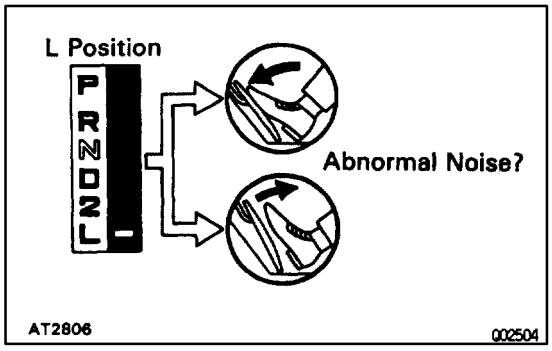

(c) Check for abnormal noise during acceleration and deceleration.

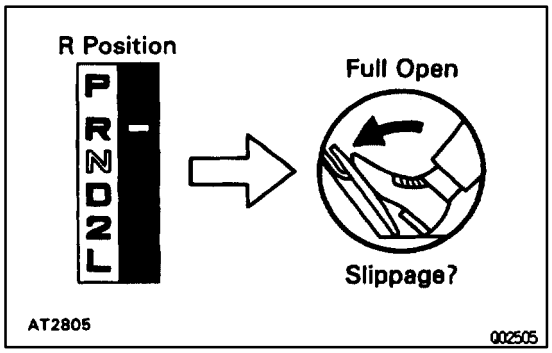

4. R POSITION TEST

Shift into the R position and fully depress the accelerator pedal and check for slipping.

CAUTION: Before conducting this test ensure that the test area is free from personnel and obstructor.

WhereEverybodyKnowsYourName

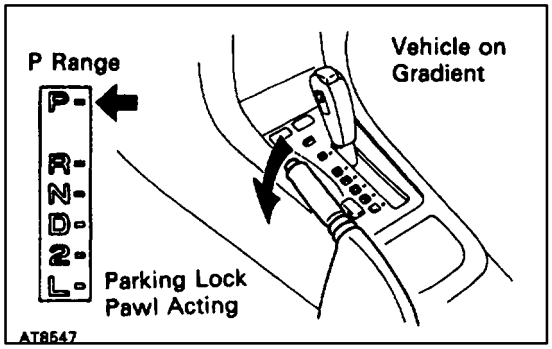

5. P POSITION TEST

Stop the vehicle on a gradient (more than 5▼ and after shifting into the P position, release the parking brake. Then check to see that the parking lock pawl holds the vehicle in place.

WhereEverybodyKnowsYourName

AT09W–09

AUTOMATIC SHIFT SCHEDULE

SHIFT POINT

NORM Mode (Kick–down foot switch activated)

Shift position	Shifting point		Vehicle speed km/h (mph)
D position	Throttle valve fully opened	1→2	67–71 (42–44)
		2→3	118–124 (73–77)
		3→O/D	170–177 (106–110)
		O/D→3	164–170 (102–106)
		3→2	105–111 (65–69)
		2→1	53–57 (33–35)
2 position	Throttle valve fully opened	1→2	67–71 (42–44)
		3→2	106–112 (66–70)
		2→1	53–57 (33–35)
L position	Throttle valve fully opened	3→2	104–109 (65–68)
		2→1	57–63 (35–39)

NORM Mode (Kick–down foot switch deactivated)

Shift position	Shifting point		Vehicle speed km/h (mph)
D position	Throttle valve fully opened	1→2	67–71 (42–44)
		2→3	118–124 (73–77)
		3→O/D	155–161 (96–100)
		O/D→3	128–134 (79–83)
		3→2	71–75 (44–47)
		2→1	10–13 (6–8)
	Throttle valve fully closed	3→O/D	32–35 (20–22)
		O/D→3	23–26 (14–16)
2 position	Throttle valve fully opened	1→2	67–71 (42–44)
		3→2	106–112 (66–70)
		2→1	10–13 (6–8)
L position	Throttle valve fully opened	3→2	104–109 (65–68)
		2→1	57–63 (35–39)

PWR Mode (Kick–down foot switch activated)

Shift position	Shifting point		Vehicle speed km/h (mph)
D position	Throttle valve fully opened	1→2	67–71 (42–44)
		2→3	116–124 (73–77)
		3→O/D	179–186 (111–116)
		O/D→3	164–170 (102–106)
		3→2	105–111 (65–69)
		2→1	53–57 (33–35)
2 position	Throttle valve fully opened	1→2	67–71 (42–44)
		3→2	106–112 (66–70)
		2→1	53–57 (33–35)
L position	Throttle valve fully opened	3→2	104–109 (65–68)
		2→1	57–63 (35–39)

WhereEverybodyKnowsYourName

PWR Mode (Kick–down foot switch deactivated)

Shift position	Shifting point		Vehicle speed km/h (mph)
D position	Throttle valve fully opened	1→2	67–71 (42–44)
		2→3	118–124 (73–77)
		3→O/D	179–186 (111–116)
		O/D→3	149–155 (93–96)
		3→2	95–100 (59–62)
		2→1	22–26 (14–16)
	Throttle valve fully closed	3→O/D	32–35 (20–22)
		O/D→3	23–26 (14–16)
2 position	Throttle valve fully opened	1→2	67–71 (42–44)
		3→2	106–112 (66–70)
		2→1	10–13 (6–8)
L position	Throttle valve fully opened	3→2	104–109 (65–68)
		2→1	57–63 (35–39)

LOCK–UP POINT

NORM Mode

D position km/h (mph) Throttle valve opening 5%	Lock–up ON	Lock–up OFF
*3rd Gear	83–88 (52–55)	77–82 (48–51)
O/D Gear	56–60 (35–37)	53–57 (33–35)

*: O/D Switch OFF

PWR Mode

D position km/h (mph) Throttle valve opening 5%	Lock–up ON	Lock–up OFF
*3rd Gear	83–88 (52–55)	77–82 (48–51)
O/D Gear	56–60 (35–37)	53–57 (33–35)

*: O/D Switch OFF

HINT:

(1) There is no lock–up in the 2 and L positions.

(2) In the following cases, the lock–up will be released regardless of the lock–up pattern.

▼ **When the throttle valve is completely closed.**

▼ **When the brake light switch is ON.**

(3) Shift up to 3rd will not occur when the engine coolant temp. is below 35°C (95°F) and the vehicle speed is below 40 km/h (25 mph).

(4) Shift–up to O/D will not occur when the engine coolant temp. is below 60°C (140°F) and the vehicle speed is below 63 km/h (39 mph).

(5) During cruise control operation, the shift pattern is fixed in NORM. And when the vehicle speed drops to 10 km/h (6 mph) or more below the cruise control set vehicle speed, shift down from O/D to 3rd occurs.

(6) The kick–down foot switch turns ON when the accelerator pedal is depressed further with the throttle valve already fully open.

WhereEverybodyKnowsYourName

AT00S–01

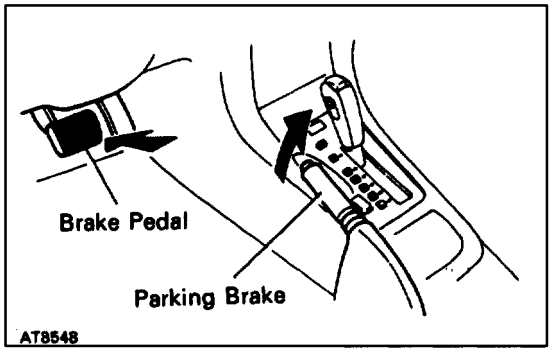

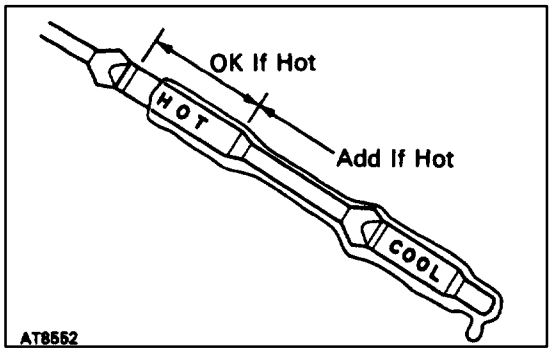

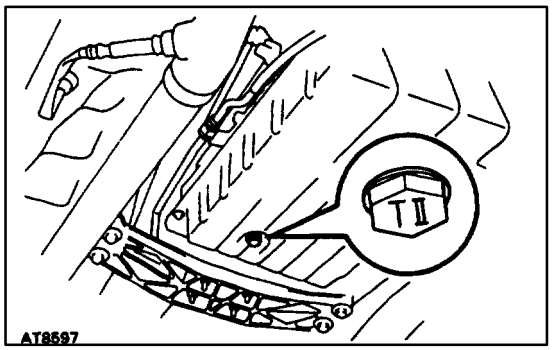

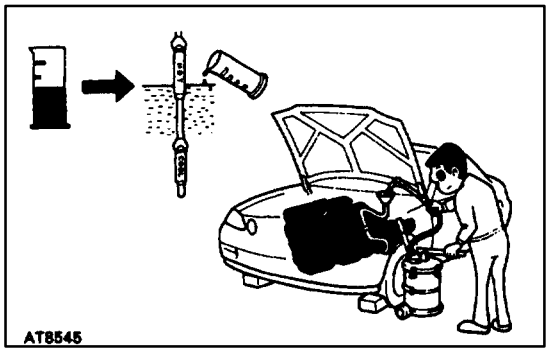

PRELIMINARY CHECK

1. CHECK FLUID LEVEL

HINT:

- Drive the vehicle so that the engine and transmission are at normal operating temperature.

Fluid temp.: 70–80°C (158–176°F)

- Only use the COOL range on the dipstick as a rough reference when the fluid is replaced or the engine does not run.

(a) Park the vehicle on a level surface and set the parking brake.

(b) With the engine idling and the brake pedal depressed, shift the shift lever into all positions from P to L position and return to P position.

(c) Pull out the transmission dipstick and wipe it clean.

(d) Push it back fully into the tube.

(e) Pull it out and check that the fluid level is in the HOT range. If the level is at the low side, add fluid.

Fluid type:

ATF TYPE T–II or Equivalent

NOTICE: Do not overfill.

2. CHECK FLUID CONDITION

If the fluid smells burnt or is black, replace it.

3. REPLACE TRANSMISSION FLUID

(a) Remove the drain plug and drain the fluid.

(b) Reinstall the drain plug securely.

(c) With the engine OFF, add new fluid through the oil filler tube.

Fluid type:

ATF TYPE T–II or Equivalent

Capacity:

Total:

8.2 liters (8.7 US qts, 7.2 Imp. qts)

Drain and refill:

1.9 liters (2.0 US qts, 1.7 Imp. qts)

(d) Start the engine and shift the shift lever into all positions from P to L position and then shift into P position.

(e) With the engine idling, check the fluid level. Add fluid up to the COOL level on the dipstick.

WhereEverybodyKnowsYourName

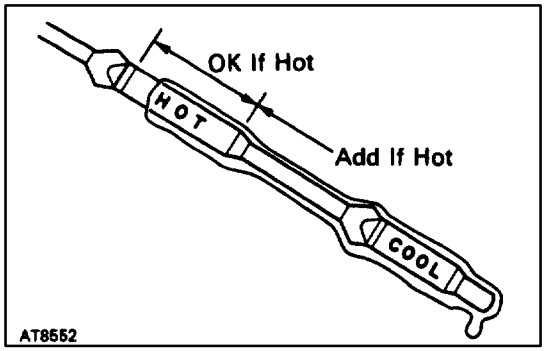

(f) Check the fluid level at the normal operating temperature 70–80▼C (158–176▼F) and add as necessary.
NOTICE: Do not overfill.

4. CHECK FLUID LEAKS

Check for leaks in the transmission.
If there are leaks, it is necessary to repair or replace O–rings, seal packings, oil seals, plugs or other parts.

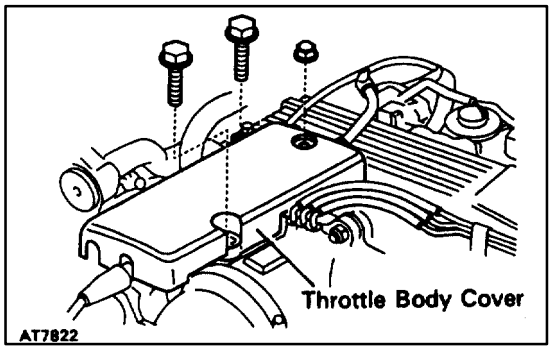

5. INSPECT AND ADJUST THROTTLE CABLE

(a) Remove the 2 bolts, nut and throttle body cover.

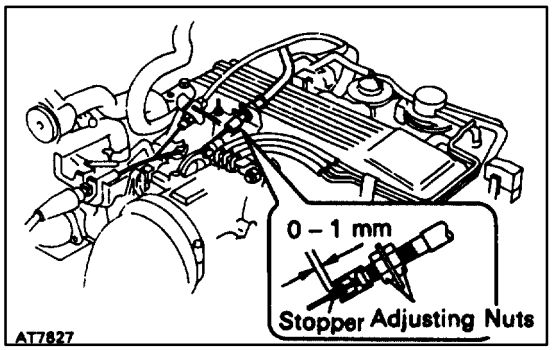

(b) Check that the throttle valve is fully closed.
(c) Check that the inner cable is not slack.
(d) Measure the distance between the outer cable end and stopper on the cable.
Standard distance:
0–1 mm (0–0.04 in.)
If the distance is not standard, adjust the cable by the adjusting nuts.
(e) Install the throttle body cover, and two bolts and nut.

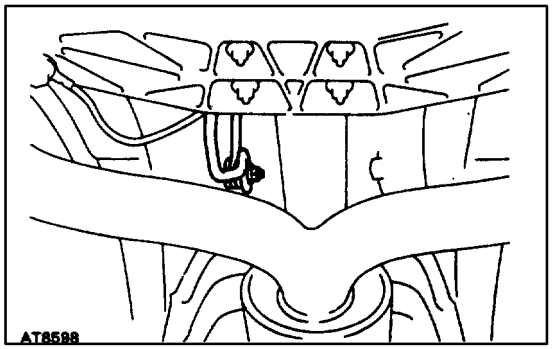

6. INSPECT AND ADJUST SHIFT LEVER POSITION

When shifting the shift lever from the N position to other positions, check that the lever can be shifted smoothly and accurately to each position and that the position indicator correctly indicates the position.
If the indicator is not aligned with the correct position, carry out the following adjustment procedures:

(a) Loosen the nut on the control shaft lever.
(b) Push the control shaft lever fully rearward.
(c) Return the control shaft lever 2 notches to N position.
(d) Set the shift lever to N position.
(e) While holding the shift lever lightly toward the R position side, tighten the shift lever nut.
(f) Start the engine and make sure that the vehicle moves forward when shifting the lever from the N to D position and reverses when shifting it to the R position.

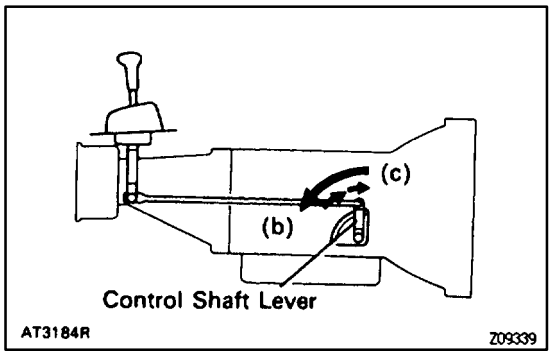

WhereEverybodyKnowsYourName

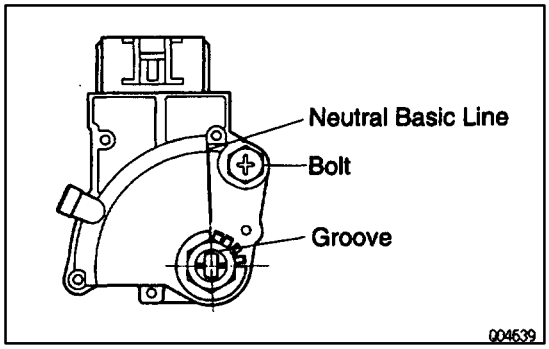

7. INSPECT AND ADJUST PARK/NEUTRAL POSITION SWITCH

Check that the engine can be started with the shift lever only in the N or P position, but not in other positions.

If not as started above, carry out the following adjustment procedure:

(a) Loosen the park/neutral position switch bolt and set the shift lever to the N position.

(b) Align the groove and neutral basic line.

(c) Hold in position and tighten the bolt.

Torque: 12 N·m (125 kgf·cm, 9 ft·lbf)

For continuity inspection of the park/neutral position switch, see page AT–106.

8. INSPECT IDLE SPEED

Idle speed:

650 RPM (In N position and air conditioner OFF)

WhereEverybodyKnowsYourName

MECHANICAL SYSTEM TESTS

AT0QT–01

STALL TEST

The object of this test is to check the overall performance of the transmission and engine by measuring the stall speeds in the D and R positions.

NOTICE:

- **Perform the test at normal operating fluid temperature 50–80℃ (122–176℉).**
- **Do not continuously run this test longer than 5 seconds.**
- **To ensure safety, conduct this test in a wide, clear, level area, which provides good traction.**
- **The stall test should always be carried out in pairs. One technician should observe the conditions of wheels or wheel stoppers outside the vehicle while the other is performing the test.**

MEASURE STALL SPEED

(a) Chock the 4 wheels.
(b) Connect a tachometer to the engine.
(c) Fully apply the parking brake.
(d) Keep your left foot pressed firmly on the brake pedal.
(e) Start the engine.
(f) Shift into the D position. Step all the way down on the accelerator pedal with your right foot. Quickly read the stall speed at this time.

Stall speed:

2,200 ± 150 RPM

(g) Perform the same test in R position.

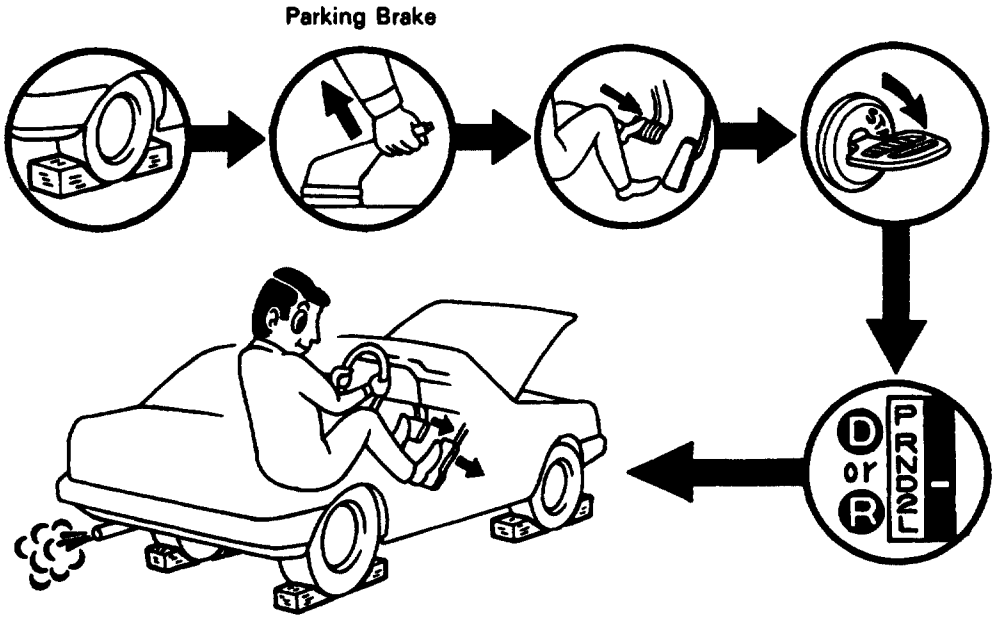

TE0047

WhereEverybodyKnowsYourName

EVALUATION

Problem	Possible cause
(a) Stall speed low in D and R positions.	2 Engine output may be insufficient. 2 Stator one–way clutch is operating properly HINT: If more than 600 RPM below the specified value, the torque converter could be faulty.
(b) Stall speed high in D position.	2 Line pressure too low 2 Forward clutch slopping 2 No.2 one–way clutch not operating properly 2 O/D one–way clutch not operating properly
(c) Stall speed high in R position.	2 Line pressure too low 2 Direct clutch slipping 2 First and reverse brake slipping 2 O/D one–way clutch not operating properly
(d) Stall speed high in D and R position.	2 Line pressure too low 2 Improper fluid level 2 O/D one–way clutch not operating properly

WhereEverybodyKnowsYourName

TIME LAG TEST

When the shift lever is shifted while the engine is idling, there will be a certain time lapse or lag before the shock can be felt. This is used for checking the condition of the O/D direct clutch, forward clutch, direct clutch, and first and reverse brake.

NOTICE:

- **Perform the test at normal operating fluid temperature 50–80°C (122–176°F).**
- **Be sure to allow a one minute interval between tests.**
- **Make 3 measurements and take the average value.**

MEASURE TIME LAG

(a) Fully apply the parking brake

(b) Start the engine and check idle speed.

Idle speed:

650 RPM (In N position and air conditioner OFF)

(c) Shift the shift lever from N to D position. Using a stop watch, measure the time it takes from shifting the lever until the shock is felt.

In same manner, measure the time lag for N ≦ R.

Time lag:

N D Less than 1.2 seconds

N R Less than 1.5 seconds

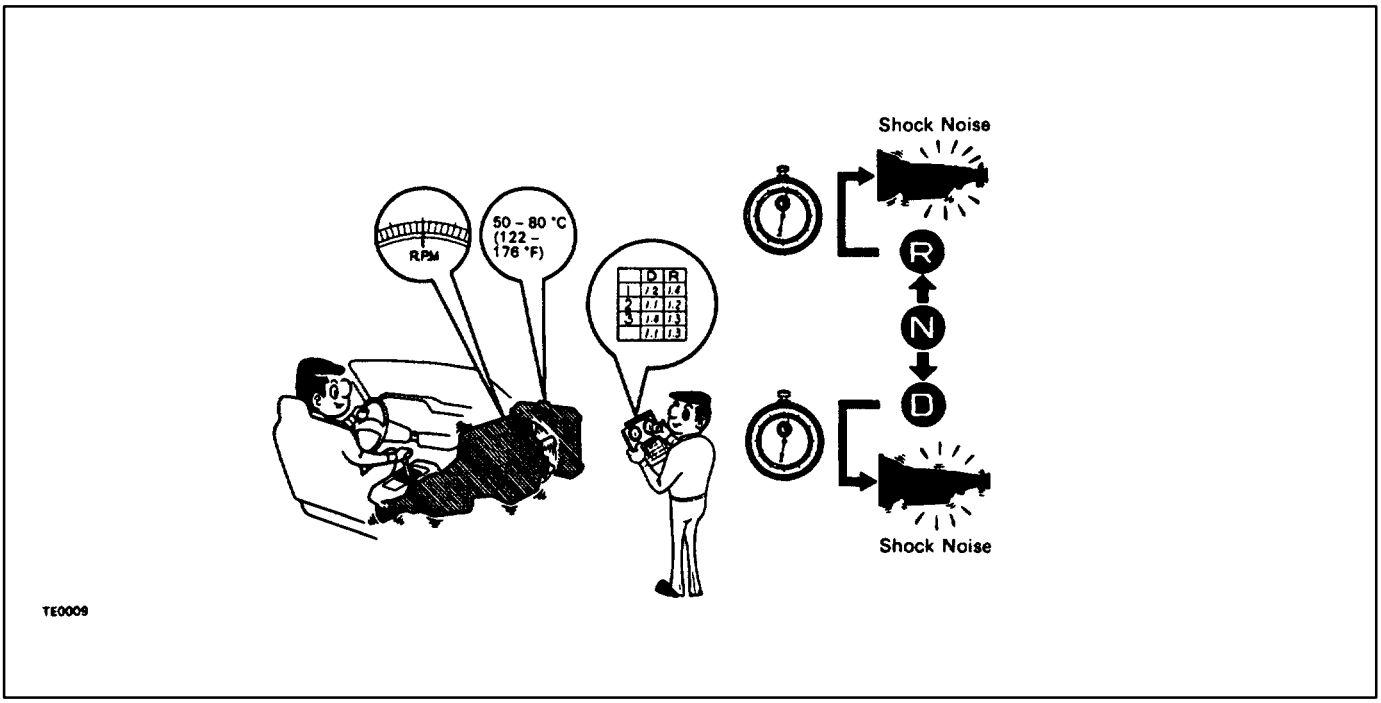

WhereEverybodyKnowsYourName

EVALUATION

If N → D or N → R time lag are longer than specified:

Problem	Possible cause
N → D time lag is longer	2 Line pressure too low 2 Forward clutch worn 2 O/D one–way clutch not operating properly 2 Accumulator back pressure too low
N → R time lag is longer	2 Line pressure too low 2 Direct clutch worn 2 First and reverse brake worn 2 O/D one–way clutch not operating properly 2 Accumulator back pressure too low

WhereEverybodyKnowsYourName

MEASURE LINE PRESSURE

NOTICE:

- **Perform the test at normal operating fluid temperature 50–80 ℃ (122–176 ℉).**
- **The line pressure test should always be carried out in pairs. One technician should observe the conditions of wheels or wheel stoppers outside the vehicle while the other is performing the test.**
- **Be careful to prevent the oil pressure gauge hose from interfering with the exhaust pipe.**

(a) Warm up the transmission fluid.

(b) Remove the test plug on the transmission case left side and connect the oil pressure gauge SST.
SST 09992–00094
HINT: Connecting the oil pressure gauge will be made easier by moving LH side heat insulator aside.

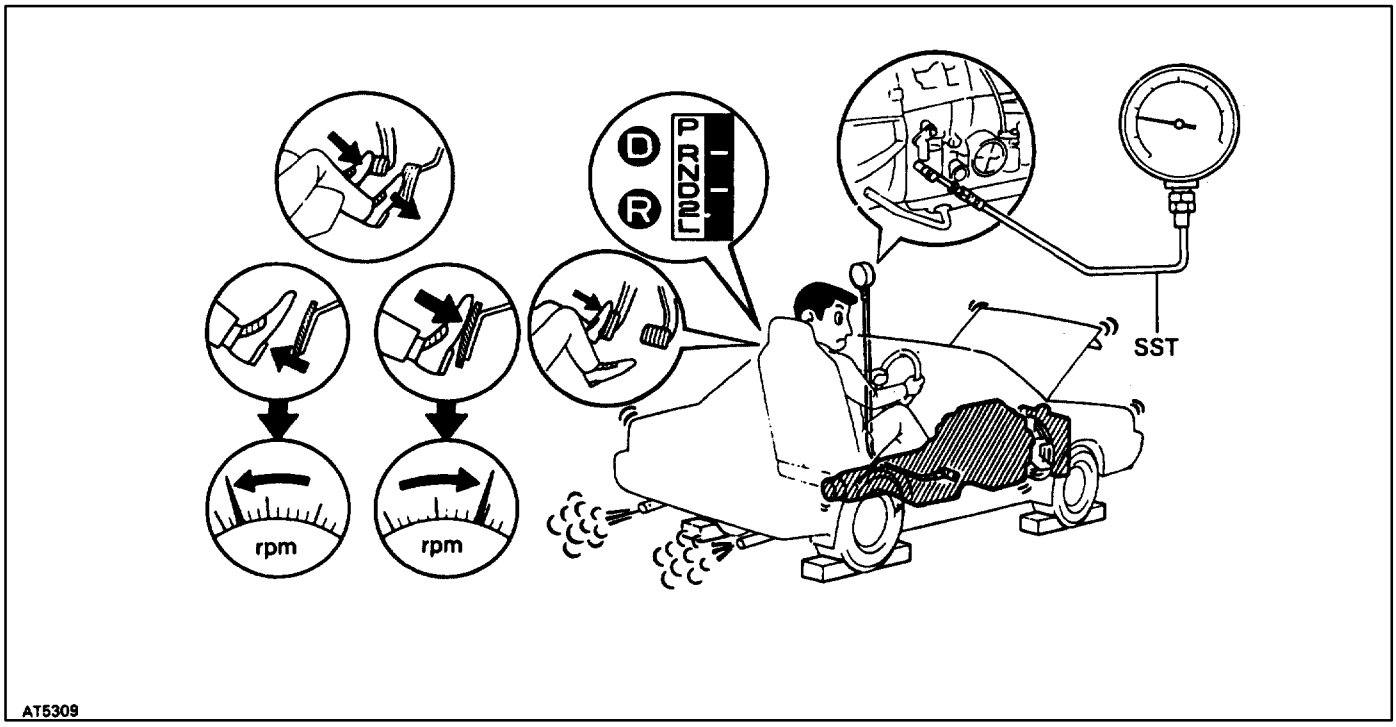

(c) Fully apply the parking brake and chock the 4 wheels.

(d) Start the engine and check idling RPM.

(e) Keep your left foot pressed firmly on the brake pedal and shift into D position.

(f) Measure the line pressure when the engine is idling.

(g) Press the accelerator pedal all the way down. Quickly read the highest line pressure when engine speed reaches stall speed.

(h) In the same manner, perform the test in R position.

WhereEverybodyKnowsYourName

SPECIFIED LINE PRESSURE

Condition	D positionkPa (kgf/cm^2, psi)	R positionkPa (kgf/cm^2, psi)
Idling	382–441 (3.9–4.5, 55–64)	637–716 (6.5–7.3, 92–104)
Stall	1,265–1,402 (12.9–14.3, 183–203)	1,726–2,060 (17.6–21.0, 250–299)

If the measured pressures are not up to specified values, recheck the throttle cable adjustment and perform a retest.

EVALUATION

Problem	Possible cause
If the measured values at all positions are higher.	2 Throttle cable out of adjustment 2 Throttle valve defective 2 Regulator valve defective
If the measured values at all positions are lower.	2 Throttle cable out of adjustment 2 Throttle valve defective 2 Regulator valve defective 2 Oil pump defective 2 O/D direct clutch defective
If pressure is low in the D position only.	2 D position circuit fluid leakage 2 Forward clutch defective
If pressure is low in the R position only.	2 R position circuit fluid leakage 2 Direct clutch defective 2 First and reverse brake defective

WhereEverybodyKnowsYourName

MEASURE ACCUMULATOR BACK PRESSURE

AT0QU–01

NOTICE:

- **Perform the test at normal operating fluid temperature 50–80°C (122–176°F).**
- **Be careful to prevent the oil pressure gauge hose from interfering with the exhaust pipe.**

(a) Warm up the transmission fluid.

(b) Remove the test plug on the transmission case rear right side and connect the oil pressure gauge SST.
SST 09992–00094
HINT: Connecting the oil pressure gauge will be made easier by moving the RH side head insulator aside.

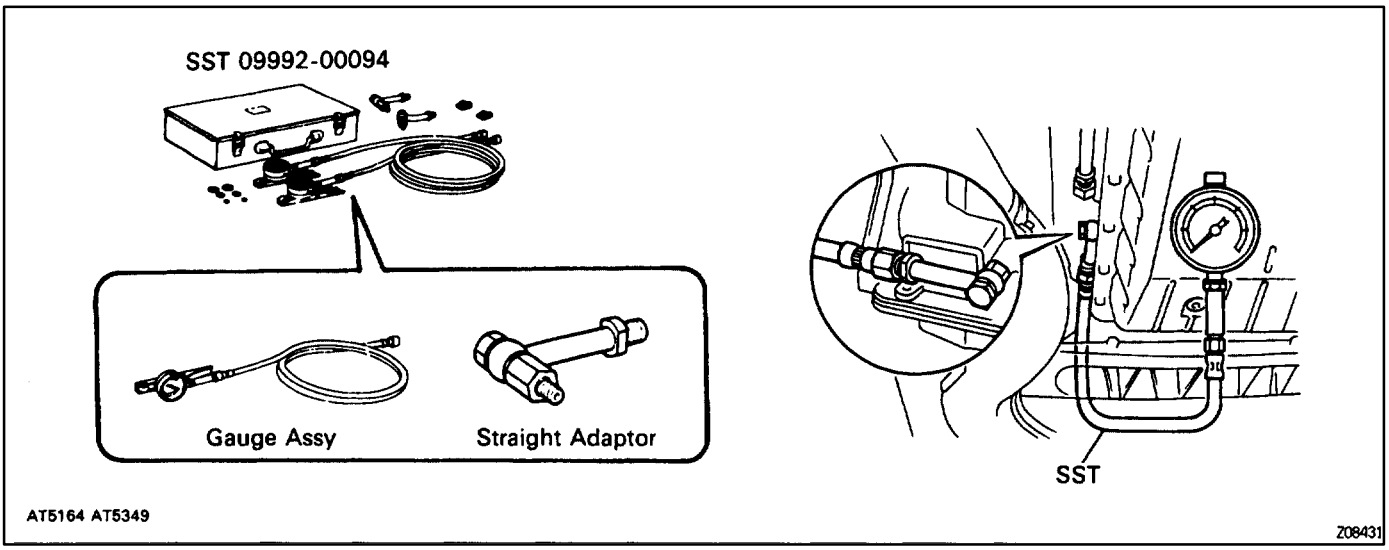

(c) Remove the passenger side No.2 under cover and ECM protector.

(d) Connect the SST (check harness A) between ECM and connector of vehicle wire harness.
SST: 09990–01000

(e) Install one test lead probe into the terminal SLN of the ECM wire harness side connector and take care not to ground the other test lead probe.
HINT: Prepare test leads which are connected with an (approximately) 8 W light bulb.

WhereEverybodyKnowsYourName

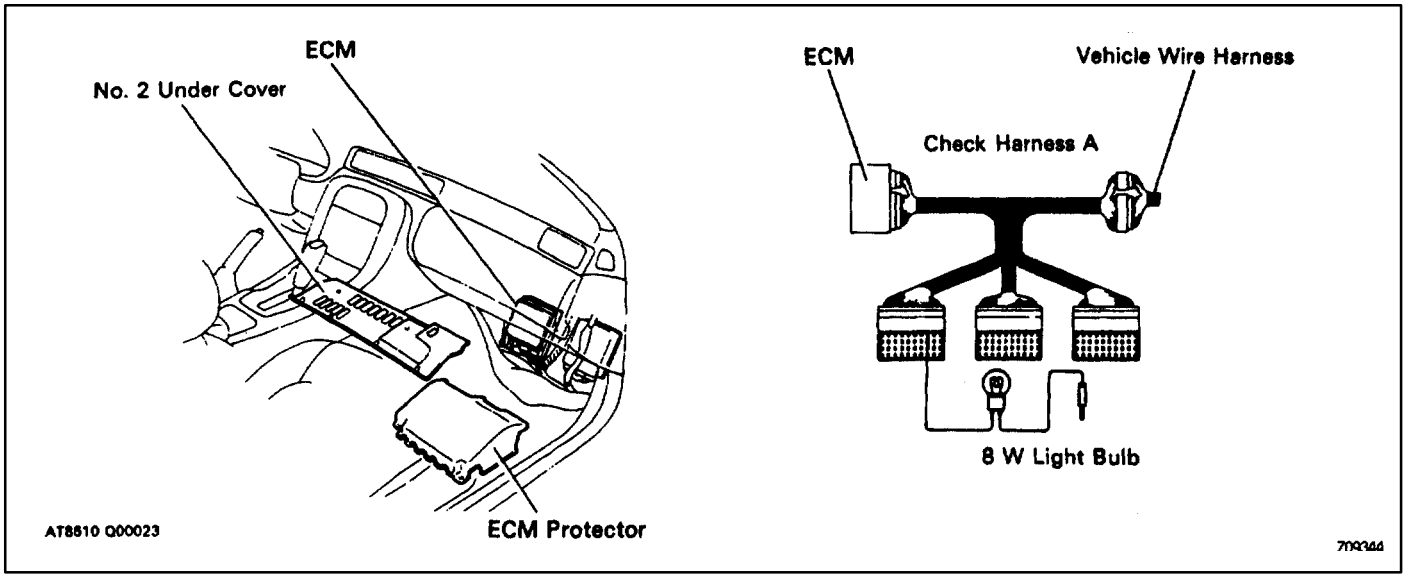

(f) Fully apply the parking brake and chock the 4 wheels.
(g) Start the engine and check idling RPM.
(h) Keep your left foot pressed firmly on the brake pedal and shift into D position.
(i) Measure the accumulator back pressure.
(j) With the conditions the same as in (h), ground the other probe of the test lead which has one end inserted into the terminal SLN of the ECM harness side connector, then measure the accumulator back pressure again.

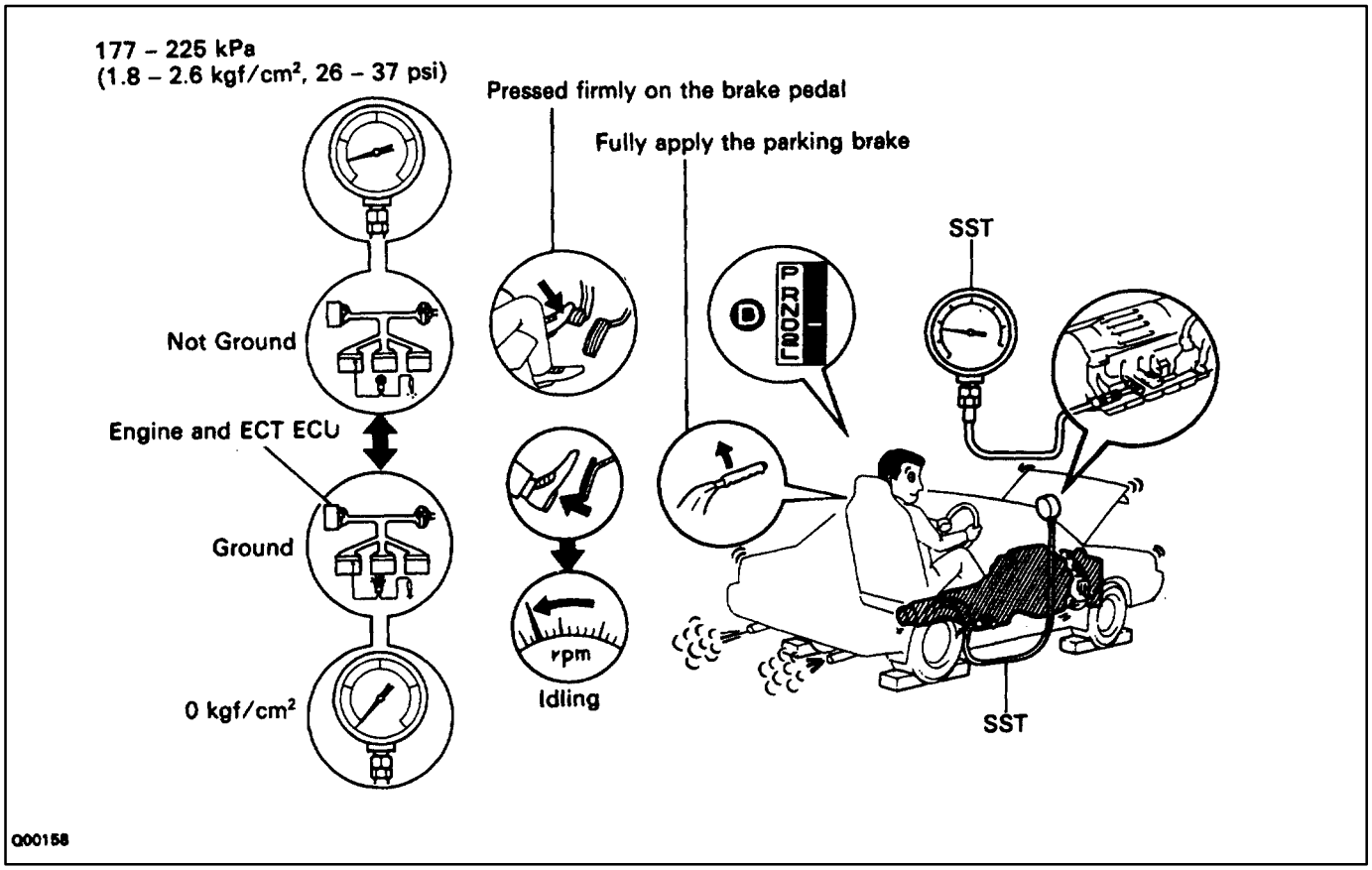

WhereEverybodyKnowsYourName

SPECIFIED ACCUMULATOR BACK PRESSURE

Condition if ECM terminal SLN	Not ground kPa (kgf/cm^2, psi)	Ground kPa (kgf/cm^2 , psi)
Accumulator back pressure	177–255 (1.8–2.6, 26–37)	0

EVALUATION

Problem	Possible cause
The accumulator back pressure is not as specified (high or low) when the terminal SLN is not ground.	2 Throttle cable out of adjustment 2 Throttle valve defective 2 Solenoid modulator valve defective 2 SLN solenoid valve defective 2 Accumulator control valve defective
The accumulator back pressure does not become 0 kgf/cm^2 when the terminal SLN is grounded.	2 SLN solenoid valve defective

WhereEverybodyKnowsYourName

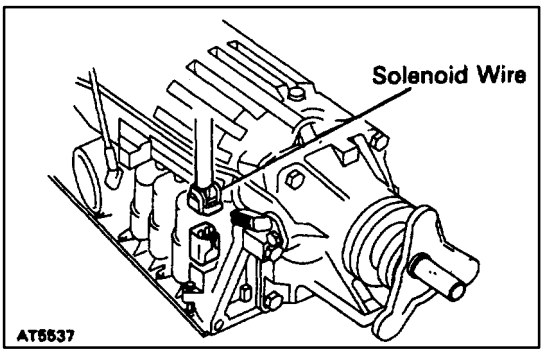

MANUAL SHIFTING TEST

AT0QV–01

HINT: With this test, it can be determined whether the trouble is within the electrical circuit or is a mechanical problem in the transmission.

1. DISCONNECT SOLENOID WIRE

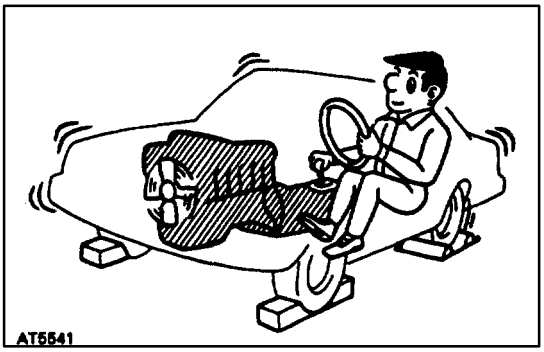

2. INSPECT MANUAL DRIVING OPERATION

Check that the shift and gear positions correspond with the table below.

Shift Position	Gear Position
D Position	O/D
2 Position	3rd
L Position	1st
R Position	Reverse
P Position	Pawl Lock

HINT: If the L, 2 and D position gear positions are difficult to distinguish, perform the following road test.

- **While driving, shift through the L, 2 and D positions. Check that the gear change corresponds to the shift position.**

If any abnormality is found in the above test, the problem is in the transmission itself.

3. CONNECT SOLENOID WIRE

4. CANCEL OUT DIAGNOSTIC TROUBLE CODE

(See page AT–39**)**

WhereEverybodyKnowsYourName

DIAGNOSTIC TROUBLE CODE CHART

AT0LR–04

If a malfunction code is displayed during the diagnostic trouble code check, check the circuit listed for that code in the table below and proceed to the page given.

Code No.	Blinking Pattern	Circuit	Diag. Code Detection Condition
42	BE3934	No.1 vehicle speed sensor	All conditions below are detected 500 times or more continuously. (2 trip detection logic)*3 (a) No No.1 vehicle speed sensor signal in 16 No.2 vehicle speed sensor signal pulses. (b) Vehicle speed: 5.6 MPH (9 km/h) or more for 4 secs. or more (c) Park/neutral position switch: OFF (Other than P or N position)
46	BE3934	No.4 solenoid valve	All conditions below are detected for 1 sec. or more. (2 trip detection logic)*3 (a) ECM output duty signal to No.4 solenoid in 90% or higher duty ratio. (b) Current to No.4 solenoid: 330 ± 100 mA or less
61	BE3936	No.2 vehicle speed sensor	All conditions below are detected 500 times or more continuously. (2 trip detection logic)*3 (a) No No.2 vehicle speed sensor signal in 4 No.1 vehicle speed sensor signal pluses. (b) Vehicle speed: 5.6 MPH (9 km/h) or more for 4 secs. or more (c) Park/neutral position switch: OFF (Other than P or N position)
62	BE3936	No.1 solenoid valve	(1) Solenoid resistance of 8 Ω or less is detected (*) 8 times or more when No.1 solenoid is energized. (2) Solenoid resistance of 100 kΩ or more is detected (*) 8 times or more when No.1 solenoid is not energized. (*) If the above failures are detected less than 8 times, the ECM memorizes the malfunction code but the O/D OFF indicator light does not blink.
63	BE3936	No.2 solenoid valve	(1) Solenoid resistance of 8 Ω or less is detected (*) 8 times or more when No.2 solenoid is energized. (2) Solenoid resistance of 100 kΩ or more is detected (*) 8 times or more when No.2 solenoid is not energized. (*) If the above failures are detected less than 8 times, the ECM memorizes the malfunction code but the O/D OFF indicator light does not blink.
64	BE3936	No.3 solenoid circuit	All conditions below are detected for 1 sec. or more. (2 trip detection logic)*3 (a) ECM outputs duty signal to No.4 solenoid in 90% or higher duty ratio. (b) Current to No.3 solenoid: 450 ± 100 mA or less
67	BE3936	O/D direct clutch speed sensor	All conditions below are detected for 4 secs. or more. (2 trip detection logic)*3 (a) Gear position: 1st, 2nd or 3rd (b) T/M input shaft RPM: 100 RPM or more (c) T/M output shaft RPM: less than 300 RPM (d) Park/neutral position switch: OFF (Other than P or N range)

WhereEverybodyKnowsYourName

Trouble Area	O/D OFF Light*1 Blinks	Memory*2	See Page
▼Harness or connector between No. 1 vehicle speed sensor and ECM. ▼No. 1 vehicle speed sensor. ▼Combination meter. ▼ECM	2	2	AT–78
▼Harness or connector between No.4 solenoid and ECM. ▼No.4 solenoid. ▼ECM	X	2	AT–82
▼Harness or connector between No.2 vehicle speed sensor and ECM. ▼No.2 vehicle speed sensor. ▼ECM	2	2	AT–86
▼Harness or connector between No.1 solenoid and ECM. ▼No.1 solenoid. ▼ECM	2	2	AT–90
▼Harness or connector between No.2 solenoid and ECM. ▼No.2 solenoid. ▼ECM	2	2	AT–90
▼Harness or connector between No.3 solenoid valve and ECM. ▼No.3 solenoid valve. ▼ECM	X	2	AT–94
▼Harness or connector between O/D direct clutch speed sensor and ECM. ▼O/D direct clutch speed sensor. ▼ECM	2	2	AT–98

WhereEverybodyKnowsYourName

*1: “O” mark means “O/D OFF” light blinks once every 2 seconds. “X” mark means “O/D OFF” light never blinks.
*2: “O” mark means the ECM memorizes the malfunction code if the ECM detects the diag. trouble code detection condition.
*3: This indicates items for which “2 trip detection logic” is used. With this logic, when a logic malfunction is first detected, the malfunction is temporarily stored in the ECM memory. If the same case is detected again during the second drive test, this second detection causes the O/F OFF Light to blink.
The 2 trip repeats the same mode twice. (However, the IG switch must be turned OFF between the 1st trip and 2nd trip.)

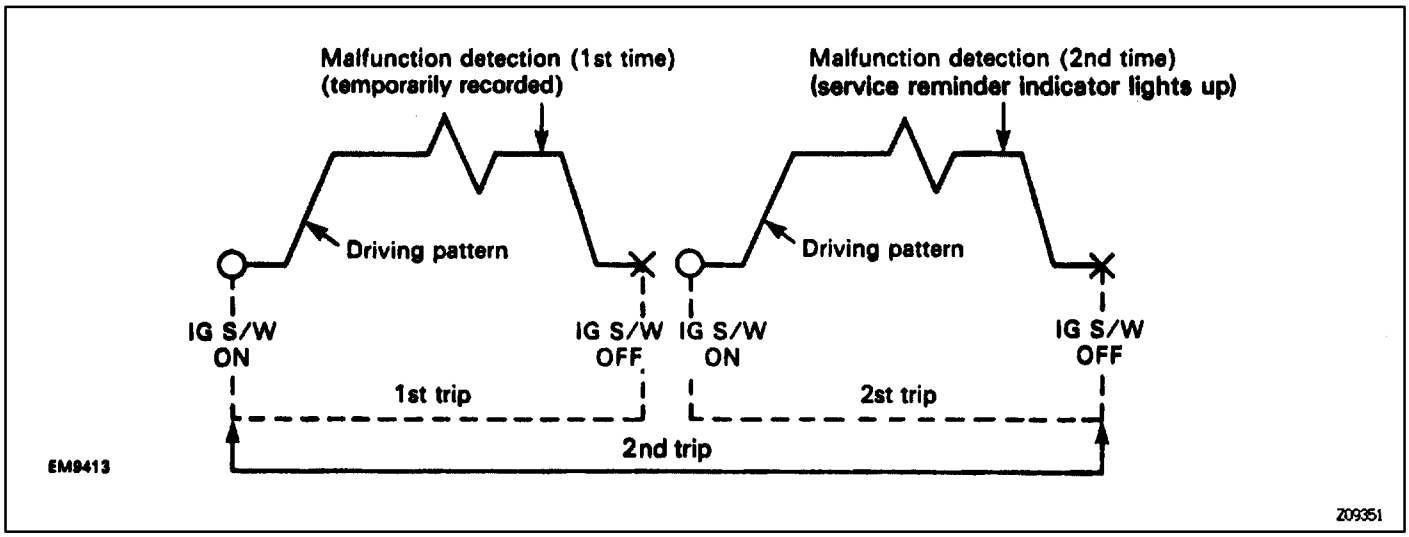

HINT:

- ▼ If the malfunction returns to normal while a malfunction warning is being output, the O/D OFF indicator light stops blinking and goes off.
  However, the malfunction code is retained in memory until it is cleared from memory.
- ▼ If the diagnosis system outputs a malfunction code even though the O/D OFF indicator was not blinking, there is intermittent trouble. Check all the connections in the circuits corresponding to that code.
- ▼ If the vehicle speed sensors No.1 and No.2 happen to fail simultaneously, the ECM will neither alert the driver by blinking the O/D OFF indicator nor record any diagnostic trouble code. It will, however, decide that the vehicle can be driven only in 1st and none of the other gears, shifting upwards will then be prohibited.
- ▼ Codes 46, 62, 63 and 64 are limited to short or open circuits in the electrical system comprised of the solenoids, wire harnesses and connectors. The ECM is unable to detect mechanical trouble (sticking, for example) in the solenoid valves.

WhereEverybodyKnowsYourName

STANDARD VALUE OF ECM TERMINAL

AT0L9–04

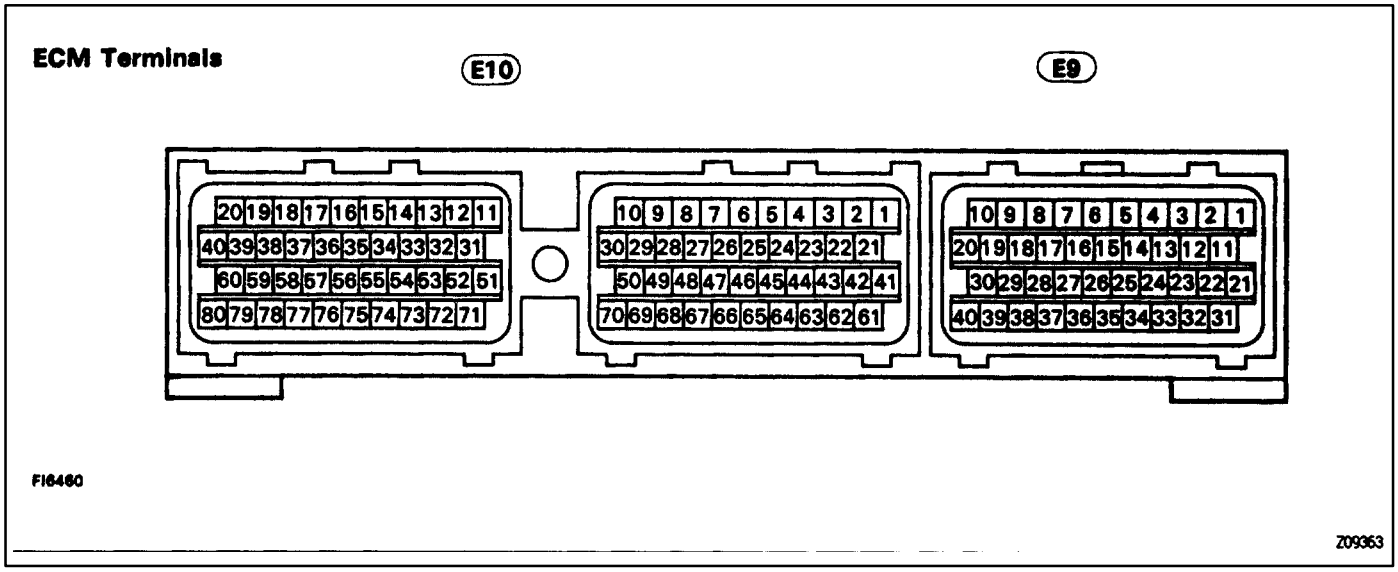

(*A=E9, B=E10)

Terminals	Symbols	Wiring color	Condition		Standard Value
B13 – B69	SLN – – E1	R-B ↔ BR	Ignition switch ON		10 – 14 V
B14 – B69	SLU – – E1	L ↔ BR	Ignition switch ON		10 – 14 V
B76 – B69	PNP – E1	B-W ↔ BR	IG ON	Shift Lever; P or N position	Below 1 V
				Shift Lever; Other than P or N position	10 – 14 V
B1 – B21	NCO – – NCO+	G ↔ R	IG OFF, Disconnect ECM connector		560 – 680 Ω
B3 – B23	SP2 – – SP2+	V ↔ P	IG OFF		560 – 680 Ω
B10 – B69	SOL1 – E1	LG ↔ BR	IG OFF		10 – 16 Ω
			Vehicle driving under 2nd gear		10 – 14 V
			IG ON		10 – 14 V
B9 – B69	SOL2 – E1	W-R ↔ BR	IG OFF		10 – 16 Ω
			Vehicle driving 2nd or 3rd gear		10 – 14 V
			IG ON		Below 0.5 V
B43 – B65	VTA1 – E2	Y ↔ BR	IG ON	Accel. pedal is not depressed	Below 1.5 V
				Accel. pedal is fully depressed	3.0 – 5.5 V
B64 – B65	IDL1 – E2	R ↔ BR	IG ON	Accel. pedal is not depressed	Below 1 V
				Accel. pedal is depressed	10 – 14 V
A2 – B65	SPD – E2	P ↔ BR	Ignition switch ON Turn the rear wheel slowly		Repeat 0 – 8 V or above
A3 – B69	KD – E1	L ↔ BR	IG ON	Kickdown SW; OFF (Accel. pedal is not depressed)	10 – 14 V
				Kickdown SW; ON (Accel. pedal is fully depressed)	Below 0.5 V
A7 – B69	R – E1	R-B ↔ BR	IG ON	Shift position; R	10 – 14 V
				Shift position; Other than R	Below 0.5 V
A9 – B69	2 – E1	G ↔ BR	IG ON	Shift position; 2 position	10 – 14 V
				Shift position; Other than 2	Below 0.5 V
A10 – B69	L – E1	W ↔ BR	IG ON	Shift position; L position	10 – 14 V
				Shift position; Other than L	Below 0.5 V
A12 – B69	OD1 – E1	BR-Y ↔ BR	Ignition switch ON		4 – 6 V
A18 – B69	P – E1	G-O ↔ BR	IG ON	Pattern select SW; PWR	10 – 14 V
				Pattern select SW; NORM	Below 1 V
A28 – B69	OD2 – E1	GR-R ↔ BR	IG ON	O/D main SW; ON	10 – 14 V
				O/D main SW; OFF	Below 0.5 V

WhereEverybodyKnowsYourName

–Memo–

WhereEverybodyKnowsYourName

MATRIX CHART OF PROBLEM SYMPTOMS

AT0LS–08

If a normal code is displayed during the diagnostic trouble code check but the trouble still occurs, check the circuits for each symptom in the order given in the charts on the following pages and proceed to the page given for troubleshooting.

The Matrix Chart is divided into 3 chapters.

Chapter 1: Electronic Circuit Matrix Chart

Chapter 2: On–vehicle Repair Matrix Chart

Chapter 3: Off–vehicle Repair Matrix Chart

In troubleshooting, check Chapter 1 first. If instructions are given in Chapter 1 to proceed to Chapter 2 or 3, proceed to it.

1. **If the instruction “Proceed to next circuit inspection shown on matrix chart” is given in the flow chart for each circuit, proceed to the circuit with the next highest number in the table to continue the check.**
2. **If the trouble still occurs even though there are no abnormalities in any of the other circuits, then check or replace the ECM.**

WhereEverybodyKnowsYourName

Chapter 1. Electronic Circuit

See Page / Suspect Area / Symptom		AT–78	AT–88	AT–86	AT–90	AT–94	AT–98	AT–102
		No.1 Vehicle speed sensor circuit	No.4 Solenoid circuit	No.2 Vehicle speed sensor circuit	No.1, No.2 Solenoid circuit	No.3 Solenoid circuit	O/D direct clutch speed sensor circuit	Throttle position sensor circuit
Vehicle does not move in any forward position and reverse position								
Vehicle does not move in a particular position or positions								
No up-shift	1st → 2nd	3		4	1			2
	2nd → 3rd	3		4	1			2
	3rd → O/D	3		4	2			5
No down-shift	O/D → 3rd	3		4	1			2
	3rd → 2nd	3		4	1			2
	2nd → 1st	3		4	1			2
Lock-up does not engage		3		4		1		2
Lock-up does not disengage		3		4		1		2
Shift point too high or too low		3		4				1
Upshifts to 2nd while in L range Upshifts to 3rd while in L range								
Upshifts to O/D from 3rd while O/D switch is OFF								
Upshifts to O/D from 3rd while engine is cold								
Harsh engagement	N → D		2			1	3	4
	Lockup	3		4		1		2
	Any driving position	5	2	6		1	3	4
Slip or Shudder	Forward and reverse							
	A particular position							
No engine braking								
Poor acceleration		3		4	5	6		2
No kick–down		3			4			2
No pattern select								
Large shift shock or engine stalls when starting off or stopping.						1		

WhereEverybodyKnowsYourName

Park/neutral position switch circuit AT–106	Kick – down switch circuit AT–104	Stop light switch circuit AT–108	Pattern select switch circuit AT–110	O/D switch O/D OFF indicator light circuit AT–112	O/D cancel signal circuit AT–116	Engine coolant tempe-rature switch circuit EG–580	ECM IN–26	On-Vehicle repair matrix chart AT–68	OFF-Vehicle repair matrix chart AT–70
								1	2
								1	2
6							8	5	7
6							8	5	7
6				1	7	8	11	9	10
							6	5	–
							6	5	–
							7	5	6
7	6	5				8	11	9	10
		5					8	6	7
			2				5	–	–
1							2	–	–
				1			2	–	–
						1	4	2	3
5							8	6	7
							7	5	6
							9	7	8
								1	2
								1	2
								1	2
	1						8	–	7
	1						6	5	–
			1				2	–	–
		2					4	–	3

WhereEverybodyKnowsYourName

Chapter 2. On–Vehicle Repair

(2 : '94 A340E and A341E AUTOMATIC TRANSMISSION Repair Manual for LEXUS SC400)

See page		AT–48	AT–48	★	★	★	★	★	★
Suspect Area / Symptom		Throttle cable	Transmission control rod	Oil strainer	Parking lock pawl	Manual valve	Reverse control valve	1-2 shift valve	2-3 shift valve
Vehicle does not move in any forward position and reverse position		1	2		4	3			
Vehicle does not move in R position							1		
Vehicle does not move in a particular positions or positions (except R position)									
No up-shift	1st → 2nd							1	
	2nd → 3rd								1
	3rd → O/D								
No down-shift	O/D → 3rd								
	3rd → 2nd								1
	2nd → 1st							1	
Lock-up does not engage or Lock-up does not disengage									
Harsh engagement	N → D								
	Lock-up								
	N → R								
	N → L								
	1st → 2nd (D position)								
	1st → 2nd (2 position)								
	1st → 2nd → 3rd → O/D								
	2nd → 3rd								
	3rd → O/D								
	O/D → 3rd								
Slip or Shudder	Forward and Reverse	1	2	3					
	Particular position	1	2						
No engine braking	1st								
	2nd								
No kick-down								1	2

V04379

WhereEverybodyKnowsYourName

★	★	★	★	★	★	★	★	★	★	★	★	★	★	★	AT–70
3-4 shift valve	Lockup control valve	Lockup relay valve	Accumulator control valve	Solenoid modulator valve	C_1 accumulator	Orifice control valve	Solenoid relay valve	C_2 accumulator	Low coast modulator valve	B_2 accumulator	2nd coast modulator valve	B_0 accumulator	C_0 accumulator	Pressure relief valve	OFF-Vehicle repair matrix chart
															5
															2
															1
															2
															2
1															2
1															
															2
	1	2													3
			1	2	3	4									5
	1	2					3								4
			1	3				2							4
									1						
			1	2						3					
			1	2							3				
			1	2											
			1	2				3							4
			1	2								3			4
			1	2									3		4
														4	5
															3
									1						2
											1				2

WhereEverybodyKnowsYourName

Chapter 3. Off–Vehicle Repair

(2 : '94 A340E and A341E AUTOMATIC TRANSMISSION Repair Manual for LEXUS SC400)

See Page		*	*	*	*	AT–25	*
Suspect Area / Symptom		O/D one-way clutch (F_0)	O/D brake (B_0)	O/D direct clutch (C_0)	O/D planetary gear unit	Torque converter clutch	1st and reverse brake (B_3)
Vehicle does not move in any forward position and reverse position		1	2	3	4	5	
Vehicle does not move in R position D, 2 and L positions				5			4
Vehicle does not move in	D, 2 and L positions						
	D and 2 positions						
	2 position						1
	L position						
No up-shift	1st → 2nd						
	2nd → 3rd						
	3rd → O/D		1				
No down-shift	2nd → 1st						
Lock-up does not engage or Lock-up does not disengage						1	
Harsh engagement	N → D						
	N → R						2
	2nd → 3rd						
	3rd → O/D		2	1	3		
	O/D → 3rd		1				
	Lockup					1	
Slip or Shudder	Forward & Reverse (After warm-up)	2		3		1	
	Forward & Reverse (Just after engine starts)					1	
	R position						2
	1st						
	2nd						
	3rd						
	O/D		1				
No engine braking	1st ~ 3rd			1			
	1st						1
	2nd						
Poor acceleration	All positions					1	
	O/D			1	2		
	Other than O/D		1				
	Other than 2nd						
	1st and 2nd						
	1st and R position						1
	R position						
Engine stalls when starting off or stopping						1	

WhereEverybodyKnowsYourName

★	★	★	★	★	★	★
2nd coast brake (B_1)	Direct clutch (C_2)	Front and rear planetary gear unit	Forward clutch (C_1)	No.2 one-way clutch (F_2)	2nd brake (B_2)	No.1 one-way clutch (F_1)
1	3	2				
			1			
				1		
2	3				1	
					1	2
	1					
1					2	
			1			
	1					
1						
	1					
			1	2		
2					1	3
	1					
1						
1					2	
	1					
			1			

WhereEverybodyKnowsYourName

LOCATION OF CONNECTORS

AT0LA–02

Location of Connectors in Engine Compartment

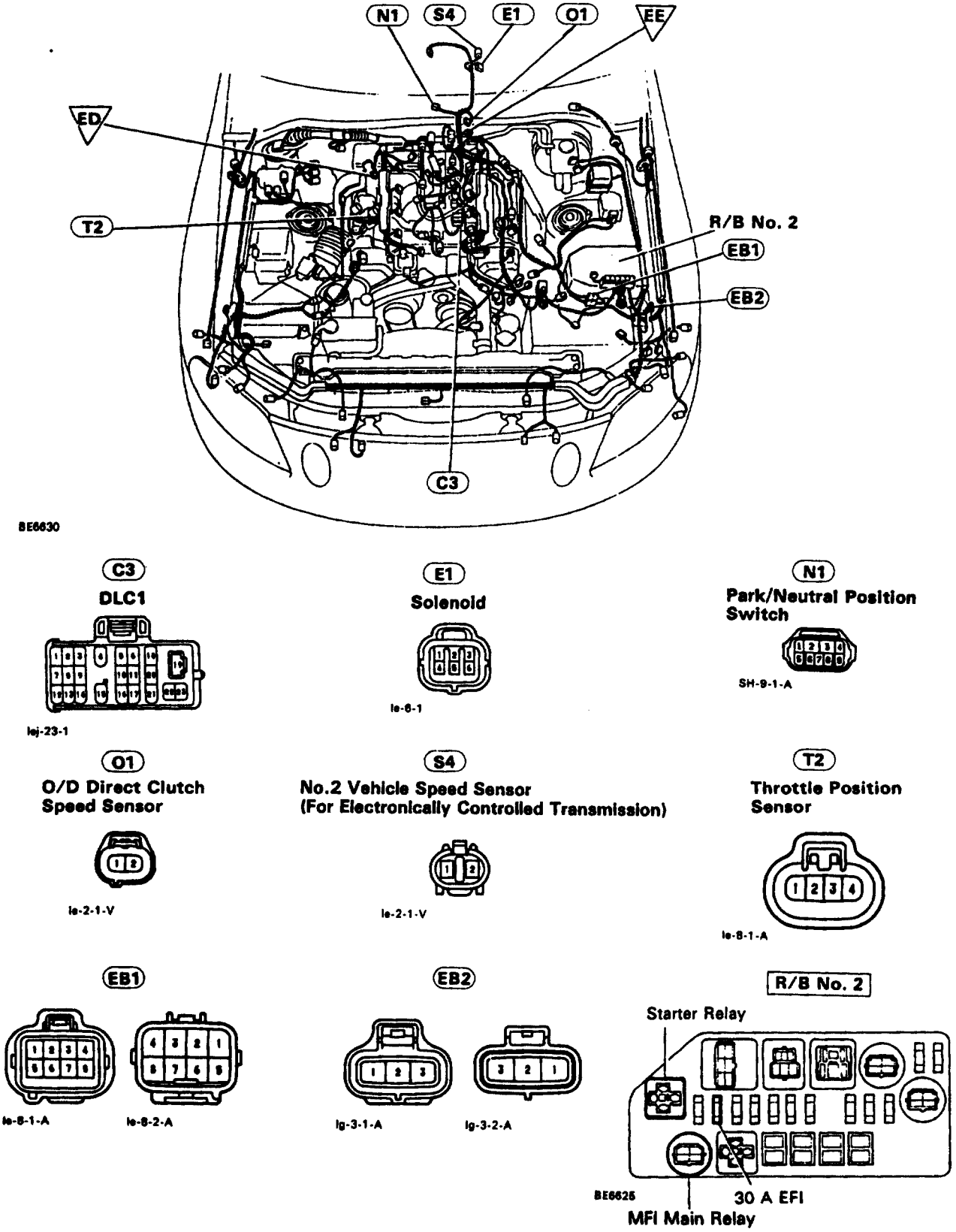

WhereEverybodyKnowsYourName

Location of Connectors in Body

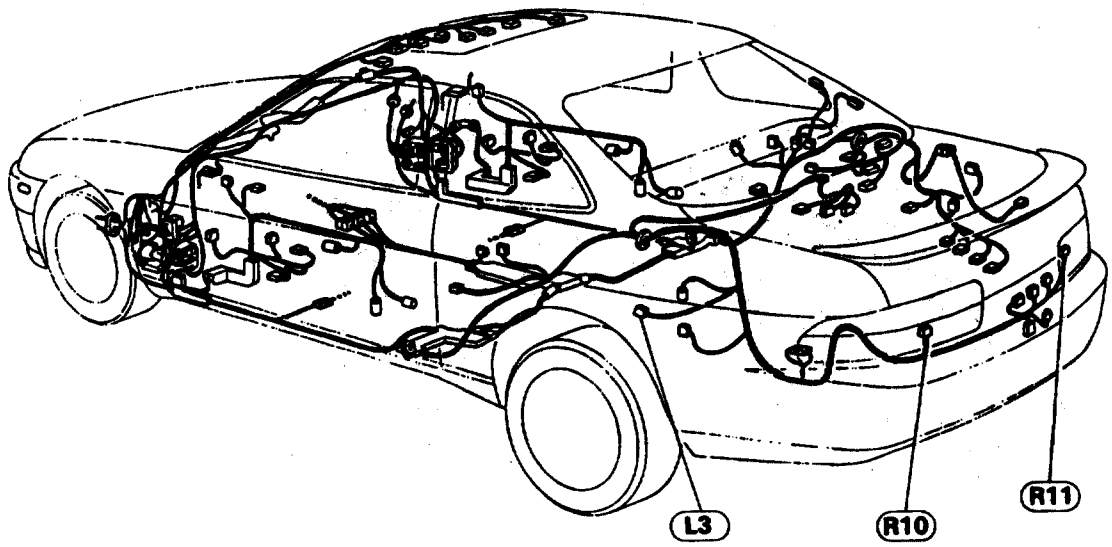

BE6632

L3
Light Failure Sensor

e-12-1

R10 R11
Stop Light

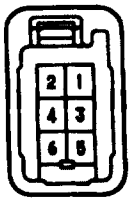

e-6-2-E

WhereEverybodyKnowsYourName

Location of Connectors in Instrument Panel

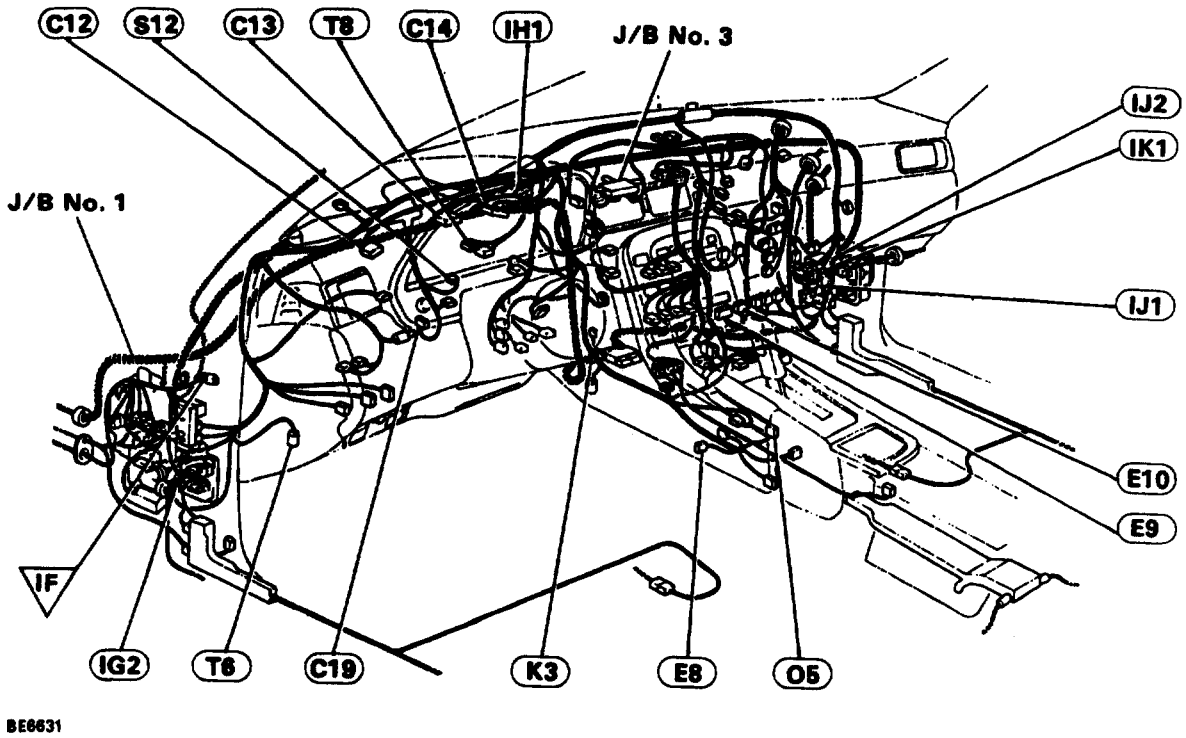

C12

Combination Meter, O/D OFF Indicator Light

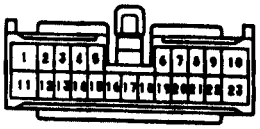

eh-23-1

C13

Combination Meter

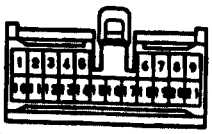

h-21-1

C14

Combination Meter, O/D OFF Indicator Light

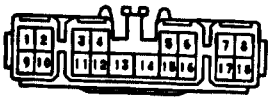

e-18-1

C19

Cruise Control ECU

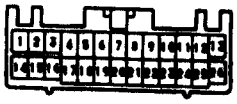

vd-26-1-B

E8

Pattern Select Switch

e-4-1

E9

ECM

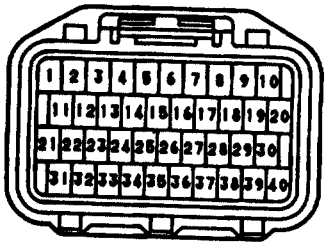

ld-40-1

WhereEverybodyKnowsYourName

E10
ECM

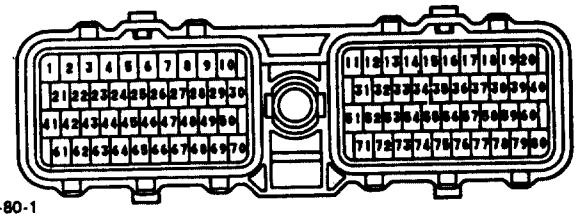

ld-80-1

K3
Kickdown Switch

le-2-1-X

O5
O/D Main Switch

e-2-1

S12
Stop Light Switch

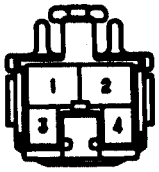

eg-4-1

T6
DLC2

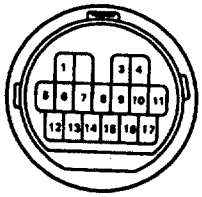

S-17-1

T8
Theft Deterrent and Door Lock ECU

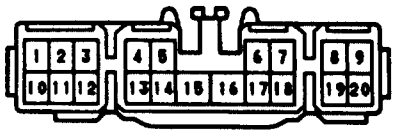

e-20-1

IG2

e-10-1

e-10-2

IH1

e-2-1

e-2-2

IJ1

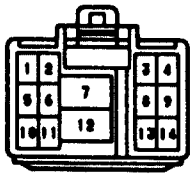

e-14-1

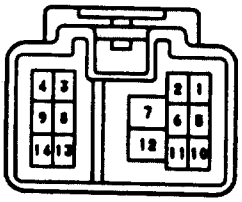

e-14-2

IJ2

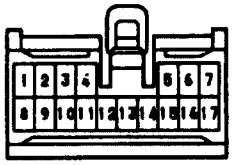

h-17-1

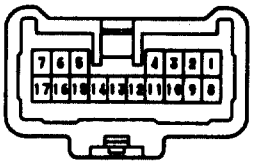

h-17-2

IK1

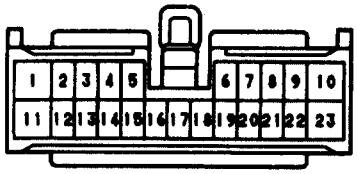

eh-23-1

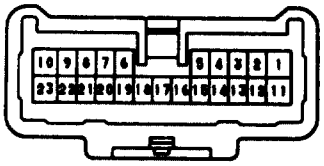

eh-23-2-B

WhereEverybodyKnowsYourName

J/B No. 1

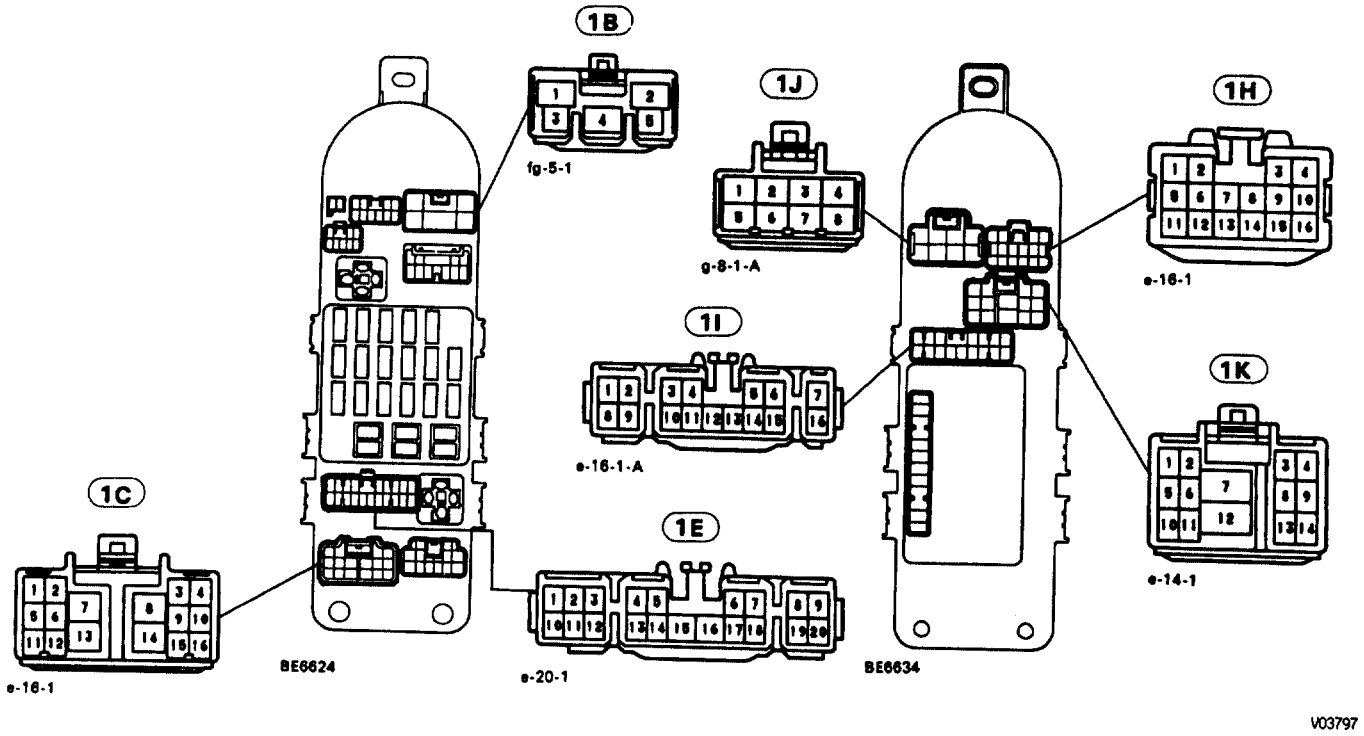

J/B No.3

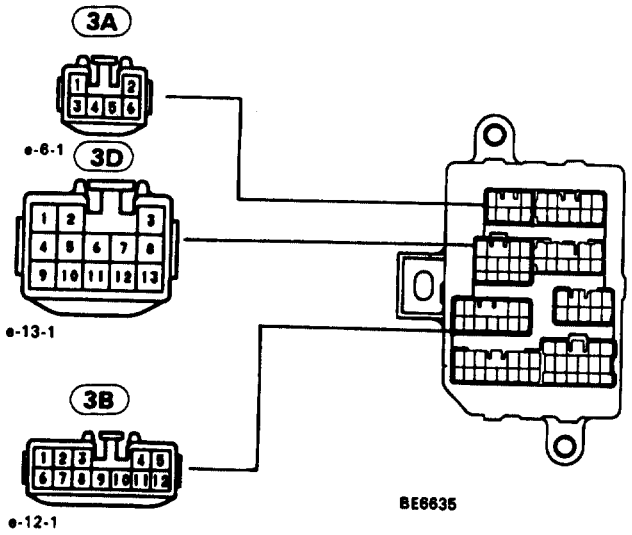

WhereEverybodyKnowsYourName

–MEMO–

WhereEverybodyKnowsYourName

CIRCUIT INSPECTION

DTC	42	No. 1 Vehicle Speed Sensor Circuit (Backup Sensor)

— CIRCUIT DESCRIPTION

The No. 1 vehicle speed sensor outputs a 4–pulse signal for every revolution of the transmission output shaft. After this signal is converted in to a more precise rectangular wave form by the wave form shaping circuit inside the combination meter, it is then transmitted to the ECM.

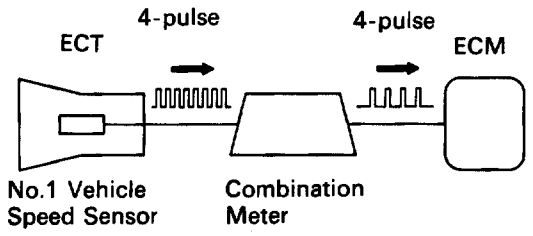

Q00765

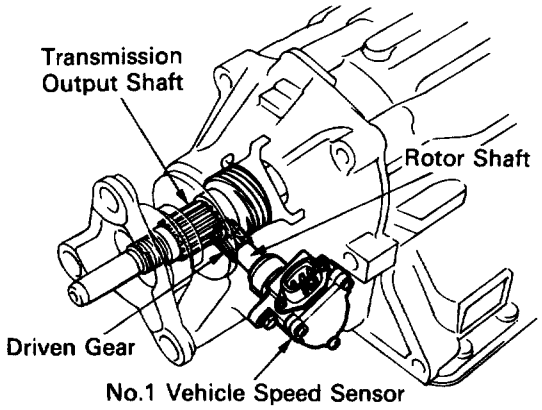

SR3327

DTC No.	DTC Detecting Condition	Trouble Area
42	All conditions below are detected 500 times or ore continuously: 2 trip detection logic* (a) No.1 vehicle speed sensor signal in 16 No 2 vehicle sensor signal (b) Vehicle speed: 5.6 MPH (9km/h) or more for at least 4 secs. or more (c) Park/neutral position switch: OFF (Other than P or N position)	▼No. 1 vehicle speed sensor. ▼Combination meter. ▼Harness or connector between No. 1 vehicle speed sensor and ECM. ▼ECM

*: See page AT–62

Reference
Wave form between terminals SPD and E1 when vehicle speed is approx. 37 MPH (60km/h).

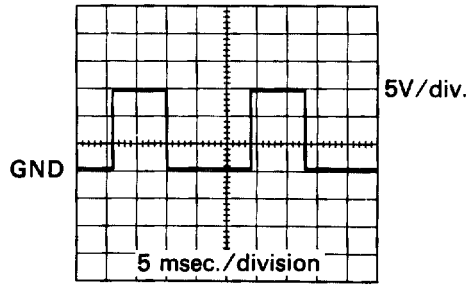

3762

HINT: The greater the vehicle speed, the greater the number of SPD signals produced.

WhereEverybodyKnowsYourName

DIAGNOSTIC CHART

1 Check operation of speedometer.

- NG → Check speedometer circuit. See combination meter troubleshooting in BE section
- OK ↓

2 Check voltage between terminal SPD of ECM connector and body ground.

- NG → Check speedometer circuit. See combination meter troubleshooting in BE section.
- OK ↓

Proceed to next circuit inspection shown on matrix chart (See page AT–66)
However, when diag. trouble code 42 is displayed, check and replace ECM.

WIRING DIAGRAM

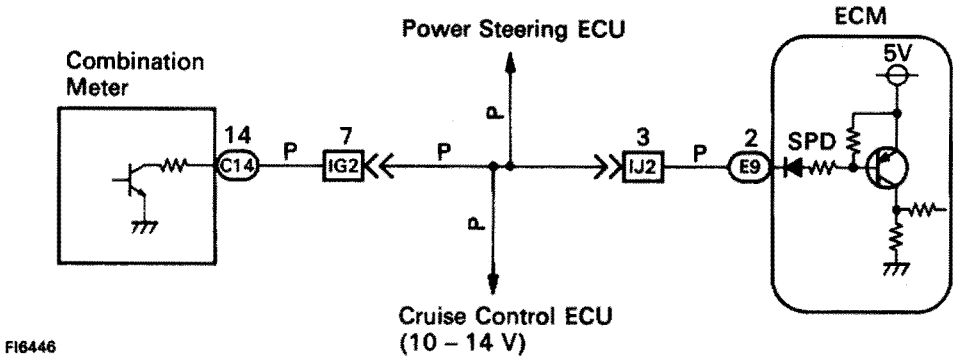

WhereEverybodyKnowsYourName

INSPECTION PROCEDURE

1	**Check operation of speedometer.**
C	Drive the vehicle and check if the operation of the speedometer in the combination meter is normal.
Hint	The No. 1 vehicle speed sensor is operating normally if the speedometer display is normal.

OK

NG → **Check speedometer circuit. See combination meter troubleshooting on BE section.**

2	**Check voltage between terminal SPD of ECM connector and body ground.**

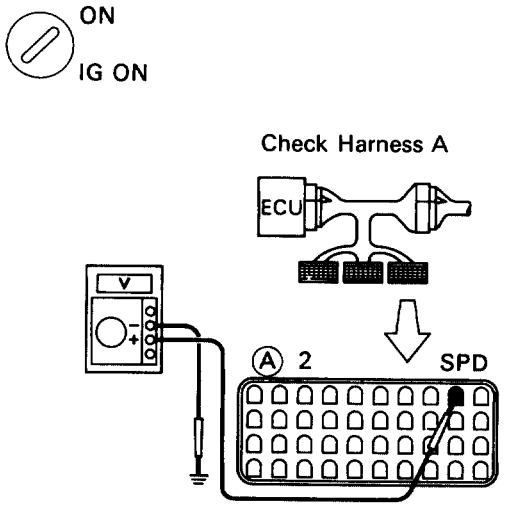

P

3. Connect the check harness A to the ECM (See EG section.)
4. Shift the shift lever to N position.
5. Jack up one of the rear wheels.
6. Turn ignition switch ON.

C Measure voltage between terminal SPD of ECM connector and body ground when he rear wheel is turned slowly.

OK **Voltage is generated intermittently.**

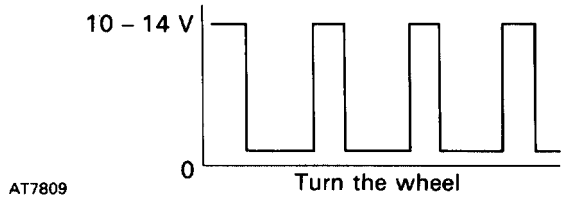

OK

NG → **Check speedometer circuit. See combination meter troubleshooting on BE section.**

Proceed to next circuit inspection shown on matrix chart (See page AT–66).
However, when diag. trouble code 42 is displayed, check and replace ECM.

WhereEverybodyKnowsYourName

DTC	46	No. 4 Solenoid Valve Circuit (For Accumulator Back Pressure Modulation)

— CIRCUIT DESCRIPTION

The No. 4 solenoid valve controls the hydraulic pressure acting on the brakes and clutches of the planetary gear units when gears are shifted and performs smooth gear shifting.
The ECM determines optimum operating pressure according to the signals from the throttle position sensor, vehicle speed sensor and O/D clutch speed sensor and controls the volume of current flow to the solenoid valve.
The amount of electric current to the solenoid is controlled by the (*) duty ratio of ECM out put signals, causing momentary change to the hydraulic pressure acting on the clutches during gear shifting.
When the duty ratio is high, the hydraulic pressure acting on the clutches is low.

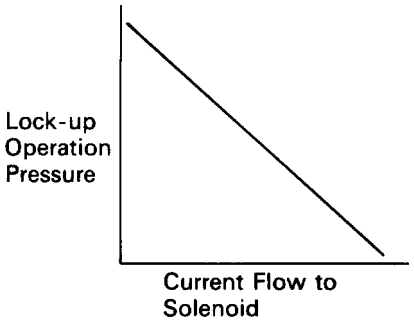

(*) Duty Ratio
The duty ration is the ration of the period of continuity in one cycle. For example, if A is the period of continuity in one cycle, and B is the period of non–continuity, then

$$\text{Duty Ratio} = \frac{A}{A + B} \times 100\ (\%)$$

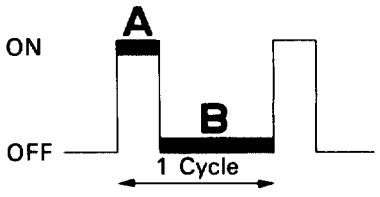

DTC No.	DTC Detecting Condition	Trouble Area
46	All conditions below are detected for 1 sec. or more. 2trip detection logic* (a) ECM outputs duty signal to No. 4 solenoid in 90% or higher duty ratio. (b) Current to No. 4 solenoid: 330 ± 100 Ma OR LESS (O/D OFF indicator light doesn't blink)	2 No. 4 solenoid valve. 2 Harness or connector between No. 4 solenoid valve and ECM 2 ECM

*: See page AT–62.

Reference

2 Waveform between terminals SLN– and E_1 when engine is idling.

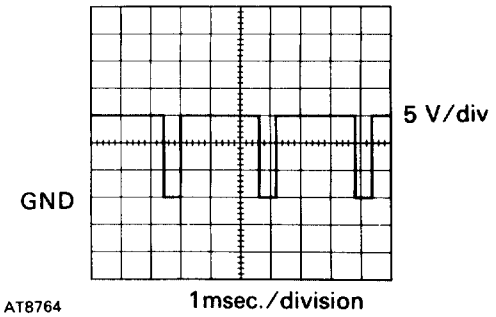

Reference

2 Waveform between terminals SLN– and E_1 during shift change.

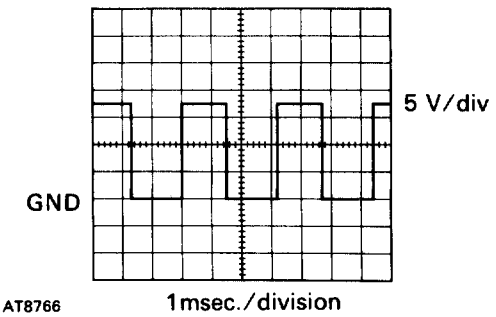

WhereEverybodyKnowsYourName

DIAGNOSTIC CHART

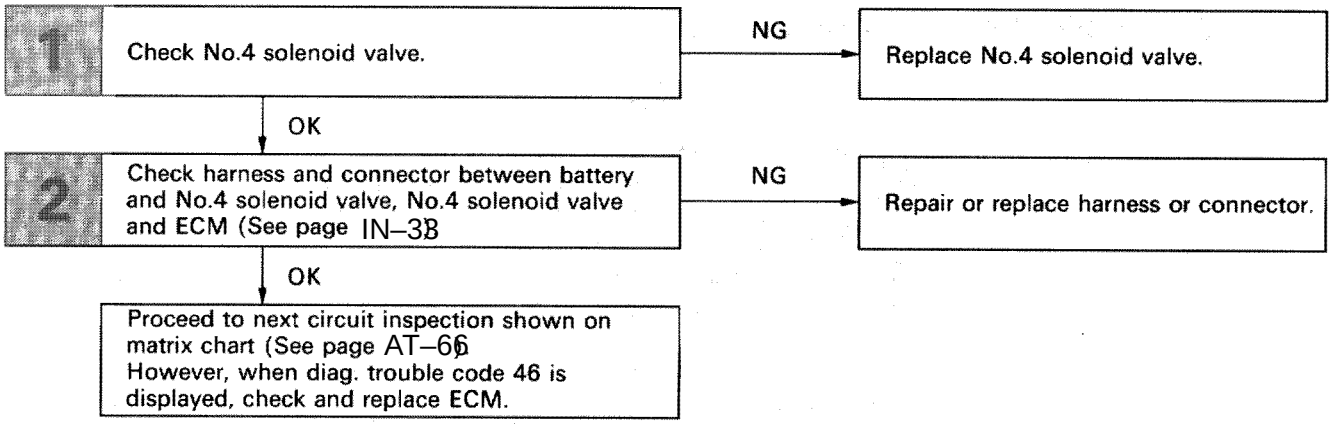

WIRING DIAGRAM

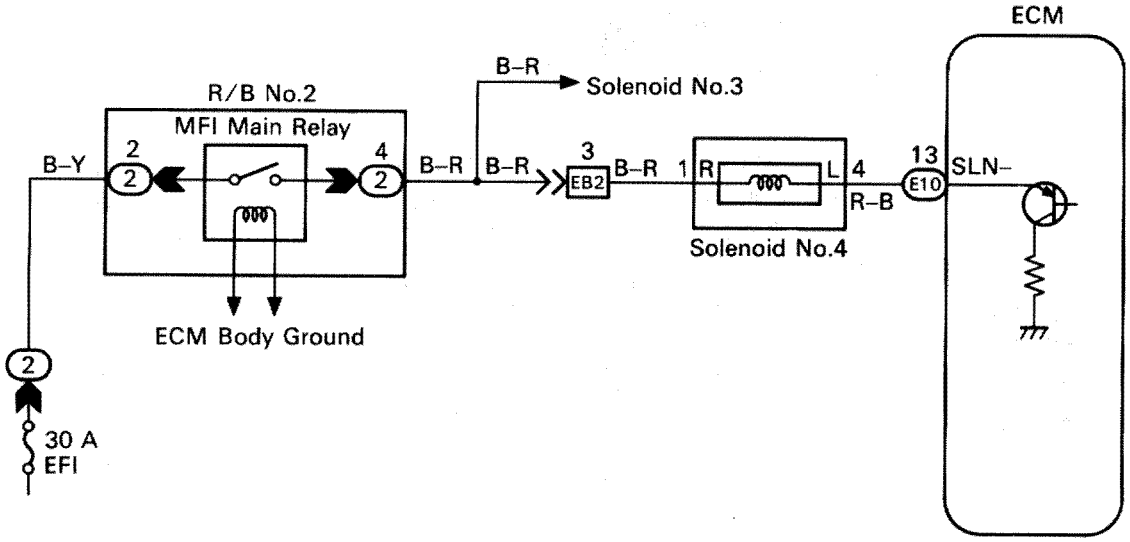

WhereEverybodyKnowsYourName

INSPECTION PROCEDURE

1 **Check No. 4 solenoid valve.**

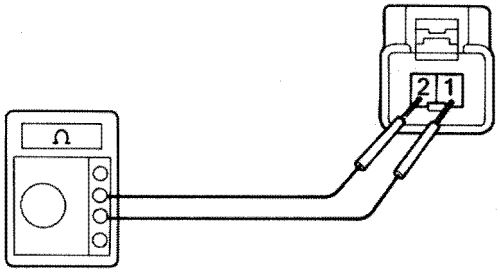

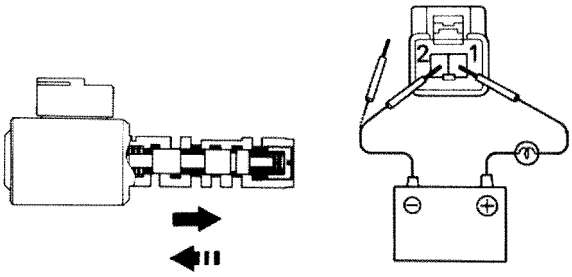

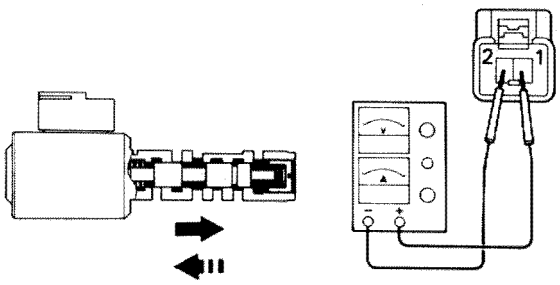

AT5533
AT5534 AT5535
AT5534 AT5536

P **Check solenoid resistance**

1. Jack up the Vehicle
2. Remove the oil pan.
3. Disconnect the connector

C Measure resistance between terminals 1 and 2 of solenoid connector.

OK **Resistance: 5.1 – 5.5**

Check solenoid operation

C Connect positive ↔ lead with an 8–10 W bulb to terminal 1 of solenoid connector and negative ⊖ lead to terminal 2, then check the movement of the valve.

OK

When battery positive voltage is applied.	Valve moves in ➡ direction.
When battery positive voltage is cut off.	Valve moves in ⬅ direction.

Reference

Check the solenoid's operation

C
1. Prepare a variable power supply.
2. Connect positive ↔ lead of the variable power supply to terminal 1 of solenoid connector and negative ⊖ lead to terminal 2.
3. Check the movement of the valve when the voltage is gradually increased. (A current greater than 1 A should not be supplied.)

OK As the voltage is increased, the valve should move slowly in the ➡ direction.

C
4. Check the movement of the valve when the voltage is cut off.

OK The valve should return in the ⬅ direction.

OK

NG **Replace No. 4 solenoid valve.**

Go to step ▼.

WhereEverybodyKnowsYourName

2	Check harness and connector between battery and No. 4 solenoid valve, No. 4 solenoid valve and ECM (See page IN–33).

OK

NG → **Repair or replace harness or connector.**

Proceed to next circuit inspection shown on matrix chart (See page AT–66). However, when diag. trouble code 46 is display, check and replace ECM.

WhereEverybodyKnowsYourName

DTC 61 No.2 Vehicle Speed Sensor Circuit

— CIRCUIT DESCRIPTION

The No.2 speed sensor detects the rotation speed of the transmission output shaft and sends signals to the ECM. The ECM determines the vehicle speed based on the these signals. An AC voltage is generated in the No.2 vehicle speed sensor coil as the rotor mounted on the output shaft rotates, and this voltage is sent to the ECM.
The gear shift point and lock–up timing are controlled by the ECM based on the signals from this vehicle speed sensor and the throttle position sensor signal.
If the No.2 vehicle speed sensor malfunctions, the ECM uses input signals from the No.1 vehicle speed sensor as a back–up signal.

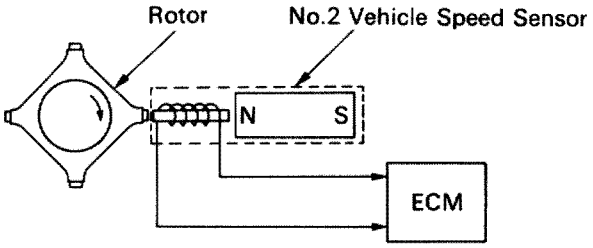

AT5605 AT5610

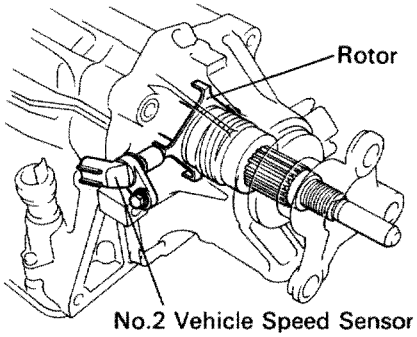

DTC No.	DTC Detecting Condition	Trouble Area
61	All conditions below are detected 500 times or more continuously. 2 trip detection logic* (a) No No.2 vehicle speed sensor signal in 4 No.1 vehicle speed sensor signal pulses. (b) Vehicle speed: 5.6 MPH (9 km/h) or more for at least 4 secs. (c) Park/neutral position switch: OFF (Other than P or N position)	▼No. 2 vehicle speed sensor ▼Harness or connector between No.2 vehicle speed sensor and ECM. ▼ECM

*: See page AT–62

Reference
▼ Waveform between terminals SP2+ and SP2– when vehicle speed is approx. 37 MPH (60km/h).

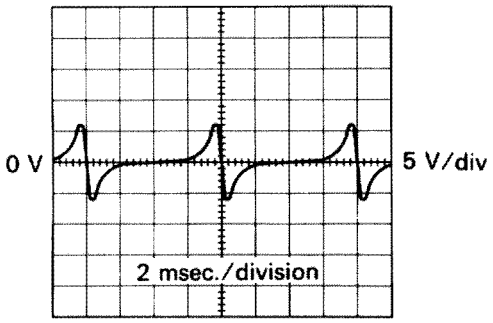

AT8761

WhereEverybodyKnowsYourName

DIAGNOSTIC CHART

1 Check continuity between terminals SP2+ and SP2− of ECM connector.

→ OK → Proceed to next circuit inspection tion shown on matrix chart (See page AT–60).

↓ NG

2 Check No.2 vehicle speed sensor.

→ NG → Replace No.2 vehicle speed sensor.

↓ OK

Check and repair harness and connector between ECM and No.2 vehicle speed sensor (See page IN–33).

WIRING DIAGRAM

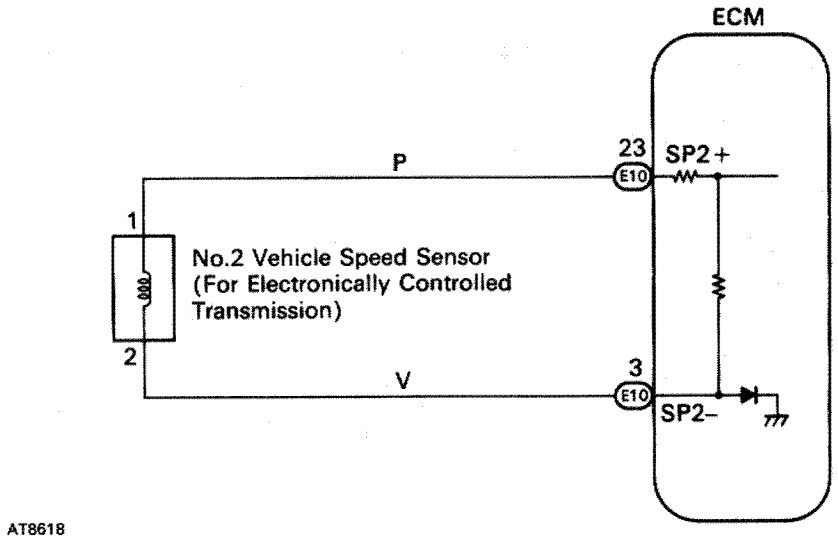

WhereEverybodyKnowsYourName

INSPECTION PROCEDURE

1 **Check resistance between terminals SP2+ and SP– of ECM connector.**

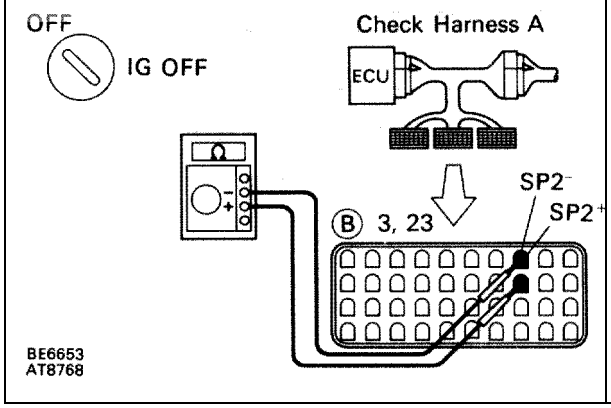

P Connect the check A to the ECM. (See EG section).

C Check resistance between terminals SP+ and SP2– of ECM connector.

OK **Resistance: 560 – 680**

NG

OK **Proceed to next circuit inspection shown on matrix chart (See page AT–66).**

2 **Check No.2 vehicle speed sensor.**

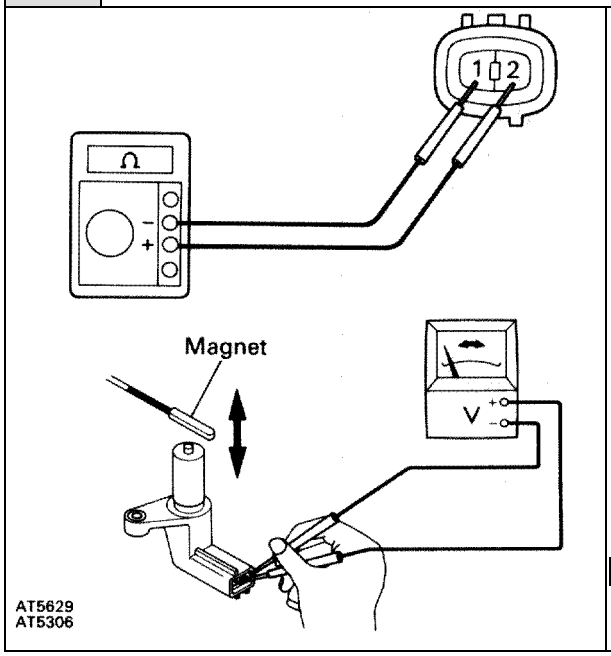

P Remove No.2 vehicle speed sensor from transmission. (See page AT–17).

C Measure resistance between terminals 1 and 2 of speed sensor.

OK **Resistance: 560 – 680**

Reference

<u>Check the vehicle speed sensor's function</u>

C Check voltage between terminals 1 and 2 of the vehicle speed sensor when a magnet is put close to the front end of the vehicle speed sensor then taken away quickly.

OK **Voltage is generated intermittently.**

Hint The voltage generated is extremely low.

OK

NG **Replace No.2 vehicle speed sensor.**

Check and repair harness and connector between ECM and No.2 vehicle speed sensor (See page IN–33).

WhereEverybodyKnowsYourName

–MEMO–

WhereEverybodyKnowsYourName

DTC 62, 63 No. 1, No. 2 Solenoid Valve Circuit

— CIRCUIT DESCRIPTION

Shifting from 1st to O/D is performed in combination with ON and OFF of the No. 1 and No. 2 solenoid valves controlled by ECM. If an open or short circuit occurs in either of the solenoid valves, the ECM controls the remaining normal solenoid to allow the vehicle to be operated smoothly (Fail safe function.

Fail Safe Function

If either of the solenoid valve circuits develops a short or an open, the ECM turns the other solenoid ON and OFF to shift to the gear positions shown in the table below. The ECM also turns the lock–up solenoid valve OFF at the same time. If both solenoids malfunction, Hydraulic control cannot be performed electronically and must be done manually.

Manual shifting as shown in the following table must be done. (In the case of a short circuit, the ECM stops sending current to the short circuited solenoid).

Position	NORMAL			NO. 1 SOLENOID MALFUNCTIONING			NO. 2 SOLENOID MALFUNCTIONING			BOTH SOLENOIDS MALFUNCTIONING
	Solenoid valve		Gear	Solenoid valve		Gear	Solenoid valve		Gear	Gear when shift selectoris manually operated
	No. 1	No. 2		No. 1	No. 2		No. 1	No. 2		
D	ON	OFF	1st	x	ON	3rd	ON	x	1st	O/D
	ON	ON	2nd	x	ON	3rd	OFF	x	O/D	O/D
	OFF	ON	3rd	x	ON	3rd	OFF	x	O/D	O/D
	OFF	OFF	O/D	x	OFF	O/D	OFF	x	O/D	O/D
2 (S)	ON	OFF	1st	x	ON	3rd	ON	x	1st	3rd
	ON	ON	2nd	x	ON	3rd	OFF	x	3rd	3rd
	OFF	ON	3rd	x	ON	3rd	OFF	x	3rd	3rd
L	ON	OFF	1st	x	OFF	1st	ON	x	1st	1st
	ON	ON	2nd	x	ON	2nd	ON	x	1st	1st

x: Malfunctions

Check the No. 1 solenoid when diagnostic trouble code 62 is output and check the No. 2 solenoid when diagnostic trouble code 63 is output.

DTC No.	DTC Detecting Condition	Trouble Area
62, 63	▼ Solenoid resistance of 8 ? or less is detected (*) 8 times or more when solenoid is energized. ▼ Solenoid resistance of 100 k? or more is detected (*) 8 times or more when solenoid is not energized.	▼Solenoid valve. ▼Harness or connector between solenoid and ECM. ▼ECM

(*) If the above failures are detected less than 8 times, the ECM memorizes the malfunction code but the O/D OFF indicator light doesn't blink.

WhereEverybodyKnowsYourName

DIAGNOSTIC CHART

1 Check No. 1, No. 2 solenoid valves.
- NG → Replace No. 1 or No. 2 solenoid valve.
- OK ↓

2 Check harness and connector between ECM and solenoid (See page IN–33).
- NG → Repair or replace harness or connector.
- OK ↓

Proceed to next circuit inspection shown on matrix chart (See page AT–66).
However, when diag. trouble code 62 or 63 is displayed, check and replace ECM.

WIRING DIAGRAM

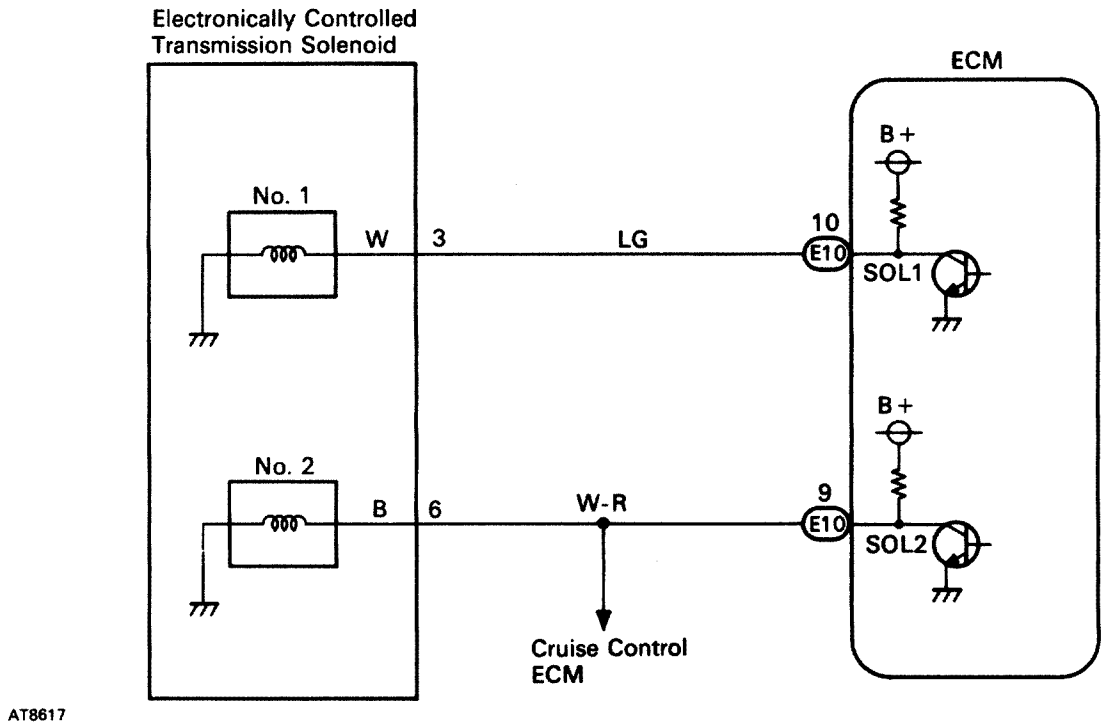

WhereEverybodyKnowsYourName

INSPECTION PROCEDURE

1 **Check No. 1, No. 2 solenoid valves.**

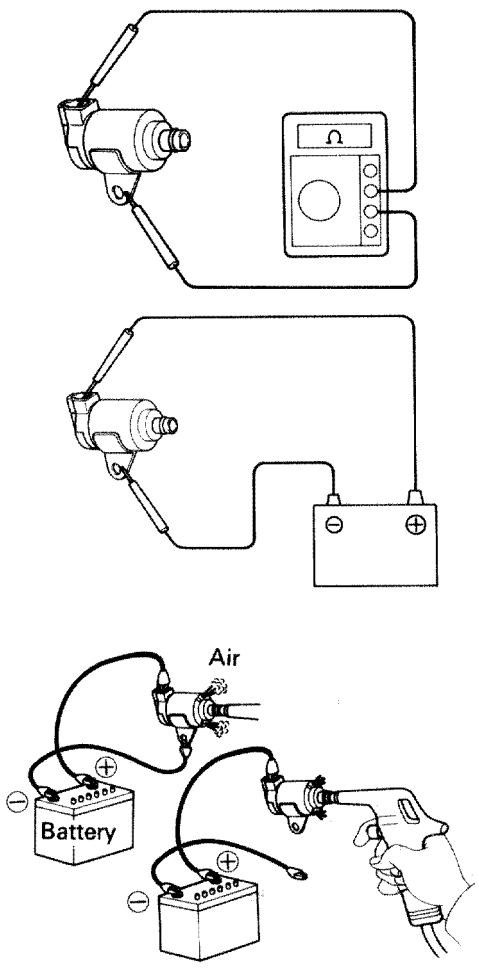

Electrical Check

P
1. Jack up the vehicle.
2. Remove oil pan.
3. Disconnect solenoid connector.

C Measure resistance between solenoid connector and body ground.

OK **Resistance: 10 – 16**

C Connect positive ≦ lead to terminal of solenoid connector, negative ↔ lead to solenoid body.

OK The solenoid makes an operating noise.

Mechanical Check

P
1. Remove the oil pan.
2. Remove the No. 1 and No. 2 solenoid valves.

C
1. Applying 490 kPa (5 kgf/cm^2, 71 psi) of compressed air, check that the solenoid valves do not leak air.
2. When battery positive voltage is supplied to the solenoid valves, check that the solenoid valves open.

OK

NG **Replace solenoid valve.**

2 **Check harness and connector between ECM and solenoid (See page IN–33).**

OK

NG **Repair or replace harness or connector.**

Proceed to next circuit inspection shown on matrix chart (See page AT–66). However, when diag. trouble code 62 or 63 is displayed, check and replace ECM.

WhereEverybodyKnowsYourName

–MEMO–

WhereEverybodyKnowsYourName

DTC	64	No. 3 Solenoid Valve Circuit (For Lock–up Control Pressure Modulation)

— CIRCUIT DESCRIPTION

The No. 3 solenoid valve is provided for lock–up operations. The lock–up operation pressure is controlled by the linear solenoid for smooth engagement.
The amount of current flow to the solenoid is controlled by the duty ratio (See page AT–82) of ECM output signal. The higher the duty ration becomes, the higher the lock–up hydraulic pressure becomes during the lock–up operation. If the malfunction occurs in this circuit and diagnostic trouble code 64 is stored in memory, the O/D OFF indicator light does not blink.

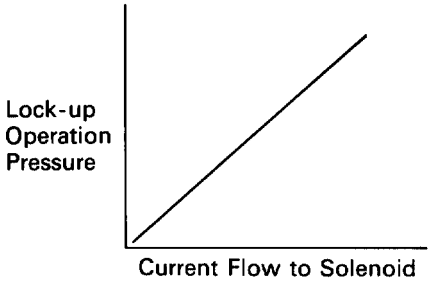

DTC No.	DTC Detecting Condition	Trouble Area
64	All conditions below are detected for 1 sec. or more. 2 trip detection logic* (a) ECM outputs duty signal to No. 3 solenoid in 90% or higher duty ration. (b) Current to No. 3 solenoid: 450 ≦ 100 mA or less.	2 No. 3 solenoid valve 2 Harness or connector between No. 3 solenoid valve and ECM. 2 ECM

*: See page AT–62

Reference
2 Waveform between terminals SLU– and E_1 when lock–up function is not operated.

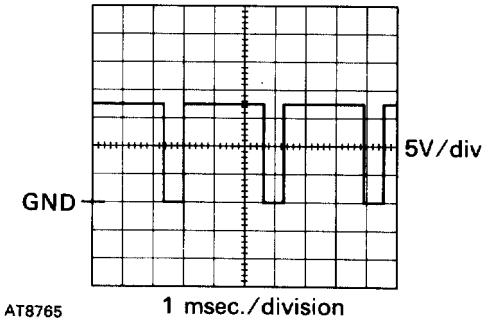

Reference
2 Waveform between terminals SLU– and E_1 when lock–up function is operated.

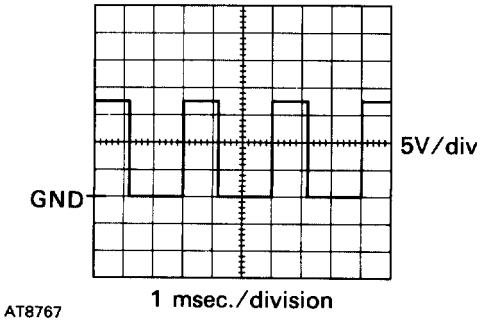

WhereEverybodyKnowsYourName

DIAGNOSTIC CHART

1 Check No. 3 solenoid valve.
- NG → Replace No. 3 solenoid valve.
- OK ↓

2 Check harness and connector between battery and No. 3 solenoid valve, No. 3 solenoid valve and ECM (See page IN–33).
- NG → Repair or replace harness or connector.
- OK ↓

Proceed to next circuit inspection shown on matrix chart (See page AT–66).
However, when diag. trouble code 64 is displayed, check and replace ECM.

WIRING DIAGRAM

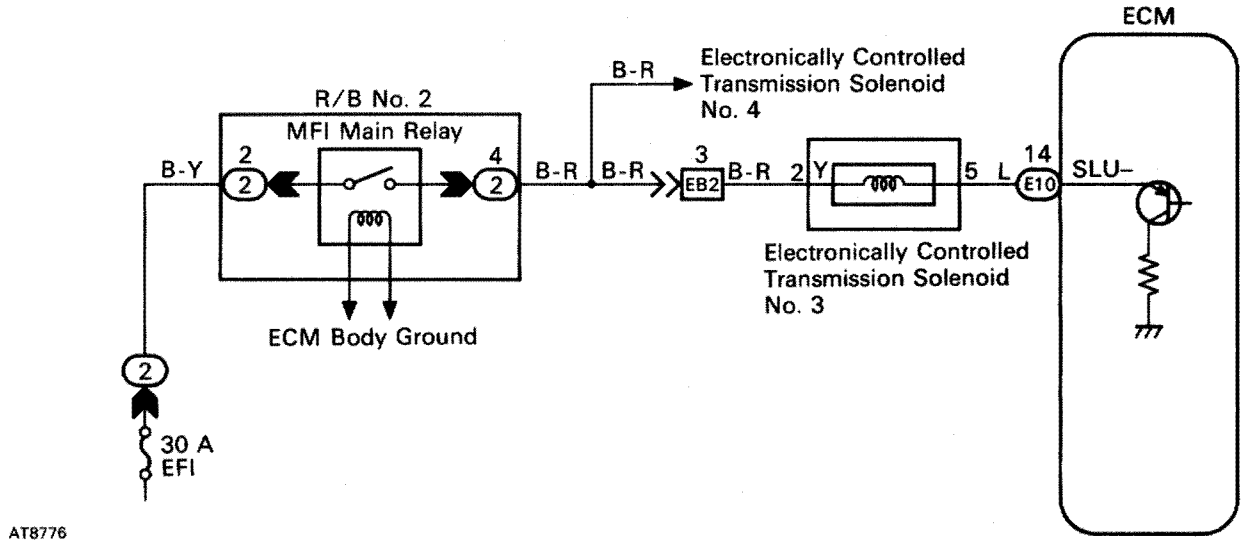

WhereEverybodyKnowsYourName

INSPECTION PROCEDURE

1 **Check No. 3 solenoid valve.**

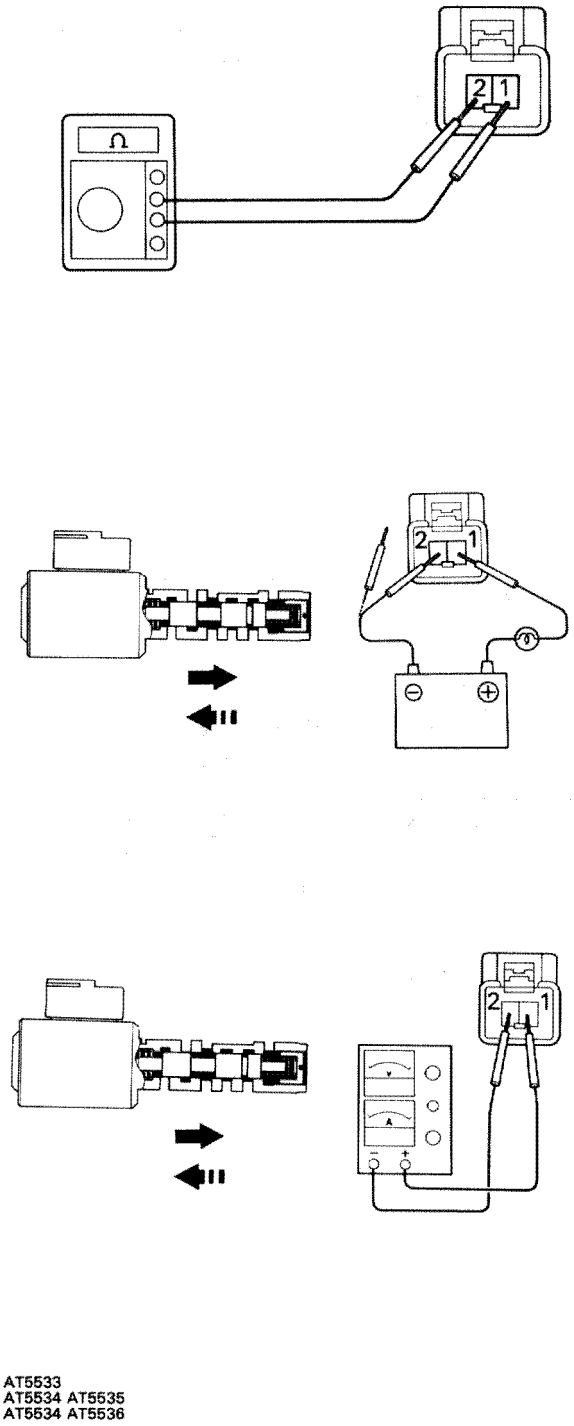

P **Check solenoid resistance**

1. Jack up the vehicle.
2. Remove oil pan.
3. Disconnect solenoid connector.

C Measure resistance between terminals 1 and 2 of solenoid connector.

OK **Resistance: 3.5 – 3.9**

Check solenoid operation

C Connect positive ↔ lead with an 8 – 10 W bulb to terminal 1 of solenoid connector and negative ⊖ lead to terminal 2, then check the movement of the valve.

OK

When battery positive voltage is applied.	Valve moves in ➡ direction.
When battery positive voltage is cut off.	Valve moves in ⬅ direction.

Reference

Check solenoid operation

C
1. Prepare a variable power supply.
2. Connect positive ↔ lead of the variable power supply to terminal 1 of solenoid connector and negative ⊖ lead to terminal 2.
3. Check the movement of the valve when the voltage is gradually increased. (A current greater than 1 A should not be supplied.)

OK **As the voltage is increased, the valve should move slowly in the ➡ direction.**

C
4. Check the movement of the valve when the voltage is cut off.

OK **The valve should return in the ⬅ direction.**

OK

NG **Replace No. 3 solenoid valve.**

Go to step ▼.

WhereEverybodyKnowsYourName

2	Check harness and connector between battery and No. 4 solenoid valve, No. 4 solenoid valve and ECM (See page IN–33).

OK

NG → **Repair or replace harness or connector.**

Proceed to next circuit inspection shown on matrix chart (See page AT–66). However, when diag. trouble code 64 is display, check and replace ECM.

WhereEverybodyKnowsYourName

DTC 67 O/D Direct Clutch Speed Sensor Circuit

— CIRCUIT DESCRIPTION

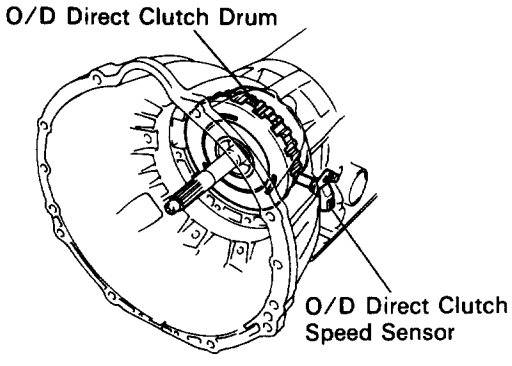

This sensor detects the rotation speed of the O/D input shaft from the rotation of the O/D direct clutch drum.
Its construction is the same as that of the No. 2 vehicle speed sensor (See page AT–86).
By comparing the O/D direct clutch speed signal and the No. 2 vehicle speed sensor signal, ECM detects the shift timing of the gears and appropriately controls the engine torque and hydraulic pressure in response to various conditions, thus performing smooth gear shift.

DTC No.	DTC Detecting Condition	Trouble Area
67	All conditions below are detected for 4 secs. or more 2 trip detection logic* (a) Gear position: 1st, 2nd and 3rd (b) T/M input shaft rpm: 100 rmp or more (c) T/M output shaft rpm: less than 300 rpm (d) PNP: OFF (other than P or N position)	▼O/D direct clutch speed sensor. ▼Harness or connector between O/D direct clutch speed sensor and ECM. ▼ECM

*: See page AT–62.

Reference
▼Wave form between terminals NCO^+ and NCO^- during engine idling.

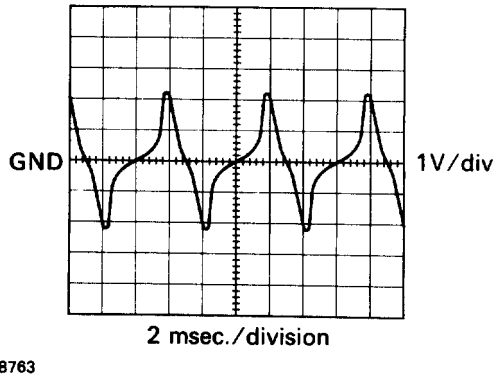

WhereEverybodyKnowsYourName

DIAGNOSTIC CHART

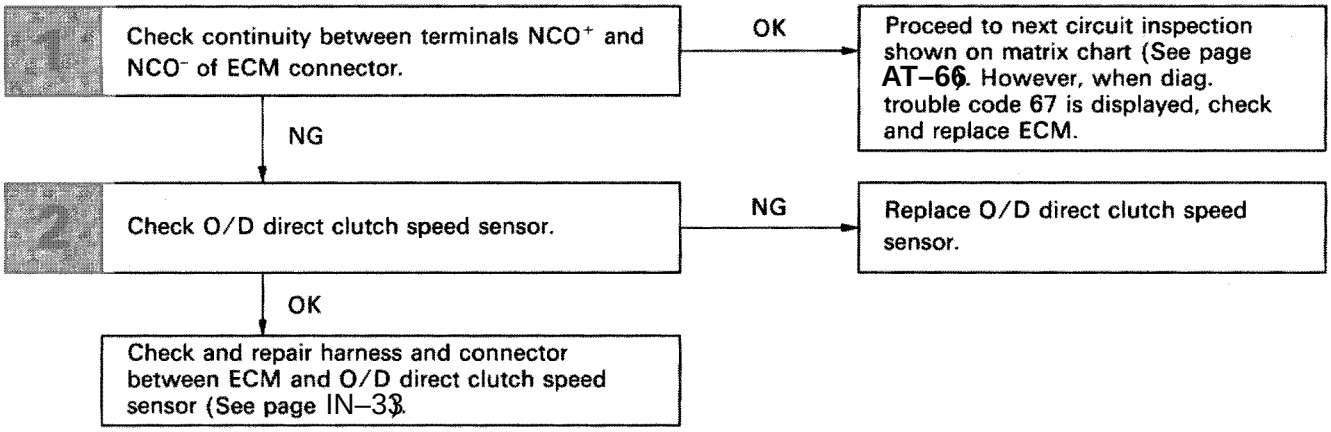

WIRING DIAGRAM

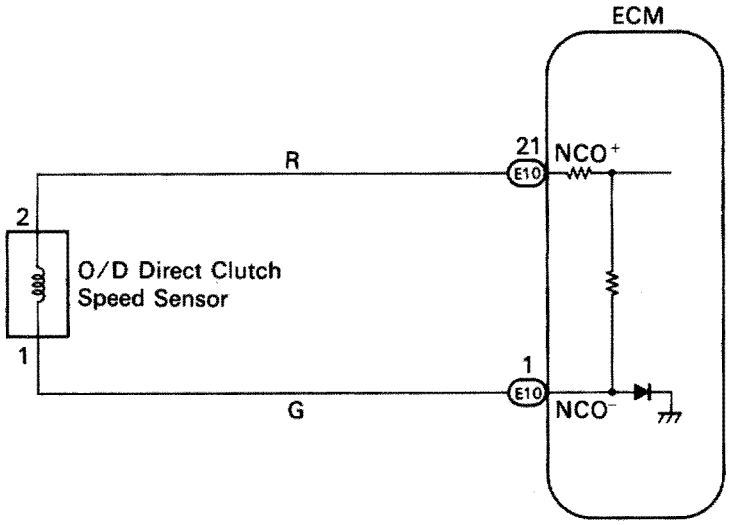

AT8618

WhereEverybodyKnowsYourName

INSPECTION PROCEDURE

1 **Check resistance between terminals NCO+ and NCO– of ECM connector.**

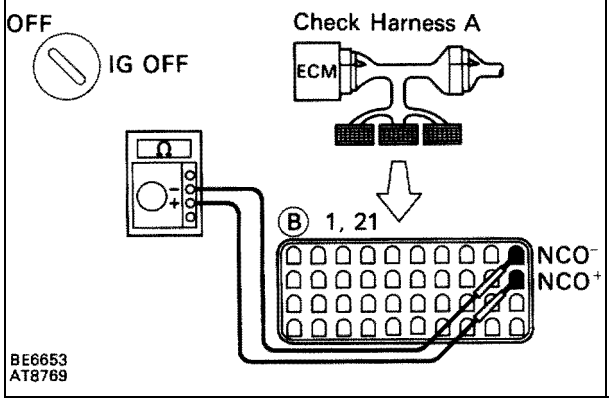

P Connect the check harness A to the ECM (See EG section).

C Check resistance between terminals NCO+ and NCO– of ECM connector.

OK **Resistance: 560 – 680**

NG

NG **Proceed to next circuit inspection shown on matrix chart (See page AT–66). However, when diag. trouble code 67 is displayed, check and replace ECM.**

2 **Check O/D direct clutch speed sensor.**

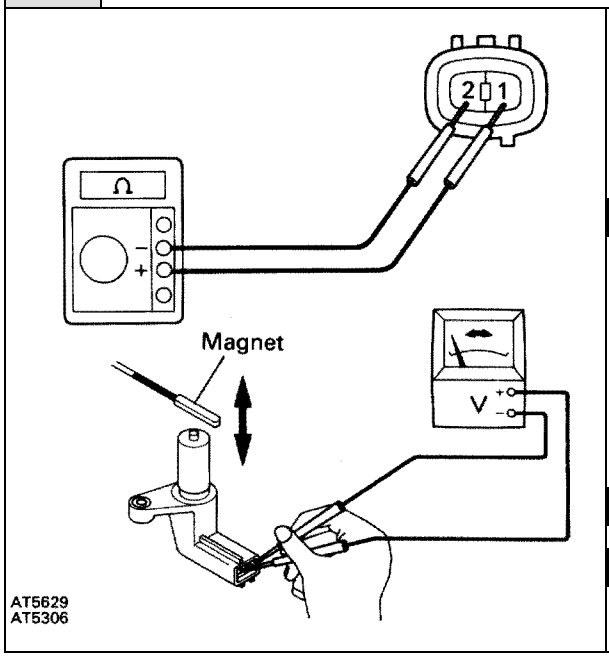

P Remove O/D direct clutch speed sensor from transmission (See page AT–17).

C Measure resistance between terminals 1 and 2 of O/D direct clutch speed sensor.

OK **Resistance: 560 – 680**

Reference

<u>Check the speed sensor function</u>

C Check voltage between terminals 1 and 2 of the speed sensor when a magnet is put close to the front end of the speed sensor then taken away quickly.

OK **Voltage is generated intermittently.**

Hint The voltage generated is extremely low.

OK

NG **Replace O/D direct clutch speed sensor.**

Check and repair harness and connector between ECM and O/D direct clutch speed sensor (See page IN–33).

WhereEverybodyKnowsYourName

–MEMO–

WhereEverybodyKnowsYourName

Throttle Position Sensor Circuit

CIRCUIT DESCRIPTION

The throttle position sensor detects the throttle valve opening angle and sends signals to ECM.

DIAGNOSTIC CHART

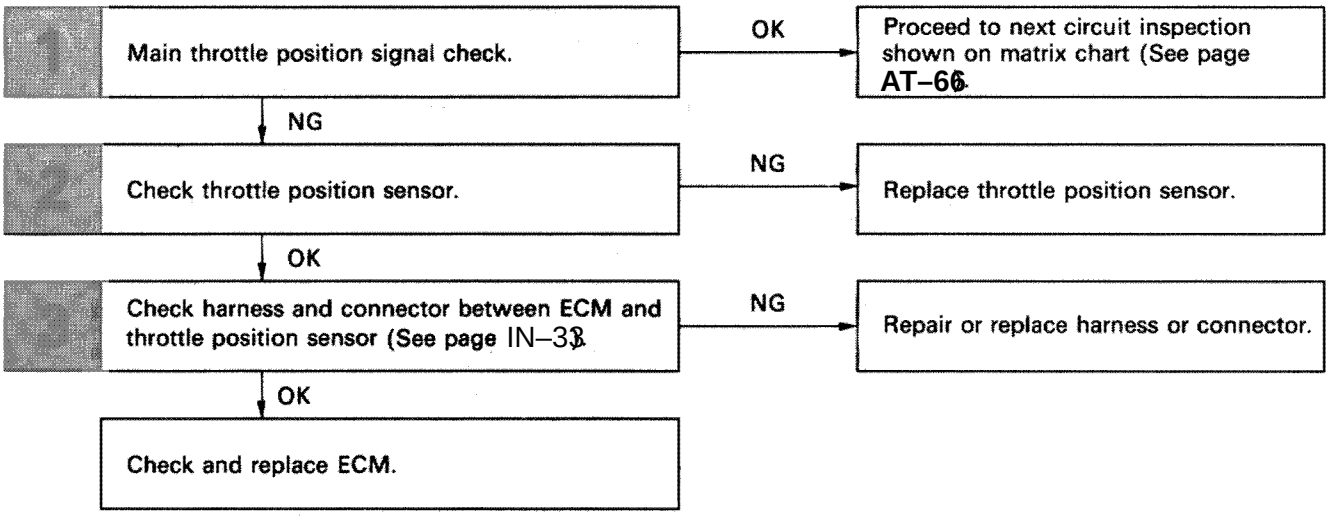

WIRING DIAGRAM

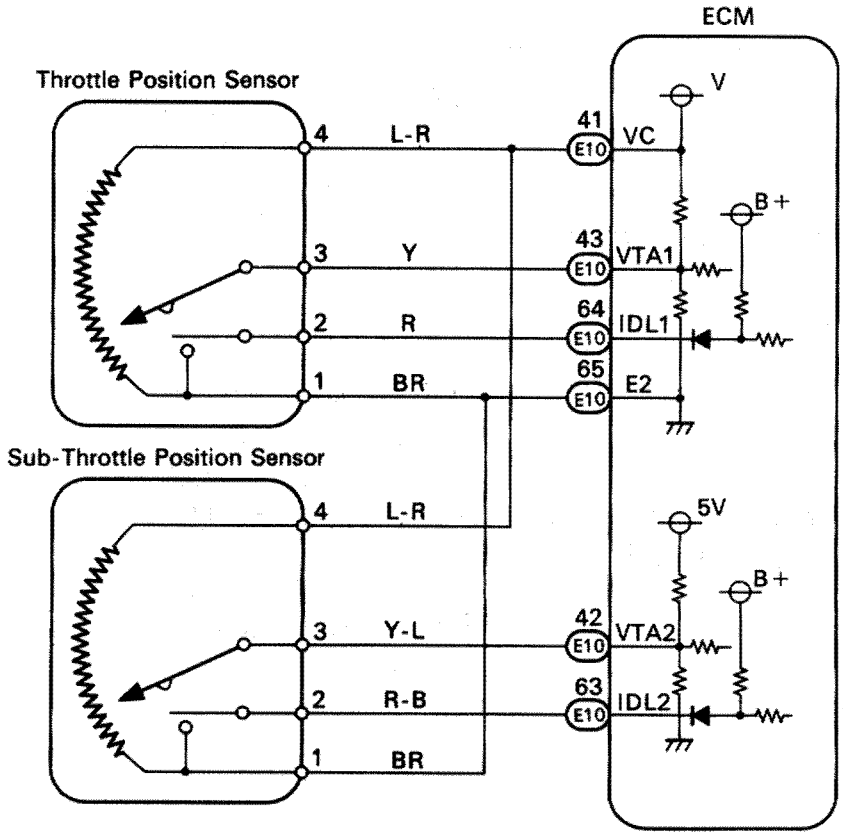

FI6478

WhereEverybodyKnowsYourName

INSPECTION PROCEDURE

1 Main throttle position signal check.

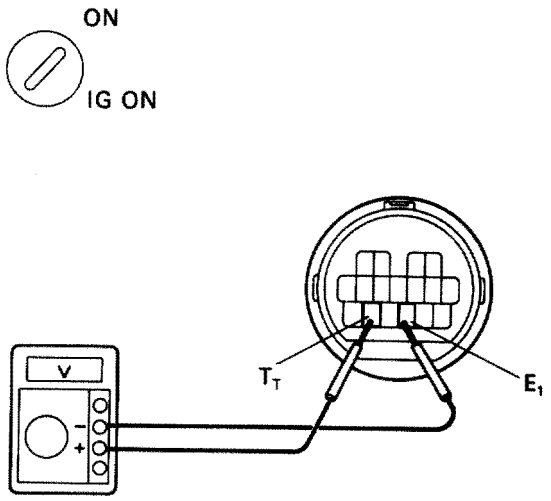

P Turn ignition switch ON (Do not start the engine).

C Check voltage at the terminal T_T of the DLC2 while gradually depressing the accelerator pedal from the fully closed position to the fully opened position.

OK **Voltage changes from 0 V to 8 V by stages.**

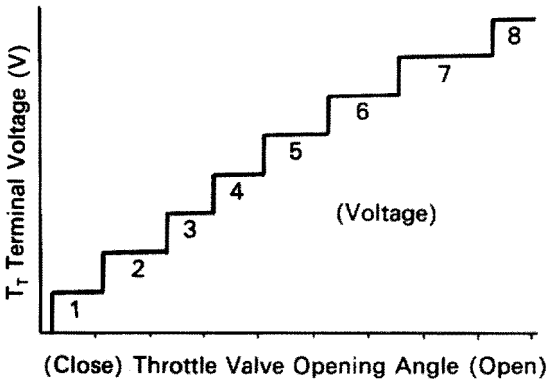

Hint Do not depress the brake pedal during this test. The voltage will stay at 0 V if depressed.

NG

OK **Proceed to next circuit inspection shown on matrix chart (See page AT–66).**

2 Check throttle position sensor.

See engine troubleshooting section in EG section.

OK

NG **Replace throttle position sensor.**

3 Check harness and connector between ECM and throttle position sensor (See page IN–33).

OK

NG **Repair or replace harness or connector.**

Check and replace ECM.

WhereEverybodyKnowsYourName

Kick–down Switch Circuit

CIRCUIT DESCRIPTION

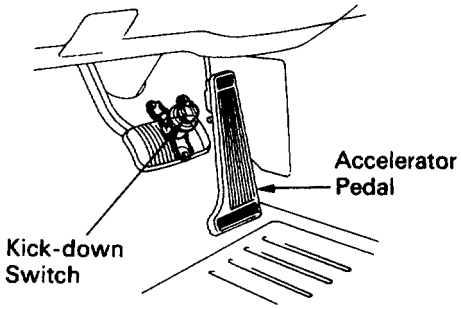

AT5611

The kick–down switch is turned on when the accelerator pedal is depressed beyond the full throttle opening and sends signals to the ECM.
When the kick–down switch is turned on, the ECM controls gear shifting according to the programmed shift diagrams.
If a short circuit develops in the kick–down switch, the ECM disregards the kick–down signals and controls shifting at the normal shift points.

DIAGNOSTIC CHART

1 Check voltage between terminal KD of ECM connector and body ground.
- OK → Proceed to next circuit inspection shown on matrix chart (See page AT–66)
- NG ↓

2 Check kick-down switch.
- NG → Replace kick-down switch.
- OK ↓

3 Check harness and connector between ECU and kick-down switch, kick-down switch and body ground (See page IN–33)
- NG → Repair or replace harness or connector.
- OK ↓

Check and replace ECM.

WIRING DIAGRAM

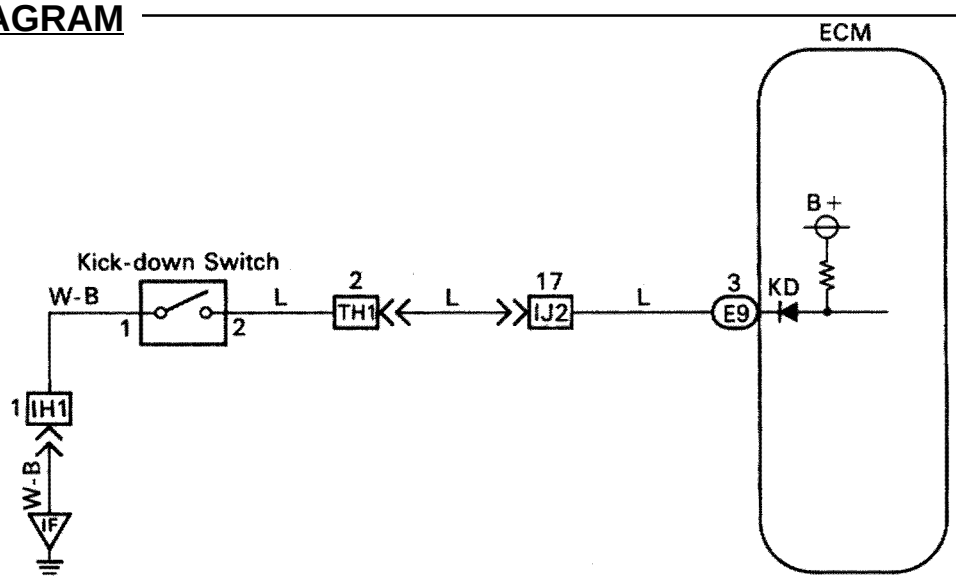

AT8755

WhereEverybodyKnowsYourName

INSPECTION PROCEDURE

1 **Check voltage between terminal KD of ECM connector and body ground.**

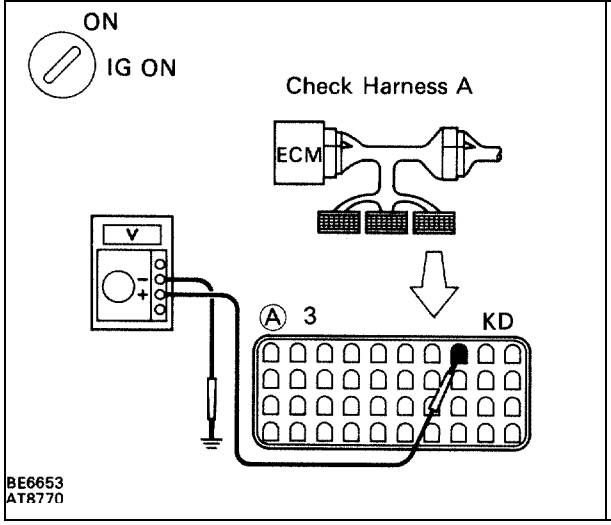

P
1. Connect the check harness A to the ECM (See EG section).
2. Turn ignition switch ON (Do not start the engine.)

C Measure voltage between terminal KD of ECM connector and body ground when accel. pedal is fully depressed or not.

OK

Accel. pedal	Voltage
Fully depressed (kickdown SW is ON)	Below 1 V
Released (kickdown SW is OFF)	10 – 14 V

NG

OK → **Proceed to next circuit inspection shown on matrix chart (See page AT–66).**

2 **Check kick–down switch.**

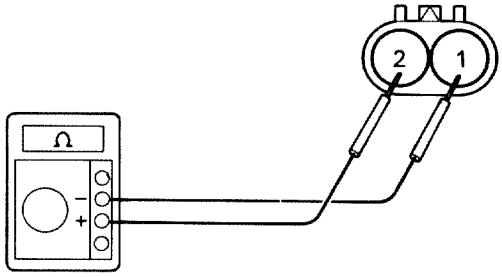

C
1. Disconnect dick–down switch connector. (See page AT–18)
2. Measure resistance between terminals 1 and 2 of kick–down switch connector when kick–down switch is ON and OFF

OK

Kick-down switch	Resistance
ON	0 Ω (continuity)
OFF	∞ Ω (open)

OK

NG → **Replace kick–down switch.**

3 **Check harness and connector between ECM and kick–down switch, kick–down switch and body ground (See page IN–33).**

OK

NG → **Repair or replace harness or connector.**

Check and replace ECM

WhereEverybodyKnowsYourName

Park/neutral Position Switch Circuit

CIRCUIT DESCRIPTION

The park/neutral position switch detects the shift lever position and sends signals to ECM.The ECM receives signals (R, PNP, 2 and L) from the park/neutral position switch. When the signal is not sent to the ECM from the park/neutral position switch, the ECM judges that the shift lever is in the D position.

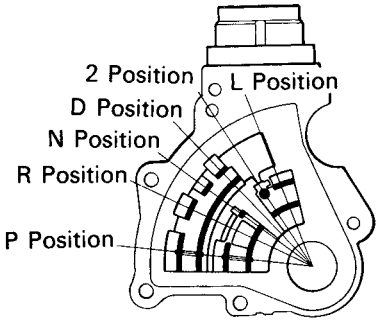

DIAGNOSTIC CHART

1. Check voltage between terminal R, PNP, 2, L, of ECM connector and body ground.
   - OK → Proceed to next circuit inspection shown on matrix chart (See page AT–66).
   - NG ↓
2. Check park/neutral position switch.
   - NG → Replace park/neutral position switch.
   - OK ↓
3. Check harness and connector between ECM and park/neutral position switch, park/neutral position switch and battery (See page IN–33).
   - NG → Repair or replace harness or connector.
   - OK ↓

Check and replace ECM.

WIRING DIAGRAM

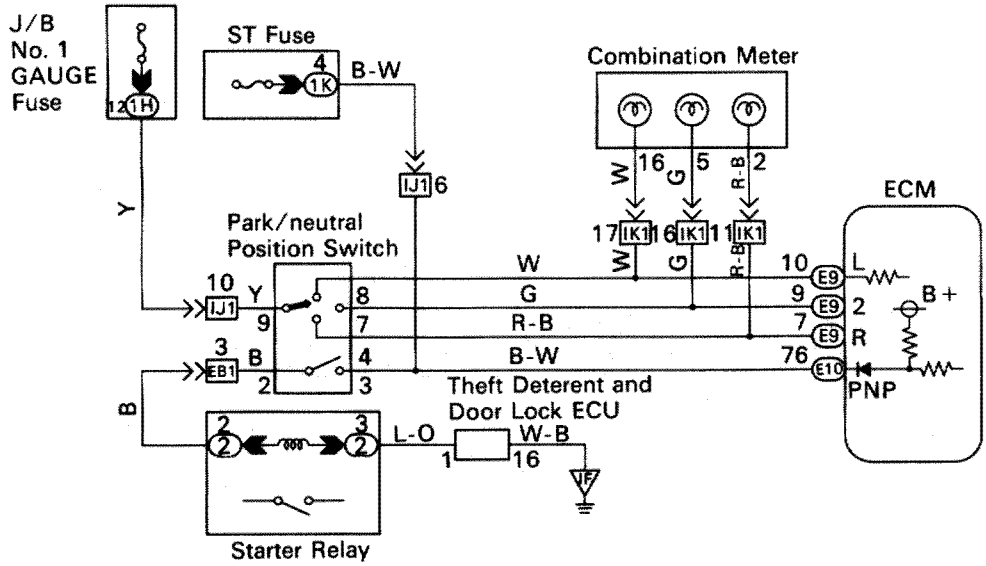

WhereEverybodyKnowsYourName

INSPECTION PROCEDURE

1 Check voltage between terminal R, PNP, 2, L of ECM connector and body ground.

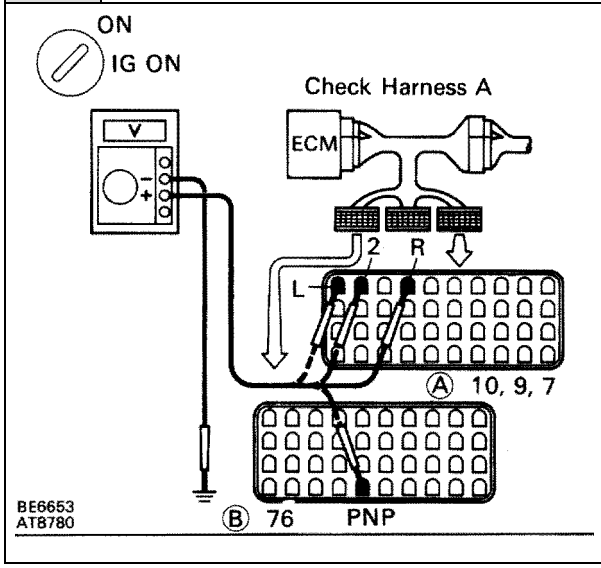

P

1. Connect the check harness A to the ECM (See EG section).
2. Turn ignition switch ON.

C Measure voltage between terminals R, PNP, 2, L of ECM connector and body ground when the shift lever is moved to the following positions.

OK

Position	R-body ground	PNP-body ground	2-body ground	L-body ground
P, N	0 V	0 V	0 V	0 V
R	10 – 14 V*	10 – 14 V*	0 V	0 V
D	0 V	10 – 14 V	0 V	0 V
2	0 V	10 – 14 V	10 – 14 V	0 V
L	0 V	10 – 14 V	0 V	10 – 14 V

*: The voltage will drop slightly due to lighting up of the back up light.

NG

OK → **Proceed to next circuit inspection shown on matrix chart (See page AT–66).**

2 Check park/neutral position switch.

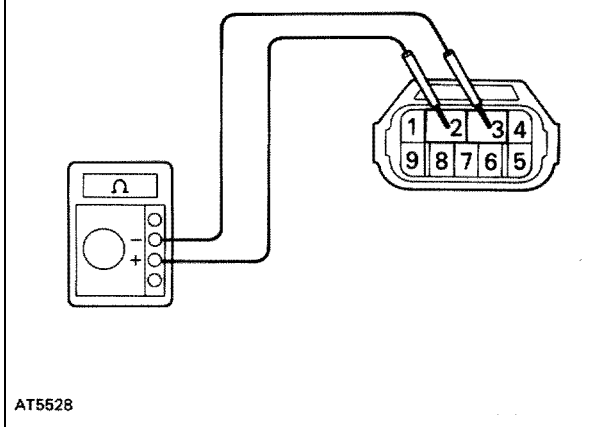

P

1. Jack up the vehicle.
2. Remove park/neutral position switch (See page AT–18).

C Check continuity between each terminal shown below when the shift lever is moved to each position.

O—O Continuity

Shift Position \ Terminal	3	2	9	1	4	6	5	7	8
P	O—O		O—O						
R			O—O						
N	O—O		O—O						
D			O—O						
2			O—O						
L			O—O						

OK

NG → **Replace park/neutral position switch.**

3 Check harness and connector between ECM and park/neutral position switch, park/neutral position switch and battery (See page IN–33).

OK

NG → **Repair or replace harness and connector.**

Check and replace ECM.

WhereEverybodyKnowsYourName

Stop Light Switch Circuit

CIRCUIT DESCRIPTION

The purpose of this circuit is to prevent the engine from stalling, while driving in lockup condition, when brakes are suddenly applied.When the brake pedal is operated, this switch sends a signal to ECM. Then the ECM cancels operation of the lockup clutch while braking is in progress.

DIAGNOSTIC CHART

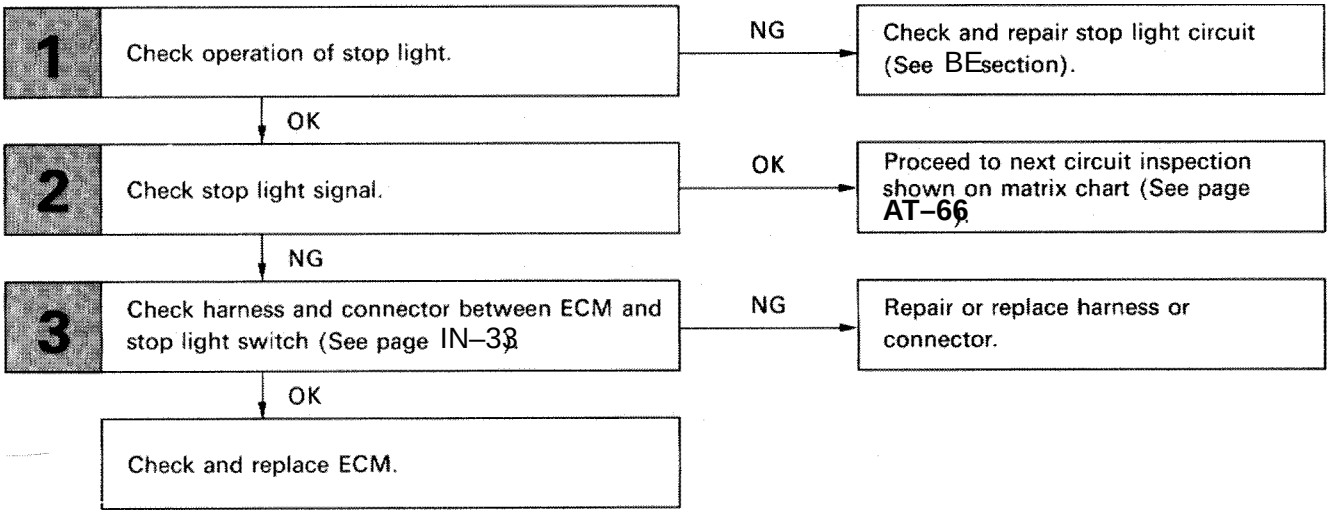

WIRING DIAGRAM

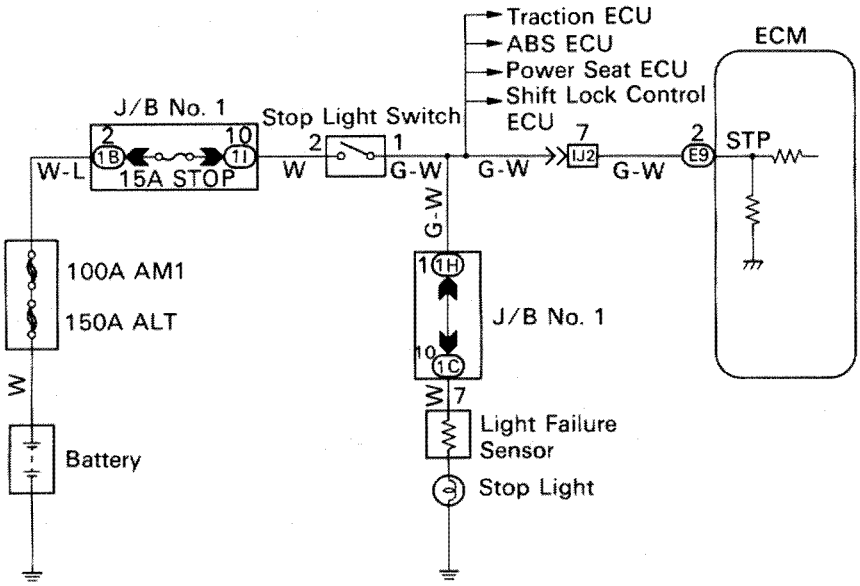

WhereEverybodyKnowsYourName

INSPECTION PROCEDURE

1	**Check operation of stop light.**
C	Check if the stop lights go on and off normally when the brake pedal is operated and released.

OK

NG → **Check and repair stop light circuit (See BE section).**

2	**Check stop light signal.**

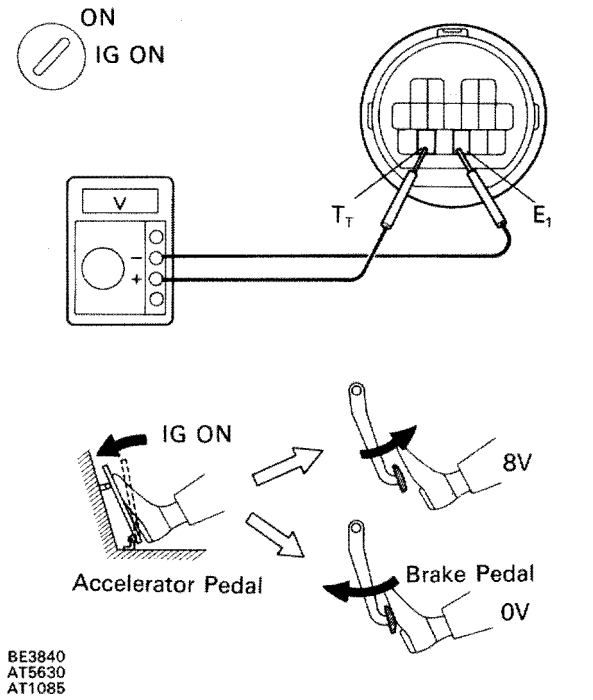

C

1. Connect voltmeter to the terminals T_T and E_1 of the DLC2.
2. Turn ignition switch ON (Do not start the engine).
3. Fully depress the accelerator pedal until the voltmeter indicates 8 V and hold it.
4. Depress and release the brake pedal and check the voltage.

OK

Brake pedal	Voltage
Depressed	0 V
Released	8 V

NG

OK → **Proceed to next circuit inspection shown on matrix chart (See page AT–66).**

3	**Check harness and connector between ECM and stop light switch (See page IN–33).**

OK

NG → **Repair or replace harness or connector.**

Check and replace ECM.

WhereEverybodyKnowsYourName

Pattern Select Switch Circuit

CIRCUIT DESCRIPTION

The ECM memory contains the shift programs for the NORMAL and POWER patterns, 2 position and L position and the lock–up patterns. Following the programs corresponding to the signals from the pattern select switch, the park/neutral position switch and other various sensors the ECM switches the solenoid valves ON and OFF, thereby controlling the transmission gear change and the lock–up clutch operation.

DIAGNOSTIC CHART

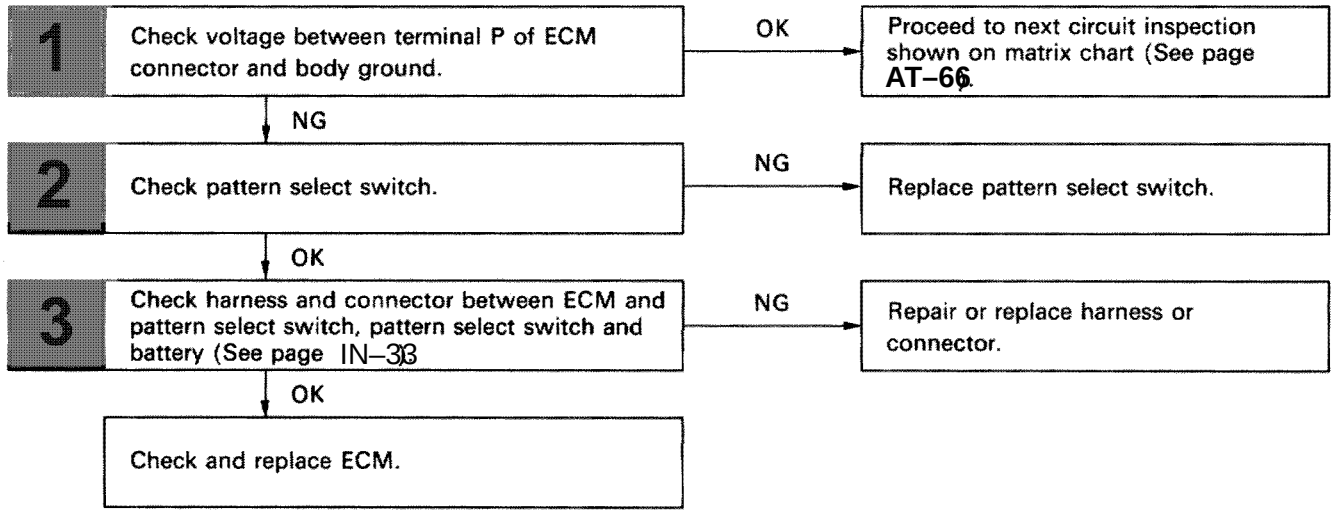

WIRING DIAGRAM

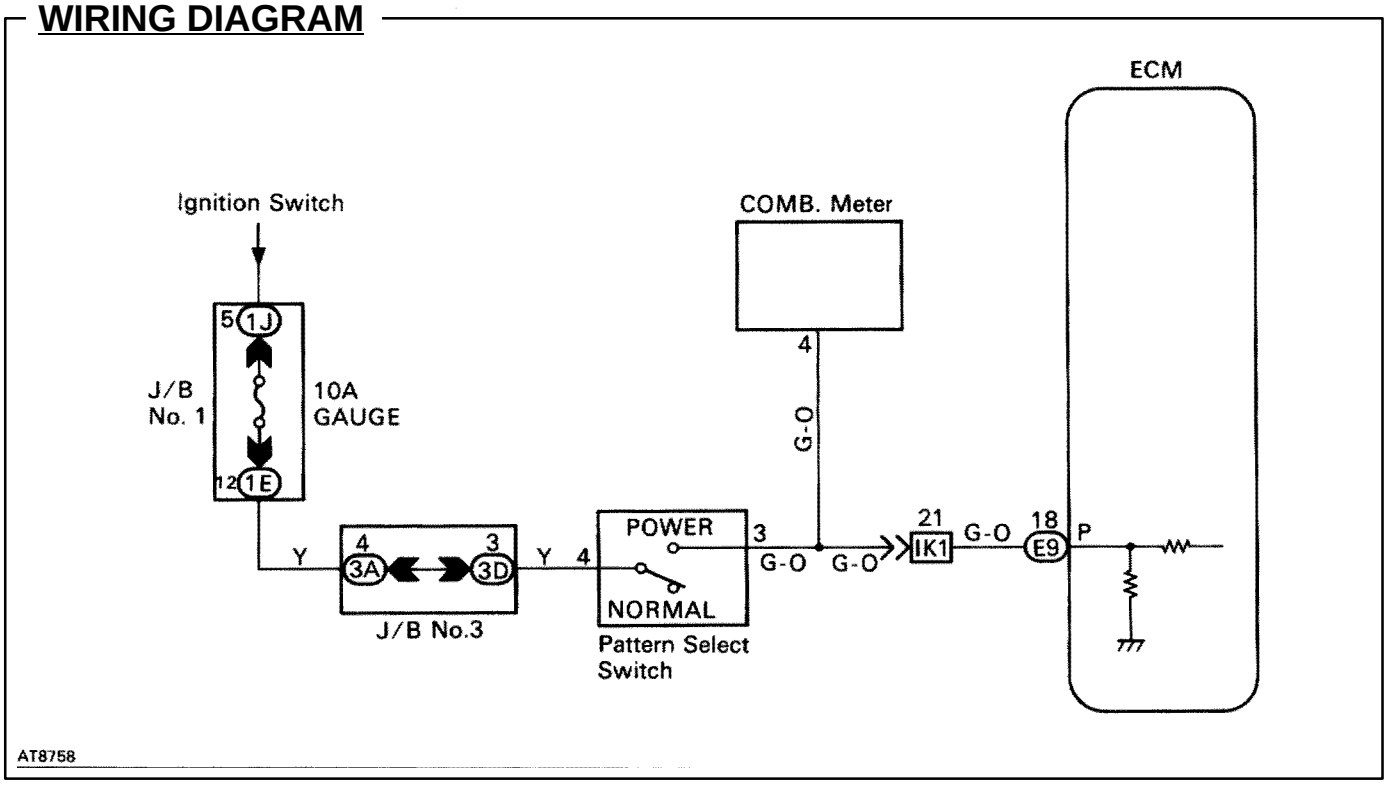

WhereEverybodyKnowsYourName

INSPECTION PROCEDURE

1 **Check voltage between terminal P of ECM connector and body ground.**

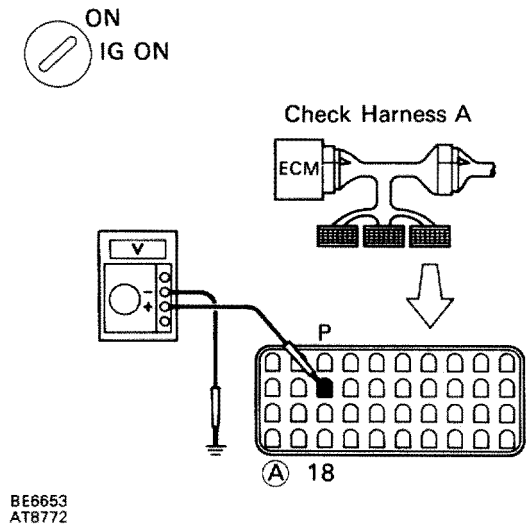

P 1. Connect the check harness A to the ECM (See EG section).

2. Turn ignition switch ON.

C Measure voltage between terminal P of ECM connector and body ground when the pattern select switch is set to the PWR (POWER) position and NORM (NORMAL) position.

OK

Pattern select switch	Voltage
PWR	10 – 14 V
NORM	Below 1 V

Hint The ECM uses the normal pattern signal if the power signal is not input.

NG

OK **Proceed to next circuit inspection shown on matrix chart (See page AT–66).**

2 **Check pattern select switch.**

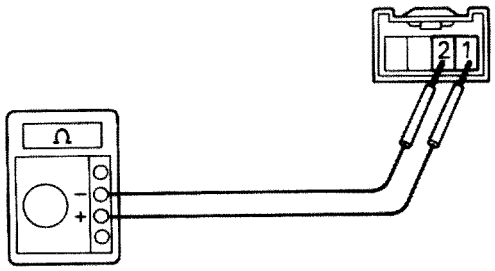

P Disconnect pattern select switch connector. (See BO section).

C Measure resistance between terminals 1 and 2 of pattern select switch connector when the select switch is set to PWR and NORM positions.

OK

Pattern	Resistance
PWR	0 Ω (continuity)
NORM	∞ Ω (open)

OK

NG **Replace pattern select switch.**

3 **Check harness and connector between ECM and pattern select switch, pattern select switch and battery (See page IN–33).**

OK

NG **Repair or replace harness or connector.**

Check and replace ECM.

WhereEverybodyKnowsYourName

O/D Main Switch and O/D OFF Indicator Light Circuit

CIRCUIT DESCRIPTION

The O/D main switch contacts go off when the switch is pushed in and comes on when it is pushed out. In O/D main switch OFF position, the O/D OFF indicator lights up, and the ECM prohibits shifting to overdrive. The ECM also causes the O/D OFF indicator light to blink when a malfunction is detected. In this case, connecting the terminals in the DLC2 or DLC1 can display the malfunction code.

DIAGNOSTIC CHART

See next page.

WIRING DIAGRAM

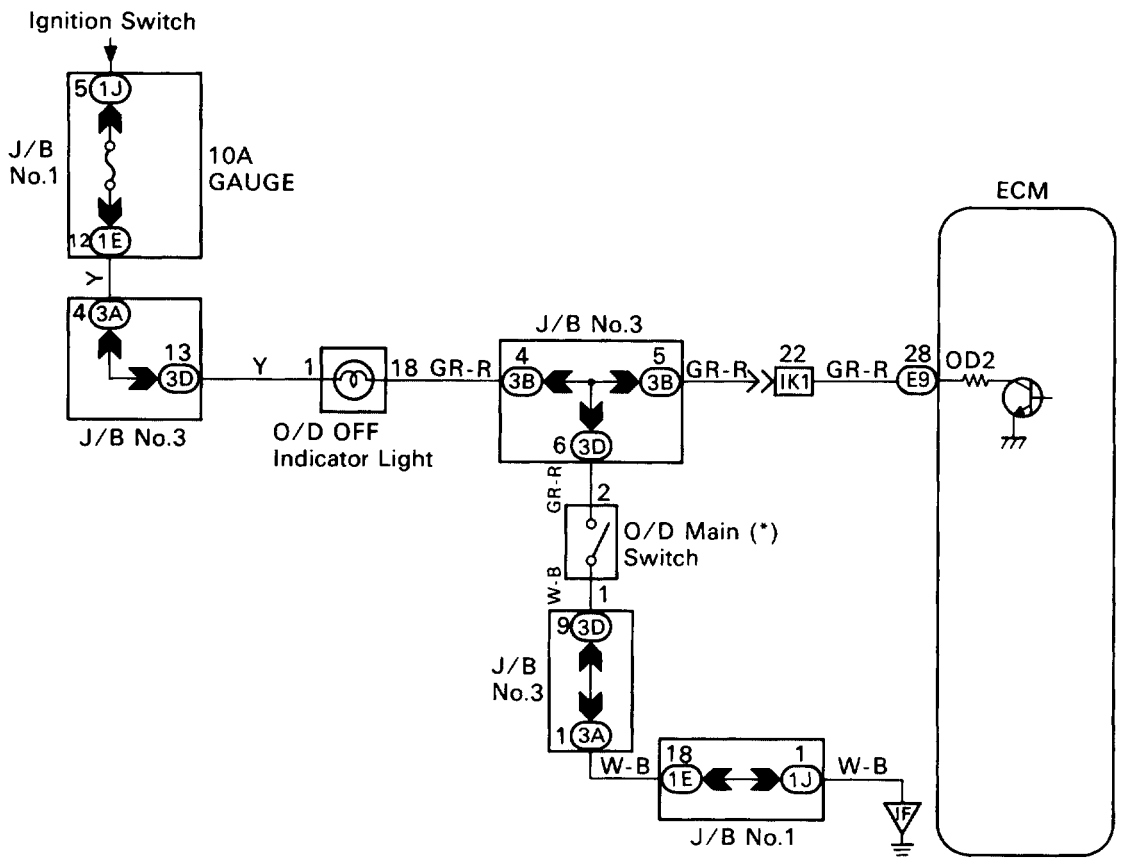

(*) O/D Main Switch
Contacts go off with switch pushed in.
Contacts go on with switch pushed out.

AT8759

WhereEverybodyKnowsYourName

O/D OFF indicator light does not light up.

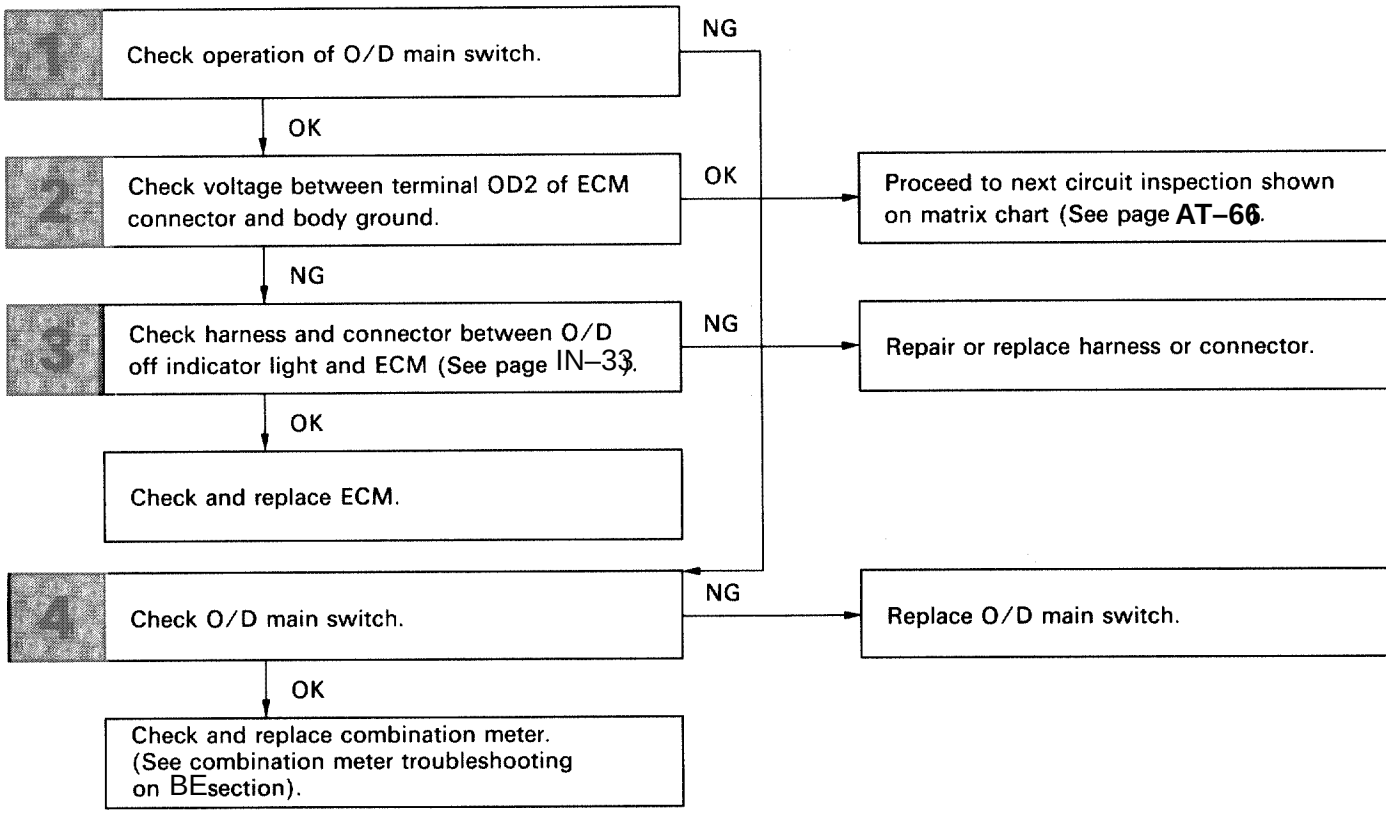

O/D OFF indicator light remains ON

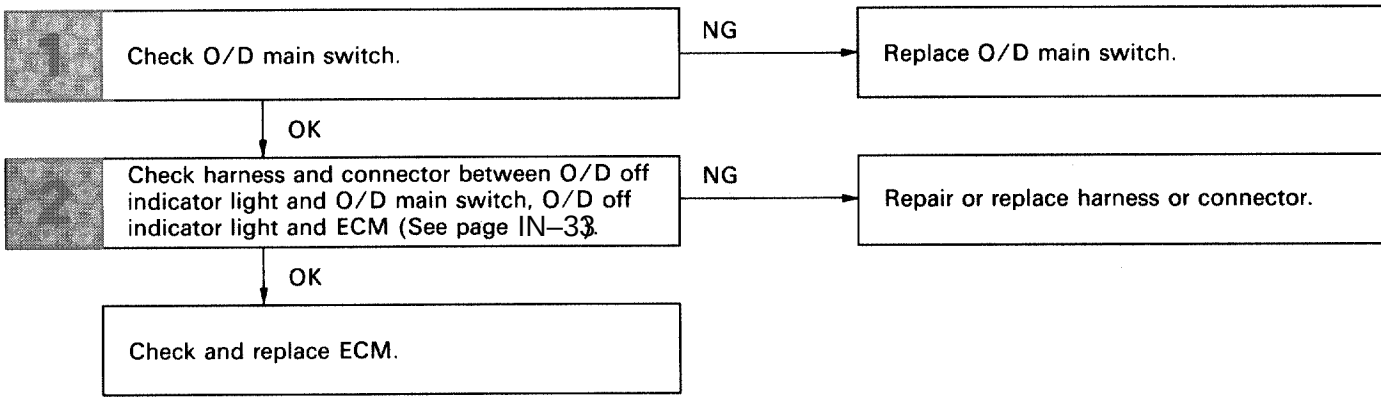

O/D OFF indicator light blinks

Perform diagnostic trouble code check (See page AT–38).

WhereEverybodyKnowsYourName

INSPECTION PROCEDURE

1 Check operation of O/D Main Switch

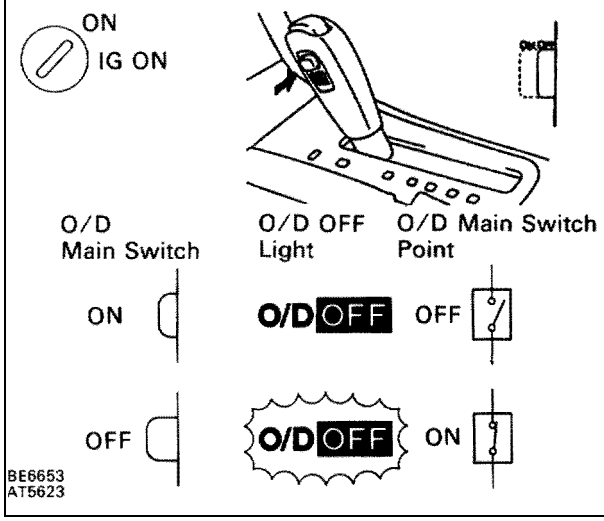

C 1. Turn ignition switch ON.
2. Check “O/D OFF” light when O/D main switch is pushed in to ON.

OK **“O/D OFF” light goes off.**

C 3. Check “O/D OFF” light when O/D main switch is pushed again, to OFF.

OK **“O/D OFF” light lights up.**

Hint If the “O/D OFF” lights blinks when the O/D main switch is pushed in to ON, a malfunction is occurring in the system.
Check the diagnostic trouble code.

OK

NG **Go to step ▼.**

2 Check voltage between terminal OD2 of ECM connector and body ground.

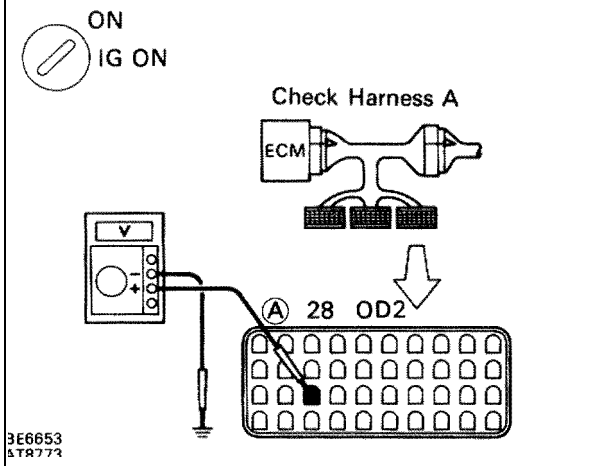

P 1. Connect the check harness A to the ECM (See EG section).
2. Turn ignition switch ON.

C Check voltage between terminal OD2 of ECM and body ground

OK

O/D Main Switch	Voltage
OFF	Below 1 V
ON	10 ~ 14 V

NG

OK **Proceed to next circuit inspection shown on matrix chart (See page AT–66).**

3 Check harness and connector between O/D off indicator light and ECM (See page IN–33).

OK

NG **Repair or replace harness or connector.**

Check and replace ECM.

WhereEverybodyKnowsYourName

4 **Check O/D Main Switch.**

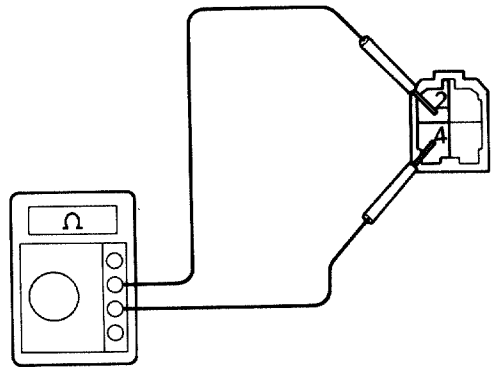

AT5529

C

1. Disconnect O/D main switch connector. (See BO section).
2. Measure resistance between terminals 2 and 4 of O/D main switch connector.

OK

O/D Main Switch	Resistance
ON	∞ Ω (open)
OFF	0 Ω (continuity)

OK

NG **Replace O/D Main Switch.**

Check and replace combination meter. (See combination meter troubleshooting on BE section).

WhereEverybodyKnowsYourName

O/D Cancel Signal Circuit

CIRCUIT DESCRIPTION

While driving with cruise control activated, in order to minimize gear shifting and provide smooth cruising when driving uphill, overdrive may be prohibited temporarily in some conditions.The cruise control ECU sends O/D cut signals to the ECM as necessary and the ECM cancels overdrive shifting until these signals are discontinued.(For details, see the cruise control system, on BE section).

DIAGNOSTIC CHART

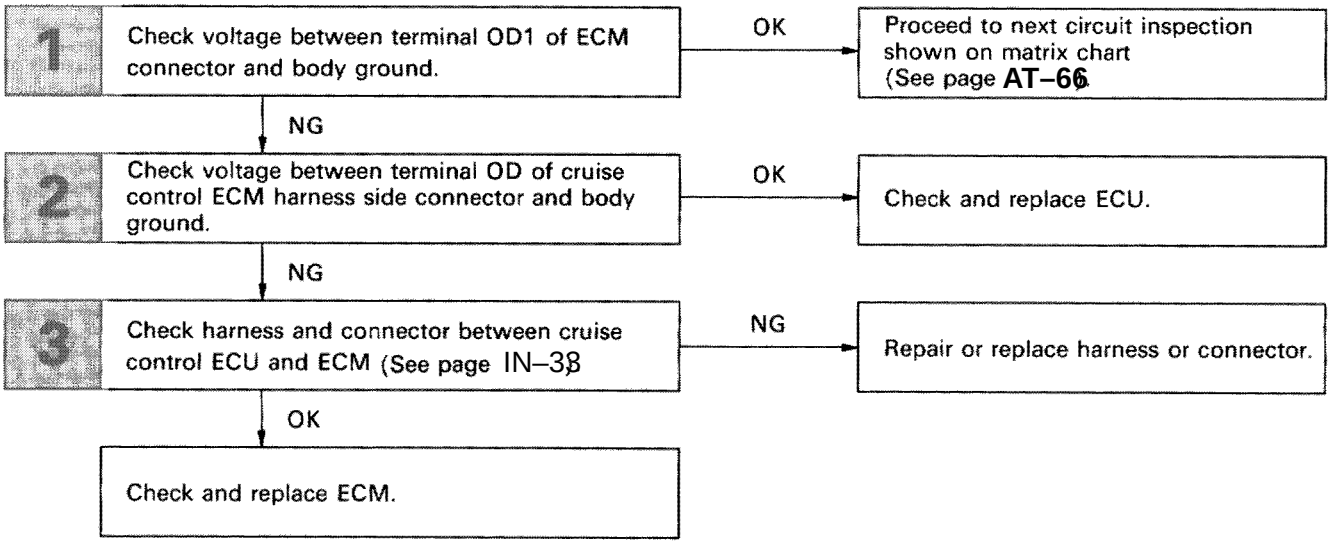

WIRING DIAGRAM

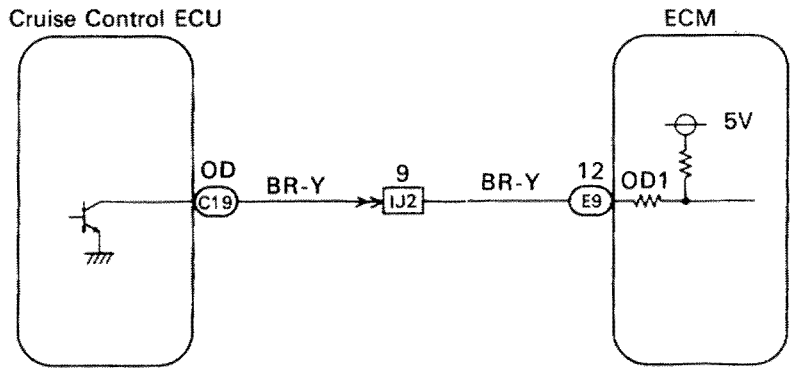

WhereEverybodyKnowsYourName

INSPECTION PROCEDURE

1 **Check voltage between terminal OD1of ECM connector and body ground.**

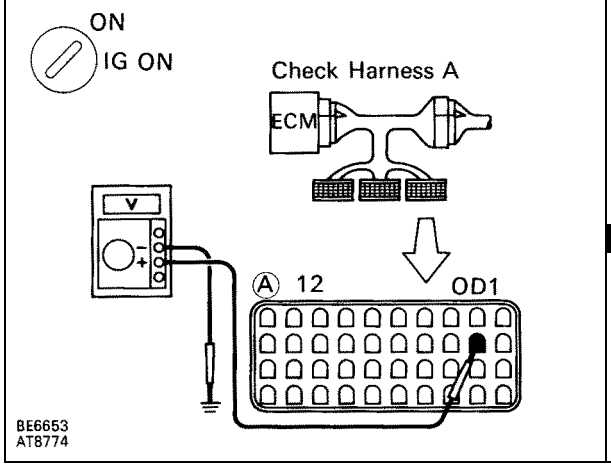

P 1. Connect the check harness A to the ECM (See EG section).
2. Turn ignition switch ON.

C Measure voltage between terminal OD1 of ECM connector and body ground.

OK **Voltage: 4 – 6 V**

NG

OK **Proceed to next circuit inspection shown on matrix chart (See page AT–66).**

2 **Check voltage between terminal OD of cruise control ECU harness side connector and body ground.**

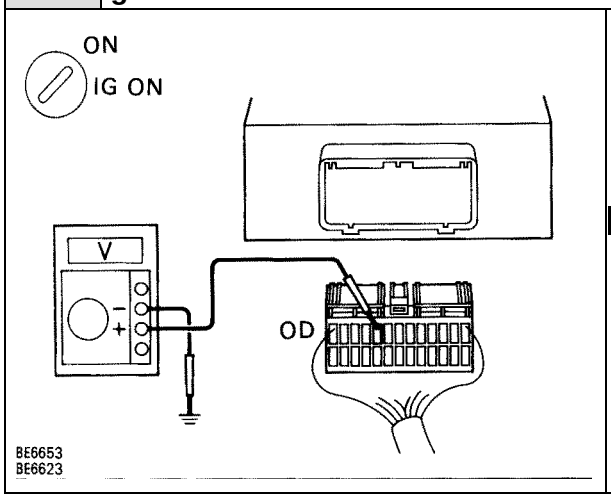

P 1. Disconnect cruise control ECU connector.
2. Turn ignition switch ON.

C Measure voltage between terminal OD of cruise control ECU harness side connector and body ground.

OK **Voltage: 4 – 6– V**

NG

OK **Check and replace cruise control ECU.**

3 **Check harness or connector between cruise control ECU and ECM (See page IN–33).**

OK

NG **Repair or replace harness or connector.**

Check and replace ECM.

WhereEverybodyKnowsYourName

TE_1 Terminal Circuit

CIRCUIT DESCRIPTION

ECM displays diagnostic trouble codes using the O/D OFF indicator light when terminals TE and E of the DLC2 or DLC1 are connected.

DIAGNOSTIC CHART

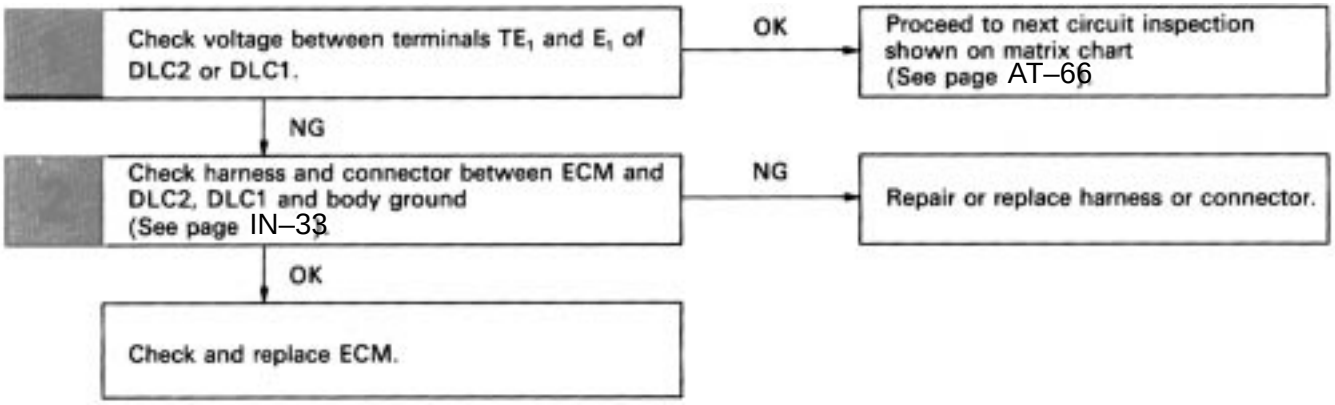

WIRING DIAGRAM

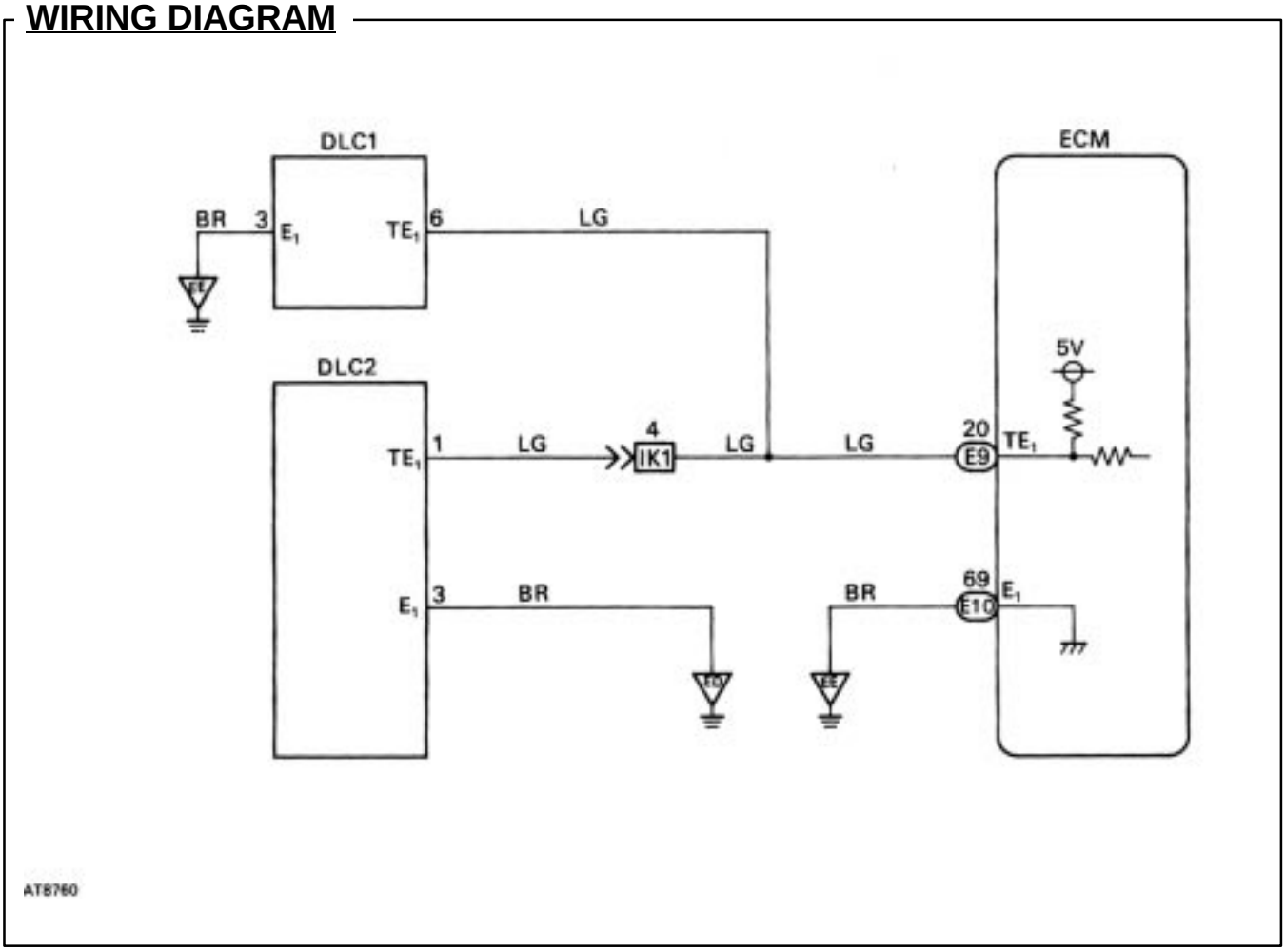

WhereEverybodyKnowsYourName

INSPECTION PROCEDURE

1	Check voltage between terminal TE_1 and E_1 of DLC2 or DLC1.
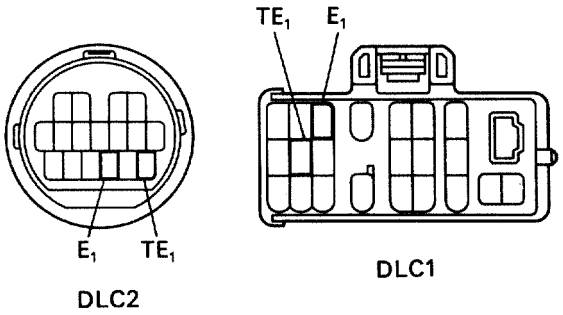 S17-1 lej-23-1	**C** Measure voltage between terminals TE_1 and E_1 of DLC2 or DLC1. **OK** **Voltage: 4 – 6 V**

NG

OK **Proceed to next circuit inspection shown on matrix chart (See page AT–66).**

2	Check harness and connector between ECM and DLC2, DLC1 and body ground (See page IN–33).

OK

NG **Repair or replace harness or connector.**

Check and replace ECM.

WhereEverybodyKnowsYourName

T_T Terminal Circuit

CIRCUIT DESCRIPTION

Checks of ECM input and output signals related to the throttle position sensor brakes, shift position and other circuits can be performed by measuring the voltages at terminal T_T of the DLC1.

DIAGNOSTIC CHART

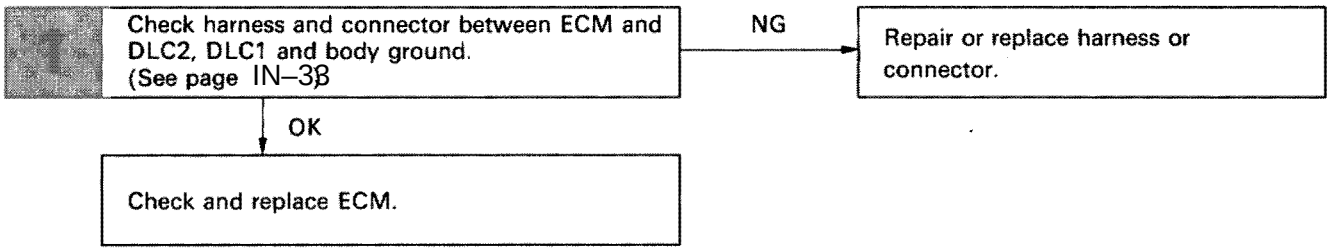

WIRING DIAGRAM

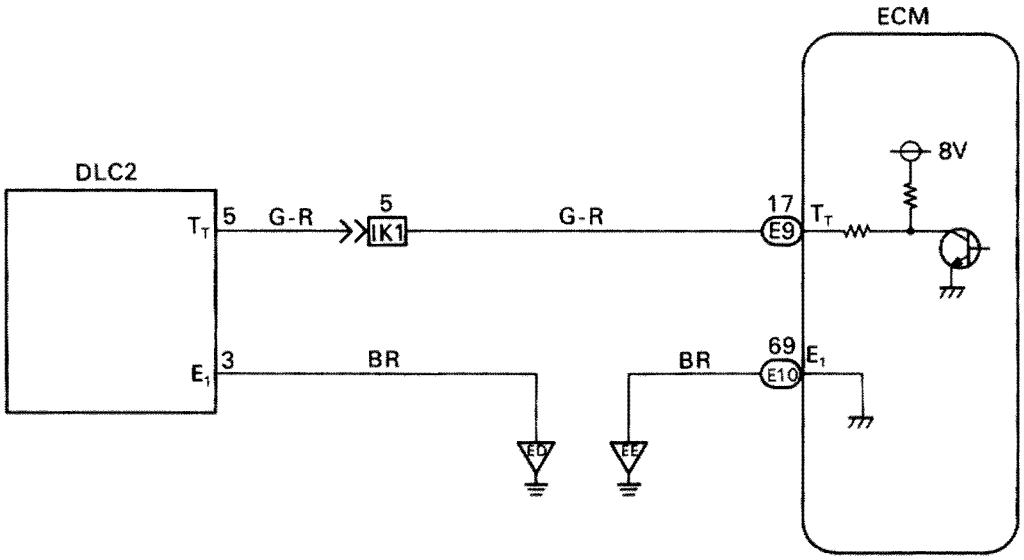

WhereEverybodyKnowsYourName

SERVICE SPECIFICATIONS

SERVICE DATA

AT0GH–02

Line pressure (wheel locked)				
Engine idling	D position	382–441 kPa	3.9–4.5 kgf/cm^2	55–64 psi
	R position	637–716 kPa	6.5–7.3 kgf/cm^2	92–104 psi
AT stall (Throttle valve opened)	D position	1,265–1,402 kPa	12.9–14.3 kgf/cm^2	183–203 psi
	R position	1,726–2,060 kPa	17.6–21.0 kgf/cm^2	250–298 psi
ECM SLN termina	lNot ground	177–255 kpa	1.8–2.6 kgf/cm^2	26–37 psi
	Ground		0	
Engine stall revolution			2,200±150 RPM	
Time lag	N position → D position		Less than 1.2 seconds	
	N position → R position		Less than 1.5 seconds	
Engine idle speed (Cooling fan and A/C OFF	)N position		650 RPM	
Throttle cable adjustment (Throttle valve fully closed)		Boot end face and inner cable stopper		
		0–1 mm	0–0.04 in.	
Torque converter clutch installing (Correct distance)		17.1mm	0.673 in.	
Drive plate runout	Limit	0.20 mm	0.0079 in.	

SHIFT POINT (Kick–down foot switch activated)

Shift position	Shifting point		Vehicle speed km/h (mph)2
D position (NORM or PWR)	Throttle valve fully opened	1→2	67–71 (42–44)
		2→3	118–124 (73–77)
		3→O/D (NORM)	170–177 (106–110)
		3→O/D (PWR)	179–186 (111–116)
		O/D→3	164–170 (102–106)
		3→2	105–111 (65–69)
		2→1	53–57 (33–35)
2 position (NORM or PWR)	Throttle valve fully opened	1→2	67–71 (42–44)
		3→2	106–112 (66–70)
		2→1	53–57 (33–35)
L position (NORM or PWR)	Throttle valve fully opened	3→2	104–109 (65–68)
		2→1	57–63 (35–39)

WhereEverybodyKnowsYourName

SHIFT POINT (Kick–down foot switch deactivated)

Shift position	Shifting point		Vehicle speed km/h (mph)
D position (NORM)	Throttle valve fully opened	1→2	67–71 (42–44)
		2→3	118–124 (73–77)
		3→O/D	155–161 (96–100)
		O/D→3	128–134 (79–83)
		3→2	71–75 (44–47)
		2→1	10–13 (6–8)
	Throttle valve fully closed	3→O/D	32–35 (20–22)
		O/D→3	23–26 (14–16)
D position (PWR)	Throttle valve fully opened	1→2	67–71 (42–44)
		2→3	118–124 (73–77)
		3→O/D	179–186 (111–116)
		O/D→3	149–155 (93–96)
		3→2	95–100 (59–62)
		2→1	22–26 (14–16)
	Throttle valve fully closed	3→O/D	32–35 (20–22)
		O/D→3	23–26 (14–16)
2 position (NORM or PWR)	Throttle valve fully opened	1→2	67–71 (42–44)
		3→2	106–112 (66–70)
		2→1	10–13 (6–8)
L position (NORM or PWR)	Throttle valve fully opened	3→2	104–109 (65–68)
		2→1	57–63 (35–39)

LOCK–UP POINT

D position km/h (mph) Throttle valve opening 5%	Lock–up ON	Lock–up OFF
3rd Gear (O/D switch OFF)	83–88 (52–55)	77–82 (48–51)
O/D Gear	56–60 (35–37)1	53–57 (33–35)

WhereEverybodyKnowsYourName

TORQUE SPECIFICATION

AT07F–04

Part tightened		N·m	kgf·cm	ft·lbf
Engine x Transmission		64	650	47
Rear mounting x Body		25	260	19
Rear mounting x Extension housing		25	250	18
Transmission housing x Transmission case	14 mm (0.55 in.)	34	345	25
	17 mm (0.67 in.)	57	580	42
Extension housing x Transmission case		34	345	25
Valve body x Transmission case		10	100	7
Oil strainer		10	100	7
Oil pan		7.4	75	65 in.·lbf
No.1 vehicle speed sensor		16	160	12
No.2 vehicle speed sensor		5.4	55	48 in.·lbf
Solenoid wiring stopper plate		5.4	55	48 in.·lbf
O/D direct clutch speed sensor		5.4	55	48 in.·lbf
Transmission output flange		123	1,250	90
Throttle cable x Transmission case		5.4	55	48 in.·lbf
Union		29	300	22
Cooler pipe union nut		34	350	25
Drive plate x Crankshaft		99	1,000	72
Torque converter clutch x Drive plate		33	340	25
Park/Neutral position switch	Bolt	13	130	9
	Nut	6.9	70	61 in.·lbf
Control shaft lever		16	160	12

WhereEverybodyKnowsYourName

A340E (1UZ–FE)
AUTOMATIC TRANSMISSION

WhereEverybodyKnowsYourName

DESCRIPTION

GENERAL DESCRIPTION

AT0GE–02

The A340E automatic transmission is a 4–speed Electronically Controlled Transmission with an intelligent control like the A341E automatic transmission used in the LS400. The A340E automatic transmission has the following features.

▼ When shifting, engine torque is controlled and the clutch hydraulic pressure in the transmission is electronically controlled to reduce transmission shift shock.

▼ A new type of ATF (ATF Type T–II) is used which provides improved shifting characteristics and prevents deterioration in the ATF over time.

HINT: For the A340E automatic transmission, use ATF Type T–II or equivalent.

▼ A super flow torque converter clutch is used to improve the transmission efficiency.

The A340E automatic transmission is mainly composed of a torque converter clutch with lock–up clutch, 4–speed planetary gear unit, hydraulic control system and the electronic control system.

To minimize the possibility of incorrect operation of the automatic transmission, a shift lock mechanism has also been added.

A340E Cross Sectional View

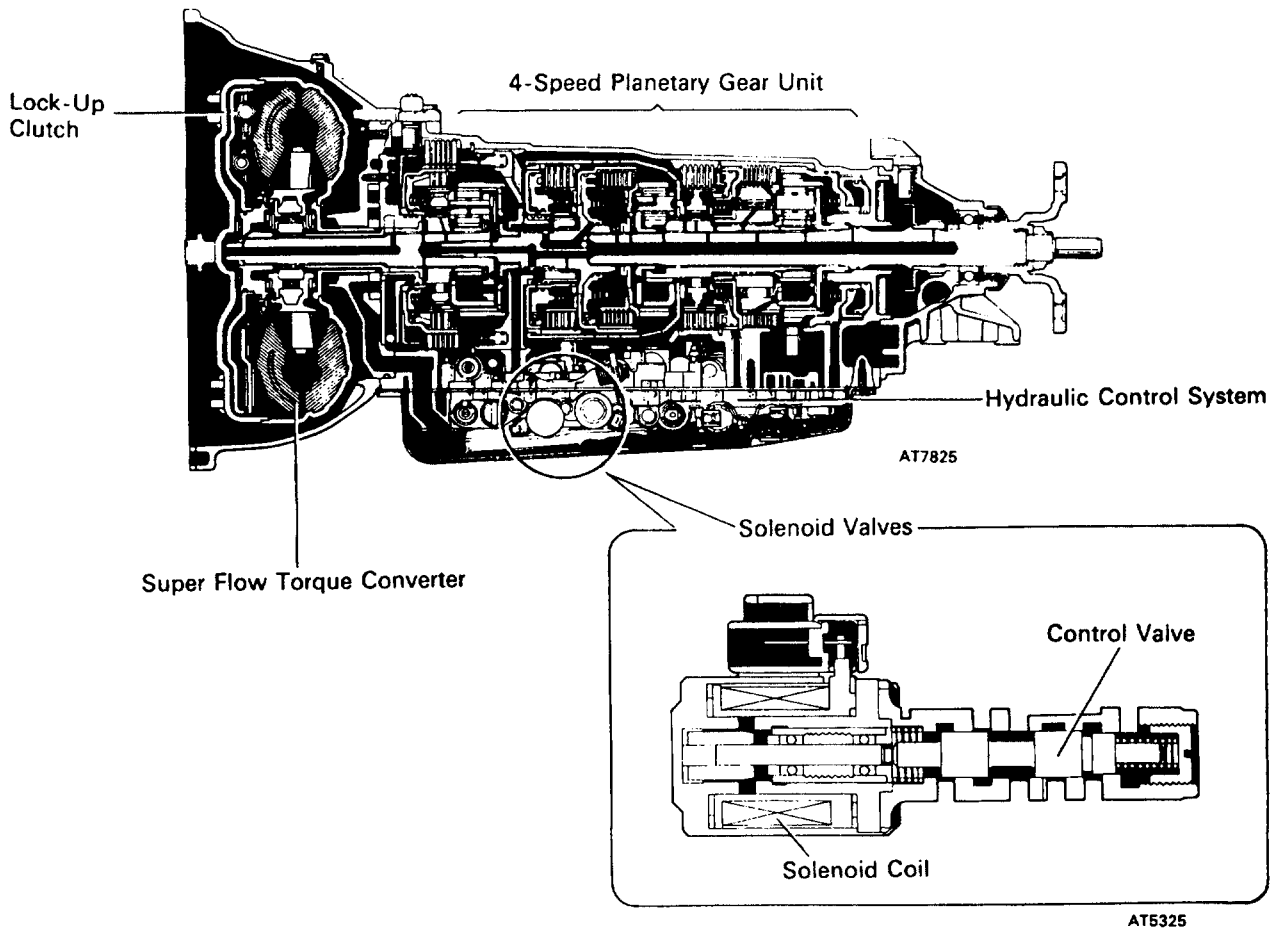

WhereEverybodyKnowsYourName

Type of Transmission		A340E
Type of Engine6		1UZ–FE
Torque Converter Clutch Stall Torque Ratio		1.900 :1
Torque Converter Clutch Lock–up Mechanism		Equipped
Gear Ratio	1st Gear	2.804
	2nd Gear	1.531
	3rd Gear	1.000
	O/D Gear	0.705
	Reverse Gear	2.393
Number of Discs/Plates	O/D Direct Clutch (C_0)	2 / 2
	Forward Clutch (C_1)	6 / 6
	Direct Clutch (C_2)	4 / 4
	2nd Brake (B_0)	5 / 5
	1st & Reverse Brake (B_2)	7 / 7
	O/D Brake (B_0)	5 / 4
2nd Coast Brake (B) Band Width	mm (in.)	40 (1.57)
ATF Type		ATF Type T–II or equivalent
Capacity liter (US qts, Imp. qts)	Total	8.2 (8.7, 7.2)
	Drain & Refill	1.9 (2.0, 1.7)

WhereEverybodyKnowsYourName

OPERATION

AT06S–04

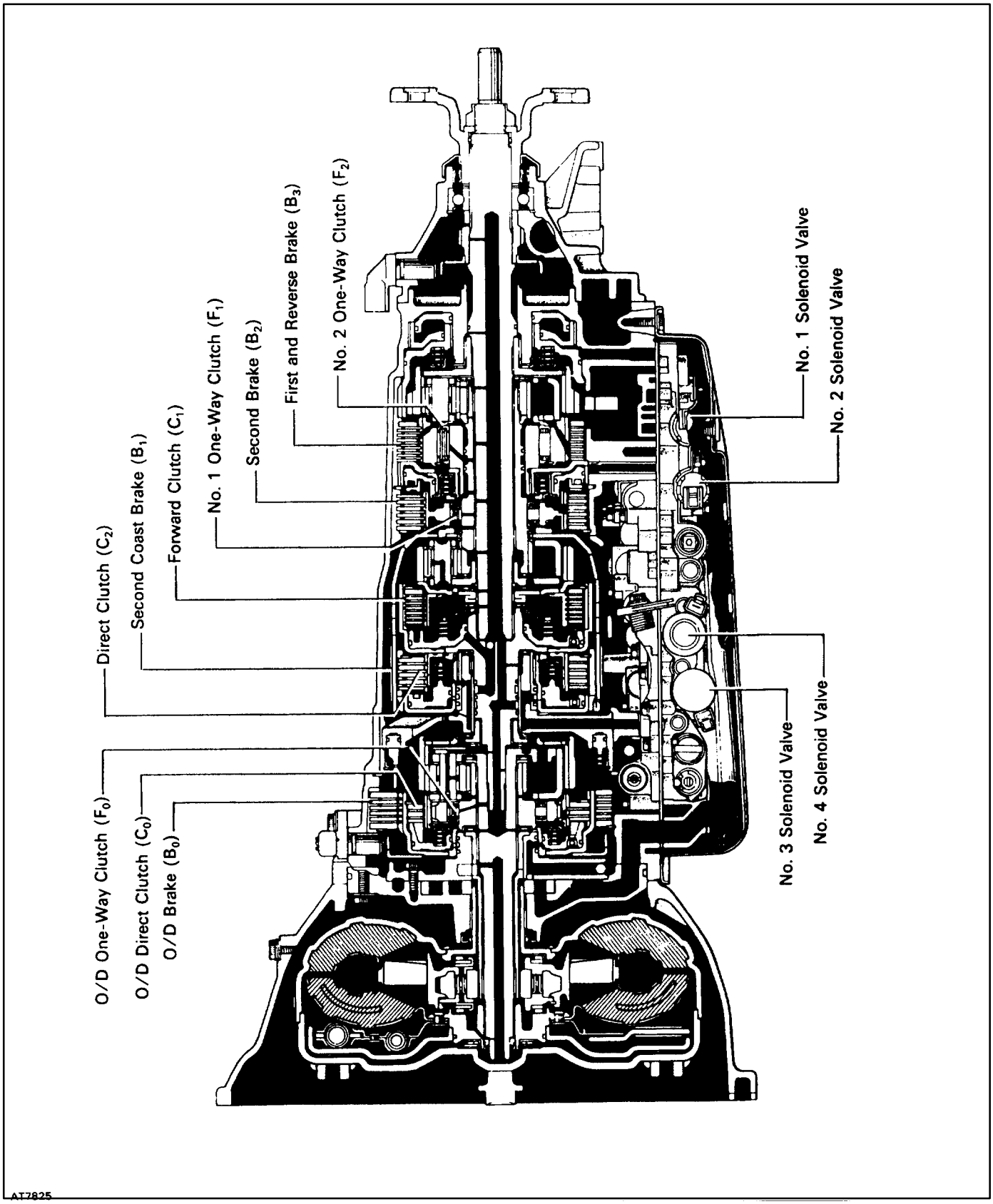

WhereEverybodyKnowsYourName

Position (i. e., Shift Lever Position)	Gear	No.1 Solenoid Valve	No.2 Solenoid Valve	C_1	C_2	C_0	B_1	B_2	B_3	B_0	F_1	F_2	F_0
P	Park	ON	OFF			●							
R	Reverse	ON	OFF		●	●			●				●
N	Neutral	ON	OFF			●							
D	1st	ON	OFF	●		●						●	●
	2nd	ON	ON	●		●		●			●		●
	3rd	OFF	ON	●	●	●		●					●
	O/D	OFF	OFF	●	●			●		●			
2	1st	ON	OFF	●		●						●	●
	2nd	ON	ON	●		●	●	●			●		●
	*3rd	OFF	ON	●	●	●		●					●
L	1st	ON	OFF	●		●			●			●	●
	*2nd	ON	ON	●		●	●	●			●		●

*: Down–shift only 2nd gear in the L position and 3rd gear in the 2 position no up–shift

❷: Operating

WhereEverybodyKnowsYourName

1. FUNCTION OF COMPONENTS

Component		Function
C_1	Forward Clutch	Connects input shaft and front planetary ring gear.
C_2	Direct Clutch	Connects input shaft and front & rear planetary sun gear.
C_0	O/D Direct Clutch	Connects overdrive sun gear and overdrive planetary carrier.
B_1	2nd Coast Brake	Prevents front & rear planetary sun gear from turning either clockwise or counterclockwise.
B_2	2nd Brake	Prevents outer race of F_1 from turning either clockwise or counterclockwise thus preventing the front & rear planetary sun gear from turning counterclockwise.
B_3	1st & Reverse Brake	Prevents rear planetary carrier from turning either clockwise or counterclockwise.
B_0	O/D Brake	Prevents overdrive sun gear from turning either clockwise or counterclockwise.
F_1	No.1 One-Way Clutch	When B_2 is operating, this clutch prevents the front & rear planetary sun gear from turning counterclockwise.
F_2	No.2 One-Way Clutch	Prevents rear planetary carrier from turning counterclockwise.
F_0	O/D One-Way Clutch	When the transmission is being driven by the engine, this clutch connects the overdrive sun gear and overdrive planetary carrier.
Planetary Gears		These gears change the route through which driving force is transmitted in accordance with the operation of each clutch and brake in order to increase or reduce the input and output speed.

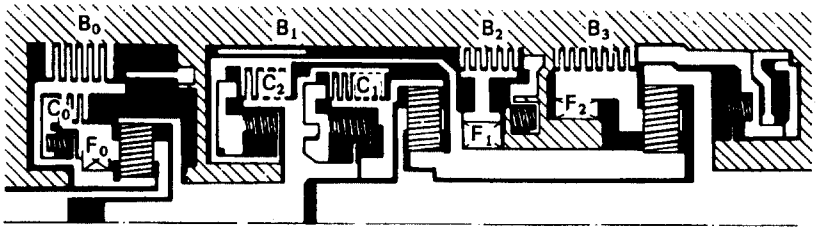

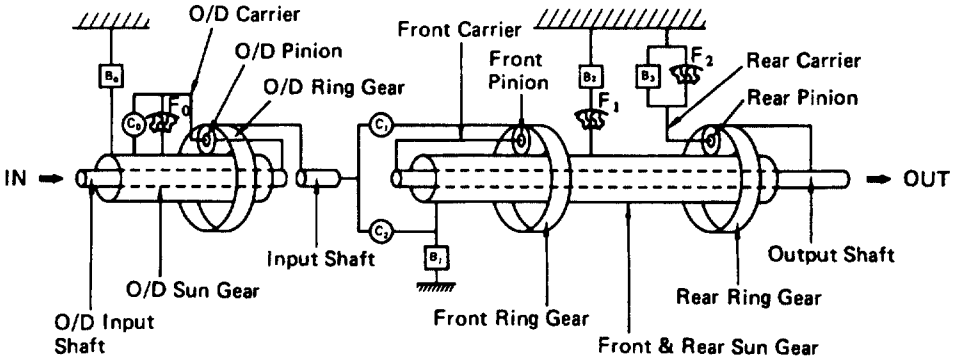

AT8491
AT5440

WhereEverybodyKnowsYourName

2. HYDRAULIC CONTROL SYSTEM

The hydraulic control system is composed of the oil pump, the valve body, the solenoid valves, the accumulators, the clutches and brakes, as well as the fluid passages which connect all of these components.
Based on the hydraulic pressure created by the oil pump, the hydraulic control system governs the hydraulic pressure acting on the torque converter clutch, clutches and brakes in accordance with the vehicle driving conditions.
There are 4 solenoid valves on the valve body.
The No.1 and No.2 solenoid valves are turned on and off by signals from the ECM to operate the shift valves, and change the gear shift position.
The No.3 solenoid valve is operated by signals from the ECM to engage or disengage the lock–up clutch of the torque converter clutch.
The No.4 solenoid valve is operated by signals from the ECM to control the engagement speed and reduce gear shift shock.

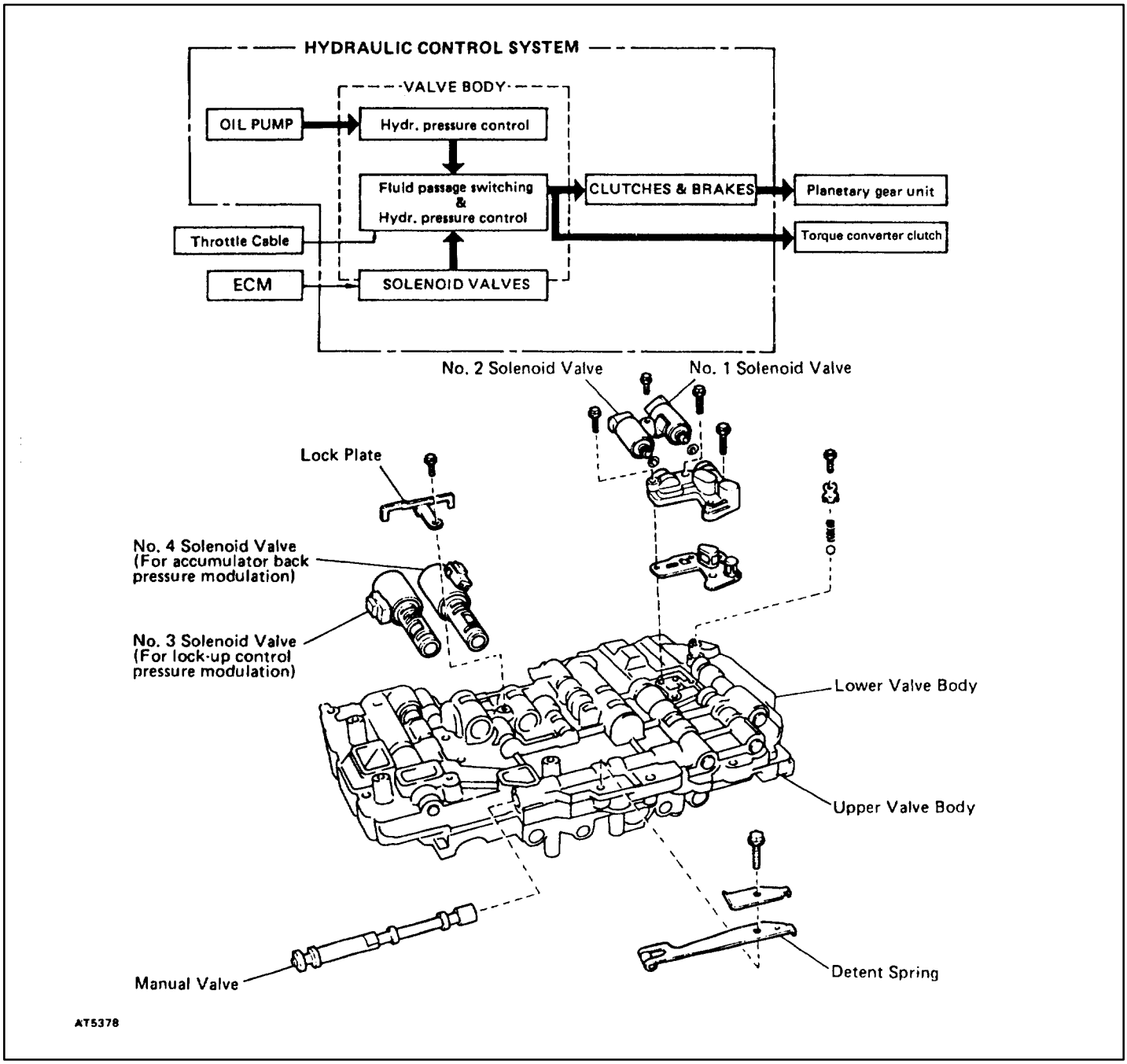

WhereEverybodyKnowsYourName

3. ELECTRONIC CONTROL SYSTEM

The electronic control system for the A340E automatic transmission provides extremely precise control of the gear shift timing and lock–up timing in response to driving conditions as sensed by various sensors located throughout the vehicle and in response to the engine's running condition.

At the same time, the ECM control reduces vehicle squat when the vehicle starts out and gear shift shock. The electronic control system is also equipped with a self diagnosis system which diagnoses malfunctions of electronically controlled components and warns the driver, and a fail–safe system which makes it possible for the vehicle to continue functioning when a malfunction occurs.

CONSTRUCTION

The electronic control system can be broadly divided onto 3 groups; the sensors, ECM and actuators.

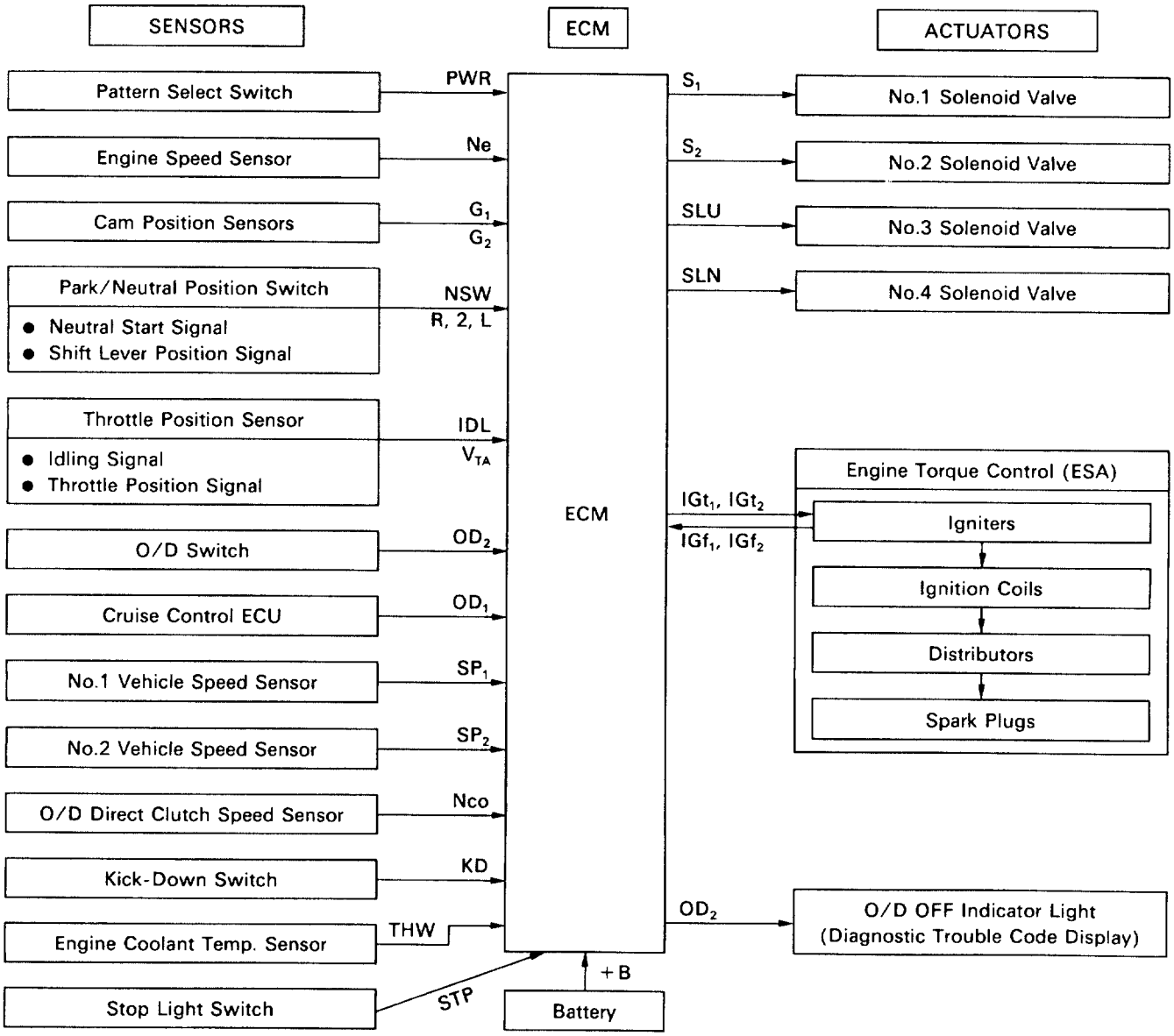

WhereEverybodyKnowsYourName

SYSTEM DIAGRAM

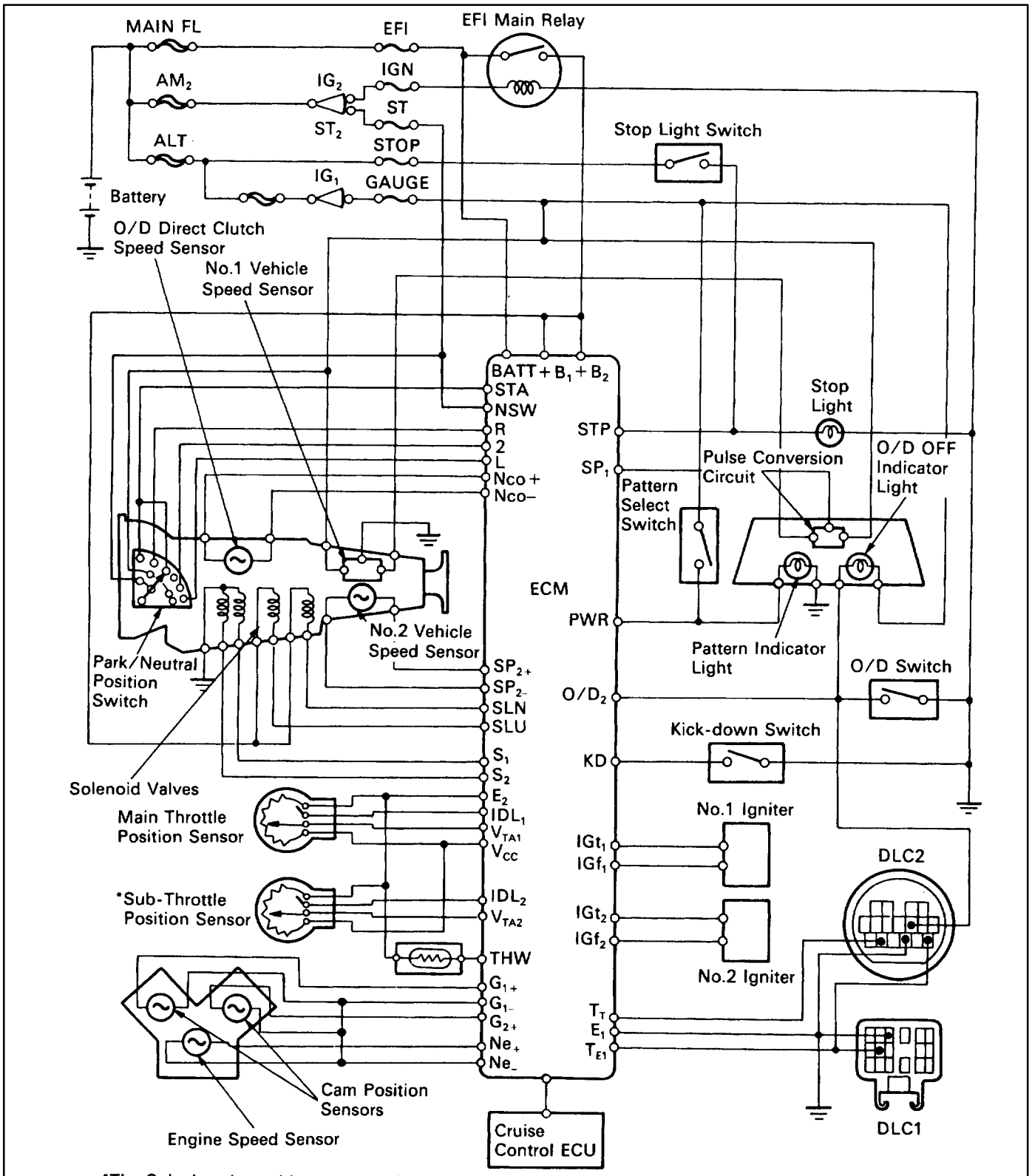

*The Sub-throttle position sensor is installed only when the optional TRAC (Traction Control) system is included in the brake system.

WhereEverybodyKnowsYourName

ARRANGEMENT COMPONENTS

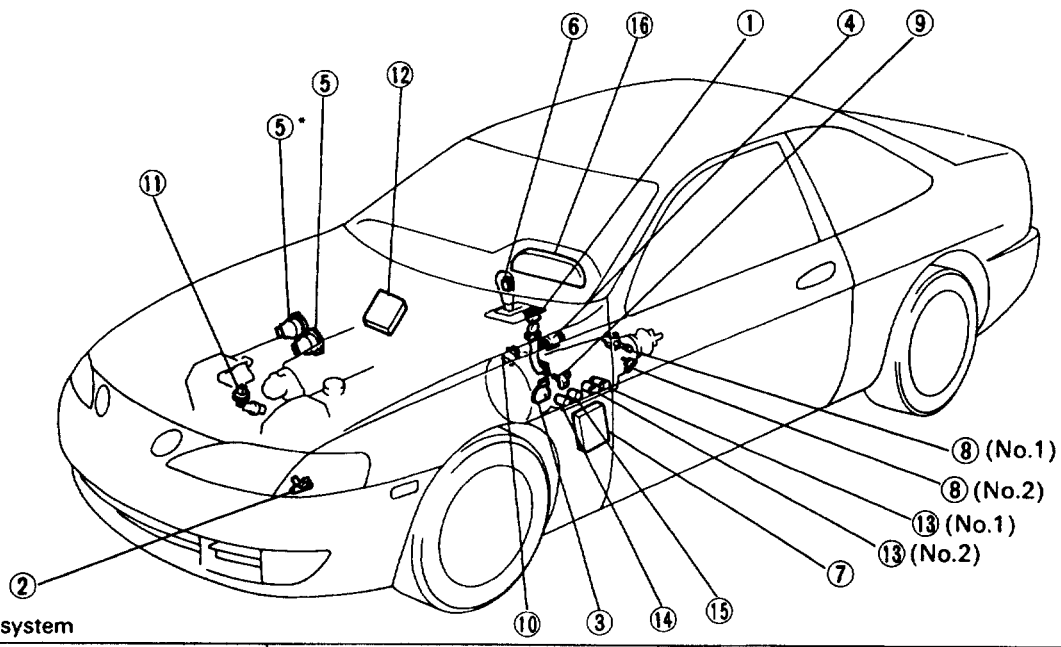

*with TRAC system

No.	Components	Functions
1	Pattern Select Switch	Selects the Power mode or the Normal mode for shift and lock-up timing.
2	Engine Speed Sensor	Detects the engine speed.
3	Park/Neutral Position Switch	Detects the shift lever position.
4	Stop Light Switch	Detects if the brake pedal is depressed.
5	Throttle Position Sensor	Detects the throttle valve opening angle.
6	O/D Switch	Prevents up shift to the O/D gear if the O/D switch is off.
7	Cruise Control ECU	This ECU prevents the transmission from shifting into overdrive and prohibits lock-up control when the vehicle's speed drops below the cruise control set speed parameter.
8	No.1 and No.2 Vehicle Speed Sensors	Detect the vehicle speed. Ordinarily, electronically controlled transmission control uses signals from the No.2 vehicle speed sensor, and the No.1 vehicle speed sensor is used as a back-up
9	O/D Direct Clutch Speed Sensor	Detects the input shaft speed from 1st gear to 3rd gear.
10	Kick-Down Switch	Detects if the accelerator pedal is depressed beyond the full throttle valve opening position.
11	Engine Coolant Temperature Sensor	Detects the engine coolant temperature.
12	ECM	Controls the engine and transmission actuators based on signals from each sensor.
13	No.1 and No.2 Solenoid Valves	Control the hydraulic pressure applied to each shift valve, and control the gear shift position and timing.
14	No.4 Solenoid For accumulator back pressure modulation	Controls hydraulic pressure applied to the back chamber accumulator and smoothes the engagement of clutches and brakes during shifting.
15	No.3 Solenoid For lock-up control pressure modulation	Controls the hydraulic pressure applied to the lock-up clutch and controls lock-up timing.
16	O/D OFF Indicator Light	Blinks and warns the driver, while the O/D main switch is pushed in, when the electronic control circuit is malfunctioning.

WhereEverybodyKnowsYourName

PREPARATION

SST (SPECIAL SERVICE TOOLS)

AT06T–03

	09032–00100 Oil Pan Seal Cutter	Remove the oil pan.
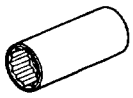	09060–20100 Deeper Socket Wrench 30 mm	Remove the output flange.
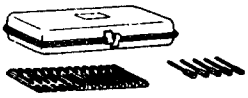	09240–00020 Wire Gauge Set	
	09308–00010 Oil Seal Puller	Remove the extension housing rear oil seal.
	09309–37010 Transmission Bearing Replacer	Install the extension housing rear oil seal.
	09325–12010 Transmission Oil Plug	Remove the extension housing rear oil seal.
	(09350–07020) Oil Pump Puller	
	(09350–07030) No.1 Piston Spring Compressor	Remove and install O/D support assembly.
	(09350–07040) No.2 Piston Spring Compressor	
	(09350–07050) No.3 Piston Spring Compressor	
	(09350–07060) No.1 Snap Ring Expander	
	(09350–07070) No.2 Snap Ring Expander	
	(09350–07080) Brake Reaction Sleeve Puller	

WhereEverybodyKnowsYourName

	(09350–07090)	Brake No.1 Piston Puller	
	(09350–07110)	Oil Seal Replacer	
	(09351–32140)	Oil Seal Replacer	
	(09351–32020)	Stator Stopper	
	09350–30020	TOYOTA Automatic Transmission Tool Set	
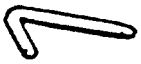	(09350–06120)	No.2 Measure Terminal	
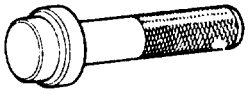	09517–36010	Rear Axle Shaft Oil Seal Replacer	Install the output flange oil seal.
	09843–18020	Diagnosis Check Wire	
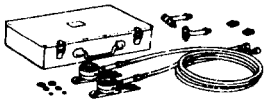	09992–00094	Automatic Transmission Oil Pressure Gauge Set	

RECOMMENDED TOOLS

AT06U–04

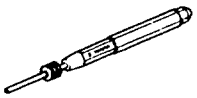	09031–00030	Pin Punch	Pin diameter 3 mm (0.12 in.)
	09082–00015	TOYOTA Electrical Tester	

WhereEverybodyKnowsYourName

EQUIPMENT

AT06V–05

Feeler gauge	Check major clearance
Vernier calipers	Check length of second coast brake piston rod.
Dial indicator or dial indicator with magnetic base	Check piston stroke and end play of the output shaft.
Dial indicator with magnetic base	Check inside diameter of major bushing.
Straight edge	Check side clearance of oil pump.
Torque wrench	
Cylinder gauge	Check inside diameter of the transmission case rear bushing.
Voltmeter	
Ammeter(A)	
Ohmmeter	

LUBRICANT

AT0GW–03

Item	Capacity	Classification
Automatic transmission fluid		
Dry fill	8.2 liters (8.7 US qts, 7.2 Imp. qts)	ATF Type T–II or equivalent
Drain and refill	1.9 liters (2.0 US qts, 1.7 Imp. qts)	

SSM (SPECIAL SERVICE MATERIALS)

AT06X–03

08826–00090	Seal Packing 1281, THREE BOND 1281 or equivalent	Transmission case X Oil pan Transmission case X Extension housing

WhereEverybodyKnowsYourName

ON–VEHICLE REPAIR

AT06Y–04

CAUTION: Work must be started after 90 seconds from the time the ignition switch is turned to the "LOCK" position and the negative (–) terminal cable is disconnected from the battery.

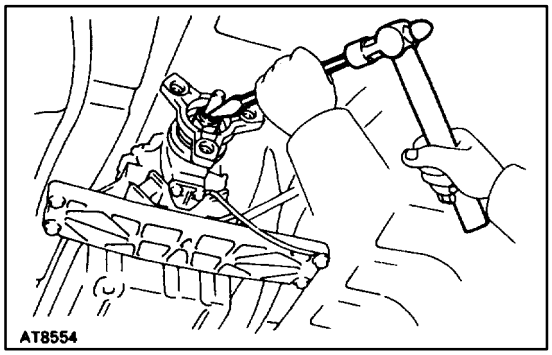

EXTENSION HOUSING

EXTENSION HOUSING REAR OIL SEAL REPLACEMENT

AT0QW–01

1. **DRAIN ATF**
2. **REMOVE FRONT EXHAUST PIPE AND HEAT INSULATOR (See pages** EG–204**)**
3. **REMOVE PROPELLER SHAFT (See pages** PR–6**)**

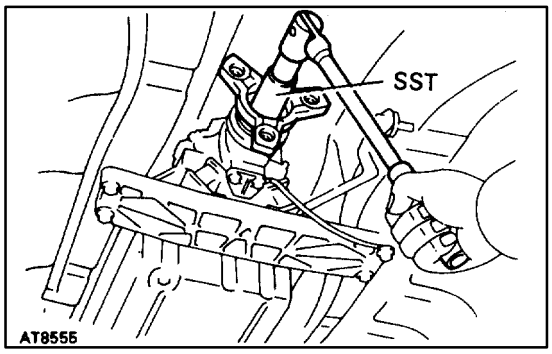

4. **REMOVE TRANSMISSION OUTPUT FLANGE**

(a) Using a hammer and chisel, loosen the staked part of the nut.
HINT: Shift the shift lever to the P position.
(b) Using SST, remove the nut.
SST 09060–20100

(c) Tap the output flange with a plastic hammer to remove it and 2 washers.

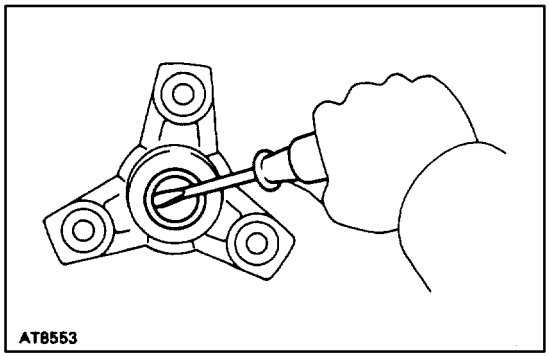

(d) Using a screwdriver, remove the oil seal from the output flange.

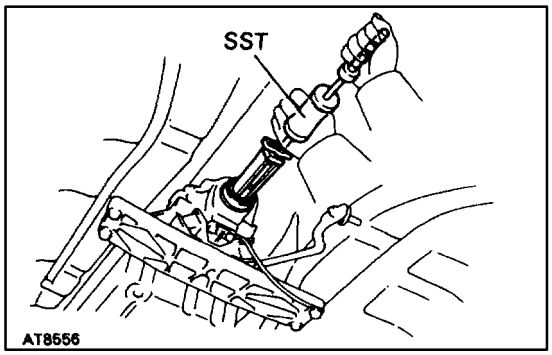

5. **REMOVE EXTENSION HOUSING REAR OIL SEAL**
Using SST, remove the oil seal.
SST 09308–00010

WhereEverybodyKnowsYourName

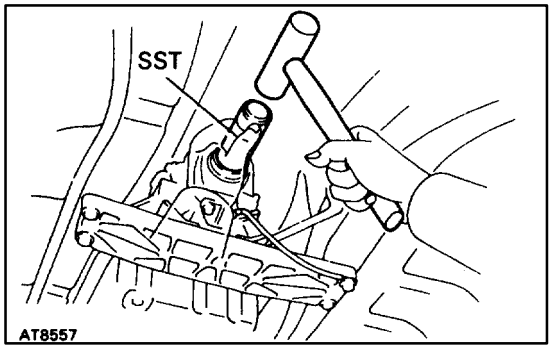

6. INSTALL EXTENSION HOUSING REAR OIL SEAL

(a) Coat the lip of oil seal with MP grease.

(b) Using SST and a hammer, drive in a new oil seal with the lip facing downward.
SST 09309–37010
Oil seal depth from flat end:
0–0.3 mm (0–0.012 in.)

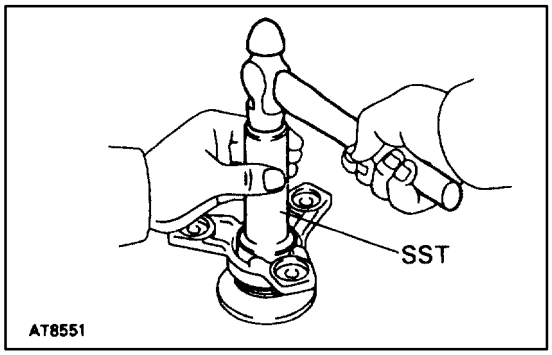

7. INSTALL TRANSMISSION OUTPUT FLANGE

(a) Using SST and a hammer, drive in a new oil seal.
SST 09517–36010

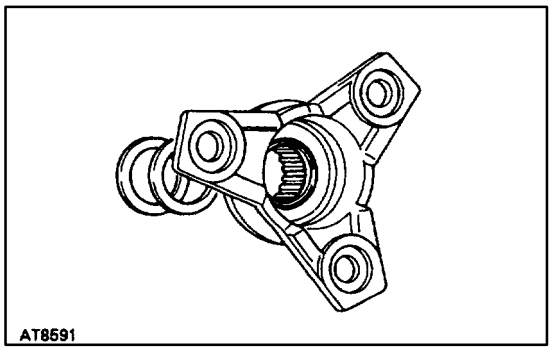

(b) Install the output flange and 2 washers.

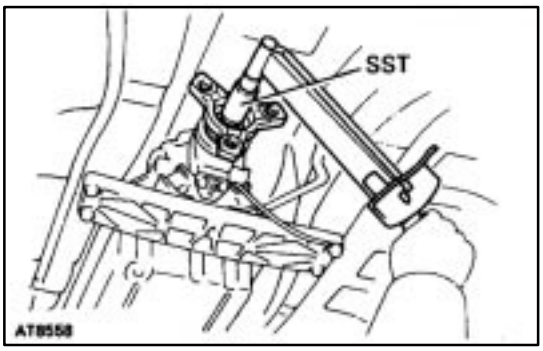

(c) Using SST, install and torque a new nut.
SST 09060–20010
Torque: 123 N·m (1,250 kgf·cm, 90 ft·lbf)
HINT: Shift the shift lever to the P position.

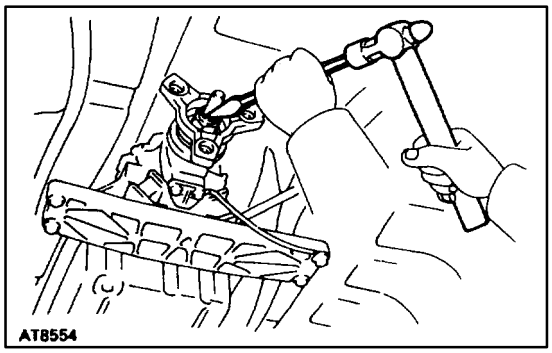

(d) Using a hammer and chisel, stake the nut.

8. INSTALL PROPELLER SHAFT
(See pages PR–12**)**

9. INSTALL FRONT EXHAUST PIPE AND HEAT INSULATOR
(See page EG–204**)**

10. FILL WITH ATF

11. CHECK FLUID LEVEL
(See page AT–47**)**

WhereEverybodyKnowsYourName

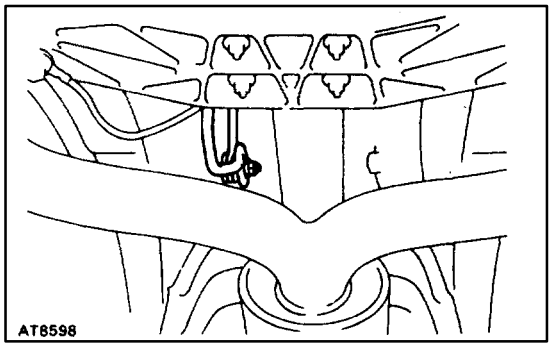

SPEED SENSOR

NO.1 VEHICLE SPEED SENSOR REPLACEMENT (w/ Speedometer Driven Gear)

AT070–04

1. REMOVE TRANSMISSION CONTROL ROD REAR SIDE

Remove the transmission control rod rear side set nut.

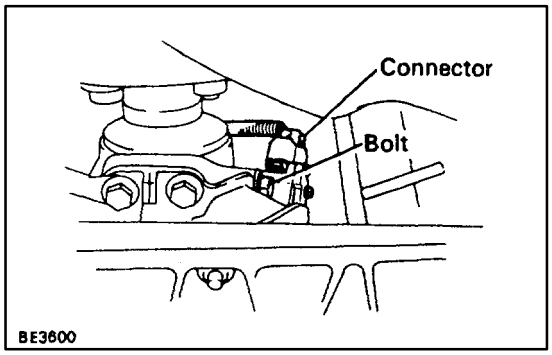

2. DISCONNECT NO.1 VEHICLE SPEED SENSOR CONNECTOR

3. REMOVE NO.1 VEHICLE SPEED SENSOR ASSEMBLY

(a) Remove the bolt and No.1 vehicle speed sensor assembly.

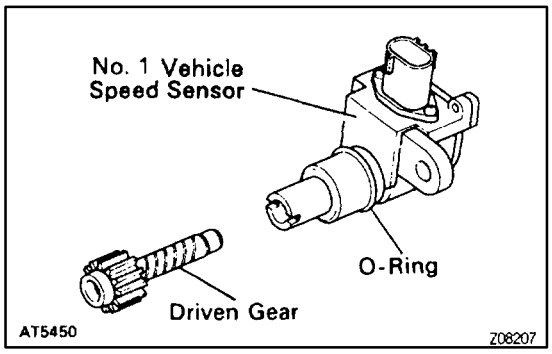

(b) Remove the speedometer driven gear from No.1 vehicle speed sensor.

(c) Remove the O–ring from No.1 vehicle speed sensor.

4. INSPECT NO.1 VEHICLE SPEED SENSOR
(See page AT–78**)**

5. INSTALL NO.1 VEHICLE SPEED SENSOR ASSEMBLY

(a) Coat a new O–ring with ATF and install it to the speed sensor.

(b) Install the speedometer driven gear to the speed sensor.

(c) Install the No.1 vehicle speed sensor assembly and torque the bolt.
Torque: 16 N·m (160 kgf·cm, 12 ft·lbf)

6. CONNECT NO.1 VEHICLE SPEED SENSOR CONNECTOR

7. INSTALL TRANSMISSION CONTROL ROD REAR SIDE

8. INSPECT AND ADJUST SHIFT LEVER POSITION
(See page AT–48**)**

WhereEverybodyKnowsYourName

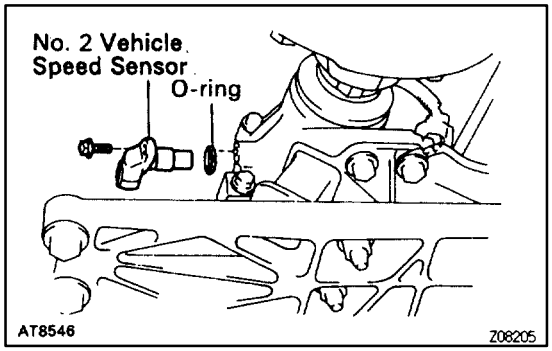

NO.2 VEHICLE SPEED SENSOR REPLACEMENT

AT0GF–02

1. **DISCONNECT NO.2 VEHICLE SPEED SENSOR CONNECTOR**
2. **REMOVE NO.2 VEHICLE SPEED SENSOR**
(a) Remove the bolt and No.2 vehicle speed sensor.
(b) Remove the O–ring from it.
3. **INSPECT NO.2 VEHICLE SPEED SENSOR**
(See page AT–86**)**
4. **INSTALL NO.2 VEHICLE SPEED SENSOR**
(a) Cost a new O–ring with ATF and install it to the speed sensor.
(b) Install the speed sensor and torque the bolt.
Torque: 5.4 N·m (55 kgf·cm, 48 in.·lbf)
5. **CONNECT NO.2 VEHICLE SPEED SENSOR CONNECTOR**

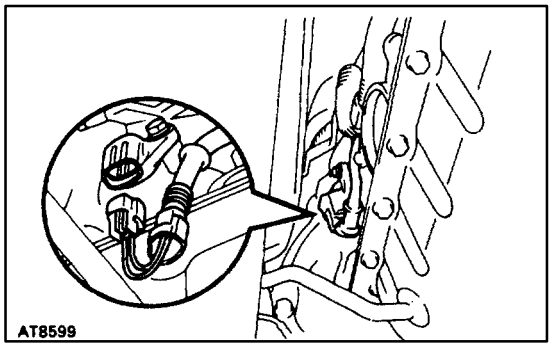

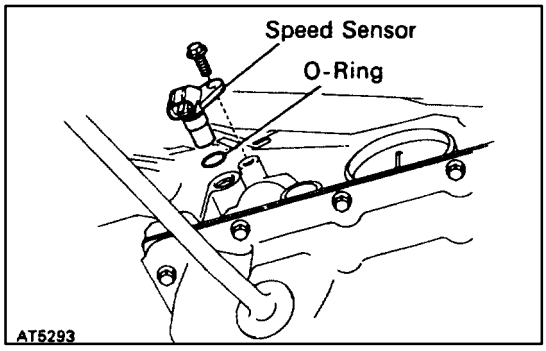

O/D DIRECT CLUTCH SPEED SENSOR REPLACEMENT

AT072–04

1. **REMOVE FRONT EXHAUST PIPE AND LH SIDE CATALYTIC CONVERTER**
(See pages EG–204**)**
2. **REMOVE LH SIDE HEAT INSULATORS**
3. **DISCONNECT O / D DIRECT CLUTCH SPEED SENSOR CONNECTOR**
4. **REMOVE O/D DIRECT CLUTCH SPEED SENSOR**
(a) Remove the bolt and O/D direct clutch speed sensor.
(b) Remove the O–ring from it.
5. **INSPECT O/D DIRECT CLUTCH SPEED SENSOR**
(See page AT–98**)**
6. **INSTALL O/D DIRECT CLUTCH SPEED SENSOR**
(a) Coat a new O–ring with ATF and install it to the O/D direct clutch speed sensor.
(b) Install the O/D direct clutch speed sensor and torque the bolt.
Torque: 5.4 N·m (55 kgf·cm, 48 in.·lbf)
7. **CONNECT O/D DIRECT CLUTCH SPEED SENSOR CONNECTOR**
8. **INSTALL LH SIDE HEAT INSULATORS**
9. **INSTALL LH SIDE CATALYTIC CONVERTER AND FRONT EXHAUST PIPE**
(See page EG–204**)**

WhereEverybodyKnowsYourName

PARK/NEUTRAL POSITION (PNP) SWITCH

PARK/NEUTRAL POSITION SWITCH REPLACEMENT

AT073–04

1. REMOVE FRONT EXHAUST PIPE
(See pages EG–204**)**

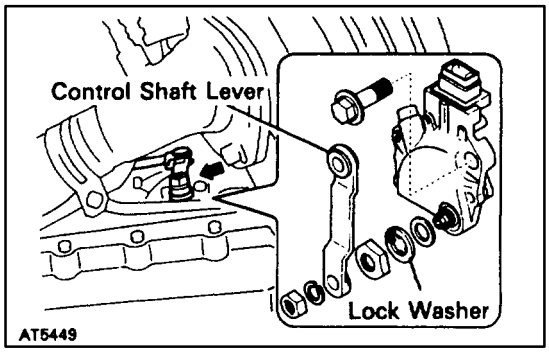

2. DISCONNECT PARK/NEUTRAL POSITION SWITCH CONNECTOR

3. REMOVE PARK/NEUTRAL POSITION SWITCH

(a) Remove the control shaft lever.

(b) Pry off the lock washer and remove the nut.

(c) Remove the bolt and pull out the park/neutral position switch.

4. INSPECT PARK/NEUTRAL POSITION SWITCH
(See page AT–106**)**

5. INSTALL AND ADJUST PARK/NEUTRAL POSITION SWITCH
(See page AT–49**)**

6. CONNECT PARK/NEUTRAL POSITION SWITCH CONNECTOR

7. INSTALL FRONT EXHAUST PIPE
(See page EG–204**)**

KICK–DOWN SWITCH

KICK–DOWN SWITCH REPLACEMENT

AT074–04

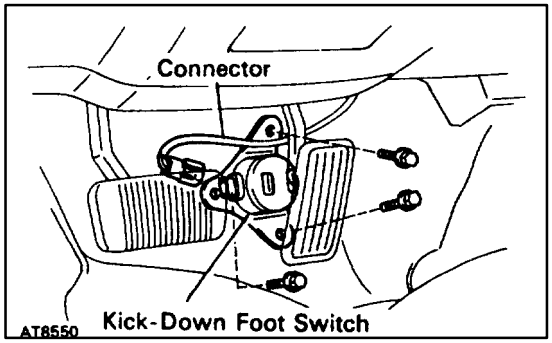

1. REMOVAL OF KICK–DOWN SWITCH

(a) Remove the 3 bolts and kick–down switch.

(b) Disconnect the kick–down switch connector.

2. INSTALLATION OF KICK–DOWN SWITCH

(a) Connect the kick–down switch connector.

(b) Install the kick–down switch and 3 bolts.

WhereEverybodyKnowsYourName

VALVE BODY

VALVE BODY REMOVAL

AT0GG–02

1. DRAIN ATF

2. REMOVE FRONT EXHAUST PIPE
(See pages EG–204**)**

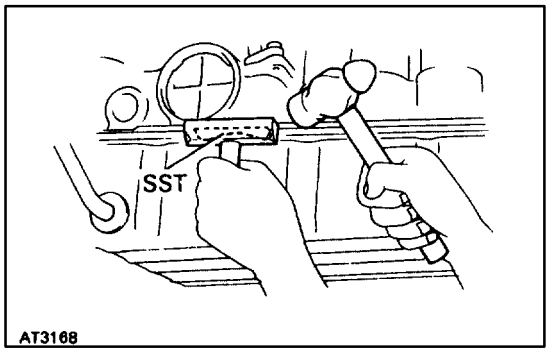

3. REMOVE OIL PAN

(a) Remove the 19 bolts.

(b) Install the blade of SST between the transmission case and oil pan, cut off applied sealer.
SST 09032–00100
NOTICE: Be careful not to damage the oil pan flange.

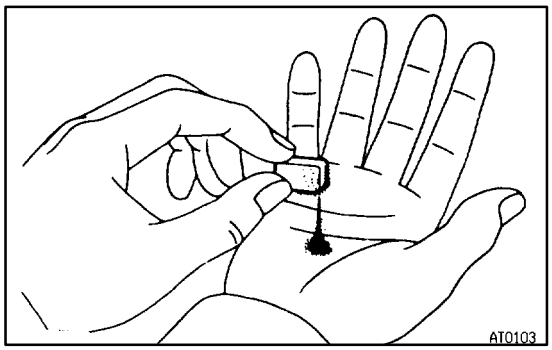

4. EXAMINE PARTICLES IN PAN

Remove the magnets and use them to collect steel particles. Carefully look at the foreign matter and particles in the pan and on the magnets to anticipate the type of wear you will find in the transmission:
Steel (magnetic) … bearing, gear and clutch plate wear
Brass (non–magnetic) … bushing wear

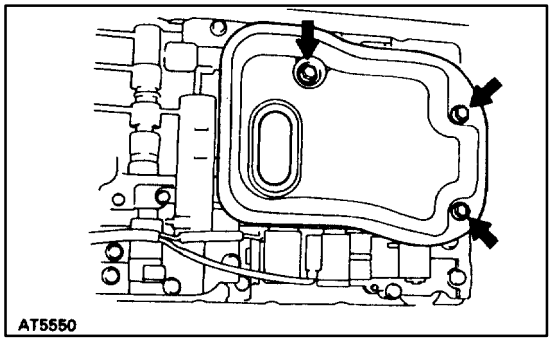

5. REMOVE OIL STRAINER

Remove the 3 bolts holding the oil strainer to the valve body.

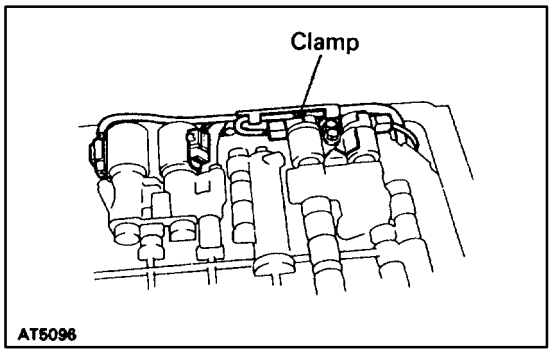

6. REMOVE SOLENOID WIRING

(a) Remove the 2 bolts and the clamp.

(b) Disconnect the 4 connectors from the solenoid valves.

WhereEverybodyKnowsYourName

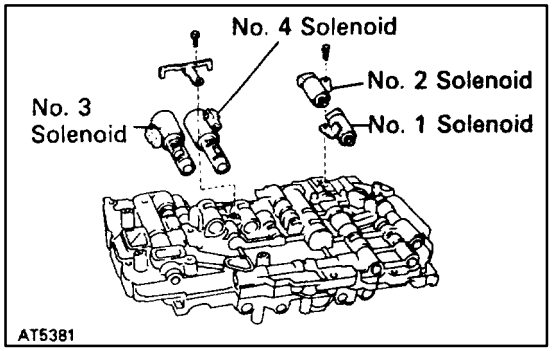

7. REMOVE 4 SOLENOID VALVES

(a) Remove the No. 1 and No.2 solenoid valves.

(b) Remove the O–rings from the No. 1 and No.2 solenoid valves.

(c) Remove the lock plate and No.3 and No.4 solenoid valves.

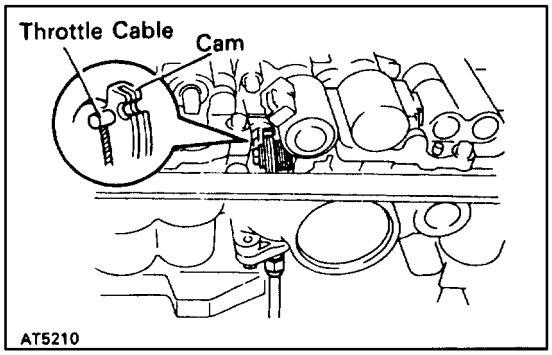

8. REMOVE THROTTLE CABLE

Disconnect the throttle cable from the cam.

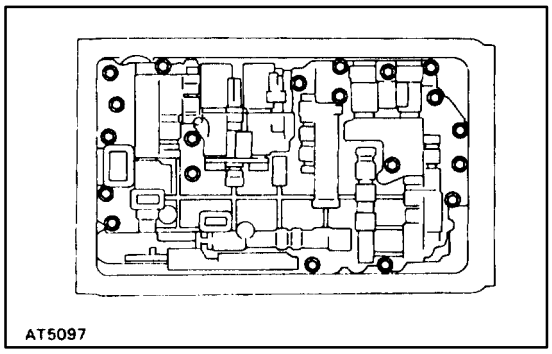

9. REMOVE VALVE BODY

(a) Remove the 20 bolts.

(b) Remove the valve body.

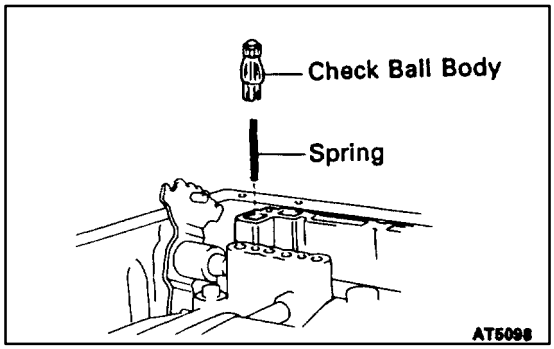

NOTICE: Do not drop the check ball body and spring.

10. INSPECT VALVE BODY

Refer to ‘94 A340E and A341E Automatic Transmission Repair Manual (for LEXUS SC400)

WhereEverybodyKnowsYourName

VALVE BODY INSTALLATION

AT0GH–02

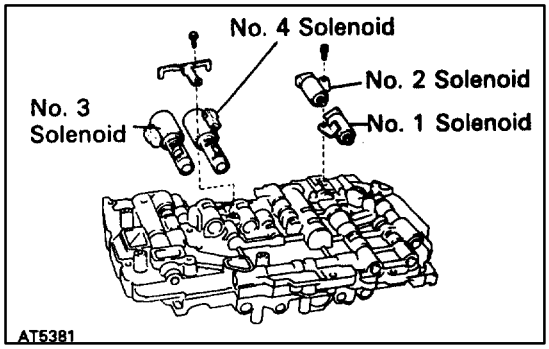

1. INSTALL 4 SOLENOID VALVES

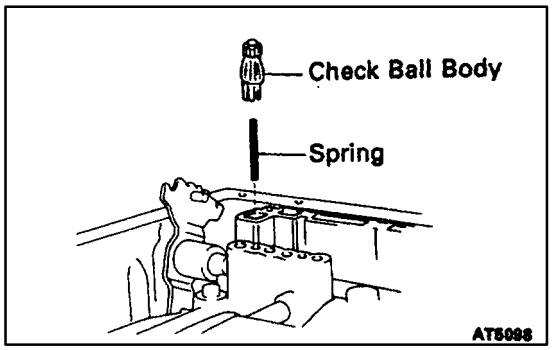

2. INSTALL CHECK BALL BODY AND SPRING AND HOLD IT

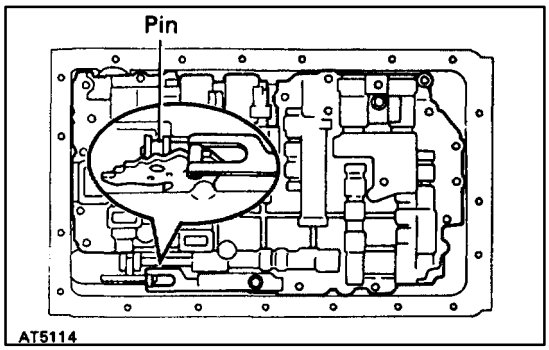

3. INSTALL VALVE BODY

(a) Align the groove of the manual valve to the pin of the lever.

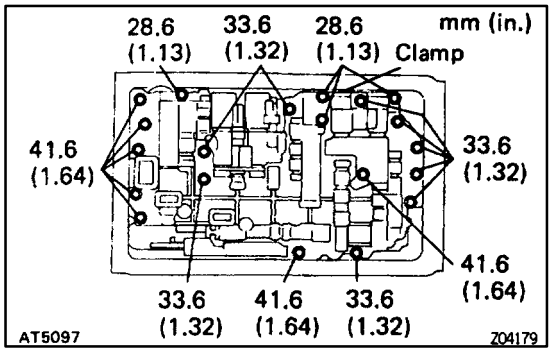

(b) Install the 20 bolts and clamp.
Torque: 10 N·m (100 kgf·cm, 7 ft·lbf)

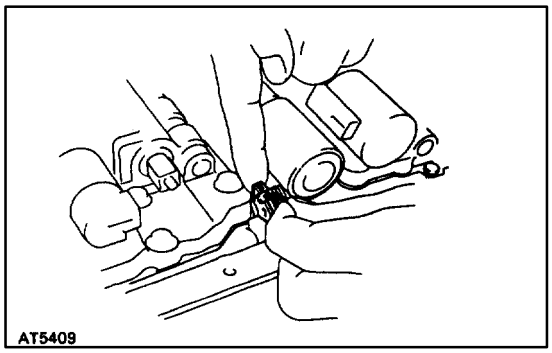

(c) Connect the throttle cable to the cam.

WhereEverybodyKnowsYourName

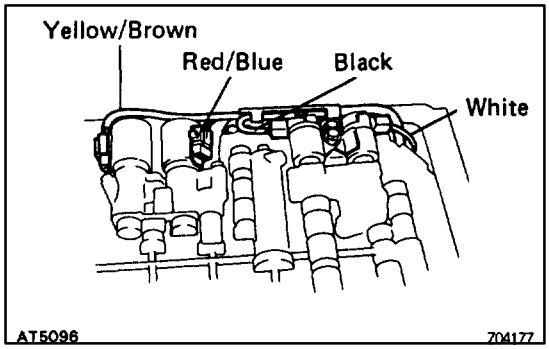

4. CONNECT SOLENOID VALVE CONNECTORS

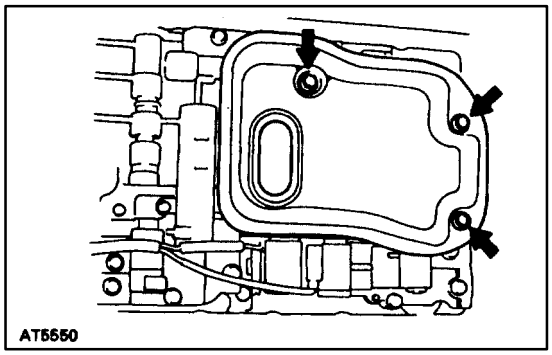

5. INSTALL OIL STRAINER AND GASKETS

Install the oil strainer and torque the 3 bolts.

Torque: 10 N·m (100 kgf·cm, 7 ft·lbf)

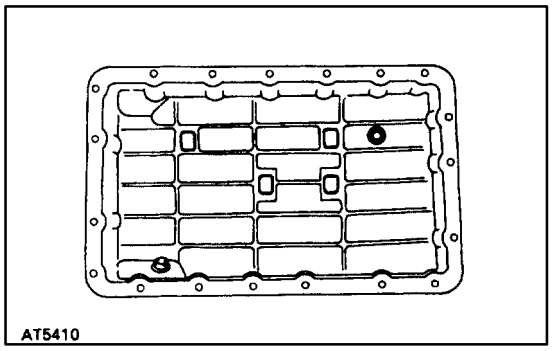

6. INSTALL OIL PAN

(a) Install the 4 magnets in the indentations of the oil pan, as shown in the illustration.

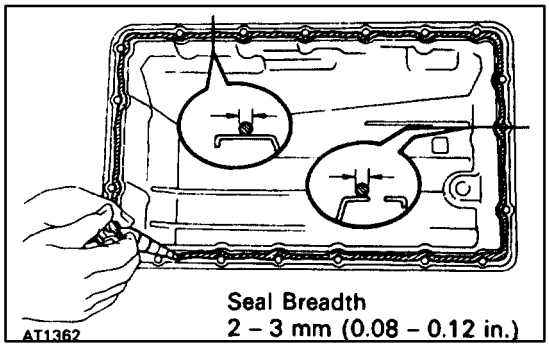

(b) Remove any FIPG material and be careful not to drop oil on the contacting surfaces of the transmission case and oil pan.

(c) Apply FIPG to the oil pan, as shown in the illustration.

FIPG:

Part No. 08826–00090, THREE BOND 1281 or equivalent

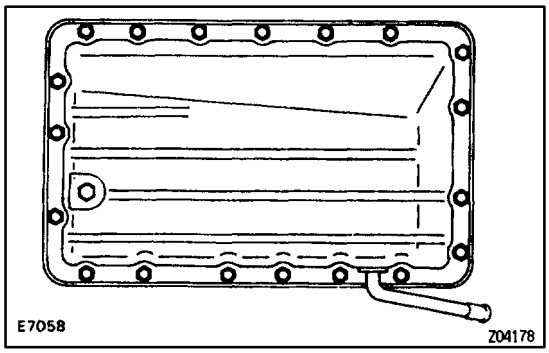

(d) Install the oil pan to the transmission case and torque the 19 bolts.

Torque: 7.4 N·m (75 kgf·cm, 65 in.·lbf)

7. INSTALL FRONT EXHAUST PIPE

(See page EG–204**)**

8. CHECK FLUID LEVEL

WhereEverybodyKnowsYourName

ASSEMBLY REMOVAL AND INSTALLATION

AT0GJ–02

Remove and install the parts, as shown.

NOTICE: Work must be started after 90 seconds from the time the ignition switch is turned to the "LOCK" position and the negative (–) terminal cable is disconnected from the battery.

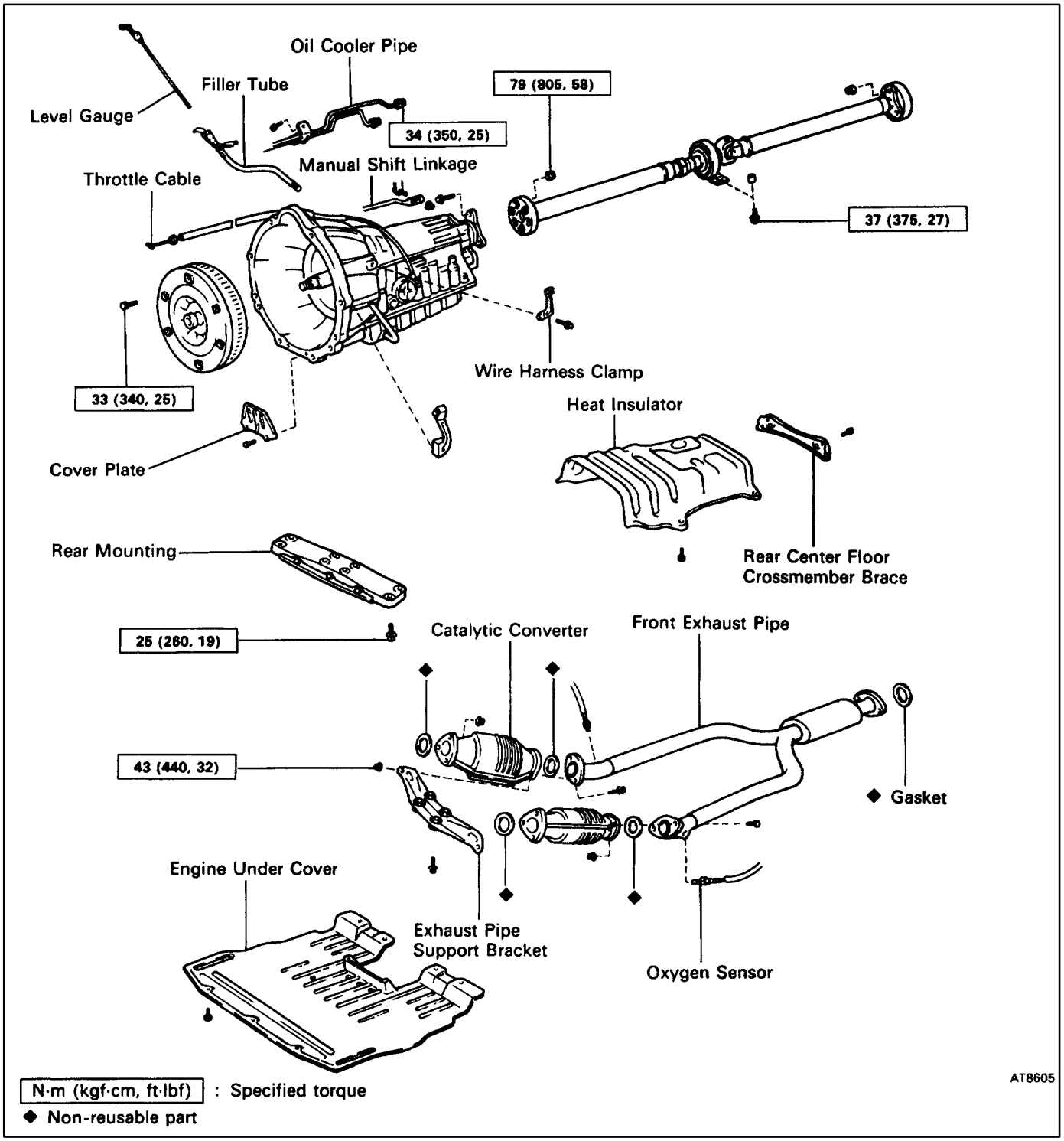

WhereEverybodyKnowsYourName

NOTICE: Before removing of transmission, disconnect the throttle cable from the following parts in the engine compartment order.

A: Throttle lever
B: Throttle cable bracket
C: Clamp
D: Clamp
E: Clamp

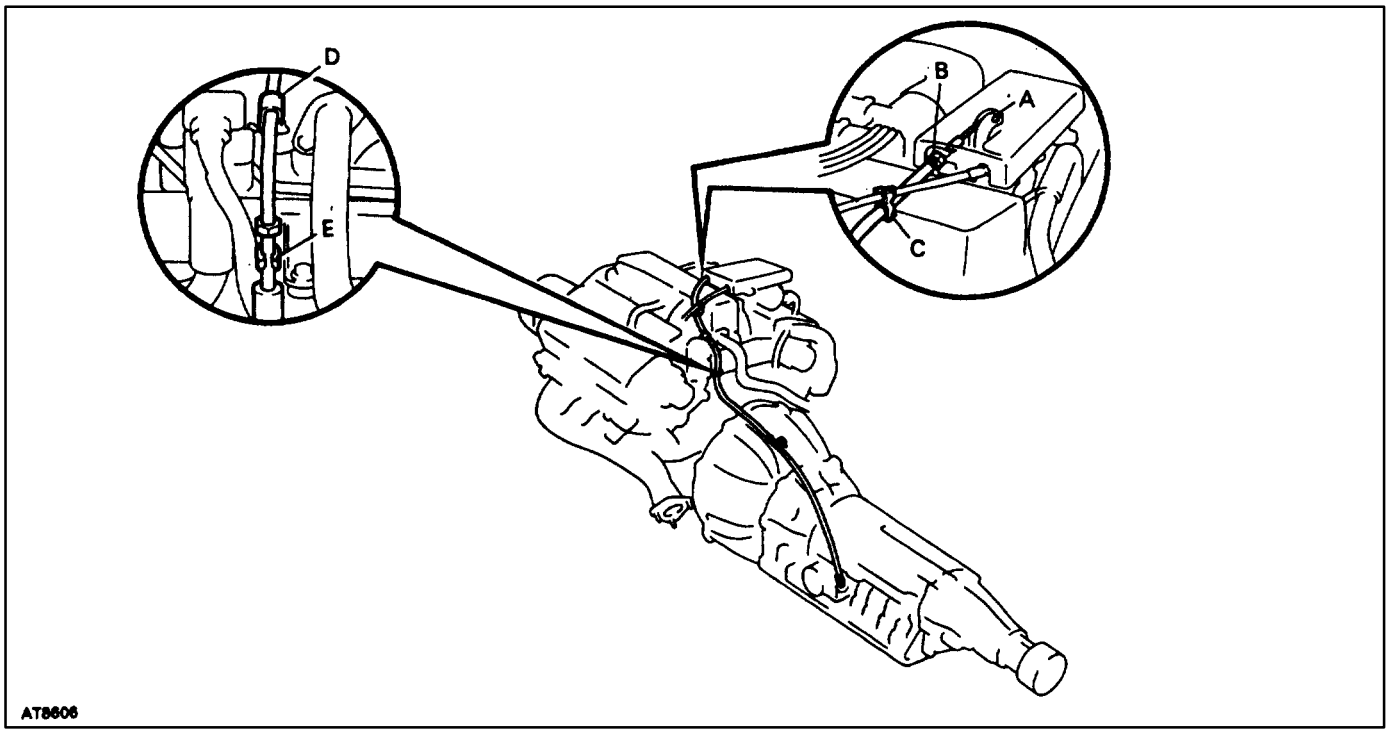

WhereEverybodyKnowsYourName

TORQUE CONVERTER CLUTCH CLEANING

AT079–04

If the transmission is contaminated, the torque converter clutch and transmission cooler should be thoroughly flushed with ATF.

TORQUE CONVERTER CLUTCH AND DRIVE PLATE INSPECTION

AT00J–01

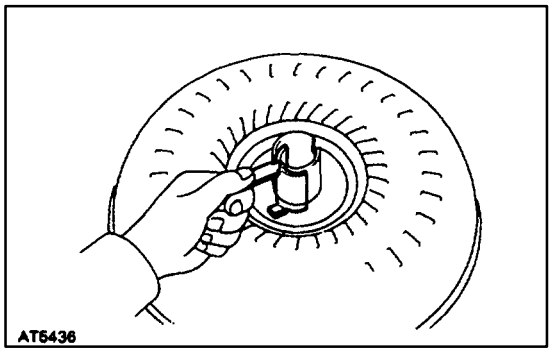

1. INSPECT ONE–WAY CLUTCH

(a) Install SST so that it fits in the notch of the converter hub and outer race of the one–way clutch.
SST 09350–30020 (09350–32020)

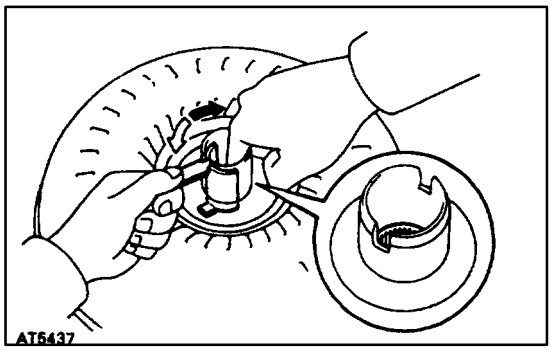

(b) Press on the serrations of starter with a finger and rotate it. Check if it rotates smoothly when turned clockwise and locks up when turned counterclockwise.

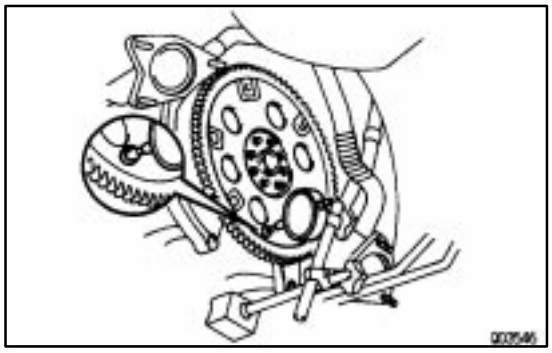

2. MEASURE DRIVE PLATE RUNOUT AND INSPECT RING GEAR

Set up a dial indicator and measure the drive plate runout. If runout exceeds 0.20 mm (0.0079 in.) or if the ring gear is damaged, replace the drive plate. If installing a new drive plate, note the orientation of spacers and tighten the bolts.
Torque: 98 N·m (1,000 kgf·cm, 72 ft·lbf)

WhereEverybodyKnowsYourName

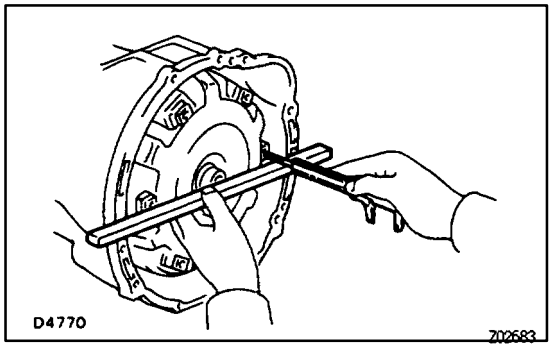

INSTALLATION MAIN POINTS

AT00L–01

1. **CHECK TORQUE CONVERTER CLUTCH INSTALLATION**
   Using calipers and a straight edge, measure from the installed surface of the torque converter clutch to the front surface of the transmission housing.
   Correct distance:
   17.1 mm (0.673 in.)

   If the distance is less than the standard, check for an improper installation.

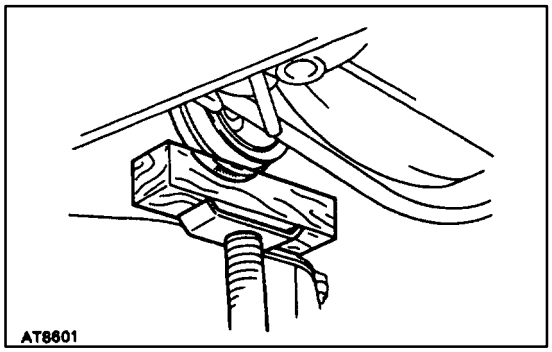

2. **LIFT ENGINE FRONT SIDE**

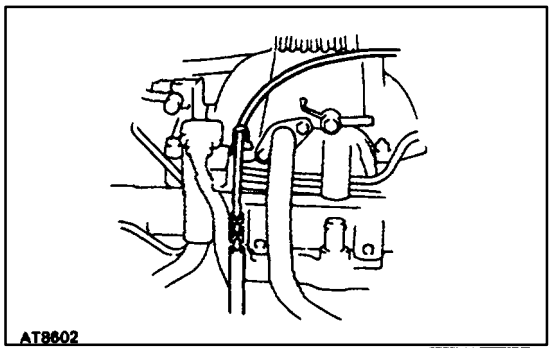

3. **INSTALL THROTTLE CABLE**
4. **ADJUST THROTTLE CABLE**
   (See page AT–48**)**
5. **FILL TRANSMISSION WITH ATF AND CHECK FLUID LEVEL**
   (See page AT–47**)**
   NOTICE: Do not overfill.
   Fluid type:
   ATF Type T–II or equivalent
6. **INSTALL PROPELLER SHAFT**
   (See page PR–12 to PR–14**)**
7. **INSTALL EXHAUST PIPE**
   (See page EG–204**)**

WhereEverybodyKnowsYourName

SHIFT LOCK SYSTEM
COMPONENT AND CIRCUIT

AT0GL–02

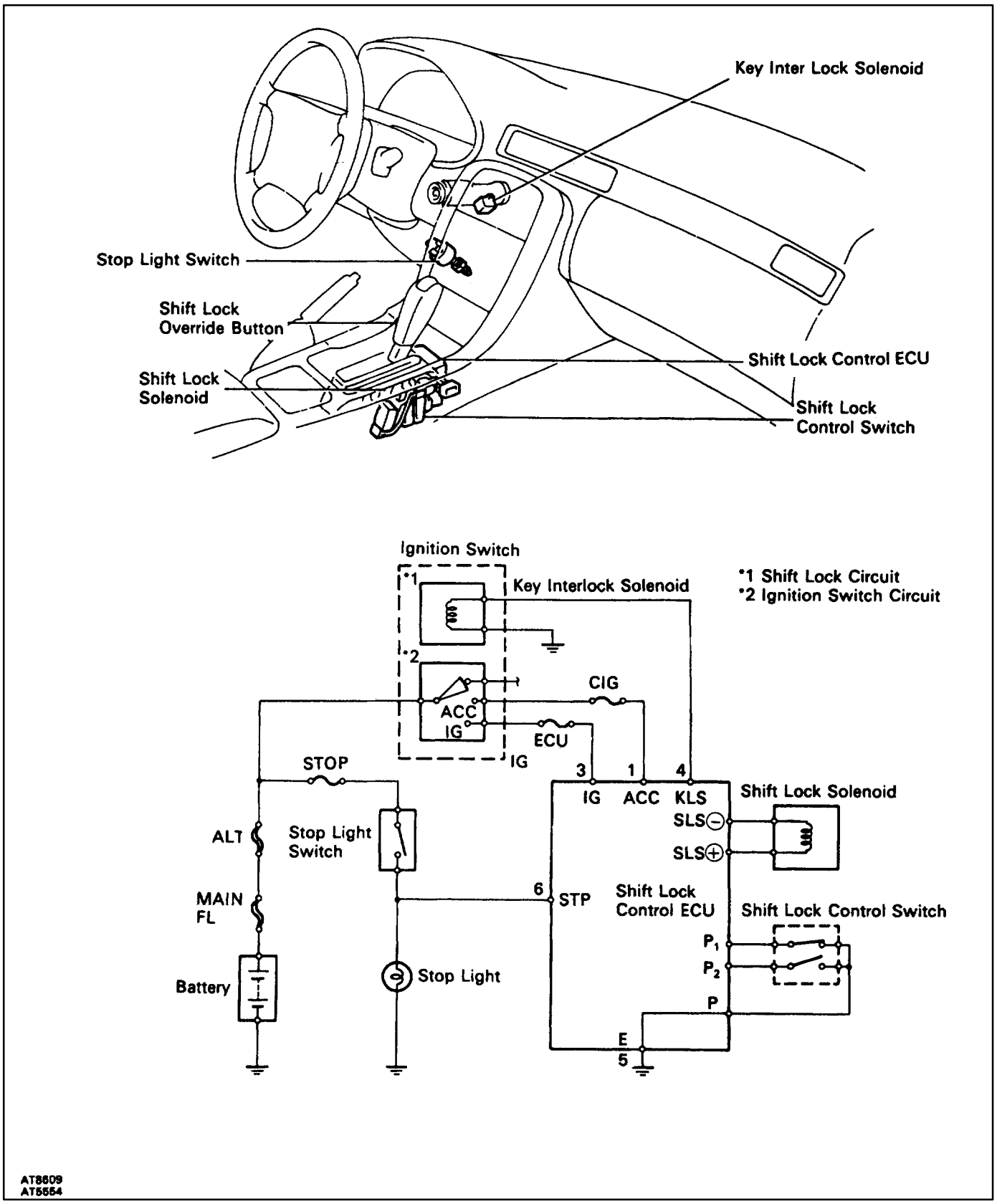

WhereEverybodyKnowsYourName

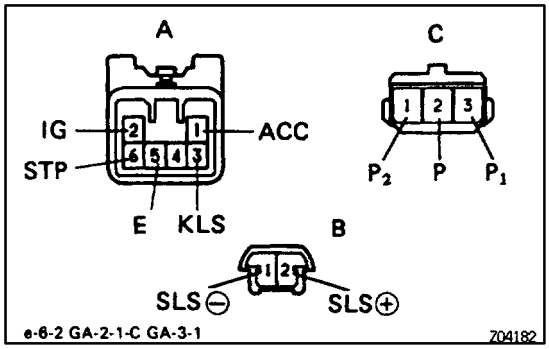

ELECTRONIC CONTROL COMPONENTS INSPECTION

AT0GM–02

1. INSPECT SHIFT LOCK CONTROL ECM

Using a voltmeter, measure the voltage at each terminal.

Connector	Terminal	Measuring condition	Voltage (V)
A	ACC–E	IG SW ACC position	10–14
	IG–E	IG SW ON position	10–14
	STP–E	Depress brake pedal	10–14
	KLS–E	❷ IG SW ACC position and P position	0
		→ R, N, D, 2, L, position	7.5–11
		❹ R, N, D, 2, L position (after one second)	6–9.5
B	SLS ≦ – SLS ↔	❷ IG SW ON position and P position	0
		→ Depress brake pedal	8–13.5
		❹ Depress brake pedal (after 20 seconds)	6–8.5
		③ R, N, D, 2, L position	0
C	P_1–P	❷ IG SW ON, P position and depress brake pedal	0
		→ R, N, D, 2, L position	9–13.5
	P_2–P	❷ IG SW ACC position and P position	9–13.5
		→ R, N, D, 2, L position	0

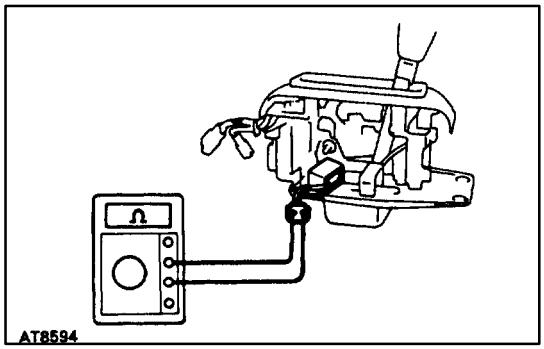

2. INSPECT SHIFT LOCK SOLENOID

(a) Disconnect the solenoid connector.

(b) Using an ohmmeter, measure the resistance between terminals.

Standard resistance:

20–28 ?

If resistance value is not as specified, replace the solenoid.

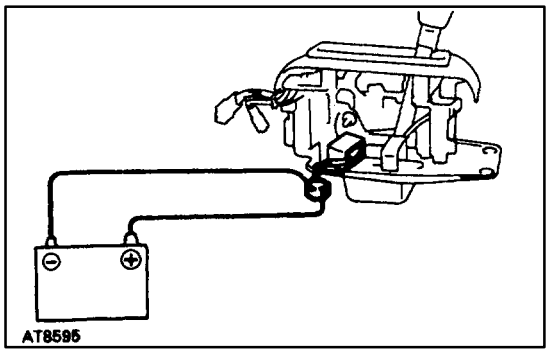

(c) Apply the battery positive voltage between terminals.
At this time, confirm that the solenoid operates.
If solenoid operation is not as specified, replace solenoid.

WhereEverybodyKnowsYourName

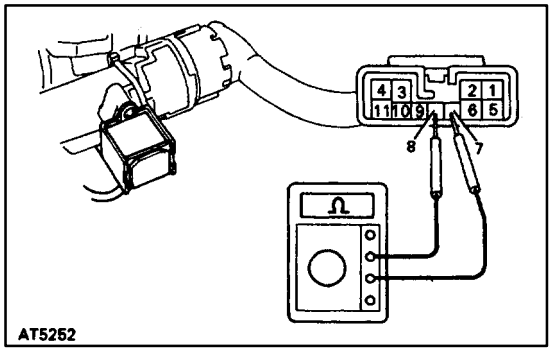

3. INSPECT KEY INTERLOCK SOLENOID

(a) Disconnect the solenoid connector.

(b) Using an ohmmeter, measure the resistance between terminals 7 and 8.

Standard resistance:

12–17 ?

If resistance value is not as specified, replace the solenoid.

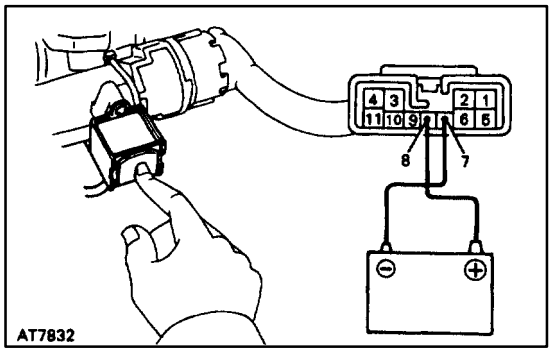

(c) Touch the solenoid with your finger and check that solenoid operation can be felt when battery positive voltage.
If solenoid operation is not as specified, replace the solenoid.

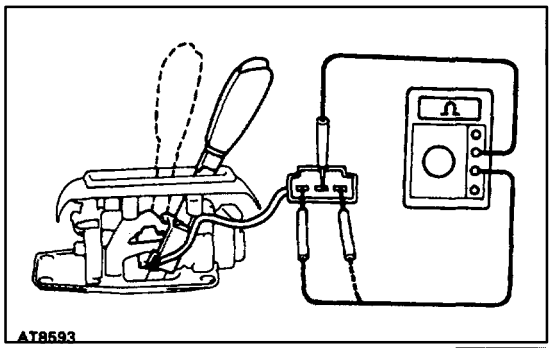

4. INSPECT SHIFT LOCK CONTROL SWITCH

Inspect that there is continuity between each terminal.

O—O: Continuity

Terminal / Switch position	P	P1	P2
P range (Release button is not pushed)	O—O		
R, N, D, 2, L, positions	O—	——	—O

WhereEverybodyKnowsYourName

–Memo–

AT00X–01

WhereEverybodyKnowsYourName

TROUBLESHOOTING

WhereEverybodyKnowsYourName

HOW TO PROCEED WITH TROUBLESHOOTING

AT09N–0D

1. CUSTOMER PROBLEM ANALYSIS

Using the customer problem analysis check sheet for reference, ask the customer in as much detail as possible about the problem.

2. CHECK AND CLEAR THE DIAGNOSTIC TROUBLE CODES (PRECHECK)

Before confirming the problem symptom, first check if there are any diagnostic trouble malfunction codes stored in memory. When there are malfunction codes, make a note of them, then clear them and proceed to “3. Problem Symptom Confirmation”.

3. PROBLEM SYMPTOM CONFIRMATION

Confirm the problem symptoms.

4. SYMPTOM SIMULATION

If the problem does not reappear, be sure to simulate the problem by mainly checking the circuits indicated by the diagnostic trouble code in step 2., using “Problem Simulation method”.

5. DIAGNOSTIC TROUBLE CODE CHECK

Check the diagnostic trouble codes. Check if there is abnormality in the sensors or the wire harness.
If a malfunction code is output, proceed to “6. Diagnostic Trouble Code Chart”.
If the normal code is output, proceed to “11. Matrix Chart of Problem Symptoms”.
Be sure to proceed to “6. Diagnostic Trouble Code Chart” after the steps 2. and 3. are completed.
If troubleshooting is attempted only by following the malfunction code stored in the memory is output, errors could be made in the diagnosis.

6. DIAGNOSTIC TROUBLE CODE CHART

If a malfunction code is confirmed in the diagnostic trouble code check, proceed to the inspection procedure indicated by the matrix chart for each diagnostic trouble code.

7. PRELIMINARY CHECK

Carry out a preliminary check of the transmission oil level, throttle cable adjustment, etc.

8. SHIFT POSITION SIGNAL CHECK

Carry out the shift position signal check when the transmission gears do not up–shift, down–shift or lock–up. This is to check the output condition from the ECM to each solenoid. If the results are NG, then it is likely that the trouble is in the electrical system (particularly in the sensors or the ECM).
Proceed to Part 1 (Electrical System) under “11. Matrix Chart of Problem Symptoms”. If all the circuits specified in Part 1 are OK, check the ECM and replace it.

9. MECHANICAL SYSTEM TEST

(Stall Test, Time Lag Test, Line Pressure Test, Accumulator Back Pressure Test)

If the malfunction is found in the stall test, time lag test, line pressure test or accumulator back pressure test, check the parts indicated in the respective tests. If the problem is that “shift shock is large”, perform the accumulator back pressure test.

10. MANUAL SHIFTING TEST

If the results of the manual driving test are NG, it is likely that the trouble is in the mechanical system or hydraulic system. Proceed to Part 2 (Mechanical System) under the Matrix Chart of Problem Symptoms.

WhereEverybodyKnowsYourName

11. MATRIX CHART OF PROBLEM SYMPTOMS

If the normal code is confirmed in the diagnostic trouble code check, perform inspection according to the inspection order in the matrix chart of problem symptoms. Perform diagnosis of each circuit or part in the order shown in the Matrix Chart. The Matrix Chart contains 3 chapters, Electronically Controlled Circuits in Chapter 1, On–vehicle Inspection in Chapter 2 and Off–vehicle Inspection in Chapter 3. If all the circuits indicated in Chapter 1 are normal, proceed to Chapter 2. If all the parts indicated in Chapter 2 are normal, proceed to Chapter 3. If all the circuits and parts in Chapter 1–Chapter 3 are normal and the trouble still occurs, check and replace the ECM.

12. CIRCUIT INSPECTION

Perform diagnosis of each circuit in accordance with the inspection order confirmed in 6. and 11. Judge whether the cause of the problem is in the sensor, actuators, wire harness and connectors, or the ECM. In some cases, the Flow Chart instructs that a throttle signal check, brake signal check or kick down signal check (in test mode) be performed. These are diagnosis functions used to check if signals are being input correctly to the ECM.

13. PARTS INSPECTION

Check the individual parts of the mechanical system and hydraulic system in the order of the numbers indicated in the Matrix Chart.

14. REPAIRS

After the cause of the problem is located, perform repairs by following the inspection and replacement procedures in this manual or ’94 A340E and A341E Automatic Transmission Repair Manual (for LEXUS SC400).

15. CONFIRMATION TEST

After completing repairs, confirm not only that the malfunction is eliminated, but also conduct a test drive, etc., to make sure the entire electronically controlled transmission system is operating correctly.

WhereEverybodyKnowsYourName

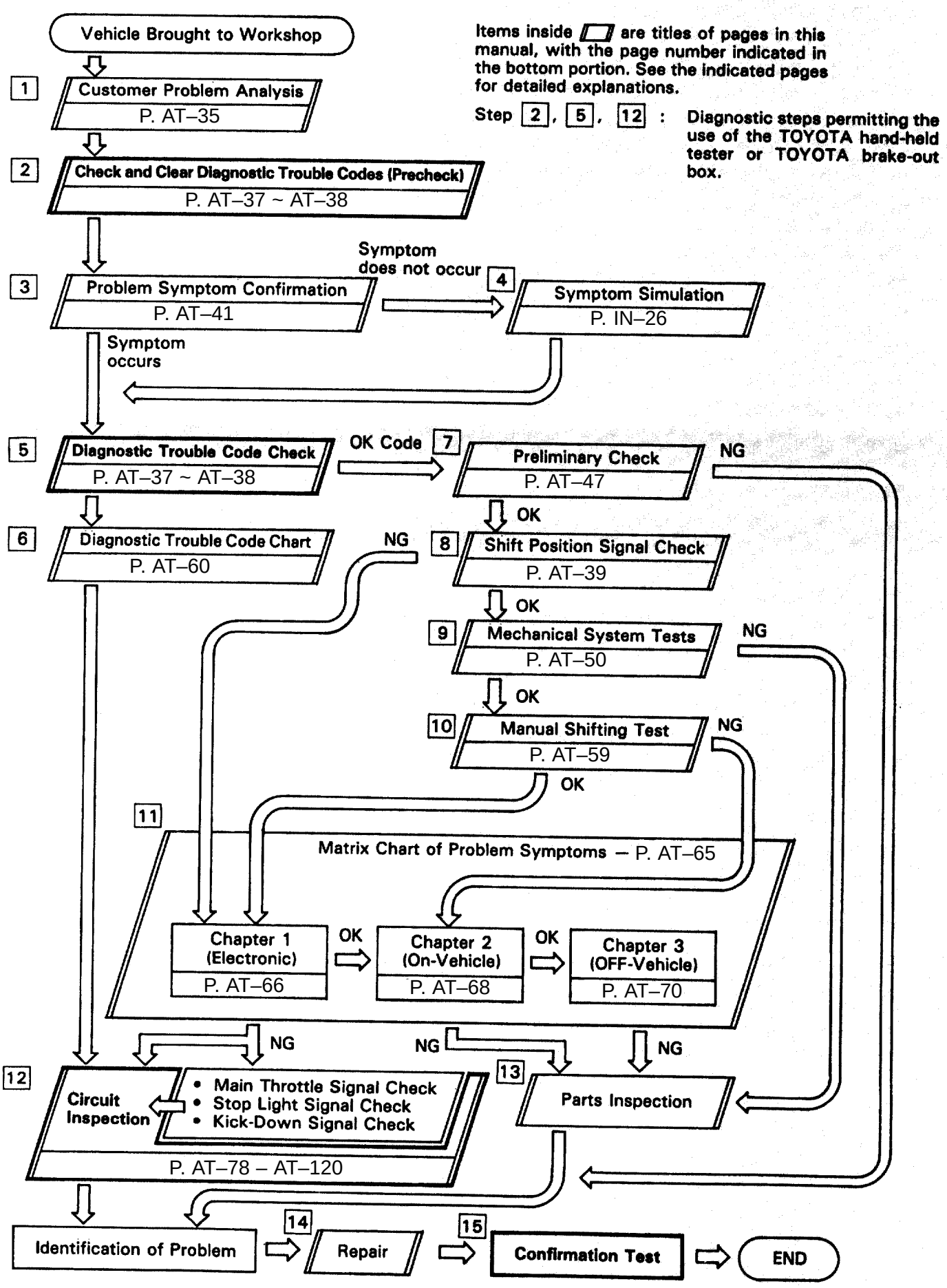

WhereEverybodyKnowsYourName

MIRROR
Outside Rear View Mirror
COMPONENTS

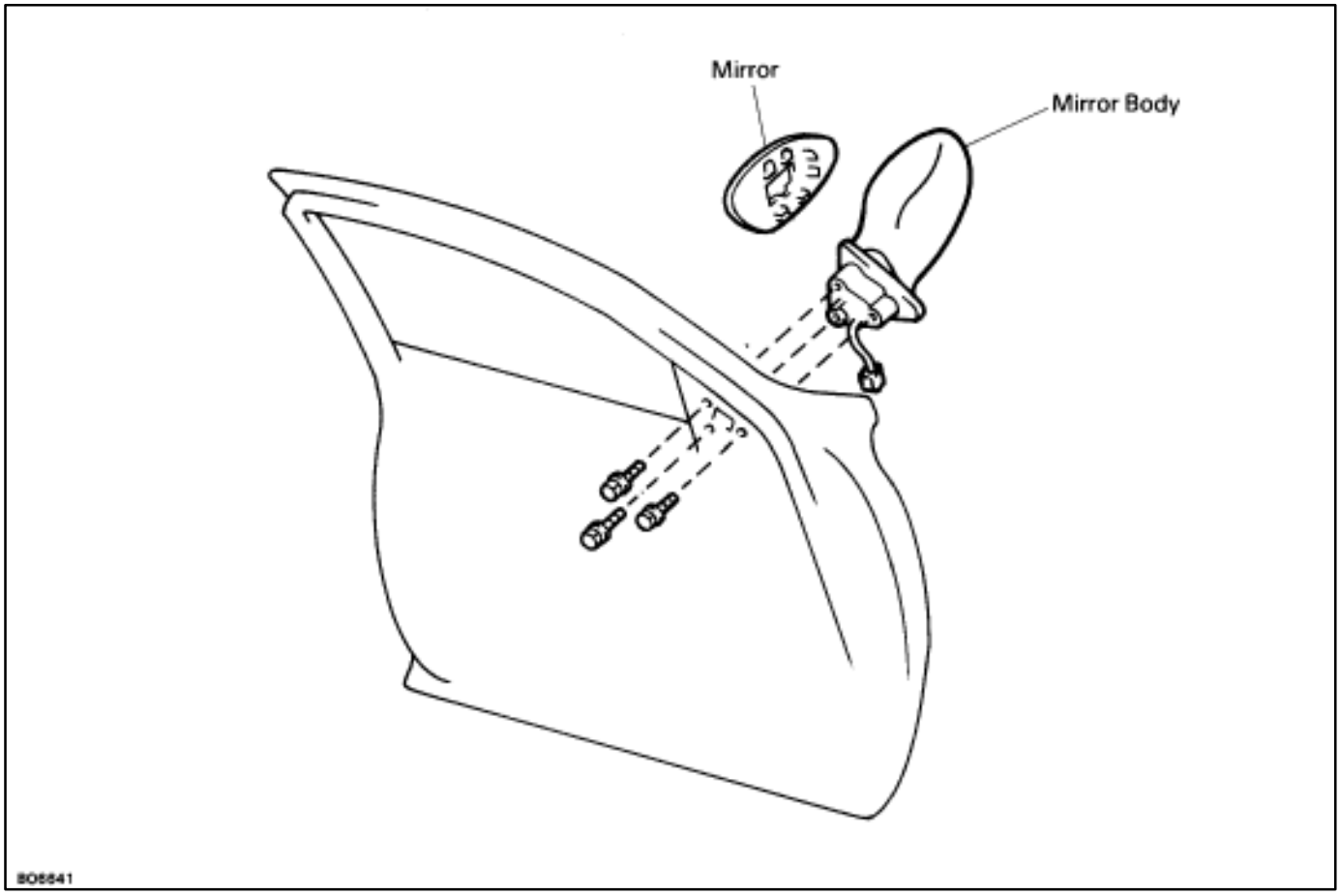

REMOVAL AND INSTALLATION OF OUTSIDE REAR VIEW MIRROR

HINT: Install the mirror by following the removal sequence in reverse.

1. **DISCONNECT BATTERY CABLE FROM NEGATIVE TERMINAL**
   CAUTION: Work must be started after approx. 20 seconds or longer from the time the ignition switch is turned to the "LOCK" position and the negative (–) terminal cable is disconnected from the battery.

2. **REMOVE DOOR TRIM UPPER PANEL**
   Removal: (See step 5 on page BO–34)
   Installation: (See step 16 on page BO–40)

3. **REMOVE MIRROR**
   (a) Connect the connector, install the mirror with two bolts.
   (b) Connect the connector, install the speaker with two bolts.

WhereEverybodyKnowsYourName

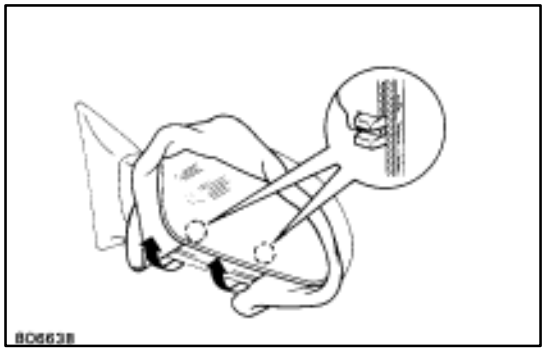

REPLACEMENT OF OUTSIDE REAR VIEW MIRROR

1. IF NECESSARY, DISCONNECT MIRROR

(a) Insert the shop rag between the mirror and the mirror body to wrap up the mirror in the shop rag.

(b) Pull up the lower side of the shop rag to disconnect the mirror joint.

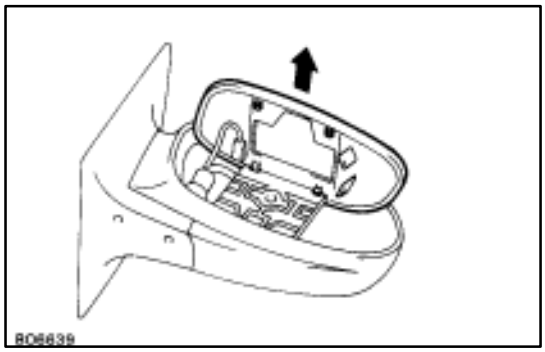

(c) Pull up the mirror and disconnect it.

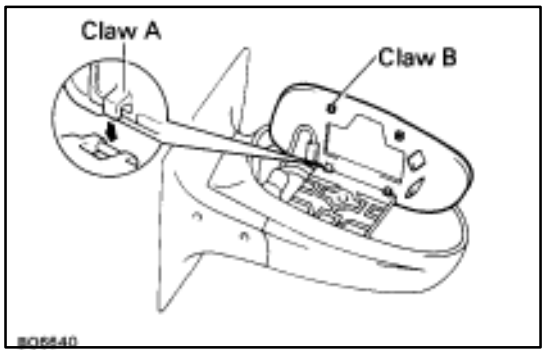

2. CONNECT MIRROR

(a) Connect the claws (A) and set the mirror to the mirror body.

(b) Push the mirror to connect the claws (B) and connect it.

WhereEverybodyKnowsYourName

Inner Rear View Mirror

COMPONENTS

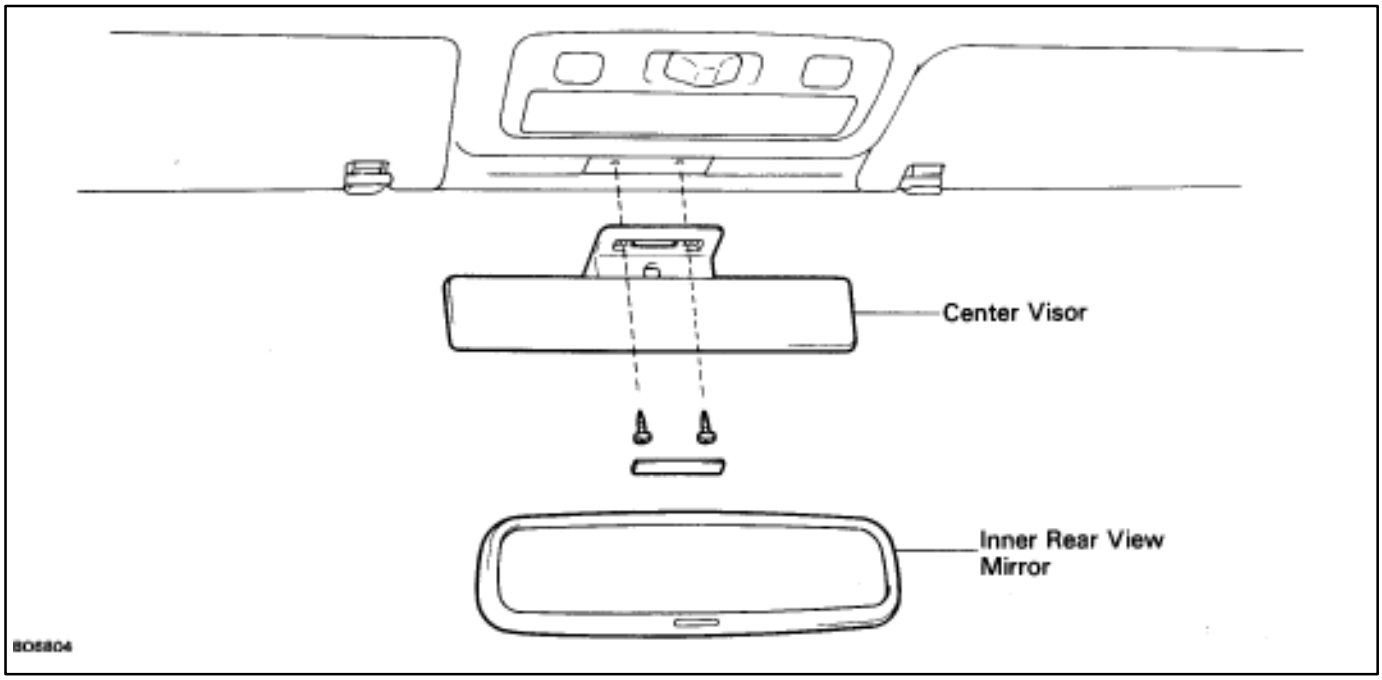

REMOVAL AND INSTALLATION OF INNER REAR VIEW MIRROR

HINT: Install the mirror following removal sequence in reverse.

1. **REMOVE CENTER VISOR**
   (See step 4 on page BO–123)

2. **REMOVE INNER REAR VIEW MIRROR**
   (a) Remove the mirror from the mirror base.
   (b) Disconnect the connector.

WhereEverybodyKnowsYourName

WINDSHIELD
COMPONENTS

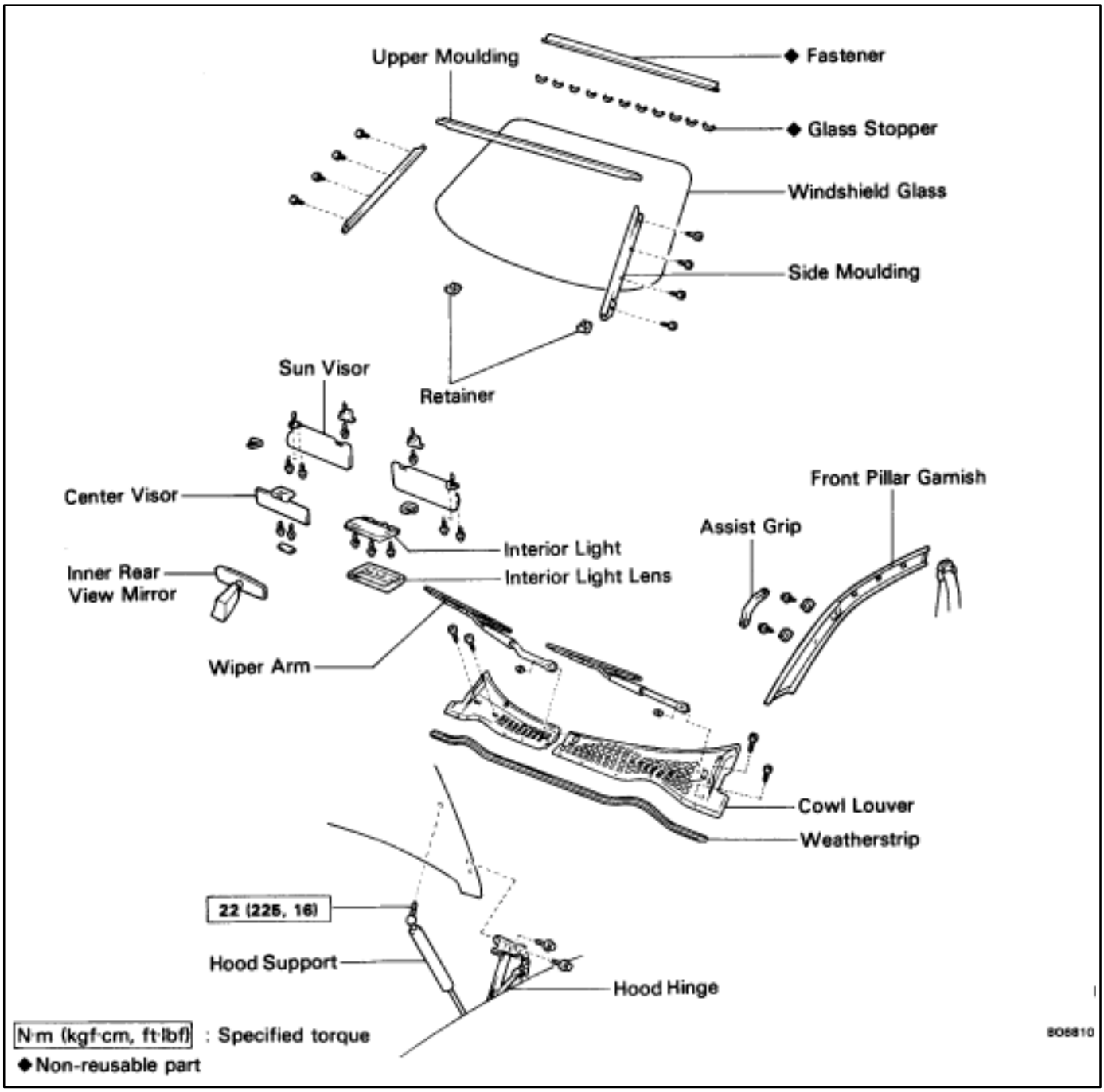

REMOVAL OF WINDSHIELD

1. **REMOVE FOLLOWING PARTS:**
   (a) Front pillar garnish (See step 2 on page BO–123)
   (b) Interior light (See step 2 on page BO–85)
   (c) Center visor and inner rear view mirror (See page BO–44)
   (d) Sun visor (See step 3 on page BO–123)
   (e) Hood (See step 2 on page BO–20)
   (f) Moulding (See page BO–96)

WhereEverybodyKnowsYourName

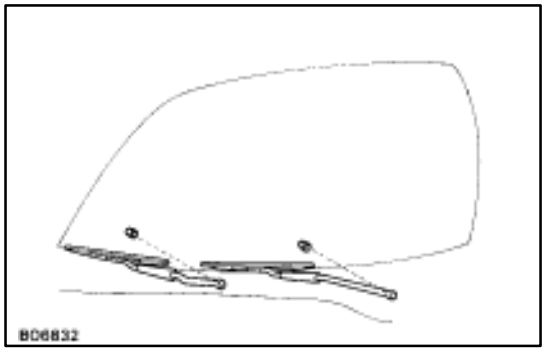

2. REMOVE WIPER ARMS

Remove two nuts and two wiper arms.

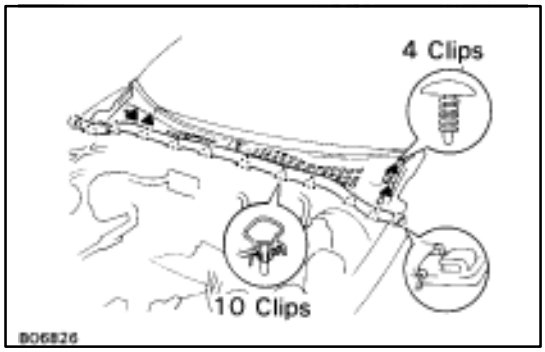

3. REMOVE COWL LOUVER

(a) Using a clip remover, remove four clips.

(b) Using a clip remover, remove ten clips and the weatherstrip.

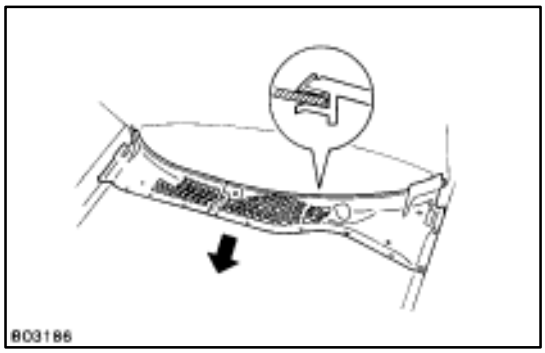

(c) Pull out the cowl louver forward as shown.

4. REMOVE WINDSHIELD MOULDING

(See page BO–96)

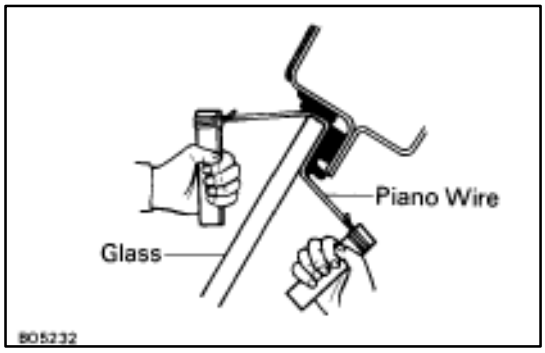

5. REMOVE WINDSHIELD GLASS

(a) Push piano wire through from the interior.

(b) Tie both wire ends to a wooden block or like object.

HINT: Apply adhesive tape to the outer surface to keep the surface from being scratched.

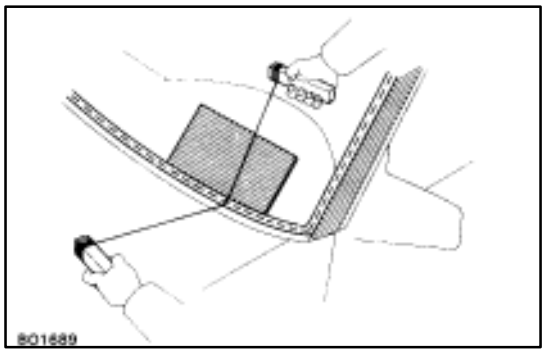

NOTICE: When separating the glass, take care not to damage the paint and interior and exterior ornaments. To prevent scratching the safety pad when removing the windshield, place a plastic sheet between the piano wire and safety pad.

(c) Cut the adhesive by pulling the piano wire around it.

(d) Remove the glass.

NOTICE: Leave as much of the adhesive on the body as possible when cutting off the glass.

WhereEverybodyKnowsYourName

INSTALLATION OF WINDSHIELD

(See page BO–45)

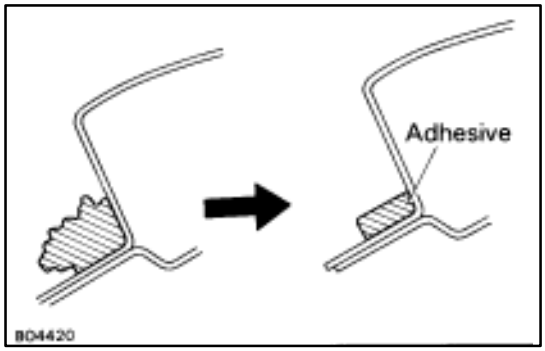

1. CLEAN AND SHAPE CONTACT SURFACE OF BODY

(a) Using a knife, cut away any rough areas on the body.

HINT: Leave as much of the adhesive on the body as possible.

(b) Clean the cutting surface of the adhesive with a piece of shop rag saturated in cleaner.

HINT: Even if all the adhesive has been removed, clean the body.

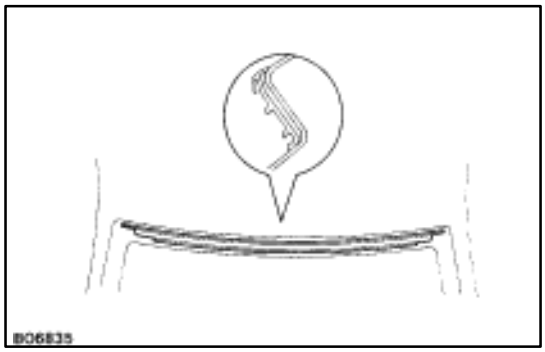

2. REPLACE FASTENER

(a) Remove the damaged fastener.

(b) Cut off the old adhesive around the fastener installation area.

HINT: Be careful not to damage the body.

(c) Clean the installation area.

(d) Install the new fastener onto the body.

HINT: Before installing, peel off the backing paper at the fastener. Install the fastener with the atmospheric temperature between 20 – 40°C (68 – 104°F).

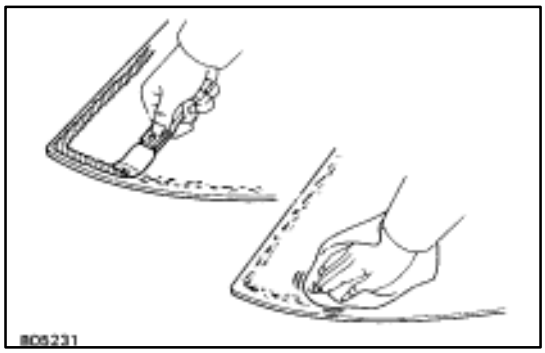

3. CLEAN REMOVED GLASS BEFORE INSTALLATION

(a) Using a scraper remove the adhesive sticking to the glass.

(b) Clean the glass with cleaner.

NOTICE: Do not touch the glass after cleaning it.

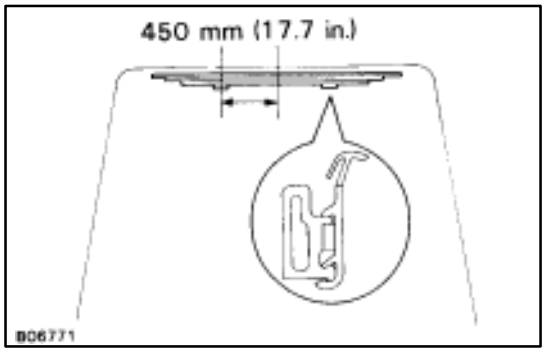

4. IF NECESSARY, REPLACE NO. 1 STOPPERS

(a) Remove old stoppers.

(b) Install new stoppers to the body marks as shown.

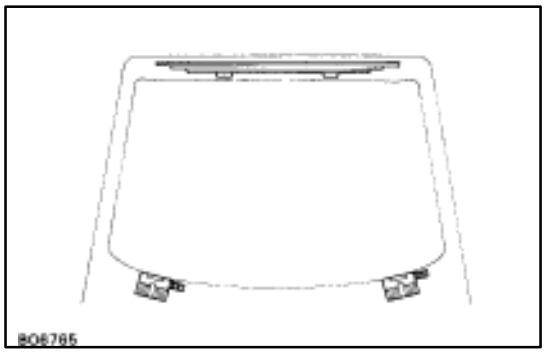

5. IF NECESSARY, REPLACE AND ADJUST RETAINERS

HINT: If replacing the retainer, adjust the retainer by the following method.

(a) Remove old retainers.

(b) Install new retainers.

(c) Place the windshield glass to the body.

WhereEverybodyKnowsYourName

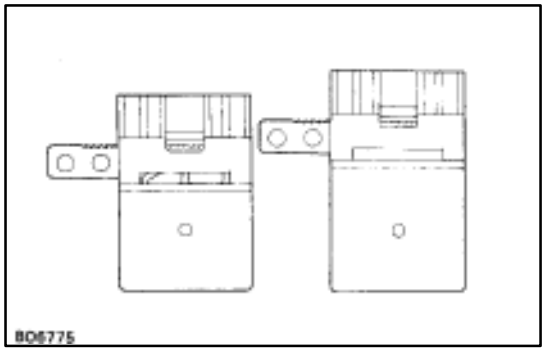

If the clearance is not as wide, slide the retainer part to adjust the length of retainer.

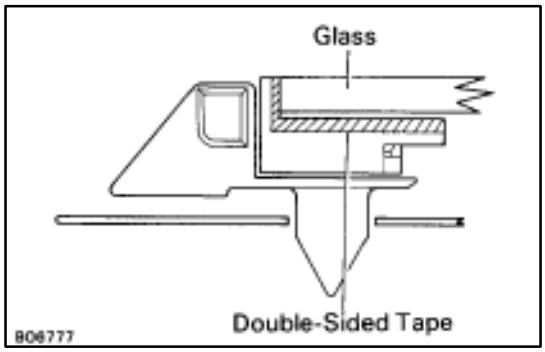

(d) Install the retainers.

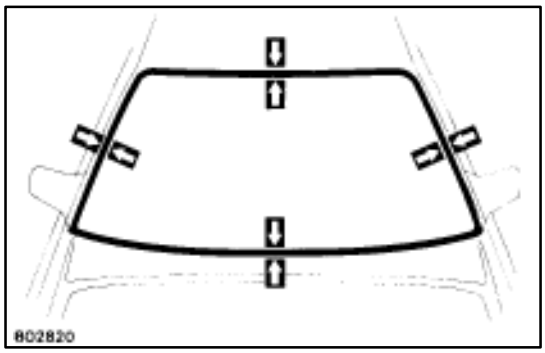

6. POSITION GLASS

(a) Place glass in correct position.
(b) Check that all contacting parts of the glass rim are perfectly even and do not make contact with the fasteners.
(c) Place reference marks between the glass and body.
(d) Remove the glass.

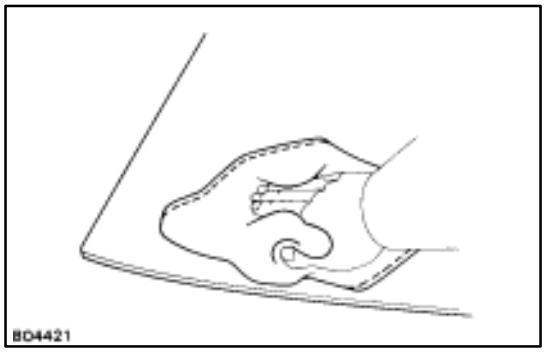

7. CLEAN CONTACT SURFACE OF GLASS

Using a cleaner, clean the contact surface black–colored area around the entire glass rim.

NOTICE: Do not touch the glass face after cleaning it.

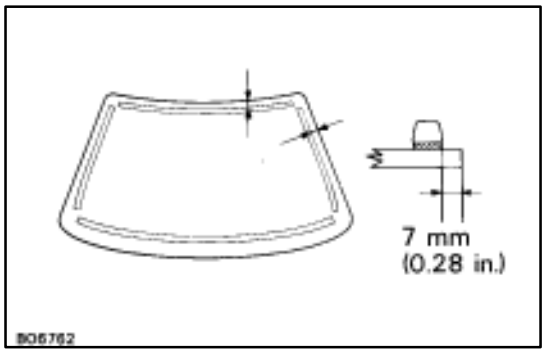

8. INSTALL DAM

(a) Apply double–stick tape at a point as shown.
(b) Place the dam on the double–stick tape.

NOTICE: Do not touch the glass face after cleaning it.

WhereEverybodyKnowsYourName

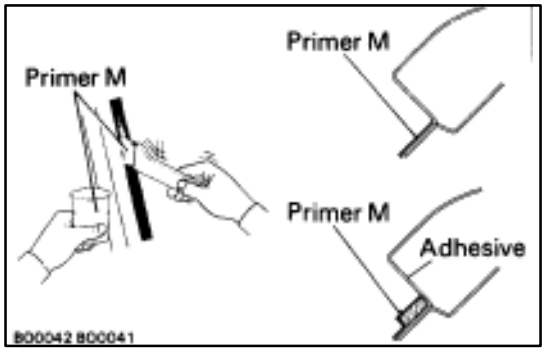

9. COAT CONTACT SURFACE OF BODY WITH PRIMER ”M”

Using a brush, coat the contact surface on the body with Primer M.

NOTICE:

- **Let the Primer coating dry for 10 minutes or more. Make sure that the installation of the glass is finished within 2 hours.**
- **Take care not to leave any part of the contact surface uncoated or excessively coated, as Primer M and G serve to boost he adhesive power of the adhesive to the glass or body.**
- **Do not keep any of the opened Primer M and G for later use.**

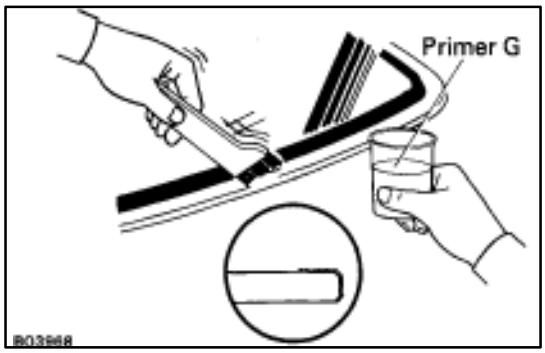

10. COAT CONTACT SURFACE OF GLASS WITH PRIMER ”G”

(a) Using a brush or sponge, coat the edge of the glass and the contact surface with Primer G.

(b) Before the Primer dries, wipe it off with a clean shop rag.

NOTICE: Be sure that installation of the glass is finished within 70 minutes.

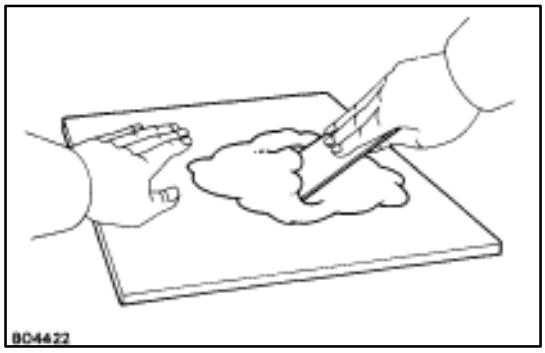

11. MIX ADHESIVE COATING

NOTICE:

- **Be sure that installation of the moulding is finished within usable time. (See step 3 on page BO–11)**
- **The mixture should be made in 5 minutes or less.**

(a) Thoroughly clean the glass plate and putty spatula with solvent.

(b) Thoroughly mix 500 g (17.64 oz.) of the main agent and 75 g (2.65 oz.) of the hardening agent on a glass plate or like object with a putty spatula.

12. APPLY ADHESIVE

(a) Cut off the tip of the cartridge nozzle. Fill the cartridge with adhesive.

(b) Load the cartridge into the sealer gun.

(c) Coat the glass with adhesive on all contact surfaces as shown.

Adhesive height: **If adhesive remains on body**
3.5 – 5.0 mm (0.138 – 0.197 in.)
If no adhesive remains on body
8 – 10 mm (0.31 – 0.39 in.)

WhereEverybodyKnowsYourName

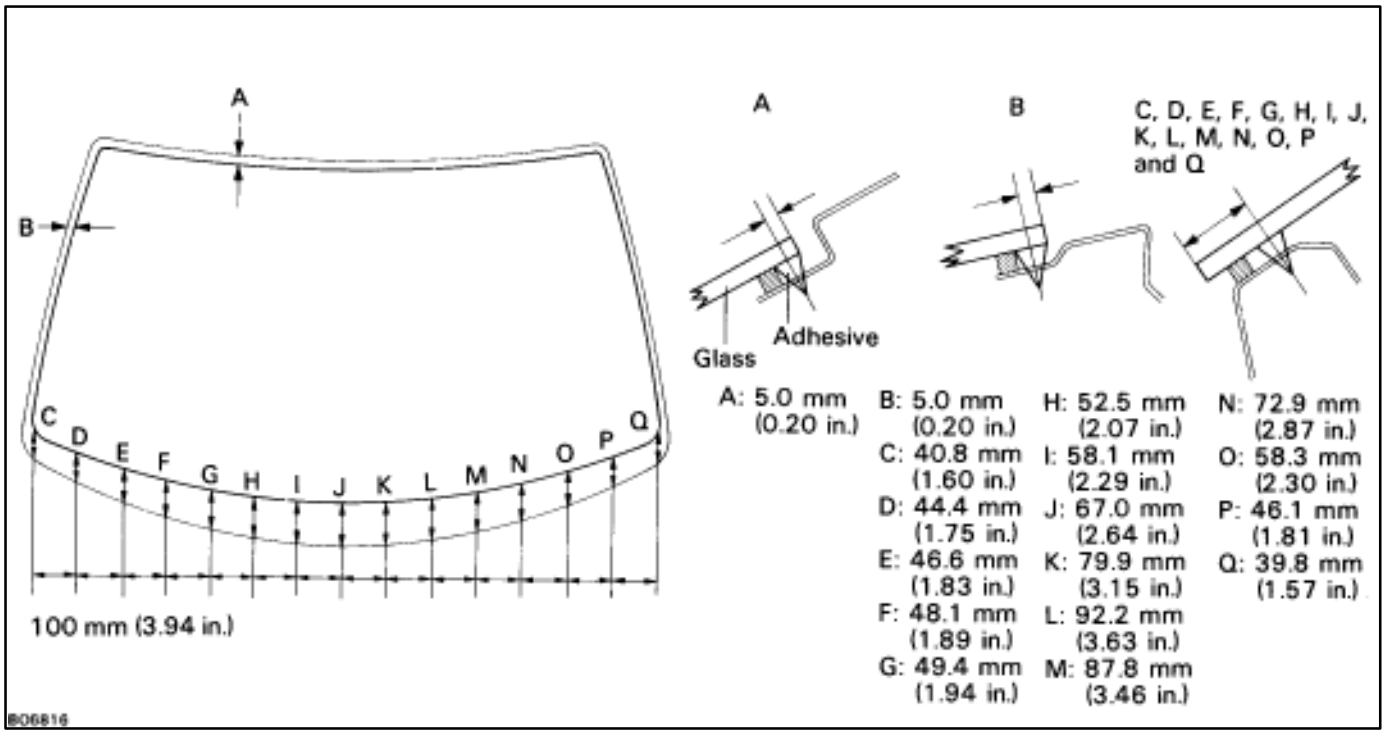

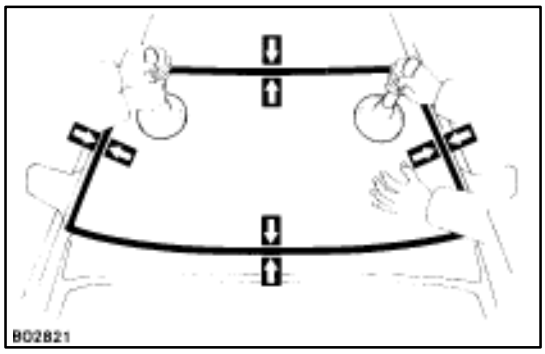

13. INSTALL GLASS

(a) Position the glass so that the reference marks are lined up, and press in gently along the rim.

(b) Using a spatula, apply adhesive on the glass rim.

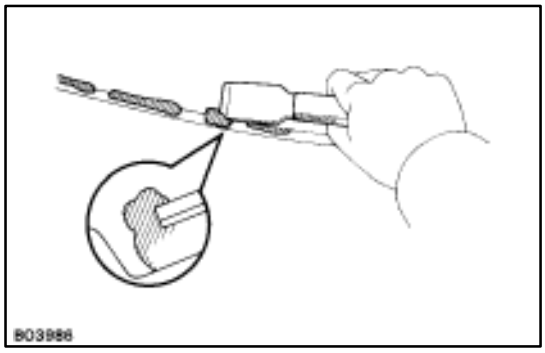

(c) Use a scraper to remove any excess or protruding adhesive.

(d) Fasten glass securely until the adhesive sets.

14. INSPECT FOR LEAKS AND REPAIR

(a) Perform a leak test after the hardening time has elapsed.

(b) Seal any leak with auto glass sealer.

Part No. 08833–00030 or equivalent

15. INSTALL WINDSHIELD MOULDINGS

(See steps 1 to 4 on pages BO–98 to 99)

16. INSTALL COWL LOUVER

(a) Put the louver in the glass.

(b) Install four clips.

(c) Install weatherstrip.

17. INSTALL WIPER ARMS

WhereEverybodyKnowsYourName

18. INSTALL FOLLOWING PARTS:

(a) Hood

HINT: Torque the hood support

Torque: 22 N·m (225 kgf·cm, 16 ft·lbf)

(b) Front roof headlining

(c) Holders

(d) Center visor and inner rear view mirror

(e) Interior light

(f) Front pillar garnish

WhereEverybodyKnowsYourName

QUARTER WINDOW GLASS

COMPONENTS

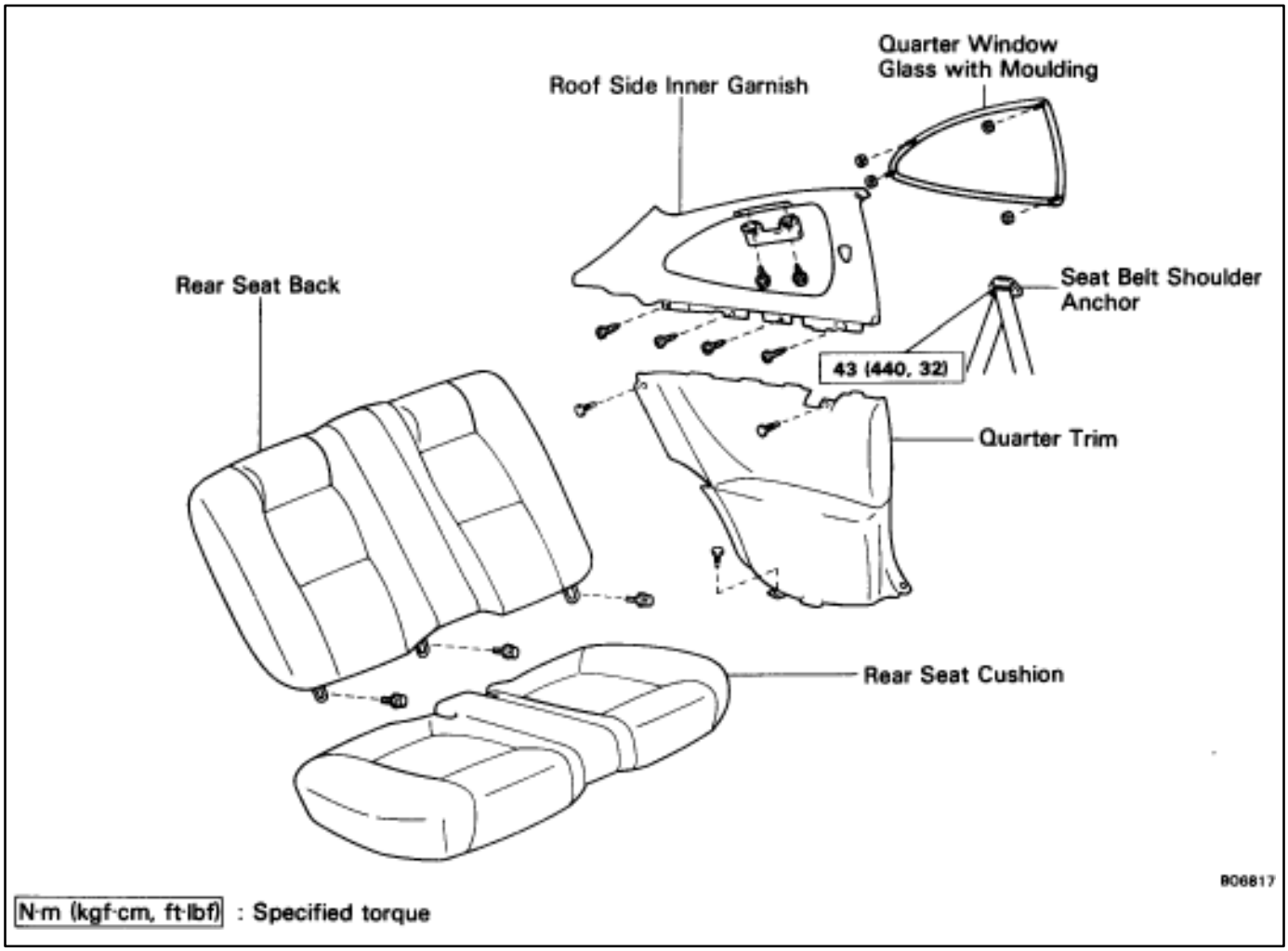

REMOVAL OF QUARTER WINDOW GLASS

1. REMOVE FOLLOWING PARTS:

(a) Rear seat cushion and back
(b) Seat belt shoulder anchor
(c) Quarter trim and roof side inner garnish

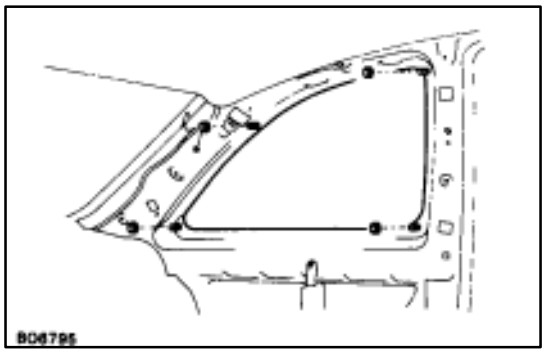

2. REMOVE QUARTER WINDOW GLASS

(a) Remove four nuts.
(b) Remove roof side rail weatherstrip.

WhereEverybodyKnowsYourName

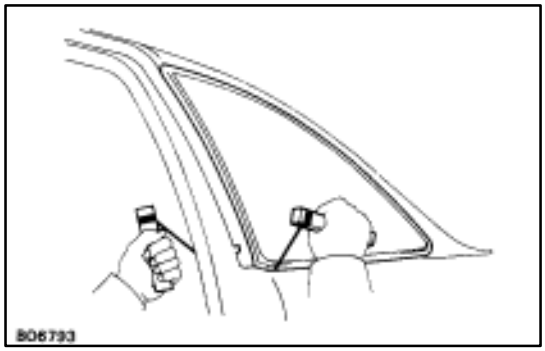

(c) Push the piano wire through from the interior.
(d) Cut loose the adhesive and remove the glass.
HINT: Do not damage the body.

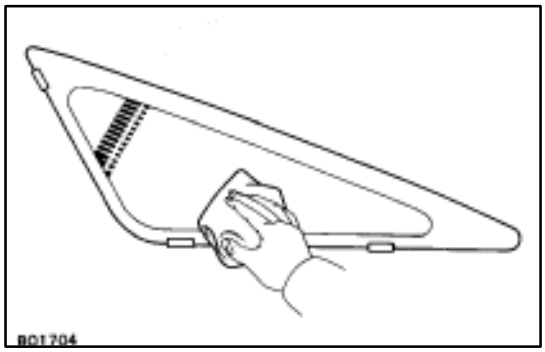

INSTALLATION OF QUARTER WINDOW GLASS

(See page BO–52)

1. CLEAN BODY OR GLASS

Wipe off any adhesive left on the body or glass with cleaner.

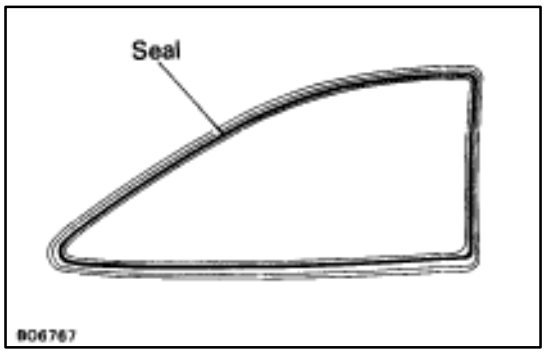

2. INSTALL QUARTER WINDOW GLASS

(a) Apply the primer around the entire ceramic application area.
(b) Install the seal to the glass.

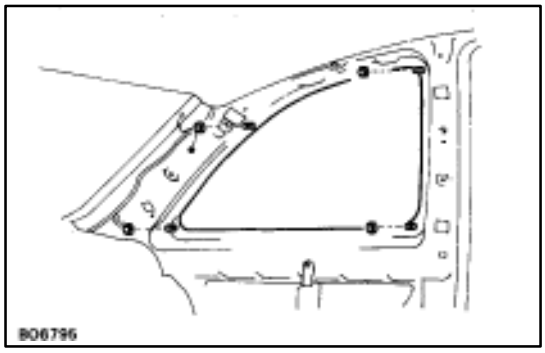

(c) Install the window glass to the body with four bolts.

3. INSTALL FOLLOWING PARTS:

(a) Quarter trim and roof side inner garnish
(b) Seat belt shoulder anchor
Torque: 43 N·m (440 kgf·cm, 32 ft·lbf)
(c) Rear seat cushion and back
(See page BO–67)

WhereEverybodyKnowsYourName

BACK WINDOW GLASS

COMPONENTS

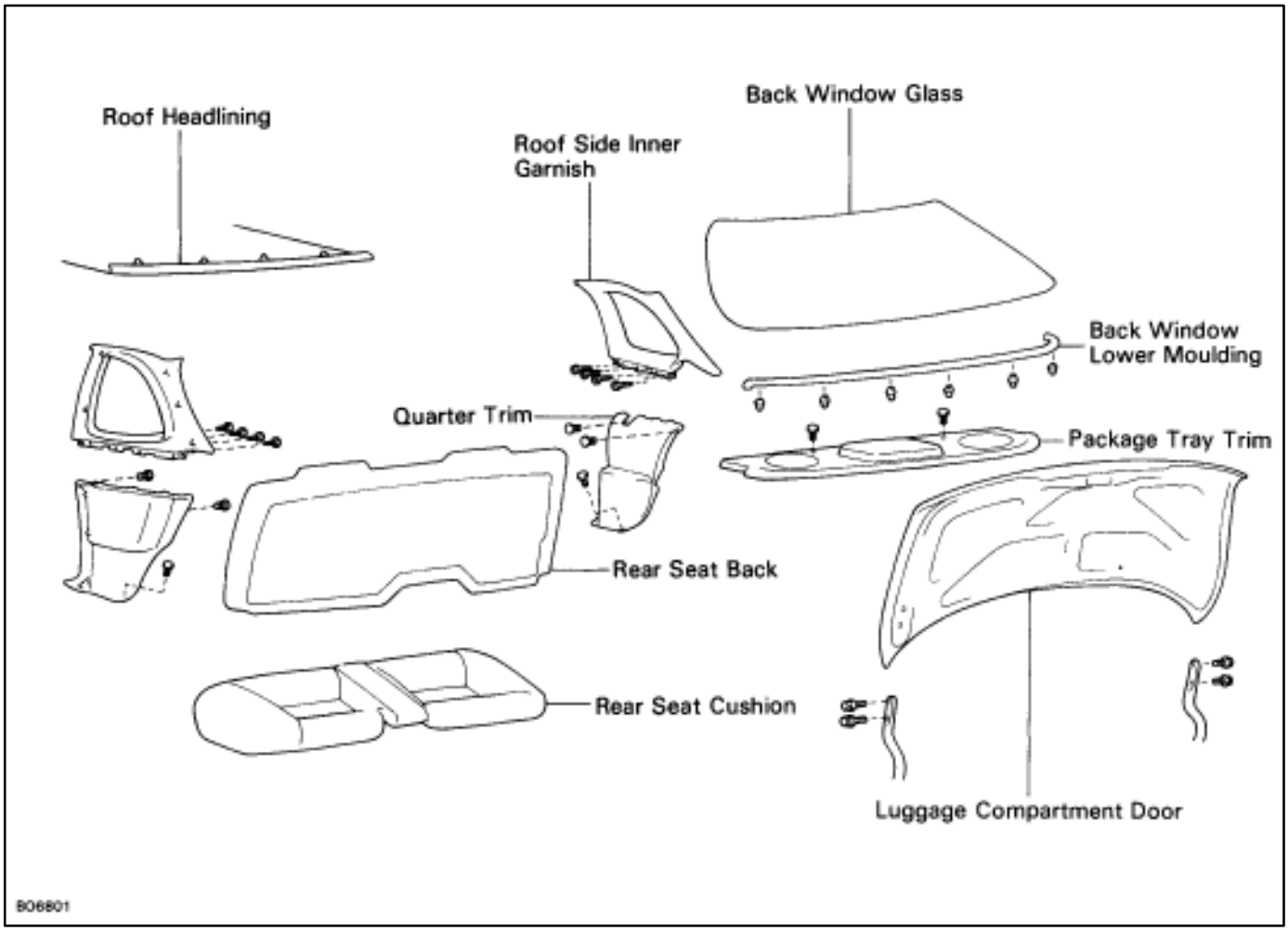

REMOVAL OF BACK WINDOW GLASS

1. REMOVE FOLLOWING PARTS:

(a) Rear seat back and cushion
(b) Roof side inner garnish
(c) Package tray trim
(d) Back window lower moulding
(e) Luggage compartment door

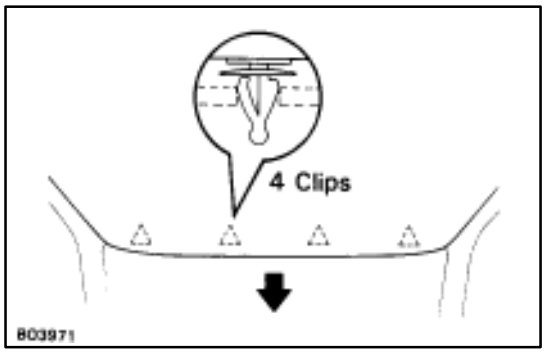

2. DISCONNECT REAR SIDE OF ROOF HEADLINING

Pull out the rear end of roof headlining with your hand and disconnect it.

WhereEverybodyKnowsYourName

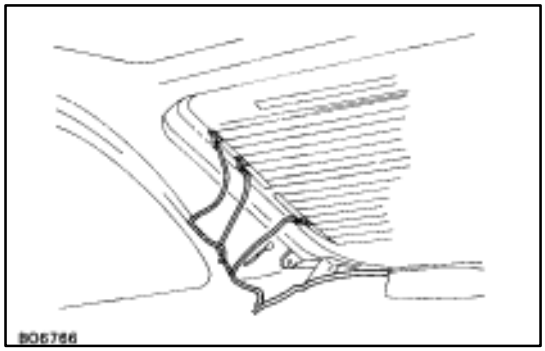

3. DISCONNECT CONNECTORS ON BACK WINDOW GLASS

Disconnect three connectors on the glass.

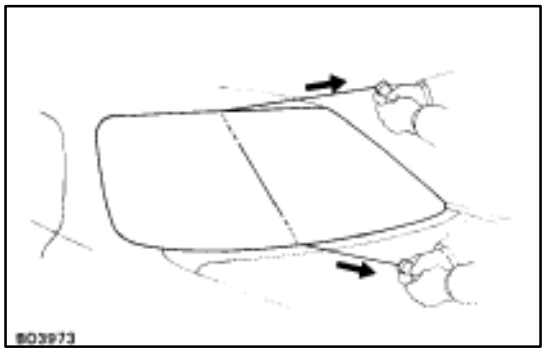

4. REMOVE BACK WINDOW GLASS

(a) Push the piano wire through from the interior.

(b) Tie both wire ends to a wooden block.

HINT: Apply adhesive tape to the outer surface to keep the surface from being scratched.

(c) Cut the adhesive by pulling the piano wire around it.

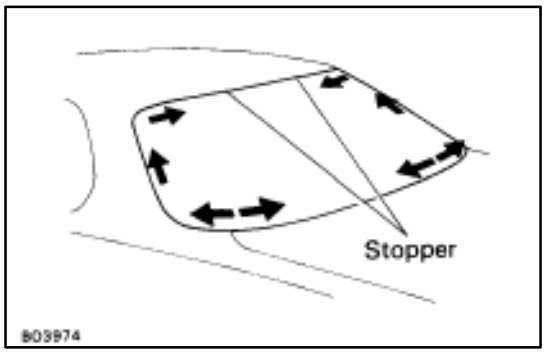

HINT: Do not damage the two stopper with the wire.

(d) Remove the glass.

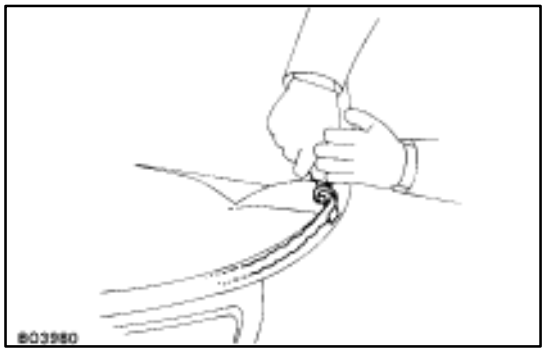

INSTALLATION OF BACK WINDOW GLASS ASSEMBLY

(See page BO–54)

1. CLEAN AND SHAPE CONTACT SURFACE OF BODY

(a) Using a knife, cut away any rough areas.

HINT: Leave a little urethane layer on the body.

(b) Clean the cutting surface of the urethane gum with a piece of shop rag saturated in cleaner.

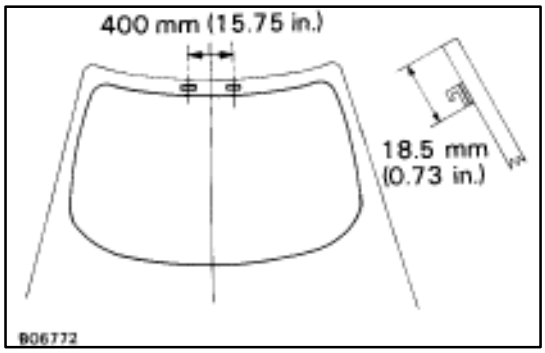

HINT: Even if all the urethane has been removed, clean the body.

2. IF NECESSARY, REPLACE DAMAGED STOPPER AND MOULDING

(a) Install the new stoppers as shown.

(b) Install the new moulding.

(See page BO–101)

WhereEverybodyKnowsYourName

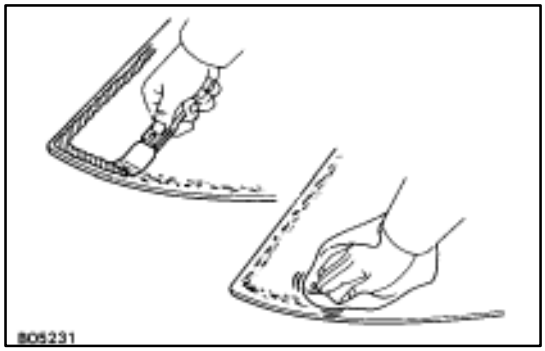

3. CLEAN REMOVED GLASS

(a) Using a scraper, cut away any adhesive remaining on the glass.

HINT: Do not damage the spacers.

(b) Clean the glass with a cleaner.

NOTICE: Do not touch the glass after cleaning it.

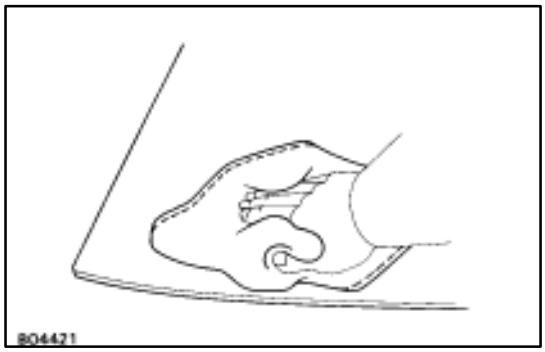

4. CLEAN CONTACT SURFACE OF GLASS

Using cleaner, clean the contact surface and the glass rim.

5. INSTALL BACK WINDOW MOULDING

(See page BO–99)

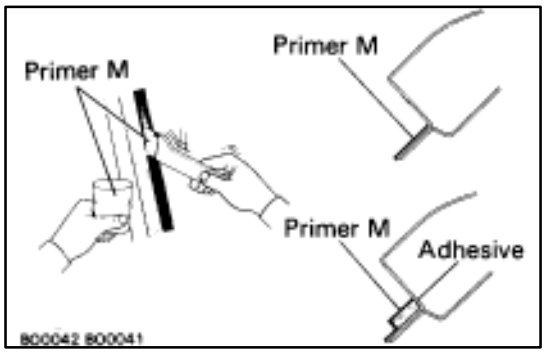

6. COAT CONTACT SURFACE OF BODY WITH PRIMER ”M”

(See step 9 on page BO–49)

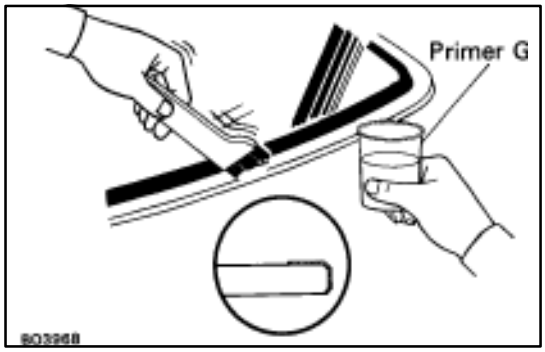

7. COAT CONTACT SURFACE OF GLASS WITH PRIMER ”G”

(See step 10 on page BO–49)

8. MIX ADHESIVE COATING

(See step 11 on page BO–49)

9. APPLY ADHESIVE

(a) Cut off the tip of the cartridge nozzle to make a hole 5 mm (0.20 in.) in diameter. Fill the cartridge with adhesive.

(b) Load the cartridge into the sealer gun.

(c) Coat the glass with adhesive on all contact surfaces as shown.

Adhesive height: **If adhesive remains on body**
3.5 – 5.0 mm (0.138 – 0.197 in.)
If no adhesive remains on body
8 – 10 mm (0.31 – 0.39 in.)

WhereEverybodyKnowsYourName

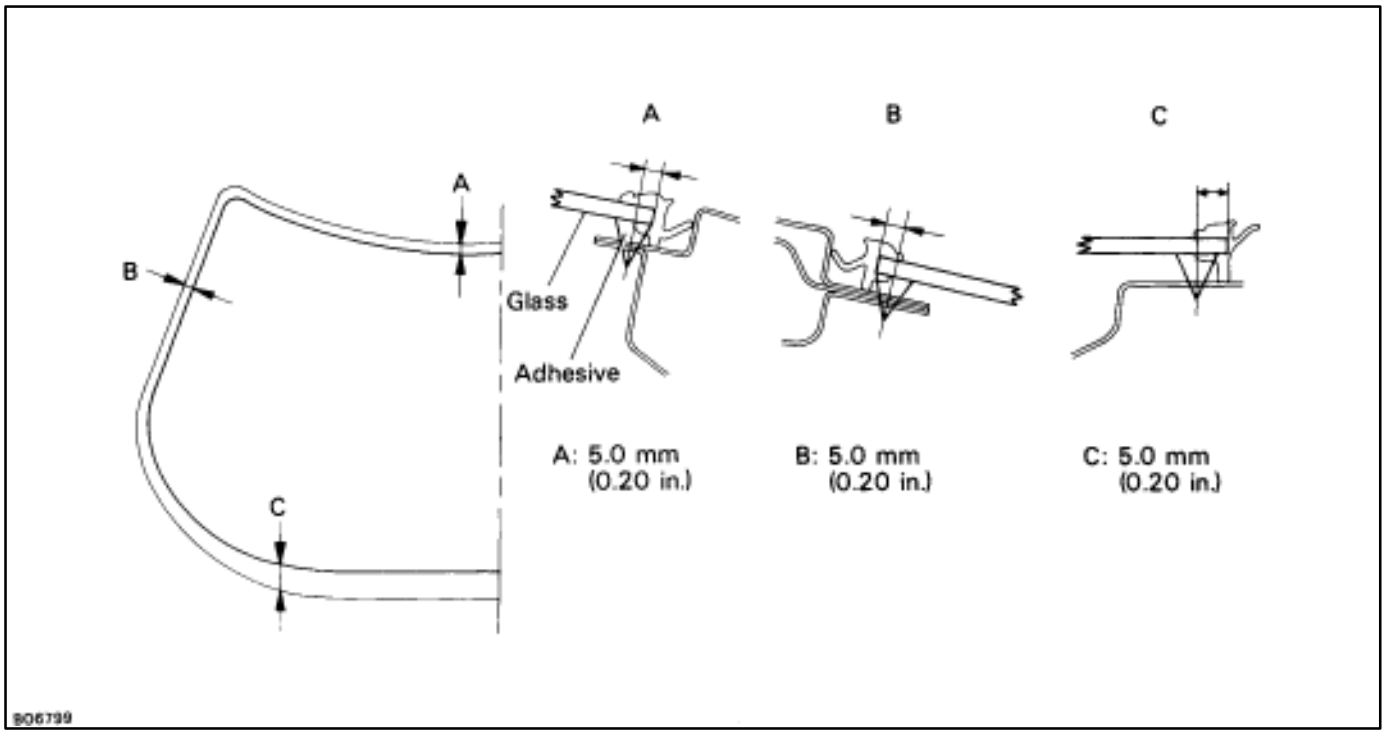

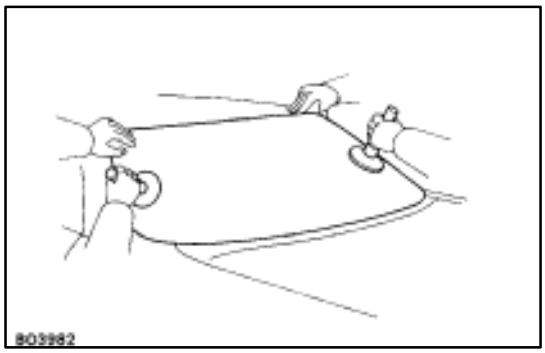

10. INSTALL GLASS

(a) Position the glass so that the reference marks are lined up, and press in gently along the rim.

(b) Use a spatula to remove any excess protruding adhesive.

(c) Fasten glass securely until the adhesive sets for about 24 hours.

11. INSPECT FOR LEAKS AND REPAIR

(a) Perform a leak test after the hardening time has elapsed.

(b) Seal any leak with auto glass sealer.
Part No. 08833–00030 or equivalent

12. INSTALL FOLLOWING PARTS:

(a) Back window lower moulding
(b) Luggage compartment door
(c) Package tray trim
(d) Roof side inner garnish
(e) Rear seat back and cushion

WhereEverybodyKnowsYourName

SEAT
Front Seat
REMOVAL OF FRONT SEAT

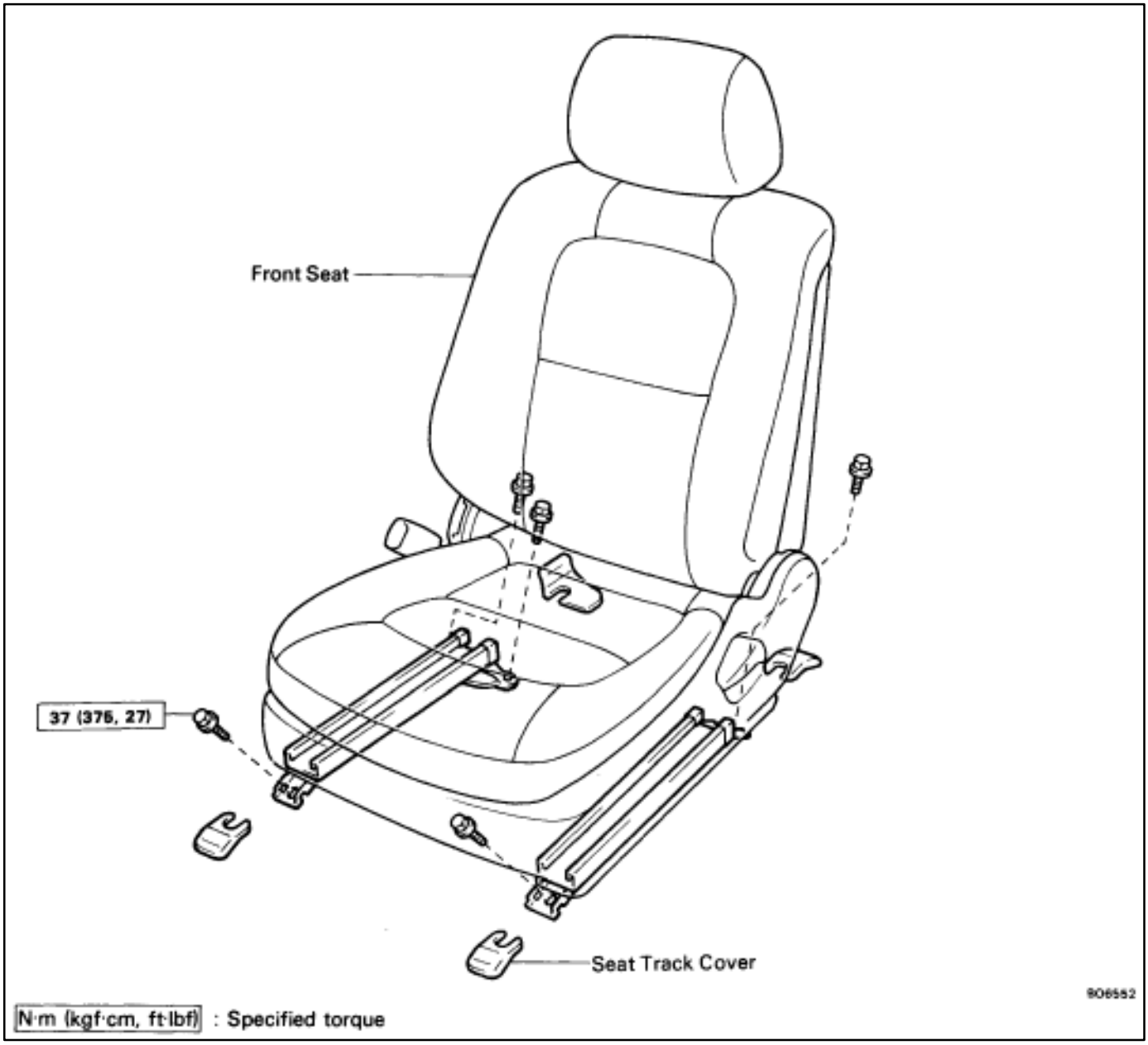

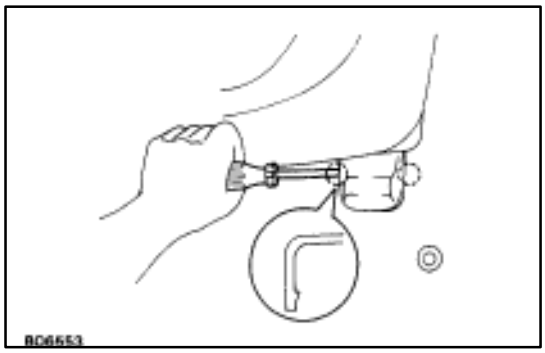

1. **REMOVE HEADREST**
   While pushing the lock button, pull up the headrest to remove it.
2. **REMOVE SEAT TRACK COVERS**
   Using a screwdriver, pry out three covers.
   HINT: Tape the screwdriver tip before use.
3. **REMOVE SEAT TRACK COVER (Rear inner side)**
   (a) Lift up the rear part of the cover.
   (b) Pull the cover straight back–wards.

WhereEverybodyKnowsYourName

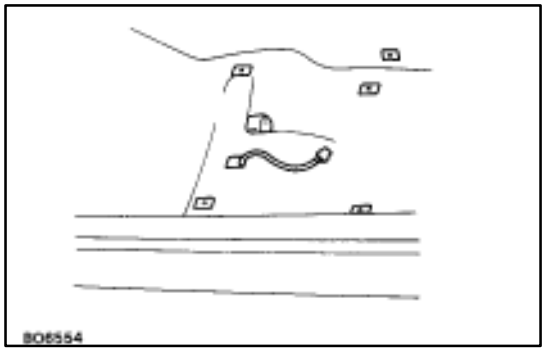

4. REMOVE FRONT SEAT

(a) Remove five bolts.

(b) Disconnect the connector.

INSTALLATION OF FRONT SEAT

(See page BO–58)

1. INSTALL HEADREST TO SEAT

2. INSTALL FRONT SEAT

(a) Connect the connector.

(b) Install five bolts.

Torque: 37 N·m (375 kgf·cm, 27 ft·lbf)

3. CHECK SEAT ADJUSTER PROPER OPERATION

4. INSTALL SEAT TRACK COVERS

WhereEverybodyKnowsYourName

DISASSEMBLY OF FRONT SEAT

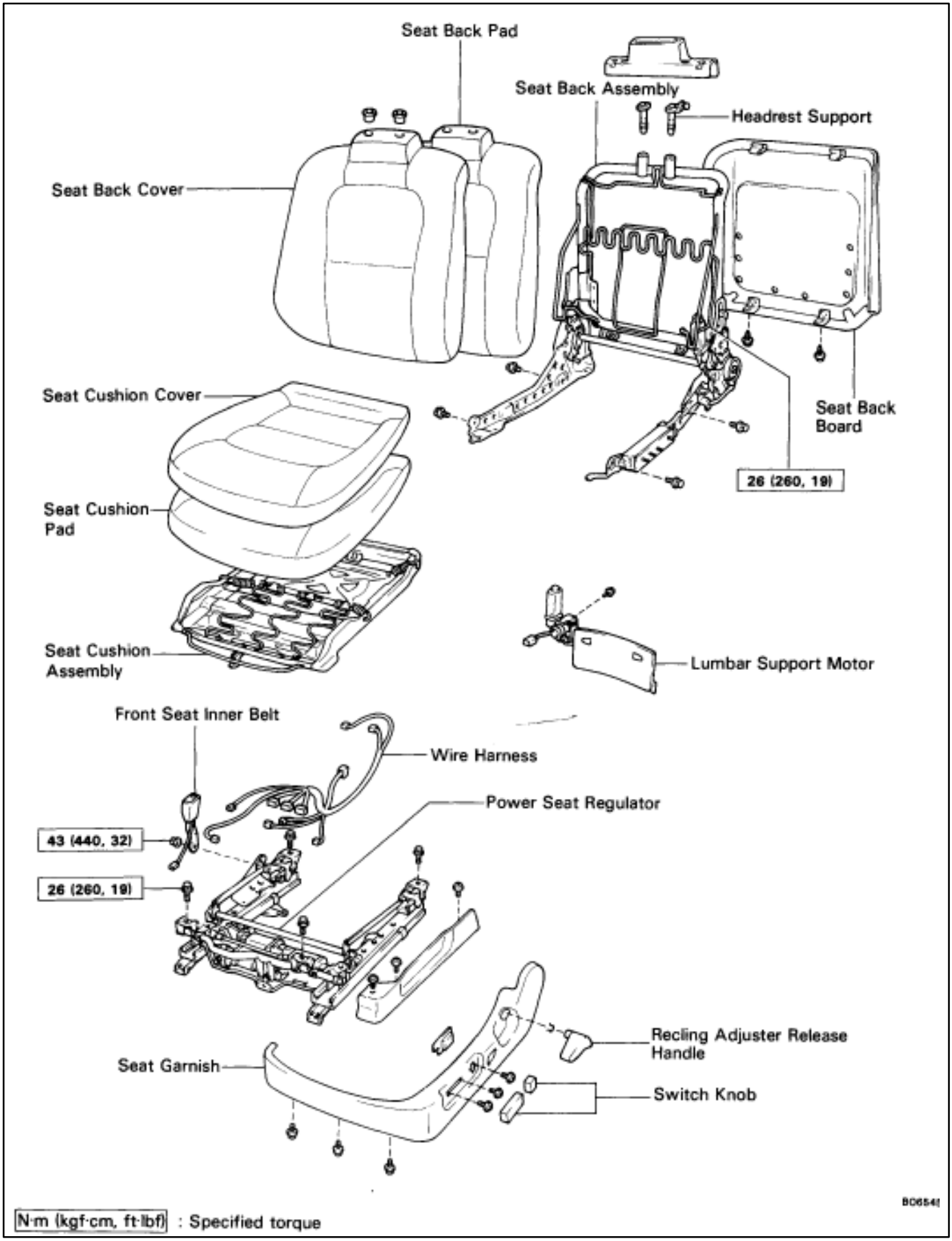

WhereEverybodyKnowsYourName

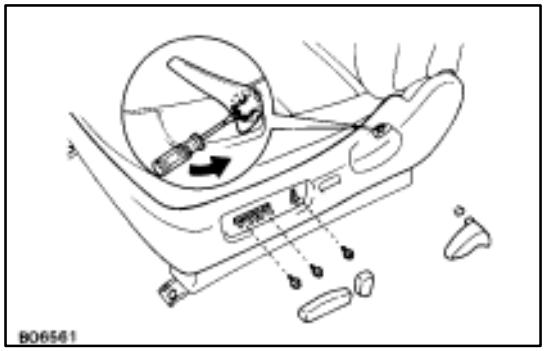

1. REMOVE SEAT GARNISH

(a) Using a screwdriver, pull out the snap ring and remove the handle.

(b) Using a screwdriver, remove two switch knobs.

HINT: Tape the screwdriver tip before use.

(c) Remove three screws.

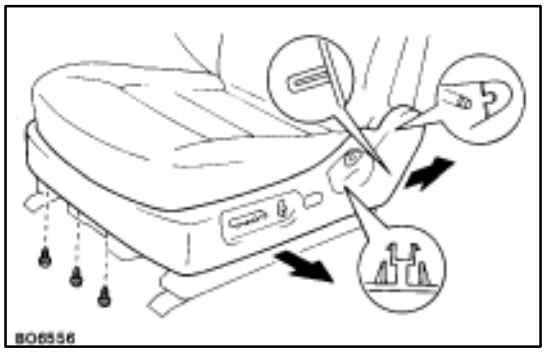

(d) Remove three screws from the seat lower side.

(e) Remove the garnish as shown.

(f) Disconnect the connector.

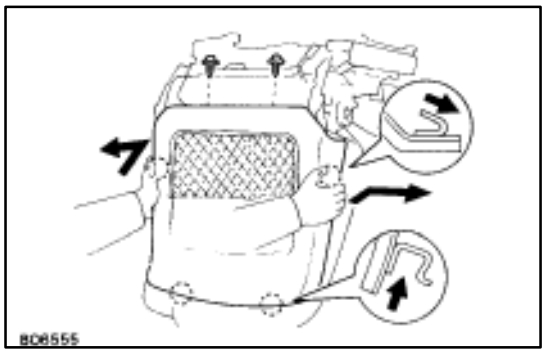

2. REMOVE SEAT BACK BOARD

(a) Remove two screws.

(b) Push the board as shown with your hands.

(c) Slide the board upward to remove it.

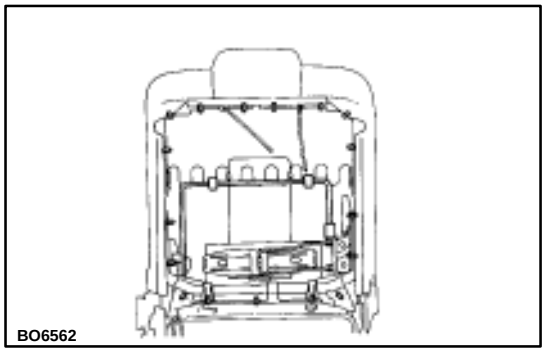

3. REMOVE SEAT BACK ASSEMBLY

(a) Using the screwdriver, remove the hog rings and disconnect the hooks from the seat bank.

(b) Disconnect wire harness clamp.

(c) Disconnect the connector.

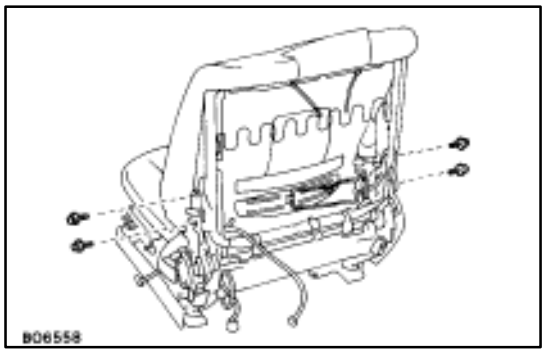

(d) Remove four bolts and the seat back assembly.

HINT: Do not damage the wire harness or connectors.

WhereEverybodyKnowsYourName

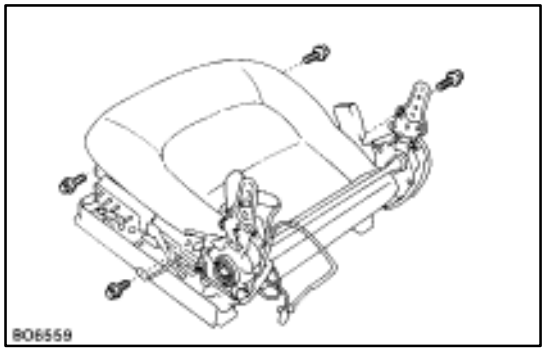

4. REMOVE SEAT CUSHION ASSEMBLY

(a) Remove four bolts.
(b) Disconnect the connectors.
(c) Remove the seat cushion assembly.

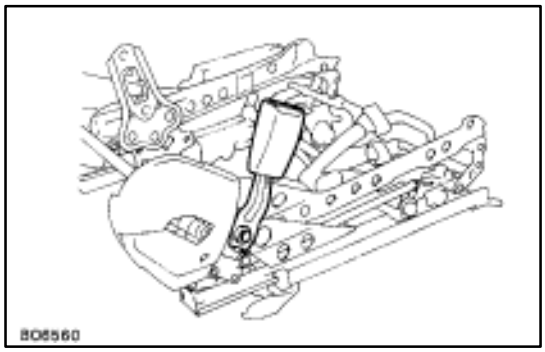

5. REMOVE FRONT SEAT INNER BELT

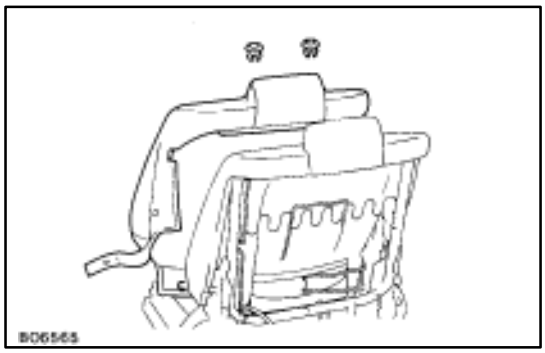

6. REMOVE SEAT BACK COVER

(a) Remove headrest grommet.
(b) Peel the seat back cover away from around the seat back cushion.

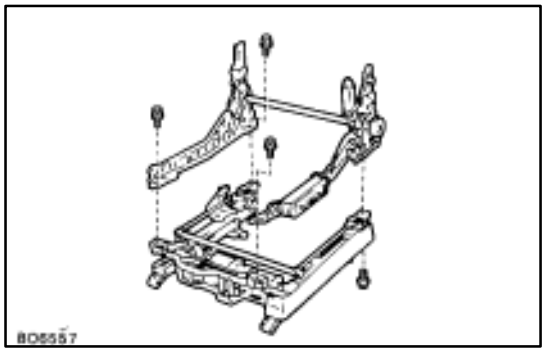

7. REMOVE SEAT TRUCK

Remove four bolts and the seat truck.

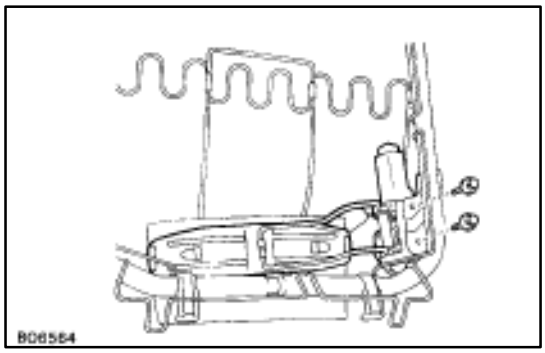

8. REMOVE LUMBER SUPPORT MOTOR

Remove two bolts and the motor.

WhereEverybodyKnowsYourName

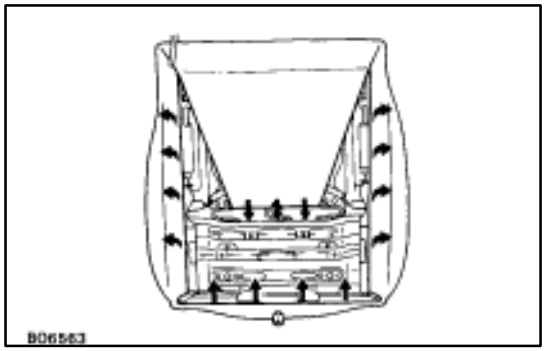

9. REMOVE SEAT CUSHION COVER

Peel the seat cushion cover away from around the edge of the seat cushion.

DISASSEMBLY OF POWER SEAT REGULATOR

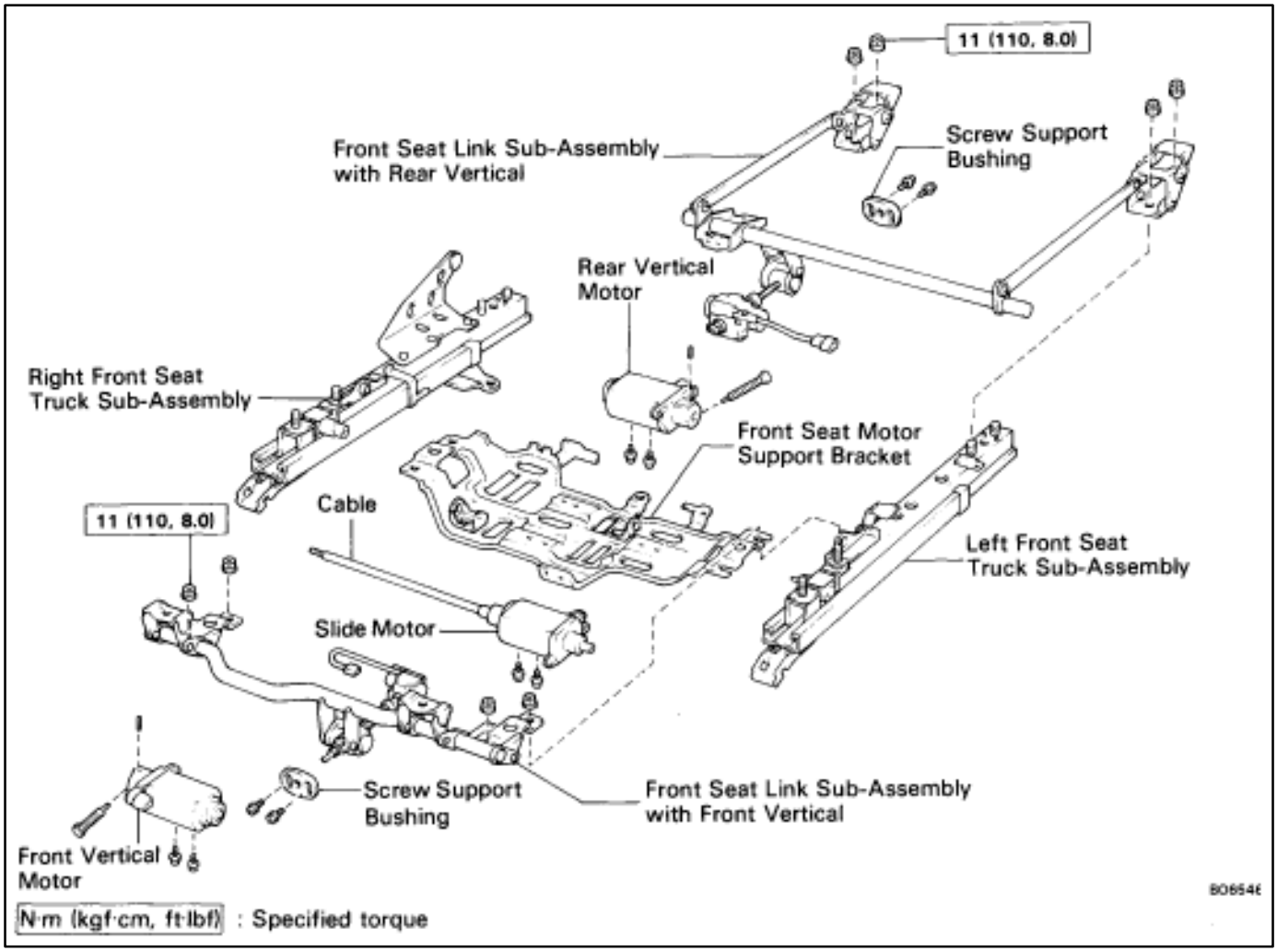

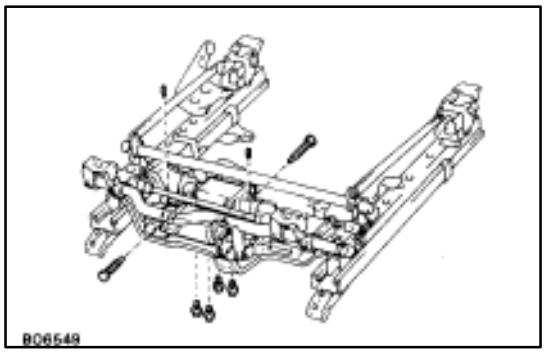

1. REMOVE FRONT AND REAR VERTICAL MOTOR

Remove eight screws and vertical motors.

WhereEverybodyKnowsYourName

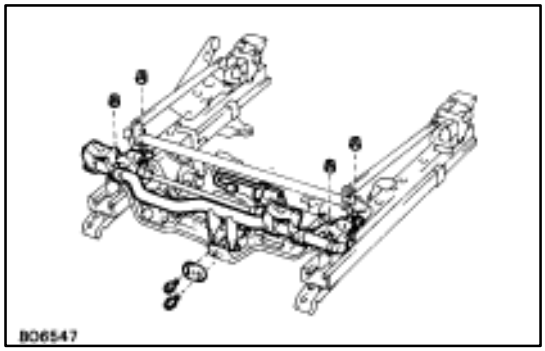

2. REMOVE FRONT SEAT LINK WITH FRONT VERTICAL

(a) Remove two screws and the screw support bushing.
(b) Remove four nuts and the link.

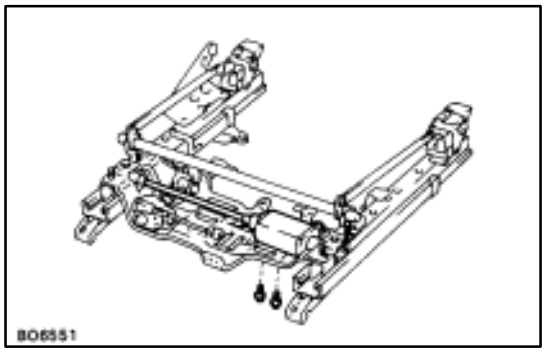

3. REMOVE SLIDE MOTOR

(a) Remove two screws and the motor.
(b) Remove the cable.

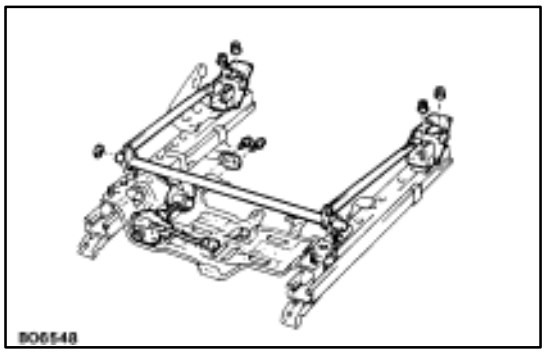

4. REMOVE FRONT SEAT LINK WITH REAR VERTICAL

(a) Remove two screws and the screw support bushing.
(b) Remove snap ring from the link.
(c) Remove four nuts and the link.

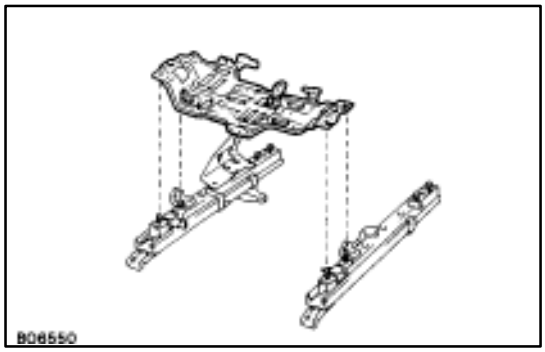

5. REMOVE FRONT SEAT MOTOR SUPPORT BRACKET

Remove the bracket from the front seat truck.

ASSEMBLY OF POWER SEAT REGULATOR

(See page BO–63)

INSTALL SLIDE AND VERTICAL MOTOR

For installation follow the removal procedure in reverse.

WhereEverybodyKnowsYourName

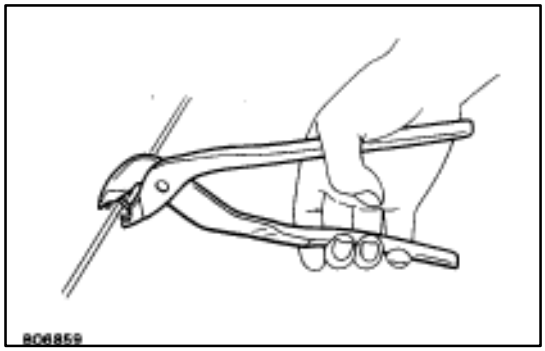

ASSEMBLY OF FRONT SEAT

(See page BO–63)

ASSEMBLE FRONT SEAT PARTS BY FOLLOWING DISASSEMBLY SEQUENCE IN REVERSE

HINT:

- Using hog ring pliers, install the new hog ring.
- Before installing the reclining adjuster, align the matchmarks.
- If creases occur in the front seat, stretch out the creases by heating them with a dryer, etc.
  If the creases still cannot be removed, spray them lightly with a vaporizer before applying the hair dry again.

WhereEverybodyKnowsYourName

Rear Seat

REMOVAL OF REAR SEAT

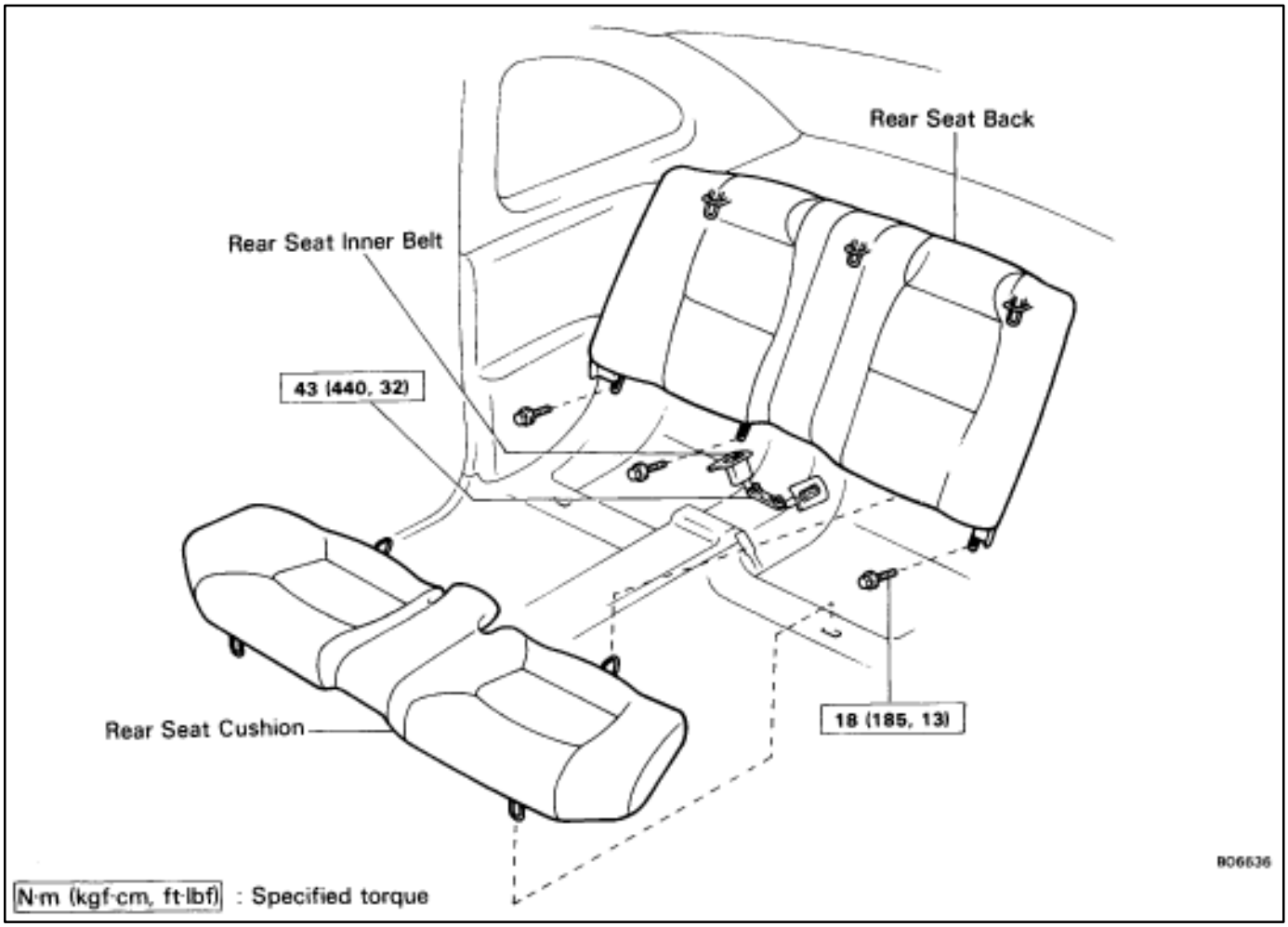

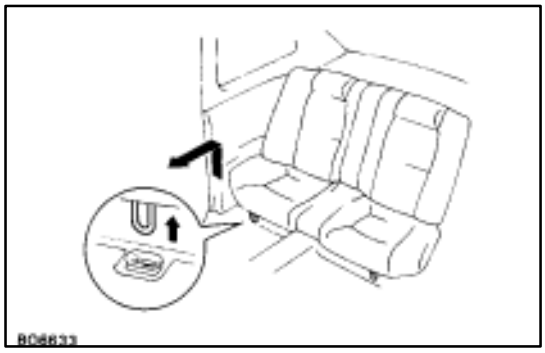

1. REMOVE REAR SEAT CUSHION

Pull up the seat cushion to remove it.

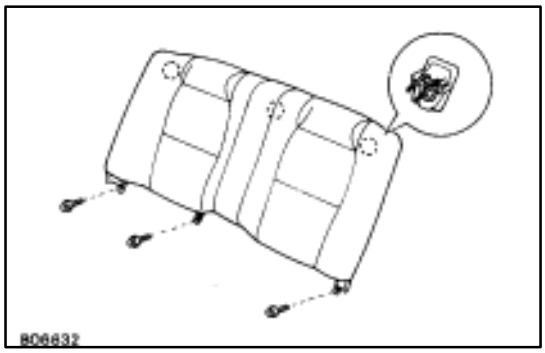

2. REMOVE REAR SEAT BACK

(a) Remove three bolts.

(b) Pull up the seat back to remove it.

WhereEverybodyKnowsYourName

INSTALLATION OF REAR SEAT

(See page BO–66)

1. INSTALL REAR SEAT BACK

Push down the rear seat back and install three bolts.

Torque: 18 N·m (185 kgf·cm, 13 ft·lbf)

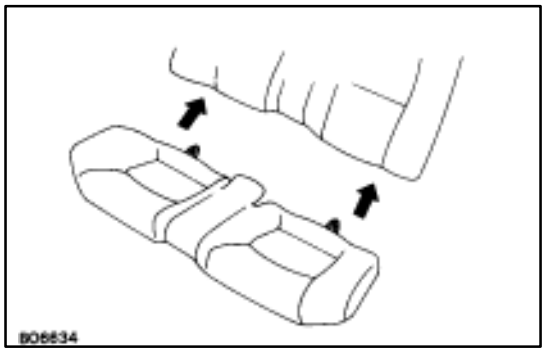

2. INSTALL REAR SEAT CUSHION

(a) Insert the seat cushion wire to seat back.

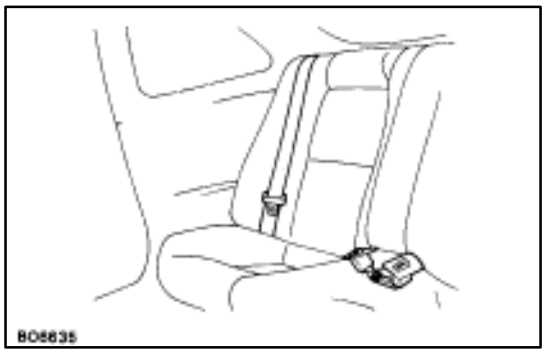

HINT: Before installation, confirm that the rear seat belts are positioned shown.

(b) Push down the cushion to install the hook to the body panel.

HINT: Confirm that the seat is installed firmly.

WhereEverybodyKnowsYourName

DISASSEMBLY OF REAR SEAT

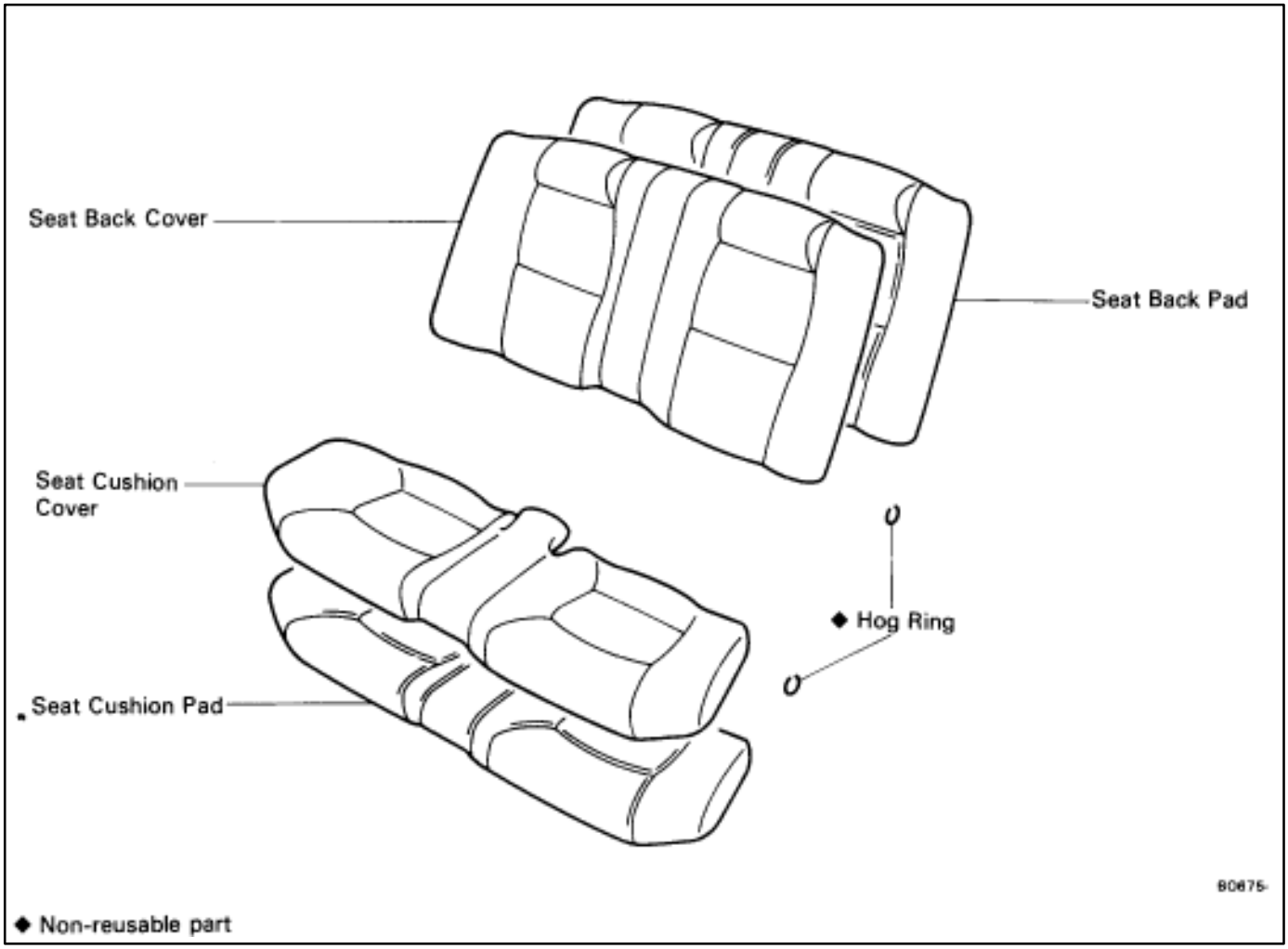

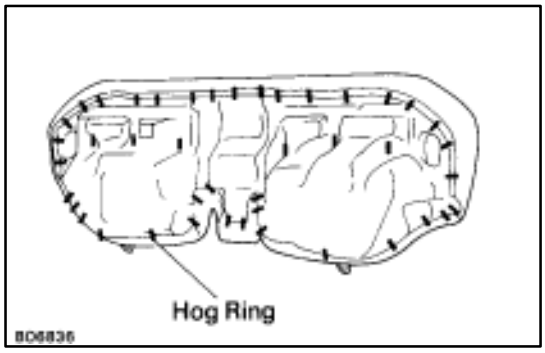

1. REMOVE SEAT CUSHION COVER

Remove hog rings and the cover.

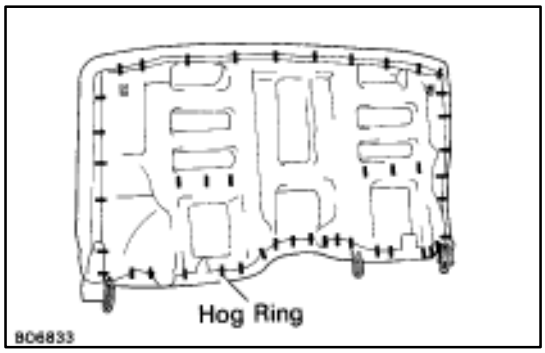

2. REMOVE SEAT BACK COVER

Remove hog rings and the cover.

WhereEverybodyKnowsYourName

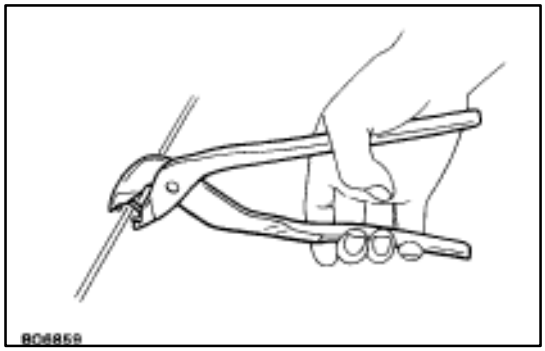

ASSEMBLY OF REAR SEAT

(See page BO–68)

ASSEMBLE THE REAR SEAT PARTS BY FOLLOWING DISASSEMBLY SEQUENCE IN REVERSE

HINT:

- Using a hog ring pliers install the new hog ring.
- If creases occur in the front seat, stretch out the creases by heating then with a dryer, etc.
  If the creases still cannot be removed, spray them lightly with a vaporizer before applying the hair dryer again.

WhereEverybodyKnowsYourName

SEAT BELT
COMPONENTS

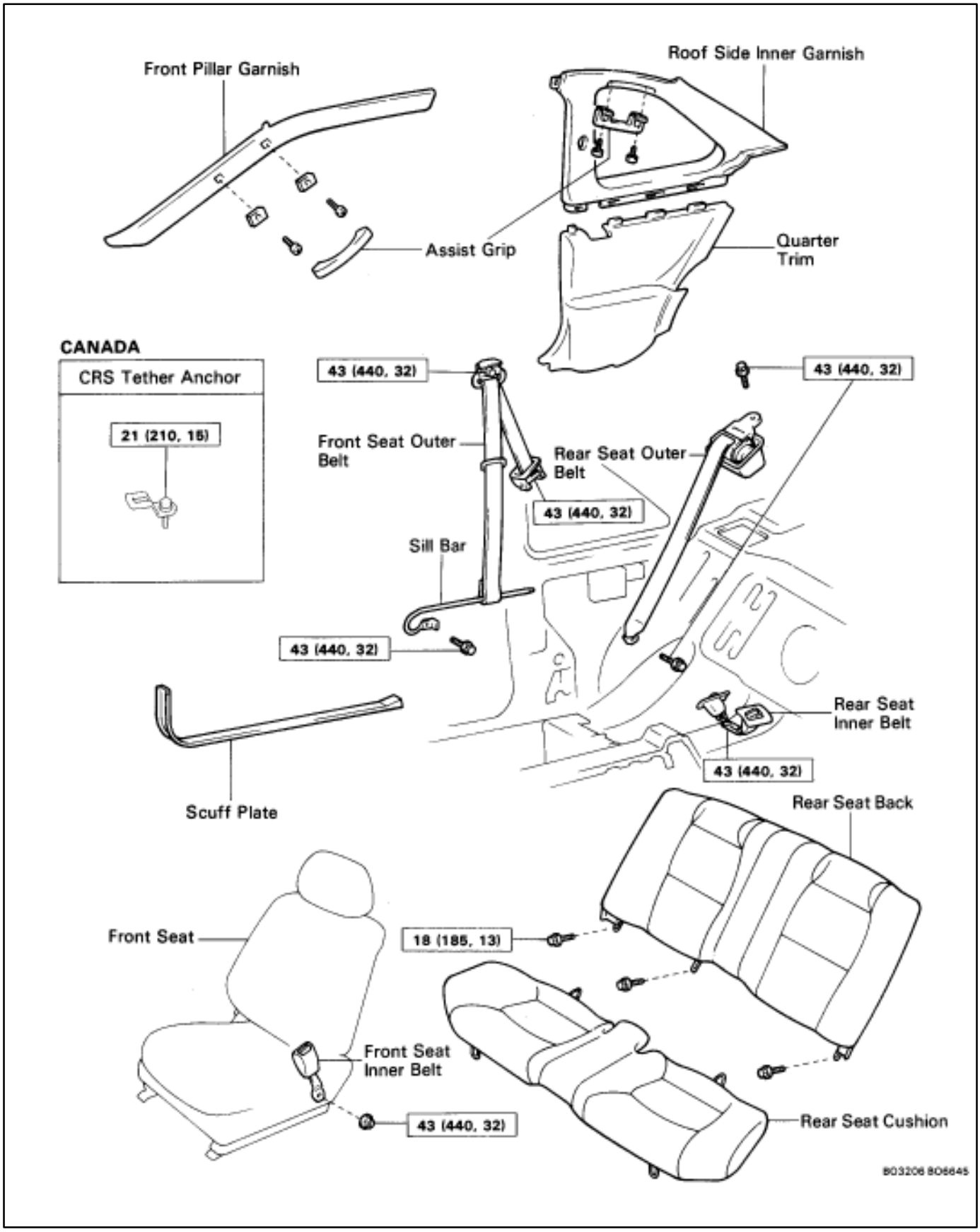

WhereEverybodyKnowsYourName

Front Seat Belt

REMOVAL OF FRONT SEAT BELT

(See page BO–70)

1. REMOVE FOLLOWING PARTS:

(a) Front seat
(b) Rear seat cushion and seat back
(c) Front pillar garnish
(d) Quater trim and roof side inner garnish

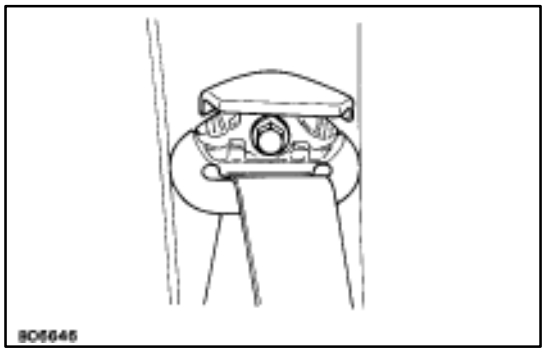

2. REMOVE FRONT SEAT OUTER BELT

(a) Using a screwdriver, pry out the front seat belt anchor bolt cover.

HINT: Tape the screwdriver tip before use.

(b) Remove the front seat belt anchor bolt.

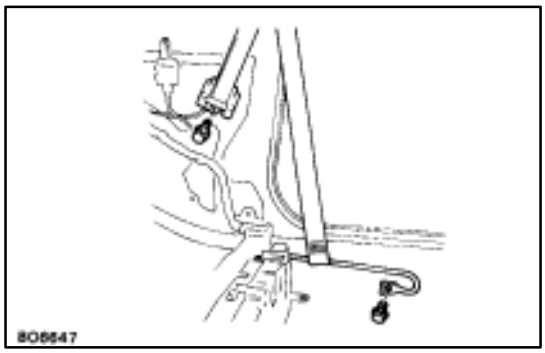

(c) Disconnect the connector.
(d) Remove two bolts and the outer belt.

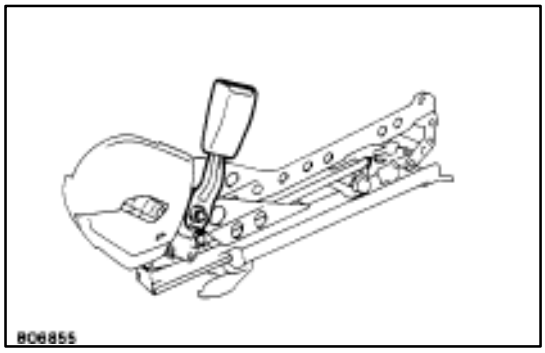

3. REMOVE FRONT SEAT INNER BELT

(a) Disconnect the connector.
(b) Remove a nut and the inner belt.

WhereEverybodyKnowsYourName

INSTALLATION OF FRONT SEAT BELT

(See page BO–70)

1. INSTALL FRONT SEAT INNER BELT

Torque: 43 N·m (440 kgf·cm, 32 ft·lbf)

2. INSTALL FRONT SEAT OUTER BELT

Torque:

Retractor bolt 43 N·m (440 kgf·cm, 32 ft·lbf)

Anchor bolt 43 N·m (440 kgf·cm, 32 ft·lbf)

HINT: After installing the anchor bolt, check that the anchor turns smoothly.

3. INSTALL FOLLOWING PARTS:

(a) Quarter trim and roof side inner garnish
(b) Front pillar garnish
(c) Rear seat cushion and seat back
(d) Front seat

INSPECTION OF FRONT SEAT BELT

[Emergency Locking Retractor (ELR) Type]

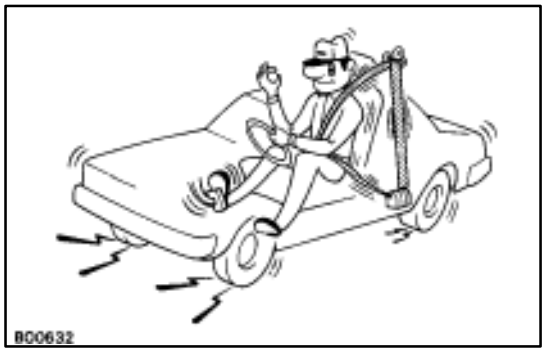

1. RUNNING TEST (IN SAFE AREA)

(a) Fasten the front seat belt.
(b) Drive the car at 10 mph (16 km/h) and make a very hard stop.
(c) Check that the belt is locked and cannot be extended at this time.

HINT: Conduct this test in a safe area. If the belt does not lock, remove the belt mechanism assembly and conduct the following static check. Also, whenever installing a new belt assembly, verify the proper operation before installation.

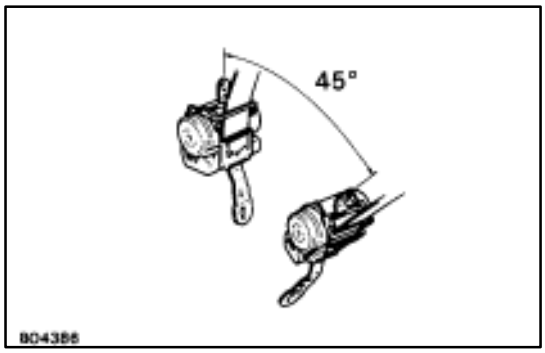

2. STATIC TEST

(a) Remove the locking retractor assembly.
(b) Tilt the retractor slowly.
(c) Verify that the belt can be pulled out at a tilt of 15 degrees or less, and cannot be pulled out at over 45 degrees of tilt.

If a problem is found, replace the assembly.

WhereEverybodyKnowsYourName

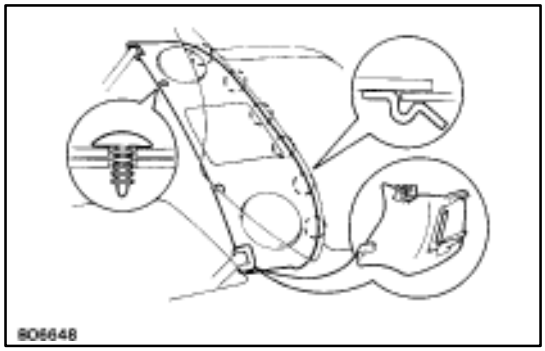

Rear Seat Belt

REMOVAL OF REAR SEAT BELT

(See page BO–70)

1. REMOVE REAR SEAT BACK AND CUSHION

2. REMOVE PACKAGE TRAY TRIM

(a) Using a clip remover, remove two clips.
(b) Pull the belt guide forward to remove it.
(c) Pull the trim forward to remove it.

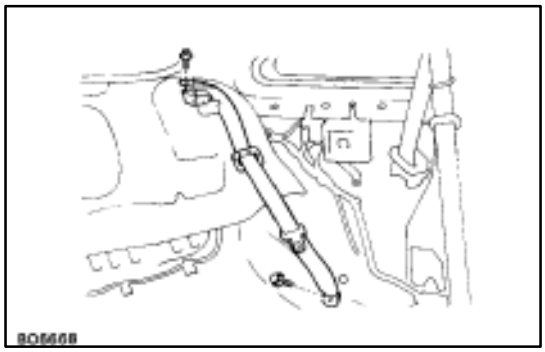

3. REMOVE REAR SEAT OUTER BELT

(a) Remove the outer belt floor anchor bolt.
(b) Remove the bolt and the retractor.

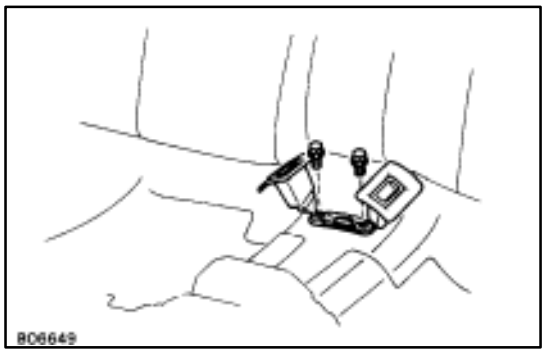

4. REMOVE REAR SEAT INNER BELT

INSTALLATION OF REAR SEAT BELT

(See page BO–70)

1. INSTALL REAR SEAT INNER BELT

Torque: 43 N·m (440 kgf·cm, 32 ft·lbf)

2. INSTALL REAR SEAT OUTER BELT

Torque:

Retractor bolt	**43 N·m (440 kgf·cm, 32 ft·lbf)**
Anchor bolt	**43 N·m (440 kgf·cm, 32 ft·lbf)**

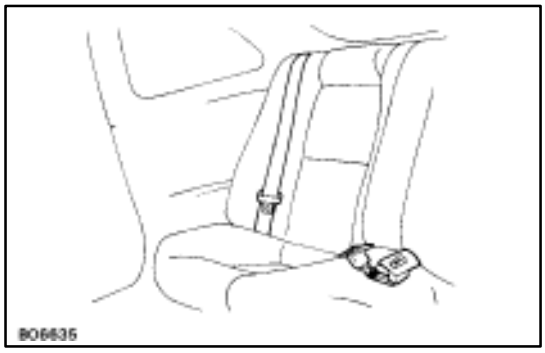

3. INSTALL PACKAGE TRAY TRIM

4. INSTALL REAR SEAT BACK AND CUSHION

(See step 1 to 2 on page BO–67)

HINT: After installation, check that the seat belts are positioned as shown.

INSPECTION OF REAR SEAT BELT

Emergency Locking Retractor (ELR)

1. RUNNING TEST (IN SAFE AREA)

(See step 1 on page BO–72)

2. STATIC TEST

(See step 2 on page BO–72)

WhereEverybodyKnowsYourName

LUGGAGE COMPARTMENT
Fitting Adjustments

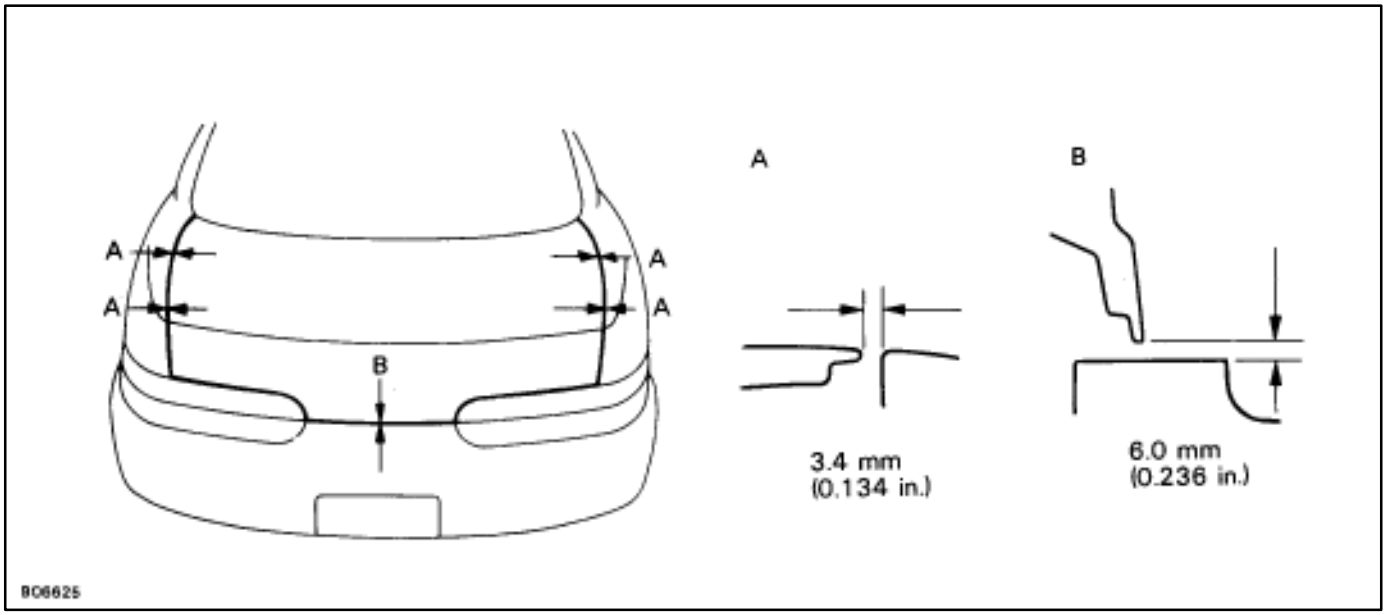

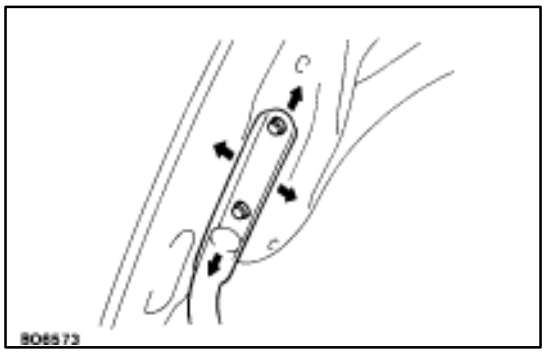

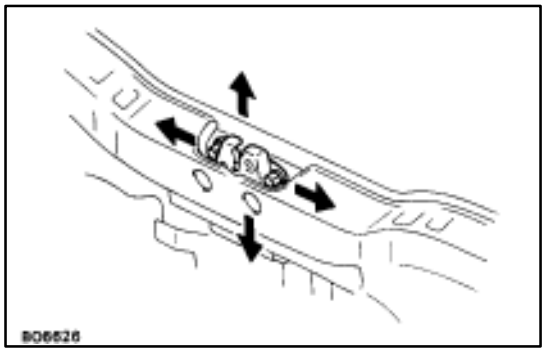

HINT: Adjust the door panel according to the following method.

1. ADJUST LUGGAGE COMPARTMENT

(a) For forward/rearward and vertical direction adjustments loosen the bolts.

(b) For left and right adjustment of front end of the door, increase or decrease the number of washers between the hinge and the door.

2. ADJUST LOCK STRIKER

(a) Remove the trim rear cover.

(b) Using a hammer and brass bar, tap the door lock to adjust it.

WhereEverybodyKnowsYourName

Luggage Compartment Door

COMPONENTS

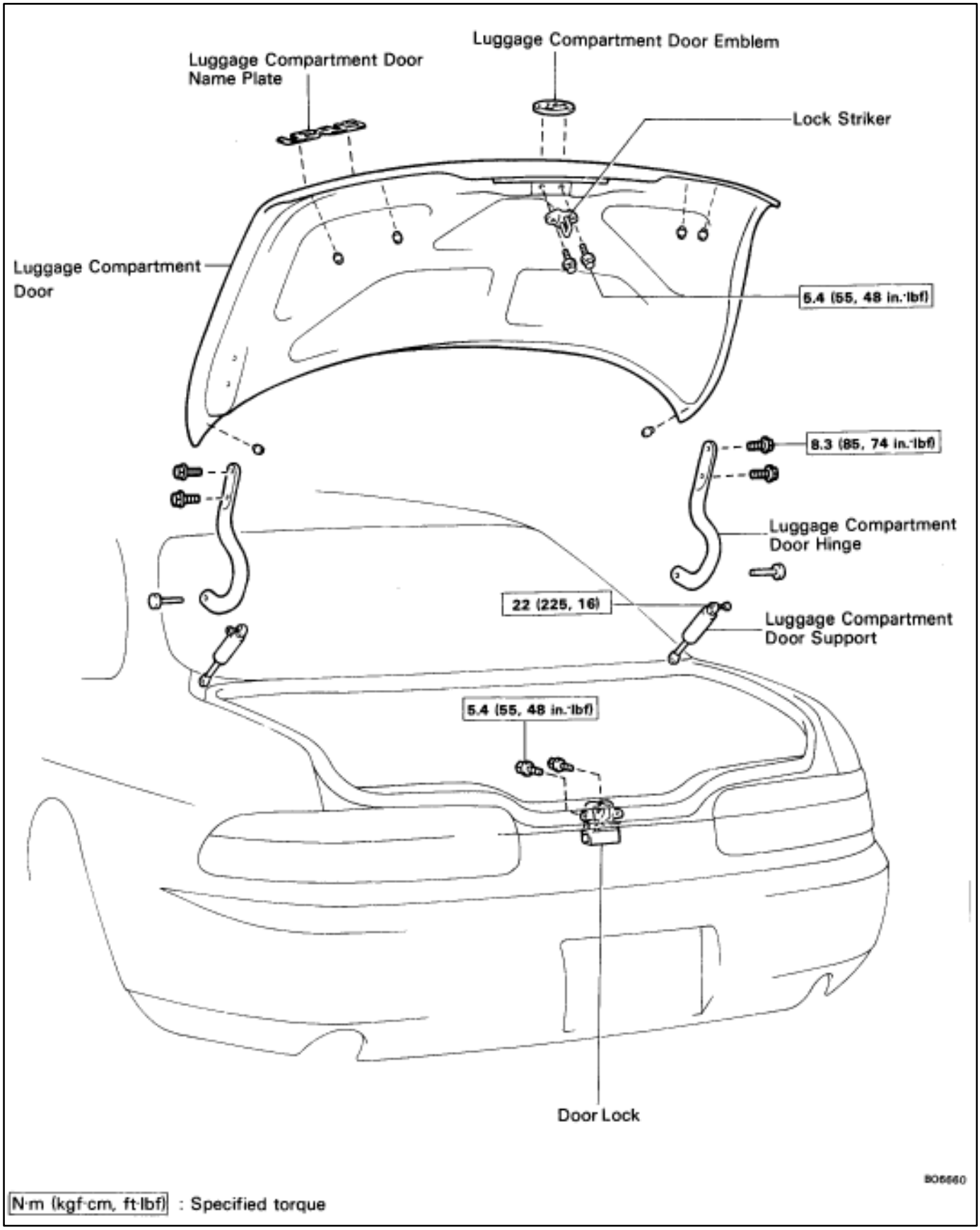

WhereEverybodyKnowsYourName

COMPONENTS (Cont'd)

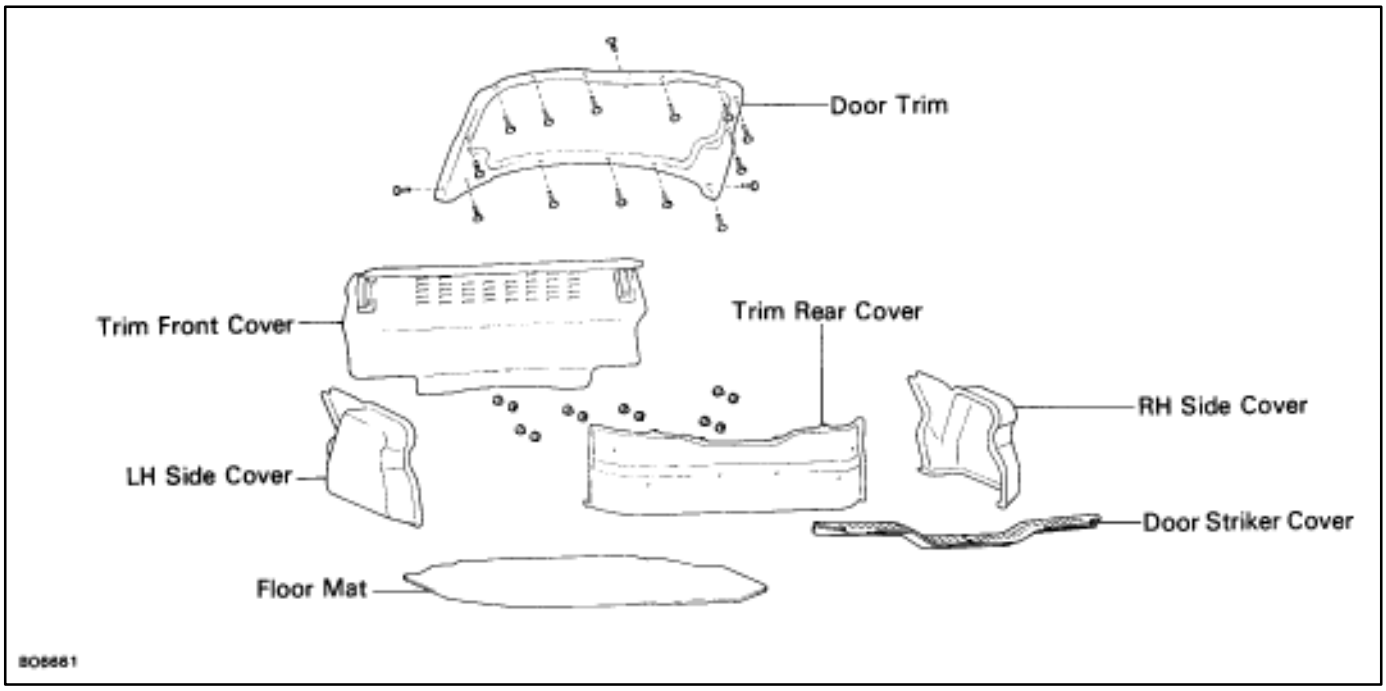

REMOVAL OF LUGGAGE COMPARTMENT DOOR

1. **REMOVE FOLLOWING PARTS:**
   (See steps 1 to 7 on pages BO–78 to 79)
   (a) Floor mat
   (b) Door striker cover
   (c) Trim rear cover
   (d) RH and LH side covers
   (e) Trim front cover
   (f) Door trim
2. **REMOVE LUGGAGE COMPARTMENT DOOR**
   Remove four bolts and the door.

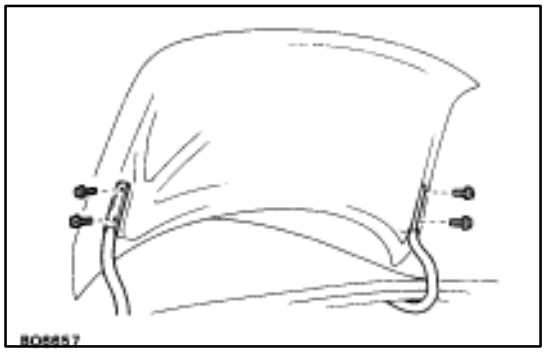

REPLACEMENT OF LUGGAGE COMPARTMENT DOOR HINGE

(See page BO–76)

1. **REMOVE FOLLOWING PARTS:**
   (a) Rear seat cushion and back (See steps 1 to 2 on page BO–66)
   (b) Roof side inner garnish (See step 8 on page BO–124)
   (c) Package tray trim (See step 9 on page BO–124)
2. **REMOVE LUGGAGE COMPARTMENT DOOR HINGE**
   (a) Remove the hinge pin.

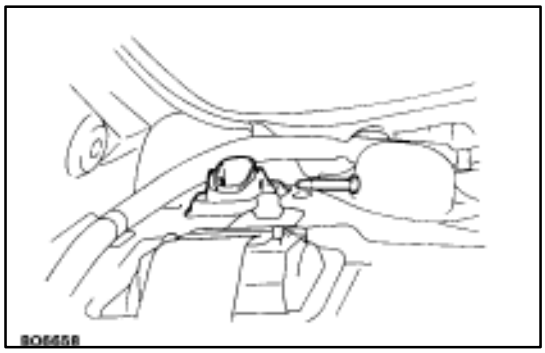

WhereEverybodyKnowsYourName

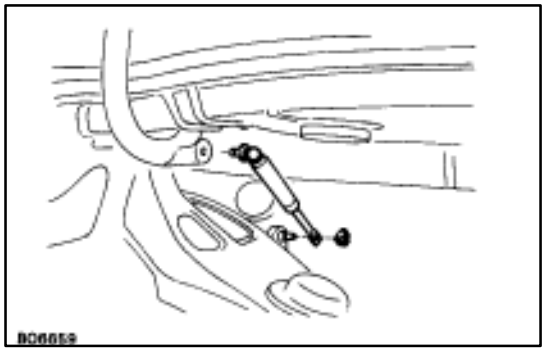

(b) Remove the clip, loosen the bolt disconnect the door support.

(c) Remove the door support.

3. IF NECESSARY, REPLACE DOOR SUPPORT
(See step 3 on page BO–23)

INSTALLATION OF LUGGAGE COMPARTMENT DOOR

(See page BO–76)

INSTALL LUGGAGE COMPARTMENT DOOR PARTS BY FOLLOWING REMOVAL SEQUENCE IN REVERSE

DISASSEMBLY OF LUGGAGE COMPARTMENT DOOR

(See page BO–76)

1. REMOVE LOCK STRIKER
Remove two bolts and the striker.

2. REMOVE CUSHION

3. REMOVE NAME PLATE AND EMBLEM
(See page BO–94)

ASSEMBLY OF LUGGAGE COMPARTMENT DOOR

(See page BO–76)

ASSEMBLE THE LUGGAGE COMPARTMENT DOOR PARTS BY FOLLOWING DISASSEMBLY SEQUENCE IN REVERSE

WhereEverybodyKnowsYourName

Trim and Weatherstrip

COMPONENTS

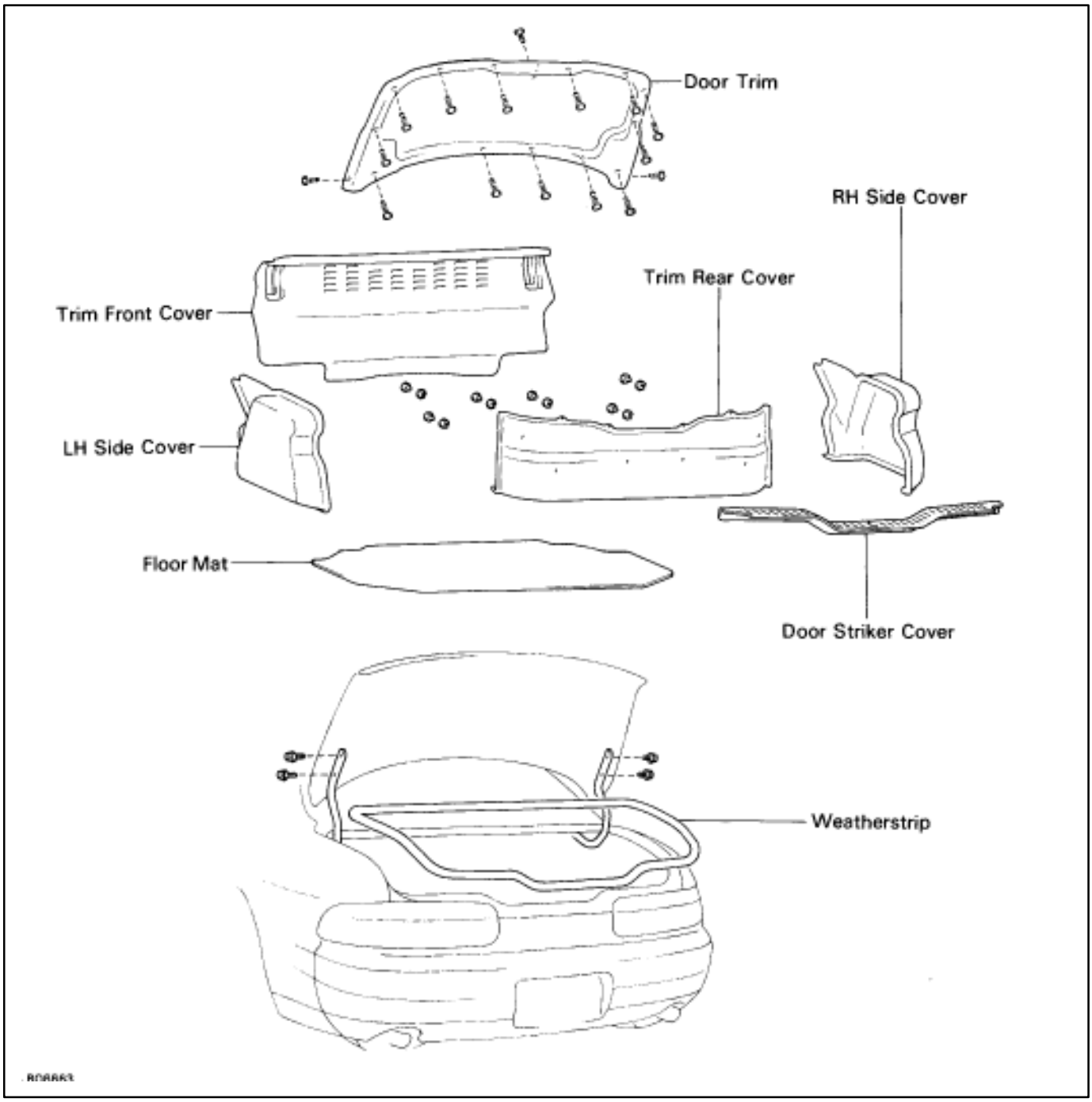

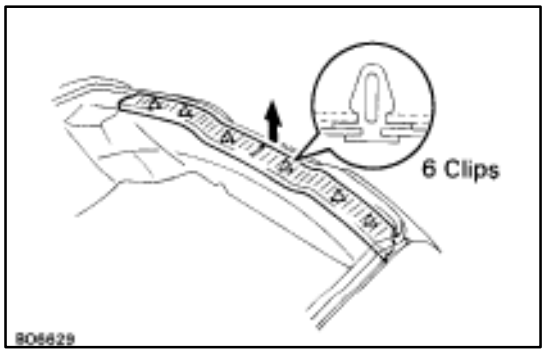

REMOVAL OF TRIM AND WEATHERSTRIP

1. **REMOVE FLOOR MAT**
2. **REMOVE DOOR STRIKER COVER**
   Pull up the cover and remove it.

WhereEverybodyKnowsYourName

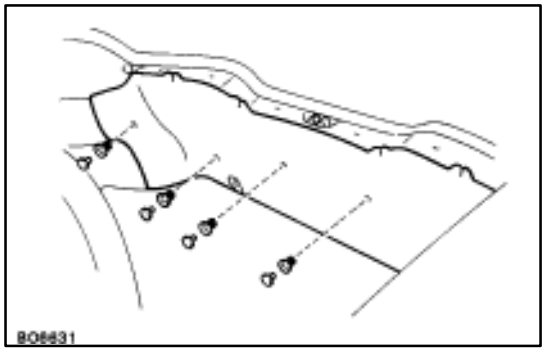

3. REMOVE TRIM REAR COVER

(a) Using a clip remover, remove six clips.

(b) Pull up the cover to remove it.

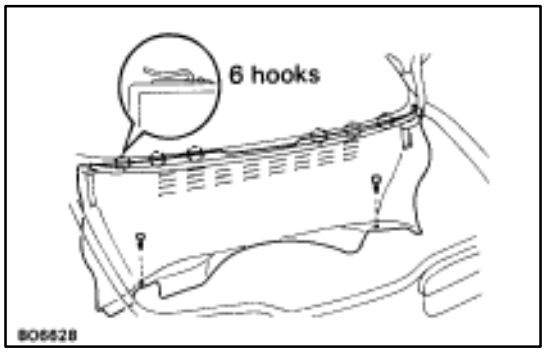

4. REMOVE TRIM FRONT COVER

Remove two screws and the cover.

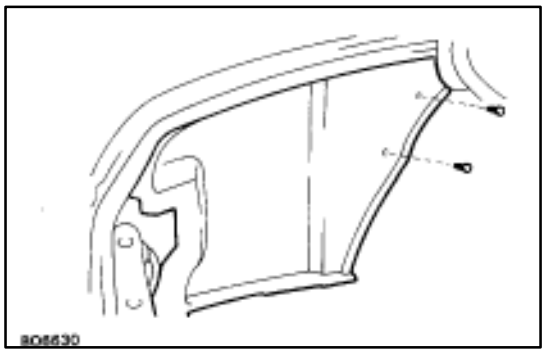

5. REMOVE LH SIDE COVER

Using a clip remover, remove two clips and the cover.

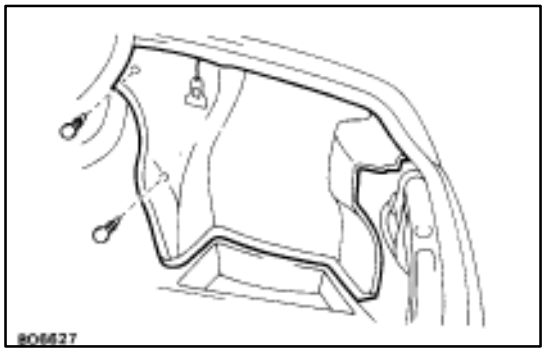

6. REMOVE RH SIDE COVER

(a) Push the plate through to the back of the cover.

(b) Using a clip remover, remove two clips and the cover.

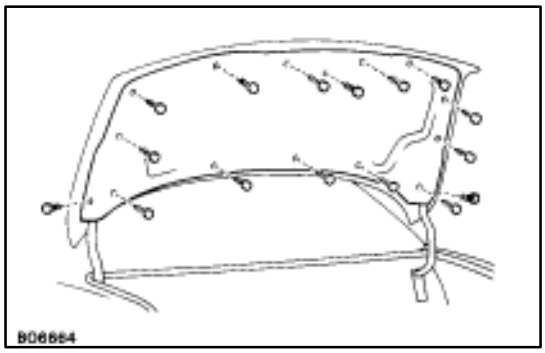

7. REMOVE DOOR TRIM

(a) Using a clip remover, remove sixteen clips.

(b) Pull the trim to remove it.

WhereEverybodyKnowsYourName

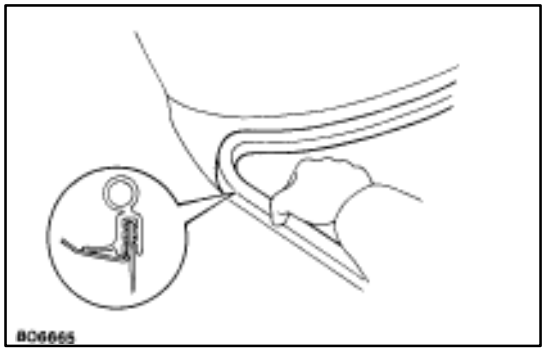

8. REMOVE LUGGAGE COMPARTMENT DOOR
(See step 2 on page BO–76)

9. REMOVE WEATHERSTRIP
Pull out the weatherstrip by hand and remove it.

INSTALLATION OF TRIM AND WEATHERSTRIP

(See page BO–78)

INSTALL TRIM AND WEATHERSTRIP PARTS BY FOLLOWING REMOVAL SEQUENCE IN REVERSE

WhereEverybodyKnowsYourName

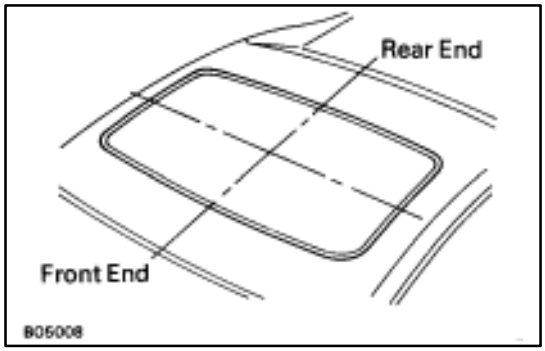

MOON ROOF
Fitting Adjustments

(See page BO–83)

1. INSPECT SLIDING ROOF GLASS ALIGNMENT

(a) Start the engine and check the operation time of the sliding roof.

Operation time: Approx. 5 secs.

(b) Check for abnormal noise or binding during operation.

(c) With the sliding roof fully closed, check for water leakage.

(d) Check for a difference in level between the sliding roof weatherstrip and roof panel.

Front end: –1 ± 1 mm (–0.039 ± 0.039 in.)

Rear end: 0 ± 1 mm (0 ± 0.039 in.)

If the sliding roof does not operate:

(e) Remove the control switch cover.

(f) Remove the large screw inside.

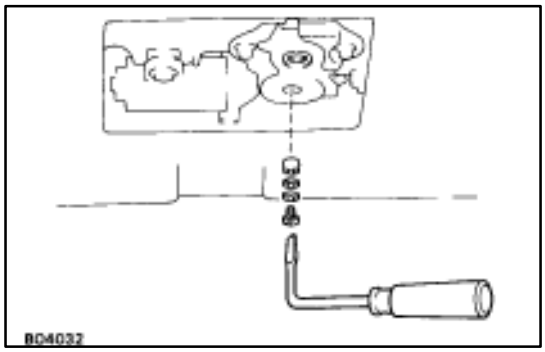

NOTICE: Be careful not to lose the spring washer or shim.

(g) Manually operate the moon roof by inserting a special crank–shaped screwdriver into the hole and turning the drive shaft.

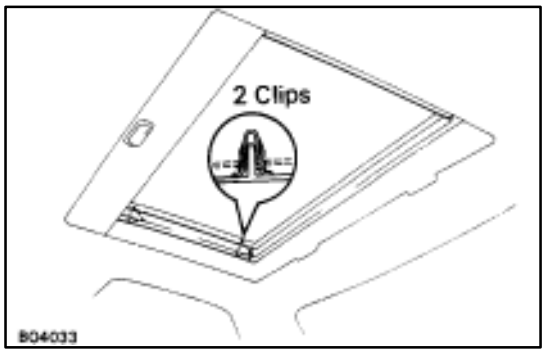

2. REMOVE SLIDING ROOF GARNISHES

Before marking adjustments, remove the left and right sliding roof garnishes.

HINT: After adjustment, reinstall the sliding roof garnishes.

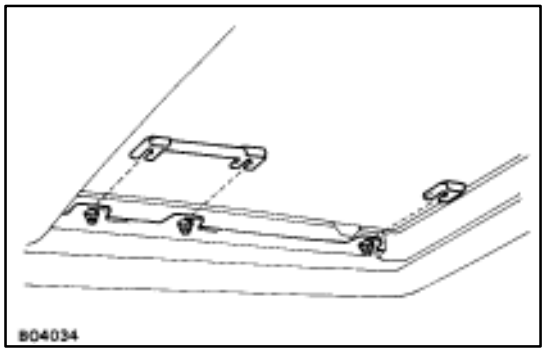

3. TO ADJUST LEVEL DIFFERENCE

Adjust by increasing or decreasing the number of shims between the bracket and sliding roof.

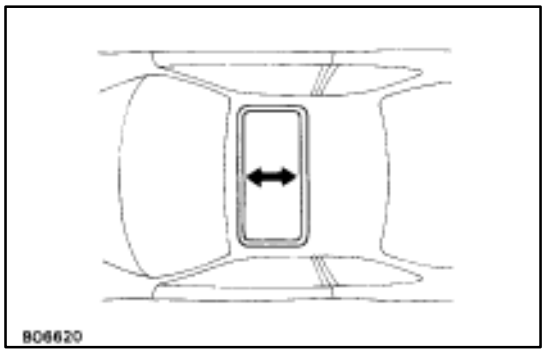

4. TO ADJUST FORWARD OR REARWARD

(a) Adjust by loosening the sliding roof installation nuts, and move the sliding roof bracket forward and backward.

WhereEverybodyKnowsYourName

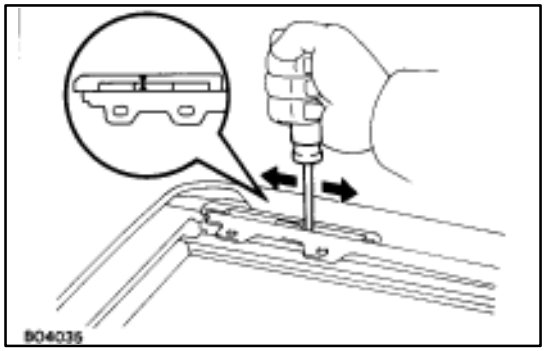

(b) When the front or rear alignment is not correct, remove the glass and adjust the drive rail.
(c) Using a screwdriver, slide the link forward or backward to align the two marks as shown.
(d) Slide the bracket to the forefront with your hand.

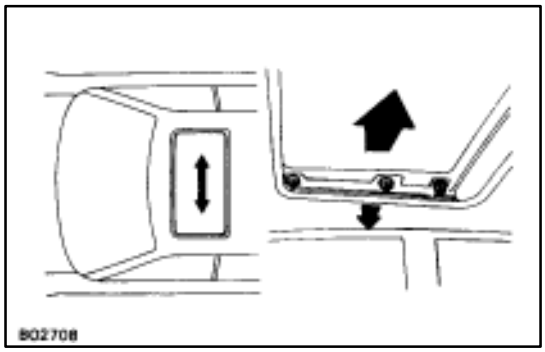

5. TO ADJUST RIGHT OR LEFT

Adjust by loosening the sliding roof rear shoe installation nuts, and move the sliding roof to the right and left.

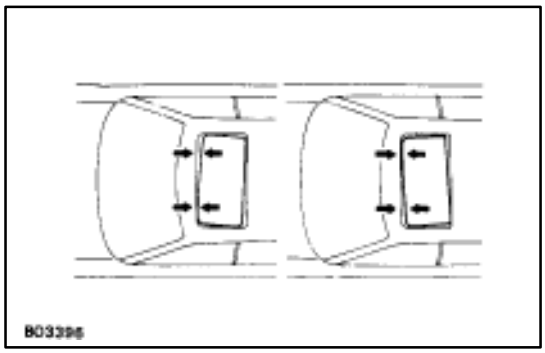

6. TO ADJUST CLEARANCE
(Difference in left and right clearance)

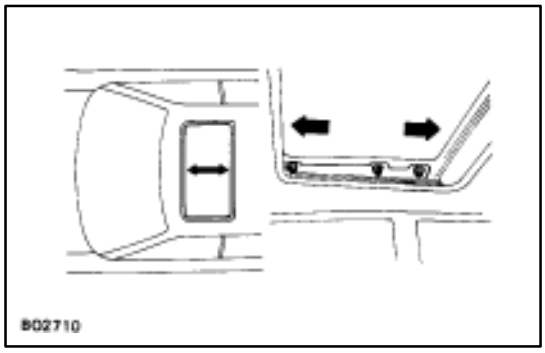

Adjust by loosening the sliding roof installation nuts and readjust the sliding roof to the proper position.

WhereEverybodyKnowsYourName

Sliding Roof
COMPONENTS

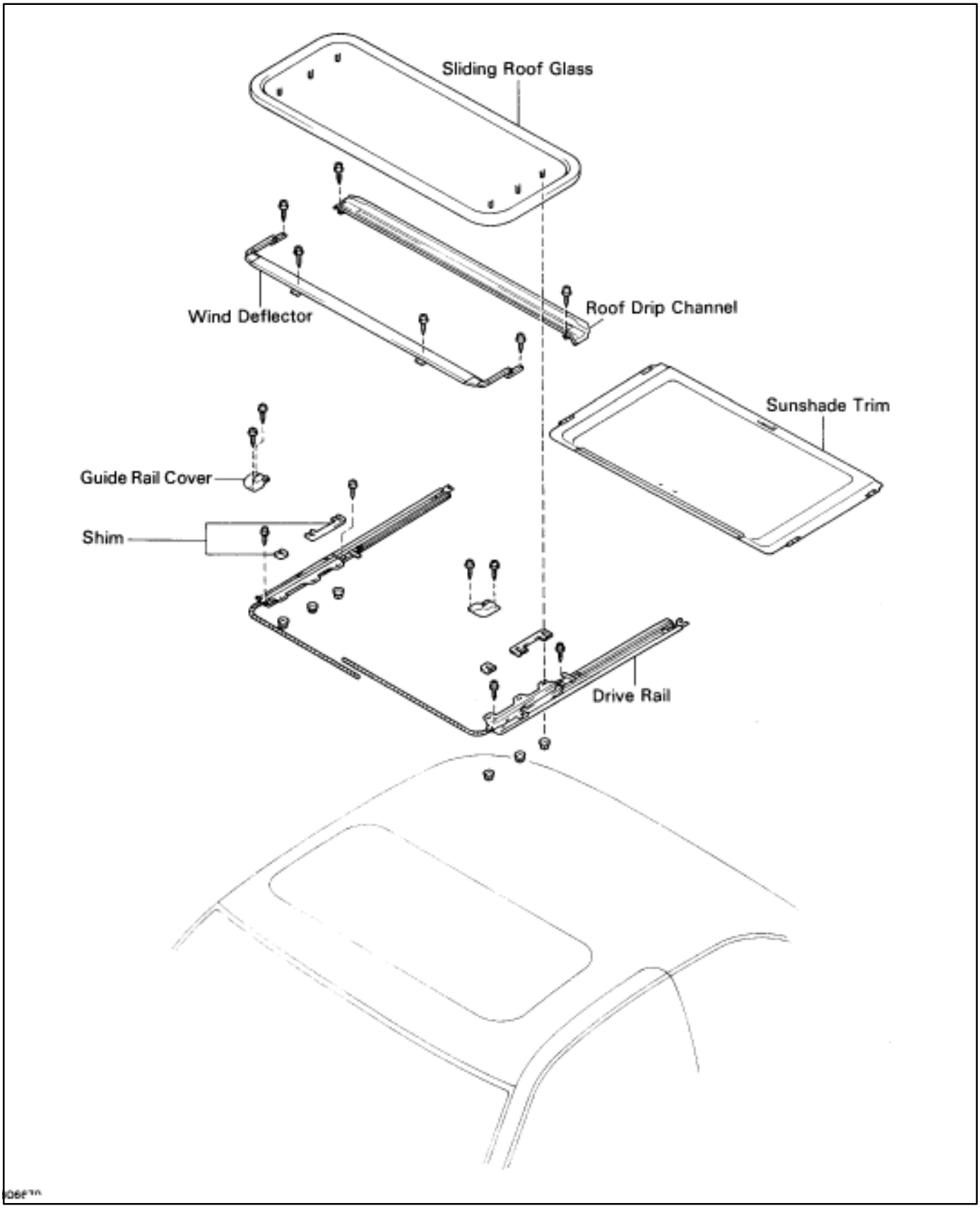

WhereEverybodyKnowsYourName

COMPONENTS (Cont'd)

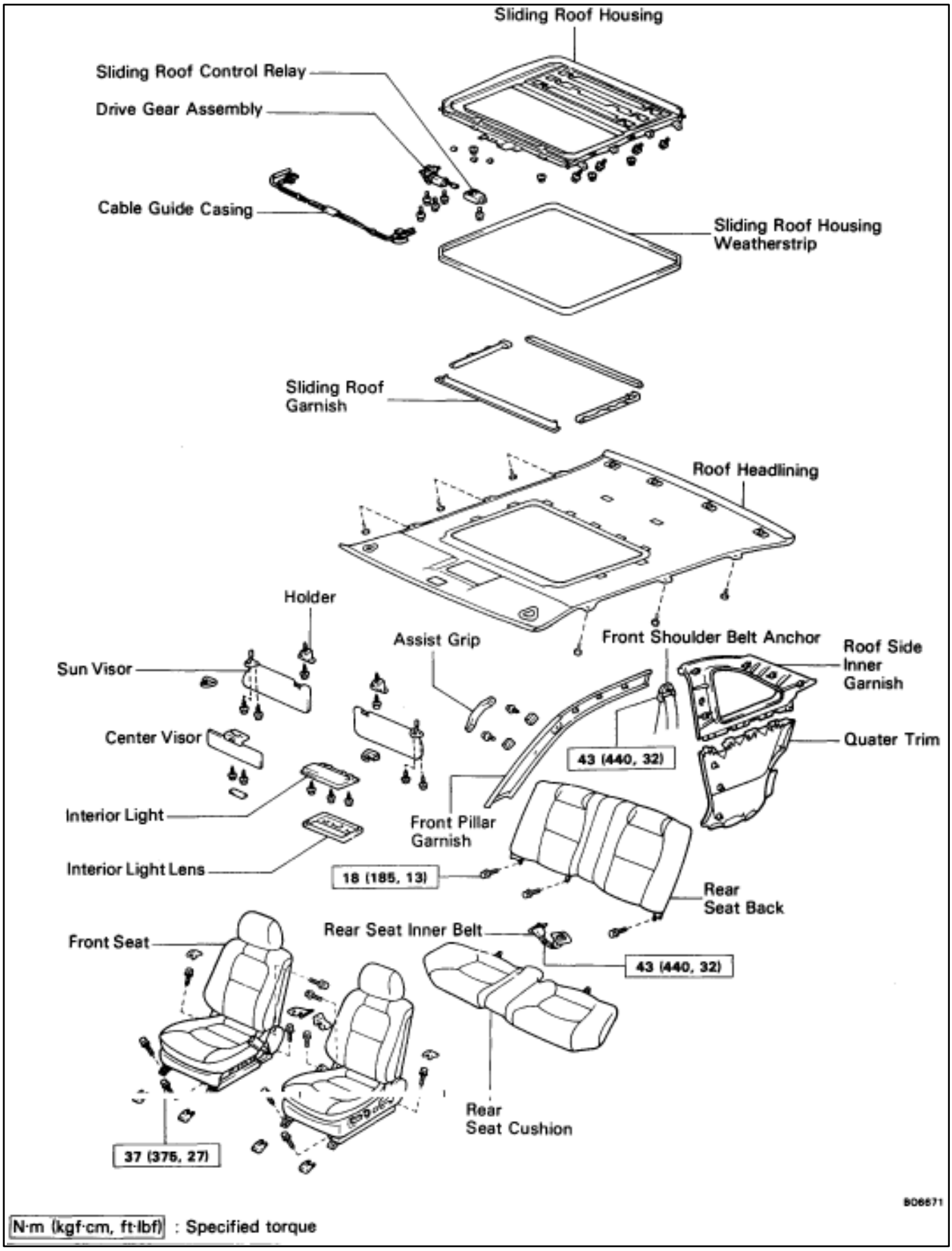

WhereEverybodyKnowsYourName

REMOVAL OF SLIDING ROOF

(See page BO–84)

1. DISCONNECT BATTERY CABLE FROM NEGATIVE TERMINAL

CAUTION: Work must be started after approx. 20 seconds or longer from the time the ignition switch is turned to the "LOCK" position and the negative (–) terminal cable is disconnected from the battery.

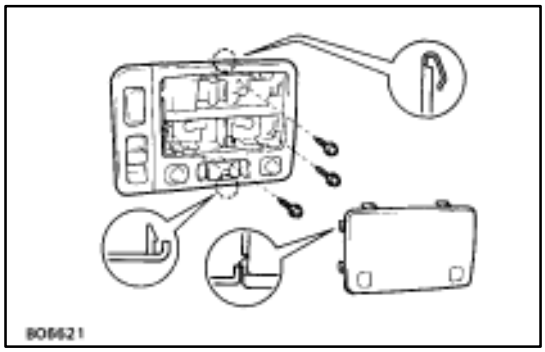

2. REMOVE INTERIOR LIGHT

(a) Using a screwdriver, remove interior light lens.

HINT: Tape the screwdriver tip before use.

(b) Remove three screws and the light.

(c) Disconnect the connector.

3. REMOVE FOLLOWING PARTS:

(a) Front pillar garnish (See step 2 on page BO–123)

(b) Sun visor (See step 3 on page BO–123)

(c) Center visor (See step 4 on page BO–123)

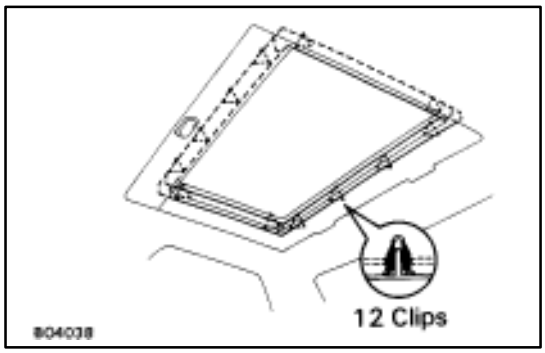

4. REMOVE SLIDING ROOF GARNISHES

Using a screwdriver, remove four sliding roof garnishes.

HINT: Do not scratch the glass or garnish with the screwdriver. Tape the screwdriver tip before use.

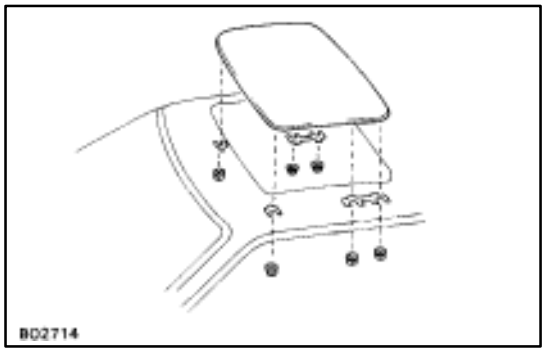

5. REMOVE SLIDING ROOF GLASS

(a) Remove six nuts and shims.

HINT: Make sure of the number of shims.

(b) Pull the glass upward to remove it.

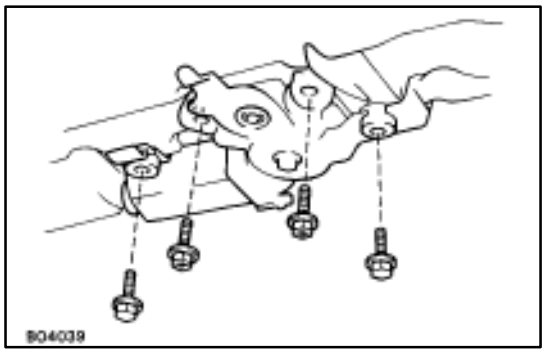

6. REMOVE DRIVE GEAR ASSEMBLY

(a) Remove four bolts and the gear assembly.

(b) Disconnect the connectors from the gear.

WhereEverybodyKnowsYourName

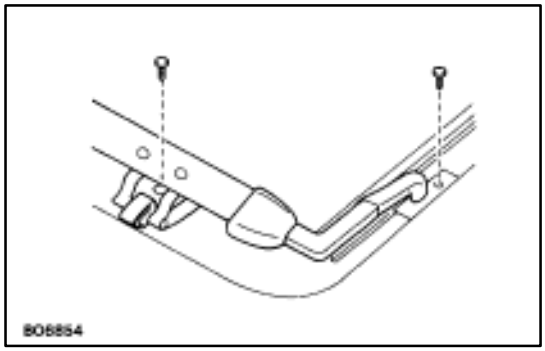

7. REMOVE WIND DEFLECTOR

(a) Slide the drive cable backward.

(b) Remove four screws and the deflector.

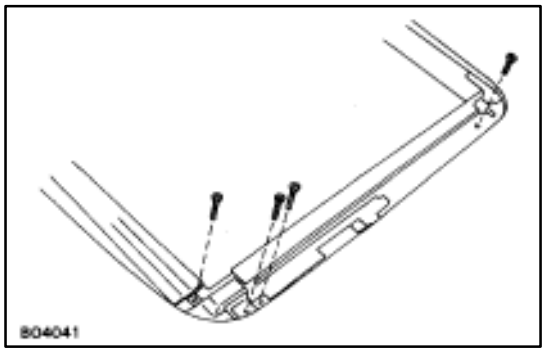

8. REMOVE CABLE GUIDE CASING

(a) Remove two screws and the guide rail cover.

(b) Remove two screws from the drive rail.

(c) Slide the drive cable forward.

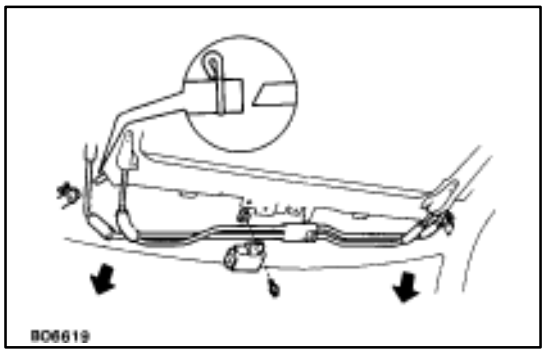

(d) Pull down the roof handlining.

(e) Disconnect front side of the drain hose.

HINT: Disconnect the drain hose from the sliding roof housing side.

(f) Remove the sliding roof control relay.

(g) Remove the two nuts from the sliding roof housing.

(h) Remove the cable guide casing gradually from both sides.

NOTICE: Be careful that the oily cable doesn't fall off.

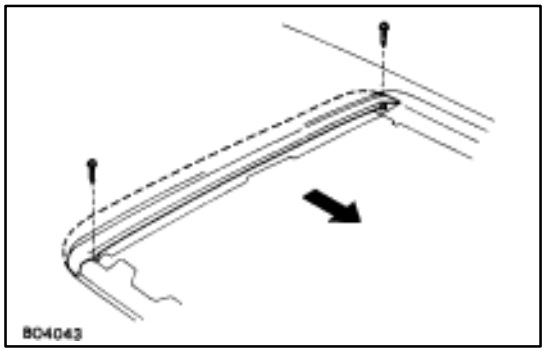

9. REMOVE ROOF DRIP CHANNEL

(a) Remove two screws.

(b) Pull the channel forward to remove it.

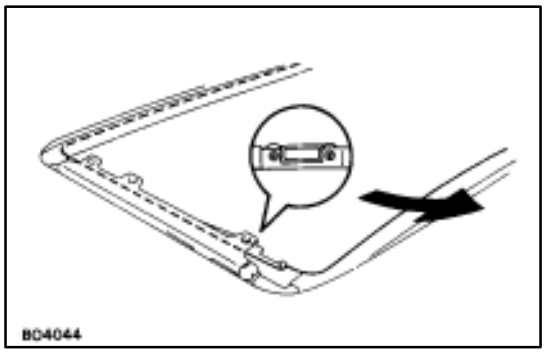

10. REMOVE SUNSHADE TRIM

While raising the drive rail, pull the trim forward to remove it.

WhereEverybodyKnowsYourName

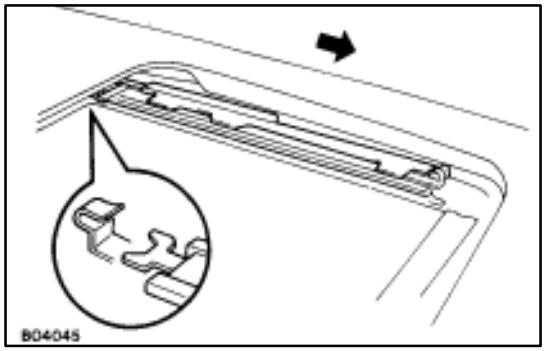

11. REMOVE DRIVE RAIL

(a) Slide the drive cable forward.

(b) Slide the rail forward and disconnect the clamp, then remove it.

INSTALLATION OF SLIDING ROOF

(See pages BO–83 to 84)

1. INSTALL FOLLOWING PARTS:

(a) Drive rail

(b) Sunshade trim

(c) Roof drip channel

2. INSTALL CABLE GUIDE CASING

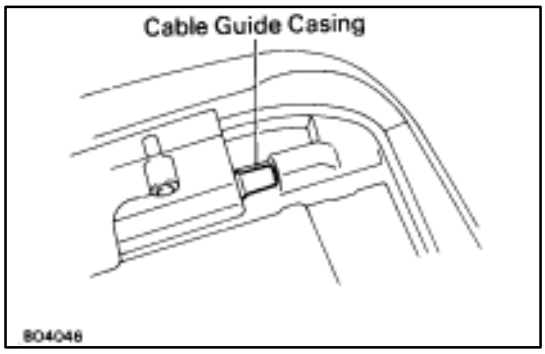

(a) Insert the cable to the casing and install the cable guide casing gradually to both sides.

(b) Insert the casing to the drive rail as shown.

(c) Install the two nuts to the sliding roof housing.

(d) Install the sliding roof control relay.

(e) Connect the front side of drain hose.

HINT: Place the knobs of clips to upper side.

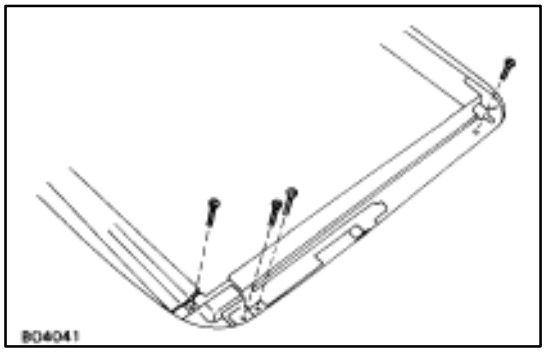

(f) Install two screws and guide rail cover.

(g) Install two screws to the drive rail.

3. INSTALL ROOF DRIP CHANNEL

4. INSTALL WIND DEFLECTOR

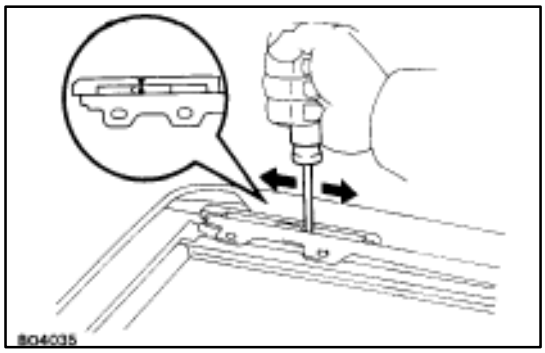

5. ADJUST DRIVE RAIL

HINT: Adjust the drive rail to a closed and tilted down position.

(a) Using a screwdriver, slide the link forward or backward to align the two marks as shown.

(b) Slide the bracket to the forefront with your hand.

WhereEverybodyKnowsYourName

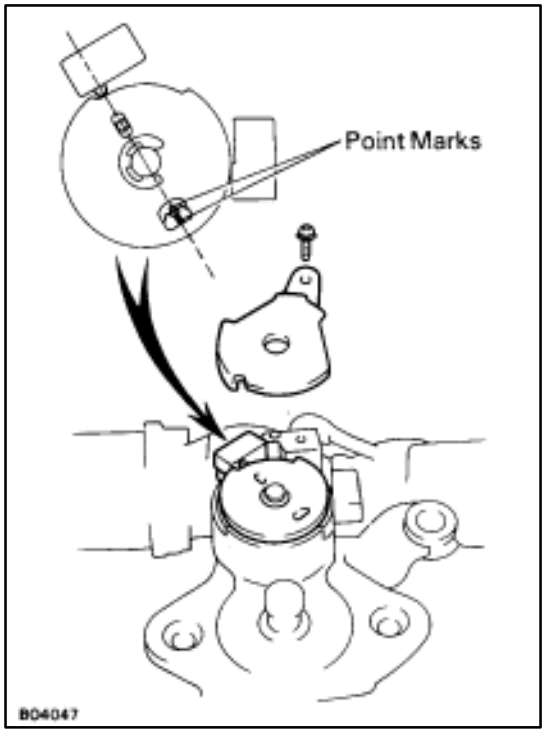

6. ADJUST AND INSTALL DRIVE GEAR ASSEMBLY

(a) Remove the screw and cam plate cover.
(b) Remove the large screw, washers and shims.
(c) Turn the drive shaft by screwdriver to align the housing and gear point mark as shown.
(d) Install cam plate cover with a screw.
(e) Install the drive gear assembly with four bolts.
(f) Connect the connectors.

7. INSTALL SLIDING GLASS

HINT:

- Confirm that the lip part of the weatherstrip housing is not twisted.
- Confirm that the clearance between the left and right of the sliding roof glass and roof panel are equal.

Install six nuts and shims.

8. INSPECT SLIDING ROOF GLASS ALIGNMENT
(See step 1 on page BO–81)

9. INSTALL FOLLOWING PARTS:

(a) Sliding roof garnishes
(b) Roof headlining
(c) Sun visor
(d) Center visor
(e) Front pillar garnish
(f) Interior light

WhereEverybodyKnowsYourName

REMOVAL OF SLIDING ROOF HOUSING

(See pages BO–85 to 87)

1. REMOVE FOLLOWING PARTS:

(a) Interior light (See step 2 on page BO–85)
(b) Front pillar garnish (See step 2 on page BO–122)
(c) Rear seat cushion, rear seat back
(See steps 1 to 2 on page BO–66)
(d) Roof side inner garnish (See step 8 on page BO–123)
(e) Center visor (See step 4 on page BO–122)
(f) Shoulder belt anchor (See step 7 on page BO–122)
(g) Sun visor (See step 3 on page BO–122)
(h) Sliding roof garnishes (See step 4 on page BO–85)
(i) Roof headlining (See step 2 on page BO–120)
(j) Sliding roof glass (See step 5 on page BO–85)
(k) Quarter trim (See step 7 on page BO–122)

2. REMOVE SLIDING ROOF HOUSING

(a) Disconnect the four drain hoses from the housing.
(b) Disconnect the connectors.
(c) Remove eight bolts.
(d) While supporting the housing, remove six nuts and the housing.

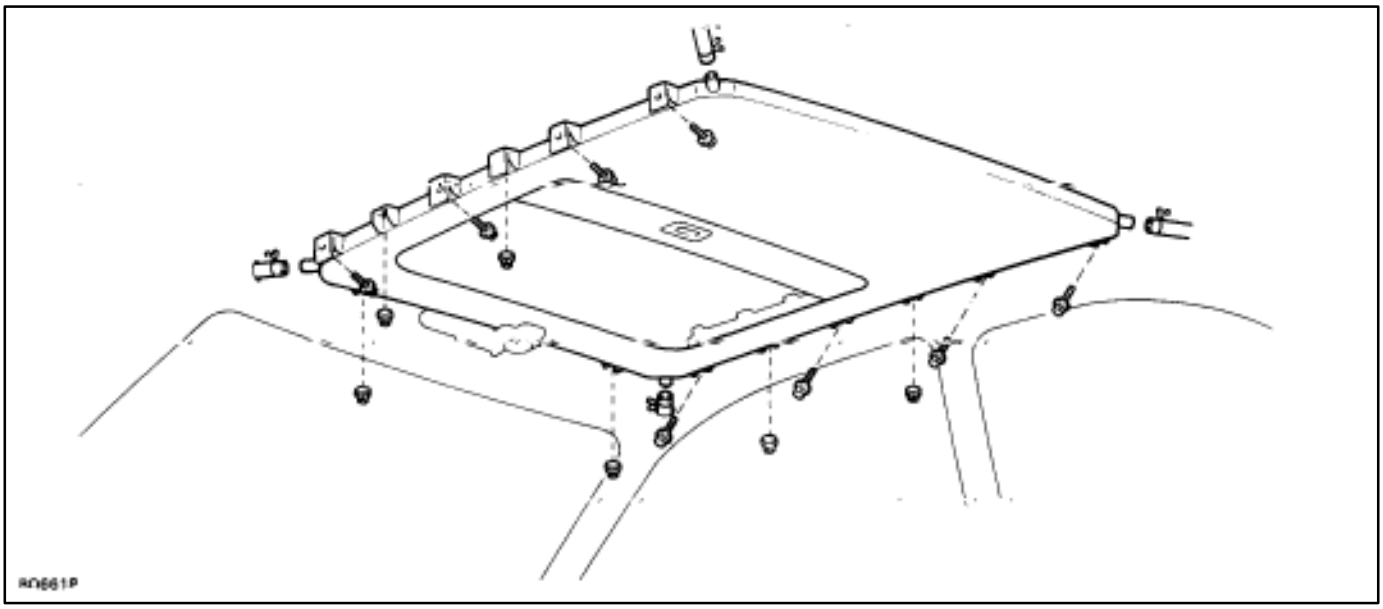

3. REMOVE FOLLOWING PARTS:

(a) Drive gear assembly (See step 6 on page BO–85)
(b) Sliding roof control relay
(c) Wind deflector (See step 7 on page BO–86)
(d) Cable guide casing (See step 8 on page BO–86)
(e) Roof drip channel (See step 9 on page BO–86)
(f) Sunshade trim (See step 10 on page BO–86)
(g) Drive rail (See step 11 on page BO–87)

WhereEverybodyKnowsYourName

INSTALLATION OF SLIDING ROOF HOUSING

(See pages BO–85 to 87)

1. INSTALL SLIDING ROOF PARTS BY FOLLOWING REMOVAL SEQUENCE IN REVERSE

HINT: When installing the sliding roof housing weatherstrip, make sure that there is no clearance in either lip of the weatherstrip.

2. TORQUE FOLLOWING BOLTS:

(a) Rear seat back

Torque: 18 N·m (185 kgf·cm, 13 ft·lbf)

(b) Rear seat inner belt

Torque: 43 N·m (440 kgf·cm, 32 ft·lbf)

(c) Front seat belt shoulder anchor bolt

Torque: 43 N·m (440 kgf·cm, 32 ft·lbf)

WhereEverybodyKnowsYourName

FRONT FENDER
COMPONENTS

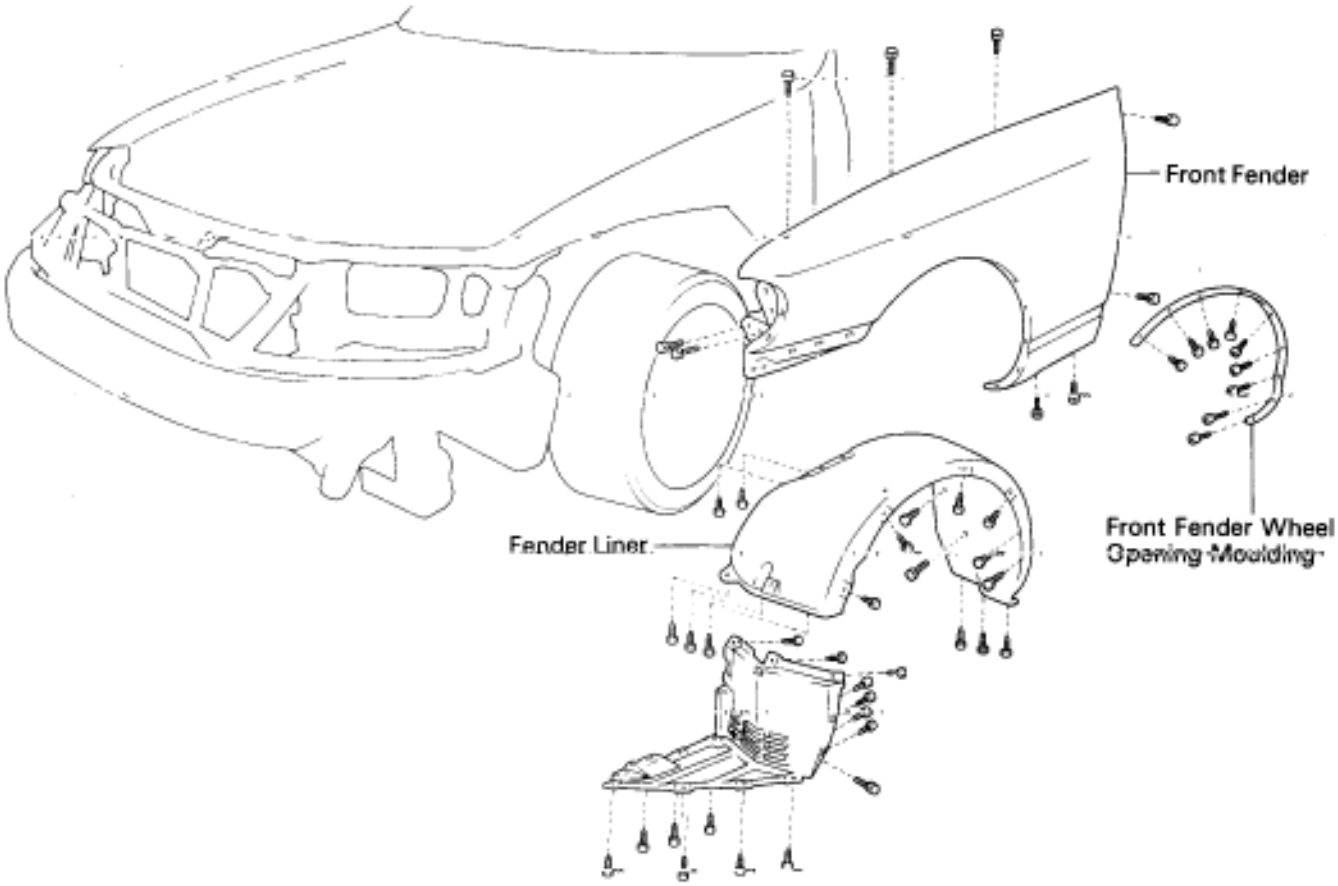

Front Bumper

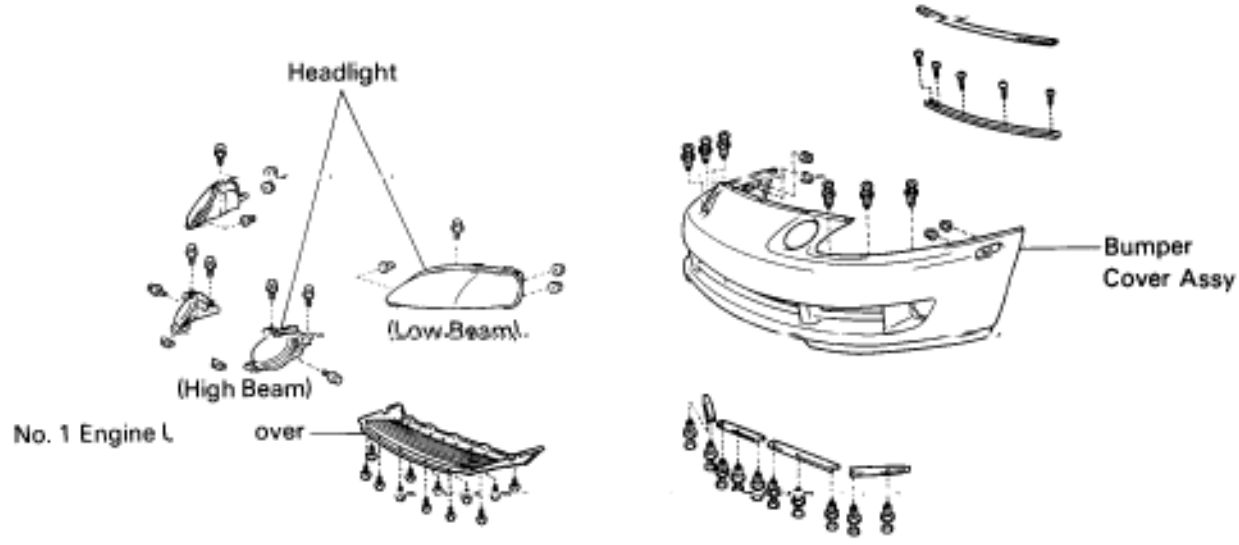

BO5808

BO5812

WhereEverybodyKnowsYourName

REMOVAL OF FRONT FENDER

(See page BO–92)

1. REMOVE FRONT BUMPER
(See page BO–91)

2. REMOVE FRONT FENDER WHEEL OPENING MOULDING
(See page BO–102)

3. REMOVE FENDER LINER
(a) Remove eight screws.
(b) Remove the liner with four clips.

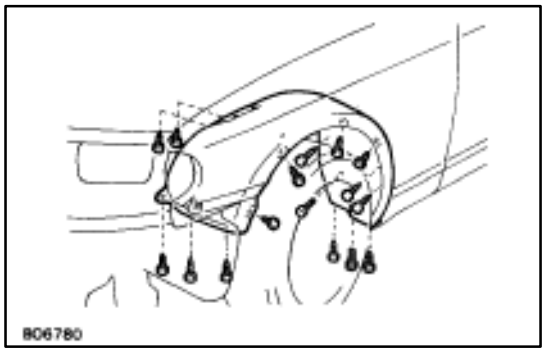

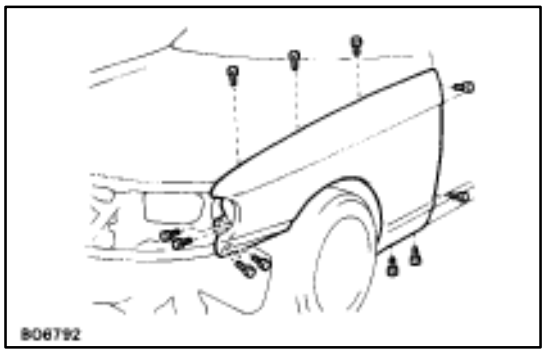

4. REMOVE FRONT FENDER
Remove eleven bolts and the fender.

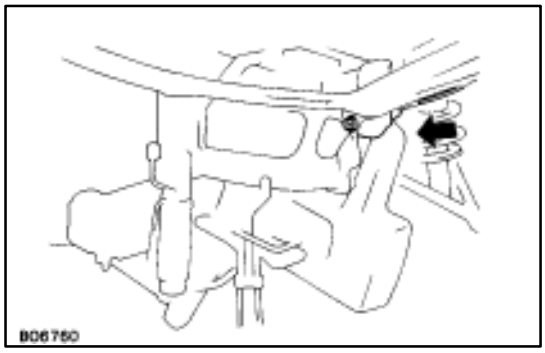

CAUTION: Do not damage or shock the front airbag sensor at all.

INSTALLATION OF FRONT FENDER

(See page BO–91)

1. INSTALL FRONT FENDER
Install eleven bolts and the fender.

WhereEverybodyKnowsYourName

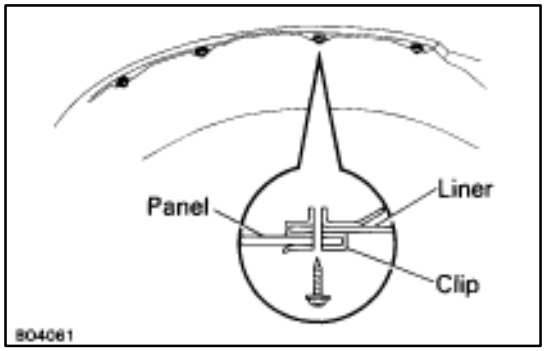

2. INSTALL FENDER LINER

(a) Install four clips so that the screw can be inserted in the manner shown in the drawing.

(b) Install eight screws and the liner.

3. INSTALL FRONT FENDER WHEEL OPENING MOULDING
(See page BO–102)

4. INSTALL FRONT BUMPER
(See page BO–14)

WhereEverybodyKnowsYourName

EMBLEM

COMPONENTS

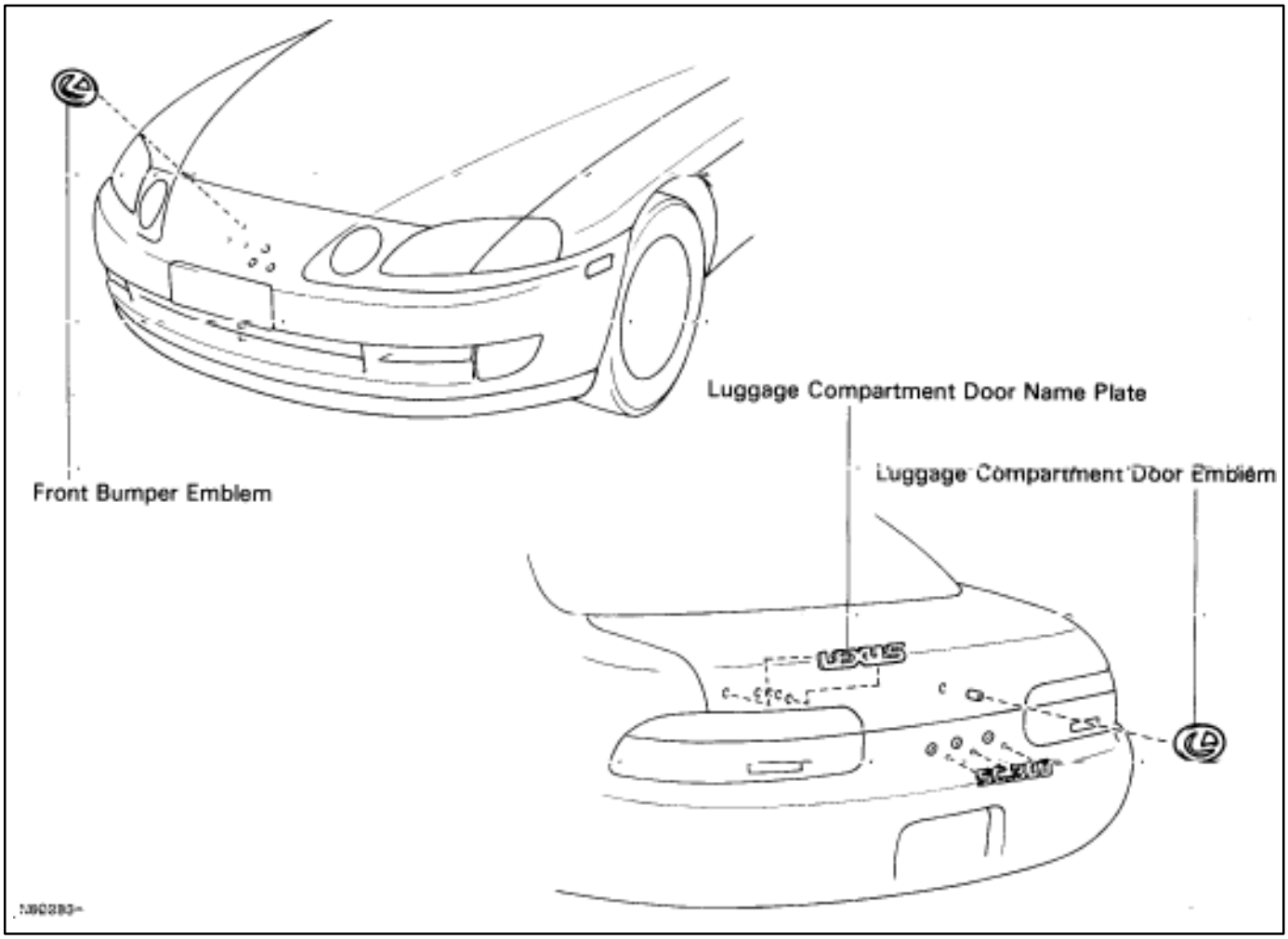

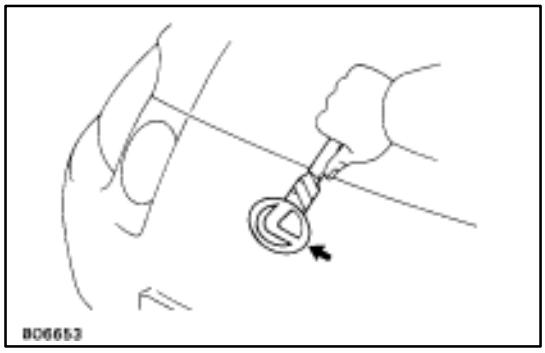

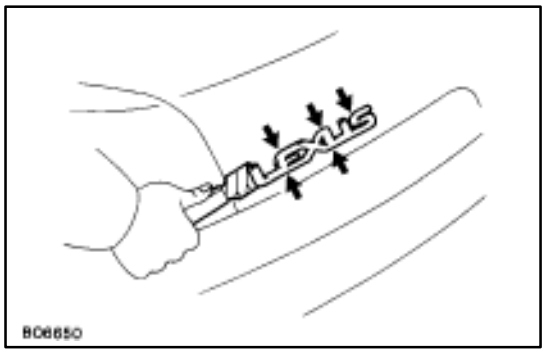

REMOVAL OF EMBLEM

1. **REMOVE FRONT AND REAR BUMPER EMBLEM**
   (a) Remove three nuts.
   (b) Using a scraper, pry out the plate.

2. **REMOVE LUGGAGE COMPARTMENT DOOR NAME PLATE**
   Using a scraper, pry out the plate.
   HINT:
   - Tape the scraper tip before use.
   - To avoid damaging the emblem, insert the scraper from various directions and gradually pry out the plate from the body.

WhereEverybodyKnowsYourName

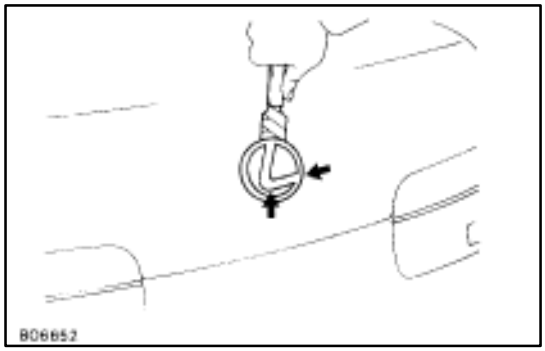

3. **REMOVE LUGGAGE COMPARTMENT DOOR EMBLEM**
   Using a scraper, pry out the plate.
   HINT:
   - Tape the scraper tip before use.
   - To avoid damaging the emblem, insert the scraper from various directions and gradually pry out the plate from the body.

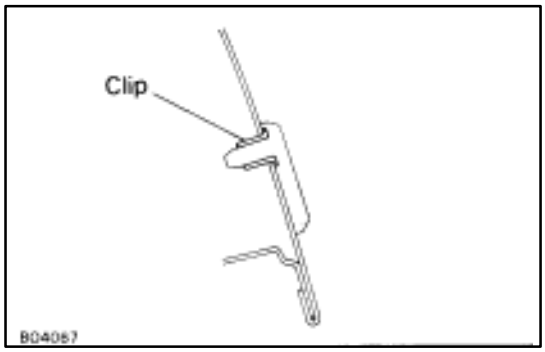

INSTALLATION OF EMBLEM

(See page BO–95)

1. **INSTALL LUGGAGE COMPARTMENT DOOR NAME PLATE**
   Push in the name plate and install it.

2. **INSTALL LUGGAGE COMPARTMENT DOOR EMBLEM**
   (a) Set the clip in the holes in the door.
   (b) Push in the emblem and install it.

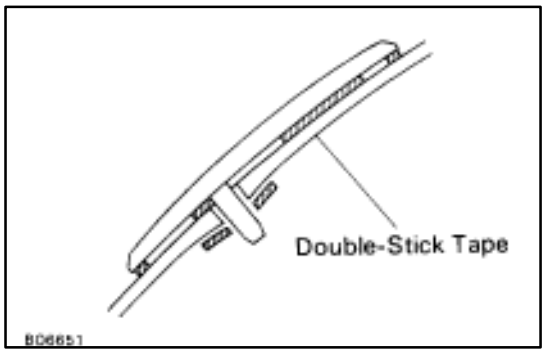

3. **INSTALL FRONT AND REAR BUMPER EMBLEM**
   (a) Install the double–stick tape and the emblem.
   (b) Install nuts.

WhereEverybodyKnowsYourName

MOULDING
Windshield Moulding
COMPONENTS

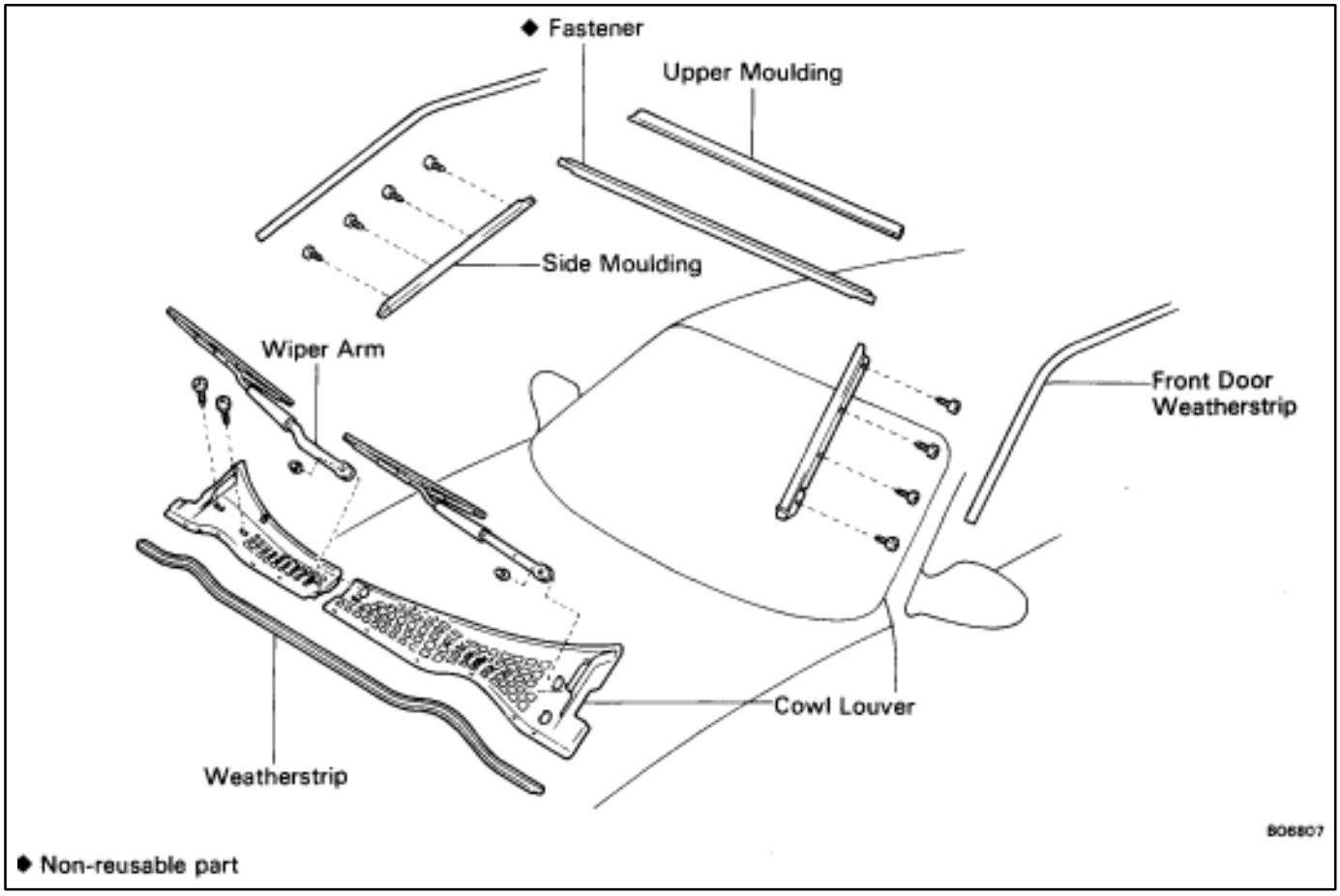

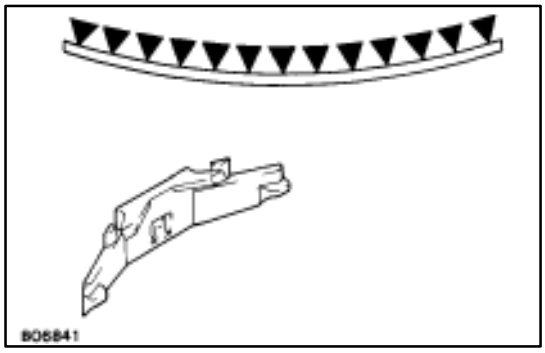

REMOVAL OF WINDSHIELD MOULDING

Location of clips is as shown. Carefully apply adhesive tape to protect the body.

1. REMOVE FOLLOWING PARTS:

(a) Wiper arm

(b) Cowl louver

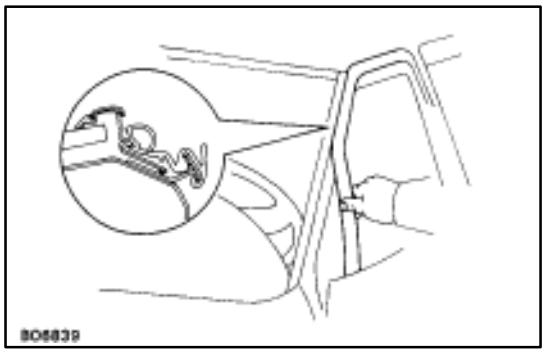

2. REMOVE FRONT DOOR WEATHERSTRIP

WhereEverybodyKnowsYourName

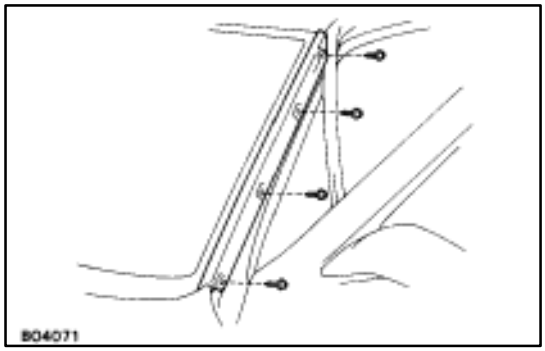

3. REMOVE SIDE MOULDING

Remove four screws and the side moulding.

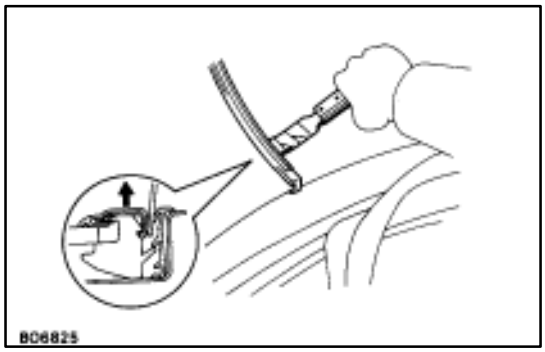

4. REMOVE UPPER MOULDING

(a) Insert the top of scraper between the body and moulding.

HINT: Tape the scraper tip before use.

(b) Pry up the scraper to loosen the moulding from the claws of the clips and the retainer.

(c) Remove the moulding.

REPLACEMENT OF FASTENER

REPLACE FASTENER

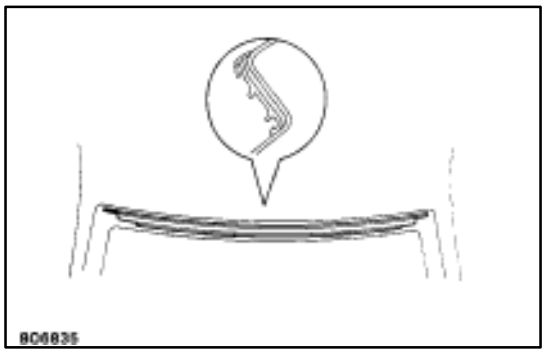

(a) Remove the damaged fastener.

(b) Cut off the old adhesive around the fastener installation area.

HINT: Be careful not to damage the body.

(c) Clean the installation area.

(d) Install the new fastener onto the body.

HINT: Before installing, peel off the backing paper at the fastener. Install the fastener with the atmospheric temperature between 20 – 40°C (68 – 104°F).

INSTALLATION OF WINDSHIELD MOULDING

(See page BO–97)

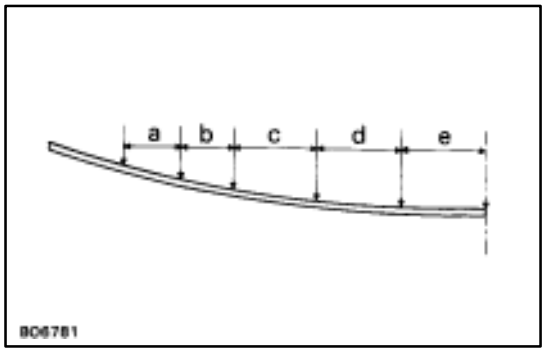

1. ADJUST CLIPS INTO UPPER MOULDING

Install the clip to the appropriate place on the moulding.

a: 75.7 mm (2.98 in.)
b: 71.0 mm (2.80 in.)
c: 109.0 mm (4.29 in.)
d: 110.0 mm (4.33 in.)
e: 110.0 mm (4.33 in.)

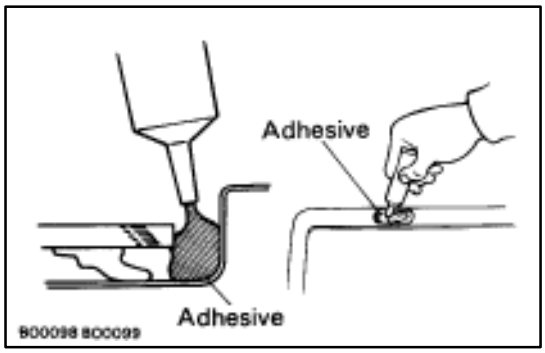

2. APPLY ADHESIVE AT NEW CLIP INSTALLATION AREA

(a) When the clip being engaged with the moulding is removed, cut out the old adhesive around the clip installation area.

NOTICE: Do not damage the body and fastener.

(b) Apply adhesive at the clip installation area so water does not collect there.

WhereEverybodyKnowsYourName

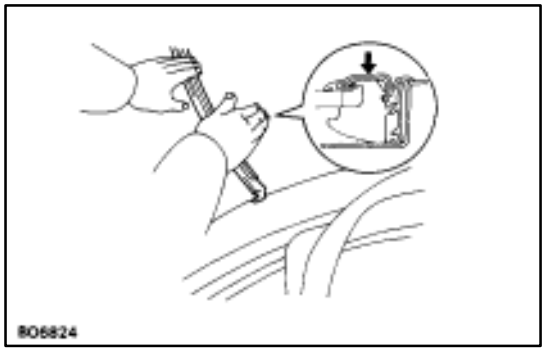

3. INSTALL UPPER MOULDING

(a) Place the moulding onto the body.

(b) Tap the moulding with your hand to fasten the clips at the glass edge. At the same time, install the fastener by tapping the clips by hand.

(c) Press the side edge of the moulding to install it.

4. INSTALL SIDE MOULDING

Install four screws and the moulding.

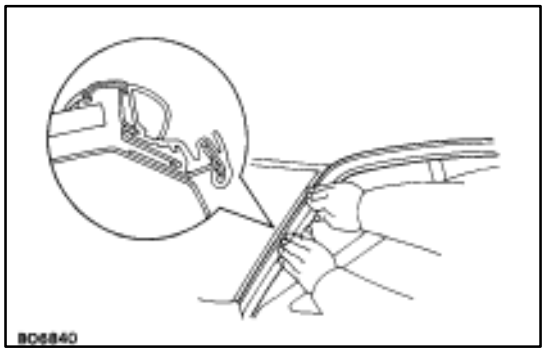

5. INSTALL FRONT DOOR WEATHERSTRIP

6. INSTALL FOLLOWING PARTS:

(a) Cowl louver

(b) Wiper arms

WhereEverybodyKnowsYourName

Back Window Moulding

COMPONENTS

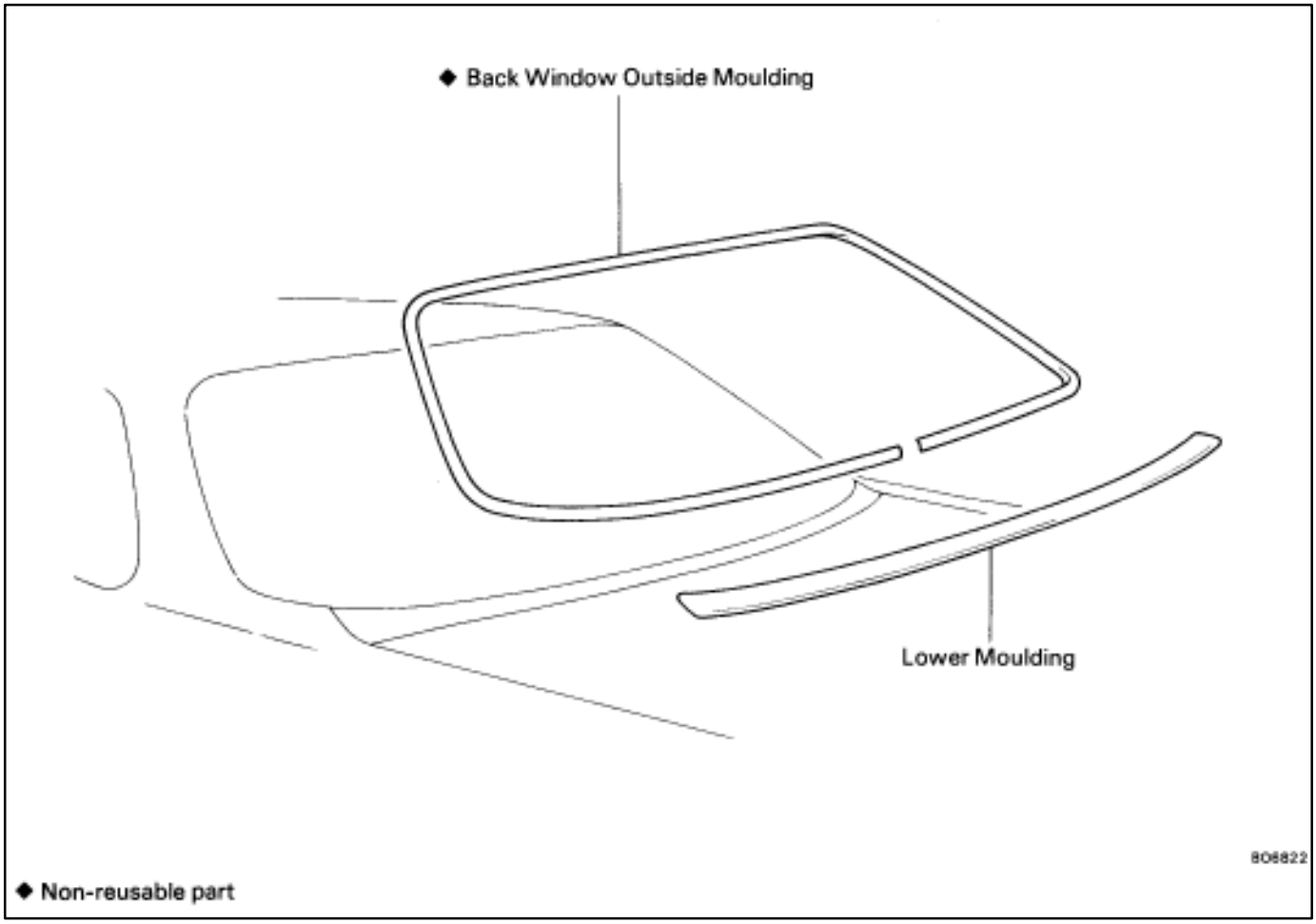

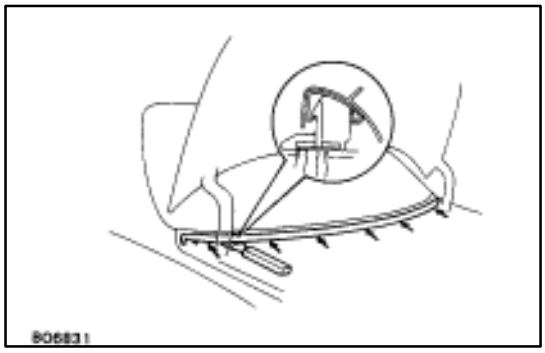

REMOVAL AND INSTALLATION OF BACK WINDOW LOWER MOULDING

1. REMOVE LOWER MOULDING

Using the scraper, pry off the moulding from the six clips and remove the moulding.

HINT: Tape the scraper tip before use.

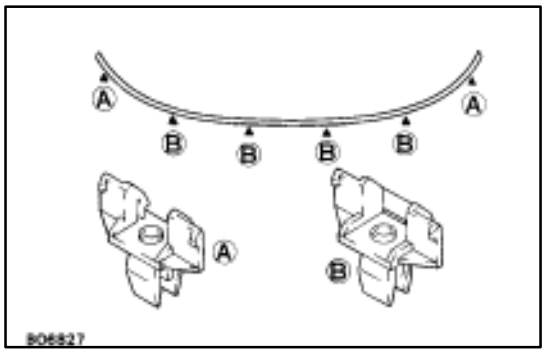

2. IF NECESSARY, REPLACE LOWER MOULDING CLIPS

HINT: There are two types of clips for moulding installation.

Location of these clips is as shown.

WhereEverybodyKnowsYourName

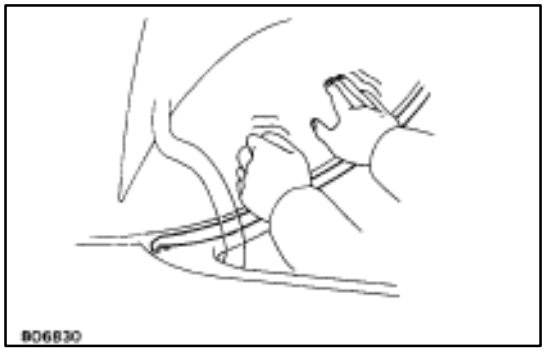

3. INSTALL LOWER MOULDING

(a) Place the moulding onto the body.

(b) Tap the moulding by your hand to install the moulding.

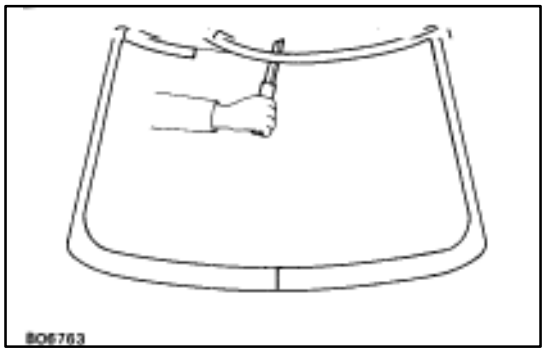

REMOVAL AND INSTALLATION OF BACK WINDOW OUTSIDE MOULDING

1. REMOVE BACK WINDOW GLASS
(See page BO–54)

2. REMOVE OUTSIDE MOULDING
Using a knife, cut loose the moulding around the glass.

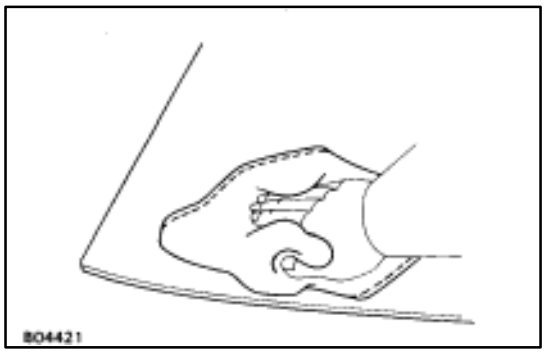

3. CLEAN CONTACT SURFACE OF GLASS
Using a cleaner, clean the contact surface black–colored area.
NOTICE: Do not touch the glass face after cleaning it.

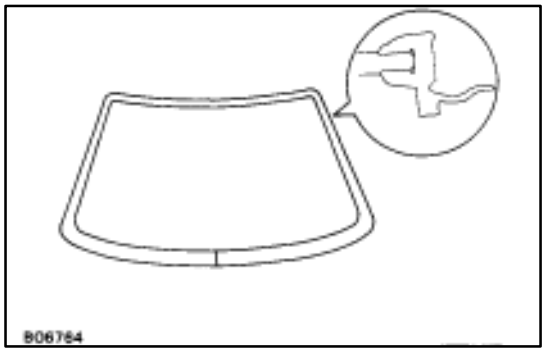

4. INSTALL OUTSIDE MOULDING

(a) Coat the edge of the glass with primer.

(b) Coat the moulding with adhesive on all contact surfaces.

(c) Install the moulding.

(d) Use a scraper to remove any excess or protruding adhesive.

5. INSTALL BACK WINDOW GLASS

6. INSTALL LOWER MOULDING

WhereEverybodyKnowsYourName

Body Outside Moulding

COMPONENTS

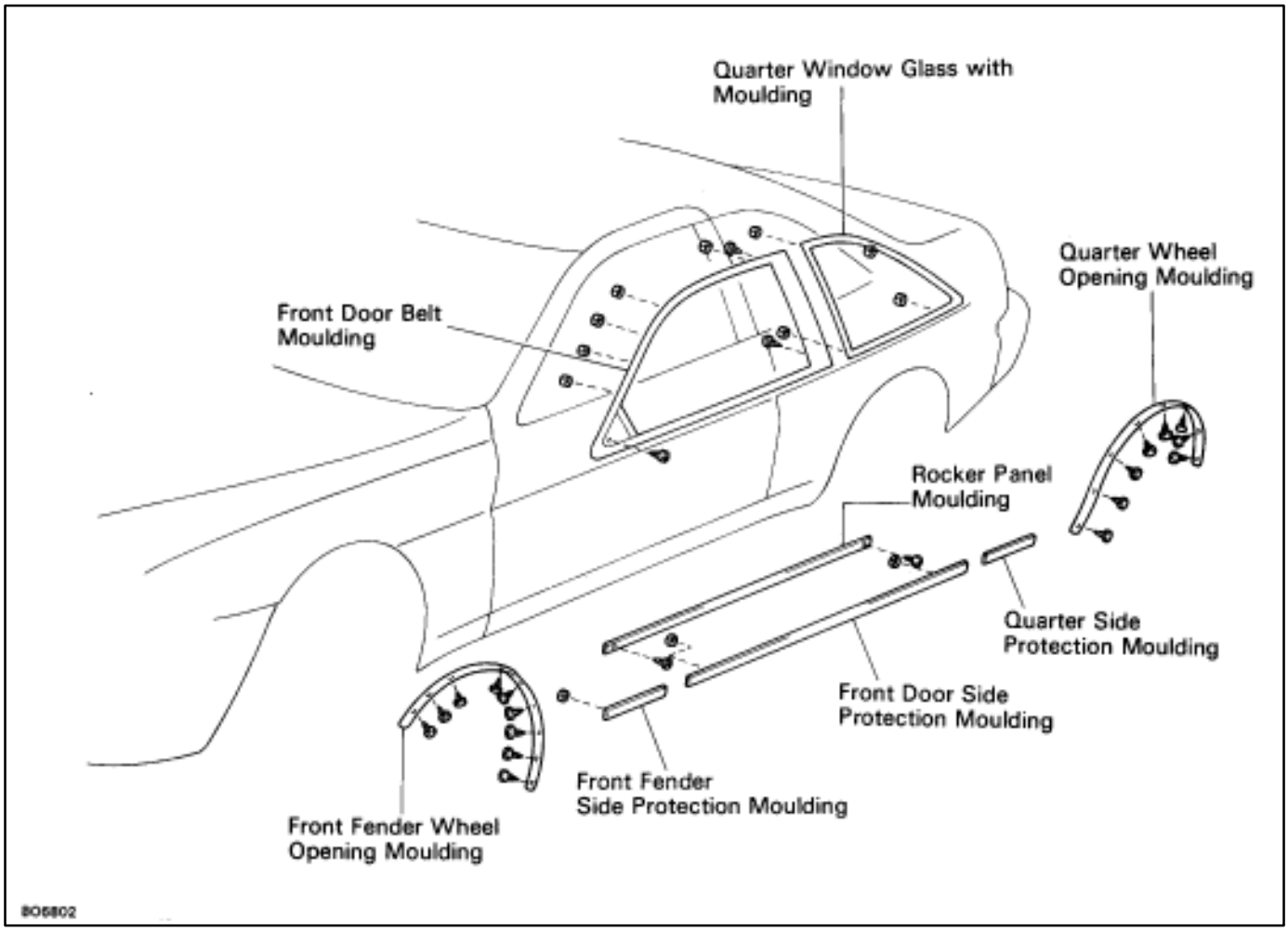

Front Door Belt Moulding

REMOVAL AND INSTALLATION

1. **REMOVE FOLLOWING PARTS:**
   (See steps 1 to 7 on pages BO–33 to 34)
   (a) Armrest base panel
   (b) Door Trim
   (c) Door Speaker Grille
   (d) Door Trim Upper Panel
   (e) Outside Rear View Mirror

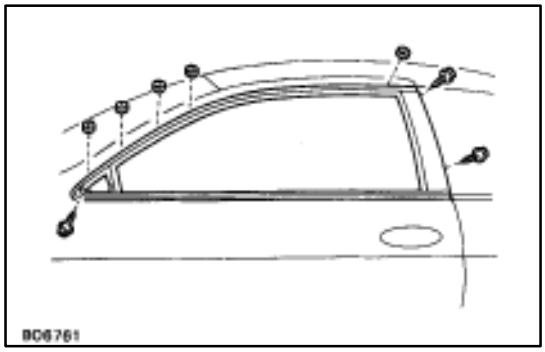

2. **REMOVE FRONT DOOR BELT MOULDING**
   (See step 13 on page BO–35)

3. **INSTALL FRONT DOOR BELT MOULDING**
   (See step 8 on page BO–39)

4. **INSTALL FOLLOWING PARTS:**
   Install the parts following removal sequence in reverse.
   (See steps 14 to 20 on pages BO–40 to 41)

WhereEverybodyKnowsYourName

Quarter Window Glass with Moulding

REMOVAL AND INSTALLATION

(See page BO–101)

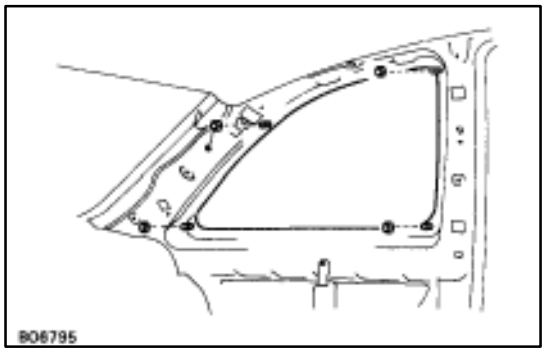

1. **REMOVE FOLLOWING PARTS:**
   (See steps 5 to 8 on pages BO–123 to 124)
   (a) Rear seat cushion
   (b) Rear seat back
   (c) Quarter trim
   (d) Roof side inner garnish
   (e) Shoulder belt anchor

2. **REMOVE QUARTER WINDOW GLASS**
   (See page BO–52)

3. **INSTALL QUARTER WINDOW GLASS**
   (See page BO–53)

4. **INSTALL FOLLOWING PARTS:**
   Install the parts following removal sequence in reverse.

Rocker Panel Moulding

REMOVAL AND INSTALLATION

(See page BO–101)

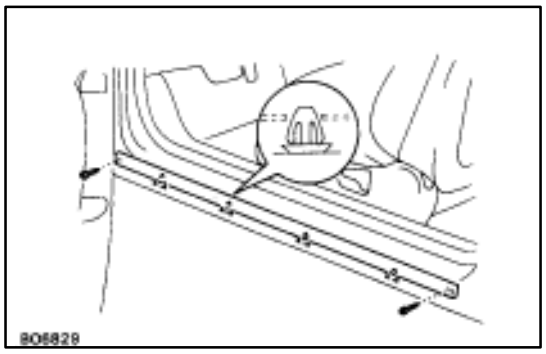

1. **REMOVE ROCKER PANEL MOULDING**
   (a) Remove two screws.
   (b) Pry loose clips and remove the moulding onto the panel.

2. **INSTALL ROCKER PANEL MOULDING**
   (a) Insert the top of clips into the panel hole and tap the moulding onto the panel.
   (b) Install two screws.

Front Fender Wheel Opening Moulding

REMOVAL AND INSTALLATION

(See page BO–101)

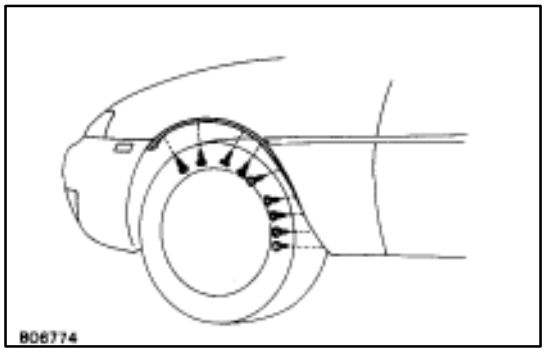

1. **REMOVE FRONT FENDER WHEEL OPENING MOULDING**
   Remove eight screws and the moulding.

2. **INSTALL FRONT FENDER WHEEL OPENING MOULDING**
   Install eight screws and the moulding.

Quarter Wheel Opening Moulding

REMOVAL AND INSTALLATION

(See page BO–101)

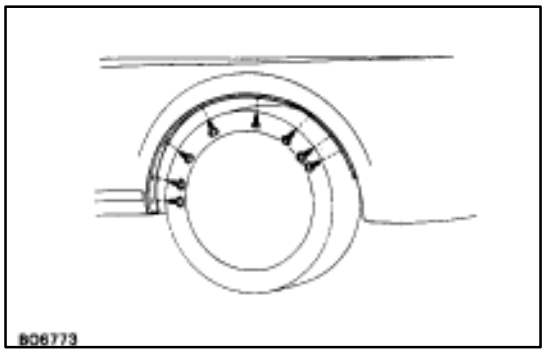

HINT: Do the same manner as the front fender wheel opening moulding.

WhereEverybodyKnowsYourName

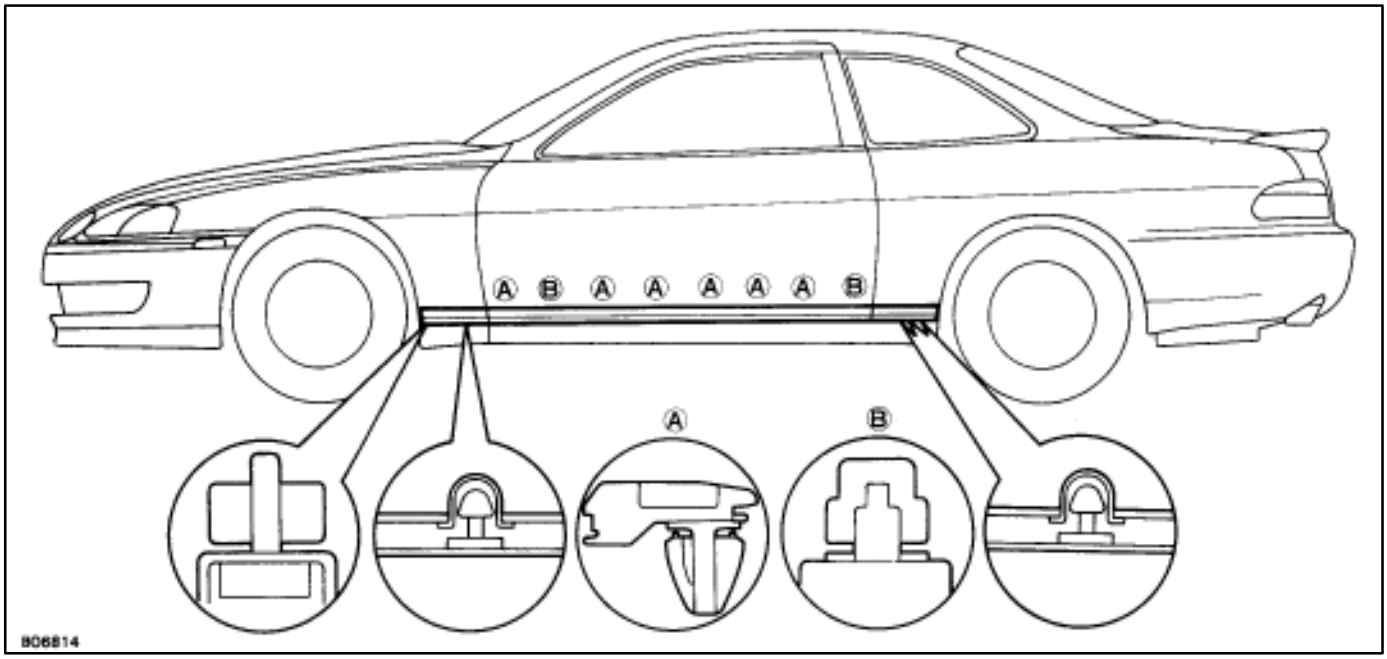

Front Fender Side Protection Moulding REMOVAL AND INSTALLATION

1. **REMOVE FRONT FENDER SIDE PROTECTION MOULDING**
   (a) Remove a nut.
   (b) Pry loose the clip and remove the moulding onto the panel.
2. **INSTALL FRONT FENDER SIDE PROTECTION MOULDING**
   (a) Insert the top of the clip into the panel hole and tap the moulding onto the panel.
   (b) Install a nut.

Front Door Side Protection Moulding REMOVAL AND INSTALLATION

1. **REMOVE FRONT DOOR SIDE PROTECTION MOULDING**
   (a) Remove two nuts.
   (b) Pry loose clips remove the moulding onto the panel.
2. **INSTALL FRONT DOOR SIDE PROTECTION MOULDING**
   (a) Insert the top of clips into the panel hole and tap the moulding onto the panel.
   (b) Install two nuts.

Quarter Side Protection Moulding REMOVAL AND INSTALLATION

1. **REMOVE QUARTER SIDE PROTECTION MOULDING**
   (a) Remove a nut.
   (b) Pry loose clips and remove the moulding onto the panel.
2. **INSTALL QUARTER SIDE PROTECTION MOULDING**
   (a) Insert the top of clips into the panel hole and tap the moulding onto the panel.
   (b) Install a nut.

WhereEverybodyKnowsYourName

MUD GUARD (For Canada)

COMPONENTS

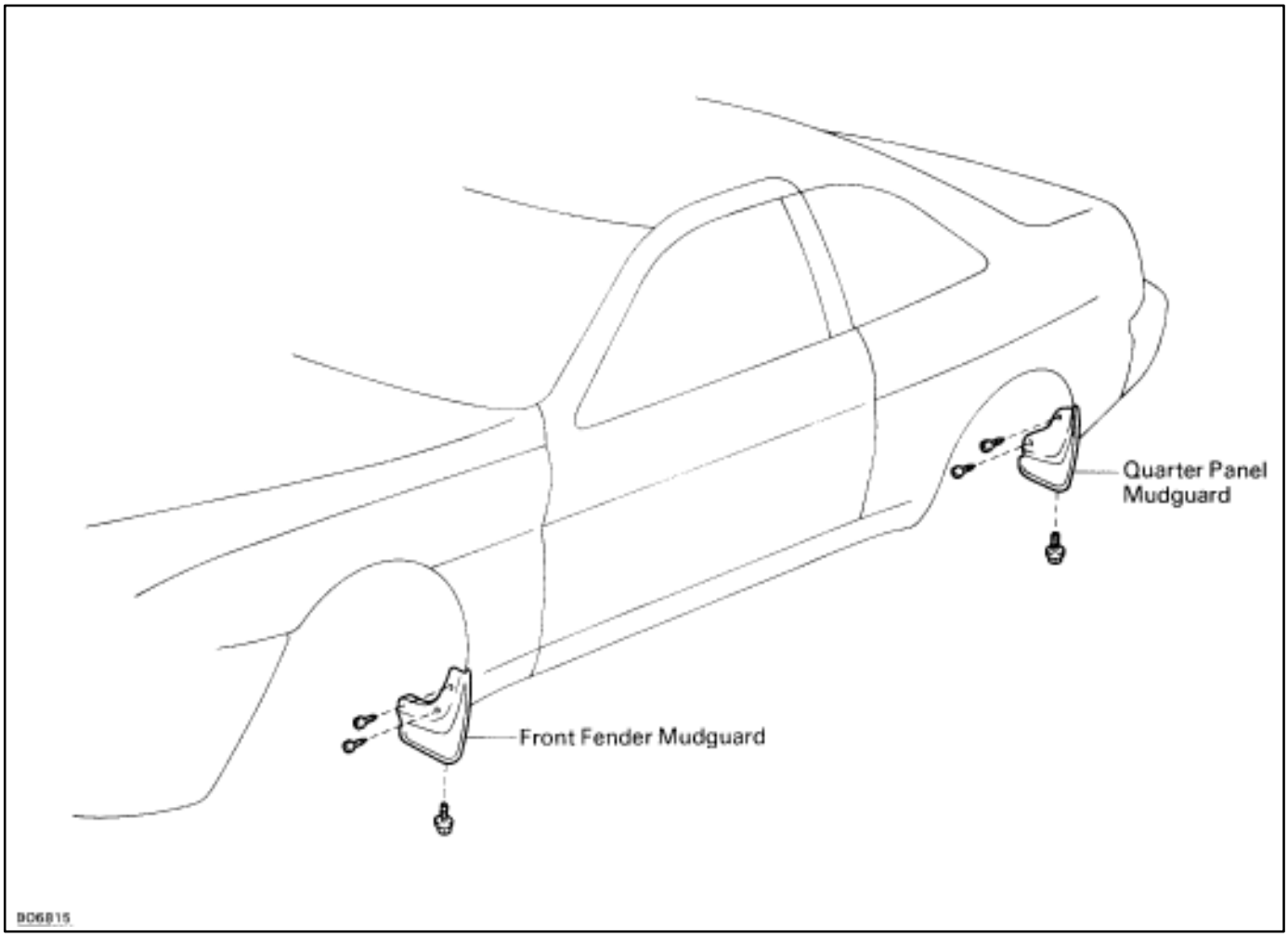

Front Fender Mudguard

REMOVAL AND INSTALLATION

1. **REMOVE FRONT FENDER MUDGUARD**
   Remove three screws and the mudguard.
2. **INSTALL FRONT FENDER MUDGUARD**
   Install the mudguard with three screws.

Quarter Panel Mudguard

REMOVAL AND INSTALLATION

HINT: Do the same manner as the front fender mudguard.

WhereEverybodyKnowsYourName

REAR SPOILER

COMPONENTS

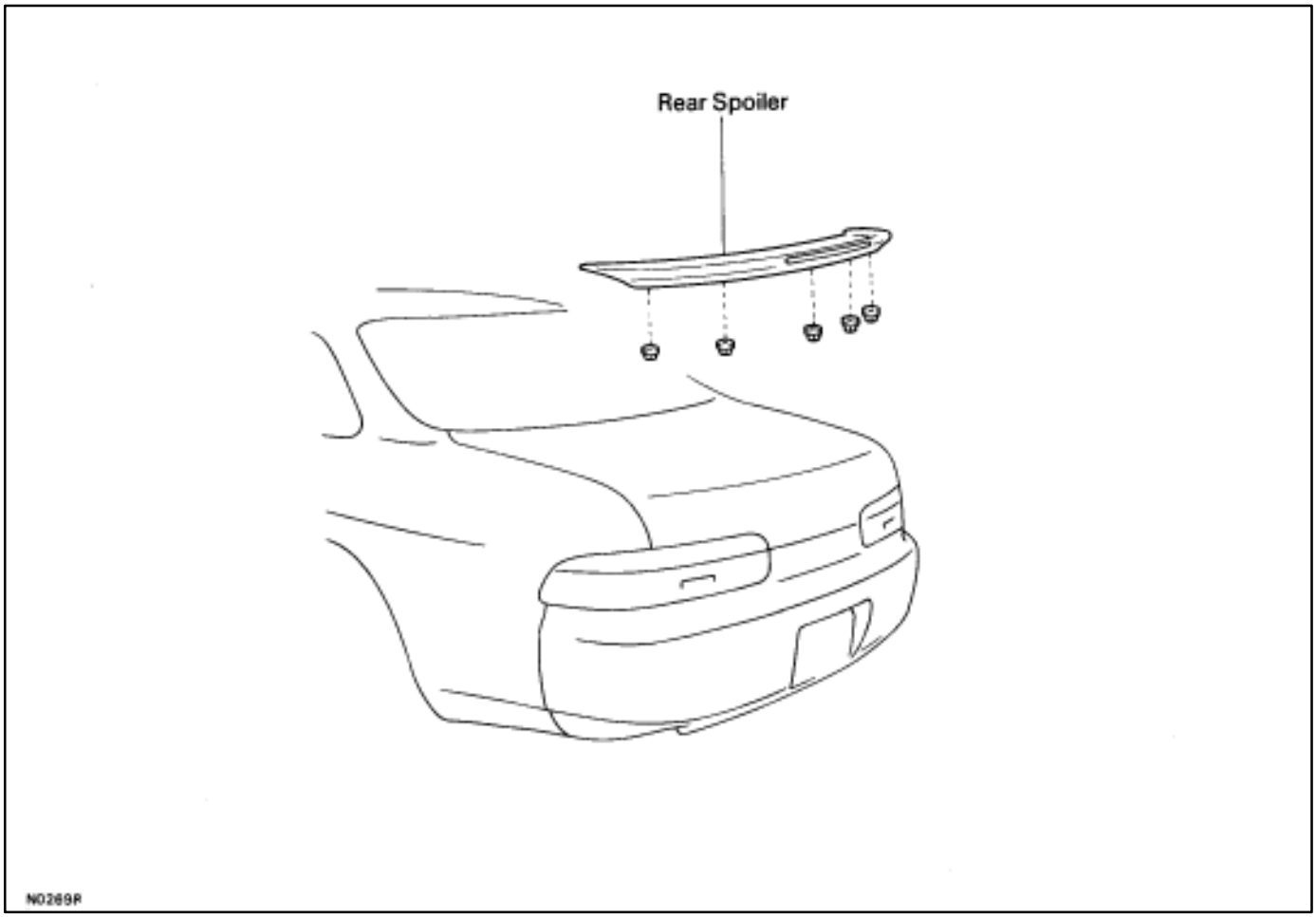

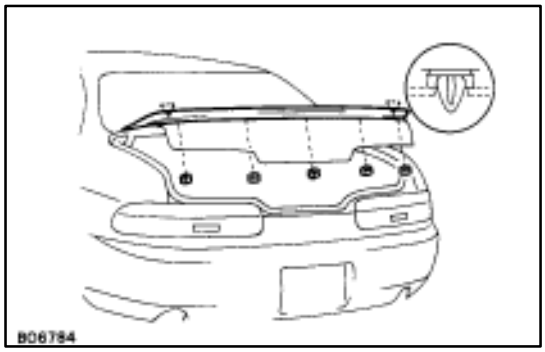

REMOVAL AND INSTALLATION

1. **REMOVE DOOR TRIM**
2. **REMOVE REAR SPOILER**
   Disconnect the connector, remove five nuts and the spoiler.
3. **INSTALL REAR SPOILER**
   Connect the connector, install five nuts and the spoiler.
4. **INSTALL DOOR TRIM**

WhereEverybodyKnowsYourName

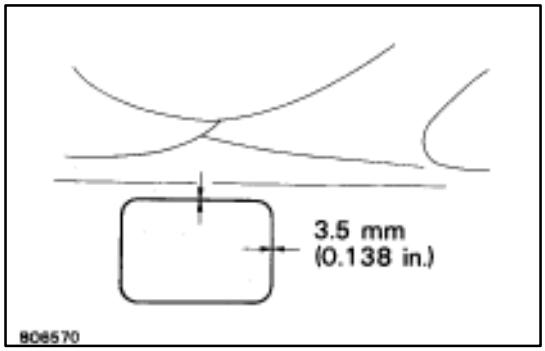

FUEL LID
Fitting Adjustments

HINT: Adjust the fuel lid according to the following method.

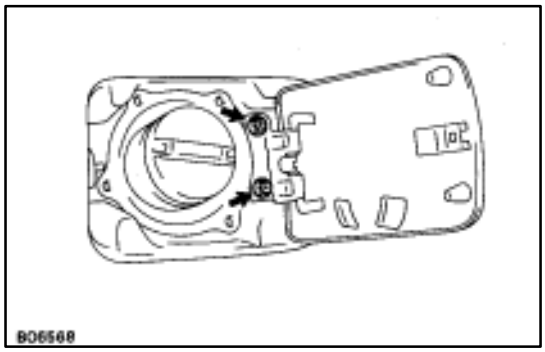

ADJUST FUEL FILLER OPENING LID

Loosen the two screws and adjust the lid as shown.

Fuel Lid
COMPONENTS

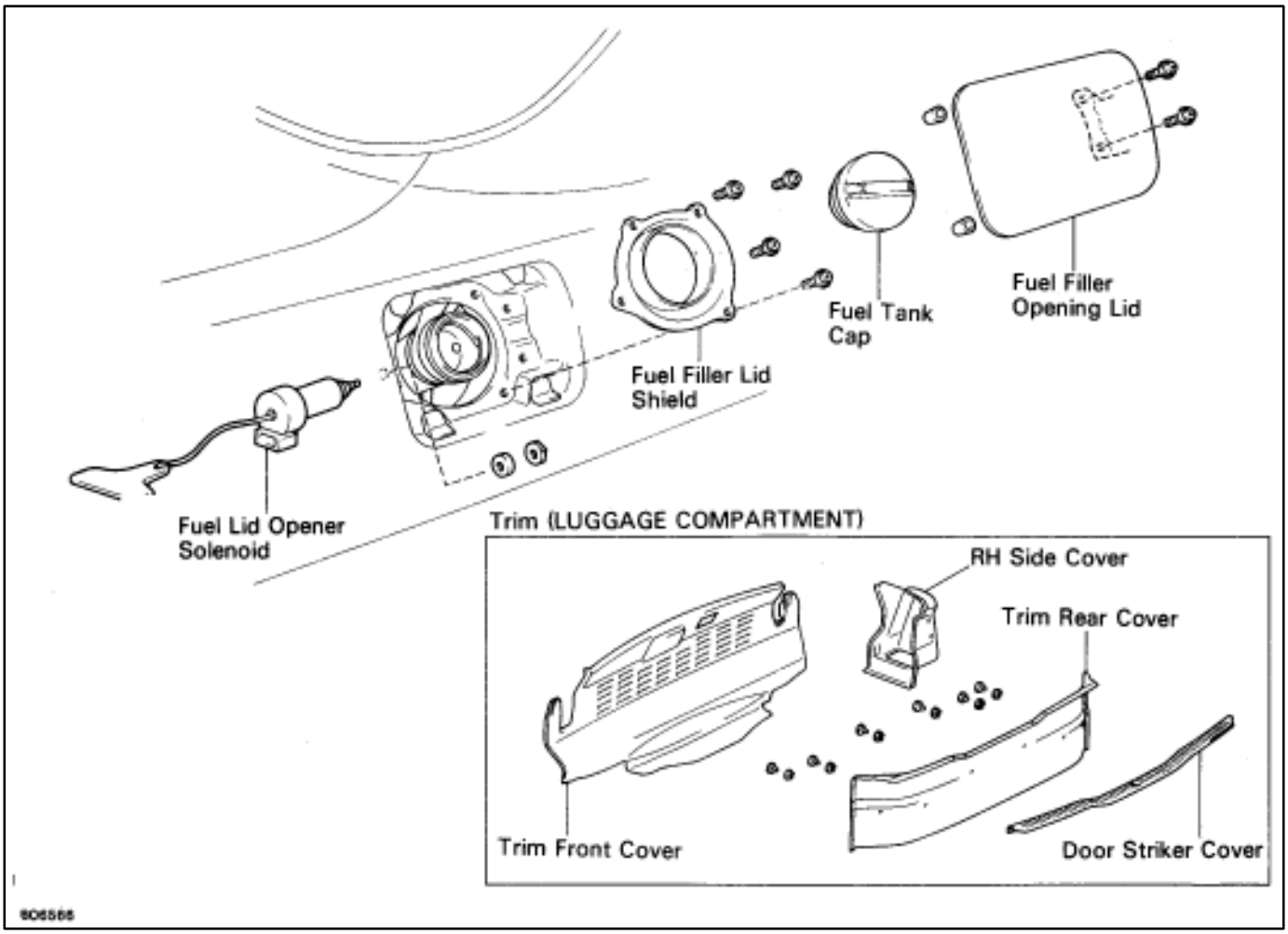

WhereEverybodyKnowsYourName

INSTRUMENT PANEL
COMPONENTS

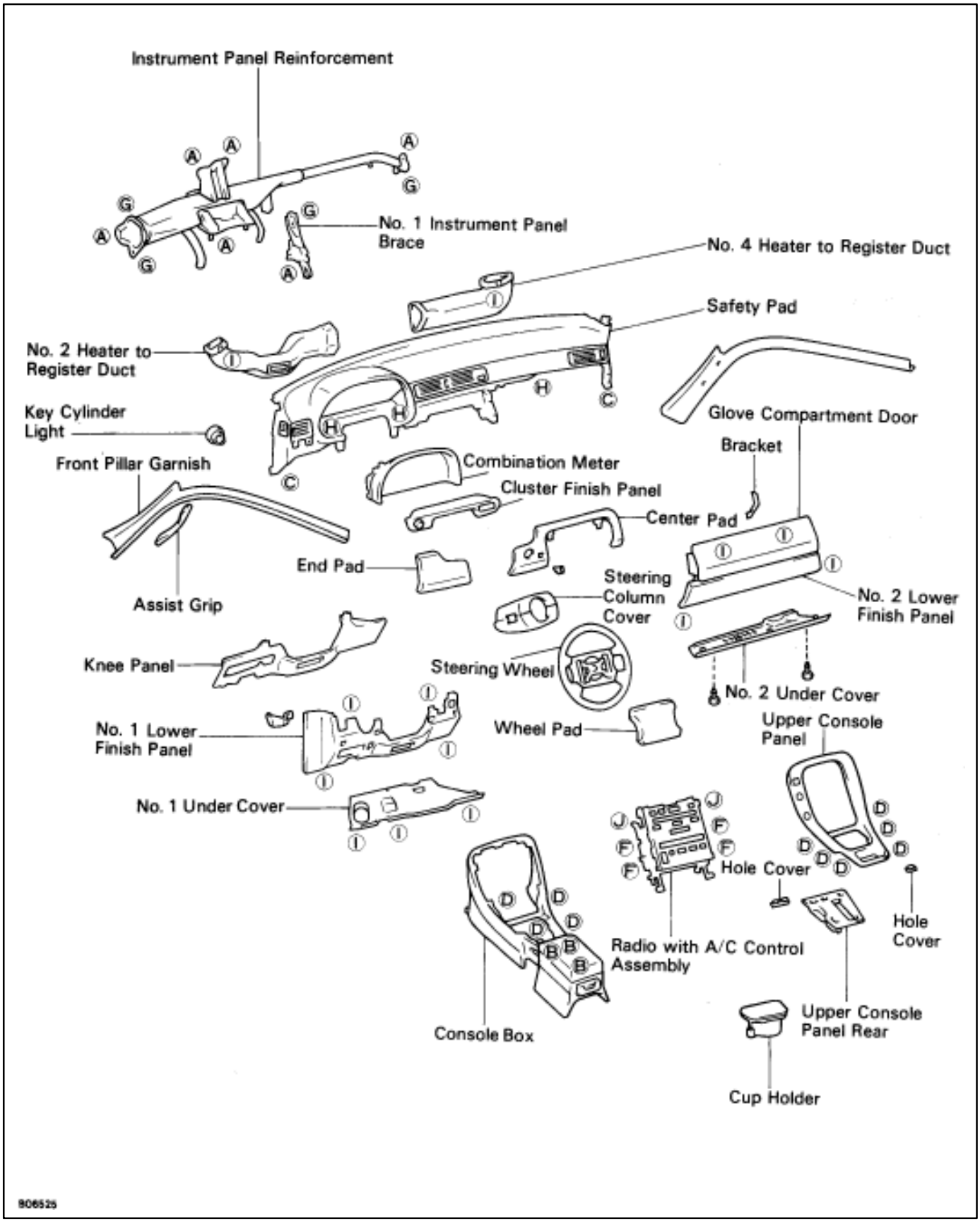

WhereEverybodyKnowsYourName

COMPONENTS (Cont'd)

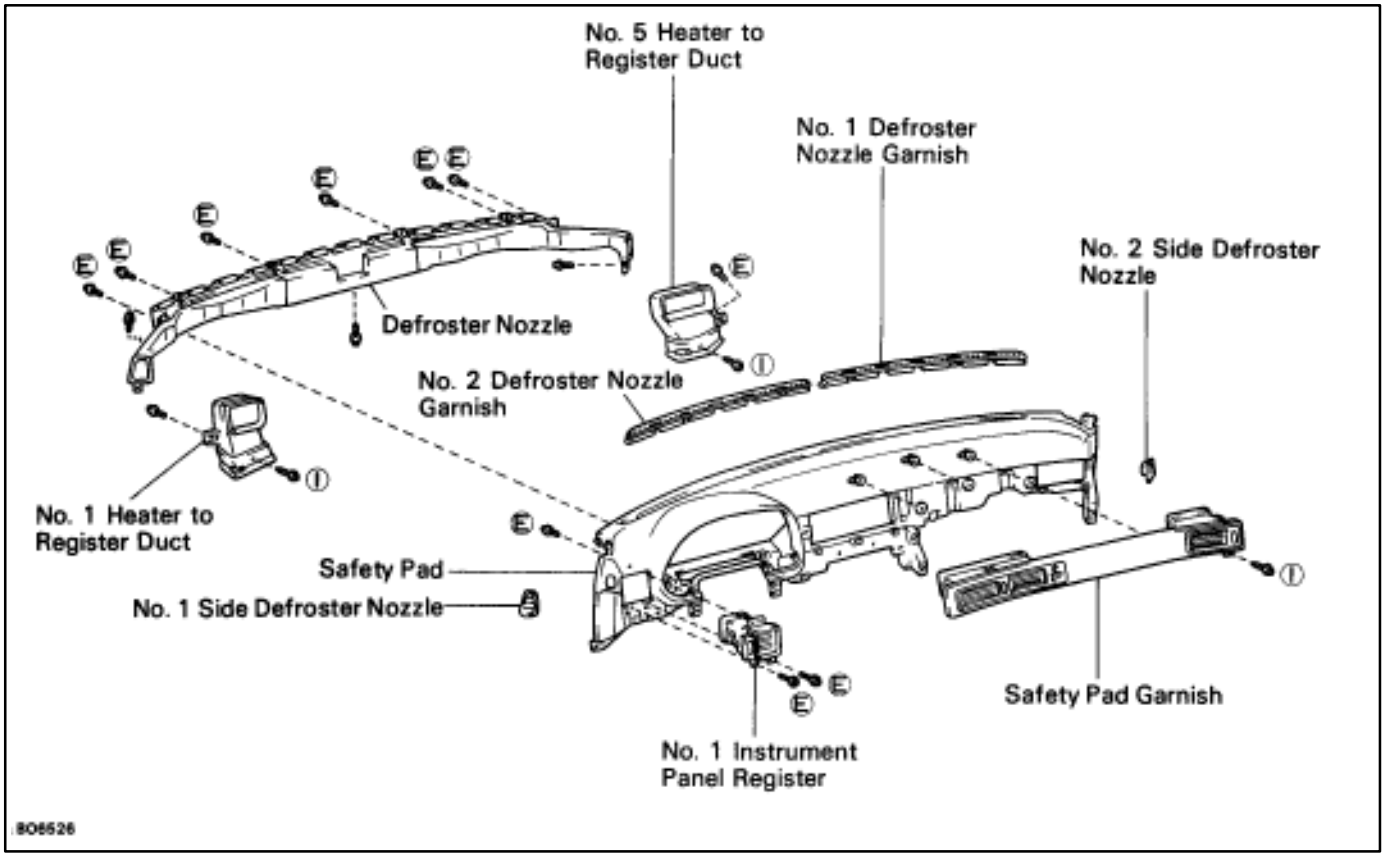

HINT: Screw sizes in the illustration on the previous page are indicated using the code below for removal and installation of safety pad.

mm (in.)

Code	Shape	Size	Code	Shape	Size	Code	Shape	Size
A		∅ = 8 (0.32) L = 20 (0.79)	D		∅ = 5 (0.20) L = 18 (0.71)	G		∅ = 8 (0.32)
B		∅ = 6 (0.24) L = 16 (0.63)	E		∅ = 5 (0.20) L = 14 (0.55)	H		∅ = 6 (0.24)
C	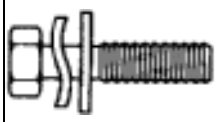	∅ = 6 (0.24) L = 20 (0.79)	F		∅ = 5 (0.20) L = 18 (0.71)	I		∅ = 5 (0.20) L = 16 (0.63)
J		∅ = 6 (0.24) L = 25 (0.98)						

BO6527

WhereEverybodyKnowsYourName

REMOVAL OF INSTRUMENT PANEL

(See page BO–108)

1. TILT DOWN AND PULL OUT STEERING WHEEL

2. DISCONNECT BATTERY CABLE FROM NEGATIVE TERMINAL

CAUTION: Work must be started after approx. 20 seconds or longer from the time the ignition switch is turned to the "LOCK" position and the negative (–) terminal cable is disconnected from the battery.

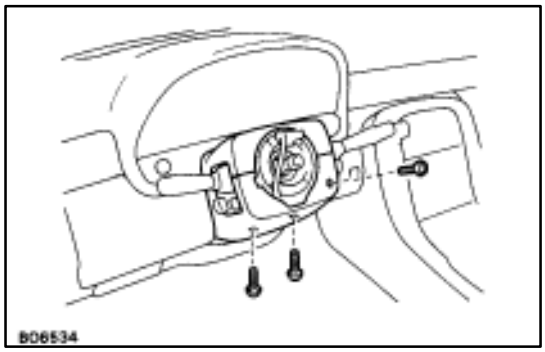

3. REMOVE RIGHT AND LEFT FRONT PILLAR GARNISH
(See step 2 on page BO–122)

4. REMOVE STEERING WHEEL
(See step 1 on page SR–7)
NOTICE: The steering wheel pad should be placed with the pad top surface facing up.

5. REMOVE STEERING COLUMN COVER
Remove three screws and the cover.

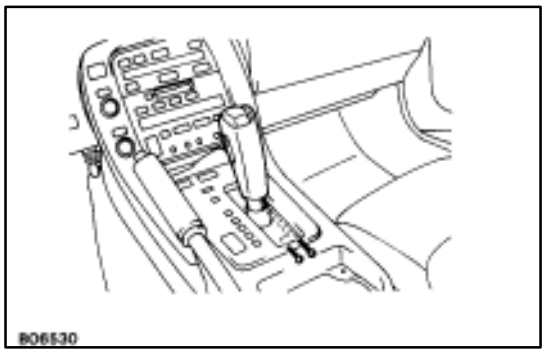

6. REMOVE SHIFT LEVER NOB
(a) Slide the shaft collar downward and remove two screws.
(b) Remove the nob.

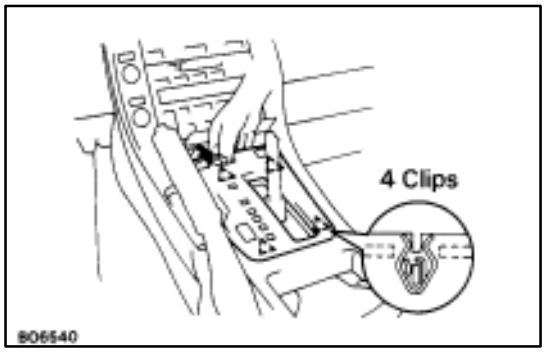

7. REMOVE UPPER CONSOLE PANEL REAR
(a) Open the ash tray lid.
(b) Lift the console panel toward you.
(c) Insert your finger in the shift lever groove and pull the console panel upward away from you.
(d) Remove the panel.

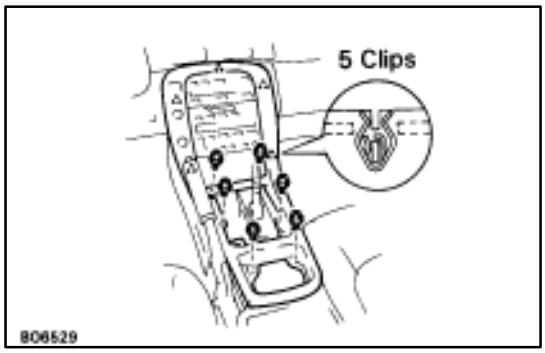

8. REMOVE CUP HOLDER
(a) Open the cup holder lid.
(b) Pull up the holder.
NOTICE: Do not pull the lid.

9. REMOVE UPPER CONSOLE PANEL
Remove six screws and pry out of the panel.

WhereEverybodyKnowsYourName

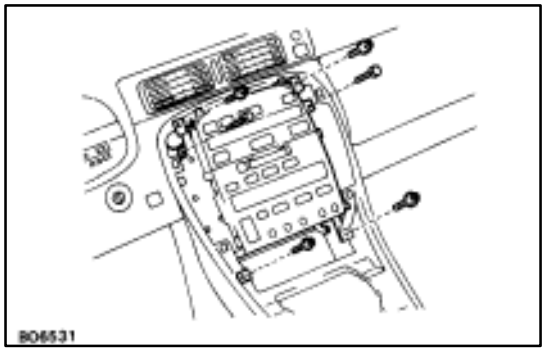

10. REMOVE RADIO WITH A/C CONTROL ASSEMBLY

(a) Remove six bolts and the radio.

(b) Disconnect the connectors.

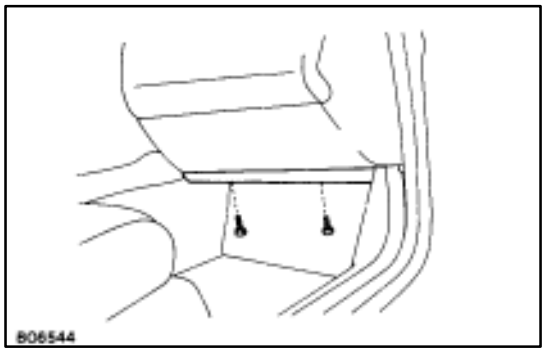

11. REMOVE NO. 2 UNDER COVER

(a) Using a clip remover, remove two clips.

(b) Remove the cover.

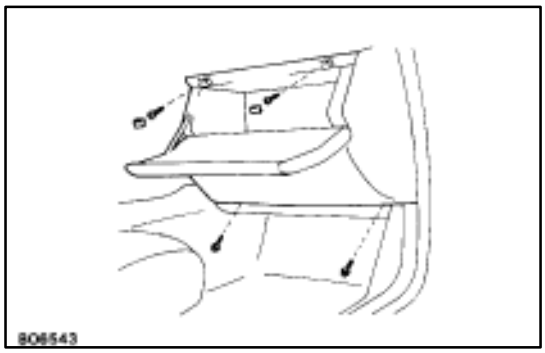

12. REMOVE NO. 2 LOWER FINISH PANEL AND GLOVE COMPARTMENT ASSEMBLY

(a) Remove two caps and two screws.

(b) Remove two screws.

(c) Remove the glove compartment assembly.

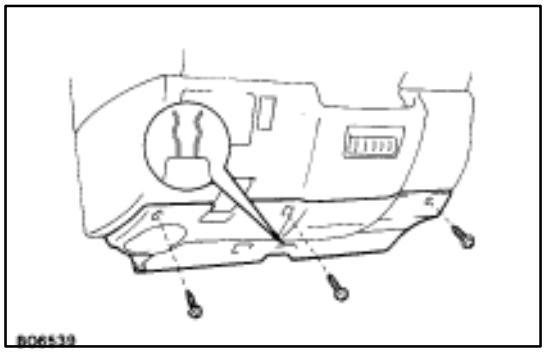

13. REMOVE NO. 1 UNDER COVER

(a) Remove three screws.

(b) Using the screwdriver, remove the cover.

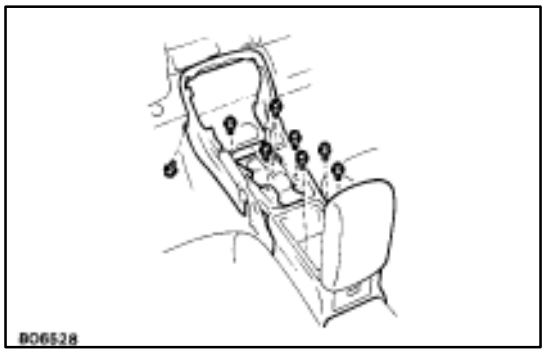

14. REMOVE CONSOLE BOX

Remove five screws, three bolts and the box.

WhereEverybodyKnowsYourName

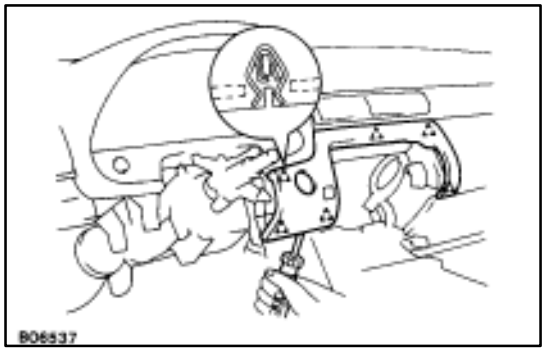

15. REMOVE CENTER PAD

Using a screwdriver, pry out the panel and remove it.

HINT: Tape screwdriver tip before use.

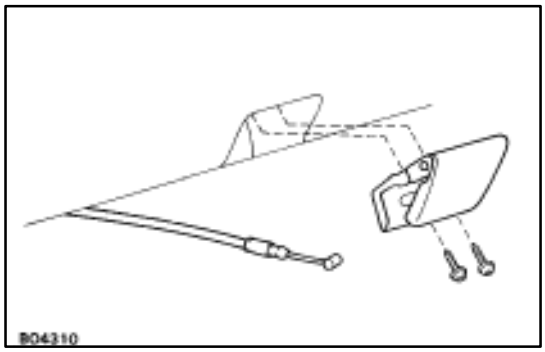

16. REMOVE ENGINE HOOD RELEASE LEVER

(a) Remove two screws and the engine hood release lever.

(b) Disconnect the release cable from the lever.

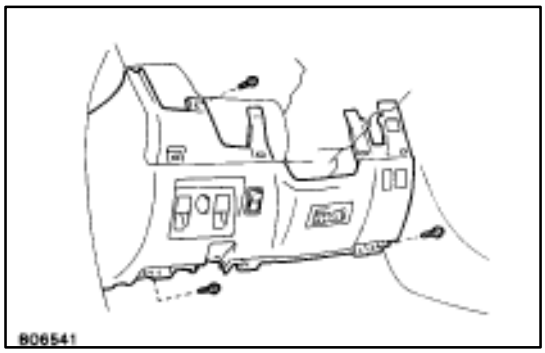

17. REMOVE NO. 1 LOWER FINISH PANEL

(a) Using a screwdriver, remove the end pad.

HINT: Tape the screwdriver tip before use.

(b) Remove the bolt and two screws.

(c) Disconnect the connectors and remove the panel.

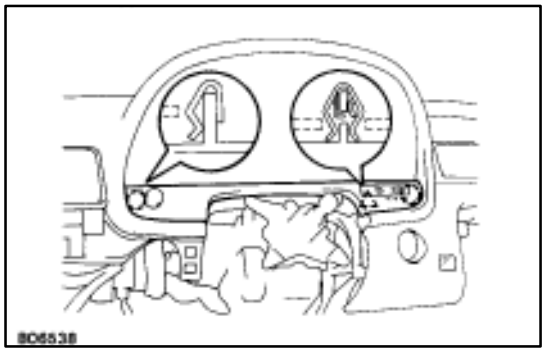

18. REMOVE COMBINATION SWITCH

19. REMOVE CLUSTER FINISH PANEL

Pull out the panel and disconnect the connector.

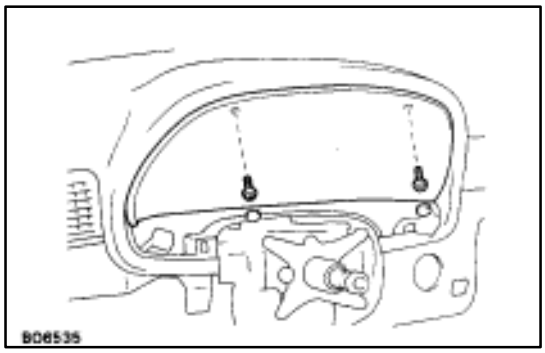

20. REMOVE COMBINATION METER

(a) Remove two caps.

(b) Remove two screws and the meter.

(c) Disconnect the connectors from the meter.

WhereEverybodyKnowsYourName

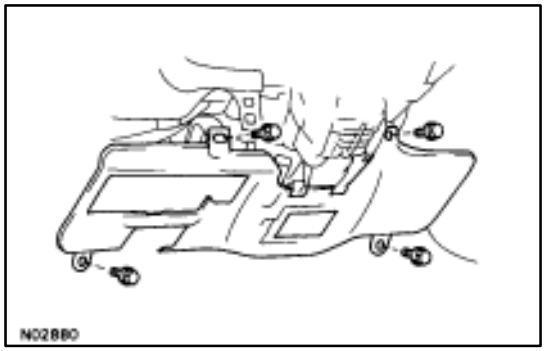

21. REMOVE KNEE PANEL

(a) Remove four bolts.

(b) Remove knee panel.

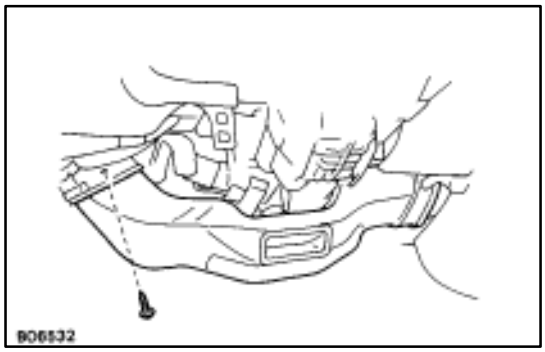

22. REMOVE NO. 2 HEATER TO REGISTER DUCT

Remove the screw and pull out the duct.

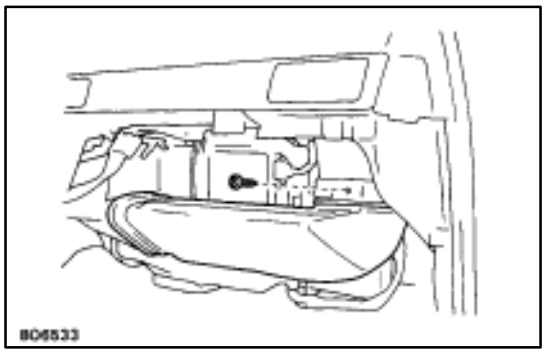

23. REMOVE NO. 4 HEATER TO REGISTER DUCT

Remove the screw and pull out the duct.

24. REMOVE SAFETY PAD

(a) Using a clip remover, remove two clips.

(b) Remove two bolts, three nuts and the safety pad.

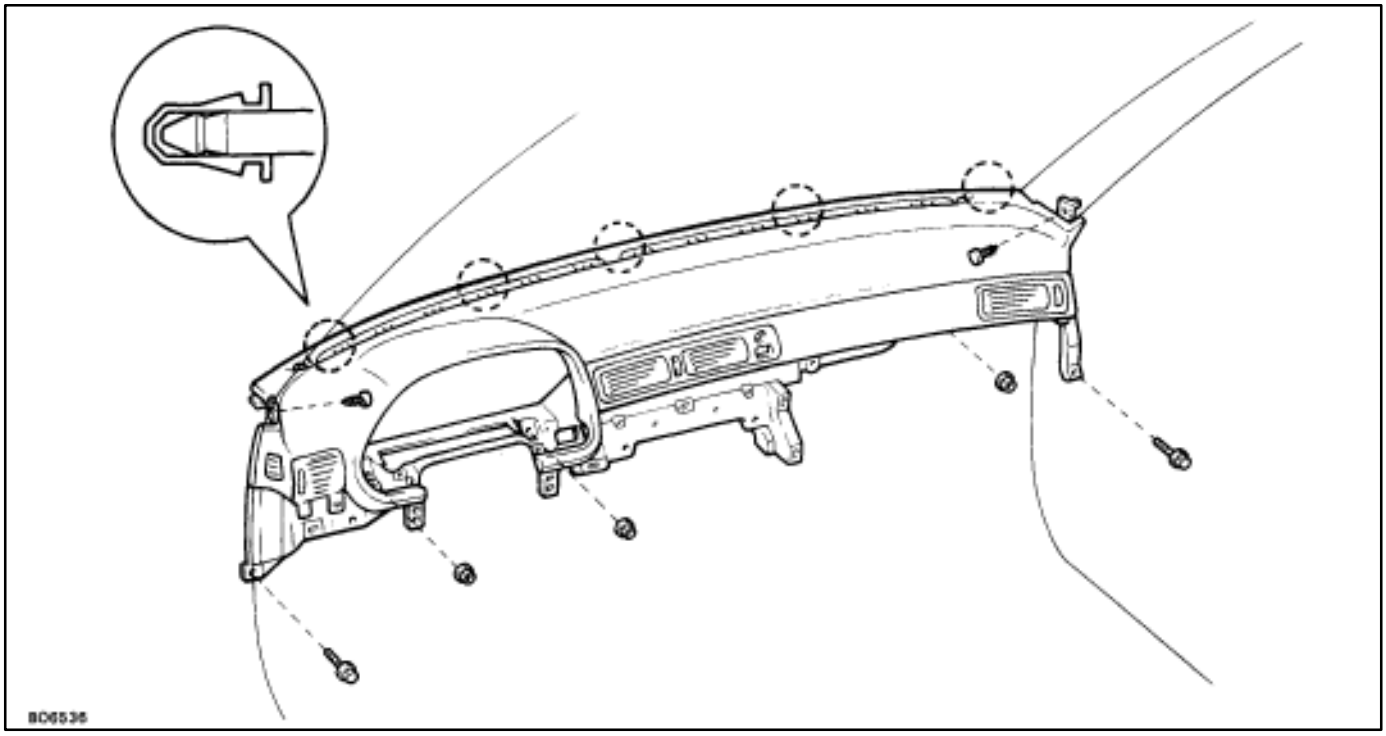

WhereEverybodyKnowsYourName

25. REMOVE WIRE HARNESS

Remove five screws, clips and the wire harness from the safety pad.

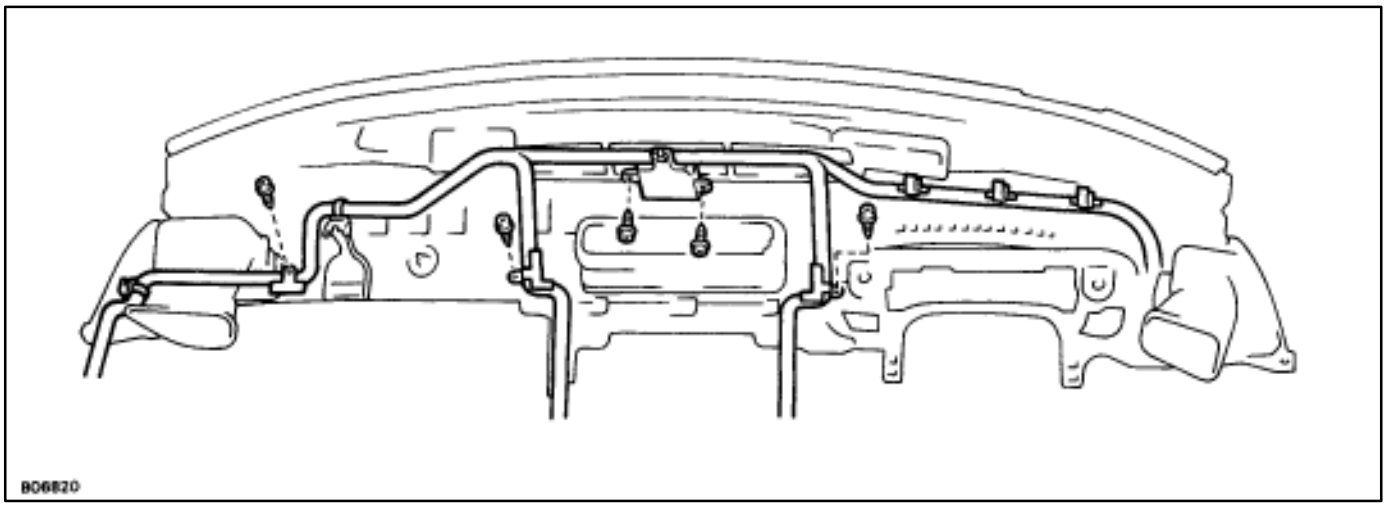

26. DISASSEMBLY OF SAFETY PAD

Remove following parts:

(a) Safety pad garnish
(b) No. 1 Instrument panel register
(c) No. 1 Side defroster nozzle
(d) No. 2 Side defroster nozzle
(e) No. 1 Defroster nozzle garnish
(f) No. 2 Defroster nozzle garnish
(g) No. 1 Heater to register duct
(h) No. 5 Heater to register duct
(i) Defroster nozzle

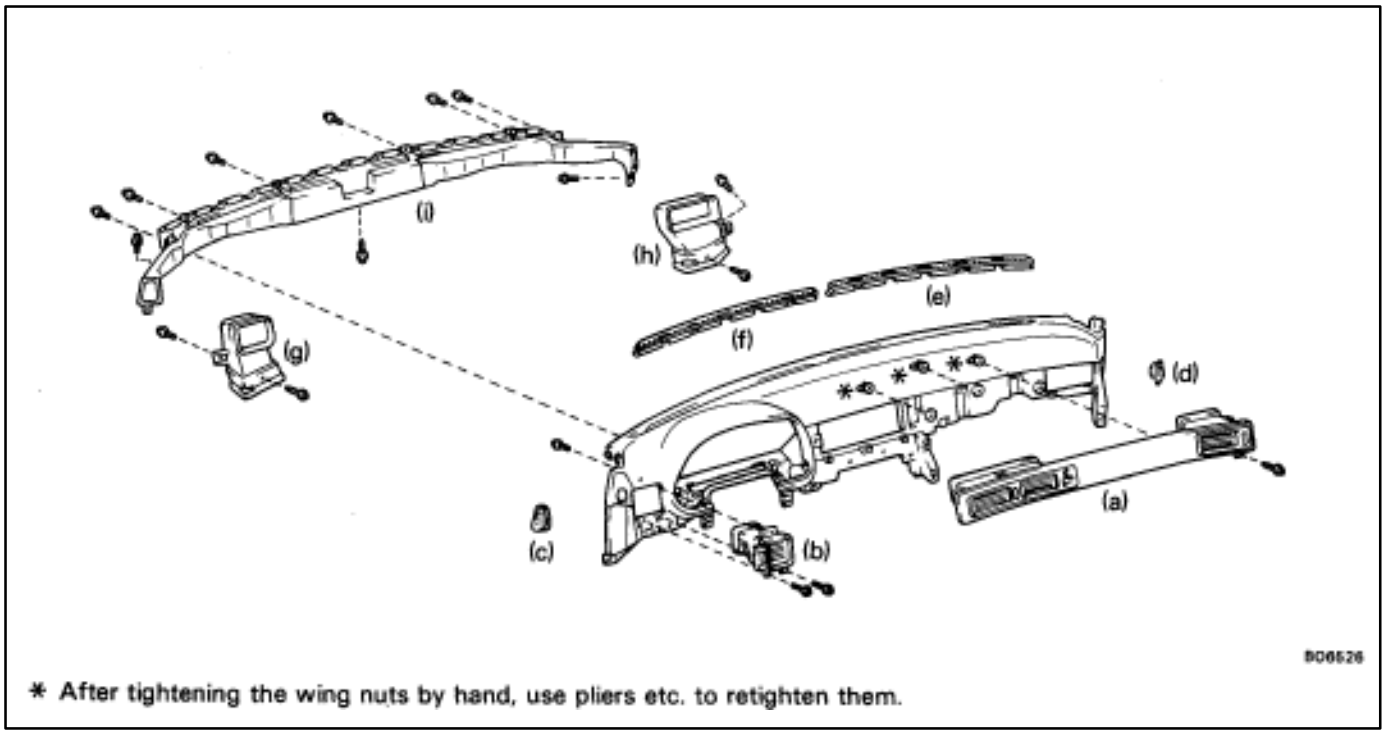

* After tightening the wing nuts by hand, use pliers etc. to retighten them.

WhereEverybodyKnowsYourName

27. REMOVE INSTRUMENT PANEL REINFORCEMENT

Remove four bolts and seven nuts to remove the reinforcement as shown.

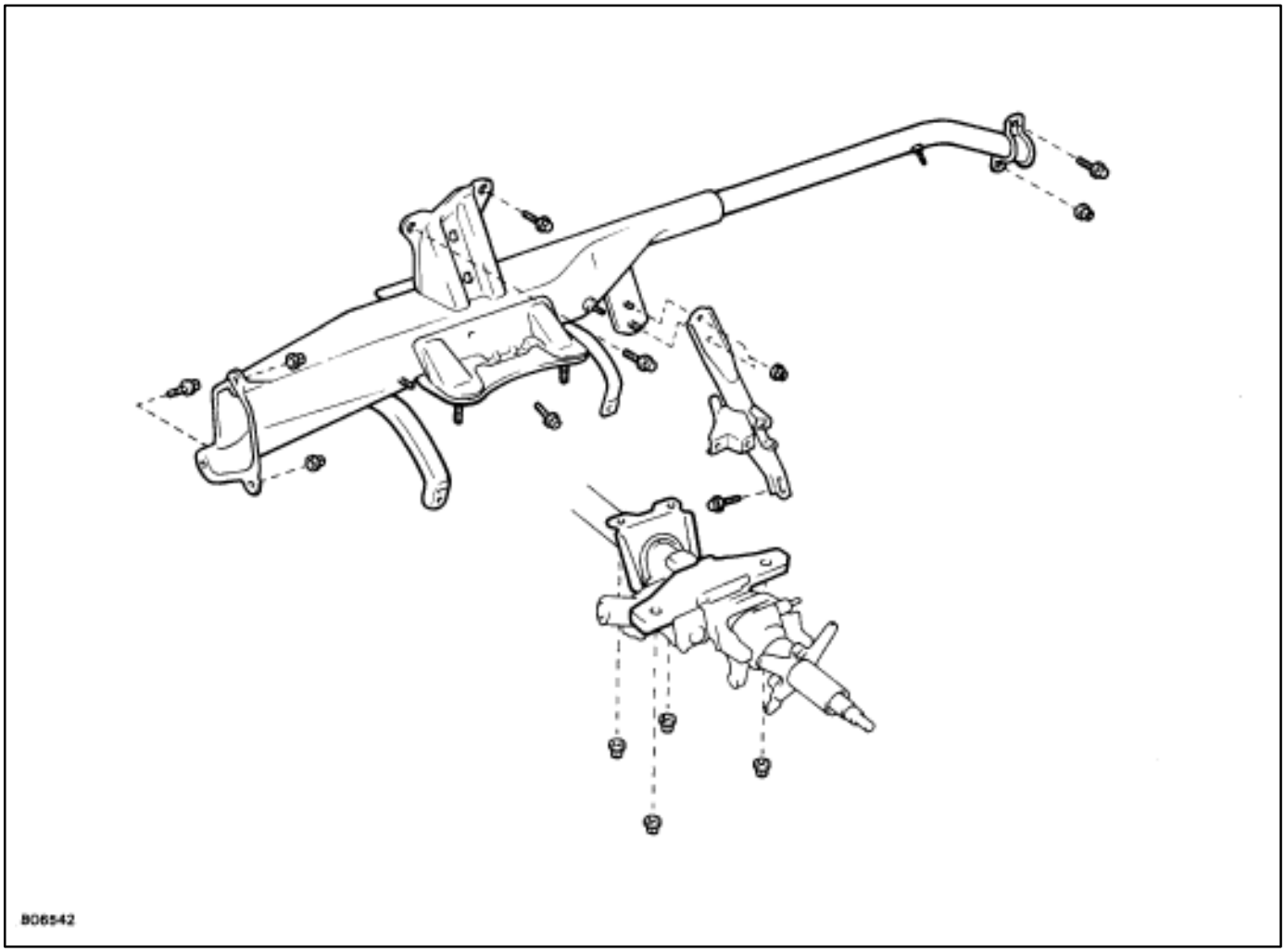

INSTALLATION OF INSTRUMENT PANEL

(See page BO–108)

INSTALL INSTRUMENT PANEL PARTS BY FOLLOWING REMOVAL SEQUENCE IN REVERSE

HINT: When installing safety pad garnish, after tightening the wing nuts by hand, use pliers etc. to retighten them.

WhereEverybodyKnowsYourName

FLOOR CARPET

COMPONENTS

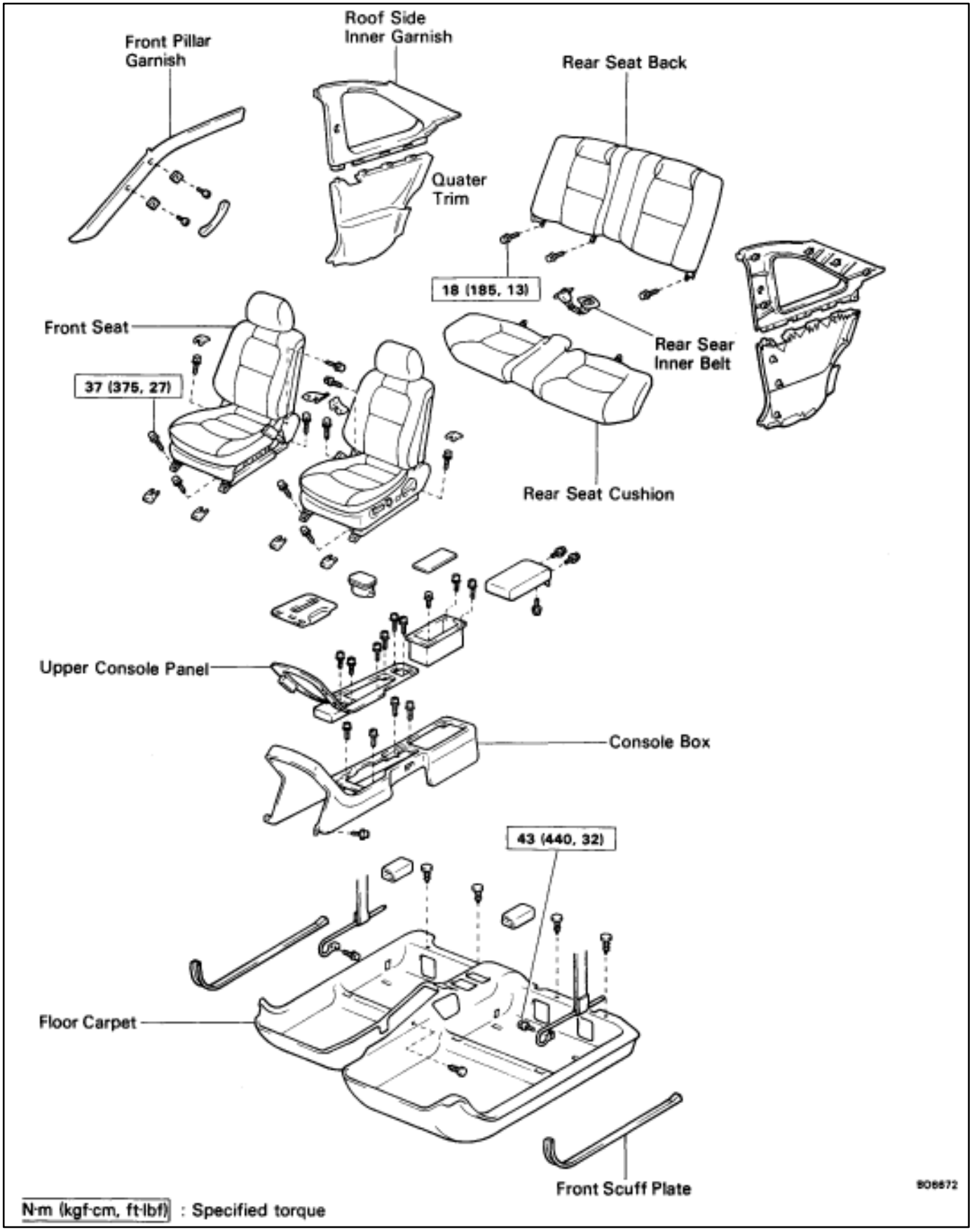

WhereEverybodyKnowsYourName

REMOVAL OF FLOOR CARPET

1. REMOVE FOLLOWING PARTS:

- Front seat (See step 3 on page BO–58)
- Rear seat (See steps 1 to 2 on page BO–66)
- Roof side inner garnish (See step 8 on page BO–123)
- Front pillar garnish (See step 2 on page BO–122)
- Front scuff plate (See step 11 on page BO–123)
- Console box (See step 14 on page BO–111)

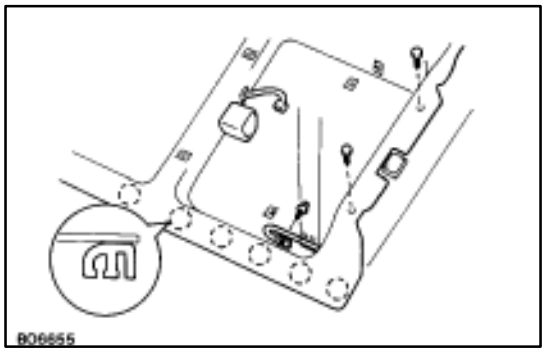

2. REMOVE FLOOR CARPET

(a) Using a clip remover, remove the clips.

(b) Remove the front seat belt lower bolt.

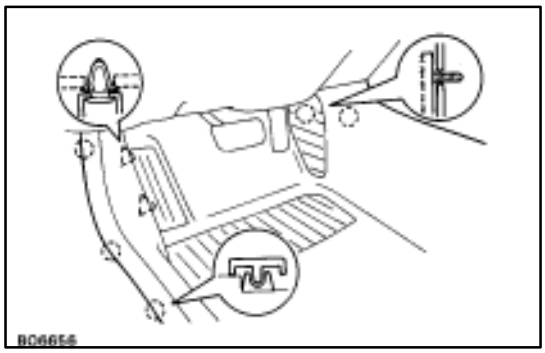

[Driver's Side]

(c) Raise the end of the carpet and disconnect the hook.

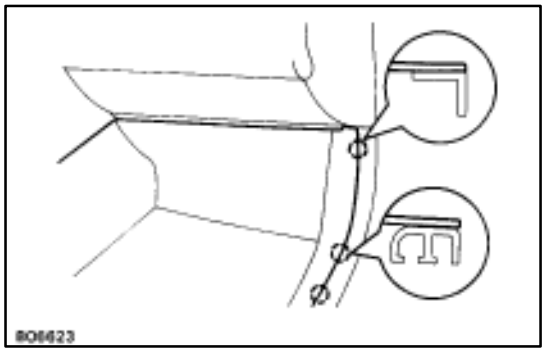

[Passenger's Side]

(d) Raise the end of the carpet and disconnect the hook.

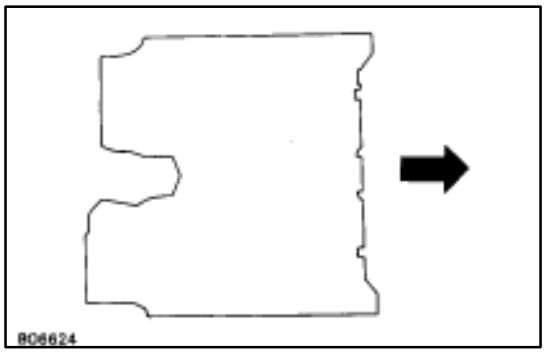

(e) Slide the carpet backward and remove it.

WhereEverybodyKnowsYourName

INSTALLATION OF FLOOR CARPET

(See page BO–117)

INSTALL FLOOR CARPET PARTS BY FOLLOWING REMOVAL SEQUENCE IN REVERSE

HINT: Torque following parts.

(a) Front seat belt lower anchor bolt

Torque: 43 N·m (440 kgf·cm, 32 ft·lbf)

(b) Front Seat

Torque: 37 N·m (375 kgf·cm, 27 ft·lbf)

WhereEverybodyKnowsYourName

ROOF HEADLINING
COMPONENTS

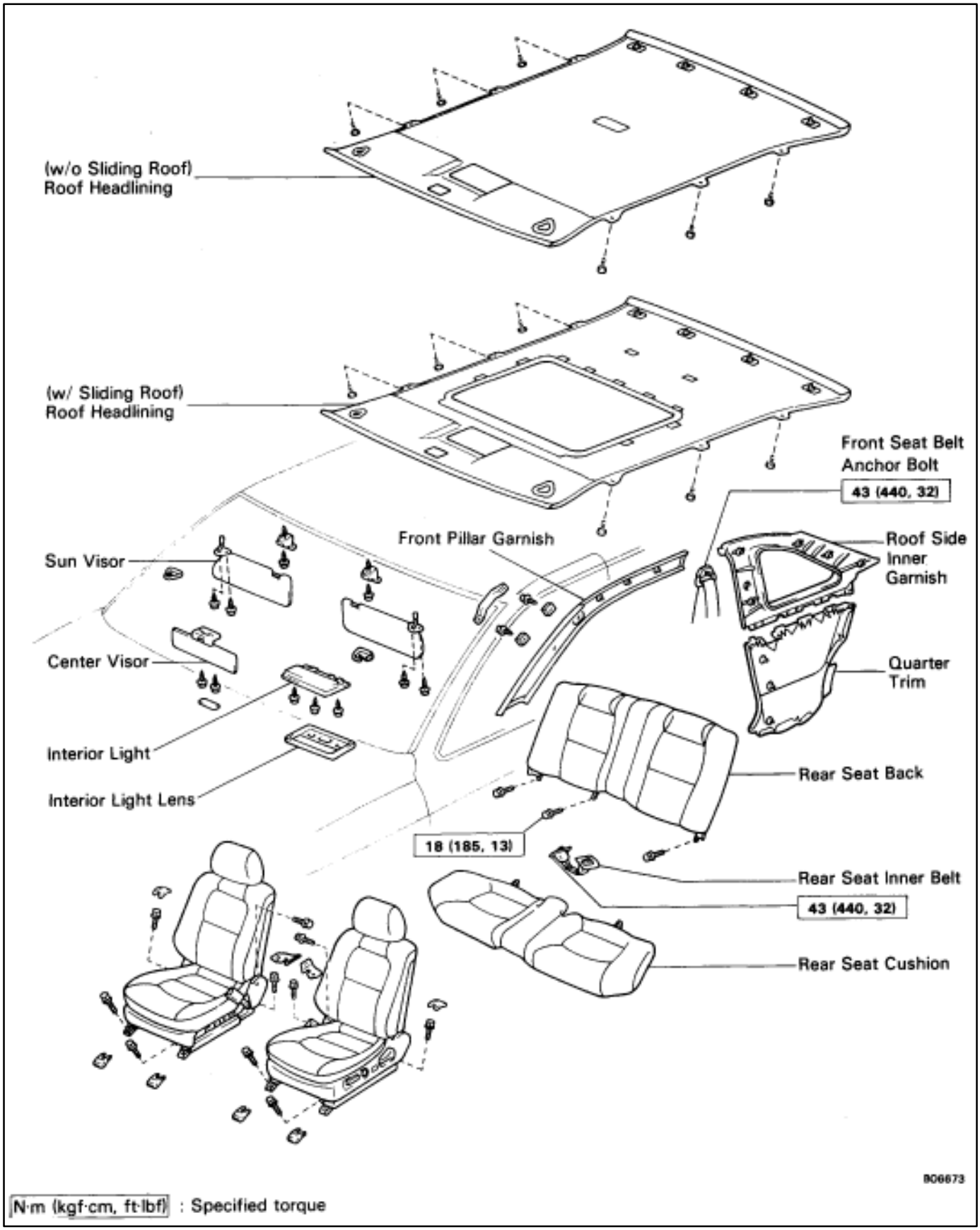

N·m (kgf·cm, ft·lbf) : Specified torque

WhereEverybodyKnowsYourName

REMOVAL OF ROOF HEADLINING

(See page BO–119)

1. REMOVE FOLLOWING PARTS:

- Front pillar garnish
- Sun visor
- Rear seat back and cushion
- Roof side inner garnish
- Quarter trim
- Interior Light
- Center visor

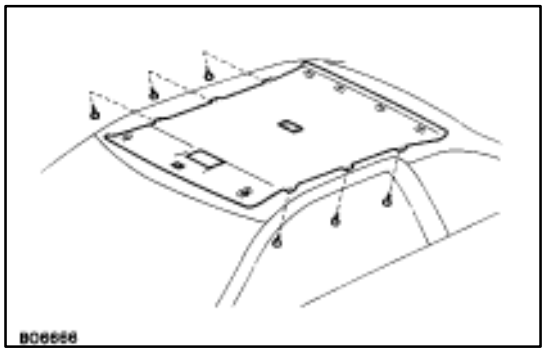

2. REMOVE ROOF HEADLINING

(a) Disconnect four clips from the roof panel rear end.
(b) Using a clip remover, remove six clips.
(c) Release the fastener tapes, then remove the headlining.

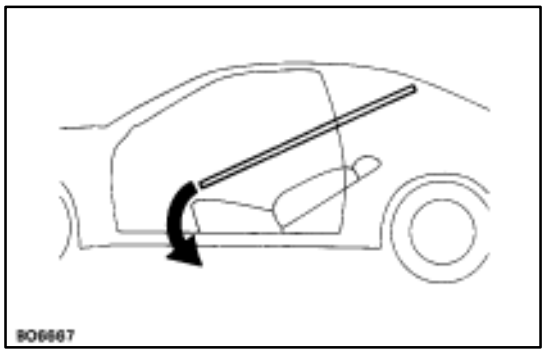

(d) Fully recline the front seat back.
(e) Bring out the headlining as shown.

NOTICE: Do not fold down the headlining.

INSTALLATION OF ROOF HEADLINING

(See page BO–119)

INSTALL ROOF HEADLINING PARTS BY FOLLOWING REMOVAL SEQUENCE IN REVERSE

HINT: Torque following parts:

(a) Rear seat back

Torque: 18 N·m (185 kgf·cm, 13 ft·lbf)

(b) Rear seat belt inner belt

Torque: 43 N·m (440 kgf·cm, 32 ft·lbf)

(c) Front seat belt shoulder anchor bolt

Torque: 43 N·m (440 kgf·cm, 32 ft·lbf)

WhereEverybodyKnowsYourName

TRIM, ASSIST GRIP AND VISOR

COMPONENTS

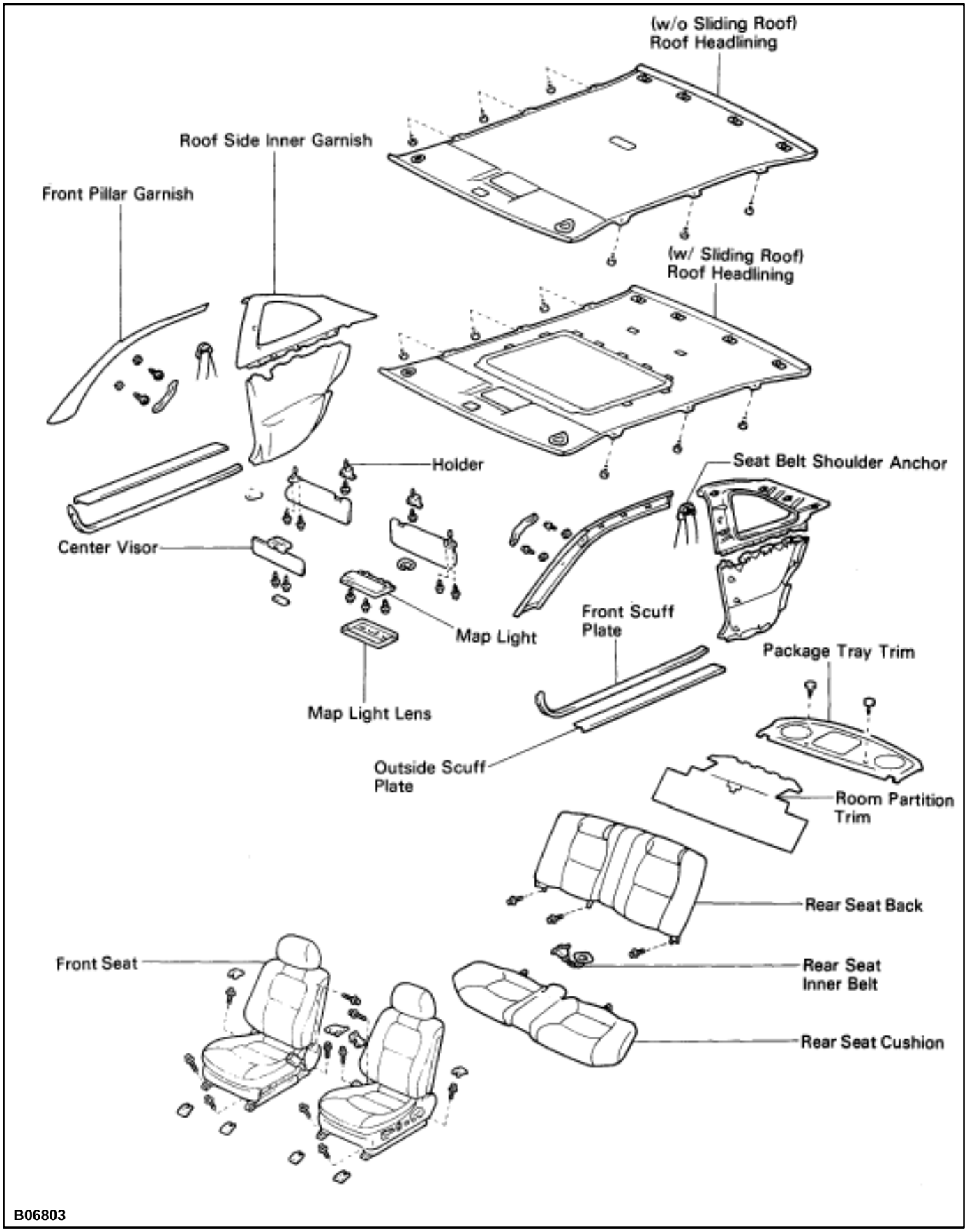

WhereEverybodyKnowsYourName

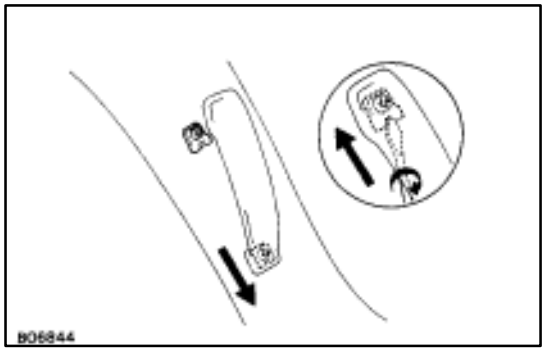

REMOVAL OF TRIM, ASSIST GRIP AND VISOR

(See page BO–121)

1. REMOVE ASSIST GRIP

(a) Lift up the grip so that the screwdriver can be inserted.
(b) Insert the screwdriver into the groove in the cushion.
(c) Turn the screwdriver while pulling the assist grip up ward.
(d) After the top of the assist grip is freed, pull the lower part downward.

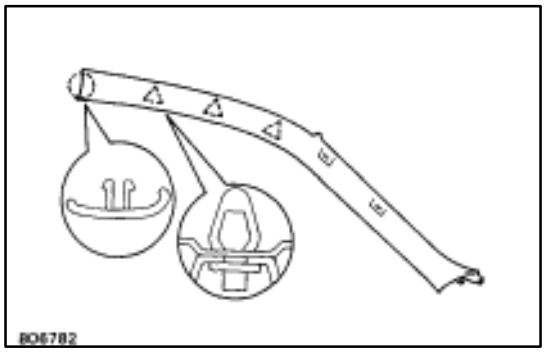

2. REMOVE FRONT PILLAR GARNISH

(a) Remove two screws and the assist grip.
(b) Pry out clips by your hand.
(c) Pull the garnish upward to remove it.

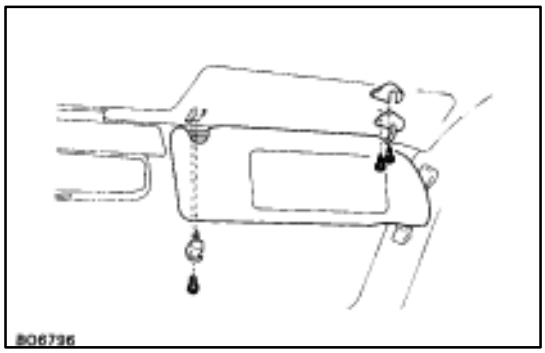

3. REMOVE SUN VISOR

(a) Pry out the cover.
(b) Remove two screws, disconnect the connector and the sun visor.
(c) Remove the screw and the holder.

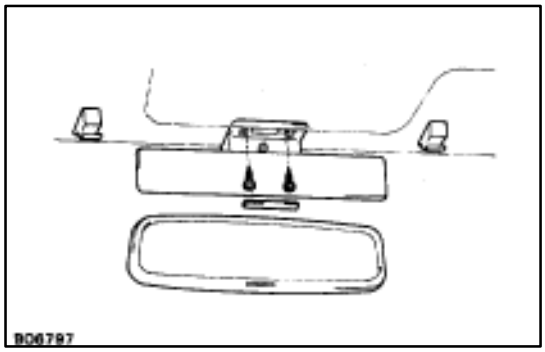

4. REMOVE CENTER VISOR

(a) Pry out the cover.
(b) Remove two screws, disconnect the connector and the visor.

5. REMOVE REAR SEAT CUSHION AND BACK

6. REMOVE FRONT SEAT OUTER BELT

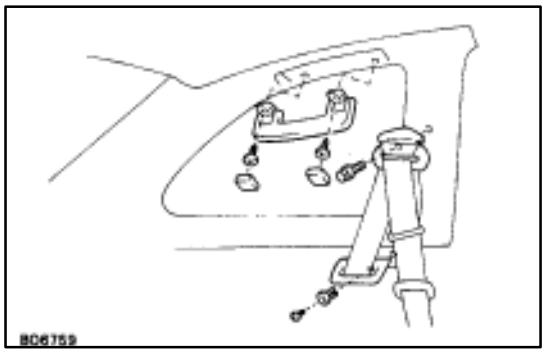

7. REMOVE QUARTER TRIM AND ASSIST GRIP

(a) Remove two caps, two screws and assist grip.
(b) Remove the clip and the belt guide.
(c) Remove the bolt and the front seat belt anchor.

WhereEverybodyKnowsYourName

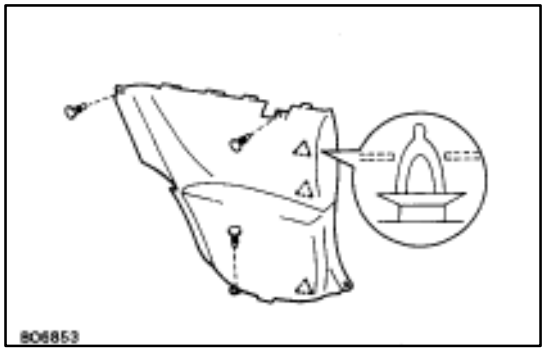

(d) Using a clip remover, remove three clips.
(e) Insert a screwdriver between the retainers and quarter trim to pry it loose.
(f) Remove the quarter trim.

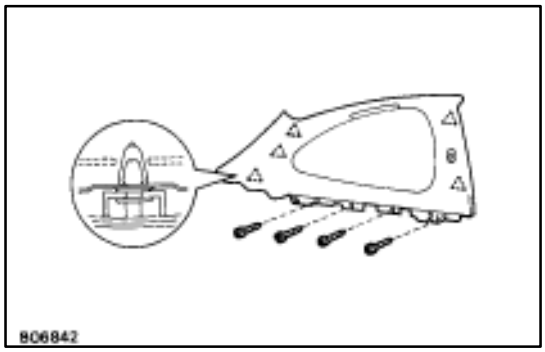

8. REMOVE ROOF SIDE INNER GARNISH
(a) Remove four screws.
(b) Insert a screwdriver between the retainers and inner garnish to pry it loose.
(c) Remove the inner garnish.

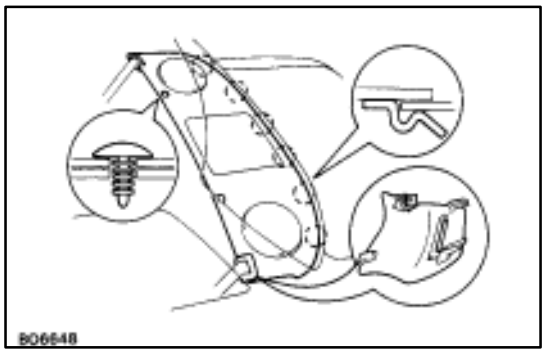

9. REMOVE PACKAGE TRAY TRIM
(a) Using a clip remover, remove two clips.
(b) Pull the belt guide forward to remove it.
(c) Pull the trim forward to remove it.

10. REMOVE ROOM PARTITION TRIM

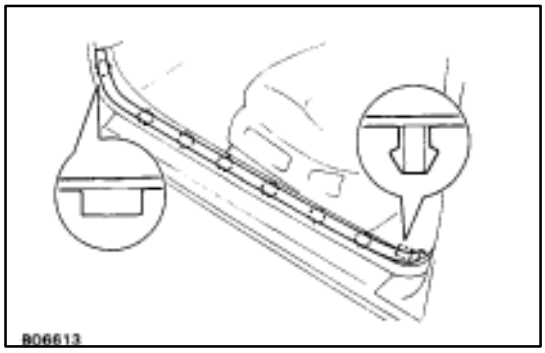

11. REMOVE FRONT SCUFF PLATE
Using a screwdriver, remove the plate.
HINT: Tape the screwdriver tip before use.

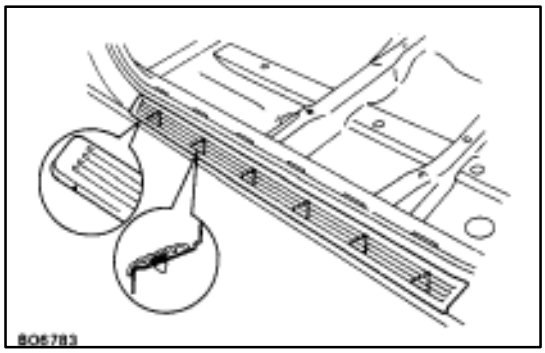

12. REMOVE OUTSIDE SCUFF PLATE
Insert a screwdriver between the retainers and the plate to pry it loose.
HINT: Tape the screwdriver tip before use.

WhereEverybodyKnowsYourName

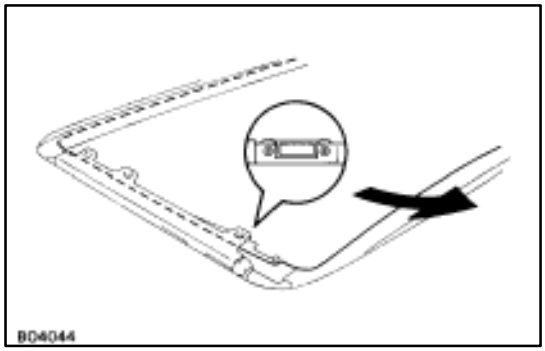

13. (w/ Sliding Roof)
REMOVE SUN SHADE TRIM
(See steps 1 to 10 on pages BO–85 to 86)

INSTALLATION OF TRIM, ASSIST GRIP AND VISOR

(See page BO–121)

1. (w/ Sliding Roof)
INSTALL SUN SHADE TRIM

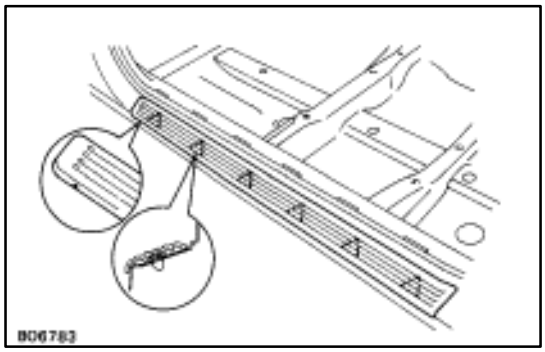

2. INSTALL OUTSIDE SCUFF PLATE
Place the plate on the body and install it by tapping.

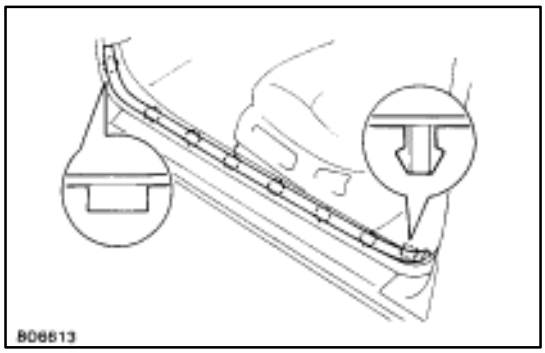

3. INSTALL FRONT SCUFF PLATE
Place the plate on the body and install it by tapping.

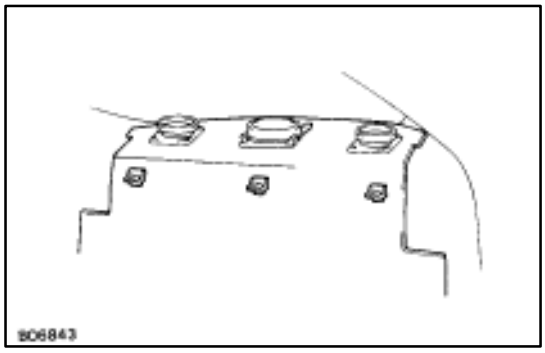

4. INSTALL ROOM PARTITION TRIM
Install the trim as shown.

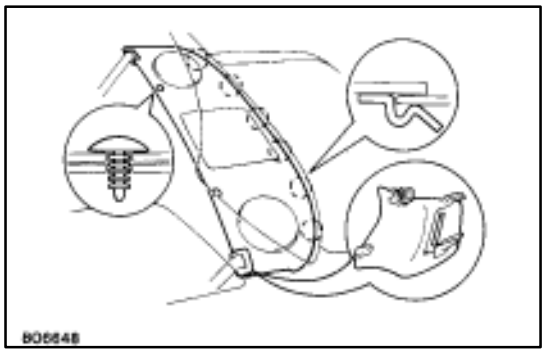

5. INSTALL PACKAGE TRAY TRIM
(a) Align the six retainers with the holes of the panel, then push the trim backward.
(b) Install two clips.
(c) Install the belt guide to the trim.

WhereEverybodyKnowsYourName

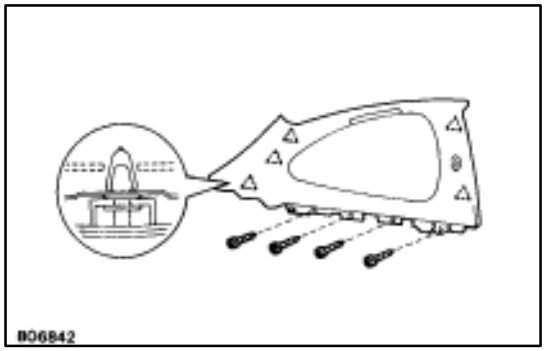

6. INSTALL ROOF SIDE INNER GARNISH

(a) Place the inner garnish on the quarter panel and install it by tapping it in.

(b) Install four screws.

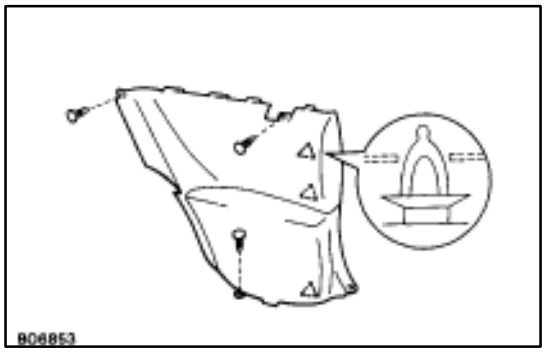

7. INSTALL QUARTER TRIM AND ASSIST GRIP

(a) Place the trim on the quarter panel and install it by tapping it in.

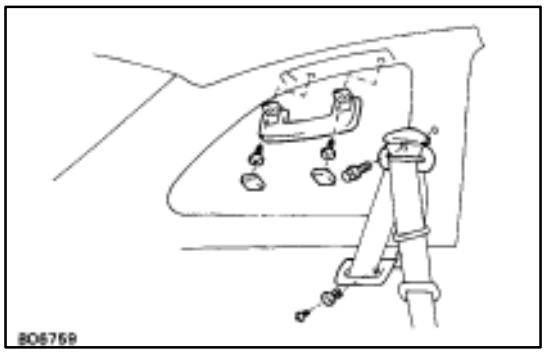

(b) Install the belt guide with the clip.

(c) Install the front seat belt anchor with the bolt.

Torque: 43 N·m (440 kgf·cm, 32 ft·lbf)

(d) Install the assist grip with two screws and two caps.

8. INSTALL REAR SEAT CUSHION AND BACK
(See page BO–67)

Torque: 18 N·m (185 kgf·cm, 13 ft·lbf)

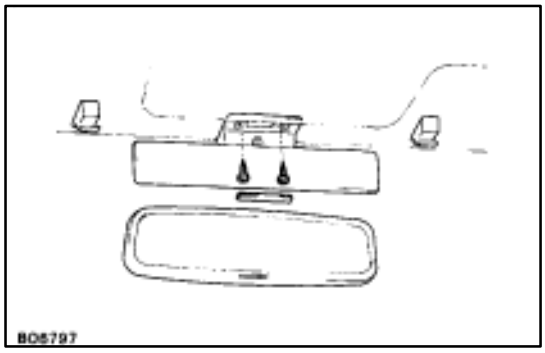

9. INSTALL CENTER VISOR

(a) Connect the connector.

(b) Install the visor with two screws and the cover.

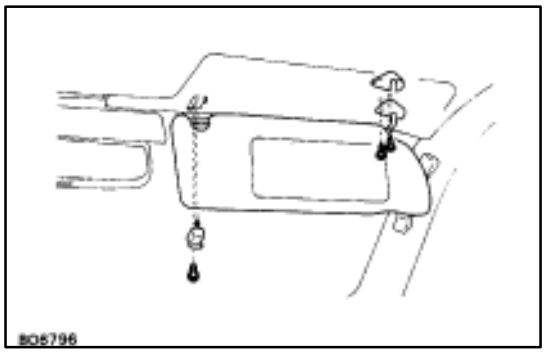

10. INSTALL SUN VISOR

(a) Install the holder with the screw.

(b) Install the sun visor with two screws and the cover.

WhereEverybodyKnowsYourName

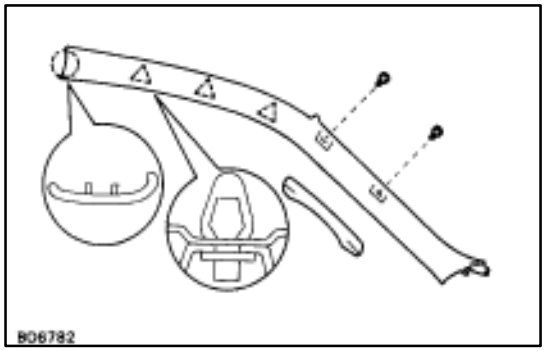

11. INSTALL FRONT PILLAR GARNISH

(a) Insert front side of the garnish to the pillar to install the clip.

(b) Install the garnish by tapping.

(c) Install two screws and the assist grip.

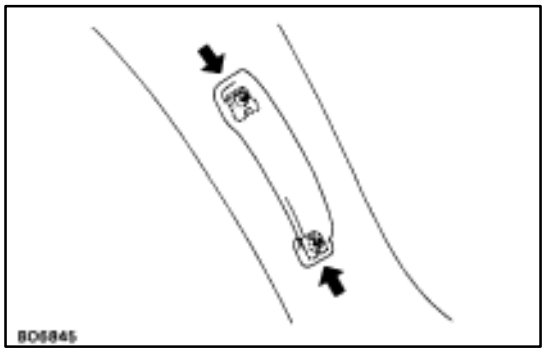

12. INSTALL ASSIST GRIP

WhereEverybodyKnowsYourName

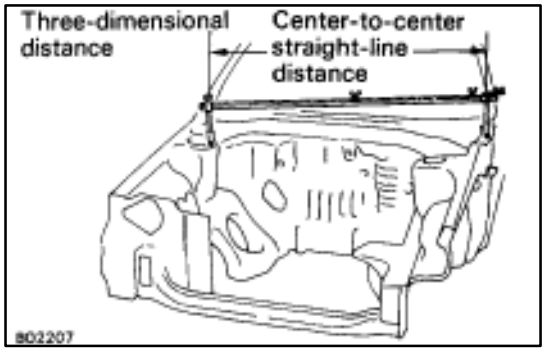

BODY DIMENSIONS
Description

1. BASIC DIMENSIONS

(a) There are two types of dimensions in the diagram.
(Three–dimensional distance)

- Straight–line distance between the centers of two measuring points.

(Two–dimensional distance)

- Horizontal distance in forward/rearward between the centers of two measuring points.
- The height from an imaginary standard line.

(b) In cases in which only one dimension is given, left and right are symmetrical.

(c) The dimensions in the following drawing indicate actual distance. Therefore, please use the dimensions as a reference.

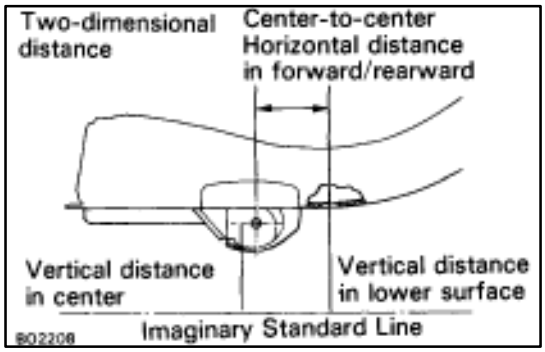

2. MEASURING

(a) Basically, all measurements are to be done with a tracking gauge. For portions where it is not possible to use a tracking gauge, a tape measure should be used.

(b) Use only a tracking gauge that has no looseness in the body, measuring plate, or pointers.

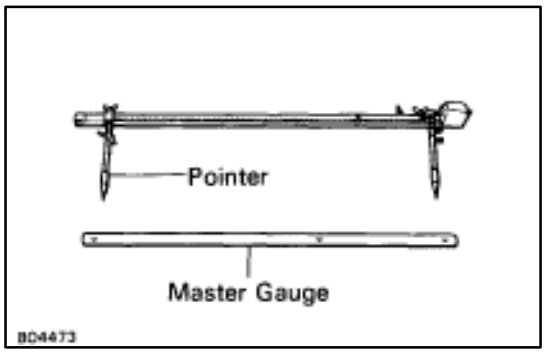

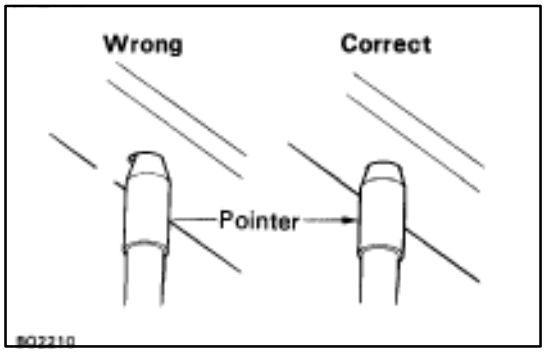

HINT:

1. The height of the left and right pointers must be equal.
2. Always calibrate the tracking gauge before measuring or after adjusting the pointer height.
3. Take care not to drop the tracking gauge or otherwise shock it.
4. Confirm that the pointers are securely in the holes.

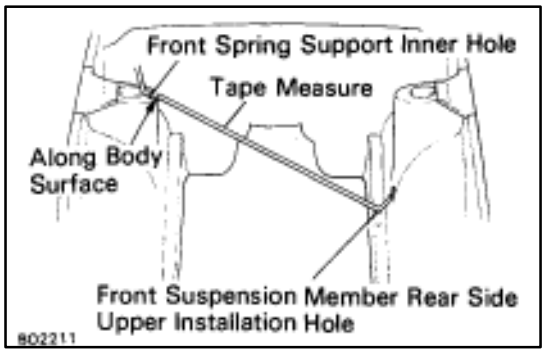

(c) When using a tape measure, avoid twists and bends in the tape.

(d) When tracking a diagonal measurement from the front spring support inner hole to the suspension member upper rear installation hole, measure along the front spring support panel surface.

WhereEverybodyKnowsYourName

Body Dimension Drawings

ENGINE COMPARTMENT

(Three–Dimensional Distance)

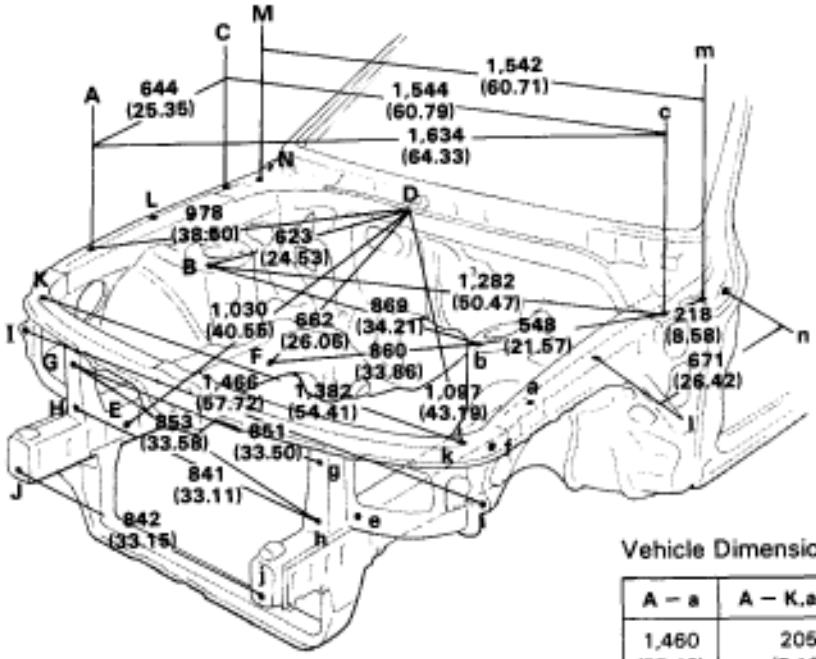

Vehicle Dimensions

A – a	A – K,a – k	C – K,c – k	C – K,c – K
1,460 (57.48)	205 (8.19)	847 (33.35)	1,689 (66.50)

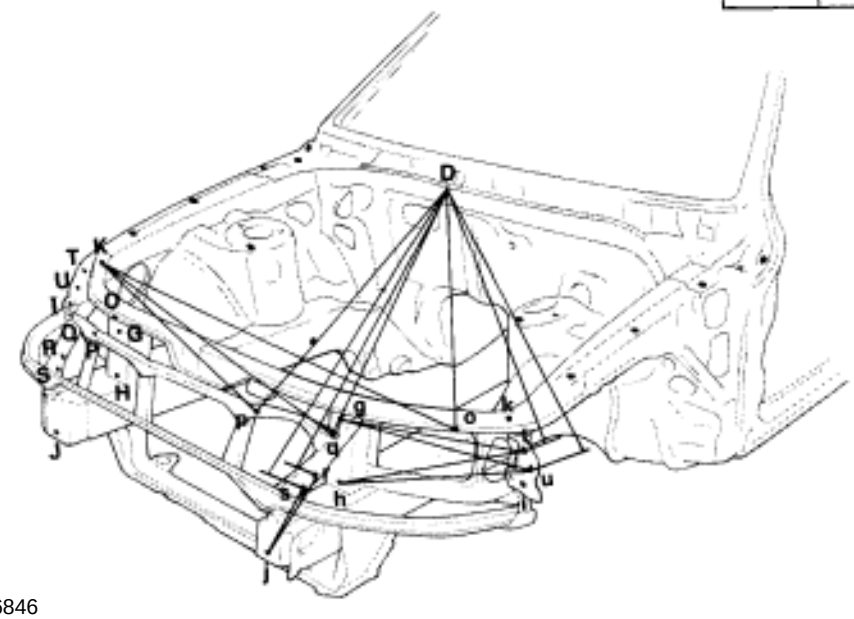

Vehicle Dimensions

D – O D – o	1,143 (45.0)	K – p k – P	1,033 (40.67)
D – P D – p	1,201 (47.28)	K – q k – Q	1,192 (46.92)
D – Q D – q	1,215 (47.83)	J – R j – r	187 (7.36)
D – R D – r	1,260 (49.61)	J – S j – s	151 (5.94)
D – S D – s	1,299 (51.14)	G – T g – t	366 (14.41)
D – T D – t	1,158 (45.59)	G – U g – u	379 (14.92)
D – U D – u	1,186 (46.69)	H – T h – t	393 (15.47)
K – o k – O	1,218 (47.95)	H – U h – u	392 (15.43)

B06846
B06860

mm (in.)

Symble	Name	Hole dia.	Symble	Name	Hole dia.
A,a	Front fender apron standard hole	10 (0.39)	L,l	Front fender installation nut	6 (0.24) screw
B,b	Front spring support hole – front	11 (0.43)	M,n	Hood hinge installation nut – rear	8 (0.31) screw
C,c	Cowl side panel standard hole	10 (0.39)	N,n	Front fender installation nut – rear	6 (0.24) screw
D	Cowl top panel center mark	—	O,o	Headlight installation nut	6 (0.24) screw
E,e	Front side member working hole	18 (0.71)	P,p	Headlight installation nut	6 (0.24) screw
F,f	Front side member working hole	18 (0.71)	Q,q	Headlight installation nut	6 (0.24) screw
G,g	Radiator support standard hole	10 (0.39)	R,r	Headlight installation nut	6 (0.24) screw
H,h	Radiator support standard hole	10 (0.39)	S,s	Headlight installation hole	11 (0.43)
I,i	Front fender apron standard hole	10 (0.39)	T,t	Headlight installation hole	10 (0.39)
J,j	Front side member standard hole	8 (0.31)	U,u	Headlight installation hole	10 (0.39)
K,k	Front fender installation nut – front	6 (0.24) screw	—	—	—

WhereEverybodyKnowsYourName

UNDER BODY

(Three–Dimensional Distance)

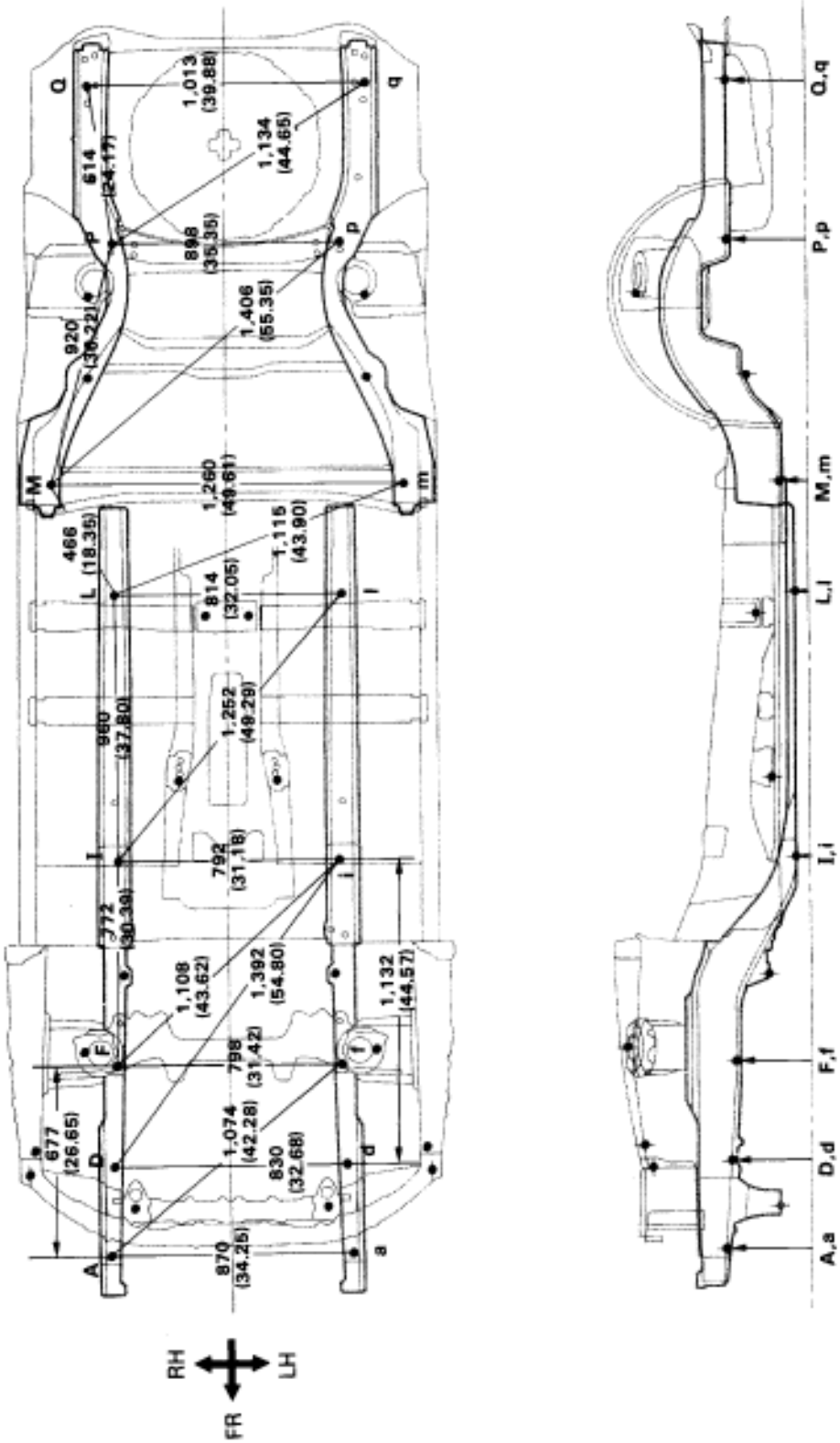

mm (in.)

Symbole	Name	Hole dia.	Symbole	Name	Hole dia.
A,a	Radiator duct installation nut	6 (0.24) screw	L,l	Front floor reinforcement standard hole	18 (0.71)
D,d	Front side member standard hole	18 (0.71)	M,m	Rear floor side member standard hole	18 (0.71)
F,f	Front suspension crossmember installation hole	13 (0.51)	P,p	Suspension member bracket installation nut rear = outer	10 (0.39) screw
I,i	Front side member standard hole	18 (0.71)	Q,q	Transport hook installation nut front = outer	12 (0.47) screw

BO6847

WhereEverybodyKnowsYourName

UNDER BODY (Cont'd)

(Three–Dimensional Distance)

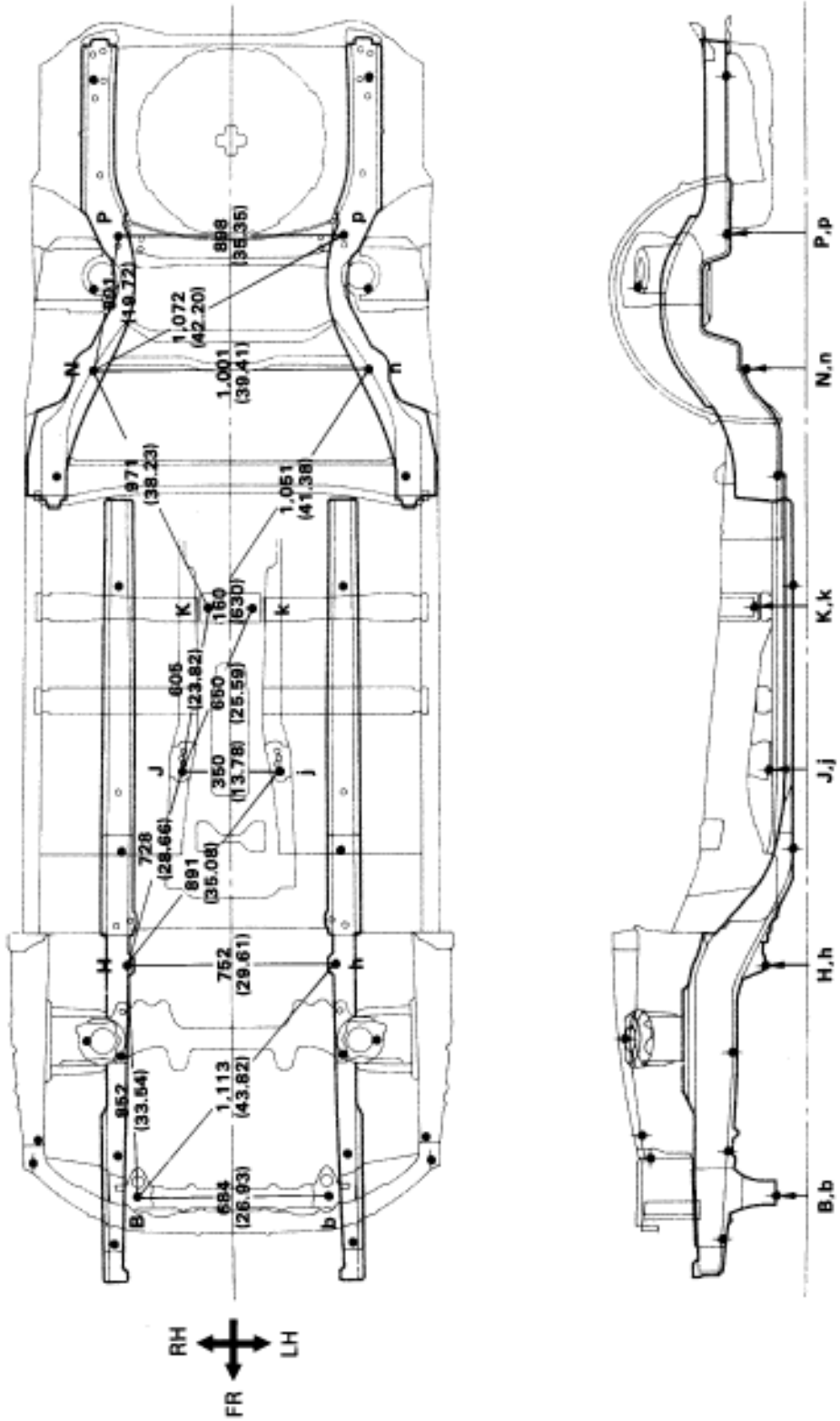

mm (in.)

Symble	Name	Hole dia.
B,b	Front crossmember working hole	9 (0.35)
H,h	Front suspension crossmember installation nut	18 (0.71)
J,j	Engine rear mounting member installation hole	10 (0.39) screw
K,k	Propeller shaft center support bearing installation nut	10 (0.39) screw
N,n	Rear suspension member installation nut	14 (0.55) screw
P,p	Suspension member bracket installation nut rear = outer	10 (0.39) screw

BO6847

WhereEverybodyKnowsYourName

UNDER BODY (Cont'd)

(Two–Dimensional Distance)

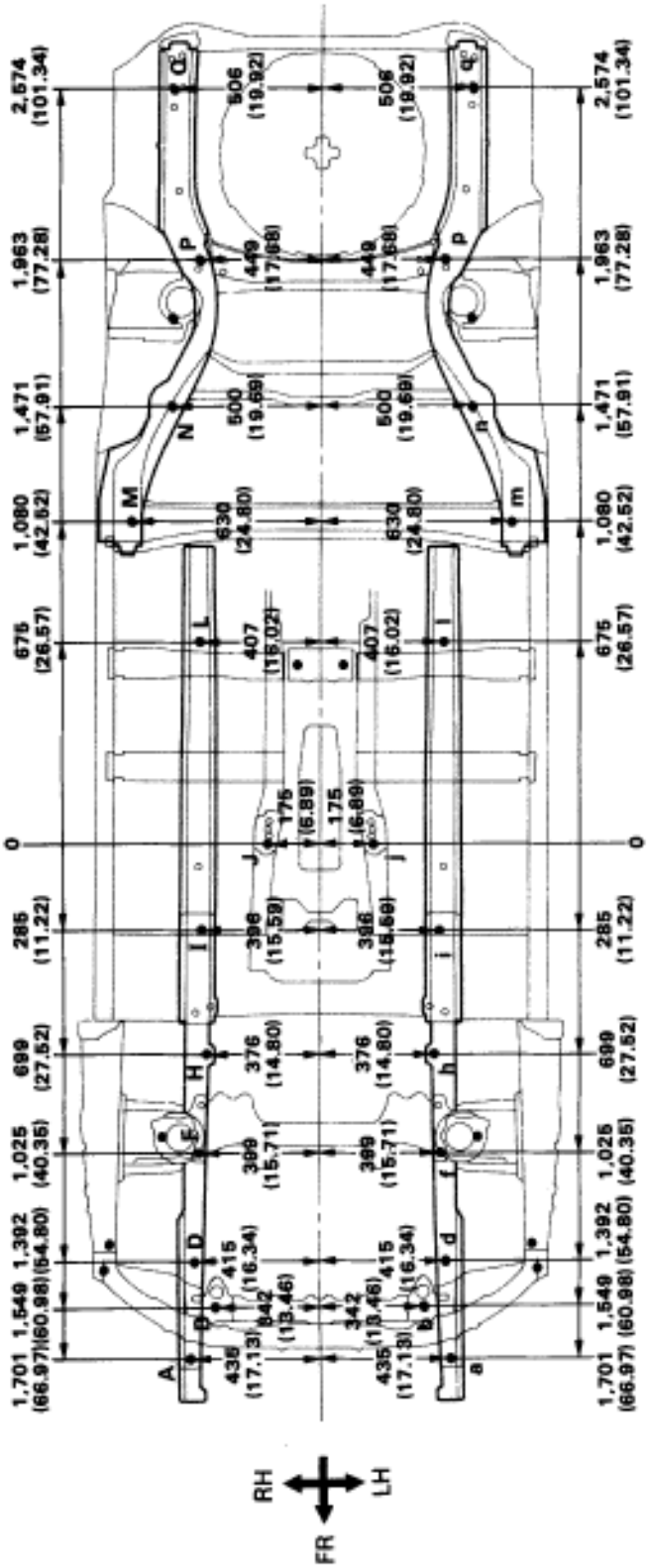

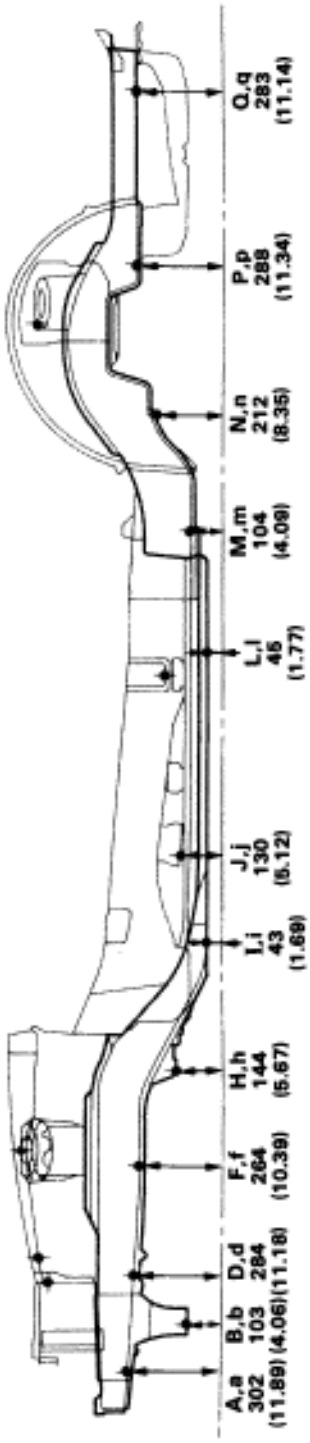

mm (in.)

Symbole	Name	Hole dia.
A,a	Radiator duct installation nut	6 (0.24) screw
B,b	Front crossmember working hole	9 (0.35)
D,d	Front side member standard hole	18 (0.71)
F,f	Front suspension crossmember installation hole	13 (0.51)
H,h	Front suspension crossmember installation nut	18 (0.71)
I,i	Front side member standard hole	18 (0.71)

Symbole	Name	Hole dia.
J,j	Engine rear mounting member installation hole	10 (0.39) screw
L,l	Front floor reinforcement standard hole	18 (0.71)
M,m	Rear floor side member standard hole	18 (0.71)
N,n	Rear suspension member installation nut	14 (0.55) screw
P,p	Suspension member bracket installation nut rear = outer	10 (0.39) screw
Q,q	Transport hook installation nut front = outer	12 (0.47) screw

WhereEverybodyKnowsYourName

UNDER BODY (Cont'd)

(Two–Dimensional Distance)

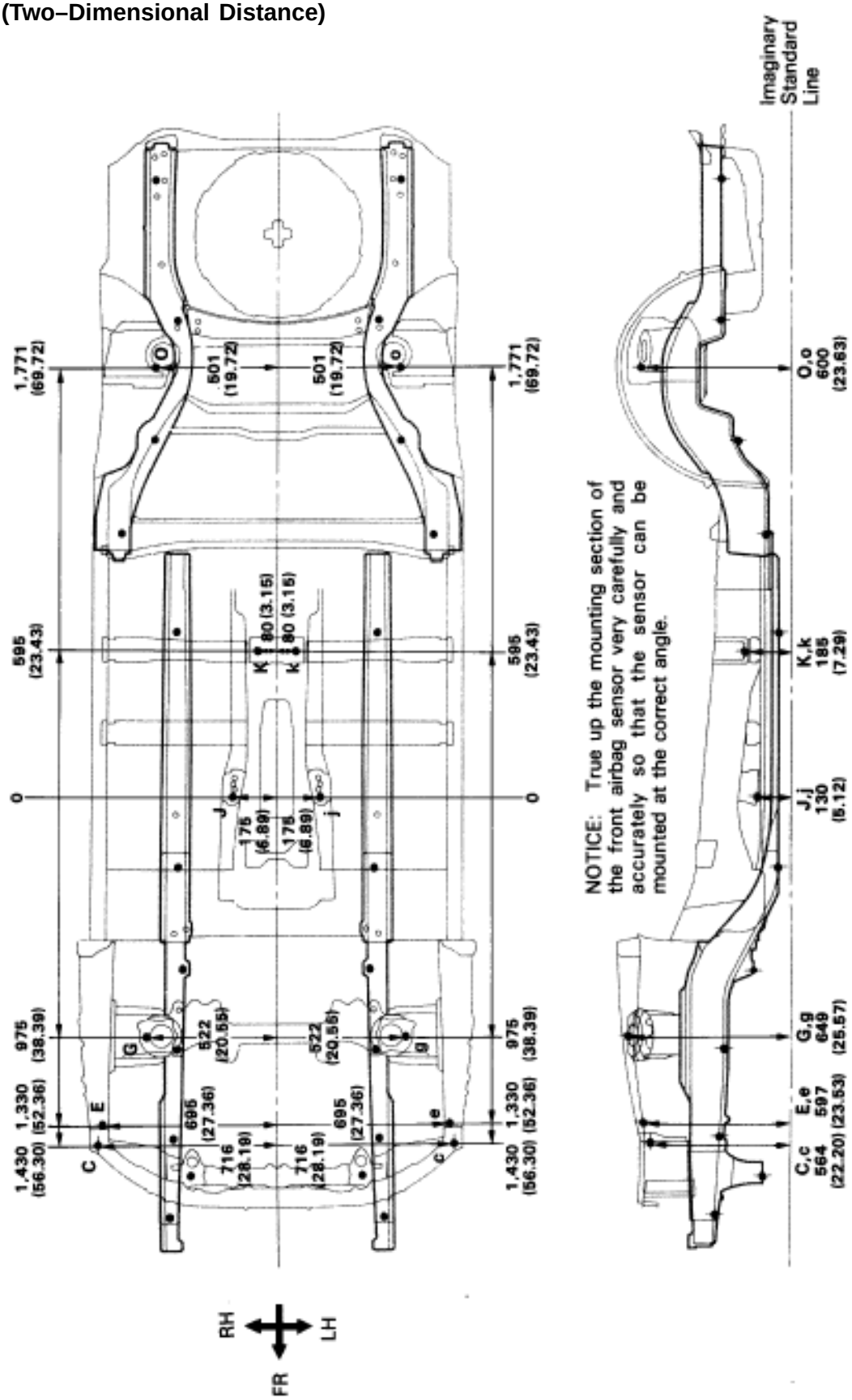

mm (in.)

Symbole	Name	Hole dia.
C,c	Airbag front sensor installation hole	9 (0.35)
E,e	Airbag front sensor installation nut	8 (0.31) screw
G,g	Front spring support hole – outer	13 x 11 (0.51 x 0.43)

Symbole	Name	Hole dia.
J,j	Engine rear mounting member installation hole	10 (0.39) screw
K,k	Propeller shaft center support bearing installation nut	10 (0.39) screw
O,o	Rear spring support hole – rear	9 (0.35)
–	–	

WhereEverybodyKnowsYourName

BODY OPENING AREAS (Side View)

(Three–Dimensional Distance)

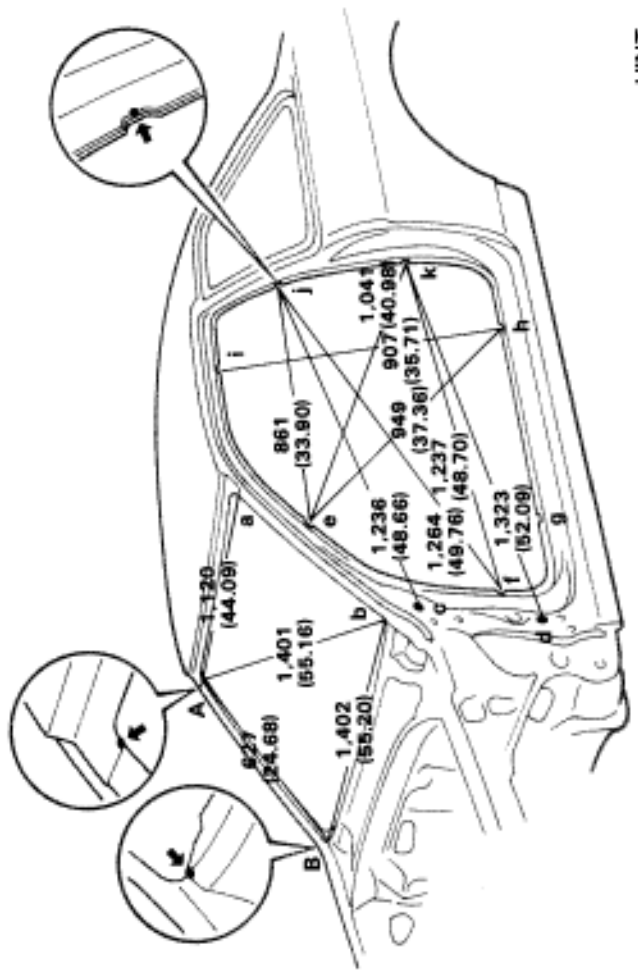

HINT: For symbols, Capital letters indicate right side of vehicle, small letters indicate left side of vehicle (Seen from rear).

Vehicle Dimensions Left ↔ Right

E – e	F – f	G – g	H – h	I – i	J – j	K – k
1,304 (51.34)	1,500 (59.06)	1,511 (59.49)	1,511 (59.49)	1,083 (42.64)	1,363 (53.66)	1,503 (59.17)

E – f or e – F	E – g or e – G	E – h or e – H	E – j or e – J	F – j or f – J	F – k or f – K	G – h or g – H	H – i or h – I	H – j or h – J	J – k or j – K
1,536 (60.47)	1,577 (62.09)	1,694 (66.69)	1,587 (62.48)	1,909 (75.16)	1,945 (76.57)	1,665 (65.55)	1,568 (61.73)	1,595 (62.80)	1,490 (58.66)

mm (in.)

Symbole	Name	Hole dia.	Symbole	Name	Hole dia.
A,a	Roof panel/Front body pillar adjoining portion	–	G,g	Rocker panel adjoining portion mark	–
B,b	Cowl top panel/Front body pillar adjoining portion	–	H,h	Rocker panel adjoining portion mark	–
C,c	Front door hinge installation nut	10 (0.39) screw	I,i	Roof side rail adjoining portion mark	–
D,d	Front door hinge installation nut	10 (0.39) screw	J,j	Quarter panel adjoining portion mark	–
E,e	Front body pillar adjoining portion mark	–	K,k	Quarter panel adjoining portion mark	–
F,f	Front body pillar adjoining portion mark	–	–	–	–

B06848

WhereEverybodyKnowsYourName

BODY OPENING AREAS (Rear View)

(Three–Dimensional Distance)

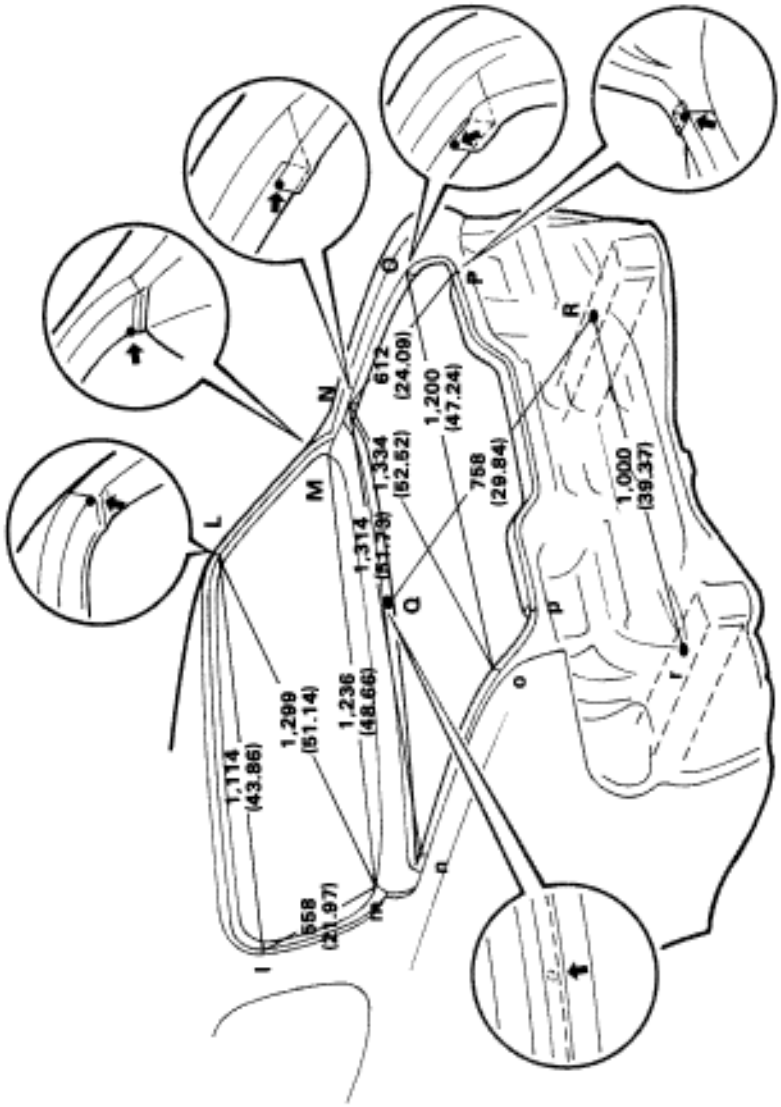

mm (in.)

Symble	Name	Hole dia.	Symble	Name	Hole dia.
L,l	Roof panel/Quarter panel adjoining portion	–	P,p	Opening trough/Lower back panel adjoining portion	–
M,m	Quarter panel/Upper back panel adjoining portion	–	Q	Upper back panel center mark	–
N,n	Quarter panel/Upper back panel adjoining portion	–	R,r	Rear floor side member standard hole	18 (0.71)
O,o	Opening trough/Quarter panel adjoining portion	–	–	–	–

BO6849

WhereEverybodyKnowsYourName

Suspension Crossmember Drawings

(Three–Dimensional Distance)

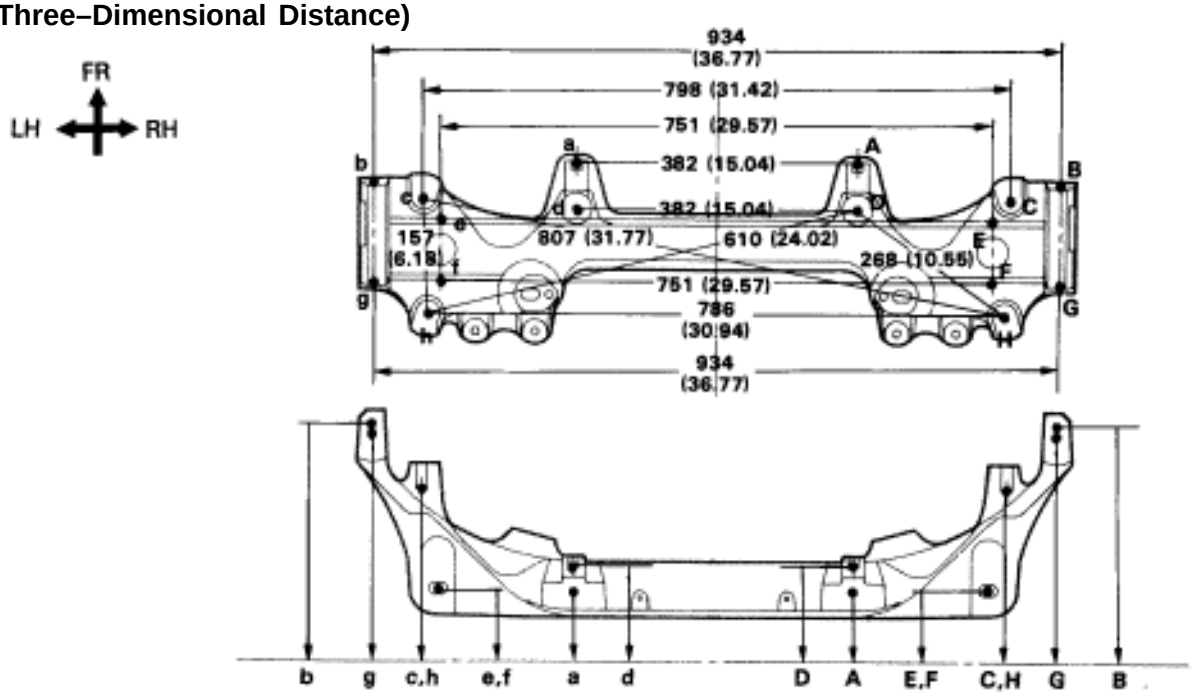

(Two–Dimensional Distance)

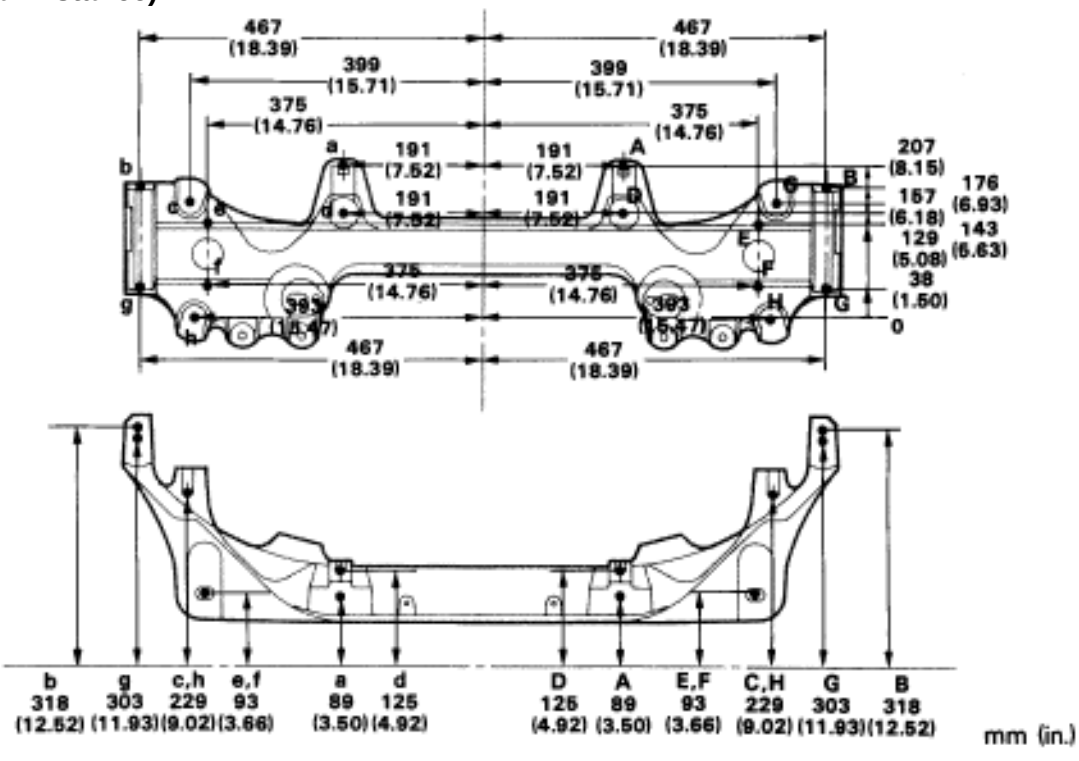

B06850
B06850

Symble	Name	Hole dia.	Symble	Name	Hole dia.
A,a	Steering gear box installation hole front	12 (0.47)	E,e	Lower arm installation hole – front	25 x 16 (0.98 x 0.63)
B,b	Upper arm installation hole front	14 (0.55)	F,f	Lower arm installation hole rear	25 x 16 (0.98 x 0.63)
C,c	Suspension crossmember installation hole front – lower	15 (0.59)	G,g	Lower arm installation hole rear	14 (0.55)
D,d	Steering gear box installation hole – lower	12 (0.47)	H,h	Suspension crossmember installation hole rear – lower	RH 15 x 13 (0.59 x 0.51) LH 13 x (0.51)

WhereEverybodyKnowsYourName

Suspension Crossmember Drawings (Cont'd)

(Three–Dimensional Distance)

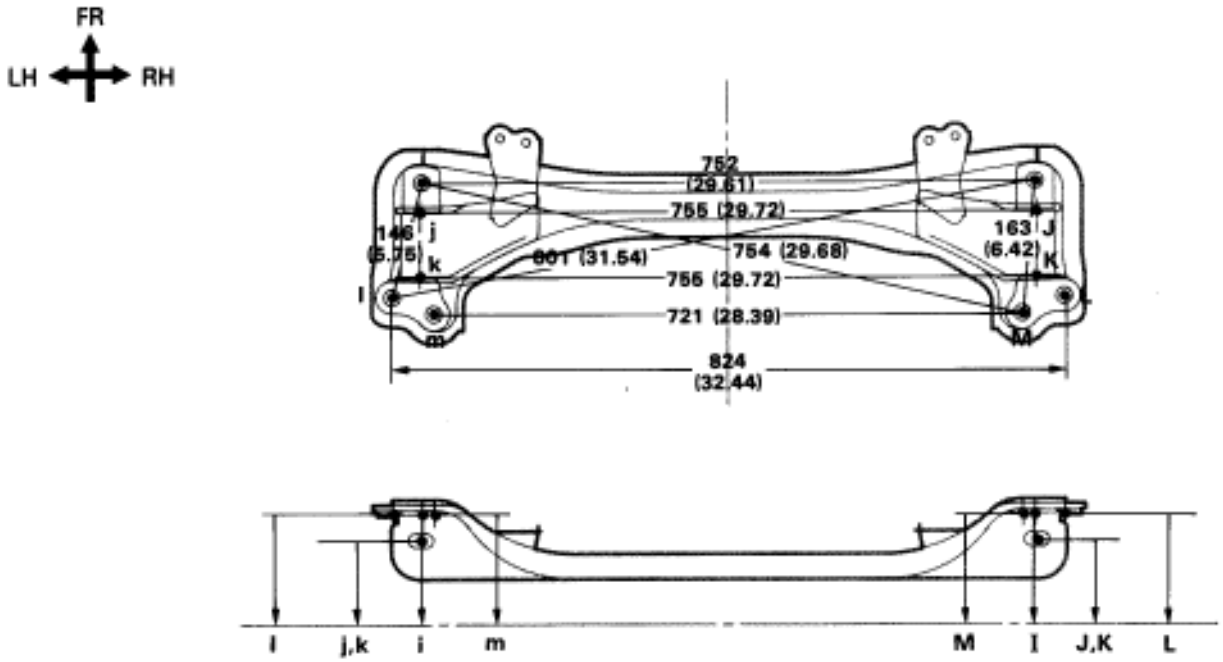

(Two–Dimensional Distance)

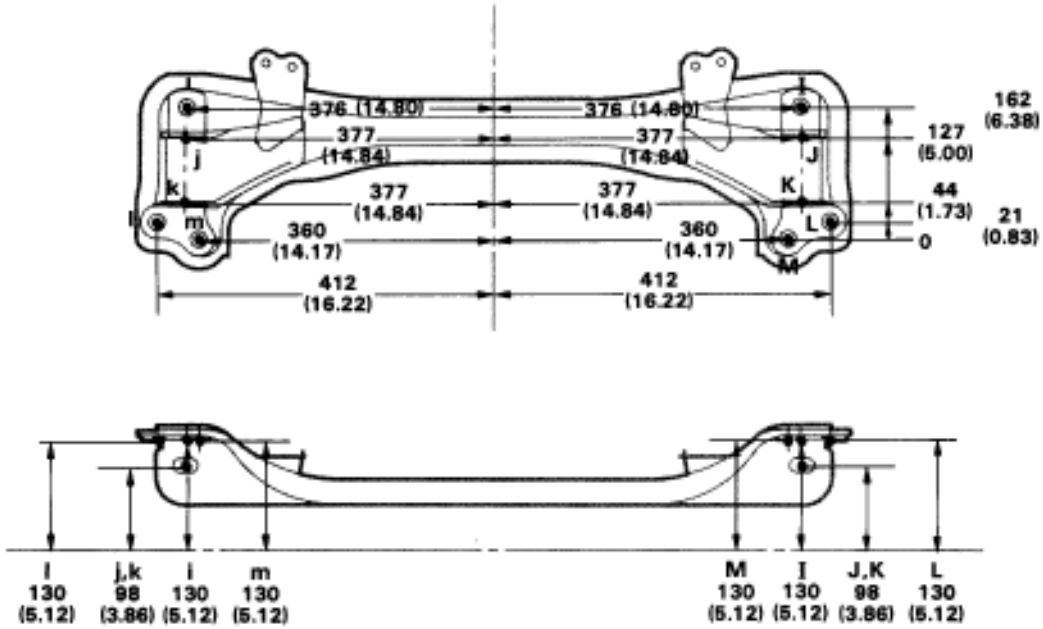

BO6851
BO6851

mm (in.)

Symble	Name	Hole dia.	Symble	Name	Hole dia.
I,i	Suspension crossmember installation hole front – lower	18 (0.71)	L,l	Suspension crossmember installation hole rear – lower	18 (0.71)
J,j	Lower arm installation hole – front	30 x 16 (1.18 x 0.63)	M,m	Suspension crossmember installation hole rear – lower	18 (0.71)
K,k	Lower arm installation hole rear	30 x 16 (1.18 x 0.63)	—	—	—

WhereEverybodyKnowsYourName

Suspension Crossmember Drawings (Cont'd)

(Three–Dimensional Distance)

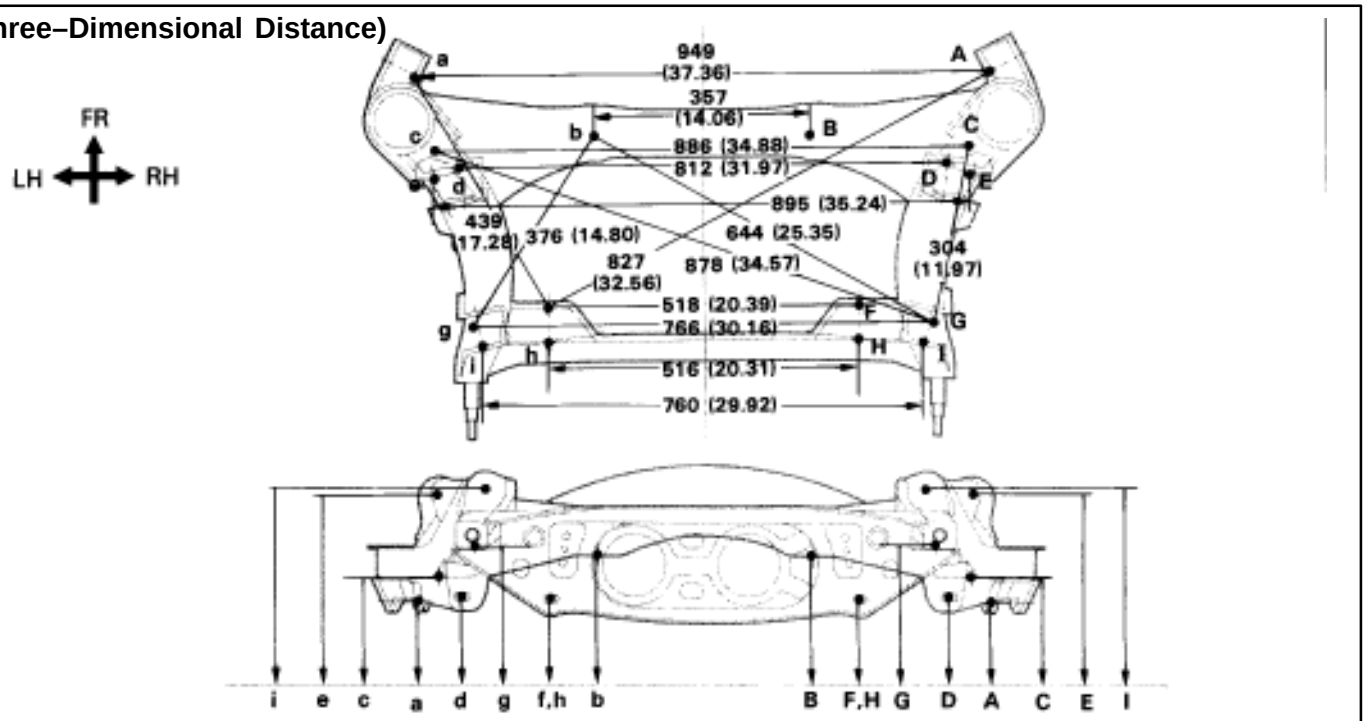

(Two–Dimensional Distance)

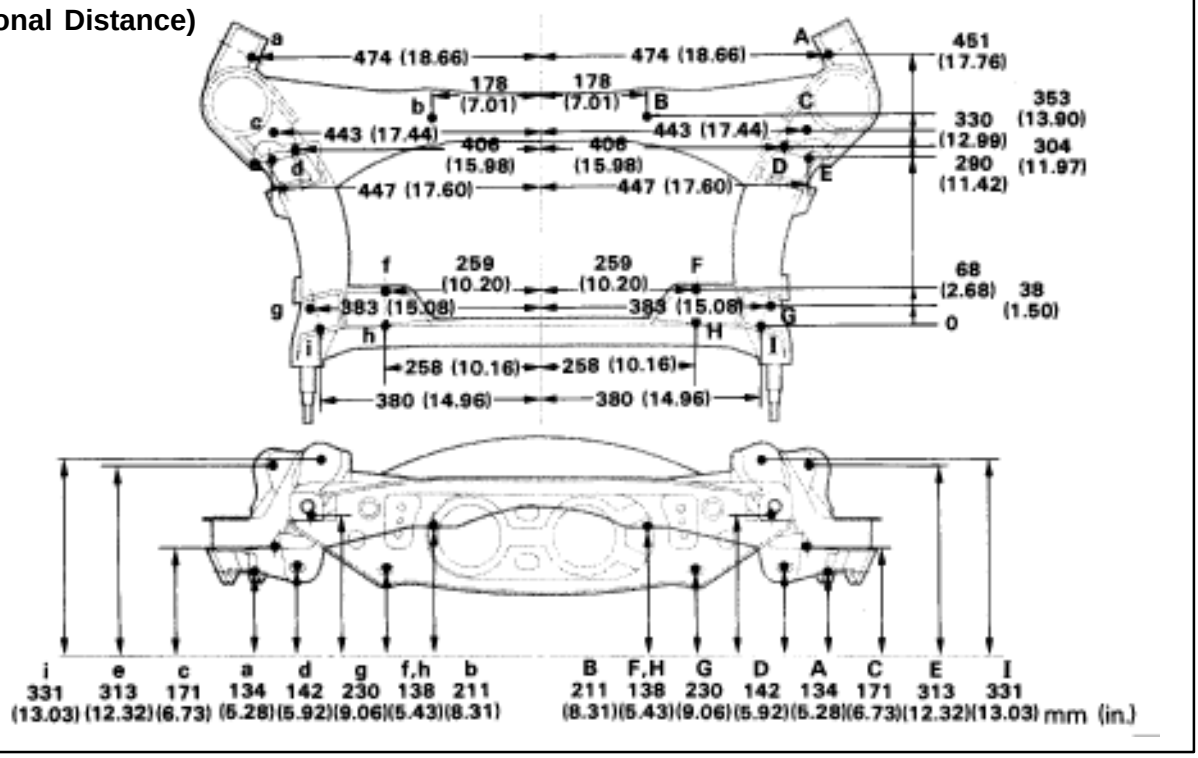

Symble	Name	Hole dia.	Symble	Name	Hole dia.
A,a	Strut bar installation hole inner	14 (0.55)	F,f	Lower arm installation hole front	26 x 14 (1.02 x 0.55)
B,b	Differential carrier installation hole	12 (0.47) screw	G,g	Rear suspension member standard hole	20 (0.78)
C,c	Rear suspension member standard hole	20 (0.78)	H,h	Lower arm installation hole rear	26 x 14 (1.02 x 0.55)
D,d	Lower arm installation hole front	26 x 14 (1.02 x 0.55)	I,i	Upper arm installation hole rear	14 (0.55)
E,e	Upper arm installation hole front	14 (0.55)	—	—	—

WhereEverybodyKnowsYourName

SERVICE SPECIFICATIONS

TORQUE SPECIFICATIONS

Part tightened	N·m	kgf·cm	ft·lbf
HOOD			
Hood support X Hood	22	225	16
Hood support X Body	22	225	16
TRANSPORT HOOK			
Front Transport Hook			
Front transport hook X Body	64	650	47
Rear Transport Hook			
Rear transport hook X Body	64	650	47
SEAT			
Front seat			
Power seat regulator X Body	37	375	27
Seat back assembly X Seat cushion assembly	26	260	19
Power seat regulator X Seat cushion assembly	26	260	19
Rear seat			
Rear seat back X Body	18	185	13
SEAT BELT			
Front Seat Belt			
Front seat outer belt anchor X Body	43	440	32
Front seat outer belt lower side X Body	43	440	32
ELR X Body	43	440	32
Front seat inner belt X Power seat regulator	43	440	32
Rear Seat Belt			
Rear seat outer belt anchor X Body	43	440	32
ELR X Body	43	440	32
Rear seat inner belt X Body	43	440	32
BUMPER			
Front Bumper			
Front bumper reinforcement X Body	13	130	9.4
Rear Bumper			
Rear bumper reinforcement X Body	13	130	9.4

WhereEverybodyKnowsYourName

Specifications
(Fitting Adjustments)

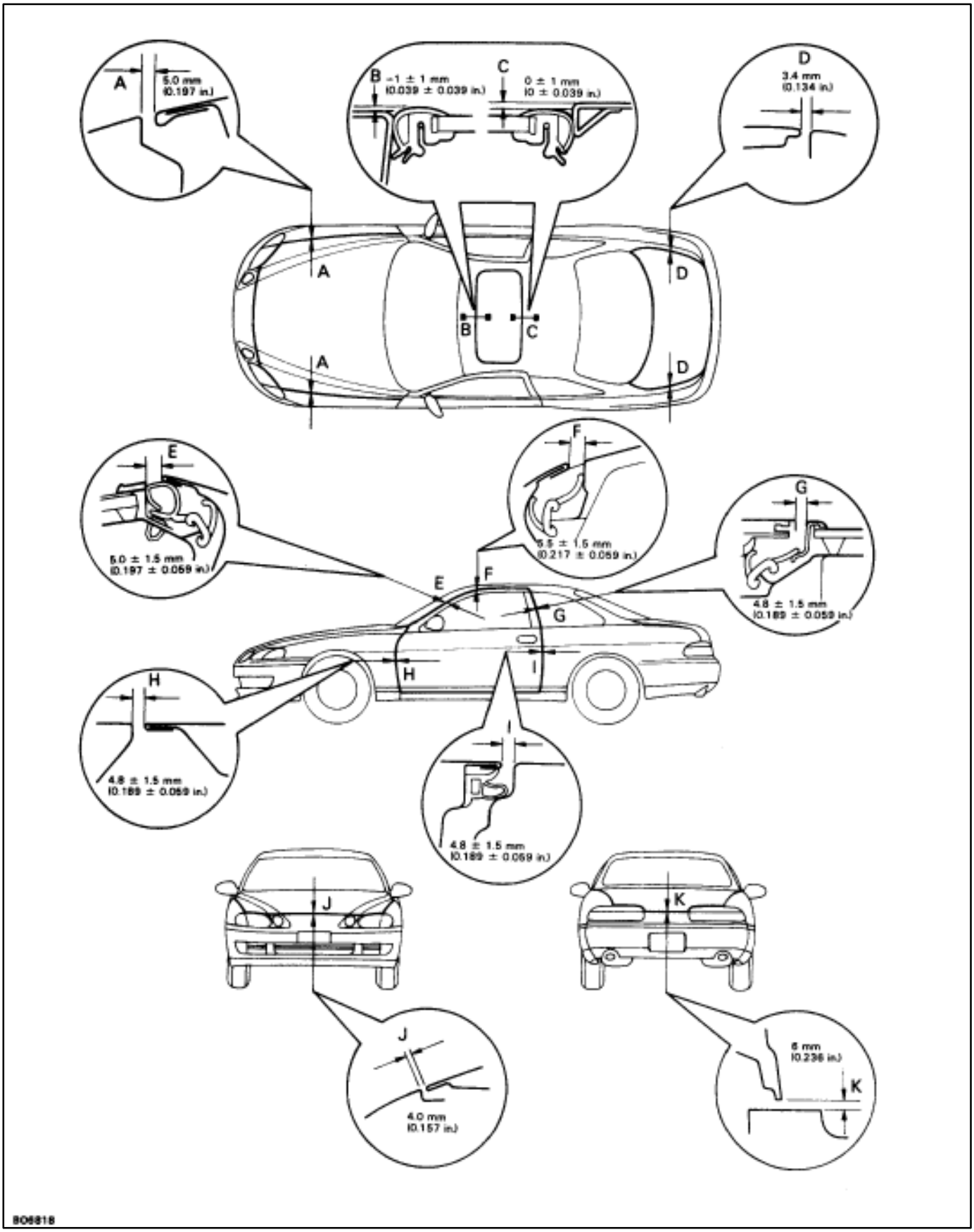

WhereEverybodyKnowsYourName

BODY

WhereEverybodyKnowsYourName

GENERAL INFORMATION

HANDLING PRECAUTIONS

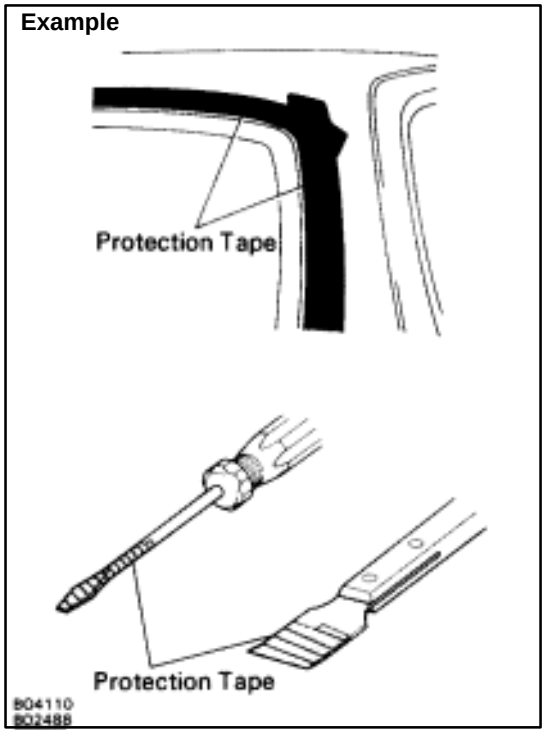

Taping

When it is possible that the body or parts may be scratched during the operation, apply protection tape before starting work.

Example:

1. Before starting work, apply protection tape to body surfaces around parts to be removed and installed.
2. Before prying parts loose with a screwdriver or scraper etc., apply protection tape to the tip of the tool to avoid scratching parts or painted surfaces of the body.

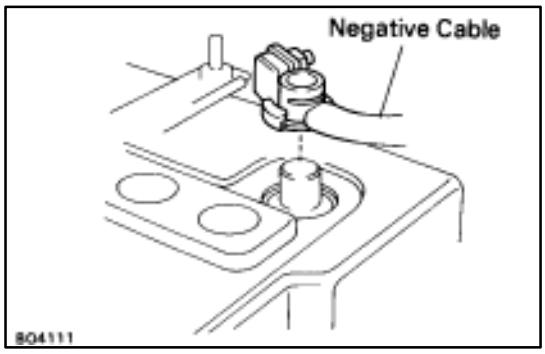

Battery

In order to prevent a short circuit while doing work on the electrical circuit such as disconnecting a connector, first turn off the ignition switch and disconnect the negative cable from the battery terminal before starting work.

HINT: When battery voltage is required for operation of a functioning part, connect the cable to the battery when needed, and promptly disconnect it when no longer necessary.

CAUTION:

- **Work must be started after approx. 20 seconds or longer from the time the ignition switch is turned to the "LOCK" position and the negative (–) terminal cable is disconnected from the battery.**
- **To avoid erasing the memory of each memory system, never use a back–up power supply from outside the vehicle.**

Fitting Adjustments

When removing and installing body panels which have a preload value, after the installation refer to the page containing the installation adjustment methods, and make adjustments according to the required specifications.

HINT: When making adjustments, do not completely loosen the bolts and nuts of the part being adjusted. Tighten them appropriately, and move the panels by hand to align them.

WhereEverybodyKnowsYourName

ANTI–RUST TREATMENT

Anti–rust treatment used on the vehicle body includes body sealer, undercoat, rust inhibitor and paint.

HINT: Refer to the Body Collision Damage Repair Manual for details of which parts have received anti–rust treatment.

Body Sealer

If the body sealer is damaged (peeling, cracks, etc.) during the operation, replace it with new body sealer.

HINT: If body sealer gets on other parts, promptly wipe it off with a clean cloth dipped in a grease, wax and silicone remover.

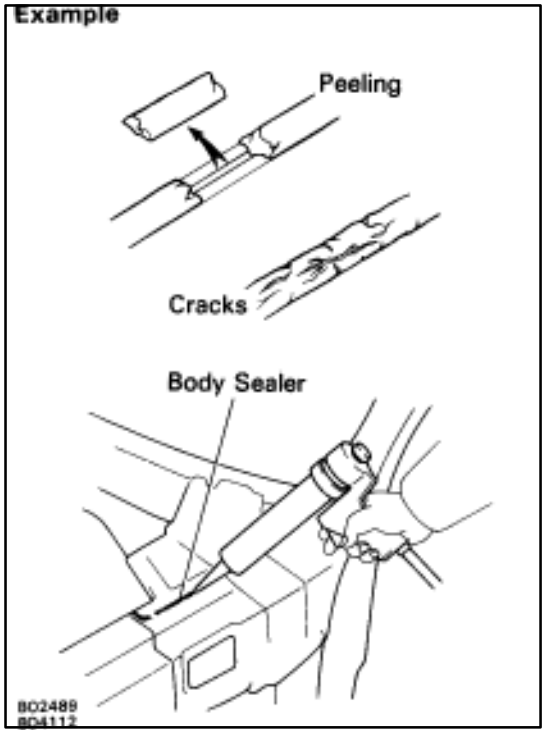

Undercoat

If the undercoat is damaged during the operation apply new undercoat.

HINT:

- Cover the surrounding area with masking paper to avoid applying undercoat where it is not needed.
- Do not apply undercoat to high temperature parts such as the tailpipe, or to drive parts such as the drive shaft.

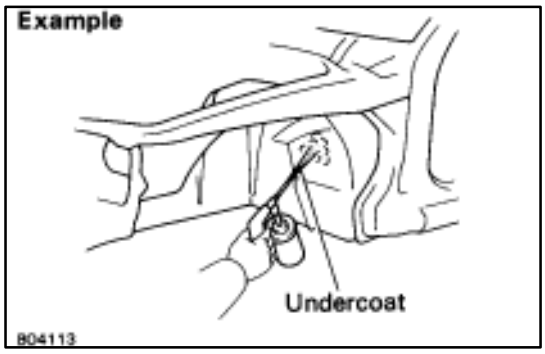

Rust Inhibitor

After removing and re–installing hinges and outer panel parts, apply rust inhibitor to the parts.

HINT: If rust inhibitor gets spilled on other parts, promptly wipe it off with a clean cloth dipped in a grease, wax and silicon remover.

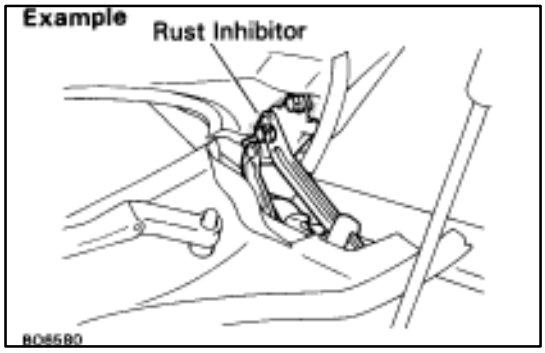

Touch–Up Paint

If a small scratch is made in the body surface, correct the scratch using touch–up paint the same color as the body color.

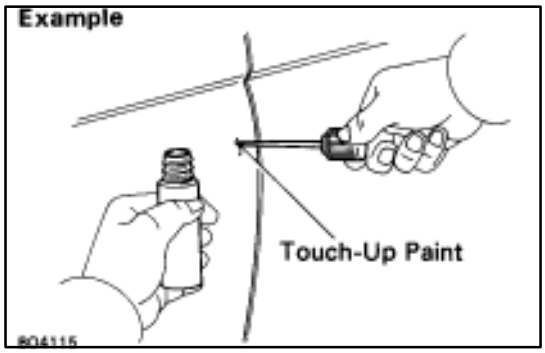

WhereEverybodyKnowsYourName

CLIPS

The removal and installation methods of typical clips used in body parts are shown in the table below.

HINT: If the clip is damaged during the operation, always replace it with a new clip.

Shape (Example)	Removal/Installation
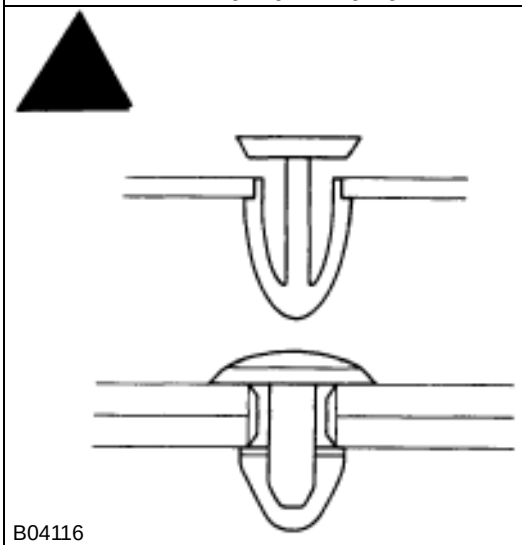 B04116	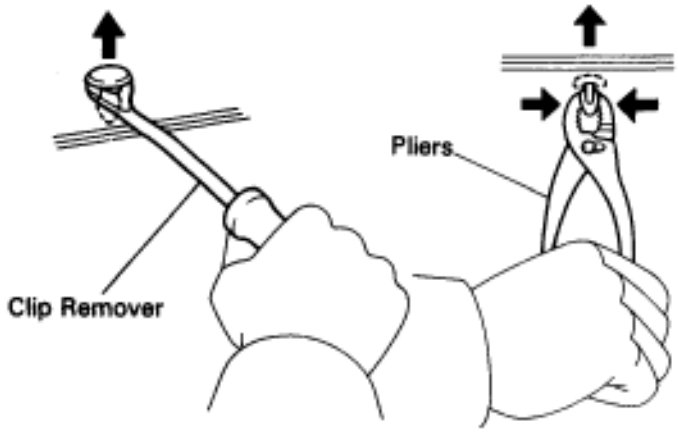 B04117
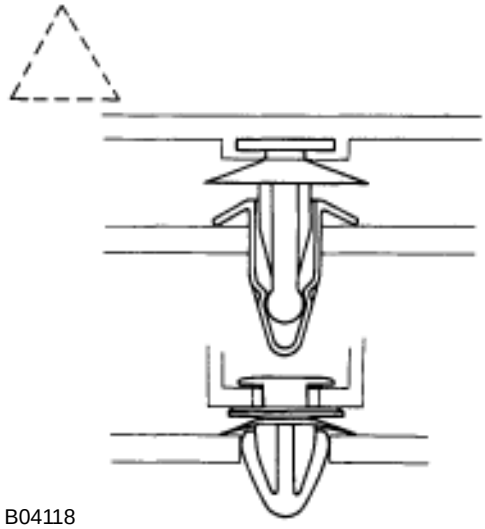 B04118	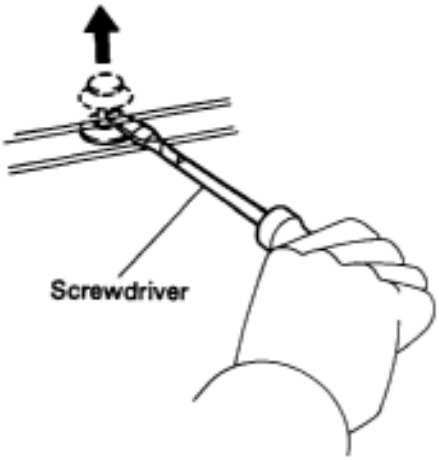 B04119
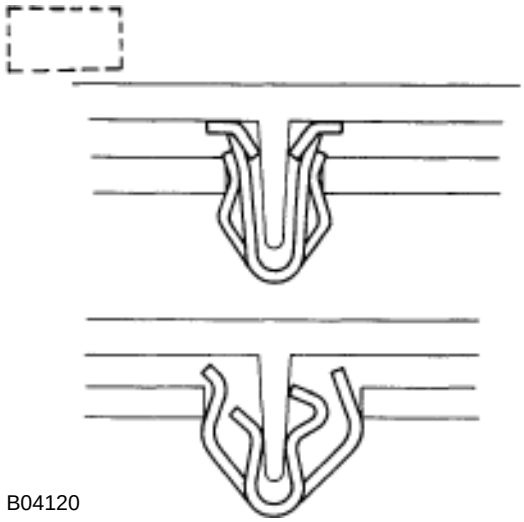 B04120	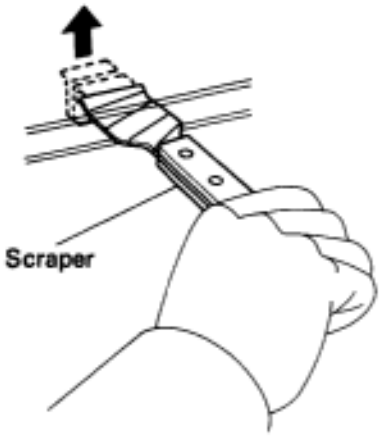 B04121

WhereEverybodyKnowsYourName

CLIPS (Cont'd)

Shape (Example)	Removal/Installation
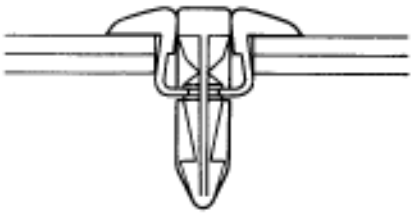 BO4122	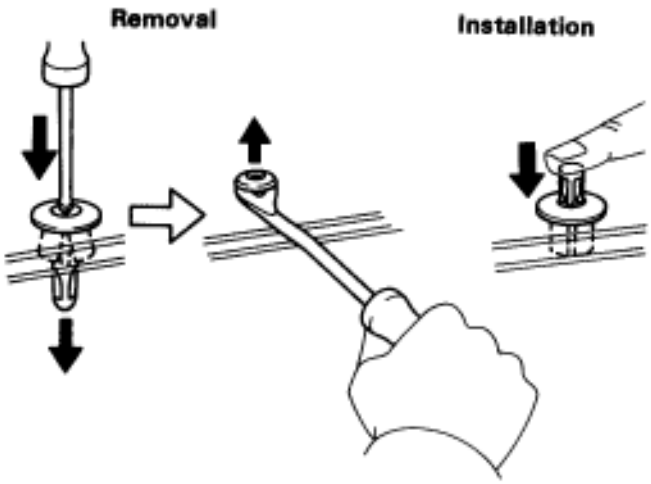 BO4123
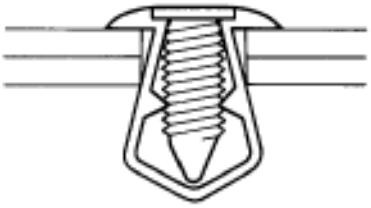 BO4124	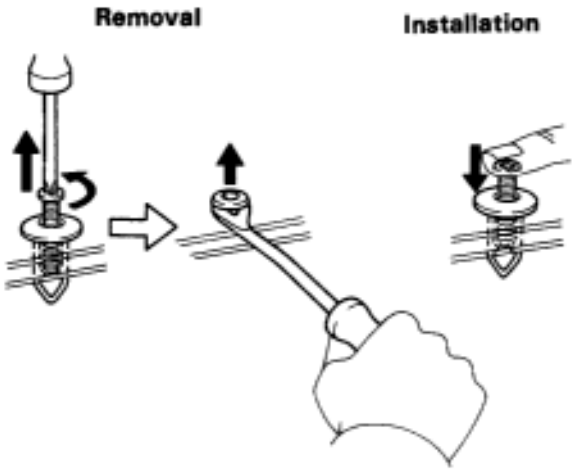 BO4125

WhereEverybodyKnowsYourName

HOW TO USE THIS SECTION

Components

When the removal and reassembly of a second system is also required in order to remove and disassemble a certain system, the components are laid out in the component diagram as follows.

1. When it is necessary to remove and reassemble almost all the parts of the second system:

The component diagram of the second system is reduced in size and included inside the large component diagram within its own separate frame.

HINT: For more detail than is given in the second component diagram in the separate frame, refer to the component diagram of the applicable system.

Example:

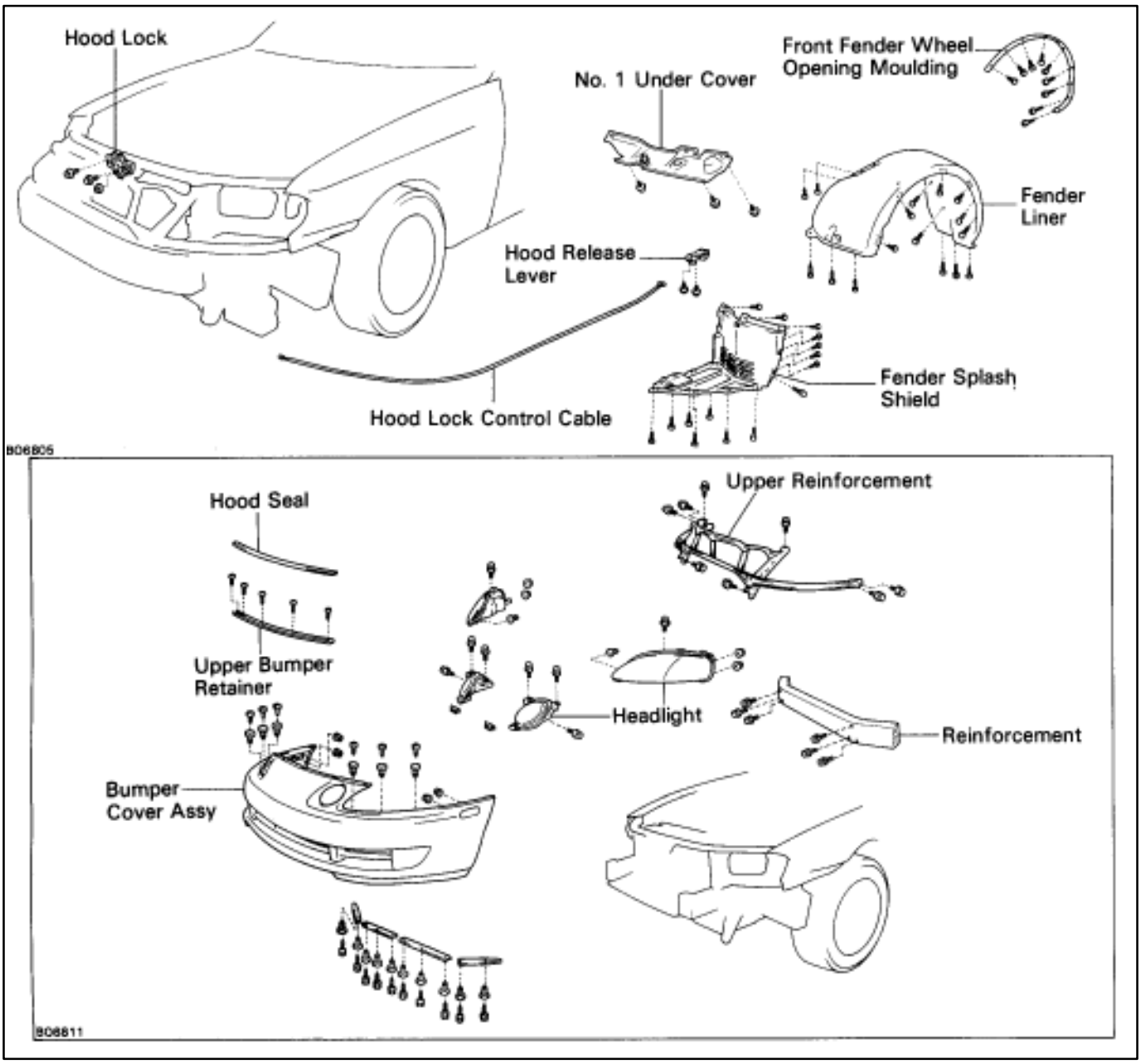

WhereEverybodyKnowsYourName

2. When the components of the second system which need to be removed are few in number and can be removed as a unit:

An abbreviated diagram of the parts and the name of the second system are included inside the larger component diagram.

HINT: For more detail than is given in the abbreviated diagram, refer to the component diagram on the page number referred to by the "See page" next to the diagram title.

Example:

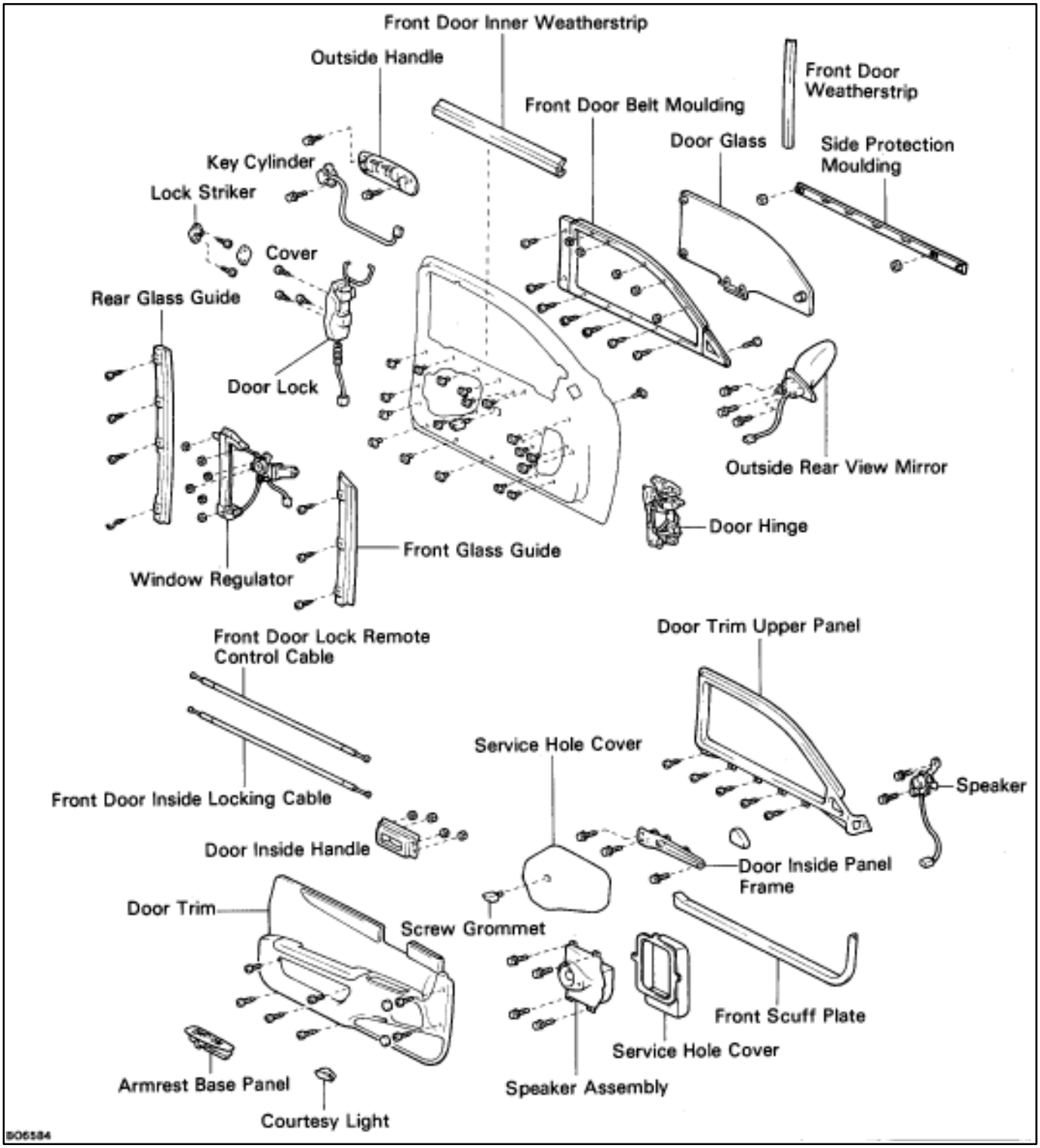

WhereEverybodyKnowsYourName

SRS AIRBAG

(See page AB–2)

The LEXUS SC300 is equipped with an SRS (Supplemental Restraint System) airbag.
Failure to carry out service operations in the correct sequence could cause the airbag system to deploy, possibly leading to a serious accident.
When removal or installation of airbag parts and the yellow wire harness and connector for the airbag is necessary, refer to the precautionary notices in the AB section before performing the operation.

- Work must be started after 20 seconds or longer from the time the ignition switch is set to the LOCK position and the negative (–) terminal cable is disconnected from the battery.
  (The airbag system is equipped with a back–up power source so that if work is started within 20 seconds of disconnecting the negative (–) terminal cable of the battery, the airbag may be deployed.
- To avoid erasing the memory of each memory system, never use a back–up power supply from outside the vehicle.
- Before repairs, remove the airbag sensors if shocks are likely to be applied to the sensors during repaires.
- The front airbag sensor set bolt has been anti–rust treated. When the sensor is removed, always replace the set bolt with a new one.
- If the front airbag sensors, center airbag sensor or steering wheel pad have been dropped, or if there are cracks, dents or other defects in the case, bracket or connector, replace them with new ones.
- Never use airbag parts from another vehicle. When replacing parts, replace them with new parts.
- Do not expose the front airbag sensors, center airbag sensor or steering wheel pad directly to hot air or flames.
- The airbag system's wire harness is integrated with the cowl wire harness assembly. The wires for the airbag wire harness are encased in a yellow corrugated tube. All the connectors for the system are also a standard yellow color. If the airbag system wire harness becomes disconnected or the connector becomes broken due to an accident, etc., repair or replace it as shown on page AB–20.
- The steering wheel must be fitted correctly to the steering column with the spiral cable at the neutral position; otherwise, cable disconnection and other troubles may result. Refer to page AB–14 of this manual concerning correct steering wheel installation.
- When removing the steering wheel pad or handling a new steering wheel pad, it should be placed with the pad top surface facing up. In this case, the twin–lock type connector lock lever should be in the locked state and care should be taken to place it so the connector will not be damaged. (Storing the pad with its metallic surface up may lead to a serious accident if the airbag inflates for some reason.)
- Grease should not be applied to the steering wheel pad and the pad should not be cleaned with detergents of any kind.
- Store the steering wheel pad where the ambient temperature remains below 93°C (200°F), without high humidity and away from electrical noise.
- Information labels are attached to the periphery of the airbag components. Follow the notices.
- When the ignition switch is at ACC or ON and the airbag warning light remains on, the center airbag sensor assembly has detected a malfunction code. (See page AB–30).

WhereEverybodyKnowsYourName

PREPARATION

EQUIPMENT

Part Name	Note
Clip remover	–
Torque wrench	–
Hexagon wrench	–
Torx driver	–
Hog ring pliers	–
Tape	For applying to the tip of the tools to avoid scratching parts or painted surfaces of the body
Double–stick tape	–
Adhesive tape	For applying to the body surfaces around the parts to avoid scratching painted surface
Instant adhesive	–
Adhesive	–
Cleaner	–
Knife	–
Shop rag	–
Sealer gun	–
Brush	–
Putty spatula	–
Glass plate or like object	For mixing the adhesive on
Wooden block or like object	For tying both piano wire ends
Plastic sheet	For placing between the piano wire and the safety pad to avoid scratching the safety pad

LUBRICANT

Item	Capacity			Classification
	Liters	US qts	Imp. qts	
MP grease	–	–	–	–

WhereEverybodyKnowsYourName

SSM (SPECIAL SERVICE MATERIALS)

Part Name	Part No.	Use etc.
Windshield glass adhesive set No. 15	08850–00070	Contents of set: Main agent 500 g (17.64 oz.) Hardening agent 75 g (2.65 oz.) Primer G [for glass] 20 g (0.71 oz.) Primer M [for body] 20 g (0.71 oz.) Sponge for applying primer Piano wire 0.6 mm dia. X 1 m (0.024 in. dia. X 39.37 in.) Cartridge
Windshield glass adhesive set No. 35	08850–00080	
Windshield glass adhesive set No. 45	08850–00090	
Auto glass sealer	08833–00030 or equivalent	–

Ambient temperature	Part No.	Part name
0 – 15°C (32 – 59°F)	08850-00070	Windshield glass adhesive set No. 15
15 – 35°C (59 – 95°F)	08850-00080	Windshield glass adhesive set No. 35
35 – 45°C (95 – 113°F)	08850-00090	Windshield glass adhesive set No. 45

1. CHOOSE SUITABLE ADHESIVE SET

Use an adhesive set suitable for the ambient temperature.

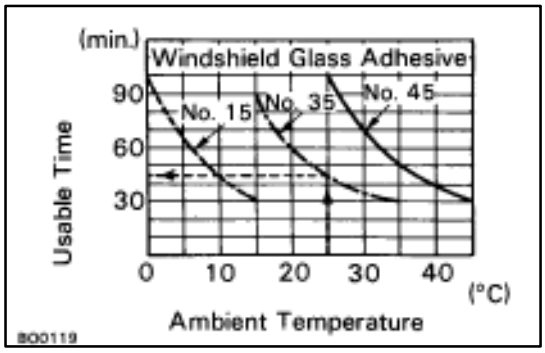

2. CHECK ADHESIVE USABLE TIME

After mixing main and hardening agents, finish glass installation within the specified time as shown.

Example: For glass installation in an ambient temperature of 25°C (77°F), apply adhesive set No. 35 within 45 minutes.

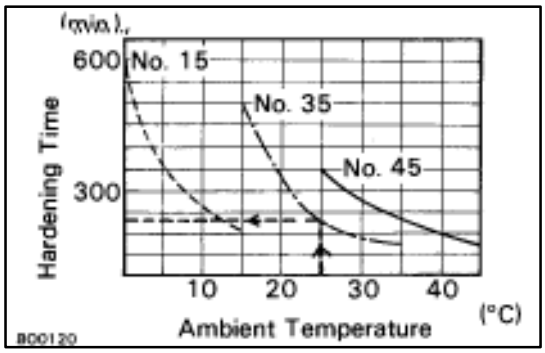

3. CHECK ADHESIVE HARDENING TIME

After main and hardening agents are mixed, leak tests should be made only after the hardening time has elapsed.

Example: The hardening time for adhesive set No. 35 with an ambient temperature of 25°C (77°F) is 2 1/2 hours.

NOTICE: Do not drive the vehicle until at least double the hardening time has elapsed.

WhereEverybodyKnowsYourName

BUMPER
Front Bumper
COMPONENTS

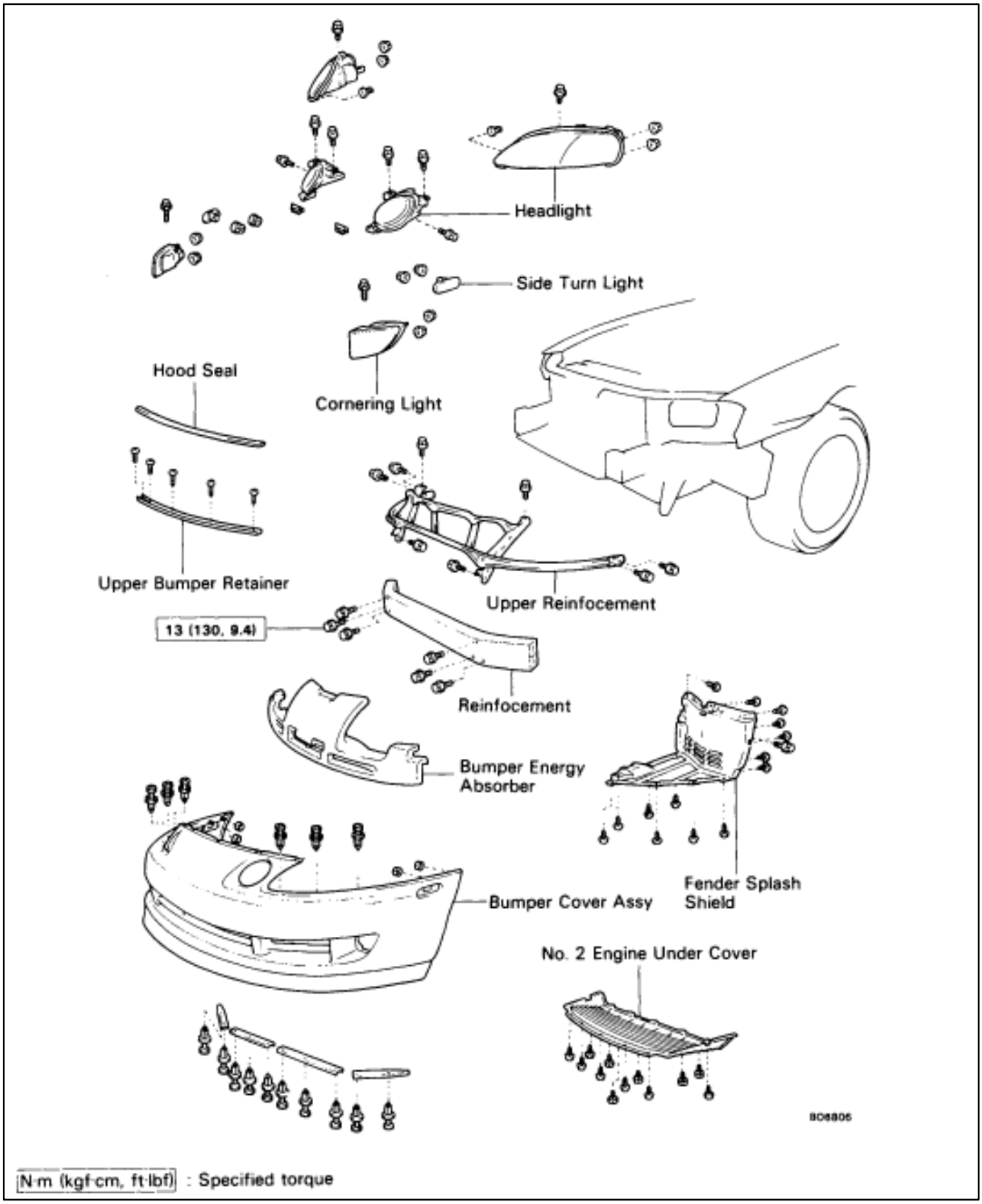

WhereEverybodyKnowsYourName

REMOVAL OF FRONT BUMPER

(See page BO–11)

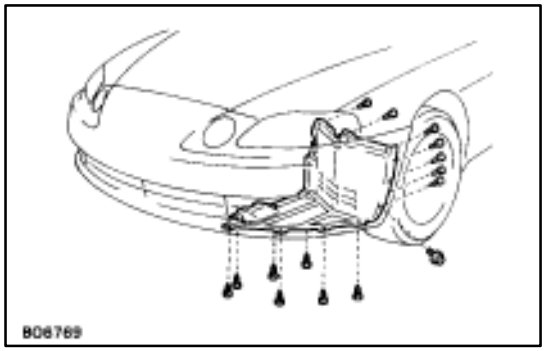

1. REMOVE FENDER SPLASH SHIELD

Remove fourteen screws, a bolt and the shield.

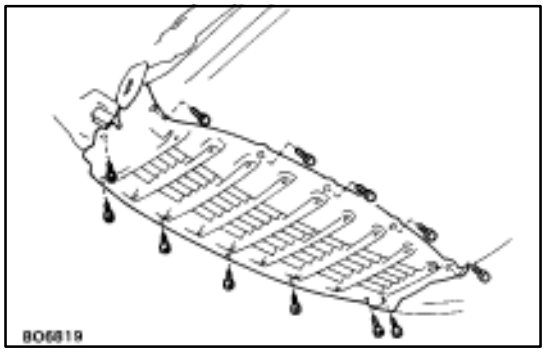

2. REMOVE NO. 2 ENGINE UNDER COVER

Remove seven screws, five bolts and the cover.

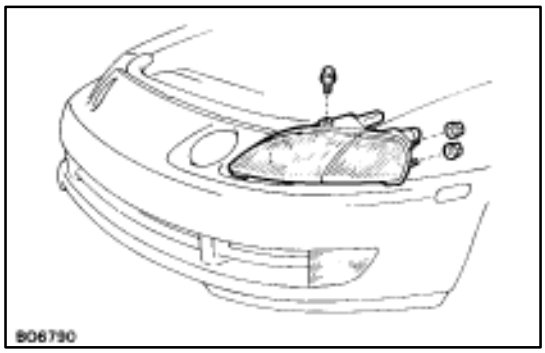

3. REMOVE HEADLIGHT

(Low Beam)

(a) Remove two nuts, a bolt and the headlight.

(b) Disconnect the connectors.

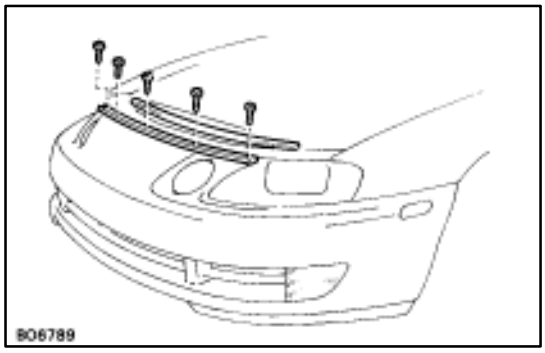

4. REMOVE UPPER BUMPER RETAINER

(a) Remove the hood seal.

(b) Remove five screws and the retainer.

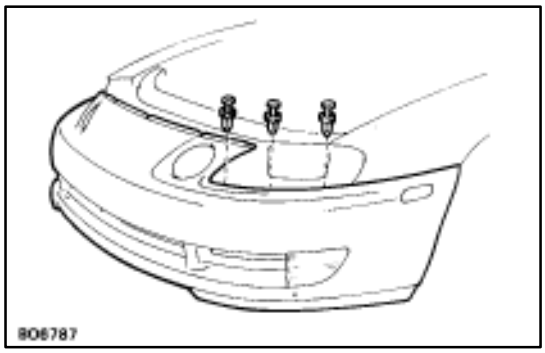

5. REMOVE BUMPER COVER ASSY

(a) Remove six clips.

WhereEverybodyKnowsYourName

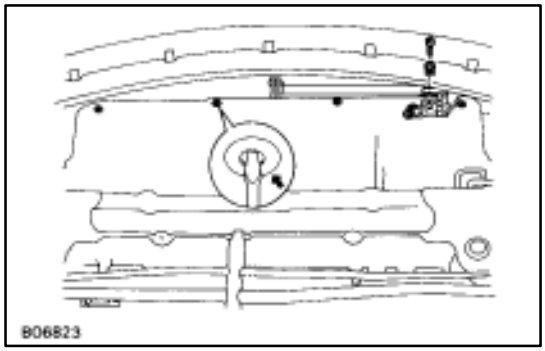

(b) Remove four clips.
(c) Remove the clip and ambient temperature sensor.

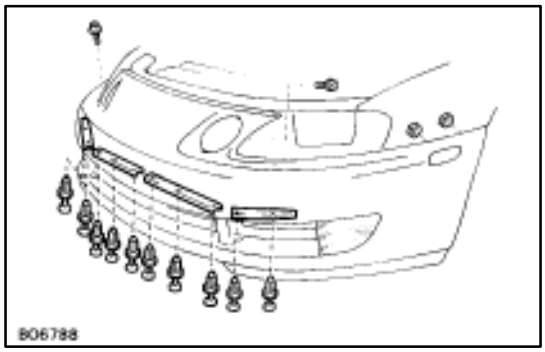

(d) Remove four nuts.
(e) Remove ten clips.
(f) Remove two bolts.
(g) Disconnect the connectors.
(h) Remove the bumper cover assy.

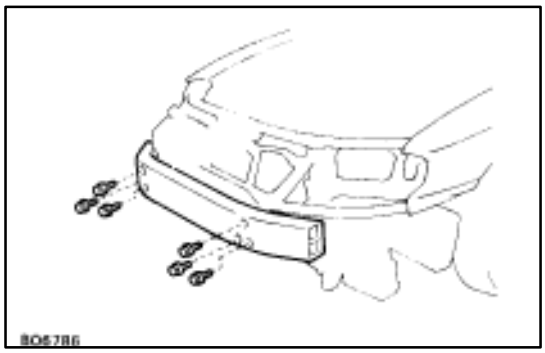

6. REMOVE REINFORCEMENT

Remove six bolts and the reinforcement.

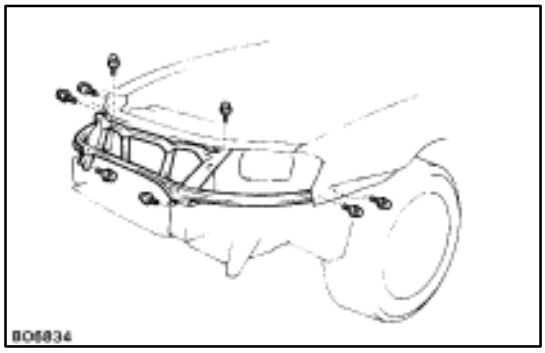

7. REMOVE UPPER REINFORCEMENT

Remove eight bolts and the reinforcement.

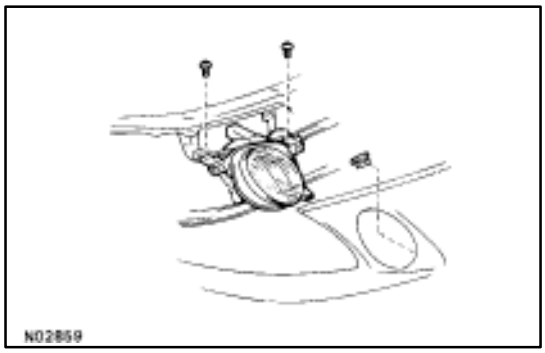

8. REMOVE HEADLIGHT

(High Beam)

(a) Remove two screws, a clip and the headlight.
(b) Disconnect the connector.

WhereEverybodyKnowsYourName

INSTALLATION OF FRONT BUMPER

(See page BO–11)

INSTALL FRONT BUMPER PARTS BY FOLLOWING REMOVAL SEQUENCE IN REVERSE

HINT:

- When installing the bumper on the body, be careful not to damage the serrated part of side bolts.
- After installing the headlight, adjust the light aiming. **(See page BE–38).**

DISASSEMBLY AND ASSEMBLY OF FRONT BUMPER

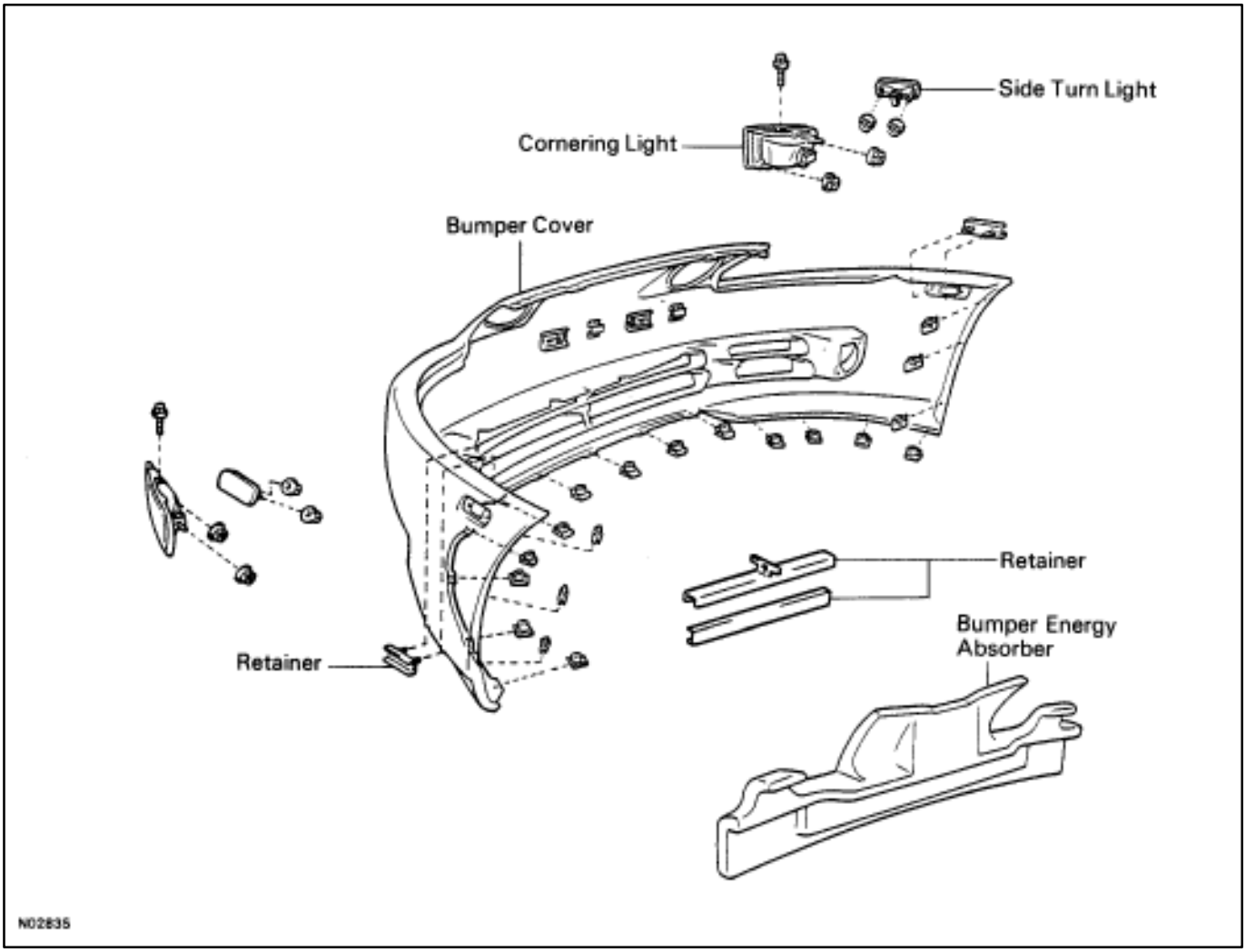

DISASSEMBLY AND ASSEMBLY BY FOLLOWING PARTS:

(a) Cornering lights
(b) Side turn lights
(c) Bumper energy absorber
(d) Retainers
(e) License bracket

WhereEverybodyKnowsYourName

Rear Bumper
COMPONENTS

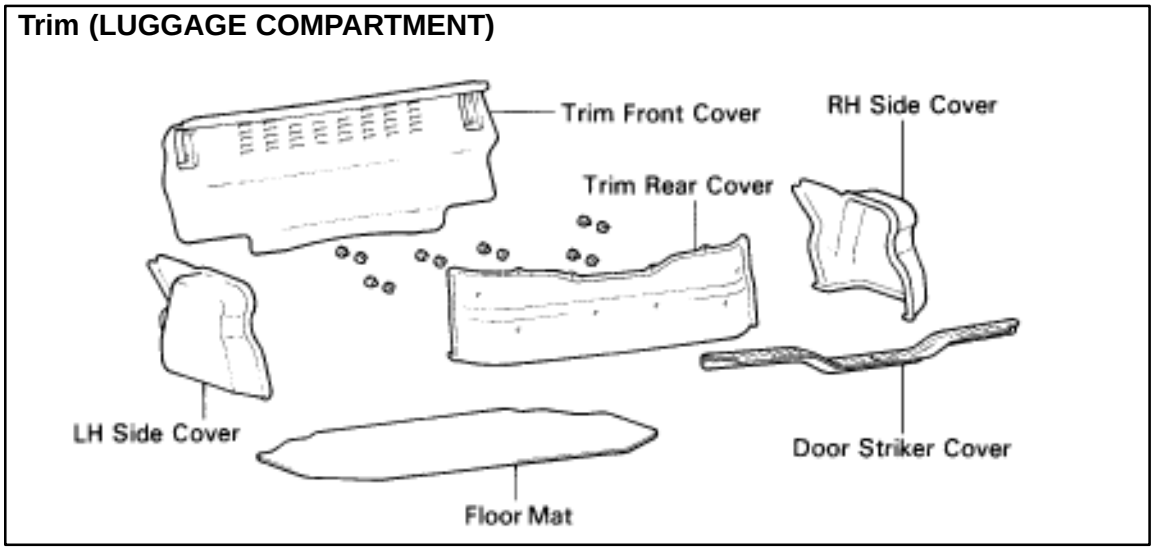

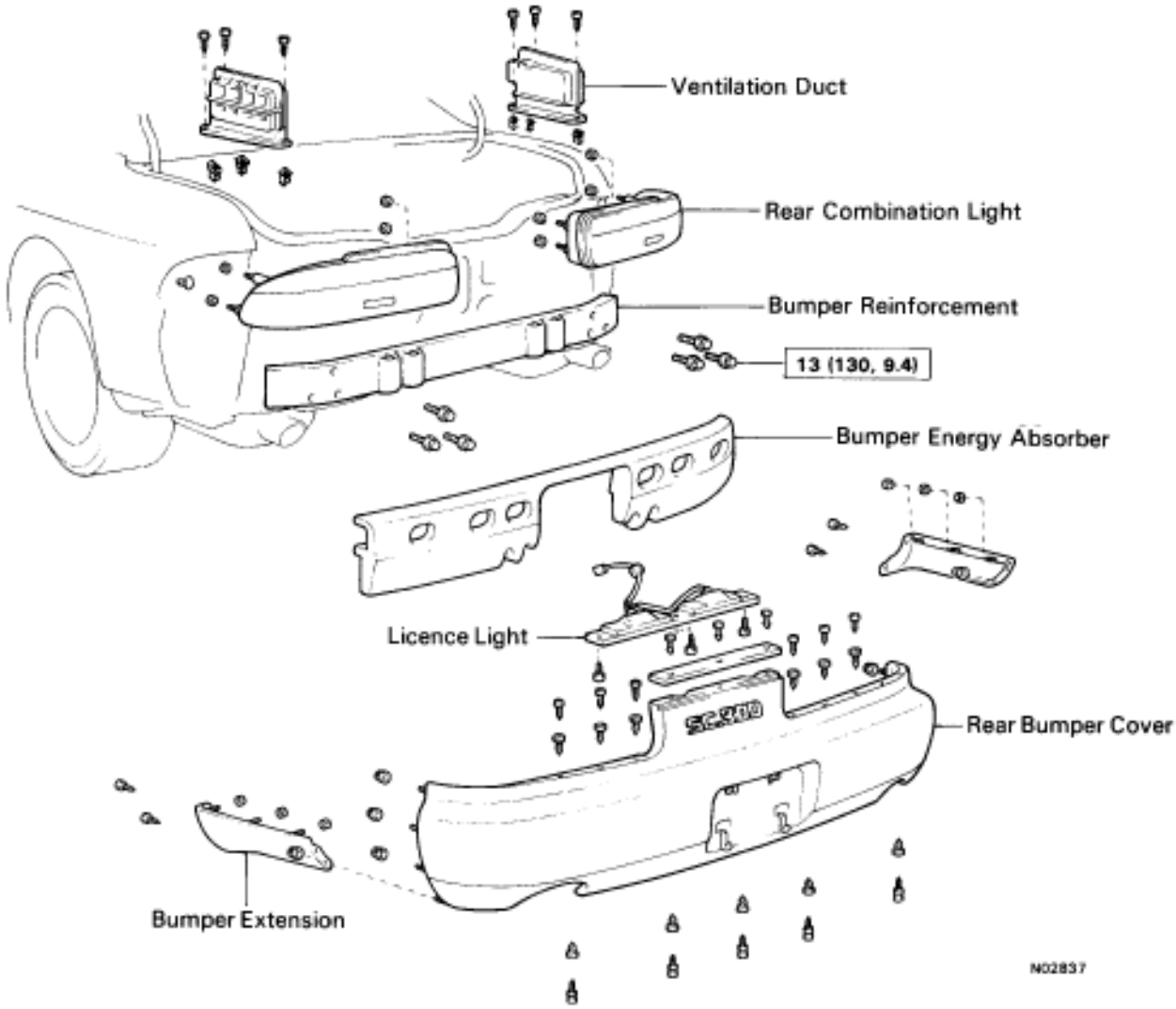

N·m (kgf·cm, ft·lbf) : Specified torque

WhereEverybodyKnowsYourName

REMOVAL OF REAR BUMPER

(See page BO–15)

1. REMOVE FOLLOWING PARTS:

(See steps 1 to 6 on pages BO–79 to 80)

(a) Floor mat
(b) Door striker cover
(c) Trim rear cover
(d) Trim front cover
(e) LH side cover
(f) RH side cover

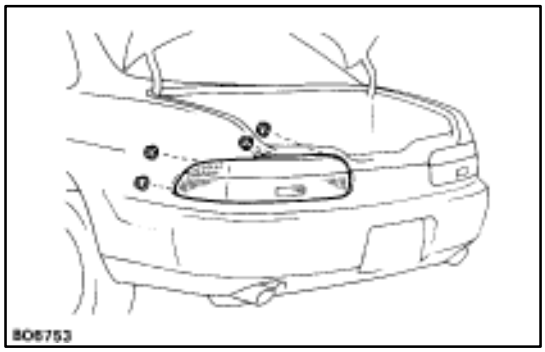

2. REMOVE REAR COMBINATION LIGHT

(a) Remove four nuts and disconnect the connectors.
(b) Remove the light.

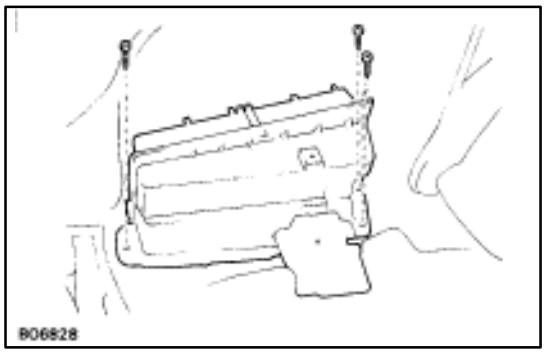

3. REMOVE VENTILATION DUCT

Remove three screws and the duct.

4. REMOVE REAR BUMPER COVER

(a) Remove sixteen clips and six nuts.
(b) Remove the cover.

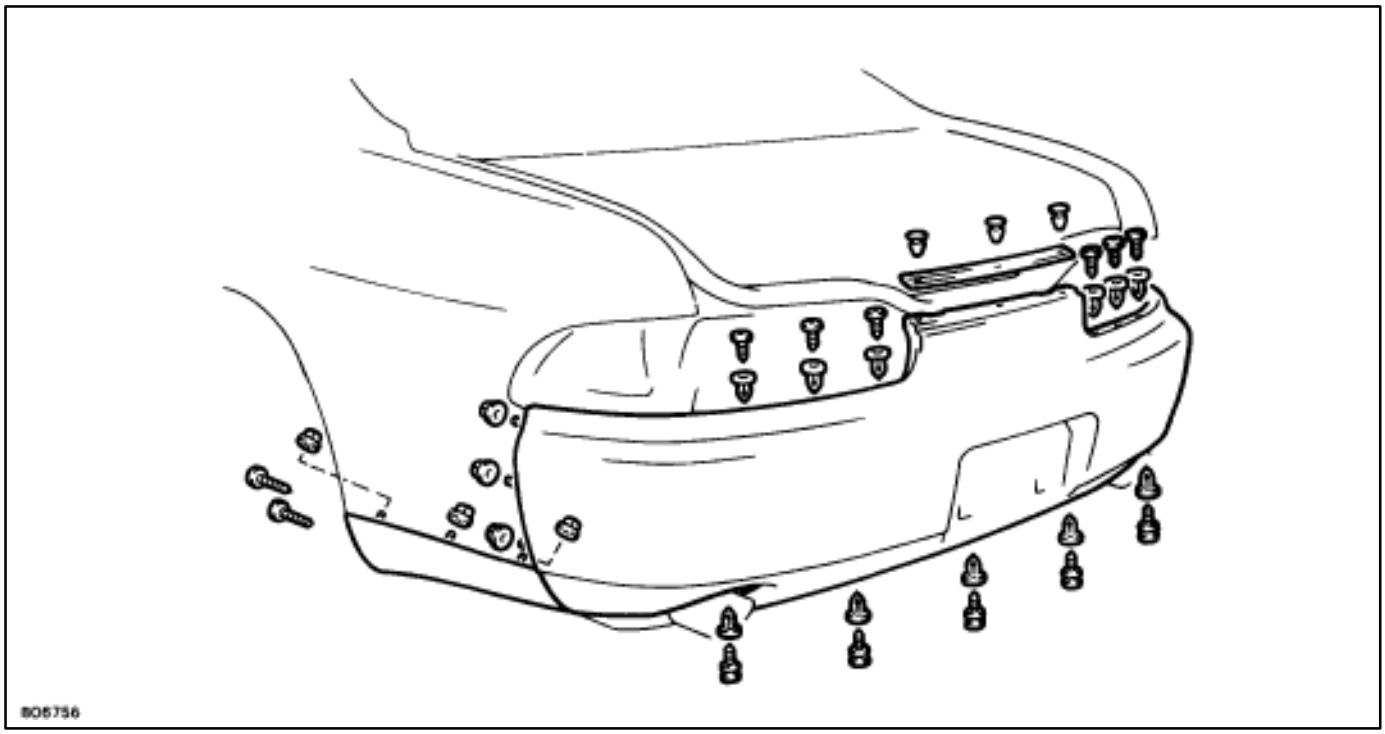

WhereEverybodyKnowsYourName

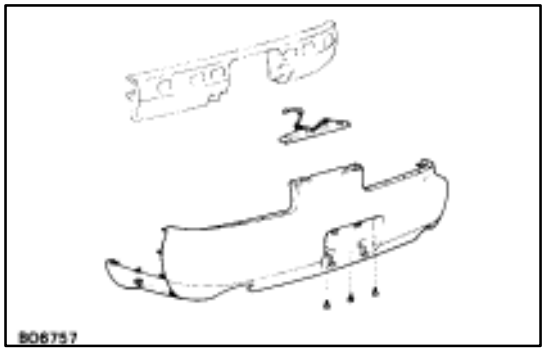

5. REMOVE LICENCE LIGHT AND BUMPER EXTENSION

(a) Remove the bumper energy absorber from the bumper cover.

(b) Remove three screws and the light.

(c) Remove the nut and the extension.

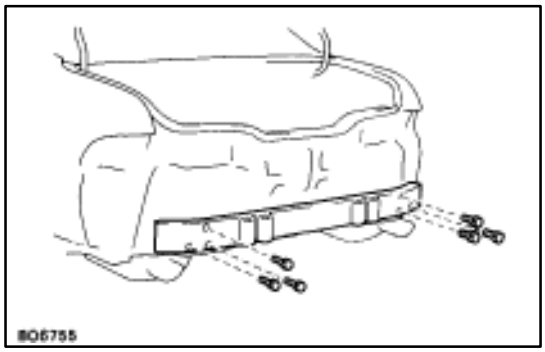

6. REMOVE BUMPER REINFORCEMENT

Remove six bolts and the reinforcement.

INSTALLATION OF REAR BUMPER

(See page BO–15)

INSTALL REAR BUMPER PARTS BY FOLLOWING REMOVAL SEQUENCE IN REVERSE

WhereEverybodyKnowsYourName

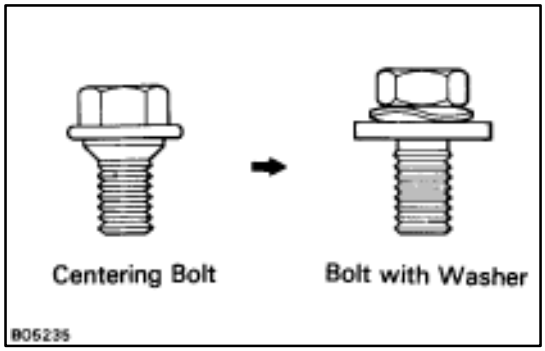

HOOD
Fitting Adjustments

1. **SUBSTITUTE BOLT WITH WASHER FOR CENTERING BOLT**
   Since the centering bolt is used as the hood hinge set bolt, the hood cannot be adjusted with it on. Substitute the bolt with washer for the centering bolt.

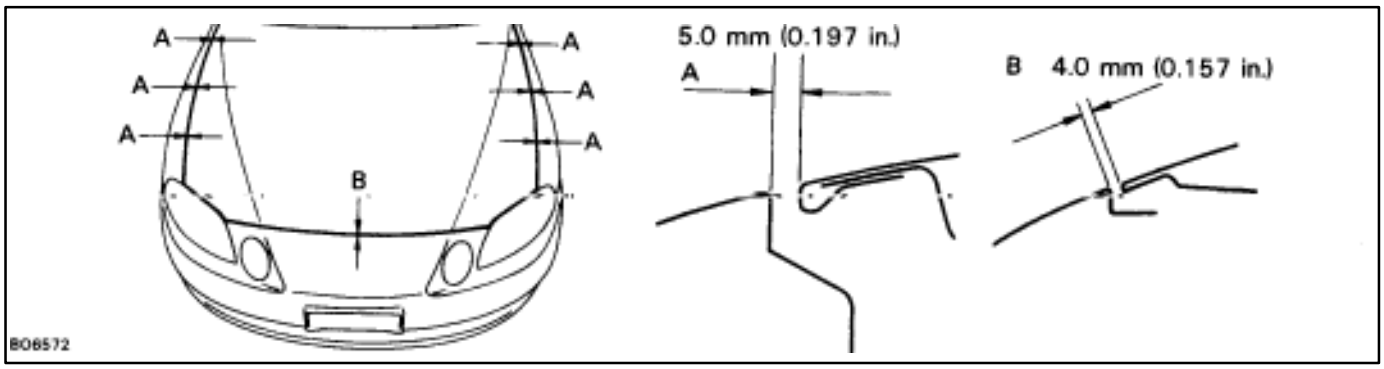

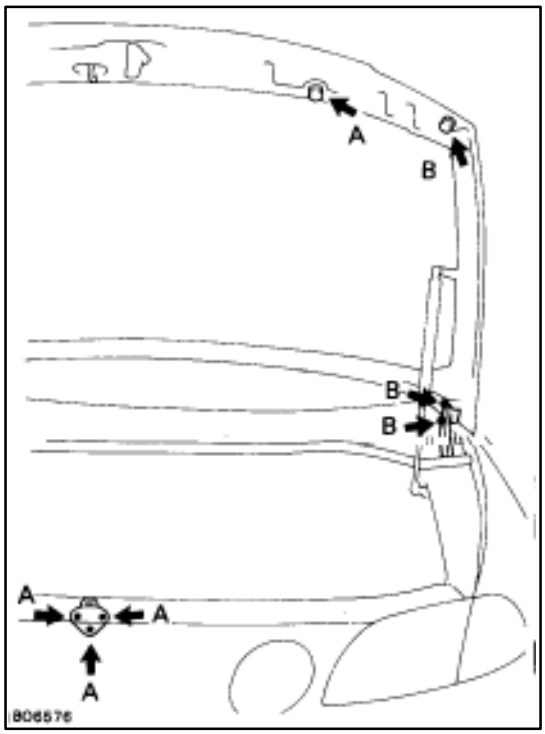

HINT: Adjust the hood according to the following method.

2. **ADJUST HOOD IN FORWARD/REARWARD AND LEFT/RIGHT DIRECTIONS**
   Adjust the hood by loosening the B bolts.

3. **ADJUST FRONT EDGE OF HOOD IN VERTICAL DIRECTION**
   Adjust the hood by turning the A and B cushions.

4. **ADJUST HOOD LOCK**
   Adjust the lock by loosening the A bolts and the nut.

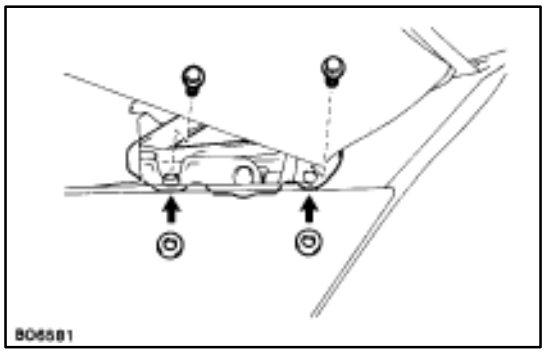

5. **ADJUST REAR EDGE OF HOOD IN VERTICAL DIRECTION**
   (a) Remove the fender. (See page BO–93)
   (b) Adjust the hood by increasing or decreasing the number of shims as shown.

WhereEverybodyKnowsYourName

Hood

COMPONENTS

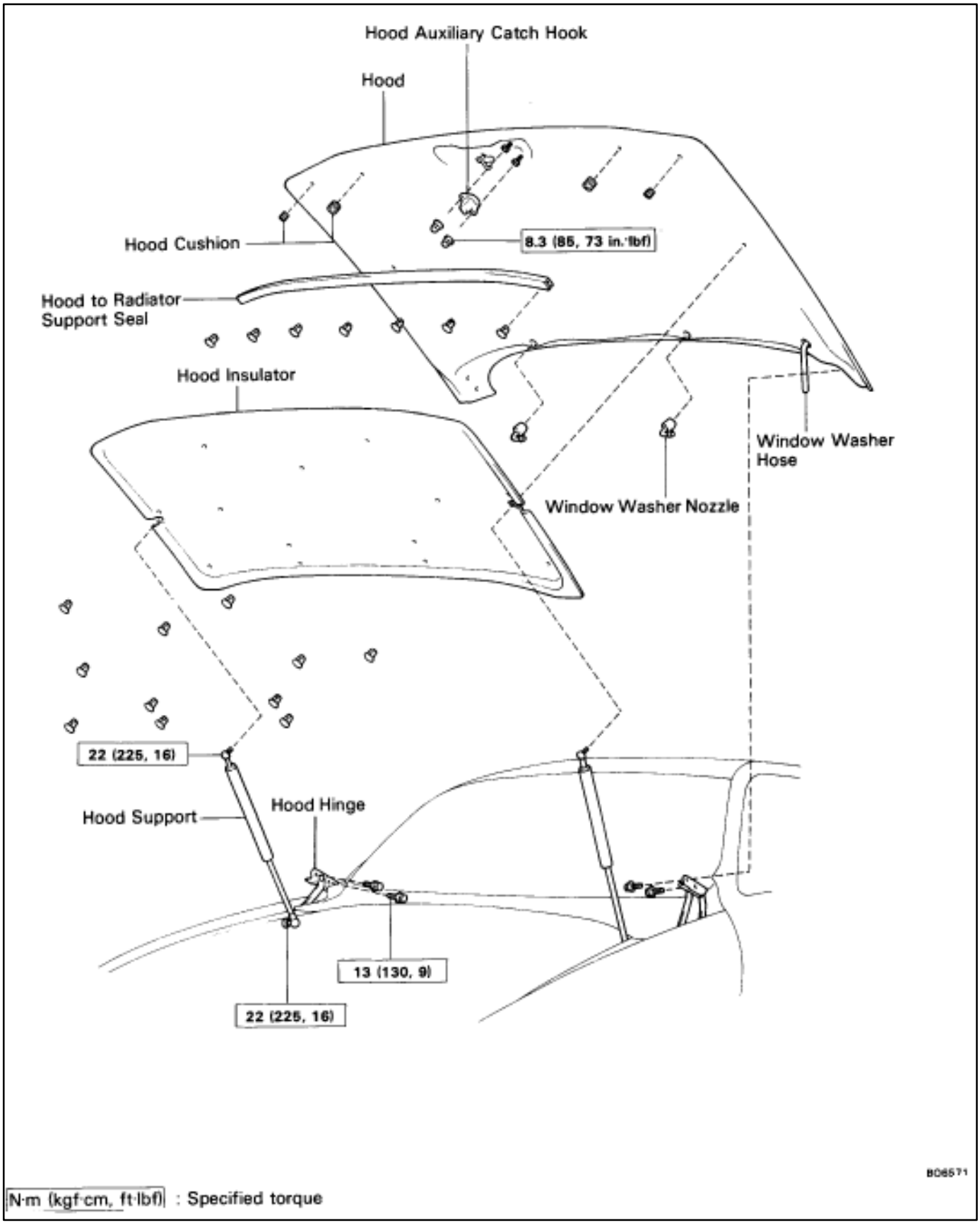

WhereEverybodyKnowsYourName

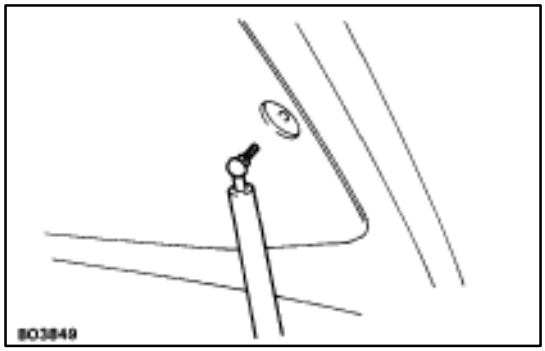

REMOVAL OF HOOD

(See page BO–19)

1. REMOVE HOOD SUPPORT FROM HOOD

Remove the bolt and disconnect the support from hood.

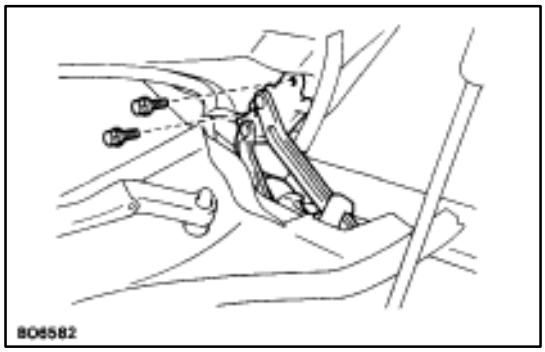

2. REMOVE HOOD

(a) Disconnect the windshield washer hose from the body side.

(b) Remove four bolts from hood hinge and remove the hood.

HINT: Be careful not to damage the body or glass with the hood end.

INSTALLATION OF HOOD

(See page BO–19)

1. INSTALL HOOD

(a) Place the hood on the hood hinge and install four bolts temporarily.

(b) Connect the windshield washer hose to the body side.

2. INSTALL HOOD SUPPORT TO HOOD

Install the bolt and connect the support to hood.

Torque: 22 N·m (225 kgf·cm, 16 ft·lbf)

3. ADJUST HOOD

(See page BO–18)

WhereEverybodyKnowsYourName

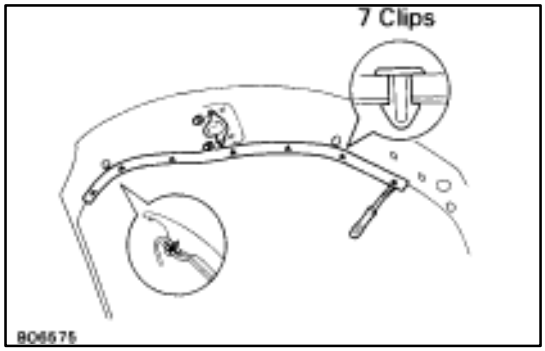

DISASSEMBLY OF HOOD

(See page BO–19)

1. REMOVE HOOD AUXILIARY CATCH HOOK

2. REMOVE HOOD TO RADIATOR SUPPORT SEAL

Using a clip remover, remove clips and the seal.

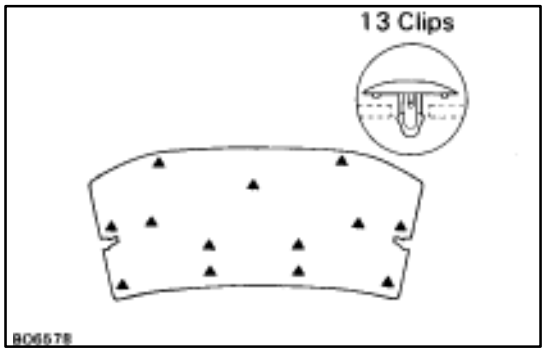

3. REMOVE HOOD INSULATOR

Using a clip remover, remove clips and the insulator.

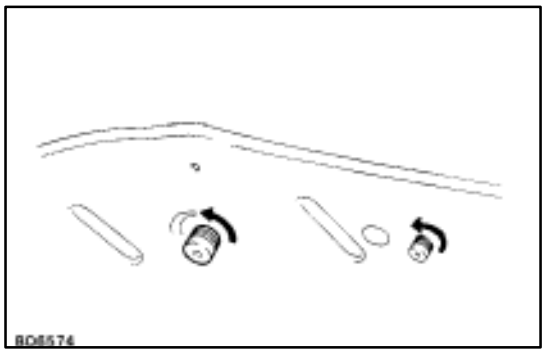

4. REMOVE HOOD CUSHION

Turn the cushions counter clockwise with your hand to remove it.

5. REMOVE WINDOW WASHER HOSE

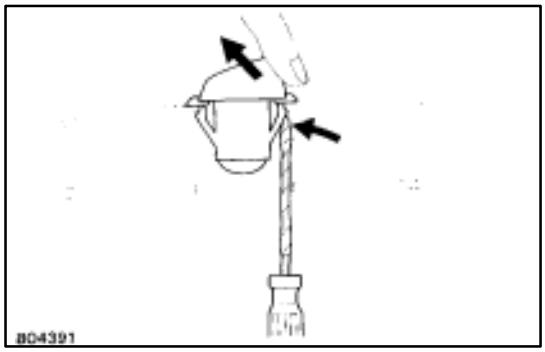

6. REMOVE WINDOW WASHER NOZZLE

(a) Remove the cover.

(b) Using a screwdriver, remove the nozzle.

HINT: Tape the screwdriver tip before use.

ASSEMBLY OF HOOD

(See page BO–19)

ASSEMBLE HOOD PARTS BY FOLLOWING DISASSEMBLY SEQUENCE IN REVERSE

WhereEverybodyKnowsYourName

Hood–Related Parts

COMPONENTS

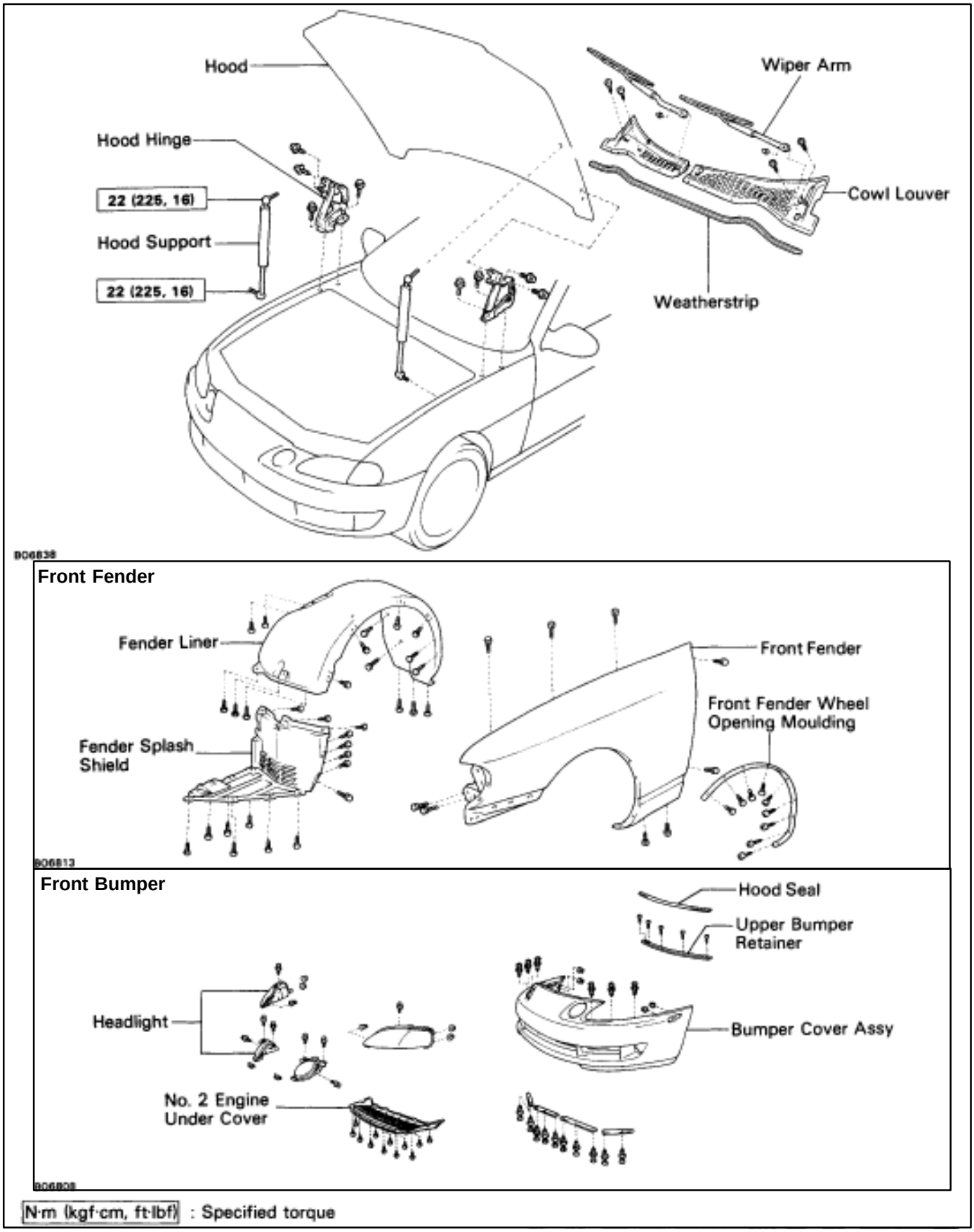

WhereEverybodyKnowsYourName

Hood Hinge
REMOVAL AND INSTALLATION
(See page BO–22)

HINT: Install the hinge by following removal sequence in reverse.

1. REMOVE HOOD

Removal: (See steps 1 to 2 on page BO–20)
Installation: (See steps 1 to 2 on page BO–20)

2. REMOVE FRONT BUMPER

Removal: (See steps 1 to 6 on page BO–12 to 13)
Installation: (See page BO–14)

3. REMOVE FRONT FENDER

Removal: (See steps 1 to 4 on page BO–92)
Installation: (See steps 1 to 4 on page BO–92 to 93)

4. REMOVE COWL LOUVER

5. REMOVE HOOD HINGE

Remove two bolts and the hinge.

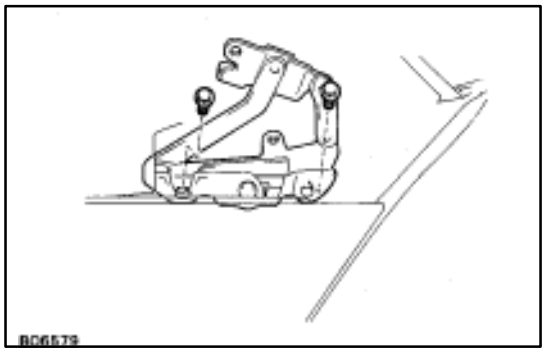

Hood Support
REMOVAL AND INSTALLATION
(See page BO–22)

1. REMOVE SUPPORT FROM HOOD

Remove the bolt and the support from hood.

HINT: While supporting the hood with your hand, remove the hood.

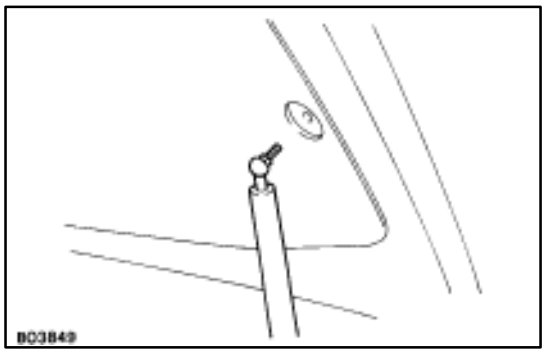

2. REMOVE SUPPORT FROM BODY

Remove the bolt and the support.

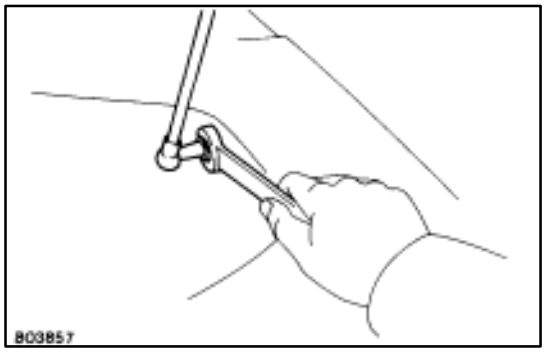

3. IF NECESSARY, REPLACE HOOD SUPPORT

NOTICE: Handling the damper.

(a) Do not disassemble the damper as the cylinder is filled with pressurized gas.

(b) If the damper is to be replaced, drill a 2.0 – 3.0 mm (0.079–0.118 in.) hole in the bottom of the removed damper cylinder to completely release the high–pressure gas before disposing of it.

(c) When drilling, chips may fly out so work carefully.

(d) The gas is colorless, odorless and non–toxic.

(e) When working, handle the damper carefully. Never score or scratch the exposed part of the piston rod, and never allow paint or oil to get on it.

(f) Do not turn the piston rod and cylinder with the damper fully extended.

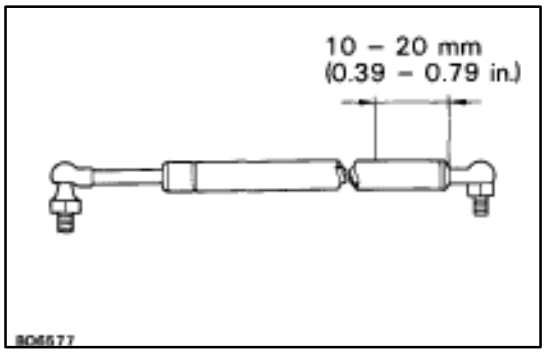

4. INSTALL HOOD SUPPORT

Install the support.

Torque: 22 N·m (225 kgf·cm 16 ft·lbf)

WhereEverybodyKnowsYourName

Hood Lock Control

COMPONENTS

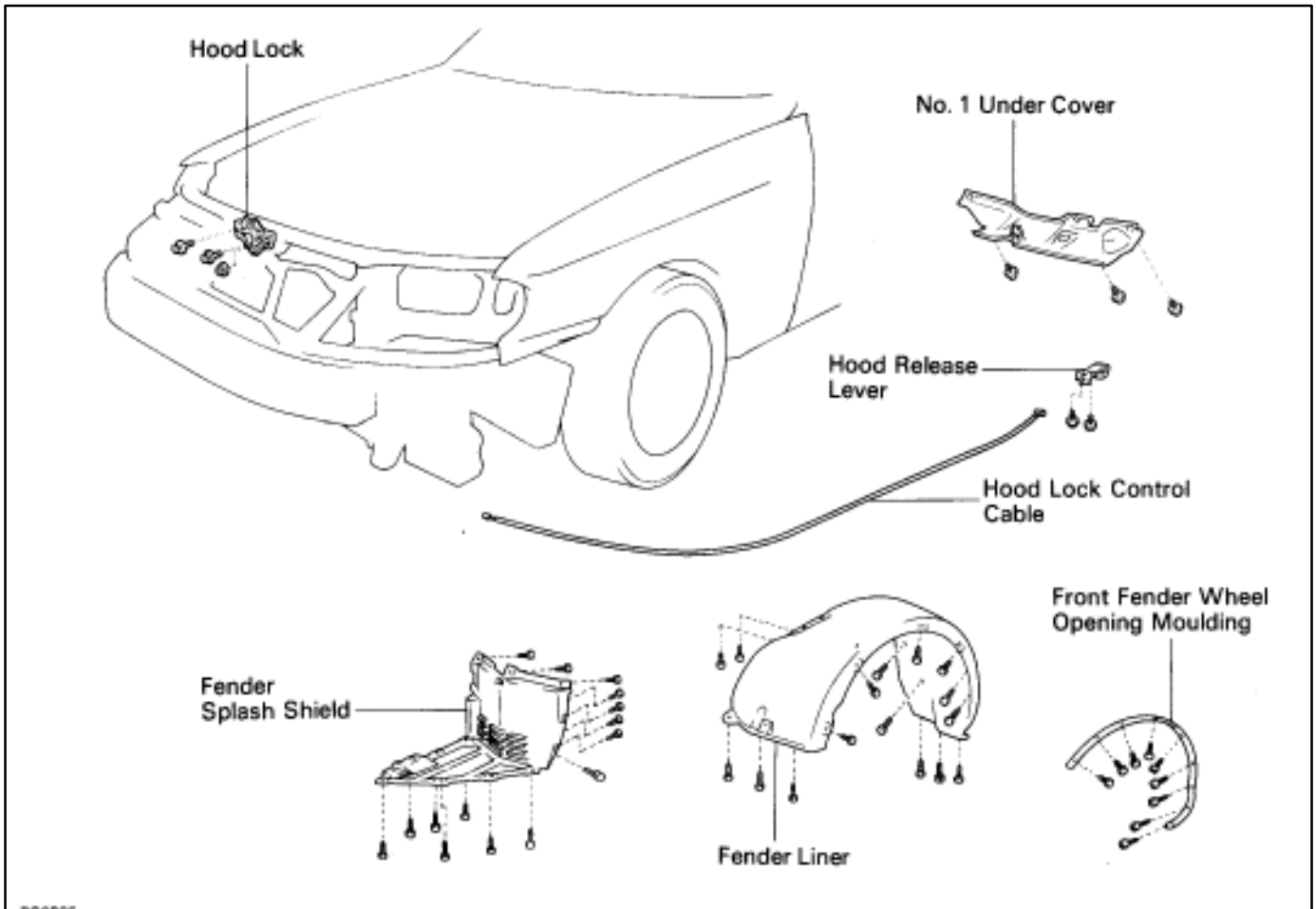

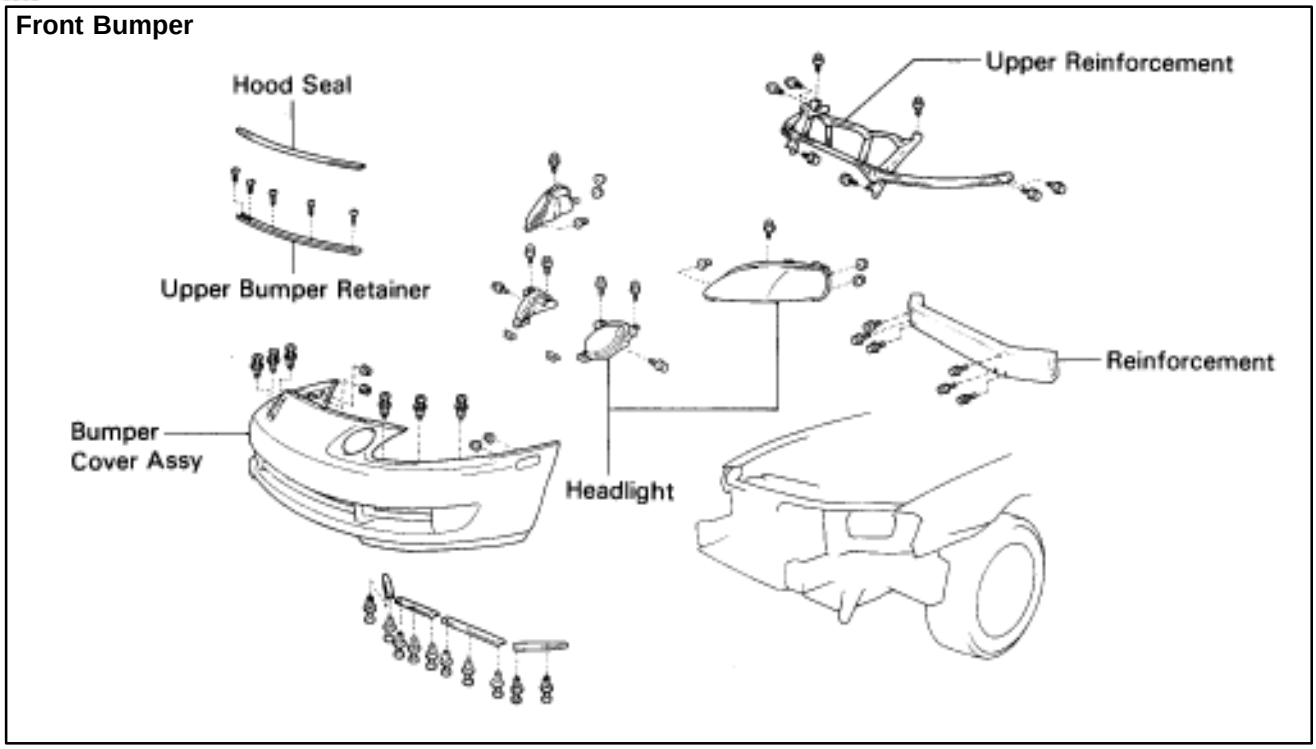

WhereEverybodyKnowsYourName

REMOVAL OF HOOD LOCK CONTROL

(See page BO–24)

1. REMOVE FOLLOWING PARTS:

(a) Front bumper
(b) LH front fender wheel opening moulding
(c) LH fender liner
(d) Fender splash shield
(e) Hood release lever

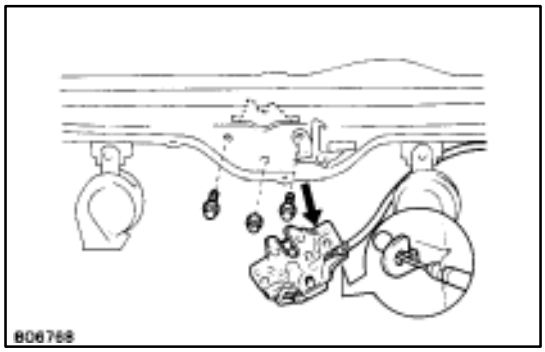

2. REMOVE HOOD LOCK

(a) Remove two bolts, the nut and the hood lock.
(b) Disconnect the link from the lock.

3. REMOVE HOOD LOCK CONTROL CABLE

(a) Disconnect the cable from clamps.

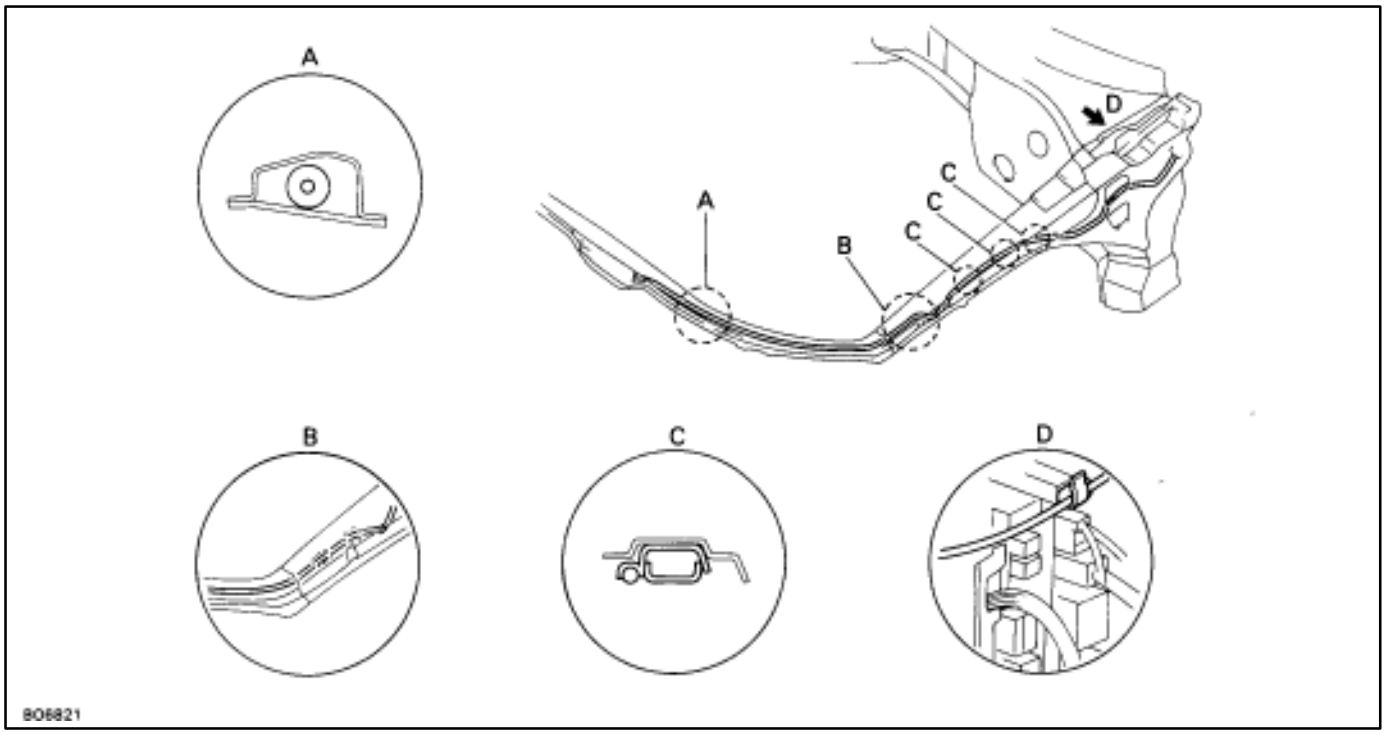

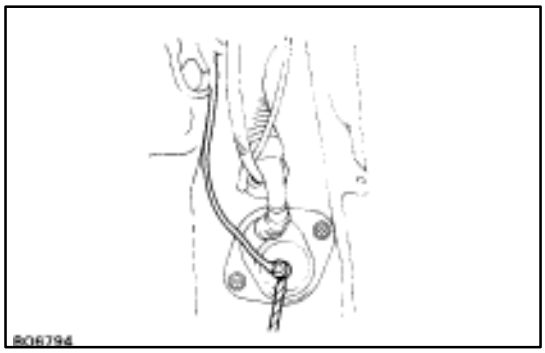

(b) Using the screwdriver, pry out the cable stopper from grommet.

HINT: Do not damage the grommet with the screwdriver.

WhereEverybodyKnowsYourName

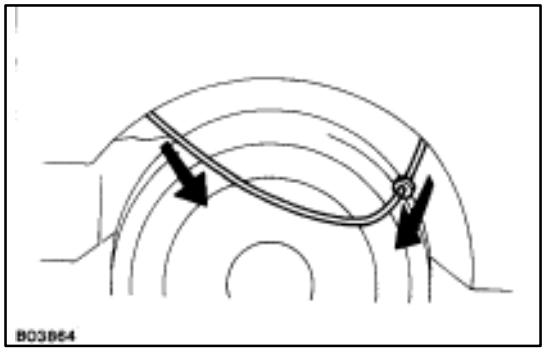

(c) Pull the cable from front wheel housing to remove it.

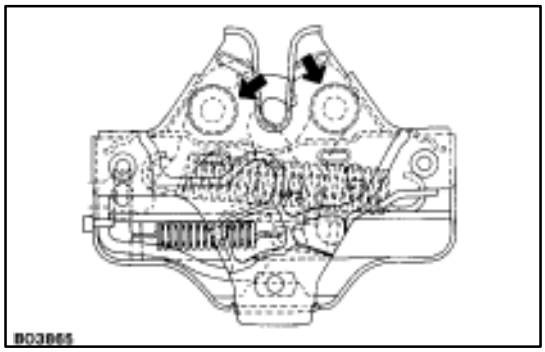

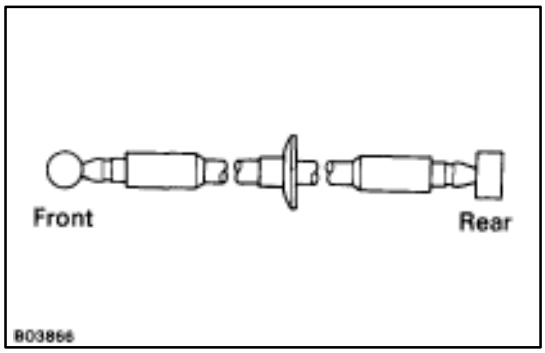

INSTALLATION OF HOOD LOCK CONTROL

(See page BO–24)

1. **BEFORE INSTALLING PARTS, COAT LOCK WITH MP GREASE**
   Apply MP grease to the sliding surface of the lock.

2. **INSTALL HOOD LOCK CONTROL CABLE**
   (a) Push the rear side cable through the grommet.
   (b) Using the screwdriver, push the cable stopper into the grommet.
   HINT: Do not damage the grommet with the screwdriver.
   (c) Clamp the cable to the junction block.
   (d) Pass the front side cable through the upper radiator support.

3. **INSTALL HOOD RELEASE LEVER**

4. **INSTALL HOOD LOCK TEMPORARILY**

5. **CHECK HOOD LOCK CONTROL FOR PROPER OPERATION**
   After checking for proper operation, tighten the nut and two bolts to install the lock.

6. **INSTALL FOLLOWING PARTS:**
   (a) Hood release lever
   (b) Fender splash shield
   (c) LH fender liner
   (d) LH front fender wheel opening moulding
   (e) Front bumper

WhereEverybodyKnowsYourName

TRANSPORT HOOK

COMPONENTS

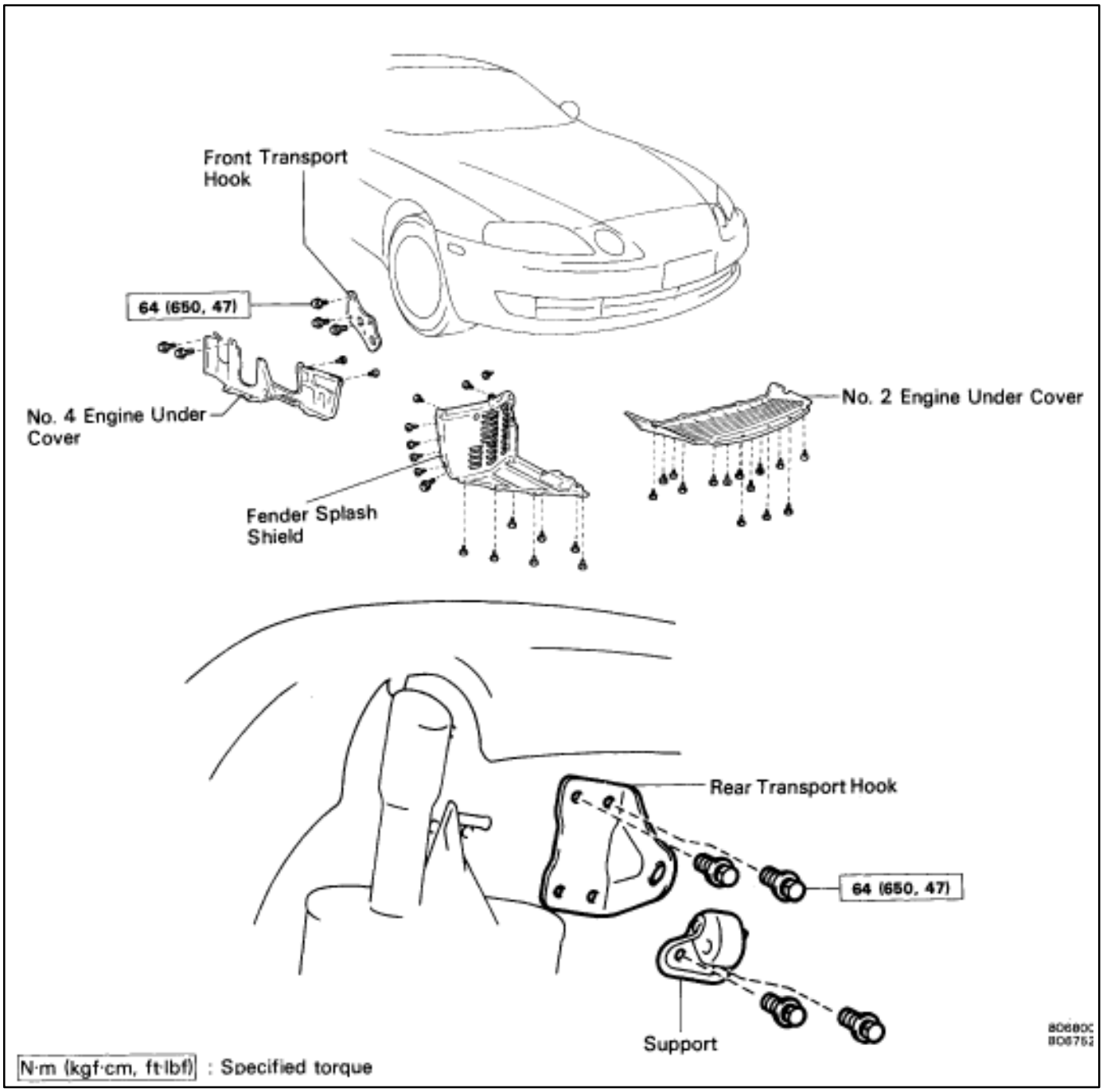

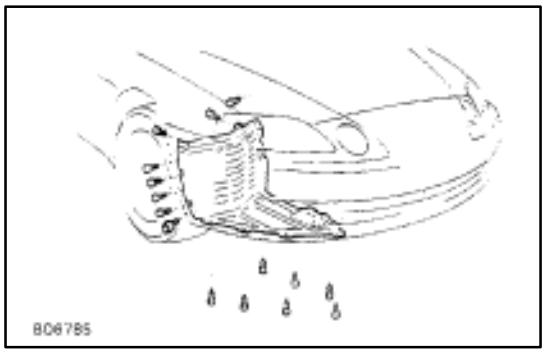

Front Transport Hook

REMOVAL AND INSTALLATION

1. **REMOVE FENDER SPLASH SHIELD**
   Remove fourteen screws, a bolt and the shield.

WhereEverybodyKnowsYourName

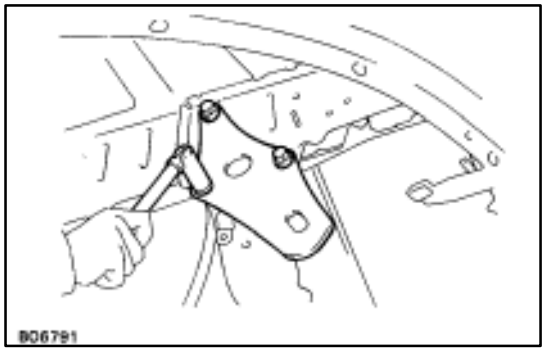

2. **REMOVE NO. 4 ENGINE UNDER COVER**

3. **REMOVE FRONT TRANSPORT HOOK**
   Remove three bolts and the hook.

4. **INSTALL FRONT TRANSPORT HOOK**
   Install the hook with three bolts.
   Torque: 64 N·m (650 kgf·cm, 47 ft·lbf)

5. **INSTALL NO. 4 ENGINE UNDER**

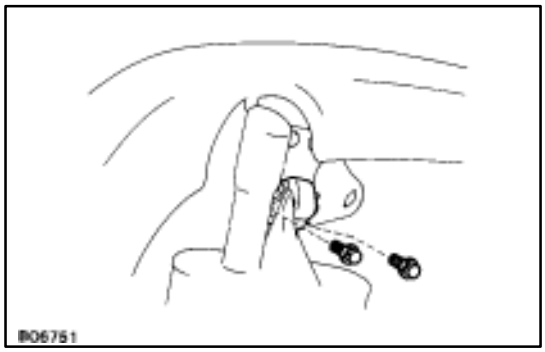

6. **INSTALL FENDER SPLASH SHIELD**

Rear Transport Hook

REMOVAL AND INSTALLATION

(See page BO–27)

1. **REMOVE SUPPORT**
   Remove two bolts and the support.

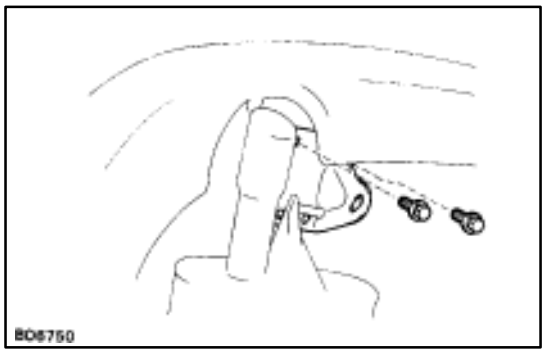

2. **REMOVE REAR TRANSPORT HOOK**
   Remove two bolts and the hook.

3. **INSTALL REAR TRANSPORT HOOK**
   Install the hook with two bolts.
   Torque: 64 N·m (650 kgf·cm, 47 ft·lbf)

4. **INSTALL SUPPORT**
   Install the support with two bolts.

WhereEverybodyKnowsYourName

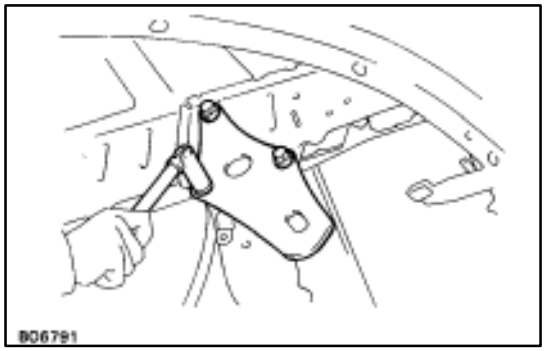

2. **REMOVE NO. 4 ENGINE UNDER COVER**

3. **REMOVE FRONT TRANSPORT HOOK**
   Remove three bolts and the hook.

4. **INSTALL FRONT TRANSPORT HOOK**
   Install the hook with three bolts.
   Torque: 64 N·m (650 kgf·cm, 47 ft·lbf)

5. **INSTALL NO. 4 ENGINE UNDER**

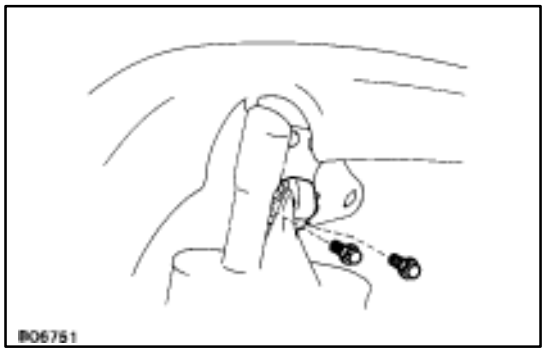

6. **INSTALL FENDER SPLASH SHIELD**

Rear Transport Hook

REMOVAL AND INSTALLATION

(See page BO–27)

1. **REMOVE SUPPORT**
   Remove two bolts and the support.

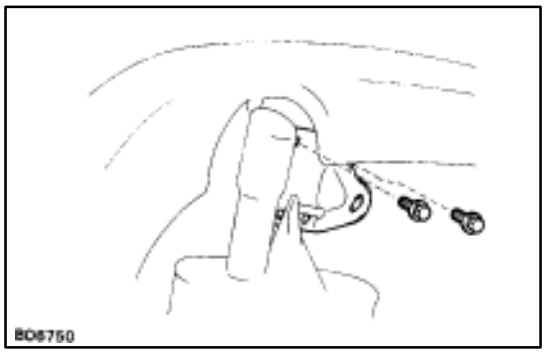

2. **REMOVE REAR TRANSPORT HOOK**
   Remove two bolts and the hook.

3. **INSTALL REAR TRANSPORT HOOK**
   Install the hook with two bolts.
   Torque: 64 N·m (650 kgf·cm, 47 ft·lbf)

4. **INSTALL SUPPORT**
   Install the support with two bolts.

WhereEverybodyKnowsYourName

DOOR
Fitting Adjustments

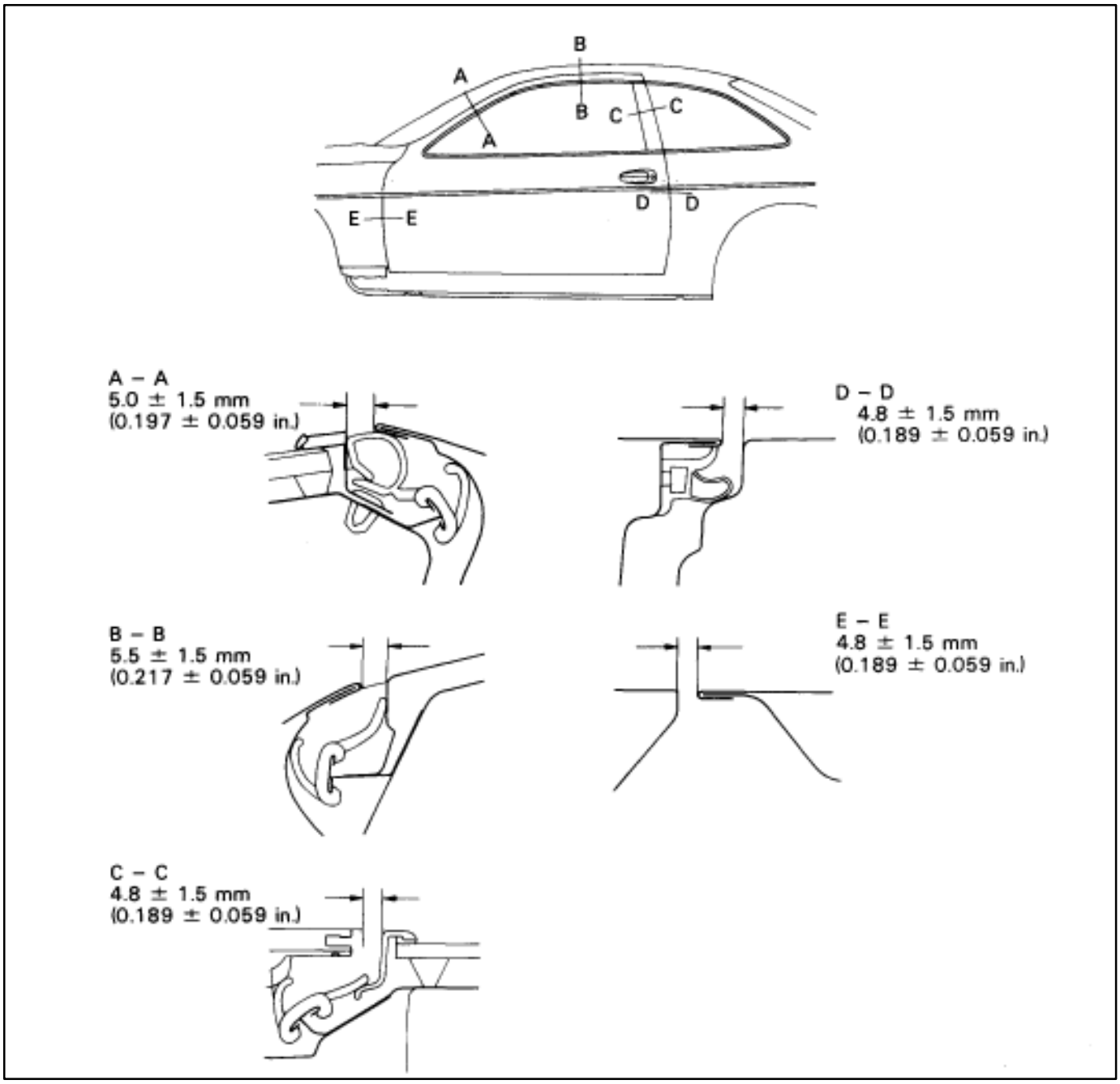

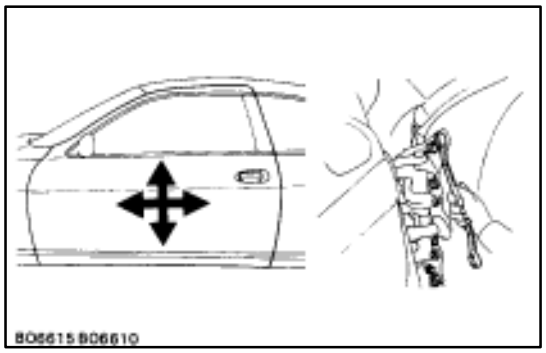

HINT: Adjust the door panel according to the following method.

[ADJUSTMENT OF FRONT DOOR]

1. **ADJUST FRONT DOOR IN FORWARD/REARWARD AND VERTICAL DIRECTIONS**
   Loosen the body side hinge bolts to adjust the door panel.
   HINT: Remove the pin on the body side before performing adjustment and reinstall it when finished.

WhereEverybodyKnowsYourName

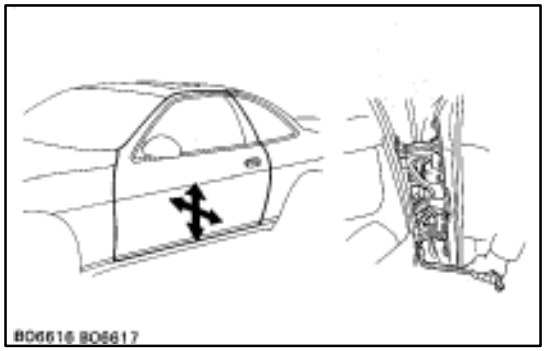

2. ADJUST FRONT DOOR IN LEFT/RIGHT AND VERTICAL DIRECTIONS

Loosen the door side hinge bolts to adjust.

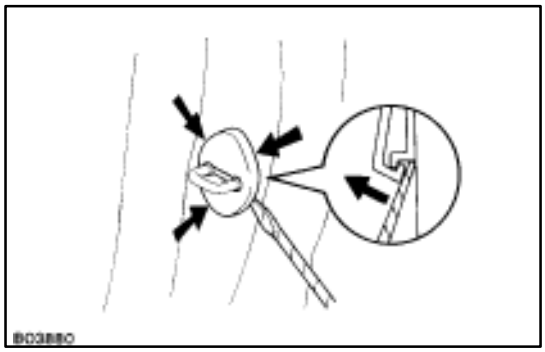

3. ADJUST FRONT DOOR LOCK STRIKER

(a) Check that the door fit and door lock linkages are adjusted correctly.

(b) Using a screwdriver, remove the striker cover.

HINT: Tape the screwdriver tip before use.

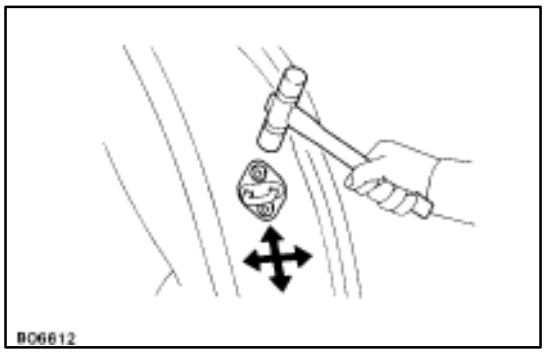

(c) Adjust the striker position by slightly loosening the striker mounting screws, and hitting the striker with a hammer. Tighten the striker mounting screws again.

(d) Install the striker cover.

WhereEverybodyKnowsYourName

Front Door
COMPONENTS

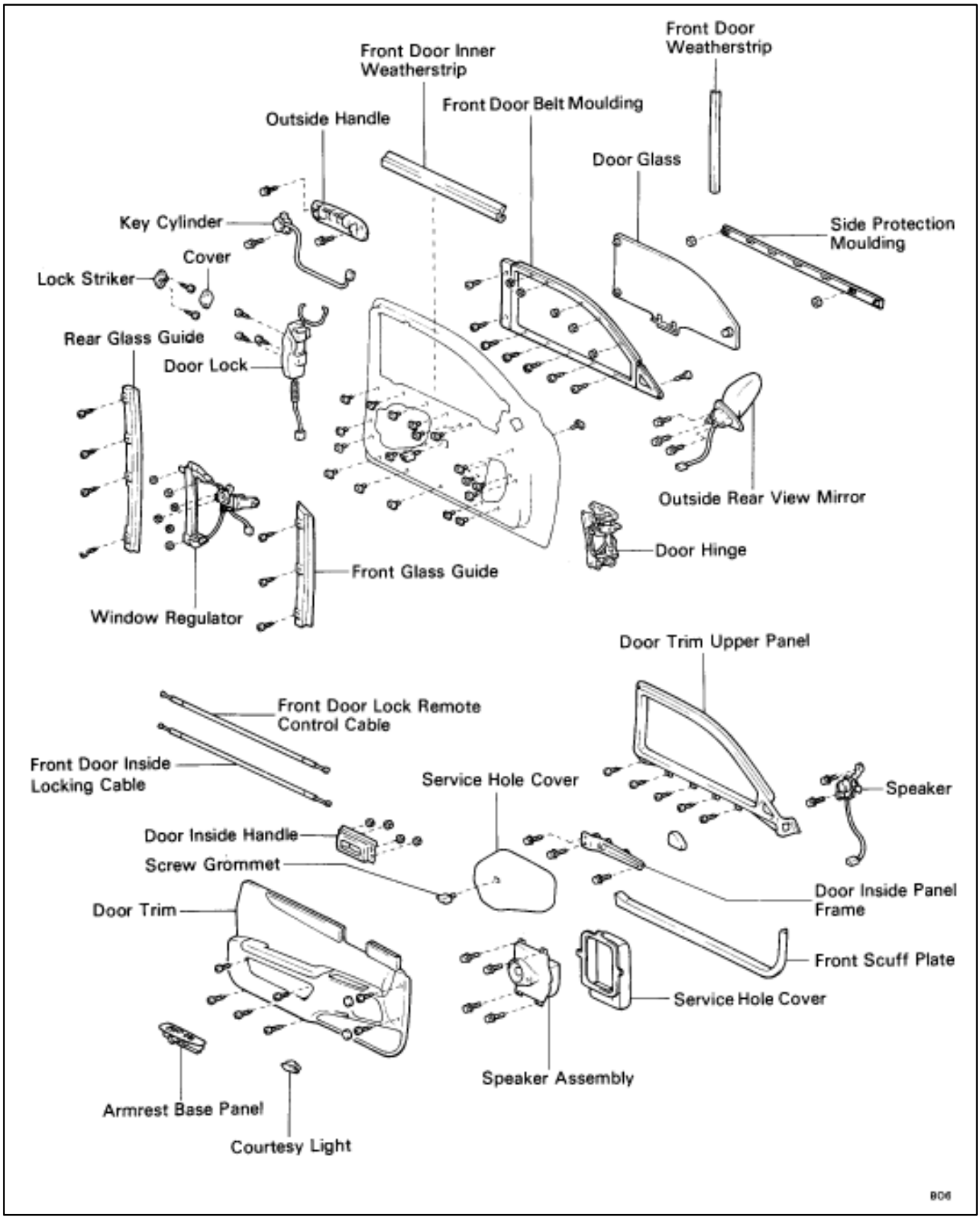

WhereEverybodyKnowsYourName

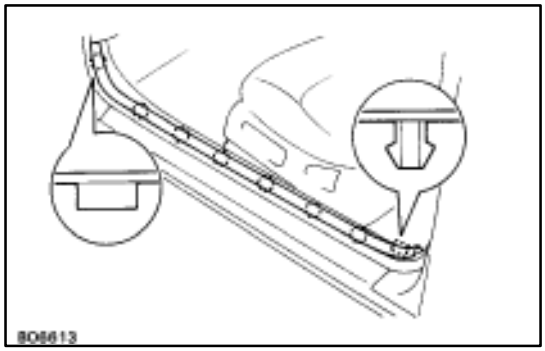

REMOVAL OF FRONT DOOR

(See page BO–31)

1. REMOVE FRONT SCUFF PLATE

Using the screwdriver, remove the plate.

HINT: Tape the screwdriver tip before use.

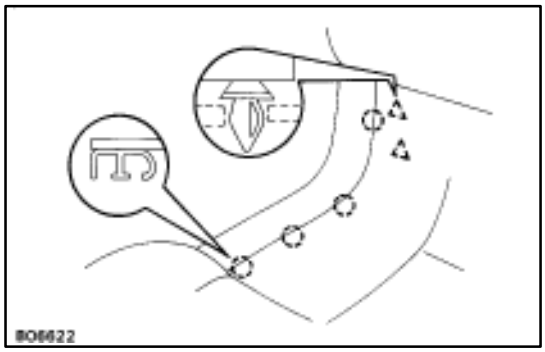

2. DISCONNECT CONNECTORS

(a) Disconnect the front corner of the floor carpet.

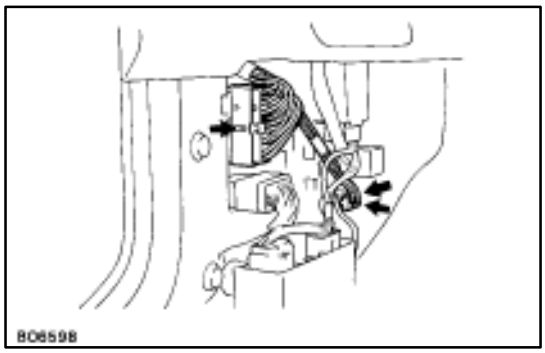

(b) Disconnect three connectors as shown.

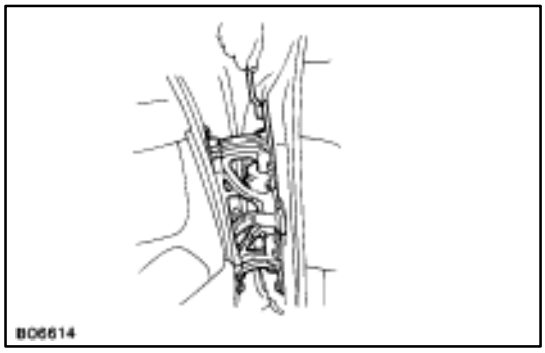

3. REMOVE DOOR

While supporting the door, remove six door hinge bolts to remove the door.

REPLACEMENT OF DOOR HINGE

1. REMOVE DOOR HINGE

Remove four bolts and the hinge.

2. INSTALL DOOR HINGE

Install four bolts and the hinge.

INSTALLATION OF FRONT DOOR

(See page BO–31)

INSTALL DOOR PARTS BY FOLLOWING REMOVAL SEQUENCE IN REVERSE

HINT: After installing the door, adjust the door. (See page BO–29)

WhereEverybodyKnowsYourName

DISASSEMBLY OF FRONT DOOR

(See page BO–31)

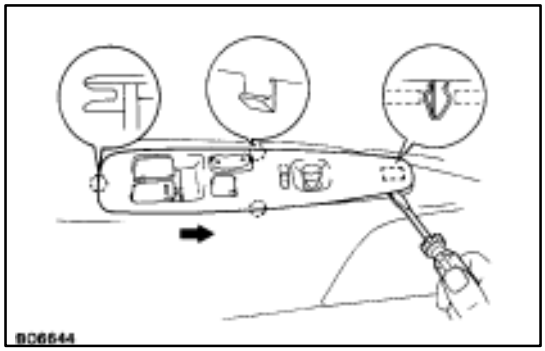

1. REMOVE ARMREST BASE PANEL

(a) Using the screwdriver, remove the clip.

(b) Pull the panel forward and disconnect the connector.

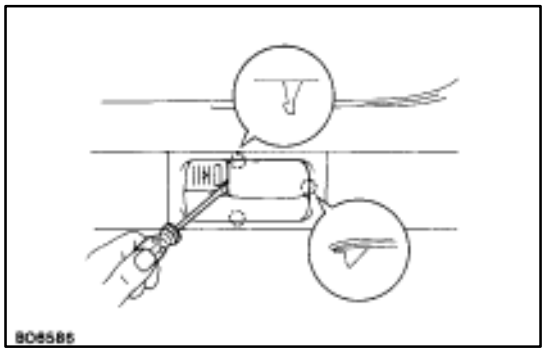

2. REMOVE DOOR INSIDE HANDLE BEZEL COVER

Using the small screwdriver, pry outward the cover.

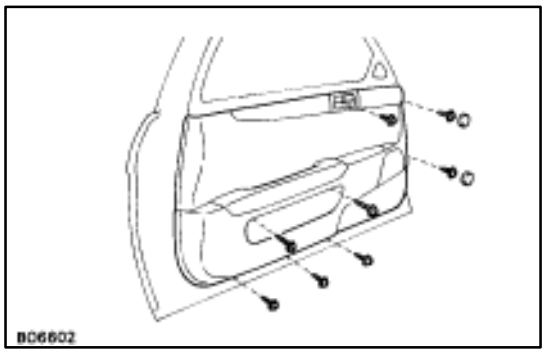

3. REMOVE DOOR TRIM

(a) Remove two caps and eight screws.

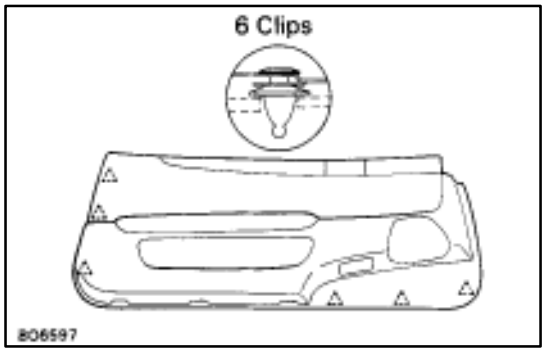

(b) Insert the screwdriver between the panel and the trim and remove clips.

HINT: Do not scratch the panel with the screwdriver.

(c) Remove the trim by pulling all of the trim.

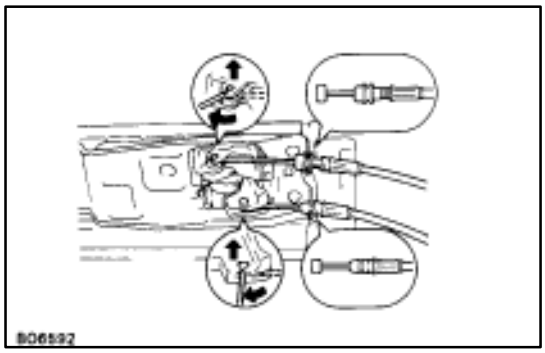

(d) Remove the two cables from the door inside handle.

(e) Disconnect the connector from the door curtesy light.

WhereEverybodyKnowsYourName

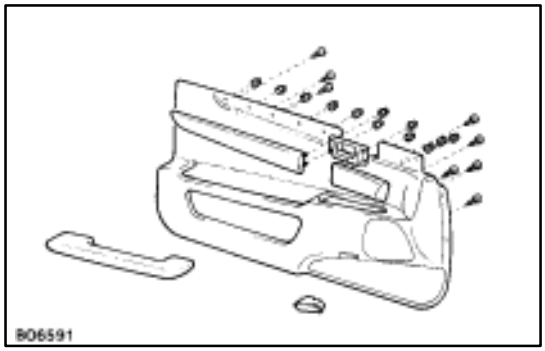

(f) Remove twelve nuts, the front door trim ornament and the door inside handle.
(g) Remove eight screws and armrest.
(h) Remove the door courtesy light.

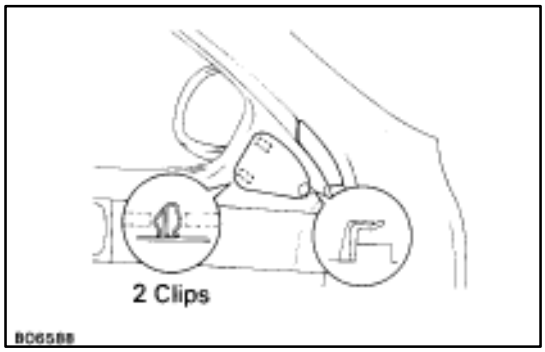

4. REMOVE DOOR SPEAKER GRILLE

Using a screwdriver, pry loose two clips and remove the cover.

HINT: Tape the screwdriver tip before use.

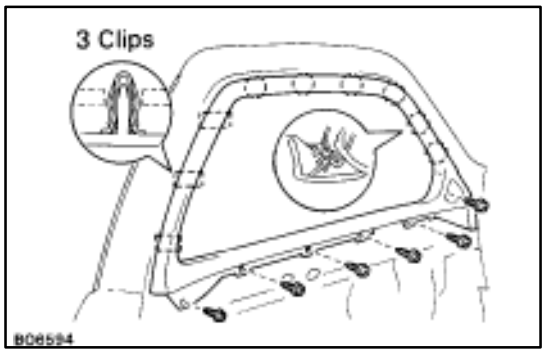

5. REMOVE DOOR TRIM UPPER PANEL

Remove six screws and pry out the panel.

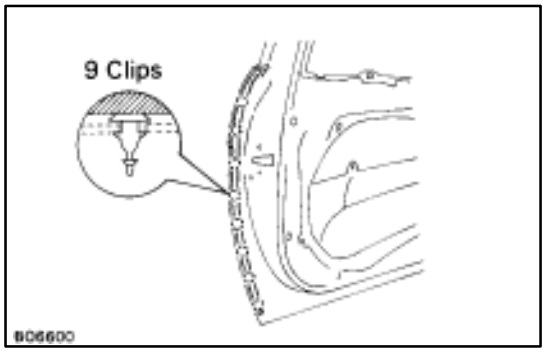

6. REMOVE FRONT DOOR WEATHERSTRIP

While pulling the weatherstrip by hand, remove the nine clips using a clip remover.

HINT: Do not pull strongly on the weatherstrip as it may tear.

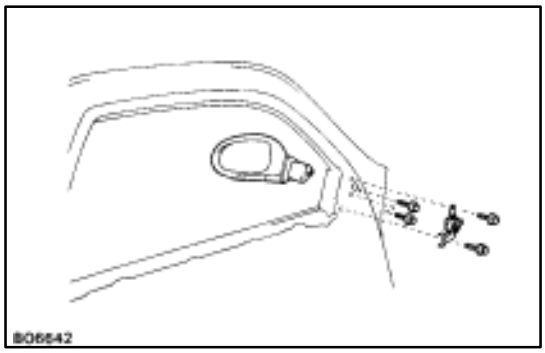

7. REMOVE OUTSIDE REAR VIEW MIRROR AND SPEAKER

(a) Remove two bolts and the speaker, disconnect the connector.
(b) Remove two bolts and the mirror, disconnect the connector.

WhereEverybodyKnowsYourName

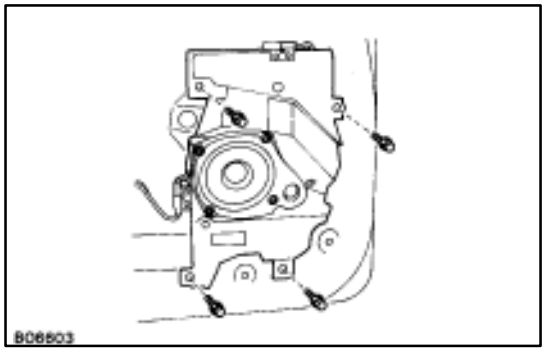

8. REMOVE SPEAKER ASSEMBLY

Disconnect connectors from speaker assembly and remove speaker assembly with four bolts.

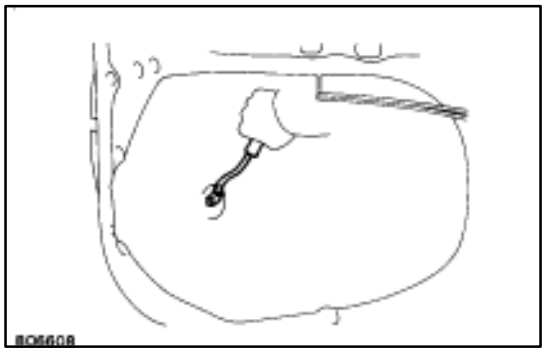

9. REMOVE SCREW GROMMETS

Using a clip remover, remove two grommets.

10. REMOVE SERVICE HOLE COVER

Remove the cover by pulling at the edge by hand.

HINT: Do not tear the cover.

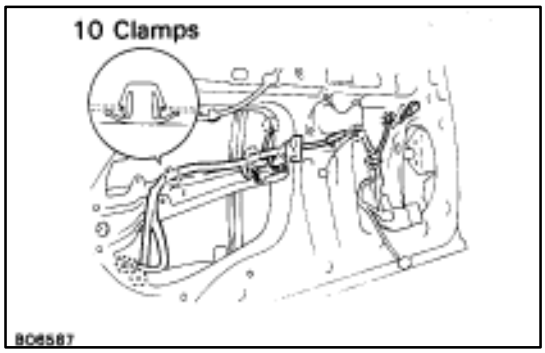

11. DISCONNECT WIRE HARNESS FROM DOOR PANEL

Using a clip remover, remove the wire harness clamps from ten position on the door panel.

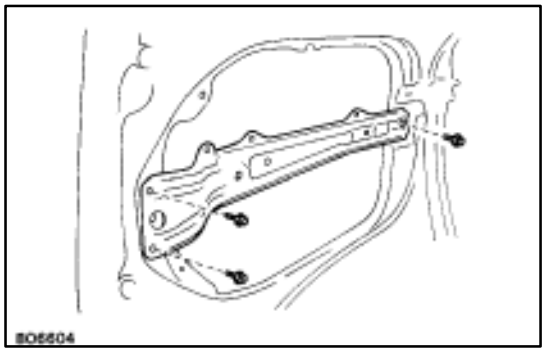

12. REMOVE DOOR INSIDE PANEL FRAME

Remove three bolts and the frame.

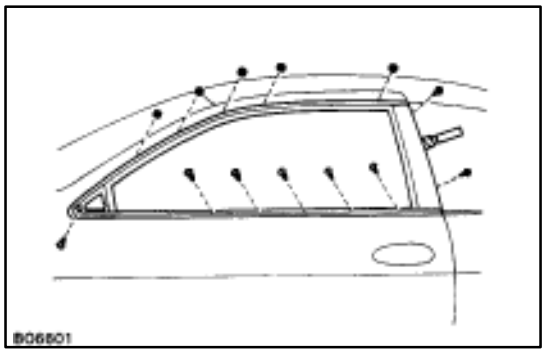

13. REMOVE FRONT DOOR BELT MOULDING

(a) Remove eight screws and five nuts.

(b) Using a scraper, remove the double–sided tape from the rear side.

HINT: Tape the scraper tip before use.

WhereEverybodyKnowsYourName

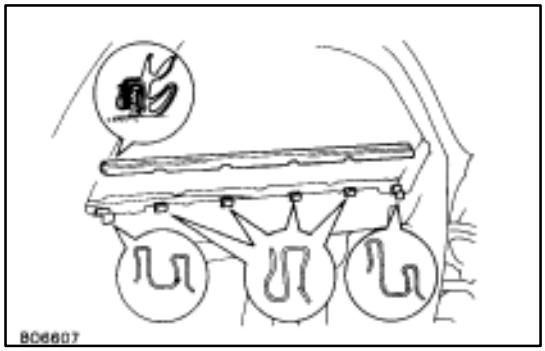

14. REMOVE FRONT DOOR INNER WEATHERSTRIP

Pry loose the clips from the edge of the panel and remove the belt moulding.

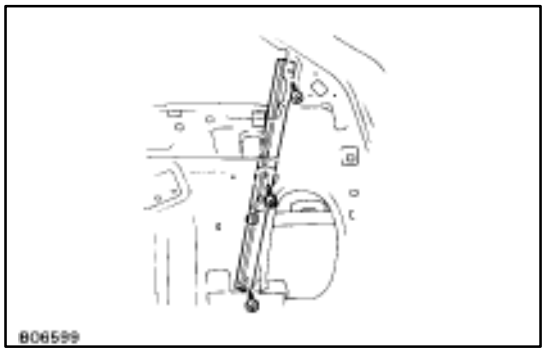

15. REMOVE FRONT GLASS GUIDE

Remove three screws and the guide.

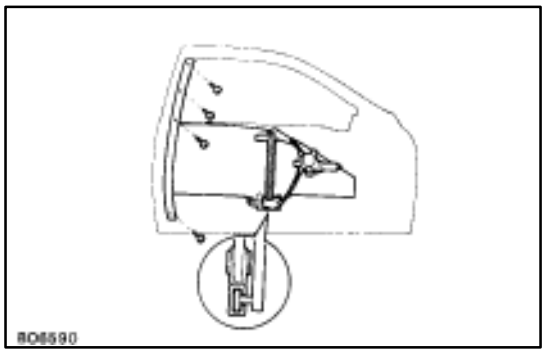

16. REMOVE REAR GLASS GUIDE AND DOOR GLASS

(a) Remove four screws from the guide.
(b) Remove joining the window regulator and glass.
(c) Pull the door glass with the guide out of the panel care fully.

HINT: Do not remove the guide from the glass.

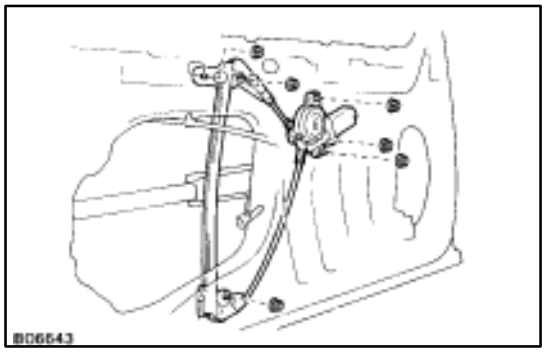

17. REMOVE WINDOW REGULATOR

Remove six nuts and the regulator.

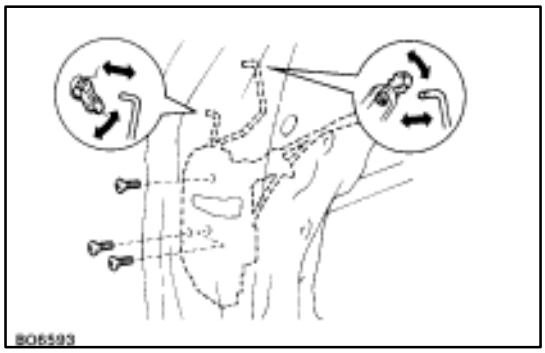

18. REMOVE DOOR LOCK

(a) Disconnect the two links from the outside handle and key cylinder.
(b) Disconnect the connector.
(c) Using a trox rench, remove three screws and the door lock.

WhereEverybodyKnowsYourName

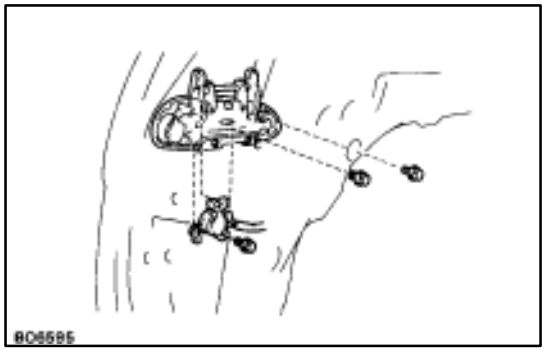

19. REMOVE OUTSIDE HANDLE AND KEY CYLINDER

(a) Disconnect the connector from key cylinder.
(b) Remove three bolts, key cylinder and outside handle.

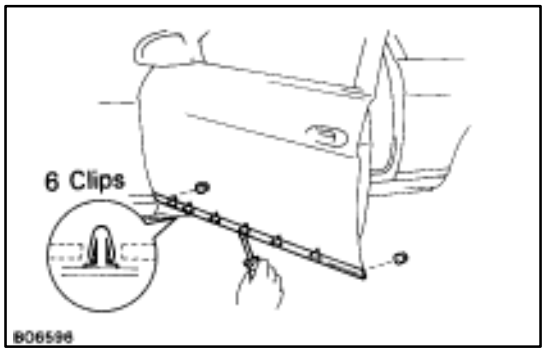

20. REMOVE SIDE PROTECTION MOULDING

(a) Remove two nuts.
(b) Using a clip remover, pry out the moulding.

REPLACEMENT OF DOOR GLASS

REMOVE FOLLOWING PARTS:

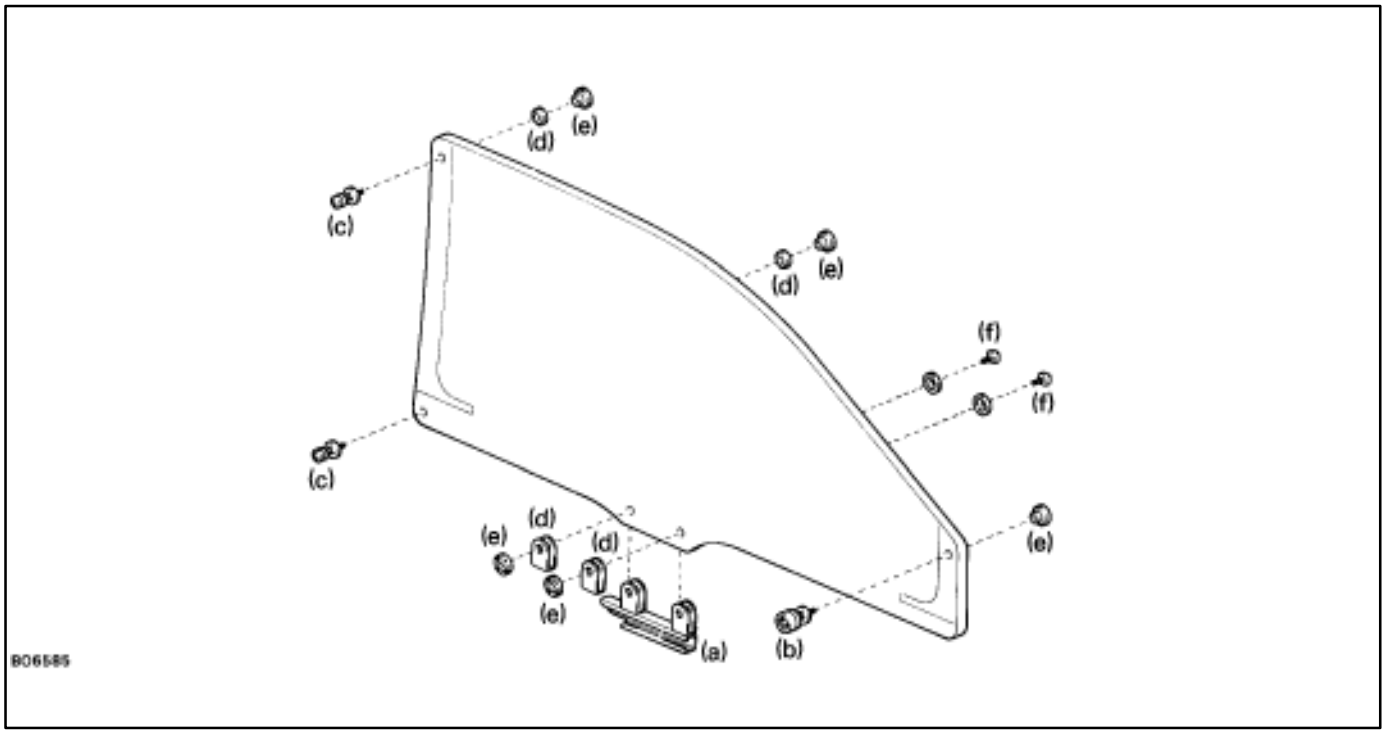

(a) Front door glass channel
(b) Glass guide roller
(c) Glass guide roller No. 2
(d) Washer
(e) Nut
(f) Bolt

WhereEverybodyKnowsYourName

ASSEMBLY OF FRONT DOOR

(See page BO–31)

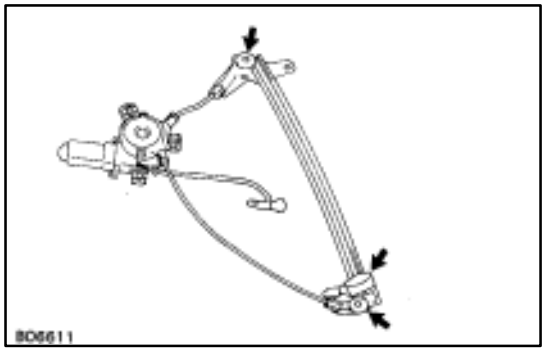

1. BEFORE INSTALLING PARTS, COAT THEN WITH MP GREASE

(a) Apply MP grease to the sliding surface and rollers of the window regulator.
(b) Apply MP grease to the sliding surface of the door lock.
(c) Apply MP grease to the door glass guide rollers.

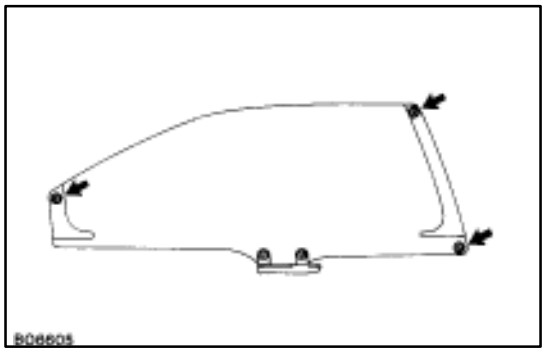

2. INSTALL SIDE PROTECTION MOULDING

(a) Insert the top of the clips into the panel hole and tap the moulding onto the panel.
(b) Install two nuts.

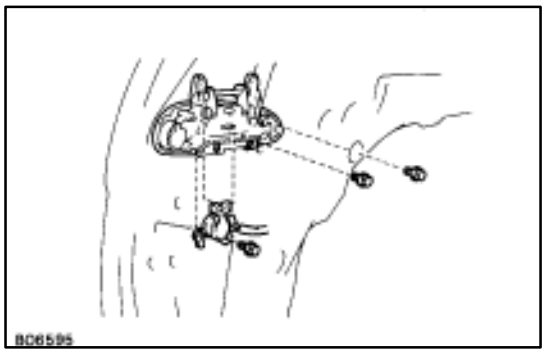

3. INSTALL OUTSIDE HANDLE AND KEY CYLINDER

(a) Install the key cylinder and the outside handle with three bolts.
(b) Connect the connector to the key cylinder.

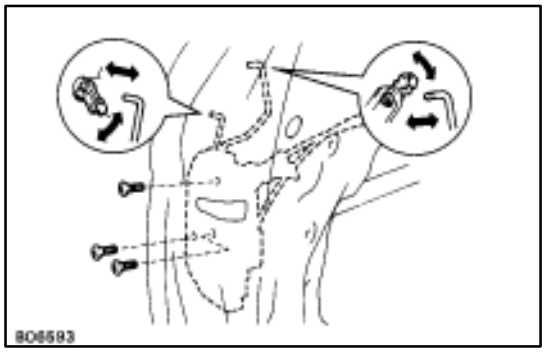

4. INSTALL DOOR LOCK

(a) Install the door lock with three screws.
(b) Install the two links to the outside handle and key cylinder.
(c) Connect the connector.

5. INSTALL WINDOW REGULATOR

Install the regulator with six nuts.

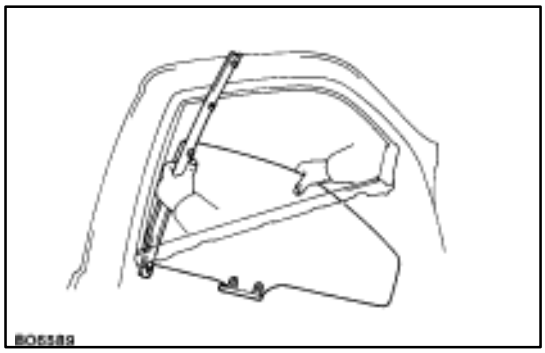

6. INSTALL GLASS GUIDE AND DOOR GLASS

(a) Install the front glass guide with three screws to the door panel.
(b) Insert the rear glass guide with the door glass inside the door panel.
(c) Install the glass to the front glass guide and the regulator.
(d) Install the rear glass guide with four screws.

WhereEverybodyKnowsYourName

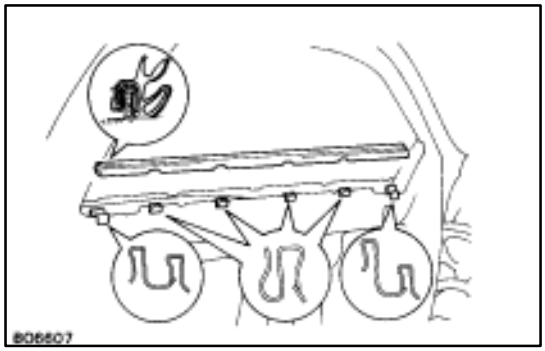

7. INSTALL FRONT DOOR INNER WEATHERSTRIP

Insert the claw of the clips into the upper panel hole and push the moulding onto the panel.

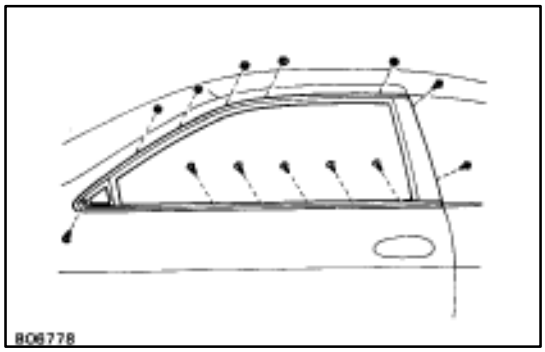

8. INSTALL FRONT DOOR BELT MOULDING

HINT:

- If the adhesive power of the tape is reduced, replace it with new tape.
- Install the moulding with eight screws and five nuts.

9. INSTALL DOOR INSIDE PANEL FRAME

Install the frame with three bolts.

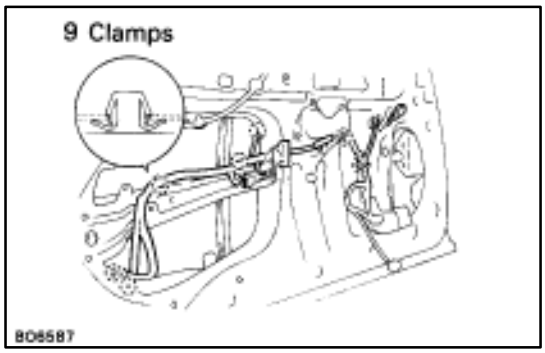

10. CONNECT WIRE HARNESS TO DOOR PANEL

Install the clamps onto the panel.

11. INSTALL SPEAKER ASSEMBLY

(a) Install the speaker assembly with four screws.
(b) Connect the connector to the speaker.

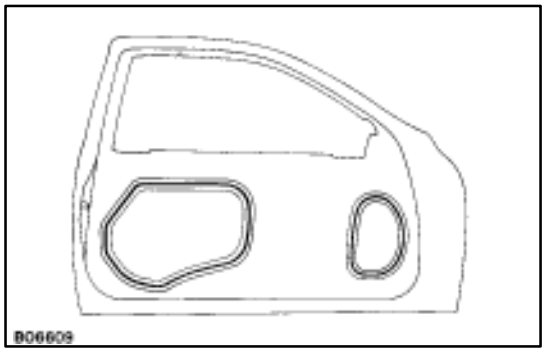

12. INSTALL SERVICE HOLE COVER

HINT: Before installing the service hole cover, peel off the backing paper from the silencer.

Seal the service hole cover with adhesive.

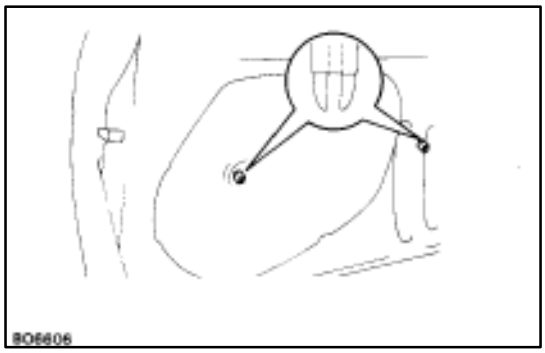

13. INSTALL SCREW GROMMETS

Install two grommets as shown.

WhereEverybodyKnowsYourName

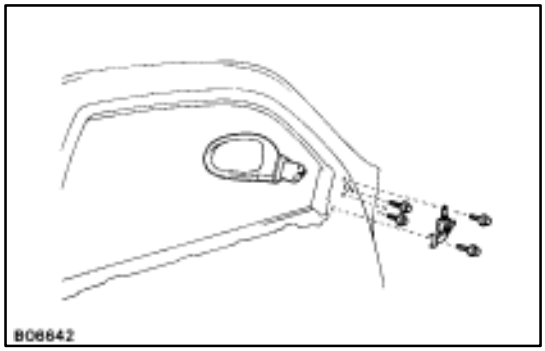

14. INSTALL OUTSIDE REAR VIEW MIRROR

(a) Install the mirror with two bolts, connect the connector.
(b) Install the speaker with two bolts, connect the connector.

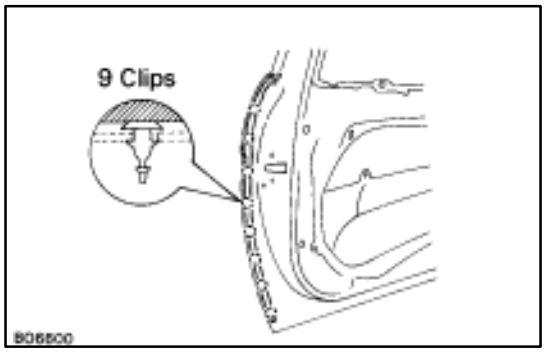

15. INSTALL FRONT DOOR WEATHERSTRIP

Push down on the nine clips of the weatherstrip.

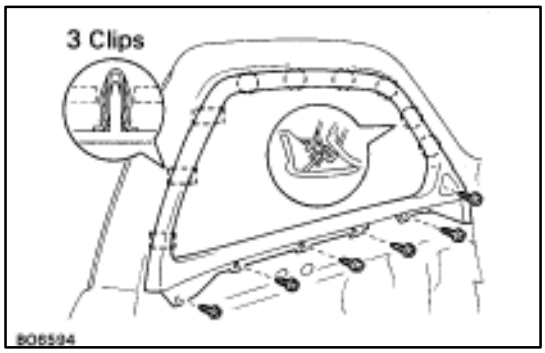

16. INSTALL DOOR TRIM UPPER PANEL

(a) Push the panel into the frame.
(b) Tap in the three clips.
(c) Install the panel with six screws.

17. INSTALL DOOR SPEAKER GRILLE

Slide the grille and tap the grille to install it.

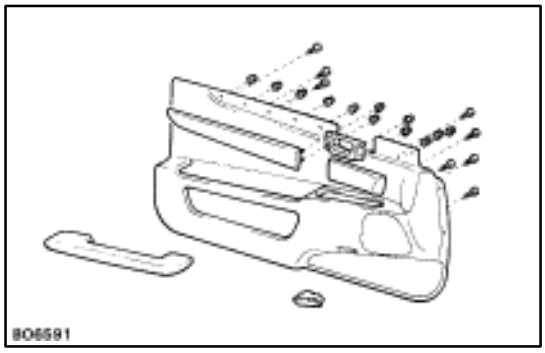

18. INSTALL DOOR TRIM

(a) Install the front door trim ornament and the door inside handle with eleven nuts.
(b) Install the armrest with eight screws.
(c) Install the door curtesy switch.

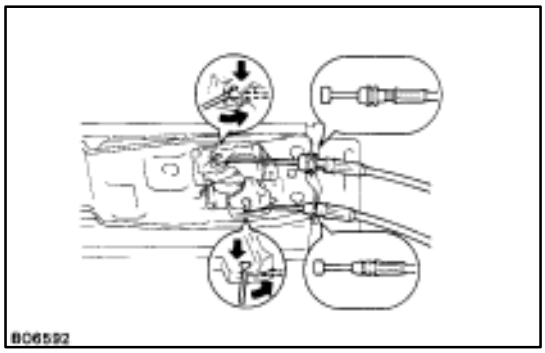

(d) Install the two cables as shown.
(e) Connect the connector to the door curtesy switch.

WhereEverybodyKnowsYourName

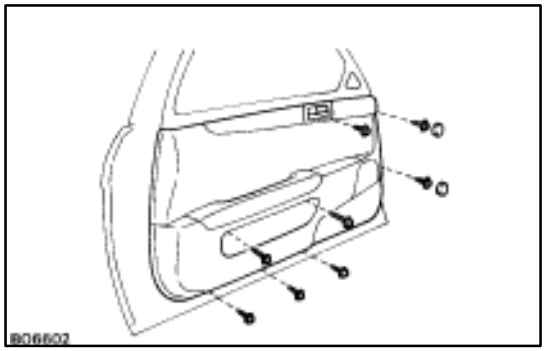

(f) Install the door trim to the door panel with eight screws and two caps.

19. INSTALL DOOR INSIDE HANDLE BEZEL COVER

With the door handle in open position, insert the cover into the bezel.

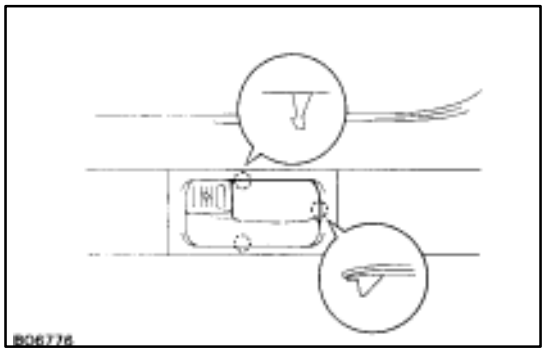

20. INSTALL ARMREST BASE PANEL

(a) Connect the connector.

(b) Slide the panel rearward and tap the panel to install it.

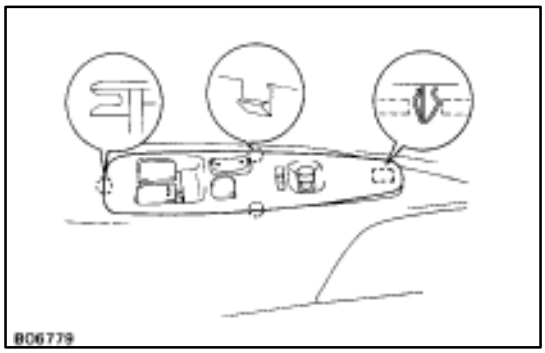

WhereEverybodyKnowsYourName

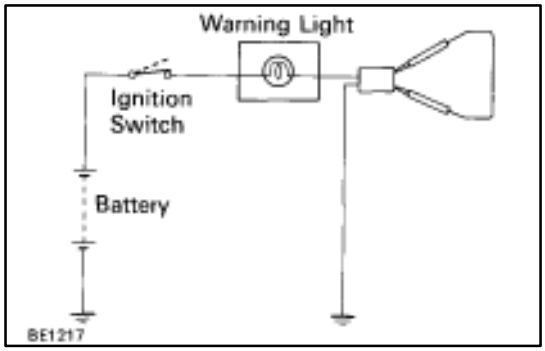

2. INSPECT BRAKE WARNING LIGHT

(a) Disconnect the connector from the brake fluid warning switch.

(b) Release the parking brake pedal.

(c) Connect terminals on the wire harness side of the level warning switch connector.

(d) Start the engine, check that the warning light lights up.

If the warning light does not light up, test the bulb or wire harness.

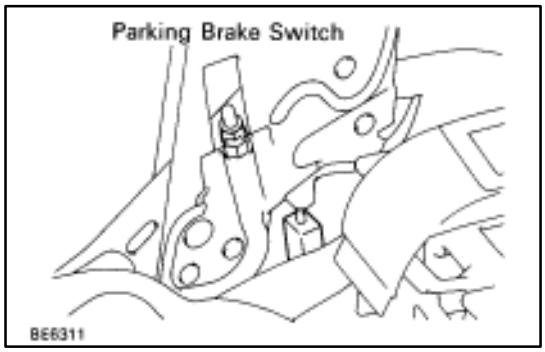

(Parking Brake Switch)

REMOVAL AND INSTALLATION OF PARKING BRAKE SWITCH

1. REMOVE PARKING BRAKE SWITCH

(a) Remove the driver's seat.

(See page BO–58)

(b) Disconnect the connector and remove switch.

2. INSTALL PARKING BRAKE SWITCH

For installation follow the removal procedure in reverse.

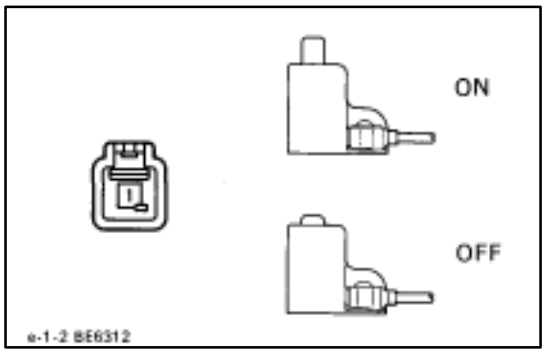

INSPECTION OF PARKING BRAKE SWITCH

1. INSPECT PARKING BRAKE SWITCH

(a) Check that there is continuity between terminal and switch body with the switch ON (switch pin released).

(b) Check that there is no continuity between terminal and switch body with the switch OFF (switch pin pushed in.)

If continuity is not as specified, replace the switch or inspect ground point.

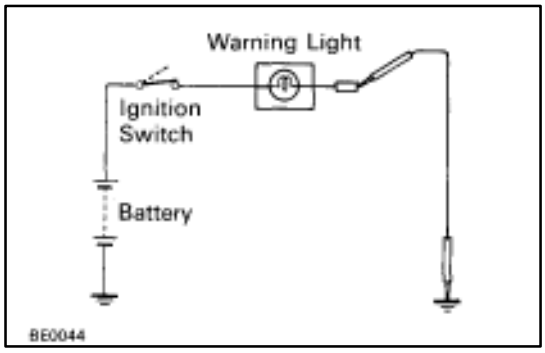

2. INSPECT BRAKE WARNING LIGHT

(a) Disconnect the connector from the parking brake switch and brake fluid warning switch.

(b) Ground terminal on the wire harness side connector.

(c) Start the engine, check that the warning light lights up.

If the warning light does not light up, test the bulb or inspect wire harness.

WhereEverybodyKnowsYourName

(Coolant Level Warning Switch)

REMOVAL AND INSTALLATION OF COOLANT LEVEL WARNING SWITCH

1. REMOVE COOLANT LEVEL WARNING SWITCH

(a) Disconnect the connector.

(b) Remove the boot.

(c) Using the notches in the head of switch, turn the switch counterclockwise and remove it.

NOTICE: Do not remove when engine is hot.

2. INSTALL COOLANT LEVEL WARNING SWITCH

For installation, follow the removal procedure in reverse.

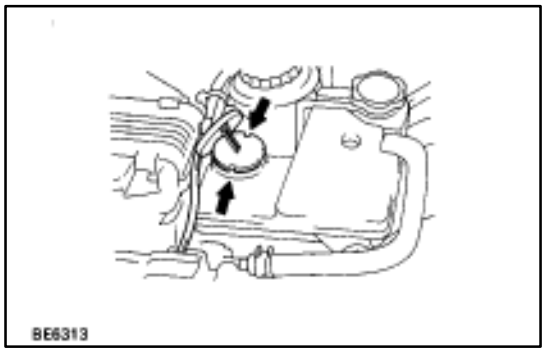

INSPECTION OF COOLANT LEVEL WARNING SWITCH

1. INSPECT COOLANT LEVEL WARNING SWITCH (Continuity)

(a) Remove the radiator cap and open the radiator drain clock.

NOTICE: Do not remove when engine is hot.

(b) Drain the coolant about 1 liter.
(1.1 US qts, 0.9 lmp. qts)

(c) Check that there is continuity between terminals (float down).

(d) Close radiator drain cock and fill the cooling system with coolant.

(e) Check that there is no continuity between terminals (float up).

If continuity is not as specified, replace the switch.

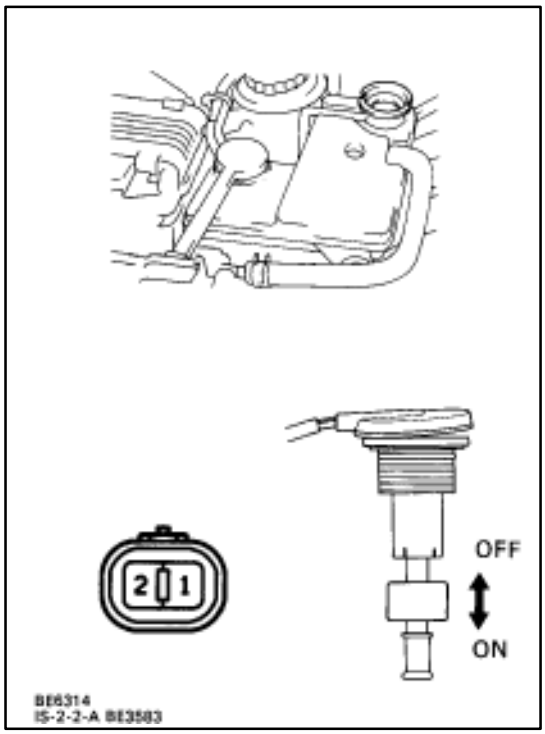

2. INSPECT COOLANT LEVEL WARNING LIGHT

(a) Disconnect the connector from the coolant level warning switch and ground terminal 1 on the wire harness side connector.

(b) Start the engine, check that the warning light lights up.

If the warning light does not light up, inspect the bulb or wire harness.

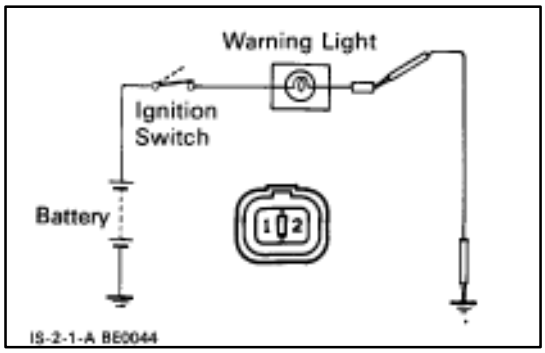

WhereEverybodyKnowsYourName

POWER WINDOW CONTROL SYSTEM

Description

The Power Window System raises and lowers the window glass in each door using electrical power. The component parts of this system and their functions are described in the following table.

Parts Name	Function
Theft Deterrent and Door Lock Control ECU	Current is sent to the power window main relay only when the ignition switch is on or within a specified period after the ignition switch is turned off.
Power Window Main Relay	Current from the theft deterrent and door lock control ECU to the power window main relay switches large current from the master switch ON and OFF.
Master Switch	This switch turns current to each power window motor ON and OFF and switches it. It also includes a circuit for ”One Touch Power Window” use of the driver’s window and a built–in window lock switch which controls the operation of all power window switches.
Power Window Switch	This switch is installed on each door except on the driver’s door. It is supplied with current from the master siwtch and turns the current to the motor ON and OFF and switches the current. This switch will not operate when the window lock switch inside the master switch is in the LOCK position.
Power Window Motor	This motor moves the window regulator directly when current is supplied to it from the master switch or power window switch. The motor has a built–in circuit breaker.

Parts Location

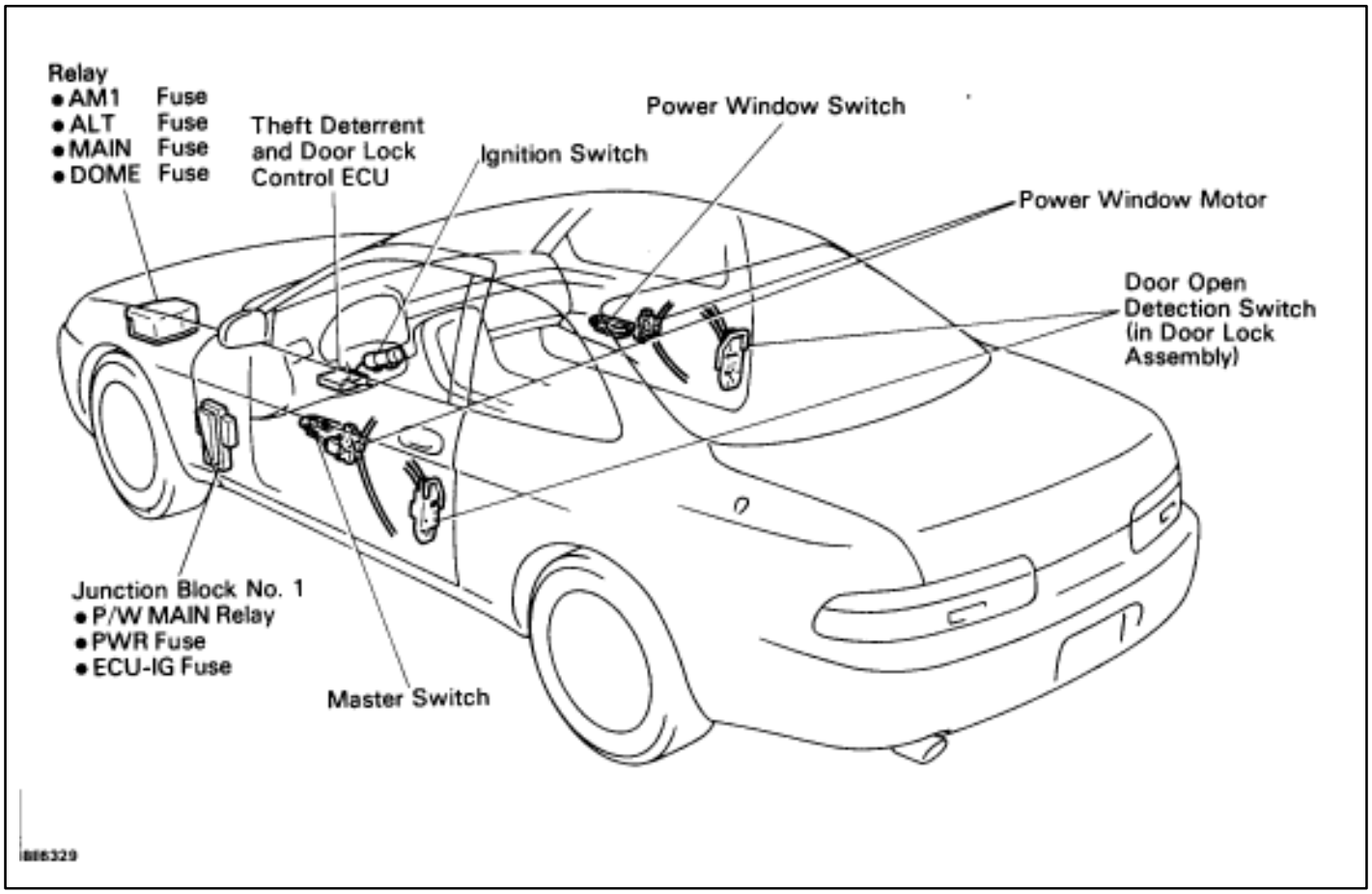

WhereEverybodyKnowsYourName

Wiring and Connector Diagrams

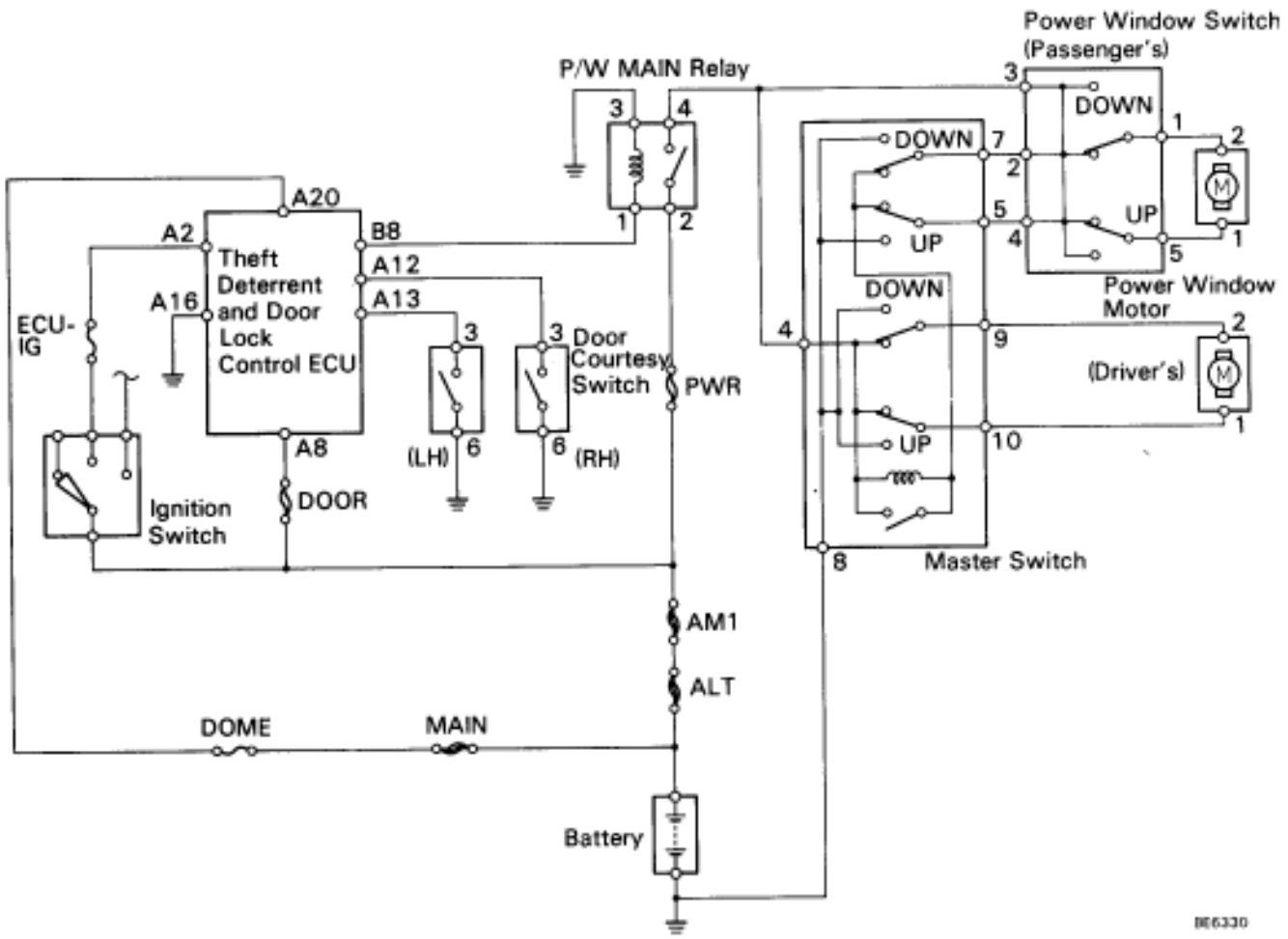

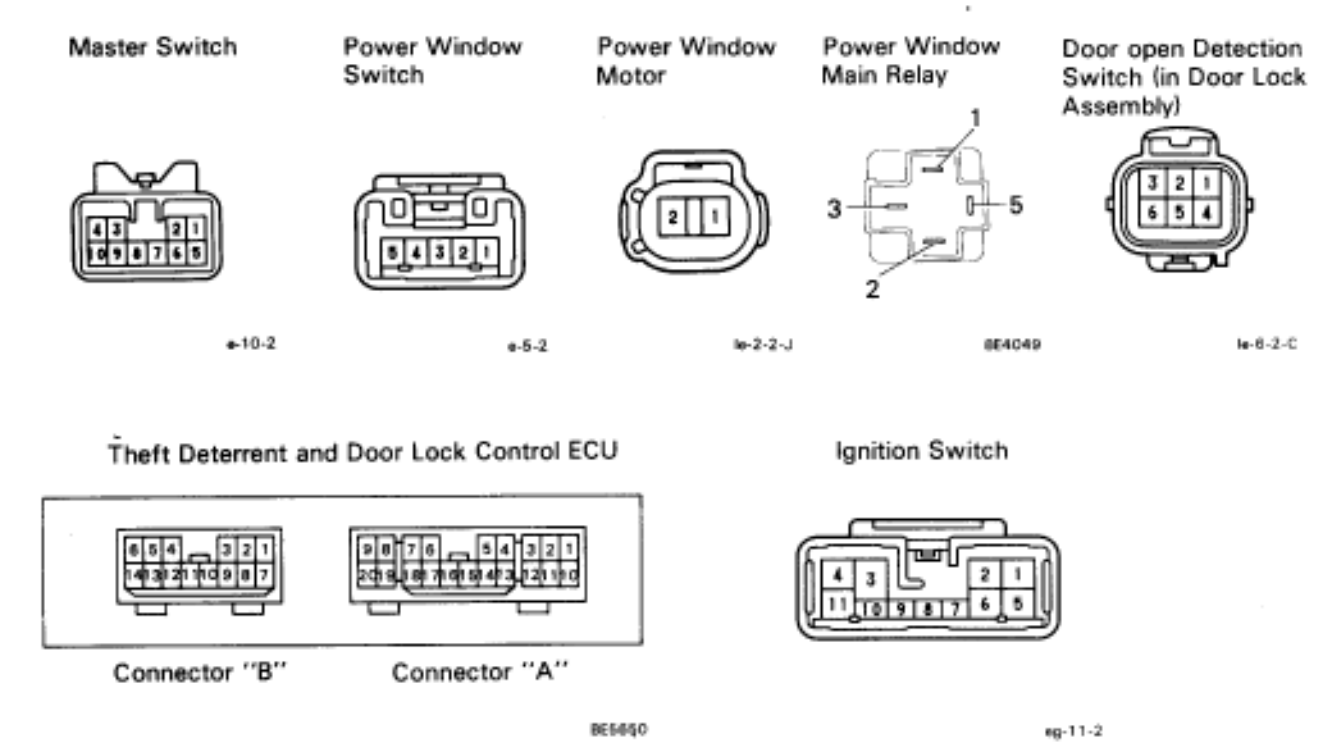

WhereEverybodyKnowsYourName

Parts Inspection (Power Window Master Switch)

REMOVAL AND INSTALLATION OF POWER WINDOW MASTER SWITCH

(See page BO–33)

INSPECTION OF POWER WINDOW MASTER SWITCH

INSPECT POWER WINDOW MASTER SWITCH

(Continuity)

Inspect the switch continuity between terminals.

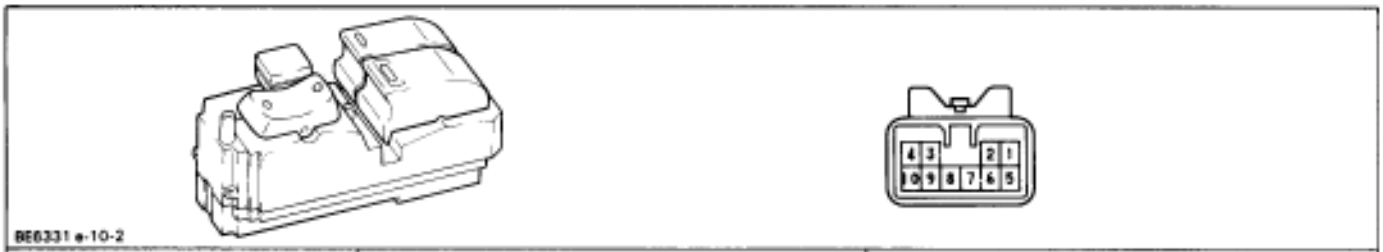

Window operation		Driver's				Passenger's			
Switch position \ Terminal		4	8	9	10	4	5	7	8
Window Unlock	UP	○——	——○	——○	——○	○——	——○	○——	——○
	OFF		○——	——○	——○		○——	——○	——○
			○——	——○				○——	——○
	DOWN	○——	——○	——○		○——	——○	——○	
			○——	——○	——○		○——	——○	——○
Window Lock	UP	○——	——○	——○	——○	○——	——○		
			○——	——○					
	OFF		○——	——○	——○		○——	——○	
			○——	——○					
	DOWN	○——	——○	——○		○——	——○	——○	
			○——	——○	——○				

If continuity is not as specified, replace the master siwtch.

(Illumination)

(a) Set the window lock switch to the unlock position.

(b) Connect the positive (+) lead from the battery to terminal 4 and the negative (–) lead to terminal 8, check that all the illuminations light up.

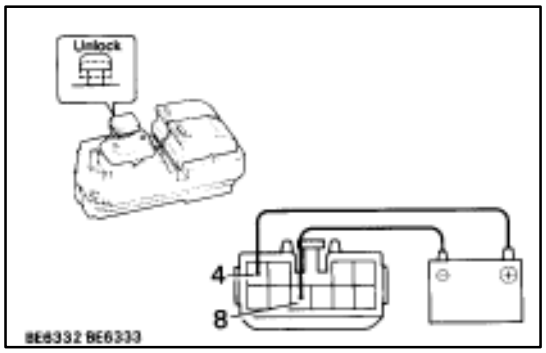

WhereEverybodyKnowsYourName

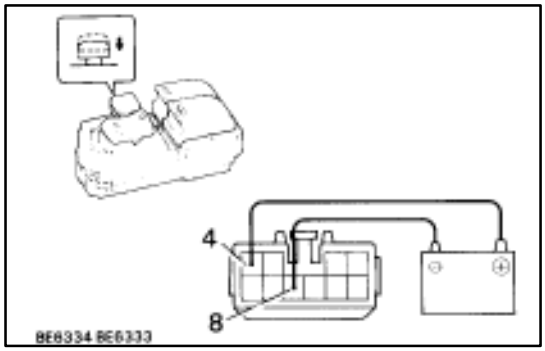

(c) Set the window lock switch to the lock position, check that all the passenger's power window switch illuminations go out.

If operation is not as specified, replace the master switch.

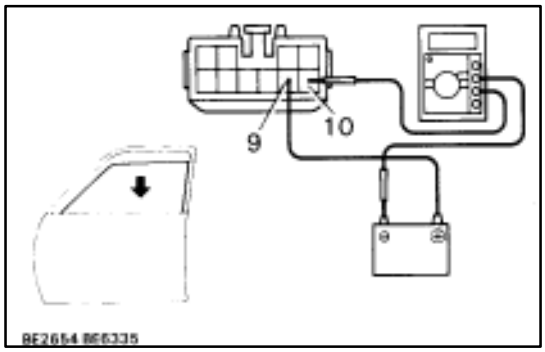

(One Touch Power Window System/Current of Circuit)
Inspection using an ammeter.

(a) Disconnect the connector from the master switch.
(b) Connect the positive (+) lead from the ammeter to terminal 9 on the wire harness side connector and the negative (–) lead to negative terminal of the battery.
(c) Connect the positive (+) lead from the battery to terminal 10 on the wire harness side connector.
(d) As the window goes down, check that the current flow is approximately 7 amperes.
(e) Check that the current increases approximately 14.5 amperes or more when the window stops going down.

HINT: The circuit breaker opens some 4–40 seconds after the window stops going down, so that check must be made before the circuit breaker operates.

If the operation is as specified, replace the master switch.

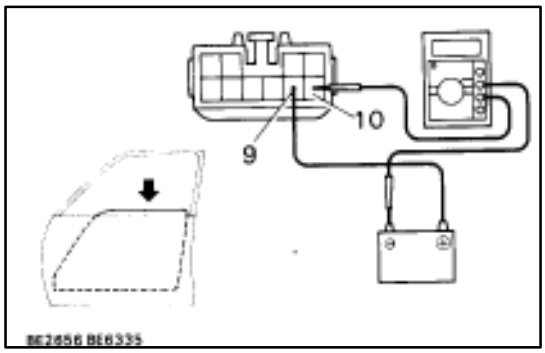

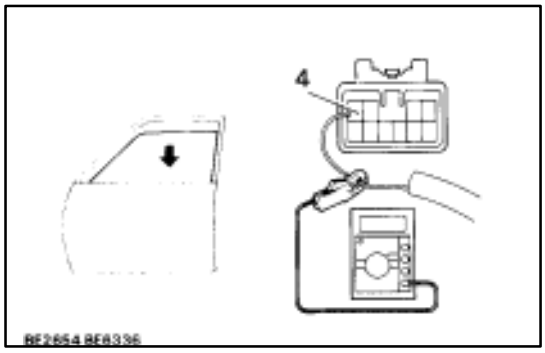

Inspection using an ammeter with a current–measuring probe.

(a) Remove the master switch with connector connected.
(b) Attach a current–measuring probe to terminal 4 of the wire harness.
(c) Turn the ignition switch ON and set the power window switch in the down position.
(d) As the window goes down, check that the current flow is approximately 7 amperes.

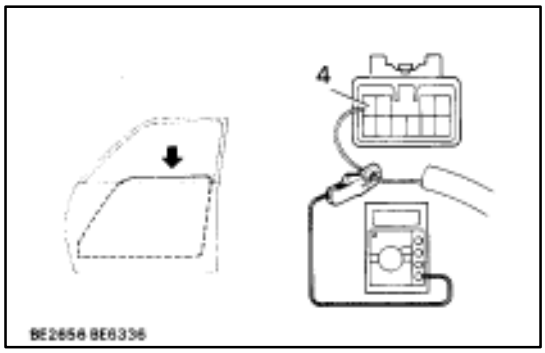

(e) Check that the current increases approximately 14.5 amperes or more when the window stops going down.

HINT: The circuit breaker opens some 4–40 seconds after the window stops going down, so that check must be made before the circuit breaker operates.

If operation is as specified, replace the master switch.

WhereEverybodyKnowsYourName

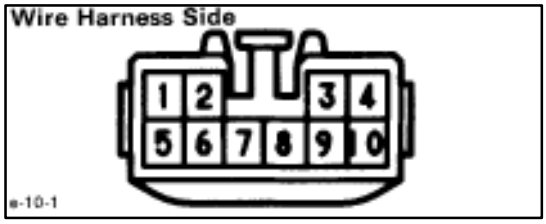

(Switch Circuit)

Disconnect the connector from the master switch and inspect the connector on the wire harness side as shown.

Check for	Tester connection	Condition	Specified value
Voltage	9–Ground	Ignition switch turned to ON	Battery voltage
Continuity	8–Ground	Constant	Continuity

If the circuit is not as specified, refer to BE–148 wiring diagram and inspect the circuits connected to other parts.

(Power Window Switch)

REMOVAL AND INSTALLATION OF POWER WINDOW SWITCH

(See page BO–33)

INSPECTION OF POWER WINDOW SWITCH

INSPECT POWER WINDOW SWITCH

(Switch Continuity)

Inspect switch continuity between terminals.

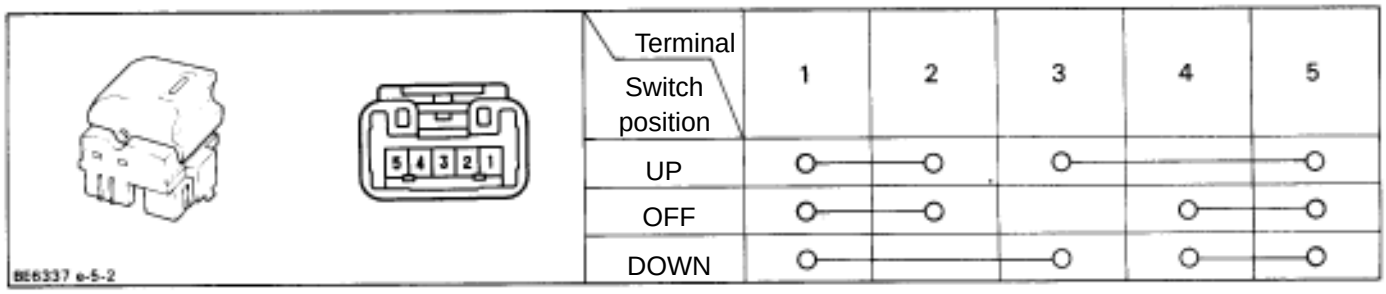

If continuity is not as specified, replace the switch.

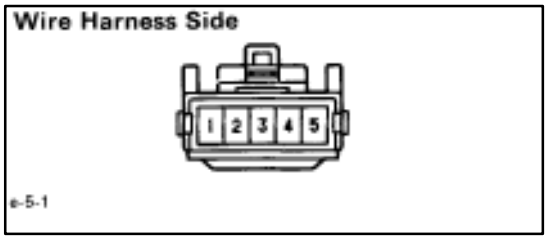

(Switch Circuit)

Disconnect the connector from the switch and inspect the connector on the wire harness side as shown.

Check for	Tester connection	Condition		Specified value
Voltage	2–Ground	Ignition switch ON and master switch position	DOWN	Battery positive voltage
			OFF	No voltage
	3–Ground	Ignition switch ON		Battery positive voltage
	4–Ground	Ignition switch ON and master switch position	UP	Battery positive voltage
			OFF	No voltage

If the circuit is not as specified, refer to BE–148 wiring diagram and inspect the circuits connected to other parts.

WhereEverybodyKnowsYourName

(Power Window Main Relay)

REMOVAL AND INSTALLATION OF POWER WINDOW MAIN RELAY

(See page BE–16)

INSPECTION OF POWER WINDOW MAIN RELAY

INSPECT POWER WINDOW MAIN RELAY

(Continuity)

Inspect relay continuity between terminals.

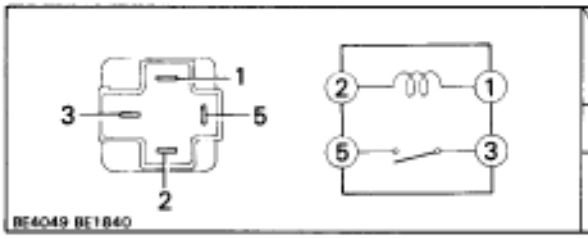

Terminal / Condition	1	2	3	5
Constant	○—⊸⊸—○			
Apply battery voltage to terminals 1 and 2.			○——○	

If continuity is not as specified, replace the relay.

(Relay Circuit)

(See page BE–20)

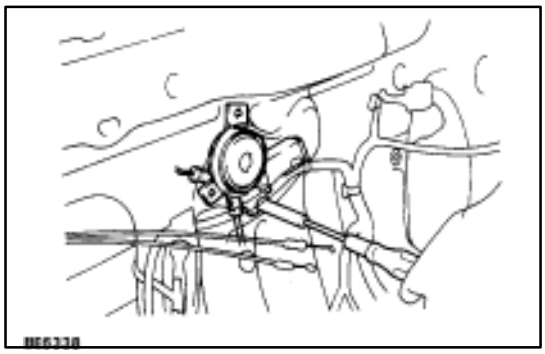

(Power Window Motor)

REMOVAL AND INSTALLATION OF POWER WINDOW MOTOR

1. **REMOVE POWER WINDOW MOTOR**
   (a) Remove window regulator.
   (See page BO–35)
2. **INSTALL POWER WINDOW MOTOR**
   For installation follow the removal procedure in reverse.

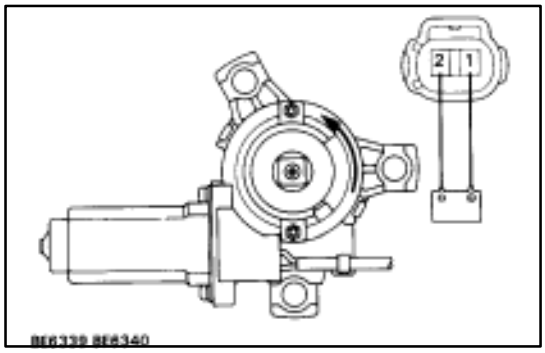

INSPECTION OF POWER WINDOW MOTOR

INSPECT POWER WINDOW MOTOR

(Left Side Door Motor/Motor Operation)

(a) Connect the positive (+) lead from the battery to terminal 1 and the negative (–) lead to terminal 2, check that the motor turns counterclockwise.

(b) Reverse the polarity, check that the motor turns clockwise.

If operation is not as specified, replace the motor.

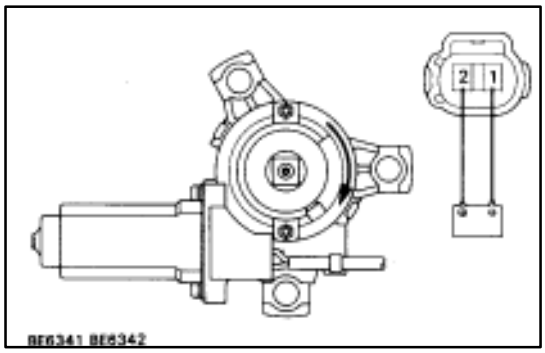

WhereEverybodyKnowsYourName

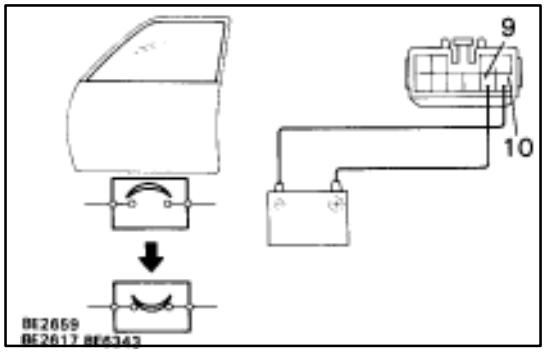

(Left Side Motor/Circuit Breaker Operation)

Driver's Door

(a) Disconnect the connector from the master switch.

(b) Connect the positive (+) lead from the battery to terminal 9 and the negative (–) lead to terminal 10 on the wire harness side connector and raise the window to full closed position.

(c) Continue to apply voltage, check that there is a circuit breaker operation noise within approximately 4 to 40 seconds.

(d) Reverse the polarity, check that the window begins to descend within approximately 60 seconds.

If operation is not as specified, replace the motor.

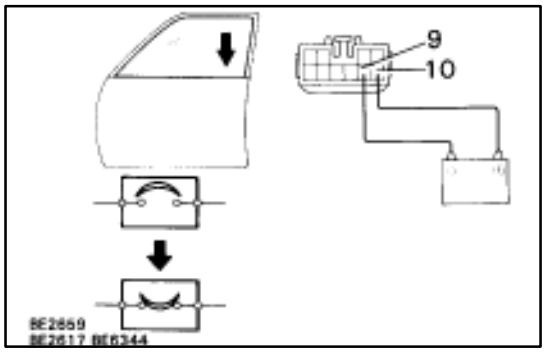

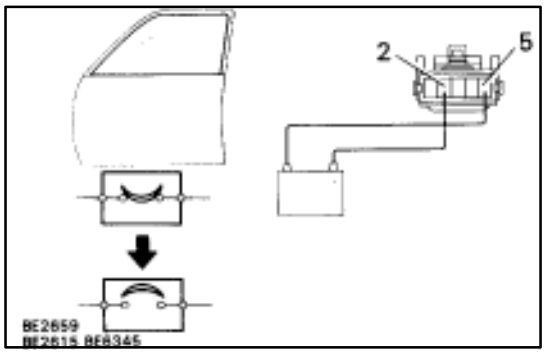

Passenger's Door

(a) Disconnect the connector from the power window switch.

(b) Connect the positive (+) lead from the battery to terminal 2 and the negative (–) lead to terminal 5 on the wire harness side connector, and raise the window to full closed position.

(c) Continue to apply voltage, check that there is a circuit breaker operation noise within approximately 4 to 40 seconds.

(d) Reverse the polarity, check that the window begins to descend within approximately 60 seconds.

If operation is not as specified, replace the motor.

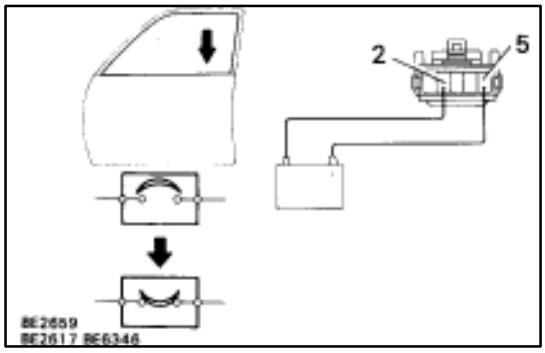

WhereEverybodyKnowsYourName

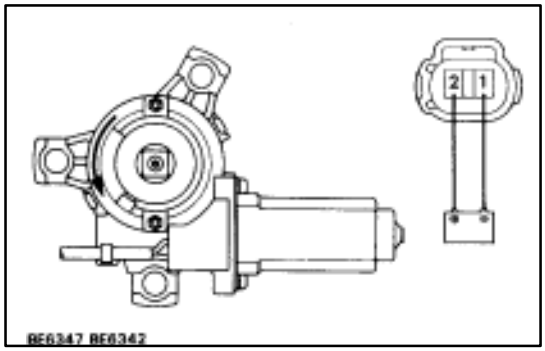

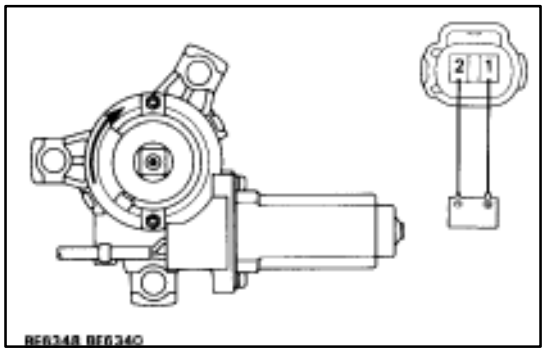

(Right Side Door Motor/Motor Operation)

(a) Connect the positive (+) lead from the battery to terminal 1 and the negative (–) lead to terminal 2, check that the motor turns clockwise.

(b) Reverse the polarity, check that the motor turns counterclockwise.

If operation is not as specified, replace the motor.

(Right Side Door Motor/Circuit Breaker Operation)

See Step of Left Side Motor on page BE–153.

WhereEverybodyKnowsYourName

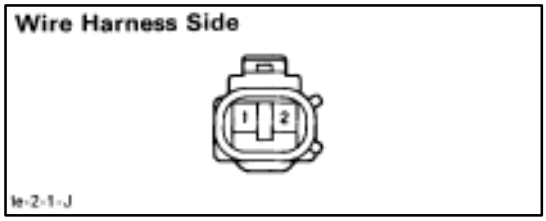

(Circuit)

(a) Disconnect the connector from the motor.

(b) Connect the connector to the master switch and power window switch.

(c) Inspect the connector on the wire harness side as shown.

Check for	Tester connection	Condition		Specified value
Voltage	1–Ground	Ignition switch ON and master switch position	DOWN	Battery positive voltage
			UP or OFF	No voltage
		* Ignition switch ON and power window switch position	DOWN	Battery positive voltage
			UP or OFF	No voltage
	2–Ground	Ignition switch ON and master switch position	UP	Battery positive voltage
			DOWN or OFF	No voltage
		* Ignition switch ON and power window switch position	UP	Battery positive voltage
			DOWN or OFF	No voltage

*: Set the window lock switch to the unlock position.

If the circuit is not as specified, refer to BE–148 wiring diagram and inspect the circuits connected to other parts.

(Theft Deterrent and Door Lock Control ECU)

REMOVAL AND INSTALLATION OF THEFT DETERRENT AND DOOR LOCK CONTROL ECU

1. REMOVE THEFT DETERRENT AND DOOR LOCK CONTROL ECU

(a) Remove following parts.
(See page BO–112 and 113)

- Instrument No. 1 Under Cover.
- Instrument No. 1 lower finish panel.

(b) Disconnect the connector and remove the ECU

2. INSTALL THEFT DETERRENT AND DOOR LOCK CONTROL ECU

For installation, follow the removal procedure in reverse.

WhereEverybodyKnowsYourName

INSPECTION OF THEFT DETERRENT AND DOOR LOCK CONTROL ECU

INSPECT THEFT DETERRENT AND DOOR LOCK CONTROL ECU

(Circuit)

(a) Inspect ECU Power Source Circuit.
(See page BE–376)

(b) Inspect Actuator Power Source Circuit.
(See page BE–378)

(c) Inspect Ignition Switch Circuit.
(See page BE–25)

(d) Inspect Door Open Detection Switch Circuit.
(See page BE–392)

If circuit is as specified, inspect ECU operation.

(Operation)

(a) With the connectors connected, shut all doors.

(b) Check that there is 10 V ~ 14 V between terminal B8 and ground when the ignition switch is turned on.

(c) After turning the ignition switch off, check within 60 seconds that there is battery voltage between terminal B8 and ground.

(d) Turn the ignition switch on then off, and check that there is 10 V ~ 14 V between terminal B8 and ground when the ignition is switched off.

(e) Open the front door within 60 seconds of turning the ignition off and check that there is no voltage between terminal B8 and ground.

(f) Close all the doors and turn the ignition switch on.

(g) When a front door is opened, check that there is battery voltage between terminal B8 and ground.

(h) Check that there is no voltage between terminal B8 and ground when the ignition switch is turned to off.

If operation is not as specified, replace the ECU.

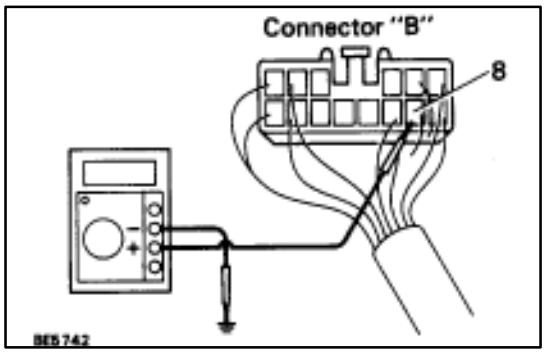

WhereEverybodyKnowsYourName

Troubleshooting

You will find the cause of trouble more easily by properly using the table shown below. In this table, the numbers indicate the order of priority of the causes of trouble. Check each part in the order shown. If necessary, replace the part.

See page / Part name / Trouble	BE–4,21	BE–4,21	BE–4,20	BE–4,20	BE–156	BE–152	BE–149	BE–151	BE–152	BE–26	BE–392	BE–4,20	—
	AM1 Fuse	DOME Fuse	DOOR Fuse	POWER Fuse	Theft Deterrent and Door Lock Control ECU	Power Window Main Relay	Power Window Master Switch	Power Window Switch	Power Window Motor	Ignition Switch	Door Open Detection Switch	ECU–IG Fuse	Wire Harness
*1 Power window does not operate.	1		2		3								4
*2 Power window does not operate.			3	5	4	6	7			2		1	8
“One Touch Power Window System” does not operate.							1						
Only one window glass does not move.							1	2	3				4
“Window Lock System” does not operate							1						
“Window Lock Illumination” does not light up.							1						
Key–off power window does not operate		1			2					4	5	3	6

*1: Dook Lock does not operate.
*2: Dook Lock is normal.

WhereEverybodyKnowsYourName

LIQUID CRYSTAL INNER MIRROR SYSTEM

Description

The liquid crystal inner mirror replaces the previous mirror, which mechanically switched between the “Day” and “Night” settings, with liquid crystal inside the mirror which changes the brightness of the mirror surface. The component parts of this system and their functions are shown in the table below.

Parts Name	Function
Liquid Crystal Inner Mirror	Receives current from the fuse DOME and changes the surface brightness of the mirror when switch is operated.
Key Unlock Warning Switch	Opens the circuit so that the mirror can be operated only when the ignition key is set.

Parts Location

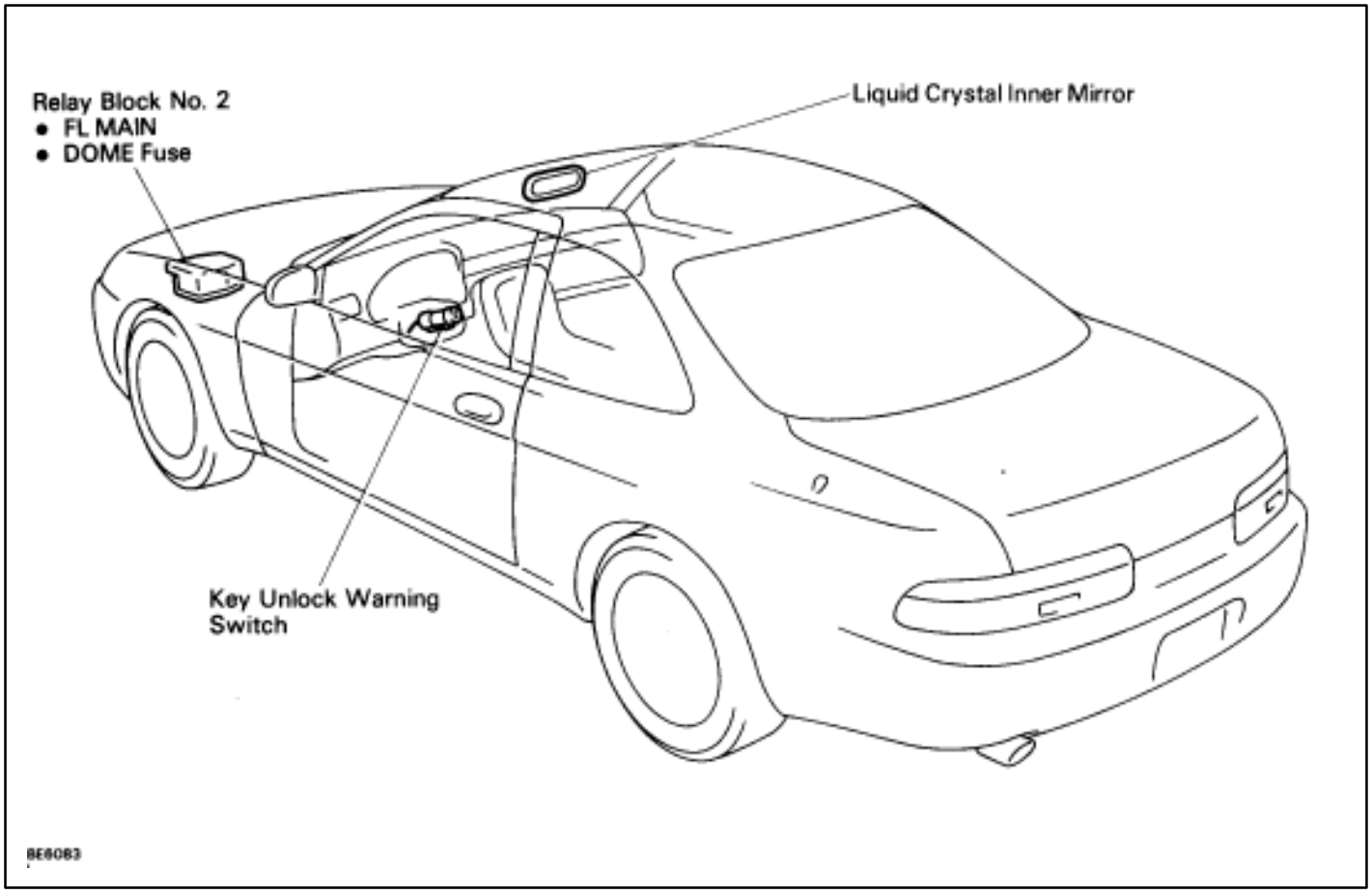

WhereEverybodyKnowsYourName

Wiring and Connector Diagrams

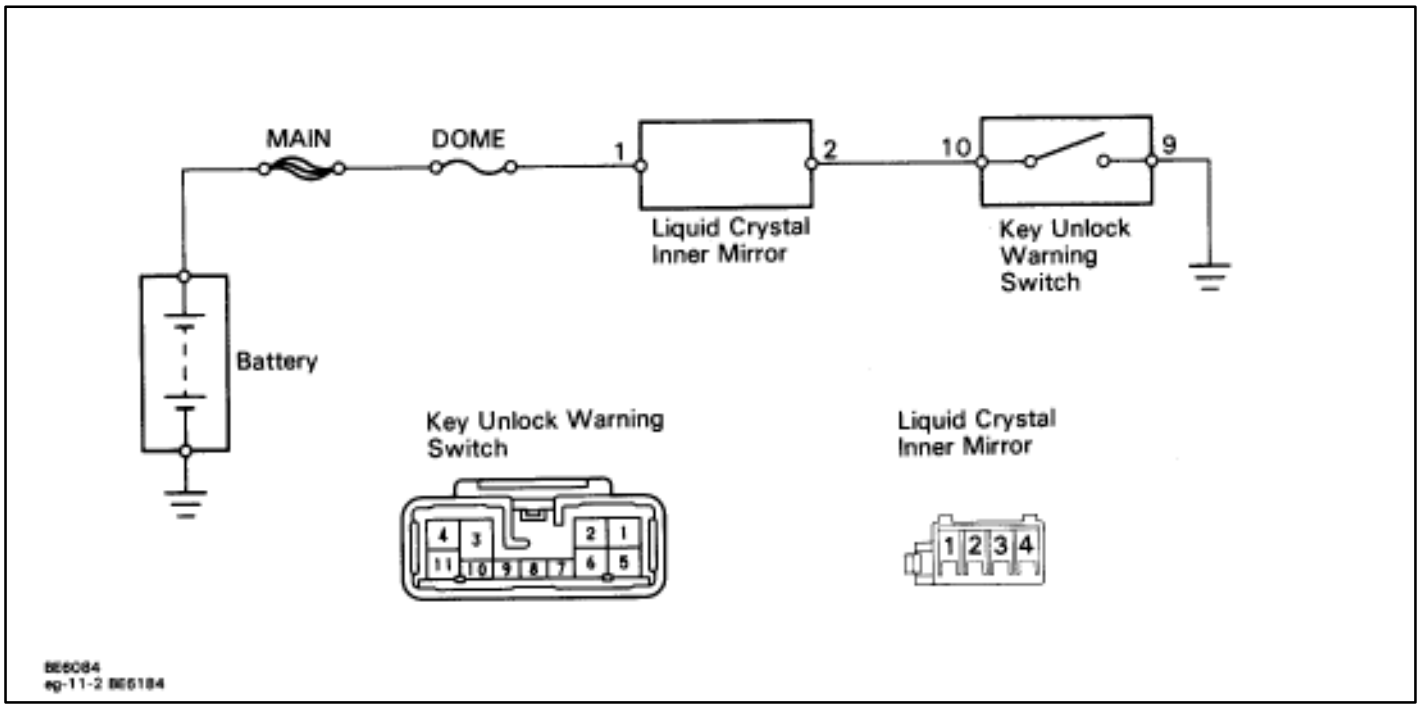

Parts Inspection (Liquid Crystal Inner Mirror)

REMOVAL AND INSTALLATION OF LIQUID CRYSTAL INNER MIRROR

(See page BO–44)

INSPECTION OF LIQUID CRYSTAL INNER MIRROR

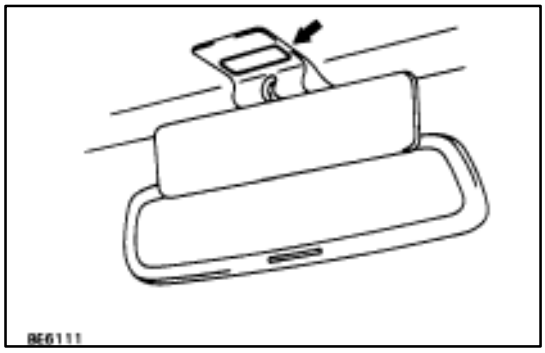

INSPECT LIQUID CRYSTAL INNER MIRROR

(a) Using a screw driver, pry out the cover.
(b) Remove two screws and center visor.

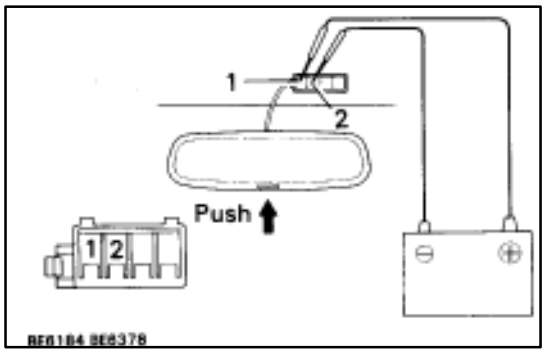

(Operation)

(a) Connect the positive (+) lead from the battery to terminal 1 and the negative (–) lead to terminal 2.

WhereEverybodyKnowsYourName

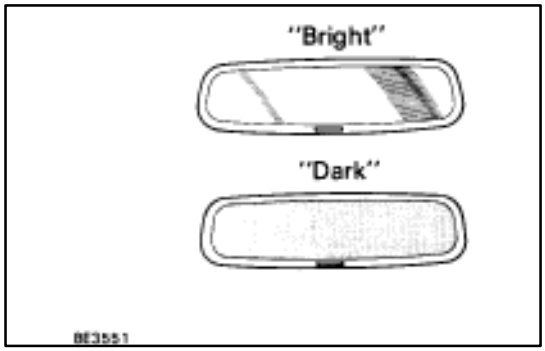

(b) Press the mirror switch and check if the mirrors surface repeatedly becomes ”bright” and ”dark”.

If operation is not as specified, replace the liquid crystal inner mirror.

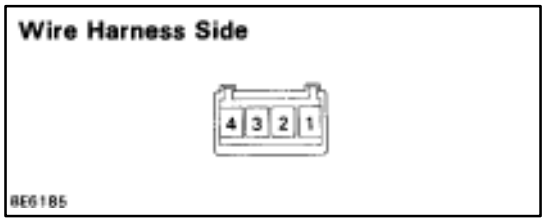

(Circuit)

Disconnect the inner mirror connector and inspect the connector on the wire harness side as shown.

Check for	Tester connection	Condition	Specified value
Voltage	2–Ground	Constant	Battery voltage
Continuity	1–Ground	Ignition key set	Continuity
		Ignition key removed	No continuity

If circuit is not as specified, refer to BE–165 wiring diagram and inspect the circuits connected to other parts.

(Key Unlock Warning Switch)

(See page BE–26)

Troubleshooting

You will find the cause of trouble more easily by properly using the table shown below. In this table, the numbers indicate the order of priority of the cruses of trouble. Check each part in the order shown. If necessary, replace the part.

See page / Parts name / Trouble	BE–4,21	BE–165	BE–26	—
	DOME Fuse	Liquid Crystal Inner Mirror	Key Unlock Warning Switch	Wire Harness
Liquid Crystal Inner Mirror does not operate.	1	2	3	4

WhereEverybodyKnowsYourName

ELECTRIC TENSION REDUCER SYSTEM

Parts Location

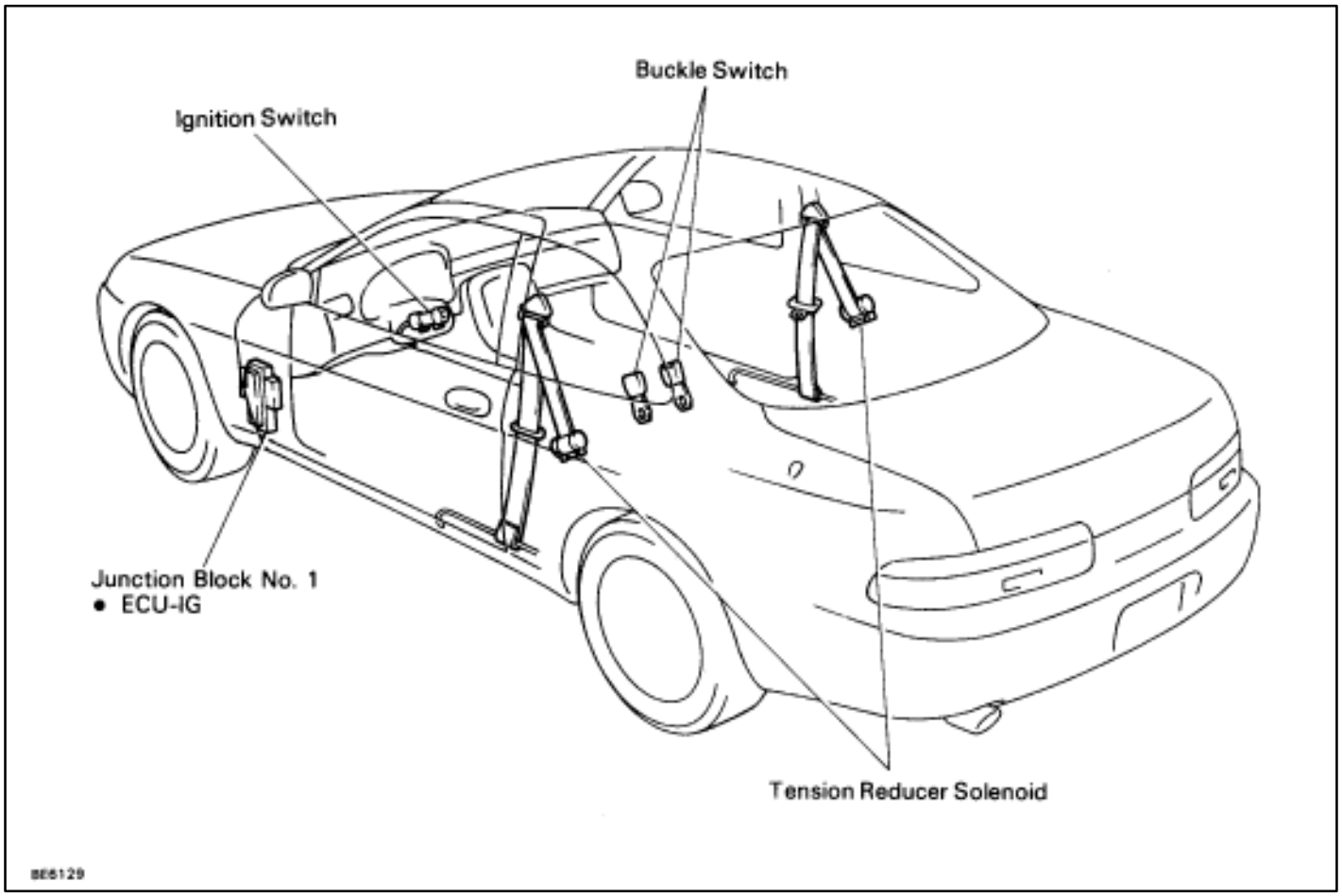

Wiring and Connector Diagrams

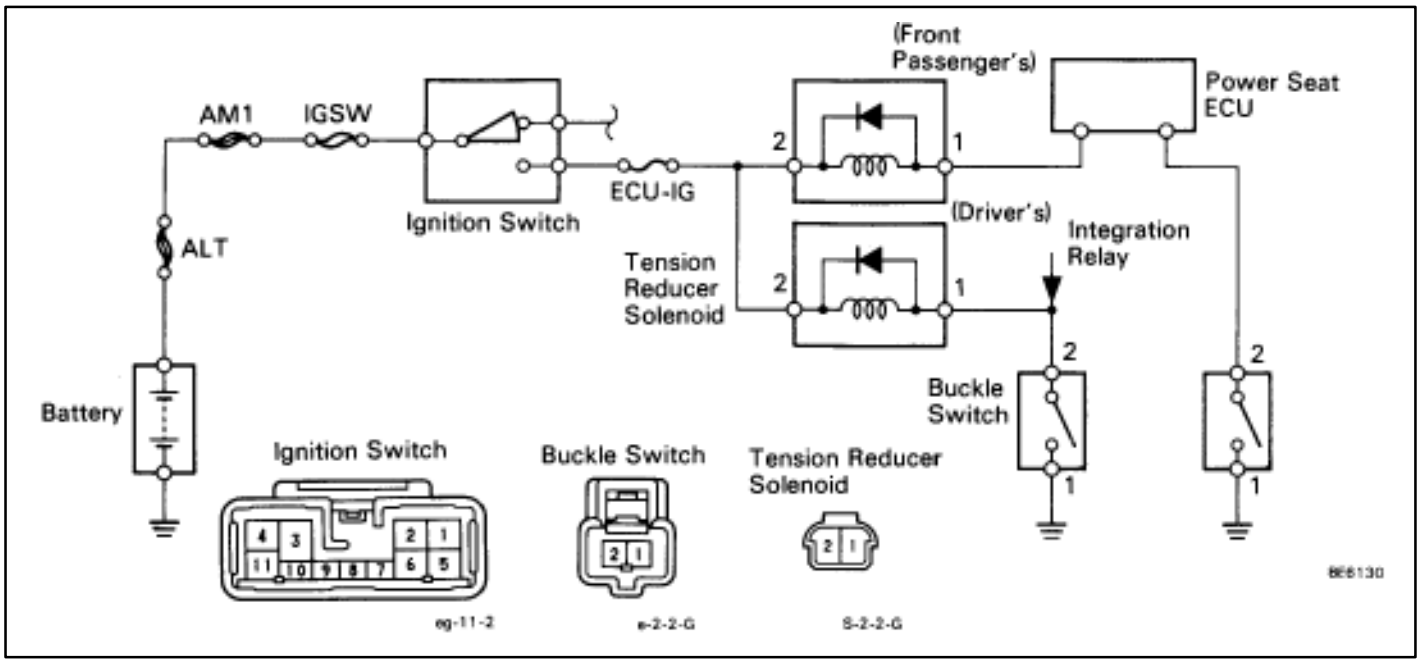

WhereEverybodyKnowsYourName

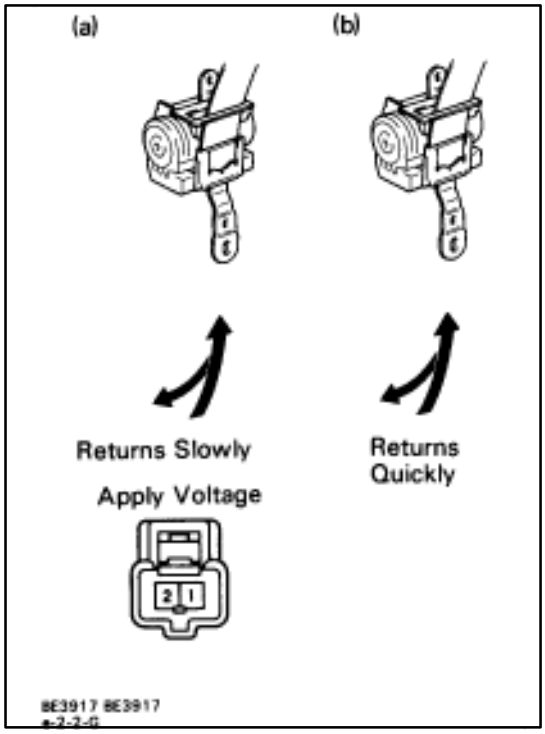

Parts Inspection (Tension Reducer Solenoid)

REMOVAL AND INSTALLATION OF TENSION REDUCER SOLENOID

(See page BO–71)

INSPECTION OF TENSION REDUCER SOLENOID

INSPECT TENSION REDUCER SOLENOID

(Operation)

(a) Connect the positive (+) lead from the battery to terminal 2, and negative (–) lead to terminal 1.

(b) Pull the belt upward and check that the belt is slowly retracted when released.

(c) Disconnect the lead from the battery.

(d) Pull the belt upward and check that the belt is retracted more quickly when released than in (b).

HINT: Do not tilt the retractor.

If the operation is not as specified, replace the front seat outer belt assembly.

(Circuit)

Disconnect the tension reducer solenoid connector and inspect the connector on wire harness side as shown.

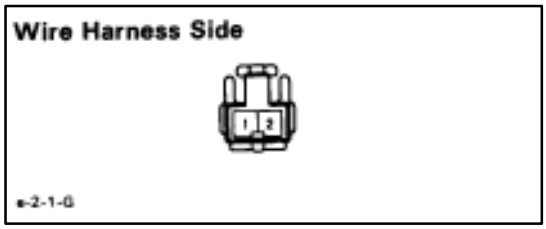

Check for	Tester connection	Condition		Specified value
Voltage	2–Ground	Ignition switch position	ON	Battery voltage
			ACC or LOCK	No voltage
Continuity	1–Ground	Buckle switch position	ON (belt fastened)	Continuity
			OFF (belt unfastened)	No continuity

If the circuit is specified, replace the front seat outer belt assembly.

If the circuit is not as specified, refer to BE–167 wiring diagram, and inspect the circuits connected to other parts.

WhereEverybodyKnowsYourName

(Buckle Switch)
REMOVAL AND INSTALLATION OF BUCKLE SWITCH

1. REMOVE BUCKLE SWITCH

(a) Remove the driver or front passenger's seat.
(b) Disconnect buckle switch connector.
(c) Remove seat belt inner with buckle switch.

2. INSTALL BUCKLE SWITCH

For installation follow the removal procedure in reverse.

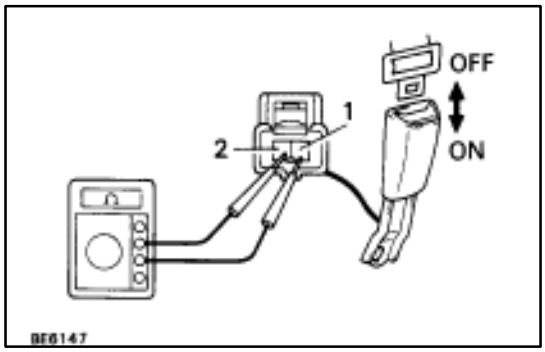

INSPECTION OF BUCKLE SWITCH

INSPECT BUCKLE SWITCH

(Switch Continuity)

(a) Check that there is continuity between terminals on the switch side connector with the switch ON (belt fastened).
(b) Check that there is no continuity between terminals on the switch side connector with the switch OFF (belt unfastened).

If operation is not as specified, replace the seat belt inner.

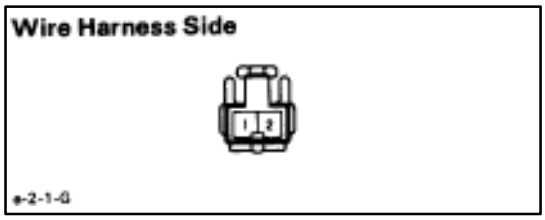

(Switch Circuit)

Disconnect the connector from switch and inspect the connector on wire harness side as shown.

Check for	Tester connection	Condition		Specified value
Voltage	2–Ground	Ignition switch position	ON	Battery voltage
			ACC or LOCK	No voltage
Continuity	1–Ground	Constant		Continuity

If the circuit is not as specified, refer to BE–167 wiring diagram, and inspect the circuits connected to other parts.

WhereEverybodyKnowsYourName

Troubleshooting

You will find the cause of trouble more easily properly using the table shown below. In this table, the numbers indicate the order priority of the causes of trouble. Check each part in the order shown. If necessary, replace the part.

See page / Parts name / Trouble	BE–4,20	BE–168	BE–169	—
	GAUGE Fuse	Tension Reducer Solenoid	Buckle Switch	Wire Harness
Tension Reducer does not operate. (Driver's and Passenger's)	1			2
Tension Reducer does not operate. (Only one side)		2	1	3

WhereEverybodyKnowsYourName

DEFOGGER SYSTEM

Description

The component parts of this system and their functions are described in the following table.

Parts Name	Function
Defogger	When over current flows in the defogger circuit, the Defogger fuse breaks the circuit to protect it against damage.
Defogger Relay	This relay is supplied with current from terminal IG1 of ignition switch (Ignition switch ON) and switches large current from the defogger.
A/C Control Panel Assembly ▼Defogger Switch	The defogger switch is built into the A/C Control Panel Assembly. This switch is supplied with current from the relay and fuse HTR. Grounds current from the defogger relay, turning the defogger relay ON.
Defogger ▼Rear Window ▼Outer Mirror	These defoggers generate heat when current is supplied from the defogger relay.

Parts Location

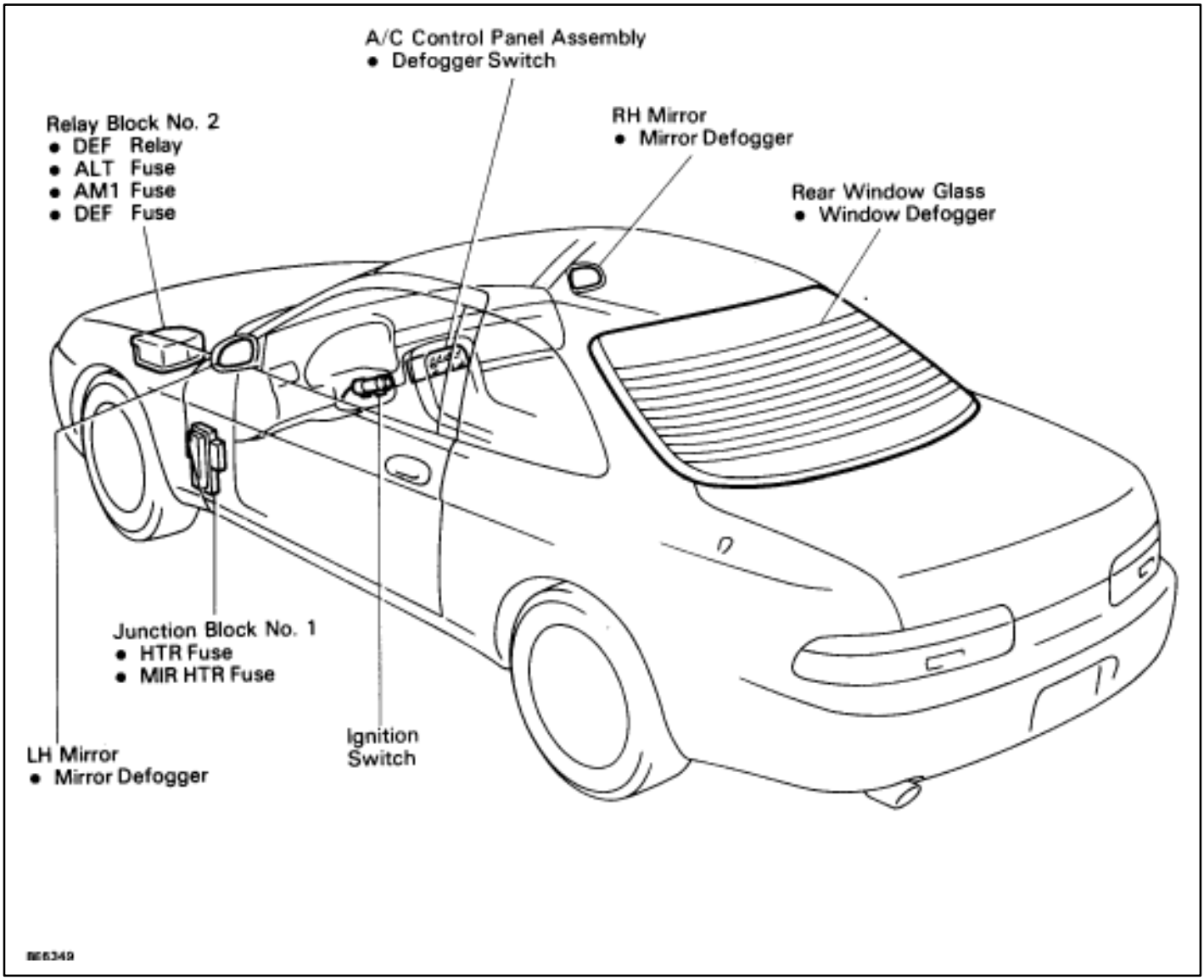

WhereEverybodyKnowsYourName

Wiring and Connector Diagrams

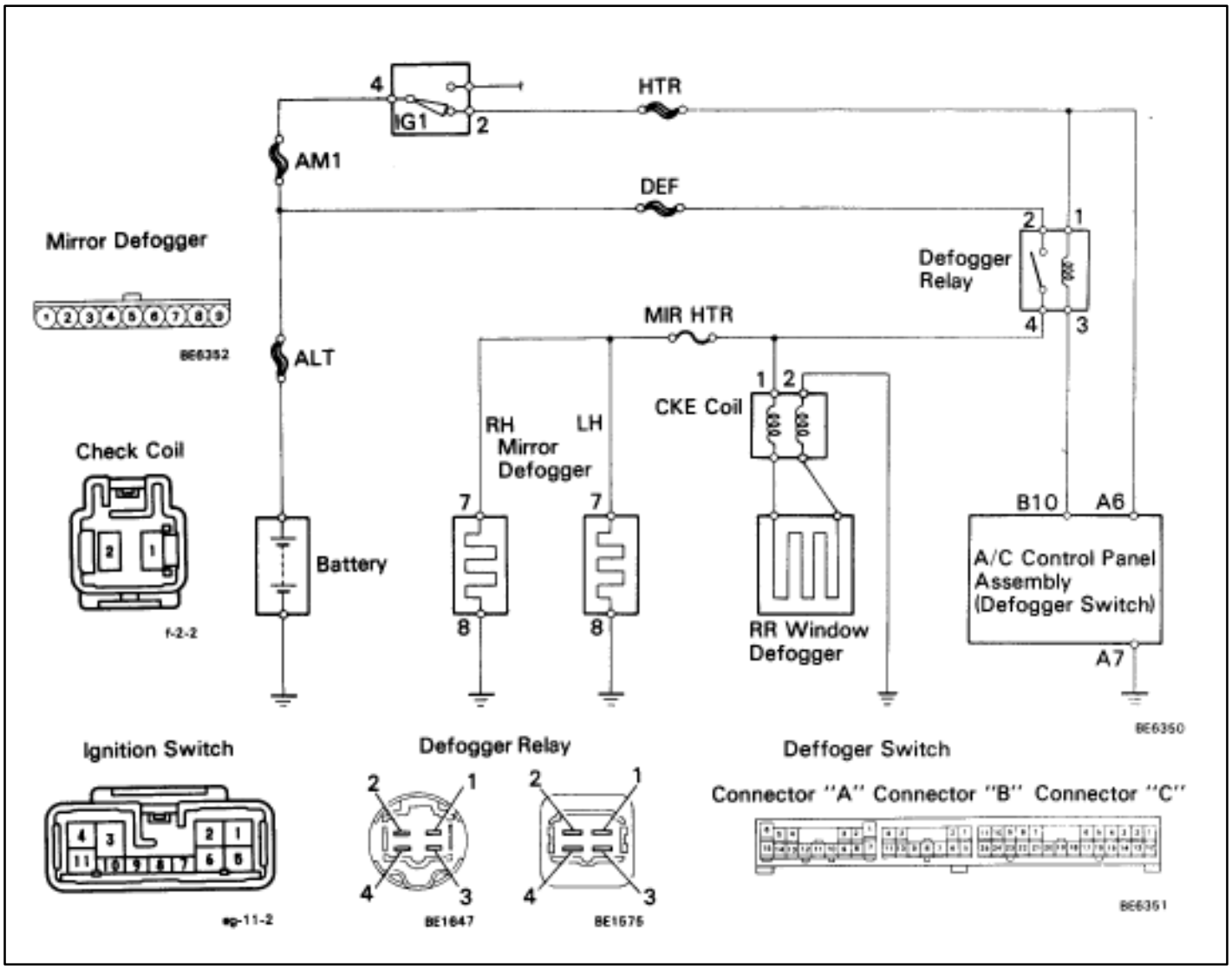

Parts Inspection (Defogger Switch)

REMOVAL AND INSTALLATION OF AIR CONDITIONER CONTROL PANEL ASSEMBLY

(See Instrument Panel on page BO–111)

INSPECTION OF DEFOGGER SWITCH

INSPECT SWITCH OPERATION

(a) Connect the positive (+) lead from the battery to terminal A6 and negative (–) lead to terminal A7.

(b) Connect the positive (+) lead from the battery to terminal B10 through a 1.4 W test bulb.

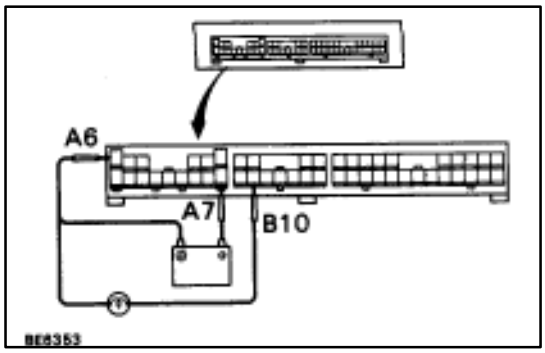

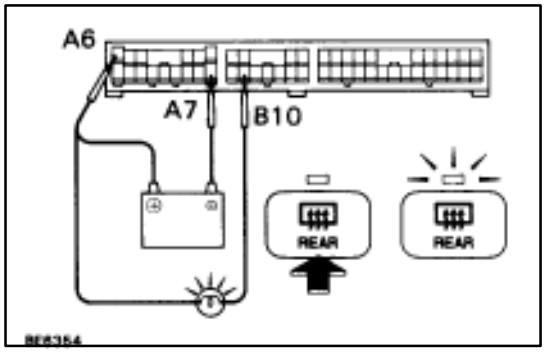

(c) Turn the defogger switch ON and check that the test bulb and indicator light turn ON, then turn OFF after about 15 minutes.

If operation is not as specified, replace the air conditioner control panel assembly.

(Defogger Relay)
INSPECTION OF DEFOGGER RELAY

INSPECT RELAY CONTINUITY AND OPERATION

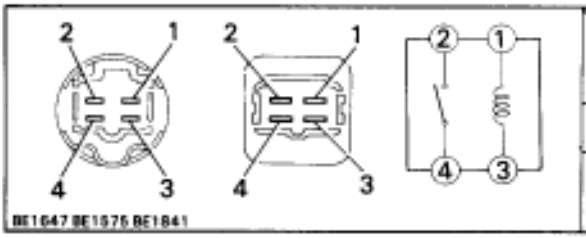

Terminal / Condition	1	2	3	4
Constant	○	⩘	○	
Apple battery voltage to terminals 1 and 3.		○		○

If continuity is not as specified, replace the relay.

(Defogger Wires)
INSPECTION AND REPAIR OF DEFOGGER WIRES

1. INSPECT DEFOGGER WIRES

NOTICE:

- **VWhen cleaning the glass, use a soft, dry cloth, and wipe the glass in the direction of the wire. Take care not to damage the wires.**
- **VDo not use detergents or glass cleaners with abrasive ingredients.**
- **VWhen measuring voltage, wind a piece of tin foil around the top of the negative probe and press the foil against the wire with your finger as shown.**

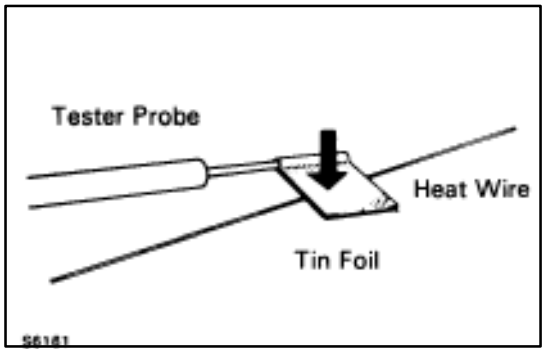

(a) Turn the ignition switch ON.

(b) Turn the defogger switch ON.

(c) Inspect the voltage at the center of each heat wire as shown.

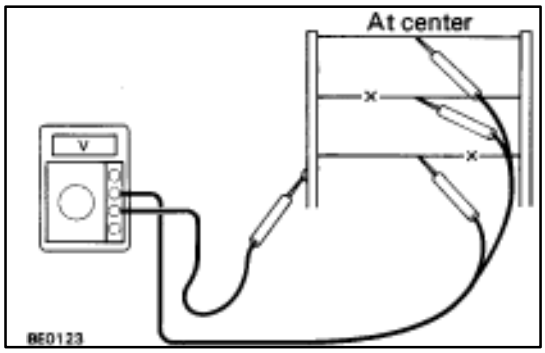

Voltage	Criteria
Approx. 5 V	Okay (No break in wire)
Approx. 10 V or 0 V	Broken wire

HINT: If there is approximately 10 volts, the wire is broken between the center of the wire and the positive (+) end. If there is no voltage, the wire is broken between the center of the wire and ground.

WhereEverybodyKnowsYourName

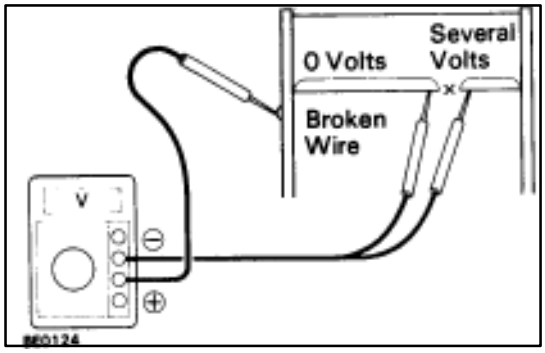

(d) Place the voltmeter positive (+) lead against the defogger positive (+) terminal.
(e) Place the voltmeter negative (–) lead with the foil strip against the heat wire at the positive (+) terminal end and slide it toward the negative (–) terminal end.
(f) The point where the voltmeter deflects from zero to several volts is the place where the heat wire is broken.

HINT: IF the heat wire is not broken, the voltmeter indicates 0 volts at the positive (+) end of the heat wire but gradually increases to about 12 volts as the meter probe is moved to the other end.

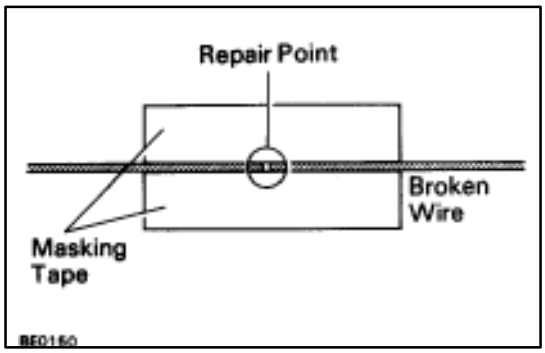

2. REPAIR DEFOGGER WIRES

(a) Clean the broken wire tips with a grease, wax and silicone remover.
(b) Place the masking tape along both sides of the wire to be repaired.
(c) Thoroughly mix the repair agent (Dupont paste No. 4817).

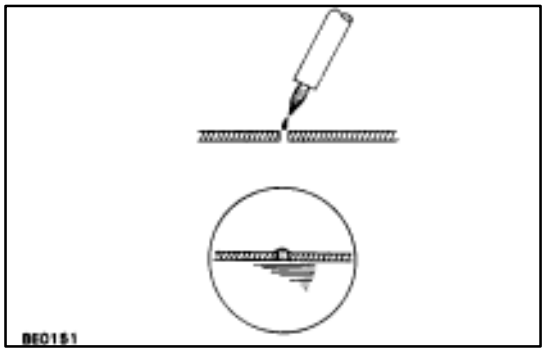

(d) Using a fine tip brush, apply a small amount to the wire.
(e) After a few minutes, remove the masking tape.
(f) Allow the repair to stand at least 24 hours.

(Mirror Defogger)
REMOVAL AND INSTALLATION OF MIRROR ASSEMBLY

(See Outside Rear View Mirror on page BO–42).

WhereEverybodyKnowsYourName

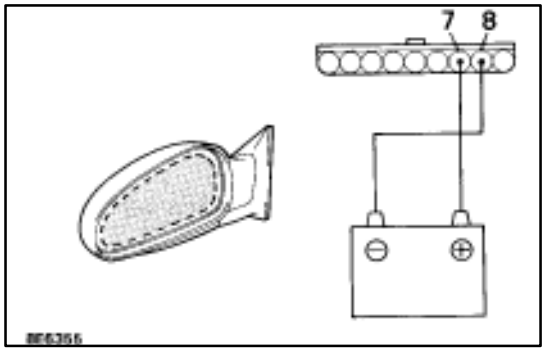

INSPECTION OF MIRROR DEFOGGER

INSPECT MIRROR DEFOGGER

(a) Connect the positive (+) lead from the battery to terminal 7 and the negative (–) lead to terminal 8.

(b) Check that the mirror becomes warm.

HINT: It will take a short time for the mirror to become warm. If the mirror does not become warm, replace the mirror assembly.

Troubleshooting

You will find the cause of trouble more easily using the table shown below. In this table, the number indicate the order priority of the causes in trouble. Check each part in the order shown. If necessary, replace the parts.

See page / Parts name / Trouble	BE–4,20	BE–4,20	BE–4,22	BE–172	BE–173	—	BE–173	—	BE–174
	HEATER Fuse	MIR–HTR Fuse	DEFOG Fuse	Defogger Switch	Defogger Relay	Wire Harness	Defogger Wires	CKE Coil	Mirror Defogger
All defogger systems do not operate.	1		1	2	3	4			
Rear window defogger does not operate.						3	1	2	
Mirror Defogger does not operate.		1				3			2

WhereEverybodyKnowsYourName

SLIDING ROOF SYSTEM

Description

Standby Operation

- ▼ Current flows from the DOME fuse to terminal A1 of the sliding roof control relay (hereafter called relay).
- ▼ When the ignition switch is ON, the current flows from the power window relay to terminal A3 of the relay.

Operation

1. Limit Switch operation

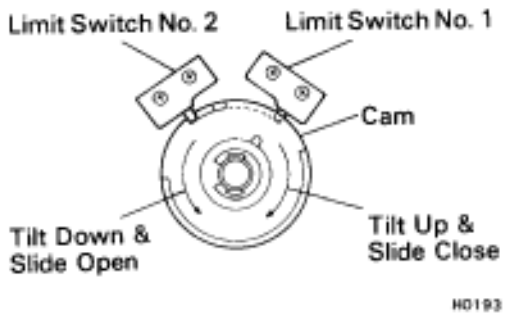

Roof Position		Fully Open	Momentary Stop		Fully Closed	Down	Up
Function		← Sliding Period →		Idling Period		← Tilting Period →	
Limit Switch No. 1	ON						
	OFF						
Limit Switch No. 2	ON						
	OFF						
Sliding Roof Control Switch	OPEN	○	○	○	○	X	
	CLOSE	○	○	○	X	X	
	UP	X	X	X	○	○	
	DOWN	X	X	X	X	○	

○: Operational X: Non-operational

2. OPEN operation

When the switch on the ”OPEN” side of the control switch is pushed, continuity is produced between terminal A8 of the relay and body ground. Then the relay operates, the current flows through terminal A3 of the relay ≦ terminal B3 ≦ terminal 1 of the sliding roof motor ≦ terminal 3 ≦ terminal B1 of the relay ≦ terminal A5 ≦ the body ground, and the motor starts to run in order to open the sliding roof.

3. CLOSE operation

When the switch on the ”CLOSE” side of the control switch is pushed, continuity is produced between terminal A7 of the relay and body ground. Then the relay operates, the current flows through terminal A3 of the relay ≦ terminal B1 ≦ terminal 3 of the sliding roof motor ≦ terminal 1 ≦ terminal B3 of the relay ≦ terminal A5 ≦ the body ground, and the motor starts to run in order to close the sliding roof.

Momentary Stop

When the sliding roof reaches about 200 mm (7.87 in.) short of the fully closed position, the limit switch is turned from ON to OFF, so there is not continuity between terminal B1 of the relay and body ground No. 1. As a result, the sliding roof stops at that position.

4. TILT UP operation

When the switch on the ”UP” side of the control switch is pushed, continuity is produced between terminal A6 of the relay and body ground. Then the relay operates, the current flows through terminal A3 of the relay ≦ terminal B1 ≦ terminal 3 of the sliding roof motor ≦ terminal 1 ≦ terminal B3 of the relay ≦ terminal A5 ≦ the body ground, and the motor starts to run in order to tilt up the sliding roof.

5. TILT DOWN operation

When the switch on the ”DOWN” side of the control switch is pushed, continuity is produced between terminal A2 of the relay and body ground. Then the relay operates, the current flows through terminal A3 of the relay ≦ terminal B3 ≦ terminal 1 of the sliding roof motor ≦ terminal 3 ≦ terminal B1 of the relay ≦ terminal A5 ≦ the body ground, and the motor starts to run in order to tilt down the sliding roof.

WhereEverybodyKnowsYourName

6. TILT UP REMINDER SYSTEM

If the ignition switch is turned from ON to OFF or ACC and the sliding roof remains tilted up, after 60 seconds have elapsed or either the driver or passenger door is opened, a buzzer will sound for approx. 8 seconds as a reminder that the sliding roof is tilted up.

Parts Location

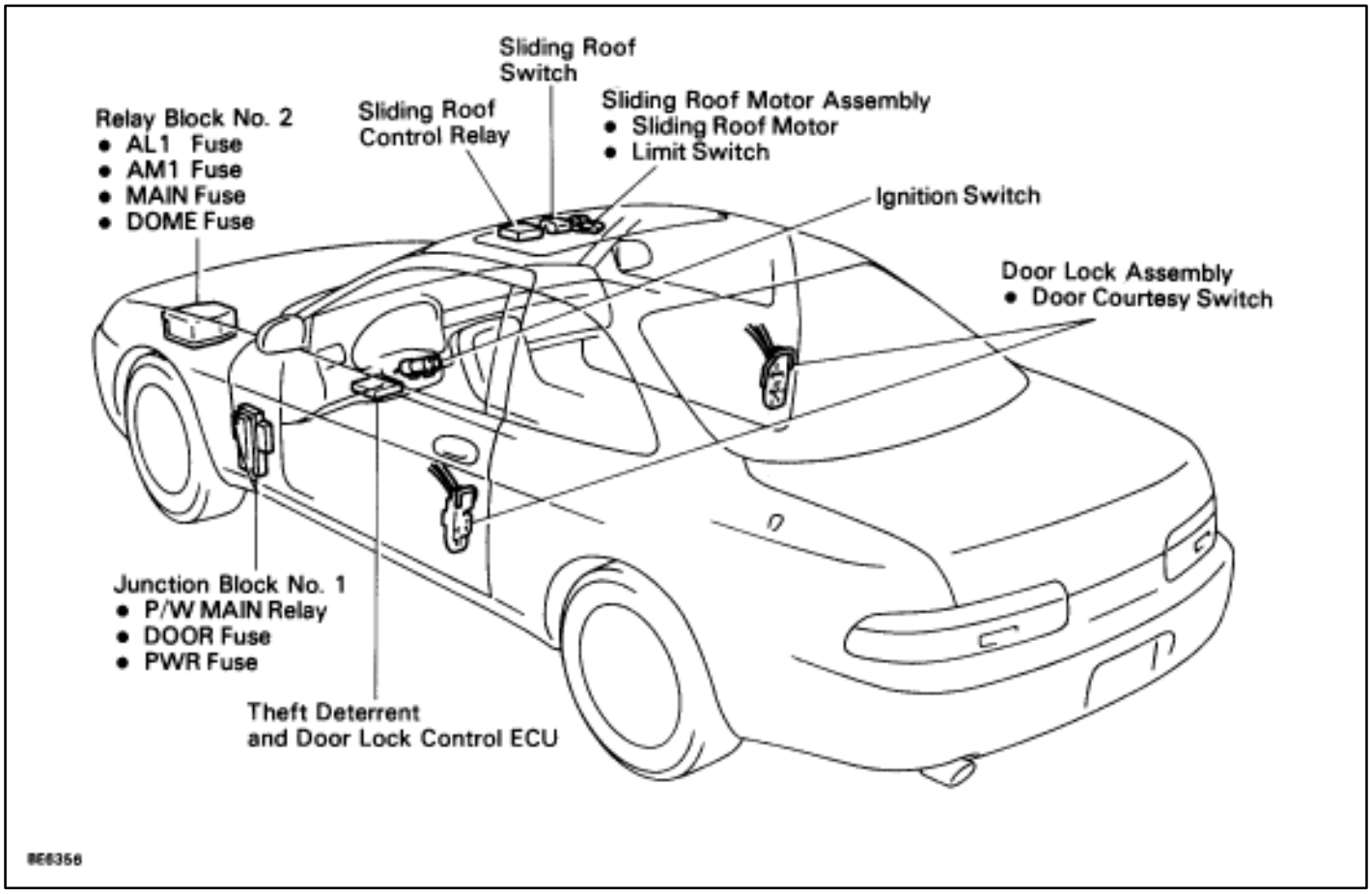

WhereEverybodyKnowsYourName

Wiring and Connector Diagrams

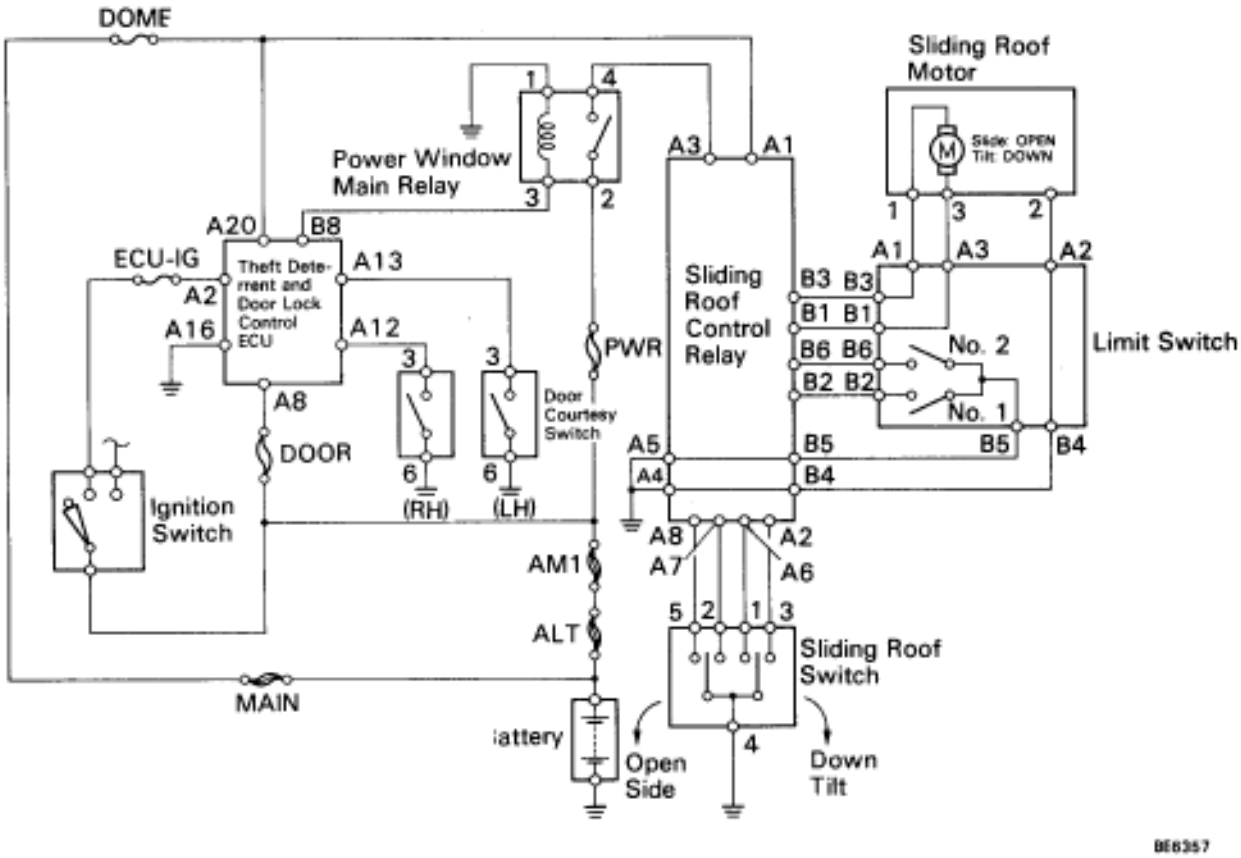

Power Window Main Relay

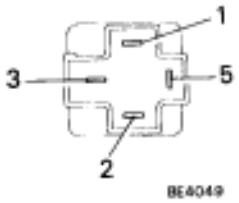

Sliding Roof Control Relay

Connector "A" Connector "B"

Sliding Roof Motor

Sliding Roof Switch

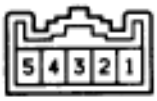

Limit Switch

Connector "A" Connector "B"

Ignition Switch

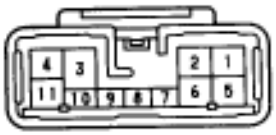

Theft Deterrent and Door Lock Control ECU

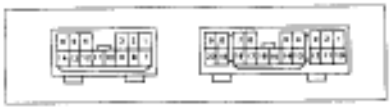

Connector "B" Connector "A"

BE5850

WhereEverybodyKnowsYourName

Parts Inspection

(Power Window Main Relay)

INSPECTION OF POWER WINDOW MAIN RELAY

(See Power Window Main Relay on page BE–152)

(Sliding Roof Switch)

REMOVAL AND INSTALLATION OF SLIDING ROOF SWITCH

(See Sliding Roof on page BO–85)

INSPECTION OF SLIDING ROOF SWITCH

INSPECT SWITCH CONTINUITY

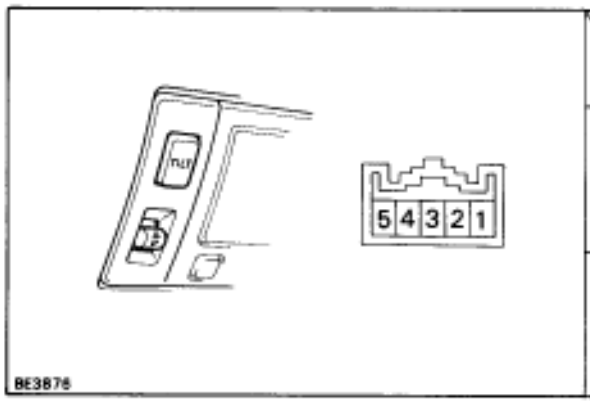

Switch position \ Terminal		1	2	3	4	5
SLIDE	OPEN				○	○
	OFF					
	CLOSE		○		○	
TILT	DOWN			○	○	
	OFF					
	UP	○			○	

If continuity is not as specified, replace the switch.

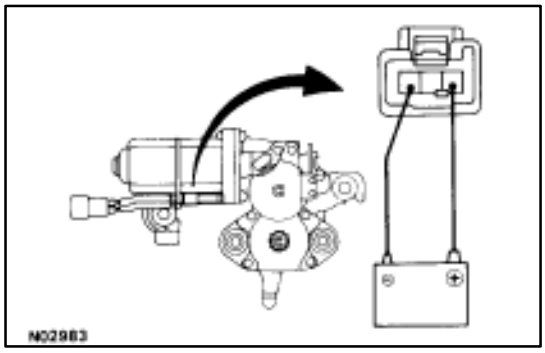

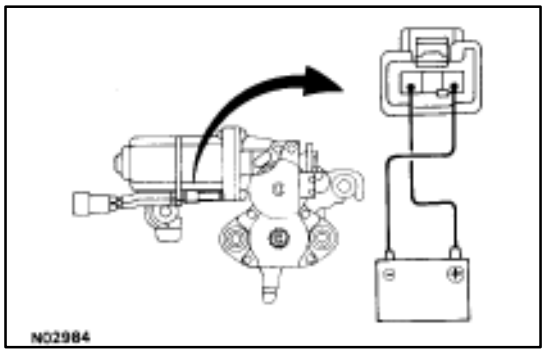

(Sliding Roof Motor)

REMOVAL AND INSTALLATION OF MOTOR

(See Sliding Roof on page BO–85)

INSPECTION OF MOTOR

INSPECT MOTOR OPERATION

(a) Disconnect the connector which has 3 terminals and inspect on the clamped connector side.

(b) Connect the positive (+) lead from the battery to terminal 1 and negative (–) lead to terminal 3 and check that the motor turns clockwise.

(c) Connect the positive (+) lead from the battery to terminal 3 and negative (–) lead to terminal 1 and check that the motor turns counterclockwise.

If operation is not as specified, replace the motor.

(d) Connect the connector.

WhereEverybodyKnowsYourName

(Sliding Roof Control Relay) REMOVAL AND INSTALLATION OF SLIDING ROOF CONTROL RELAY

(See Sliding Roof on page BO–85)

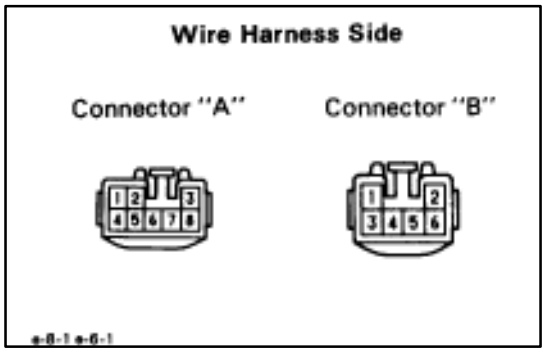

INSPECTION OF SLIDING ROOF CONTROL RELAY

INSPECT CONTROL RELAY CIRCUIT

Disconnect the connector from the relay and inspect the connector on the wire harness side as shown in the chart.

Check for	Test connection	Condition		Specified value
Continuity	A2 – Ground	Sliding roof control switch position (TILT)	OFF or UP	No continuity
			DOWN	Continuity
	A6 – Ground	Sliding roof control switch position (TILT)	OFF or DOWN	No continuity
			UP	Continuity
	A7 – Ground	Sliding roof control switch position (SLIDE)	OFF or OPEN	No continuity
			CLOSE	Continuity
	A8 – Ground	Sliding roof control switch position (SLIDE)	OFF or CLOSE	No continuity
			OPEN	Continuity
	B1 – Ground	Constant		No continuity
	B1 – B3	Constant		Continuity
	B2 – Ground	No. 1 limit switch position	OFF (Sliding roof tilt up or approx. 200 mm (7.87 in.) opened)	No continuity
			ON (Except for conditions mentioned above)	Continuity
	B3 – Ground	Constant		No continuity
	B4 – Ground	Constant		Continuity
	B5 – Ground	Constant		Continuity
	B6 – Ground	No. 2 limit switch position	OFF (Sliding roof closed)	No continuity
			ON (Sliding roof opened)	Continuity
Voltage	A1 – Ground	Constant		Battery voltage
	A3 – Ground	Ignition switch position	LOCK or ACC (*)	No voltage
			ON	Battery voltage

(*) Except within 60 seconds after turning the ignition key to the OFF position and both the driver's door and the passenger's door are closed.

If circuit is as specified, replace the relay.

WhereEverybodyKnowsYourName

(Sliding Roof Limit Switch)

REMOVAL AND INSTALLATION OF LIMIT SWITCH

(See Sliding Roof on page BO–85)

INSPECTION OF LIMIT SWITCH

1. INSPECT LIMIT SWITCH CIRCUIT

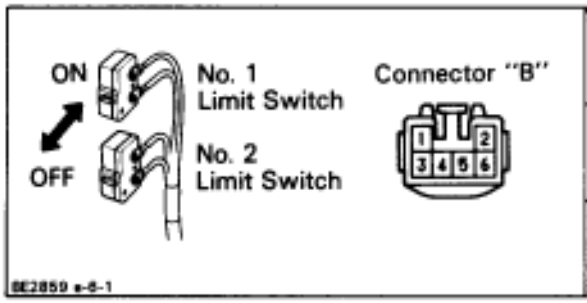

Switch position		Terminal B2	Terminal B5	Terminal B6
No. 1 limit switch	OFF (SW pin released)			
	ON (SW pin pushed in)	○	○	
No. 2 limit switch	OFF (SW pin released)			
	ON (SW pin pushed in)		○	○

If continuity is not as specified, replace the switch.

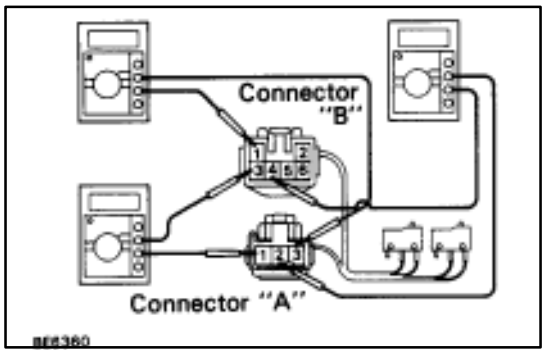

2. INSPECT MOTOR WIRE CIRCUIT

(a) Check that there is continuity between terminals A1 and B3.

(b) Check that there is continuity between terminals A2 and B4.

(c) Check that there is continuity between terminals A3 and B1.

If continuity is not as specified, replace the switch.

(Theft Deterrent and Door Lock Control ECU)

(See page BE–155)

(Door Courtesy Switch)

(See page BE–79)

WhereEverybodyKnowsYourName

Troubleshooting

You will find the cause of trouble more easily by properly using the table shown below. In this table, the numbers indicate the order of priority of the causes of trouble. Check each part in the order shown. If necessary, replace the part.

See page / Part name / Trouble	AM1 Fuse	DOME Fuse	DOOR Fuse	POWER Fuse	Theft Deterrent and Door Lock Control ECU	Power Window Main Relay	Sliding Roof Control Relay	Sliding Roof Switch	Sliding Roof Motor	Sliding Rood Motor (Stones to foreign material trapped in motor assembly)	Limit Switch	Ignition Switch	Door Courtesy Switch	ECU–IG Fuse	Wire Harness
See page	BE–4,21	BE–4,21	BE–4,20	BE–4,20	BE–156	BE–152	BE–180	BE–179	BE–179	—	BE–181	BE–26	BE–79	BE–4,20	—
*1 Sliding roof system does not operate.	1		2		3										4
*2 Sliding roof system does not operate.			3	5	4	6	7	8	9			2		1	10
Sliding roof system operates abnormally.							1	3			2				4
Sliding roof system stops operation half way.							1	3		4	2				
Buzzer does not sound.		1					2								3
Buzzer sounds abnormally.							1								
“Key–off Sliding Roof” operation does not operate.		1			2							4	5	3	6

*1: Door Lock does not operate
*2: Door Lock is normal

WhereEverybodyKnowsYourName

POWER MIRROR CONTROL SYSTEM

Description

The Power Miror Control System carries out mirror left/right and up/down adjustments electrically when the Mirror Switch is operated. In addition, operation of the Driving Position Memory and Return Switches makes it possible to store the adjusted position in memory and reproduce each adjustment when desired. The component parts of this system and their functions are described in the following table.

Parts Name	Function
Outside Rear View Mirror ECU	The Outside Rear View Mirror ECU is supplied with power from the DOME and RADIO NO.2 fuses and is connected to the Tilt and Telescopic ECU, Mirror Switch, each mirror motor and ground.
Rear View Adjustment Switch	Operation of this switch sends left/right, up/down signals to Outside Rear View Mirror ECU.
Driving Position Memory and Return Switches	Memory and return signals are sent to the ECU via the Tilt and Telescopic ECU.
Mirror Motor	These motors operate on current from the Outside Rear View Mirror ECU, moving the various parts of the mirror directly. These sensors send signals about the motor positions to the ECU for storing in memory and during return operation.
Left/Right Select Switch	This switch is used to select operation of the Rear View Adjustment Switch for the leftor right hand side mirror.

WhereEverybodyKnowsYourName

Parts Location

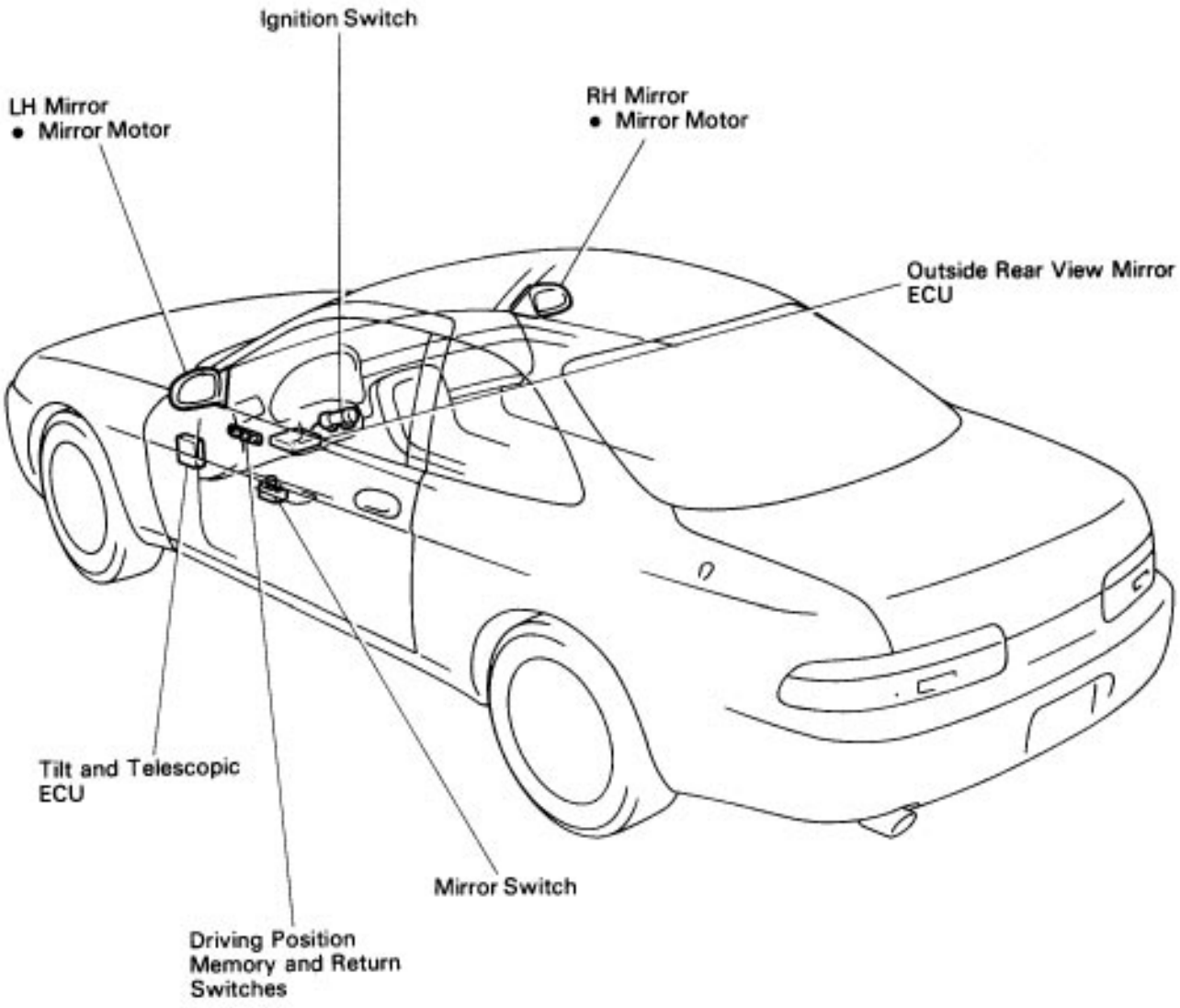

WhereEverybodyKnowsYourName

Wiring and Connector Diagrams (Cont'd)

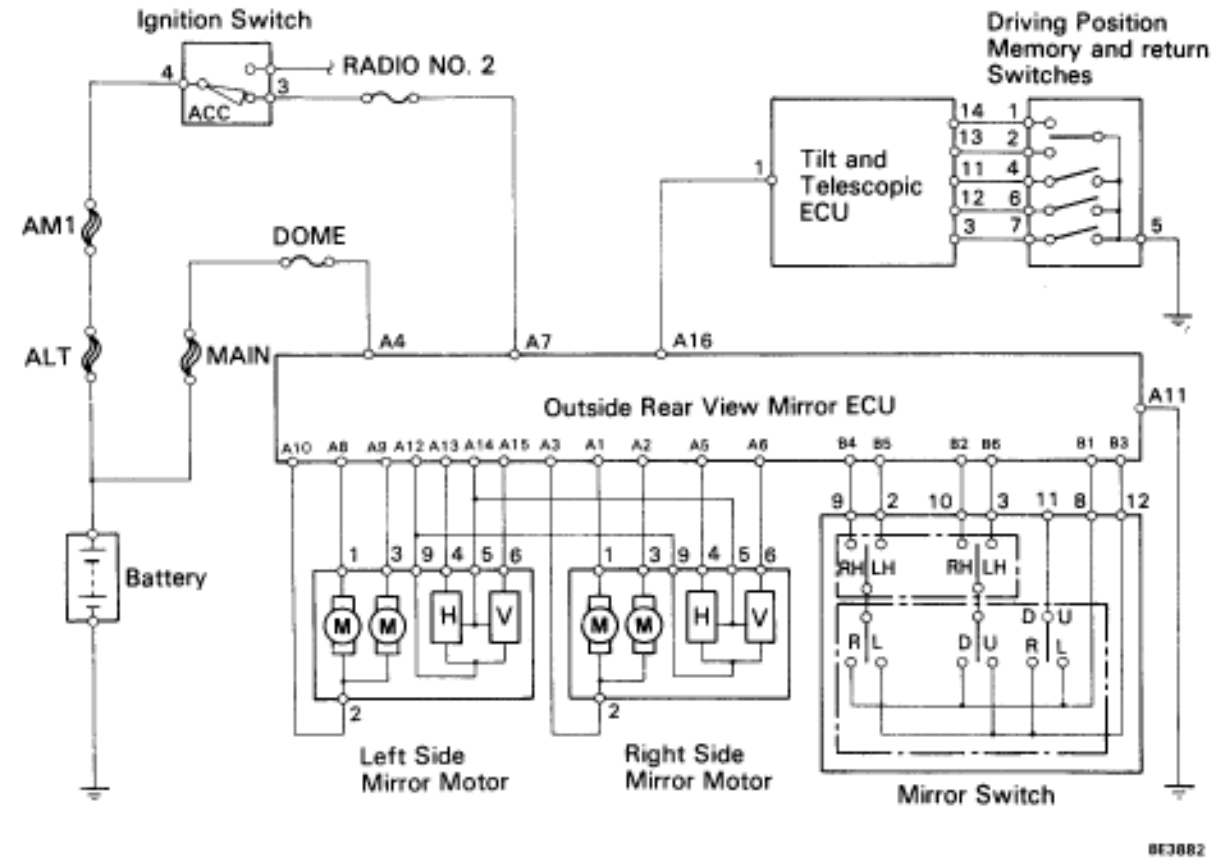

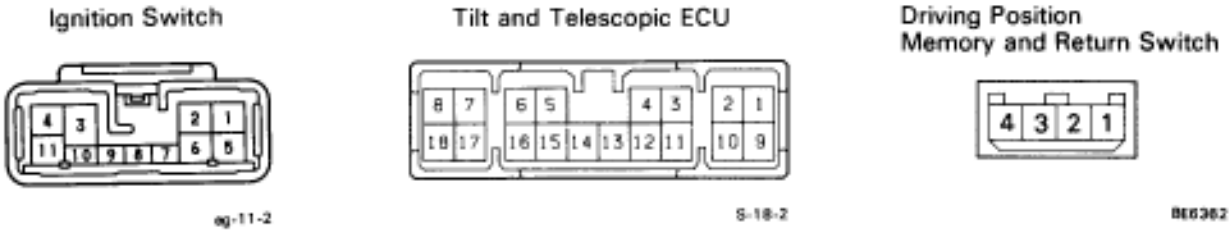

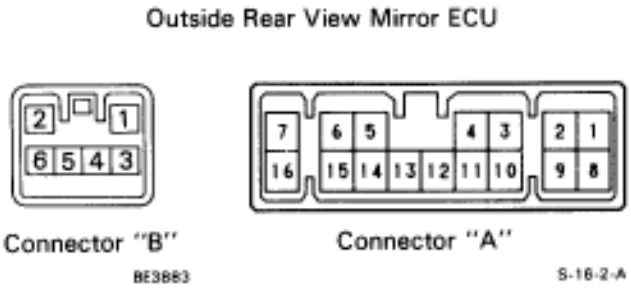

WhereEverybodyKnowsYourName

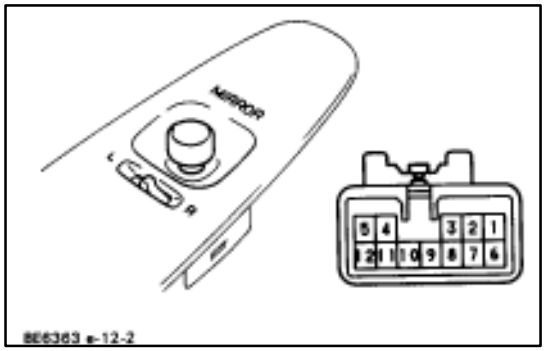

Parts Inspection
(Mirror Switch)
REMOVAL AND INSTALLATION OF MIRROR SWITCH

(See Instrument Panel on page BO–33)

INSPECTION OF MIRROR SWITCH

INSPECT SWITCH CONTINUITY

▼ Rear View adjustment switch

Left/Right Select Switch Position	LEFT SIDE					RIGHT SIDE				
Terminal / Switch Position	2	3	8	11	12	8	9	10	11	12
OFF										
UP		○	○	○	○	○		○	○	○
DOWN		○	○	○	○	○		○	○	○
LEFT	○		○	○	○	○	○		○	○
RIGHT	○		○	○	○	○	○		○	○

▼ Left/Right select switch

Terminal / Switch Position	2	3	9	10
LEFT	○	○	○	○
OFF				
RIGHT	○	○	○	○

If continuity is not as specified, replace the switch.

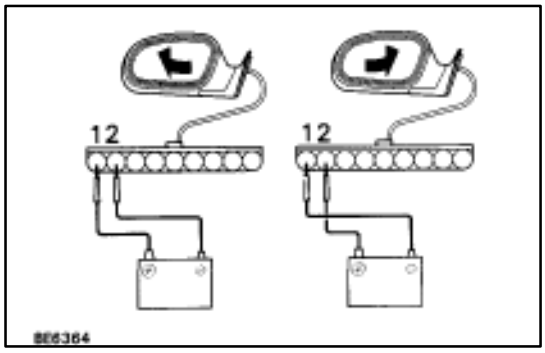

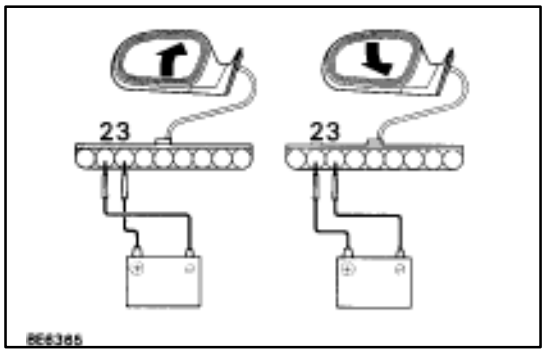

(Mirror Motor)
REMOVAL AND INSTALLATION OF OUTSIDE MIRROR ASSEMBLY

(See Outside Rear View Mirror on page BO–42)

INSPECTION OF MIRROR MOTOR

1. INSPECT MIRROR MOTOR OPERATION

(a) Connect the positive (+) lead from the battery to terminal 1 and negative (–) lead to terminal 2 check that the mirror turns to left side.

(b) Reverse the polarity, check that the mirror turns to right side.

(c) Connect the positive (+) lead from the battery to terminal 3 and negative (–) lead to terminal 2 check that the mirror turns upward.

(d) Reverse the polarity, check that the mirror turns downward.

WhereEverybodyKnowsYourName

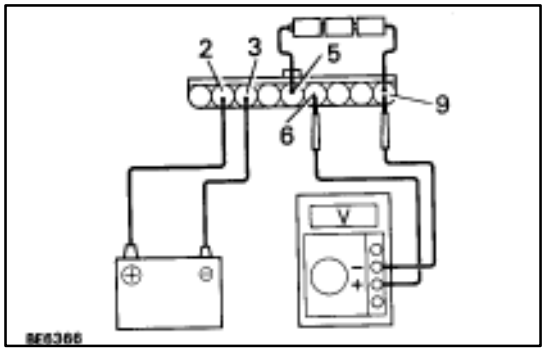

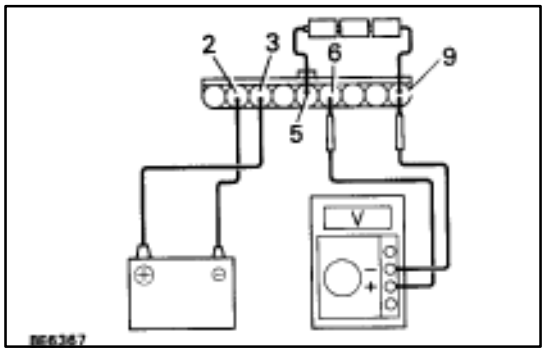

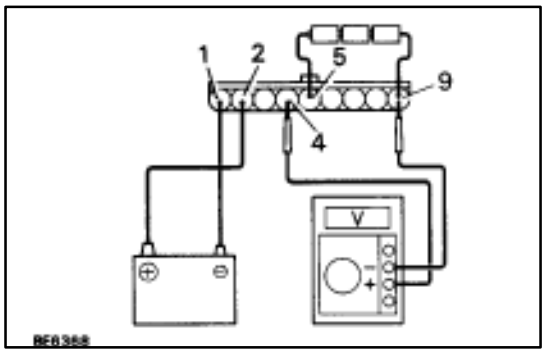

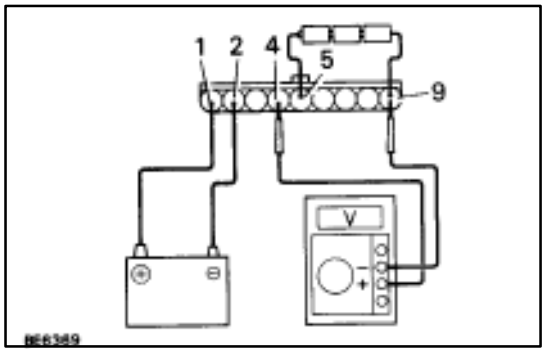

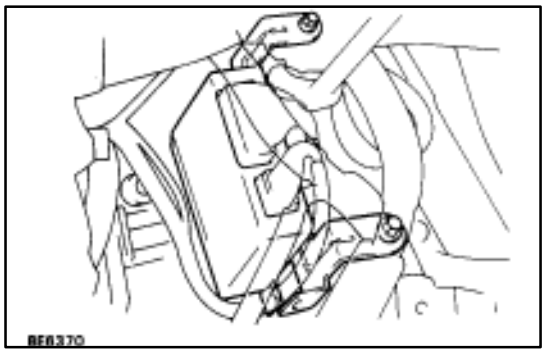

2. INSPECT MIRROR POSITION SENSORS

HINT: Strip off the vinyl tape of the connector and remove terminals 1, 2, 3, 5 and 9 from the connector housing.

(a) Connect a series of three 1.5 volt dry cell batteries.

(b) Connect the positive (+) lead from the dry cell batteries to terminal 5 and the negative (–) lead to terminal 9.

(c) Connect the positive (+) lead from the voltmeter to terminal 6 and the negative (–) lead to terminal 9.

(d) Apply battery voltage to terminals 2 and 3, check that the voltage gradually changes according to the table below while the mirror moves between the uppermost position and lowermost position.

Mirror position	Lowermost		Uppermost
Voltage	2.8 – 5.0	Changes gradually	0 – 0.9

If voltage value is not as specified, replace the motor assembly.

(e) Disconnect the four leads of the battery and voltmeter.

(f) Connect the positive (+) lead from the voltmeter to terminal 4 and the negative (–) lead to terminal 9.

(g) Apply battery voltage to terminals 1 and 2n inspect that the voltage gradually changes according to the table below while the mirror moves between the leftmost position and rightmost position.

Mirror Position		Leftmost		Rightmost
Voltage	Left Mirror	2.8 – 5.0	Changes gradually	0 – 0.9
	Right Mirror	0 – 0.9	Changes gradually	2.8 – 5.0

If voltage value is not as specified, replace the motor assembly.

(Mirror ECU)
REMOVAL AND INSTALLATION OF MIRROR ECU

REMOVAL AND INSTALL MIRROR ECU

(a) Remove the No. 1 under cover .
(See page BO–112)

(b) Remove the two screws and disconnect the two connectors and then pull out the ECU.

(c) For installation, follow the removal procedure in reverse.

WhereEverybodyKnowsYourName

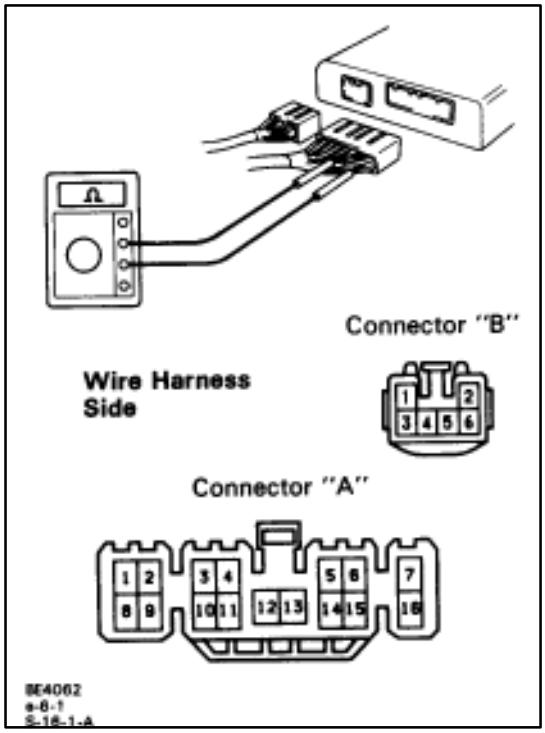

INSPECTION OF MIRROR ECU

1. INSPECT MIRROR ECU CIRCUIT

Disconnect the connectors from the ECU and inspect the connector on the wire harness side as shown in the chart below.

Check for	Tester connection	Condition	Specified value
Continuity	A1–A2	Constant	Continuity
	A1–A3	Constant	Continuity
	A8–A10	Constant	Continuity
	A9–A10	Constant	Continuity
	A11–Ground	Constant	Continuity
	A12–A13	Constant	Continuity
	A16–*	Constant	Continuity
	B1–B2	Right mirror switch on DOWN	Continuity
	B1–B4	Right mirror switch to RIGHT	Continuity
	B1–B5	Left mirror switch to RIGHT	Continuity
	B1–B6	Left mirror switch to DOWN	Continuity
	B2–B3	Right mirror switch to UP	Continuity
	B3–B4	Right mirror switch to LEFT	Continuity
	B3–B5	Left mirror switch to LEFT	Continuity
	B3–B6	Left mirror switch to UP	Continuity
Voltage	A4–Ground	Constant	Battery positive voltage
	A7–Ground	Ignition switch to ACC	Battery positive voltage
		Ignition switch to OFF	No voltage

*: Terminal 1/18 of the Tilt and Telescopic ECU

If circuit is not as specified, inspect the wire harness and mirror switch or motor assembly.

WhereEverybodyKnowsYourName

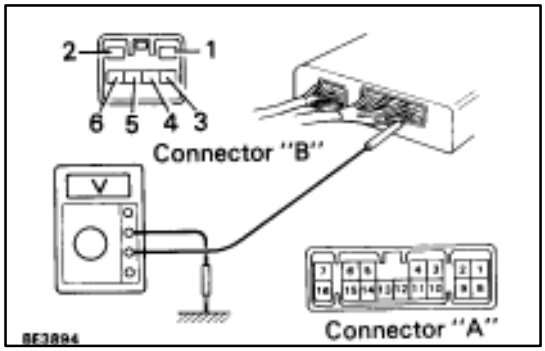

2. INSPECT MIRROR ECU OPERATION

Connect the connectors and using a voltmeter with high impedance (10 k? /V minimum), measure the voltage at each terminal and body ground.

Check for	Tester connection	Condition	Specified value
Voltage	A1–Ground	Right mirror switch to LEFT	Battery positive voltage
	A2–Ground	Right mirror switch to UP	Battery positive voltage
	A3–Ground	Right mirror switch to RIGHT or DOWN	Battery positive voltage
	*A5–Ground	Right mirror to leftmost position	0–0.9 V
		Right mirror to rightmost position	2.8–5.0 V
	*A6–Ground	Right mirror to lowermost position	2.8–5.0 V
		Right mirror to uppermost position	0–0.9 V
	A8–Ground	Left mirror switch to RIGHT	Battery positive voltage
	A9–Ground	Left mirror switch to UP	Battery positive voltage
	A10–Ground	Left mirror switch to LEFT or DOWN	Battery positive voltage
	A13–Ground	Right or left mirror switch to any position except OFF	Approx. 5 V
	*A14–Ground	Left mirror to leftmost position	2.8–5.0 V
		Left mirror to rightmost position	0–0.9 V
	*A15–Ground	Left mirror to lowermost position	2.8–5.0 V
		Left mirror to uppermost position	0–0.9 V
	B2–Ground	Constant	Approx. 5 V
	B4–Ground	Constant	Approx. 5 V
	B5–Ground	Constant	Approx. 5 V
	B6–Ground	Constant	Approx. 5 V

*: Confirm that the voltage changes gradually while the mirror moves

If operation is not as specified, inspect the wire harness and mirror switch or motor assembly. Then if these are correct, replace the ECU.

WhereEverybodyKnowsYourName

Troubleshooting

You will find the cause of trouble more easily by properly using the table shown below. In this table, the numbers indicate the order of priority of the causes of trouble. Check each part in the order shown. If necessary, replace the part.

See page / Parts name / Trouble	BE–4,20	BE–4,21	BE–186	BE–186	—	BE–188	SR–60	—	IN–32	BE–187
	RADIO NO. 2 Fuse	DOME Fuse	Mirror Switch	Mirror Motor	Wire Harness	Mirror ECU	Driving Position Switch	Driving Position Switch (Position is not set)	Tilt and Telescopic ECU	Mirror Sensors
Mirror does not operate.	1	1	2	3	5	4				
Mirror operates abnormally			1	2	4	3				
Mirror does not return to the memorized position. (w/ Memory System)					6	4	2	1	3	5
Mirror returns to a position which is not memorized. (w/ Memory System)					3	1				2

WhereEverybodyKnowsYourName

FUEL LID OPENER SYSTEM

Parts Location

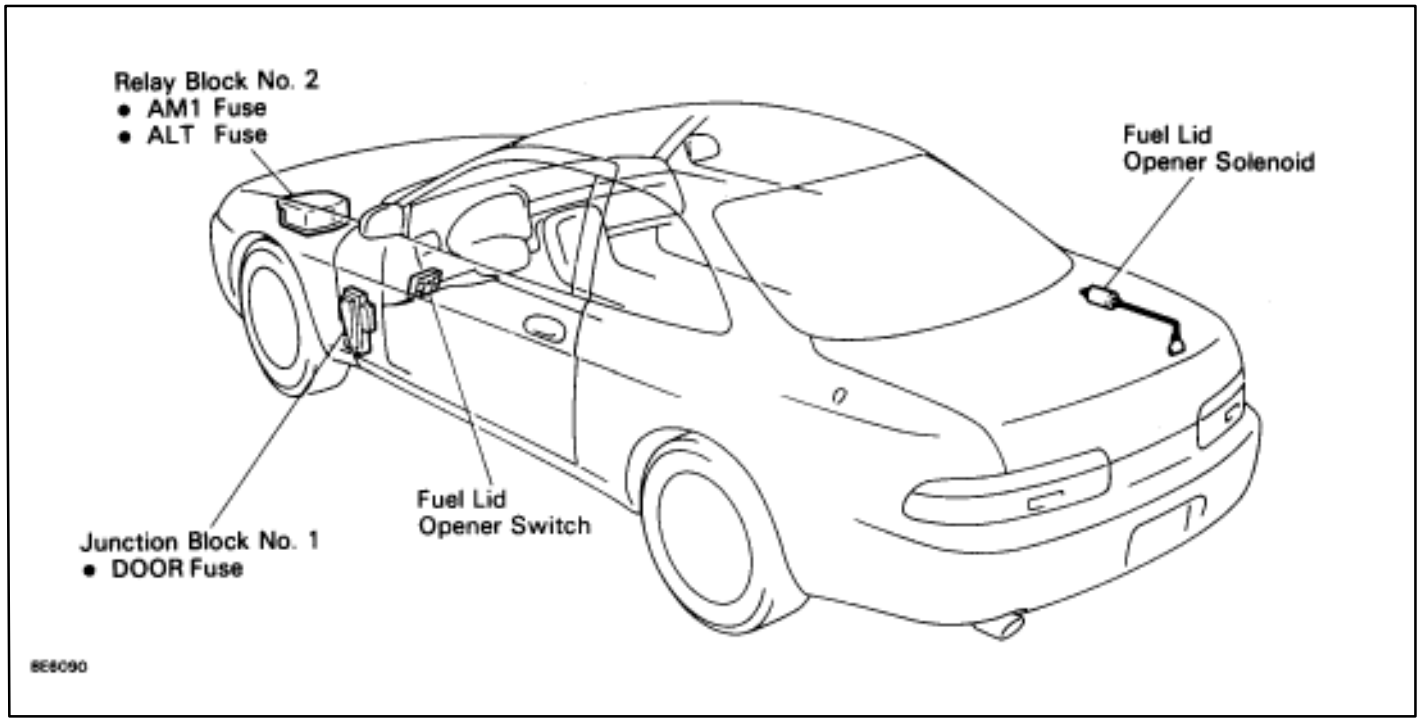

Wiring and Connector Diagrams

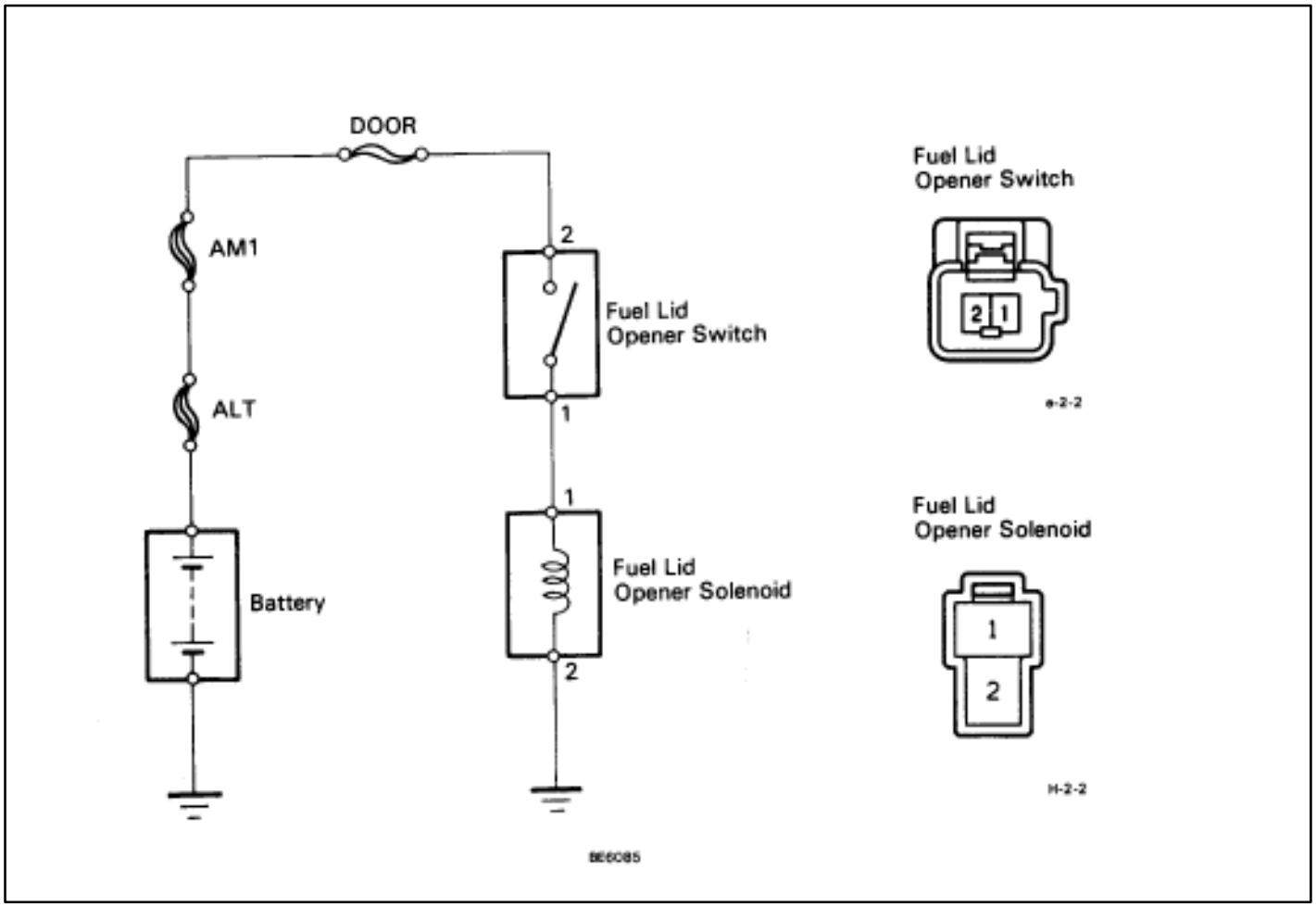

WhereEverybodyKnowsYourName

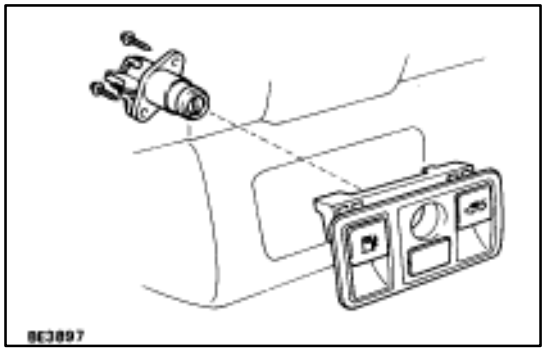

Parts Inspection
(Fuel Lid Opener Switch)
REMOVAL AND INSTALLATION OF FUEL LID OPENER SWITCH

REMOVE AND INSTALL FUEL LID OPENER SWITCH

(a) Remove No. 1 lower finish panel.
(See Instrument Panel on page BO–113)
(b) Remove the key cylinder, then remove the fuel lid opener switch assembly from the pad.
(c) Install the opener switch assembly and key cylinder to the pad.
(d) Install the No. 1 lower finish panel.
(See Instrument Panel on page BO–116)

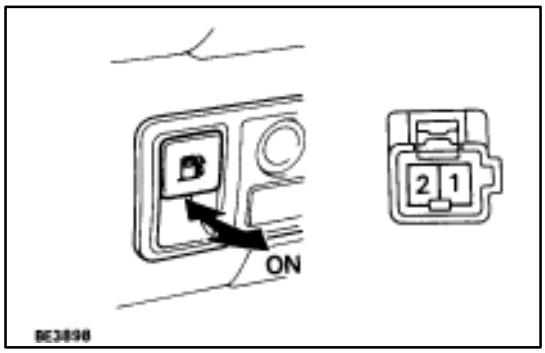

INSPECTION OF FUEL LID OPENER SWITCH

INSPECT SWITCH CONTINUITY

(a) Check that there is continuity between terminals with the switch ON (Lever pulled).
(b) Check that there is no continuity between terminals with the switch OFF (Lever free).

If continuity is not as specified, replace the switch assembly.

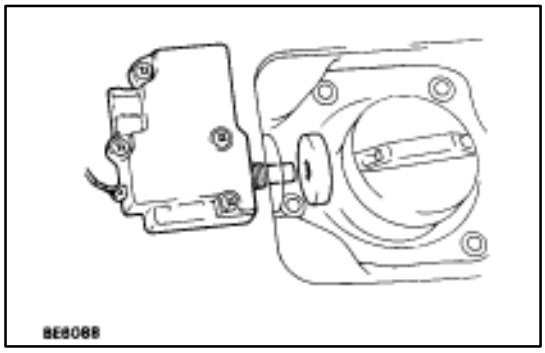

(Fuel Lid Opener Solenoid)
REMOVAL AND INSTALLATION OF FUEL LID OPENER SOLENOID

REMOVE AND INSTALL FUEL LID SOLENOID

(a) Disconnect the connector from the solenoid.
(b) Open the fuel lid and remove the solenoid lock nut, then remove the solenoid.
(c) Install the solenoid in place with the lock nut.
(d) Connect the connector to the solenoid.

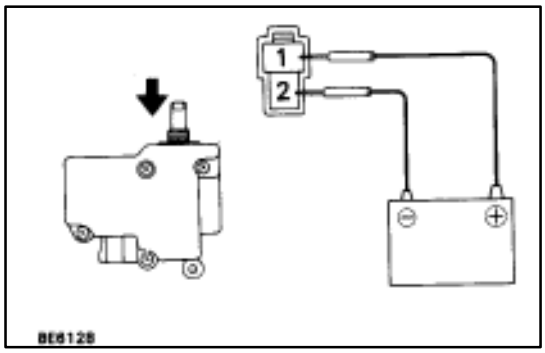

INSPECTION OF FUEL LID OPENER SOLENOID

INSPECT SOLENOID OPERATION

(a) Apply battery voltage to the terminals.
(b) Check that the solenoid operates in the open direction.

If operation is not as specified, replace the solenoid.

WhereEverybodyKnowsYourName

Troubleshooting

You will find the cause of trouble more easily by properly using the table shown below. In this table, the numbers indicate the order or priority of the causes of trouble. Check each part in the order shown. If necessary, replace the part.

See page / Part Name / Trouble	BE – 4, 20	BE – 192	BE – 192	
	DOOR Fuse	Fuel Lid Opener Switch	Fuel Lid Opener Solenoid	Wire Harness
Fuel lid opener system does not operate	1	2	3	4

Mirror Switch

WhereEverybodyKnowsYourName

CLOCK

Troubleshooting

HINT: Troubleshoot the clock according to the table below.

Clock will not operate	1
Clock loses or gains time	2

1	CLOCK WILL NOT OPERATE

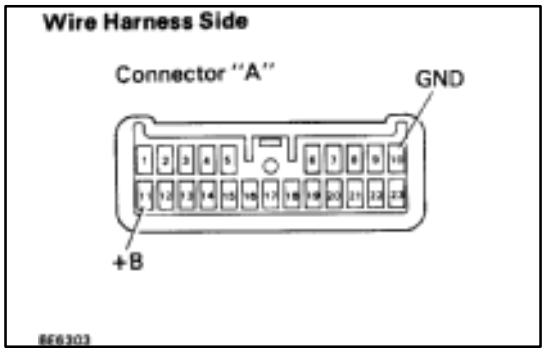

(a) Check that the battery voltage is 10–16 V.
If voltage is not as specified, replace the battery.
(b) Check that the DOME fuse is not blown.
If the fuse is blown, replace the fuse and check for short.
(c) Troubleshoot the clock as follows.
HINT: Inspect the connector on the wire harness side.

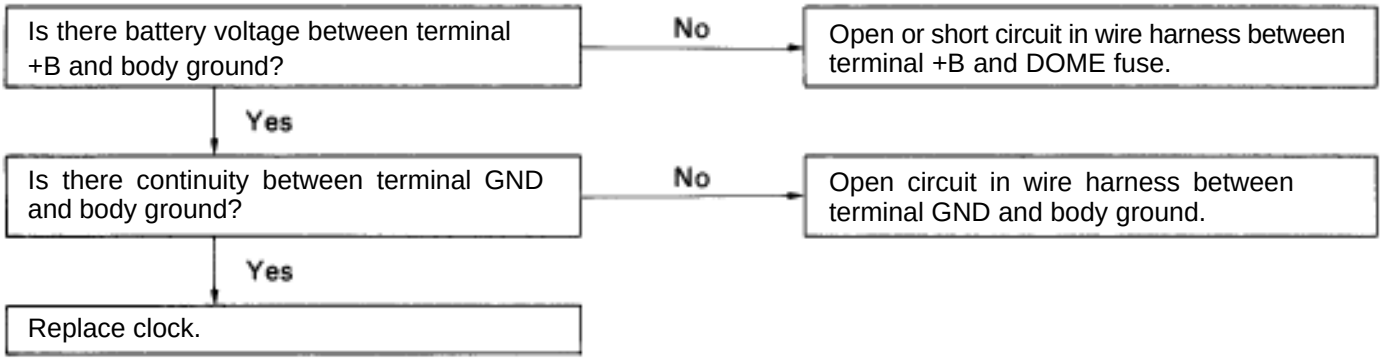

WhereEverybodyKnowsYourName

2	CLOCK LOSES OR GAINS TIME

(a) Check that the battery voltage is 10–16 V.

If voltage is not as specified, replace the battery.

(b) Inspect the error of the clock.

Allowable error (par day): ± 2.0 seconds

If the error exceeds the allowable error, replace the clock.

(c) Check if the clock adjusting button is sticking in position and has failed to return.

If the button has not returned, repair or replace the clock.

(d) troubleshoot the clock as follows.

HINT: Inspect the connector on the wire harness side.

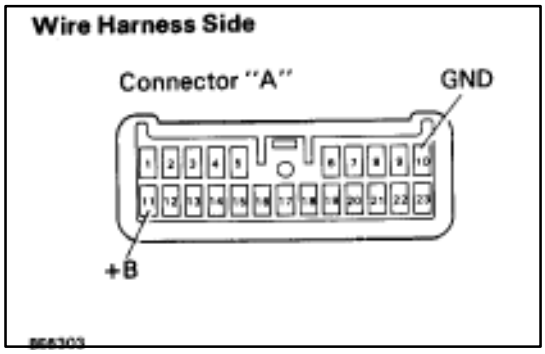

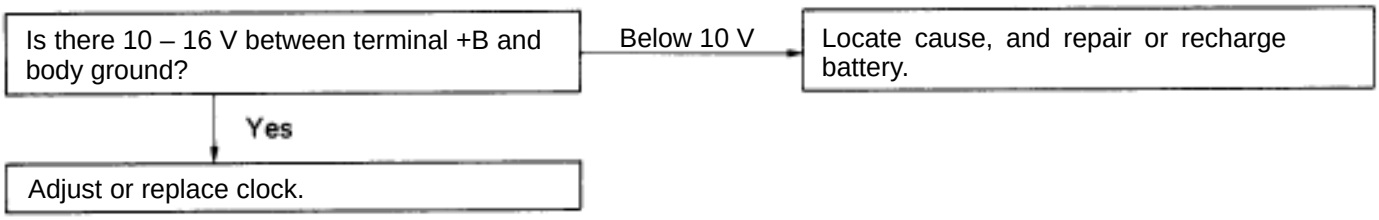

WhereEverybodyKnowsYourName

AUDIO SYSTEM
System Description

RADIO WAVE BAND

The radio wave bands used in radio broadcasting are as follows:

Frequency	30 kHz	300 kHz	3 MHz	30 MHz	300 MHz
Designation	LF	MF	HF	VHF	
Radio wave		AM ↔		FM ↔	
Modulation method	Amplitude modulation			Frequency modulation	

LF: Low Frequency MF: Medium Frequency HF: High Frequency VHF: Very High Frequency

SERVICE AREA

There are great differences in the size of the service area for AM, FM monaural, and FM stereo broadcasting. Thus it may happen that FM broadcasts cannot be received even though AM comes in very clearly.
Not only does FM stereo have the smallest service area, but it also picks up static and other types of interference (”noise”) easily.

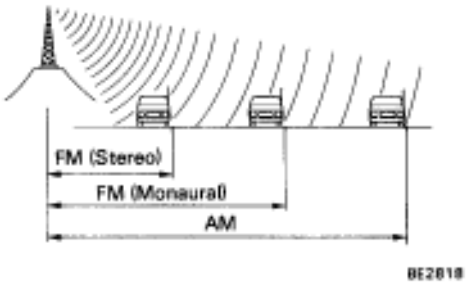

RECEPTION PROBLEMS

Besides the problem of static, there are also the problems called ”fading”, ”multipath” and ”fade out”. These problems are caused not by electrical noise but by the nature of the radio waves themselves.

Fading

Besides electrical interference, AM broadcasts are also susceptible to other types of interference, especially at night. This is because AM radio waves bounce off the ionosphere at night. These radio waves then interfere with the signals from the same transmitter that reach the vehicle’s antenna directly. This type of interference is called ”fading”.

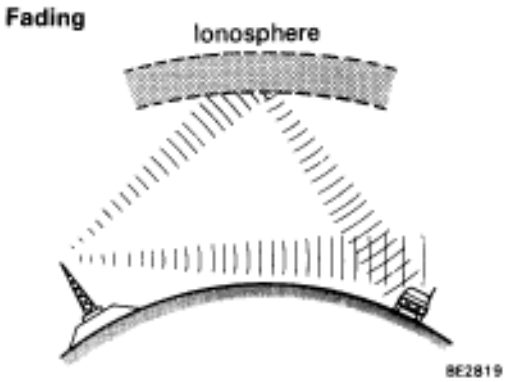

Multipath

One type of interference caused by the bouncing of radio waves off of obstructions is called ”multipath”. Multipath occurs when a signal from the broadcast transmitter antenna bounces off of buildings and mountains and interferes with the signal that is received directly.

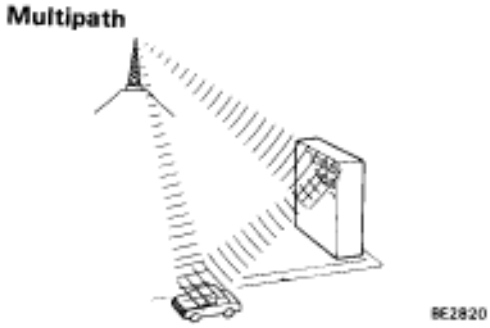

Fade Out

Because FM radio waves are of higher frequencies than AM radio waves, they bounce off of buildings, mountains, and other obstructions. For this reason, FM signals often seem to gradually disappear or fade away as the vehicle goes behind a building or other obstruction. This is called ”fade out”.

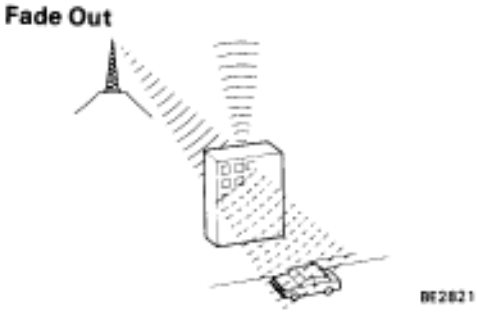

WhereEverybodyKnowsYourName

MAINTENANCE OF TAPE PLAYER

Head Cleaning

Using a moist–type cleaning tape, clean the head surface, pinch rollers and capstans.

COMPACT DISC PLAYER

Compact Disc (hereafter called ”CD”) players use a laser beam pick–up to read the digital signals recorded on the CD and reproduce analog signals of the music, etc. There are 4.7 in. (12 cm) and 3.2 in. (8 cm) CD available, but it is recommended that you do not use 3.2 in. (8 cm) discs in the CD auto changer.

HINT: Never attempt to disassemble or oil any part of the player unit. Do not insert any object other than a disc into the magagine.

NOTICE: CD players use on invisible laser laser beam which could cause hazardous radiation exposure. Be sure to operate the player correctly as instructed.

WhereEverybodyKnowsYourName

Parts Location

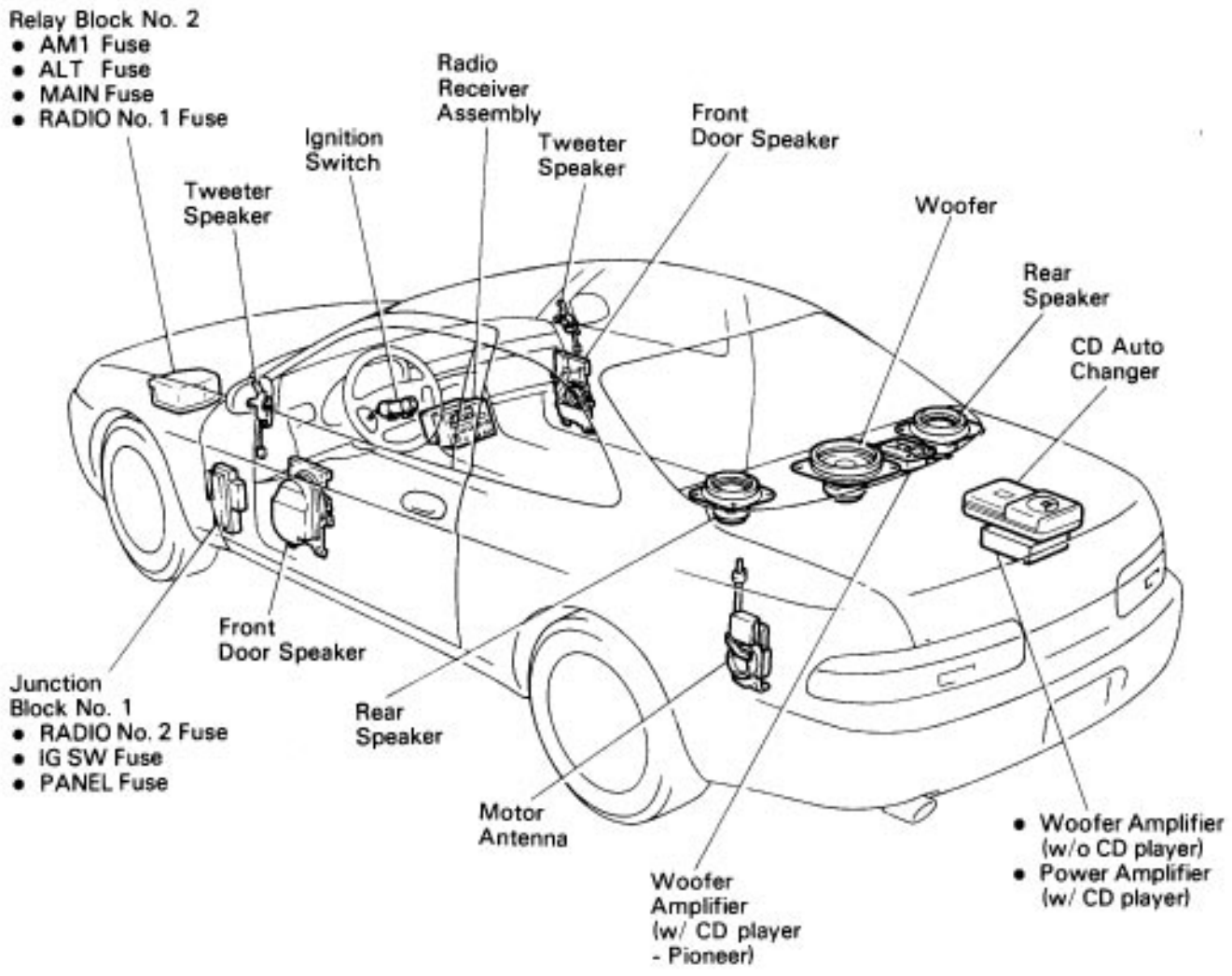

BE6525

WhereEverybodyKnowsYourName

Wiring and Connector Diagrams

Without CD player

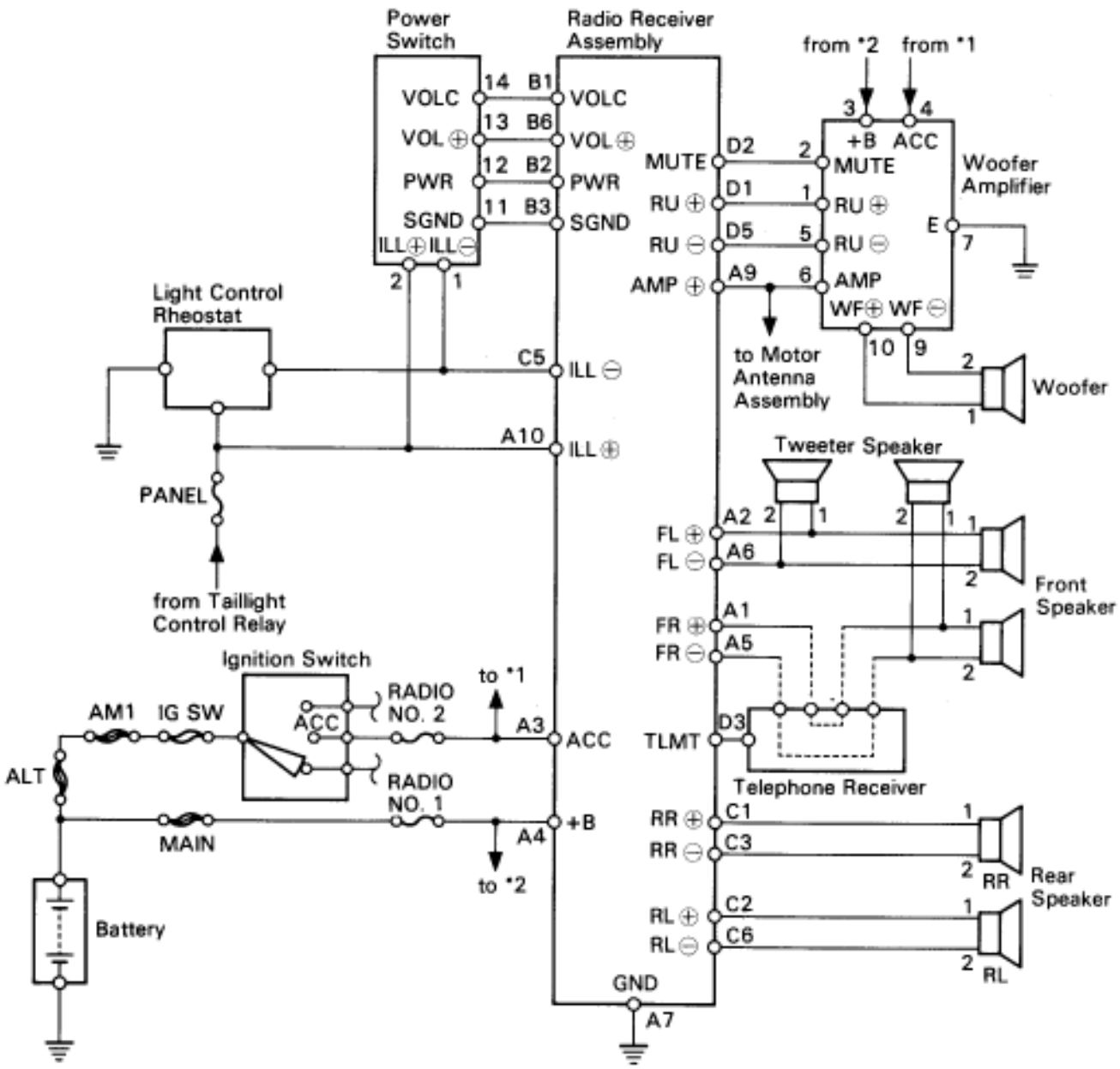

WhereEverybodyKnowsYourName

Radio Receiver Assembly

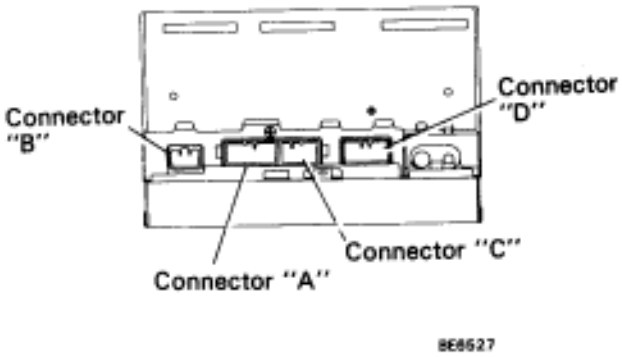

Connector "A"

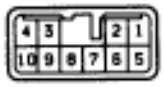

S-10-2-A

Connector "B"

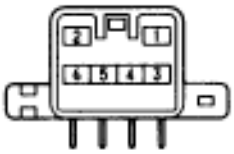

e-6-2-A

Connector "C"

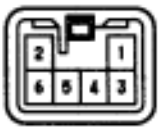

Ie-6-2-A

Connector "D"

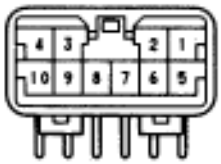

e-10-2-A

Woofer Amp

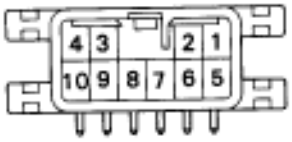

BE6528

Power Switch

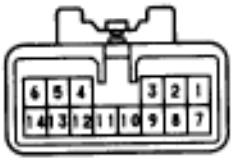

e-14-2-A

Motor Antenna Assembly

e-8-2

Front Speaker

e-2-2-E

Rear Speaker

e-2-2-A

Woofer

e-2-2-E

WhereEverybodyKnowsYourName

Wiring and Connector Diagrams

with CD player – Pioneer

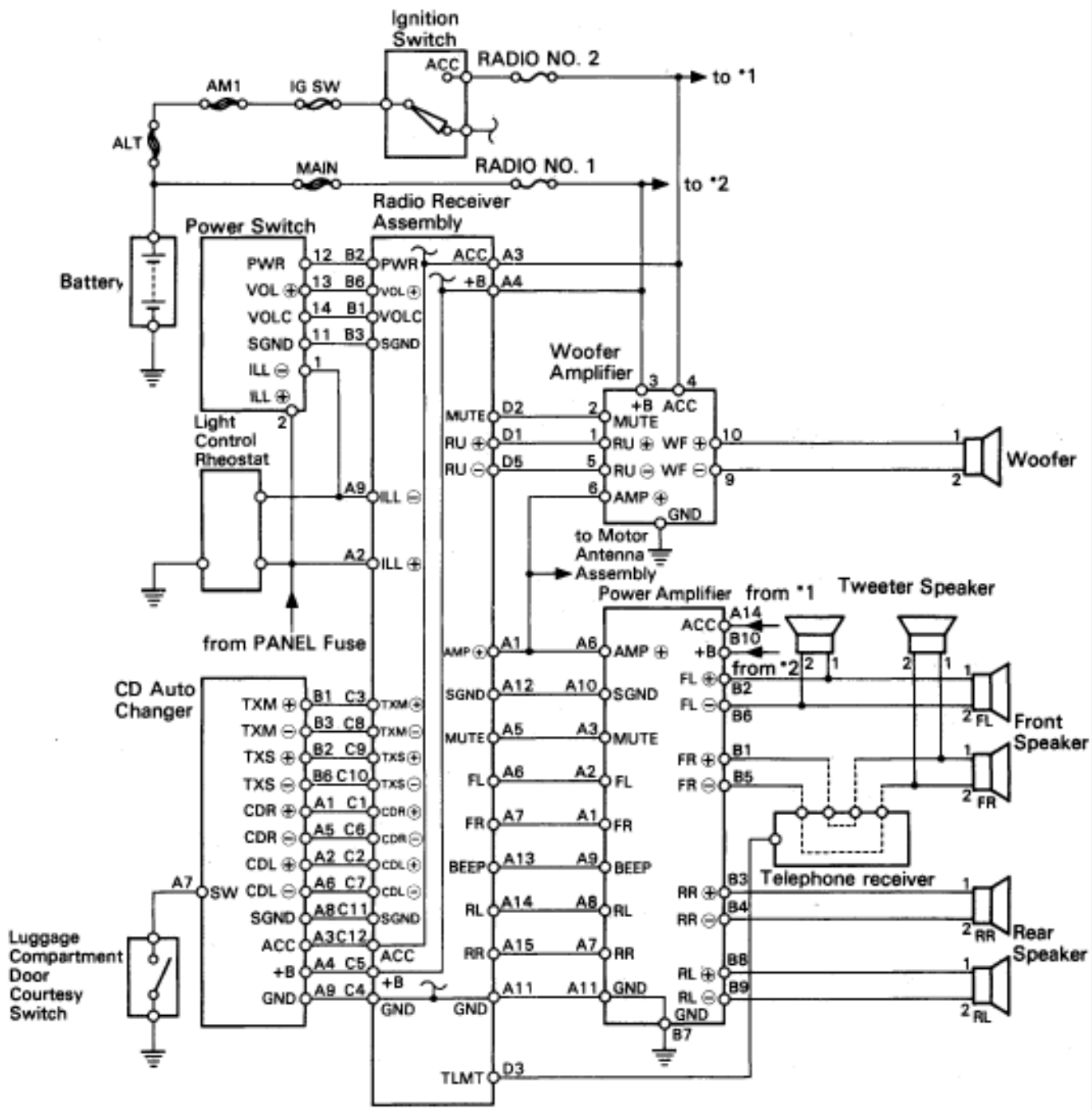

Radio Receiver Assembly

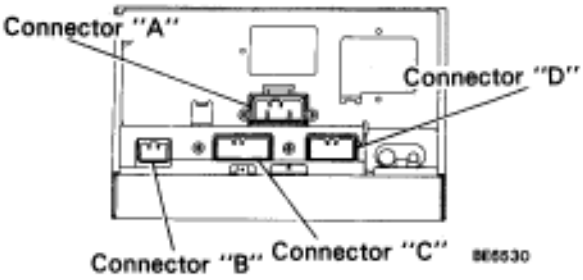

Connector "A"

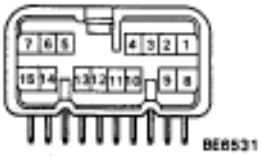

Connector "B"

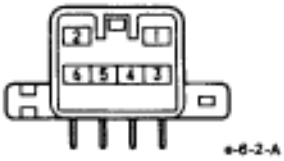

Connector "C"

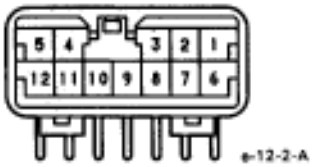

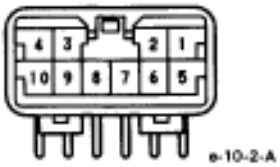

CD Auto Changer

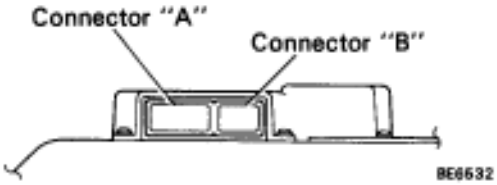

Connector "A"

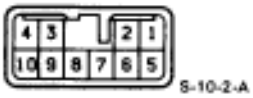

Connector "B"

Power Amplifier

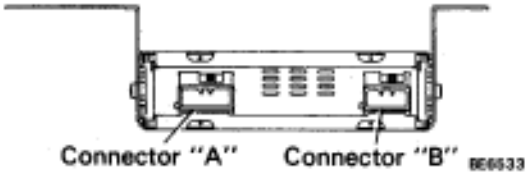

Connector "A"

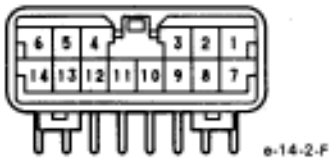

Connector "B"

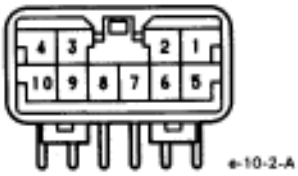

Woofer Amplifier

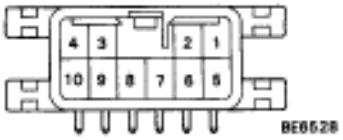

Motor Antenna Assembly

Power Switch

Front Speaker

Rear Speaker

Woofer Speaker

WhereEverybodyKnowsYourName

Wiring and Connector Diagrams

with CD player – Nakamichi

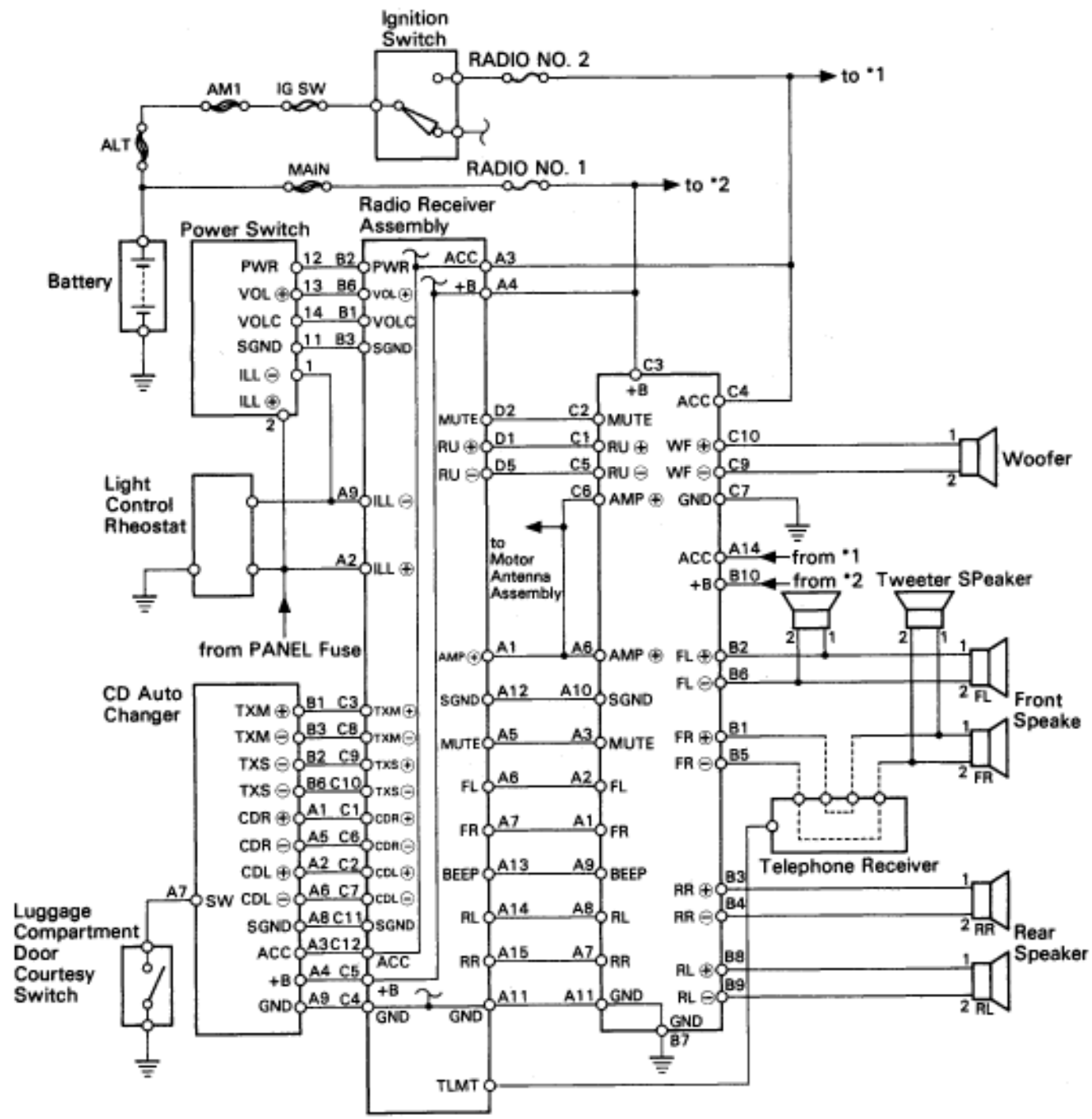

WhereEverybodyKnowsYourName

Radio Receiver Assembly

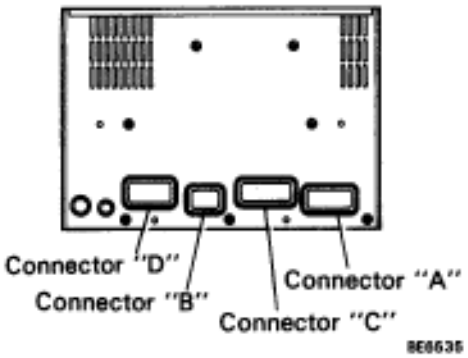

Connector "A"

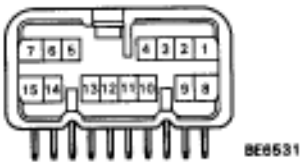

Connector "B"

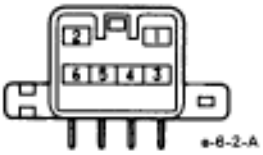

Connector "C"

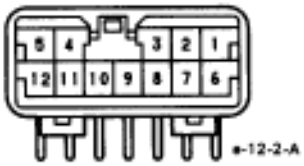

Connector "D"

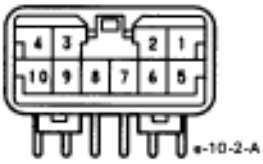

CD Auto Changer

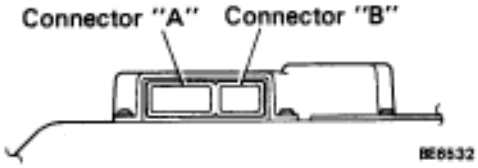

Connector "A"

Connector "B"

Power Amplifier

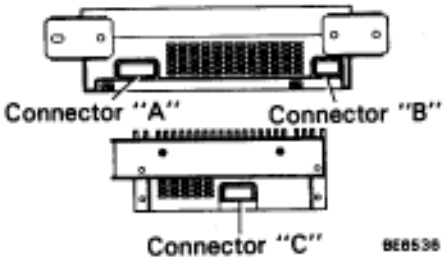

Connector "A"

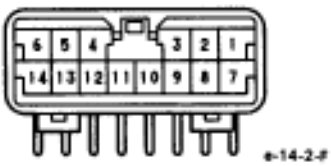

Connector "B"

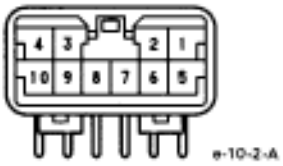

Connector "C"

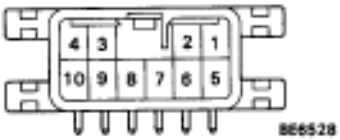

Antenna Motor

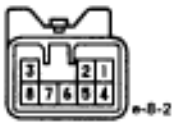

Power Switch

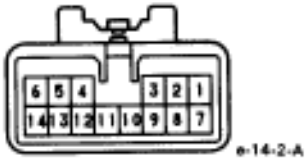

Front Speaker

Rear Speaker

Woofer

WhereEverybodyKnowsYourName

Wiring and Connector Diagrams

Motor Antenna

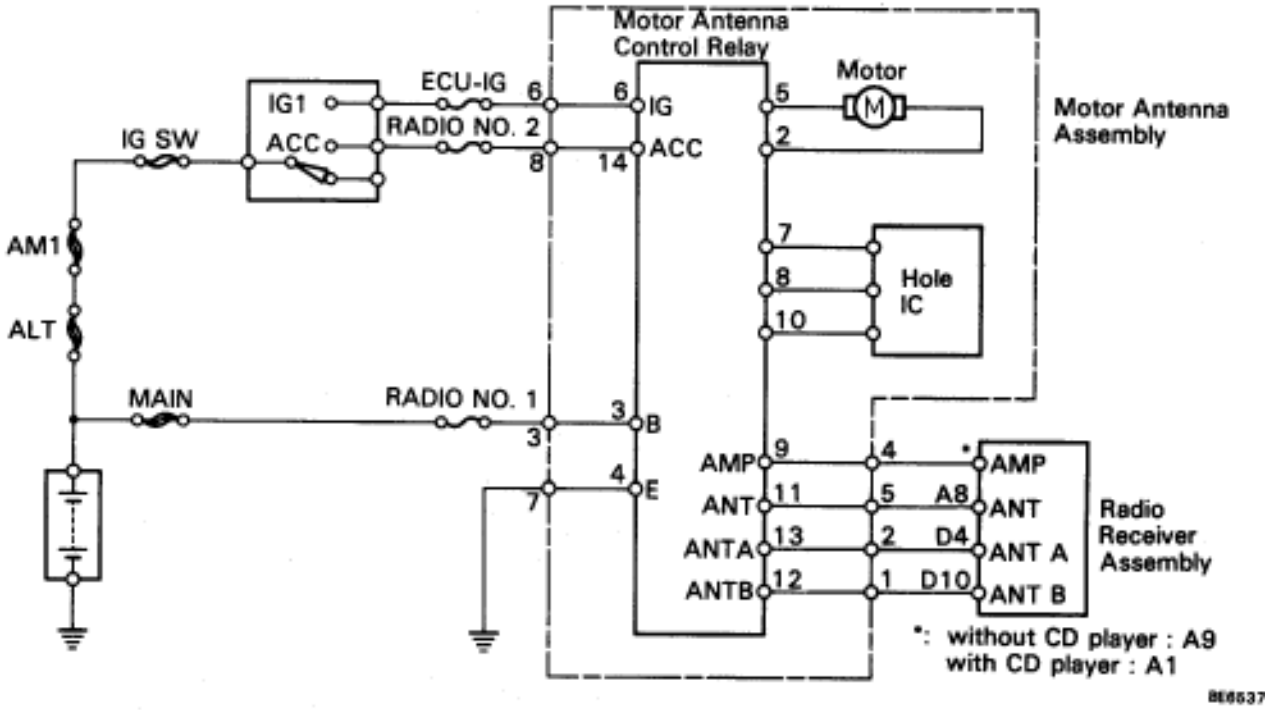

Motor Antenna Assembly

Motor Antenna Control Relay

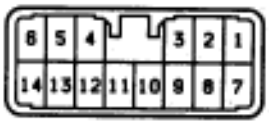

Radio Receiver Assembly
without CD player

Connector "A"

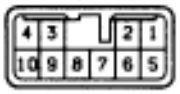

Connector "D"

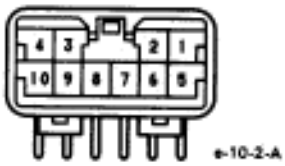

with DC player

Connector "A"

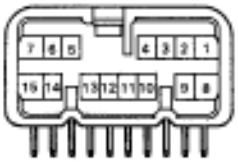

Connector "D"

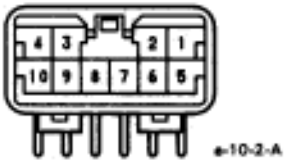

WhereEverybodyKnowsYourName

Parts Inspection
(Power Switch)
REMOVAL AND INSTALLATION OF POWER SWITCH

1. REMOVAL CONTROL PANEL

(a) Remove the console upper panel.
(See BO section)

(b) Remove three screws and the control panel.

2. INSTALL CONTROL PANEL

For installation, follow the removal procedure in reverse.

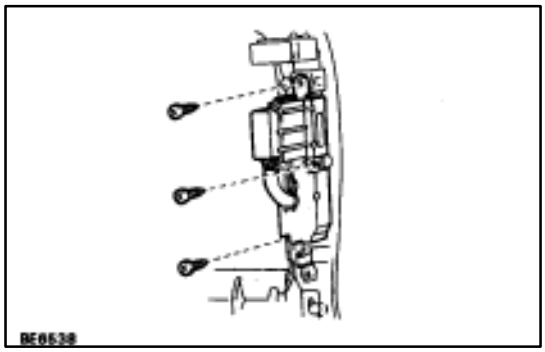

INSPECTION OF POWER SWITCH

INSPECT POWER SWITCH

(Continuity)

Inspect continuity between terminals.

Terminal / Switch position	11	12
OFF (Power switch released)		
ON (Power switch pushed in)	○	○

If continuity is not as specified, replace the control panel.

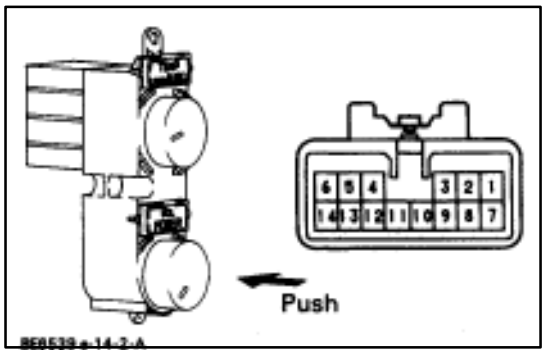

(Resistance)

Inspect resistance between terminals.

Tester connection	Condition	Specified value
11–13	Constant	Approx. 50 k
11–14	Switch knob A ≦ B	Approx. 0 ≦ 50 k

If resistance is not as specified, replace the control panel.

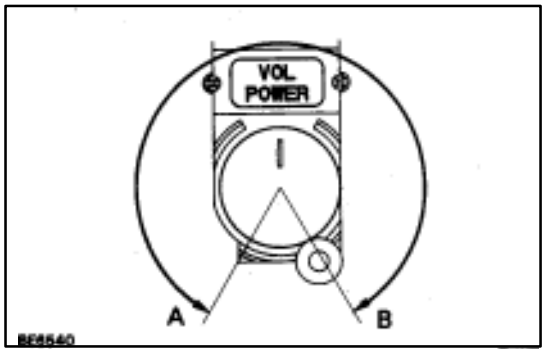

(Illumination)

Connect the positive (+) lead from the battery to terminal 2 and the negative (–) lead to terminal 1, check that the illumination light lights up.

If the illumination light does not light up, replace the control panel.

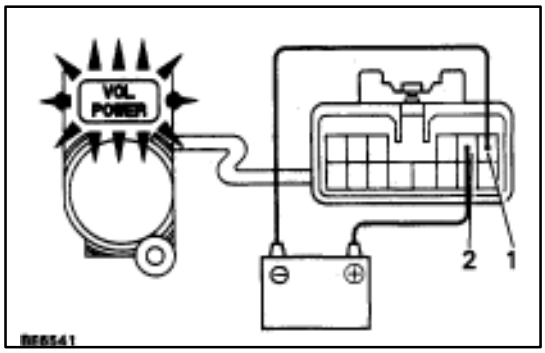

WhereEverybodyKnowsYourName

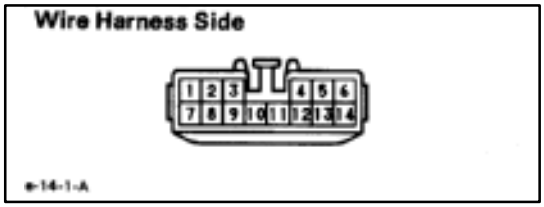

(Circuit)

Disconnect the control panel connector and inspect the connector on wire harness side as shown.

Check for	Tester connection	Condition		Specified value
Voltage	2–Ground	Light control switch position	TAIL or HEAD	Battery voltage
			OFF	No voltage

If circuit is not as specified, refer to BE–199, 201, 203 wiring diagrams and inspect the circuits connected to other parts.

(Radio Receiver Assembly)

REMOVAL AND INSTALLATION OF RADIO RECEIVER ASSEMBLY

(See page BE–112)

INSPECTION OF RADIO RECEIVER ASSEMBLY

INSPECT RADIO RECEIVER ASSEMBLY

(Circuit)

Disconnect the connectors from the radio receiver assembly. And inspect the connector on the wire harness side as shown.

(without CD player)

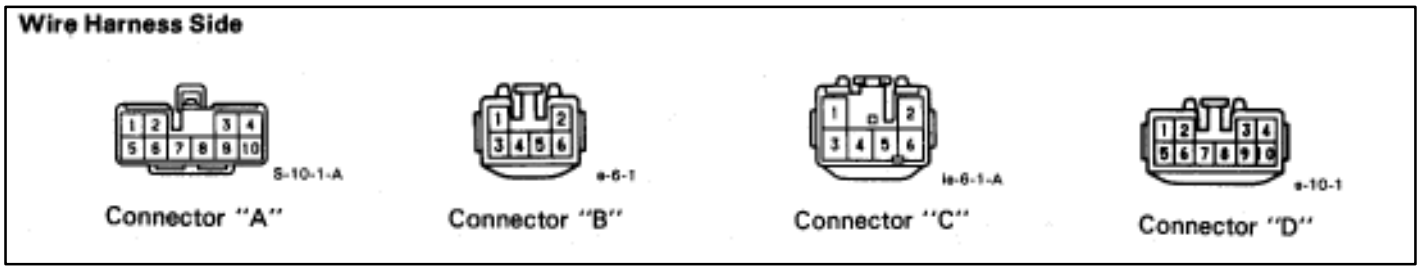

Check for	Tester connection	Condition		Specified value
Continuity	A7–Ground	Constant		Continuity
Voltage	A4–Ground	Constant		Battery voltage
Voltage	A3–Ground	Ignition switch position	ACC or ON	Battery voltage
			LOCK	No voltage
	A10–Ground	Light control switch position	TAIL or HEAD	Battery voltage
			OFF	No voltage

If circuit is not as specified, refer to BE–199 wiring diagrams and inspect the circuits connected to other parts.

WhereEverybodyKnowsYourName

(With CD player)

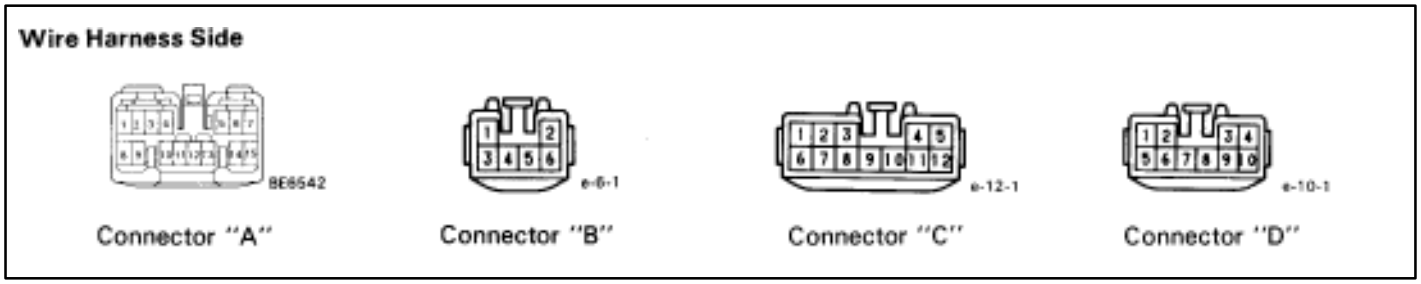

Check for	Tester connection	Condition		Specified value
Voltage	A4–Ground	Constant		Battery voltage
	A3–Ground	Ignition switch position	ACC or ON	Battery voltage
			LOCK	No voltage
	A2–Ground	Light control switch position	TAIL or HEAD	Battery voltage
			OFF	No voltage

If circuit is not as specified, refer to BE–201, 203 wiring diagrams and inspect the circuits connected to other parts.
HINT: Check the wire harness between radio receiver assembly and the CD auto changer, between radio receiver assembly and power amplifier, in accordance with the wiring diagrams in BE–201, 203.

(Front Door Speaker)

REMOVAL AND INSTALLATION OF FRONT DOOR SPEAKER

(See page BO–35)

(Tweeter)

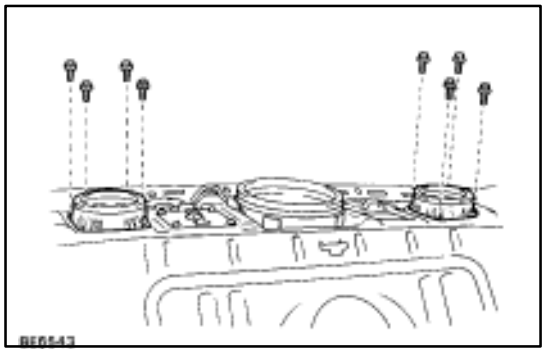

REMOVAL AND INSTALLATION OF TWEETER

(See page BO–34)

(Rear Speaker)

REMOVAL AND INSTALLATION OF REAR SPEAKER

1. **REMOVE REAR SPEAKER**
   (a) Remove the package tray trim.
   HINT: (See page BO–124)
   (b) Remove eight bolts.
   (c) Disconnect connectors and remove the rear speaker.
2. **INSTALL REAR SPEAKER**
   For installation, follow the removal procedure in reverse.

WhereEverybodyKnowsYourName

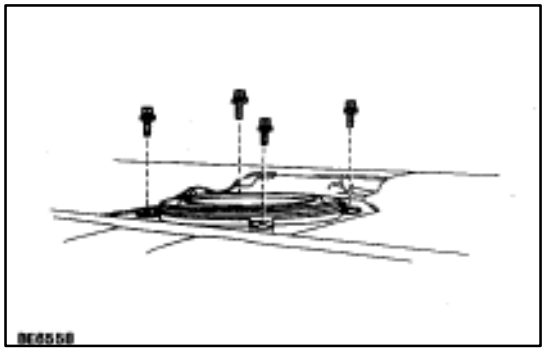

(Woofer)
REMOVAL AND INSTALLATION OF WOOFER

1. REMOVE WOOFER

(a) Remove woofer cover together with high mount stop light.

(b) Remove four bolts.

(c) Disconnect connector and remove woofer.

2. INSTALL WOOFER

For installation follow the removal procedure in reverse.

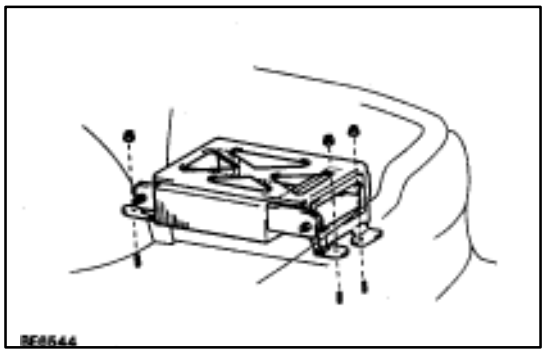

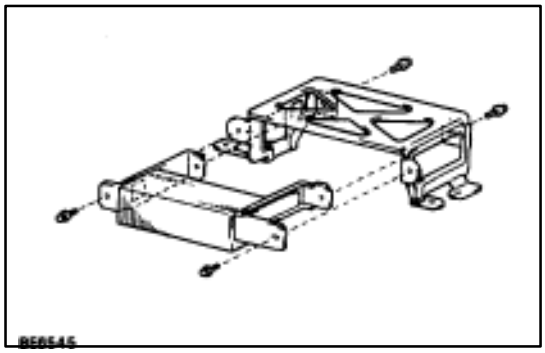

(Woofer Amplifier)
REMOVAL AND INSTALLATION OF WOOFER AMPLIFIER

(without CD player)

1. REMOVE WOOFER AMPLIFIER

(a) Remove the RH side cover.

(b) Disconnect the connector and remove three nuts and the woofer amplifier with the bracket.

(c) Remove four bolts and the woofer amplifier.

2. INSTALL WOOFER AMPLIFIER

For installation, follow the removal procedure in reverse.

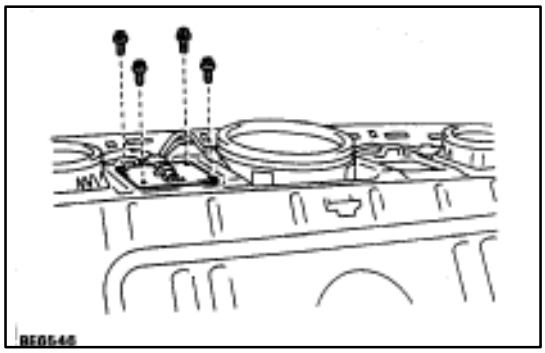

(with CD player–Pioneer)

1. REMOVE WOOFER AMPLIFIER

(a) Remove the package tray trim.

HINT: (See page BO–124)

(b) Remove four bolts.

WhereEverybodyKnowsYourName

(c) Disconnect the connector and remove the woofer amplifier.

2. INSTALL WOOFER AMPLIFIER

For installation, follow the removal procedure in reverse.

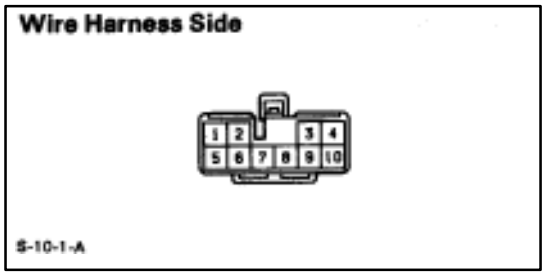

INSPECTION OF WOOFER AMPLIFIER

INSPECT WOOFER AMPLIFIER

(Circuit)

Disconnect the connector from woofer amplifier and inspect the connector on the wire harness side as shown.

Check for	Tester connection	Condition		Specified value
Continuity	7–Ground	Constant		Continuity
Voltage	3–Ground	Constant		Battery voltage
	4–Ground	Ignition switch position	ACC or ON	Battery voltage
	6–Ground		LOCK	No voltage

If circuit is not as specified, refer to BE–201 wiring diagrams and inspect the circuits connected to other parts.

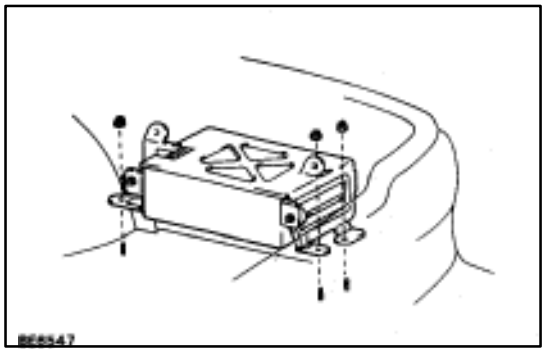

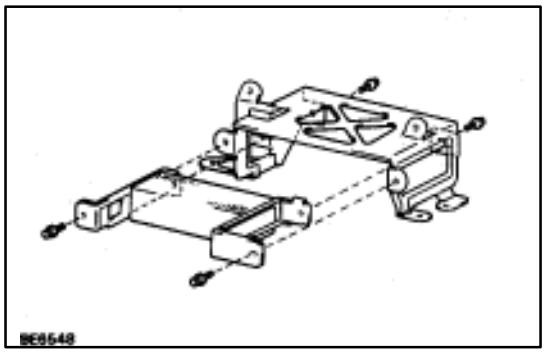

(Power Amplifier)
REMOVAL AND INSTALLATION OF POWER AMPLIFIER

(Pioneer)

1. REMOVE POWER AMPLIFIER

(a) Remove the RH side cover.

(b) Remove the CD auto changer (See page BE–212).

(c) Disconnect two connectors and remove three nuts and the power amplifier with the bracket.

(d) Remove four bolts and the power amplifier.

2. INSTALL POWER AMPLIFIER

For installation, follow the removal procedure in reverse.

WhereEverybodyKnowsYourName

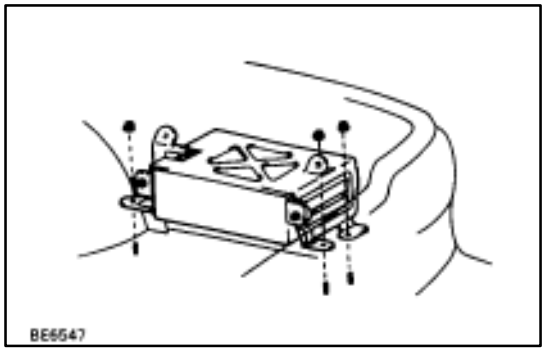

(Nakamichi)

1. REMOVE POWER AMPLIFIER

(a) Remove the RH side cover.

(b) Remove the CD auto changer (See page BE–212).

(c) Disconnect three connectors and remove three nuts and the power amplifier with the bracket.

(d) Remove four bolts and the power amplifier.

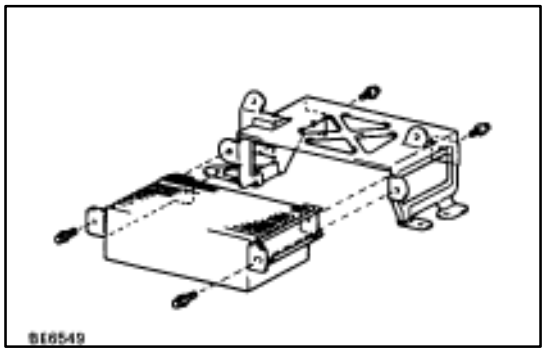

2. INSTALL WOOFER AMPLIFIER

For installation follow the removal procedure in reverse.

POWER AMPLIFIER INSPECTION

INSPECT POWER AMPLIFIER

(Circuit)

Disconnect the connector from power amplifier and inspect the connector on the wire harness side as shown.

(Produced by PIONEER)

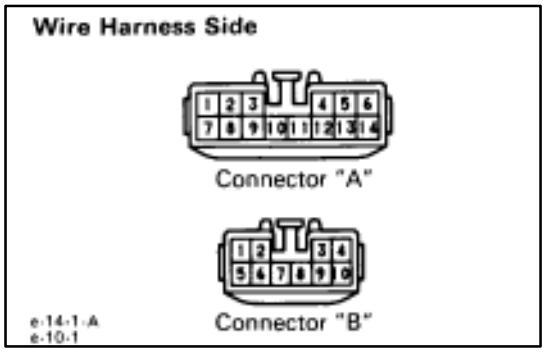

Check for	Tester connection	Condition		Specified value
Continuity	B7–Ground	Constant		Continuity
Voltage	B10–Ground	Constant		Battery positive voltage
	A14–Ground A6–Ground	Ignition switch position	ACC or ON	Battery positive voltage
			LOCK	No voltage

If circuit is not as specified, refer to BE–201 wiring diagrams and inspect the circuits connected to other parts.

WhereEverybodyKnowsYourName

(Produced by NAKAMICHI)

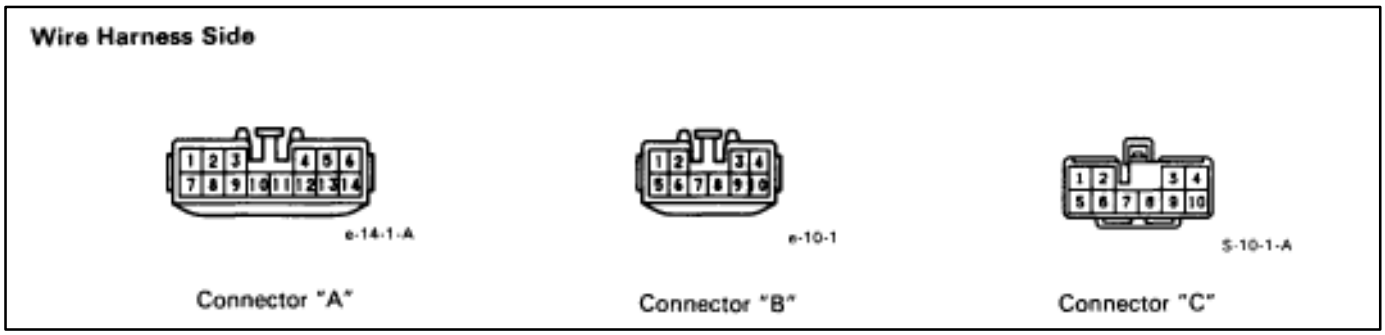

Check for	Tester connection	Condition		Specified value
Continuity	B7–Ground C7–Ground	Constant		Continuity
Voltage	B10–Ground C3–Ground	Constant		Battery positive voltage
	A6–Ground A14–Ground C4–Ground C6–Ground	Ignition switch position	ACC or ON	Battery positive voltage
			LOCK	No voltage

If circuit is not as specified, refer to BE–203 wiring diagrams and inspect the circuits connected to other parts.

CD AUTO CHANGER

CD AUTO CHANGER REMOVAL AND INSTALLATION

1. REMOVE CD AUTO CHANGER

(a) Remove RH side cover.
(b) Disconnect two connectors.
(c) Remove three bolts, one nut and the CD auto changer.

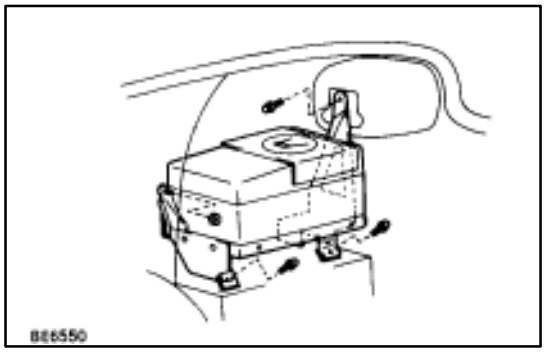

CD AUTO CHANGER INSPECTION

INSPECT CD AUTO CHANGER

(Circuit)

Disconnect connectors from CD auto changer and inspect the connector on the wire harness side as shown.

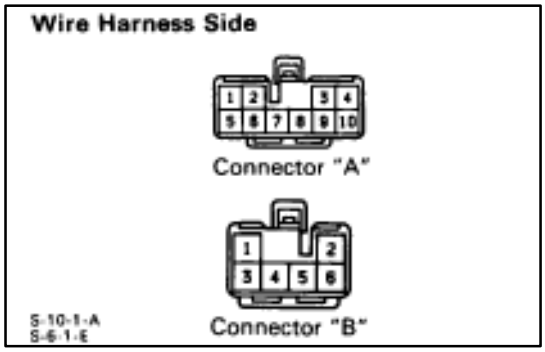

WhereEverybodyKnowsYourName

Check for	Tester connection	Condition		Specified value
Voltage	A4–Ground	Constant		Battery positive voltage
	A3–Ground	Ignition switch position	ACC or ON	Battery positive voltage
			LOCK	No voltage
Continuity	A7–Ground	Luggage compartment door courtesy switch	Push (OFF)	No continuity
			Free (ON)	Continuity

If circuit is not as specified, refer to BE–201, 203 wiring diagrams and inspect the circuits connected to other parts.

HINT:

- Check the wire harness between the radio receiver assembly and the CD auto changer in accordance with the wiring diagrams in BE–201, 203.
- Since the signals to and from the CDL+, CDL, CDR+, CDR, TXM+, TXM, TXS+ and TXS terminals are serial signals, they cannot ordinarily be measured with a tester.

LUGGAGE COMPARTMENT DOOR COURTESY SWITCH

(See page BE–82)

WhereEverybodyKnowsYourName

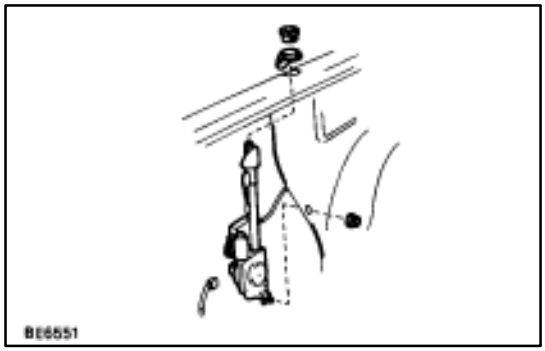

MOTOR ANTENNA

MOTOR ANTENNA REMOVAL AND INSTALLATION

1. REMOVE MOTOR ANTENNA

(a) Remove the antenna nut.

(b) Remove the LH side cover.

(c) Disconnect the motor antenna connector and the antenna cord.

(d) Remove the nut and the motor antenna assembly.

2. INSTALL MOTOR ANTENNA

(a) Install the antenna nut.

(b) Connect the motor antenna connector and the antenna cord.

(c) Install the nut.

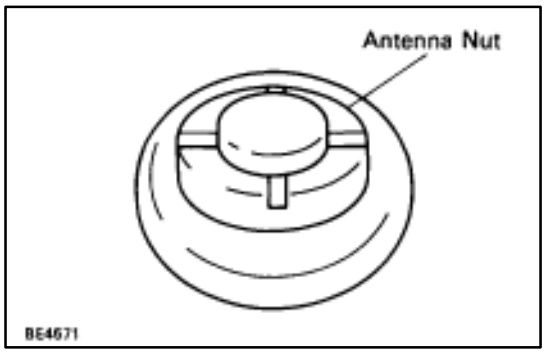

ANTENNA ROD REMOVAL AND INSTALLATION

1. REMOVE ANTENNA ROD

HINT: Perform this operation with the battery negative (–) cable connected to the battery terminal.

(a) Turn the ignition switch to ”LOCK” position.

(b) Remove the antenna nut.

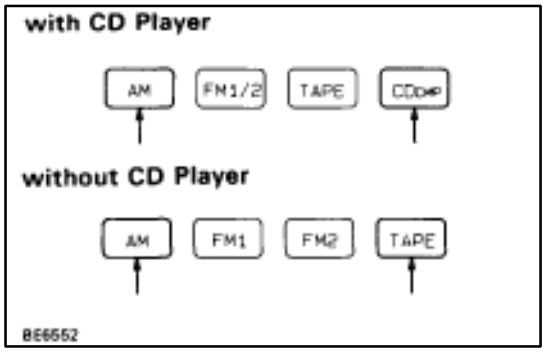

(c–1) with CD player

Press the ”AM” and ”CD” buttons on the radio receiver, and simultaneously turn the ignition switch to ”ACC” position.

(c–2) without CD player

Press the ”AM” and ”TAPE” buttons on the radio receiver, and simultaneously turn the ignition switch to ”ACC” position.

HINT:

- The rod will extend fully and be released from the motor antenna.
- After removing the antenna rod, leave the ignition switch at ”ACC”.

NOTICE: To prevent body damage when the antenna rod is released, hold the rod while it comes out.

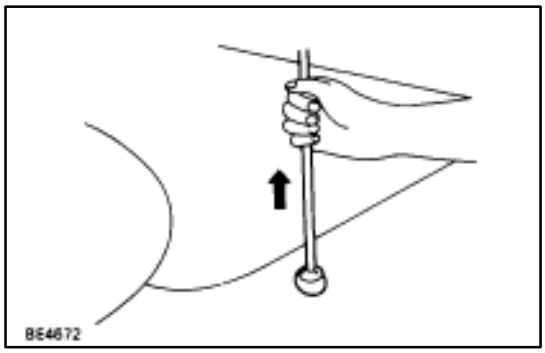

WhereEverybodyKnowsYourName

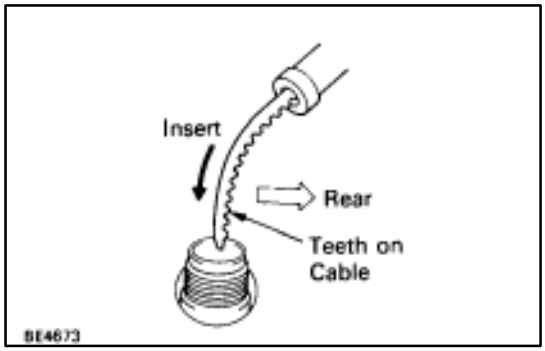

2. INSTALL ANTENNA ROD

(a) Insert the cable of the rod until it reaches the bottom.
HINT:
- When inserting the cable, the teeth on the cable must face toward the rear of the vehicle.
- Insert the cable approx. 400 mm (15.75 in.).

(b) Wind the cable to retract the rod by turning the ignition switch to ”LOCK” position.
HINT:
- If the ignition switch is already in ”LOCK” position, perform step 1.
- In case the cable is not wound, twist it as shown in the illustration.
- Even if the rod has not retracted fully, install the antenna nut and inspect the antenna rod operation. It will finally retract fully.

(c) Inspect the antenna rod operation by pushing the radio wave band select buttons.

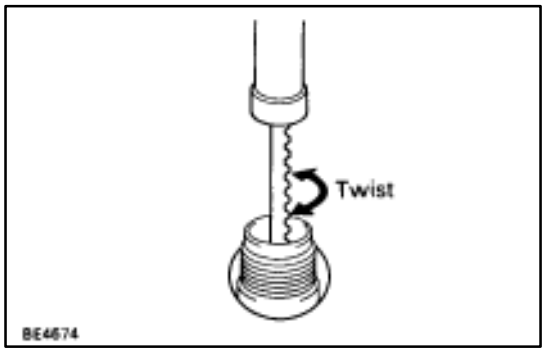

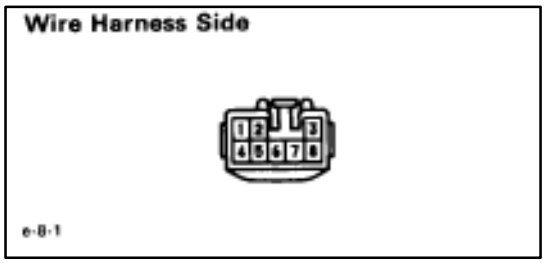

MOTOR ANTENNA INSPECTION

1. INSPECT MOTOR ANTENNA (Circuit)

Disconnect the motor antenna connector from the body wire harness and inspect the connector on body wire harness side as shown.

Check for	Tester connection	Condition		Specified value
Continuity	7–Ground	Constant		Continuity
Voltage	3–Ground	Constant		Battery positive voltage
	8–Ground	Ignition switch position	ACC or ON	Battery positive voltage
			LOCK	No voltage
	6–Ground	Ignition switch position	ON	Battery positive voltage
			ACC or LOCK	No voltage
	2–Ground	Ignition switch ACC or ON	Radio or Tape or CD switch ON	Battery positive voltage
			Radio or Tape or CD switch OFF	No voltage
	5–Ground	Ignition switch ACC or ON	Radio switch ON	Battery positive voltage
			Radio switch OFF	No voltage
	4–Ground	Ignition switch ACC or ON and radio switch ON	AM or FM (87.9 – 96.0 MHz)	Battery positive voltage
			Others	No voltage
	1–Ground	Ignition switch ACC or ON and radio switch ON	AM	Battery positive voltage
			Others	No voltage

If circuit is not as specified, inspect radio or wire harness. If circuit is as specified, replace motor antenna.

WhereEverybodyKnowsYourName

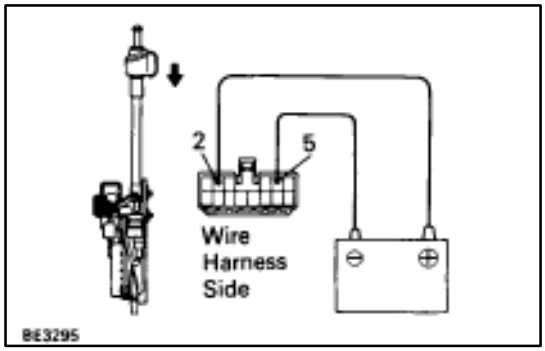

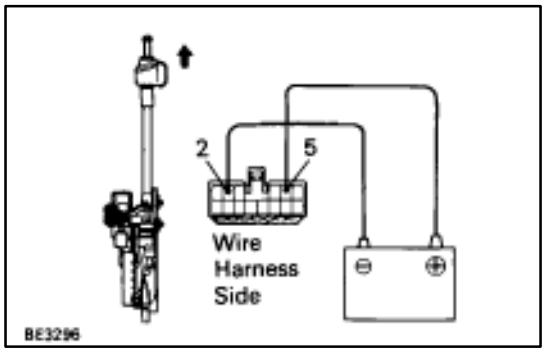

2. INSPECT ANTENNA MOTOR

(a) Install antenna nut.

(b) Disconnect connector from the motor antenna control relay.

(c) Connect the positive (+) lead from the battery to terminal 2 and the negative (–) lead to terminal 5 on the wire harness side connector.

(d) Check that the motor turns (moves upward).
NOTICE: These tests must be performed quickly (within 4–8 seconds) to prevent the coil from burning out.

(e) Then, reverse the polarity, check that the motor turns the opposite way (moves downward).
NOTICE: These tests must be performed quickly (within 4–8 seconds) to prevent the coil from burning out.
HINT: When the motor is normal, lower the antenna to the lower most position.
If operation is not as specified, replace the antenna motor assembly.

GLASS PRINTED ANTENNA

GLASS PRINTED ANTENNA INSPECTION

1. INSPECT GLASS PRINTED ANTENNA
(Use same procedure as for ”INSPECT DEFOGGER WIRES” on page BE–173.)

2. REPAIR GLASS PRINTED ANTENNA
(Use same procedure as for ”REPAIR DEFOGGER WIRES” on page BE–174.)

WhereEverybodyKnowsYourName

ANTENNA CORD

ANTENNA CORD REMOVAL AND INSTALLATION

1. REMOVE ANTENNA CORD

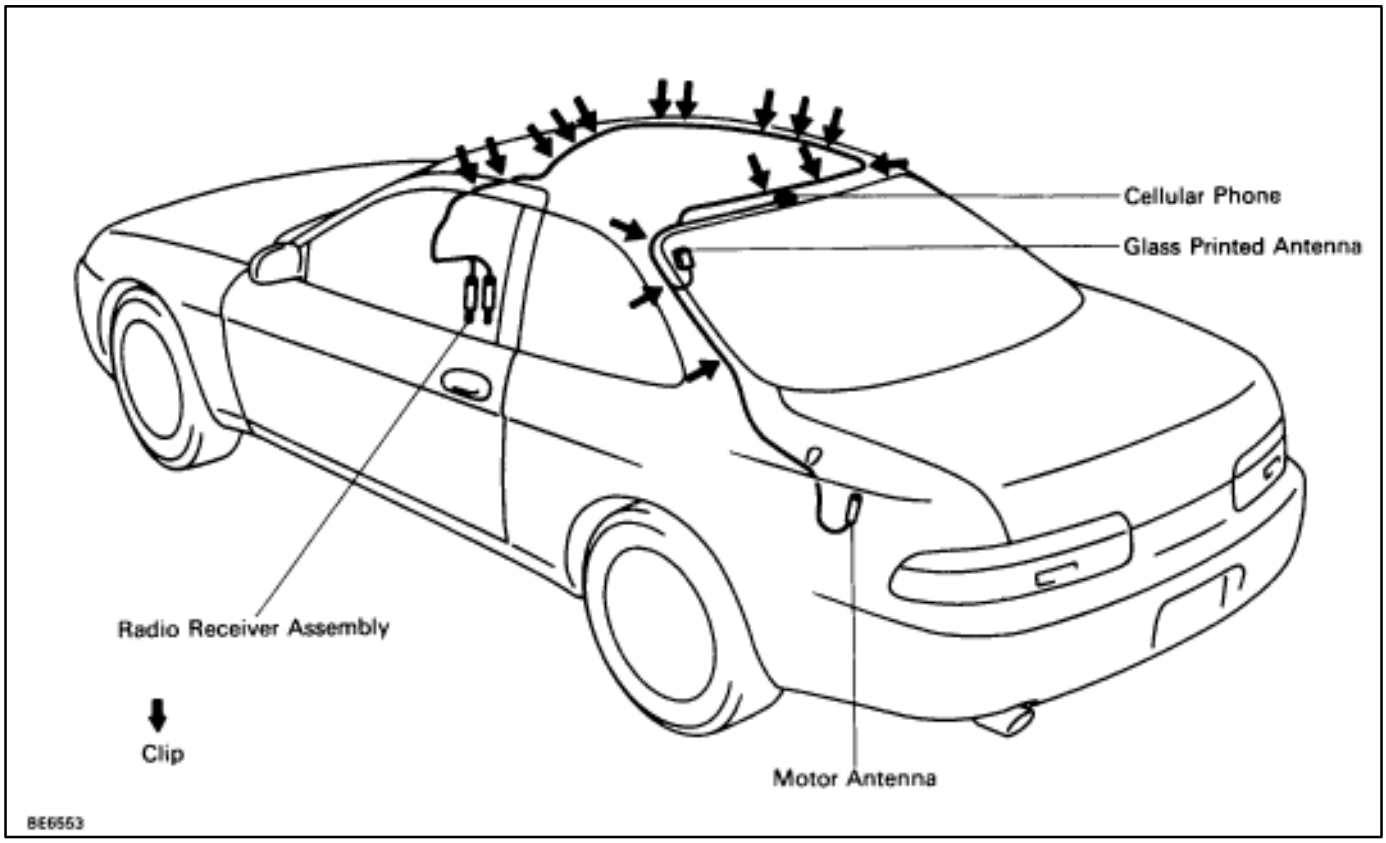

(a) Remove the following parts:
- Instrument panel assembly
- Right front pillar garnish
- Roof headlining
- Roof side inner garnish
- Right center pillar garnish
- Right rear pillar garnish
- Package tray trim
- Room partition trim
- Luggage compartment RH cover
- Luggage compartment trim front cover

HINT: (See BO–section.)

(b) Remove antenna cord from motor antenna and glass printed antenna.

(c) Disconnect the connectors shown in the figure.

(d) Remove the clips and antenna cord assembly.

2. INSTALL ANTENNA CORD

For installation follow the removal procedure in reverse.

WhereEverybodyKnowsYourName

TROUBLESHOOTING

NOTICE: When replacing the internal mechanism (ECU part) of the audio system, be careful that no part of your body or clothing comes in contact with the terminals of the leads from the IC, etc. of the replacement part (spare part).

HINT:

- This inspection procedure is simple troubleshooting which should be carried out on the vehicle during system operation and is based on the assumption that the cause of trouble lies with the system components (excluding the wires and connectors, etc.).
  Always inspect the trouble taking the following items into consideration.
  - Open or short circuit of the wire harness
  - Connector or terminal connection fault
- The cassette tape or compact disc itself may be causing the trouble, so when troubleshooting the tape player or CD player, always use a different cassette tape or compact disc first of all to check operation of the tape player or CD player.
- For some of problems in the following problem chart, the AUDIO SYSTEM CHECKER can be used to inspect malfunctions of the Radio or Tape Player, and the CD PLAYER CHECKER can be used to inspect the CD player.
  The portions indicated by on the flow charts on the following pages can be inspected using a CHECKER.
  For instructions on how to connect the checker to the vehicle and how to use the checker, please refer to the instruction Manual for AUDIO SYSTEM CHECKER or CD PLAYER CHECKER.

WhereEverybodyKnowsYourName

	Problem	No.
Radio	Radio not operating when power switch turned to ”ON”	1
	Display indicates when power switch turned to ”ON”, but no sound (including ”noise”) is produced (except woofer).	2
	Noise present, but AM–FM not operating	3
	Any speaker does not work (except woofer).	4
	Volume faint (except woofer).	5
	Woofer does not work.	6
	Woofer volume faint.	7
	Reception poor.	8
	Preset memory disappears.	9
	Volume remains at maximum level.	10
Tape player	Cassette tape cannot be inserted.	11
	Cassette tape will not eject.	12
	Display indicates, but no sound is produced (except woofer).	13
	Any speaker does not work (except woofer).	14
	Volume faint (except woofer).	15
	Woofer does not work.	16
	Woofer volume faint.	17
	Sound quality poor.	18
	Volume remains at maximum level.	19
CD player	Magazine cannot be inserted into auto changer.	20
	Magazine is inserted, but display does not indicate ”CD”.	21
	Display indicates, but no sound is produced (except woofer).	22
	Any speaker does not work (except woofer).	23
	Volume faint (except woofer).	24
	RH channel or LH channel speaker volume faint.	25
	Woofer does not work.	26
	Woofer volume faint.	27
	Sound quality poor.	28
	Volume remains at maximum level.	29
Noise	Noise produced by vibration or shock while driving.	30
	Noise produced when engine starts.	31
Antenna	Antenna–related.	32

WhereEverybodyKnowsYourName

1	Radio	RADIO NOT OPERATING WHEN POWER SWITCH TURNED TO ”ON”.

A. Without CD player type

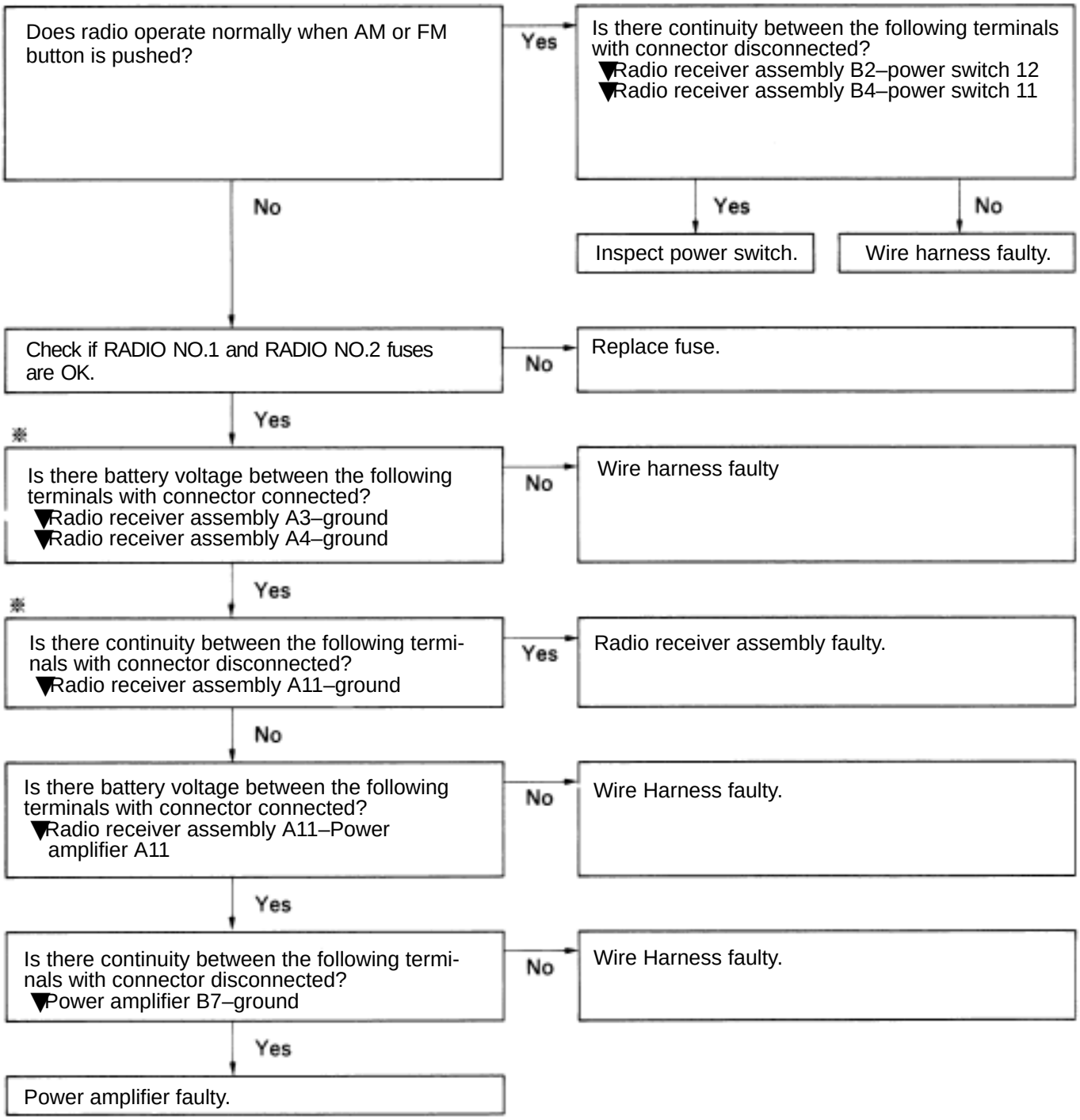

WhereEverybodyKnowsYourName

B. with CD player type

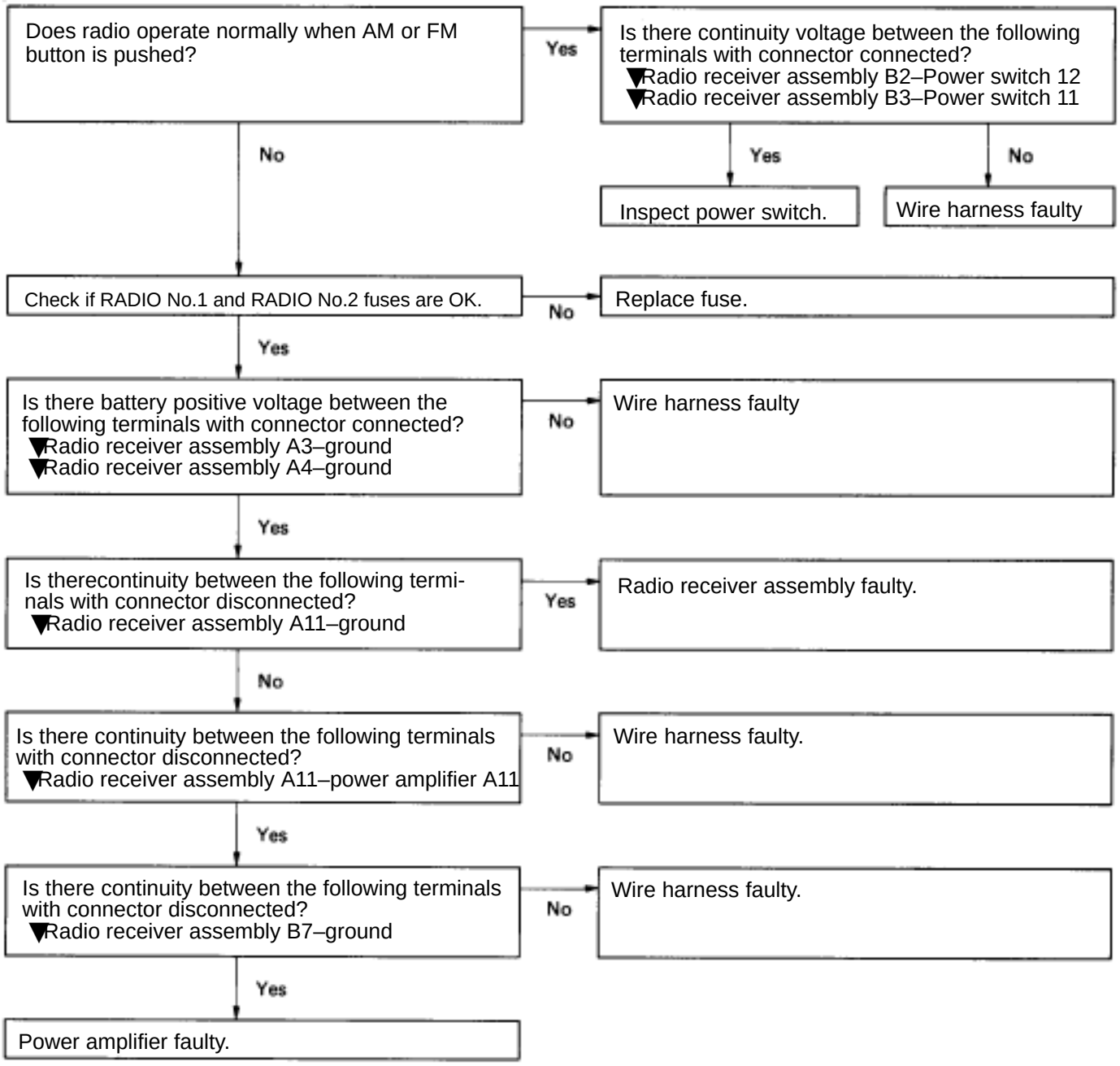

WhereEverybodyKnowsYourName

2	Radio	DISPLAY INDICATES WHEN POWER SWITCH TURNED TO ”ON”, BUT NO SOUND (INCLUDING ”NOISE”) IS PRODUCED (EXCEPT WOOFER)

A. without CD player type

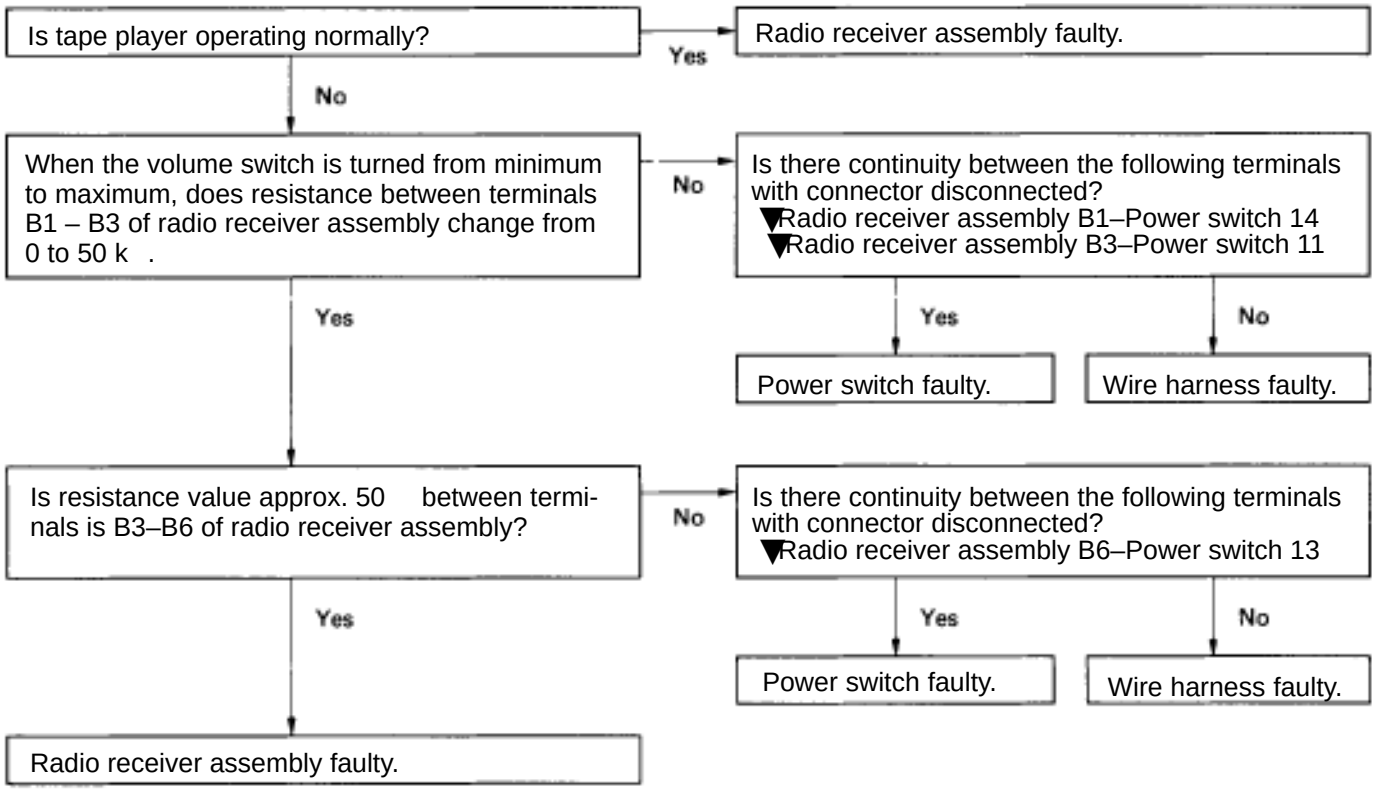

WhereEverybodyKnowsYourName

B. with CD player type

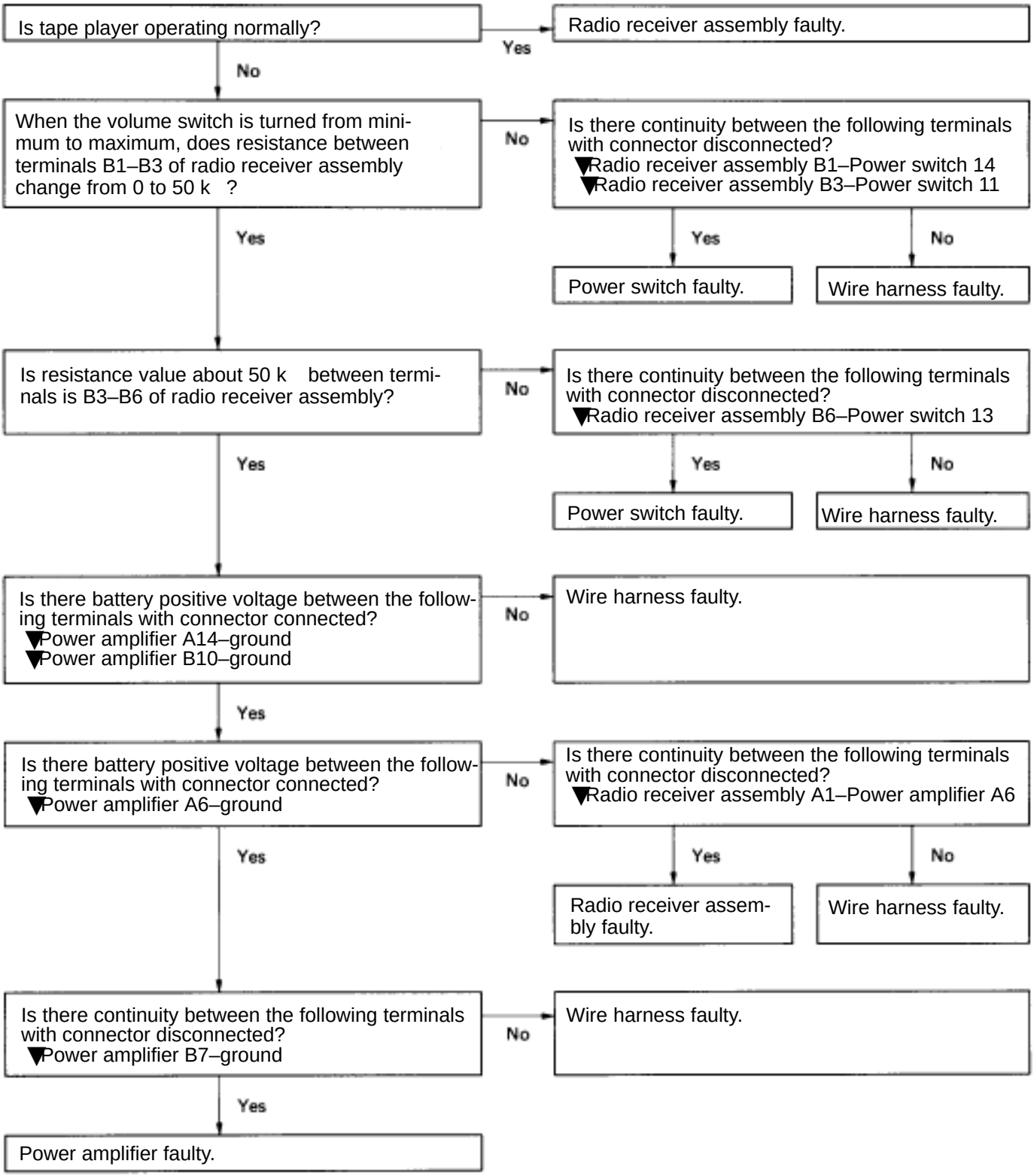

WhereEverybodyKnowsYourName

3	Radio	NOISE PRESENT, BUT AM–FM NOT OPERATING

Go to No. 32 → Radio receiver assembly faulty.

If radio side faulty.

WhereEverybodyKnowsYourName

4	Radio	ANY SPEAKER DOES NOT WORK (EXCEPT WOOFER)

A. without CD player type

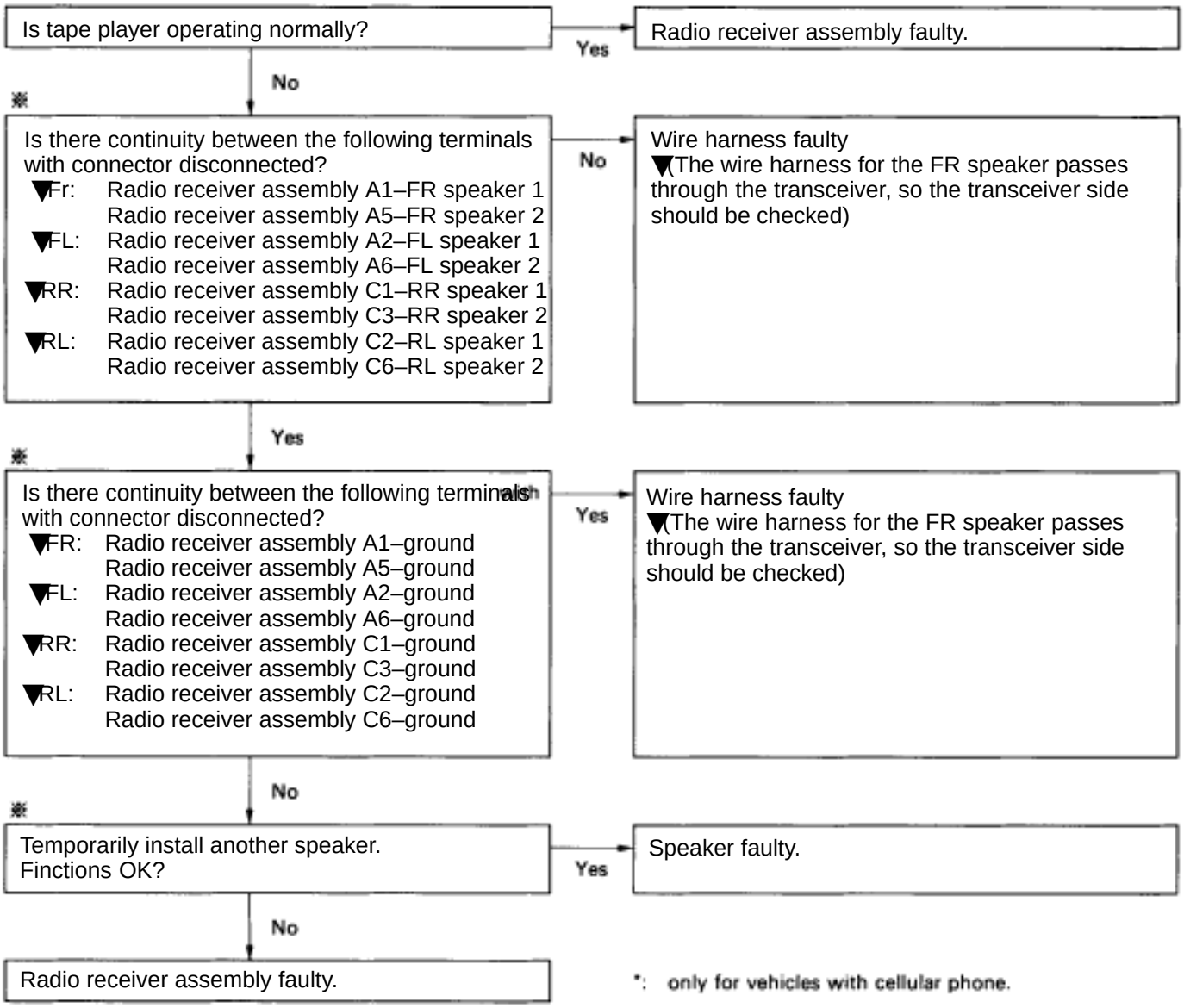

WhereEverybodyKnowsYourName

B. with CD player type

Is tape player operating normally?
- Yes → Radio receiver assembly faulty.
- No ↓

※ Is there continuity between the following terminals with connector disconnected?
- ▼Fr: Radio receiver assembly B1–FR speaker 1
  Radio receiver assembly B5–FR speaker 2
- ▼FL: Radio receiver assembly B2–FL speaker 1
  Radio receiver assembly B6–FL speaker 2
- ▼RR: Radio receiver assembly B3–RR speaker 1
  Radio receiver assembly B4–RR speaker 2
- ▼RL: Radio receiver assembly B8–RL speaker 1
  Radio receiver assembly BP–RL speaker 2

No → Wire harness faulty
▼(The wire harness for the FR speaker passes through the transceiver, so the transceiver side should be checked)

Yes ↓

※ Is there continuity between the following terminals with connector disconnected?
- ▼FR: Radio receiver assembly B1–ground
  Radio receiver assembly B5–ground
- ▼FL: Radio receiver assembly B2–ground
  Radio receiver assembly B6–ground
- ▼RR: Radio receiver assembly B3–ground
  Radio receiver assembly B4–ground
- ▼RL: Radio receiver assembly B8–ground
  Radio receiver assembly B9–ground

Yes → Wire harness faulty
▼(The wire harness for the FR speaker passes through the transceiver, so the transceiver side should be checked)

No ↓

※ Temporarily install another speaker.
Functions OK?
- Yes → Speaker faulty.
- No ↓

Is there continuity between the following terminals with connector disconnected?
- ▼FR: Radio receiver assembly A7–Power amplifier A1
- ▼FL: Radio receiver assembly A6–Power amplifier A2
- ▼RR: Radio receiver assembly A15–Power amplifier A7
- ▼RL: Radio receiver assembly A14–Power amplifier A8

No → Wire harness faulty.

Yes ↓

Is there continuity between the following terminals with connector disconnected?
- ▼FR: Radio receiver assembly A7–ground
- ▼FL: Radio receiver assembly A6–ground
- ▼RR: Radio receiver assembly A15–ground
- ▼RL: Radio receiver assembly A14–ground

Yes → Wire harness faulty.

No ↓

Continued on next page

※: only for vehicles with cellular phone

WhereEverybodyKnowsYourName

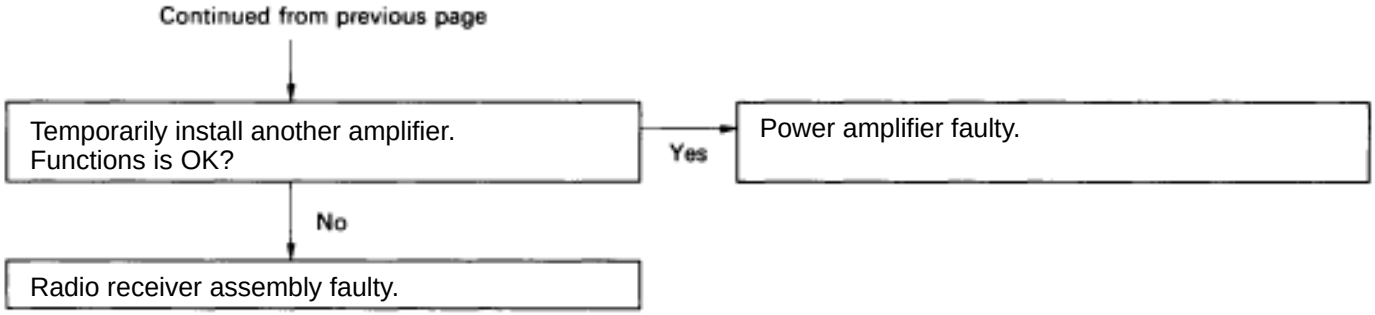

WhereEverybodyKnowsYourName

5	Radio	VOLUME FAINT (EXCEPT WOOFER)

A. without CD player type

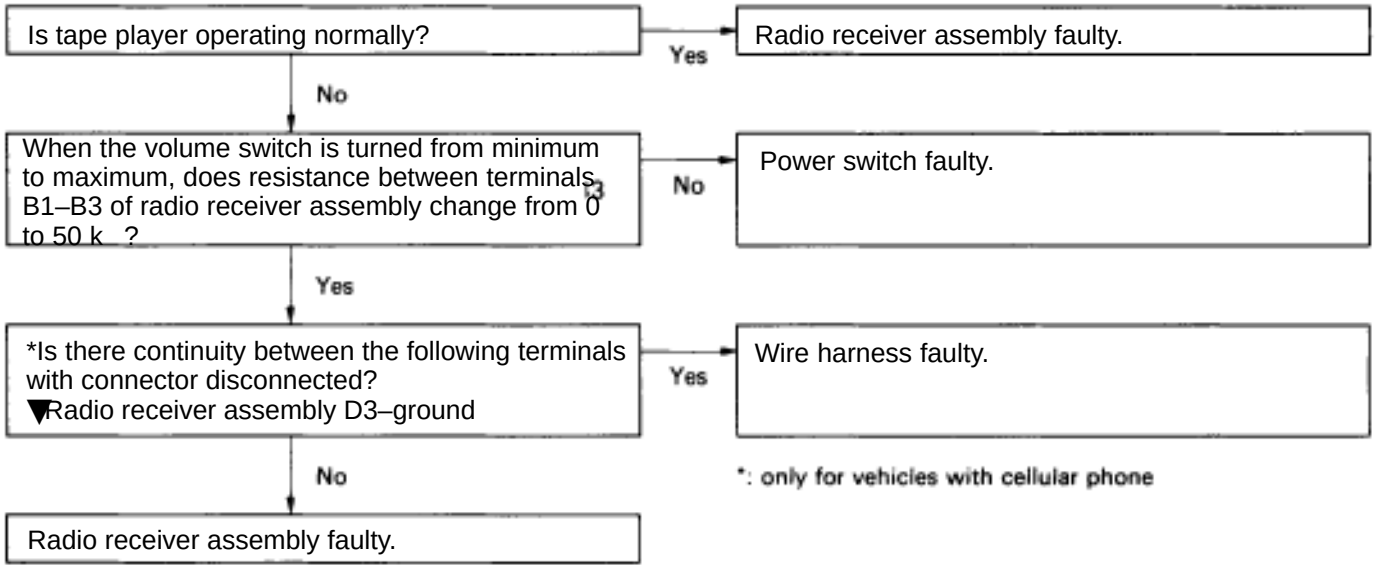

B. with CD player type

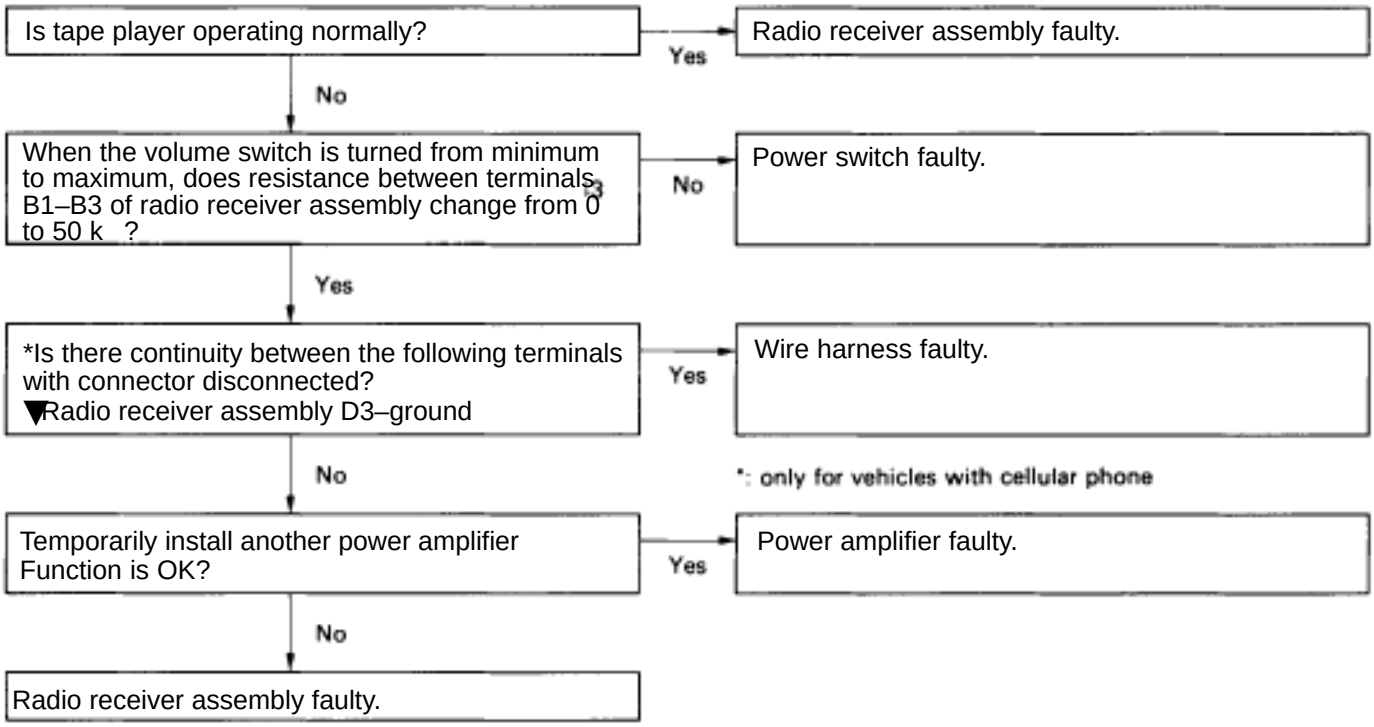

WhereEverybodyKnowsYourName

6	Radio	WOOFER DOES NOT WORK

A. without CD player type

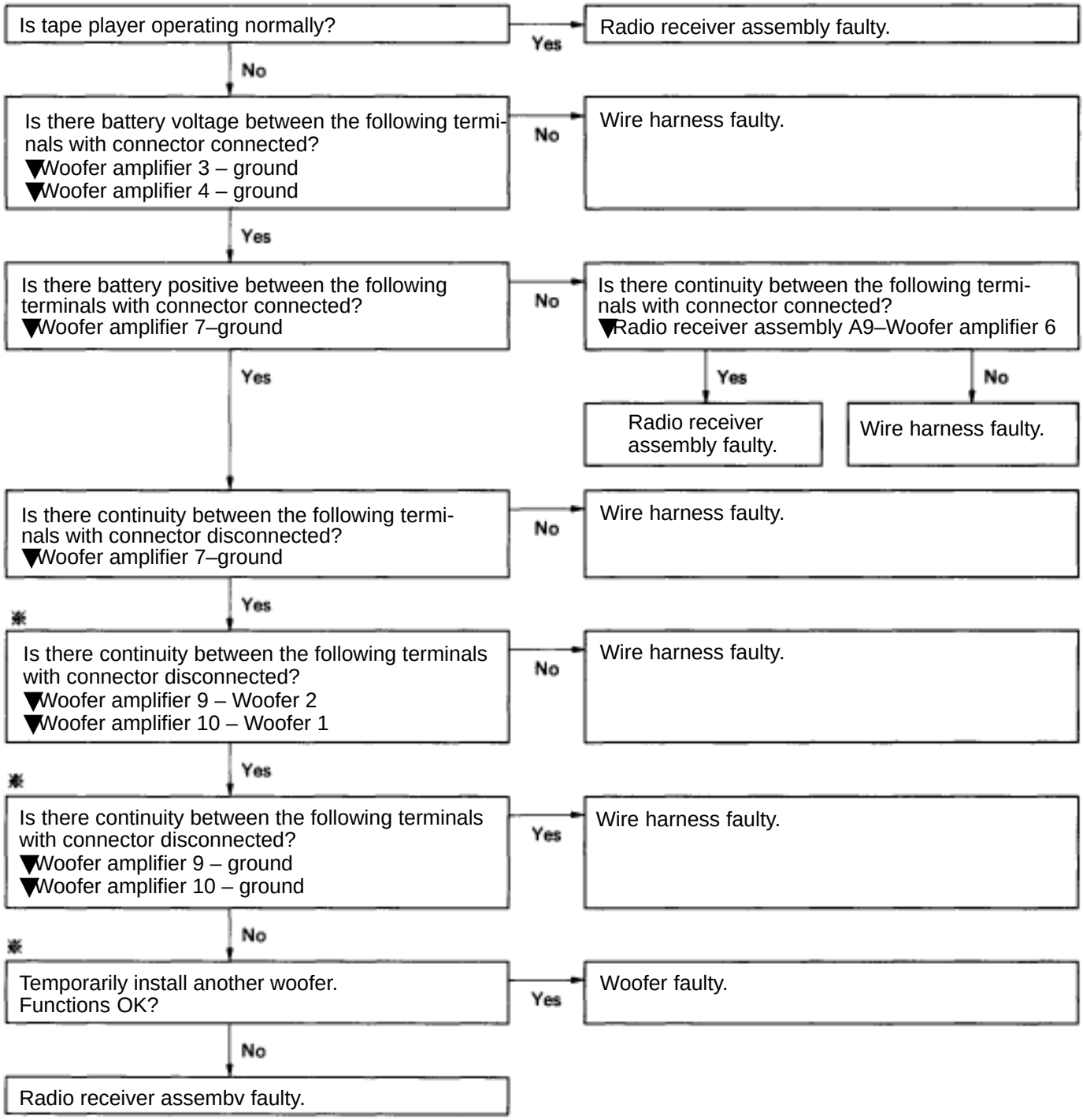

WhereEverybodyKnowsYourName

B. with CD player type

HINT: The part names and terminals indicated in brackets ( ) are for models with a Nakamichi system.

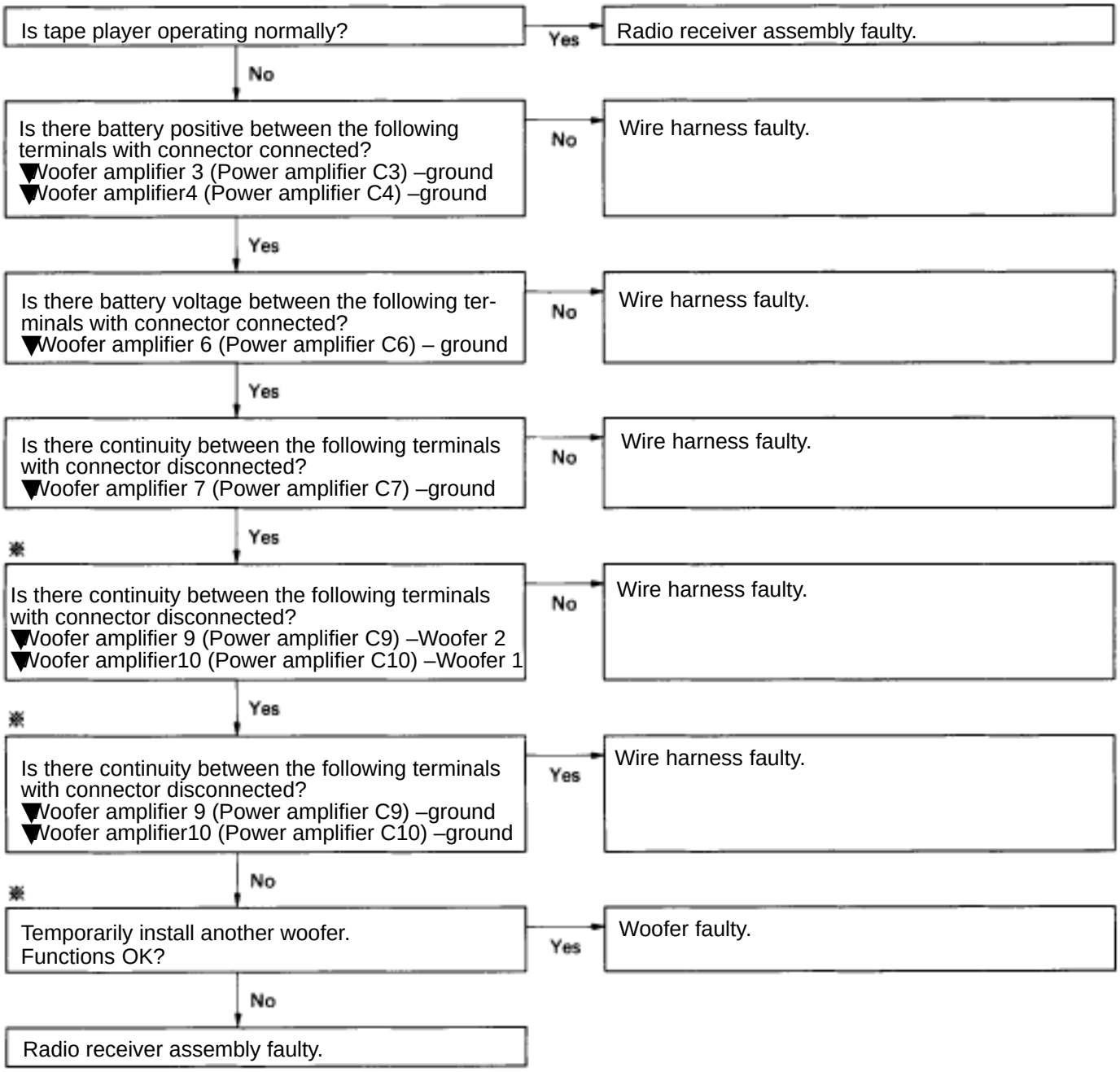

WhereEverybodyKnowsYourName

7	Radio	WOOFER VOLUME FAINT

A. without CD player type

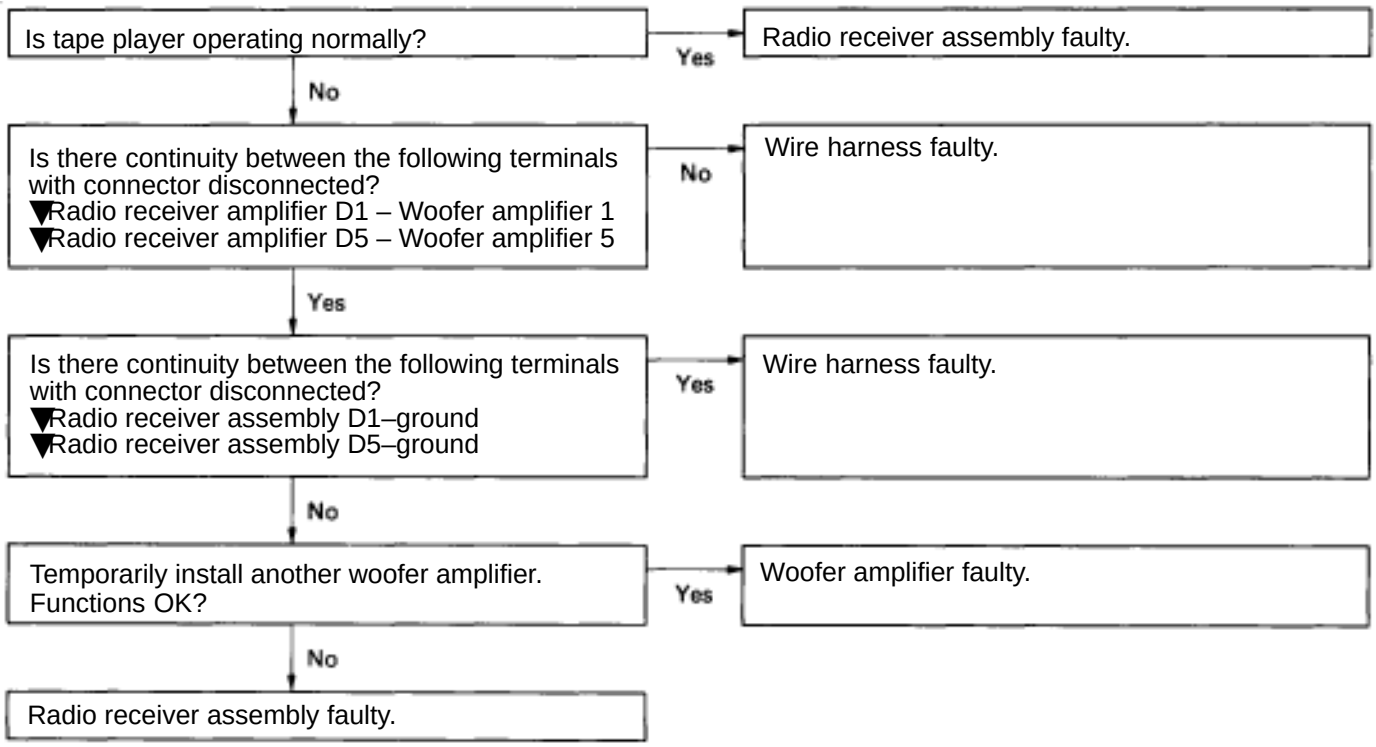

B. with CD player type

HINT: The part names and terminals indicated in brackets ( ) are for models with a Nakamichi system.

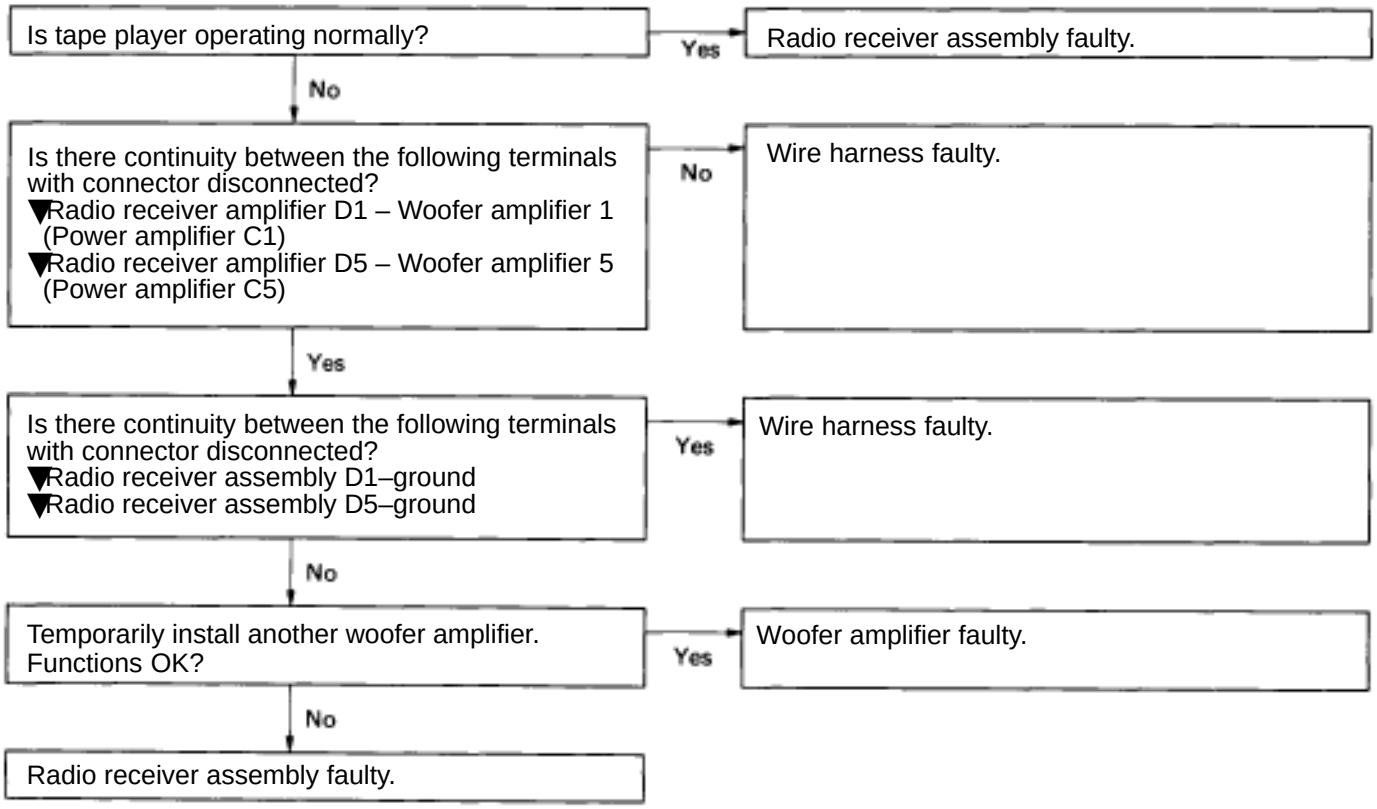

WhereEverybodyKnowsYourName

8	Radio	RECEPTION POOR

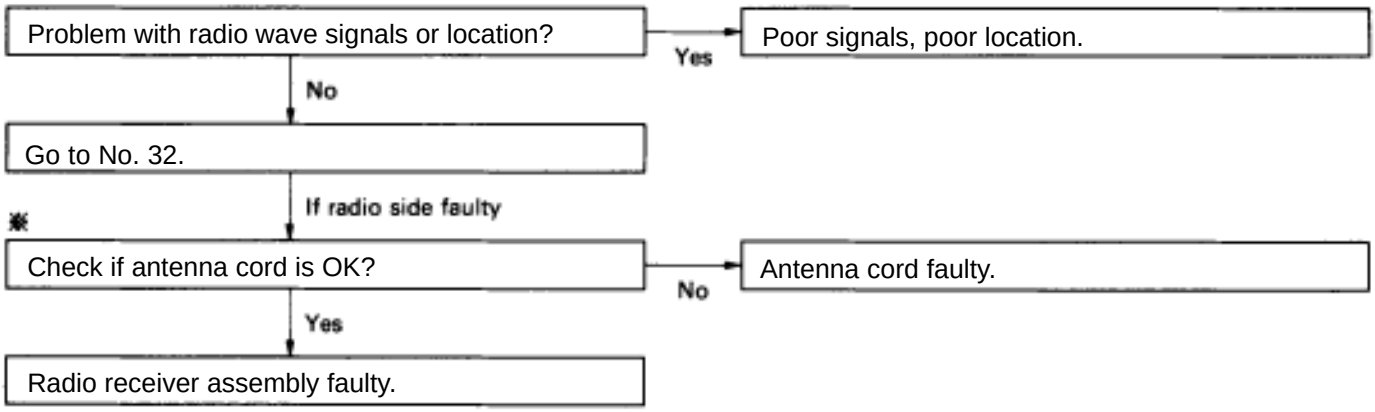

9	Radio	PRESET MEMORY DISAPPEARS

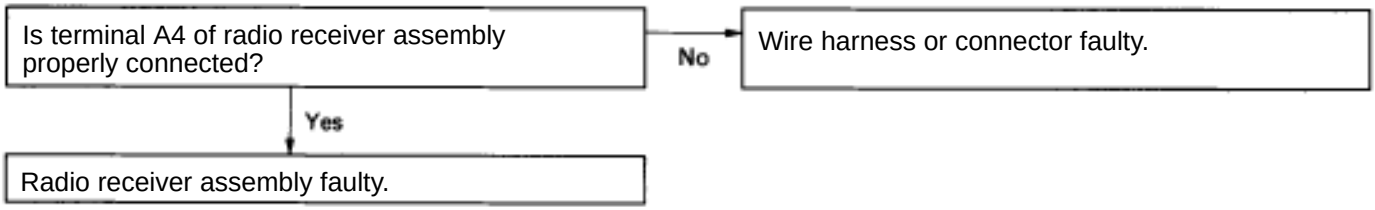

WhereEverybodyKnowsYourName

10	Radio	VOLUME REMAINS AT MAXIMUM LEVEL

A. without CD player type

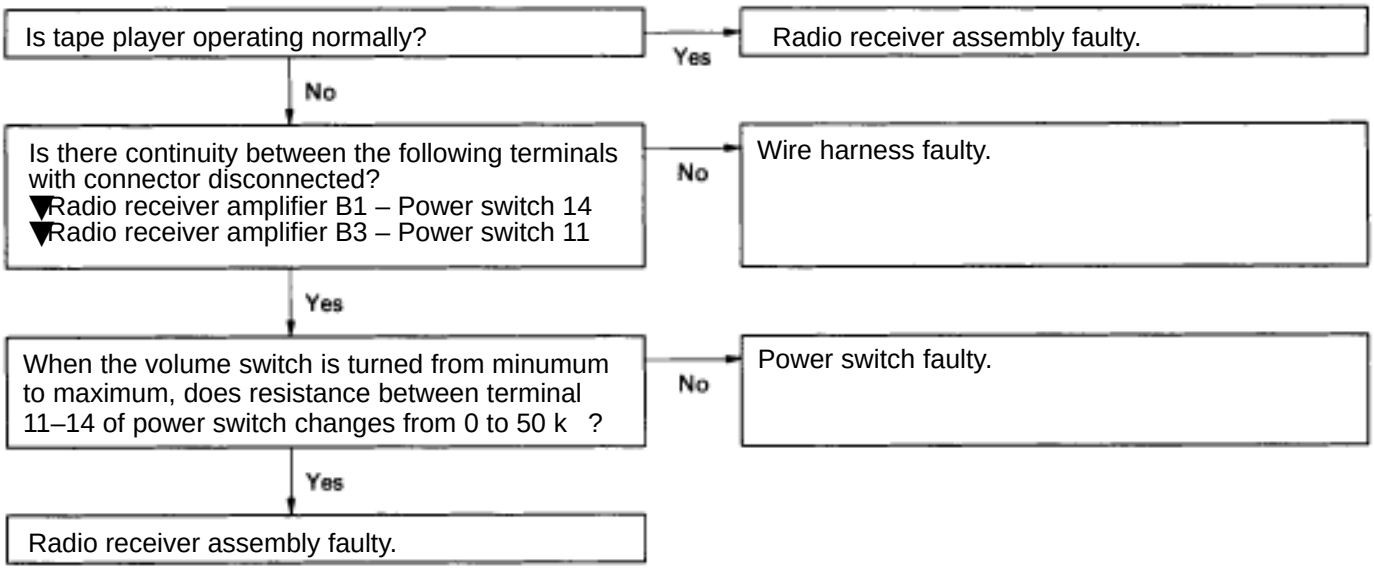

B. with CD player type

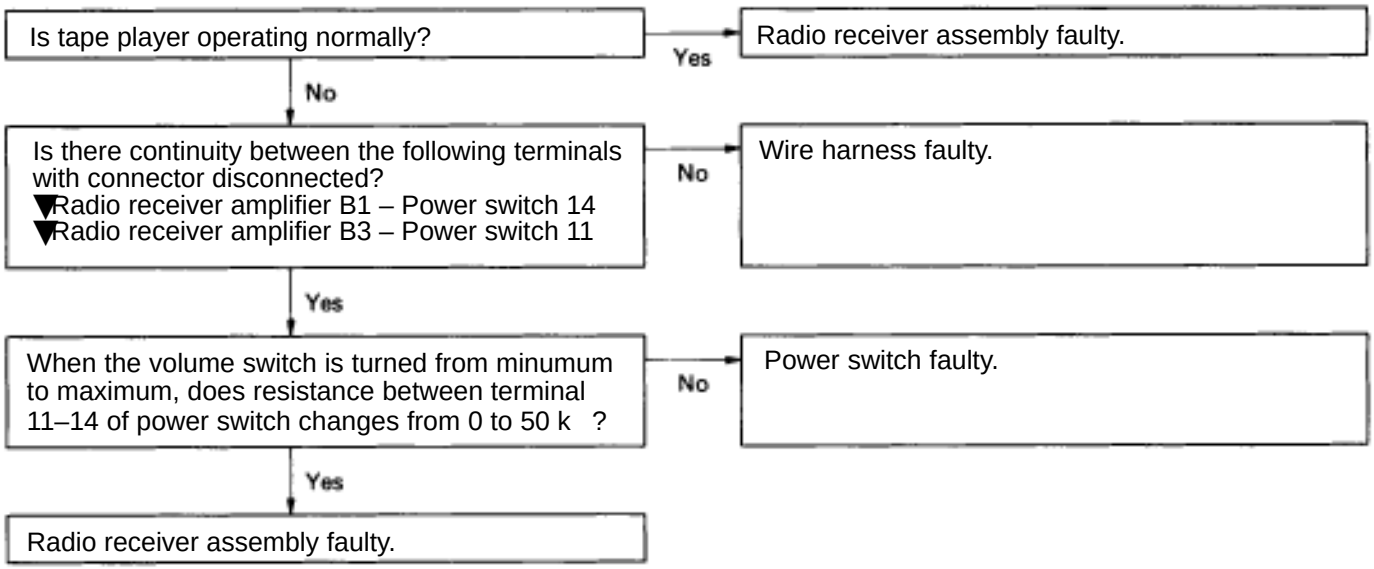

WhereEverybodyKnowsYourName

11	Tape player	CASSETTE TAPE CANNOT BE INSERTED

A. without CD player type

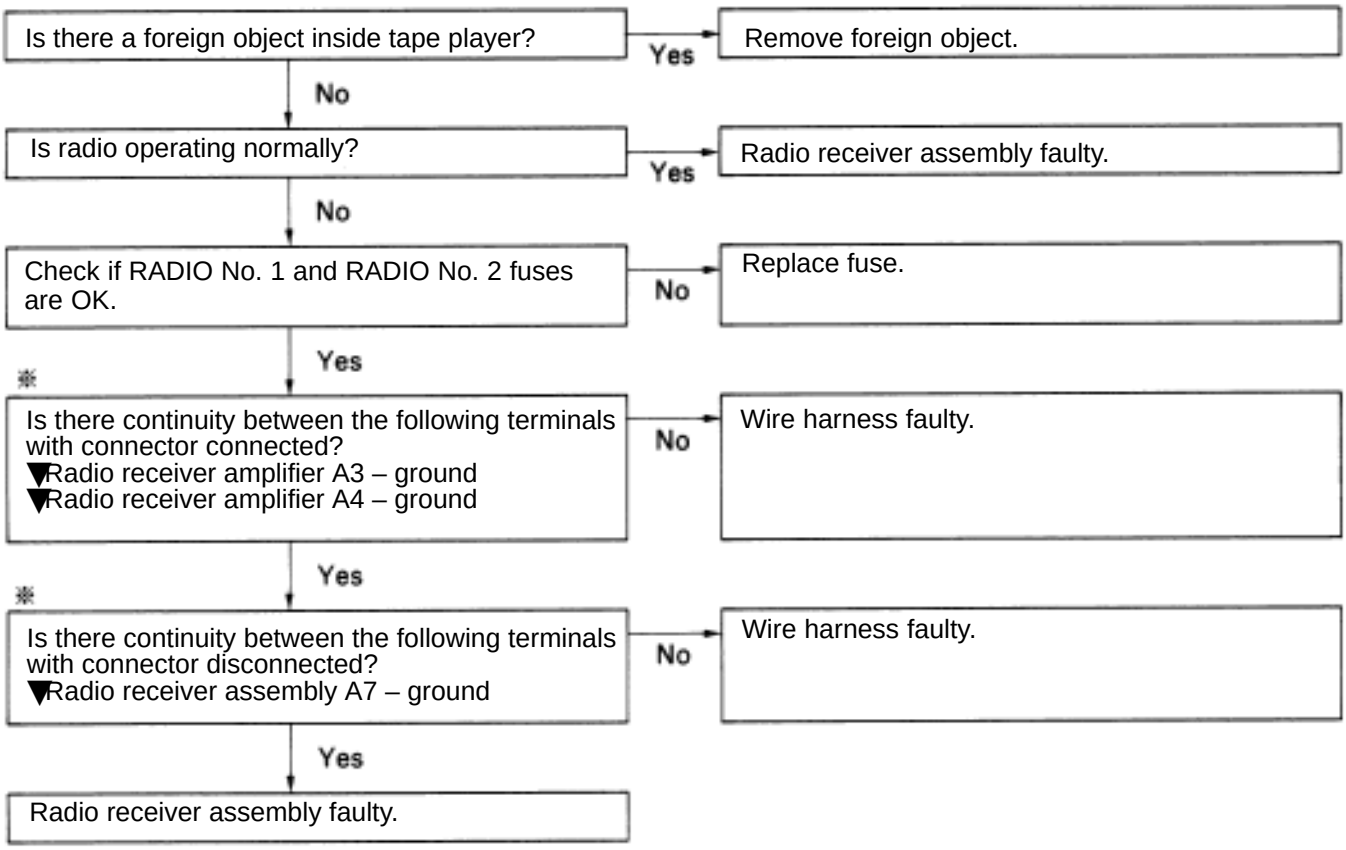

WhereEverybodyKnowsYourName

B. with CD player type

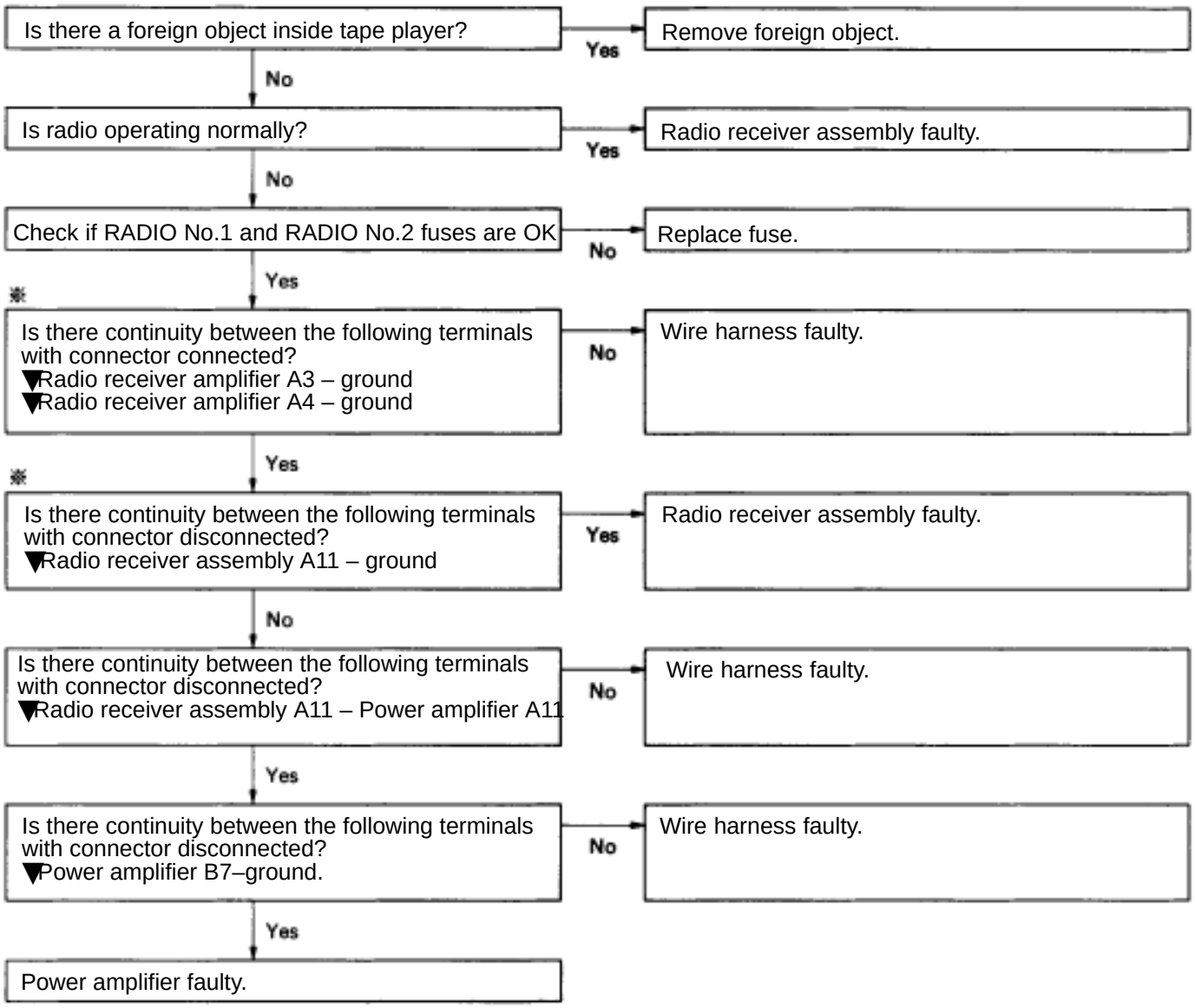

WhereEverybodyKnowsYourName

12	Tape player	CASSETTE TAPE WILL NOT EJECT

A. without CD player type

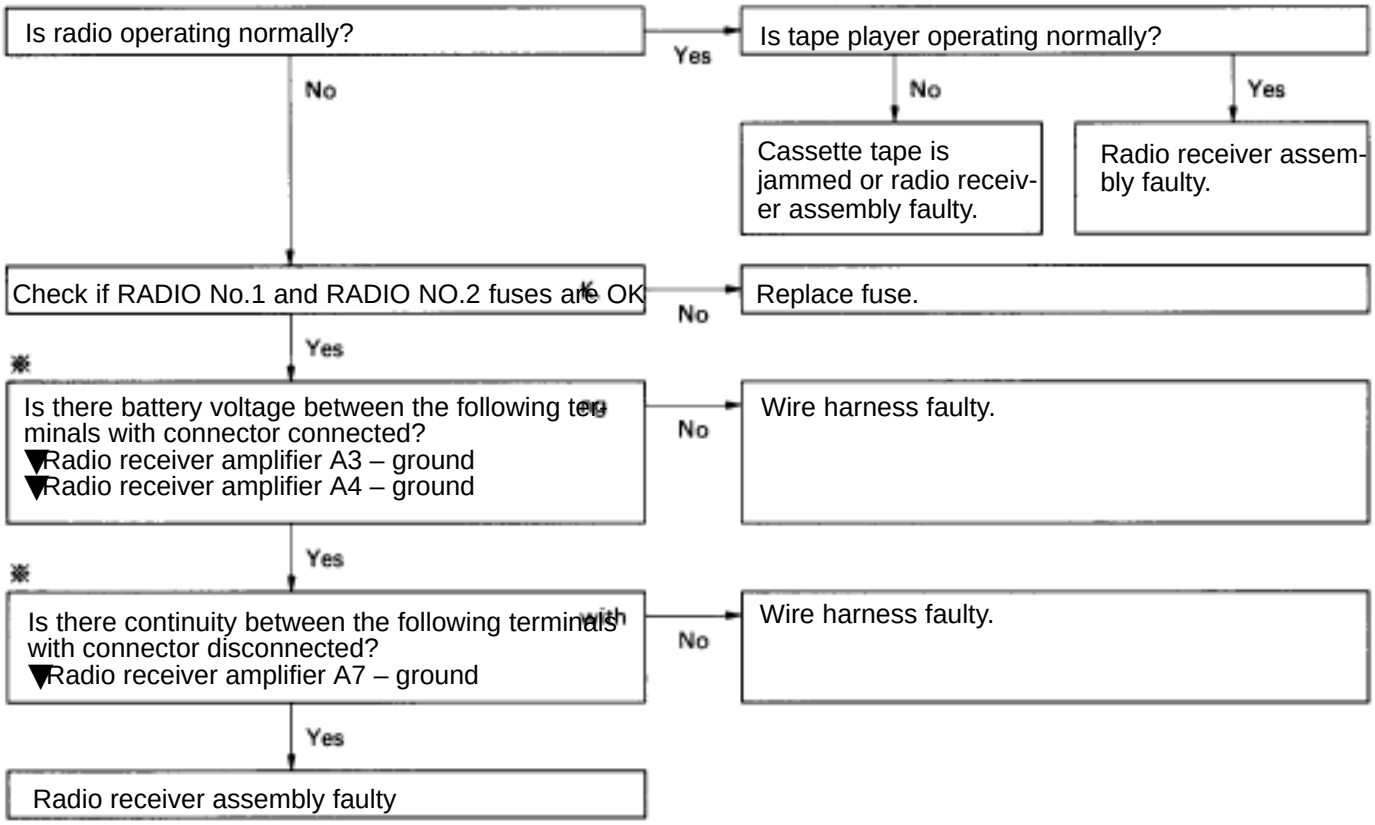

WhereEverybodyKnowsYourName

B. with CD player

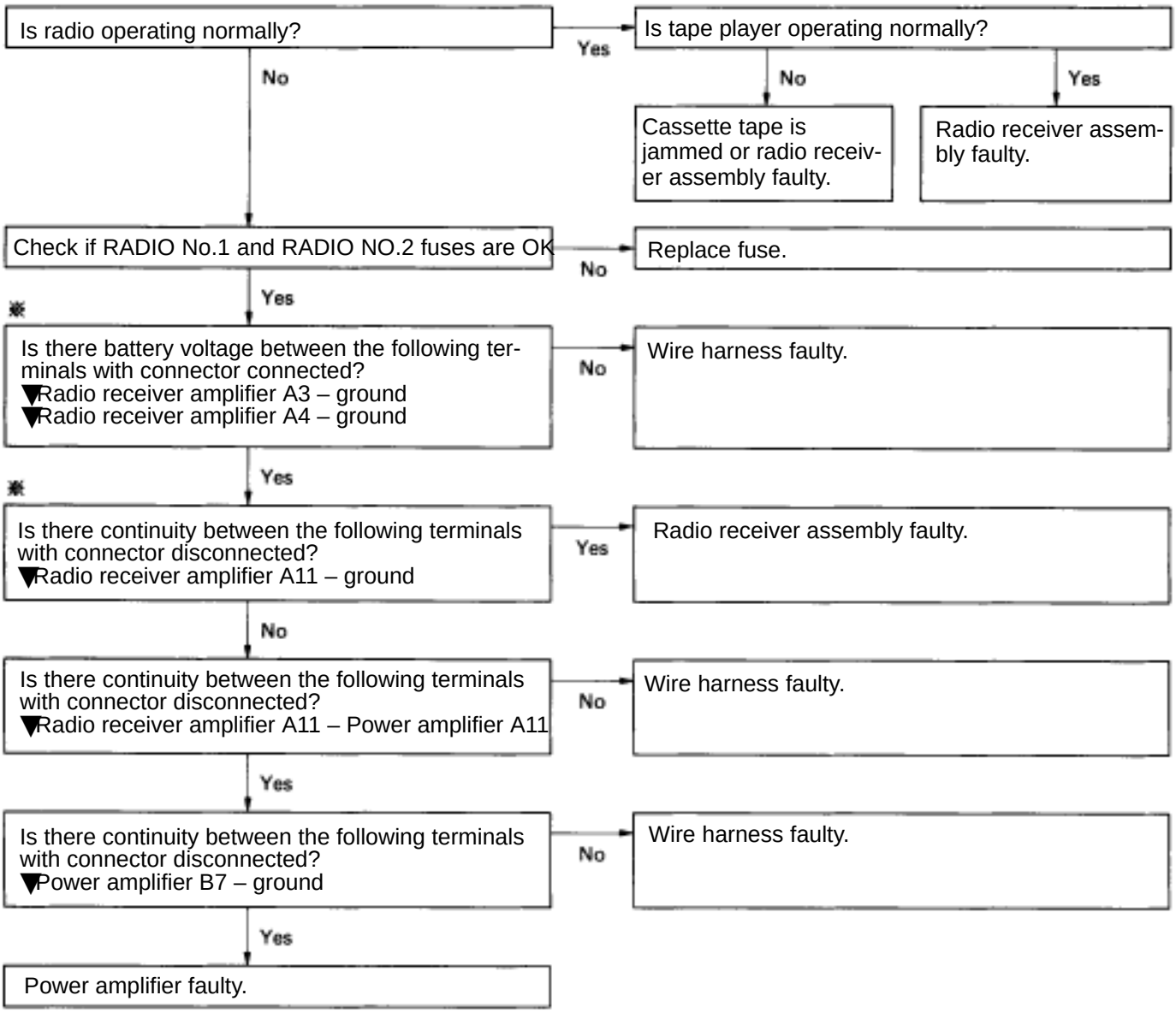

WhereEverybodyKnowsYourName

13	Tape player	DISPLAY INDICATES, BUT NO SOUND IS PRODUCED (EXCEPT WOOFER)

A. without CD player type

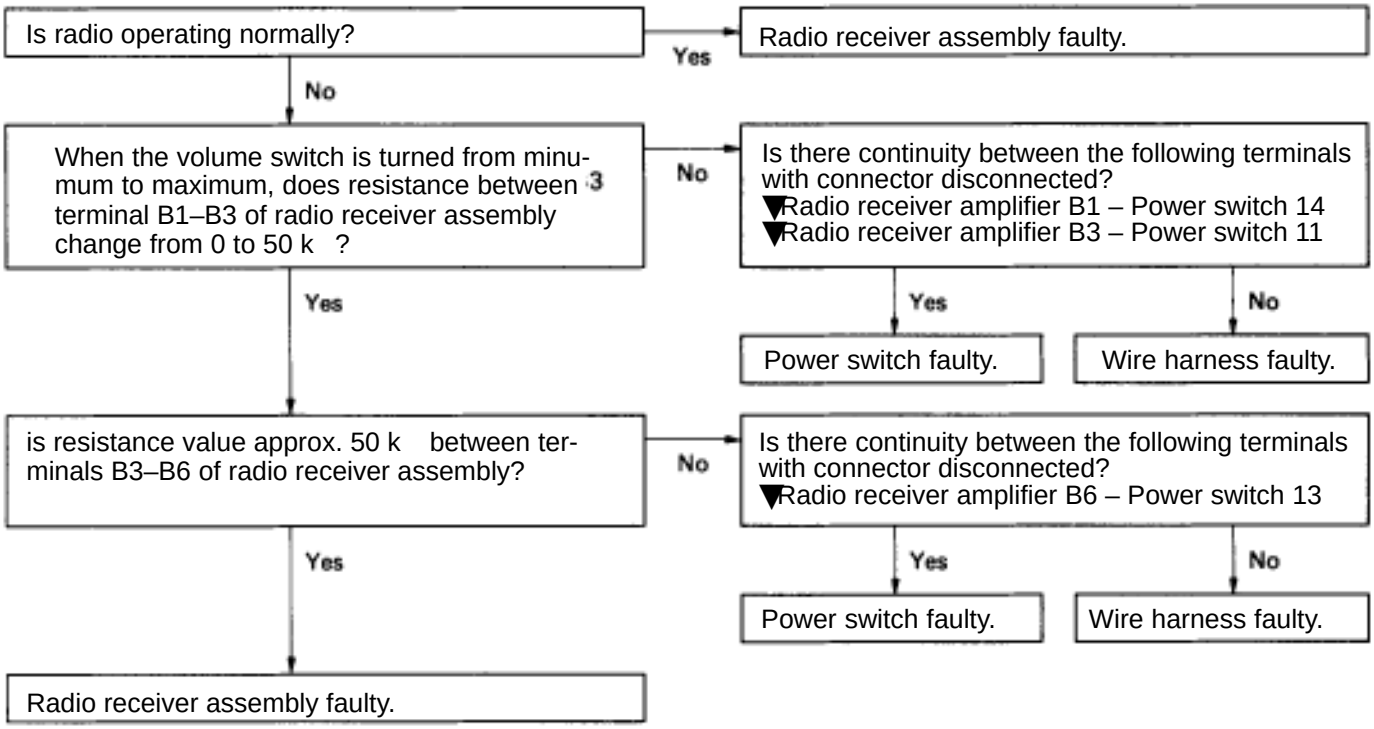

WhereEverybodyKnowsYourName

B. with CD player type

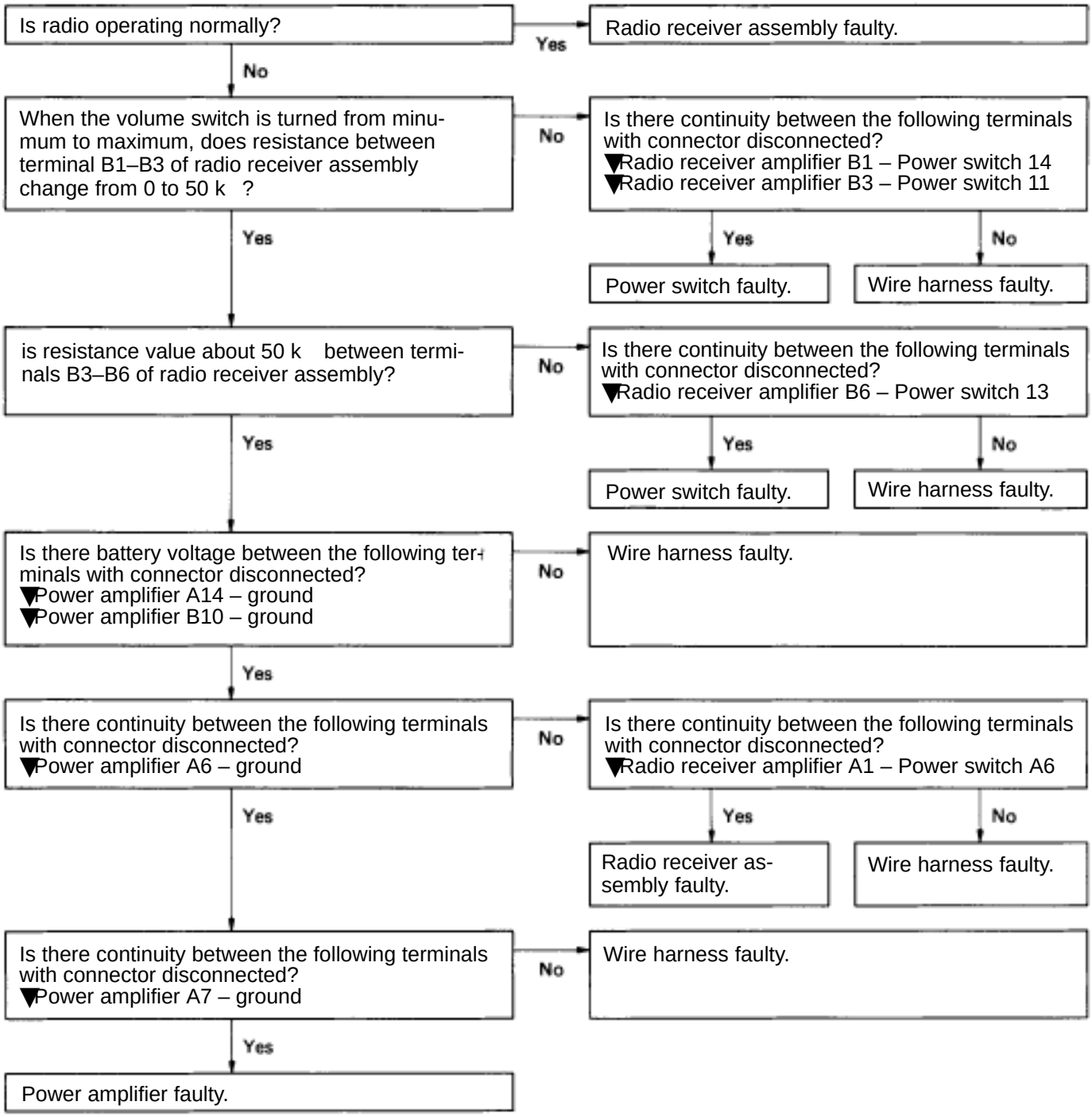

WhereEverybodyKnowsYourName

14	Tape player	ANY SPEAKER DOES NOT WORK (EXCEPT WOOFER)

A. without CD player type

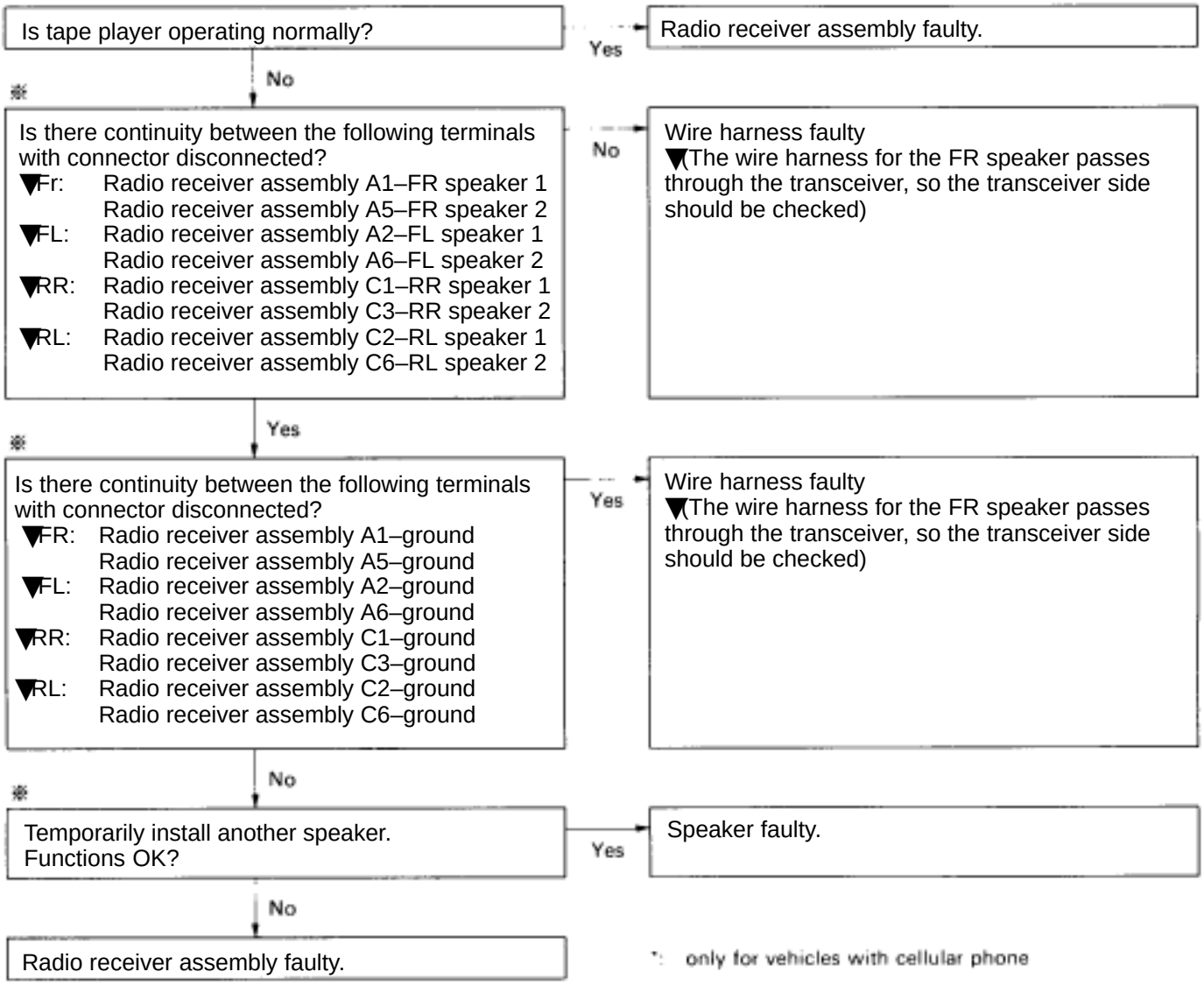

WhereEverybodyKnowsYourName

B. with CD player type

Is tape player operating normally?
- Yes → Radio receiver assembly faulty.
- No ↓

※ Is there continuity between the following terminals with connector disconnected?
▼Fr: Power amplifier B1–FR speaker 1
Power amplifier B5–FR speaker 2
▼FL: Power amplifier B2–FL speaker 1
Power amplifier B6–FL speaker 2
▼RR: Power amplifier B3–RR speaker 1
Power amplifier B4–RR speaker 2
▼RL: Power amplifier B8–RL speaker 1
Power amplifier B9–RL speaker 2
- No → Wire harness faulty
▼(The wire harness for the FR speaker passes through the transceiver, so the transceiver side should be checked)
- Yes ↓

※ Is there continuity between the following terminals with connector disconnected?
▼FR: Power amplifier B1–ground
Power amplifier B5–ground
▼FL: Power amplifier B2–ground
Power amplifier B6–ground
▼RR: Power amplifier B3–ground
Power amplifier B4–ground
▼RL: Power amplifier B8–ground
Power amplifier B9–ground
- Yes → Wire harness faulty
▼(The wire harness for the FR speaker passes through the transceiver, so the transceiver side should be checked)
- No ↓

※ Temporarily install another speaker.
Functions OK?
- Yes → Speaker faulty.
- No ↓

Is there continuity between the following terminals with connector disconnected?
▼FR: Radio receiver assembly A7–Power amplifier A1
▼FL: Radio receiver assembly A6–Power amplifier A2
▼RR: Radio receiver assembly A15–Power amplifier A7
▼RL: Radio receiver assembly A14–Power amplifier A8
- No → Wire harness faulty.
- Yes ↓

Is there continuity between the following terminals with connector disconnected?
▼FR: Radio receiver assembly A7–ground
▼FL: Radio receiver assembly A6–ground
▼RR: Radio receiver assembly A15–ground
▼RL: Radio receiver assembly A14–ground
- Yes → Wire harness faulty.
- No ↓

Continued on next page

*: only for vehicles with cellular phone

WhereEverybodyKnowsYourName

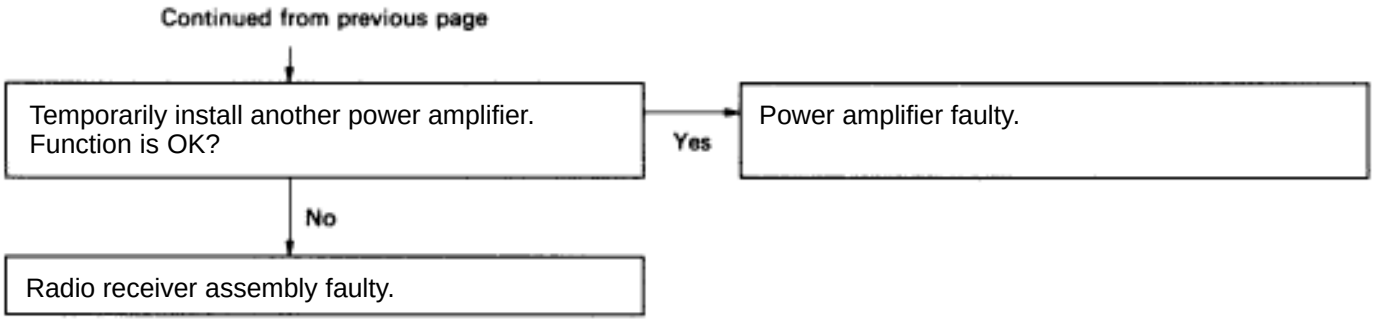

WhereEverybodyKnowsYourName

15	Tape player	VOLUME FAINT (EXCEPT WOOFER)

A. without CD player type

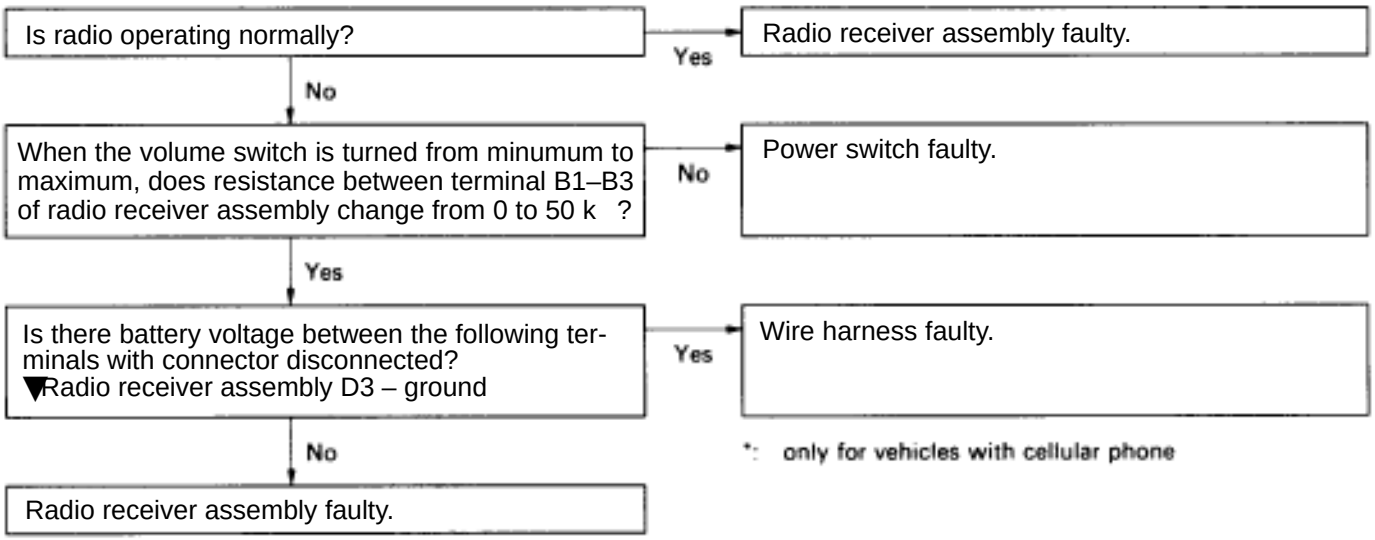

B. with CD player type

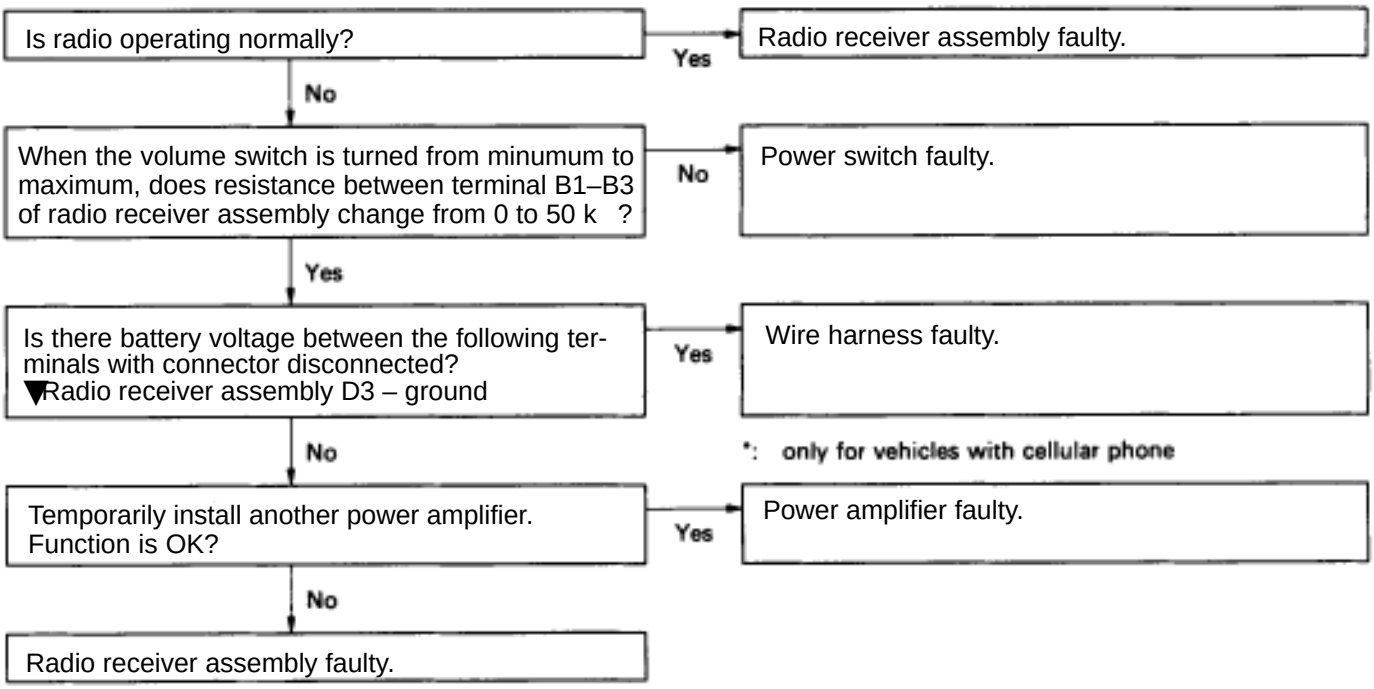

WhereEverybodyKnowsYourName

16	Tape player	WOOFER DOES NOT WORK

A. without CD player type

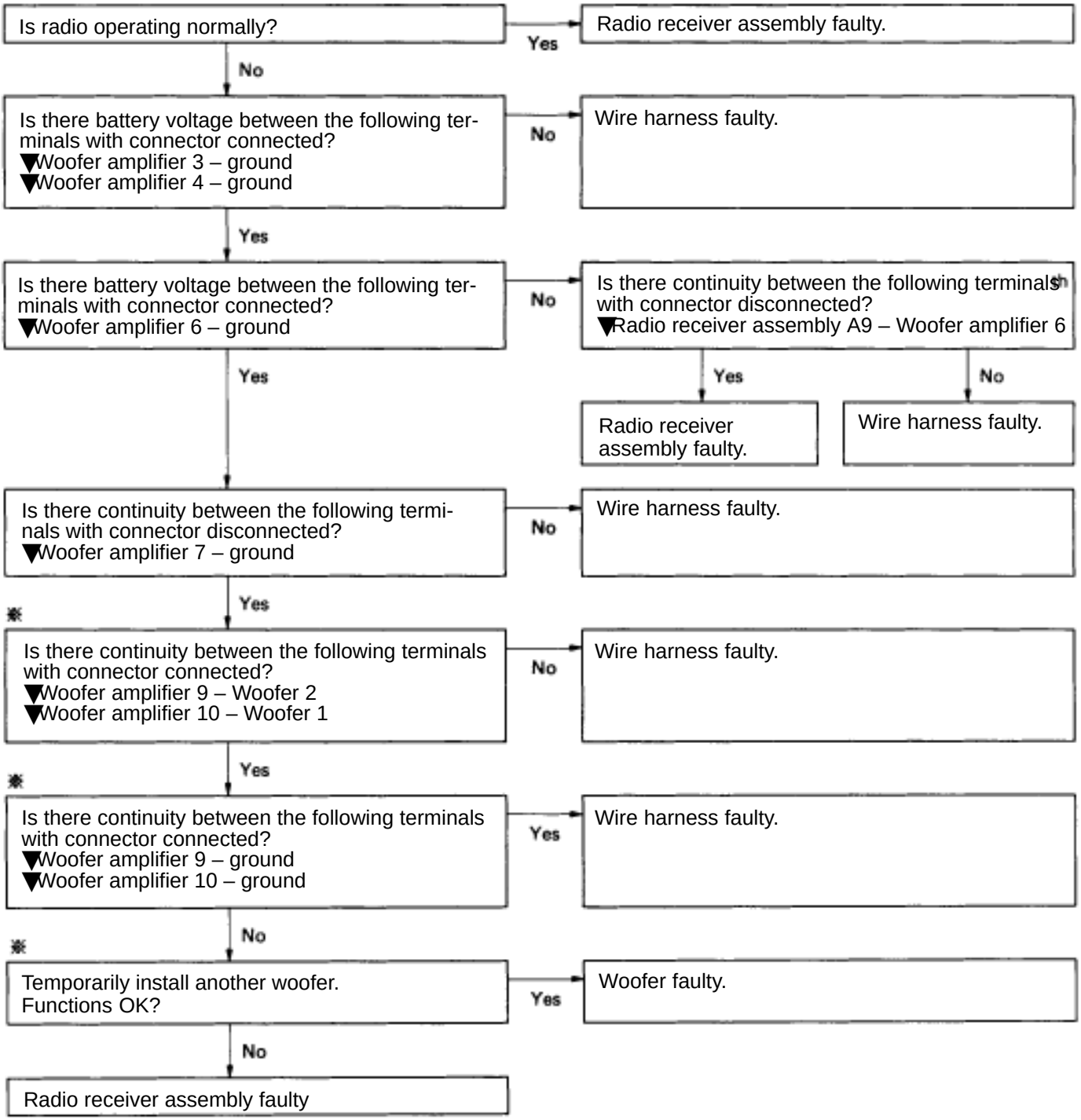

WhereEverybodyKnowsYourName

B. with CD player type

HINT: The part names and terminals indicated in brackets ( ) are for models with a Nakamichi system.

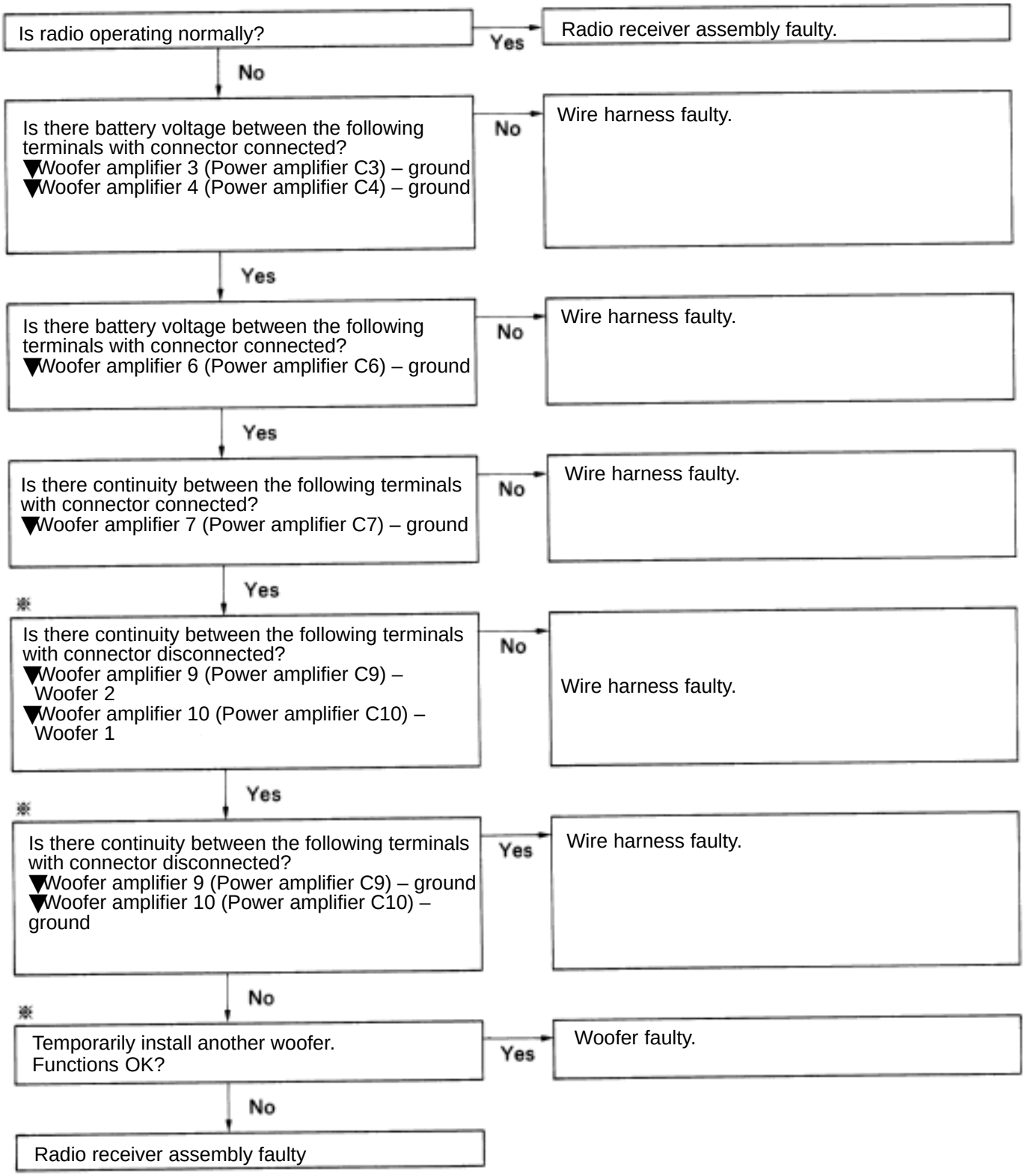

WhereEverybodyKnowsYourName

17	Tape player	WOOFER VOLUME FAINT

A. without CD player type

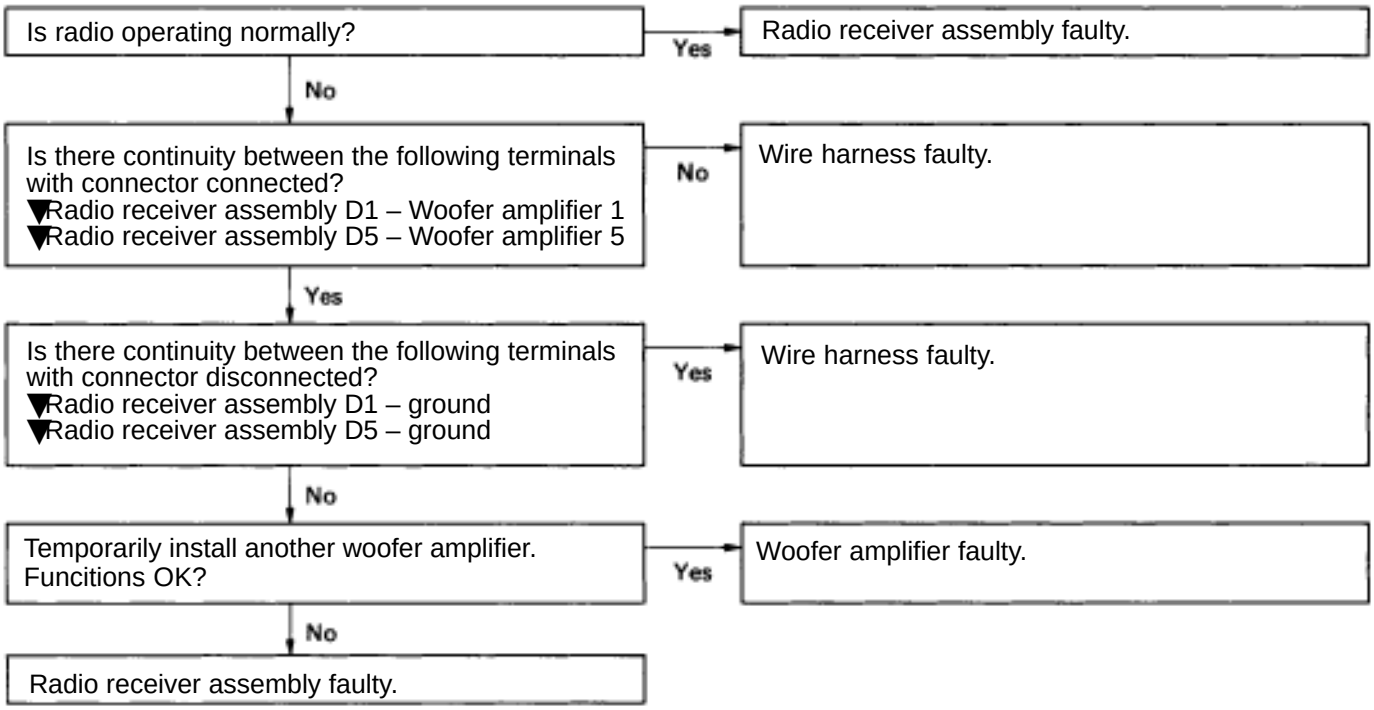

B. with CD player type

HINT: The part names and terminals indicated in brackets ( ) are for models with a Nakamichi system.

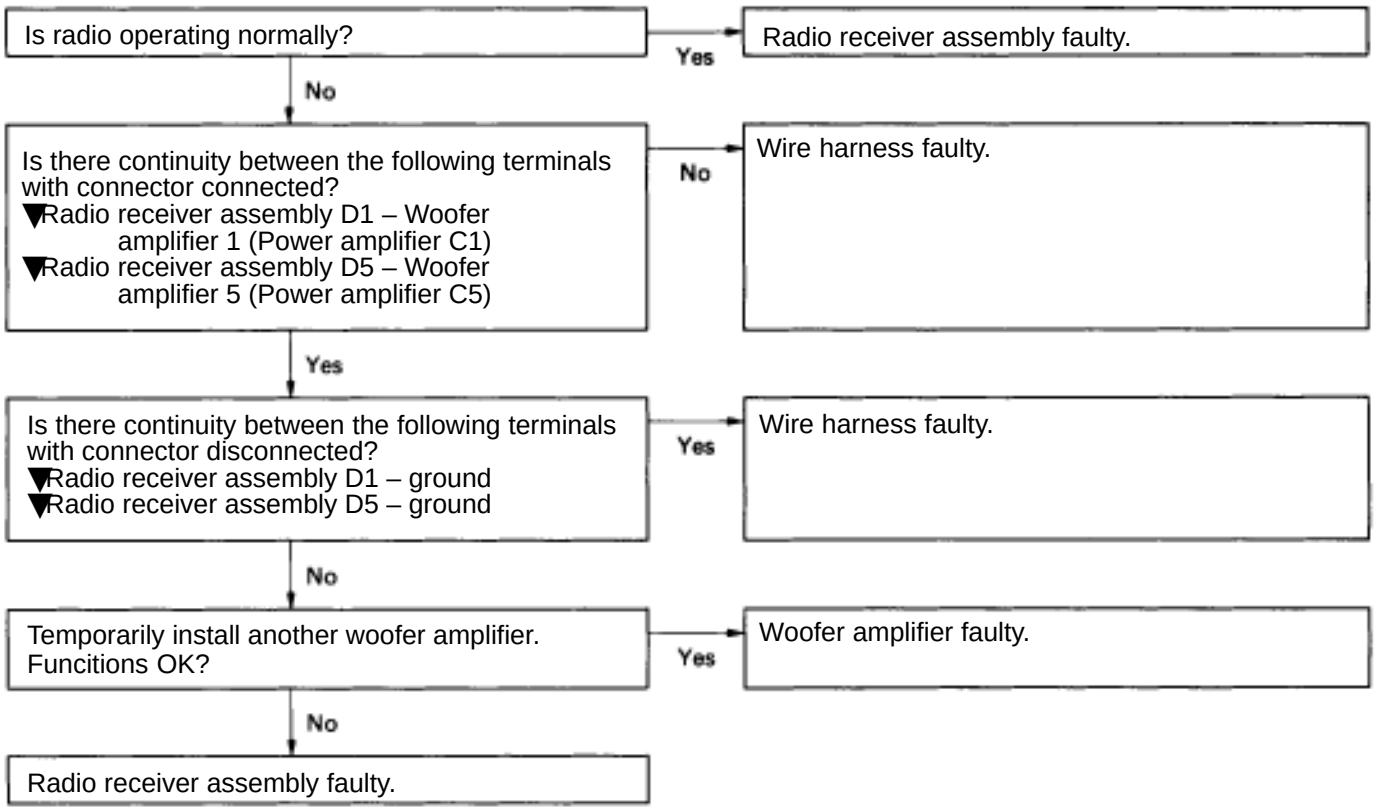

WhereEverybodyKnowsYourName

18	Tape player	SOUND QUALITY POOR

A. without CD player type

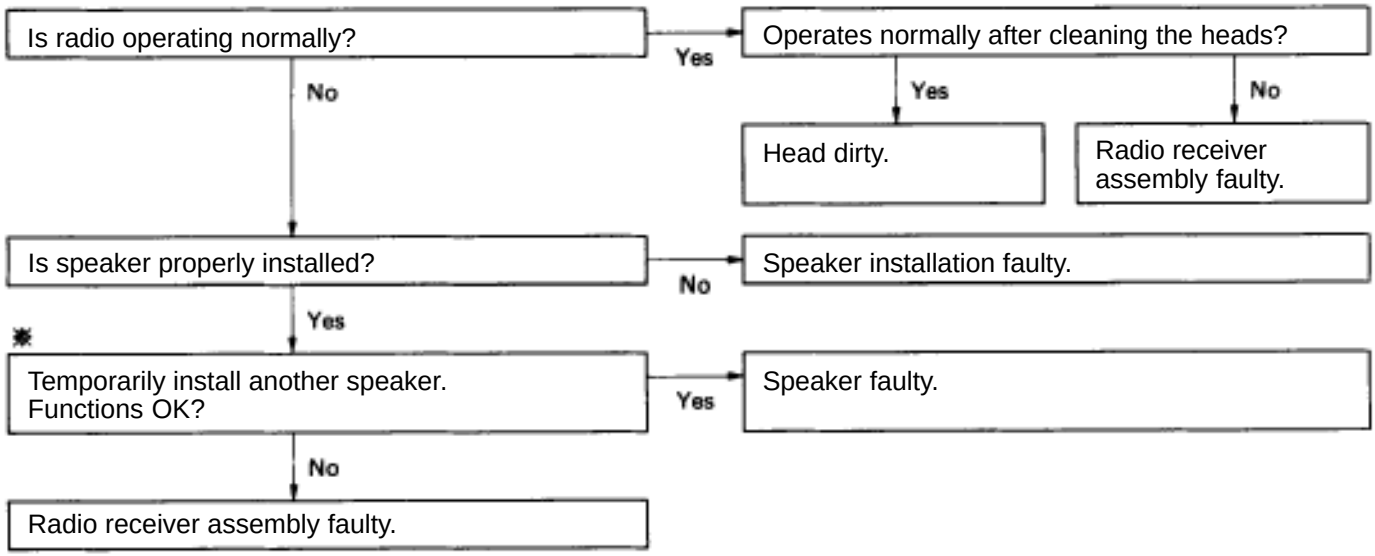

B. with CD player type

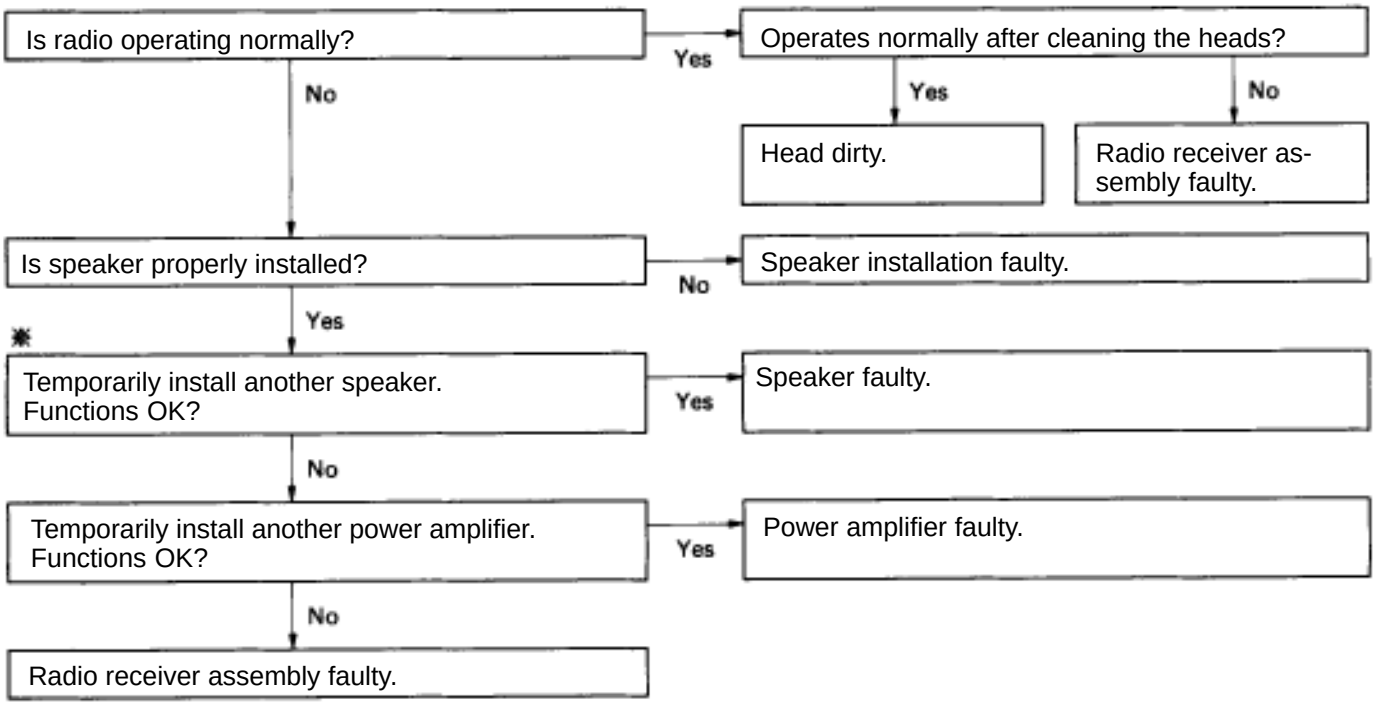

WhereEverybodyKnowsYourName

19	Tape player	VOLUME REMAINS AT MAXIMUM LEVEL

A. without CD player type

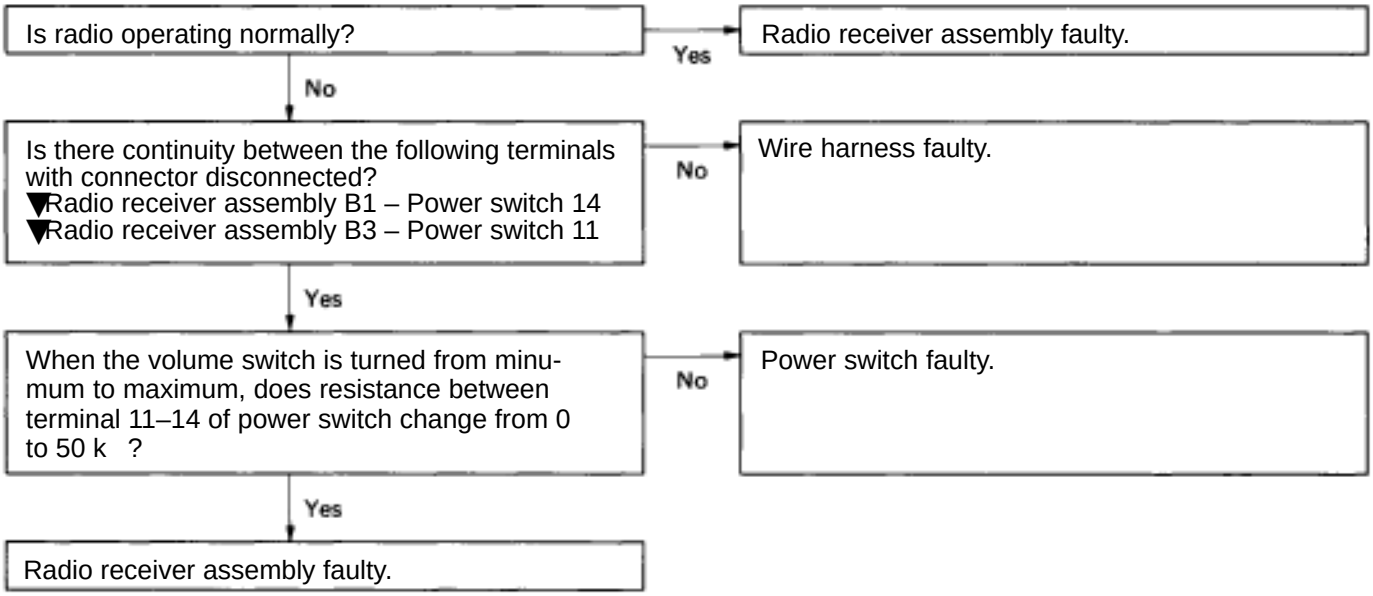

B. with CD player type

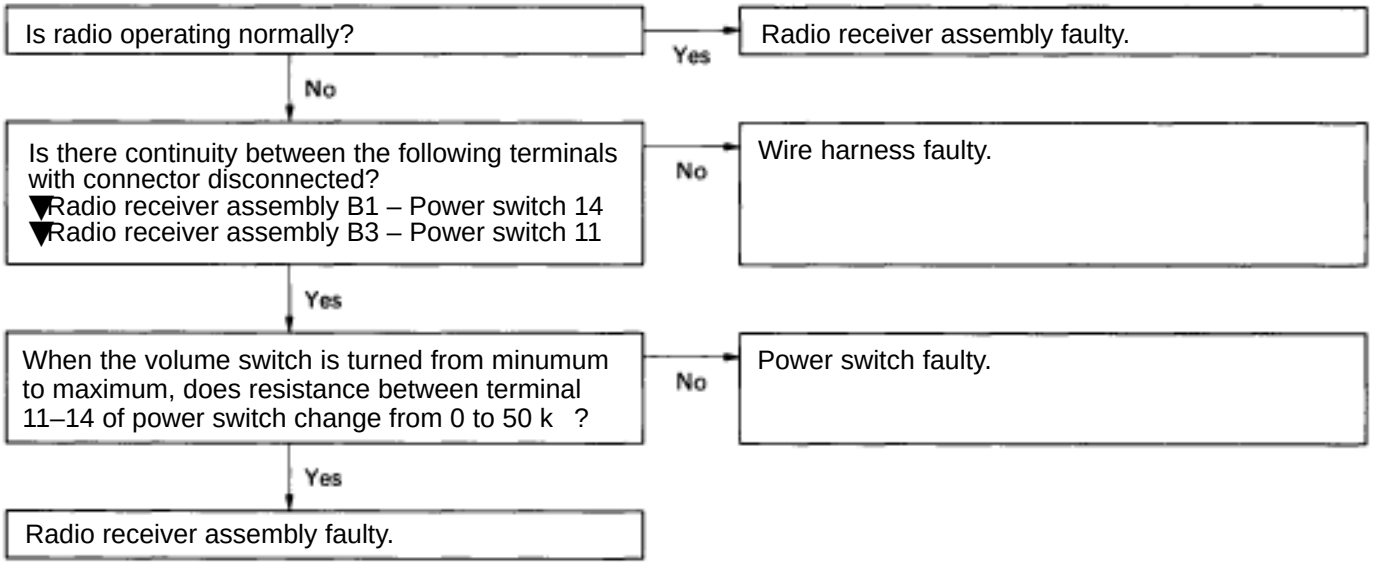

WhereEverybodyKnowsYourName

20	CD player	MAGAZINE CANNOT BE INSERTED INTO AUTO CHANGER

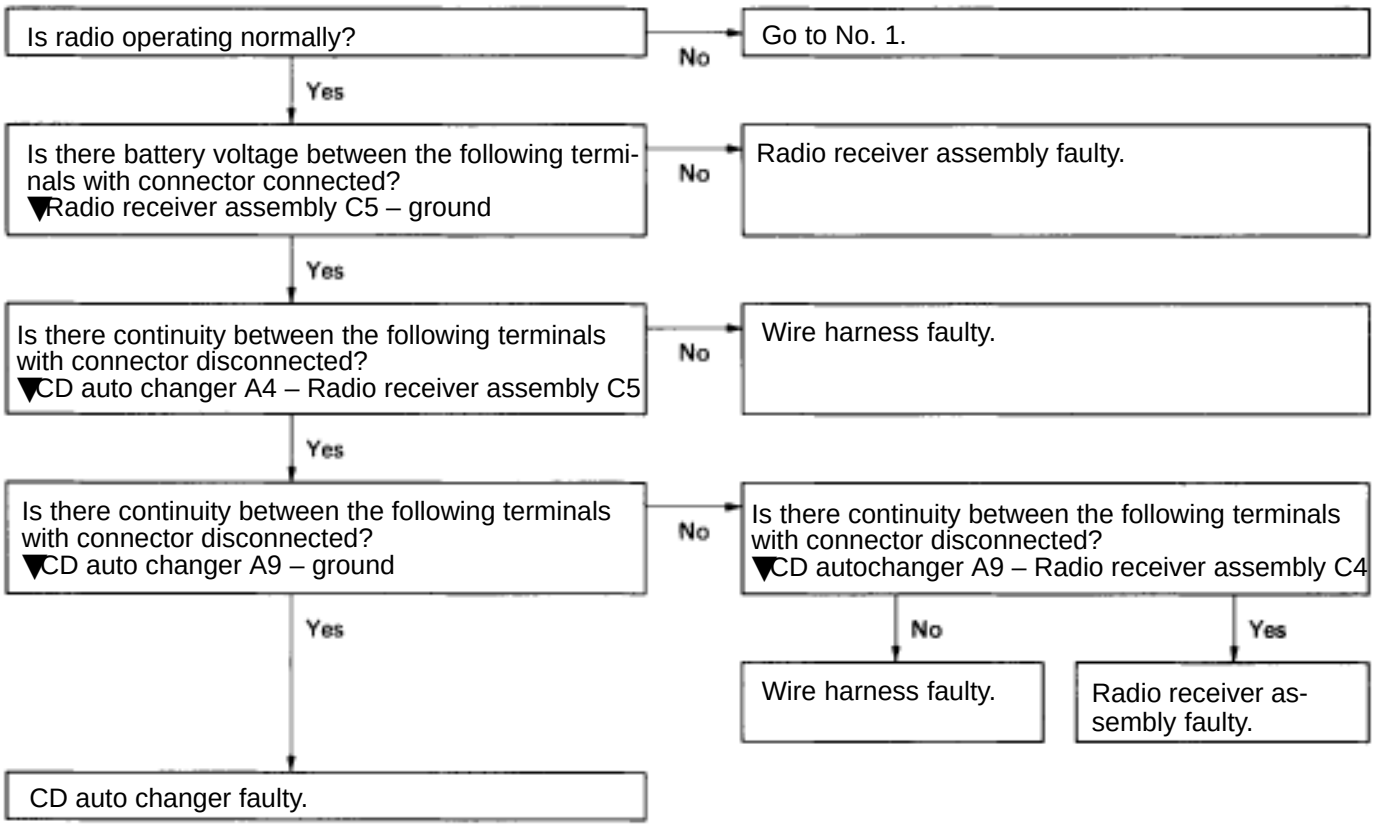

WhereEverybodyKnowsYourName

21	CD player	MAGAZINE IS INSERTED, BUT DISPLAY DOES NOT INDICATE ”CD”

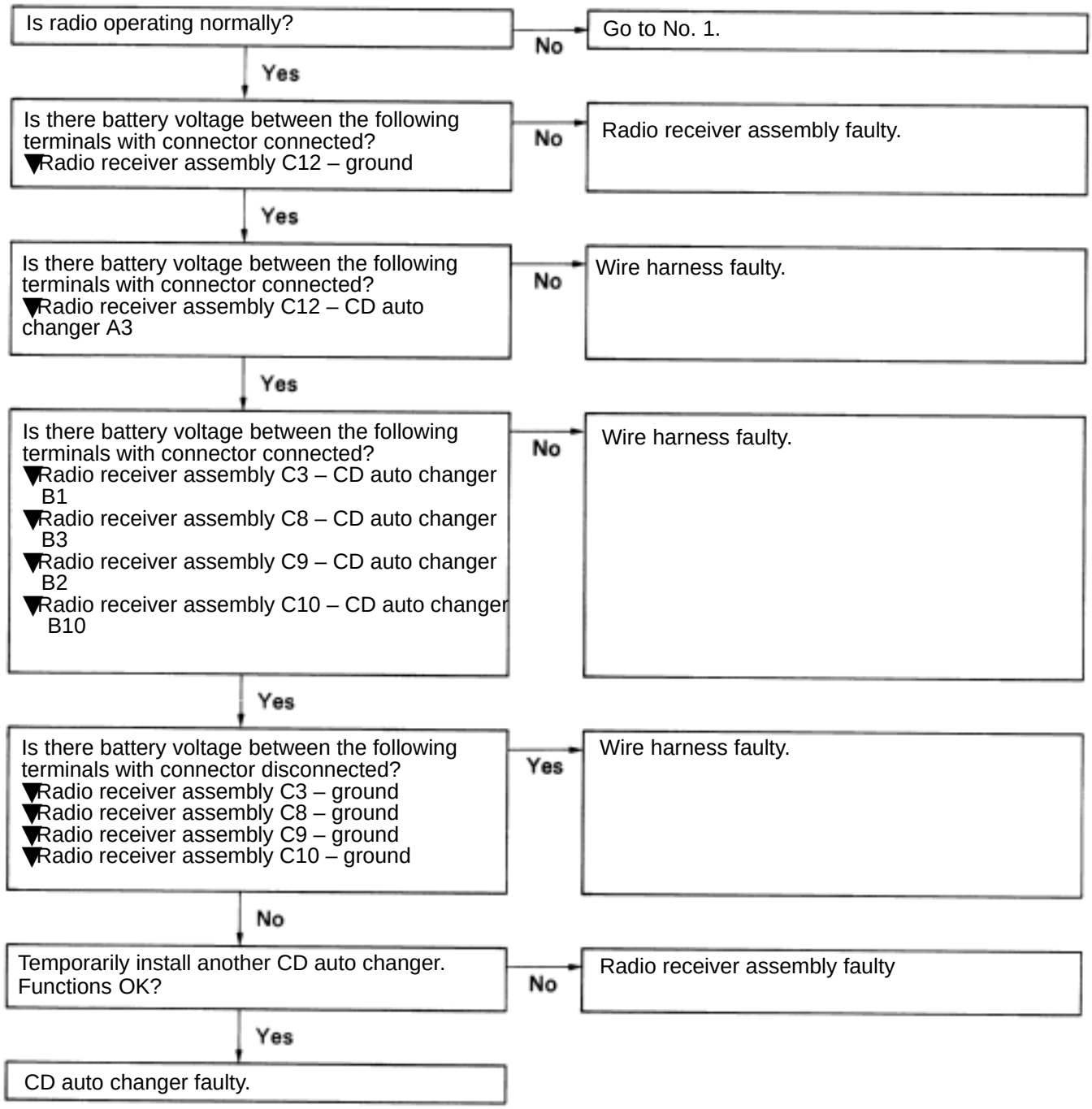

WhereEverybodyKnowsYourName

22	CD player	DISPLAY INDICATES, BUT NO SOUND IS PRODUCED (EXCEPT WOOFER)

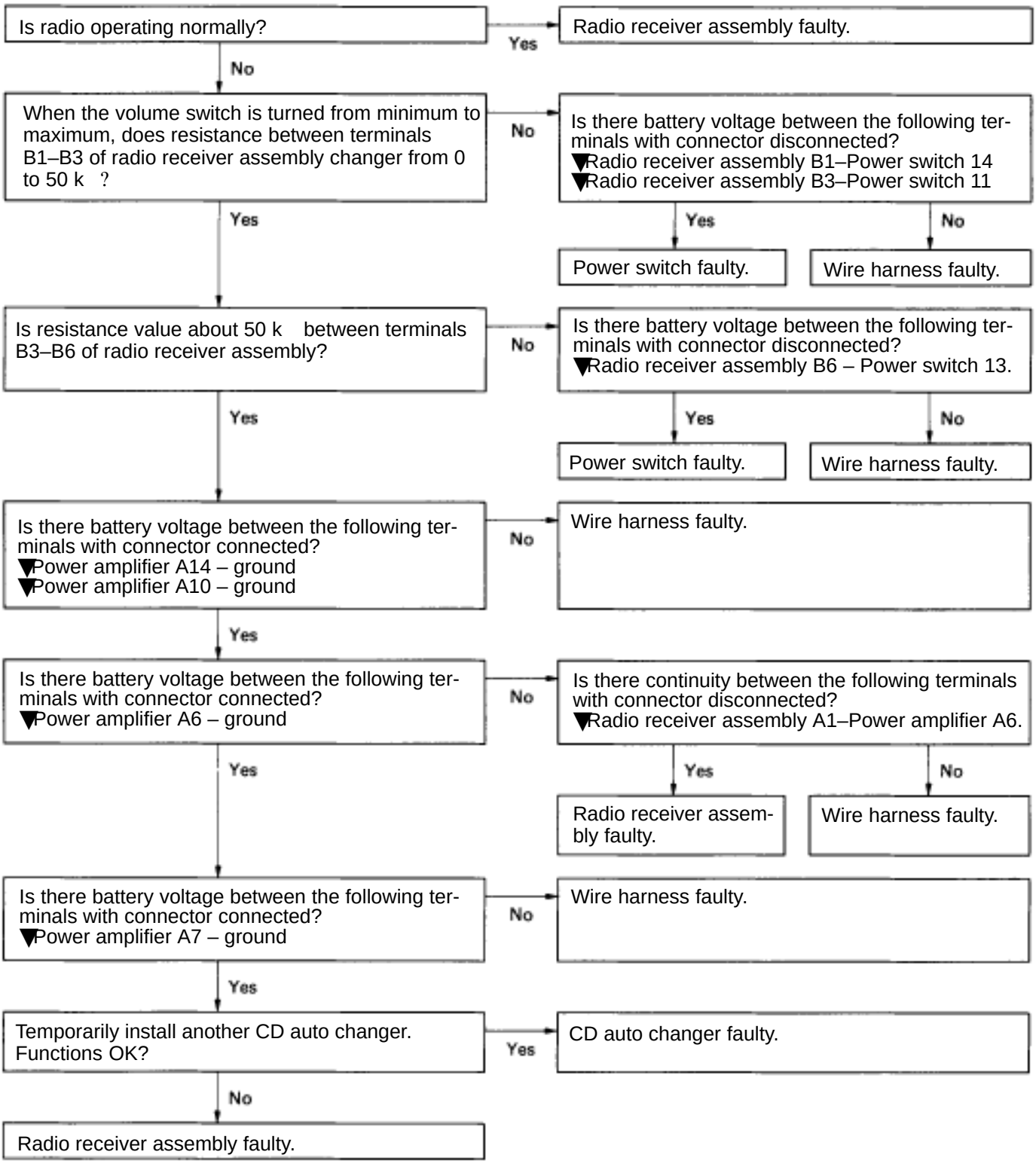

WhereEverybodyKnowsYourName

23	CD player	ANY SPEAKER DOES NOT WORK (EXCEPT WOOFER).

Is radio operating normally?

- Yes → Radio receiver assembly faulty.
- No ↓

Is there continuity between the following terminals with connector disconnected?
▼Fr: Power amplifier B1–FR speaker 1
Power amplifier B5–FR speaker 2
▼FL: Power amplifier B2–FL speaker 1
Power amplifier B6–FL speaker 2
▼RR: Power amplifier B3–RR speaker 1
Power amplifier B4–RR speaker 2
▼RL: Power amplifier B8–RL speaker 1
Power amplifier B9–RL speaker 2

- No → Wire harness faulty
▼(The wire harness for the FR speaker passes through the transceiver, so the transceiver side should be checked)
- Yes ↓

Is there continuity between the following terminals with connector disconnected?
▼FR: Power amplifier B1–ground
Power amplifier B5–ground
▼FL: Power amplifier B2–ground
Power amplifier B6–ground
▼RR: Power amplifier B3–ground
Power amplifier B4–ground
▼RL: Power amplifier B8–ground
Power amplifier B9–ground

- Yes → Wire harness faulty
▼(The wire harness for the FR speaker passes through the transceiver, so the transceiver side should be checked)
- No ↓

Temporarily install another speaker.
Functions OK?

- Yes → Speaker faulty.
- No ↓

Is there continuity between the following terminals with connector disconnected?
▼FR: Radio receiver assembly A7–Power amplifier A1
▼FL: Radio receiver assembly A6–Power amplifier A2
▼RR: Radio receiver assembly A15–Power amplifier A7
▼RL: Radio receiver assembly A14–Power amplifier A8

- No → Wire harness faulty.
- Yes ↓

Is there continuity between the following terminals with connector disconnected?
▼FR: Radio receiver assembly A7–ground
▼FL: Radio receiver assembly A6–ground
▼RR: Radio receiver assembly A15–ground
▼RL: Radio receiver assembly A14–ground

- Yes → Wire harness faulty.
- No ↓

Continued on next page

*: only for vehicles with cellular phone.

WhereEverybodyKnowsYourName

Continued from previous page

Temporarily install another power amplifier. Function is OK?

- Yes → Power amplifier faulty.
- No → Radio receiver assembly faulty.

24	CD player	VOLUME FAINT (EXCEPT WOOFER)

Is radio operating normally?

- Yes → Radio receiver assembly faulty.
- No ↓

When the volume switch is turned from minimum to maximum, does resistance between terminals B1–B3 of radio receiver assembly changer from 0 to 50 k ?

- No → Power switch faulty.
- Yes ↓

*Is there battery voltage between the following terminals with connector disconnected?
▼Radio receiver assembly D3 – ground

- Yes → Wire harness faulty.
- No ↓

*: only for vehicles with cellular phone

Temporarily install another power amplifier. Function is OK?

- Yes → Power amplifier faulty.
- No ↓

Radio receiver assembly faulty.

WhereEverybodyKnowsYourName

25	CD player	RH CHANNEL OR LH CHANNEL SPEAKER VOLUME FAINT

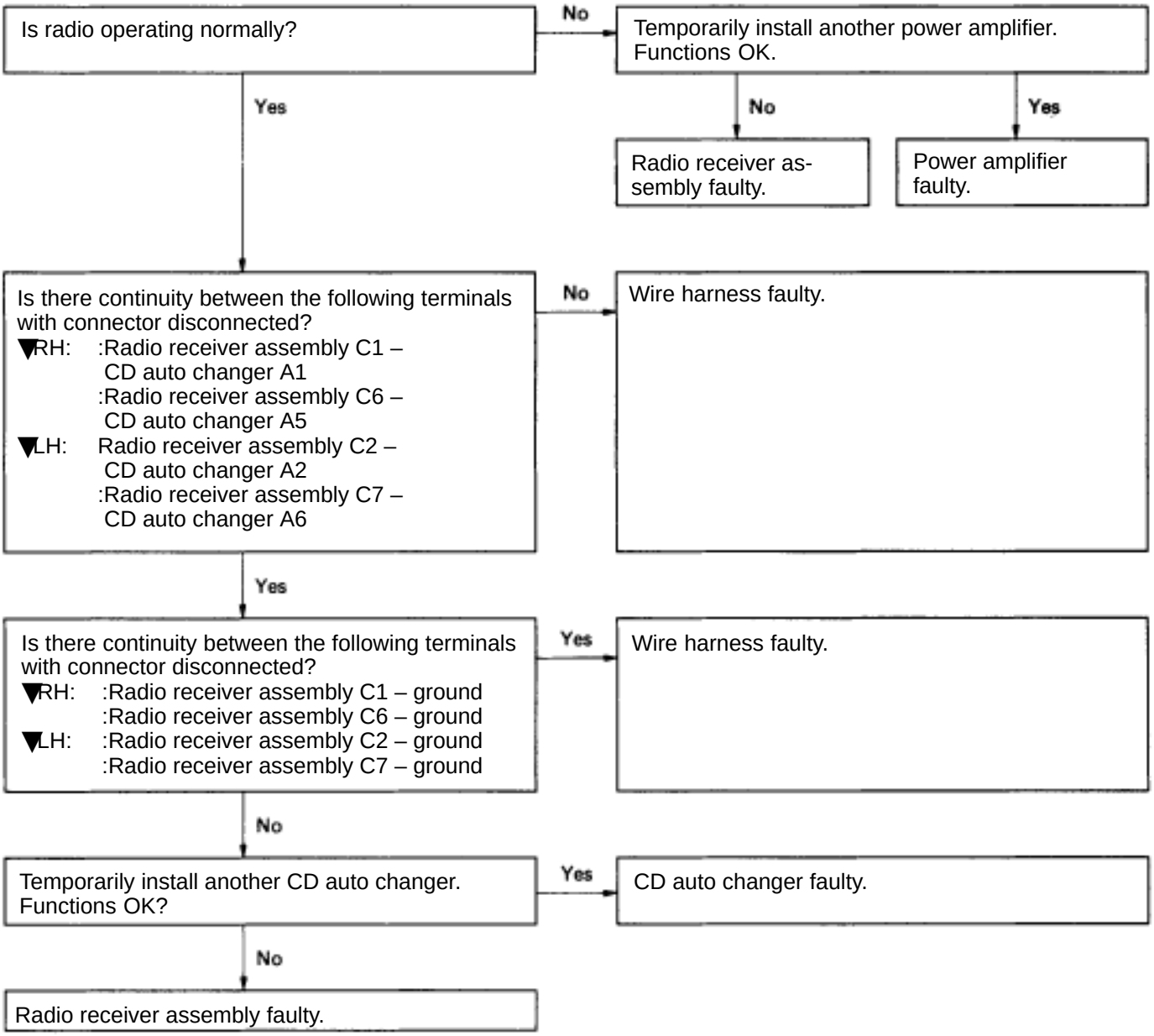

WhereEverybodyKnowsYourName

26	CD player	WOOFER DOES NOT WORK

HINT: The part names and terminals indicated in brackets ( ) are for models with a Nakamichi system.

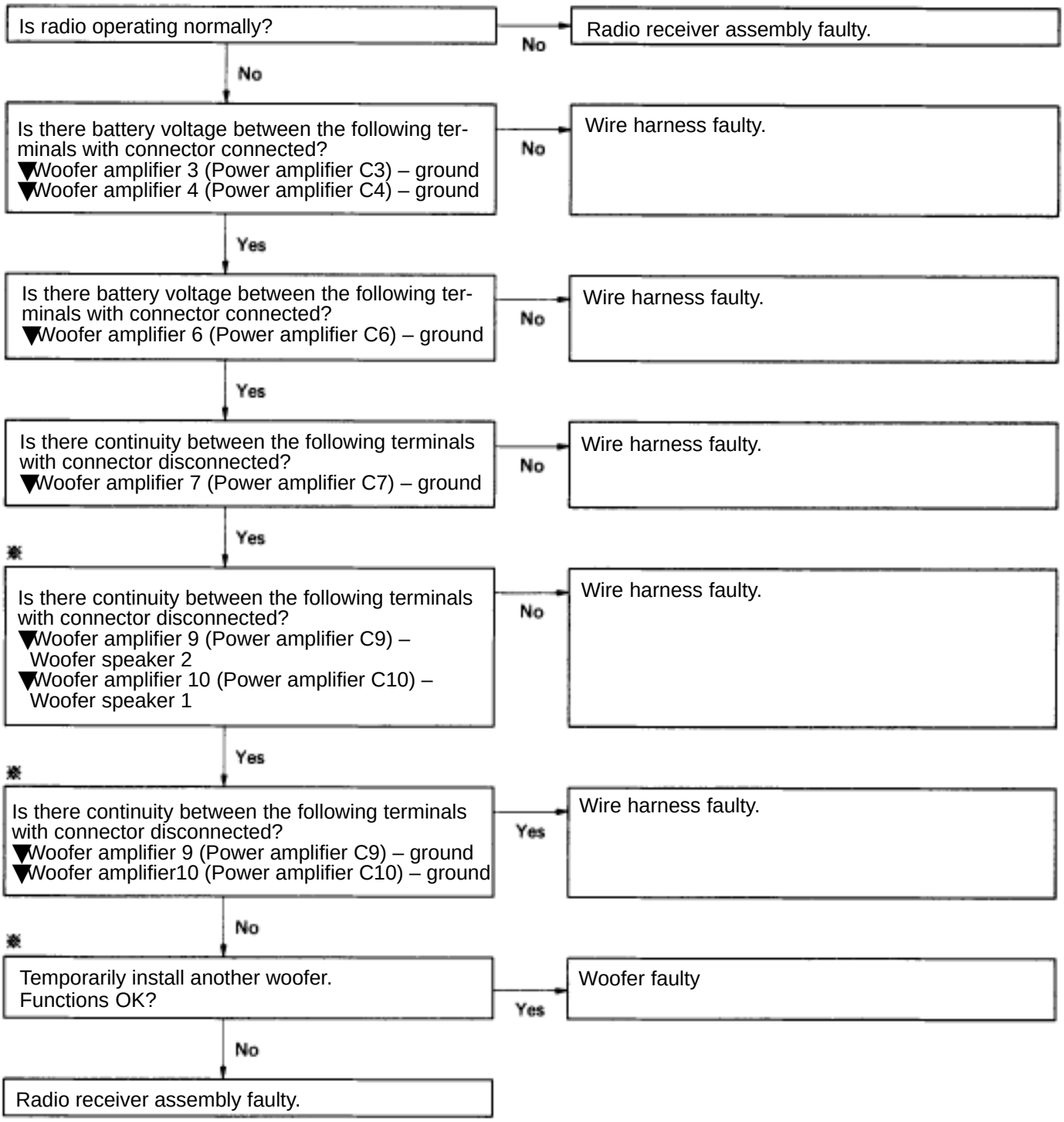

WhereEverybodyKnowsYourName

27	CD player	WOOFER VOLUME FAINT

HINT: The part names and terminals indicated in brackets ( ) are for models with a Nakamichi system.

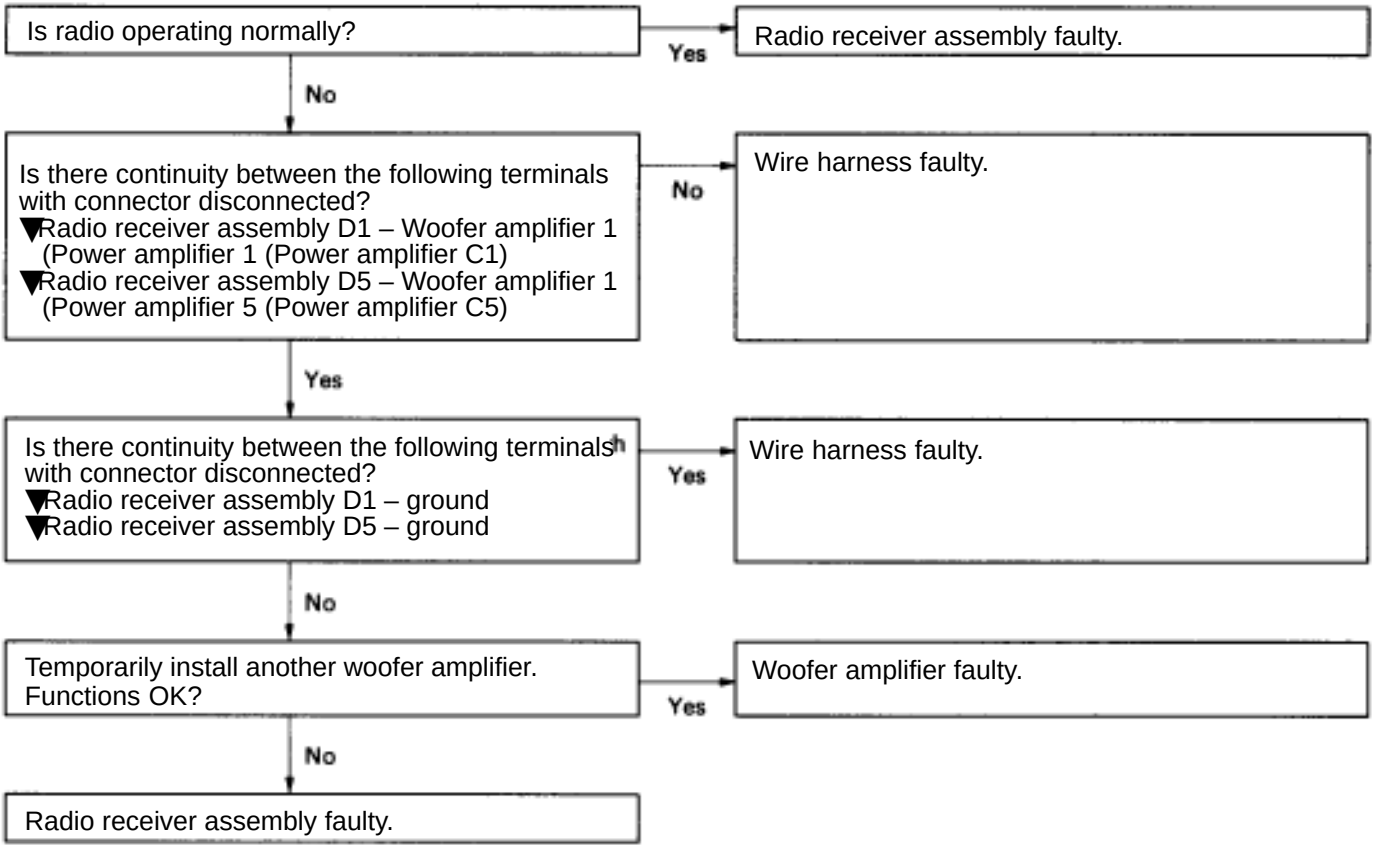

WhereEverybodyKnowsYourName

28 CD player SOUND QUALITY POOR

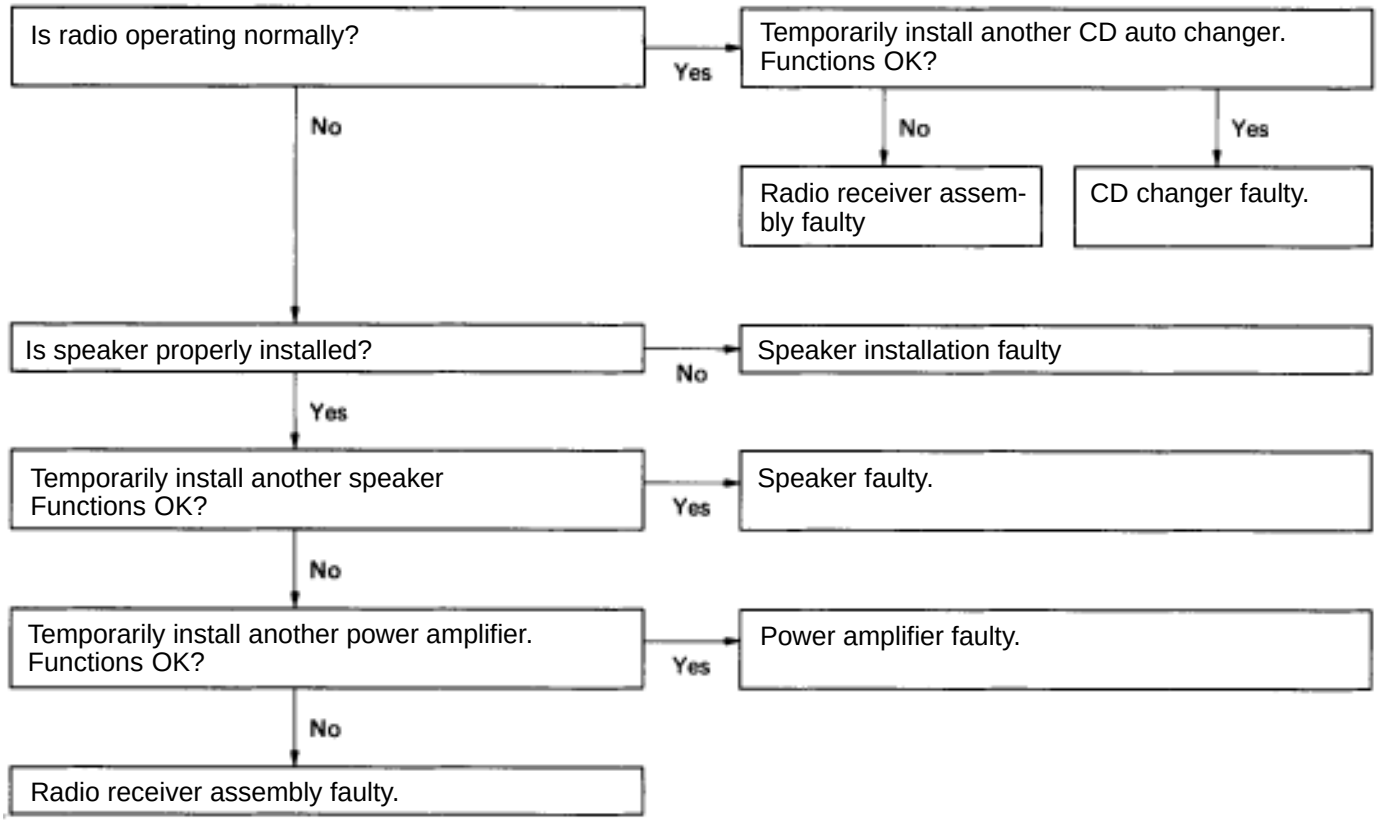

29 CD player VOLUME REMAINS AT MAXIMUM LEVEL

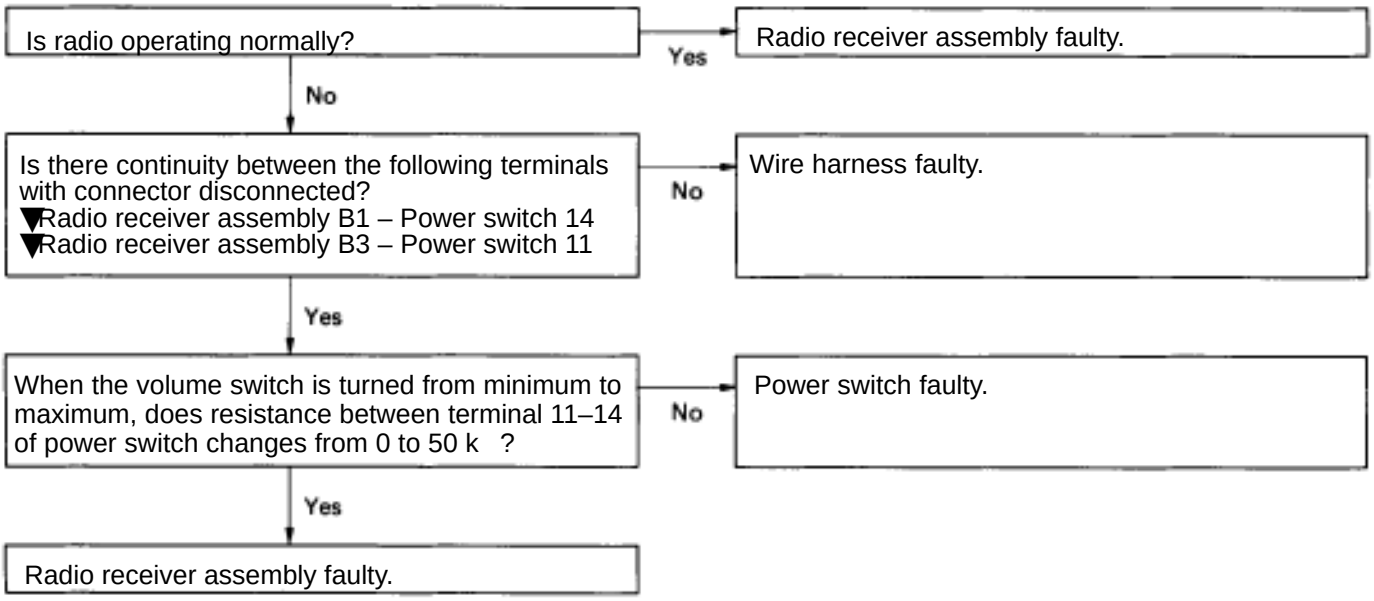

WhereEverybodyKnowsYourName

30	Noise	NOISE PRODUCED BY VIBRATION OR SHOCK WHILE DRIVING

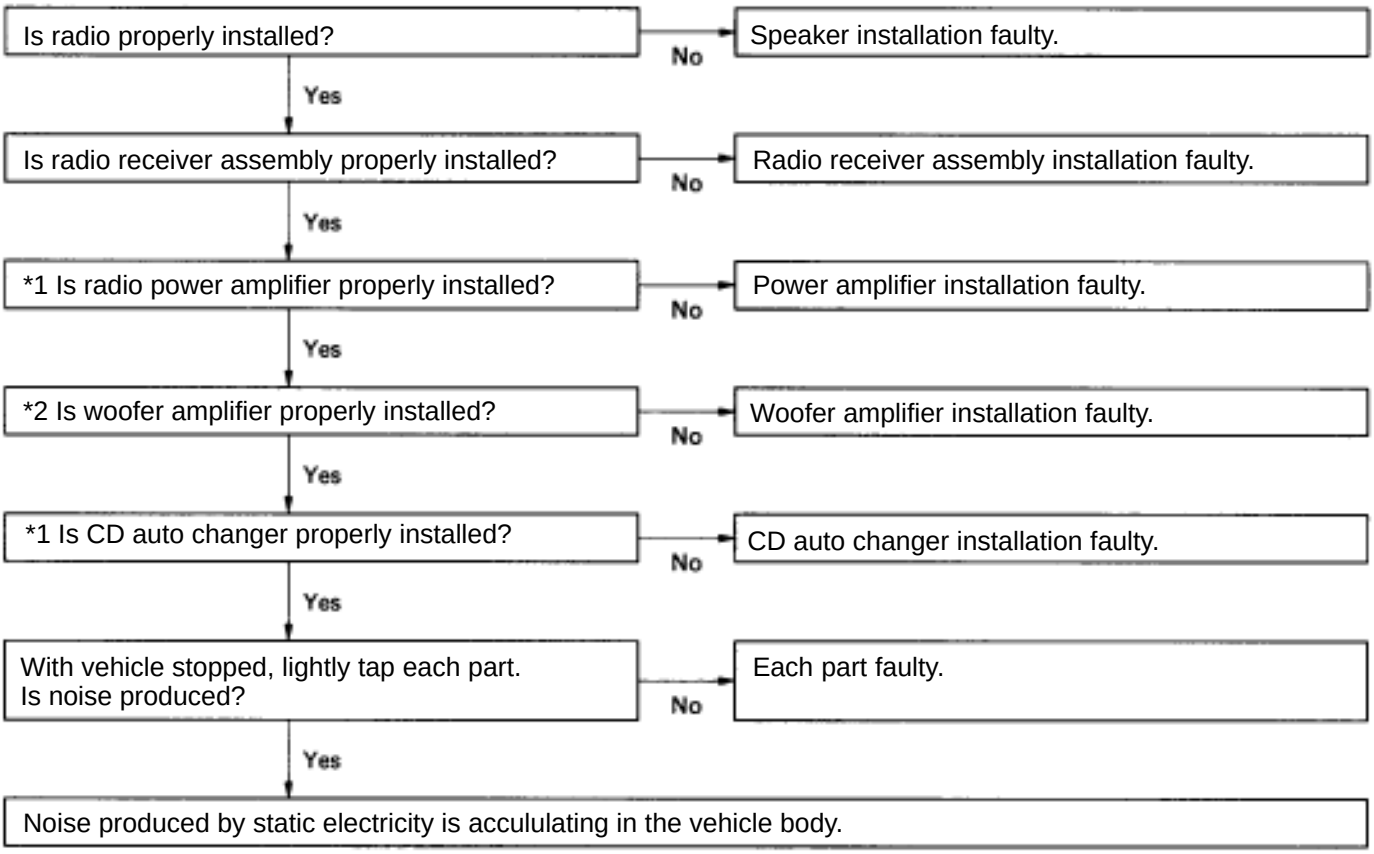

WhereEverybodyKnowsYourName

31	Noise	NOISE PRODUCED WHEN ENGINE STARTS

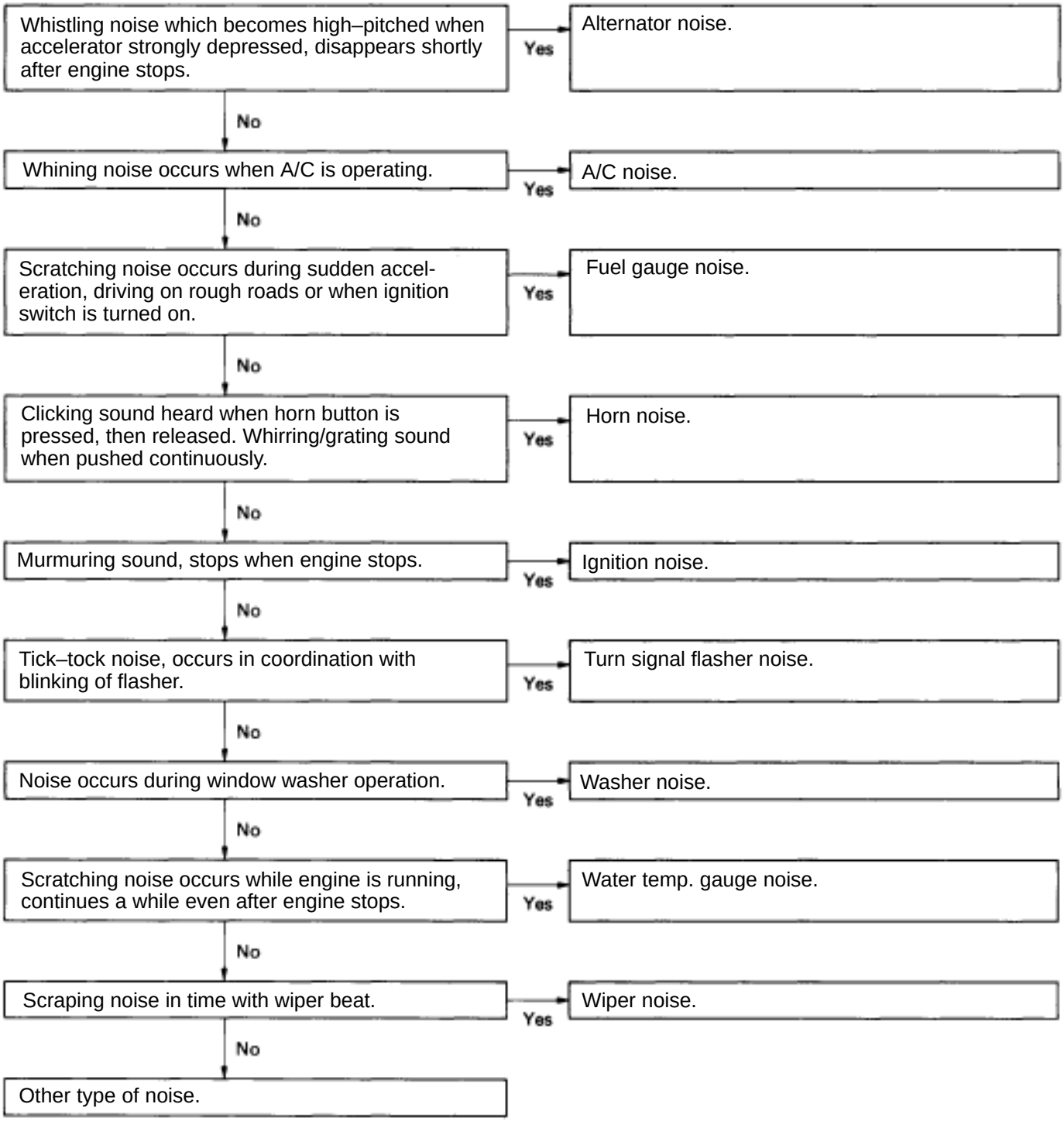

WhereEverybodyKnowsYourName

32	Antenna	ANTENNA–RELATED

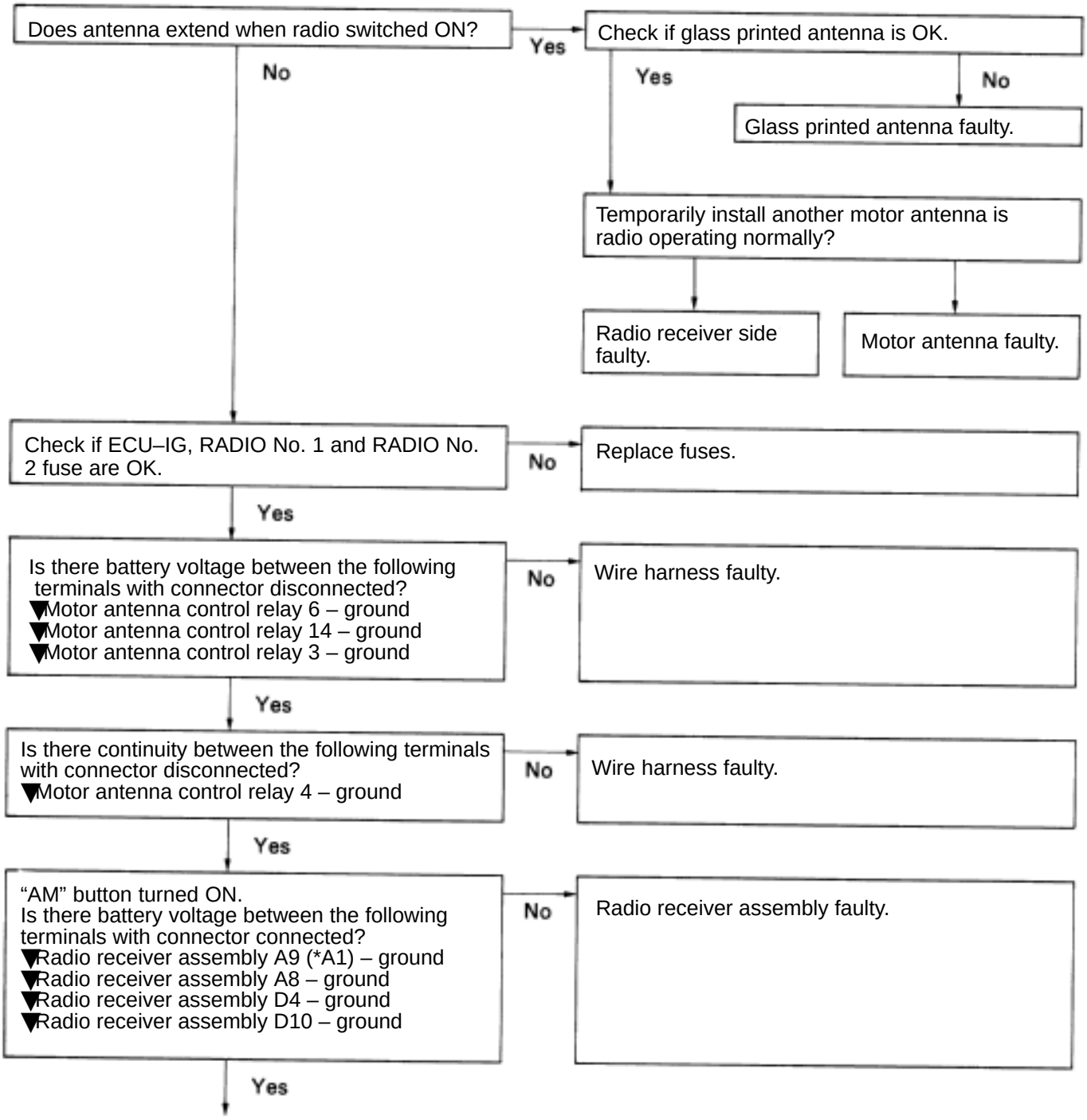

Continued on next page.

*: The terminals indicated in brackets ( ) are for models with CD player system.

WhereEverybodyKnowsYourName

Continued from previous page

Is there continuity between the following terminals with connector disconnected?
▼Radio receiver assembly A9 (*A1) – Motor antenna control relay 4
▼Radio receiver assembly A8 – Motor antenna control relay 5
▼Radio receiver assembly D4 – Motor antenna control relay 2
▼Radio receiver assembly D10 – Motor antenna control relay 12

No → Wire harness faulty.

Yes ↓

Temporarily install another motor antenna control relay. Functions OK?

Yes → Motor antenna control relay faulty.

No ↓

Motor antenna control relay faulty.

*: The terminals indicated in brackets ( ) are for models with CD player system.

WhereEverybodyKnowsYourName

HORN SYSTEM

PARTS LOCATION

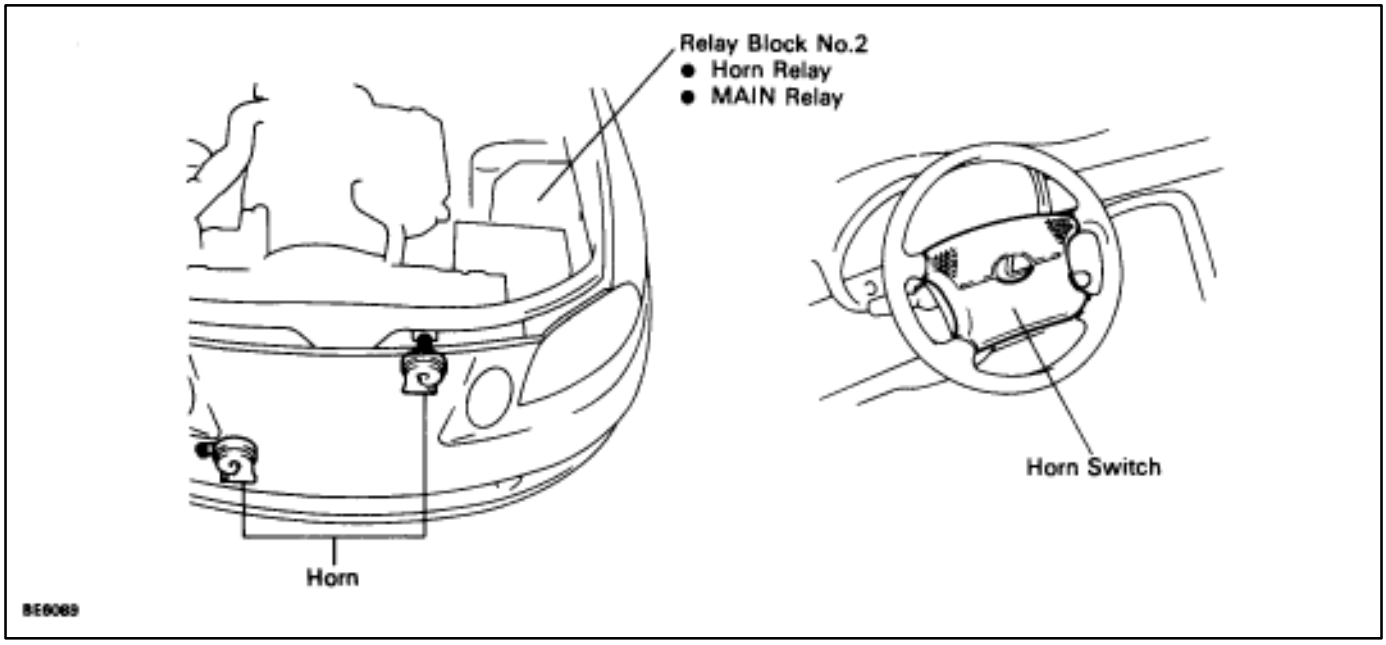

WIRING AND CONNECTOR DIAGRAMS

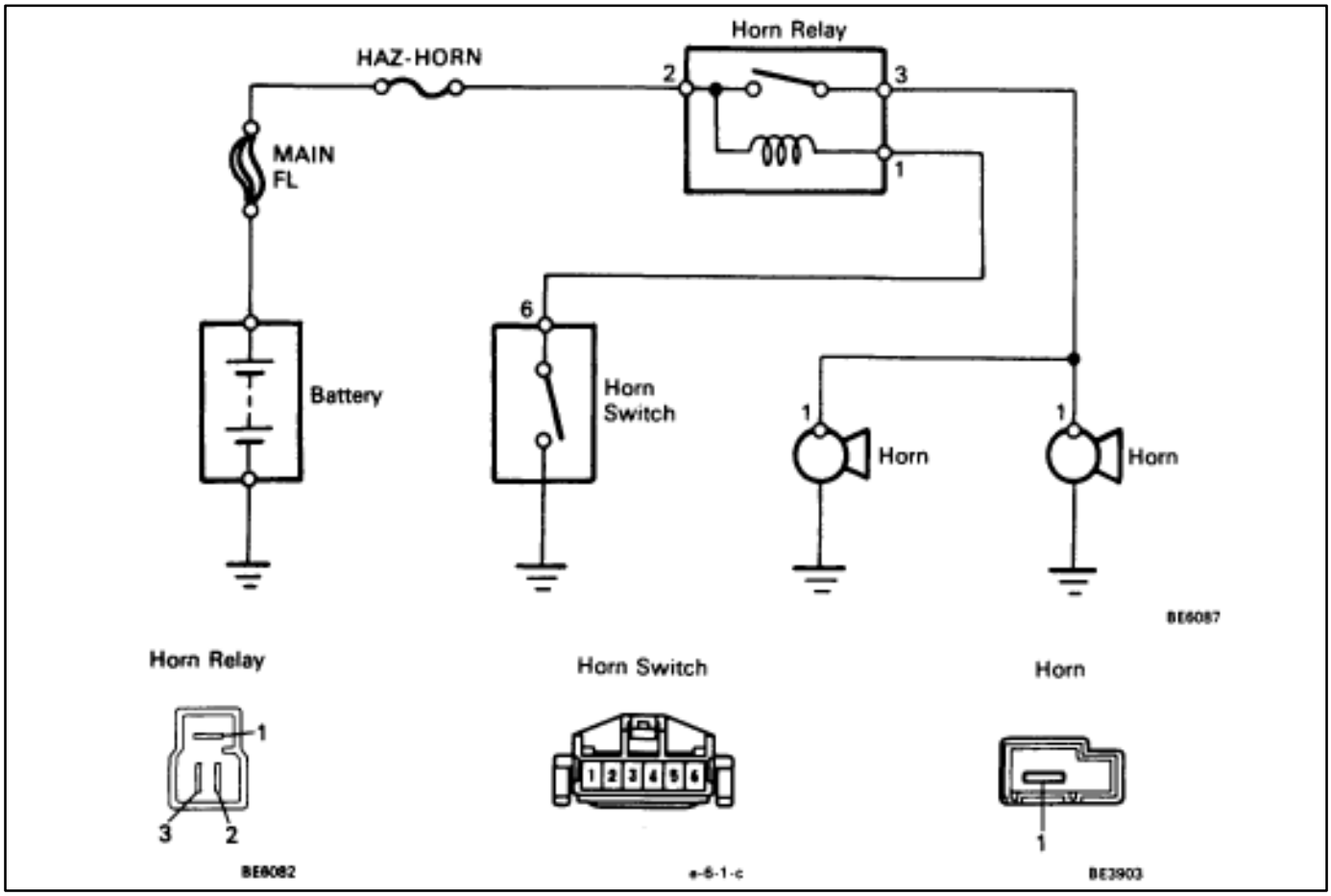

WhereEverybodyKnowsYourName

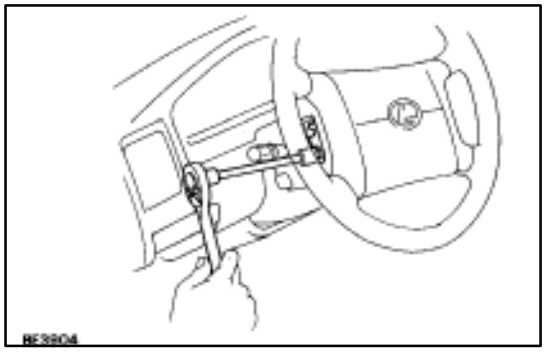

Parts Inspection
(Horn Switch)
INSPECTION OF HORN SWITCH

INSPECT HORN SWITCH

(a) Disconnect the negative (–) terminal from the battery.

(b) Remove the left and right covers from the steering wheel.

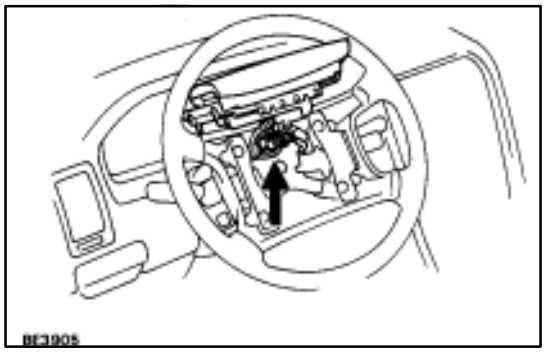

(c) Using a torx wrench, loosen the four bolts.

(d) Pull up the horn pad and place it on the steering column as shown.

HINT: Do not disconnect the connector from the horn pad.

(e) Disconnect the connector from the slip ring.

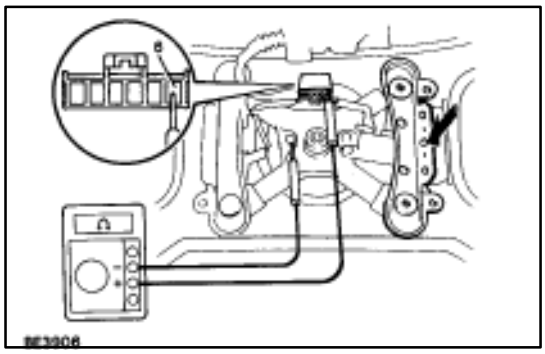

(f) Check that there is no continuity between terminal 6 of the connector and body ground.

(g) Check that there is continuity between terminal 6 of the connector and body ground when the horn contact plate is pressed against the steering spoke assembly.

If continuity is not as specified, repair or replace the steering wheel or wire harness as necessary.

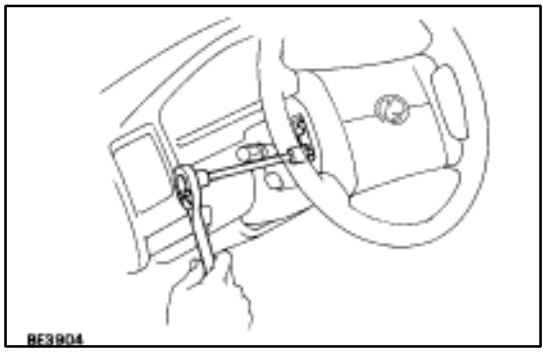

(h) Install the horn pad in place and using a torx wrench, tighten the four bolts.

Torque: 7.1 N·m (72 kgf·cm, 62 in.·lbf)

(i) Install the left and right covers.

(j) Connect the negative (–) terminal to the battery.

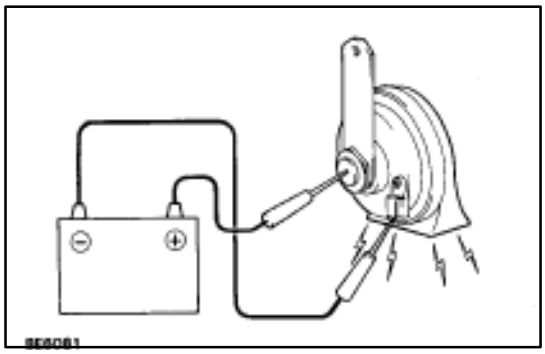

(Horn)
INSPECTION OF HORN

INSPECT HORN OPERATION

Connect the positive (+) lead from the battery to the terminal and negative (–) lead to the horn body and check that the horn blows.

If operation is not as specified, replace the horn.

WhereEverybodyKnowsYourName

HORN RELAY

HORN RELAY INSPECTION

INSPECT RELAY CONTINUITY AND OPERATION

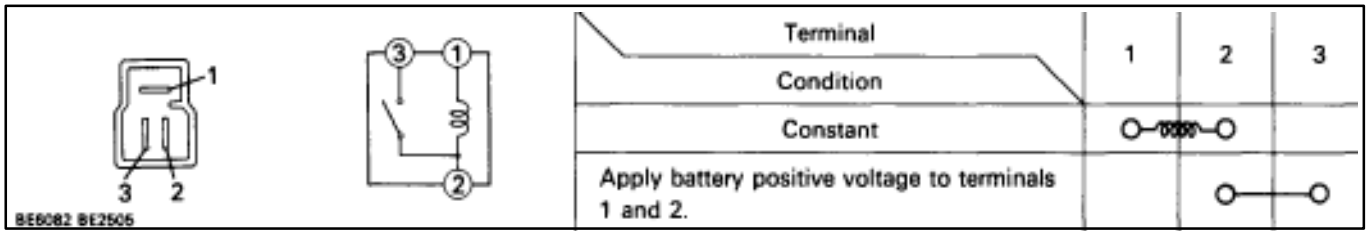

If operation is not as specified, replace the relay.

Troubleshooting

You will find the cause of trouble more easily by properly using the table shown below. In this table, the numbers indicate the order of priority of the causes of trouble. Check each part in the order shown. If necessary, replace these part.

See page	BE–4, 21	BE–264	BE–263	BE–263	–
Parts name / Trouble	HAZ–HORN Fuse	Horn Switch	Horn Switch	Horn	Wire Harness
Horn system does not operate	1	2	3	4	5
Horns blow all the time		1	2		3
One horn operates but other horn does not Operate				1	2
Horns operate abnormally		1		2	3

WhereEverybodyKnowsYourName

POWER SEAT CONTROL SYSTEM (Driver's seat)

WhereEverybodyKnowsYourName

DESCRIPTION

The Power Seat Control System carries out seat slide, front vertical, rear vertical, reclining and lumbar support position adjustments electrically. Power seat switch and lumbar support switch.
In addition, operation of the memory switch makes it possible to store the positions of the slide, front vertical, rear vertical and reclining adjustments in memory and return to the position.
The component parts of this system and their function are described in the following table.

Parts Name	Function
Driver's Seat ECU	The seat ECU controls power operation, memory operation, and position return operation of the power seat. When input is received from the power seat switch, the relay inside the ECU is controlled and the power seat operates. The seat memory and position return are controlled by mutual communication between the electrically operated Tilt and Telescopic ECU and the seat ECU.
Power Seat Switch	Operation of this switch sends slide, front vertical, rear vertical, reclining signals to ECU.
Driving Position Memory and Return Switch	Memory and Return Signals are sent to the seat ECU via the Tilt and Telescopic ECU.
Lumbar Support Switch	This switch is supplied with power from the DOOR fuse. When the switch is operated, power is supplied to the lumbar support motor controlling the direction in which the motor turns and turning the current ON and OFF. This switch is not connected to the ECU and the adjustment position cannot be stored in memory for return operation.
Position Sensor	This sensor sends signals on the position of each motor (slide, front vertical, rear vertical and reclining) to the ECU for use in memory and return.
*Motor	These motors operate on current from the driver's seat ECU moving the various parts of the seat directly. Each motor has a built–in circuit breaker.

*: Slide, Front Vertical, Rear Vertical, Lumbar Support and Reclining.

Motors contained in each seat are described in the following table.

Motor / Seat	Slide Motor	Front Vertical Motor	Rear Vertical Motor	Reclining Motor	Lumbar Support Motor
Driver's Seat	O*	O*	O*	O*	O

*: Operated by the memory and return functions.

WhereEverybodyKnowsYourName

PARTS LOCATION

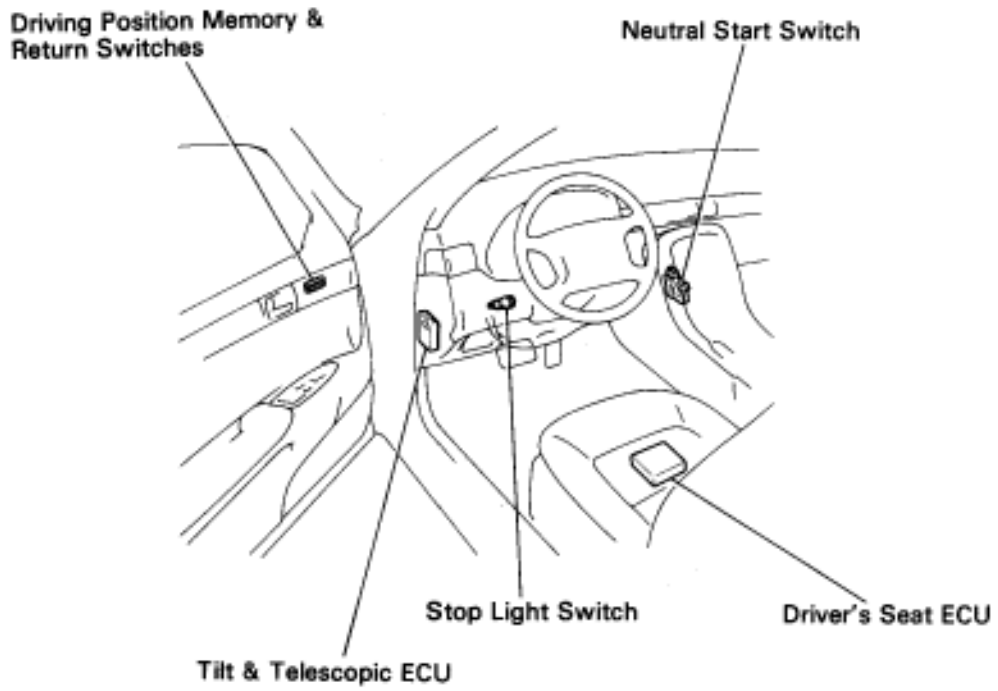

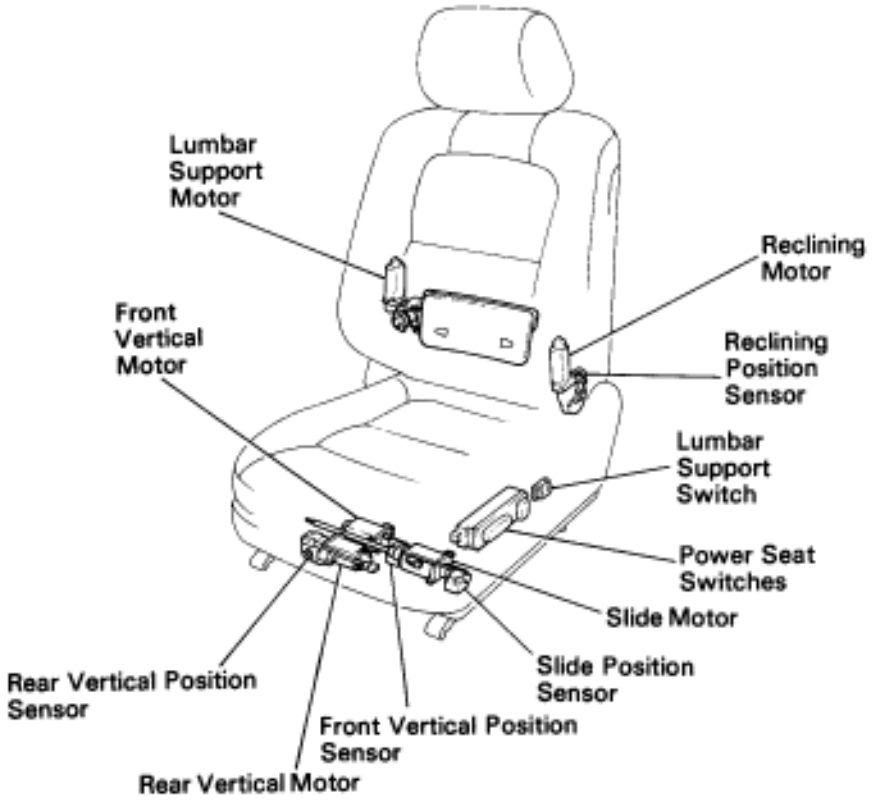

BE0388
BE0389

WhereEverybodyKnowsYourName

HOW TO PROCEED WITH TROUBLESHOOTING

Perform troubleshooting in accordance with the procedure on the following page.

▼ **CUSTOMER PROBLEM ANALYSIS**

Using the customer problem analysis check sheet for reference, ask the customer in as much detail as possible about the problem.

2 **PROBLEM SYMPTOM CONFIRMATION,** 2 **SYMPTOM SIMULATION.**

Confirm the problem symptoms. If the problem does not reappear, be sure to simulate the problem using the "Problem Simulation Methods".

When checking the problem symptoms, pay attention to the following points to accurately define the symptoms and the extent of the problem:

For "Not Functioning" problems:

(1) Is the problem only in one part (e.g. "reclining only"), or everything?

(2) Is the problem only for manual operation, only for position return operation, or for both manual and position return operation?

(3) Is tilt, telescopic and outer mirror operation normal?

(4) Does the problem occur with the ignition key inserted, or not inserted?

10 **MATRIX CHART OF PROBLEM SYMPTOMS**

Confirm the order of inspection on the matrix chart for the particular problem symptom involved. For "Not Functioning" problems, pay attention to the points in 2. to find out the specifics of the problem, then choose the most appropriate problem symptom from among those listed on the matrix chart, and proceed with troubleshooting accordingly.

5 **CIRCUIT INSPECTION**

Proceed with diagnosis of each circuit in accordance with the inspection order confirmed in 10.

Determine whether the cause of the problem is in the sensor, actuators, wire harness and connectors, or the ECU.

6 **POSITION SENSOR CHECK**

This function checks that the signal from each position sensor is correctly input into the ECU when the manual switch is turned ON. The instructions for this diagnosis are included in the flow chart for the position sensor circuit.

7 **REPAIR**

After the cause of the problem is located, perform repairs by following the inspection and replacement procedures is this manual.

9 **CONFIRMATION TEST**

After completing repairs, confirm that the problem is eliminated and that tilt, telescopic and outer mirror operation is normal.

WhereEverybodyKnowsYourName

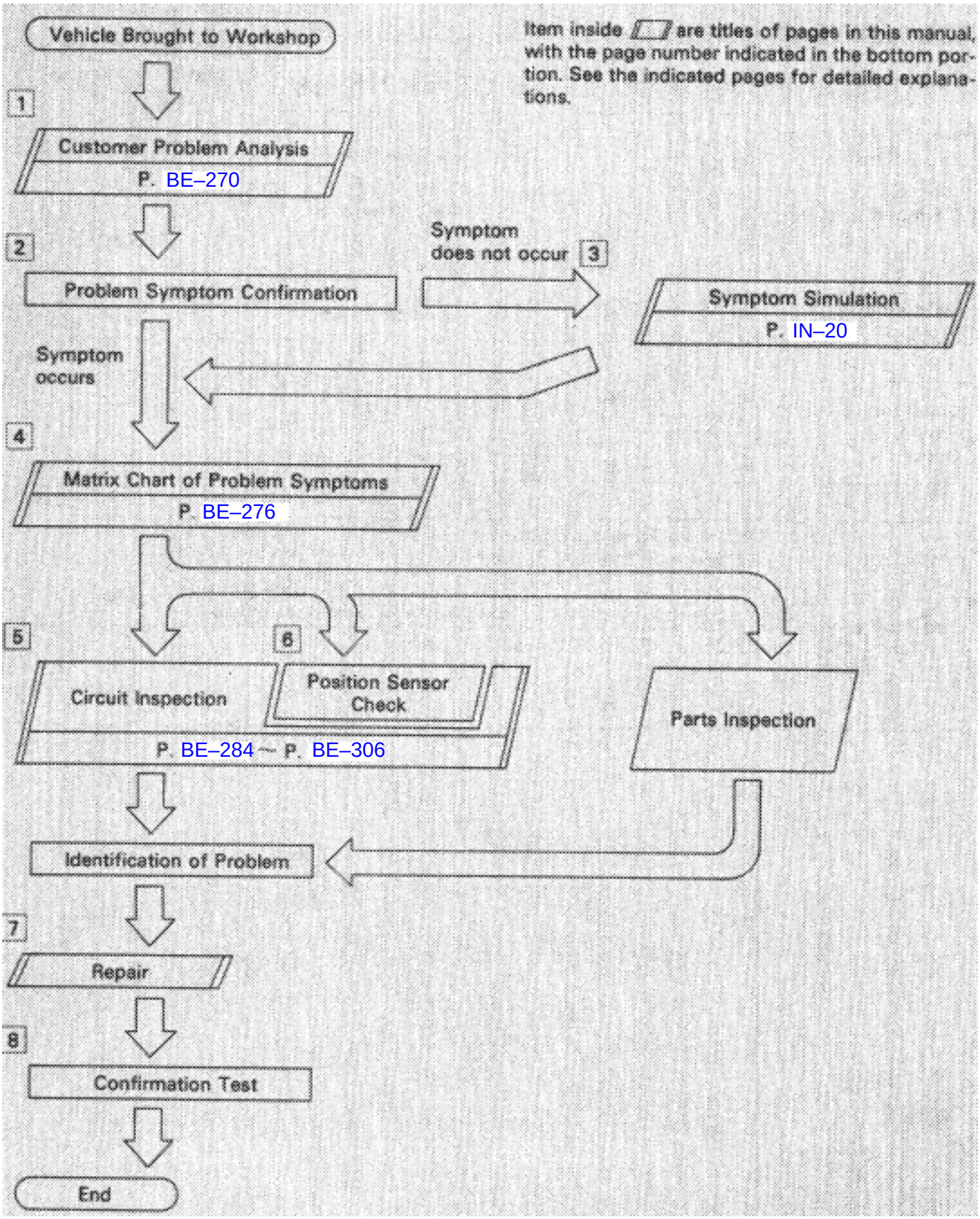

WhereEverybodyKnowsYourName

CUSTOMER PROBLEM ANALYSIS CHECK SHEET

POWER SEAT Check Sheet

Inspector's Name : _____

Customer's Name		**Registration No.**	
		Registration Year	/ /
		Frame No.	
Date Vehicle Brought In	/ /	**Odometer Reading**	Km Miles

Condition of Problem Occurrence	**Date Problem Occurrence**	/ /
	How Often does Problem Occur?	▼Continuous ▼Intermittent (times a day)

Symptoms	▼ Manual Function does not operate	▼Slide ▼Front Vertical ▼Rear Vertical ▼Reclining ▼Lumbar Support
	▼ Return Function does not operate	▼Slide ▼Front Vertical ▼Rear Vertical ▼Reclining ▼Does not operate in any conditions ▼Only with key inserted ▼Only with key not inserted ▼Only with memory & return switch 1 or 2
	▼ Memory function does not operate.	
	▼ Position return function does not stop when brake pedal is depressed.	

For "Return function does not operate" malfunctions, check the return operation of the items below.

Check Item	**Tilt & Telescopic**	▼OK	▼NG
	Outer Mirror	▼OK	▼NG

WhereEverybodyKnowsYourName

WIRING DIAGRAM

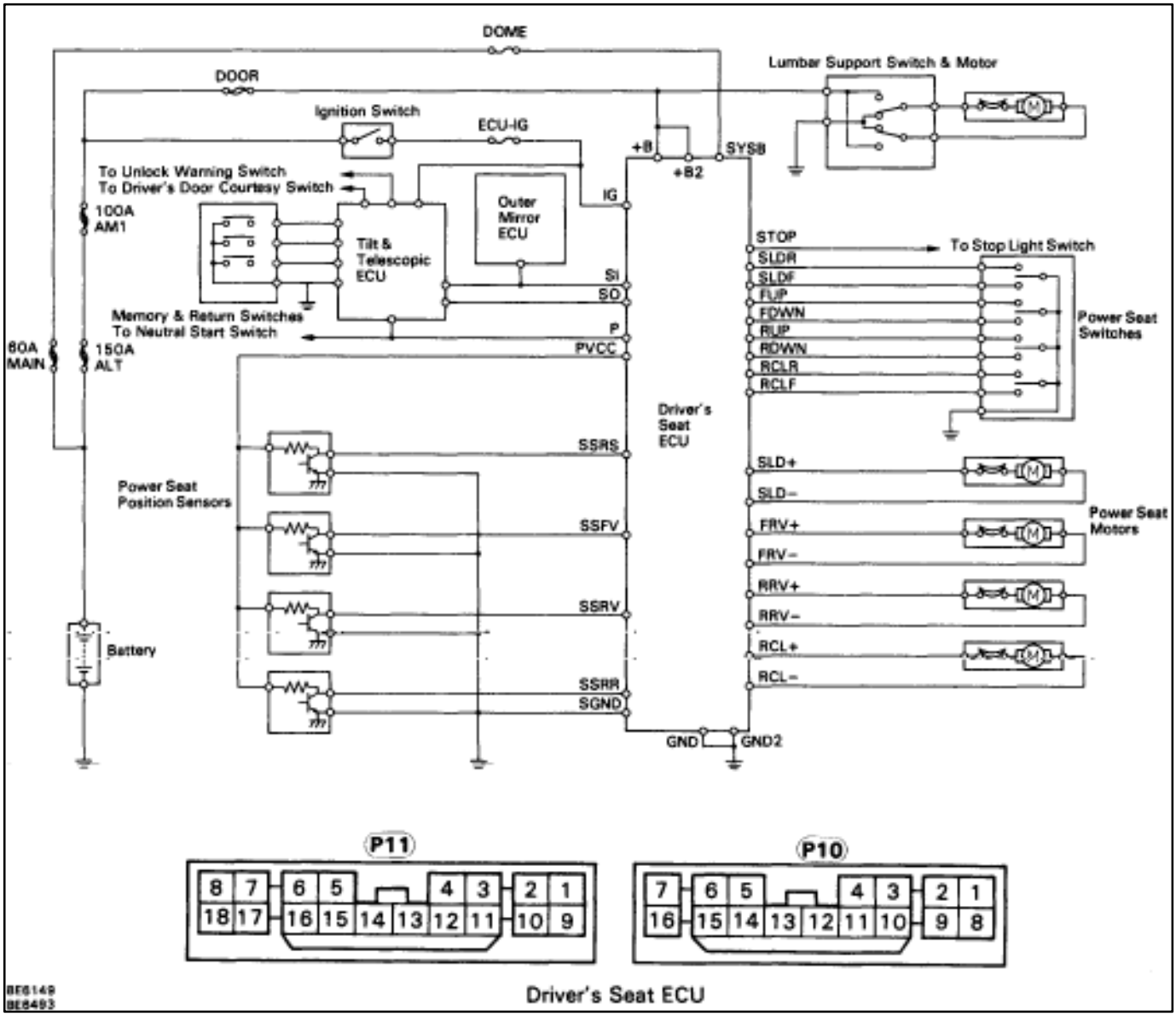

No.	Symbol	Terminal Name	No.	Symbol	Terminal Name	No.	Symbol	Terminal Name
P11 –1	SLDF	Slide Switch (Forward)	P11–13	CHK	Check	P10–7	IG	Ignition Switch
2	RCLF	Reclining Switch (Forward)	14	SSRR	Reclining Sensor	8	GND2	Ground 2
3	FUP	Front Vertical Switch (UP)	15	SSRV	Rear Vertical Sensor	9	SLD–	Slide Motor (Back)
4	RUP	Rear Vertical Switch (UP)	16	SSRS	Slide Sensor	10	RCL–	Reclining Motor (Down)
5	SSFV	Front Vertical Switch	17	SO	Serial Communications	11	FRV–	Front Vertical Motor (Down)
6	PVCC	Position Sensor Power Source	18	SGND	Sensor Ground	12	RRV–	Rear Vertical Motor (Down)
7	SYSB	Power Source	P10–1	GND	Ground	13	RRV+	Rear Vertical Motor (Forward)
8	SI	Serial Communications	2	SLD+	Slide Motor (Forward)	14	+B2	Power Source
9	SLDR	Slide Switch (Back)	3	RCL+	Reclining Motor (Up)	15	P	Neutral Start Switch
10	RCLR	Reclining Switch (Back)	4	FRV+	Front Vertical Motor (Up)	16	—	—
11	FDWN	Front Vertical Switch (Down)	5	+B	Power Source			
12	RDWN	Rear Vertical Switch (Down)	6	STOP	Stop Light			

WhereEverybodyKnowsYourName

STANDARD VALUE OF ECU TERMINAL

Terminals	Symbols	Wiring Color	Condition	Standard Value
P11–1↔Body Ground	SLDF↔Body Ground	L	Seat moved forward using slide SW	Below 1 V
			Others	10–14 V
P11–2↔Body Ground	RCLF↔Body Ground	Y–R	Seat moved forward using reclining SW	Below 1 V
			Others	10–14 V
P11–3↔Body Ground	FUP↔Body Ground	L–Y	Seat raised using front vertical SW	Below 1 V
			Others	10–14 V
P11–4↔Body Ground	RUP↔Body Ground	Y–G	Seat raised using rear vertical SW	Below 1 V
			Others	10–14 V
P11–5↔P11–18	SSFV↔SGND	LG–R↔BR–B	Front vertical operation	0 V↔8 V
P11–6↔P11–18	PVCC↔SGND	V↔BR–B	Manual position return operation	8 V
P11–7↔P10–1	SYSB↔GND	R↔W–B	Always	10–14 V
P11–8	SI	W	Signals between power seat ECU & tilt telescopic ECU	0 V↔12 V
			Others	Resistance (approx. 2.5 k?)
P11–9↔Body Ground	SLDR↔Body Ground	L–B	Seat moved to rear using slide SW	Below 1 V
			Others	10–14 V
P11–10↔Body Ground	RCLR↔Body Ground	Y–B	Seat moved to rear using reclining SW	Below 1 V
			Others	10–14 V
P11–11↔Body Ground	FDWN↔Body Ground	L–R	Seat lowered using front vertical SW	Below 1 V
			Others	10–14 V
P11–12↔Body Ground	RDWN↔Body Ground	Y–L	Seat lowered using rear vertical SW	Below 1 V
			Others	10–14 V
P11–13	CHK			
P11–14↔P11–18	SSRR↔SGND	V–W↔BR–B	Reclining operation	0 V↔8 V
P11–15↔P11–18	SSRV↔SGND	Y–G↔BR–B	Rear vertical operation	0 V↔8 V
P11–16↔P11–18	SSRS↔SGND	LG↔BR–B	Slide operation	0 V↔8 V

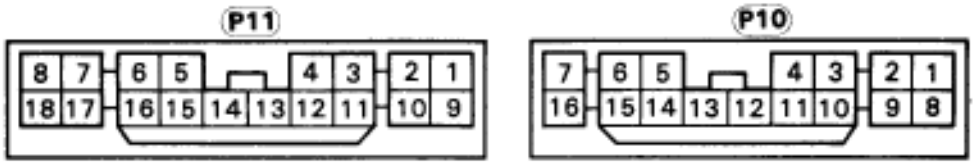

Driver's Seat ECU

BE6493

WhereEverybodyKnowsYourName

P11–17	SO	B	Signals between power seat ECU & tilt telescopic ECU	0 V↔12 V
P11–18	SGND	BR–B	Always	Below 1 V
P10–1	GND	W–B	Always	Below 1 V
P10–2↔P10–1	SLD+↔GND	L↔W–B	Seat moved forward using slide SW	10–14 V
			Others	Below 1 V
P10–3↔P10–1	RCL+↔GND	Y–R↔W–B	Seat moved forward using reclining SW	10–14 V
			Others	Below 1 V
P10–4↔P10–1	FRV+↔GND	L–Y↔W–B	Seat raised using front vertical SW	10–14 V
			Others	Below 1 V
P10–5	+B	L–W	Always	10–14 V
P10–6↔Body Ground	STOP↔Body Ground	G↔W	Brake pedal depressed	10–14 V
			Others (Several ? or less)	Below 1 V
P10–7	IG	B–R	Ignition SW ON	10–14 V
P10–8	GND2	W–B	Always	Below 1 V
P10–9↔P10–1	SLD–↔GND	L–B↔W–B	Seat moved to rear using slide SW	10–14 V
			Others	Below 1 V
P10–10↔P10–1	RCL–↔GND	Y–B↔W–B	Seat moved to rear using reclining SW	10–14 V
			Others	Below 1 V
P10–11↔P10–1	FRV–↔GND	L–R↔W–B	Seat lowered using front vertical SW	10–14 V
			Others	Below 1 V
P10–12↔P10–1	RRV–↔GND	Y–LW–B	Seat lowered using rear vertical	10–14 V
			Others	Below 1 V
P10–13↔P10–1	RRV+↔GND	Y–L↔W–B	Seat raised using rear vertical	10–14 V
			Others	Below 1 V
P10–14	+B2	L–W	Always	10–14 V
P10–15↔Body Ground	P↔Body Ground	GR	Shift lever in "P" with IG ON	10–14 V
			Others (10? or less)	Below 1 V
P10–16	—	—	—	—

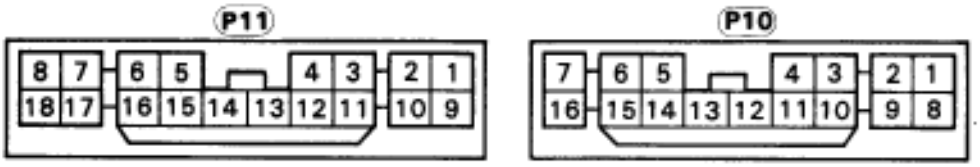

Driver's Seat ECU

B66403

WhereEverybodyKnowsYourName

MATRIX CHART OF PROBLEM SYMPTOMS

Perform troubleshooting of the circuits for the applicable problem symptom in the order given in the chart below. Proceed to the page located for each circuit.

The Driver's Seat ECU communicates with the tilt & telescopic ECU about memory and return, so there are occasions when a power seat problem symptom is caused by trouble in the tilt and telescopic circuit. When the instruction "See tilt and telescopic section" appears in the matrix chart, proceed to the matrix chart (see page SR–28) in the tilt and telescopic section and inspect the circuits as directed by the matrix chart.

See page / Suspect Area / Symptom			BE–28 4	BE–28 6	BE–28 8
			+B Power Source Circuit	ECU Power Source Circuit	Motor Circuit
Both manual & return functions do not operate	All functions		1		3
	One function only				1
One or all functions do not operate for manual operation only.					
Memory function does not operate			→	→	→
Return operation does not stop when brake pedal is depressed					
Only return function does not operate or operates a little, then stops	All return functions	Tilt & telescopic return operate normally		1	
		Tilt & telescopic return also does not operate	→	→	→
	Only one return function				
	With ignition key inserted, return only	Tilt & telescopic return operate normally			
		Tilt & telescopic return also does not operate			
	With ignition key not inserted return only		→	→	→

WhereEverybodyKnowsYourName

HINT:

- If the instruction "Proceed to next circuit inspection shown on matrix chart" is given in the flow chart for each circuit, proceed to the circuit with the next highest number in the table to continue the check.
- If the trouble still reappears even though there are no abnormalities in any of the other circuits, then check and replace the driver's seat ECU as the last step.

BE–29 2	BE–29 4	BE–29 8	BE–30 0	BE–30 2	BE–30 4	BE–30 6	IN–32
Position Sensor Power Source Circuit	Position Sensor Circuit	Stop Light Circuit	Neutral Start Switch Circuit	Ignition Switch Circuit	Power Seat Switch Circuit	Serial Communication Circuit	Driver's Seat ECU
					2		4
							2
					1		2
See tilt and telescopic section on page SR–28							
		1					2
2						3	4
See tilt and telescopic section on page SR–28							
	1						2
			1				2
				1			2
See tilt and telescopic section on page SR–28							

WhereEverybodyKnowsYourName

LOCATION OF CONNECTORS

Location of Connectors in Engine Compartment

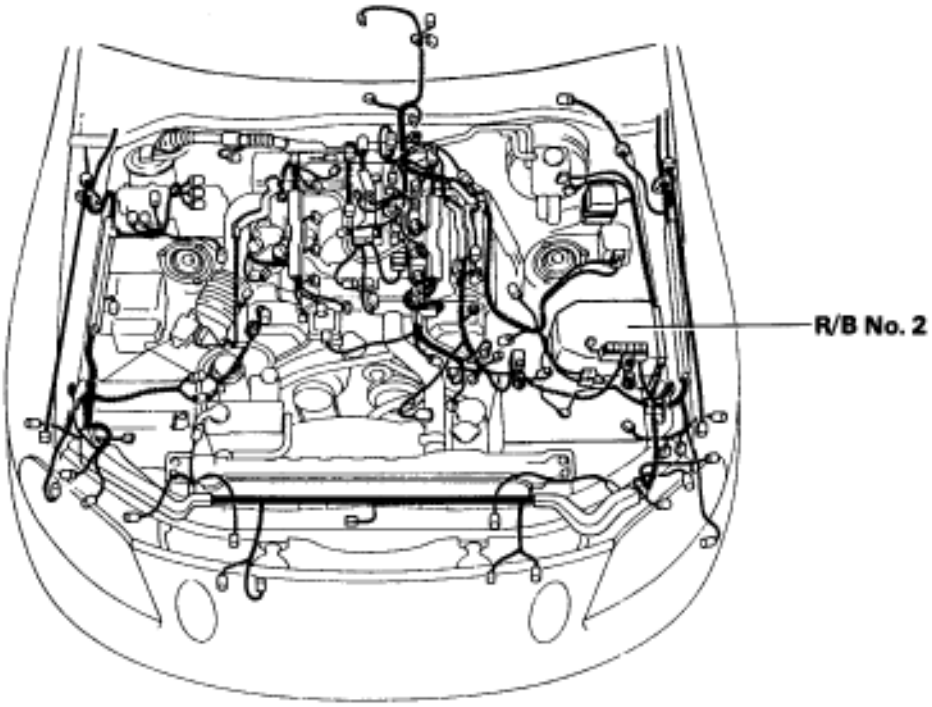

BE6630

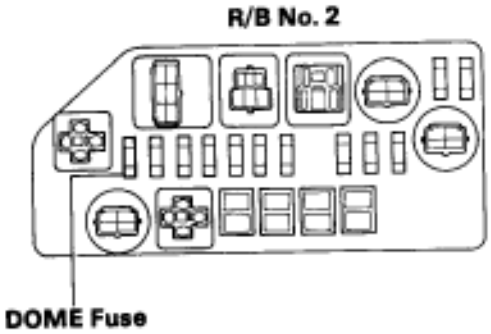

BE6625

WhereEverybodyKnowsYourName

Location of Connectors in Body

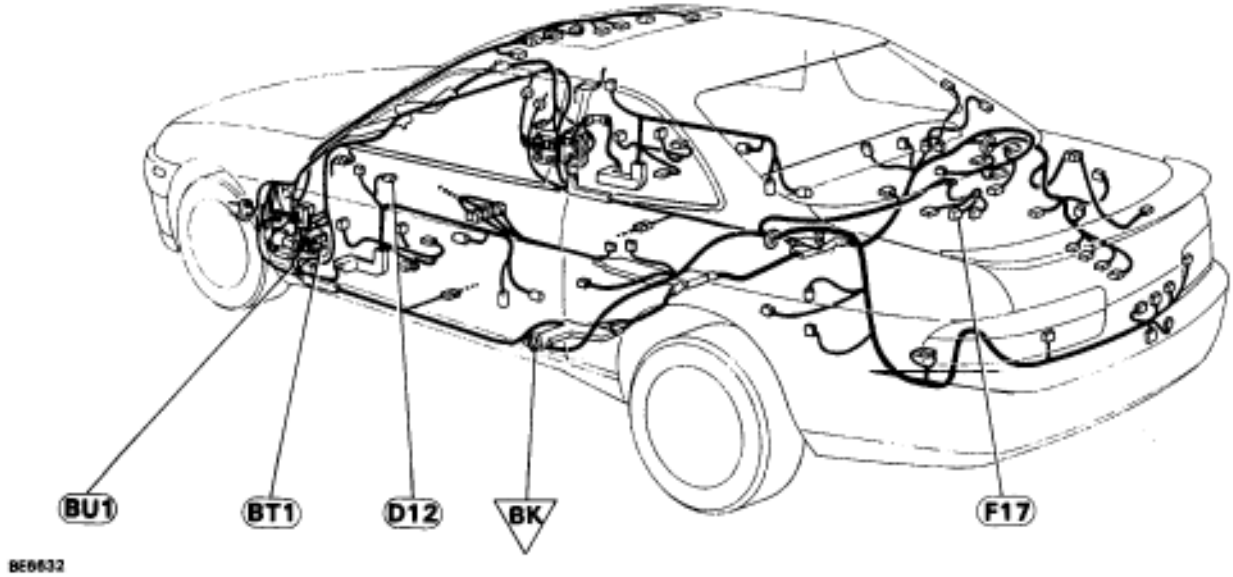

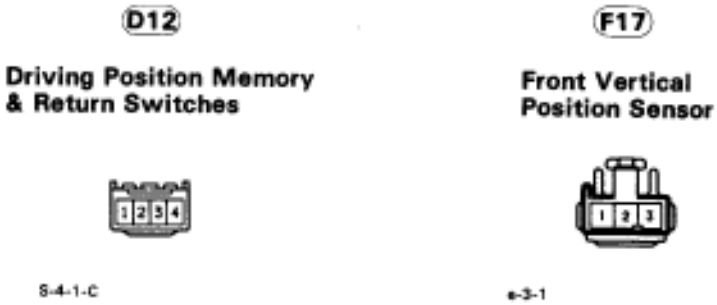

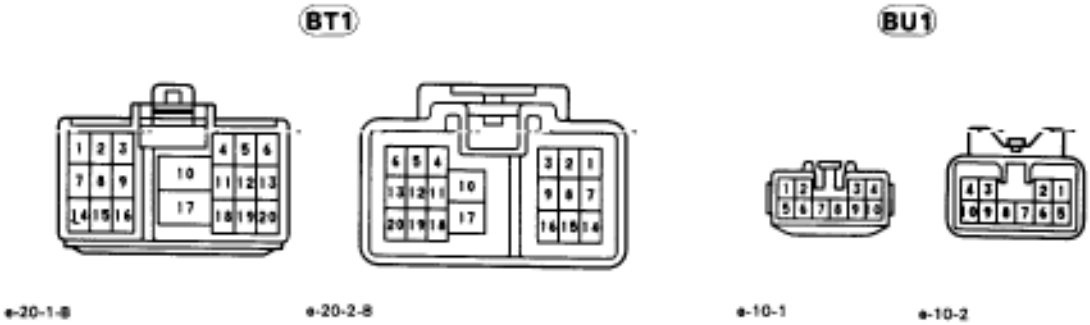

WhereEverybodyKnowsYourName

Location of Connectors in Instrument Panel

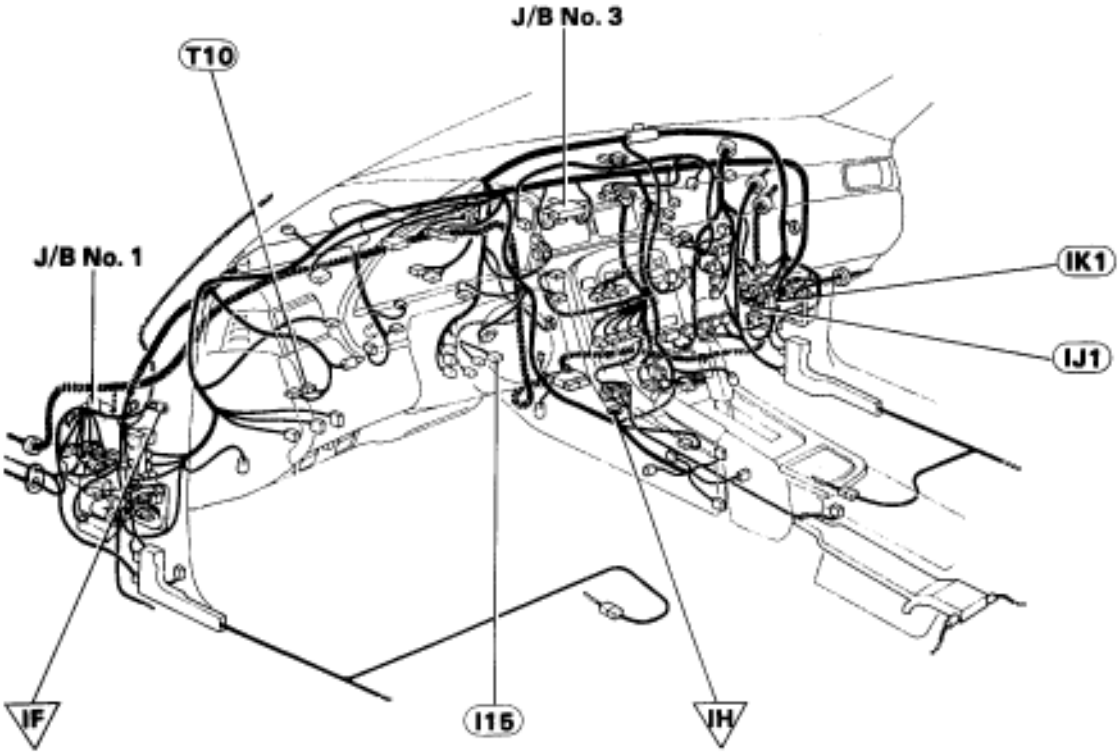

BE6631

WhereEverybodyKnowsYourName

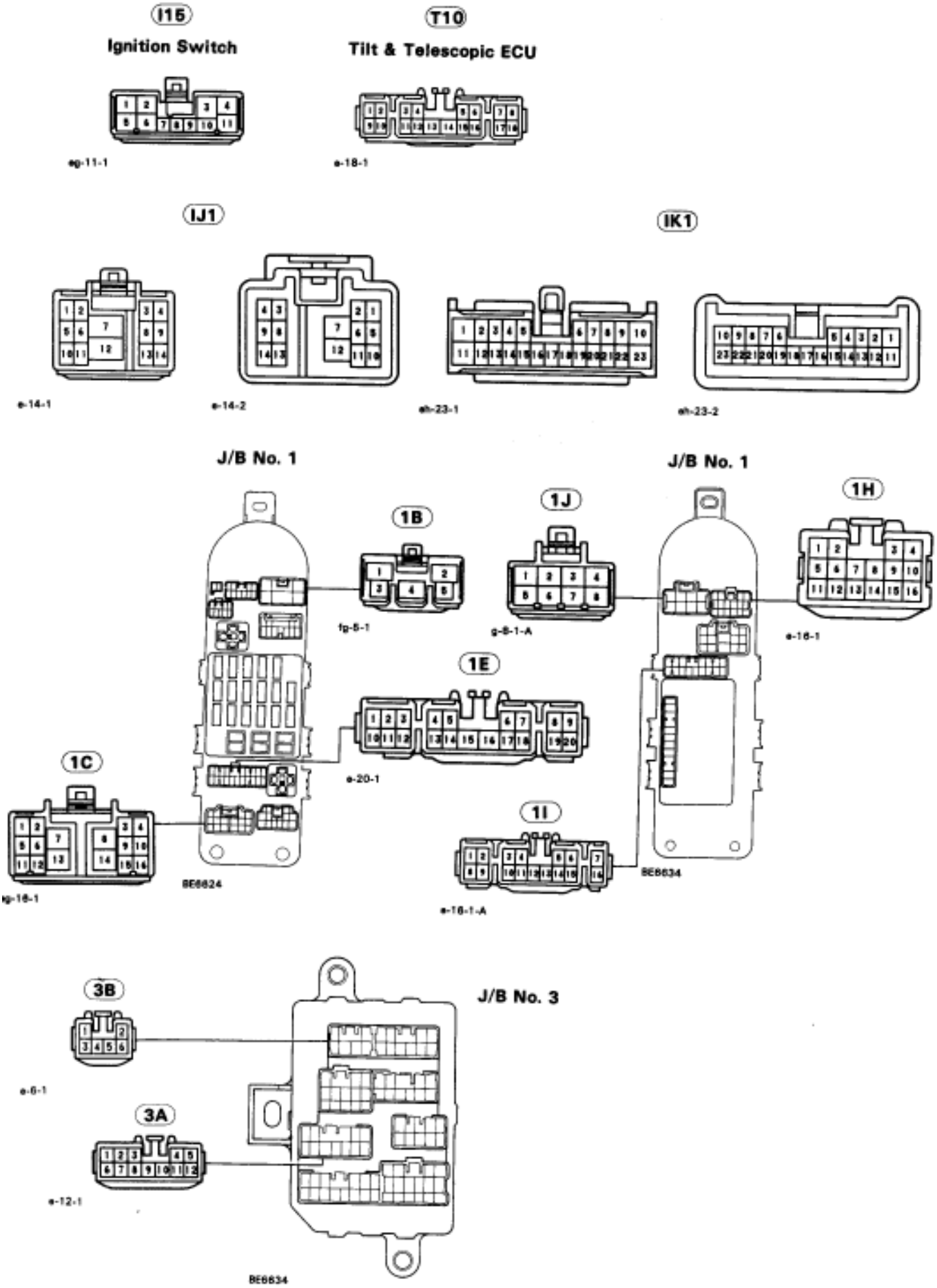

WhereEverybodyKnowsYourName

Location of Connectors in Seat

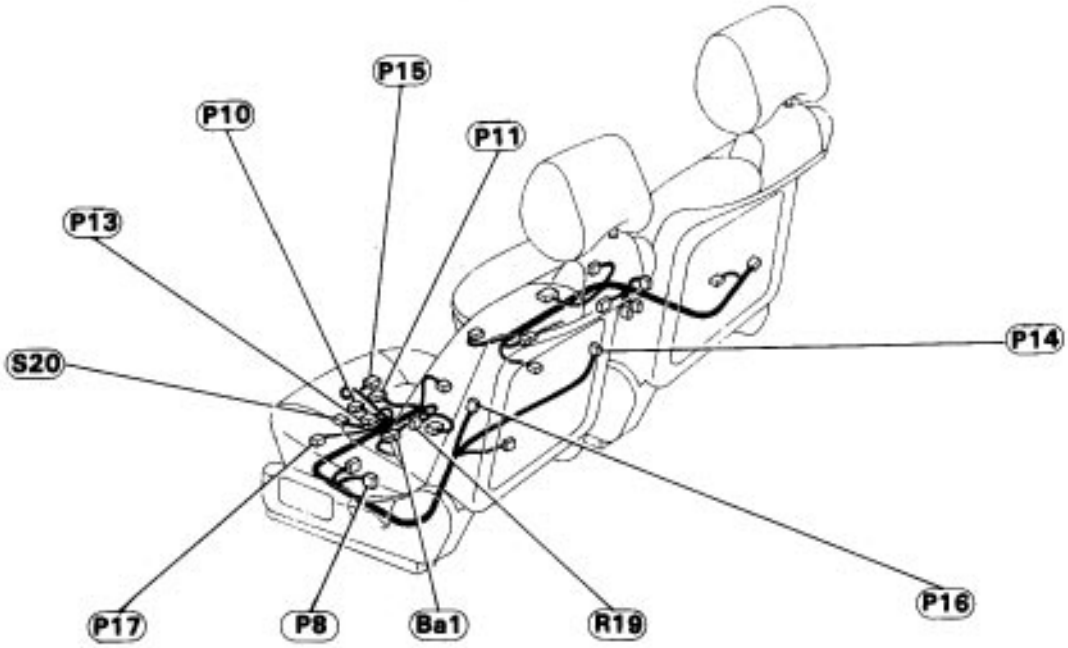

BE6633

WhereEverybodyKnowsYourName

P8

Power Seat Switches

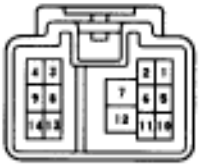

e-14-2

P10

Driver's Seat ECU

e-16-1-A

P11

e-18-1

P13

Front Vertical Motor

H-2-1

P14

Lumbar Support Motor

H-2-1

P15

Rear Vertical Motor

H-2-1

P16

Reclining Position Sensor

e-6-1-E

P16

Reclining Motor

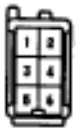

e-6-1-E

P17

Slide Motor

H-2-1

R19

Rear Vertical Position Sensor

e-3-1

S20

Slide Position Sensor

e-3-1

Ba1

e-14-1

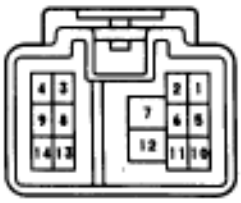

e-14-2

WhereEverybodyKnowsYourName

CIRCUIT INSPECTION

+B Power Source Circuit

CIRCUIT DESCRIPTION

This is the power source for motors such as the slide motor and reclining motor.

DIAGNOSTIC CHART

1 Check Door fuse.
- NG → Check for short in all harness and components connected to the DOOR fuse (See attached wiring diagram).
- OK ↓

2 Check voltage between terminals +B, +B2 and GND of ECU connector.
- OK → Proceed to next circuit inspection shown on matrix chart (See page BE–276).
- NG ↓

3 Check continuity between terminal GND of ECU connector and body ground.
- NG → Repair or replace harness or connector.
- OK ↓

Check and repair harness or connector between ECU and battery.

WIRING DIAGRAM

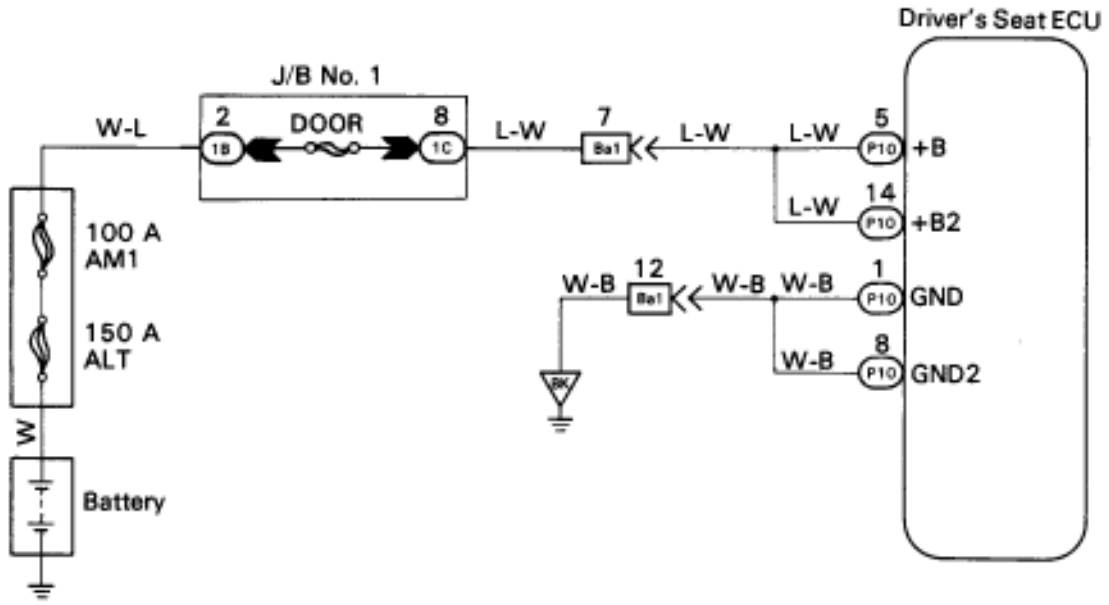

BE6488

WhereEverybodyKnowsYourName

INSPECTION PROCEDURE

1	Check DOOR fuse.

OK

NG → Check for short in all the harness and components connected to the DOOR fuse (See attached wiring diagram).

2	Check voltage between terminals +B, +B2 and GND of ECU connector.

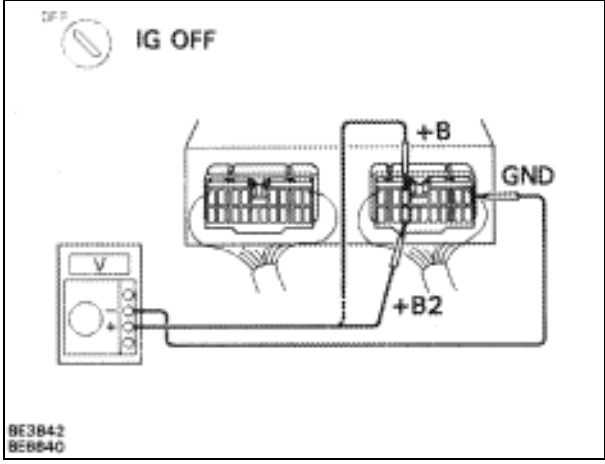

P Remove ECU with connectors still connected.

C Measure voltage between terminals +B, +B2 and GND of ECU connector.

OK **Voltage: 10 – 14 V**

NG

OK → Proceed to next circuit inspection shown on matrix chart (See page BE–276.)

3	Check continuity between terminal GND of ECU connector and body ground.

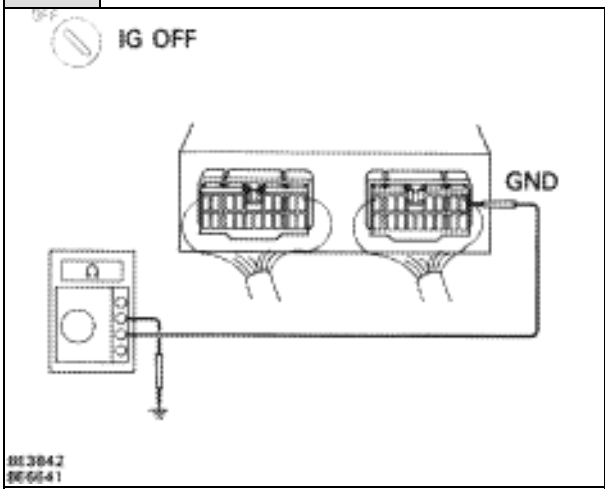

C Measure resistance between terminal GND of ECU and body ground.

OK **Resistance: 1 or less.**

OK

NG → Repair or replace harness or connector.

Check and repair harness or connector between ECU and battery.

WhereEverybodyKnowsYourName

ECU Power Source Circuit

CIRCUIT DESCRIPTION

This circuit provides power for ECU operation and is also the power source for the sensors.

DIAGNOSTIC CHART

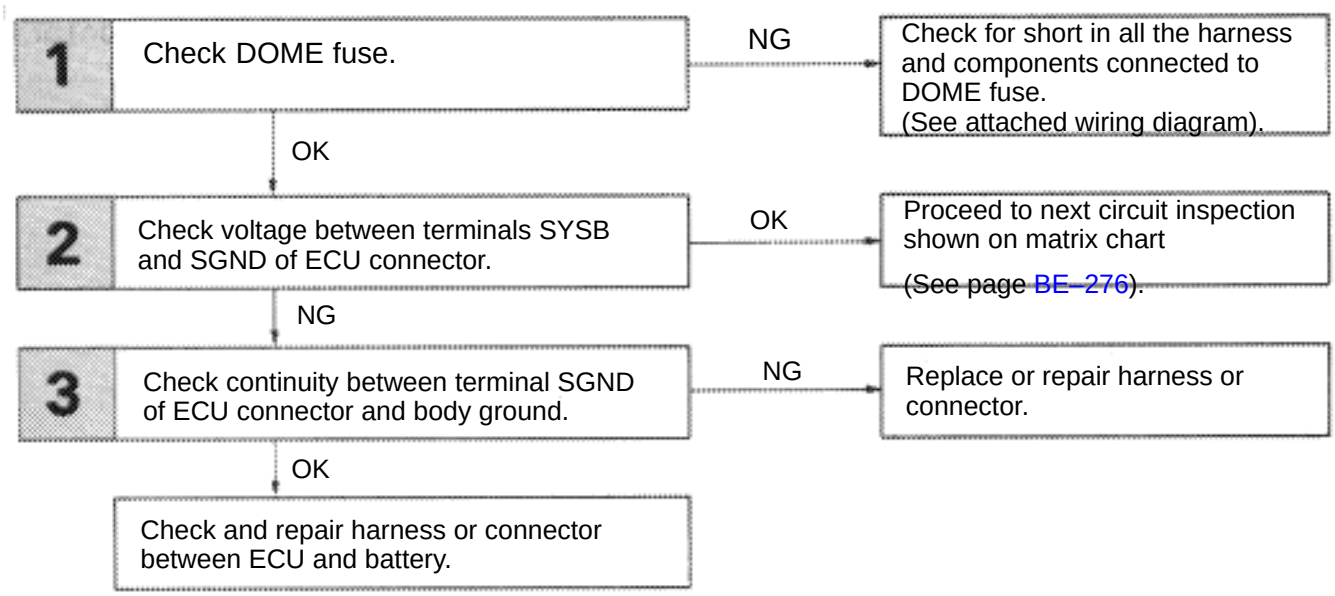

WIRING DIAGRAM

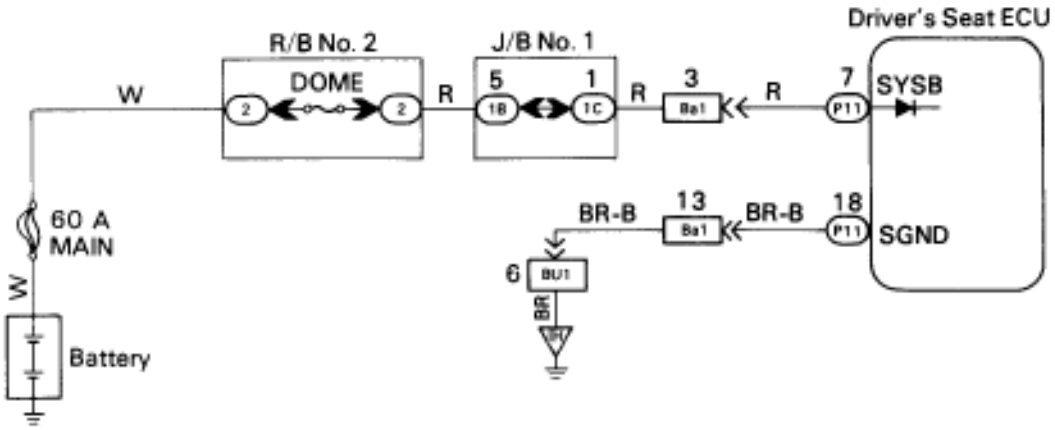

BE6451

WhereEverybodyKnowsYourName

INSPECTION PROCEDURE

1	Check DOME fuse.

OK

NG → **Check for short in all the harness and components connected to the DOME fuse (See attached wiring diagram).**

2	Check voltage between terminals SYSB and SGND of ECU connector.

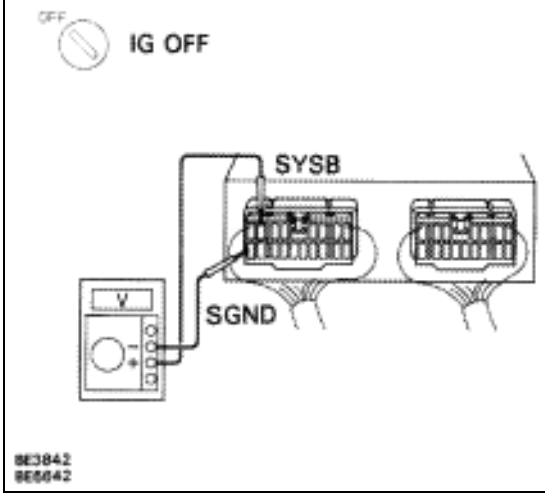

P Remove ECU with connectors still connected.

C Measure voltage between terminals SYSB and SGND of ECU connector.

OK **Voltage: 10 – 14 V**

NG

OK → **Proceed to next circuit inspection shown on matrix chart (See page BE–276).**

3	Check continuity between terminal SGND of ECU connector and body ground.

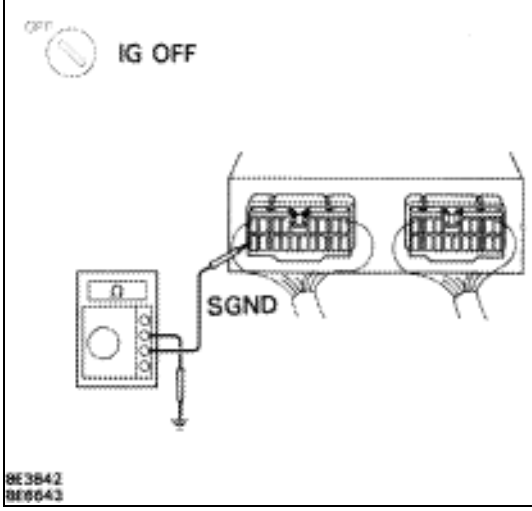

C Measure resistance between terminal SGND of ECU connector and body ground.

OK **Resistance: 1 or less.**

OK

NG → **Repair or replace harness or connector.**

Check and repair harness or connector between ECU and battery.

WhereEverybodyKnowsYourName

Motor Circuit

CIRCUIT DESCRIPTION

The driver's seat ECU controls the 4 motors for slide, front vertical, rear vertical and reclining.

DIAGNOSTIC CHART

Inspect the circuit of the motor which is malfunctioning.

1 Check motor.
- NG → Replace motor.
- OK ↓

2 Check harness and connector between ECU and motor (See page IN–27).
- NG → Repair or replace harness or connector.
- OK ↓

Proceed to next circuit inspection shown on matrix chart (See page BE–276).

WIRING DIAGRAM

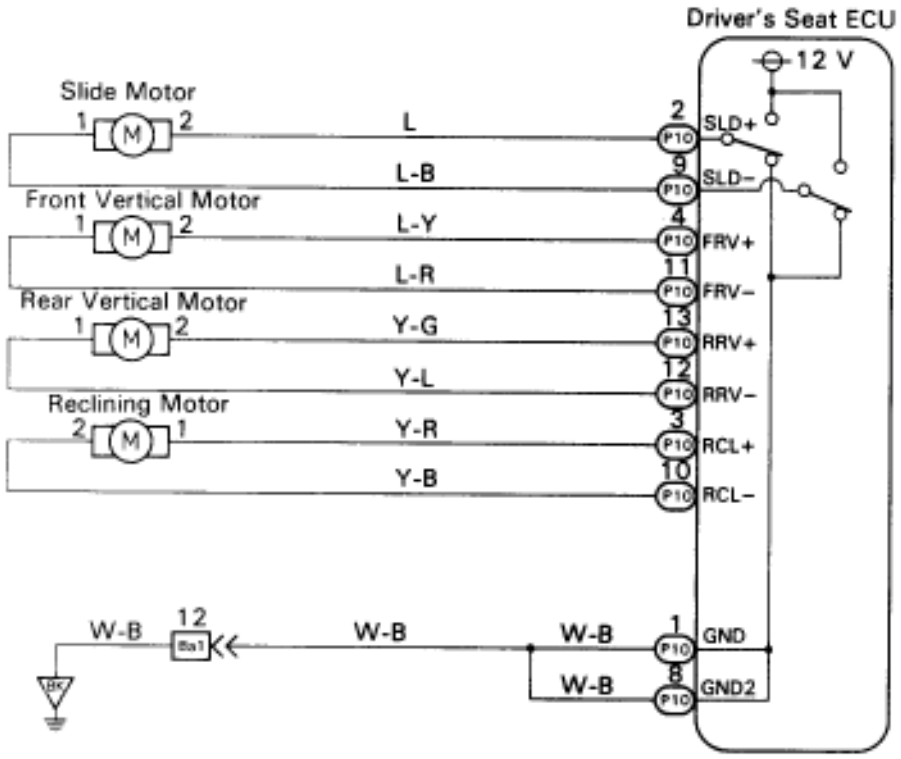

BE3989

WhereEverybodyKnowsYourName

INSPECTION PROCEDURE

1 Check Motor

Slide

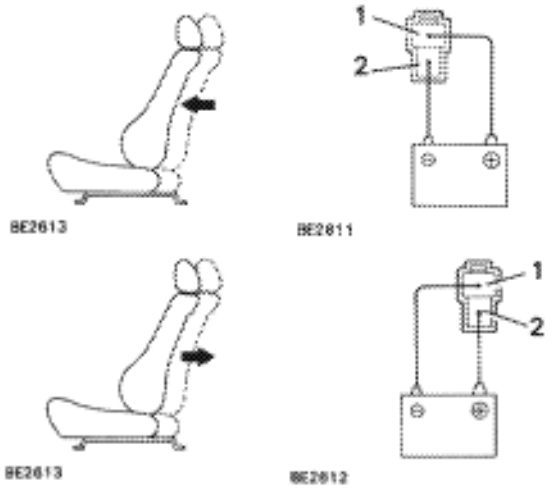

Front vertical

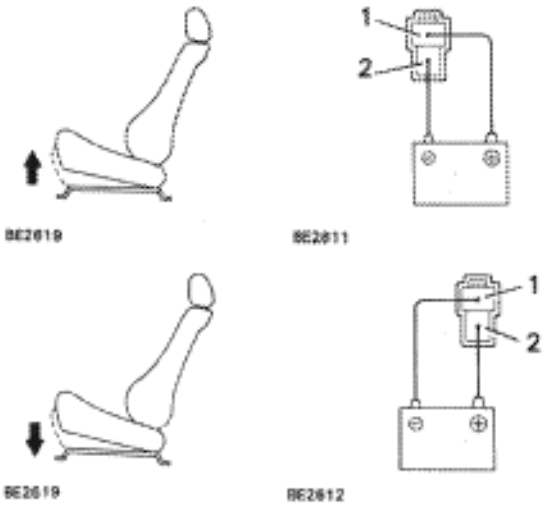

Rear vertical

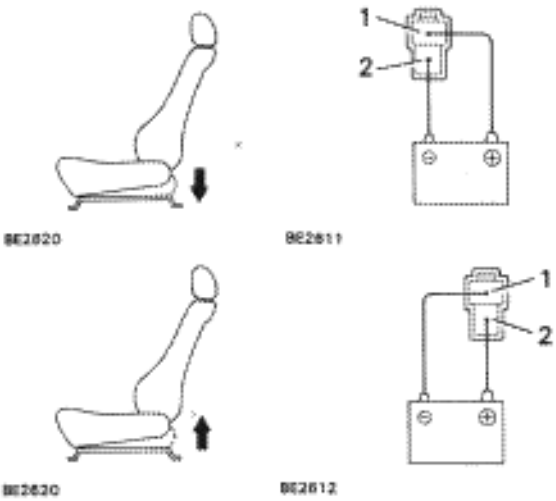

P (1) Remove seat.
(2) Disconnect each motor connector.

C Check seat movement when battery voltage is applied to each motor.

OK **Slide**

Terminal / Movement	1	2
Forward	⊕	⊖
Back	⊖	⊕

OK **Front vertical**

Terminal / Movement	1	2
Cushion rises	⊕	⊖
Cushion lowers	⊖	⊕

OK **Rear vertical**

Terminal / Movement	1	2
Cushion lowers	⊕	⊖
Cushion rises	⊖	⊕

WhereEverybodyKnowsYourName

Reclining

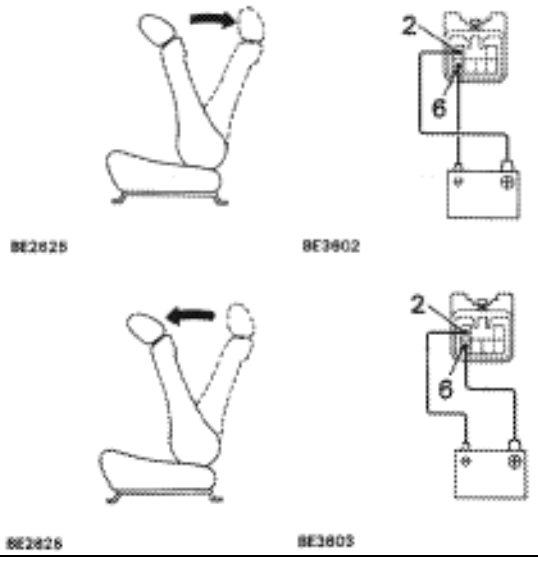

OK **Reclining**

Movement \ Terminal	2	6
Reclining	⊕	⊖
Returns to upright	⊖	⊕

OK → **NG** → **Replace motor.**

2	Check for open and short in harness and connector between ECU and motor (See page IN–27).

OK → **NG** → **Repair or replace harness or connector.**

Proceed to next circuit inspection shown on matrix chart (See page BE–276).

WhereEverybodyKnowsYourName

Position Sensor Power Source Circuit

CIRCUIT DESCRIPTION

This circuit provides power to the slide, front vertical, rear vertical and reclining sensors.

DIAGNOSTIC CHART

1 Check voltage between terminals PVCC of ECU connector and body ground.

- OK → Proceed to next circuit inspection shown on matrix chart (See page BE–276).
- NG ↓

2 Check harness and connector connected to terminal PVCC of ECU (See page IN–27).

- NG → Repair or replace harness or connector.
- OK ↓

Check and replace ECU.

WIRING DIAGRAM

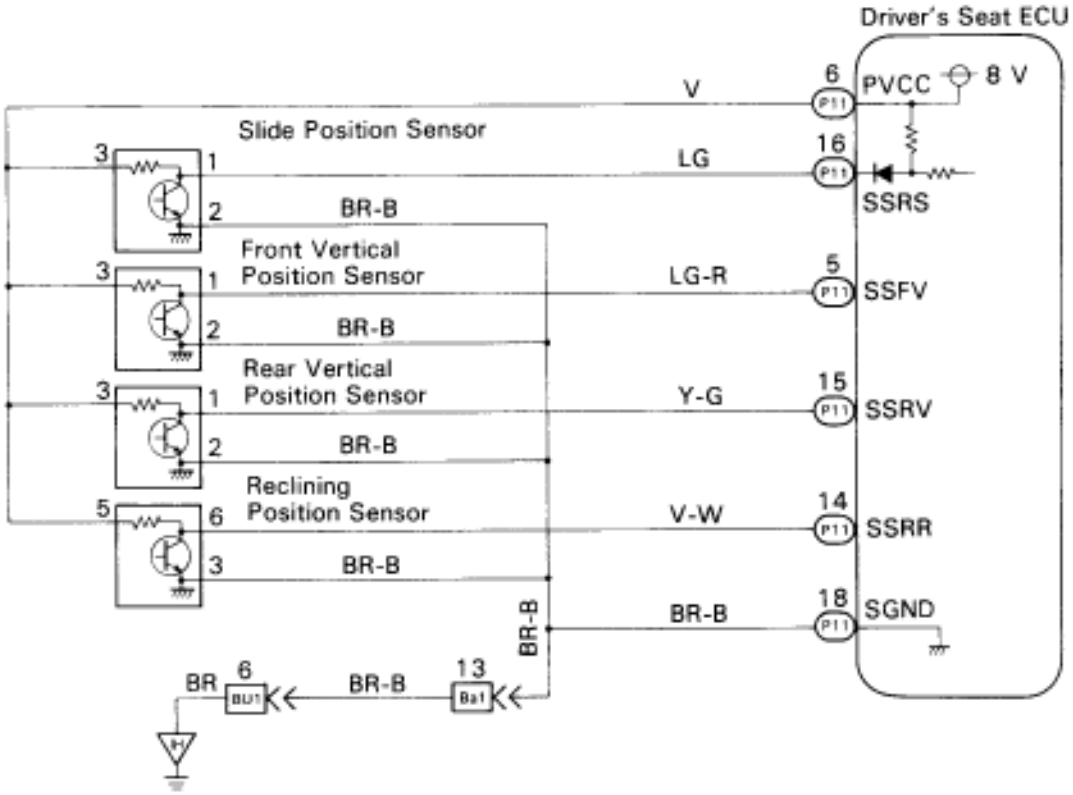

BE6500

WhereEverybodyKnowsYourName

INSPECTION PROCEDURE

1	Check voltage between terminal PVCC of ECU connector and body ground.

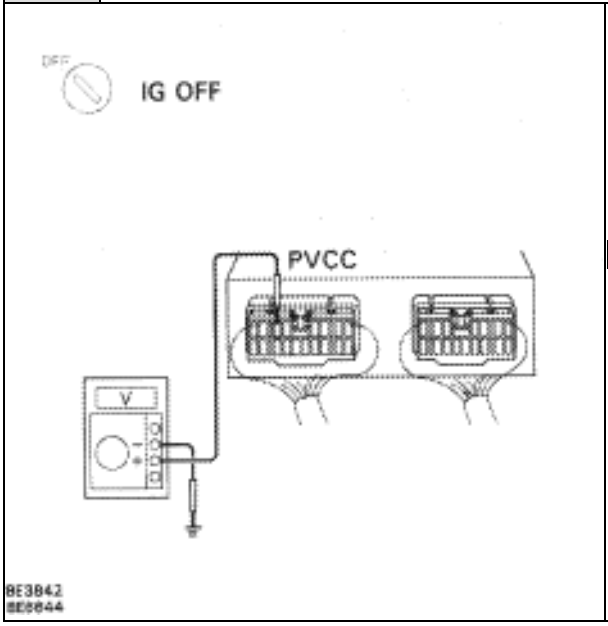

P Remove ECU with connectors still connected.

C While operating the manual switch and moving the seat, check voltage between terminal PVCC of ECU connector and body ground.

OK **Voltage: 7 – 9 V**

NG

OK **Proceed to next circuit inspection shown on matrix chart (See page BE–276).**

2	Check for open and short in harness and connector connected to terminal PVCC of ECU (See page IN–27).

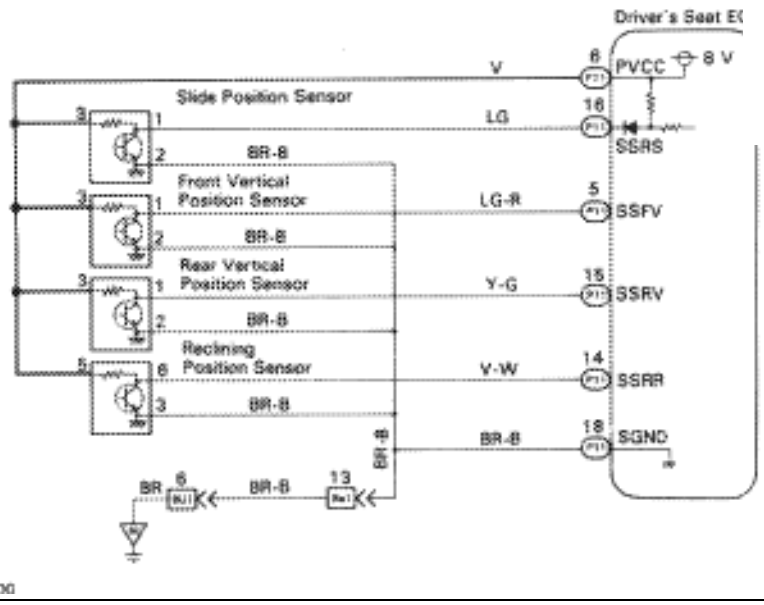

Check for open or short in the harnesses or connectors for the position sensor power source circuit outlined in the diagram with a thick line (—).

OK

NG **Repair or replace harness or connector.**

Check and replace ECU.

WhereEverybodyKnowsYourName

Position Sensor Circuit

CIRCUIT DESCRIPTION

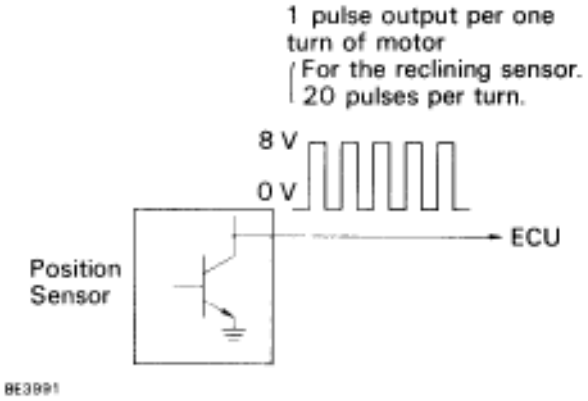

The position sensor senses movement of the seat and send pulse signals to the ECU. The position sensor sends pulses to the ECU in proportion to the amount of seat movement, as shown in the diagram on the left.
The ECU uses the number of pulses to constantly calculate the position relative to the memory position and returns the seat to the memorized position.
If a malfunction occurs in a position sensor and a sensor signal is not input to the ECU even when the motor operates, the ECU prohibits return operation.

DIAGNOSTIC CHART

1 Position sensor check.
- OK → Proceed to next circuit inspection shown on matrix chart (See page BE–276).
- NG ↓

2 Check position sensor.
- NG → Replace position sensor.
- OK ↓

3 Check harness and connectors between ECU and position sensors. (See page IN–27).
- NG → Repair or replace harness or connector.
- OK ↓

Check and replace ECU.

WIRING DIAGRAM

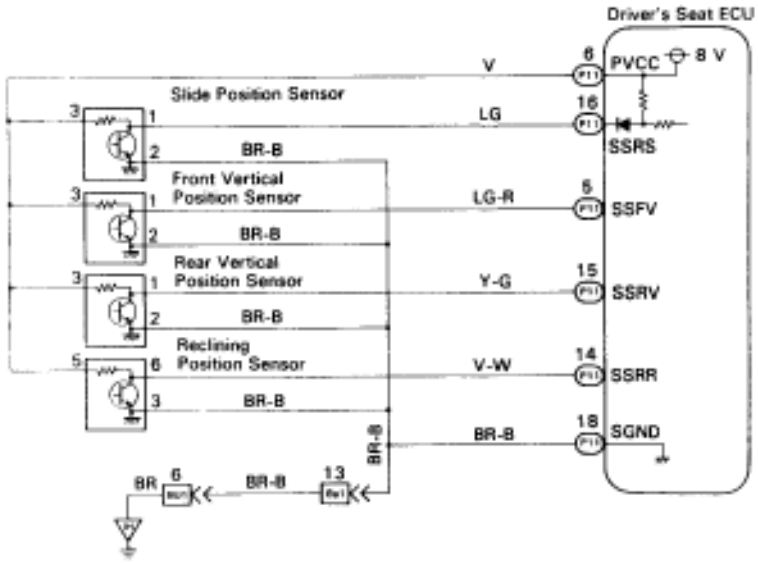

WhereEverybodyKnowsYourName

INSPECTION PROCEDURE

1 Position sensor check

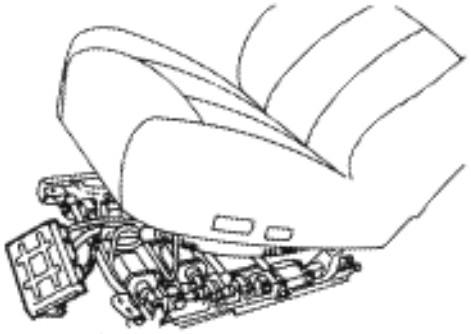

BE3631

P (1) Remove the driver's seat.

(2) Remove the bolts for the front vertical adjuster and lift the seat cushion up a little.

Notice: If the seat cushion is lifted to high, the harness will be pulled and the clamp may come loose.

(3) Remove the ECU with the connector attached from where it is installed to the underside of the seat cushion.

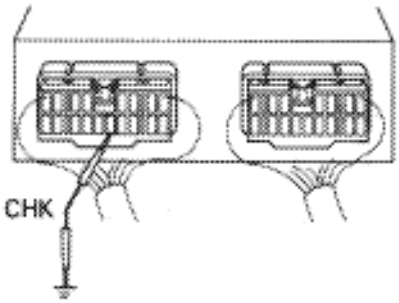

BE8646

C (1) Connect terminal CHK of the ECU to body ground to put the ECU into check mode.

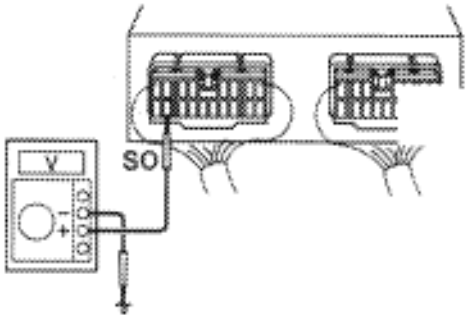

BE8645

(2) Measure the voltage between terminal SO of ECU and body ground.

HINT: Use an analog type meter.

"Ready" code

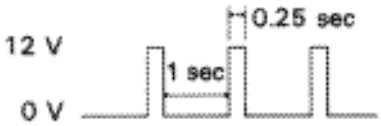

BE3939

(3) Check that the "ready" code is output as shown in the illustration.

Voltmeter

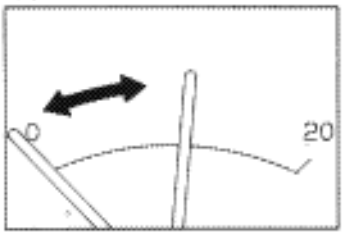

BE3940

WhereEverybodyKnowsYourName

1 Position sensor check (Cont'd)

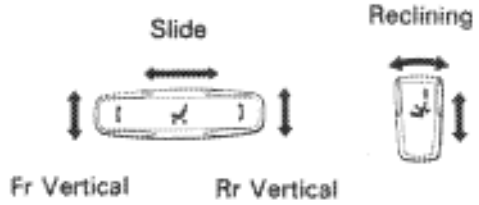

BE3202 BE3203

OK Code

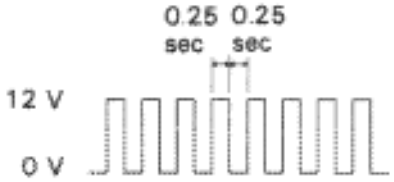

BE3828

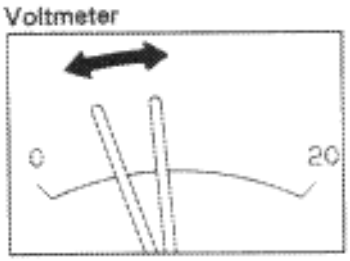

BE3844

NG Code

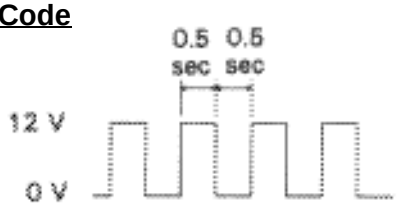

BE3830

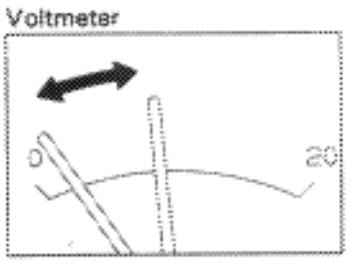

BE3845

(4) Operate the power seat switch and check the change in the voltage when the seat is moving.

Hint The lumbar support does not have a position sensor, so the sensor check cannot be done.

(5) The changes in the output voltage when the input signal is normal and when it is abnormal are shown in the illustrations. Compare the results with those from (4) and diagnose the condition of each circuit.

Hint

- ▼ The OK and NG codes continue to be output while the manual switch is ON.
- ▼ When the seat reaches the limit of movement, e.g. when the slide position reaches the most forward or back position, the voltage changes from the OK code to the NG code.

  After operating any of the system functions with no problem and confirming the OK code and NG code by comparing the amount of wavering of the voltmeter needle, inspect the function with a problem.
- ▼ The amount of wavering of the voltmeter needle depends on the meter.

OK

Output	OK	OK Code
	NG	NG Code

WhereEverybodyKnowsYourName

2 **Check position sensor.**

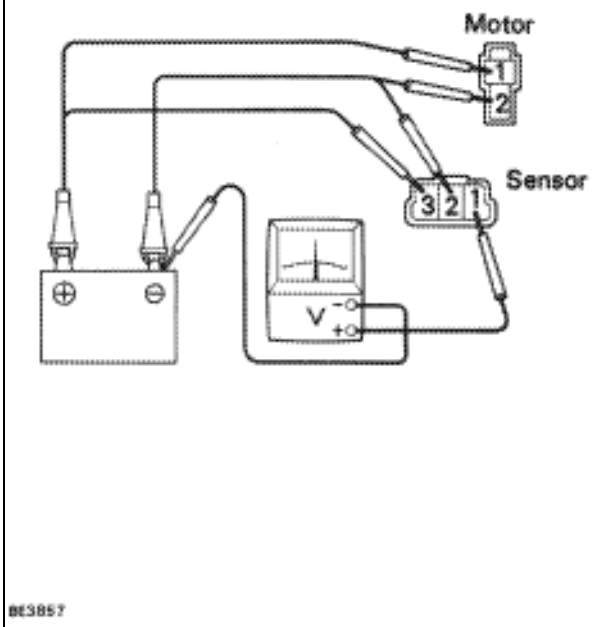

P Disconnect the connector of the sensor and the connector of the motor leading to the sensor.

C (1) Connect positive ≦ lead to terminal 3 of sensor and negative ↔ lead to terminal 2.

(2) Measure voltage between terminal 1 of sensor and body ground when battery voltage is applied between terminals 1 and 2 of motor connector.

Hint When the battery voltage is applied to the motor connector terminals, ≦ and ↔ are interchangeable.

OK

Condition	Voltage
Motor stopped (Check several times with the motor in a different position each time.)	0 V or battery voltage according to stop position
Motor Turning	half of battery voltage

OK → **NG** → **Replace position sensor.**

3 **Check for open and short in harness and connectors between ECU and position sensors (See page IN–27).**

OK → **NG** → **Repair or replace harness or connectors.**

Check and replace ECU.

WhereEverybodyKnowsYourName

Stop Light Circuit

CIRCUIT DESCRIPTION

The stop light switch sends a brake ON of Off signal to the ECU. When the ECU receives a brake ON signal it prohibits return of the seat.

DIAGNOSTIC CHART

1 Check stop light operation.

- NG → Check stop light circuit (See page BE–64).
- OK ↓

2 Check voltage between terminals STOP of ECU connector and body ground.

- OK → Proceed to next circuit inspection shown on matrix chart (See page BE–276).
- NG ↓

Check and repair harness and connector between ECU and stop light switch.

WIRING DIAGRAM

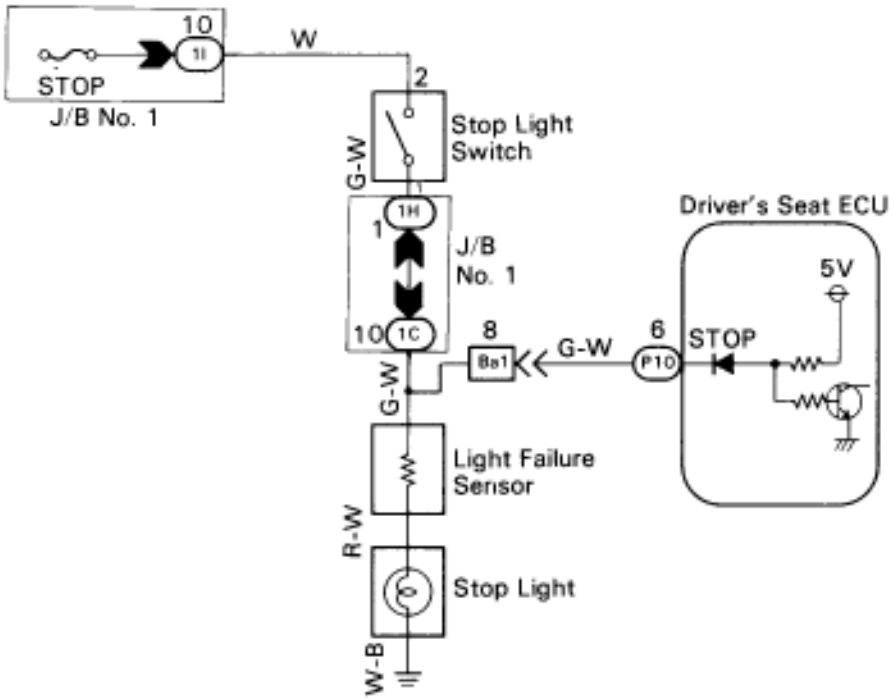

BE6508

WhereEverybodyKnowsYourName

INSPECTION PROCEDURE

1	**Check stop light operation.**
C	Check that the stop light comes on when the brake pedal is depressed, and turns off when the pedal is released.

OK

NG → **Check stop light circuit. (See page BE–64).**

2	**Check voltage between terminal STOP of ECU connector and body ground.**

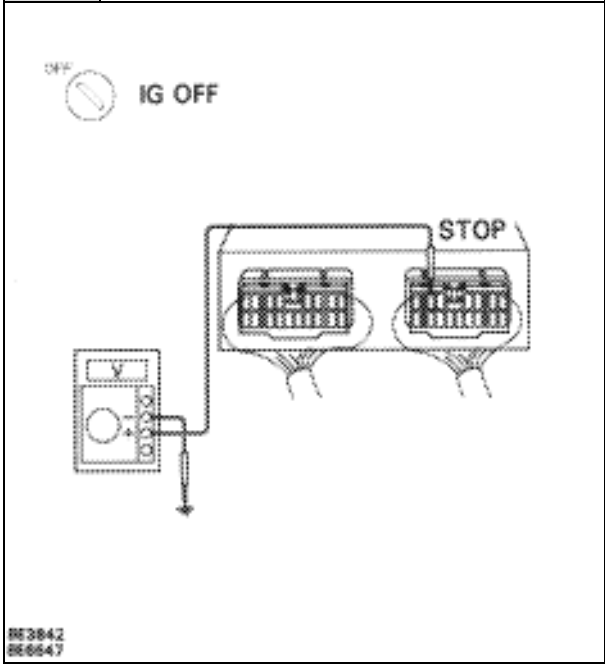

P Remove ECU with connectors still connected.

C Measure voltage between terminal STOP of ECU and body ground when the brake pedal is depressed and released.

OK

Brake pedal	Voltage
Depressed	10 – 14 V
Released	Below 1 V

Hint

NG

OK → **Proceed to next circuit inspection shown on matrix chart (See page BE–276).**

Check and repair harness and connector between ECU and stop light switch.

WhereEverybodyKnowsYourName

Neutral Start Switch Circuit

CIRCUIT DESCRIPTION

The neutral start switch detects when the shift position is in P range and sends a signal to the ECU. When the return switch is turned ON with the IG SW ON and the shift in P range, the ECU performs return operation.

DIAGNOSTIC CHART

1 Check shift position indicator.
- NG → Check shift position indicator circuit (See page BE– 141).
- OK ↓

2 Check voltage between terminal P of ECU connector and body ground.
- OK → Proceed to next circuit inspection shown on matrix chart (See page BE–276).
- NG ↓ Check and repair harness and connector between ECU and connector.

WIRING DIAGRAM

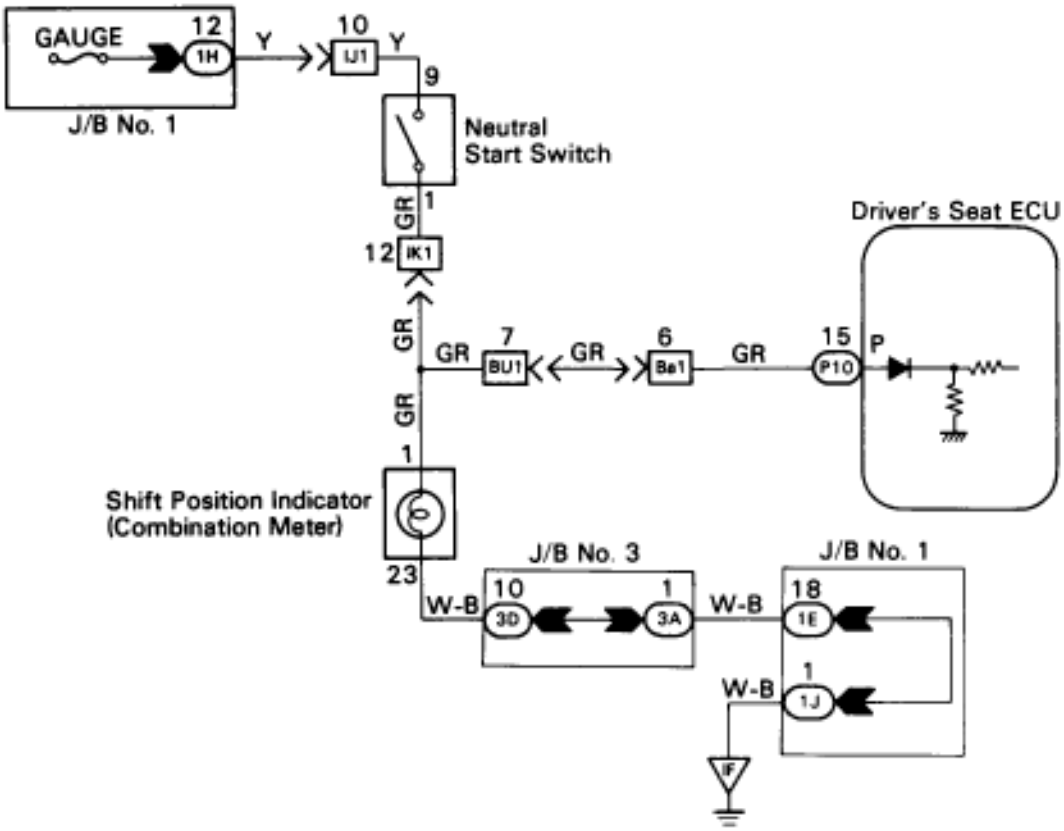

WhereEverybodyKnowsYourName

INSPECTION PROCEDURE

1	**Check the shift position indicator.**
C	Check that P lights up on the shift indicator when P range is shifted into, and that P is OFF when shifting into another range.

OK

NG **Check shift position indicator circuit (See page BE–141).**

2	**Check voltage between terminal P of ECU connector and body ground.**

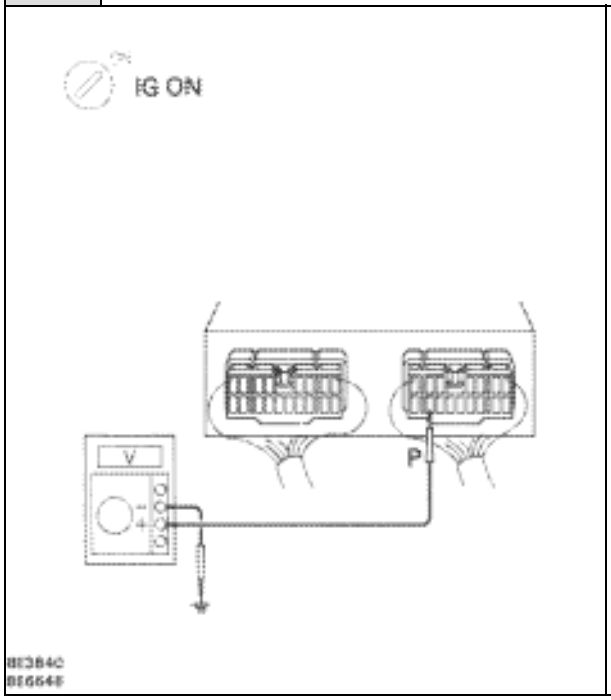

P Remove ECU with connectors still connected.

C (1) Turn ignition switch ON.

(2) Measure voltage between terminal P of ECU connector and body ground when the shift lever is positioned to the following ranges.

OK

Shift range	Voltage
P	10 – 14 V
Other than P	Below 1 V

NG

OK **Proceed to next circuit inspection shown on matrix chart (See page BE–276).**

Check and repair harness and connector between ECU and connector.

WhereEverybodyKnowsYourName

Ignition Switch Circuit

CIRCUIT DESCRIPTION

This circuit sends an ignition switch ON or OFF signal to the ECU.

DIAGNOSTIC CHART

1 Check ECU–IG fuse.
- NG → Check for short in all the harness and components connected to ECU–IG fuse.
- OK ↓

2 Check voltage between terminal IG of ECU connector and body ground.
- OK → Proceed to next circuit inspection shown on matrix chart (See page BE–276).
- NG ↓

Check and repair harness or connector between ECU and battery (See page IN–27).

WIRING DIAGRAM

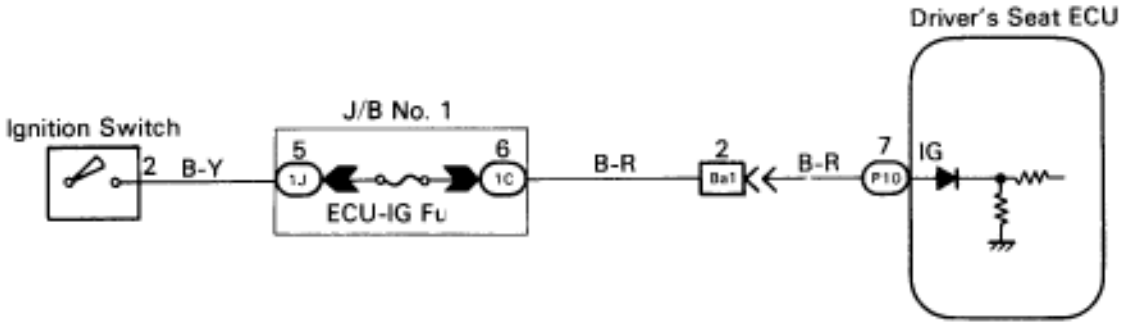

BE6496

INSPECTION PROCEDURE

1	Check ECU – IG fuse.

OK

NG → **Check for short in all the harness and components connected to ECU–IG fuse.**

2	Check voltage between terminal IF of ECU connector and body ground.

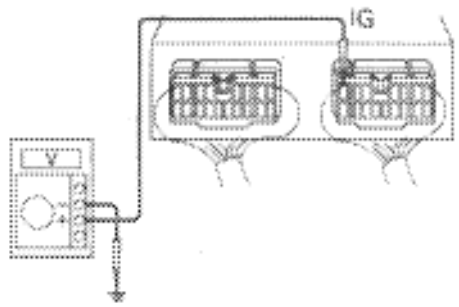

P Remove ECU with connectors still connected.

C Measure voltage between terminal IG of ECU connector and body ground when ignition switch is on and off.

Ignition switch	Voltage
ON	10 – 14 V
OFF	Below 1 V

NG

OK → **Proceed to next circuit inspection shown on matrix chart (See page BE–276).**

Check and repair harness or connector between ECU and battery (See page IN–27).

WhereEverybodyKnowsYourName

Power Seat Switch Circuit

CIRCUIT DESCRIPTION

When the power seat switch is operated, a signal is sent from the power seat switch to the ECU and the ECU sends a signal to the motor to make it operate (except for the lumbar support).
Even if a malfunction should occur with the position sensor and return operation is prohibited, manual operation will occur as normal.

DIAGNOSTIC CHART

1 Check voltage between each terminal and a SGND of ECU connector.
- OK → Proceed to next circuit inspection shown on matrix chart (See page BE–276).
- NG ↓

2 Check power seat switch.
- NG → Replace power seat switch.
- OK ↓

3 Check harness and connectors between ECU and power seat switch (See page IN–27).
- NG → Repair or replace harness or connector.
- OK ↓

Check and replace ECU.

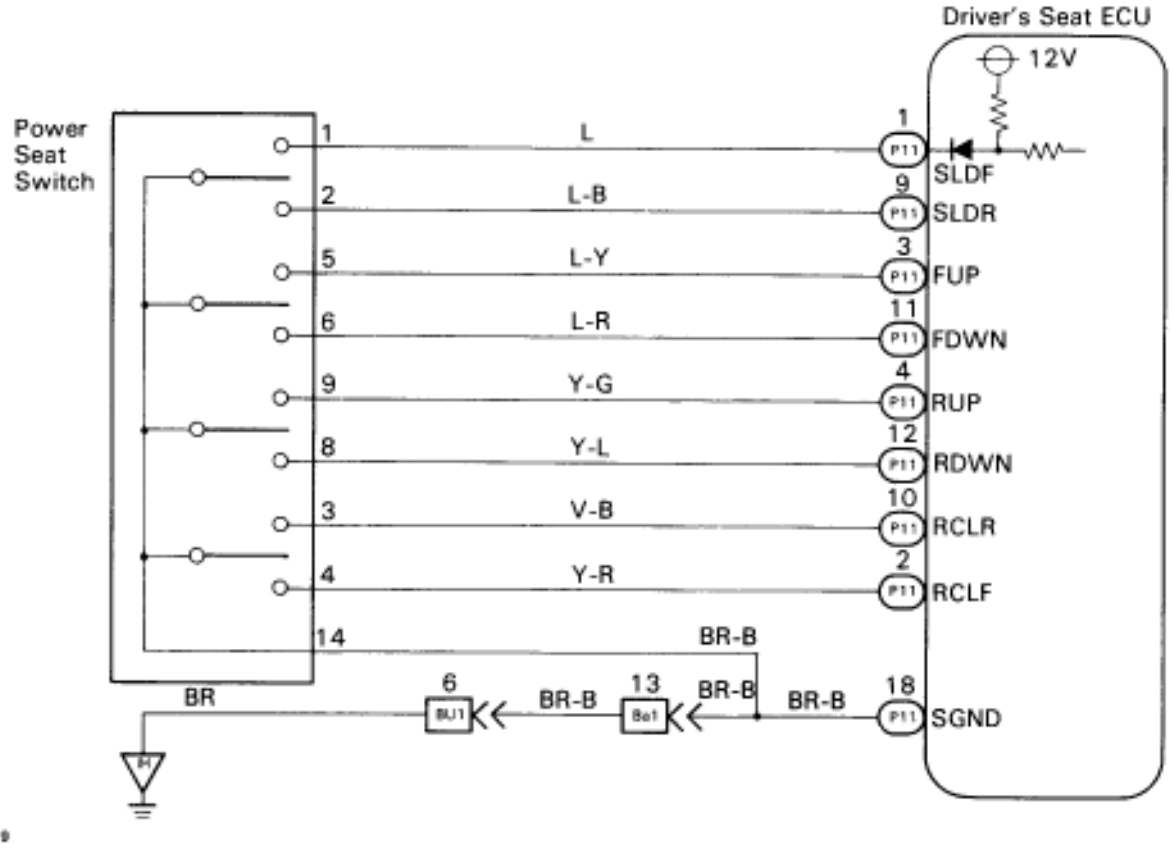

WhereEverybodyKnowsYourName

INSPECTION PROCEDURE

1 **Check voltage between each terminal and SGND ECU connector.**

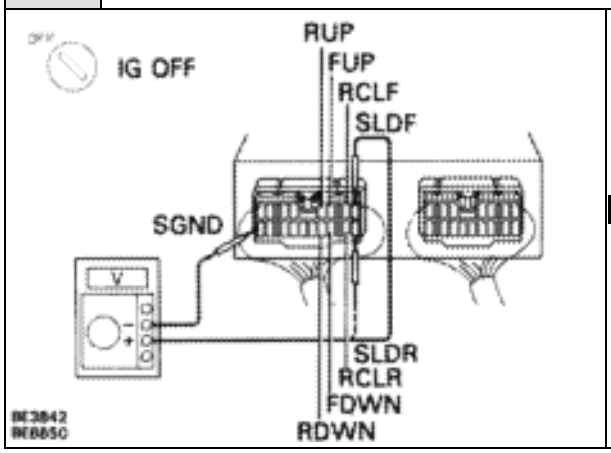

P Remove ECU with connectors still connected.

C Measure voltage between each terminal of the manual switch and SGND of ECU connector.

OK

At each terminal	With SW ON	Below 1 V
	With SW OFF	10 – 14 V

NG

OK **Proceed to next circuit inspection shown on matrix chart (See page BE–276).**

2 **Check power seat switch.**

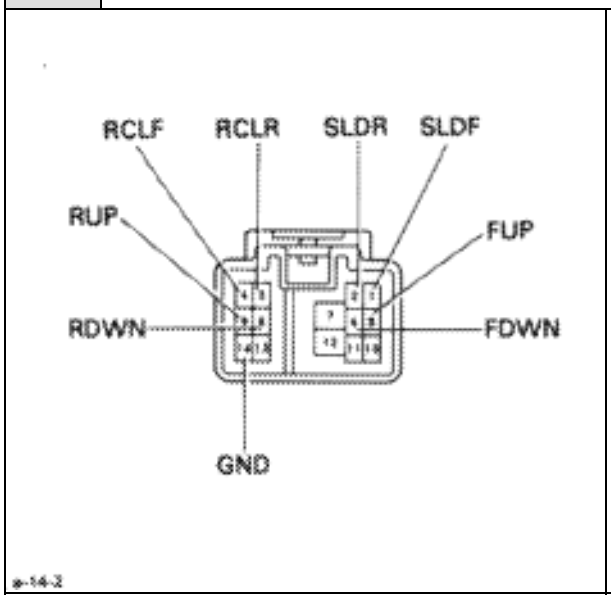

P Disconnect power seat switch connector.

C Check continuity of each terminal.

○—○ Continuity

Switch position		4	3	8	9	6	5	2	1	14
	Neutral									
Slide	Front								○	○
	Back							○		○
Front vertical	Up						○			○
	Down					○				○
Rear vertical	Up				○					○
	Down			○						○
Reclining	Forward reclining	○								○
	Rear reclining		○							○

OK

NG **Replace power seat switch.**

3 **Check for open and short in harness and connectors between ECU and power seat switch (See page IN–27).**

OK

NG **Repair or replace harness or connector.**

Check and replace ECU.

WhereEverybodyKnowsYourName

Serial Communication Circuit

CIRCUIT DESCRIPTION

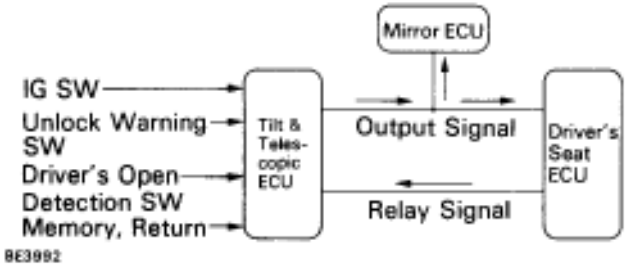

Memory and return command signals and mutual communication during return operation pass between the ECU and the tilt & telescopic ECU in the from of serial data communication. Signals activating memory and return operation are sent from the tilt & telescopic ECU to the ECU and mirror ECU. When the ECU receives a memory signals, its position is memorized, and when a return signal is received, the position is returned to the memorized position.

During return operation, tilt & telescopic ECU and ECU continue mutual communication constantly, and if a malfunction should occur in the communication wire, the tilt & telescopic ECU stops signal output to the ECU and stops return operation. However, the tilt & telescopic ECU continues return operation. Even with power return stopped, manual switch operation of the power seat is possible. The mirror ECU receives activation signals only and is not involved in reciprocal communication during return operation, so even when a reply signal from the ECU to the tilt & telescopic ECU is abnormal and the power seat stops return operation, the mirror ECU continues return operation.

DIAGNOSTIC CHART

1 Check harness and connector between ECU and tilt & telescopic ECU (See page IN–27).
- NG → Repair or replace harness or connector.
- OK ↓

2 Check return operation of tilt and telescopic ECU, and mirror ECU.
- NG → Check and replace tilt & telescopic ECU.
- OK ↓

Proceed to next circuit inspection shown on matrix chart (See page BE–276).

WIRING DIAGRAM

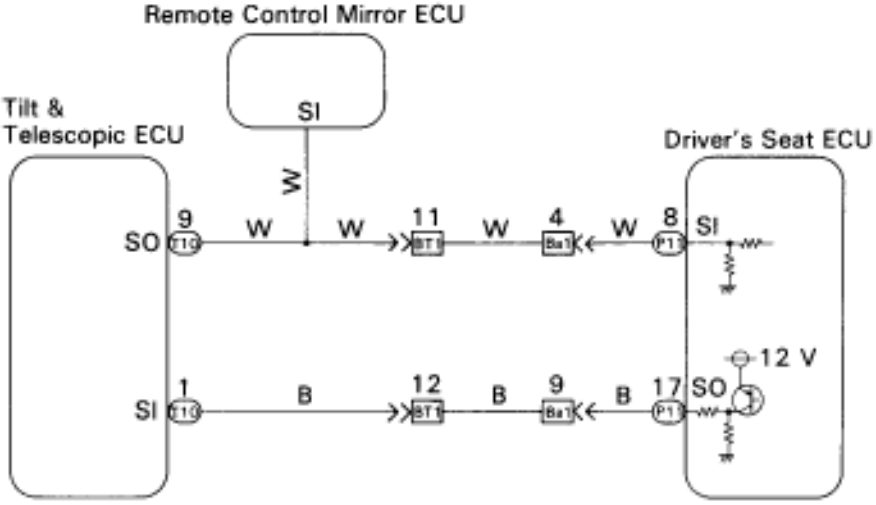

WhereEverybodyKnowsYourName

INSPECTION PROCEDURE

1 **Check for open and short in harness and connector between ECU and tilt & telescopic ECU (See page IN–27).**

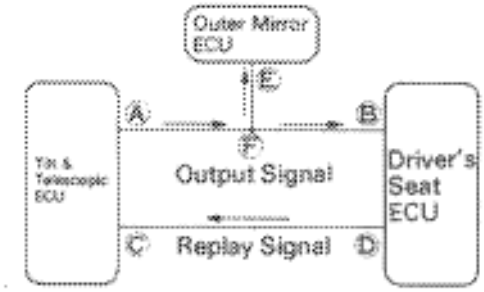

Hint Depending on the differences that exist for return operation or non–return operation of each system, the problems is the harness and connector shown in the table below may be considered.

○ return occurs x return not occurring

Tilt & Telescopic	Mirror	Seat	Trouble area
○	x	x	Open Ⓐ ~ Ⓕ Short Ⓐ ~ Ⓑ Ⓔ ~ Ⓕ
○	○	x	Open Ⓑ ~ Ⓕ Open or Short Ⓒ ~ Ⓓ

OK → **NG** → **Repair or replace harness or connector.**

2 **Check return operation by tilt & telescopic ECU, and mirror ECU.**

C Check that return operation is normal for tilt, telescopic and mirror functions.

OK → **NG** → **Check and replace tilt & Telescopic ECU.**

Proceed to next circuit inspection shown on matrix chart (See page BE–276).

WhereEverybodyKnowsYourName

POWER SEAT CONTROL SYSTEM (Passenger's seat)

WhereEverybodyKnowsYourName

DESCRIPTION

In walk–in operation, when the passenger's seat back is reclined fully forward, this is detected by the limit switch and the seat slides forward electronically. In return operation, when the seat back is pulled upright the seat slides back electronically.

1). Walk–in Operation
   a). When the initial seat position is 100 mm (3.94 in.) or more behind the the foremost position, the seat will slide forward 100 mm (3.94 in.) in one slide operation.
   b). When the initial seat position is less than 100 mm (3.94 in.) away from the foremost position, the seat only slides forward to the foremost position.
   c). If the seatback is raised approximately 10° during walk–in operation, slide operation stops and will not resume even if the seatback is fully reclined again.
   d). If the seatback is pulled upright to a lock position during slide operation, the seat slide direction is reversed (becomes return operation).
   e). Walk–in operation will not occur when the slide manual switch is operated or when the tongue of the passenger's seat belt is inserted in the buckle.

2). Return Operation
   a). If the seatback is reclined a minimum of 10° during return operation, the slide operation stops and will not resume even if the seatback is pulled back to lock position.
   b). If the seatback is reclined forward during return operation, the seat slide direction changes to forward movement (walk–in operation).
   c). When the slide manual switch is operated or the slide distance exceeds 150 mm (5.91 in.), return operation stops.

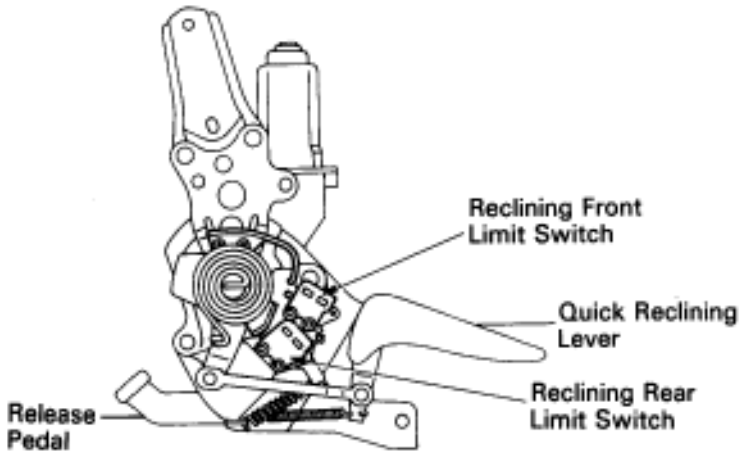

BE6385

WhereEverybodyKnowsYourName

Parts Name	Function
Passenger's Seat ECU	The passenger seat ECU controls the distance the seat slides when the power seat switch is operated and also controls the power slide distance during return operation.
Power Seat Switch	When the power seat switch is operated, a seat slide signal is sent to the ECU. The reclining slide of the switch is linked directly to the motor operation.
Slide Position Sensor	The slide position sensor detects the slide distance during walk–in operation and inputs the information to the ECU.
Slide Neutral Limit Switch	This switch detects the neutral position of the seat slide and input the information to the ECU.
Reclining Front Limit Switch	This switch detects when the seatback is inclined fully forward and informs the ECU.
Reclining Rear Limit Switch	This switch detects when the seatback is pulled back and informs the ECU.
Motor	There are two motors, one each for seat sliding and for reclining.
Tension Reducer and Buckle Switch	This switch inputs a signal to the ECU to inform it whether the tongue of the passenger's seat belt is inserted in the buckle.

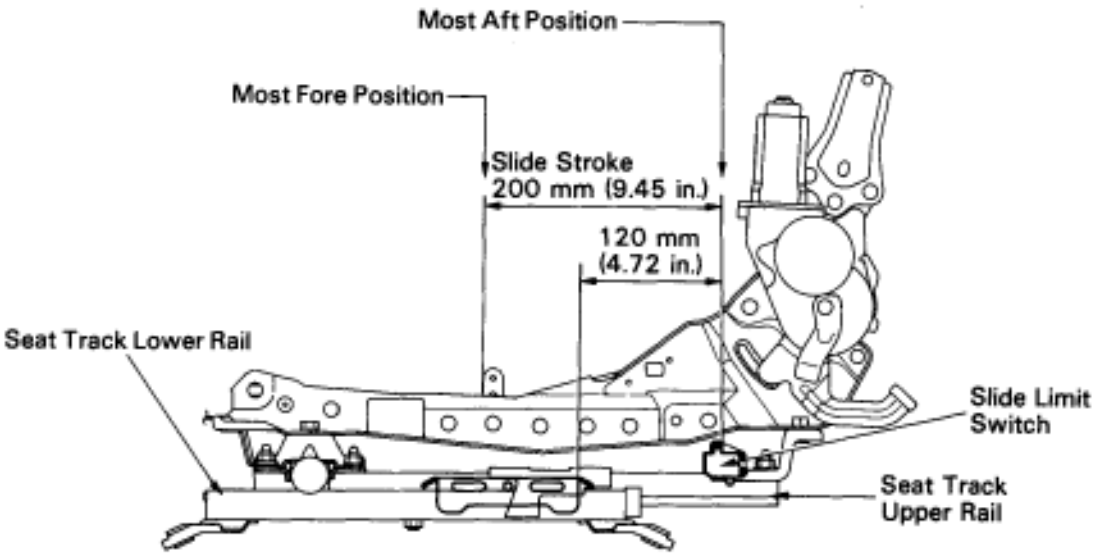

WhereEverybodyKnowsYourName

PARTS LOCATION

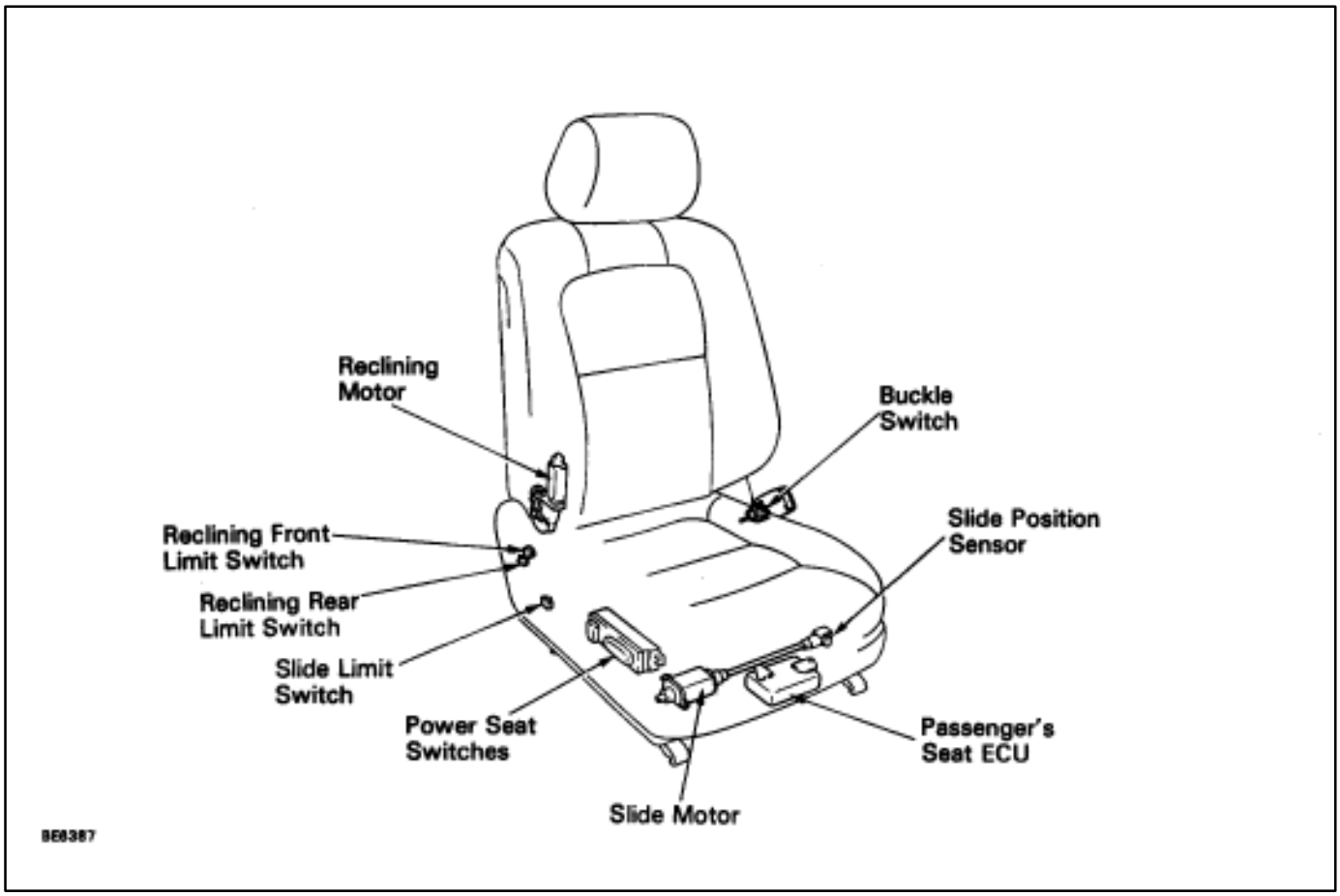

WhereEverybodyKnowsYourName

HOW TO PROCEED WITH TROUBLESHOOTING

Perform troubleshooting in accordance with the procedure on the following page.

▼ **CUSTOMER PROBLEM ANALYSIS**
Using the customer problem analysis check sheet for reference, ask the customer in as much detail as possible about the problem.

2 **PROBLEM SYMPTOM CONFIRMATION,** 2 **SYMPTOM SIMULATION.**
Confirm the problem symptoms. If the problem does not reappear, be sure to simulate the problem using the "Problem Simulation Methods".

10 **MATRIX CHART OF PROBLEM SYMPTOMS**
Confirm the order of inspection on the matrix chart for the particular problem symptom involved. For "Not Functioning" problems, pay attention to the points in 2 to find out the specifics of the problem, then choose the most appropriate problem symptom from among those listed on the matrix chart, and proceed with troubleshooting accordingly.

5 **CIRCUIT INSPECTION**
Proceed with diagnosis of each circuit in accordance with the inspection order confirmed in 10. Determine whether the cause of the problem is in the sensor, actuators, wire harness and connectors, or the ECU.

6 **POSITION SENSOR CHECK**
This function checks that the signal from position sensor is correctly input into the ECU. The instructions for this diagnosis are included in the flow chart for the position sensor circuit.

7 **REPAIR**
After the cause of the problem is located, perform repairs by following the inspection and replacement procedures is this manual.

9 **CONFIRMATION TEST**
After completing repairs, confirm that the problem is eliminated and power walk–in operation is normal.

WhereEverybodyKnowsYourName

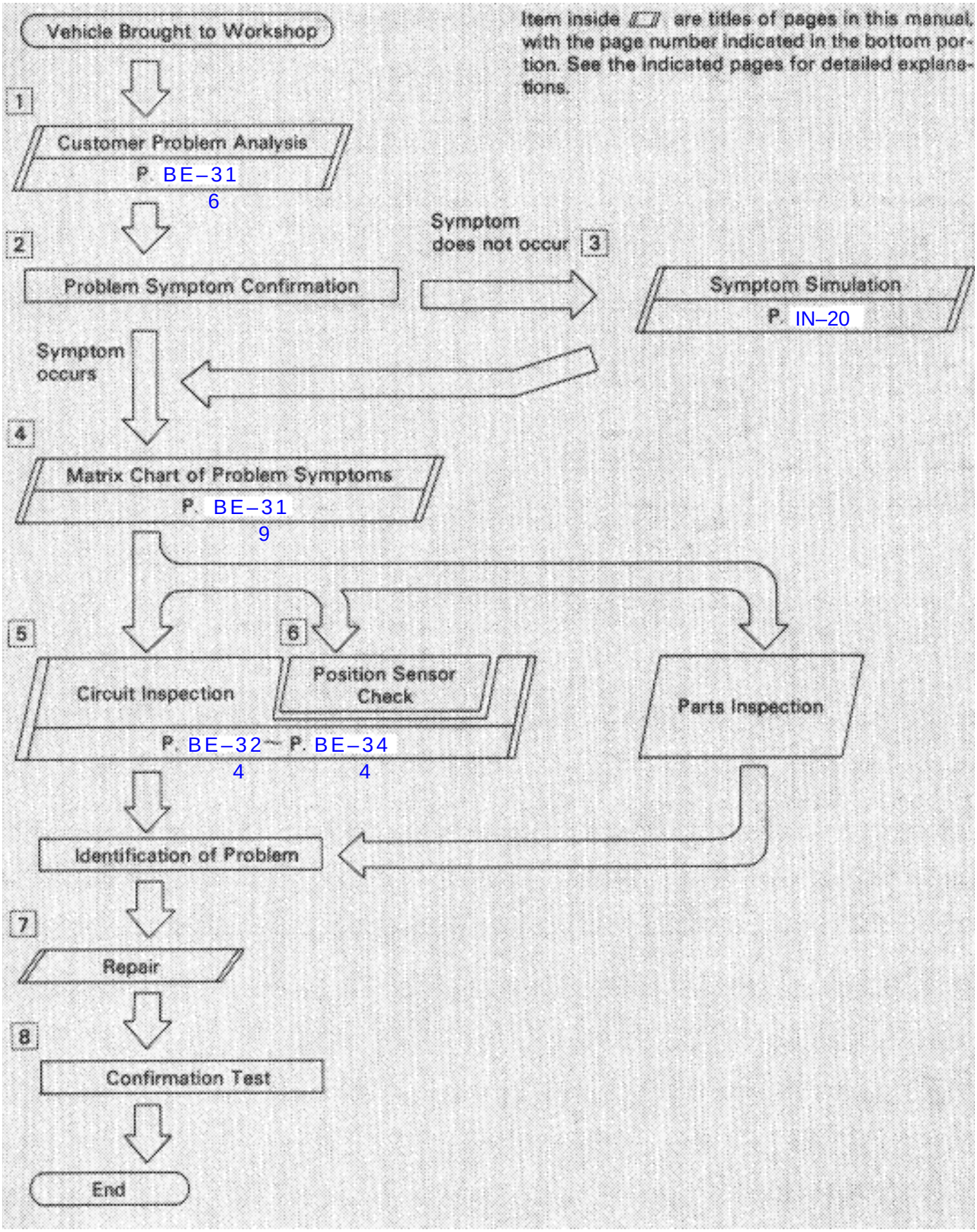
Item inside ▭ are titles of pages in this manual, with the page number indicated in the bottom portion. See the indicated pages for detailed explanations.
Vehicle Brought to Workshop
1
Customer Problem Analysis
P. BE–31 6
2
Problem Symptom Confirmation
Symptom does not occur
3
Symptom Simulation
P. IN–20
Symptom occurs
4
Matrix Chart of Problem Symptoms
P. BE–31 9
5
Circuit Inspection
6
Position Sensor Check
P. BE–32 4 ~ P. BE–34 4
Parts Inspection
Identification of Problem
7
Repair
8
Confirmation Test
End

CUSTOMER PROBLEM ANALYSIS CHECK SHEET

POWER WALK–IN Check Sheet

Inspector's Name : _____

Customer's Name		**Registration No.**	
		Registration Year	/ /
		Frame No.	
Date Vehicle Brought In	/ /	**Odometer Reading**	Km Miles

Condition of Problem Occurrence	**Date of Problem Occurrence**	/ /
	How Often does Problem Occur?	2 Continuous 2 Intermittent (times a day)

Symptoms	2 Manual Function does not Operate	2 Slide 2 Reclining
	2 Auto Function does not operate	2 Walk–in Function (Seat does not slide). 2 Return Function (Seat does not slide).
	2 Others (Please write down in detail)	

WhereEverybodyKnowsYourName

WIRING DIAGRAM

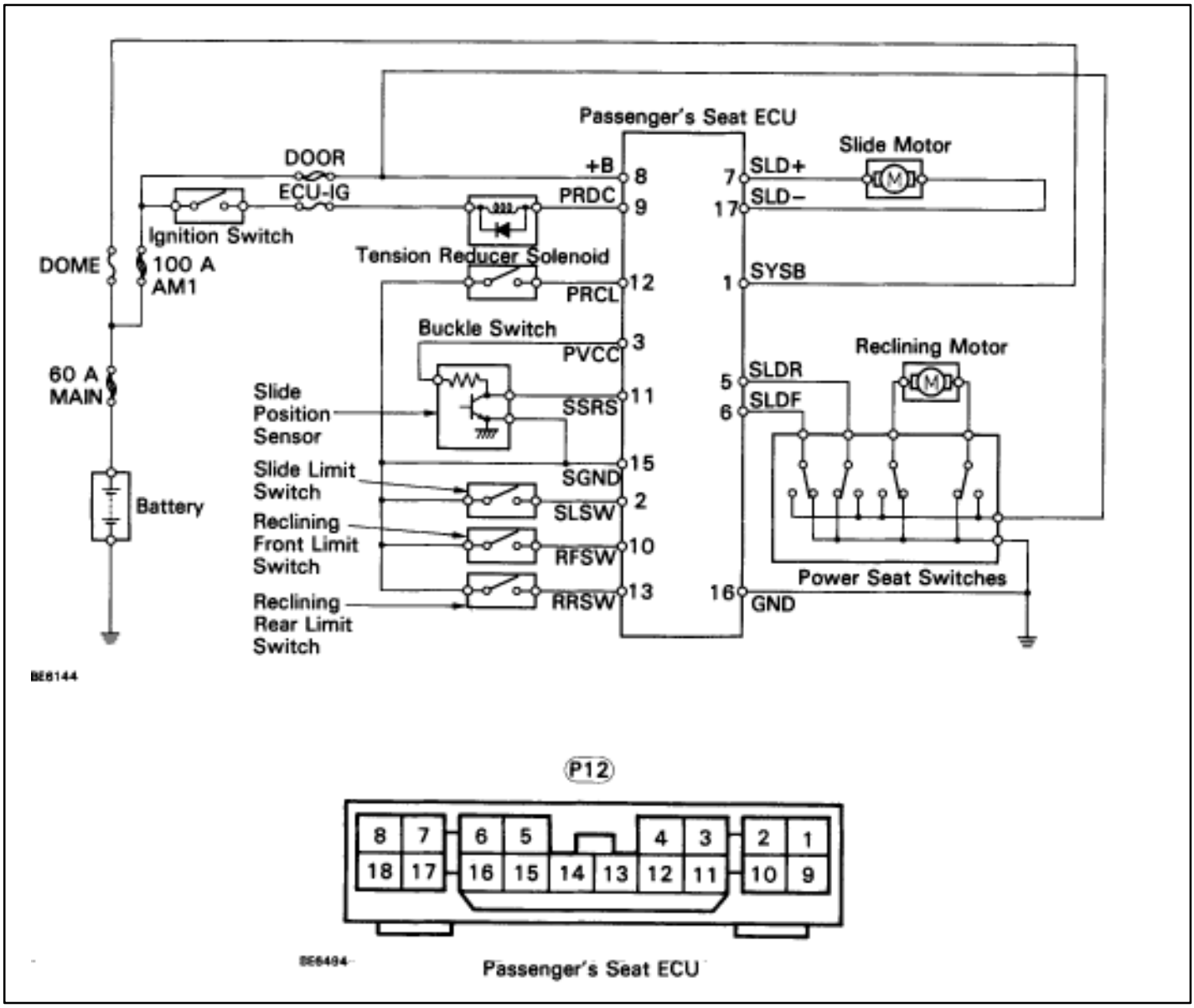

Terminal of ECU

No.	Symbol	Terminal Name	No.	Symbol	Terminal Name
P12–1	SYSB	Power Source	P12–10	PFSW	Reclining Front Limit Switch
2	SLSW	Slide Limit Switch	11	SSRS	Slide Sensor
3	PVCC	Position Sensor Power Source	12	PBCL	Passenger's Buckle Switch
4	DOUT	—	13	RRSW	Reclining Rear Limit Switch
5	SLDR	Slide Switch (Back)	14	CHK	Check
6	SLDF	Slide Switch (Forward)	15	SGND	Sensor Ground
7	SLD+	Slide Motor (Forward)	16	GND	Ground
8	+B	Power Source	17	SLD–	Slide Motor (Back)
9	PRDC	Tension Reducer	18		

WhereEverybodyKnowsYourName

STANDARD VALUE OF ECU TERMINAL

Terminals	Symbols	Wiring Color	Condition	Standard Value
P12–1↔P12–16	SYS↔BGND	R↔W–B	Always	10 ~ 14 V
P12–2↔ Body Ground	SLSW↔ Body Ground	V–W↔ Body Ground	Slide neutral limit switch OFF (Passenger's seat is slided at most back position, when power seat operation)	10 ~ 14 V
			Slide neutral limit switch ON (Passenger's seat is slided 120 mm or more from most back position, when power seat operation)	Below 1 V
P12–3↔P12–15	PVCC↔SGND	V↔BR	Always (When power seat operation)	10 ~ 14 V
P12–4	DOUT	—	—	—
P12↔P12–16	SLDR↔GND	L–R↔W–B	Slide switch is pushed back	10 ~ 14 V
			Others	Below 1 V
P12–6↔P12–16	SLDF↔GND	L–Y↔W–B	Slide switch is pushed forward	10 ~ 14 V
			Others	Below 1 V
P12–7↔P12–16	SLD+↔GND	L↔W–B	Slide switch is pushed forward	10 V ~ 14 V
			Others	Below 1 V
P12–8↔P12–16	+B↔GND	L–W↔W–B	Always	10 ~ 14 V
P12–9↔ Body Ground	PRDC↔ Body Ground	B↔ Body Ground	Passenger's buckle switch ON and ignition switch ON (Tung plate is inserted into buckle switch)	Below 1 V
			Passenger's buckle switch OFF and Ignition switch ON (Tung plate is not inserted into buckle switch)	10 ~ 14 V
P12–10↔ Body Ground	RFSW↔ Body Ground	Y↔ Body Ground	Reclining front limit switch OFF (Passenger's seat back is moved backward, when power seat operation)	10 ~ 14 V
			Reclining front limit switch ON (Passenger's seat back is moved forward, when power seat operation)	Below 1 V
P12–11↔P12–15	SSRS↔SGND	LG↔BR	When passenger's seat is sliding back and forth, when power seat operation	0 ↔ 12 V
P12–12↔ Body Ground	PBCL↔ Body Ground	B–Y↔ Body Ground	Passenger's buckle switch OFF (Tung plate is not inserted into buckle switch, when power seat operation)	10 ~ 14 V
			Passenger's buckle switch ON (Tung plate is inserted into buckle switch, when power seat operation)	Below 1 V
P12–13↔P12–16	PRSW↔GND	LG–R↔W–B	Reclining rear limit switch OFF (Passenger's seat back is moved backward, when power seat operation)	10 ~ 14 V
			Reclining rear limit switch ON (Passenger's seat back is moved forward, when power seat operation)	Below 1 V
P12–14	CHK	—	—	—
P12–15↔ Body Ground	SGND↔ Body Ground	BR↔ Body Ground	Always	1 or less
P12–16↔ Body Ground	GND↔ Body Ground	W–B↔ Body Ground	Always	1 or less
P12–17↔P12–16	SLD–↔GND	L–B↔W–B	Slide switch is pushed back	10 ~ 14 V
			Others	Below 1 V
P12–18	—	—	—	—

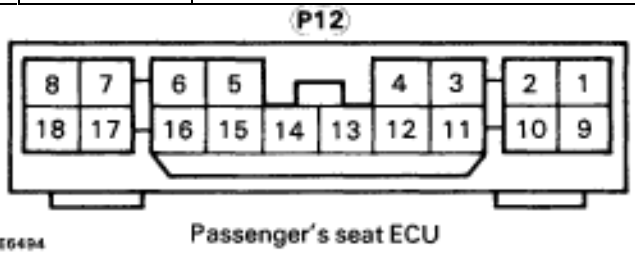

WhereEverybodyKnowsYourName

MATRIX CHART OF PROBLEM SYMPTOMS

Perform troubleshooting the circuits for the applicable problem symptom in the order given in the chart below. Proceed to the page located for each circuit.

See page / Suspect Area / Symptom	BE–32 4	BE–32 6	BE–32 8	BE–33 0	BE–33 4	BE–33 8	BE–34 0	BE–34 4	IN–32
	ECU Power Source Circuit	Slide Motor Power Source Circuit	Slide Motor Circuit	Position Sensor Circuit	Slide Switch Circuit	Buckle Switch Circuit	Limit Switch Circuit	Reclining Switch Circuit	Passenger's Seat ECU
Walk-in function and return function do not operate. (However, they operate when using the manual switch).	1			3			2		4
Only walk-in operation is not functioning.						1	2		3
Only return operation is not functioning.							1		2
Does not slide even when the manual switch is operated.		2	3		1				4
Does not recline even when the manual switch is operated.								1	
Seat returns to rear most position during return operation.							1		2

WhereEverybodyKnowsYourName

LOCATION OF CONNECTORS

Location of Connectors in Engine Compartment

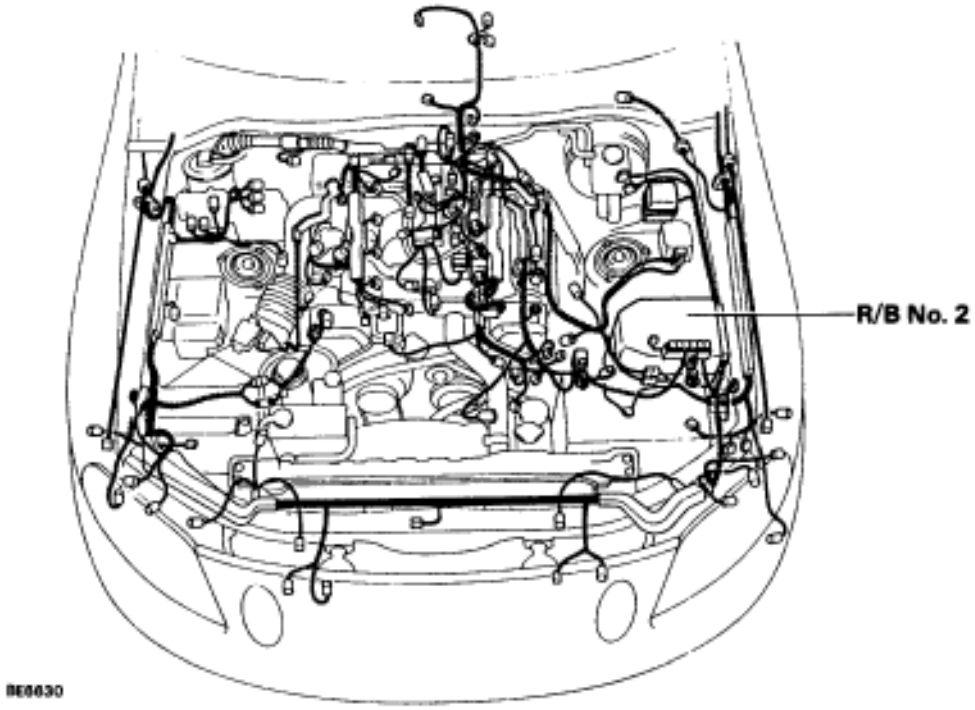

R/B No. 2

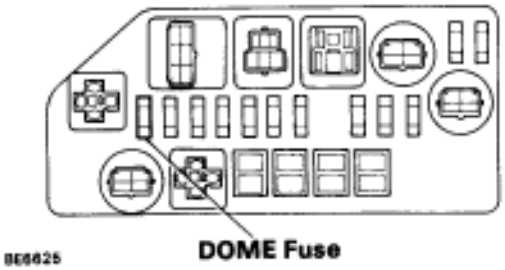

WhereEverybodyKnowsYourName

Location of Connectors in Instrument Panel

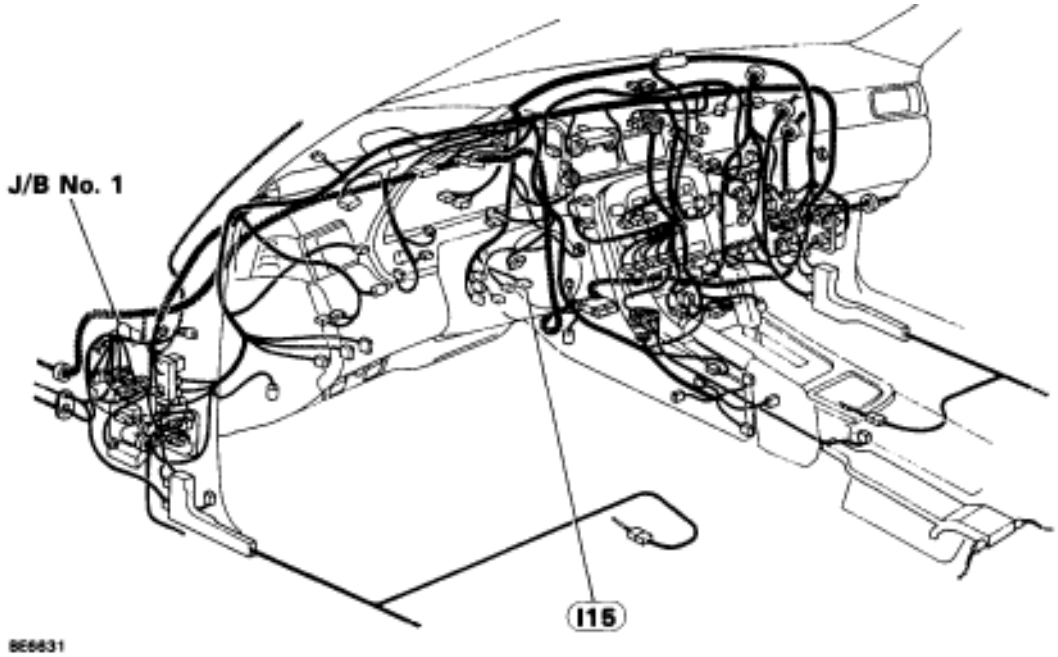

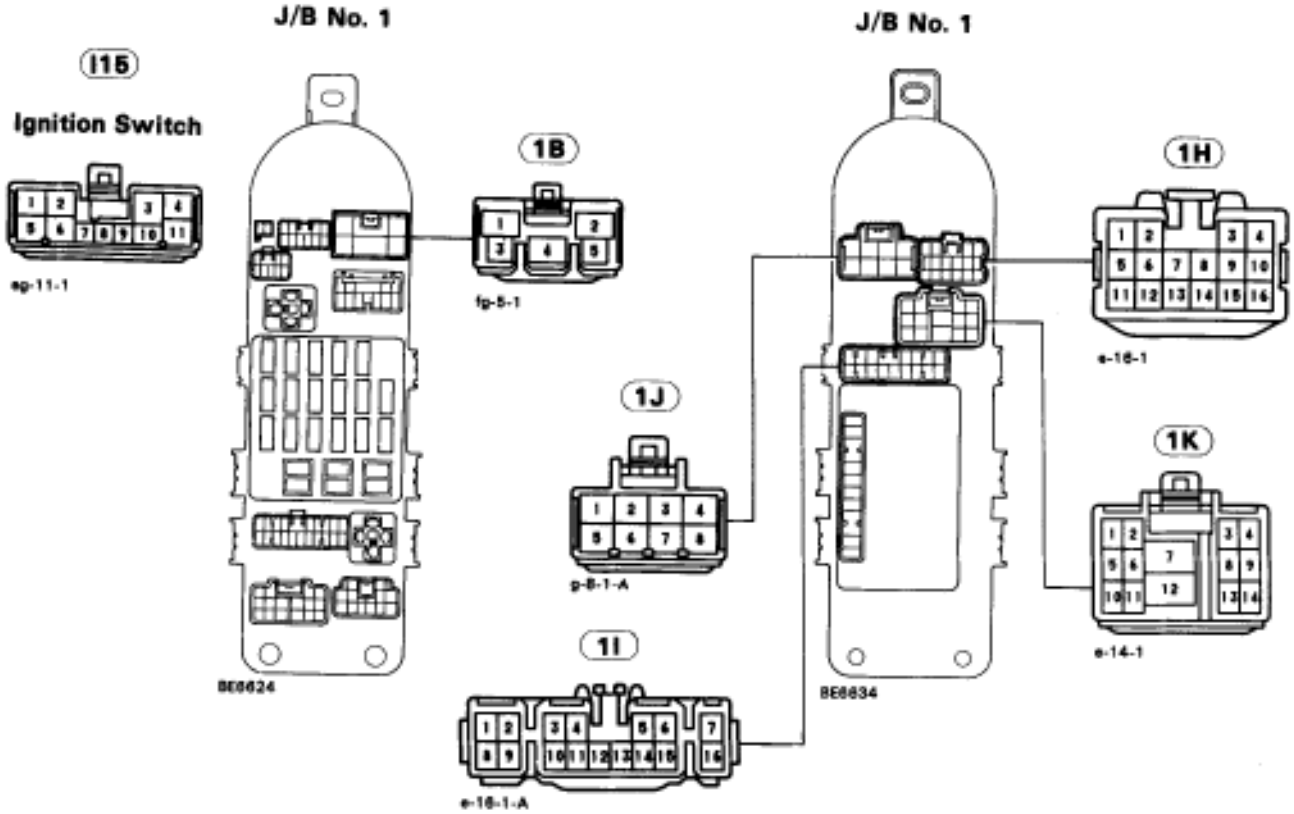

WhereEverybodyKnowsYourName

Location of Connectors in Body

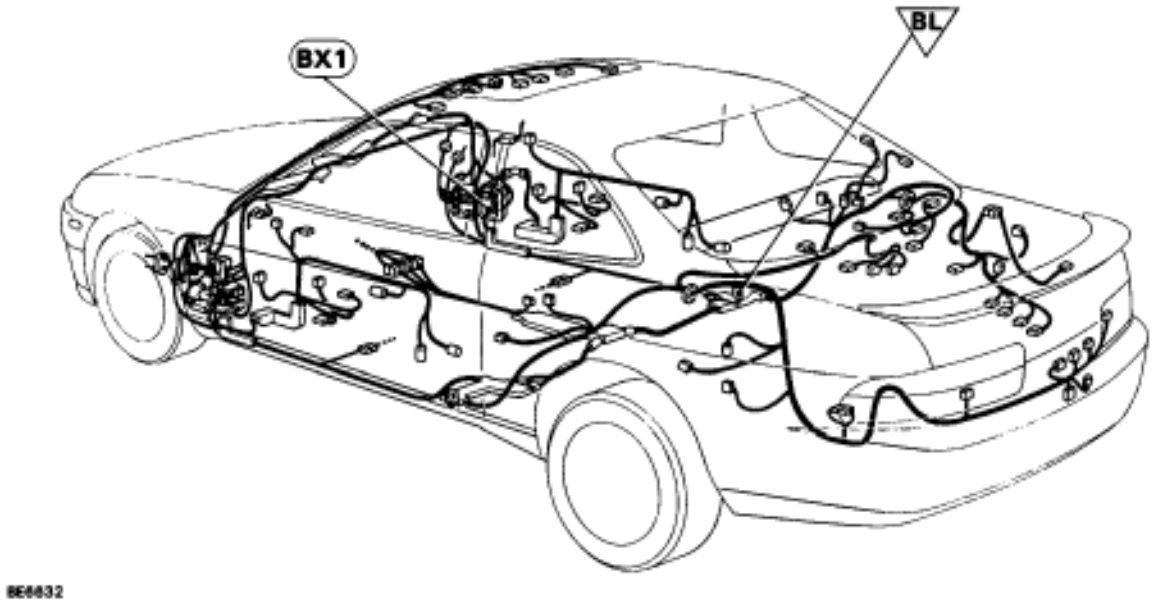

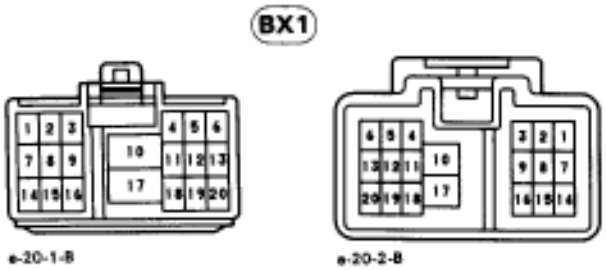

WhereEverybodyKnowsYourName

Location of Connectors in Seat

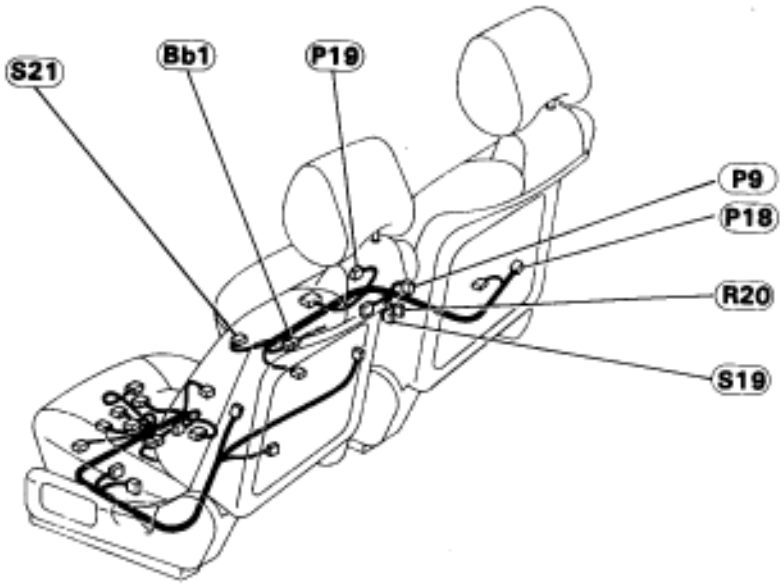

P9

Power Seat Switches

e-6-2

P18

Reclining Motor

e-2-1

P19

Slide Motor

H-2-1

R20

Reclining Front Limit Switch

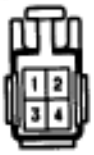

e-4-1

R20

Reclining Rear Limit Switch

e-4-1

S19

Slide Limit Switch

e-2-1-G

S21

Slide Position Sensor

e-3-1

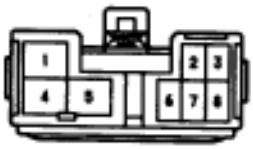

eg-8-1

Bb1

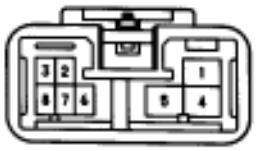

eg-8-2

WhereEverybodyKnowsYourName

CIRCUIT INSPECTION

ECU Power Source Circuit

CIRCUIT DESCRIPTION

This circuit provides power for ECU operation and is also the power source for the slide position sensor.

DIAGNOSTIC CHART

1 Check DOME fuse.
- NG → Check for short in all the harness and components connected to DOME fuse. (See attached wiring diagram).
- OK ↓

2 Check voltage between terminals SYSB and GND of ECU connector.
- OK → Proceed to next circuit inspection shown on matrix chart. (See page BE–319).
- NG ↓

3 Check continuity between terminal GND of ECU connector and body ground.
- NG → Repair or replace harness or connector.
- OK ↓

Check and repair harness or connector between ECU and battery.

WIRING DIAGRAM

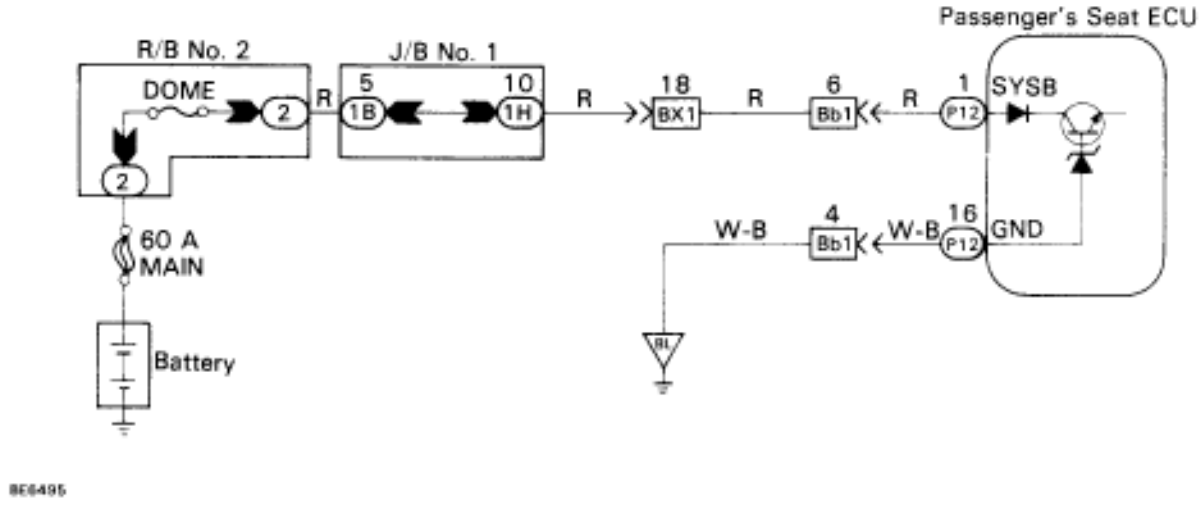

WhereEverybodyKnowsYourName

INSPECTION PROCEDURE

1	Check DOME fuse.

OK

NG → **Check for short in all the harness and components connected to DOME fuse and repair them (See attached wiring diagram).**

2	Check voltage between terminals SYSB and GND of ECU connector.

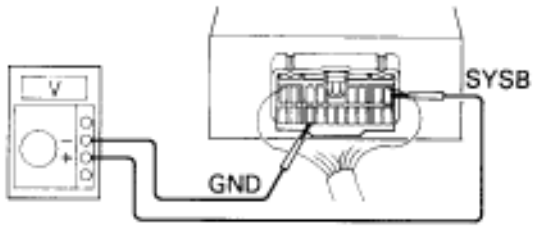

P Remove ECU with connectors still connected.

C Measure voltage between terminals SYSB and GND of ECU connector.

OK **Voltage: 10 –14 V**

NG

OK → **Proceed to next circuit inspection shown on matrix chart (See page BE–319).**

3	Check continuity between terminal GND of ECU connector and body ground.

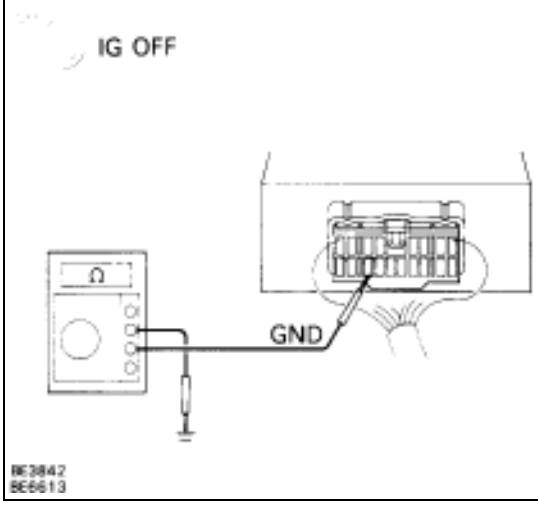

C Measure resistance between terminal GND of ECU connector and body ground.

OK **Resistance: 1 or less**

OK

NG → **Repair or replace harness or connector.**

Check and repair harness or connector between ECU and battery.

WhereEverybodyKnowsYourName

Slide Motor Power Source Circuit

CIRCUIT DESCRIPTION

This is the power source for slide motor.

DIAGNOSTIC CHART

1 Check DOOR fuse.
- NG → Check for short in all the harness and components connected to the DOOR fuse (See attached wiring diagram). *1
- OK ↓

2 Check voltage between terminals +B and GND of ECU connector.
- OK → Proceed to next circuit inspection shown on matrix chart (See page BE–319).
- NG ↓

3 Check continuity between terminal GND of ECU connector and body ground.
- NG → Repair or replace harness of connector.
- OK ↓

Check and repair harness or connector between ECU and battery.

*1 The power source is supplied to the actuator (Slide motor) through the passenger's seat ECU accordingly, if a short circuit of the W/H or actuator occurs in the actuator circuit, the DOOR fuse may become open, so also inspect the actuator. (Slide motor circuit on page BE–328).

WIRING DIAGRAM

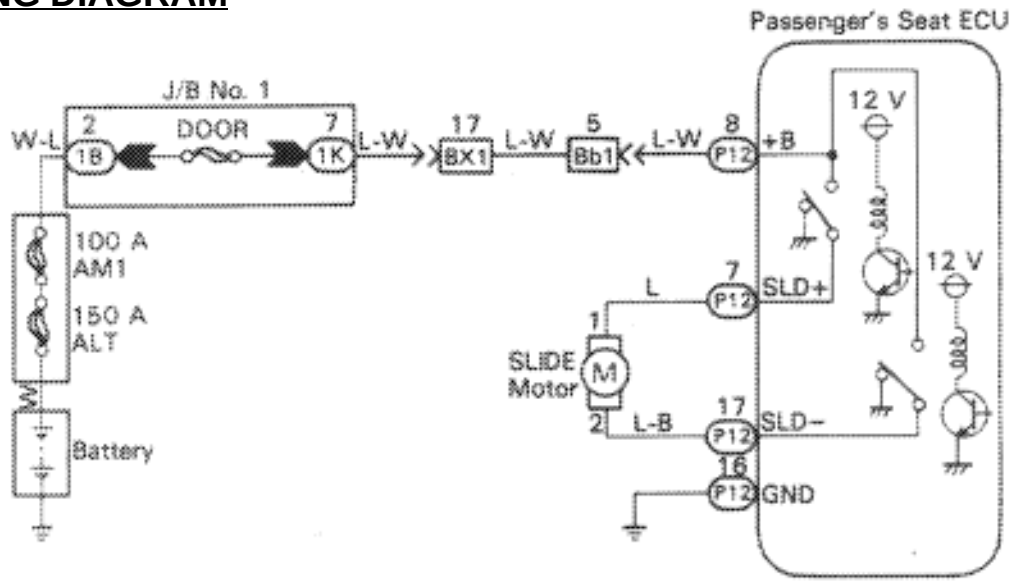

WhereEverybodyKnowsYourName

INSPECTION PROCEDURE

1	Check DOOR fuse.

OK

NG → **Check for short in all the harness components connected to the DOOR fuse and repair them (See attached wiring diagram). *1**

2	Check voltage between terminals +B and GND of ECU connector.

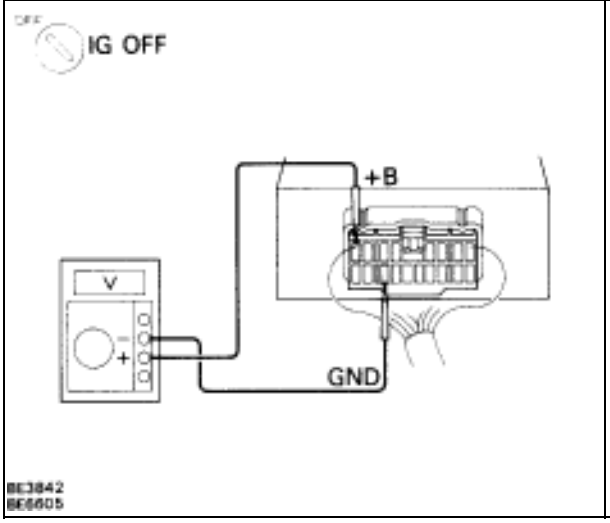

P Remove passenger's seat ECU with connectors still connected.

C Measure voltage between terminals +B and GND of ECU connector.

OK **Voltage: 10 – 14 V**

NG

OK → **Proceed to next circuit inspection shown on matrix chart (See page BE–319).**

3	Check continuity between terminal GND of ECU connector and body ground.

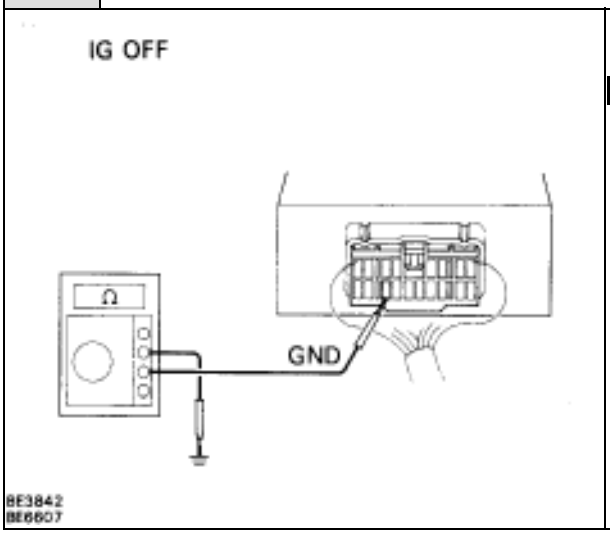

C Measure resistance between terminal GND of ECU and body ground.

OK **Resistance: 1 or less**

OK

NG → **Repair or replace harness or connector.**

Check and repair harness or connector between ECU and battery.

WhereEverybodyKnowsYourName

Slide Motor Circuit

CIRCUIT DESCRIPTION

The passenger's seat ECU control the slide motor.

DIAGNOSTIC CHART

1 Check slide motor.
- NG → Replace motor.
- OK ↓

2 Check harness and connector between ECU and motor (See page IN–27).
- NG → Repair or replace harness or connector.
- OK ↓

Proceed to next circuit inspection shown on matrix chart (See page BE–319).

WIRING DIAGRAM

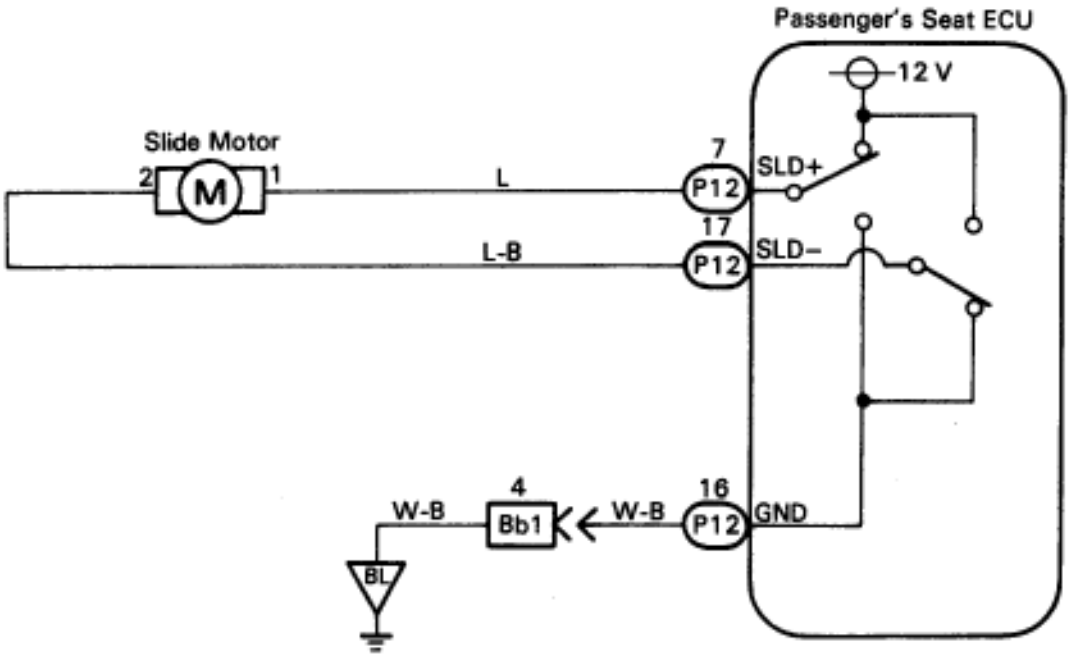

BE0581

WhereEverybodyKnowsYourName

INSPECTION PROCEDURE

1 **Check Slide Motor.**

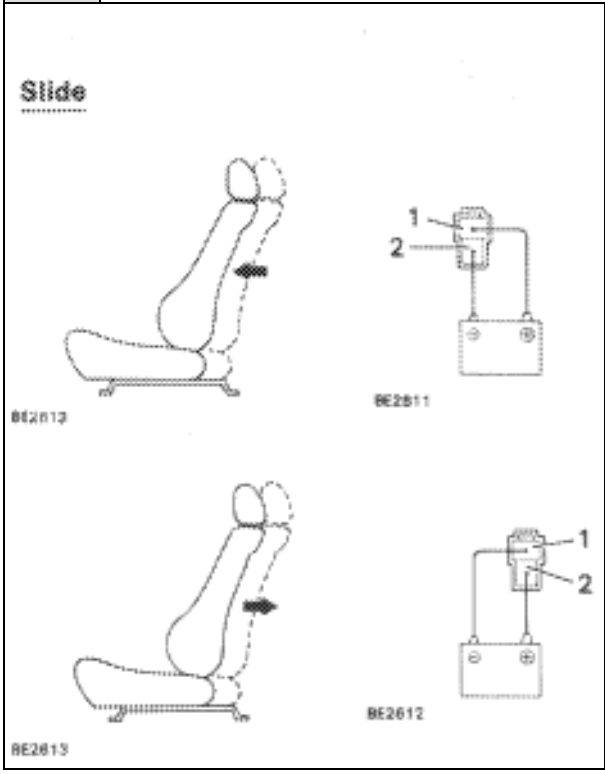

P (1) Remove Seat

(2) Disconnect slide motor connector.

C Check seat movement when battery voltage is applied to slide motor.

Connect positive ≦ (negative ↔) terminal to terminal 1 of slide motor connector and negative ↔ (positive ≦) terminal to terminal 2.

OK

Terminal / Movement	1	2
Forward	⊕	⊖
Back	⊖	⊕

OK → **NG** → **Replace motor.**

2 **Check for open and short in harness and connector between ECU and motor (See page IN–27).**

OK → **NG** → **Repair or replace harness or connector.**

Proceed to next circuit inspection shown on matrix chart (See page BE–319).

WhereEverybodyKnowsYourName

Position Sensor Circuit

CIRCUIT DESCRIPTION

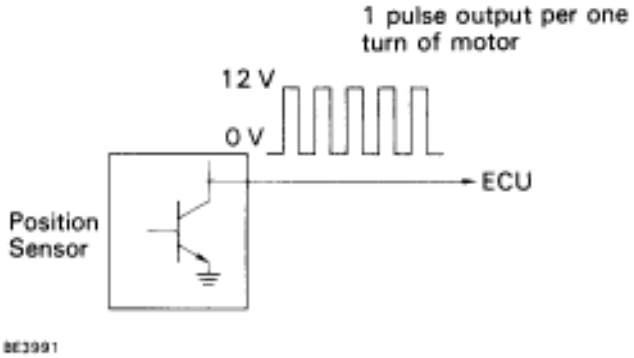

The position sensor senses movement of the seat and send pulse signals to the ECU. The position sensor sends pulses to the ECU in proportion to the amount of seat movement, as shown in the diagram on the left.
If a malfunction occurs in a position sensor and a sensor signal is not input to the ECU even when the motor operates, the ECU prohibits return operation.

DIAGNOSTIC CHART

Inspect the circuit which is malfunctioning.

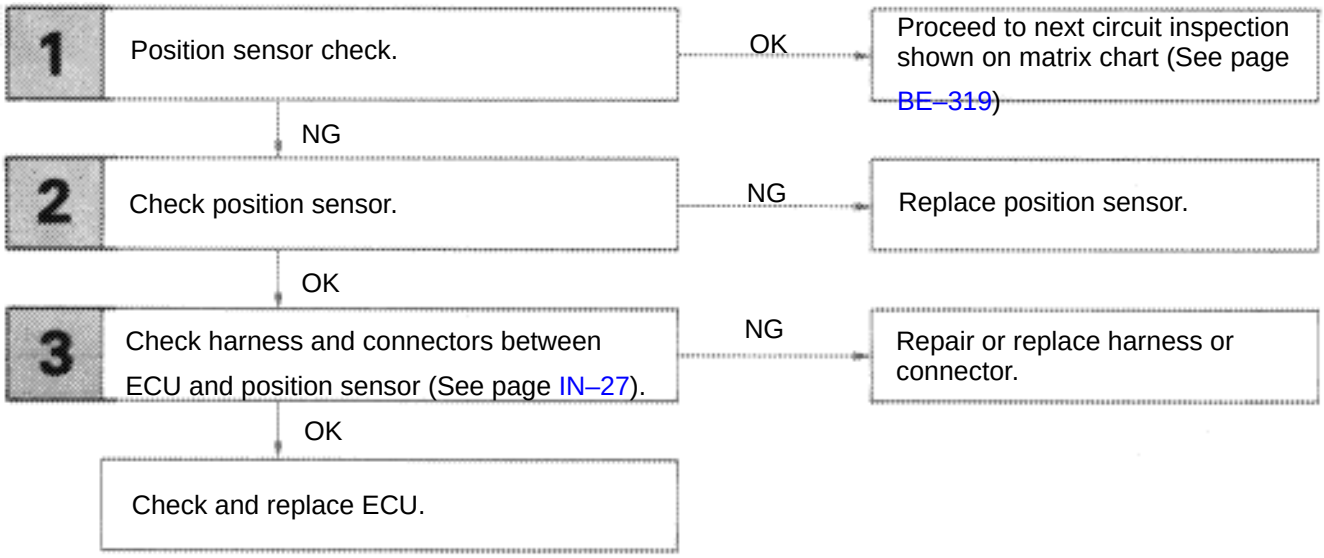

WIRING DIAGRAM

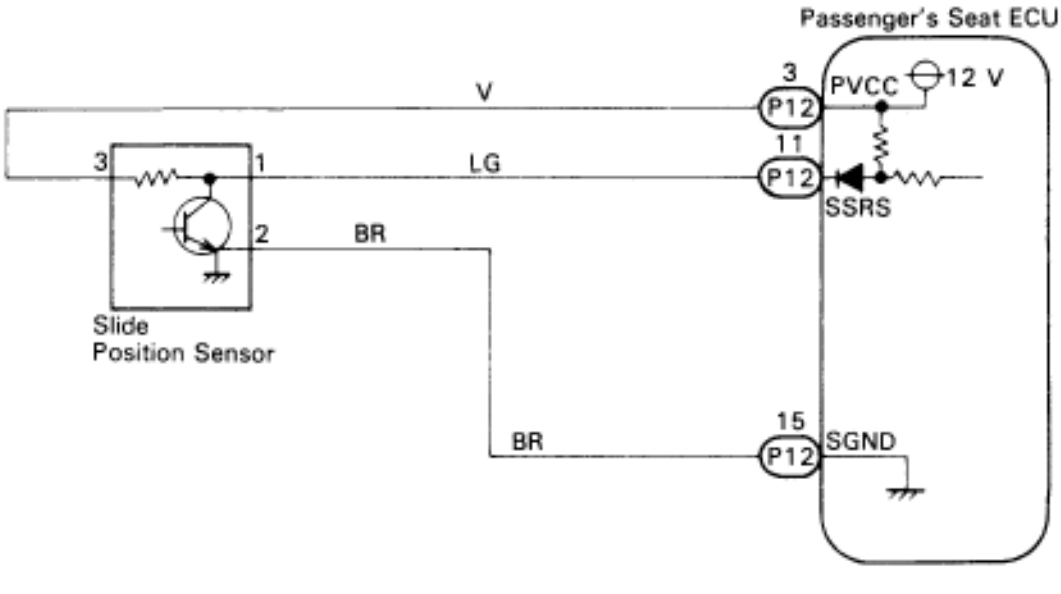

WhereEverybodyKnowsYourName

INSPECTION PROCEDURE

1 Position Sensor Check.

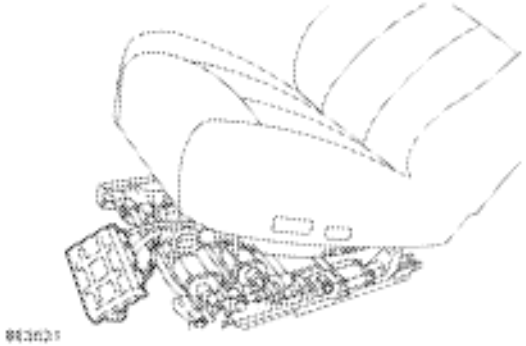

P (1) Remove the passenger's seat.

(2) Remove the bolts for seat rail and lift the seat cushion up a little.

Notice: If the seat cushion is lifted too high, the harness will be pulled and the clamp may come loose.

(3) Remove the ECU with the connector attached from where it is installed to the underside of the seat cushion.

Position sensor check

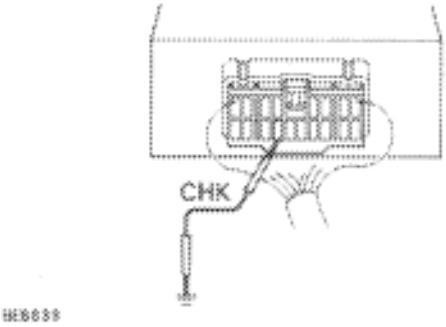

C (1) Connect terminal CHK of the ECU to body ground to put the ECU into check mode.

(2) Measure voltage between terminal DOUT of ECU and body ground.

Use an analog type meter.

Hint

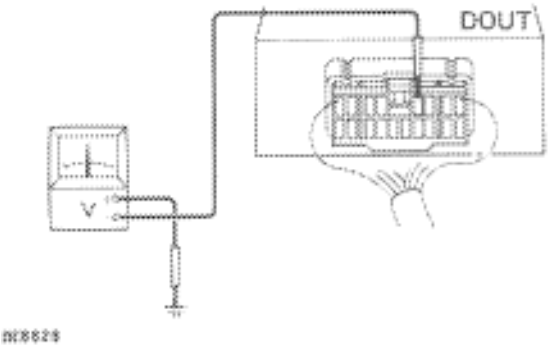

(3) Check that the "ready" code is output as shown in the illustration.

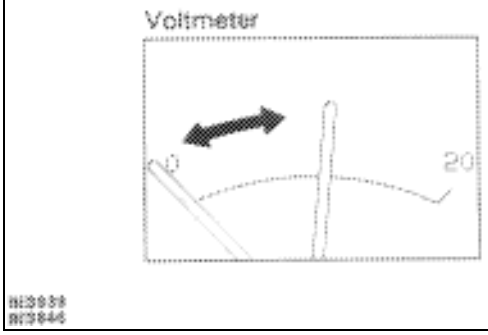

WhereEverybodyKnowsYourName

1 **Position sensor check (Cont'd).**

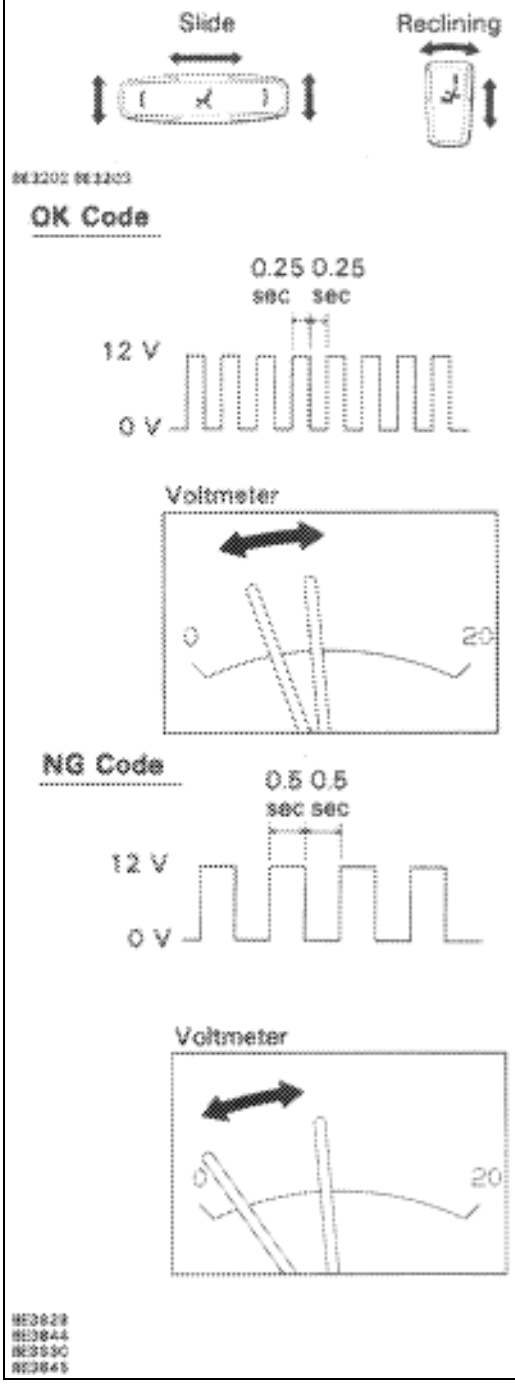

(4) Operate the power seat manual switch and check the change in the voltage when the seat is moving.

(5) The changes in the output voltage when the input signal is normal and when it is abnormal are shown in the illustrations. Compare the results with those from (4) and diagnose the condition of each circuit.

Hint

▼The OK and NG codes continue to be output while the manual switch is ON.

▼When the seat reaches the limit of movement, e.g. when the headrest reaches the highest or lowest position, the voltage changes from the OK code to the NG code.

After operating any of the system functions with no problem and confirming the OK code and NG code by comparing the amount of wavering of the voltmeter needle, inspect the function with a problem.

▼The amount of wavering of the voltmeter needle depends on the meter.

OK

Output	OK	OK Code
	NG	NG Code

NG

OK **Proceed to next circuit inspection shown on the matrix chart (See page BE–318).**

Go to step [2].

WhereEverybodyKnowsYourName

2 **Check position sensor.**

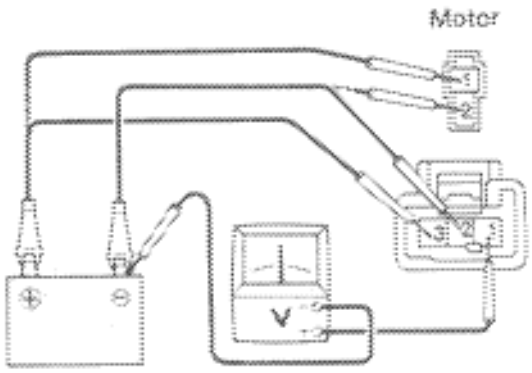

P Disconnect the connector of the sensor and the connector of the motor leading to the sensor.

C

(1) Connect the positive ≦ lead to terminal 3 of sensor and negative ↔ lead to terminal 2.

(2) Measure voltage between terminal 1 of sensor and body ground when battery voltage is applied between terminals 1 and 2 of motor connector.

Hint When the battery voltage is applied to the motor connector terminals, ≦ and ↔ are interchangeable.

OK

OK → **NG** → **Replace position sensor.**

3 **Check for open and short in harness and connectors between ECU and position sensor (See page IN–27).**

OK → **NG** → **Repair or replace harness or connectors.**

Check and replace ECU.

WhereEverybodyKnowsYourName

Slide Switch Circuit

CIRCUIT DESCRIPTION

When the power seat control switch is operated, a signal is sent to the ECU and the ECU applies the power source to the slide motor.

DIAGNOSTIC CHART

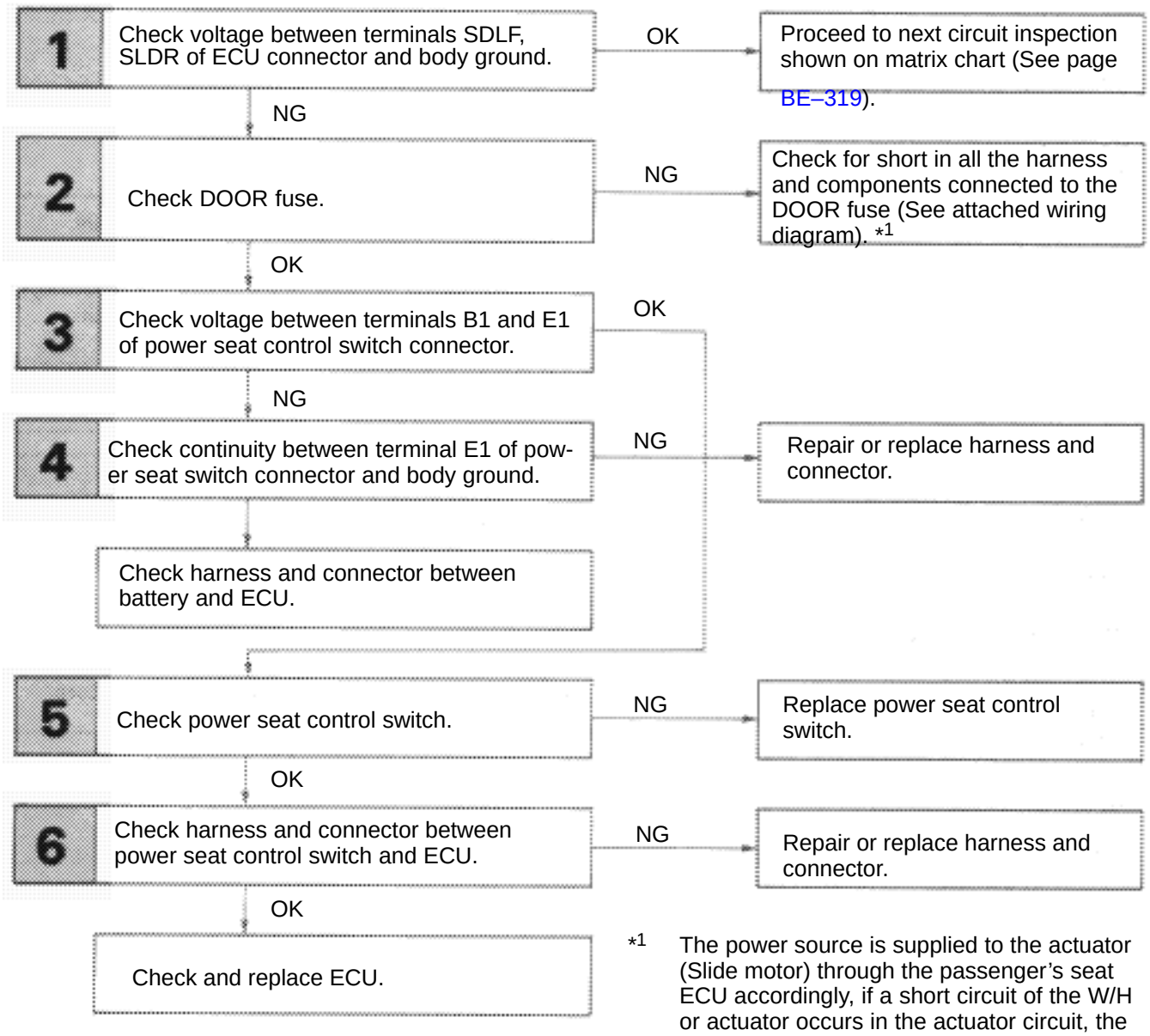

*1 The power source is supplied to the actuator (Slide motor) through the passenger's seat ECU accordingly, if a short circuit of the W/H or actuator occurs in the actuator circuit, the DOOR fusible link may become open, so also inspect the actuator.

(Slide motor circuit on page BE–328).

WhereEverybodyKnowsYourName

WIRING DIAGRAM

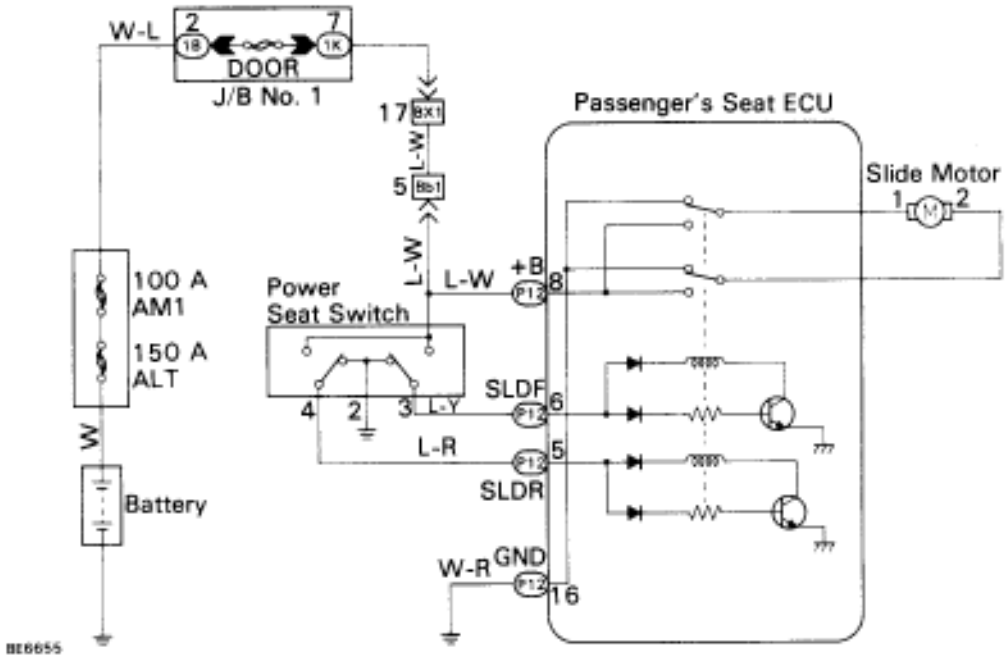

INSPECTION PROCEDURE

1 **Check voltage between terminals SLDF, SLDR, of ECU connector and body ground.**

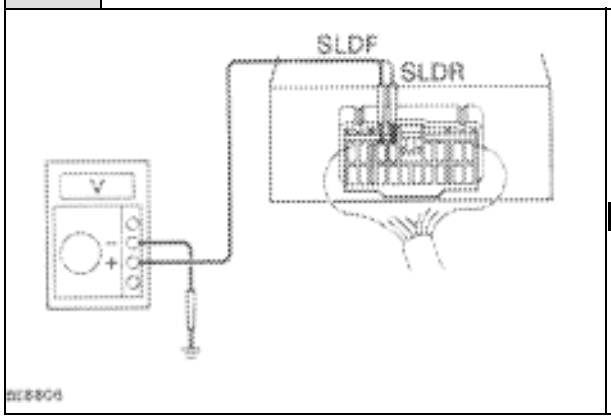

P Remove ECU with connector still connected.

C Measure voltage between SLDF, SLDR terminal and body ground, when slide switch is operated.

OK

Switch condition	Voltage (V)	
	SLDF	SLDR
Forward	10 – 14 V	Below 1 V
Back	Below 1 V	10 – 14 V

NG

OK **Proceed to next circuit inspection shown on matrix chart (See page BE–319).**

2 **Check DOOR fuse.**

OK

NG **Check for short in all the harness and components connected to the DOOR fuse and repair them (See attached wiring diagram). *1**

Go to step [3].

*1 The power source is supplied to the actuator (Slide motor) through the passenger's seat ECU accordingly, if a short circuit of the W/H or actuator occurs in the actuator circuit, the DOOR fusible link may become OPEN, so also inspect the actuator.
(Slide motor circuit on page BE–328).

WhereEverybodyKnowsYourName

3	Check voltage between terminals B1 and E1 of power seat switch connector.
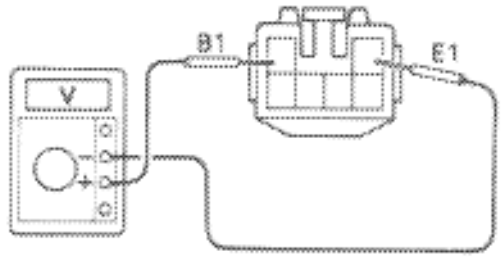	**P** Remove power seat switch with connector still connected. **C** Measure voltage between terminal B1 and E1 of power seat switch connector. **OK** **Voltage: 10 – 14 V**

NG

OK → **Go to step 5.**

4	Check continuity between terminal E1 or power seat switch connector and body ground.
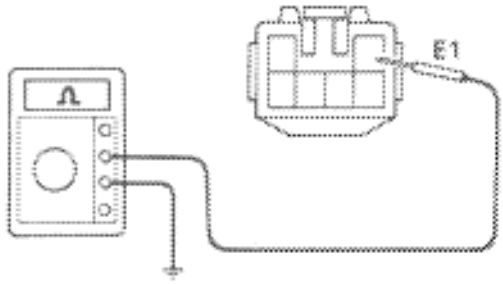	**P** Disconnect power seat switch connector. **C** Check continuity of E1 terminal. **OK** **Resistance: 1 or less**

OK

NG → **Repair or replace harness or connector.**

Check for open and short in harness and connector between ECU and battery (See page IN–27).

WhereEverybodyKnowsYourName

5 **Check power seat switch.**

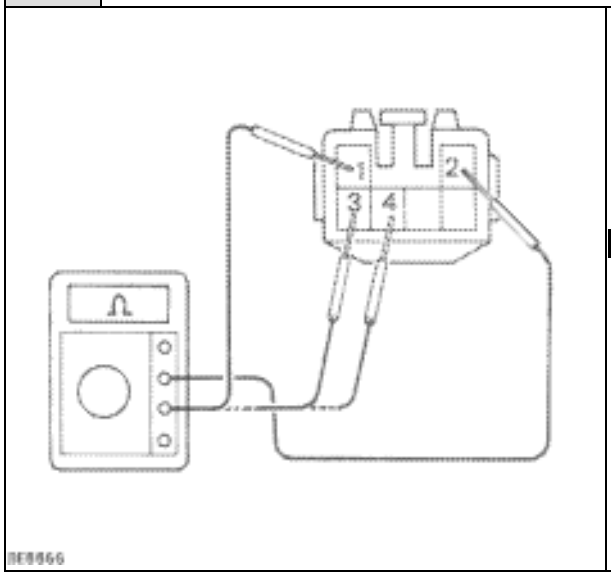

P Disconnect power seat switch connector.

C Check continuity of each terminal.

OK

Continuity

Switch Position \ Terminal		1	3	4	2
Side	Neutral		○	○	○
	Forward	○	○	○	○
	Back	○		○	
			○		○

OK → **NG** → **Replace power seat switch.**

6 **Check for open and short in harness and connectors between ECU and power seat switch. (See page IN–27).**

OK → **NG** → **Repair or replace harness or connector.**

Check and replace ECU.

WhereEverybodyKnowsYourName

Buckle Switch Circuit

CIRCUIT DESCRIPTION

Buckle switch signal is sent to ECU when the passenger's seat belt is fastened.
When the signal is input to ECU, ECU prohibits operation of the power walk–in.

DIAGNOSTIC CHART

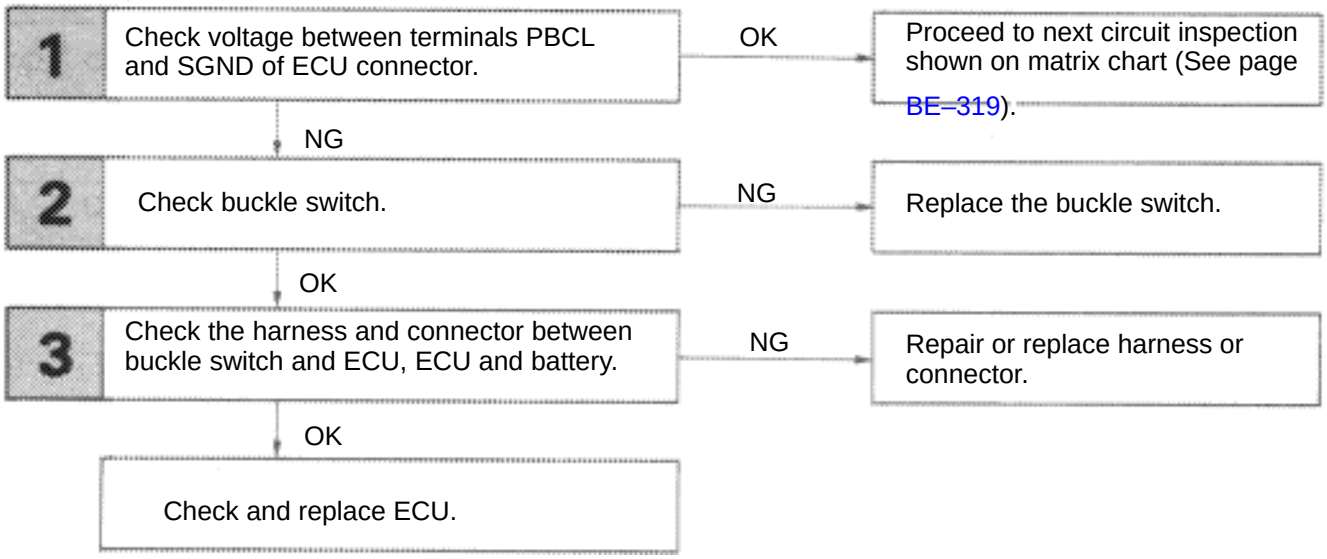

WIRING DIAGRAM

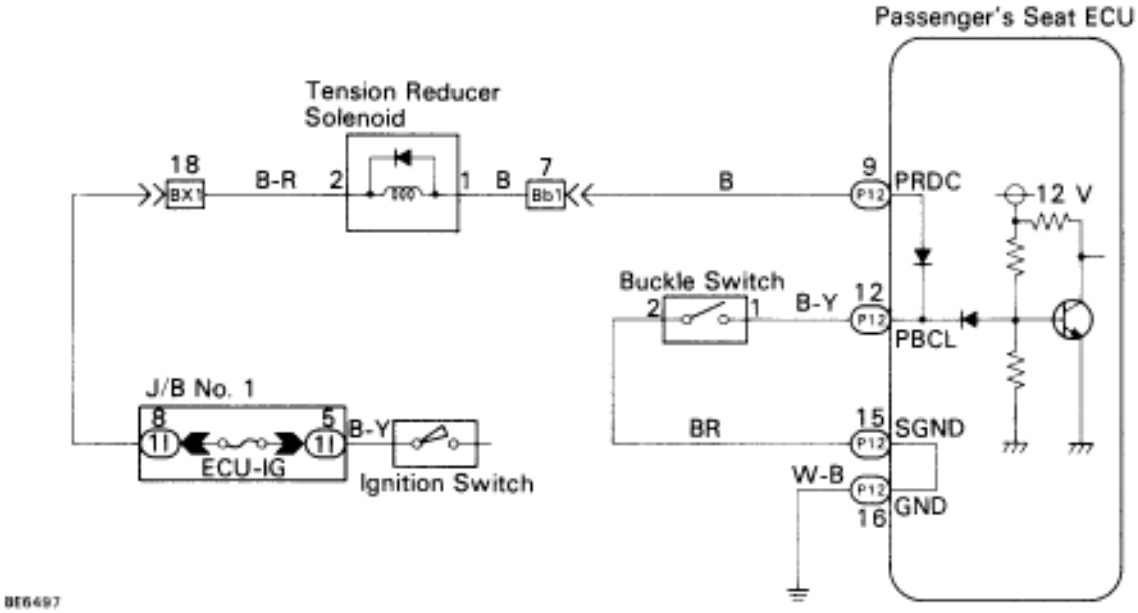

WhereEverybodyKnowsYourName

INSPECTION PROCEDURE

1 **Check voltage between terminal PBCL and SGND of ECU connector.**

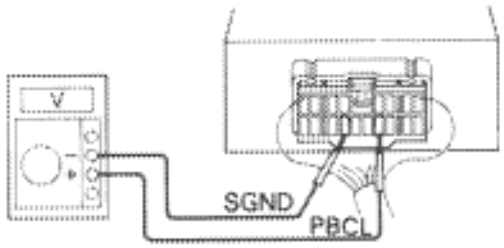

P Remote ECU with connectors still connected.

C Measure voltage between terminals PBCL and SGND of ECU connector, when buckle switch is on and off.

OK

With switch ON (Tung plate is inserted into buckle switch)	Below 1 V
With switch OFF (Tung plate is inserted into buckle switch)	10 – 14 V

NG

OK **Proceed to next circuit inspection shown on matrix chart (See page BE–319).**

2 **Check buckle switch.**

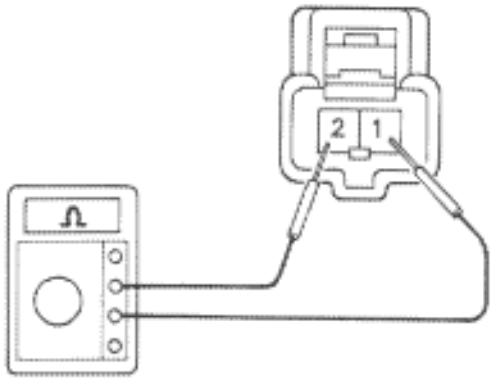

P Disconnect buckle switch connector.

C Check continuity between terminal 1 and 2 of buckle switch connector.

OK

Continuity

Switch condition \ Terminal	1	2
ON	○—○	
OFF		

OK

NG **Replace buckle switch.**

3 **Check for open and short in harness and connector between buckle switch and ECU, ECU and battery (See page IN–27).**

OK

NG **Repair or replace harness or connector.**

Check and replace ECU.

WhereEverybodyKnowsYourName

Limit Switch Circuit

CIRCUIT DESCRIPTION

Slide neutral limit switch: this switch is on when passenger's seat is slided approx. 120 or more from the most back position.
Reclining from limit switch: this switch is on, when passenger's seat back is reclining forward.
Reclining rear limit switch: when passenger's seat back returns to upright, this is on.

DIAGNOSTIC CHART

For each symptom, inspect the circuit indicated in the table.

Symptom	Inspection circuit
• Only return operation is not functioning. • Seat returns to rear most position during return operation.	Slide neutral limit switch.
• Walk–in function and return function do not operate. (However, they operate when using the manual switch).	Reclining front limit switch. Reclining rear limit switch.
• Only walk–in operation is not functioning.	Reclining front limit switch.

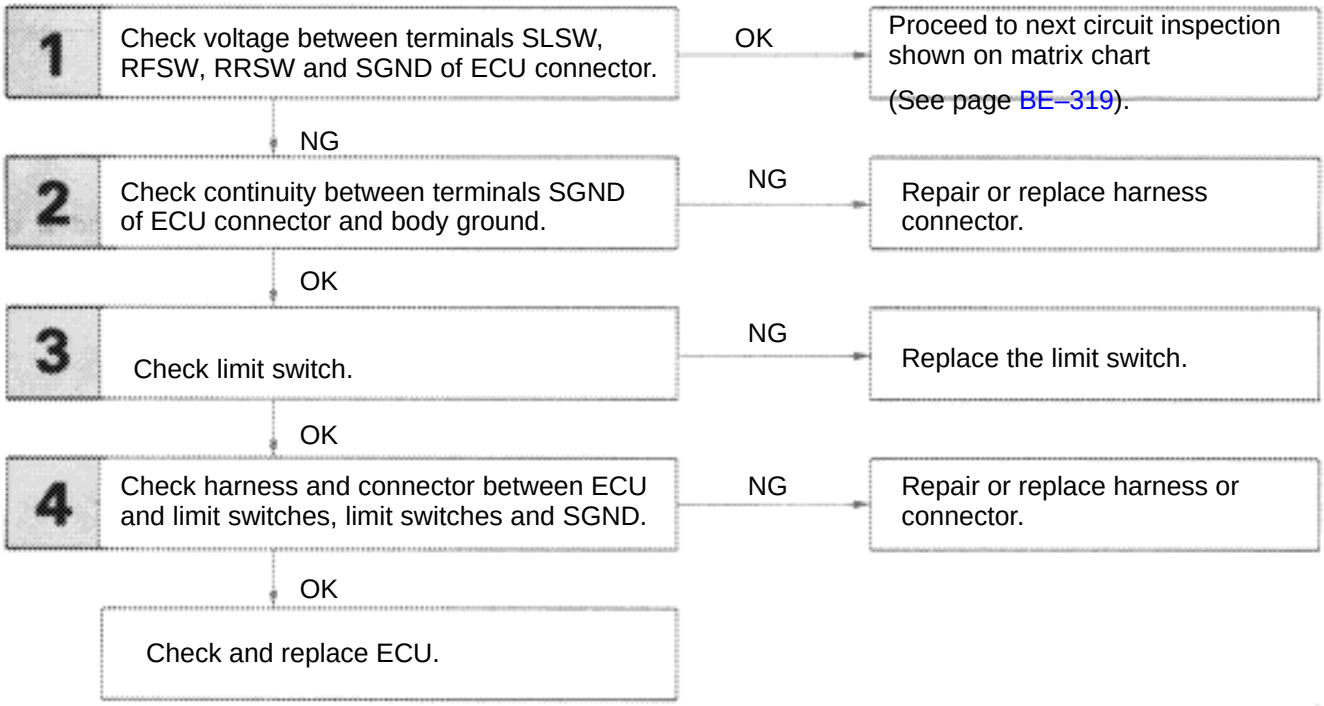

WhereEverybodyKnowsYourName

INSPECTION PROCEDURE

1 Check voltage between terminals SLSW, RFSW, RRSW and SGND of ECU connector.

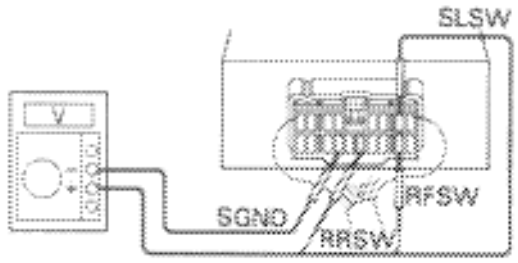

P Remove ECU with connector still connected.

C Measure voltage between each terminal and SGND of ECU connector.

When each limit switch is on and off.

OK

Switch condition		Condition	Voltage
Slide neutral limit switch	ON	Seat is forward of the neutral position.	Below 1 V
	OFF	Seat is to the rear of the neutral position.	10 – 14 V
Reclining front limit switch	ON	Seat back is fully reclined.	Below 1 V
	OFF	Others	10 – 14 V
Reclining rear limit switch	ON	Seat back is in the upright position	Below 1 V
	OFF	Others	10 – 14 V

NG

OK **Proceed to next circuit inspection shown on matrix chart (See page BE–319).**

2 Check continuity between terminal SGND of ECU connector and body ground.

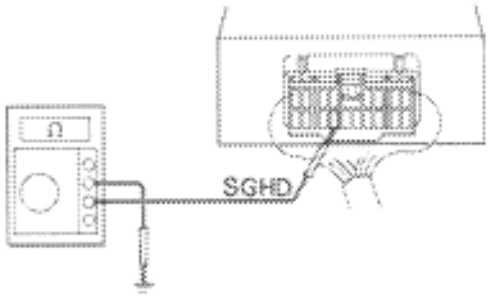

P Remove ECU with connector still connected.

C Measure resistance between SGND of ECU connector and body ground.

OK **Resistance: 1 or less**

OK

NG **Repair or replace harness or connector.**

Go to step [3].

WhereEverybodyKnowsYourName

3 **Check each limit switch.**

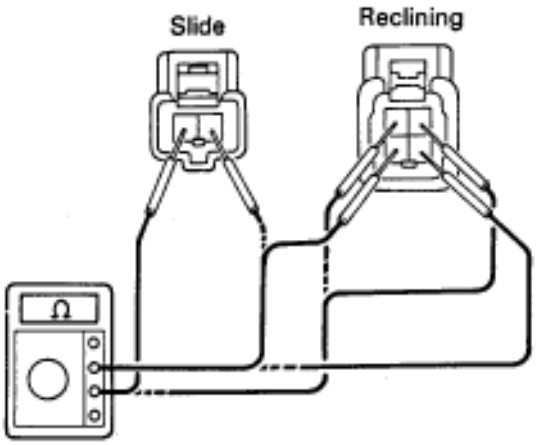

P Disconnect limit switch connector.

C Check continuity of each terminal of limit switch.

OK

Switch condition		Condition	Voltage
Slide neutral limit switch	ON	Seat is forward of the neutral position.	Continuity
	OFF	Seat is to the rear of the neutral position.	Open
Reclining front limit switch	ON	Seat back is fully reclined.	Continuity
	OFF	Others	Open
Reclining rear limit switch	ON	Seat back is in the upright position	Continuity
	OFF	Others	Open

OK → **NG** → **Replace the limit switch.**

4 **Check for open and short in harness and connector between ECU and limit switches, limit switches and SGND (See page IN–27).**

OK → **NG** → **Repair or replace harness or connector.**

Check and replace ECU.

WIRING DIAGRAM

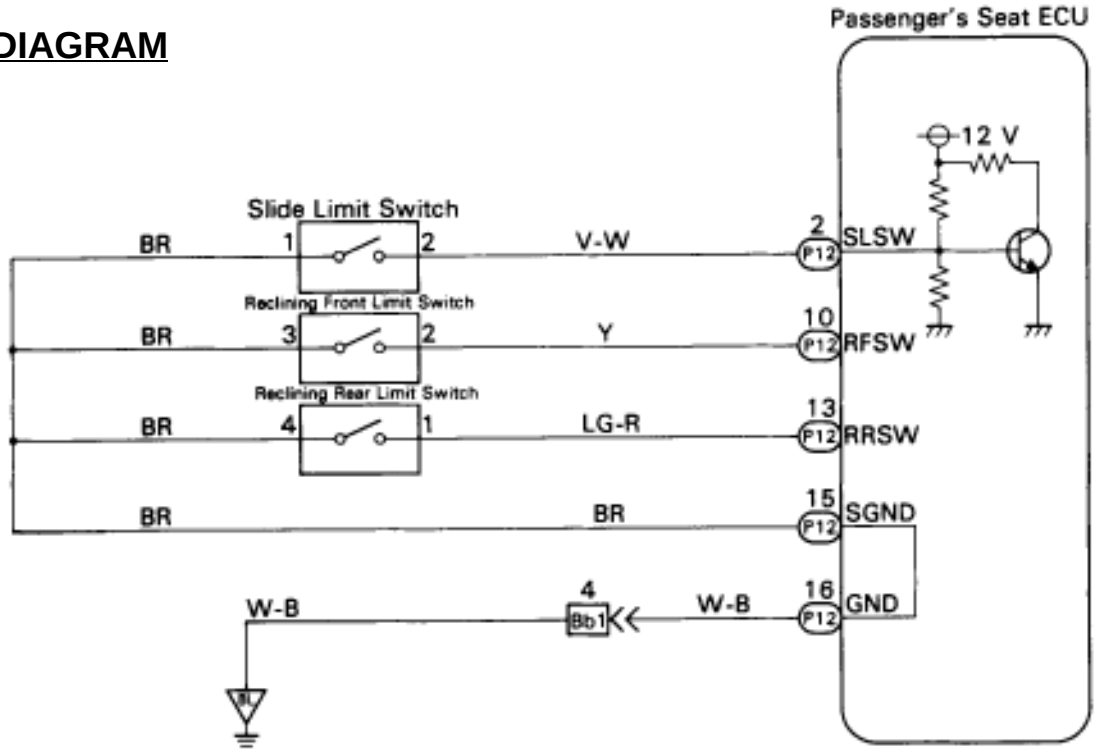

WhereEverybodyKnowsYourName

Reclining Switch and Motor Circuit

CIRCUIT DESCRIPTION

When the power seat switch is turned to forward reclining, the seat back returns to upright.
When the switch is turned to rear reclining, the seat back reclines.

DIAGNOSTIC CHART

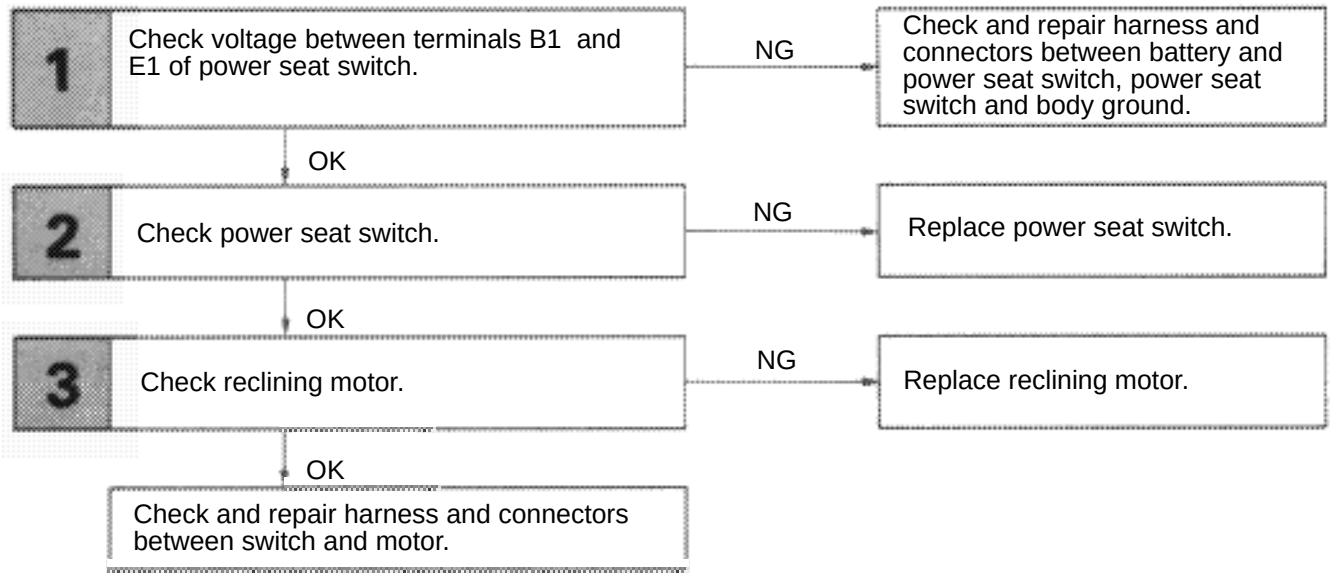

WIRING DIAGRAM

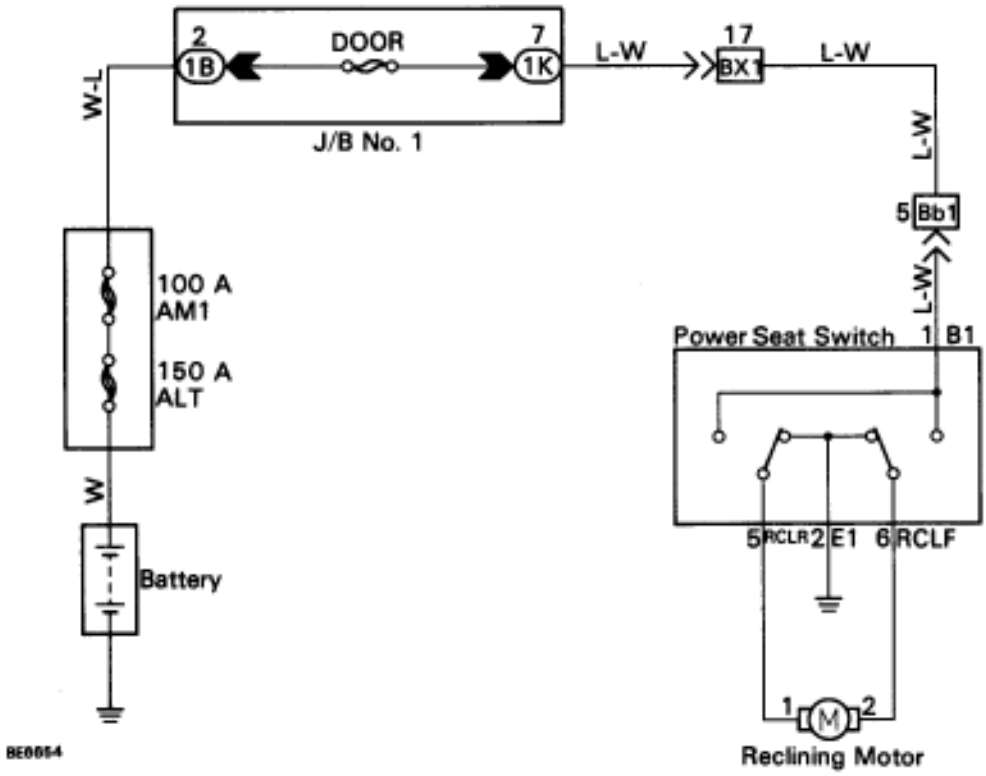

WhereEverybodyKnowsYourName

INSPECTION PROCEDURE

1 **Check voltage between terminals B1 and E1 of power seat switch.**

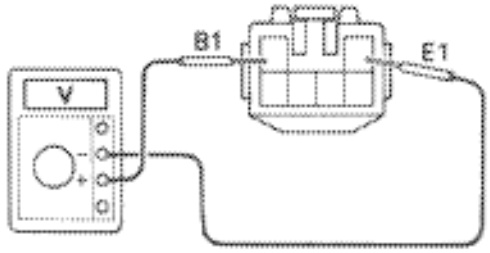

P Remove power seat switch with connector still connected.

C Measure voltage between terminals B1 and E1 of power seat switch connector.

OK **Voltage: 10 – 14 V**

OK

NG **Check and repair harness and connectors between battery and power seat switch, power seat switch and body ground.**

2 **Check power seat switch.**

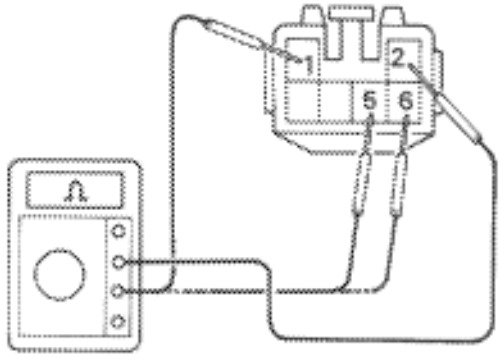

P Disconnect power seat switch connector.

C Check continuity of each terminal shown below.

OK

Continuity

Switch Position \ Terminal		1	6	5	2
Reclining	Neutral		○—○	○—○	○—○
	Forward	○—○	○—○	○—○	○—○
	Back	○—○	○—○	○—○	○—○

OK

NG **Replace power seat switch.**

Go to step [3].

WhereEverybodyKnowsYourName

3	Check reclining motor.

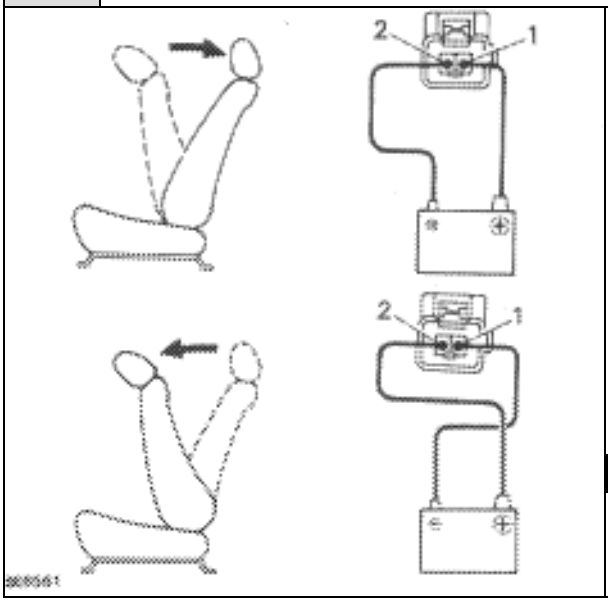

P (1) Remove seat.
(2) Disconnect reclining motor connector.

C Connect battery ≦ to terminal 1, and battery ↔ to terminal 2 of the reclining motor connector.

OK **The seat back reclines.**

C Connect battery ↔ to terminal 1, and battery ≦ to terminal 2 of the reclining motor connector.

OK **The seat back returns to upright.**

OK

NG **Replace reclining motor.**

Check and repair harness connectors between switch and motor.

WhereEverybodyKnowsYourName

DOOR LOCK CONTROL SYSTEM

WhereEverybodyKnowsYourName

DESCRIPTION

The door lock control system has a key–interlocked door lock and unlock function and a key–confinement prevention function. All doors can be locked and unlocked simultaneously by key operation at the front right or left door (the key needs to be operated twice to unlock the doors at the driver's door). If the door lock operation is performed when one of the doors is open and the ignition key inserted in the key cylinder, doors are unlocked automatically to prevent the ignition key from being left inside the vehicle. The luggage compartment door can be opened by electromagnetic opener.
For the function of component parts of this system, refer to the circuit description in circuit inspection.

PARTS LOCATION

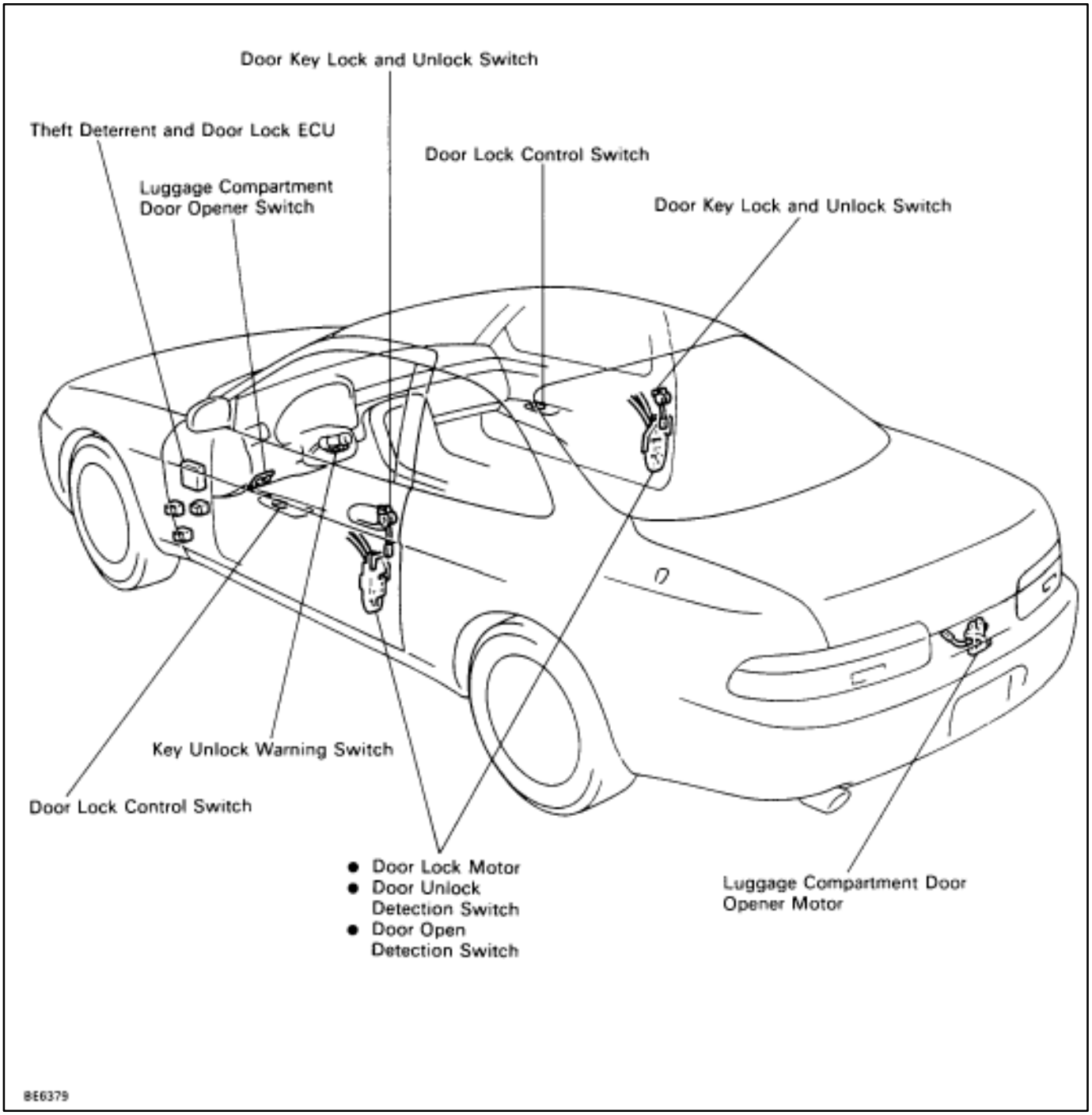

WhereEverybodyKnowsYourName

DESCRIPTION

The door lock control system has a key–interlocked door lock and unlock function and a key–confinement prevention function. All doors can be locked and unlocked simultaneously by key operation at the front right or left door (the key needs to be operated twice to unlock the doors at the driver's door). If the door lock operation is performed when one of the doors is open and the ignition key inserted in the key cylinder, doors are unlocked automatically to prevent the ignition key from being left inside the vehicle. The luggage compartment door can be opened by electromagnetic opener.
For the function of component parts of this system, refer to the circuit description in circuit inspection.

PARTS LOCATION

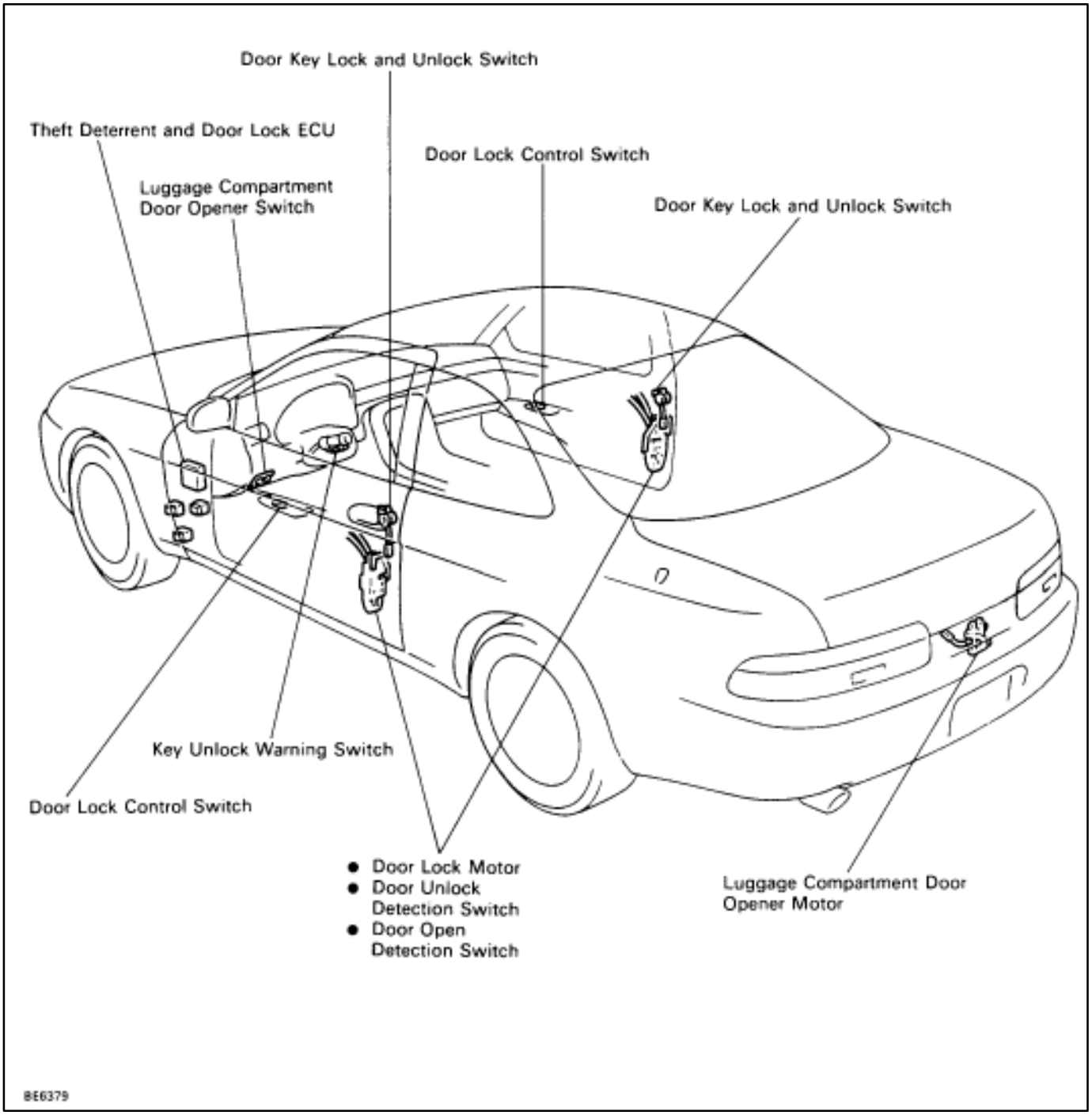

WhereEverybodyKnowsYourName

–MEMO–

WhereEverybodyKnowsYourName

HOW TO PROCEED WITH TROUBLESHOOTING

Perform troubleshooting in accordance with the procedure on the following page.

▼ **CUSTOMER PROBLEM ANALYSIS**
Using the customer problem analysis check sheet for reference, ask the customer in as much detail as possible about the problem.

9 **PROBLEM SYMPTOM CONFIRMATION,** 2 **SYMPTOM SIMULATION**
Confirm the problem symptoms. If the problem does not reappear, be sure to simulate the problem using ”Problem Simulation Method”.
For example, if the malfunction involves failure of the lock or unlock during operation of the Door Lock Control Switch, check if lock and unlock operation of the door using the key is normal or abnormal, and also check if key confinement prevention function and luggage compartment door opener function are normal or not. And having fully checked the extent of the malfunction.

10 **MATRIX CHART OF PROBLEM SYMPTOMS**
Confirm the order of inspection for each applicable problem symptom on the matrix chart.

5 **CIRCUIT INSPECTION**
Proceed with diagnosis of each circuit in accordance with the inspection order confirmed in 10. Judge whether the cause of the problem is in the sensor, wire harness and connectors, or the ECU.

6 **REPAIR**
When the cause of the problem is found in 5, perform repairs.

7 **CONFIRMATION TEST**
After completing repairs, confirm that the problem is eliminated and that all functions of the door lock control system are normal.

WhereEverybodyKnowsYourName

Item inside ▱ are titles of pages in this manual, with the page number indicated in the bottom portion. See the indicated pages for detailed explanations.

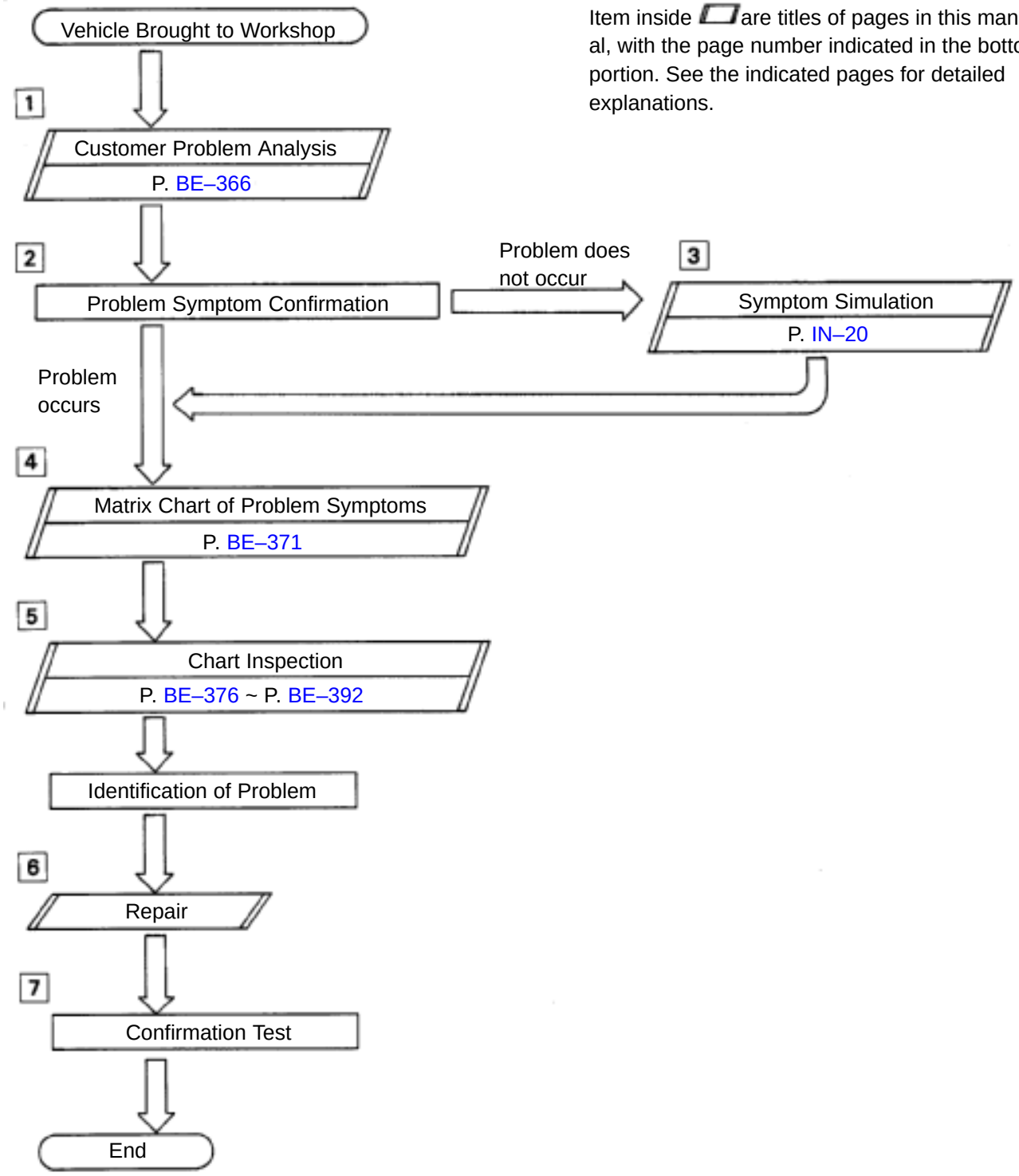

WhereEverybodyKnowsYourName

CUSTOMER PROBLEM ANALYSIS CHECK SHEET

DOOR LOCK CONTROL System Check Sheet

Inspector's Name : _____

Customer's Name		**Registration No.**	
		Registration Year	/ /
		Frame No.	
Date Vehicle Brought In	/ /	**Odometer Reading**	km Miles

Date of Problem Occurrence		/ /
Frequency of Problem Occurrence		2 Constant 2 Sometimes (times/per day, month) 2 Once only
Conditions at Time of Problem Occurrence	**Weather**	2 Fine 2 Cloudy 2 Rainy 2 Snowy 2 Various/Others
	Outdoor Temperature	2 Hot 2 Warm 2 Cool 2 Cold (Approx. °F (°C))

Problem Symptom	2 Malfunction in Door Lock/Unlock Operation Using Door Lock Control Switch	2 Driver's side door lock control switch	2 Driver's side door 2 Passenger's side door
		2 Passenger's side door lock control switch	2 Driver's side door 2 Passenger's door
	2 Malfunction in Door Lock/Unlock Operation Using Key.	2 Driver's side door key operated switch	2 Driver's side door 2 Passenger's side door
		2 Passenger's side door key operated switch	2 Driver's side door 2 Passenger's side door
		2 2–operation unlock function of driver's side door key operated switch.	
	2 Malfunction in Key Confinement Prevention Function.		
	2 Malfunction in Luggage Compartment Door Opener Function.		
	2 Others		

WhereEverybodyKnowsYourName

WIRING DIAGRAM

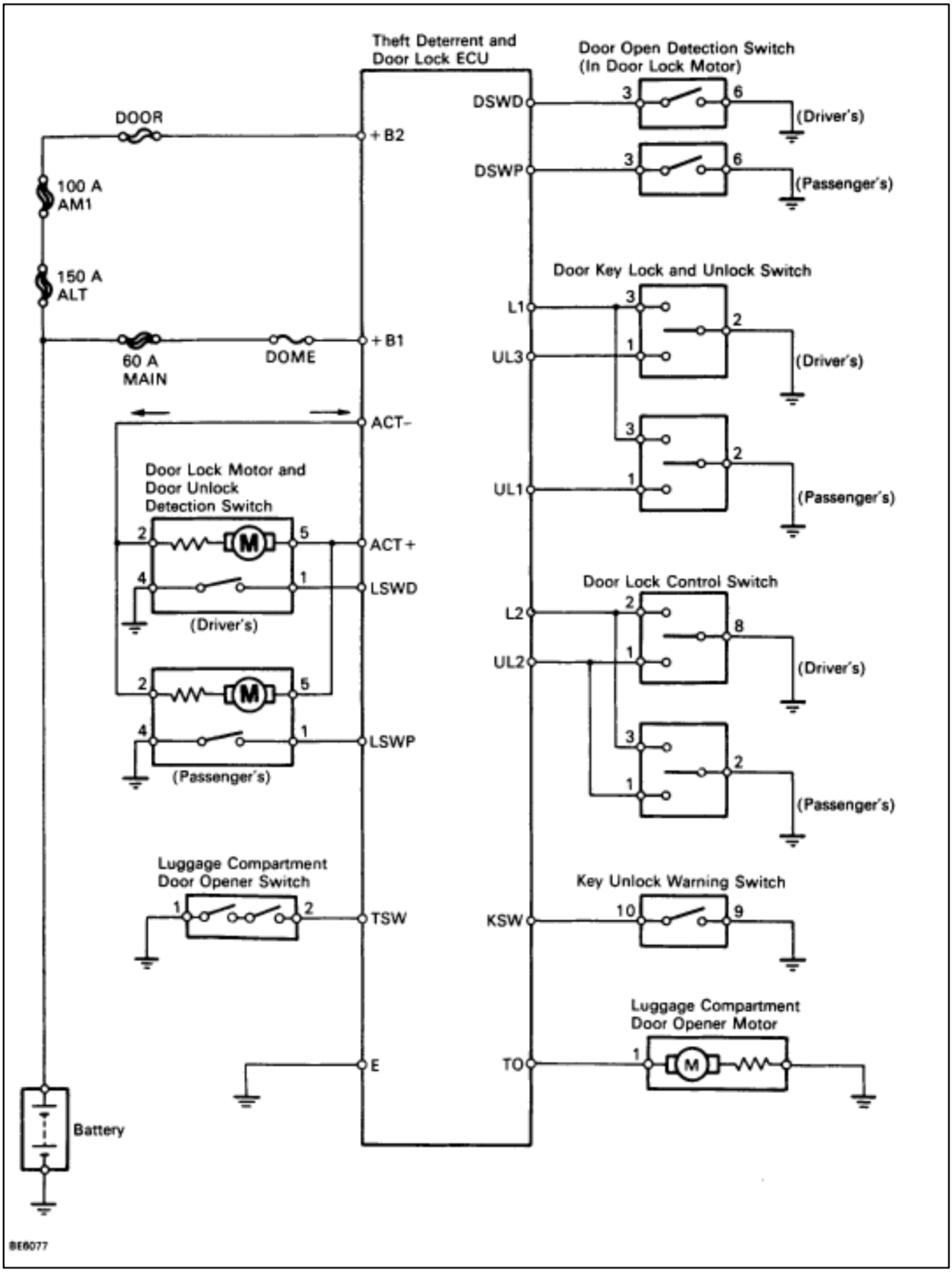

WhereEverybodyKnowsYourName

TERMINALS OF ECU

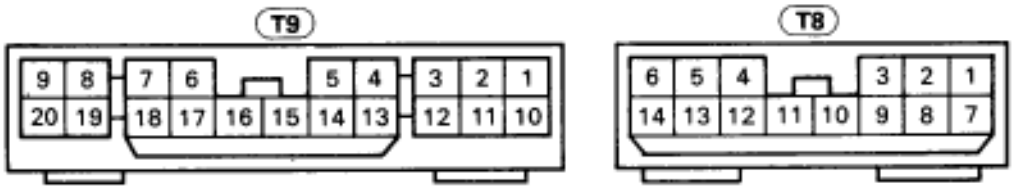

Theft Deterrent and Door Lock ECU

BE6492

No.	Symbol	Terminal Name	No.	Symbol	Terminal Name
T8–3	ACT –	Door Lock Motor	T8–13	DSWD	Door Open Detection Switch
T8–4	ACT +	Door Lock Motor	T8–14	L1	Door Key Lock and Unlock Switch (Lock)
T8–5	TO	Luggage Compartment Door Opener Motor	T8–15	UL1	Door Key Lock and Unlock Switch (Unlock)
T8–6	KSW	Key Unlock Warning Switch	T8–16	E	Ground
T8–7	LSWP	Door Unlock Detection Switch	T8–17	L2	Door Lock Control Switch (Lock)
T8–8	+ B2	Actuator Power Source	T8–18	UL2	Door Lock Control Switch (Unlock)
T8–10	UL3	Door Key Lock and Unlock Switch (Unlock)	T8–19	TSW	Luggage Compartment Door Opener Switch
T8–11	LSWD	Door Unlock Detection Switch	T8–20	+ B1	ECU Power Source
T8–12	DSWP	Door Open Detection Switch			

WhereEverybodyKnowsYourName

STANDARD VALUE OF ECU TERMINAL

Terminals	Symbols	Wiring Color	Condition	Standard Value
T9–3 ↔ T9–4	ACT ↔ ACT+	L–W ↔ L–R	Ignition switch OFF	50 or less
T9–5 ↔ T9–16	T0 ↔ E	B ↔ W–B	Ignition switch OFF	100 or less
T9–6 ↔ T9–16	KSW ↔ E	Y ↔ W–B	Key unlock warning switch ON. (Key is inserted into key cylinder).	1 or less
			Key unlock warning switch OFF. (Key is not inserted into key cylinder).	1 M or higher
T9–7 ↔ T9–16	LSWP ↔ E	P–B ↔ W–B	Door unlock detection switch ON. (Passenger's)	1 or less
			Door unlock detection switch OFF.	1 M higher
T9–8 ↔ T9–16	+B2 ↔ E	L–W ↔ W–B	Always	10–14 V
T9–10 ↔ T9–16	UL3 ↔ E	G ↔ W–B	Door key lock and unlock switch "unlock" position.	1 or less
			Door key lock and unlock switch OFF or "lock" position.	1 M or higher
T9–11 ↔ T9–16	LSWD ↔ E	W–L ↔ W–B	Door unlock detection switch ON. (driver's)	1 or less
			Door unlock detection switch OFF. (driver's)	1 M or higher
T9–12 ↔ T9–16	DSWP ↔ E	R–W ↔ W–B	Door open detection switch (passenger's) ON (door opened).	1 or less
			Door open detection switch (passenger's) OFF (door closed).	1 M or higher
T9–13 ↔ T9–16	DSWD ↔ E	R–B ↔ W–B	Door open detection switch (driver's) ON (door opened).	1 or less
			Door open detection switch (driver's) OFF (Door closed).	1 M or higher
T9–14 ↔ T9–16	L1 ↔ E	G–Y ↔ W–B	Door key lock and unlock switch "lock" position.	1 or less
			Door key lock and unlock switch OFF or "unlock" position.	1 M or higher
T9–15 ↔ T9–16	UL1 ↔ E	G–W ↔ W–B	Door key lock and unlock switch "unlock" position.	1 or less
			Door key lock and unlock switch OFF or "lock" position.	1 M or higher
T9–16 ↔ Body Ground	E ↔ Body Ground	W–B ↔ Body Ground	Always	1 or less
T9–17 ↔ T9–16	L2 ↔ E	R–B ↔ W–B	Door lock control switch "lock" position.	1 or less
			Door lock control switch OFF or "unlock" position.	1 M or higher
T9–18 ↔ T9–16	UL2 ↔ E	G–L ↔ W–B	Door lock control switch "unlock" position	1 or less
			Door lock control switch OFF or "lock" position.	1 M or higher

WhereEverybodyKnowsYourName

Terminals	Symbols	Wiring Color	Condition	Standard Value
T9–19 ↔ T9–16	TSW ↔ E	L ↔ W–B	Luggage compartment door opener switch ON.	1 or less
			Luggage compartment door opener switch OFF.	1 M or higher
T9–20 ↔ T9–16	+B1 ↔ E	R ↔ W–B	Always	10–14 V

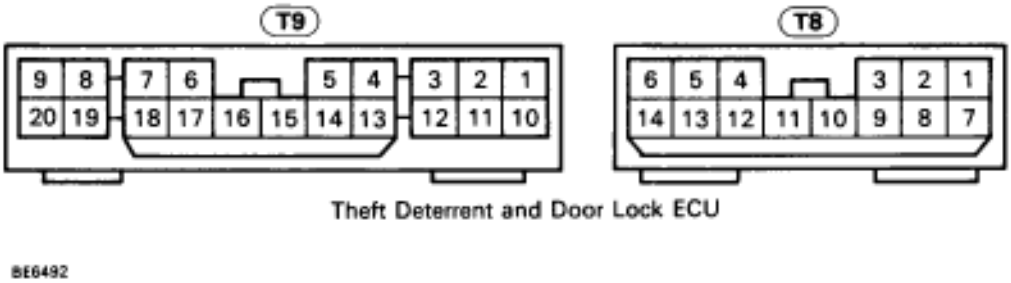

O When checking the voltage or resistance of theft deterrent and door lock ECU terminal, disconnect the ECU connector.

WhereEverybodyKnowsYourName

MATRIX CHART OF PROBLEM SYMPTOMS

Perform troubleshooting of the circuits for the applicable problem symptom in the order given in the chart below. Proceed to the page located for each circuit.

HINT:

- If the instruction “Proceed to next circuit inspection shown on matrix chart” is given in the flow chart for each circuit, proceed to the circuit with the next highest number in the table to continue the check.
- If the trouble still reappears even though there are no abnormalities in any of the other circuits, then check or replace the Theft Deterrent and Door Lock ECU as the last step.

See page / Suspect Area / Symptom	BE–376	BE–378	BE–380	BE–382	BE–384	BE–386	BE–388	BE–390	BE–392	IN–32
	ECU Power Source Circuit	Actuator Power Source Circuit	Door Lock Motor Circuit	Luggage Compartment Door Opener Motor Circuit	Door Lock Control Switch Circuit	Door key Lock and Unlock Switch Circuit	Key Unlock Warning Switch Circuit	Luggage Compartment Door Opener Main Switch and Opener Switch Circuit	Door Open Detection Switch Circuit	Theft Deterrent and Door Lock ECU
Whole functions of the door lock control system does not operate.	1	2	4	3						5
All doors or some doors are not locked and unlocked with the Door Lock Control Switch and Key operated Switch. (Luggage compartment door opener function normally operate.)			3		1	2				4
Doors cannot be locked or unlocked with the door lock control switch. (Doors lock and unlock normally with the key operated switch.)					1		2		3	4
Doors are not locked or unlocked with the key operated switch. (Doors lock and unlock normally with the door lock control switch.)						1				2
Key confinement prevention function does not operate. Doors lock and unlock normally with the key operated switch.							1		2	3
Luggage compartment door opener function does not operate.				2				1		3

WhereEverybodyKnowsYourName

Location of Connectors

Location of Connectors in Engine Compartment

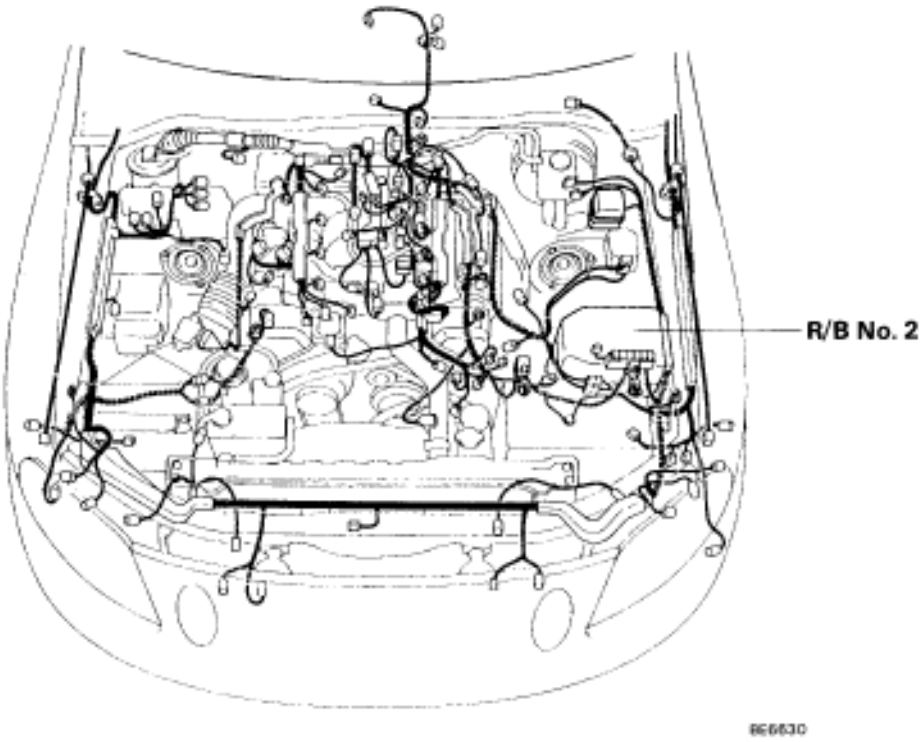

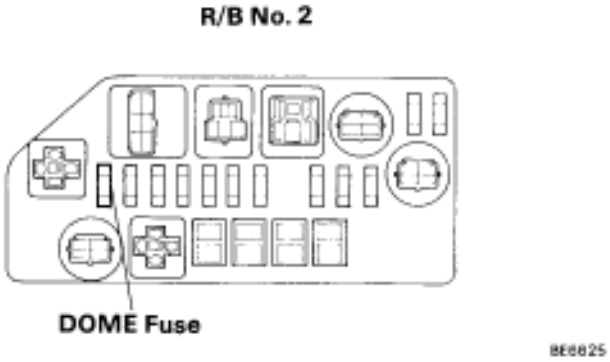

WhereEverybodyKnowsYourName

Location of Connectors in Body

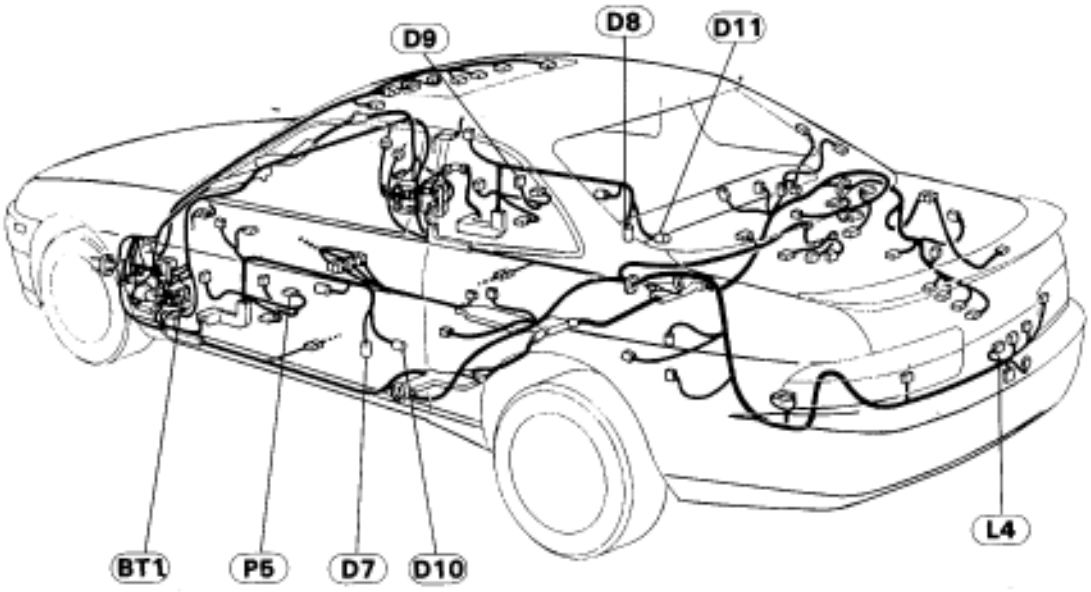

BE6632

D7 D8
Door Key Lock and Unlock Switch

h-3-1

D9
Door Lock Control Switch (Passenger's)

e-4-1-D

D10 D11
Door Lock Motor and Door Unlock Detection Switch

le-6-1-C

L4
Luggage Compartment Door Opener Motor

H-1-1

P5
Door Lock Control Switch (Driver's)

e-10-1

BT1

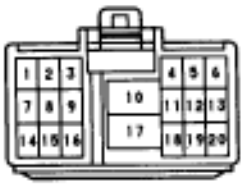

e-20-1-B

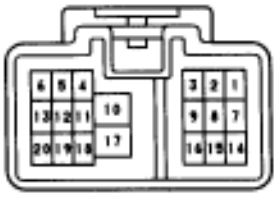

e-20-2-B

WhereEverybodyKnowsYourName

Location of Connectors in Instrument Panel

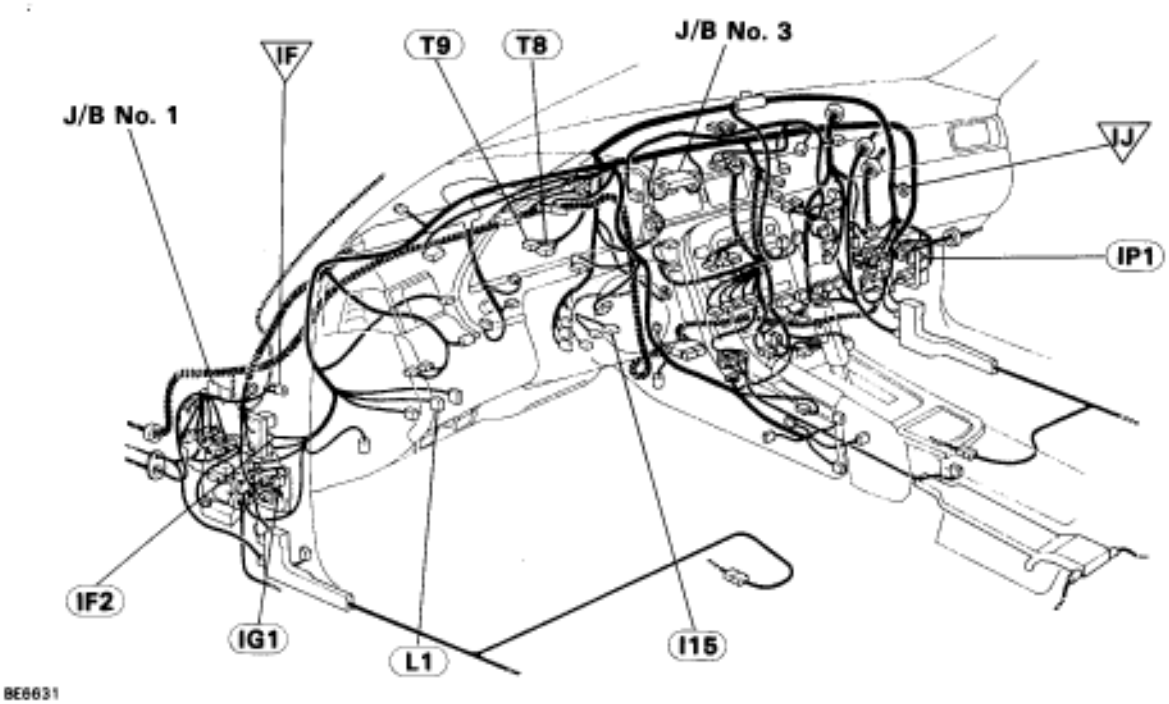

I15
Key Unlock Warning Switch

L1
Luggage Compartment Door Opener Switch

T9
Theft Deterrent and Door Lock Control ECU

T8
Theft Deterrent and Door Lock Control ECU

IF2

IG1

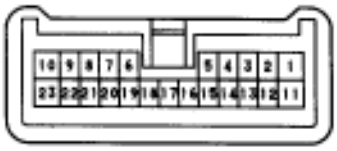

IT1

WhereEverybodyKnowsYourName

J/B No. 1

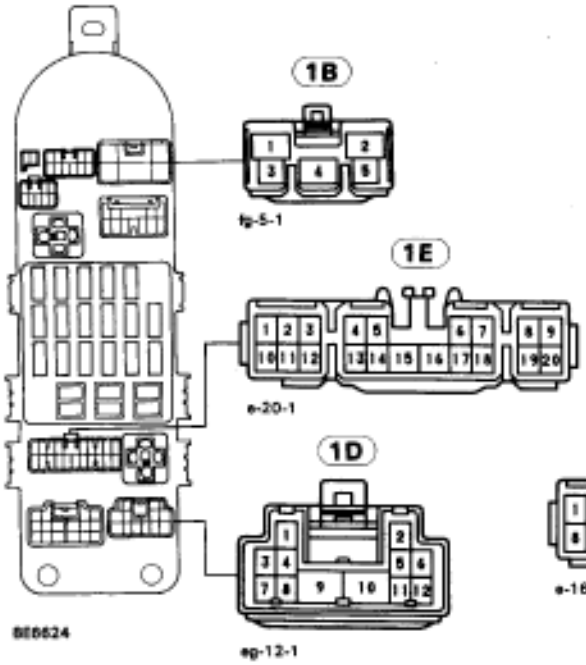

J/B No. 1

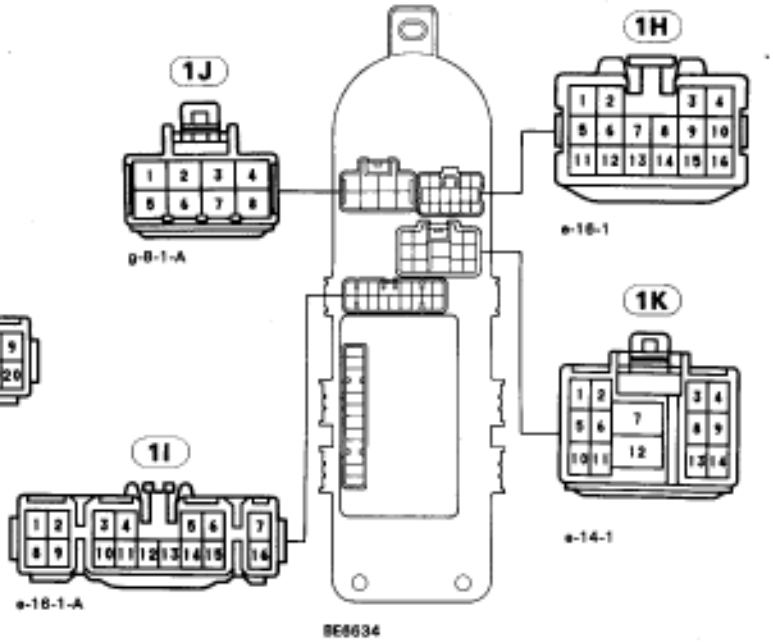

J/B No. 3

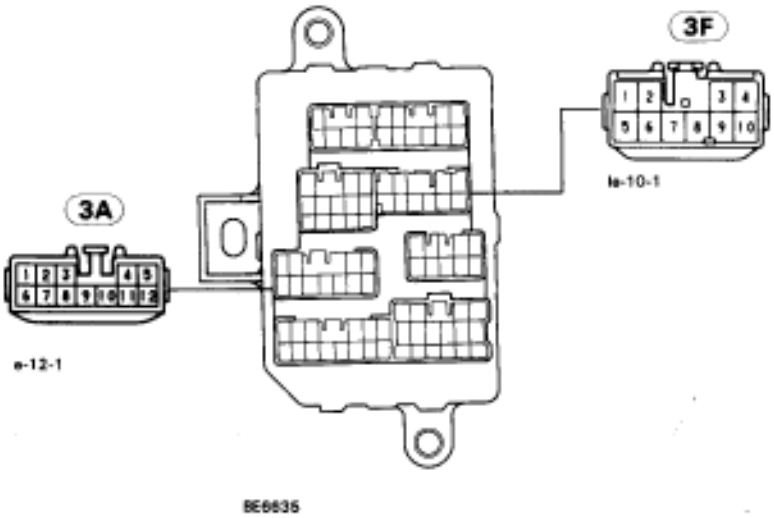

WhereEverybodyKnowsYourName

CIRCUIT INSPECTION

ECU Power Source Circuit

CIRCUIT DESCRIPTION

This circuit provides power to operate the theft deterrent and door lock ECU.

DIAGNOSTIC CHART

1 Check DOME fuse.
- NG → Check for short in all the harness and components connected to the DOME fuse (See attached wiring diagram).
- OK ↓

2 Check voltage between terminals +B1 and E of ECU connector.
- OK → Proceed to next circuit inspection shown on matrix chart (See page BE–371).
- NG ↓

3 Check for open in harness and connector between ECU and body ground (See page IN–27).
- NG → Repair or replace harness or connector.
- OK ↓

Check and repair harness and connector between ECU and battery.

WIRING DIAGRAM

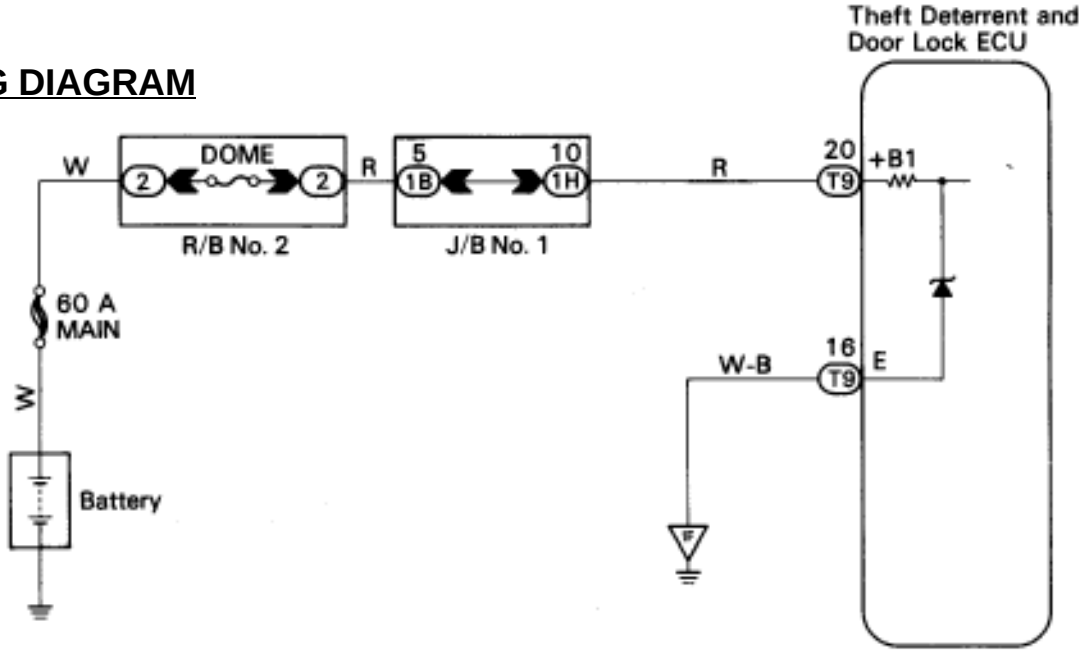

BE6434

WhereEverybodyKnowsYourName

INSPECTION PROCEDURE

1 **Check DOME fuse.**

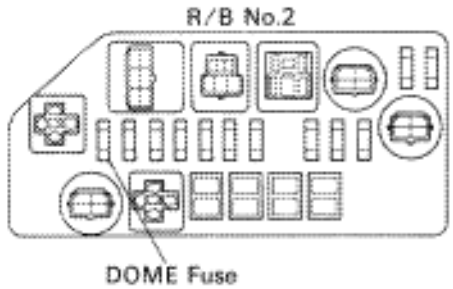

P Remove DOME fuse from R/B No. 2.

C Check continuity of DOME fuse.

OK **Continuity**

OK

NG **Check for short in all the harness and components connected to the DOME fuse (See attached wiring diagram).**

2 **Check voltage between terminals +B1 and E of ECU connector.**

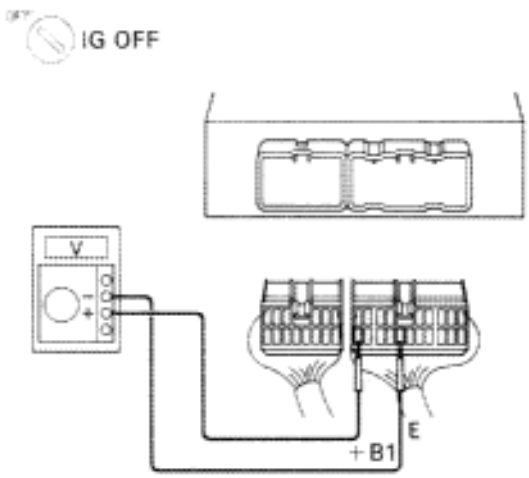

P
1. Remove the No. 1 under cover and heater duct.
2. Disconnect the theft deterrent and door lock ECU connectors.

C Measure voltage between terminals +B1 and E of ECU connector.

OK **Voltage: 10 – 14 V**

NG

OK **Proceed to next circuit inspection shown on matrix chart (See page BE–371).**

3 **Check for open in harness and connector between ECU and body ground (See page IN–27).**

OK

NG **Repair or replace harness or connector.**

Check and repair harness and connector between ECU and battery.

WhereEverybodyKnowsYourName

Actuator Power Source Circuit

CIRCUIT DESCRIPTION

This circuit provides power to drive the door lock motor and the luggage compartment door opener motor.

DIAGNOSTIC CHART

1 Check P/W fuse.

- NG → Check for short in all the harness and components connected to the DOOR fuse (See attached wiring diagram). *1
- OK ↓

2 Check voltage between terminal +B2 of ECU connector and body ground.

- OK → Proceed to next circuit inspection shown on matrix chart (See page BE–371).
- NG ↓

Check and repair harness and connectors between ECU and battery (See page IN–27).

*1: The power source is supplied to the actuator (door lock motor, luggage compartment door opener motor) through the theft deterrent and door lock ECU. Accordingly, if a short circuit of the W/H or actuator occurs in the actuator circuit, the DOOR fuse may become OPEN. so also inspect the actuator (door lock motor circuit on page BE–380, and the luggage compartment door opener motor circuit on page BE–382).

WIRING DIAGRAM

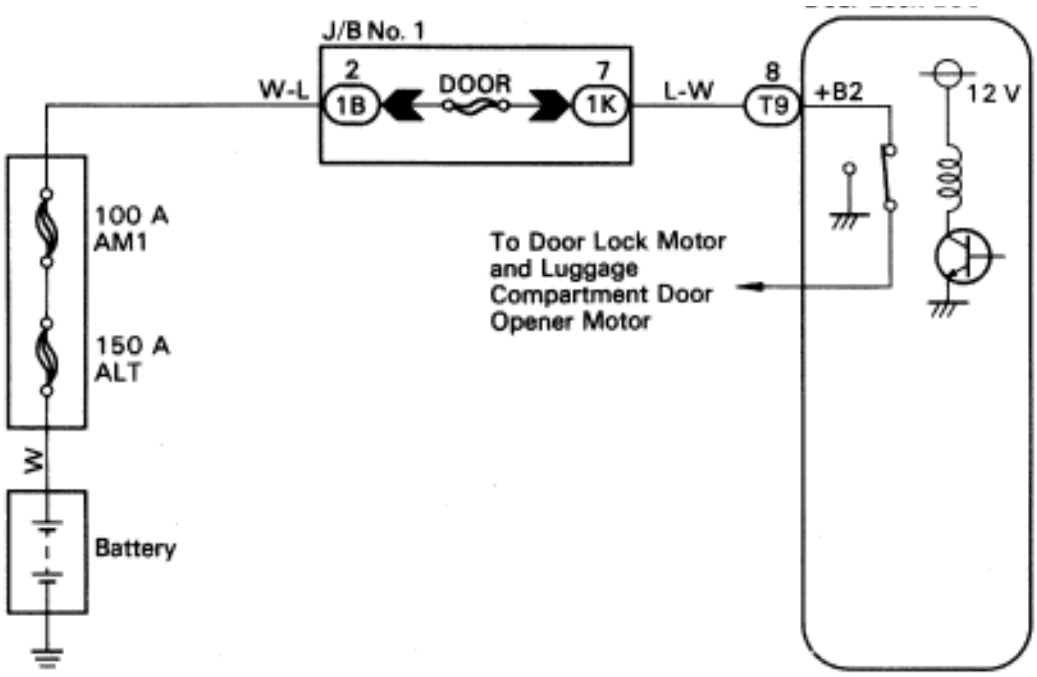

WhereEverybodyKnowsYourName

INSPECTION PROCEDURE

1 **Check DOOR fuse.**

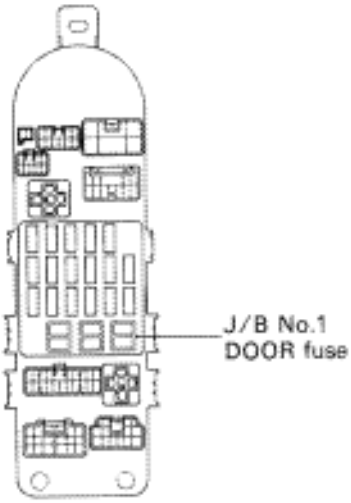

P
1. Remove the No. 1 under cover and LH lower pad.
2. Remove the DOOR fusible link from J/B No. 1.

C Check continuity of DOOR fuse.

OK **Continuity**

OK

NG **Check for short in all the harness and components connected to the DPPR fusible link (See attached wiring diagram). *1**

2 **Check voltage between terminal +B2 of ECU connector and body ground.**

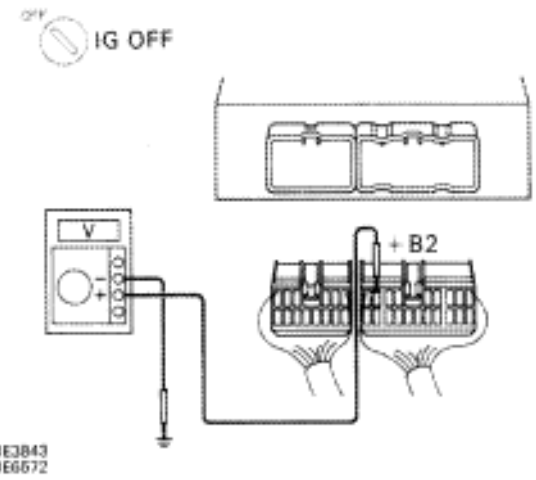

P
1. Remove No. 1 under cover and heater duct.
2. Disconnect the theft deterrent and door lock ECU connector.

C Measure voltage between terminal +B2 of ECU connector and body ground.

OK **Voltage: 10 – 14 V**

NG

Check and repair harness and connectors between ECU and battery (See page IN–27).

OK **Proceed to next circuit inpsection shown on matrix chart (See page BE–371).**

*1: The power source is supplied to the actuator (door lock motor, luggage compartment door opener motor) through the theft deterrent and door lock ECU. Accordingly, if a short circuit of the W/H or actuator occurs in the actuator circuit, the DOOR fusible link may become OPEN, so also inspect the actuator (door lock motor circuit on page BE–380, and the luggage compartment door opener motor circuit on page BE–382).

WhereEverybodyKnowsYourName

Door Lock Motor Circuit

CIRCUIT DESCRIPTION

The door lock motor locks and unlocks the door in accordance with signals from the ECU.

DIAGNOSTIC CHART

HINT: Inspect the door which is malfunctioning.

1 Check operating sound of door lock motor.
- OK → Repair or replace door lock control link.
- NG ↓

2 Check door lock motor.
- NG → Replace door lock motor.
- OK ↓

3 Check and harness connectors between ECU and door lock motor (See page IN–27).
- NG → Repair or replace harness or connector.
- OK ↓

Proceed to next circuit inspection shown on matrix chart (See page BE–371).

WIRING DIAGRAM

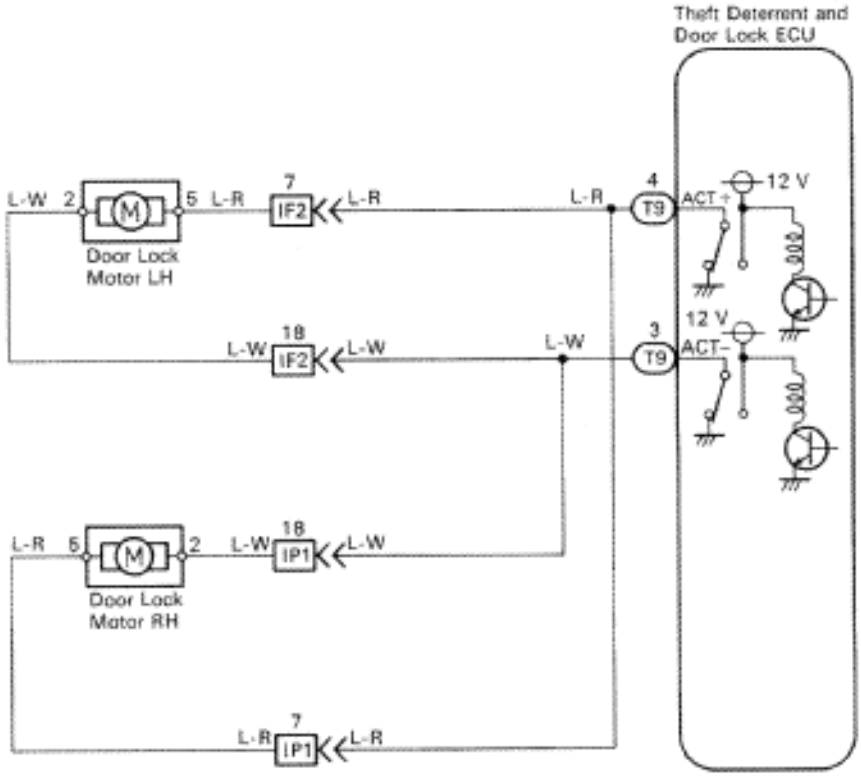

WhereEverybodyKnowsYourName

INSPECTION PROCEDURE

1	Check operating sound of door lock motor.
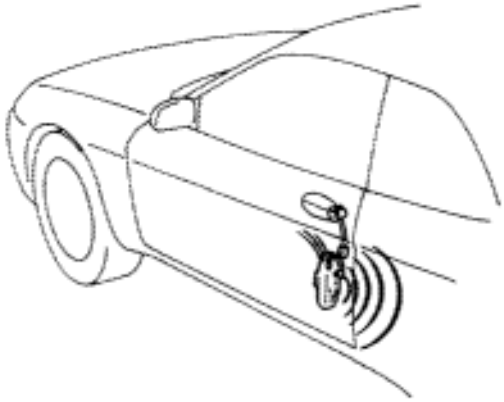	**C** Check operating sound of door lock motor, when door lock control switch is pushed to the lock side and unlock side. **OK** **Can hear operating sound of door lock motor.** **Hint** Inspect the door which is malfunctioning.

NG

OK **Repair or replace door lock control link.**

2	Check door lock motor.
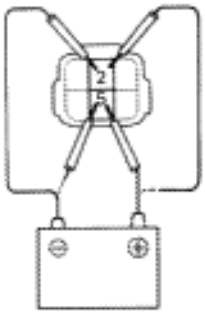	**P** 1. Remove the door trim and service hole cover. 2. Disconnect the door lock motor connector. **C** 1. Connect positive ↔ lead to terminal 5 and negative ⊖ lead to terminal 2 o door lock motor connector. 2. Connect positive ↔ lead to terminal 2 and negative ⊖ lead to terminal 5 of, door lock motor connector. **OK** 1. **Door lock motor locks door.** 2. **Door lock motor unlocks door.** **Hint** Perform inspection in a short time (within 2 seconds).

NG

OK **Replace door lock motor.**

3	Check harness and connectors between ECU and door lock motor (See page IN–27).

OK

NG **Repair or replace harness or connector.**

Proceed to next circuit inspection shown on matrix chart (See page BE–371).

WhereEverybodyKnowsYourName

Luggage Compartment Door Opener Motor Circuit

CIRCUIT DESCRIPTION

This circuit unlocks the luggage compartment door when the ECU sends signals to the luggage compartment door opener motor.

DIAGNOSTIC CHART

1 Check voltage between terminal 1 of luggage compartment door opener motor and body ground.

- NG → Check harness and connectors between ECU and luggage compartment door opener motor (See page IN–27).
- OK ↓

2 Check luggage compartment door opener motor.

- NG → Replace luggage compartment door motor.
- OK ↓

Proceed to next circuit inspection shown on matrix chart (See page BE–371).

WIRING DIAGRAM

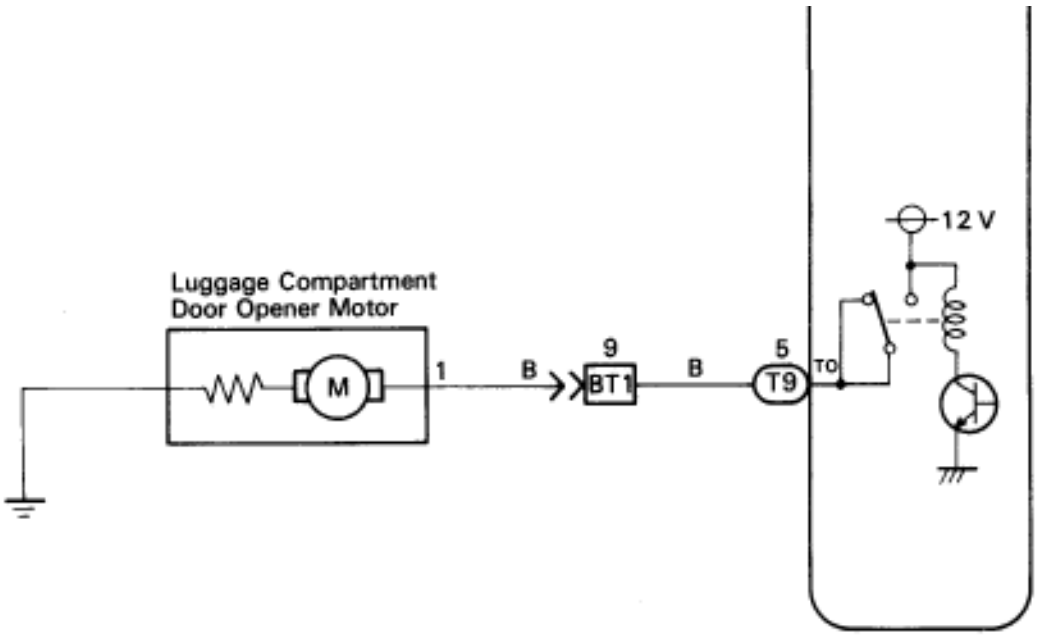

WhereEverybodyKnowsYourName

INSPECTION PROCEDURE

1 **Check voltage between terminal 1 of luggage compartment door opener motor and body ground.**

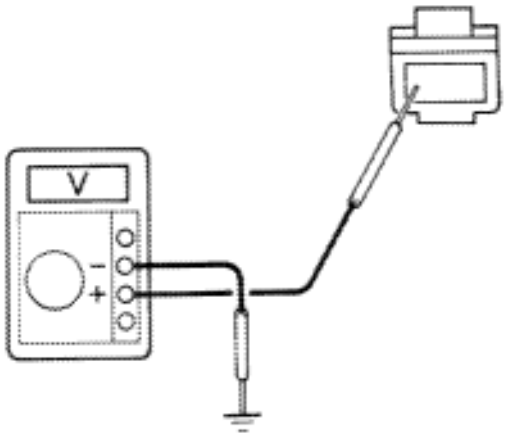

BE6683

P
1. Remove luggage compartment trim rear cover.
2. Disconnect the opener motor connector.

C Measure voltage between terminal 1 of luggage compartment door opener motor and body ground, when opener switch is pulled and not pulled.

OK

Opener switch	Voltage
Pulled	5 – 14 V
Not pulled	Below 1 V

OK

NG **Check harness and connectors between ECU and luggage compartmtne door opener motor (See page IN–27).**

2 **Check luggage compartment door opener motor.**

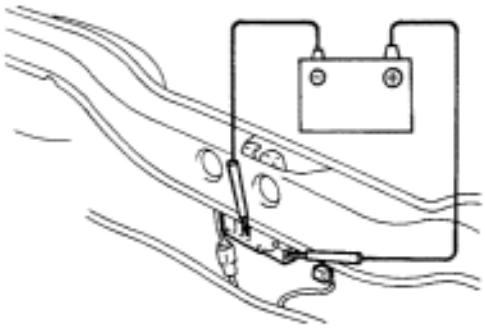

BE6638

C Connect positive ↔ lead to the opener motor connector and negative ⊖ lead to the body of the opener motor.

OK **Operated motor shaft and gear.**

Hint Perform inspection in a short time (within 1 second).

OK

NG **Replace luggage compartment door opener motor.**

Proceed to next circuit inpsection shown on matrix chart (Seepage BE–371).

WhereEverybodyKnowsYourName

Door Lock Control Switch Circuit

CIRCUIT DESCRIPTION

When the door lock control switch is pushed to the lock side, Lock terminal of the switch is grounded, and when the switch is pushed to the unlock side, Unlock terminal is grounded (See wiring diagram below).

DIAGNOSTIC CHART

1 Check voltage between terminals 2 (3), 1(1) of door lock control switch connector and body ground.
- OK → Proceed to next circuit inspection shown on matrix chart (See page BE–371).
- NG ↓

2 Check door lock control switch.
- NG → Replace door lock control switch.
- OK ↓

3 Check harness and connectors between ECU and door lock control switch, switch and body ground (See page IN–27).
- NG → Repair or replace harness or connector.
- OK ↓

Check and replace ECU

WIRING DIAGRAM

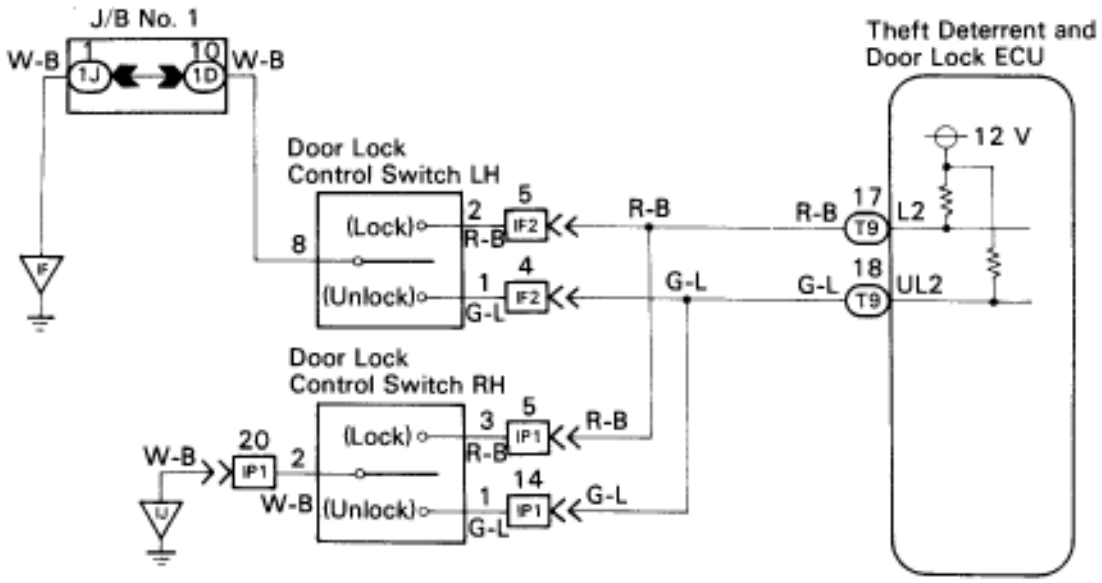

WhereEverybodyKnowsYourName

INSPECTION PROCEDURE

1 Check voltage between terminals 2(3), 1(1) of door lock control switch connector and body ground.

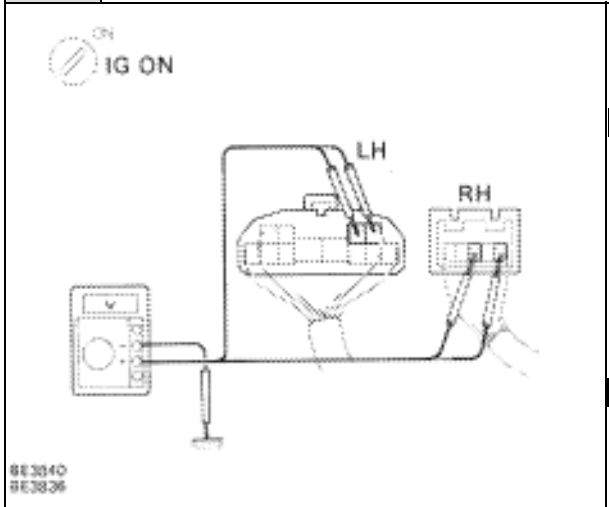

P Remove the door trim and service hole cover.

C 1. Turn ignition switch ON.

OK 2. Measure voltage between terminals 2(3), 1(1) of door lock control switch connector and body ground, when door lock control switch is pressed to the lock side, unlock side and not pressed.

Switch position \ Terminal	2(3)	1(1)
Lock side	Below 1 V	8 – 10 V
Unlock side	8 – 10 V	Below 1 V
OFF	8 – 10 V	8 – 10 V

Hint The terminal number without brackets is for the LH, the number with brackets is for the RH.

NG

OK → **Proceed to next circuit inspection shown on matrix chart (See page BE–371).**

2 Check door lock control switch.

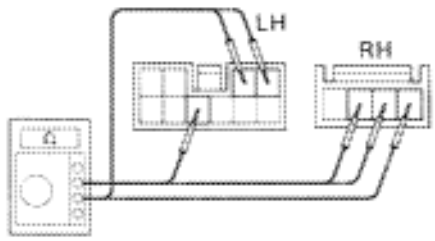

P Disconnect the door lock control switch connector.

C Check continuity between terminals 2(3), 1(1), and 8(2) of door lock control switch connector, when door lock control switch is pressed to the lock side, and unlock side and not pressed.

OK

○—○ Continuity

Switch position \ Terminal	2(3)	1(1)	8(2)
Lock side	○		○
Unlock side		○	○
OFF			

Hint The terminal number without brackets is for the LH, the number with brackets is for the RH.

OK

NG → **Replace door lock control switch.**

3 Check harness and connectors between ECU and door lock control switch, switch and body ground (See page IN–27).

OK

NG → **Repair or replace harness or connector.**

Check and replace ECU. *1

*1: malfunction of the ECU can be considered possible only when the problem symptom is the following:

▼ Lock and/or unlock using the Door Lock Control Switch cannot be done, neither on the driver's side nor on the passenger's side.

WhereEverybodyKnowsYourName

Door Key Lock and Unlock Switch Circuit

CIRCUIT DESCRIPTION

The door key lock and unlock switch is built in the door key cylinder.
When the key is turned to the lock side, terminal 3 of the switch is grounded and when the key is turned to the unlock side, terminal 1 of the switch is grounded.

DIAGNOSTIC CHART

1 Check door key lock and unlock switch.
- NG → Replace door key lock and unlock switch.
- OK ↓

2 Check harness and connectors between ECU and switch, switch and body ground (See page IN–27).
- NG → Repair or replace harness or connector.
- OK ↓

Proceed to next circuit inspection shown on matrix chart (See page BE–371).

WIRING DIAGRAM

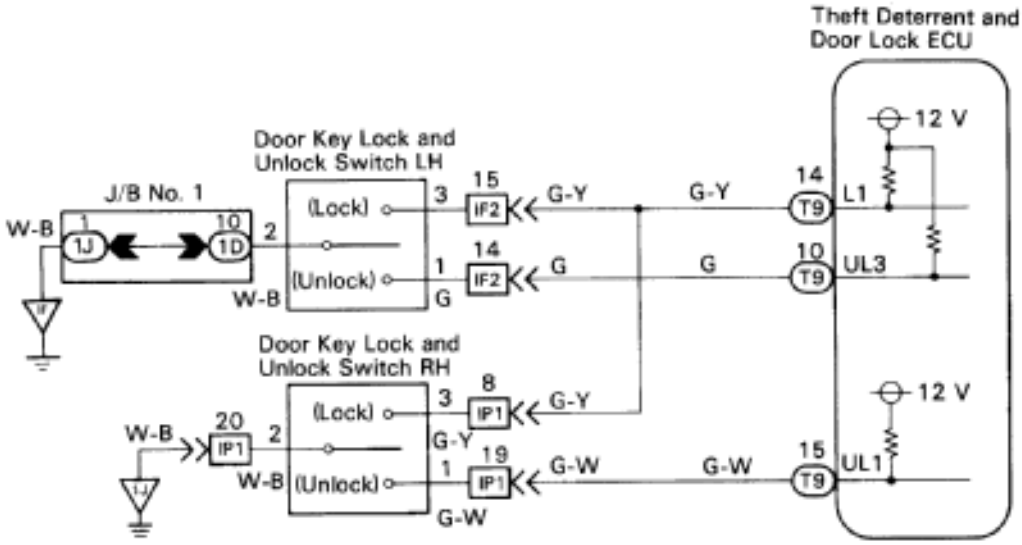

WhereEverybodyKnowsYourName

INSPECTION PROCEDURE

1 **Check door key lock and unlock switch.**

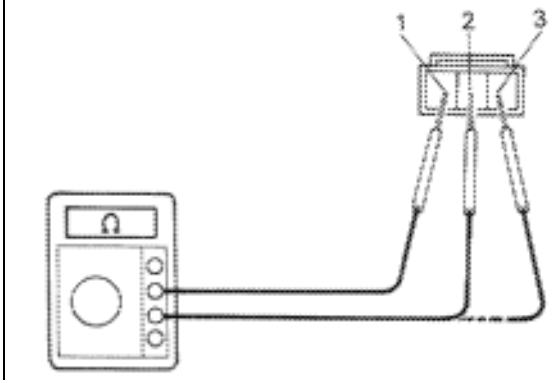

P
1. Remove the door trim and service hole cover.
2. Disconnect the door ley lock and unlock switch connector.

C Check continuity between terminals 1, 2 and 3 of door key lock and unlock switch is turned to the lock side, unlock side and not turned.

OK

O—O Continuity

Switch position \ Terminal	1	2	3
Lock side		O—O	
Unlock side	O—O		O—O
OFF			

OK → **NG** → **Replace door key lock and unlock switch.**

2 **Check harness and connectors between ECU ans switch, switch and body ground (See page IN–27).**

OK → **NG** → **Repair or replace harness or connector.**

Proceed to next circuit inspection shown on matrix chart (See page BE–371).

WhereEverybodyKnowsYourName

Key Unlock Warning Switch Circuit

CIRCUIT DESCRIPTION

The key unlock warning switch goes on when the ignition key is inserted in the key cylinder and goes off when the ignition key is removed.
The ECU operates the key confinement prevention function while the key unlock warning switch is on.

DIAGNOSTIC CHART

1 Check key unlock warning switch.
- NG → Replace key unlock warning switch.
- OK ↓

2 Check harness and connectors between ECU and key unlock warning switch, key unlock warning switch and body ground (See page IN–27).
- NG → Repair or replace harness or connector.
- OK ↓

Proceed to next circuit inspection shown on matrix chart (See page BE–371).

WIRING DIAGRAM

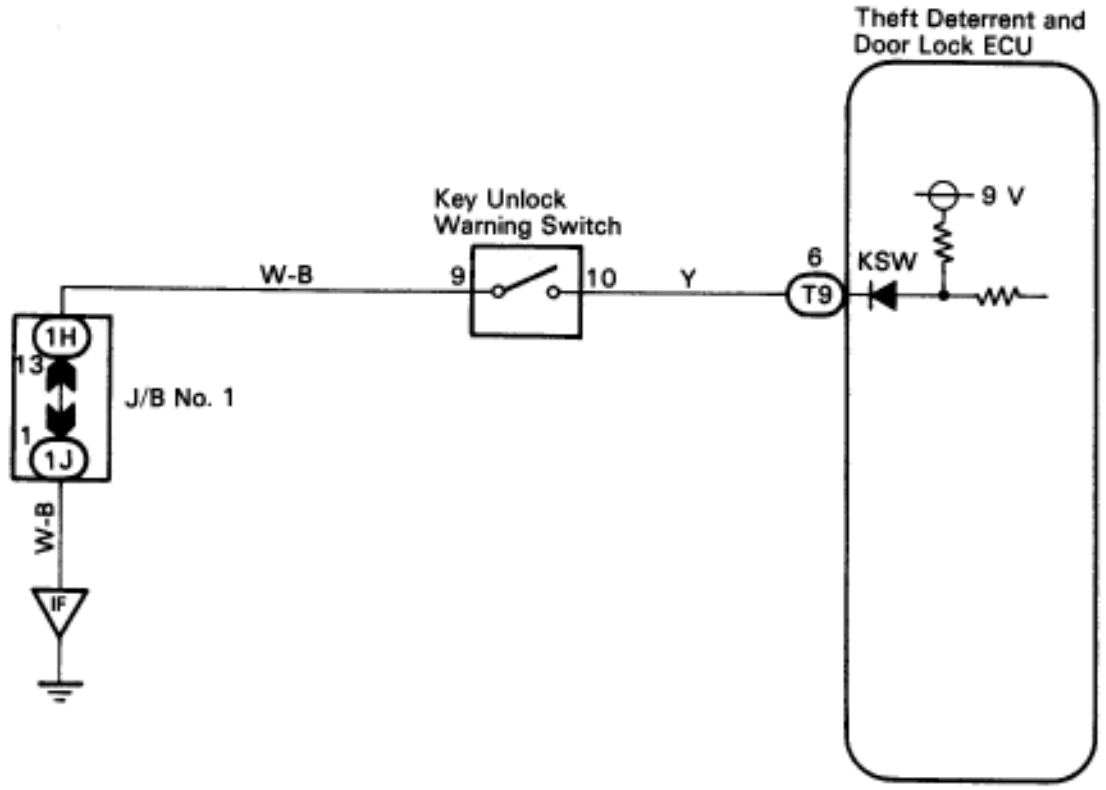

WhereEverybodyKnowsYourName

INSPECTION PROCEDURE

1 **Check key unlock warning switch.**

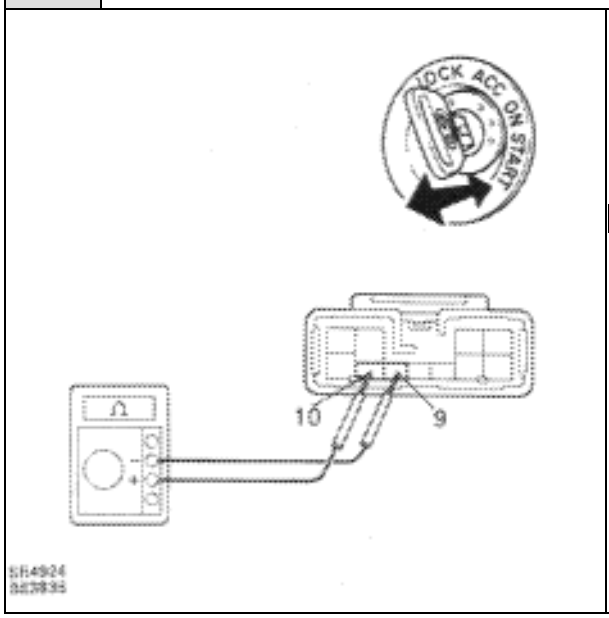

P Disconnect key unlock warning switch connector.

C Check continuity between terminal 9 and 10 of key unlock warning switch connector, when the key is inserted to the key cylinder or removed.

OK

○—○ Continuity

Switch position \ Terminal	9	10
ON (Key inserted)	○	○
OFF (Key removed)		

OK

NG **Replace key unlock warning switch.**

2 **Check harness and connectors between ECU and key unlock warning switch, key unlock warning switch and body ground (See page IN–27).**

OK

NG **Repair or replace harness or connector.**

Proceed to next circuit inspection shown on matrix chart (See page BE–371).

WhereEverybodyKnowsYourName

Luggage Compartment Door Opener Main Switch and Opener Switch Circuit

CIRCUIT DESCRIPTION

The luggage compartment door opener main switch is off when it is pushed in, and the luggage compartment door opener switch is on when it is pulled.
The ECU energizes the luggage compartment door opener motor only when the main switch and opener switch are on together.

DIAGNOSTIC CHART

1 Check luggage compartment door opener main switch and opener switch. → Replace luggage compartment door opener main switch and/or opener switch.

2 Check harness and connectors between ECU and main switch, opener switch and body ground (See page IN–27). → NG: Repair or replace harness or connector.

OK: Proceed to next circuit inspection shown on matrix chart (See page BE–371)

WIRING DIAGRAM

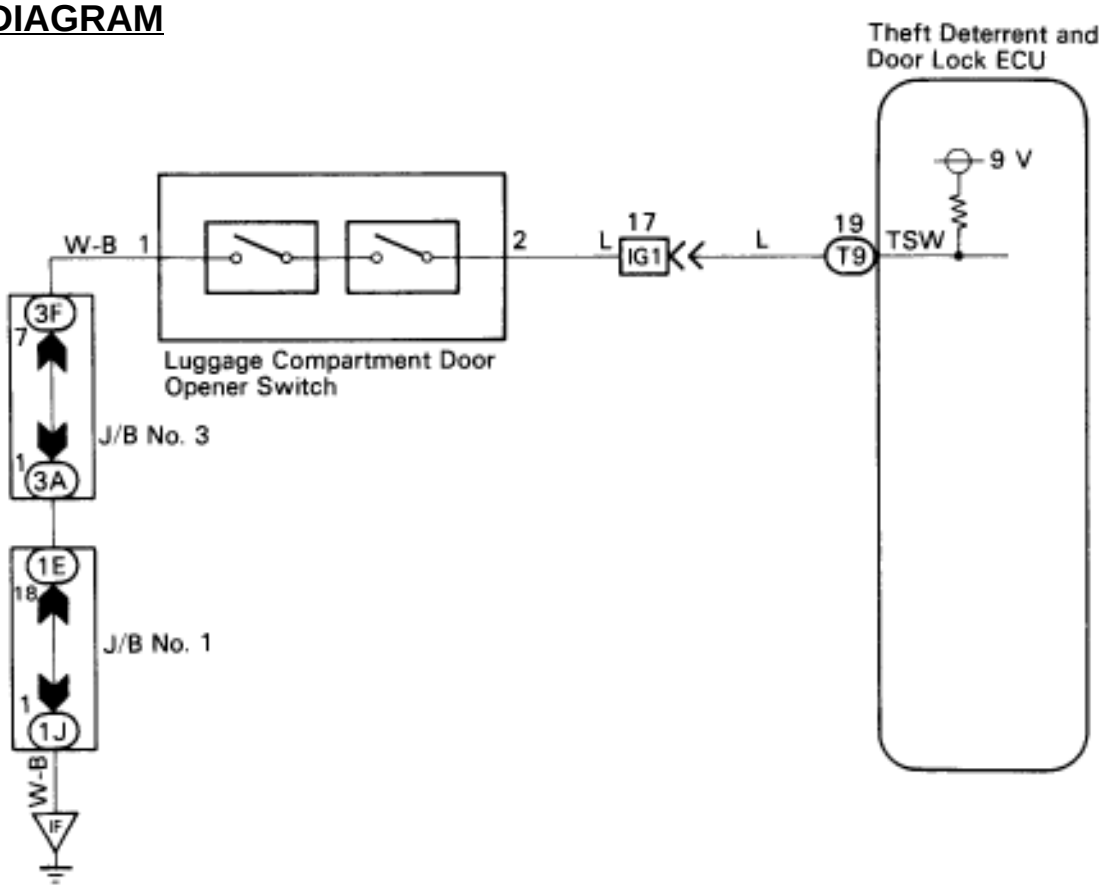

WhereEverybodyKnowsYourName

INSPECTION PROCEDURE

1 **Check luggage compartment door opener main switch and opener switch.**

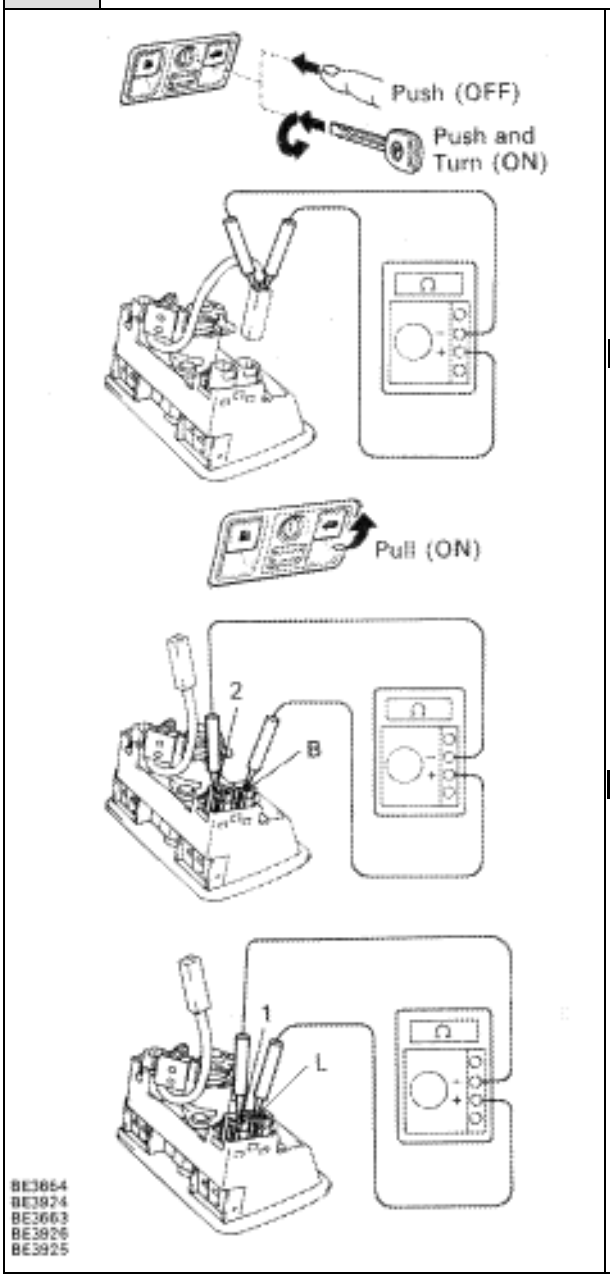

P Disconnect the luggage compartment door opener main switch and opener switch connector.

C Check luggage compartment door opener main switch. Check continuity between terminals of main switch connector.

OK

○—○ Continuity

Switch position \ Terminal	1	2
ON (Push and turn)	○	○
OFF (Push)		

C Check luggage compartment door opener switch. Check continuity between terminals of main switch and opener switch connector.

OK

Switch position \ Terminal	2	B	1	L
ON (Pull)	○	○	○	○
OFF	○	○		

OK

NG **Replace luggage compartment door opener main switch and or opener switch.**

2 **Check harness and connector between ECU and main switch, opener switch and body ground (See page IN–27).**

OK

NG **Repair or replace harness or connector.**

Proceed t next circuit inspection shown on matrix chart (See page BE–371).

WhereEverybodyKnowsYourName

Door Open Detection Switch Circuit

CIRCUIT DESCRIPTION

The door open detection switch is built in the door lock assembly. It is on when the door is open and off when the door is closed.

DIAGNOSTIC CHART

1 Check door open detection switch.
- NG → Replace door open detection switch.
- OK ↓

2 Check harness and connectors between ECU and door open detection switch, door open detection switch and body ground (See page IN–27).
- NG → Repair or replace harness or connector.
- OK ↓

Proceed to next circuit inspection shown on matrix chart (See page BE–371)

WIRING DIAGRAM

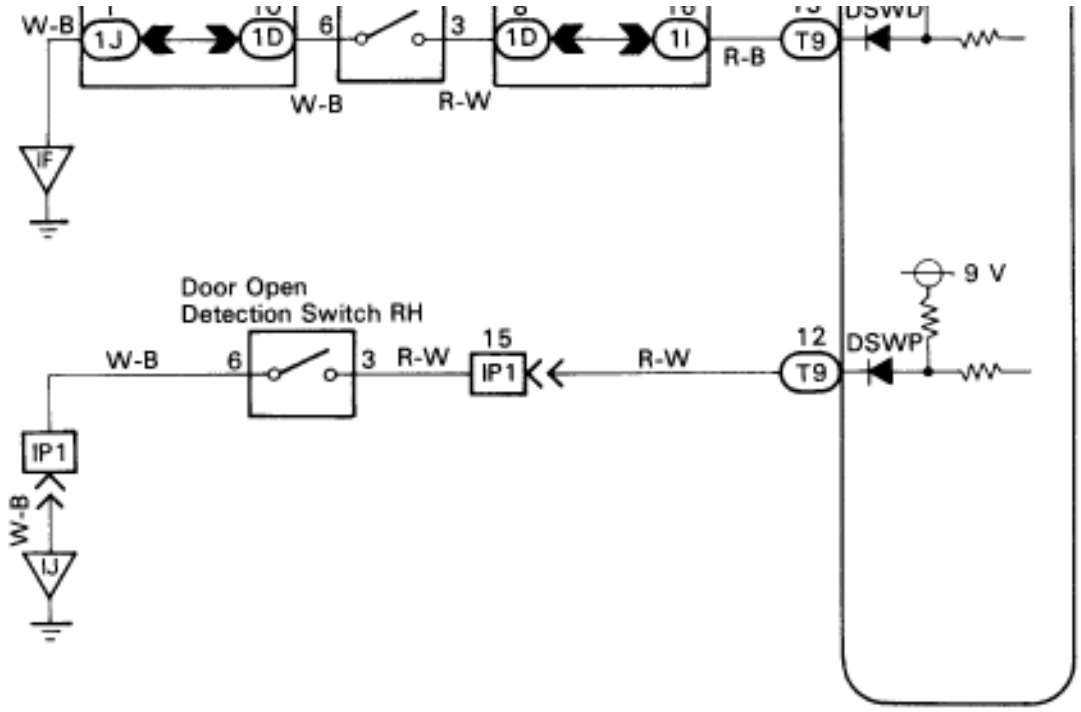

WhereEverybodyKnowsYourName

INSPECTION PROCEDURE

1 **Check door open detection switch**

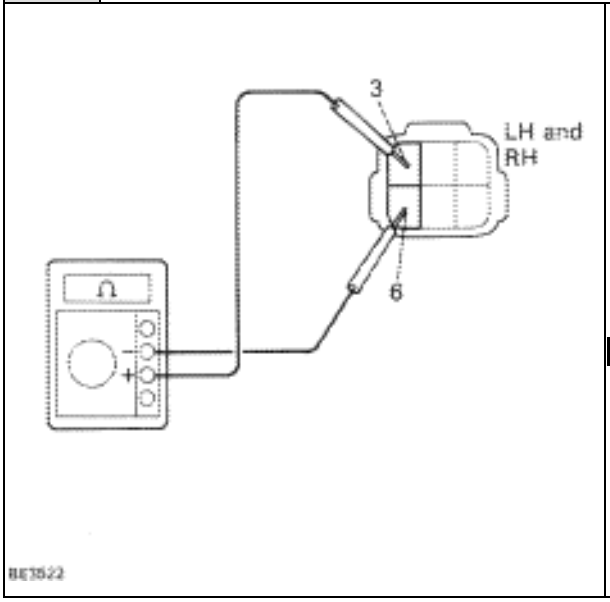

P
1. Remove the door trim and service hole cover.
2. Disconnect door open detection switch connector.

C Check continuity between terminals 3 and 6 of door open detection switch connector, when the front door is opened and closed.

OK

Switch position \ Terminal	3	6
ON (Door opened)	○—○	
OFF (Door closed)		

○—○ Continuity

OK → **NG** → **Replace door open detection switch.**

2 **Check harness and connectors between ECU and door open detection switch, door open detection switch and body ground (See page IN–27).**

OK → **NG** → **Repair or replace harness or connector.**

Proceed to next circuit inspection shown on matric chart (See page BE–371).

WhereEverybodyKnowsYourName

–MEMO–

WhereEverybodyKnowsYourName

WIRELESS DOOR LOCK CONTROL SYSTEM

WhereEverybodyKnowsYourName

DESCRIPTION

The wireless door lock control system is to lock and unlock all the doors at a distance, transmitting a weak radio wave from a transmitter contained in the master ignition key.
The weak radio wave (coded differently for each key) is sent to the receiver via the rear window defogger wiring.
For the function of the component parts of this system, refer to the circuit description in circuit inspection.

PARTS LOCATION

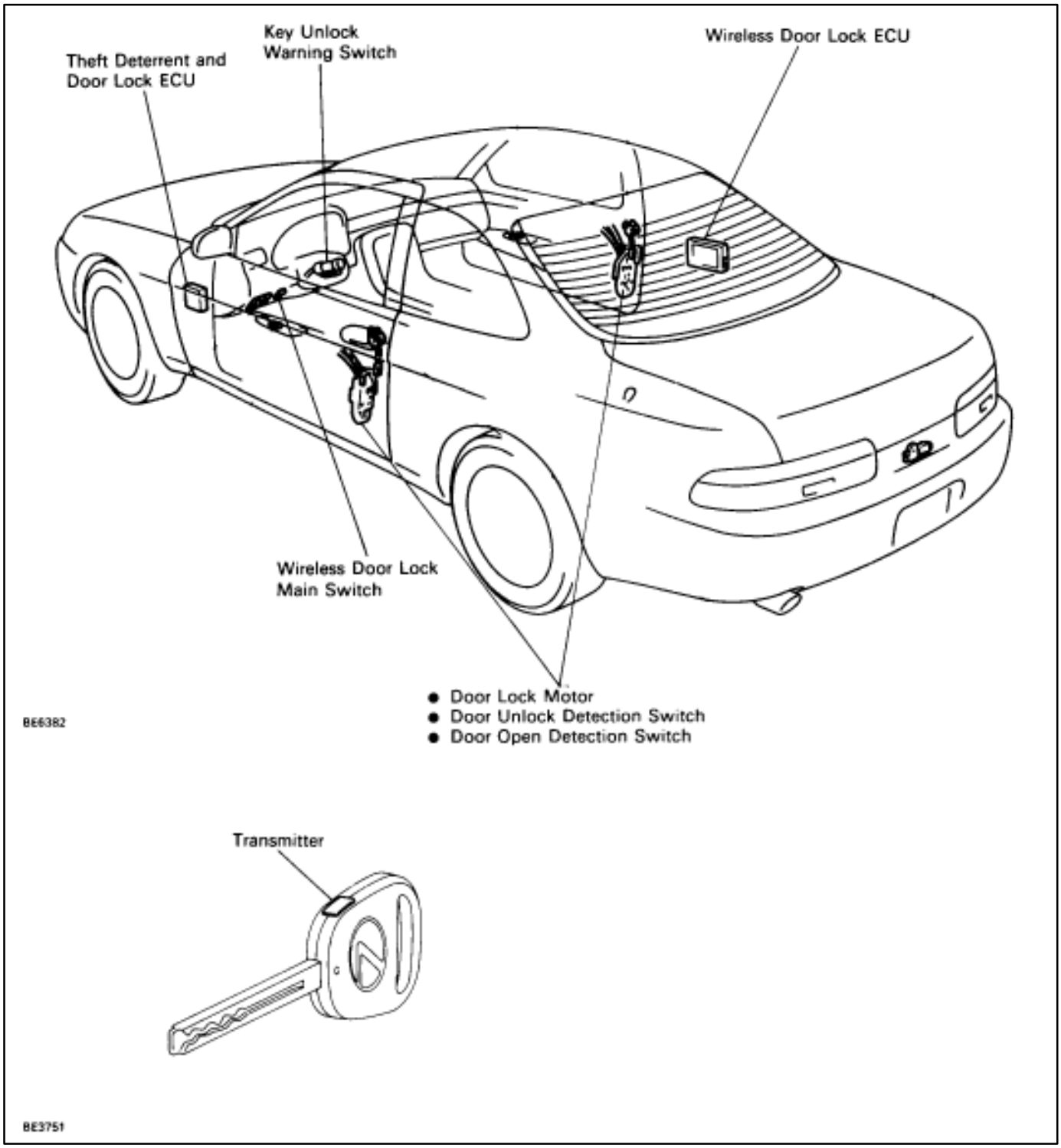

WhereEverybodyKnowsYourName

DESCRIPTION

The wireless door lock control system is to lock and unlock all the doors at a distance, transmitting a weak radio wave from a transmitter contained in the master ignition key.
The weak radio wave (coded differently for each key) is sent to the receiver via the rear window defogger wiring.
For the function of the component parts of this system, refer to the circuit description in circuit inspection.

PARTS LOCATION

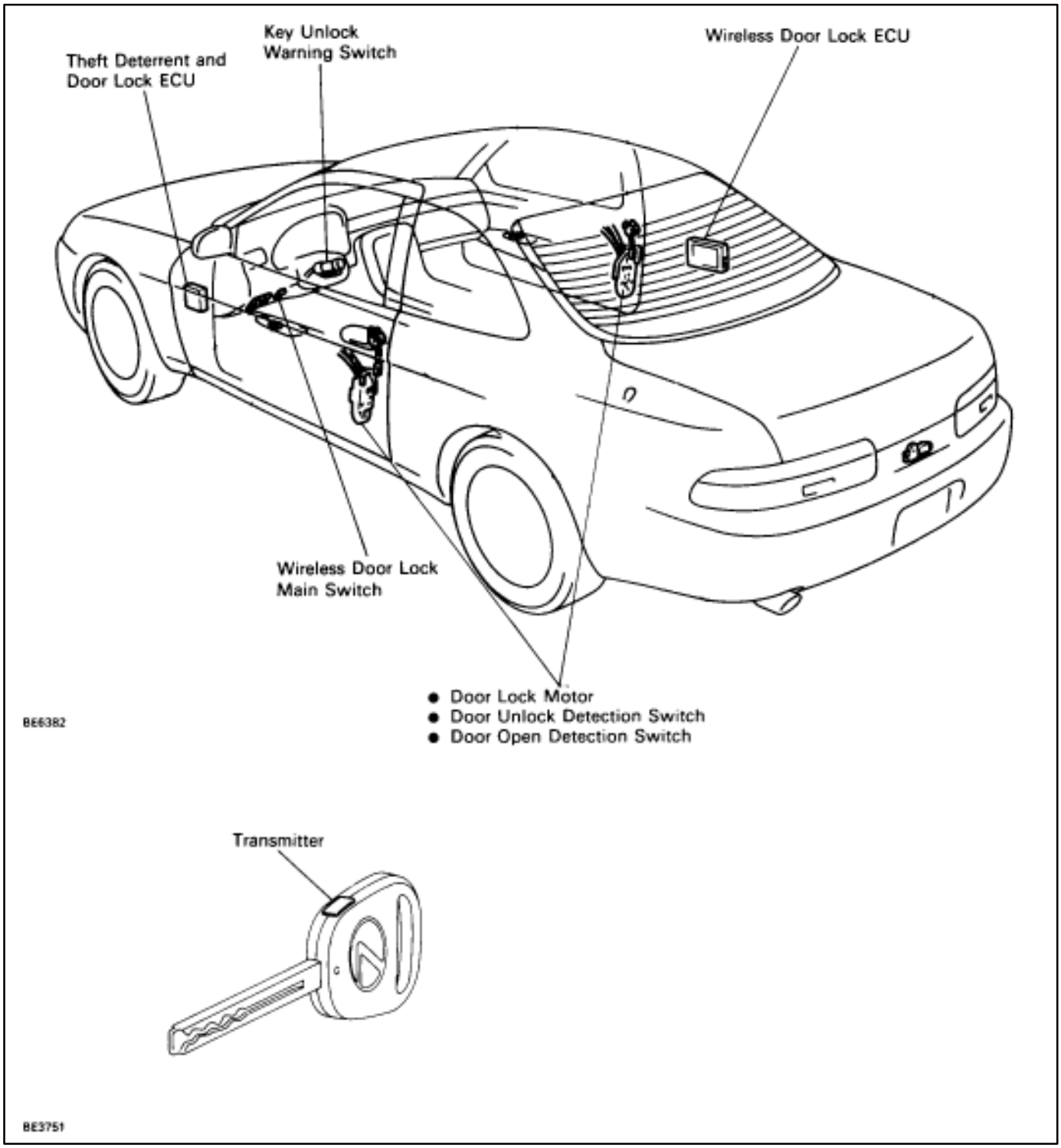

WhereEverybodyKnowsYourName

–MEMO–

WhereEverybodyKnowsYourName

HOW TO PROCEED WITH TROUBLESHOOTING

HINT: Troubleshooting of the wireless door lock control system is based on the premise that the door lock control system is operating normally. Accordingly, before troubleshooting the wireless door lock control system, first make certain that the door lock control system is operating normally.
Perform troubleshooting in accordance with the procedure on the following page.

▼ **CUSTOMER PROBLEM ANALYSIS**
Using the customer problem analysis check sheet of reference, ask the customer in as much detail as possible about the problem.

2 **PROBLEM SYMPTOM CONFIRMATION,** 2 **SYMPTOM SIMULATION**
Confirm the problem symptoms. If the problem does not reappear, be sure to simulate the problem using the “Problem Simulation Method”.
At this stage check whether the whole wireless door lock control system fails to operate, or whether only some of the particular functions fail to operate.

10 **PRECHECK TYPE I,** 5 **PRECHECK TYPE II**
Using the self diagnosis function of the wireless door lock ECU, perform Precheck Type I to find out if the system is normal (system non–operation due to external noise, etc.) or if the abnormality lies with the vehicle. In Precheck Type II, locate if the cause of problem lies in the transmitter, the antenna or the vehicle.
Perform Precheck Type I when whole wireless door lock control system fails to operate only at a specific locality.
Perform Precheck Type II when whole wireless door lock control system fails to operate no matter where the locality is.
When only some functions of wireless door lock control system do not operate, proceed to [8] on the Matrix Chart of Problem Symptoms.

6 **INSPECTION OF TRANSMITTER, [7] INSPECTION OF ANTENNA CIRCUIT**
If it is found in Precheck Type II that the cause of the problem is in the transmitter or antenna, proceed to the appropriate pages and start troubleshooting.

7 **MATRIX CHART OF PROBLEM SYMPTOMS**
Confirm the order of inspection for each applicable problem symptom on the matrix chart.

9 **CIRCUIT INSPECTION**
Proceed with diagnosis of each circuit in accordance with the inspection order confirmed in [8]. Judge whether the cause of the problem is in the sensor, wire harness and connectors, or the ECU.

[10] REPAIR
If the cause of the problem is found in [9]., perform repairs.

[11] CONFIRMATION TEST
After completing repairs, confirm that the problem is eliminated and that all functions of the wireless door lock control system are normal.

WhereEverybodyKnowsYourName

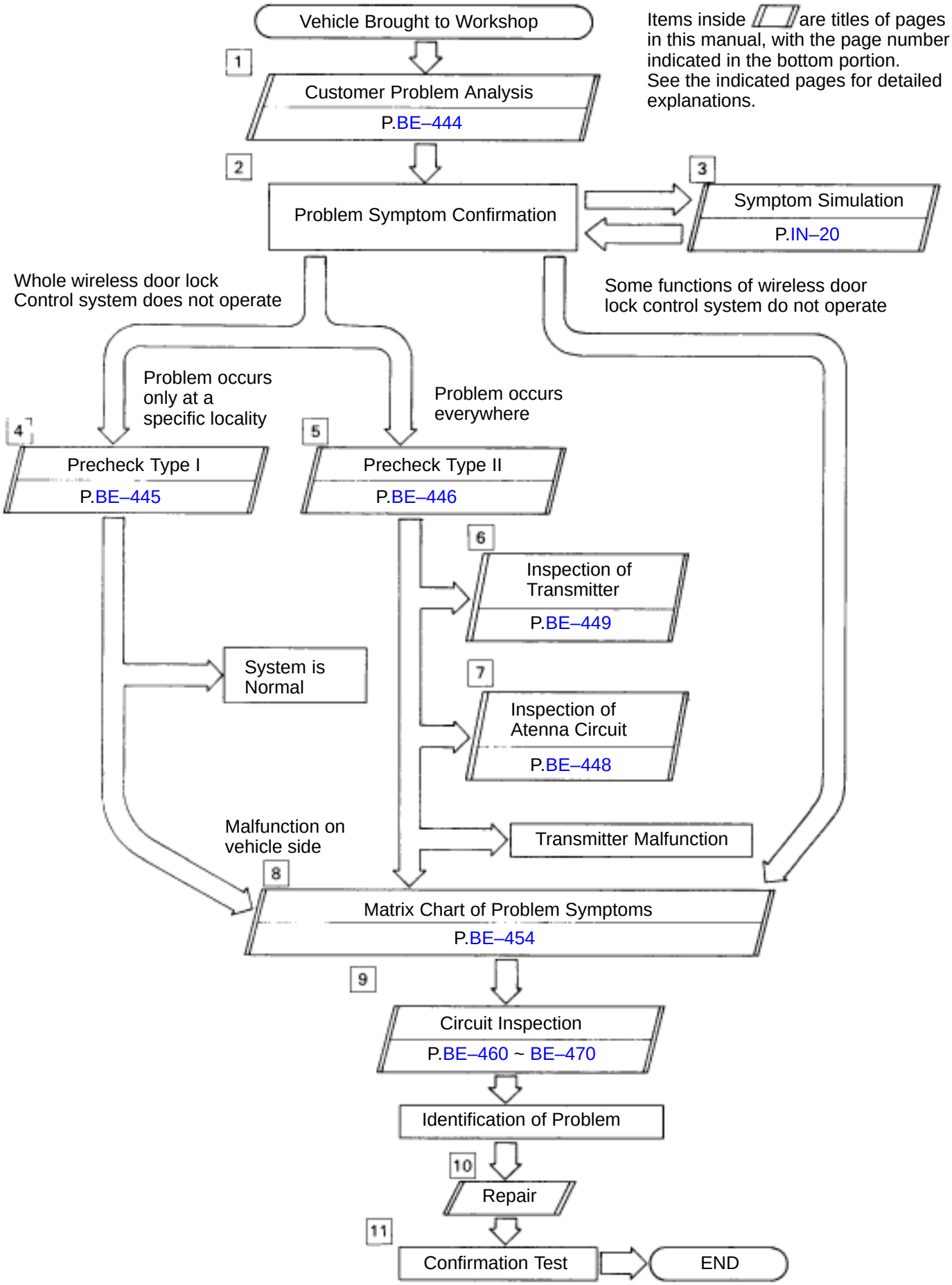

WhereEverybodyKnowsYourName

CUSTOMER PROBLEM ANALYSIS CHECK SHEET

WIRELESS DOOR LOCK CONTROL System Check Sheet

Inspector's Name: _____

Customer's Name		**Registration No.**	
		Registration Year	/ /
		Frame No.	
Date Vehicle Brought In	/ /	**Odometer Reading**	Km Miles

Date of Problem Occurrence		/ /
Frequency of Problem Occurrence		2 Constant 2 Sometimes (times/per day, month) 2 Once Only
Conditions at Time of Problem Occurrence	**Weather**	2 Fine 2 Cloudy 2 Rainy 2 Snowy 2 Various/Others
	Outdoor Temperature	2 Hot 2 Warm 2 Cool 2 Cold (Approx. °F(°C))
	Place	2 Everywhere 2 Specific Locality ( )
Date Transmitter Battery Last Replaced		/ /

Problem Symptom	2 Whole wireless door lock control system does not operate.	
	2 Only door unlock operation is not possible.	
	2 Only door lock operation is not possible.	
	2 Only key confine prevention function is not possible.	
	2 Wireless door lock function operates even when each door is opened.	
	2 Wireless door lock function incorrectly. (Although one door is unlocked, when the transmitter switch is pressed, all doors unlock.)	2 When RH door is unlocked. 2 When LH door is unlocked.
	2 Others	

WhereEverybodyKnowsYourName

PRECHECK TYPE I

In cases where the wireless door lock control system fails to operate only at a specific locality, perform this check at that locality.

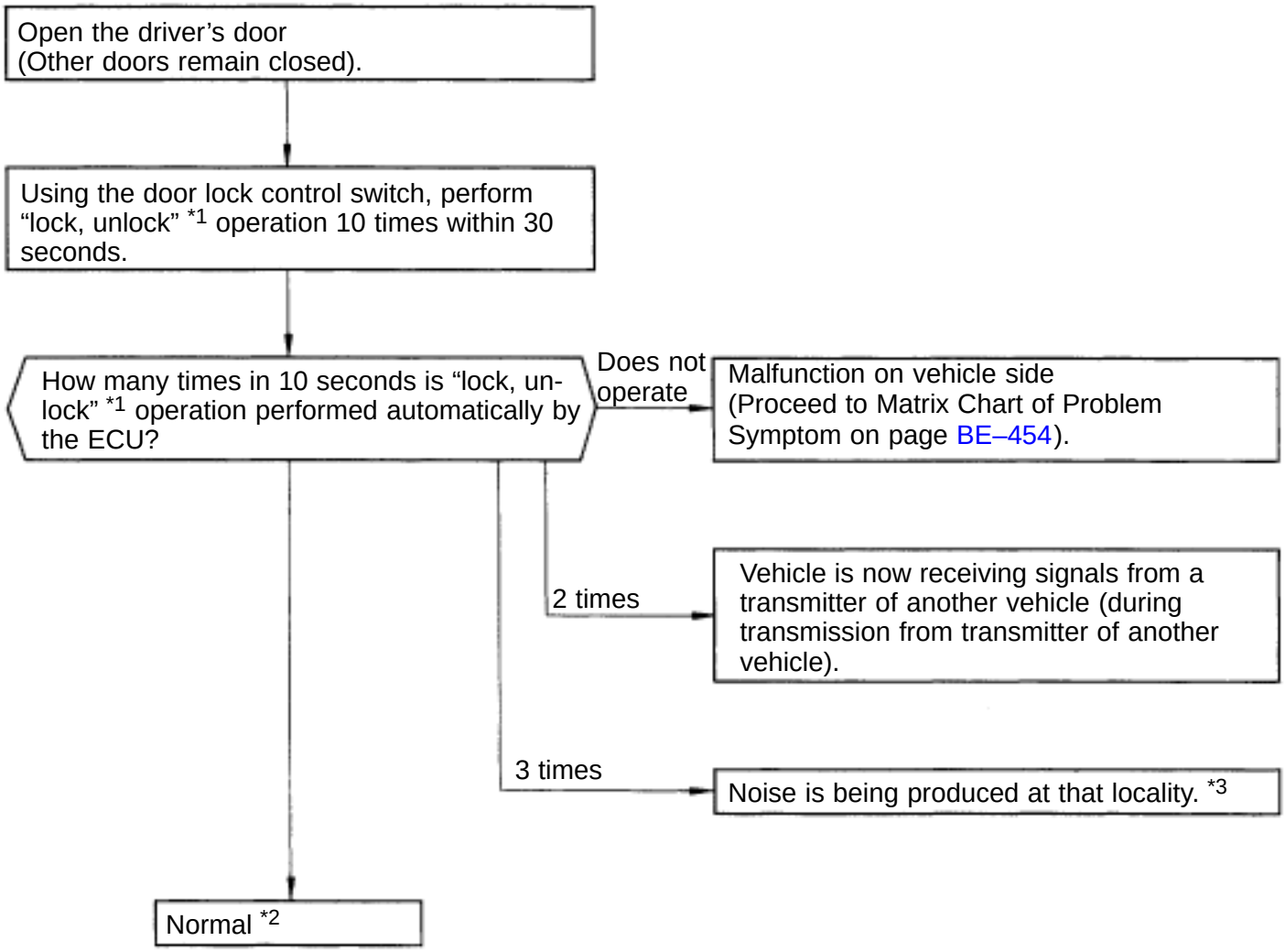

*1: Performing lock and unlock once counts as one time.

*2: If noise is not constantly produced at the locality being used and inspection is performed on an occasion when there is no noise, then it may happen that the system is judged normal.

*3: If the conclusion is that noise is produced in the locality the vehicle is used, then transmitter use is limited in that locality. Limitations on usage are described below.

HINT:

Because the transmitter uses weak electromagnetic waves, it is easily affected by noise, so remote control within the normal range becomes difficult.

To reduce the influence of noise, bring the transmitter as close as possible to the back window glass (antenna section), or touch (ground) the grooved key tip of the transmitter to the door key cylinder and then operate the transmitter switch; this should make door lock remote control operation possible.

If door lock remote control operation is still not possible, insert the key in the door key cylinder and press the transmitter switch.

WhereEverybodyKnowsYourName

PRECHECK TYPE II

Perform this check in cases where the wireless door lock control system fails to operate anywhere.

Open the driver's door
(Other doors remain closed).

Using the door lock control switch, perform "lock, unlock" *1 operation 10 times with in 30 seconds.

Soon (less than 2 secs.) after performing the above, continue to press the transmitter switch for 10 seconds.

How many times does "lock, unlock" *1 operation of all doors occur during the time the transmitter is operated (approx. 10 secs.)?

- Does not operate → Malfunction on vehicle side (Proceed to Matrix Chart of Problem Symptom on page BE–454).
- 2 times → Wrong transmitter parts (exclusive code does not match). [Replace transmitter and ROM in ECU. (See page BE–449)]
- 3 times → Transmitter fault (Inspect transmitter on page BE–447).
- Once → Close all doors.

Disconnect the antenna cable from the ECU, directly insert the transmitter (grooved section of key) and press the transmitter switch. In this case do not let the transmitter come in contact with the ECU case (because the transmitter will be grounded).

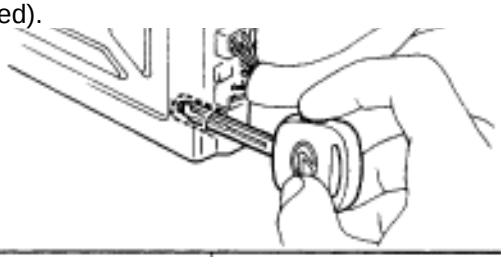

Do all doors lock and unlock?

- YES → Malfunction on antenna curcuit (Inspect antenna circuit on page BE–448).
- NO → Tune the FM radio to 94.9 MHz.

Is there noise on the radio while the transmitter switch is being pushed? *2

- YES → Malfunction on vehicle side (Proceed to Matrix Chart of Problem Symptom on page BE–454).
- NO → Inspect transmitter (See page BE–447).

*1: Performing lock and unlock once counts as one time.
*2: In some localities, inspection cannot be carried out because the local FM radio broadcast is also at 94.9 MHz. When this occurs, perform inspection using a portable radio in a place indoors free from the influence of FM broadcasts.

WhereEverybodyKnowsYourName

INSPECTION OF TRANSMITTER

HINT: Perform this inspection only when transmitter is judged to be the faulty in precheck type II.

1 **Transmitter battery capacity check.**

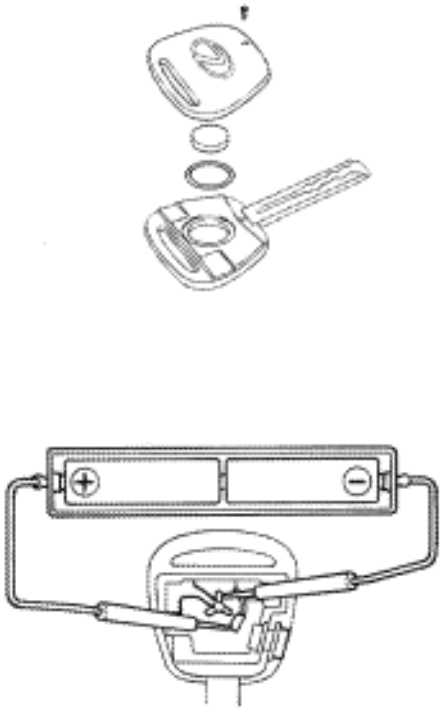

Hint This inspection is not directly for the purpose of checking the capacity of the transmitter battery, but is performed when remote control operation becomes difficult or impossible, in order to ascertain if this is caused by low battery capacity.

P

1. Remove the transmitter screw.
2. /Remove the cover.
3. Remove the O–ring and battery.

C

1. Connect 2 new 1.5 V dry–cell batteries in series. Connect the battery ⊥ terminal to the battery receptacle side terminal and the battery ⊖ terminal to the bottom terminal to provide 3 V to the transmitter.
2. In the condition (1), push the wireless door lock remote control switch on the side of the transmitter body and operate the door lock by remote control.

OK **Remove control operation possible.**

NG

Replace transmitter and ROM in ECU (See page BE–450).

OK

Replace the battery for transmitter (See page BE–450).

WhereEverybodyKnowsYourName

INSPECTION OF ANTENNA CIRCUIT

Antenna Circuit

CIRCUIT DESCRIPTION

The antenna receives the electromagnetic wave emitted by the transmitter and sends it to the wireless door lock ECU.

DIAGNOSTIC CHART

HINT: Perform this inspection only when vehicle antenna is judged to be faulty in initial check type II.

1 Check defogger wire (See page BE–173).

- NG → Repair defogger wire.
- OK → Replace antenna pinjack cable and capacitor.

WIRING DIAGRAM

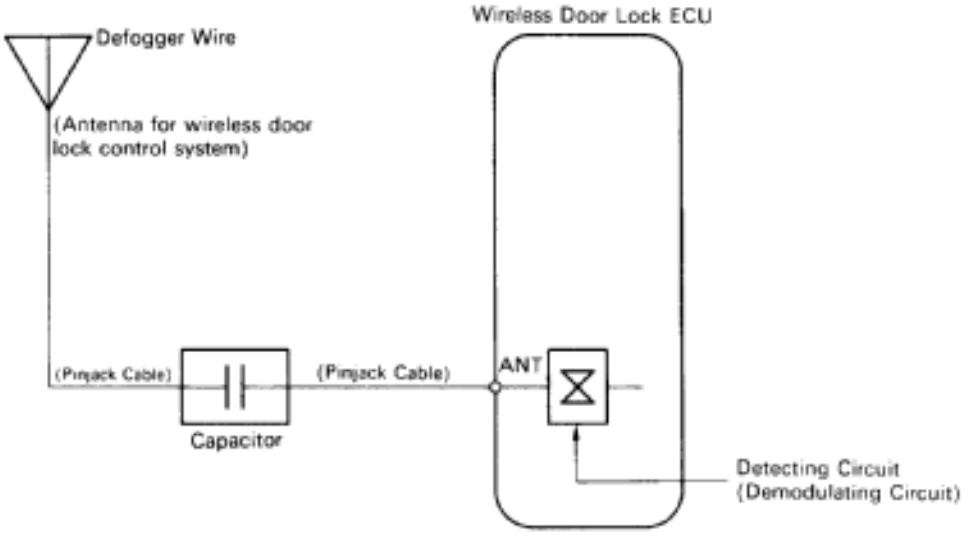

BE3695

WhereEverybodyKnowsYourName

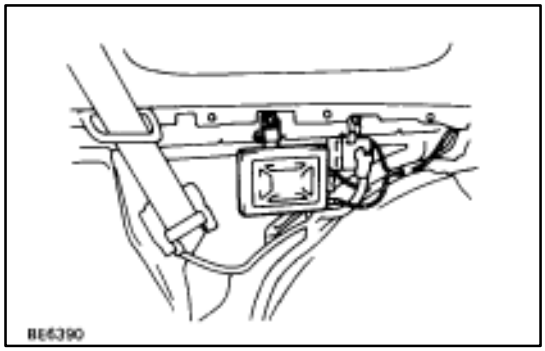

PARTS REPLACEMENT

WIRELESS DOOR LOCK ECU REMOVAL AND INSTALLATION

1. REMOVE WIRELESS DOOR LOCK ECU

(a) Remove the rear seat.
(b) Remove the RH quarter trim panel.
(c) Disconnect the connectors.
(d) Remove the ECU.

2. INSTALL WIRELESS DOOR LOCK ECU

For installation, follow the removal procedure in reverse.

WIRELESS DOOR LOCK ECU AND TRANSMITTER REPLACEMENT

Disassembly and assembly of the wireless door lock ECU and transmitter includes details of spare parts and replacement procedure for defective parts found through trouble-shooting.

Each part is a precision electronic component so handle with care.

Destroy old ROM and transmitter to prevent reuse.

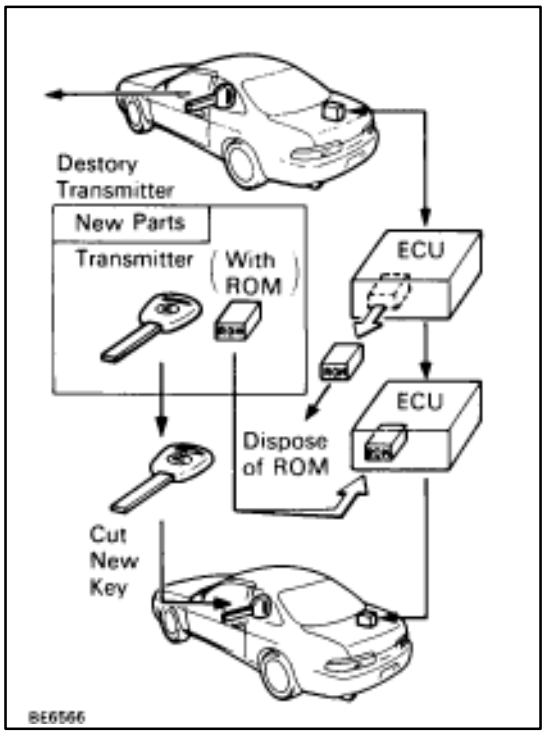

1. SPARE PARTS AND REPLACEMENT PROCEDURE FOR MALFUNCTIONING PARTS

(For malfunctioning transmitter)

(a) Prepare the new transmitter (with ROM).
(b) Remove the ECU from the vehicle.
(c) Remove the ROM from the ECU.
(d) Install the new ROM into the ECU.
(e) Install the ECU into the vehicle.
(f) Check that door lock remote control operation works.
(g) Cut the new key to the shape of the replaced key.

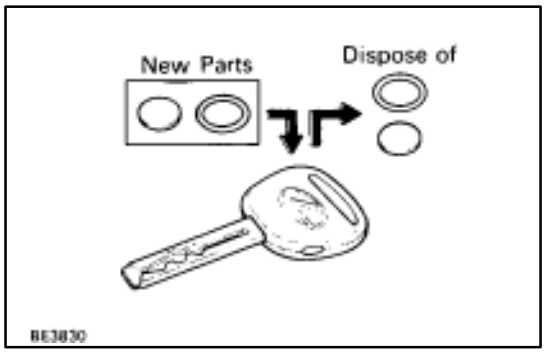

(For non–functioning battery)

(a) Prepare new battery (with O–ring).
(b) Remove battery and O–ring from transmitter.
(c) Install new battery and O–ring into transmitter.

WhereEverybodyKnowsYourName

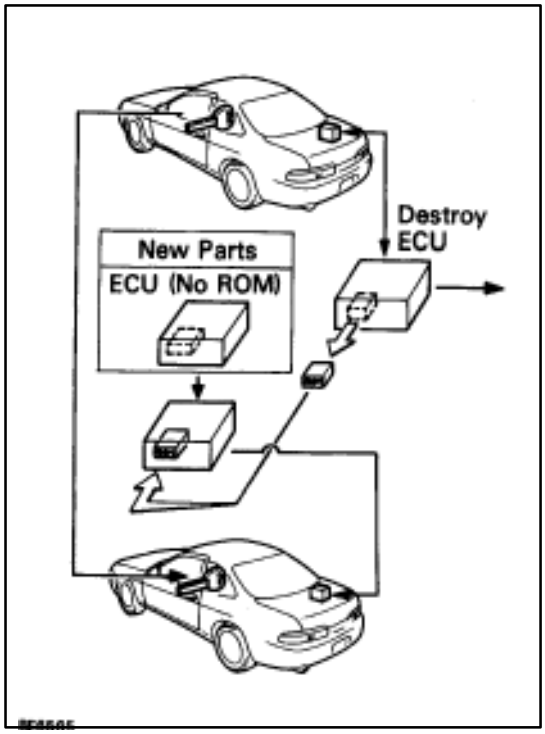

(For malfunctioning ECU)

(a) Prepare the new ECU (without ROM).
(b) Remove the ECU from the vehicle.
(c) Remove the ROM from the ECU.
(d) Install the ROM into the new ECU.
(e) Install the new ECU into the vehicle.

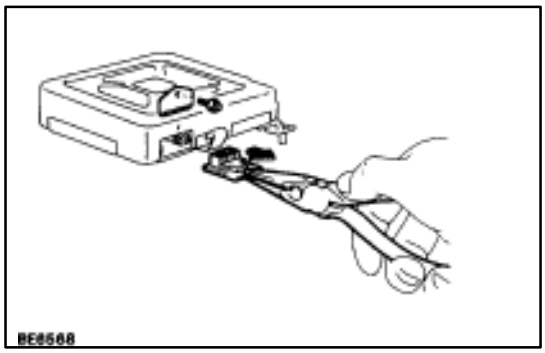

2. REMOVAL OF ROM FROM ECU

(a) Remove the cover from the hole for ROM insertion.
(b) Using long nosed pliers, grasp the center of the print board (ROM) and remove it.

NOTICE:

- **When replacing the ROM, always disconnect the ECU connector first.**
- **When removing the ROM, always grasp the board and do not touch the IC parts or print wiring on the board.**

(c) Insert the new print board (ROM) along the rails on both sides and push it in with your finger until the terminal on the end is completely inserted.
(d) Install the cover to the hole for ROM insertion.

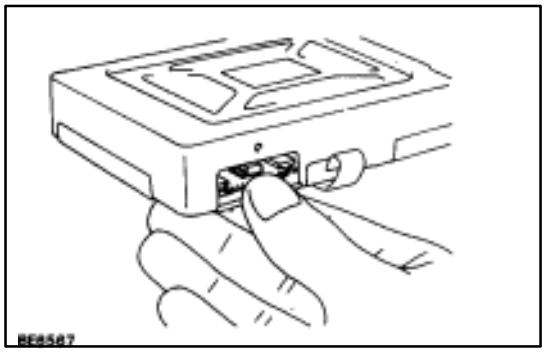

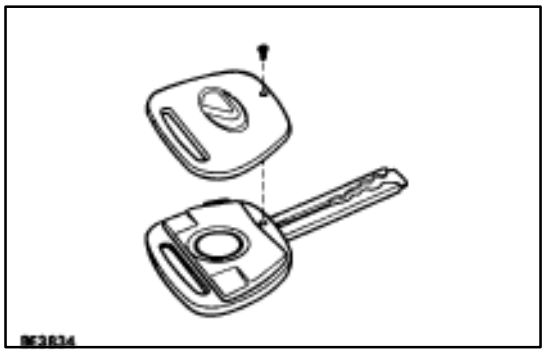

3. REPLACEMENT OF BATTERY FOR TRANSMITTER

(a) Remove the screw from the transmitter.
(b) Remove the cover.

WhereEverybodyKnowsYourName

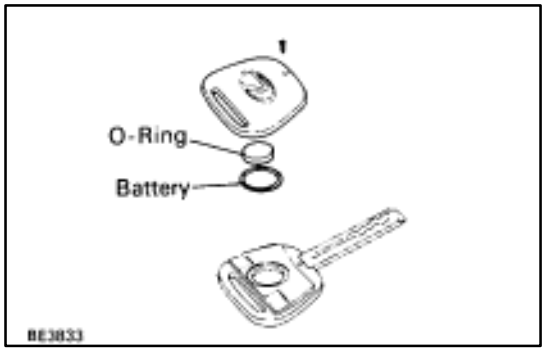

(c) Remove the O–ring and battery.
(d) Set the new battery and O–ring into the transmitter.
(e) Install the cover to the transmitter body taking care not to twist or displace the O–ring.
(f) Tighten the screw.

WhereEverybodyKnowsYourName

WIRING DIAGRAM

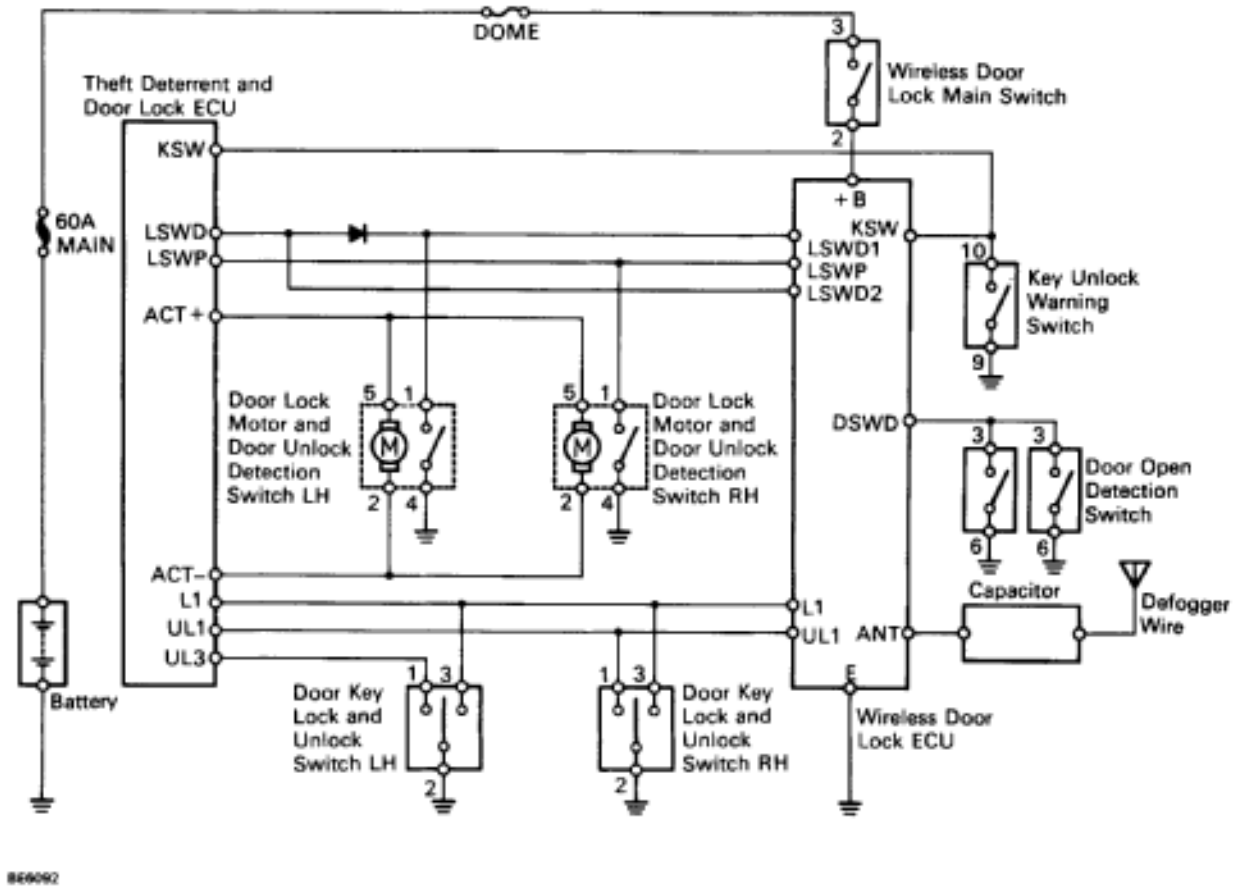

Terminals of ECU

No.	Symbol	Terminal Name	No.	Symbol	Terminal Name
W8–1	+B	Power Source	W8–6	KSW	Key Unlock Warning Switch
W8–2	LSWD1	Door Unlock Detection Switch LH	W8–7	E	Ground
W8–3	LSWP	Door Unlock Detection Switch RH	W8–8		
W8–4	UL1	Door Key Lock and Unlock Switch	W8–9	LSWD2	Door Lock Motor LH
W8–5	L1	Door Key Lock and Unlock Switch	W8–10	DSWD	Door Open Detection Switch

WhereEverybodyKnowsYourName

STANDARD VALUE OF ECU TERMINAL

Terminals	Symbols	Wiring color	Condition	Standard Value
W8–1↔W8–7	+B1↔E	R–L↔W–B	Wireless door lock main switch ON	10 ~ 14 V
			Wireless door lock main switch OFF	Below 1 V
W8–2↔Body Ground	LSWD1↔Body Ground	L–W↔Body Ground	Door lock knob of driver's door LOCK	8 ~ 10 V
			Door lock knob of driver's door UNLOCK	Below 1 V
W8–3↔Body Ground	LSWP↔Body Ground	P–B↔Body Ground	Door lock knob of assistant's door LOCK	8 ~ 10 V
			Door lock knob of assistant's door UNLOCK	Below 1 V
W8–4↔Body Ground	UL1↔Body Ground	G–W↔Body Ground	Turn ignition switch ON, Key operate switch Left and Right UNLOCK	Below 1 V
			Turn ignition switch ON Key operate switch Left or Right UNLOCK	
			Except above mention	8 ~ 10 V
W8–5↔Body Ground	L1↔Body Ground	G–Y↔Body Ground	Turn ignition switch, ON Key operate switch Right LOCK	Below 1 V
			Turn ignition switch ON, Except above mention	8 ~ 10 V
W8–6↔Body Ground	KSW↔Body Ground	Y↔Body Ground	Ignition key insert key cylinder	Below 1 V
			Ignition key pull out key cylinder	10 ~ 14 V
W8–7↔Body Ground	E↔Body Ground	W–B↔Body Ground	Always	Below 1 V
W8–9↔Body Ground	LSWD2↔Body Ground	W–L↔Body Ground	Door lock knob of driver's door LOCK	8 ~ 10 V
			Door lock knob of driver's door UNLOCK	Below 1 V
W8–10↔Body Ground	DSWD↔Body Ground	G–L↔Body Ground	Door open detection switch Left and Right ON	Below 1 V
			Door open detection switch Left or Right ON	
			Door open detection switch Left or Right OFF	
			Door open detection switch Left and Right OFF	10 ~ 14 V

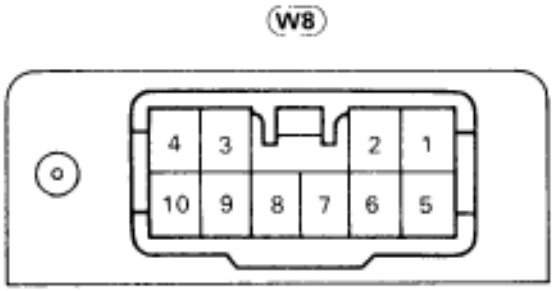

Wireless Door Lock ECU

BE6491

WhereEverybodyKnowsYourName

MATRIX CHART OF PROBLEM SYMPTOMS

Perform troubleshooting of the circuits for the applicable problem symptom in the order given in the chart below. Proceed to the page located for each circuit.

HINT:

- **Troubleshooting of the wireless door lock control system is based on the premise that the door lock control system is operating normally. Accordingly, before troubleshooting the wireless door lock control system, first make certain that the door lock control system is operating normally.**
- If the instruction ”Proceed to next circuit inspection shown on matrix chart” is given in the flow chart for each circuit, proceed to the circuit with the next highest number in the table to continue the check.
- If the trouble still reappears even though there are no abnormalities in any of the other circuits, then check and replace the Wireless Door Lock ECU as the last step.

See page / Suspect Area / Symptom	BE–460	BE–462	BE–464	BE–466	BE–468	BE–470	IN–32
	ECU Power Source Circuit	Door Unlock Detection Switch Circuit	Door Key Lock and Unlock Swtich Circuit (Unlock Side)	Door Key Lock and Unlock Swtich Circuit (Lock Side)	Key Unlock Warning Switch Circuit	Door Open Detection Swtich Circuit	Wireless Door Lock ECU
All functions of wireless door lock control system do not operate.	1		3	4	5	2	6
Only door unlock operation is not possible (Lock operation is possible).		2	1				3
Only door lock operation is not possible (Unlock operation is possible).				1			2
Only transmitter misoperation prevention function is not possible					1		2
Wireless door lock function operates even when each door is opened.						1	2
Wireless door lock functions incorrectly. (Although one door is unlocked, when the transmitter switch is pressed, all doors unlock.)		1					2

WhereEverybodyKnowsYourName

–MEMO–

WhereEverybodyKnowsYourName

LOCATION OF CONNECTORS

Location of Connectors in Engine Compartment

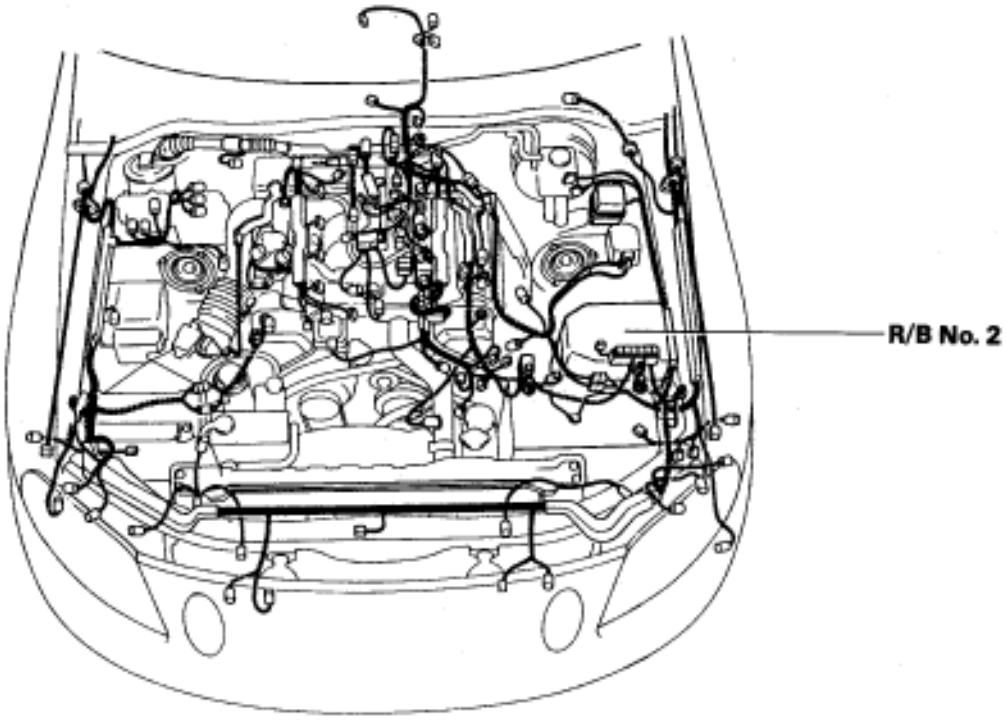

BE6630

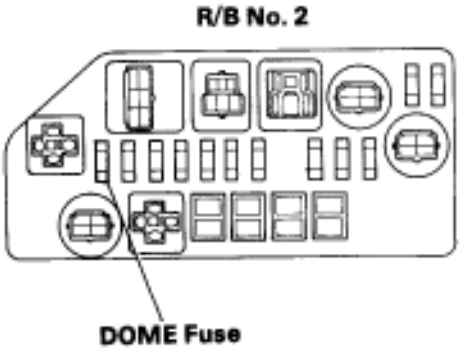

BE6625

WhereEverybodyKnowsYourName

Location of Connectors in Body

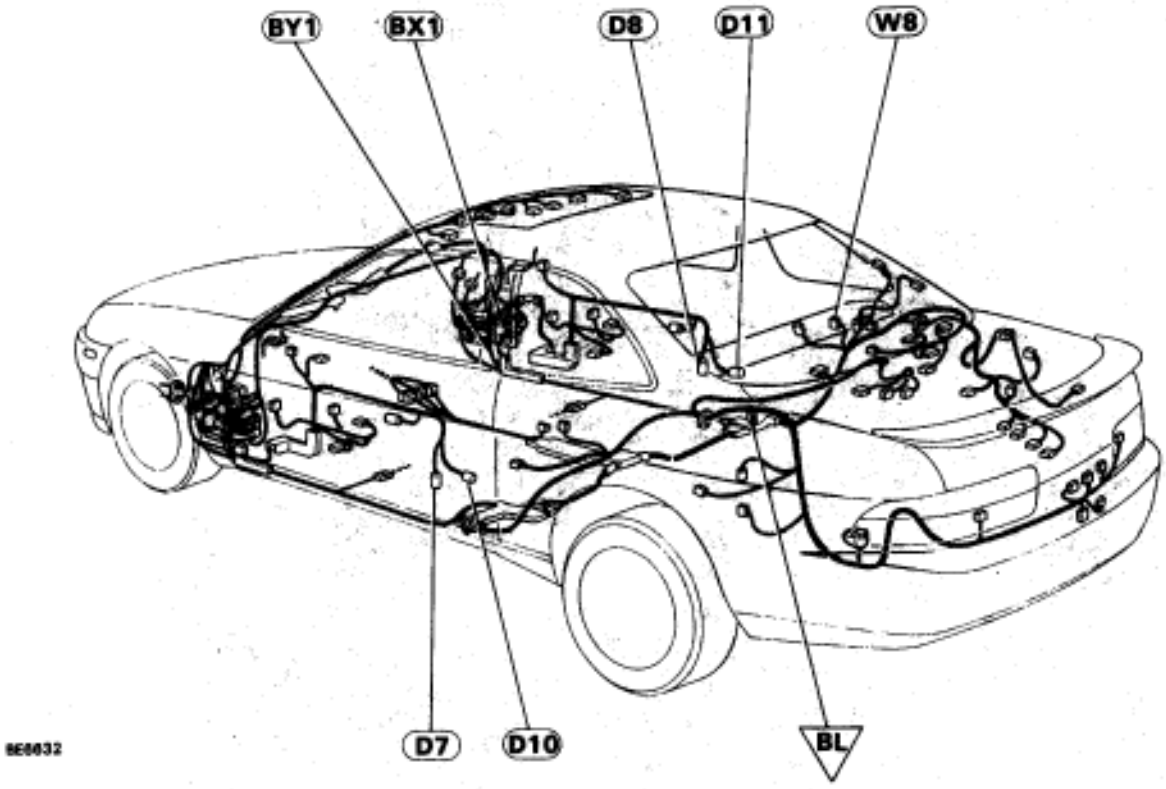

D7, D8, D10, D11

Door Key Lock and Unlock Switch LH, RH

Ie-6-1-C

W8

Wireless Door Lock ECU

e-10-1

BX1

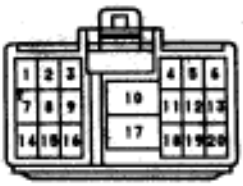

e-20-1-8

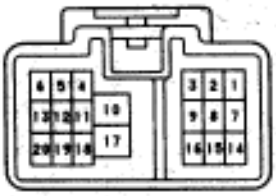

e-20-2-8

BY1

e-10-1

e-10-2

WhereEverybodyKnowsYourName

Location of Connectors in Instrument Panel

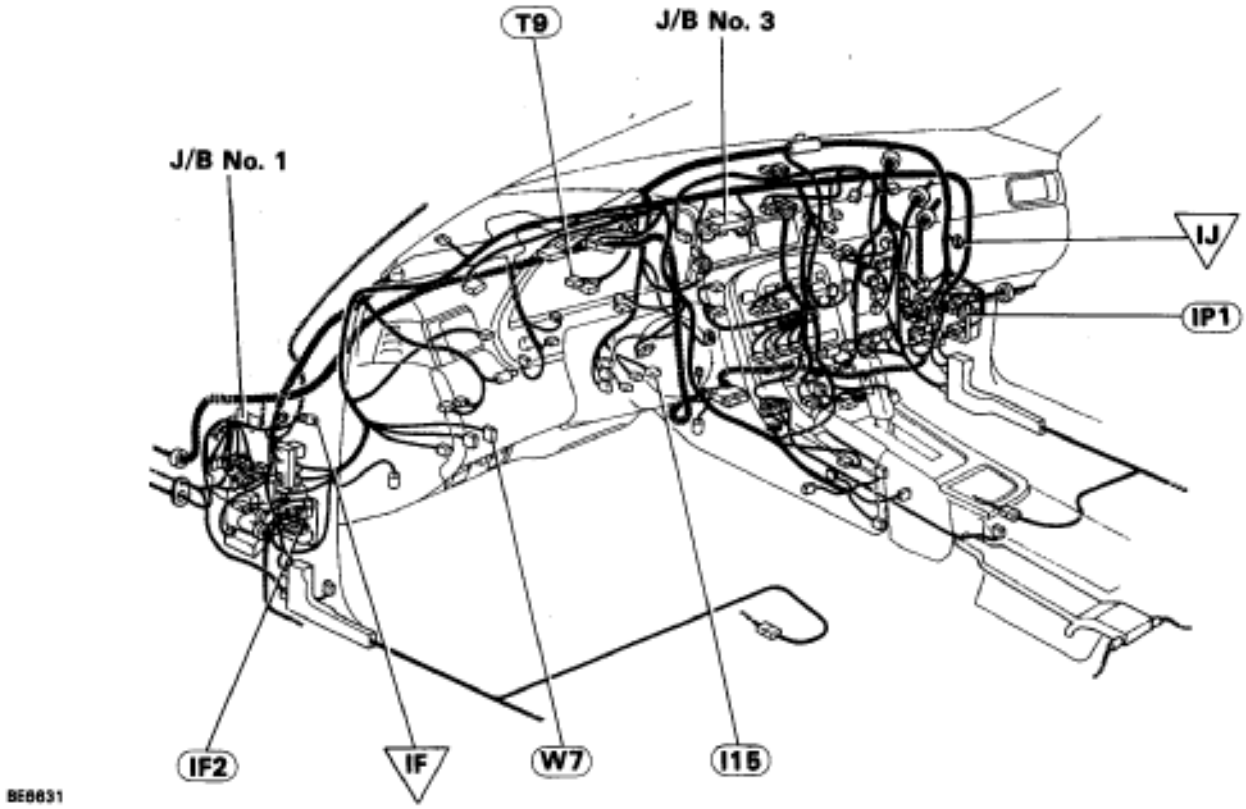

I15

Key Unlock Warning SW

eg-11-1

T9

Theft Deterrent and Door Lock Control ECU

e-20-1

W7

Wireless Door Lock Main SW

Z-3-1

IF2

e-20-1

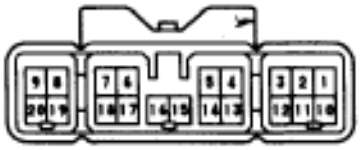

e-20-2

IP1

e-20-1

e-20-2

WhereEverybodyKnowsYourName

J/B No. 1

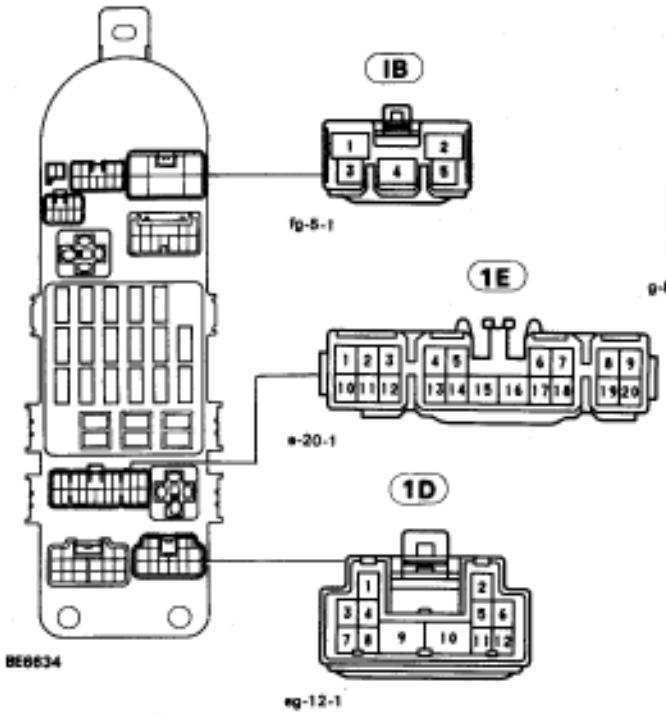

J/B No. 1

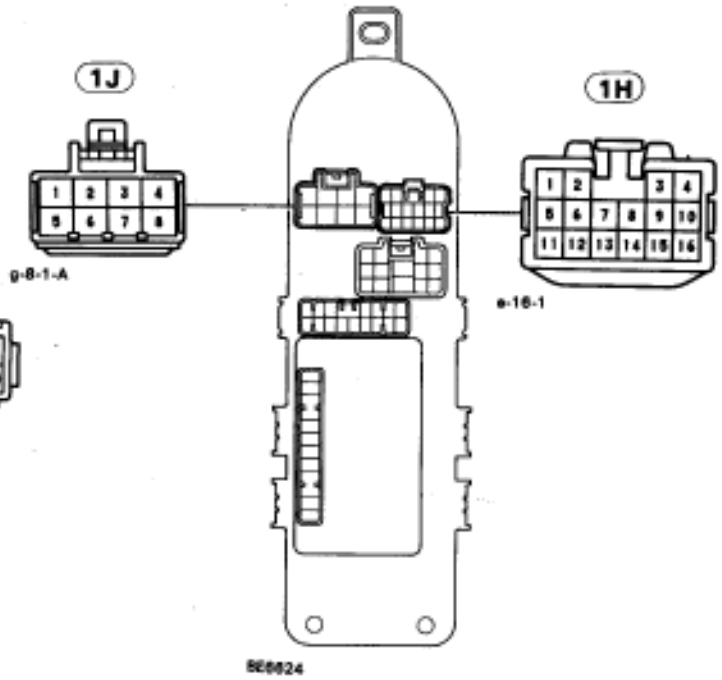

J/B No. 3

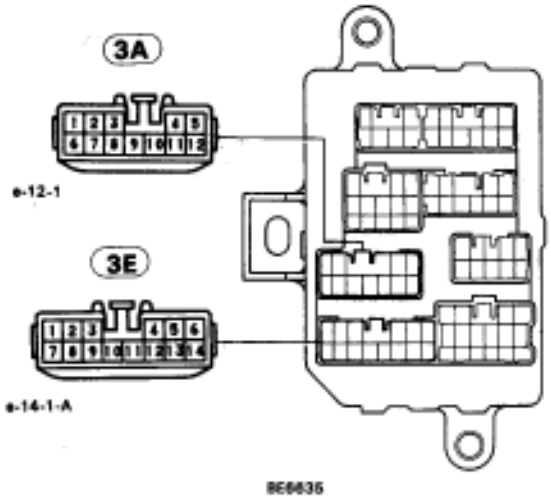

WhereEverybodyKnowsYourName

CIRCUIT INSPECTION

ECU Power Source Circuit

CIRCUIT DESCRIPTION

When the wireless door lock main switch is ON, battery voltage is applied to terminal +B of the wireless door lock ECU, causing the ECU to operate.
When the wireless door lock main switch is OFF, battery voltage is not applied to terminal +B and the ECU does not operate.

DIAGNOSTIC CHART

1 Check DOME fuse.
- NG → Check for short in all the harness and components connected to DOME fuse. (See attached wiring diagram)
- OK ↓

2 Check voltage between terminals +B and E of wireless door lock ECU connector.
- OK → Proceed to next circuit inspection shown on matrix chart (See page BE–454).
- NG ↓

3 Check for open in harness and connector between terminal E of ECU and body ground (See page IN–27).
- NG → Repair or replace harness or connector.
- OK ↓

4 Check wireless door lock main switch.
- NG → Replace wireless door lock main switch.
- OK ↓

Check and repair harness and connector between ECU and main switch, main switch and battery.

WIRING DIAGRAM

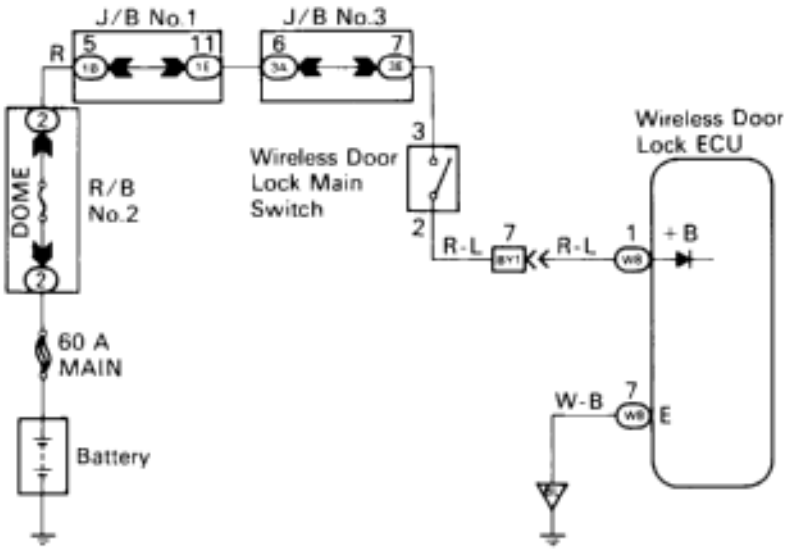

WhereEverybodyKnowsYourName

INSPECTION PROCEDURE

1 **Check DOME fuse.**

OK

NG **Check for short in all the harness and components connected to DOME fuse (See attached wiring diagram).**

2 **Check voltage between terminals +B and E of ECU connector.**

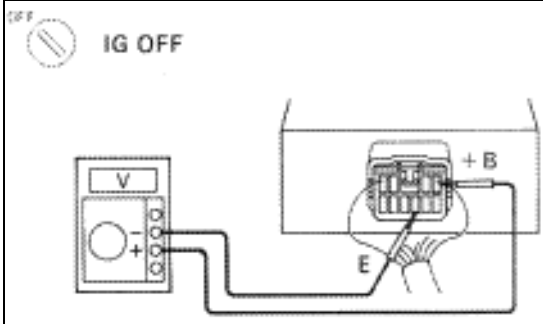

P
1. Remove the rear seat and RH quarter trim panel.
2. Remove the ECU.

C Measure voltage between terminals +B and E of ECU connector, when wireless door lock main switch is on and off.

OK

Wireless door lock main switch	Voltage
ON	10 – 14 V
OFF	Below 1 V

NG

OK **Proceed to next circuit inspection shown on matrix chart (See page BE–454).**

3 **Check for open in harness and connector between terminal E of ECU and body ground (See page IN–27).**

OK

NG **Repair or replace harness or connector.**

4 **Check wireless door lock main switch.**

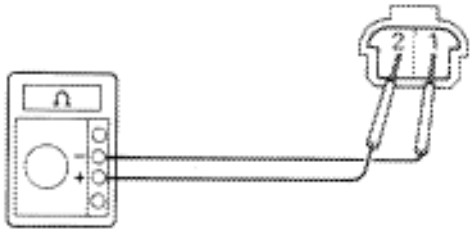

P
1. Remove the instrument lower finish panel.
2. Remove wireless door lock main switch.
3. Disconnect the connector.

C Measure resistance between terminals of wireless door lock main switch connector, when main switch is on and off.

OK

Wireless door lock main switch	Resistance
ON	Continuity
OFF	1MΩ or higher

OK

NG **Replace wireless door lock main switch.**

Check and repair harness and connector between ECU and main switch, main switch and battery.

WhereEverybodyKnowsYourName

Door Unlock Detection Switch Circuit

CIRCUIT DESCRIPTION

The door unlock detection switch is built into the door lock motor assembly. The switch is OFF when the door lock knob is in Lock position, and is ON when the knob is in Unlock position.
Furthermore, the door unlock detection switch circuit has terminal + B connected inside the theft deterrent ECU, when the door unlock detection switch is OFF, battery positive voltage is applied to the terminal of the door unlock detection switch circuit of the wireless door lock ECU.

DIAGNOSTIC CHART

1 Check voltage between terminals LSWD1 LSWP and LSWD2 of ECU connector and body ground.

- OK → Proceed to next circuit inspection shown on matrix chart (See page BE–454).
- NG → Check and repair harness and connector between ECU and door unlock detection switch.

WIRING DIAGRAM

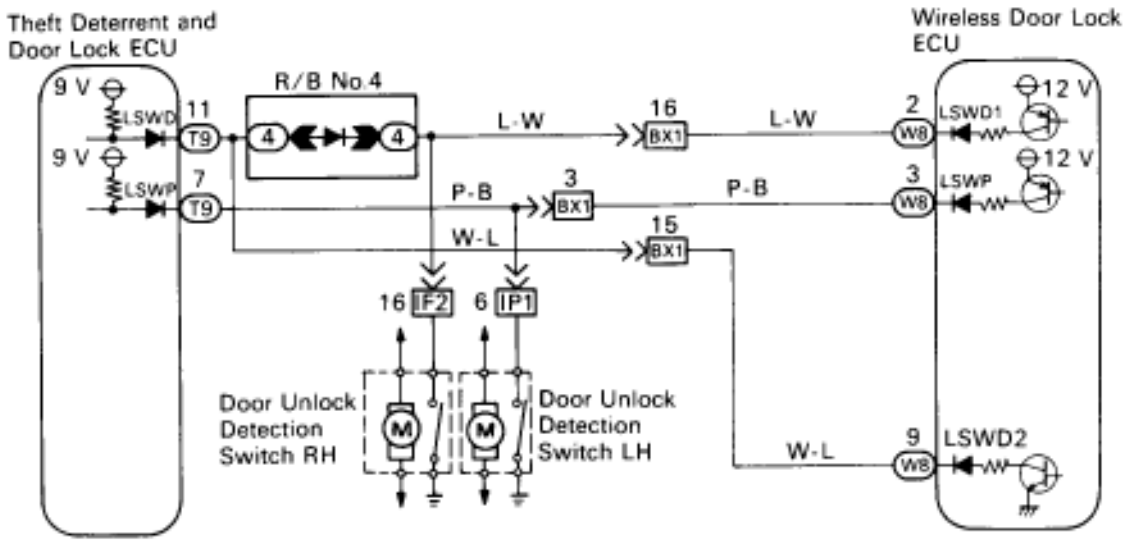

BE6576

WhereEverybodyKnowsYourName

INSPECTION PROCEDURE

1	Check voltage between terminals LSWD1, LSWP and LSWD2 of ECU connector and body ground.

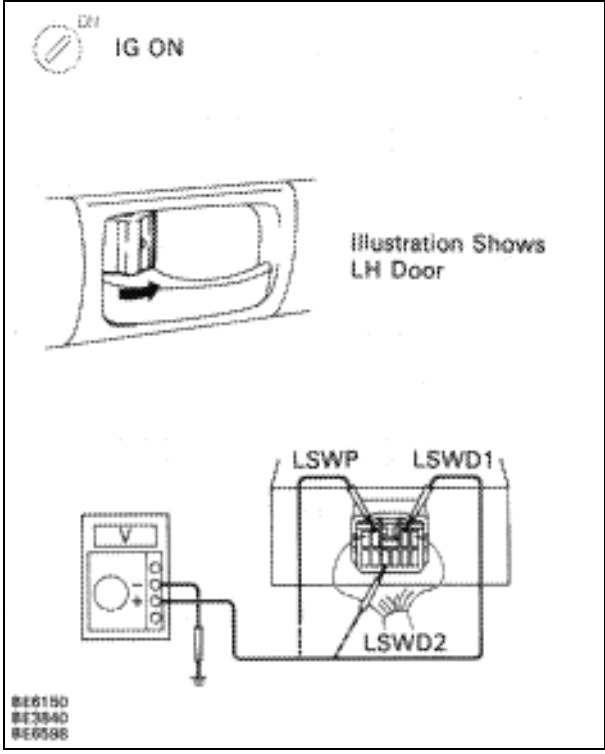

P

1. Remove the rear seat and RH quarter trim panel.
2. Remove the ECU.
3. Turn ignition switch on.

C Measure voltage between terminals LSWD1, LSWP and LSWD2 of ECU connector and body ground, when the respective door lock knob involved is pushed to the lock side.

OK **Voltage: 8 – 10 V**

NG

OK **Proceed to next circuit inspection shown on matrix chart (See page BE–454).**

Check and repair harness and connector between ECU and door unlock detection switch.

WhereEverybodyKnowsYourName

Door Key Lock and Unlock Switch Circuit (Unlock Side)

CIRCUIT DESCRIPTION

The door key lock and unlock switch is built into the door key cylinder. When the key is turned to the lock side, the lock terminal of the switch is grounded, and when the key is turned to the unlock side the unlock terminal is grounded.
Furthermore, the door key lock and unlock switch circuit has terminal +B connected inside the theft deterrent and door lock ECU, when neither the lock or unlock terminal of the door key lock and unlock switch are grounded, battery positive voltage is applied to the door key lock and unlock switch circuit of the wireless door lock ECU. (Tr inside the ECU coming ON causes the wireless door lock ECU to output a signal to unlock all the doors.)

DIAGNOSTIC CHART

1 Check voltage between terminal UL1 of ECU connector and ground.

- OK → Proceed to next circuit inspection shown on matrix chart (See page BE–454).
- NG → Check and repair harness and connector between ECU and key door key lock and unlock switch.

WIRING DIAGRAM

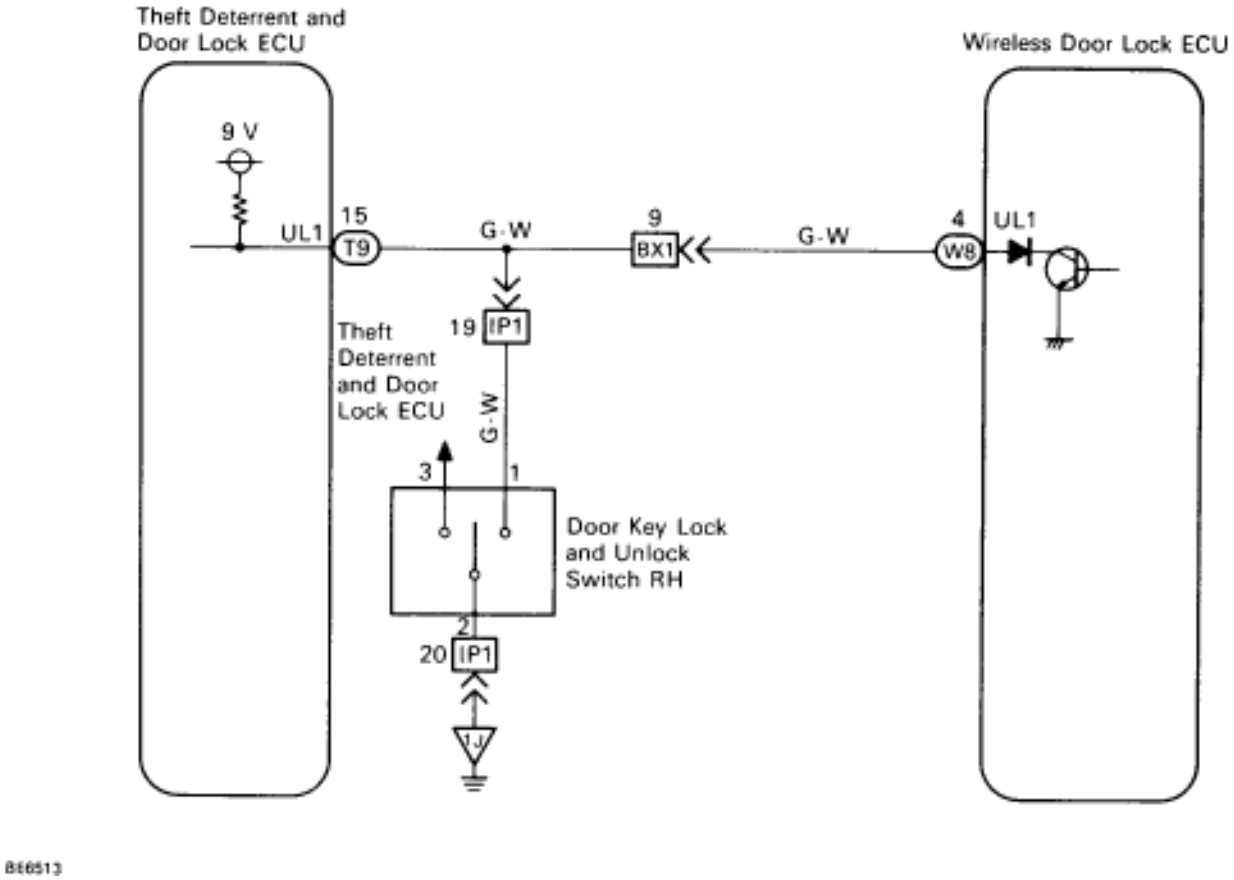

WhereEverybodyKnowsYourName

INSPECTION PROCEDURE

1	Check voltage between terminal UL1 of ECU connector and body ground.
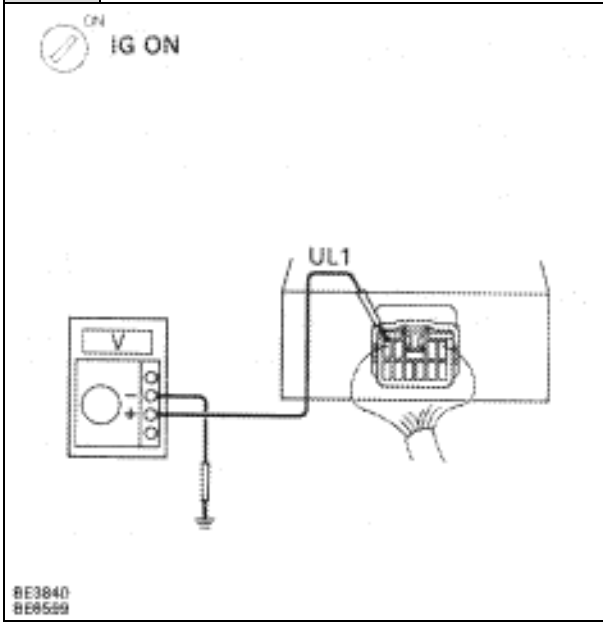	**P** 1. Remove the rear seat and RH quarter trim panel. 2. Remove the ECU. 3. Turn ignition switch on. **C** Measure voltage between terminal UL1 of ECU connector and body ground. **OK** **Voltage: 8 – 10 V**

NG

OK **Proceed to next circuit inspection shown on matrix chart (See page BE–454).**

Check and repair harness and connector between ECU and door key lock and unlock switch.

WhereEverybodyKnowsYourName

Door Key Lock and Unlock Switch Circuit (Lock Side)

CIRCUIT DESCRIPTION

Refer to page BE–464.
Tr inside the ECU coming ON causes the wireless door lock ECU to output a signal to lock all the doors.

DIAGNOSTIC CHART

1 Check voltage between terminal L1 of ECU connector and body ground.

- OK → Proceed to next circuit inspection shown on matrix chart (See page BE–454).
- NG → Check and repair harness and connector between ECU and door key lock and unlock switch.

WIRING DIAGRAM

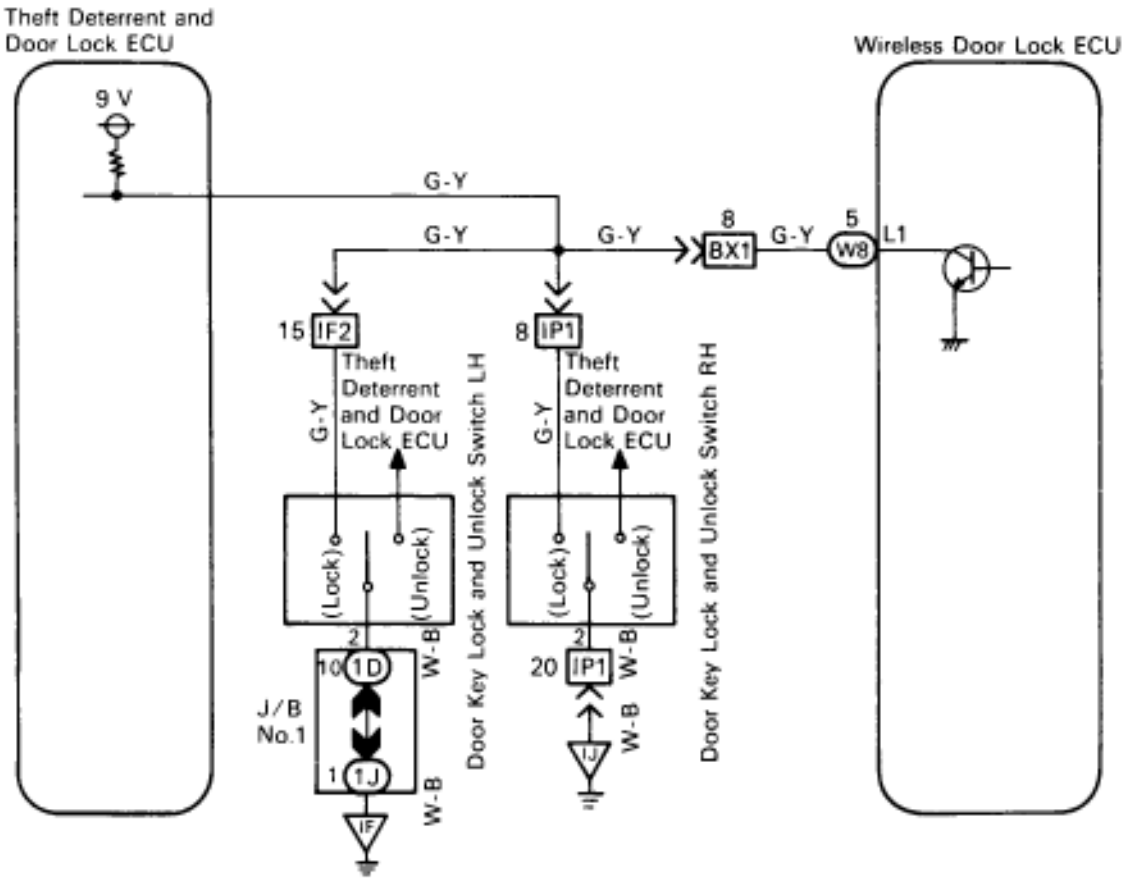

BE6511

WhereEverybodyKnowsYourName

INSPECTION PROCEDURE

1	Check voltage between terminal L1 of wireless door lock ECU connector and body ground.
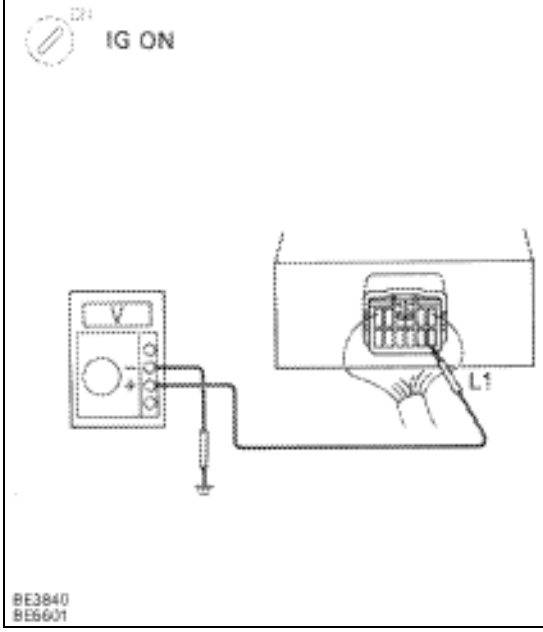	**P** 1. Remove the rear seat and RH quarter trim panel. 2. Remove the ECU. 3. Turn ignition switch on. **C** Measure voltage between terminal L1 of ECU connector and body ground. **OK** **Voltage: 8 – 10 V**

NG

OK **Proceed to next circuit inspection shown on matrix chart (See page BE–454).**

Check and repair harness and connector between ECU and door key lock and unlock switch.

WhereEverybodyKnowsYourName

Key Unlock Warning Switch Circuit

CIRCUIT DESCRIPTION

When the key is inserted in the ignition key cylinder the key unlock warning switch comes ON, and when the key is not inserted switch is OFF.
When the key unlock warning switch is ON, the ECU operates the key confinement prevention function.

DIAGNOSTIC CHART

1 Check voltage between terminal KSW of ECU connector and body ground.

- OK → Proceed to next circuit inspection shown on matrix chart (See page BE–454).
- NG → Check and repair harness and connector between ECU and key unlock warning switch.

WIRING DIAGRAM

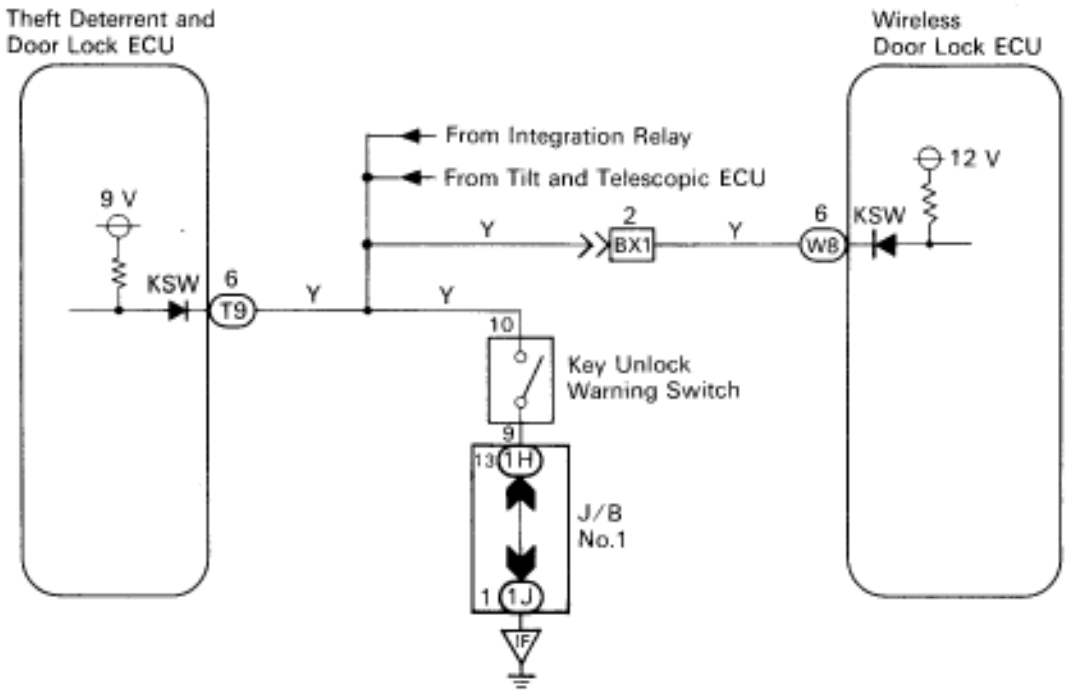

BE6512

WhereEverybodyKnowsYourName

INSPECTION PROCEDURE

1	Check voltage between terminal KSW of ECU connector and body ground.
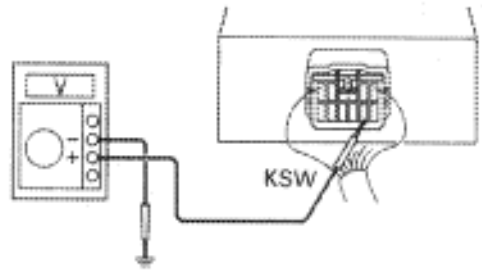	**P** 1. Remove the rear seat and RH quarter trim panel. 2. Remove the ECU. 3. Key plate is not inserted in the key cylinder. **C** Measure voltage between terminal KSW of ECU connector and body ground, when key plate is not inserted in the key cylinder. **OK** **Voltage: 10 – 14 V**

NG

OK **Proceed to next circuit inspection shown on matrix chart (See page BE–454).**

Check and repair harness and connector between ECU and key unlock warning switch.

WhereEverybodyKnowsYourName

Door Open Detection Switch Circuit

CIRCUIT DESCRIPTION

The door open detection switch comes ON when the door is opened and goes OFF when the door is closed. Furthermore the door open detection switch circuit has terminal +B connected inside the theft deterrent and door lock ECU, battery positive voltage is applied to terminal DSWD of the wireless door lock ECU when all doors are closed, i.e., when the door open detection switch of all doors are OFF.

DIAGNOSTIC CHART

1 Check operation of open door warning light

- OK → Check open door warning light circuit (See page BE–118).
- NG ↓

2 Check voltage between terminal DSWD of ECU connector and body ground.

- → Proceed to next circuit inspection show on matrix chart (See page BE–454).
- ↓ Check and repair harness and connector between ECU and door open detection switch.;

WIRING DIAGRAM

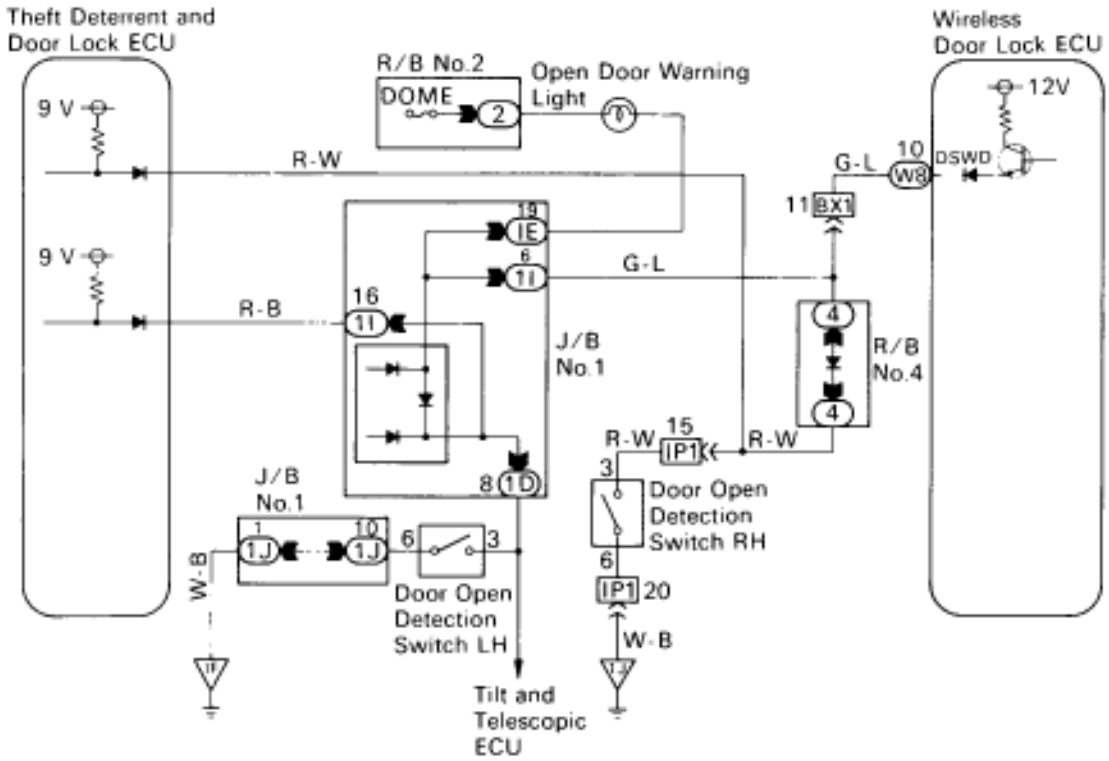

WhereEverybodyKnowsYourName

INSPECTION PROCEDURE

1	**Check operation of open door warning light.**
C	Check that open door warning light comes on when each door is opened, and goes off when all doors are closed.

OK

NG → **Check open door warning light circuit (See page BE–118).**

2	**Check voltage between terminal DSWD of ECU connector and body ground.**
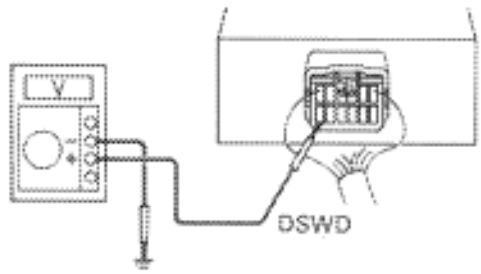	P 1. Remove the rear seat and RH quarter trim panel. 2. Remove the ECU. 3. Wireless door lock main switch on. C Measure voltage between terminal DSWD of ECU connector and body ground, when all doors are closed. OK **Voltage: 10 – 14 V**

NG

OK → **Proceed to next circuit inspection shown on matrix chart (See page BE–454).**

Check and repair harness and connector between ECU and door open detection switch.

WhereEverybodyKnowsYourName

–MEMO–

WhereEverybodyKnowsYourName

BODY ELECTRICAL SYSTEM

WhereEverybodyKnowsYourName

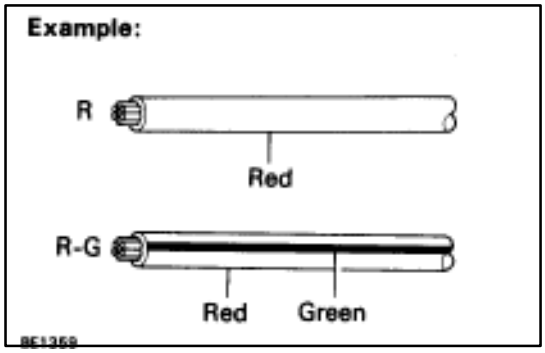

GENERAL INFORMATION

Wiring Color Code

Wire colors are indicated by an alphabetical code.

B	=	Black	L	=	Blue	R	=	Red
BR	=	Brown	LG	=	Light Green	V	=	Violet
G	=	Green	O	=	Orange	W	=	White
GR	=	Gray	P	=	Pink	Y	=	Yellow

The first letter indicates the basic wire color and the second letter indicates the color of the stripe.

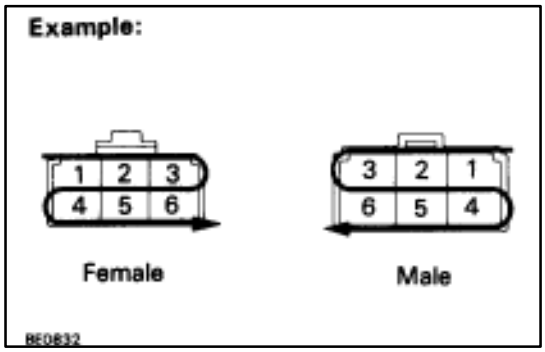

Connector

1. PIN NUMBERS OF FEMALE CONNECTOR

Numbered in order from upper left to lower right.

2. PIN NUMBERS OF MALE CONNECTOR

Numbered in order from upper right to lower left.

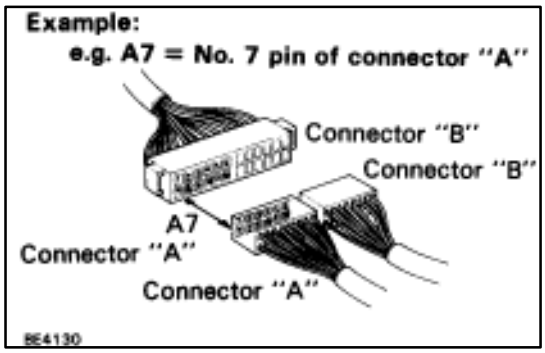

HINT: When connectors with different of the same number of terminals are used with the same parts, each connector name (letter of the alphabet) and pin number is specified.

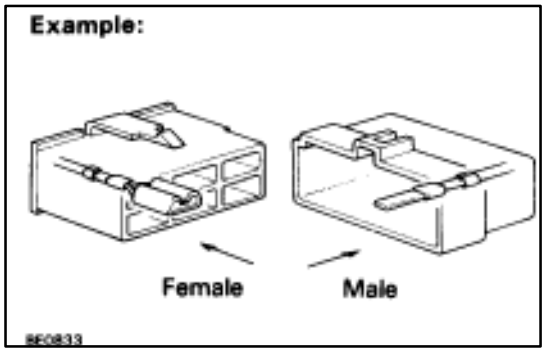

3. DISTINCTION OF MALE AND FEMALE CONNECTORS

Male and female connectors are distinguished by shape of their internal pins.

(a) All connectors are shown from the open end, and the lock is on top.

(b) To pull apart the connectors, pull on the connector itself, not the wires.

HINT: Check to see what kind of connector you are disconnecting before pulling apart.

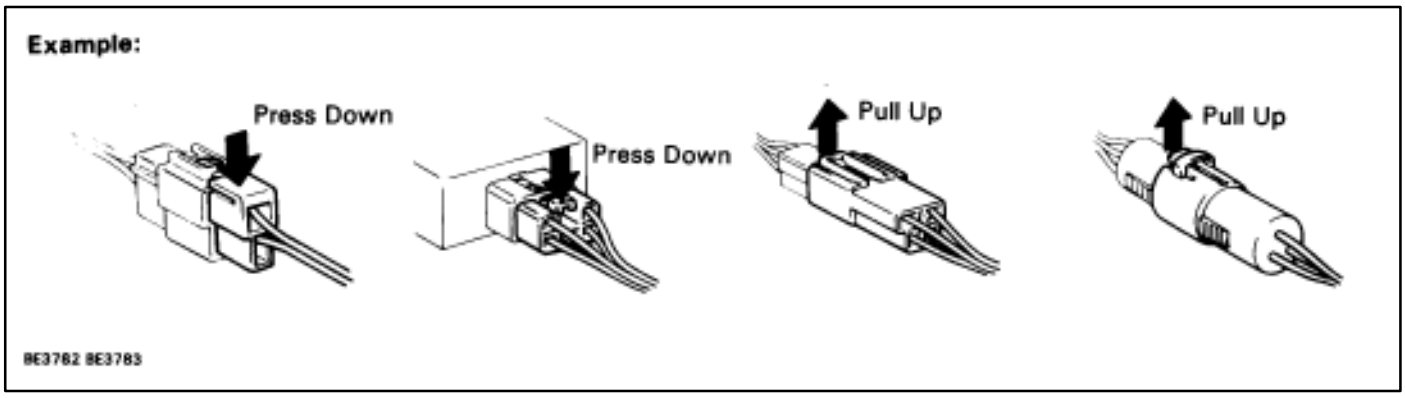

WhereEverybodyKnowsYourName

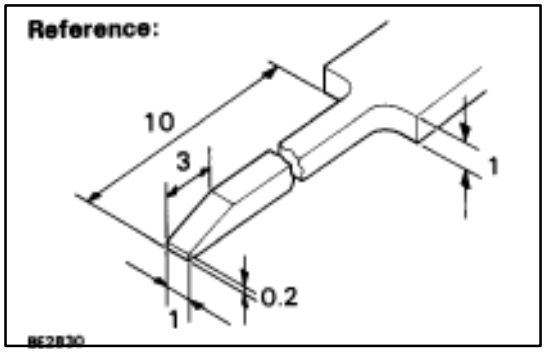

How to Replace Terminal

(with Terminal Retainer Type)

HINT: To remove the terminal for this type of connector, please construct and use the special tool or like object shown on the left.

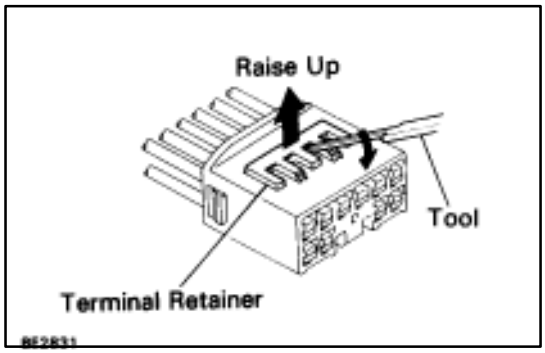

1. DISCONNECT CONNECTOR

Disconnect the connector according to the instructions on BE–2.

2. DISCONNECT TERMINAL FROM CONNECTOR

(a) Using the special tool, raise the retainer up to the temporary lock position.

HINT: The needle insertion position varies according to the connector's shape (number of terminals, etc.), so check the position before inserting it.

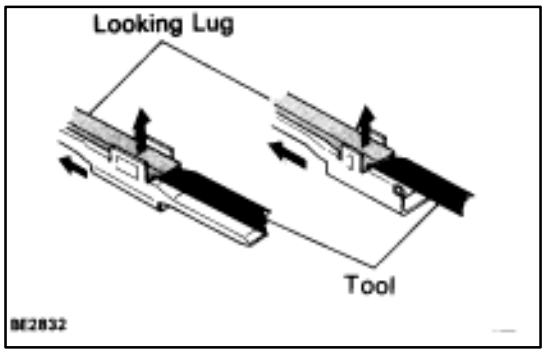

(b) Using the special tool, release the locking lug and pull the terminal out from rear.

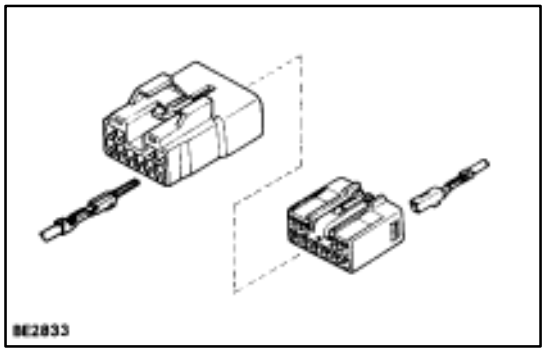

3. INSTALL TERMINAL TO CONNECTOR

(a) Insert the terminal.

HINT:

1. Make sure the terminal is positioned correctly.
2. Insert the terminal until the locking lug locks firmly.
3. Insert the terminal with retainer in the temporary lock position.

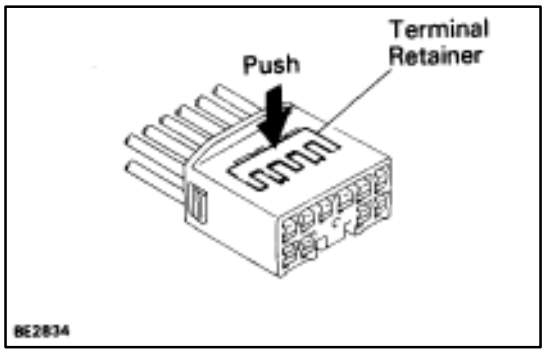

(b) Push the retainer in to the full lock position.

4. CONNECT CONNECTOR

WhereEverybodyKnowsYourName

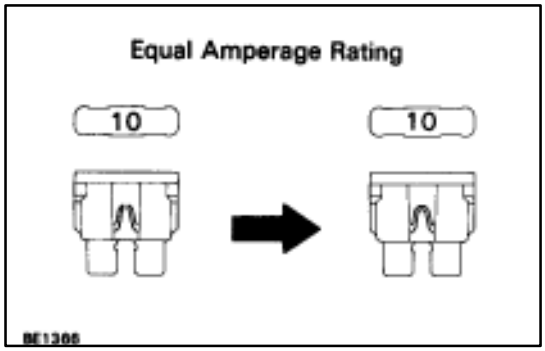

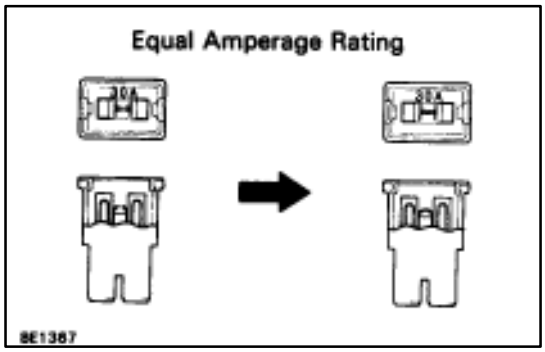

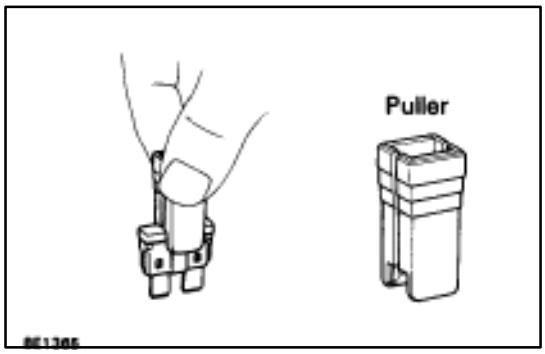

Replacement of Fuse

HINT: If replacing the fuse, be sure to replace it with a fuse with an equal amperage rating.

NOTICE:

1. **Turn off all electrical components and the ignition switch before replacing a fuse. Do not exceed the fuse amperage rating.**
2. **Always use a fuse puller for removing and inserting a fuse. Remove and insert straight in and out without twisting. Twisting could force open the terminals too much, resulting in a bad connection.**

If a fuse continues to blow, a short circuit is indicated. The system must be checked by a qualified technician.

HINT: The puller is located at Relay Block No. 2.

How to Inspect for System Inspection

This inspection precedure is a simple troubleshooting which should be carried out on the vehicle during system operation and is based on the assumption of system component trouble (except for the wires and connectors, etc.).

Always inspect the trouble taking the following items into consideration.

- Ground point fault
- Open or short circuit of the wire harness
- Connector or terminal connection fault
- Fuse or fusible link fault

NOTICE:

1. **This is an on–vehicle inspection during system operation. Therefore, inspect the trouble with due regard for safety.**
2. **If connecting the battery directly, be careful not to short circuit, and select the applicable voltage.**

WhereEverybodyKnowsYourName

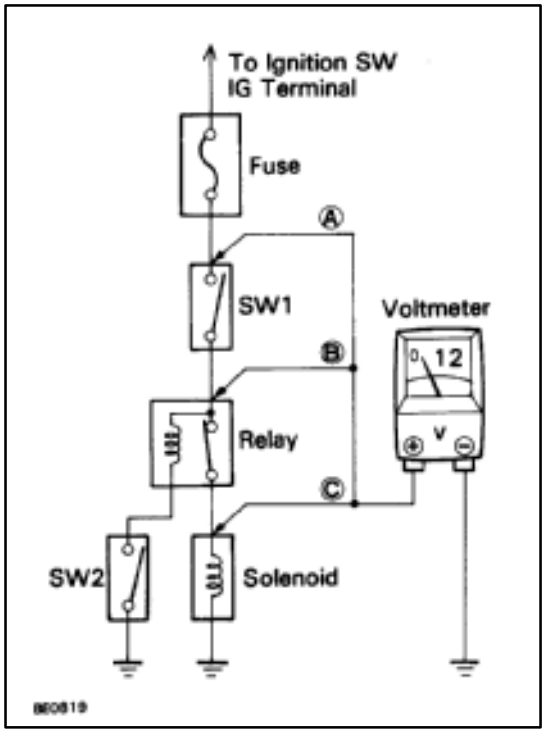

Check for Voltage

(a) Establish conditions in which voltage is present at the check point.

Example:

(A)–Ignition SW on

(B)–Ignition SW and SW 1 on

(C)–Ignition SW, SW 1 and Relay on (SW 2 off)

(b) Using a voltmeter, connect the negative (–) lead to a good ground point or negative (–) battery terminal and the positive (+) lead to the connector or component terminal. This check can be done with a test bulb instead of a voltmeter.

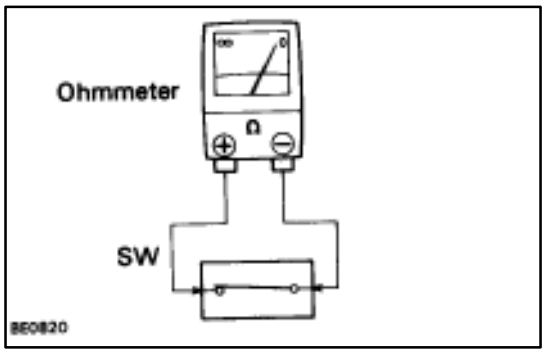

Check for Continuity and Resistance

(a) Disconnect the battery terminal or wire so there is no voltage between the check points.

(b) Connect the two leads of an ohmmeter to each of the check points.

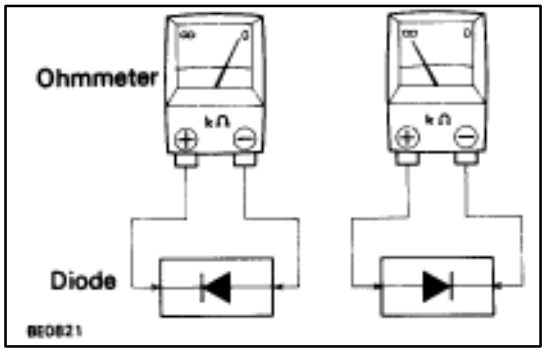

If the circuit has diodes, reverse the two leads and check again.

When contacting the negative (–) lead to the diode positive (+) side and the positive (+) lead to the negative (–) side, there should be continuity. When contacting the two leads in reverse, there should be no continuity.

HINT: Specifications may vary depending on the type of tester, so refer to the tester's instruction manual before performing the inspection.

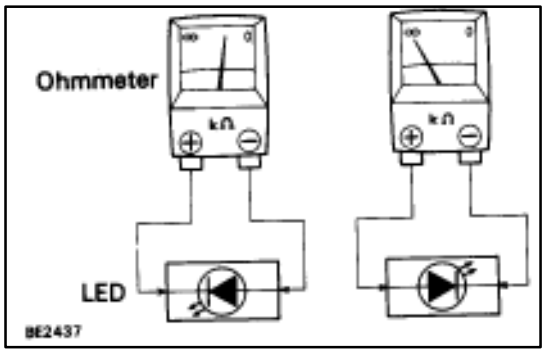

Check LED (Light Emitting Diode) in the same manner as that for diodes.

HINT:

- Use a tester with a power source of 3 V or greater to overcome the circuit resistance.
- If a suitable tester is not available, apply battery voltage and check that the LED lights up.

WhereEverybodyKnowsYourName

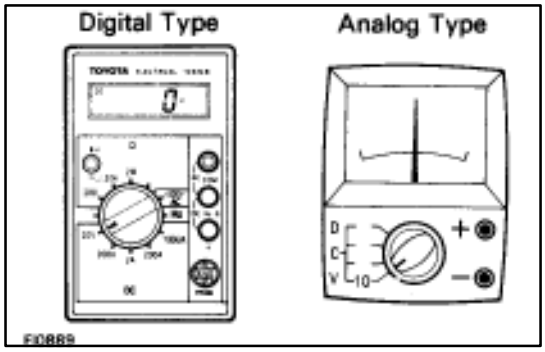

(c) Use a volt/ohmmeter with high impedance (10 k/V minimum) for troubleshooting of the electrical circuit.

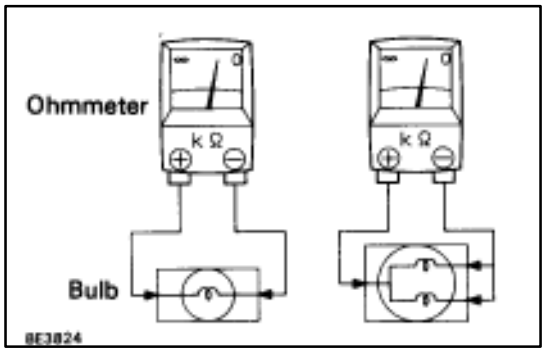

Check the Bulb

(a) Remove the bulb.
(b) There should be continuity between the respective terminals of the bulb together with a certain amount of resistance.
(c) Apply the two leads of the ohmmeter to each of the terminals.
(d) Apply battery voltage and check that the bulb light up.

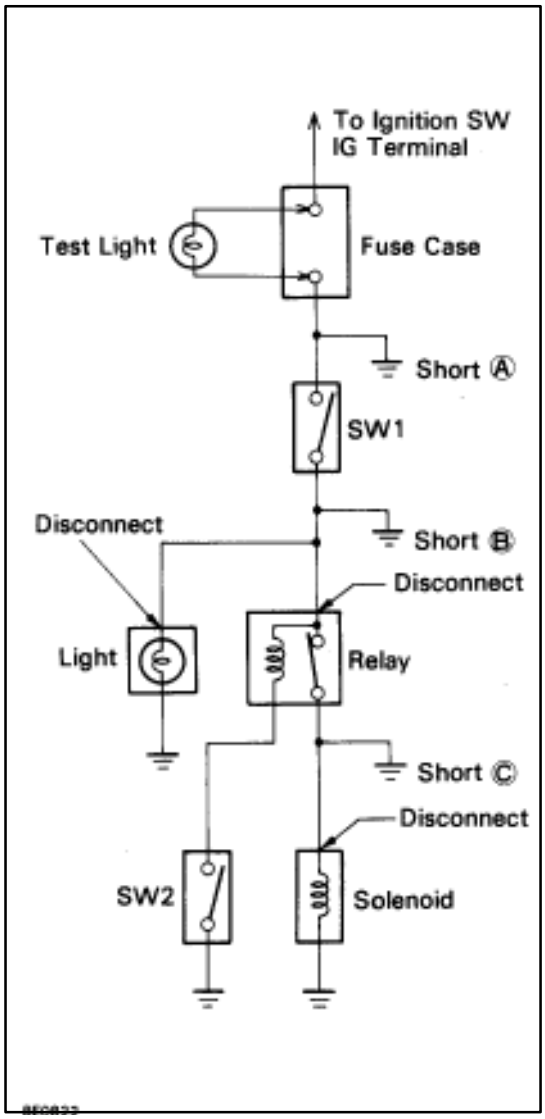

Check for Short Circuit

(a) Remove the blown fuse and eliminate all loads from the fuse.
(b) Connect a test bulb in place of the fuse.
(c) Establish conditions in which the test bulb comes on.

Example:
(A)–Ignition SW on
(B)–Ignition SW and SW 1 on
(C)–Ignition SW, SW 1 and Relay on (Connect the Relay) and SW 2 off (or Disconnect SW 2)

(d) Disconnect and reconnect the connectors while watching the test bulb. The short lies between the connector where the test bulb stays lit and the connector where the bulb goes out.
(e) Find the exact location of the short by lightly shaking the problem wire along the body.

WhereEverybodyKnowsYourName

PRECAUTIONS

Take care to observe the following precautions when performing inspections or removal and replacement of body electrical related parts.

1. SRS AIR–BAG SYSTEM

- ▼ Work must be started approx. 20 seconds after the ignition is set to the Lock position and the negative (–) terminal cable is disconnected from the battery. (See page AB–2)
- ▼ When disconnecting any of the connectors in the SRS AIR–BAG system, be sure to Lock the ignition switch and disconnect the battery negative (–) terminal first. Since the connectors are twin lock type connectors, disconnect the connectors only after releasing the first stage lock.
- ▼ When connecting SRS AIR–BAG system connectors, be sure to lock them securely. (If the connectors are not locked securely, the system may not operate when needed.)
- ▼ Always store the steering wheel pad with the pad surface facing upward. (Storing the pad with its metallic surface up may lead to a serious accident if the air bag inflates for some reason.)
- ▼ When installing the spiral cable, be sure the vehicle is in the straight ahead condition and confirm that the spiral cable is in the neutral position when it is installed. (See page BE–40)
- ▼ INFORMATION LABELS (NOTICE) are attached to the periphery of the air bag components. Follow the NOTICE.

2. MICRO COMPUTER PRESET DRIVING POSITION SYSTEM

Power Seat Control System
Power Mirror Control System
Power Tilt and Telescopic Steering System

- ▼ If the battery negative (–) terminal is disconnected, the preset driving positions stored in memory are erased, so be sure to note the positions and reset them after the battery terminal is reconnected.

3. AUDIO SYSTEM

- ▼ If the battery negative (–) terminal is disconnected, the preset AM, FM 1 and FM 2 stations stored in memory are erased, so be sure to note the stations and reset them after the battery terminal is reconnected.
- ▼ If the battery negative (–) terminal is disconnected, the ”ANTI–THEFT SYSTEM” will operate when the terminal is reconnected, but the radio, tape player and CD player will not operate. Be sure to input the correct ID number so that the radio, tape player and CD player can be operated again.

WhereEverybodyKnowsYourName

PREPARATION

SST (SPECIAL SERVICE TOOLS)

Illustration	Part No.	Part Name	Note
	09213–31021	Crankshaft Pulley Puller	For removing steering wheel

RECOMMENDED TOOLS

Illustration	Part No.	Part Name	Note
	09082–00015	TOYOTA Electrical Tester	
	09041–0030	Torx Driver T30	For removing and installing steering wheel pad and power window motor
	09042–00010	Torx Socket T30	For removing and installing steering wheel pad and power window motor

EQUIPMENT

Part Name	Note
Voltmeter	
Ammeter	
Ohmmeter	
Test lead	
Thermometer	Water temperature sender gauge, Engine oil level, Warning switch, Seat heater
Syphon	Brake fluid level warning switch
Oil bath	Engine oil level warning switch
Bulb (1.4 W)	Coolant level warning ECU
Bulb (3.4 W)	Fuel sender, gauge, Seat belt warning relay
Bulb (21 W)	Turn signal flasher relay
Dry cell battery	Fuel sender gauge
Heat light	Seat heater
Hexagon wrench (6 mm)	Power seat

WhereEverybodyKnowsYourName

EQUIPMENT (Cont'd)

Part	Note
Torque wrench	
Clip remover	For removing cowl louver
Masking tape	Rear window defogger wire
Tim foil	Rear window defogger wire

SSM (SPECIAL SERVICE MATERIALS)

Part Name	Part No.	Use etc.
Adhesive 1324, Three bond 1324 or equivalent	08833–00070	Power seat housing set nut, Power seat slide and vertical motor set screw
Adhesive 1344, Three bond 1344, Loctite 242 or equivalent	08833–00080	Low oil pressure warning switch Water temperature sender gauge
Dupont paste No. 4817	–	Rear window defogger wire

WhereEverybodyKnowsYourName

POWER SOURCE

Parts Location

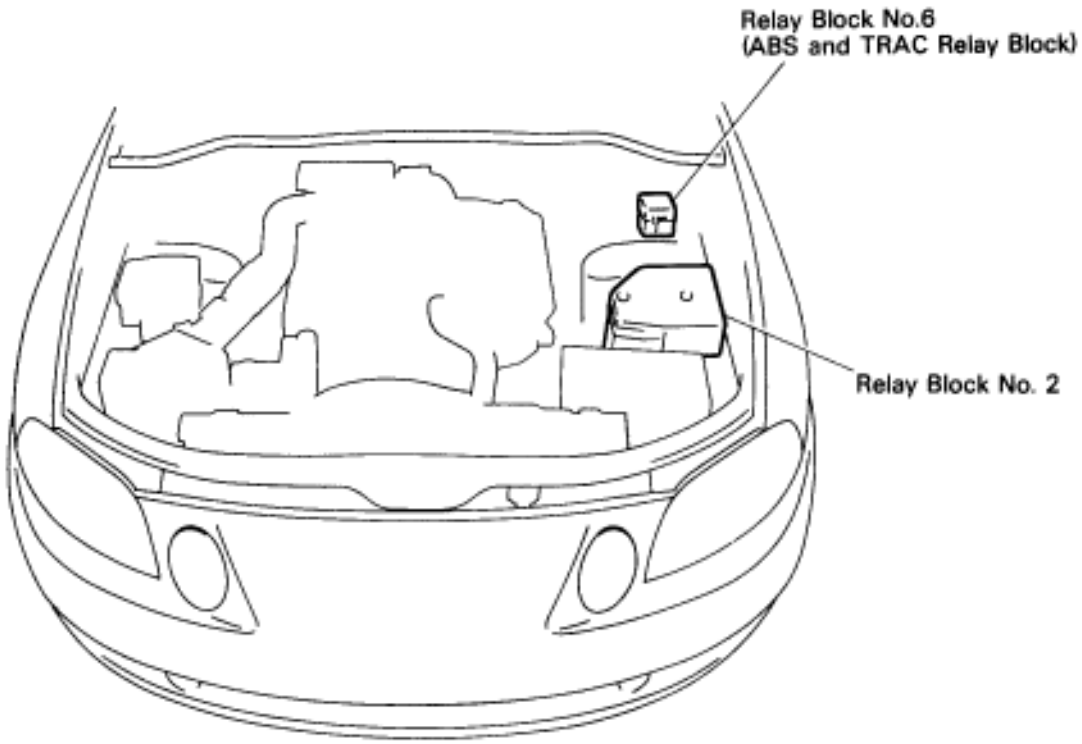

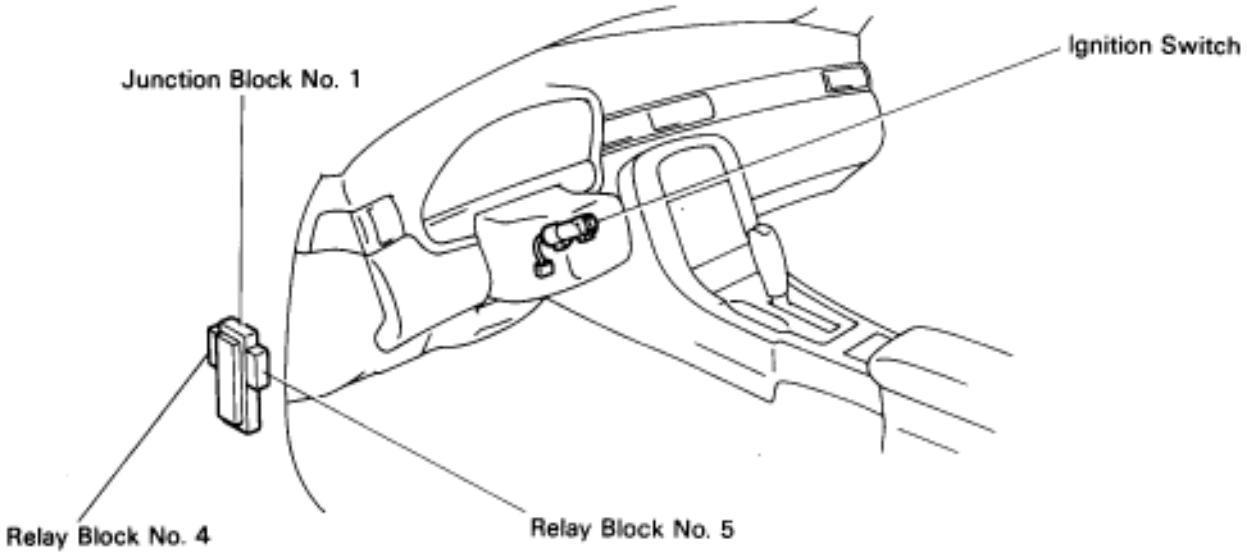

BE6201
BE6202

WhereEverybodyKnowsYourName

Parts Location (Cont'd)

JUNCTION BLOCK NO. 1

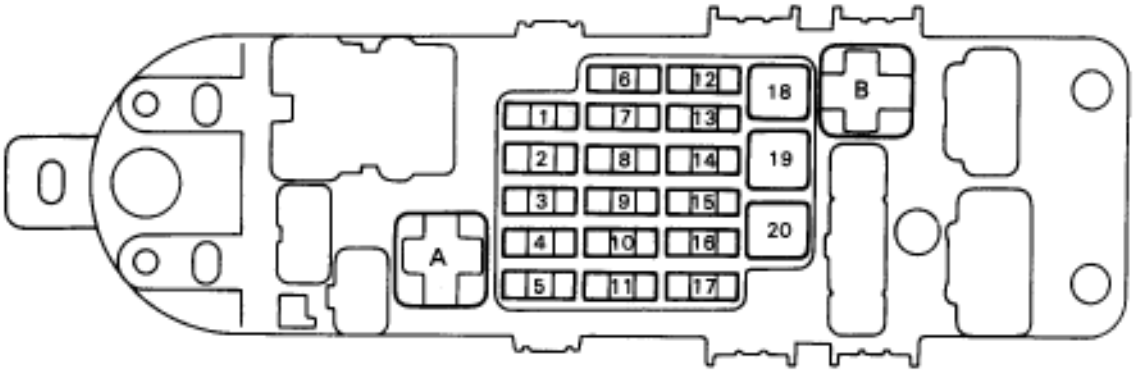

BE6203

Fuses

1.	IGN	7.5 A
2.	ST	7.5 A
3.	WIPER	20 A
4.	HTR	10 A
5.	ENGINE	7.5 A
6.	RADIO NO. 2	7.5 A
7.	CIG	15 A
8.	STOP	15 A
9.	TURN	20 A
10.	MIR HTR	10 A
11.	PANEL	7.5 A
12.	—	
13.	—	
14.	ECV-B	15 A
15.	GAUGE	10 A
16.	ECU-IG	15 A
17.	TAIL	15 A
18.	DOOR	30 A
19.	IG SW	40 A
20.	PWR	30 A

Relays

A.	TAIL	Relay
B.	P/W MAIN	Relay

WhereEverybodyKnowsYourName

Parts Location (Cont'd)

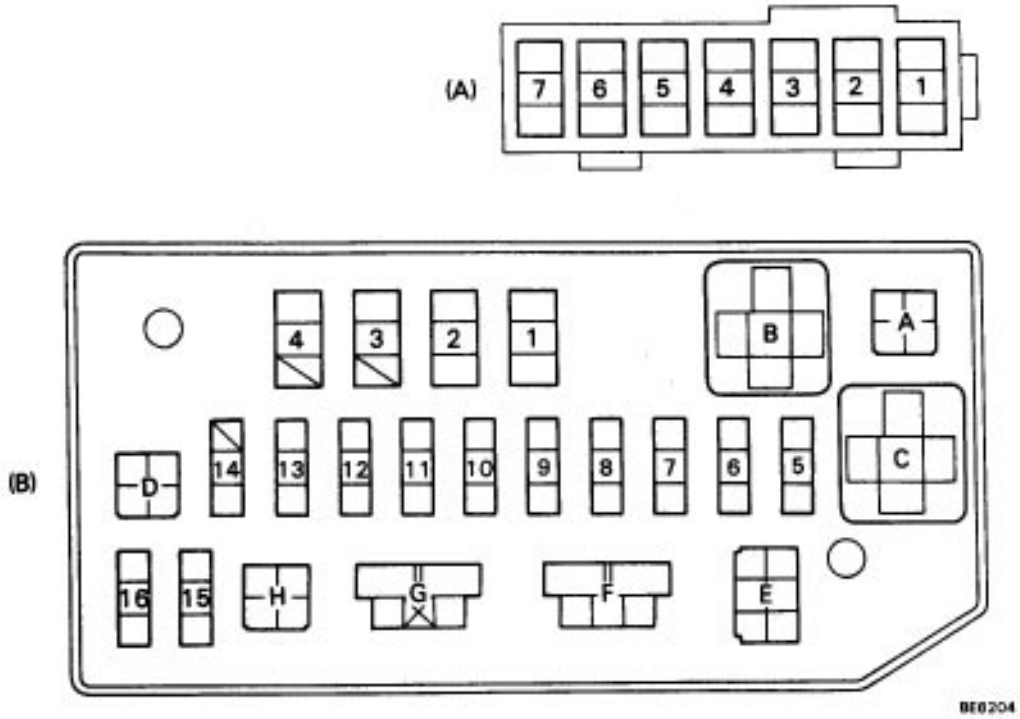

RELAY BLOCK NO. 2 (A)

Fuses

1.	ABS NO. 1	60 A
2.	AM1	100 A
3.	ALT	150 A
4.	MAIN	60 A
5.	AM2	30 A
6.	ABS NO. 2	40 A
7.	INJ	30 A

RELAY BLOCK NO. 2 (B)

Fuses

1.	HTR	60 A
2.	DEF	50 A
3.	—	
4.	—	
5.	DOME	10 A
6.	EFI	30 A
7.	HAZ-HORN	25 A
8.	RADIO NO. 1	20 A
9.	TEL	15 A
10.	ALT-S	7.5 A
11.	TRC	7.5 A
12.	HEAD (RH-LWR)	15 A
13.	HEAD (LH-LWR)	15 A
14.	—	
15.	HEAD (RH-UPR)	15 A
16.	HEAD (LH-UPR)	15 A

Relays

A.	EFI	Relay
B.	MG	Relay
C.	ST	Relay
D.	DIM	Relay
E.	IG2	Relay
F.	HTR	Relay
G.	H-LP	Relay
H.	DEF	Relay

WhereEverybodyKnowsYourName

Parts Location (Cont'd)

RELAY BLOCK NO. 4

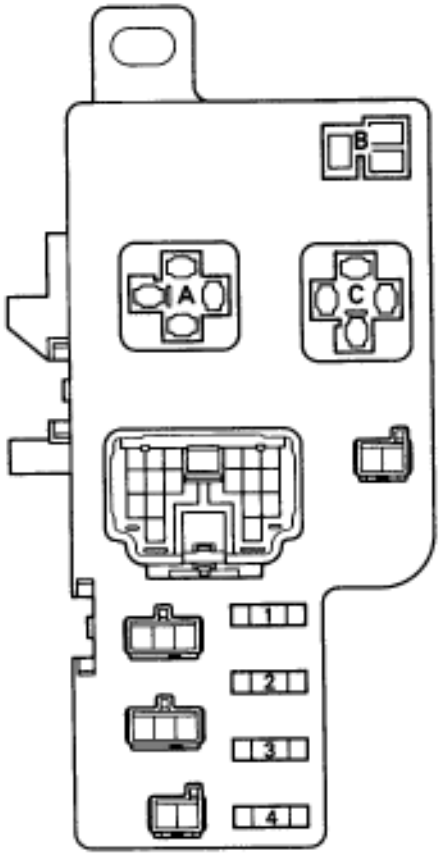

Fuse

1.	STHTR	15 A
2.	—	
3.	—	
4.	—	

Relays

A. FLSH Relay
B. HORN Relay
C. IG MAIN Relay

RELAY BLOCK NO. 5

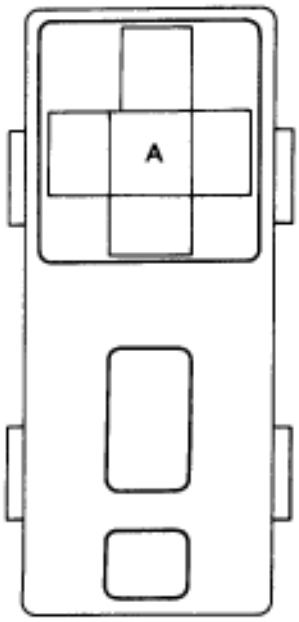

Relay

A. CRNRNG LP Relay

BE6188
BE6206

WhereEverybodyKnowsYourName

Parts Location (Cont'd)

RELAY BLOCK NO. 6
(ABS and TRAC Relay Block)

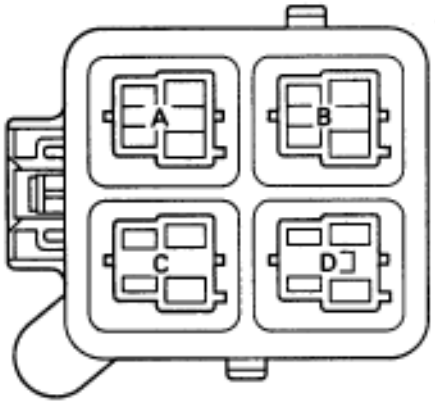

Relays

A. TRAC SOL Relay
B. TRAC MTR Relay
C. ABS SOL Relay
D. ABS MTR Relay

BE6143

WhereEverybodyKnowsYourName

Wiring Diagram

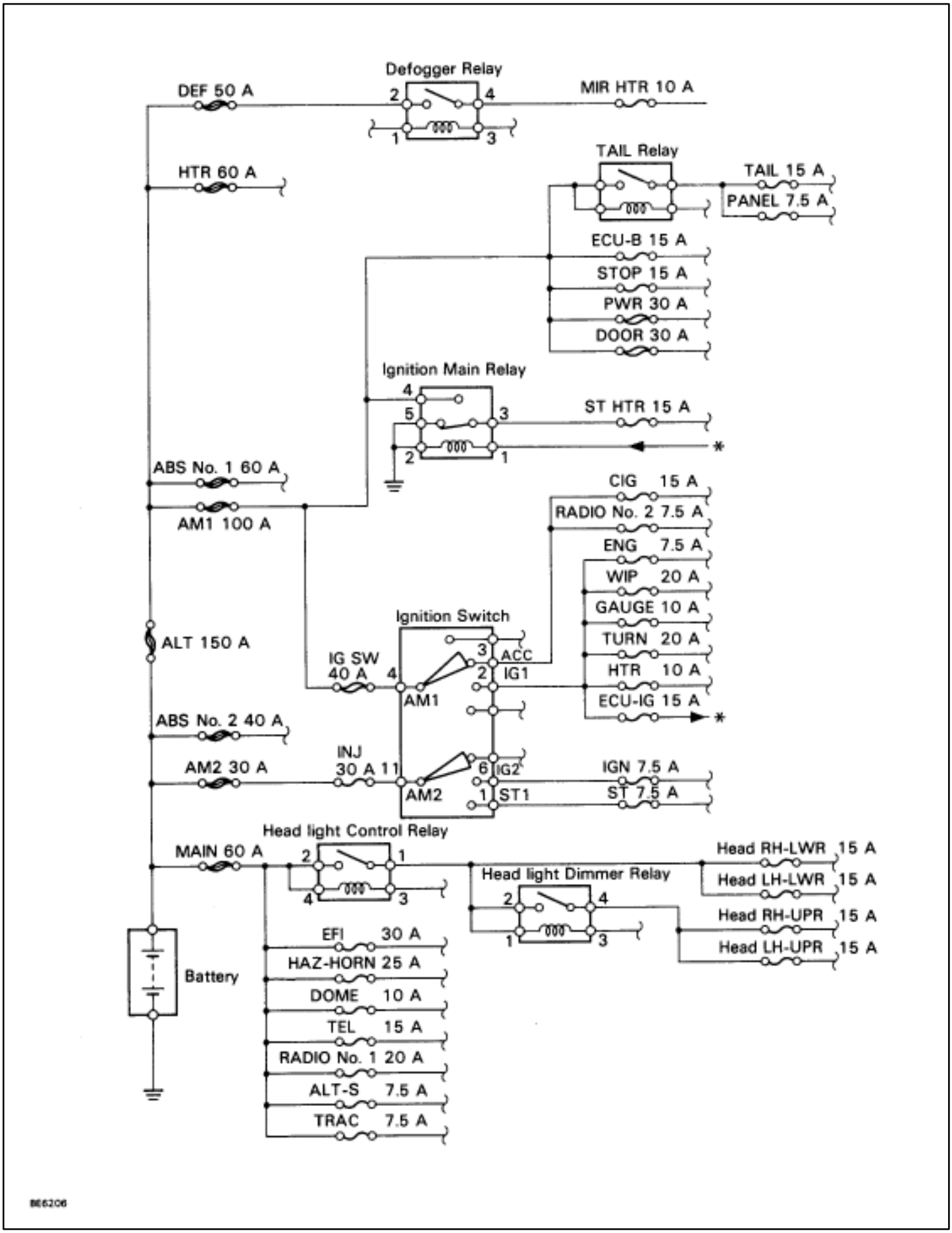

WhereEverybodyKnowsYourName

Replacement of Relays

REPLACEMENT OF RELAY IN RELAY BLOCK NO. 1, NO. 4 and NO. 5

1. REMOVE FOLLOWING PARTS:
(See page BO–112)
(a) No. 1 under cover.
(b) Door scuff plate.
(c) Floor carpet.

2. REMOVAL AND INSTALLATION OF RELAY
(a) Remove the junction block No. 1 set bolts.
(b) Disconnect connectors.
(c) Separate the relay block No. 4 and No. 5 from the junction block No. 1.
(d) For installation follow the removal procedure in reverse.

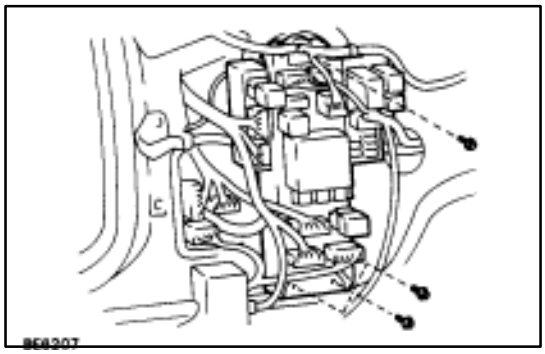

Replacement of Relay Block No. 2 (A)

REPLACEMENT OF RELAY BLOCK NO. 2 (A) IN RELAY BLOCK NO. 2

1. REMOVE RELAY BLOCK NO. 2 (A)
(a) Remove the battery.
CAUTION: Work must be started after approx. 20 seconds or longer from the time the ignition switch is turned to the "LOCK" position and negative (–) terminal cable is disconnected from the battery.
(b) Remove the relay block No. 2 cover.
(c) Pry loose two locking lugs and remove the nut.

2. INSTALL RELAY BLOCK NO. 2 (A)
For installation follow removal procedure in reverse.

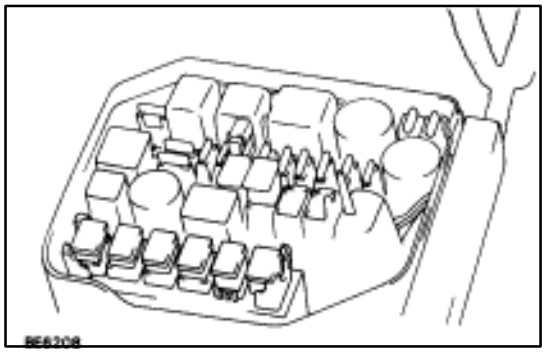

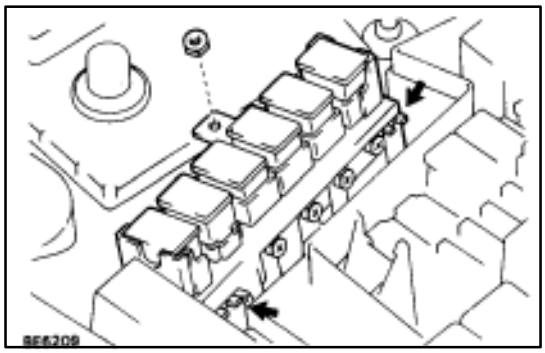

WhereEverybodyKnowsYourName

REPLACEMENT OF RELAY BLOCK NO. 2 (B) IN RELAY BLOCK NO. 2

1. REMOVE RELAY BLOCK NO. 2 (B)

(a) Disconnect the battery terminals.

CAUTION: Work must be started after approx. 20 seconds or longer from the time the ignition switch is turned to the ”LOCK” position and negative (–) terminal cable is disconnected from the battery.

(b) Remove the relay block No. 2 cover.

(c) Remove the relay block No. 2 lower cover.

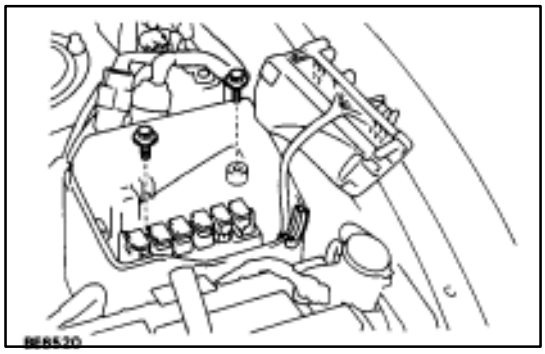

2. INSTALL RELAY BLOCK NO. 2 (B)

For installation follow the removal procedure in reverse.

WhereEverybodyKnowsYourName

Description

The power source supplies power to each of the vehicle's electrical devices. It is composed of the battery, fuses and relays, which are located centrally at relay block No. 2 and relay block No. 6 in the engine compartment and junction block No. 1 relay block No. 4 and relay block No. 5 in the cabin near the driver's feet.

Related systems for each Fuse

No.	Part Name	Related Systems or Parts	
1	IGN	▼Charging System ▼Engine	▼AIR–BAG System
2	ST	▼Starter	
3	WIPER	▼Wiper and Washer System	
4	HTR	▼Defogger System	▼A/C System
5	ENGINE	▼Charging System	
6	RADIO NO. 2	▼Audio System	▼Power Mirror System
7	CIG	▼Cigarette Lighter ▼Combination Meter System ▼Shift Lock System ▼TEL System	▼A/C System ▼AIR–BAG System ▼Theft Deterrent System
8	STOP	▼Stop Light System	▼Cruise Control System
9	TURN	▼Turn Signal and Hazard Warning Light System	▼Cornnering Light System
10	MIR HTR	▼Mirror Heater System	
11	PANEL	▼Illumination Light System	
12	ECU–B	▼Combination Meter System	▼AIR–BAG System
13	GAUGE	▼Combination Meter System ▼Back–Up Light ▼Light Failare Sensor	▼ECT System ▼Transmission Indicator ▼ABS and TRAC
14	ECU–IG	▼Power Seat System ▼TEL System ▼Radiator Fan ▼Electric Tension Reducer System ▼Auto–Tilt away Steering	▼Door Lock Control System ▼Shift Lock System ▼Auto Antenna ▼Power Steering ▼Cruise Control System
15	TAIL	▼Taillight System ▼Clearance Light	▼Side Marker
16	DOOR	▼Power Seat System ▼Door Lock Control System	▼Luggage Door Opener ▼Fuel Lid Opener System
17	IG SW	Upstream of ECU–IG, ENGINE, WIP, HTR, TURN, GAUGE, and ST Fuse	
18	PWR	▼Power Window System	▼Sliding Roof System
19	ABS NO. 1	▼ABS and TRAC	
20	AM1	Upstream of MIR HTR, TAIL, PANEL, STOP, ECUA–B, DOOR and PWR Fuse	
21	ALT	Upstream of DEF, HTR, AM1, and ABS No. 1 Fuse	

WhereEverybodyKnowsYourName

No.	Part Name	Related Systems or Parts	
22	MAIN	▼Upstream of ALT–S and EFI Fuse	
23	AM2	▼Charging System ▼AIR–BAG System	▼Engine
24	ABS NO. 2	▼ABS and TRAC	
25	INJ	▼Charging System ▼AIR–BAG System	▼Engine
26	DEF	▼Defogger System	
27	DOME	▼Power Seat System ▼A/C System ▼Combination Meter System ▼ABS and TRAC ▼Cruise Control System ▼Theft Deterrent System	▼Sliding Roof System ▼Liquid Crystal Inner Mirror System ▼Interior Light System ▼Wireless Door Lock Control System ▼Auto–Tilt away Steering
28	EFI	▼Engine	
29	HAZ–HORN	▼Turn Signal and Hazard Warning Light System ▼Horn System	
30	RADIO NO. 1	▼Audio System	
31	TEL	▼TEL System	
32	ALT–S	▼Charging System	
33	TRAC	▼ABS and TRAC	
34	HEAD (RH–LWR)	▼Headlight System	
35	HEAD (LH–LWR)	▼Headlight System	
36	HEAD (RH–UPR)	▼Headlight System	
37	HEAD (LH–UPR)	▼Headlight System	
38	HTR	▼Blow Motor	

WhereEverybodyKnowsYourName

Inspection of Power Source Circuit

INSPECTION OF JUNCTION BLOCK NO. 1

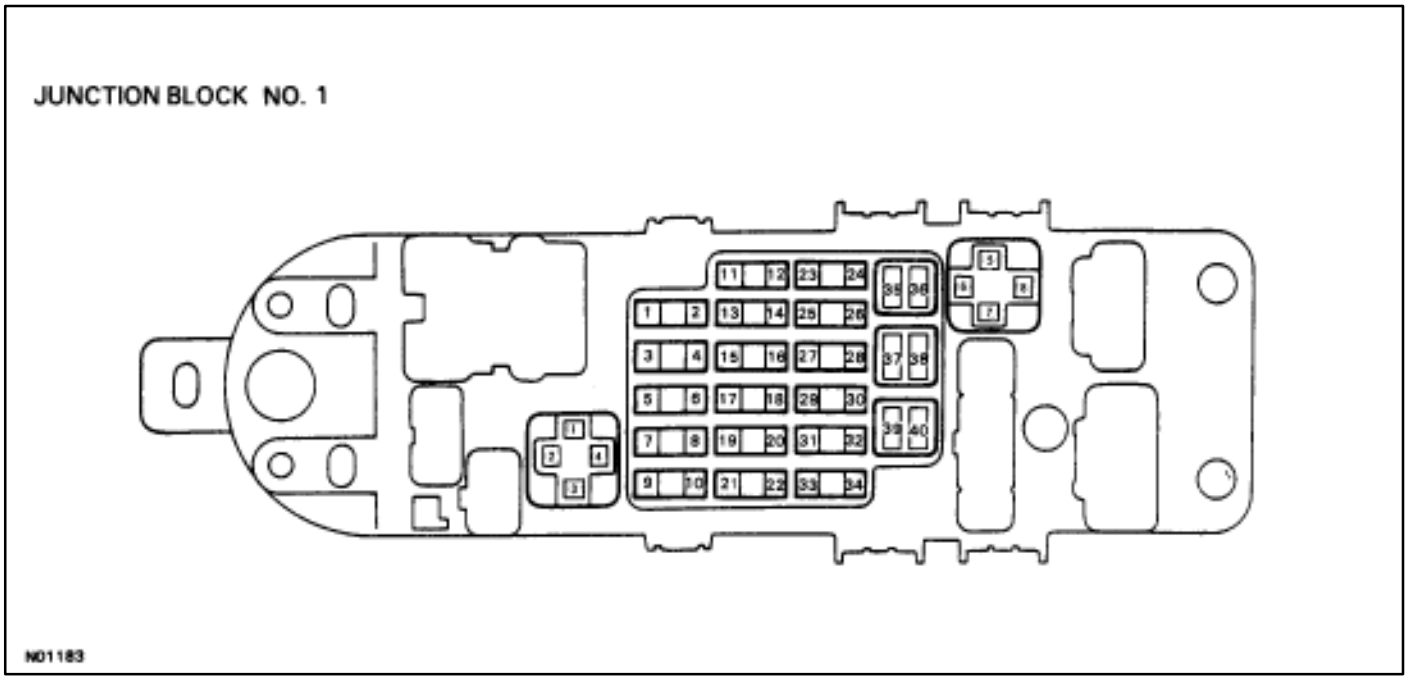

1. INSPECT FUSE CIRCUIT

Remove the fuse from the junction block and inspect the connector on junction block side as shown.

Fuse	Check for	Tester connection	Condition	Specified value
IGN	Voltage	1–Ground	Ignition switch turned to ON	Battery voltage
ST		4–Ground	Ignition switch turned to START	
WIPER		5–Ground	Ignition switch turned to ON	
HTR		8–Ground		
ENGINE		9–Ground		
RADIO NO. 2		11–Ground	Ignition switch turned to ACC or ON	
CIG		14–Ground		
STOP		15–Ground	Constant	
TURN		18–Ground	Ignition switch turned to ON	
MIR HTR		20–Ground	Ignition switch turned to ON and defogger switch turned to ON	
PANEL		21–Ground	Light control switch turned to TAIL or HEAD and *Engine Running	
ECU–B		27–Ground	Constant	
GAUGE		29–Ground	Ignition switch turned to ON	
ECU–IG		32–Ground		
TAIL		33–Ground	Light control switch turned to TAIL or HEAD and *Engine Running	
DOOR		35–Ground	Constant	
IG SW		38–Ground		
POWER		39–Ground		

If the circuit is not as specified, refer to BE–15 wiring diagram and inspect the circuits connected to other parts.

WhereEverybodyKnowsYourName

2. INSPECT RELAY CIRCUIT

Remove the relay from the junction block and inspect the connector on junction block side as shown.

Relay	Check for	Tester connection	Condition	Specified value
TAIL	Voltage	(1)–Ground (4)–Ground	Constant	Battery voltage
P/W MAIN		(6)–Ground		

If the circuit is not as specified, refer to BE–15 wiring diagram and inspect the circuits connected to other parts.

INSPECTION OF RELAY BLOCK NO. 2

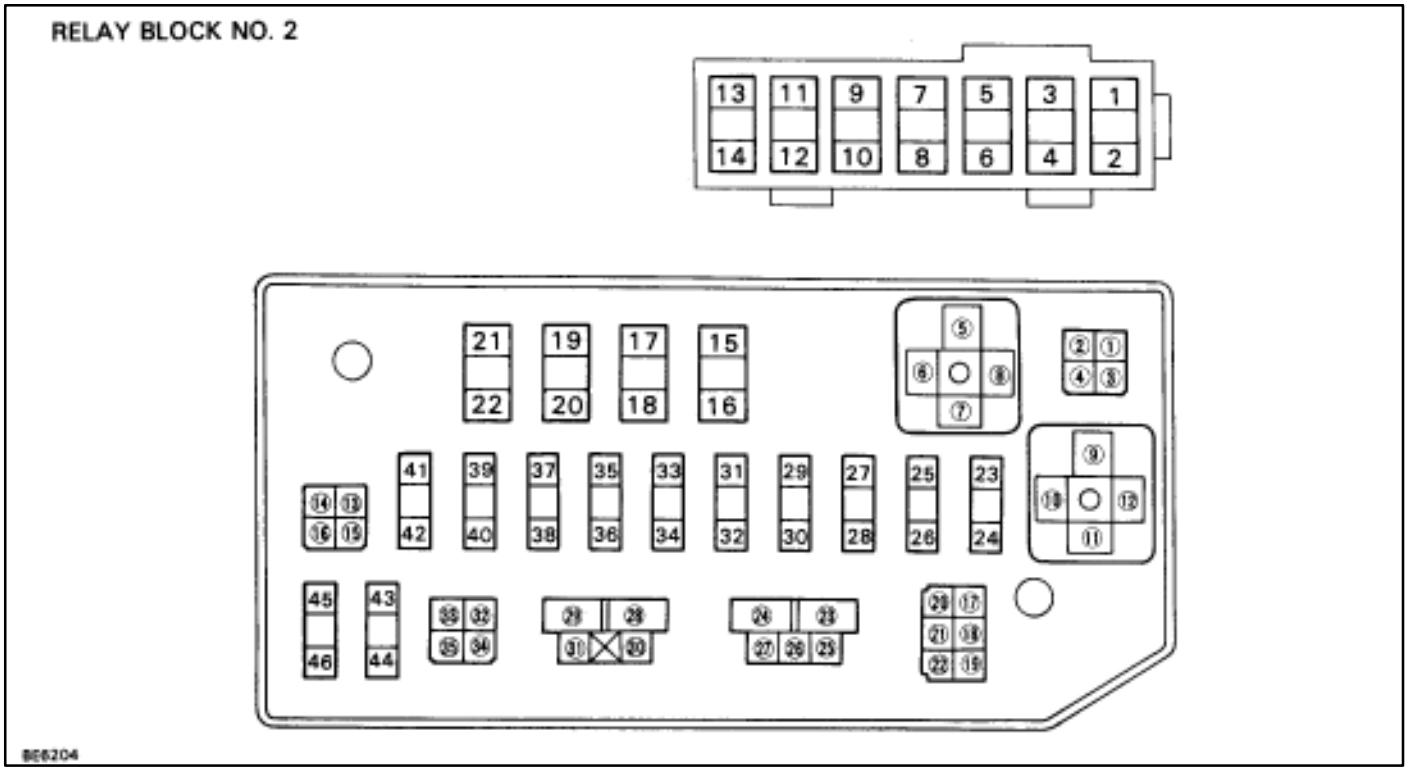

1. INSPECT FUSE CIRCUIT

Remove the fuse from the relay block and inspect the connector on relay block side as shown.

Fuse	Check for	Tester Connection	Condition	Specified value
ABS NO. 1	Voltage	2–Ground	Constant	Battery voltage
AM1		4–Ground		
ALT		5–Ground		
MAIN		7–Ground		
AM2		9–Ground		
ABS NO. 2		11–Ground		
INT		13–Ground		

WhereEverybodyKnowsYourName

Fuse	Check for	Tester Connection	Condition	Specified value
HTR	Voltage	(15)–Ground	Constant	Battery voltage
DEF		(17)–Ground		
DOME		(24)–Ground		
EFI		(26)–Ground		
HAZ–HORN		(28)–Ground		
RADIO NO. 1		(30)–Ground		
TEL		(32)–Ground		
ALT–S		(34)–Ground		
TRAC		(36)–Ground		
HEAD (RH–LWR)		(38)–Ground	Light control switch turned to TAIL or HEAD and *ENGINE running	
HEAD (LH–LWR)		(40)–Ground		
HEAD (RH–UPR)		(44)–Ground	Light control switch turned to HEAD and dimmer switch turned to HI or FLASH	
HEAD (LH–UPR)		(46)–Ground		

If the circuit is not as specified, refer to BE–15 wiring diagram and inspect the circuits connected to other parts.

2. INSPECT RELAY CIRCUIT

Remove the relay from the relay block and inspect the connector on relay block side as shown.

Relay	Check for	Tester connection	Condition	Specified value
EFI	Voltage	(4)–Ground	Constant	Battery voltage
ST		(10)–Ground (11)–Ground		
DIM		(15)–Ground (16)–Ground	Light control switch turned to TAIL or HEAD and *Engine running	
IG2		(18)–Ground	Constant	
HTR		(24)–Ground (25)–Ground		
H–LP		(28)–Ground (30)–Ground		
DEF		(34)–Ground (35)–Ground		

If the circuit is not as specified, refer to BE–15 wiring diagram and inspect circuits connected to other parts.

WhereEverybodyKnowsYourName

INSPECTION OF RELAY BLOCK NO. 4 AND NO. 5 RELAY BLOCK

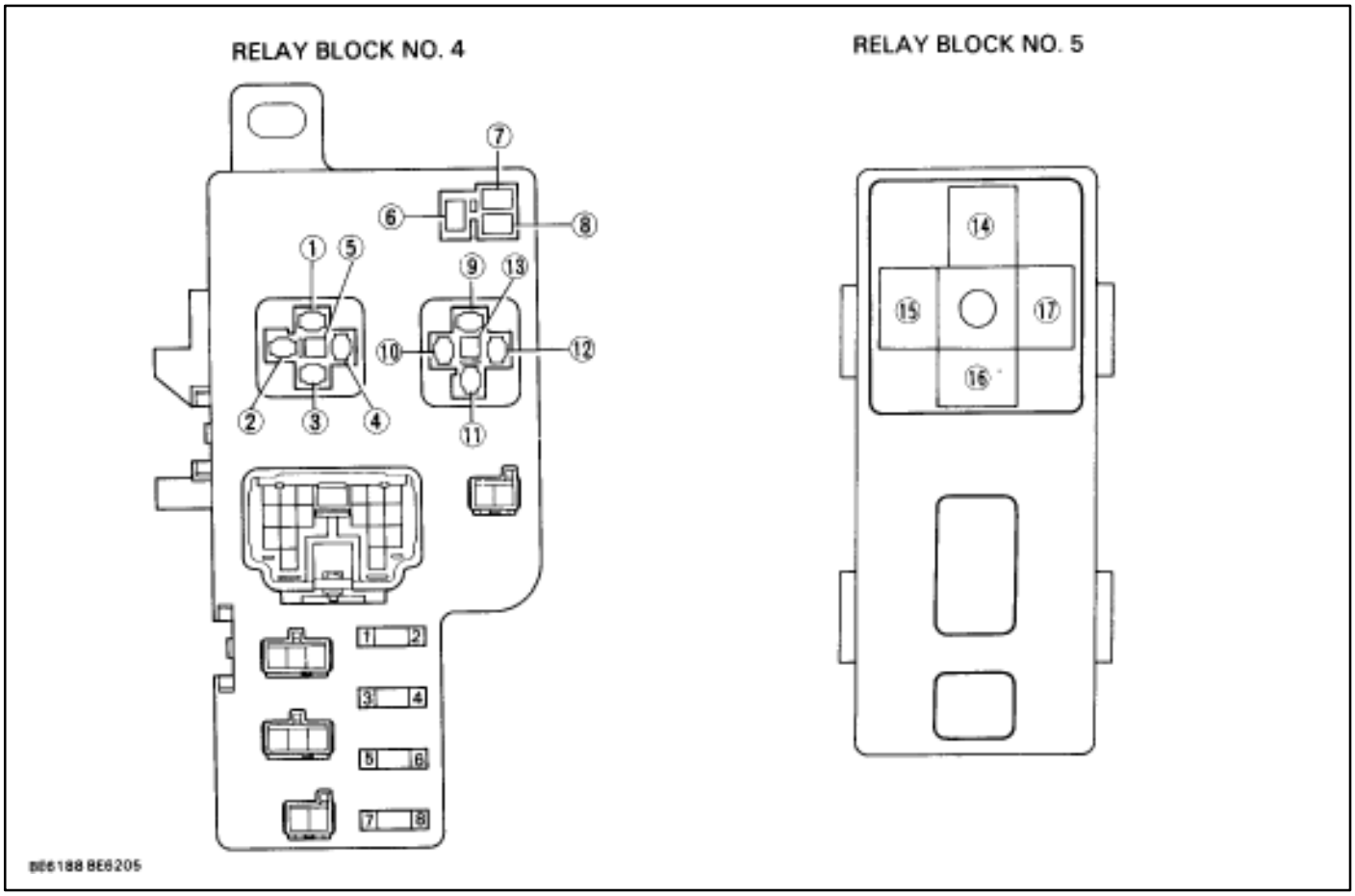

1. INSPECT FUSE CIRCUIT

Remove the fuse from the relay block and inspect the connector on relay block side as shown.

Fuse	Check for	Tester connection	Condition	Specified value
STHTR	Voltage	2–Ground	Ignition Switch Turn to ON	Battery voltage

If the circuit is not as specified, refer to BE–15 wiring diagram and inspect the circuits connected to other parts.

2. INSPECT RELAY CIRCUIT

Remove the relay from the relay block and inspect the connector on junction block side as shown.

Relay	Check for	Tester connection	Condition	Specified value
HORN	Voltage	(8)–Ground	Constant	Battery voltage
IG MAIN		(9)–Ground		
		(13)–Ground		Continuity
CRNRNG LP		(14)–Ground (15)–Ground	Ignition Switch Turned to ON	Battery voltage

WhereEverybodyKnowsYourName

If the circuit is not as specified, refer to BE–15 wiring diagram and inspect the circuits connected to other parts.

INSPECTION OF RELAY BLOCK NO. 6 (ABS and TRAC Relay Block)

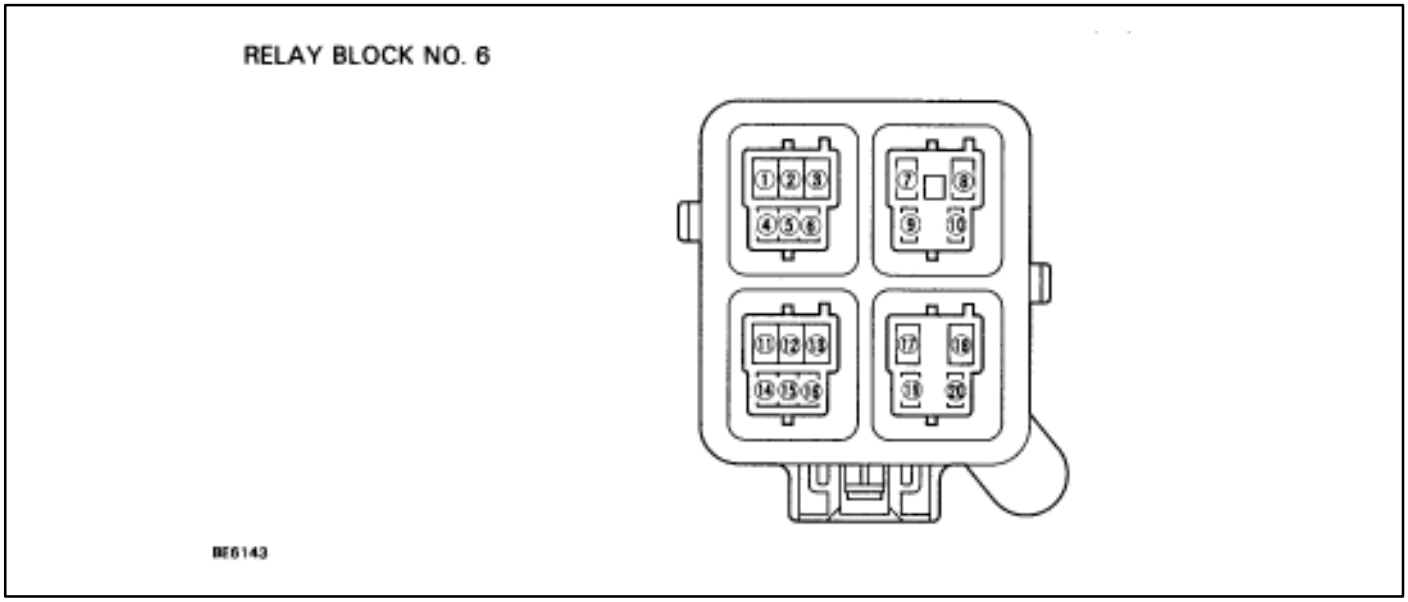

INSPECT RELAY CIRCUIT

Remove the relay from the relay block and inspect the connector on junction block side as shown.

Relay	Check for	Tester connection	Condition	Specified value
TRAC SOL	Voltage	(1)–Ground	Constant	Battery voltage
TRAC MTR		(7)–Ground		
ABS SOL		(11)–Ground		
ABS MIR		(17)–Ground		

If the circuit is not as specified, refer to BE–15 wiring diagram and inspect circuits connected to other parts.

WhereEverybodyKnowsYourName

IGNITION SWITCH

Description

The ignition switch is supplied with power from the battery via a fusible link. Power is supplied to each fuse and relay according to the position of the switch, whether “CC” “ON” or “START”. The key unlock warning switch, which detects the set condition of the key, is built into this switch.

Parts Location

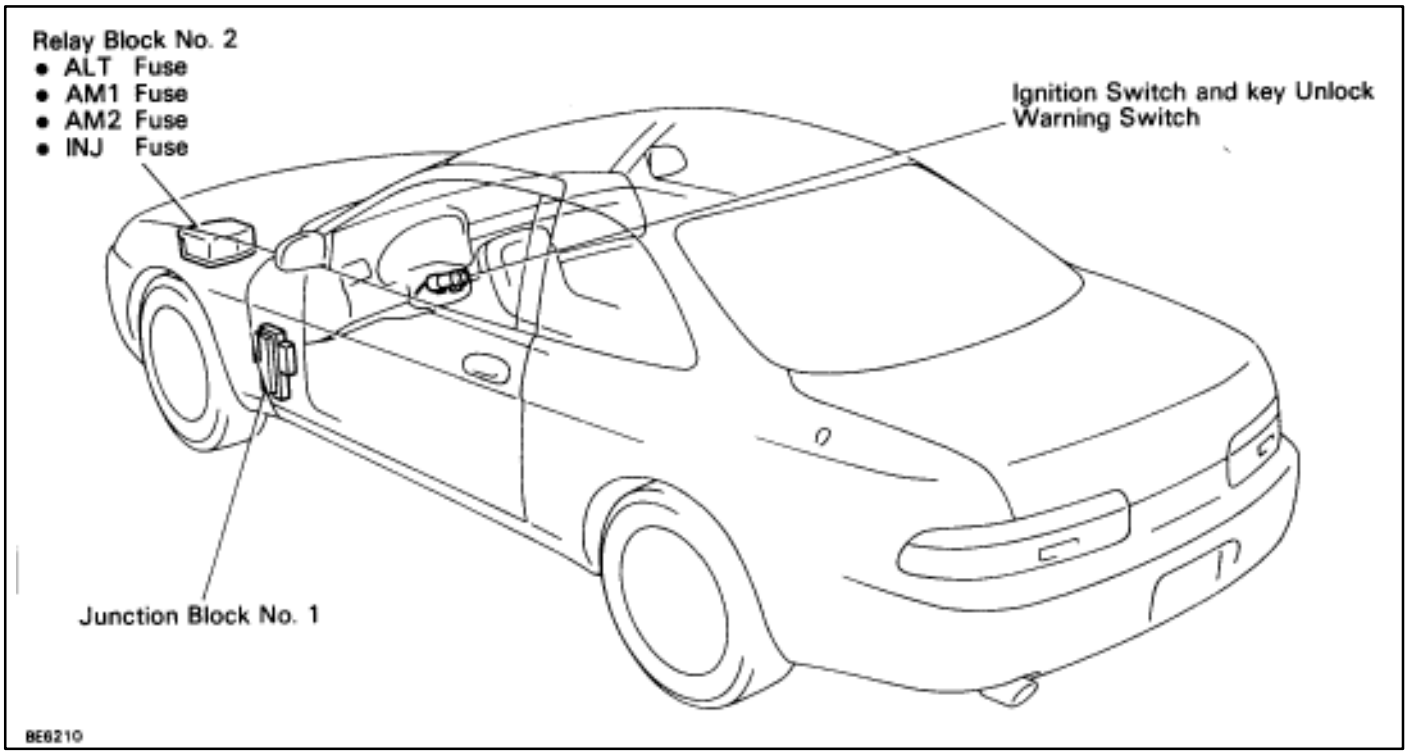

Wiring and Connector Diagrams

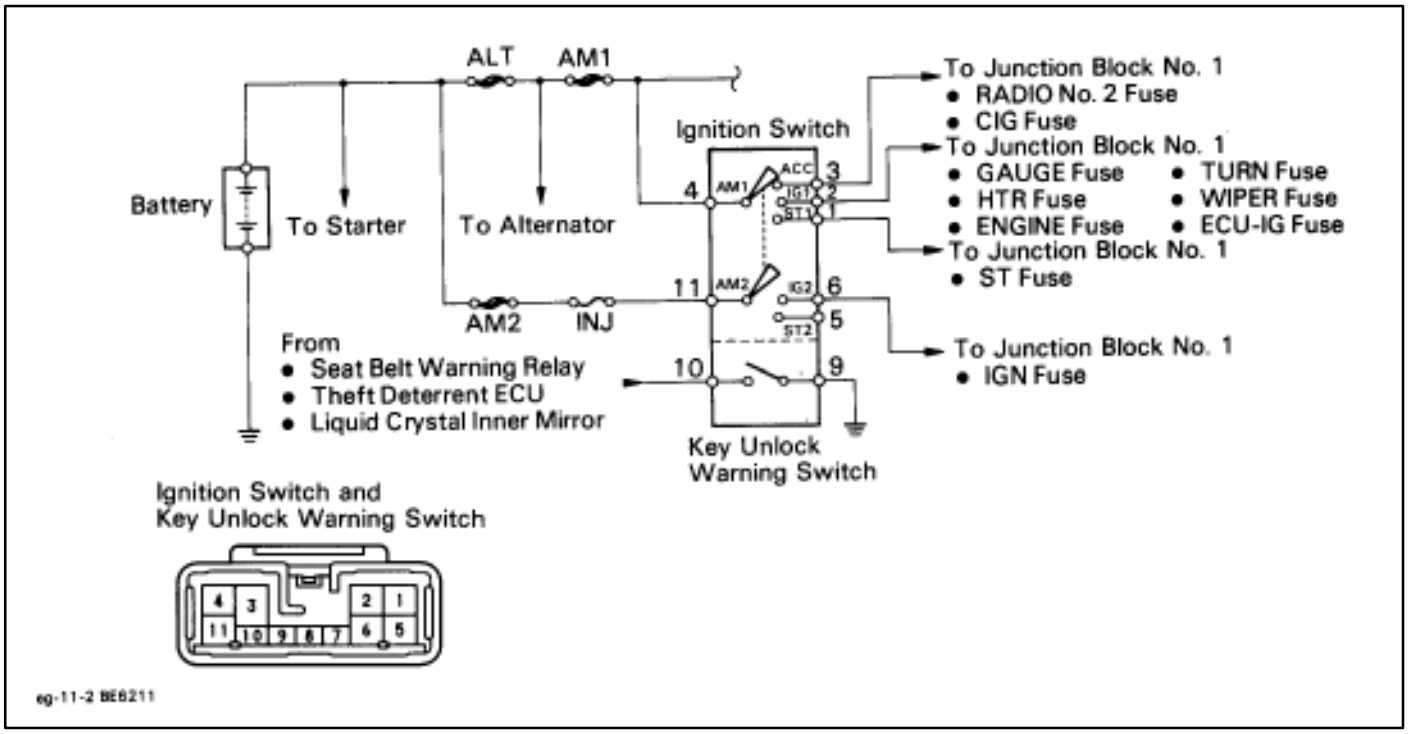

WhereEverybodyKnowsYourName

Parts Inspection (Ignition Switch and Key Unlock Warning Switch)

REMOVAL AND INSTALLATION OF IGNITION SWITCH AND KEY UNLOCK WARNING SWITCH

1. **DISCONNECT BATTERY TERMINALS**
   CAUTION: Work must be started after approx. 20 seconds or longer from the time the ignition switch is turned to the "LOCK" position and negative (–) terminal cable is disconnected from the battery.
2. **REMOVE FOLLOWING PARTS:**
   (See page BO–112)
   - No. 1 under cover
   - No. 1 lower finish panel
   - Console box assembly
   - Instrument panel lower center
3. **REMOVE IGNITION SWITCH**
   (a) Disconnect connector.
   (b) Remove three screws and the switch from the key cylinder and wire harness clamp.
4. **INSTALL IGNITION SWITCH**
   For installation, follow the removal procedure in reverse.

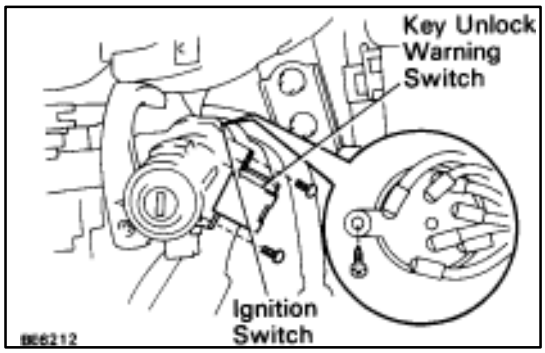

INSPECTION OF IGNITION SWITCH AND KEY UNLOCK WARNING SWITCH

1. **INSPECT IGNITION SWITCH**
   (Switch continuity)
   Inspect the switch continuity between terminals.

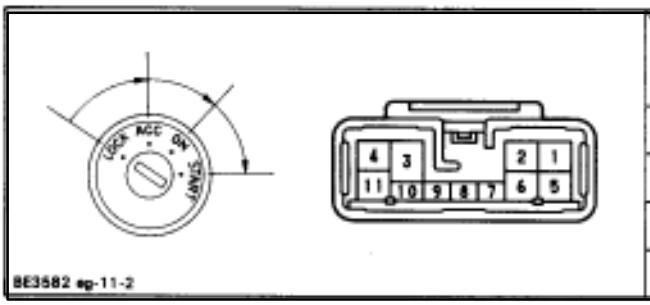

Terminal / Switch position	1	2	3	4	5	6	11
LOCK							
ACC			○	○			
ON		○	○	○		○	○
START	○	○		○	○	○	○

If continuity is not as specified, replace the switch.

WhereEverybodyKnowsYourName

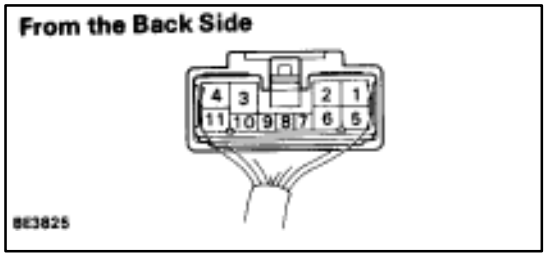

(Switch circuit)
Connect the switch connector and inspect the connector on the wire harness side from the back side as shown.

Check for	Tester connection	Condition	Specified value
Voltage	2–Ground	Ignition switch turned to ON	Battery voltage
	3–Ground	Ignition switch turned to ACC or ON	
	4–Ground	Constant	
	5–Ground	Ignition switch turned to START	
	6–Ground	Ignition switch turned to ON	
	11–Ground	Constant	

If circuit is not as specified, inspect the switch or refer to BE–25 wiring diagram and inspect the circuits connected to other parts.

2. INSPECT KEY UNLOCK WARNING SWITCH
(Switch continuity)
Inspect the switch continuity between terminals.

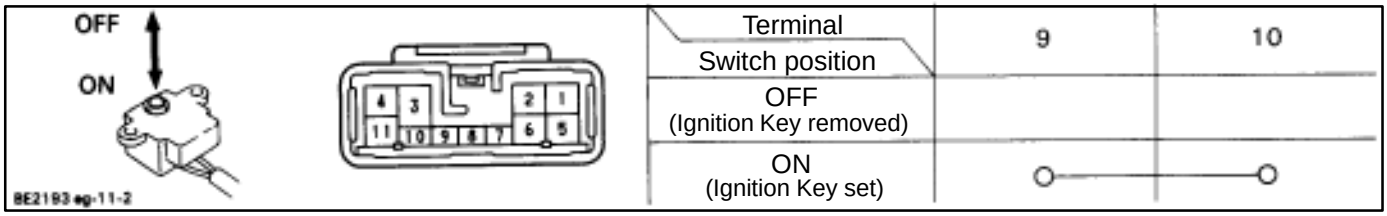

If continuity is not as specified, replace the switch.

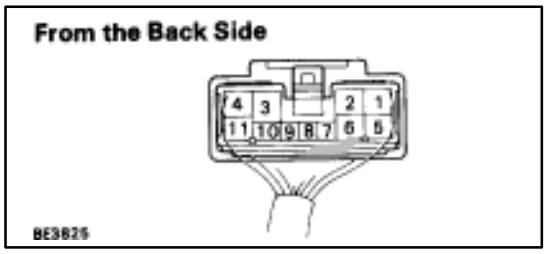

(Switch circuit)
Connect the switch connector and inspect the connector on the wire harness side from the back side as shown.

Check for	Check connection	Condition	Specified value
Continuity	10–Ground	Ignition key removed	No continuity
		Ignition key set	Continuity
	9–Ground	Constant	Continuity

If circuit is not as specified, inspect the switch or wire harness.

WhereEverybodyKnowsYourName

LIGHTING SYSTEM

WhereEverybodyKnowsYourName

(HEADLIGHT SYSTEM)
Description – Headlight System

The component parts of this system and their function are described in the following table.

Parts Name	Function
Light Control Switch	Grounds current from the headlight control relay and taillight control relay via the integration relay, switching each relay and supplying current to the appropriate bulbs accordance with the switch position.
Dimmer Switch	Grounds current from the dimmer relay in accordance with the switch position, turning on the ”LO–Beam” or ”HI Beam” lights. In the case of ”FLASH” it turns the heading control relay and turns on the ”HI Beam” lights.
Headlight Control Relay	Turned on by signals from the light control switch, dimmer switch and running light relay and supplies current to each bulb or headlight dimmer relay.
Headlight Dimmer Relay	Receives current from the headlight control relay, which switches the relay according to the position of the dimmer switch and sends current to the headlight ”LO–Beam” or ”HI Beam”.
Integration Relay	Carries out ”Light Auto Turn–off” of the headlights and taillights and cuts off current to the light control switch in accordance with signals from the GAUGE fuse and courtesy switch.
Door Courtesy Switch/Driver’s	Detects when the door is open and sends the appropriate signals to integration relay. (Light Auto Turn–Off System)
Parking Brake Switch (CANADA)	Detects when the parking brake lever is released and sends the appropriate signals to daytime running light relay.

WhereEverybodyKnowsYourName

System Description – Headlights

DAYTIME RUNNING LIGHT SYSTEM

The Daytime Running Light (DRL) system is activated when engine is started (However, if the parking brake lever is engaged when the engine is started, the DRL will not light up after the engine has started. Once the parking brake is released, the DRL will then light up and will remain on regardless of operation of the parking brake lever).
The DRL remain on until the ignition switch is turned off.

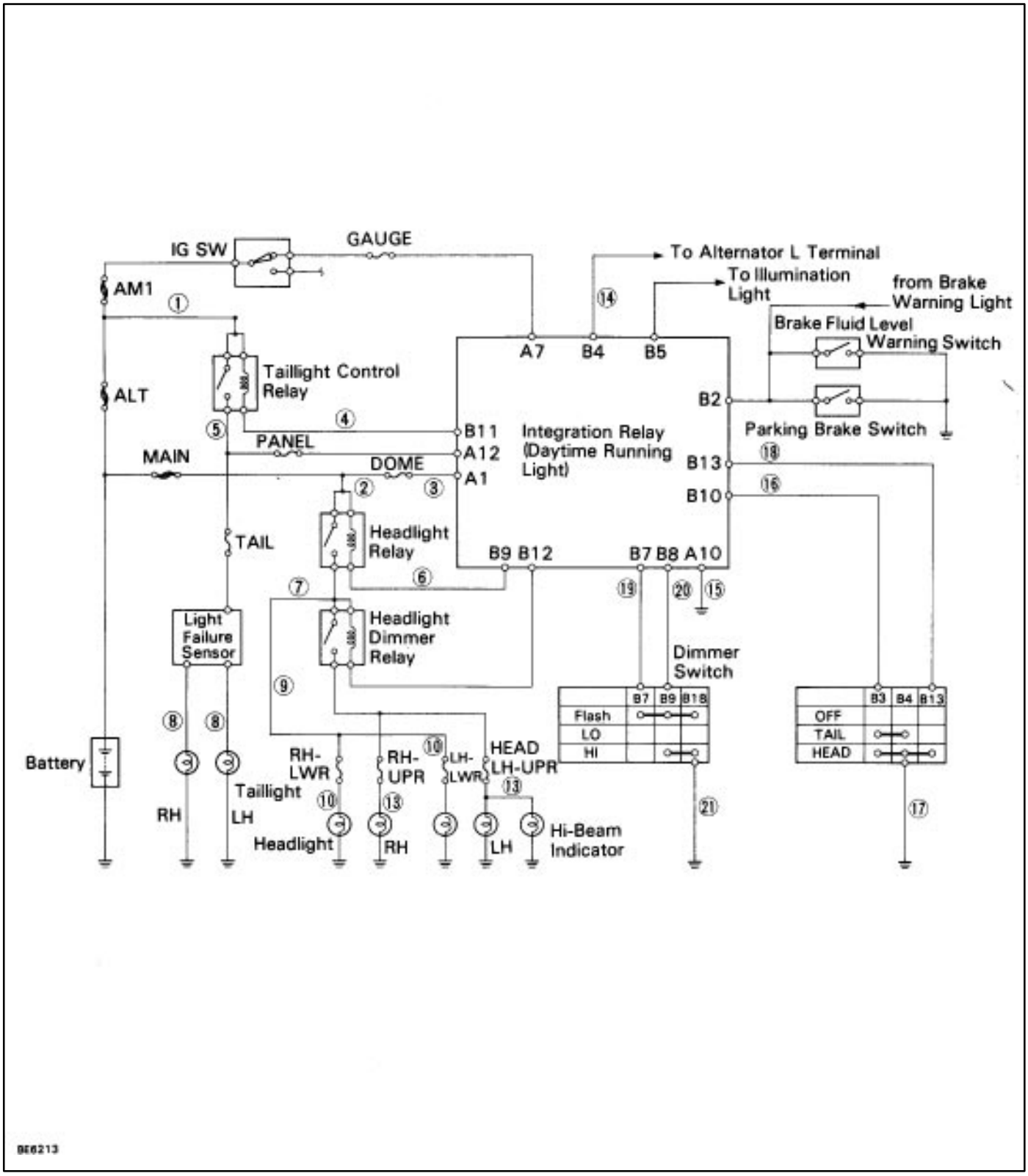

WhereEverybodyKnowsYourName

Operation example (Current flow table)

1. Daytime Running Light Lights Up

Switch	Position
Ignition switch	ON (Engine running)
Light Control Switch	OFF
Headlight Dimmer Switch	LO or HI

Condition: Battery Voltage → (3) , (14)

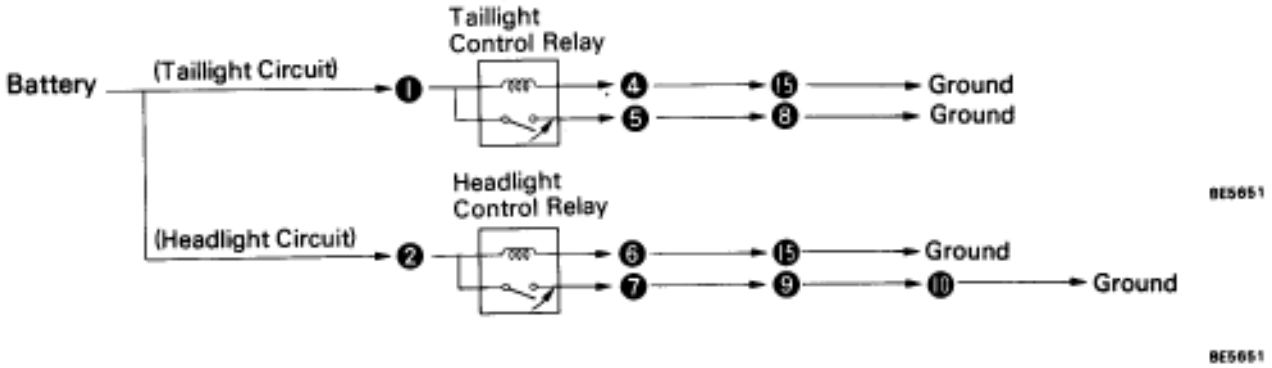

2. Taillight Lights Up

Switch	Position
Ignition Switch	OFF or ON
Light Control Switch	TAIL
Headlight Dimmer Switch	LO or HI

Condition: Battery Voltage → (3)
Continuity (16) → (17) → Ground

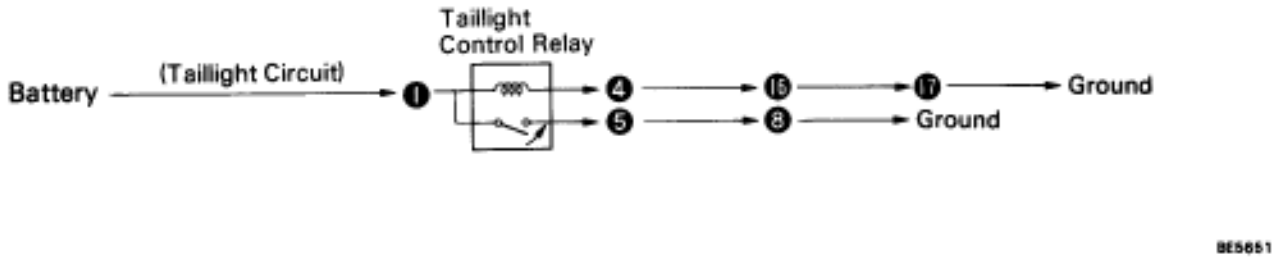

3. Headlight LO–Beam Lights Up

Switch	Position
Ignition Switch	OFF or ON
Light Control Switch	HEAD
Headlight Dimmer Switch	LO

Condition: Battery Voltage → (3)
Continuity (16) → (17) → Ground
(18) → (17) → Ground

WhereEverybodyKnowsYourName

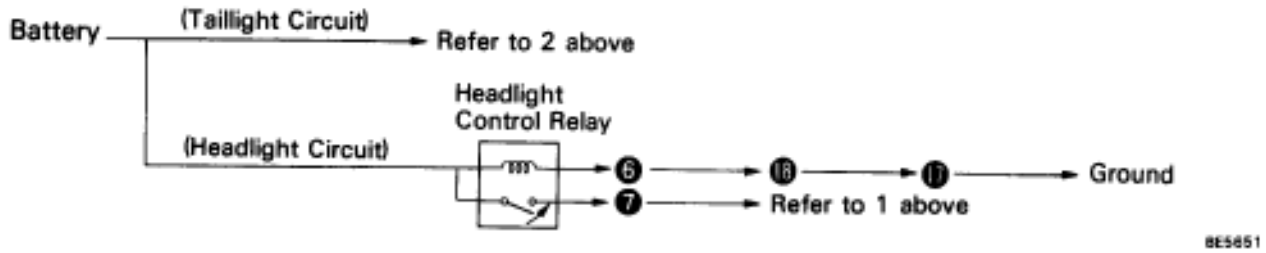

4. Headlight HI–Beam Lights Up

Switch	Position
Ignition Switch	OFF or ON
Light Control Switch	HEAD
Headlight Dimmer Switch	HI

Condition: Battery Voltage → (3)
Continuity (20) → (21) → Ground
(18) → (17) → Ground
(16) → (17) → Ground

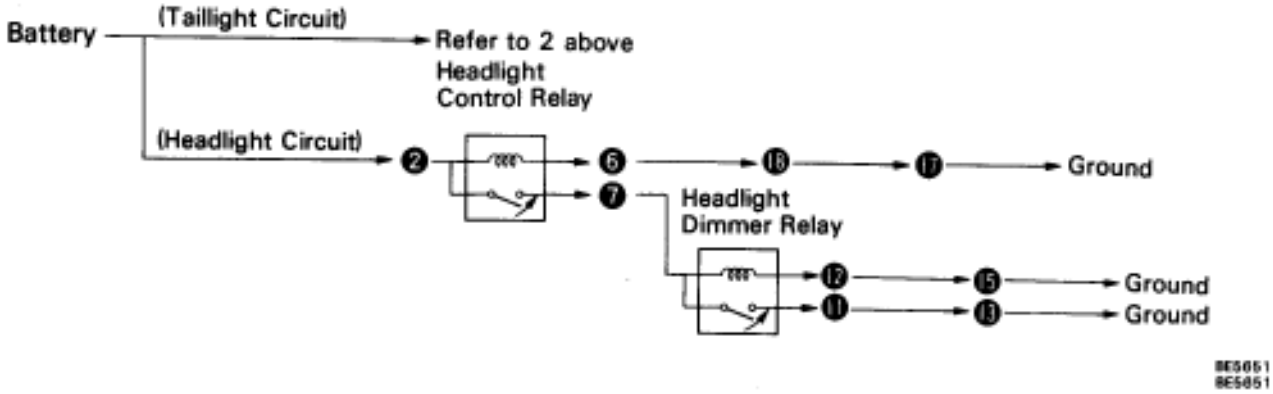

5. Headlight Flash

Switch	Position
Ignition Switch	OFF or ON
Light Control Switch	OFF or TAIL or HEAD
Headlight Dimmer Switch	FLASH

Condition: Battery Voltage → (3)
Continuity (19) → (21) → Ground
(20) → (21) → Ground

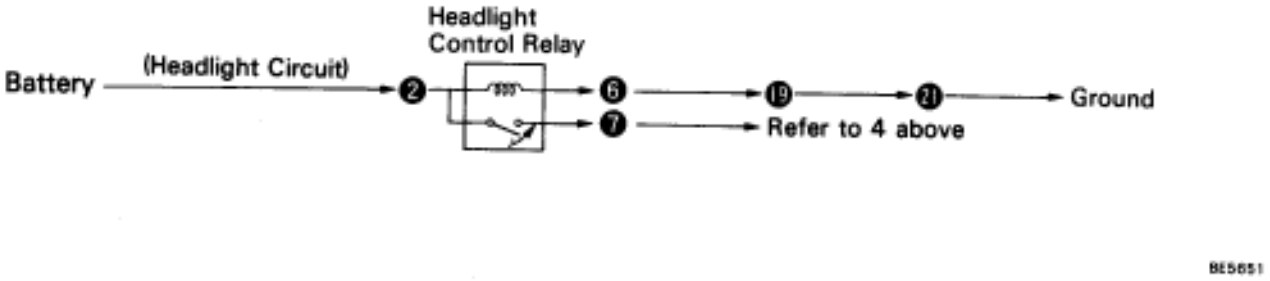

WhereEverybodyKnowsYourName

Parts Location – Headlight System

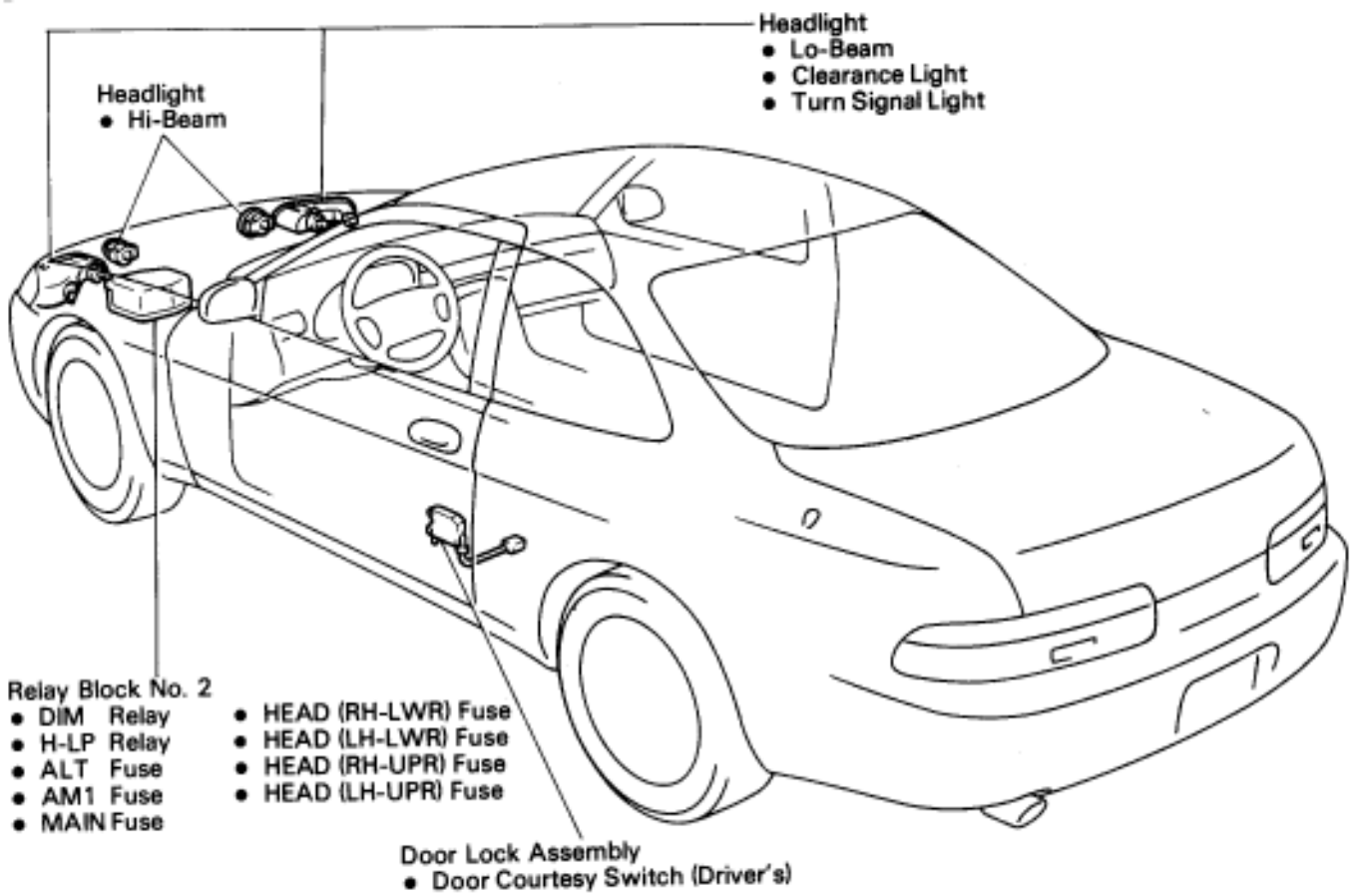

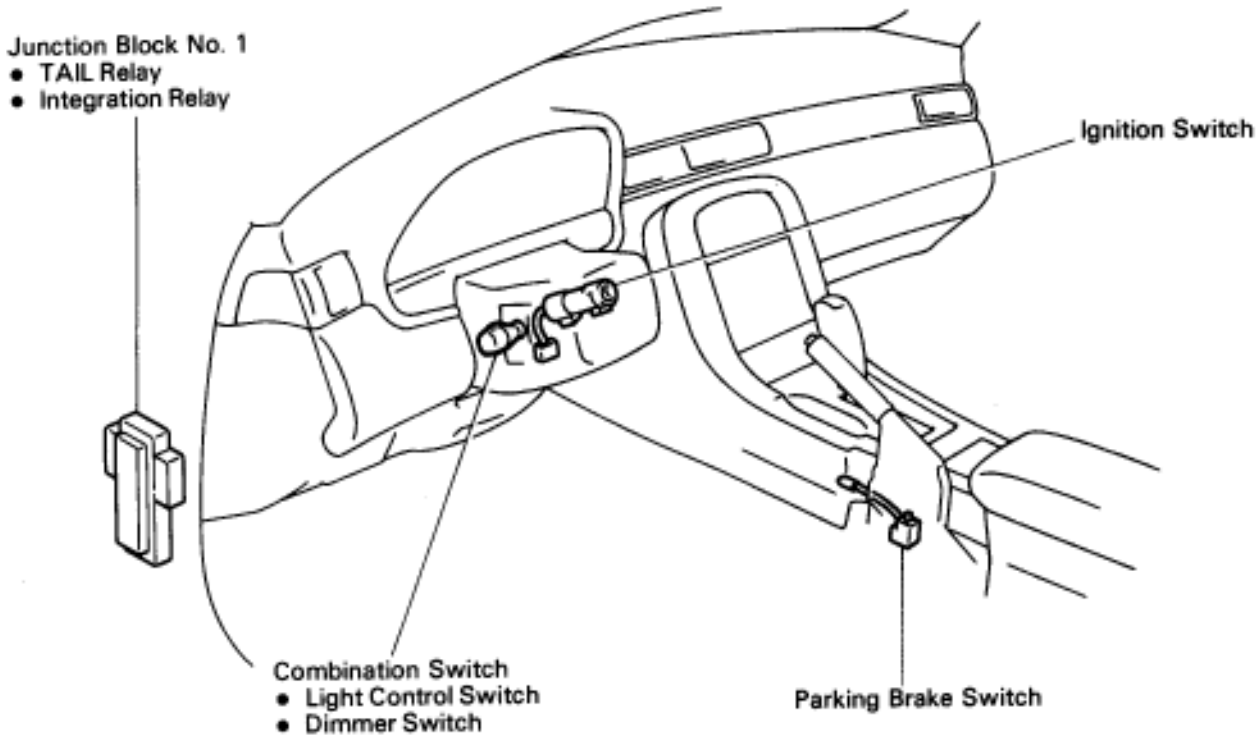

BE6214
BE6215

WhereEverybodyKnowsYourName

Wiring Diagram – Headlight System

USA

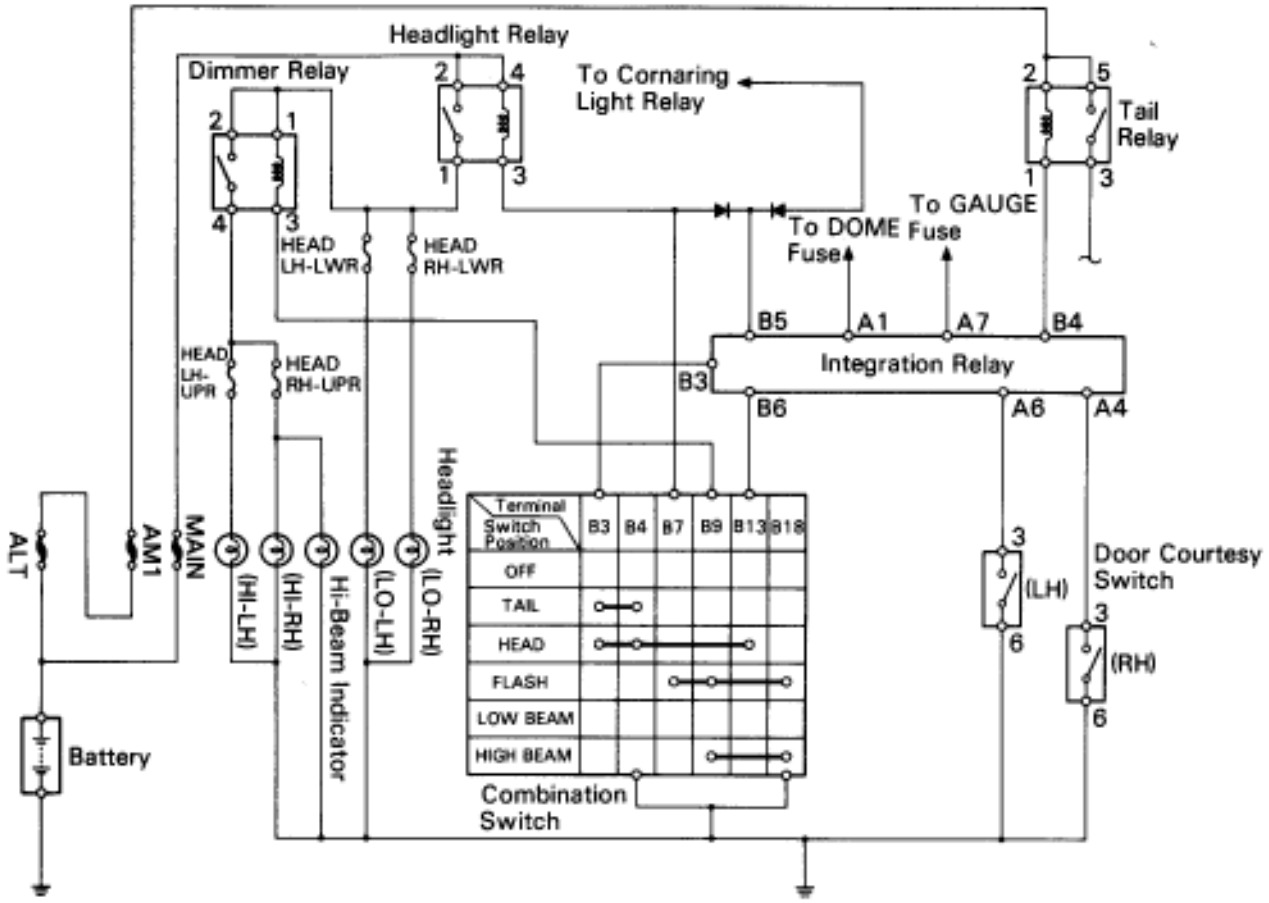

BE8216

WhereEverybodyKnowsYourName

Wiring Diagram (Cont'd)

Canada

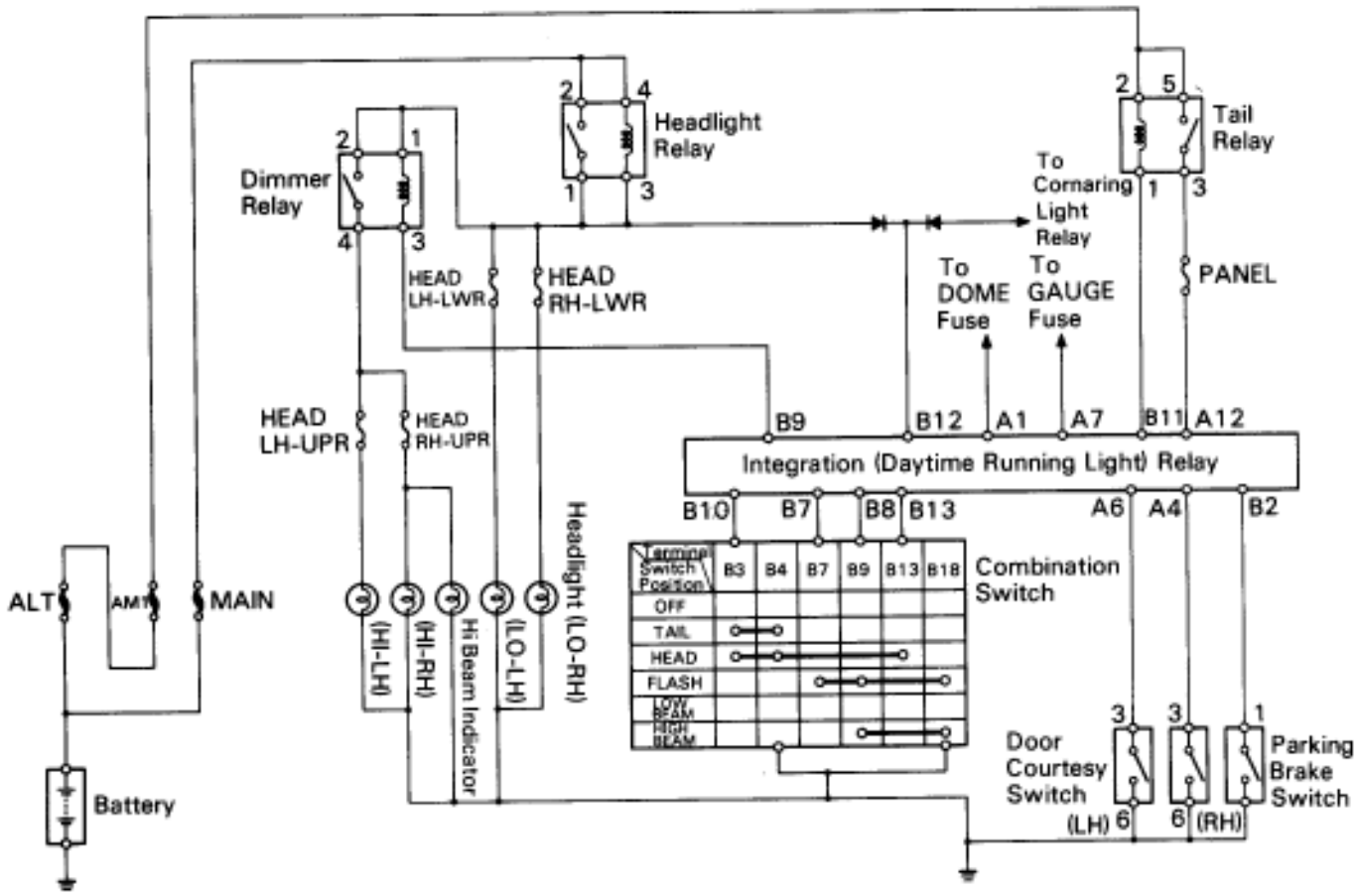

BE6217

Connector Diagrams – Headlights

Ignition Switch

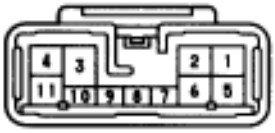

eg-11-2

- Light Control Switch
- Dimmer Switch

Connector "B" Connector "A"

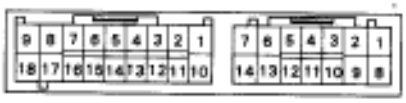

BE6218

Door Courtesy Switch
(in Door Lock Assembly)

le-6-2-C

Headlight Relay

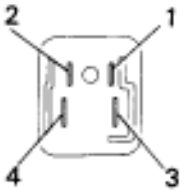

BE1838

Tailight Relay

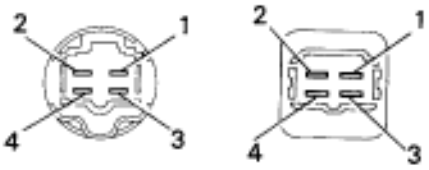

BE1647 BE1575

Headlight Dimmer Relay

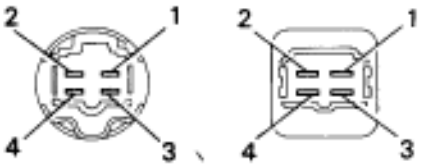

BE1647 BE1575

Parking Brake Switch

e-1-2

Ignition Relay

Connector "A"

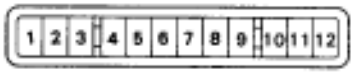

BE6219

Connector "B"

(USA)

BE6091

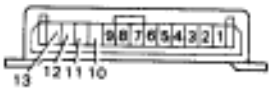

(Canada)

BE6220

WhereEverybodyKnowsYourName

Parts Replacement – Headlight (Headlight)

REPLACEMENT OF HEADLIGHT

1. REMOVE HEADLIGHT

(a) Remove battery (LH) or disconnect negative termial (–) from the battery (RH).

CAUTION: Work must be started after approx. 20 seconds or longer from the time the ignition switch is turned to the ”LOCK” position and negative (–) terminal cable is disconnected from the battery.

(b) Remove fender liner. (BO–92)
(c) Remove a screw and two nuts.
(d) Disconnect connector.
(e) Remove headlight (Low Beam).
(f) Disconnect connector.
(g) Remove front bumper. (BO–12)
(h) Remove the bolt.
(i) Remove headlight (High–Beam).

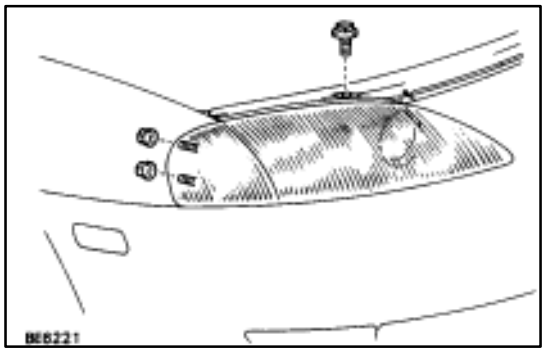

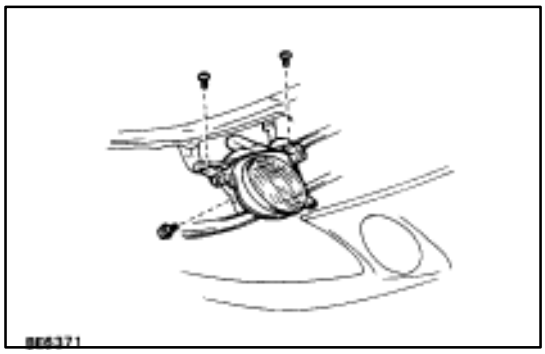

2. INSTALL HEADLIGHT

For installation, follow the removed procedure in reverse.

WhereEverybodyKnowsYourName

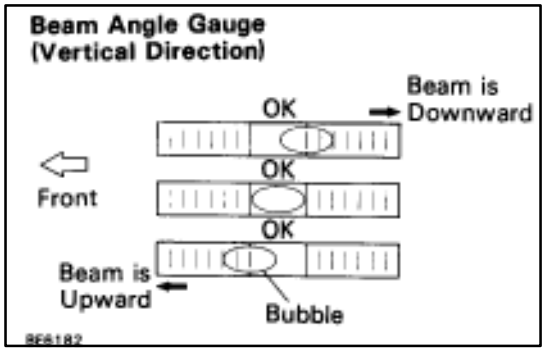

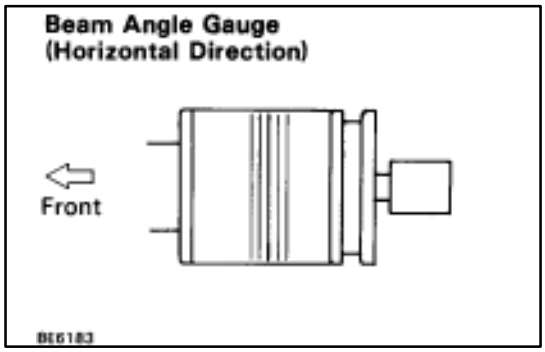

Parts Adjustment

Adjustment of Headlight Aim

1. INSPECT HEADLIGHT AIM

Check the following items before inspection.

- Be sure that the body around the headlight is not deformed.
- Park the vehicle on a level spot.
- The driver gets into the driver's seat and puts the vehicle in state ready for driving (with a full tank).
- Bounce the vehicle several times.

(Vertical Direction)

Check that the bubble of the gauge does not deviate from the center of the gauge.

(Horizontal Direction)

Check that the red mark does not deviate from the center of the gauge.

If the error is over the valve specified, adjust headlight aim.

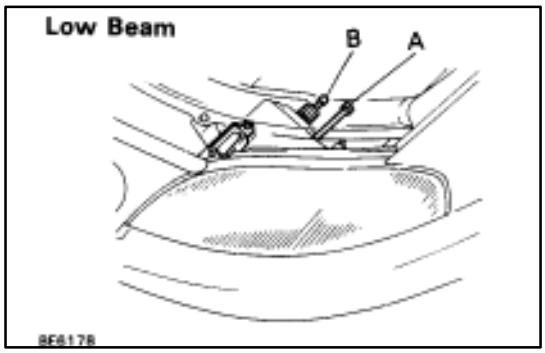

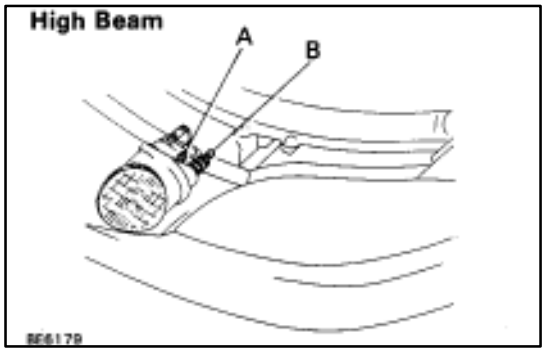

2. ADJUST HEADLIGHT AIM

(Vertical Direction)

Turn the bolt A and adjust the bubble of angle gauge to center of the gauge.

HINT: The beam angle will change about 0°19' with one mark.

(Horizontal Direction)

Turn the bolt B and adjust the mark of angle gauge to Center of the gauge.

HINT: The beam angle will change about 0°38' with one mark.

NOTICE: The beam angle gauge should only be used when the headlights are correctly installed on the body.

WhereEverybodyKnowsYourName

Parts Inspection – Headlight System (Combination Switch Assembly)

REMOVAL OF COMBINATION SWITCH ASSEMBLY

1. REMOVAL FOLLOWING PARTS:
(See page BO–112)

- No. 1 under cover
- No. 1 lower finish Panel

NOTICE:

- **Turn the steering wheel and front wheels to the straight ahead position.**
- **Turn the ignition switch to the OFF position, then remove the battery negative terminal.**

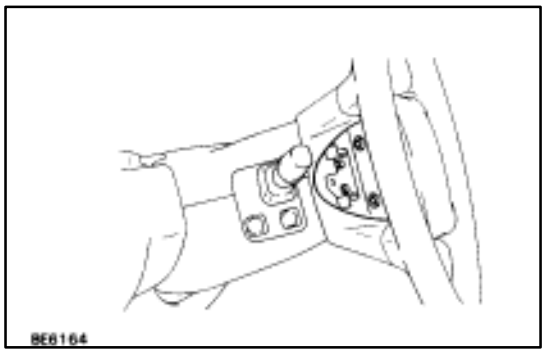

2. REMOVE STEERING WHEEL CENTER PAD

(a) Remove two covers.
(b) Using torx driver or wrench, remove the four torx screws.
Torx wrench T30 (09042–00010)
Torx driver T30 (09041–00030)
(c) Remove center pad and disconnect connector.

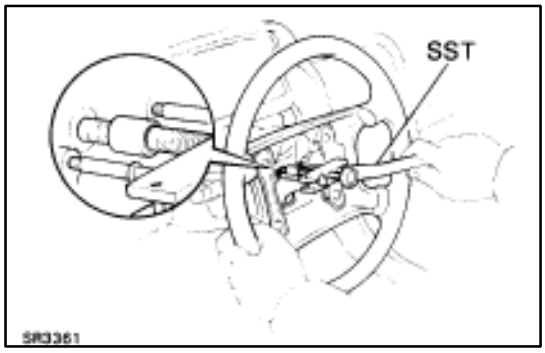

3. REMOVE STEERING WHEEL

(a) Remove the steering nut.
(b) Using SST, remove steering wheel.
SST 09213–31021

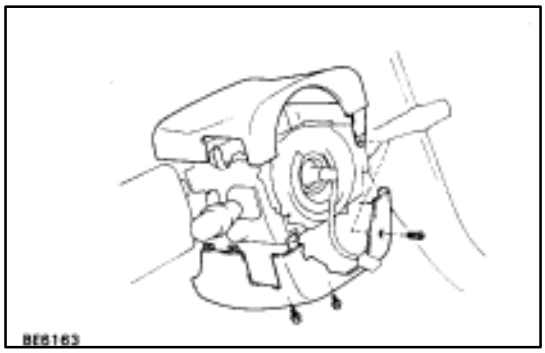

4. REMOVE STEERING COLUMN COVER

Remove three screws and steering column covers.

WhereEverybodyKnowsYourName

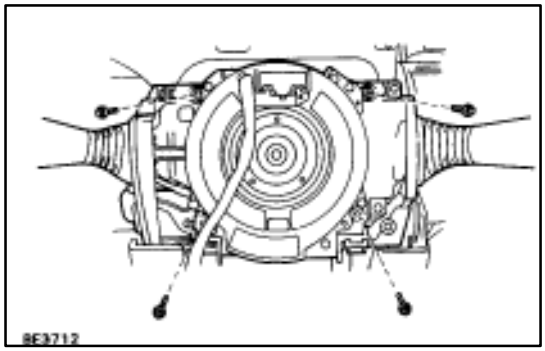

5. REMOVE COMBINATION SWITCH ASSEMBLY

(a) Remove four screws.

(b) Disconnect connectors.

(See page BE–41)

HINT: Since the airbag connector has a 2–stage lock, remove the 1st stage lock, and disconnect the connector.

(c) Remove combination switch assembly from steering column.

HINT: Pull the wire harness spool body to forward and remove wire harness spool body from steering column.

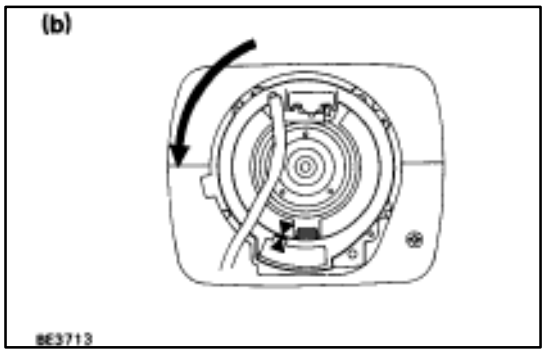

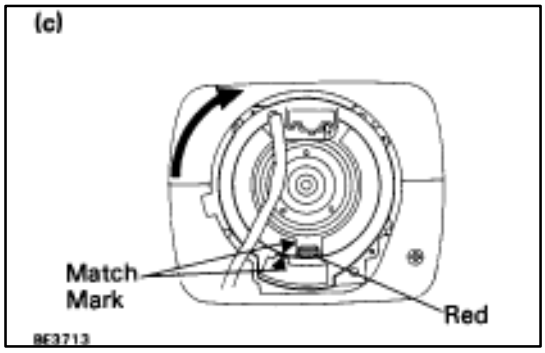

INSPECTION OF COMBINATION SWITCH

For installation, follow the removal procedure in reverse.

(MAIN POINT OF INSTALLATION)

1. ADJUSTMENT OF SPIRAL CABLE

(a) Check that the front wheels are facing straight ahead.

(b) Turn the spiral cable counterclockwise by hand until it becomes harder to turn the cable.

(c) Then rotate the spiral cable clockwise about 3 turns to align the red mark.

HINT:

- The spiral cable will rotate about 3 turns to either left or right of the center.
- The connector should be straight up.

(d) Install the steering wheel so that the match marks will not be misaligned.

2. INSTALL STEERING SET NUT

Torque: 35 N·m (360 kgf·cm, 26 ft·lbf)

3. INSTALL STEERING WHEEL CENTER PAD

Torque the torx screws.

Torque: 7.1 N·m (75 kgf·cm, 62 in.lbf)

WhereEverybodyKnowsYourName

DISASSEMBLY OF COMBINATION SWITCH ASSEMBLY (Components)

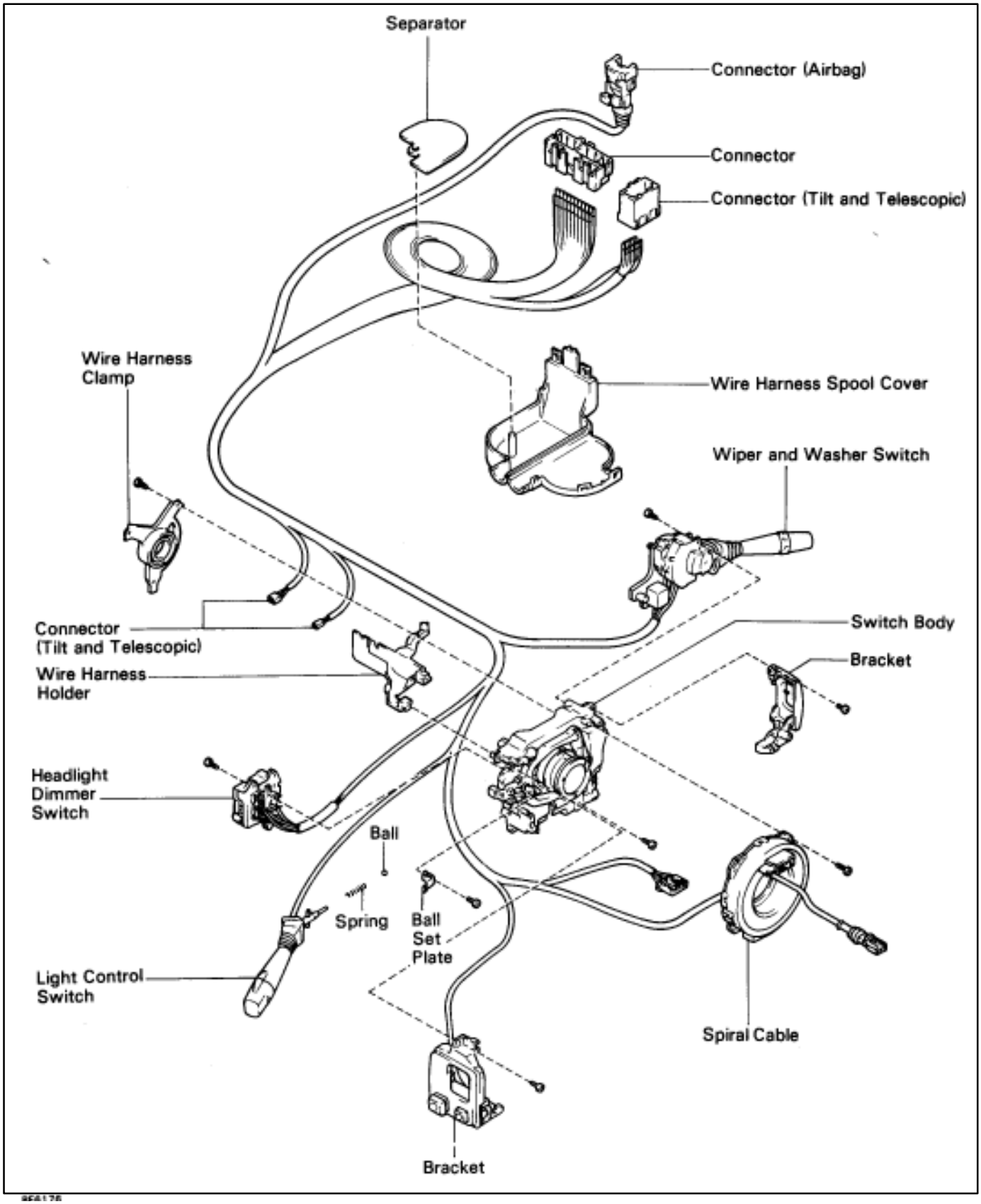

WhereEverybodyKnowsYourName

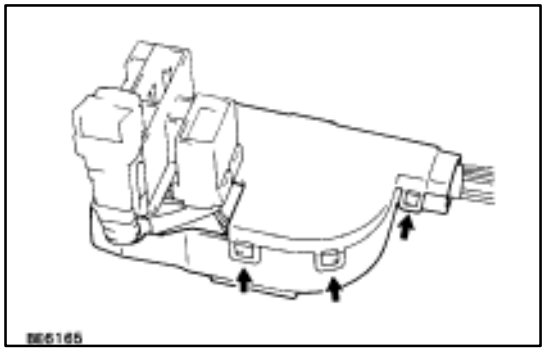

1. REMOVE WIRE HARNESS SPOOL COVER

Pry loose three locking lugs.

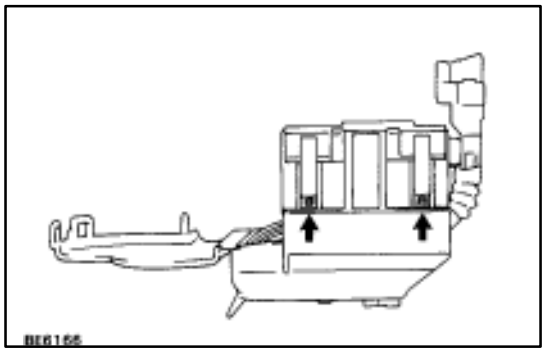

2. REMOVE CONNECTOR FROM SPOOL BODY

(a) Pry loose two locking lugs and separate the connector from spool body.

(b) Remove the separator from spool body.

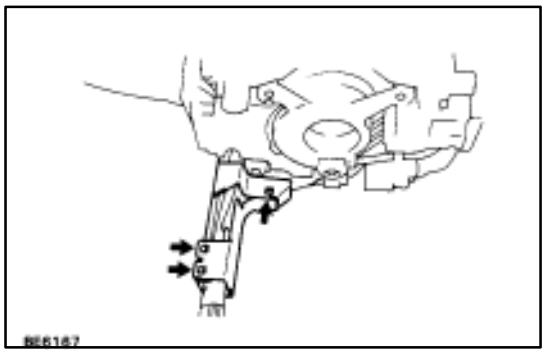

3. REMOVE WIRE HARNESS HOLDER

(a) Pry loose three locking lugs.

(b) Pull out the wire harness.

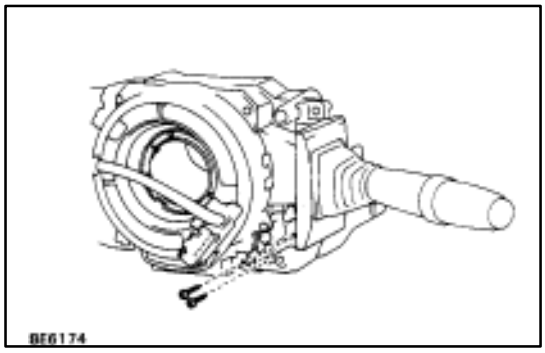

(c) Remove two screws and the wire harness holder.

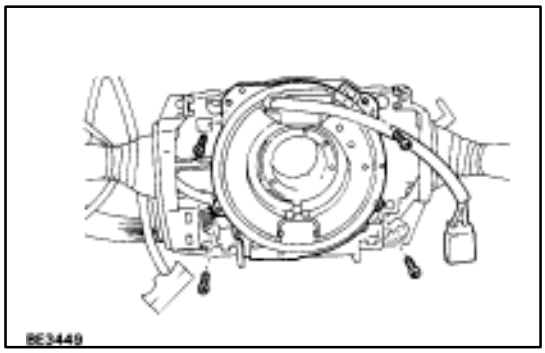

4. REMOVE SPIRAL CABLE SUBASSEMBLY

(a) Disconnect the connector (White).

(b) Remove the four screws and spiral cable subassembly.

WhereEverybodyKnowsYourName

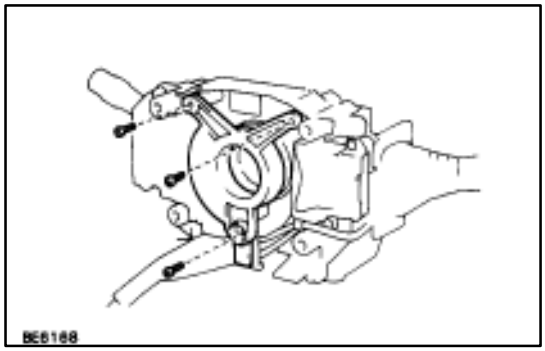

5. REMOVE WIRE HARNESS CLAMP

Remove three screws and wire harness clamp.

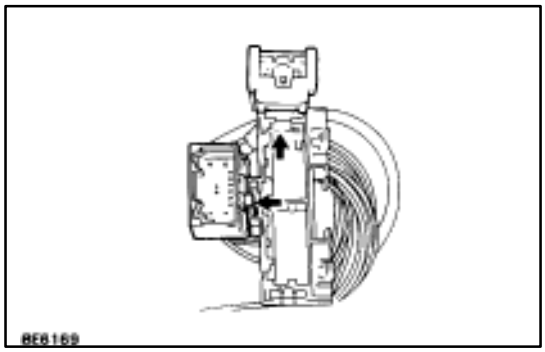

6. SEPARATE CONNECTOR

(a) Pry loose two locking lugs.

(b) Separate two connectors from connector assembly.

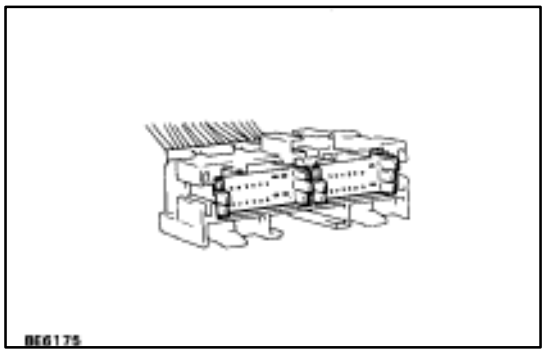

7. REMOVE TERMINALS FROM CONNECTOR (32p connector)

(a) Pull out two inner terminal covers.

CAUTION: Do not remove terminal for AIRBAG connector (Yellow).

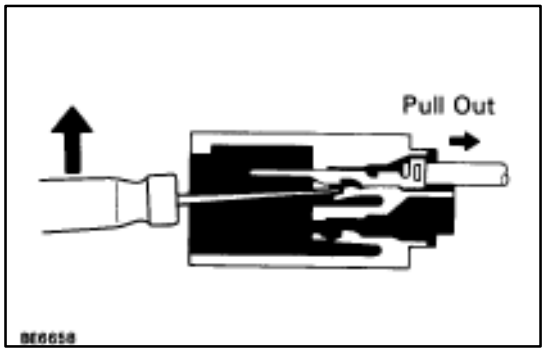

(b) From the open end, insert a miniature screwdriver between the locking lug and terminal.

(c) Pry down the locking lug with the screwdriver and pull the terminal out from the rear.

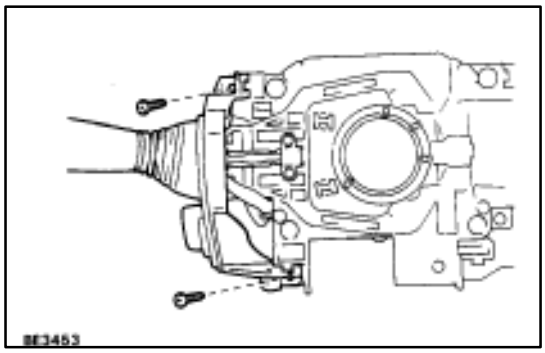

8. REMOVE LIGHT CONTROL SWITCH

(a) Remove the two screws, and separate the bracket from switch body.

WhereEverybodyKnowsYourName

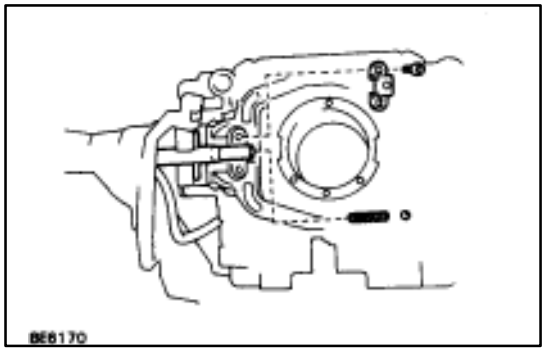

(c) Remove two screws and the ball set plate from the switch body.
(b) Remove the ball and slide out the switch from the switch body with the spring.
(d) Remove the boot.

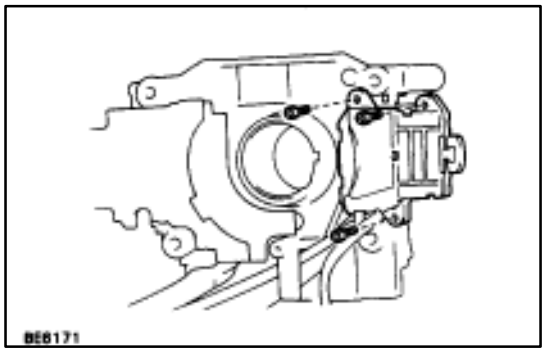

9. REMOVE HEADLIGHT DIMMER SWITCH AND TURN SIGNAL SWITCH

Remove three screws and the switch from the switch body.

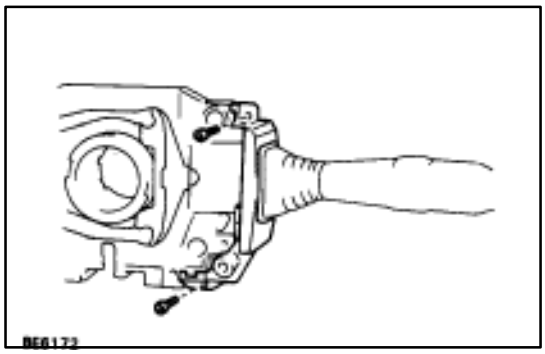

10. REMOVE WIPER AND WASHER SWITCH

(a) Remove two screws and separate the bracket from the switch body.

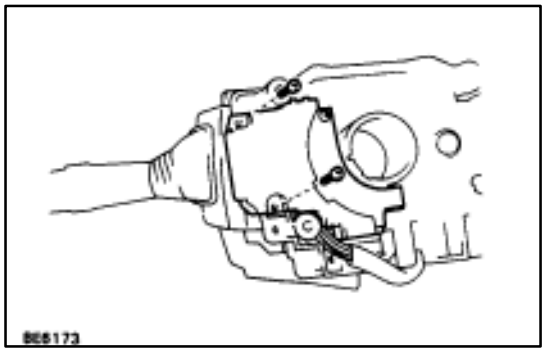

(b) Remove two screws and the switch from the switch body.
(c) Remove the boot.

WhereEverybodyKnowsYourName

ASSEMBLY OF COMBINATION SWITCH

INSTALL PARTS OF COMBINATION SWITCH IN REVERSE SEQUENCE OF DISASSEMBLY

(MAIN POINT OF INSTALLATION)

1. INSTALL LIGHT CONTROL SWITCH

(a) Slide the switch and install the switch body.

(b) Set the lever in the HI position, and install the ball and plate.

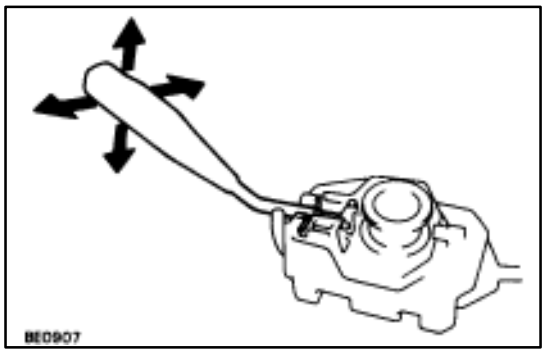

(c) After installing the light control switch to the switch body, insure that the switch operation is smooth.

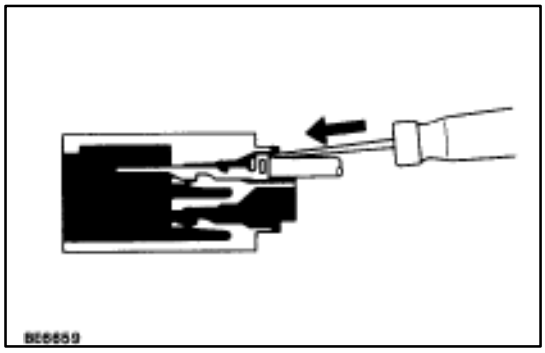

2. INSTALL TERMINALS TO CONNECTOR

- Push in the terminal until it is securely locked in the connector lug.
- Install each switch terminal as shown in the figure.

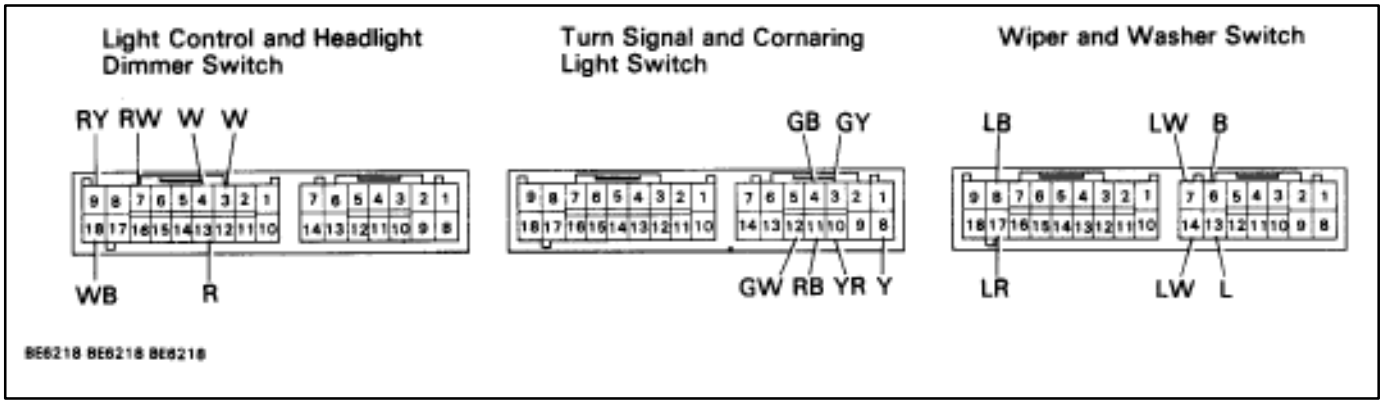

WhereEverybodyKnowsYourName

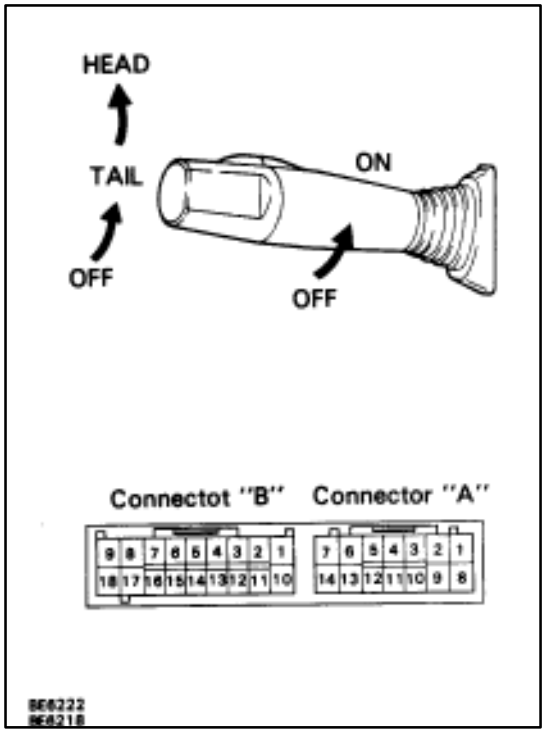

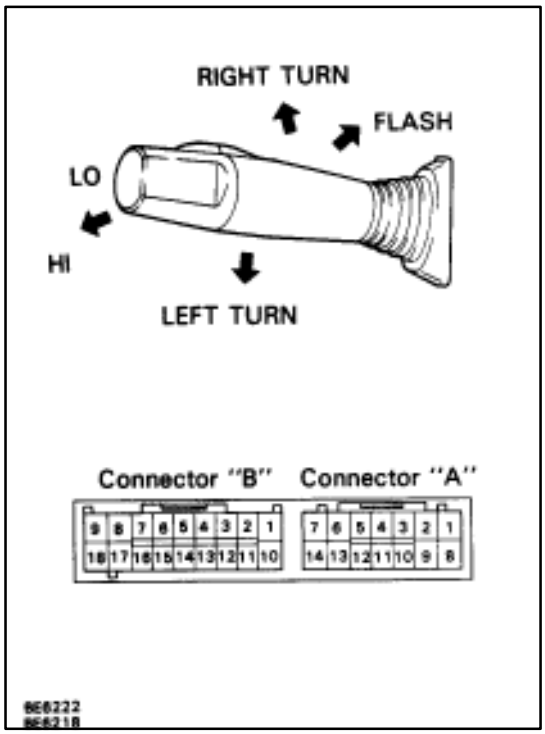

INSPECTION OF COMBINATION SWITCH

1. INSPECT LIGHT CONTROL SWITCH (Continuity)

Inspect the switch continuity between terminals.

Terminal / Switch position	B3	B4	B13
OFF			
TAIL	○——	——○	
HEAD	○——	——○	——○

If continuity is not as specified, replace the switch.

2. INSPECT DIMMER SWITCH (Continuity)

Inspect the switch continuity between terminals.

Terminal / Switch position	B7	B9	B18
Flash	○——	——○	——○
Low beam			
High beam		○——	——○

If continuity is not as specified, replace the switch.

3. INSPECT TURN SIGNAL SWITCH (Continuity)

Inspect the switch continuity between terminals.

Terminal / Switch position	A3	A4	A12
Left turn		○——	——○
Neutral			
Right turn	○——	——	——○

If continuity is not as specified, replace the switch.

4. INSPECT CORNARING LIGHT SWITCH (Continuity)

Inspect the switch continuity between terminals.

Terminal / Switch position	A8	A10	A11
Left side	○——	——○	
Neutral			
Right Side	○——	——	——○

If continuity is not as specified, replace the switch.

WhereEverybodyKnowsYourName

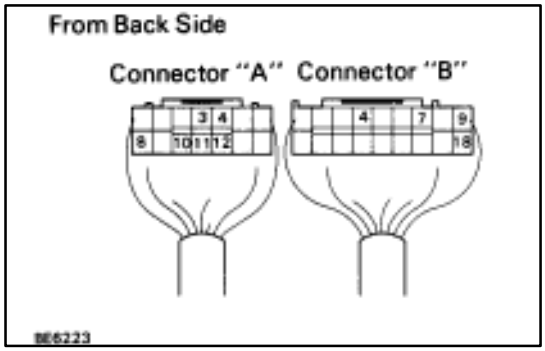

5. USA

INSPECT COMBINATION SWITCH CIRCUIT

(a) Pull the spool body to forward and separate spool body from steering column.

(b) Connect the wire harness side connector to the combination switch and inspect wire harness side connector from the back side as shown.

(Light Control Switch Circuit)

Check for	Tester connection	Condition	Specified value
Continuity	B4–Ground	Constant	Continuity

(Dimmer Switch Circuit)

Check for	Tester connection	Condition		Specified value
Voltage	*1B7–Ground	Light Control Switch Position	OFF or TAIL	No voltage
			HEAD	Battery voltage
	*1B9–Ground	Dimmer Switch Position	Low beam	No voltage
			Flash or High beam	Battery voltage
Continuity	B18–Ground	Constant		Continuity
*1: USA				

(Turn Signal Switch Circuit)

Check for	Tester connection	Condition		Specified value
Voltage	A3–Ground	Hazard Warning Switch ON		Battery voltage ↔0 V
		Ignition Switch ON and turn signal switch position	Right	Battery voltage ↔0 V
	A4–Ground	Hazard Warning Switch ON		Battery voltage ↔0 V
		Ignition Switch ON and turn signal switch position	Left	Battery voltage ↔0 V
Continuity	A12–Ground	Constant		Continuity

(Cornaring Light Control Switch Circuit)

Check for	Tester connection	Condition		Specified value
Voltage	A8–Ground	Light control switch HEAD and dimmer switch position	LO	Battery voltage
			HI or FLASH	No voltage
Continuity	A10–Ground	Constant		*2 Continuity
	A11–Ground	Constant		*2Continuity
*2 There is resistance because this circuit is grounded through the bulb.				

If the circuit is not as specified, refer to BE–34 wiring diagram and inspect the circuits connected to other parts.

WhereEverybodyKnowsYourName

(Headlight Control Relay)
INSPECTION OF HEADLIGHT CONTROL RELAY

INSPECT HEADLIGHT CONTROL RELAY

(Continuity)

Inspect relay continuity between terminals.

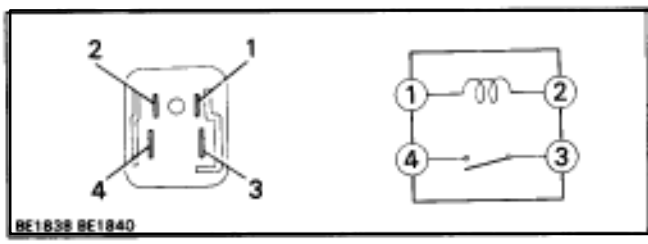

Terminal / Condition	1	2	3	4
Constant	O—⁄⁄⁄⁄—O			
Apply battery voltage to terminals 1 and 2.			O—	—O

If continuity is not as specified, replace the relay.

(Relay Circuit)

(See page BE–21)

(Headlight Dimmer Relay)
INSPECTION OF HEADLIGHT DIMMER RELAY

INSPECT HEADLIGHT DIMMER RELAY

(Continuity)

Inspect relay continuity between terminals.

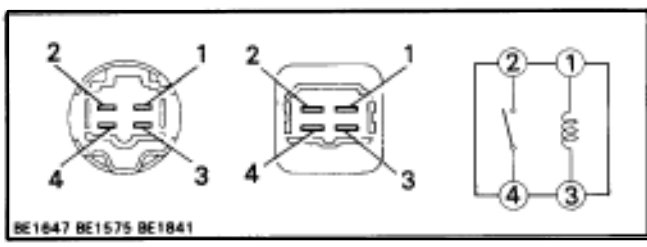

Terminal / Condition	1	2	3	4
Constant	O—	⁄⁄⁄⁄—	—O	
Apply battery voltage to terminals 1 and 3.		O—	—	—O

If continuity is not as specified, replace the relay.

WhereEverybodyKnowsYourName

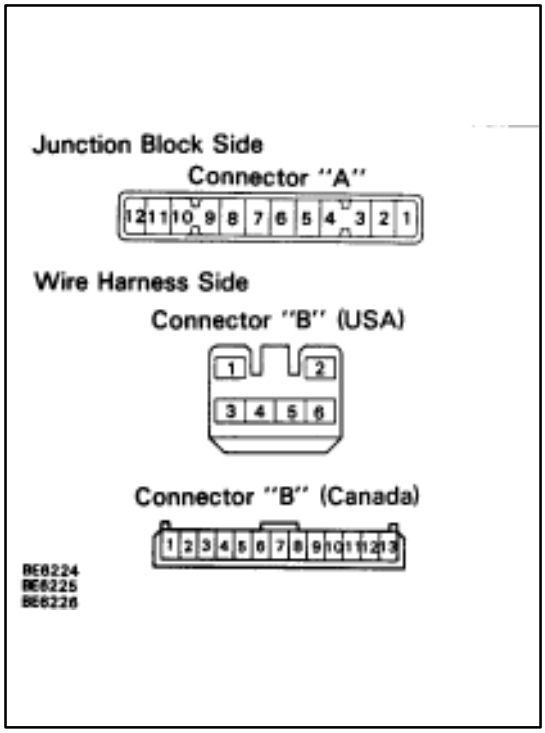

(Integration Relay)

REMOVAL AND INSTALLATION OF INTEGRATION RELAY

(See page BE–16)

INSPECTION OF INTEGRATION RELAY

INSPECT INTEGRATION RELAY

(Relay Circuit/Light Auto Turn Off System)

Remove the relay from junction block and inspect the connectors on the wire harness and junction block side as shown in the chart.

(USA)

Check for	Tester connection	Condition		Specified value
Continuity	A4–Ground	Passenger's Courtesy	OFF	No continuity
			ON	Continuity
	A5–Ground	Ignition Key	Pull off	No continuity
			Put in	Continuity
	A6–Ground	Driver's Courtesy	OFF	No continuity
			ON	Continuity
	A8–Ground	Seat Belt	Unfasten	Continuity
			Fasten	No continuity
	A10–Ground	Constant		Continuity
	B1–Ground	Passenger's Door	Unlock	Continuity
			Lock	No continuity
	B2–Ground	Driver's Door	Unlock	Continuity
			Lock	No continuity
	B3–Ground	Light Control Switch	OFF	No continuity
			TAIL or HEAD	Continuity
	B6–Ground	Light Control Switch	TAIL or OFF	No continuity
			HEAD	Continuity
Voltage	A1–Ground	Constant		Voltage
	A2–Ground	Constant		*Voltage
	A7–Ground	Ignition Switch	ON	Voltage
			LOCK or ACC	No voltage
	A9–Ground	Ignition Switch	ON	Battery voltage
			LOCK or ACC	No voltage
	A11–Ground	Ignition Switch	ON or ACC	Voltage
			LOCK	No voltage

* There is resistance because this circuit is grounded through the bulb.

WhereEverybodyKnowsYourName

(Canada)

Check for	Tester connection	Condition		Specified value
Continuity	A4–Ground	Passenger's Courtesy	OFF	No continuity
			ON	Continuity
	A5–Ground	Ignition Key	Pull off	No continuity
			Put in	Continuity
	A6–Ground	Driver's Courtesy	OFF	No continuity
			ON	Continuity
	A8–Ground	Seat Belt	Unfasten	Continuity
			Fasten	No continuity
	A10–Ground	Constant		Continuity
	A12–Ground	Constant		Continuity
	B1–Ground	Passenger's Door	Unlock	Continuity
			Lock	No continuity
	B2–Ground	Parking Brake Switch Position	OFF (Switch pin pushed in)	No continuity
			ON (Switch pin released)	Continuity
	B3–Ground	Driver's Door	Unlock	Continuity
			Lock	No continuity
	B7–Ground	Headlight Dimmer Switch Position	Low Beam or High Beam	No continuity
			Flash	Continuity
	B8–Ground	Headlight Dimmer Switch Position	Low Beam	No continuity
			High Beam or Flash	Continuity
	B10–Ground	Light Control Switch	OFF	No continuity
			HEAD or TAIL	Continuity
	B12–Ground	Constant		Continuity
	B13–Ground	Light Control Switch	OFF or TAIL	No continuity
			HEAD	Continuity
Voltage	A1–Ground	Constant		Voltage
	A2–Ground	Constant		*Voltage
	A7–Ground	Ignition Switch	ON	Voltage
			LOCK or ACC	No voltage
	A9–Ground	Ignition Switch	ON	*Voltage
			LOCK or ACC	No voltage
	A11–Ground	Ignition Switch	ON or ACC	Voltage
			LOCK	No voltage
	B4–Ground	Engine	STOP	No voltage
			Running	Voltage
	B11–Ground	Constant		Voltage
* There is resistance because this circuit is grounded through the bulb.				

If the circuit is as specified, trying replacing the relay with a new one.

If the circuit is not as specified, refer to BE–35 wiring diagram and inspect the circuit connected to other parts.

WhereEverybodyKnowsYourName

DEFOGGER SYSTEM

Description

The component parts of this system and their functions are described in the following table.

Parts Name	Function
Defogger	When over current flows in the defogger circuit, the Defogger fuse breaks the circuit to protect it against damage.
Defogger Relay	This relay is supplied with current from terminal IG1 of ignition switch (Ignition switch ON) and switches large current from the defogger.
A/C Control Panel Assembly 2 Defogger Switch	The defogger switch is built into the A/C Control Panel Assembly. This switch is supplied with current from the relay and fuse HTR. Grounds current from the defogger relay, turning the defogger relay ON.
Defogger 2 Rear Window 2 Outer Mirror	These defoggers generate heat when current is supplied from the defogger relay.

Parts Location

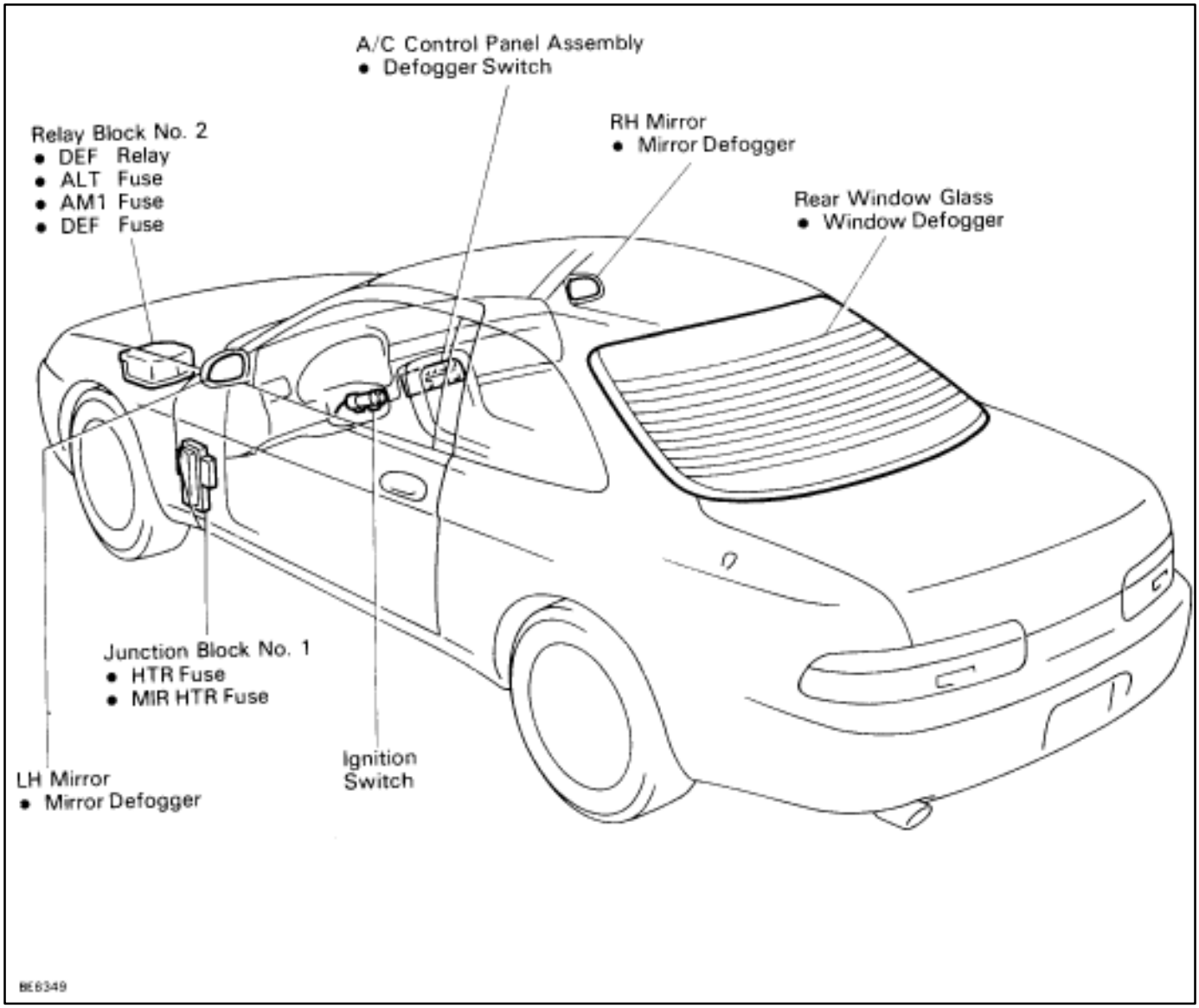

WhereEverybodyKnowsYourName

Wiring and Connector Diagrams

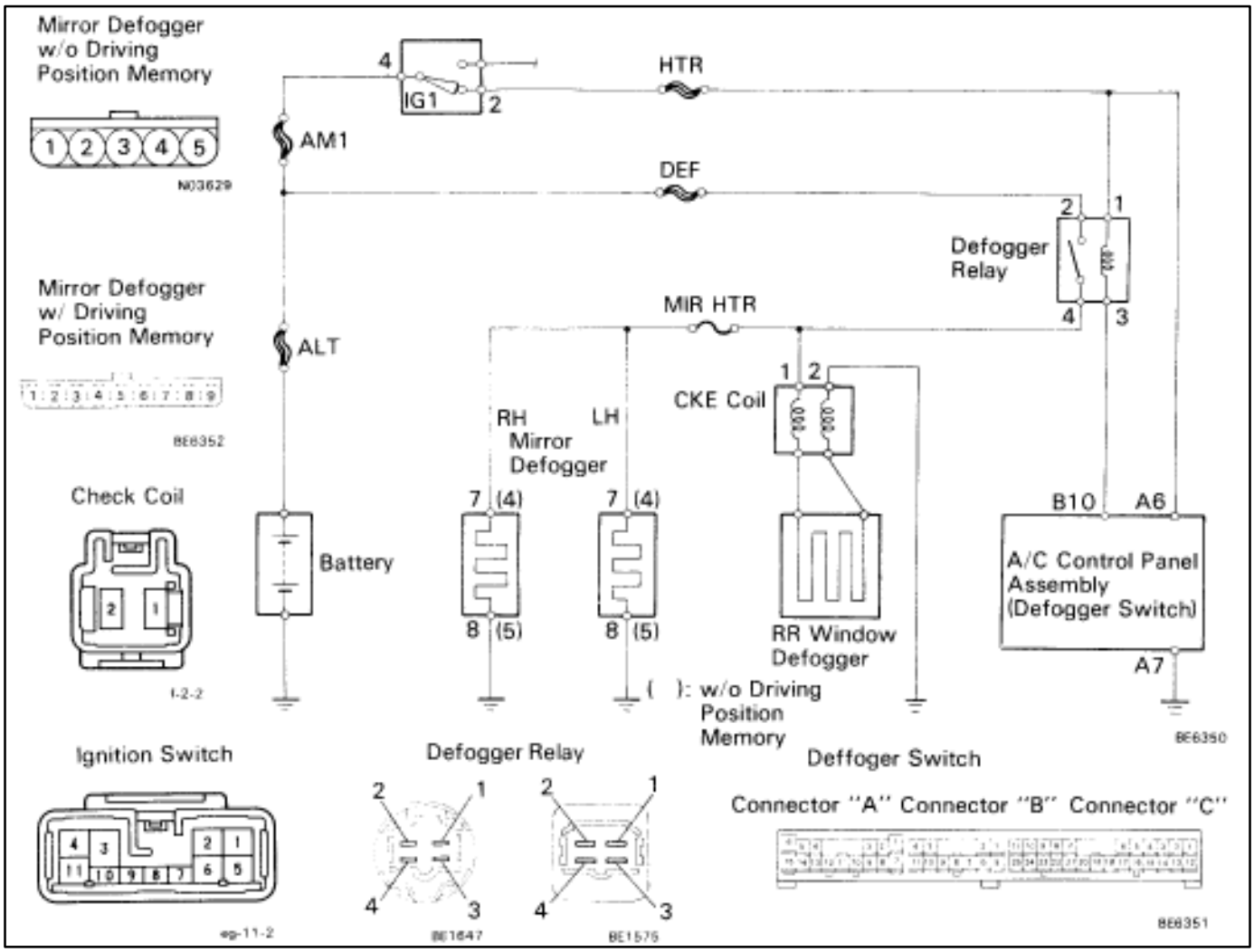

Parts Inspection (Defogger Switch)

REMOVAL AND INSTALLATION OF AIR CONDITIONER CONTROL PANEL ASSEMBLY

(See Instrument Panel on Pub. No. RM260U2, page BO–111**)**

INSPECTION OF DEFOGGER SWITCH

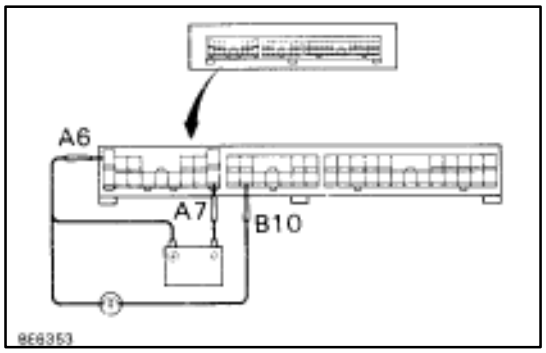

INSPECT SWITCH OPERATION

(a) Connect the positive (+) lead from the battery to terminal A6 and negative (–) lead to terminal A7.

(b) Connect the positive (+) lead from the battery to terminal B10 through a 1.4 W test bulb.

WhereEverybodyKnowsYourName

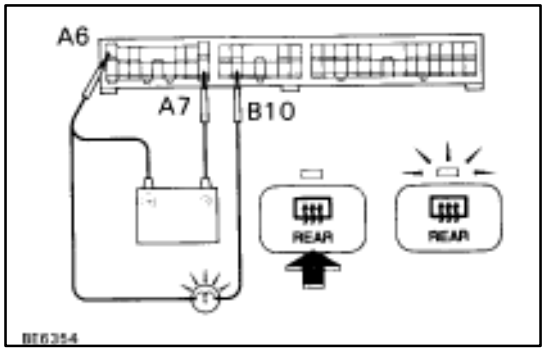

(c) Turn the defogger switch ON and check that the test bulb and indicator light turn ON, then turn OFF after about 15 minutes.

If operation is not as specified, replace the air conditioner control panel assembly.

(Defogger Relay)

INSPECTION OF DEFOGGER RELAY

INSPECT RELAY CONTINUITY AND OPERATION

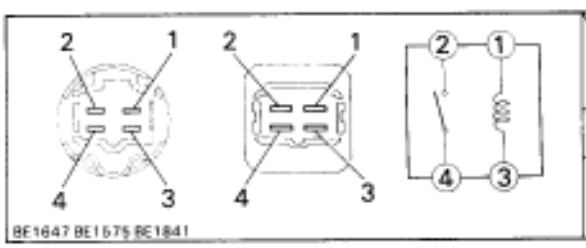

Terminal / Condition	1	2	3	4
Constant	○	⌇	○	
Apply battery voltage to terminals 1 and 3.		○		○

If continuity is not as specified, replace the relay.

(Defogger Wires)

INSPECTION AND REPAIR OF DEFOGGER WIRES

1. INSPECT DEFOGGER WIRES

NOTICE:

- **When cleaning the glass, use a soft, dry cloth, and wipe the glass in the direction of the wire. Take care not to damage the wires.**
- **Do not use detergents or glass cleaners with abrasive ingredients.**
- **When measuring voltage, wind a piece of tin foil around the top of the negative probe and press the foil against the wire with your finger as shown.**

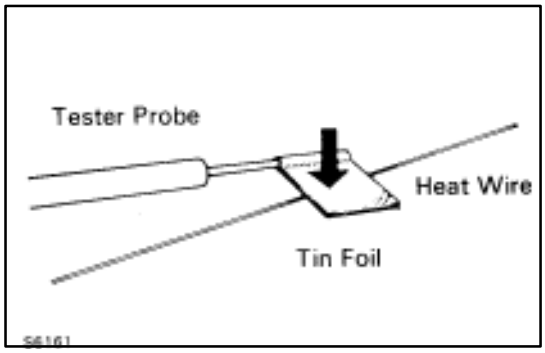

(a) Turn the ignition switch ON.

(b) Turn the defogger switch ON.

(c) Inspect the voltage at the center of each heat wire as shown.

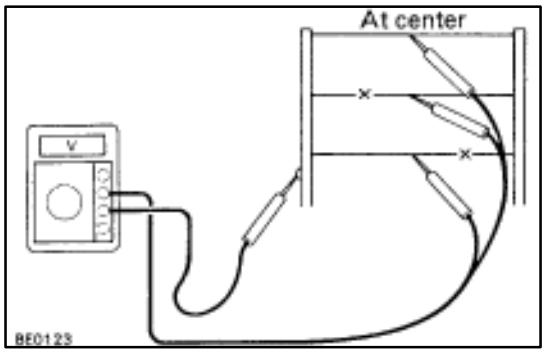

Voltage	Criteria
Approx. 5 V	Okay (No break in wire)
Approx. 10 V or 0 V	Broken wire

HINT: If there is approximately 10 volts, the wire is broken between the center of the wire and the positive (+) end. If there is no voltage, the wire is broken between the center of the wire and ground.

WhereEverybodyKnowsYourName

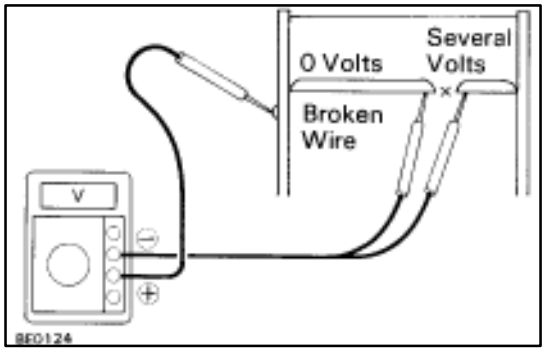

(d) Place the voltmeter positive (+) lead against the defogger positive (+) terminal.
(e) Place the voltmeter negative (–) lead with the foil strip against the heat wire at the positive (+) terminal end and slide it toward the negative (–) terminal end.
(f) The point where the voltmeter deflects from zero to several volts is the place where the heat wire is broken.

HINT: IF the heat wire is not broken, the voltmeter indicates 0 volts at the positive (+) end of the heat wire but gradually increases to about 12 volts as the meter probe is moved to the other end.

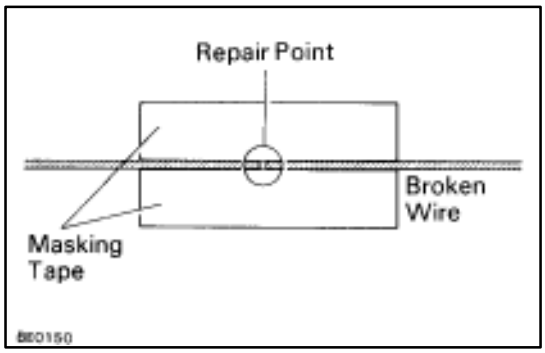

2. REPAIR DEFOGGER WIRES

(a) Clean the broken wire tips with a grease, wax and silicone remover.
(b) Place the masking tape along both sides of the wire to be repaired.
(c) Thoroughly mix the repair agent (Dupont paste No. 4817).

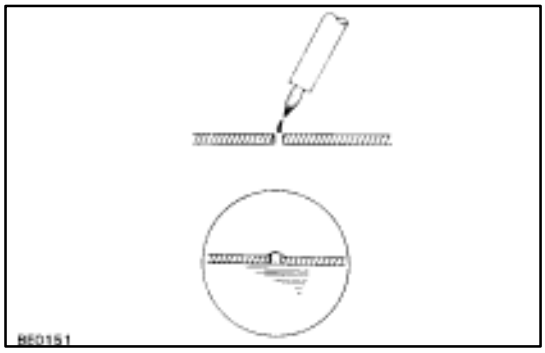

(d) Using a fine tip brush, apply a small amount to the wire.
(e) After a few minutes, remove the masking tape.
(f) Allow the repair to stand at least 24 hours.

(Mirror Defogger)

REMOVAL AND INSTALLATION OF MIRROR ASSEMBLY

(See Outside Rear View Mirror on Pub. No. RM260U2, page BO–42**)**

WhereEverybodyKnowsYourName

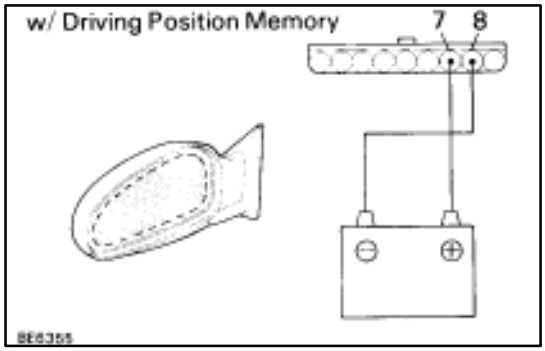

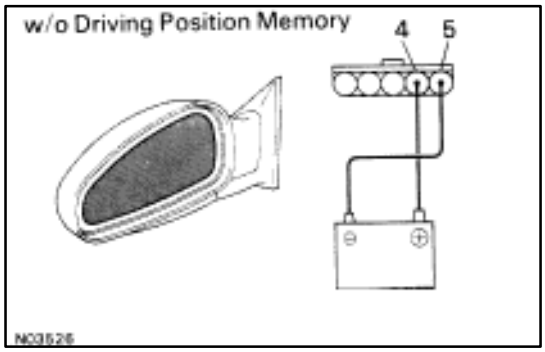

INSPECTION OF MIRROR DEFOGGER

INSPECT MIRROR DEFOGGER

(a) Connect the positive (+) lead from the battery to terminal 7 (4) and the negative (–) lead to terminal 8 (5).

(b) Check that the mirror becomes warm.
HINT: It will take a short time for the mirror to become warm. If the mirror does not become warm, replace the mirror assembly.

( ): w/o Driving Position Memory

Troubleshooting

You will find the cause of trouble more easily using the table shown below. In this table, the number indicate the order priority of the causes in trouble. Check each part in the order shown. If necessary, replace the parts.

See page / Part name / Trouble	BE–4, 20	BE–4, 20	BE–4, 22	BE–172★	BE–173★	–	BE–173★	–	BE–174★
	HEATER Fuse	MIR-HTR Fuse	DEFOG Fuse	Defogger Swtich	Defogger Relay	Wire Harness	Defogger Wires	CKE Coil	Mirror Defogger
All defogger systems do no operate.	1		1	2	3	4			
Rear window defogger does not operate.						3	1	2	
Mirror defogger does not operate.		1				3			2

▼Refer to 1992 LEXUS SC300 Repair Manual (Pub. No. RM260U2)

WhereEverybodyKnowsYourName

(TAILLIGHT SYSTEM)
Description – Taillight System

The component parts of this system and their function are as shown in the following table.

Parts Name	Function
Light Control Switch	Grounds current from the taillight control relay via the integration relay, switching each relay and supplying current to the appropriate bulbs accordance with the switch position.
Taillight Control Relay	Turned on by signals from the light control switch and supplies current to each bulb.
Integration Relay	Carries out ”Light Auto Turn–Off” of the headlights, fog lights and taillights and cuts off current to the light control switch in accordance with signals from the GAUGE fuse and door courtesy switch.
Light Failure Sensor	This sensor senses when a bulb in rear combination light is burnt out and lights up a warning light.
Integration Relay (Daytime Running Light Relay: CANADA)	Refer to BE–30.

PARTS LOCATION – Taillight System

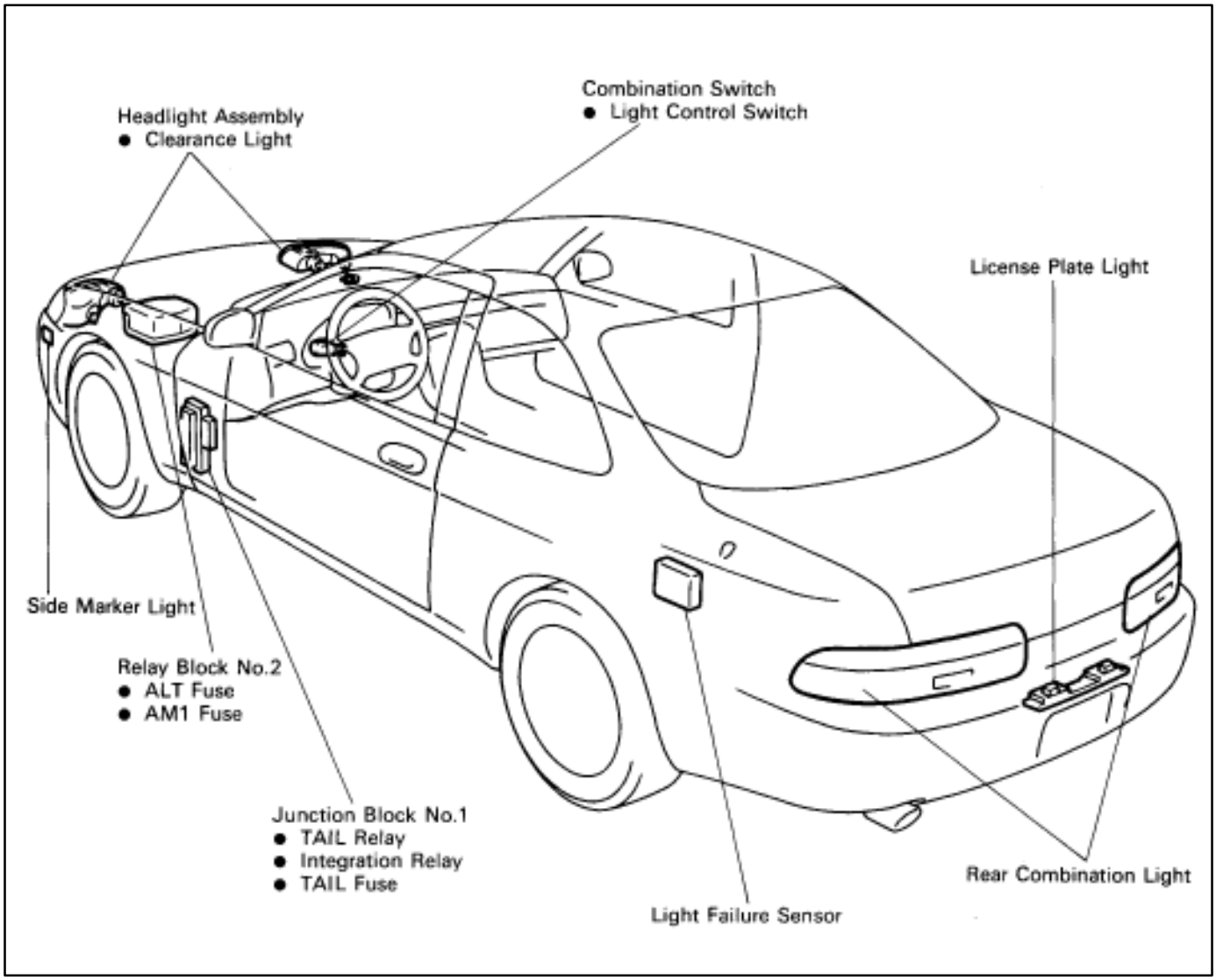

WhereEverybodyKnowsYourName

WIRING AND CONNECTOR DIAGRAMS – Taillight System

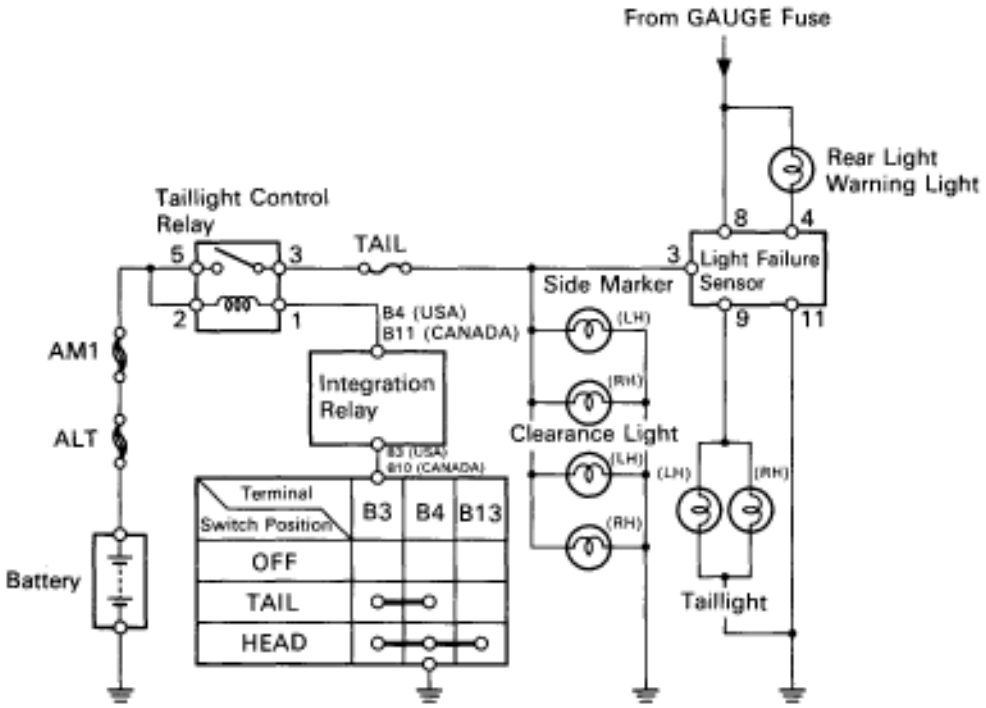

Light Control Switch
(Combination Switch)

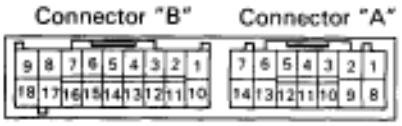

Taillight Control Relay

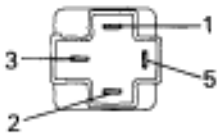

Integration Relay
Connector "A"

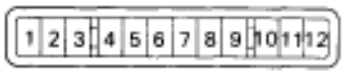

Light Failure Sensor

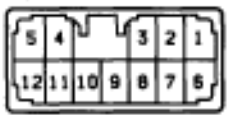

Connector "B"

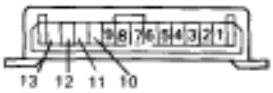

WhereEverybodyKnowsYourName

Parts Replacement – Taillights

(Clearance Light)

REPLACEMENT OF CLEARANCE LIGHT

(See page BE–37)

HINT: Replacement of Headlight (LO–Beam).

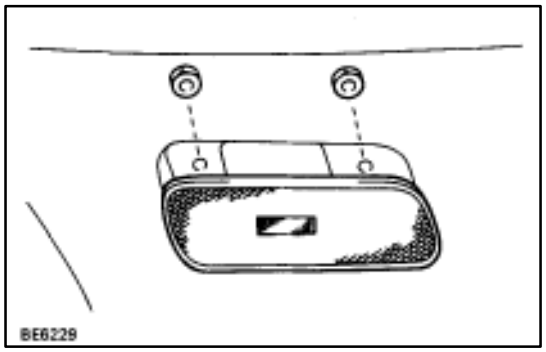

(FRONT SIDE MARKER LIGHT)

REPLACEMENT OF FRONT SIDE MARKER LIGHT

1. **REMOVE FRONT SIDE MARKER LIGHT**
   (a) Disconnect negative (–) terminal from the battery.
   CAUTION: Work must be started after approx.20 seconds from the time the ignition switch is turned to the ”LOCK” position and negative (–) terminal cable is disconnected from the battery.
   (b) Remove fender liner. BO–92)
   (c) Remove two nuts.
   (d) Remove front side marker light from bumper.
   (e) Disconnect connector.
2. **INSTALL FRONT SIDE MARKER LIGHT**
   For installation, follow the removal procedure in reverse.

(Light Failure Sensor)

See page BE–62

(Integration Relay)

See page BE–49

(Rear Combination Assembly)

REPLACEMENT OF REAR COMBINATION LIGHT ASSEMBLY

1. **REMOVE REAR COMBINATION LIGHT ASSEMBLY**
   (a)Disconnect negative (–) terminal from the battery.
   CAUTION: Work must be started after approx. 20 seconds from the time the ignition switch is turned to the ”LOCK” position and negative (–) terminal cable is disconnected from the battery.

WhereEverybodyKnowsYourName

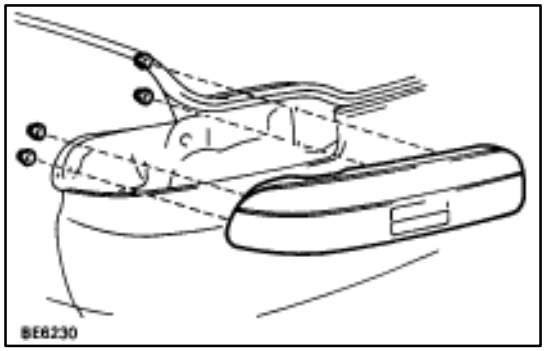

(b) Remove the luggage compartment trim.
(c)Disconnect connector.
(d) Remove four nuts and rear combination light assembly.

2. INSTALL REAR COMBINATION LIGHT ASSEMBLY
Follow the removal procedure in reverse to carry out installation.

(License Plate Light)

REPLACEMENT OF LICENSE PLATE LIGHT

1. REMOVE LICENSE PLATE LIGHT
(a) Disconnect negative (–) terminal from the battery.
CAUTION: Work must be started after. 20 seconds from the time the ignition switch is turned to the ”LOCK” position and negative (–) terminal cable is disconnected from the battery.
(b) Remove the rear bumper.
(c) Disconnect connector.
(d) Remove three screws and the license plate light.

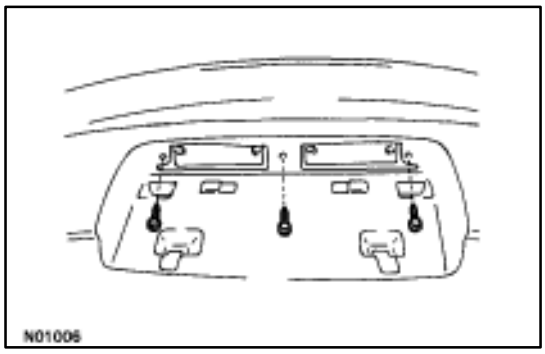

2. INSTALL LICENSE PLATE LIGHT
Follow the removal procedure in reverse to carry out installation.

WhereEverybodyKnowsYourName

Parts Inspection – Taillights

(Combination Switch Assembly)

(See page BE–46

HINT: Inspect light control switch.

(Taillight Control Relay)

REMOVAL AND INSTALLATION OF TAILLIGHT CONTROL RELAY

(See page BE–16)

INSPECTION OF TAILLIGHT CONTROL RELAY

INSPECT TAILLIGHT CONTROL RELAY

(Continuity)

Inspect relay continuity between terminals.

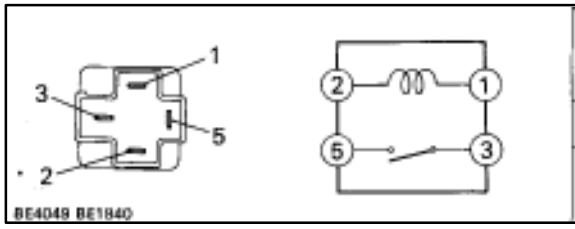

Terminal / Condition	1	2	3	5
Constant	○–⩘–○			
Apply battery positive voltage to terminals 1 and 2.			○——○	

If continuity is not as specified, replace the relay.

(Relay Circuit)

(See page BE–20)

WhereEverybodyKnowsYourName

Troubleshooting

Taillight System

You will find the cause of troubles more easily using the table well shown below. In this table, the numbers indicate the order priority of the causes in troubles. Check each part in the order shown. If necessary, replace the parts.

	See page	BE–4,20	BE–20,57	BE–46	BE–49	BE–62	BE–79	BE–4,20	–	BE–6	–
	Part name / Trouble	TAIL Fuse	Taillignt Control Relay	Light Control Switch	Integration Relay	Light Failure Sensor	Door Courtesy	GAUGE Fuse	Wire Harness	Bulb	Other Parts
USA	Taillight does not light. (Headlight does not light.)			1	2				3		
USA	Taillight does not light. (Headlight is normal.)	1	2	3	4				5		
USA	Only one light does not light. (Taillight)								2	1	
USA	Rear combination light does not light.					2			1	3	
USA	“Light Auto Turn–Off System” does not operate.				1		4	3	2		
CANADA	Taillight does not light. (Headlight is does not light.)			1	2				3		
CANADA	Taillight does not light. (Headlight is normal.)	1	2	3	4				5		
CANADA	Only one light does not light. (Taillight)								2	1	
CANADA	Rear combination light does not light.					2			1	3	
CANADA	“Light Auto Turn–Off System” does not operate.				1		4	2	3		
CANADA	Taillight does not light with light control SW in TAIL		1	2	3						
CANADA	Taillight does not go out with light control SW in OFF		1	3	2				4		
CANADA	Headlight and Taillight do not light with engine running and light control SW in OFF				2			1	3		*1 4

*1: Alternator L Terminal

WhereEverybodyKnowsYourName

(STOP LIGHT SYSTEM)
DESCRIPTION – Stoplight System

The component parts of this system and their function are as shown in the following table.

Parts Name	Function
Stop Light Switch	Creates a closed circuit for current from the STOP fuse when the brake pedal is depressed, thus turning on the stop lights.
Light Failure Sensor	This sensor senses when a bulb in rear combination light is burnt out and lights up a warning light.

PARTS LOCATION – Stoplight System

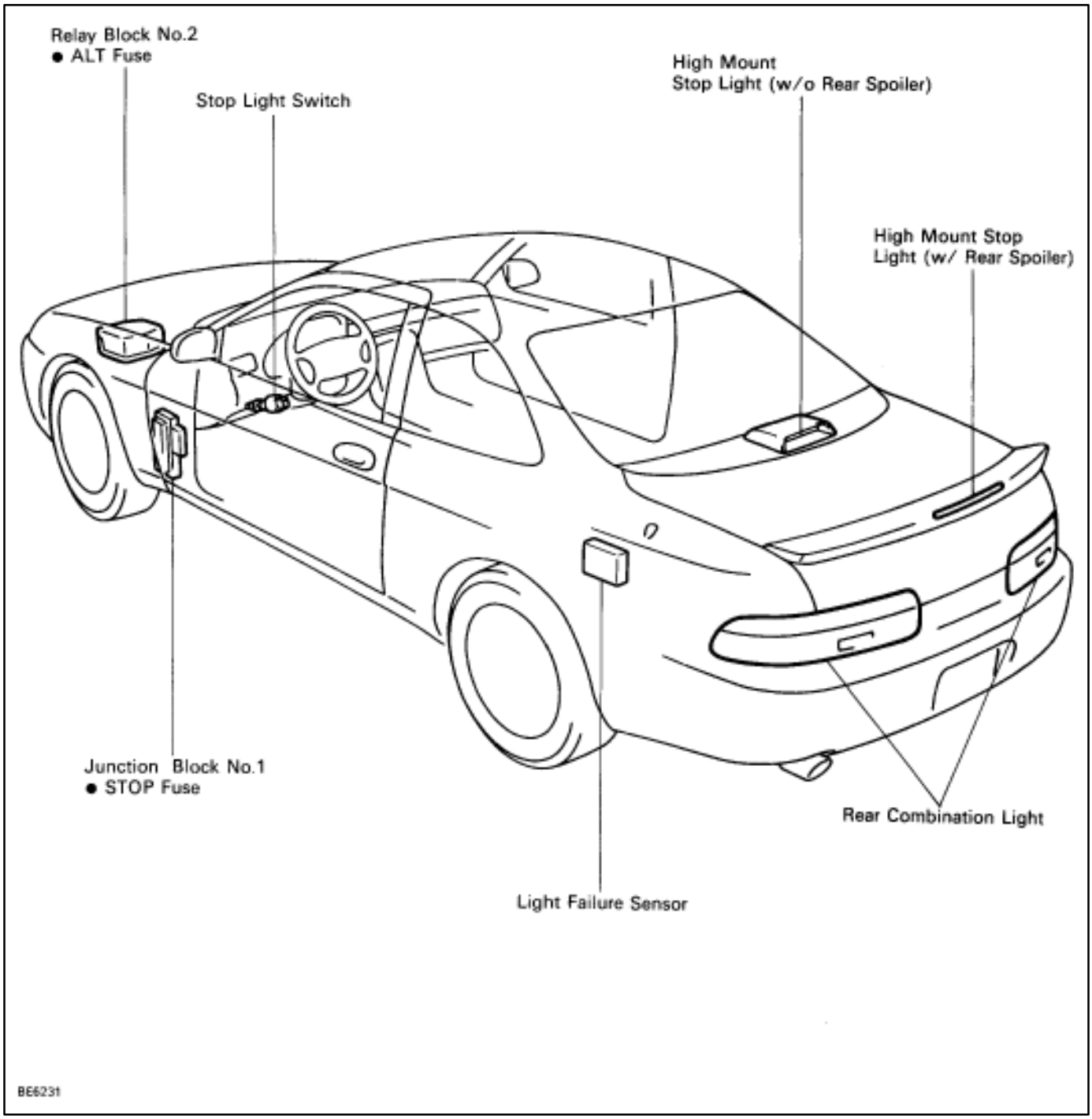

WhereEverybodyKnowsYourName

WIRING AND CONNECTOR DIAGRAMS – STOP LIGHT SYSTEM

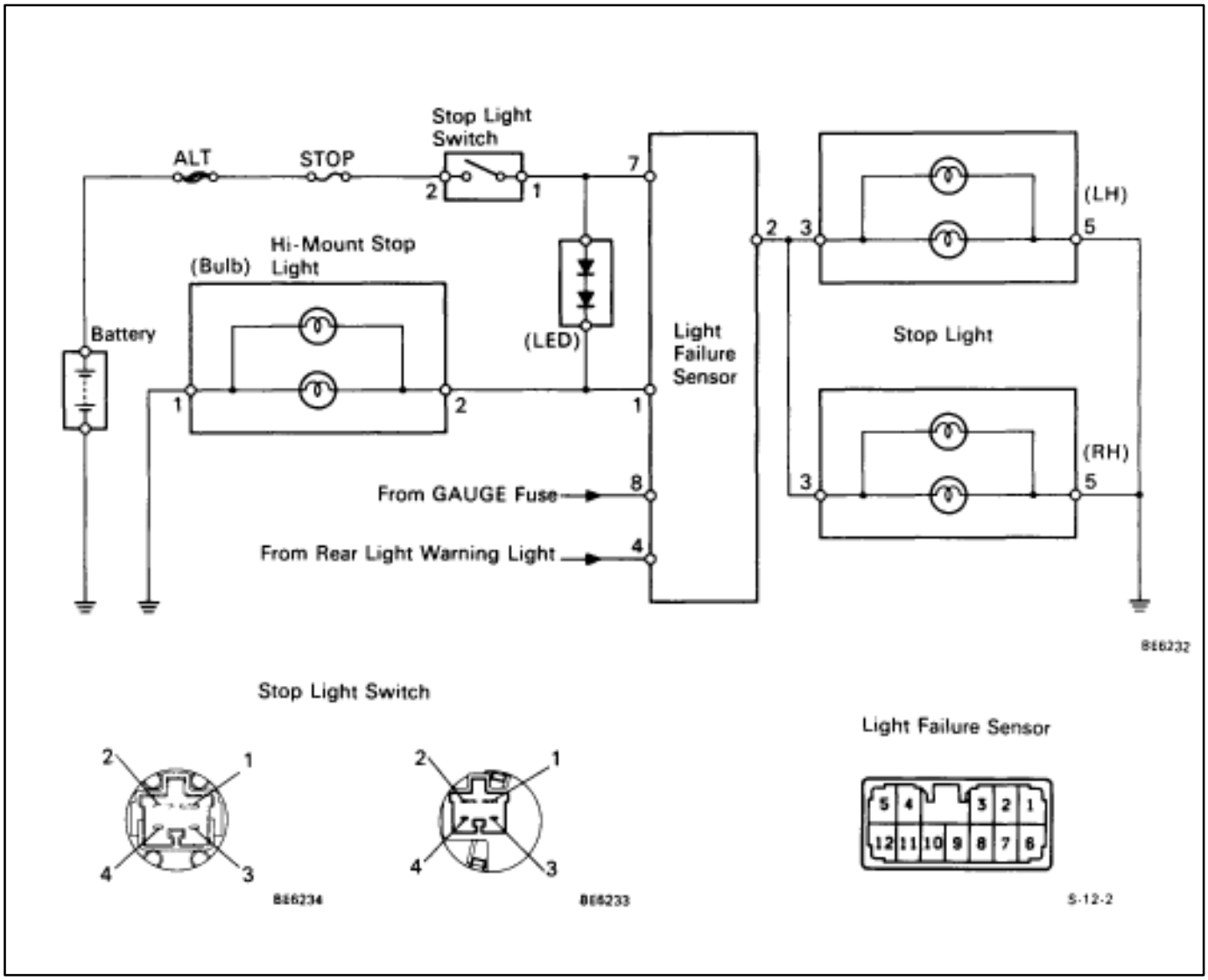

WhereEverybodyKnowsYourName

Parts Replacement – Stoplights (Rear Combination Light)

(See page BE–56)

(High Mount Stop Light)

REPLACEMENT OF HIGH MOUNT STOP LIGHT

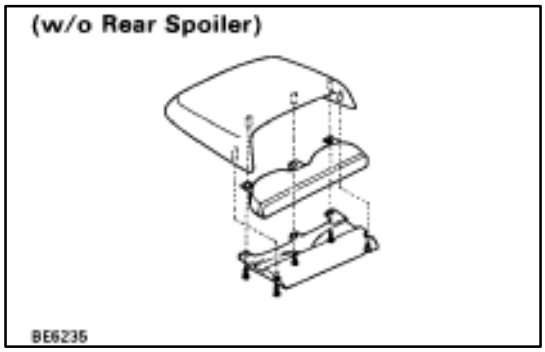

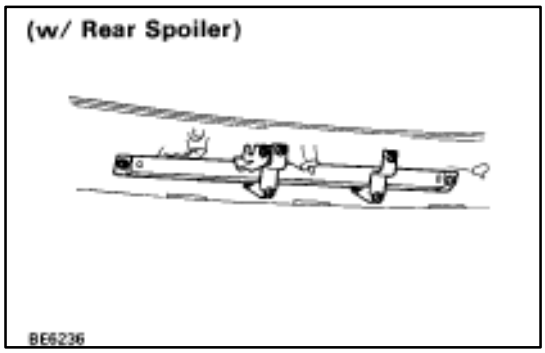

1. **REMOVE HIGH MOUNT STOP LIGHT**
   (a) Disconnect negative (–) terminal from the battery.
   CAUTION: Work must be started after approx. 20 seconds or longer from the time the ignition switch is turned to the "LOCK" position and negative (–) terminal cable is disconnected from the battery.
   (w/o Rear Spoiler)
   (b) Separate the woofer speaker cover from package tray trim.
   (c) Disconnect connector.
   (d) Remove woofer speaker cover.
   (e) Remove five screws and separate the high mount stop light from woofer speaker cover.
   (w/ Rear Spoiler)
   (f) Separate the rear spoiler from the luggage door. (See page BO–106)
   (g) Remove three screws and separate the high mount stop light from rear spoiler.
2. **INSTALL HIGH MOUNT STOP LIGHT**
   For installation, follow the removal procedure in reverse.

Parts Inspection– Stop Light System (Stop Light Switch)

STOP LIGHT SWITCH

REMOVAL AND INSTALLATION OF STOP LIGHT SWITCH

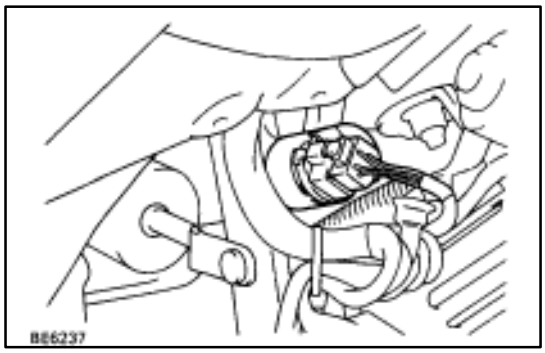

1. **REMOVE STOP LIGHT SWITCH**
   (a) Remove instrument panel subassembly cover under No.1 and brake pedal return spring.
   (b) Disconnect connector.
   (c) Remove a nut and switch.
2. **ADJUSTMENT OF STOP LIGHT SWITCH**
   (See page BR–4)
3. **INSTALL STOP LIGHT SWITCH**
   For installation, follow the removal procedure in reverse.

WhereEverybodyKnowsYourName

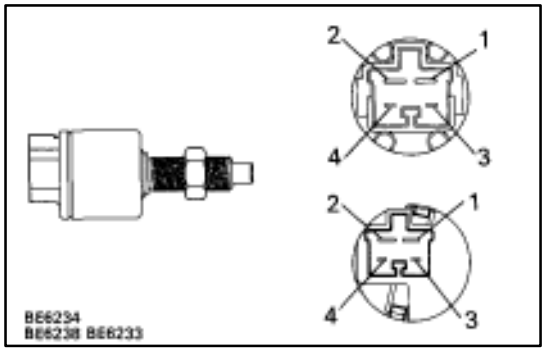

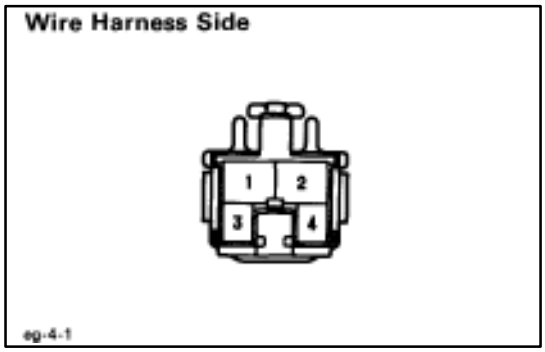

INSPECTION OF STOP LIGHT SWITCH

INSPECT STOP LIGHT SWITCH

(Continuity)

Inspect the switch continuity between terminals.

Terminal / Switch position	1	2	3	4
Switch pin free (Brake pedal depressed)	○	○		
Switch pin pushed in (Brake pedal released)			○	○

If continuity is not as specified, replace the switch.

(Switch Circuit)

Disconnect the connector from the switch and inspect the connector on the wire harness side as shown.

Check for	Tester connection	Condition	Specified value
Voltage	2–Ground	Constant	Battery voltage

If circuit is not as specified, inspect power source or wire harness.

(Light Failure Sensor)

REMOVAL AND INSTALLATION OF LIGHT FAILURE SENSOR

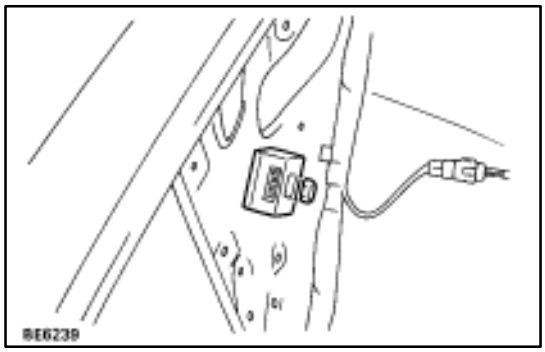

1. **REMOVE LIGHT FAILURE SENSOR**
   (a) Remove luggage front trim cover.
   (b) Remove a clip and disconnect connector.
   (c) Remove light failure sensor.
2. **INSTALL LIGHT FAILURE SENSOR**
   For installation, follow the removal procedure in reverse.

WhereEverybodyKnowsYourName

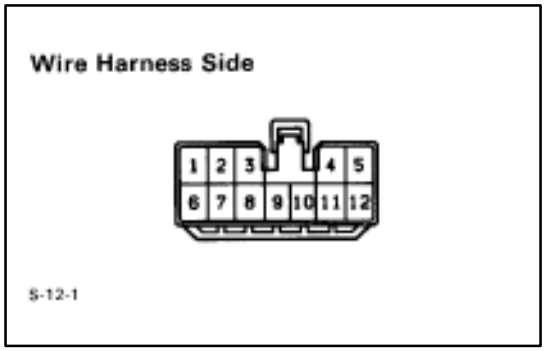

INSPECTION OF LIGHT FAILURE SENSOR

INSPECT LIGHT FAILURE SENSOR

(Relay Circuit)

Disconnect the connector from the sensor and inspect the connector on the wire harness side as shown.

Check for	Tester connection	Condition		Specified value
Continuity	1–Ground	Constant		*Continuity
	2–Ground	Constant		*Continuity
	3–Ground	Constant		*Continuity
	9–Ground	Constant		*Continuity
	11–Ground	Constant		Continuity
Voltage	3–Ground	Tail or Head	OFF	No voltage
			ON	Battery voltage
	4–Ground	Ignition switch	LOCK or ACC	No voltage
			ON	Battery voltage
	7–Ground	Stop light switch	OFF	No voltage
			ON	Battery voltage
Voltage	8–Ground	Ignition switch	LOCK or ACC	No voltage
			ON	Battery voltage
*: There is resistance because this circuit is grounded through the bulb.				

If circuit is as specified, replace the sensor. If the circuit is not as specified, refer to BE–60 wiring diagram and inspect the circuits connected to other parts.

WhereEverybodyKnowsYourName

Troubleshooting
Stop Light System

You will find the cause of trouble more easily using the table shown. In this table, the numbers indicate the order priority of the causes in trouble. Check each part in the order shown. If necessary, replace the parts.

See page / Part name / Trouble	BE–4, 20	BE–61	BE–62	I	BE–6
	STOP Fuse	Stop Light Switch	Light Failure Sensor	Wire Harness	Bulb
Stop light does not light up.	1	2	3	4	
Stop light always lights up.		1		2	
Only one light always lights up.				1	
Only one light does not light up.				2	1

WhereEverybodyKnowsYourName

(TURN SIGNAL AND HAZARD WARNING LIGHT SYSTEM)
Description – TURN SIGNAL AND HAZARD WARNING LIGHT SYSTEM

The component parts of this system and their function are as shown in the following table.

Parts Name	Function
Turn Signal Switch	Switches current from the turn signal flasher to the left side or right side.
Hazard Warning Switch	Modifies the circuit to the flasher relay and turn signal switch in accordance with the respective switch positions.
Turn Signal Flasher	Receives current from the hazard warning switch and flashes the turn signal lights by switching the current to the lights ON and OFF.

PARTS LOCATION – TURN SIGNAL

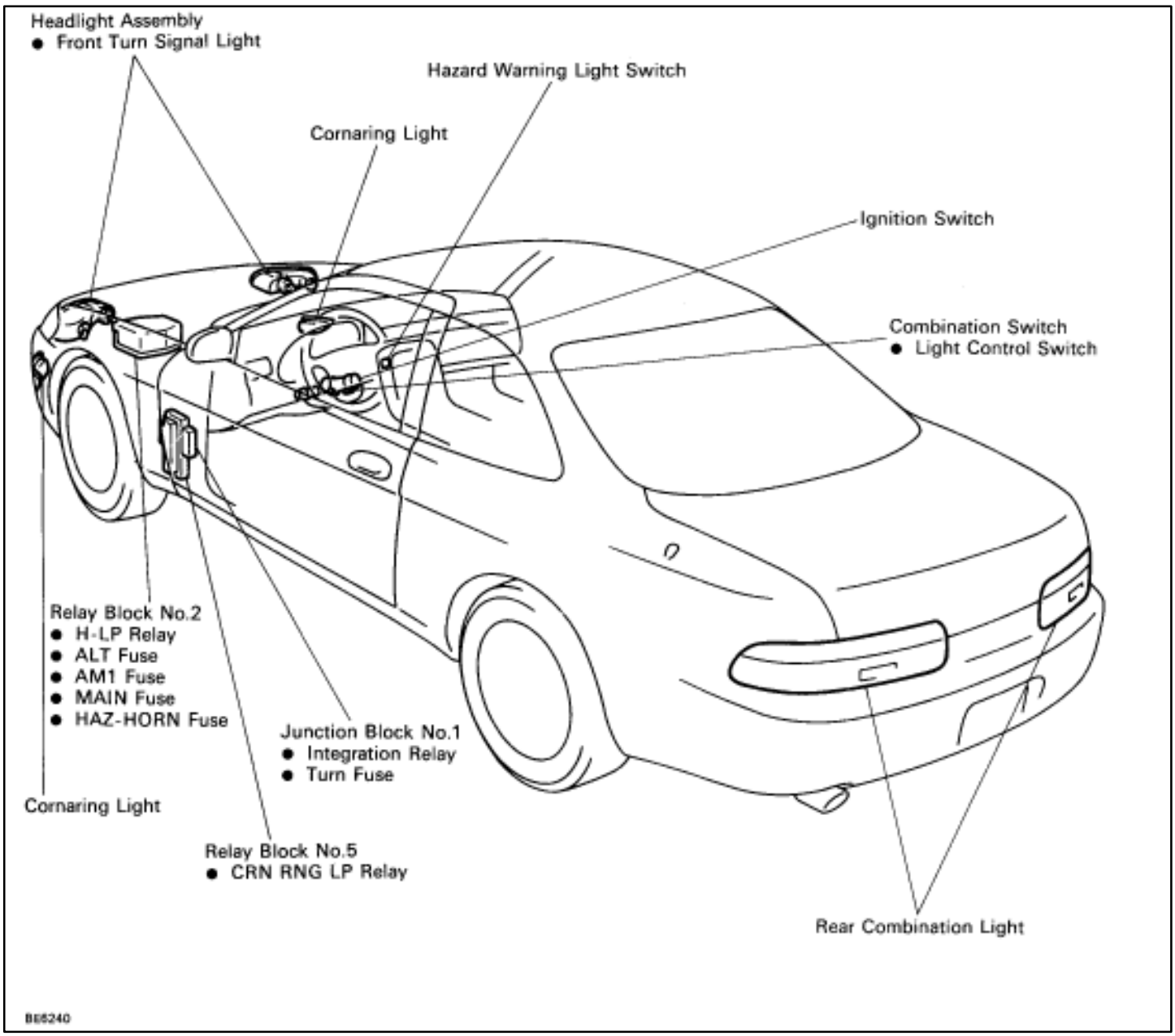

WhereEverybodyKnowsYourName

WIRING AND CONNECTOR DIAGRAMS
Turn Signal and Hazard Warning Lights

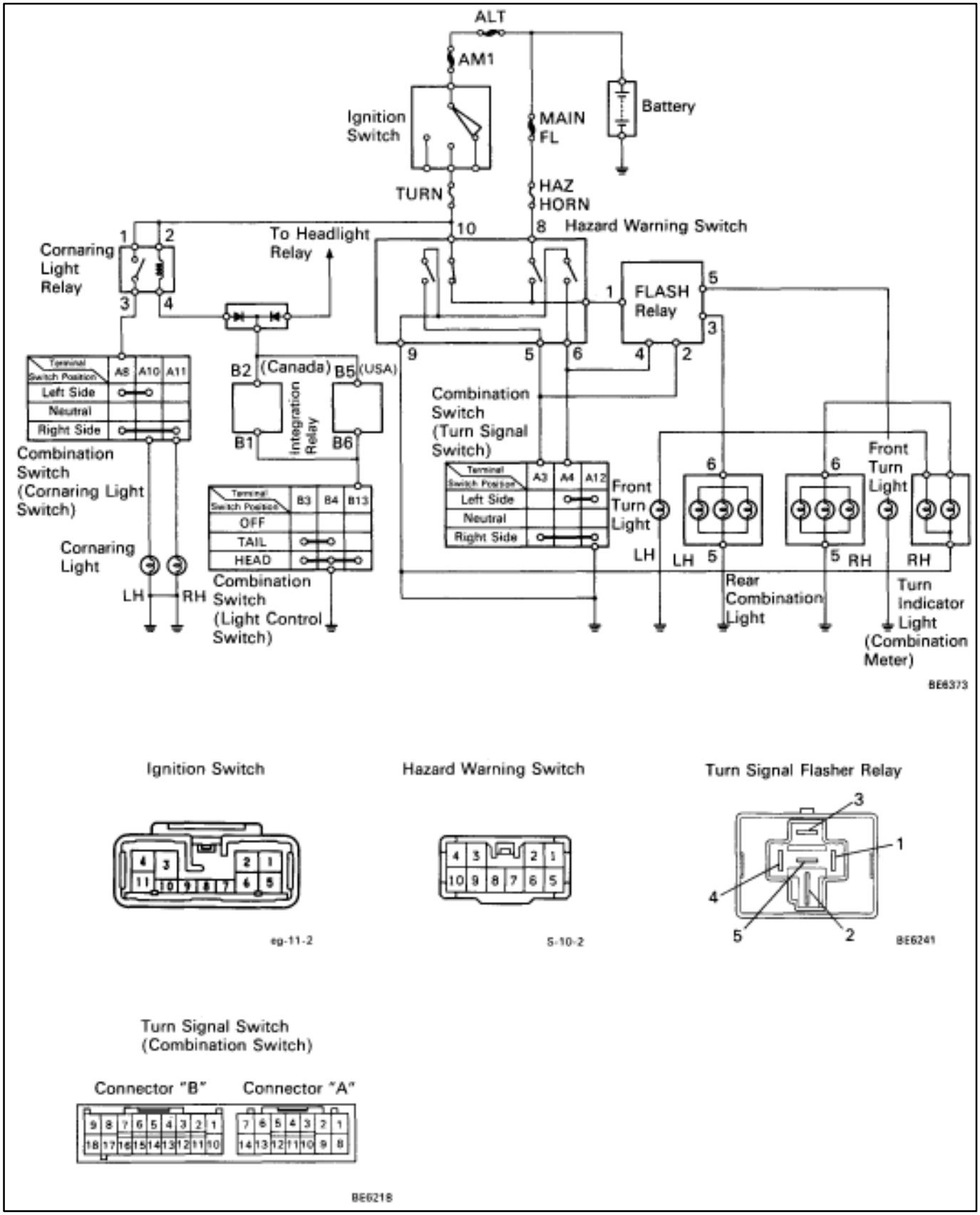

WhereEverybodyKnowsYourName

Parts Replacement (Turn Signals) (Cornering Light)

REPLACEMENT OF CORNARING LIGHT

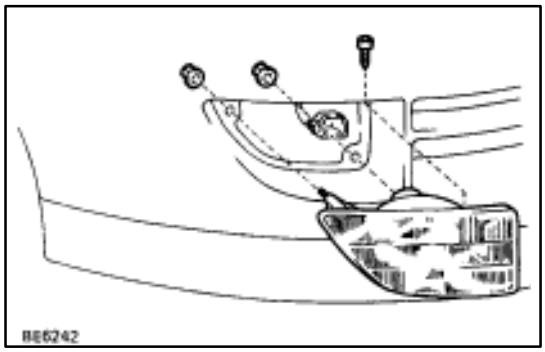

1. REMOVE CORNARING LIGHT

(a) Disconnect negative (–) terminal from the battery.

CAUTION: Work must be started after approx. 20 seconds or longer from the time the ignition switch is turned to the ”LOCK” position and negative (–) terminal cable is disconnected from the battery.

(b) Remove front under cover. (See page BO–92)

(c) Remove a screw and two nuts.

(d) Remove cornaring light from bumper.

(e) Disconnect connector.

2. INSTALL CORNARING LIGHT

For installation follow the removal procedure in reverse.

(Front Turn Signal Light)

REPLACEMENT OF FRONT TURN SIGNAL LIGHT

(See page BE–37)

HINT: Replacement of Headlight (LO–Beam)

(Rear Combination Light)

(See pageBE–56)

WhereEverybodyKnowsYourName

Parts Inspection (Turn and Hazard) (Combination Switch Assembly)

(See page BE–39)

HINT: Inspect turn signal light switch.

(Turn Signal Flasher)

REMOVAL AND INSTALLATION OF TURN SIGNAL FLASHER

(See page BE–16)

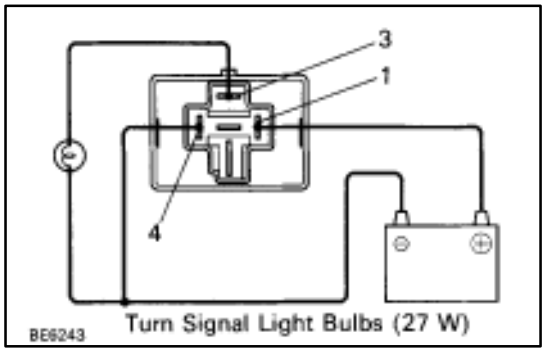

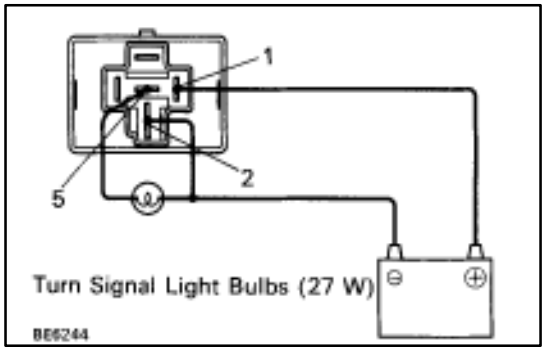

INSPECTION OF TURN SIGNAL FLASHER

INSPECT TURN SIGNAL FLASHER

(Operation)

LHD Side

(a) Connect the positive (+) lead from the battery to terminal 1 and the negative (–) lead to 4.

(b) Connect the two turn signal light bulbs parallel to each other to terminals 3 and 4, check that bulbs flash.

RHD Side

(c) Connect the positive (+) lead from the battery to terminal 1 and the negative (–) lead to 2.

(d) Connect two turn signal light bulbs parallel to each other to terminals 2 and 5, check that the bulbs flash.

HINT: The turn signal lights should flash 60 to 120 times per minute.

If one of the front or rear turn signal lights has an open circuit, the number of flashes will be more than 140 per minute.

If operation is not as specified, replace the flasher.

(Flasher Circuit)

(See page BE–23)

(HAZARD WARNING SWITCH)

REMOVAL AND INSTALLATION OF HAZARD WARNING SWITCH

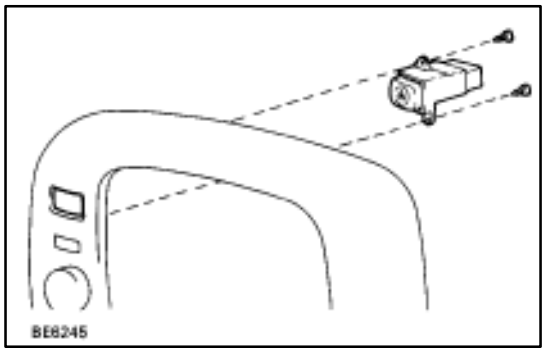

1. **REMOVE INSTRUMENT PANEL NO.2 REGISTER ASSEMBLY**
   (See page BO–111)
2. **REMOVE HAZARD WARNING SWITCH**
   Remove two screws and hazard warning switch from register.
3. **INSTALL HAZARD WARNING SWITCH AND REGISTER**
   For installation, follow the removal procedure in reverse.

WhereEverybodyKnowsYourName

INSPECTION OF HAZARD WARNING SWITCH

INSPECTION HAZARD WARNING SWITCH

(Continuity)

Inspect the switch continuity between terminals.

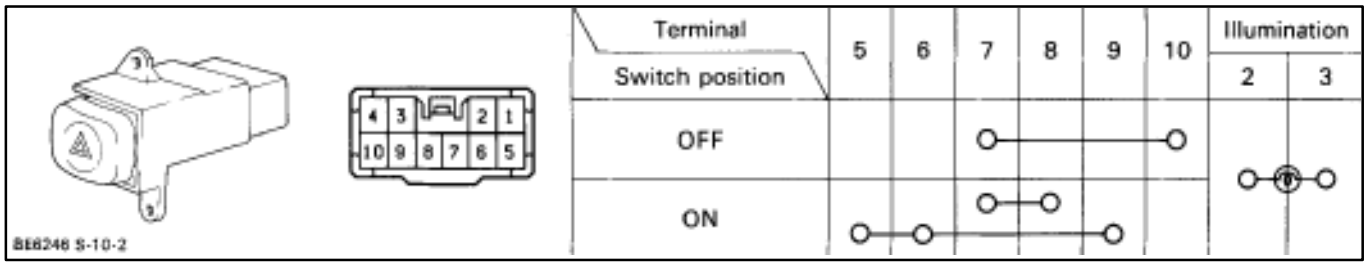

If continuity is not as specified, replace the switch.

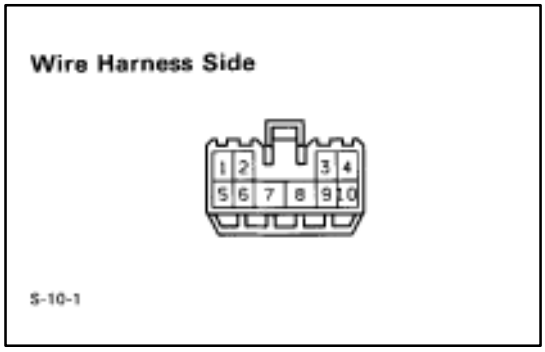

(Switch Circuit)

Disconnect the switch connector and inspect the connection on the wire harness side as shown.

Check for	Tester connection	Condition		Specified value
Voltage	8–Ground	Constant		Battery positive voltage
	10–Ground	Ignition switch position	LOCK or ACC	No voltage
			ON	Battery positive voltage
	*1 2–Ground	Light control switch position	OFF	No voltage
			TAIL or HEAD	Battery voltage
Continuity	*1 3–Ground	Constant		Continuity
	5–Ground	Constant		*2 Continuity
	6–Ground	Constant		*2 Continuity

*1: Illumination
*2: There is resistance because this circuit is grounded through the bulb.

If the circuit is not as specified, refer to BE–66 wiring diagram and inspect the circuits connected to other parts.

WhereEverybodyKnowsYourName

TROUBLESHOOTING
Turn Signal and Hazard Warning Light System

You will find the cause of trouble more easily using the table shown below. In this table, the numbers indicate the order priority of the causes in trouble. Check each part in the order shown. If necessary, replace the parts.

See page / Part name / Trouble	BE–4, 21	BE–4, 20	BE–26	BE–68	BE–68	BE–46	'	BE–6
	HAZ–HORN Fuse	TURN Fuse	Ignition Switch	Hazard Warning Switch	Turn Signal Flasher	Turn Signal Switch	Wire Harness	Bulb
"Hazard" and "Turn" do not light up.				1	2		3	
The flashing frequency is abnormal.					2		3	1
Hazard warning light does not light up. (Turn is normal.)	1						2	
Hazard warning light does not light up in one direction.				1			2	
*▼Turn signal does not light up.		2	1			3	4	
*2 Turn signal does not light up.		1				2	3	
Turn signal does not light up in one direction.						1	2	
Only one bulb does not light up.							2	1

*▼ Combination Meter, Wiper and Washer do not operate.
*2: Combination Meter, Wiper and Washer are normal.

WhereEverybodyKnowsYourName

(ILLUMINATION LIGHT SYSTEM) DESCRIPTION – ILLUMINATION LIGHT SYSTEM

The component parts of this system and their function are described in the following table.

Parts Name	Function
Rheostat Light Control Volume	In order to adjust the degree of illumination light, the resistance value of the built–in variable resistor is sent to the combination meter and rheostat light control.
Integration Relay (Daytime Running Light Relay: Canada)	During daytime running light operation this prevents current flow to the rheostat light control to stop each illumination from lighting up. When the light control switch is at TAIL or HEAD, current is sent to the rheostat light control.

PARTS LOCATION

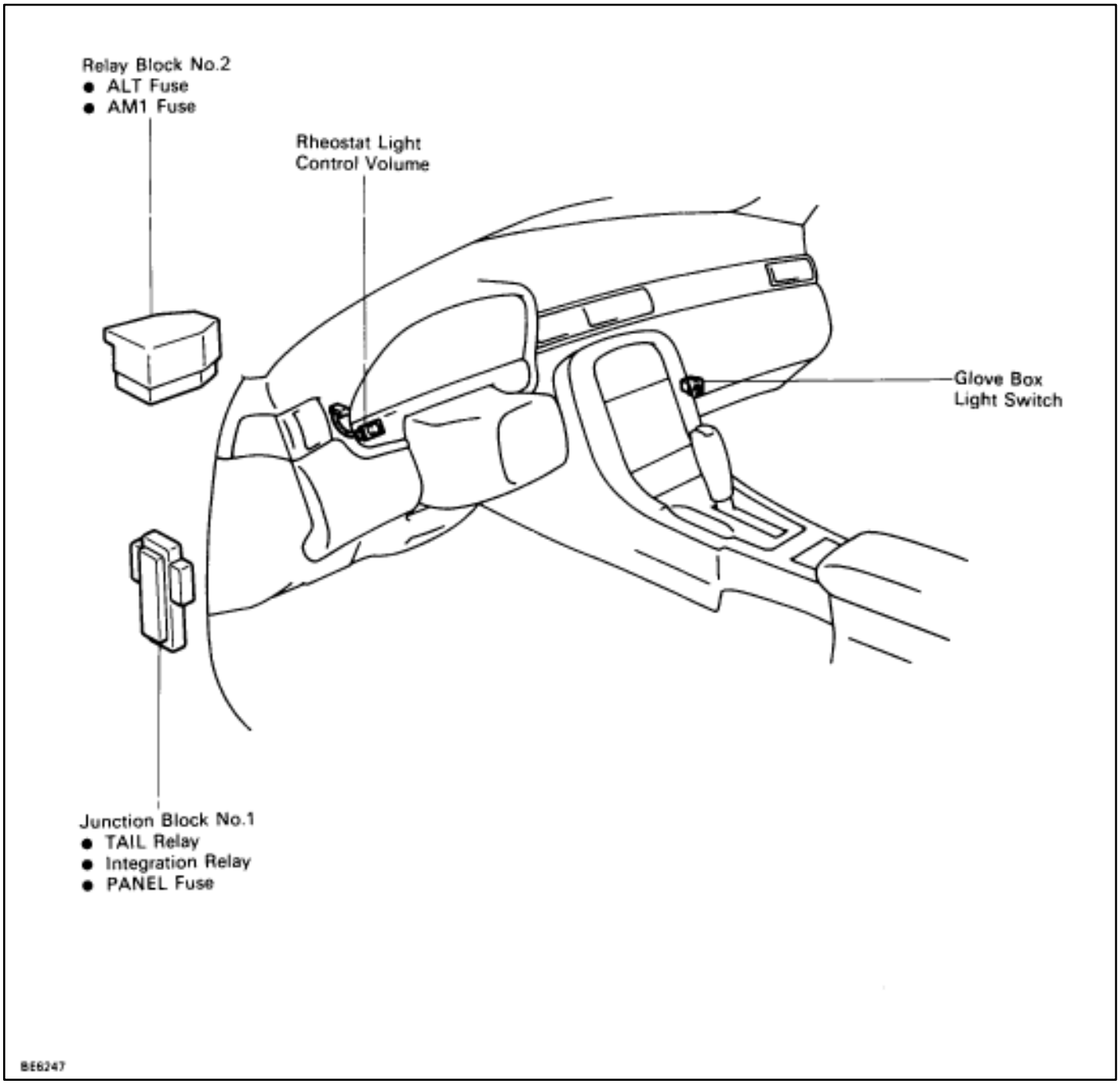

WhereEverybodyKnowsYourName

WIRING AND CONNECTOR DIAGRAMS

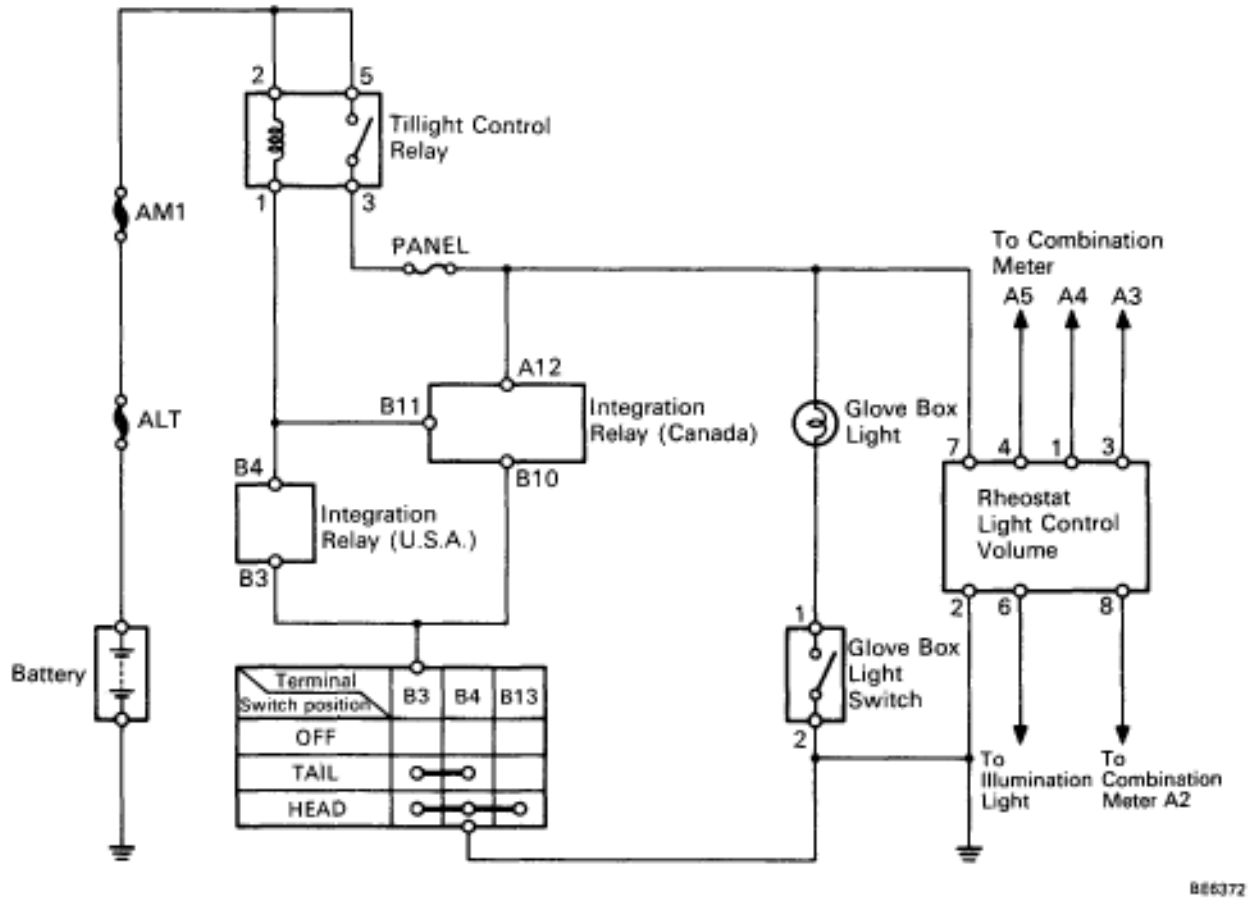

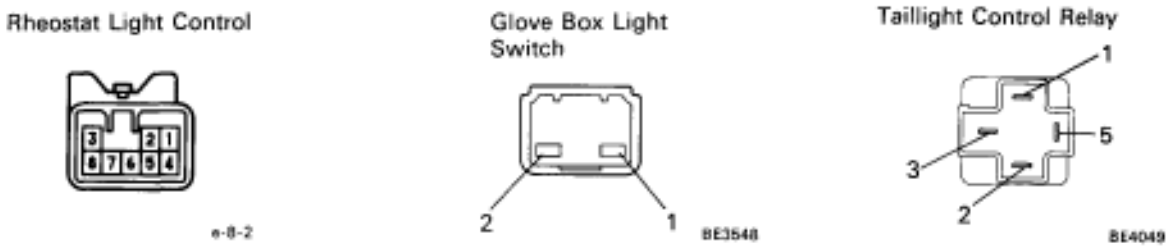

WhereEverybodyKnowsYourName

Parts Inspection – ILLUMINATION LIGHT SYSTEM (Rheostat Light Control Volume)

REMOVAL AND INSTALLATION OF RHEOSTAT LIGHT CONTROL VOLUME

(See page BE–103)

INSPECTION OF RHEOSTAT LIGHT CONTROL VOLUME

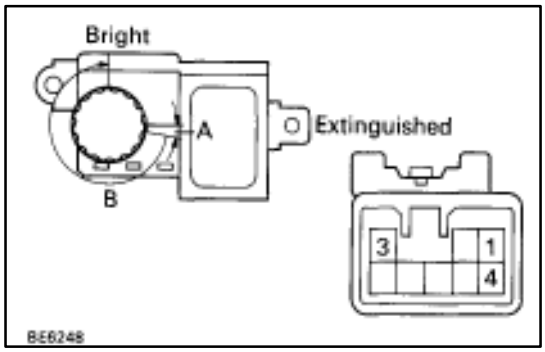

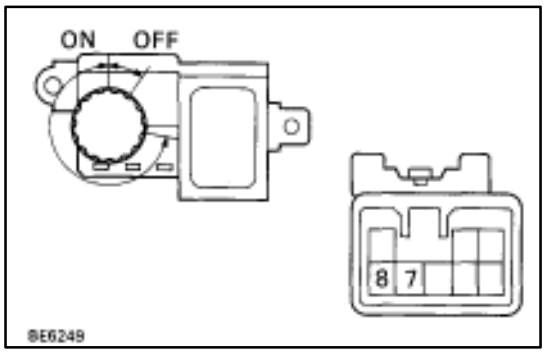

1. **INSPECT RHEOSTAT LIGHT CONTROL VOLUME (Resistance)**
   Inspection resistance between terminals.

Tester Connection	Condition		Specified value
3–4	Constant		Approx. 10 k?
1–3	Rheostat knob turned clockwise	A	≦
		B	Approx. 10 k? → 0 ?

If resistance is not as specified, replace the rheostat light control volume.

(Taillight Switch/Continuity)

Inspect continuity between terminals.

Terminal / Switch position	7	8
OFF (Rheostat knob turned fully clockwise.)		
ON (Rheostat knob turned any position except fully clockwise.)	○	○

If operation is not as specified, replace the rheostat light control volume.

WhereEverybodyKnowsYourName

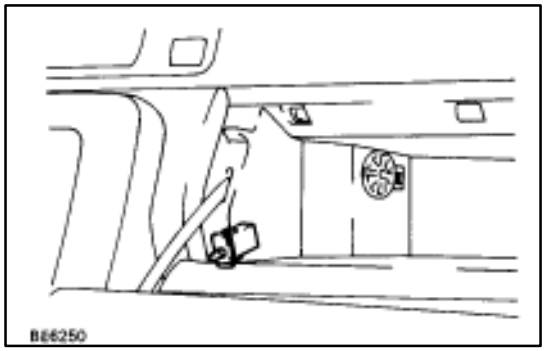

(GLOVE BOX LIGHT SWITCH)

REMOVAL AND INSTALLATION OF GLOVE BOX LIGHT SWITCH

1. **REMOVE GLOVE BOX LIGHT SWITCH**
   (a) Remove glove compartment.
   (See page BO–112)
   (b) Release two tabs and remove switch.
2. **INSTALL GLOVE BOX LIGHT SWITCH**
   For installation, follow the removal procedure in reverse.

INSPECTION OF GLOVE BOX LIGHT SWITCH

INSPECT GLOVE BOX LIGHT SWITCH
(Continuity)
Inspect the switch continuity between terminals.

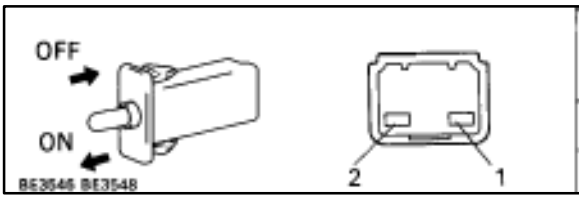

Terminal / Switch position	1	2
OFF (Closed)		
ON (Opened)	○	○

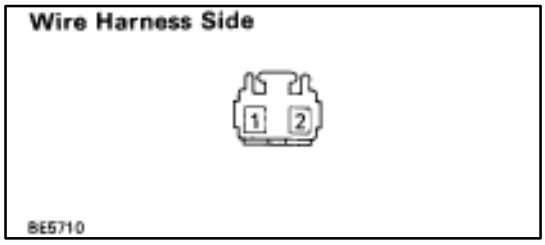

If continuity is not as specified, replace the switch.
(Switch Circuit)
Disconnect the connector from the switch and inspect the connector on the wire harness side as shown.

Check for	Tester connection	Condition		Specified value
Continuity	2–Ground	Constant		Continuity
Voltage	1–Ground	Light control switch position	OFF	No voltage
			TAIL or HEAD	Battery positive voltage

If the circuit is not as specified, refer to BE–76 wiring diagram and inspect the circuits connected to other parts.

(INTEGRATION RELAY)

(See page BE–49)

(TAILLIGHT CONTROL RELAY)

(See page BE–57)

WhereEverybodyKnowsYourName

WIRING AND CONNECTOR DIAGRAMS – INTERIOR LIGHT SYSTEM

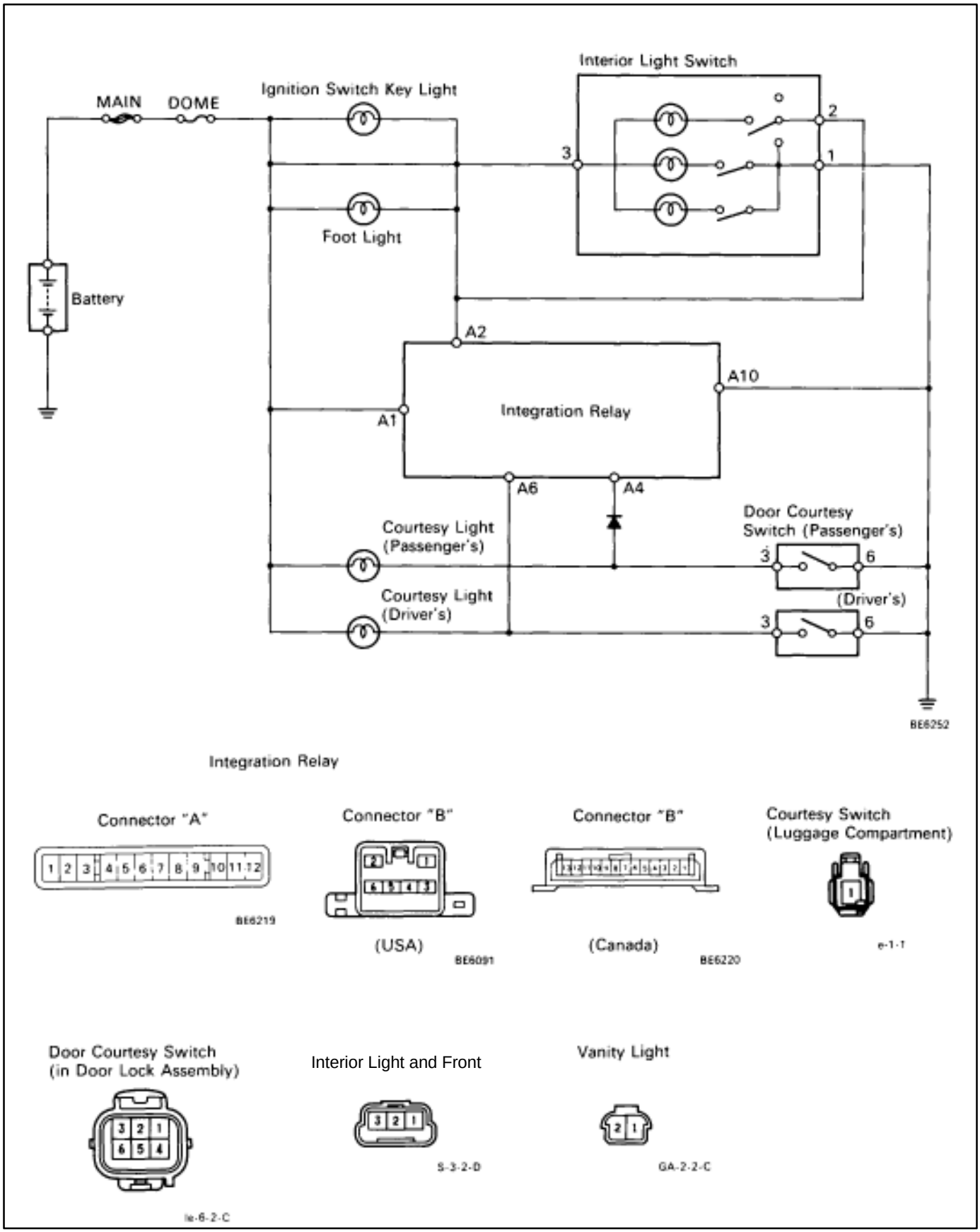

WhereEverybodyKnowsYourName

(INTERIOR LIGHT SYSTEM)
Description – INTERIOR LIGHT SYSTEM

The component parts of this system and their function are as shown in the following table.

Parts Name	Function
Integration Relay	Fades out some of the interior lights in accordance with signals from the door courtesy switch and outside handle switch. (Illuminated Entry System)
Door Courtesy Switch	Creates a closed circuit when the doors are opened lighting each courtesy light, etc. Also detects when the door is open and sends the appropriate signals to the integration relay.

PARTS LOCATION – INTERIOR LIGHT

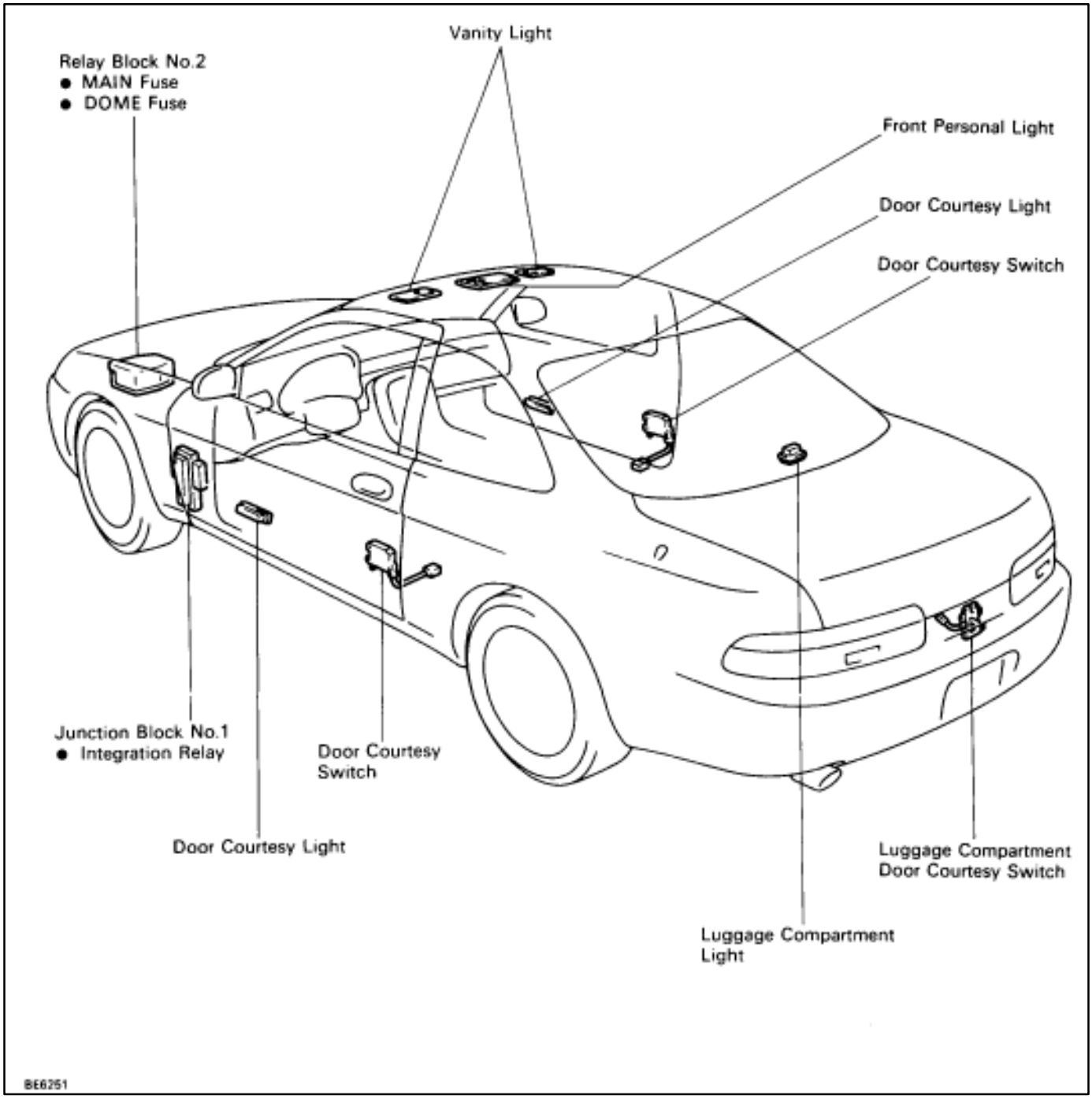

WhereEverybodyKnowsYourName

WIRING AND CONNECTOR DIAGRAMS – INTERIOR LIGHT SYSTEM

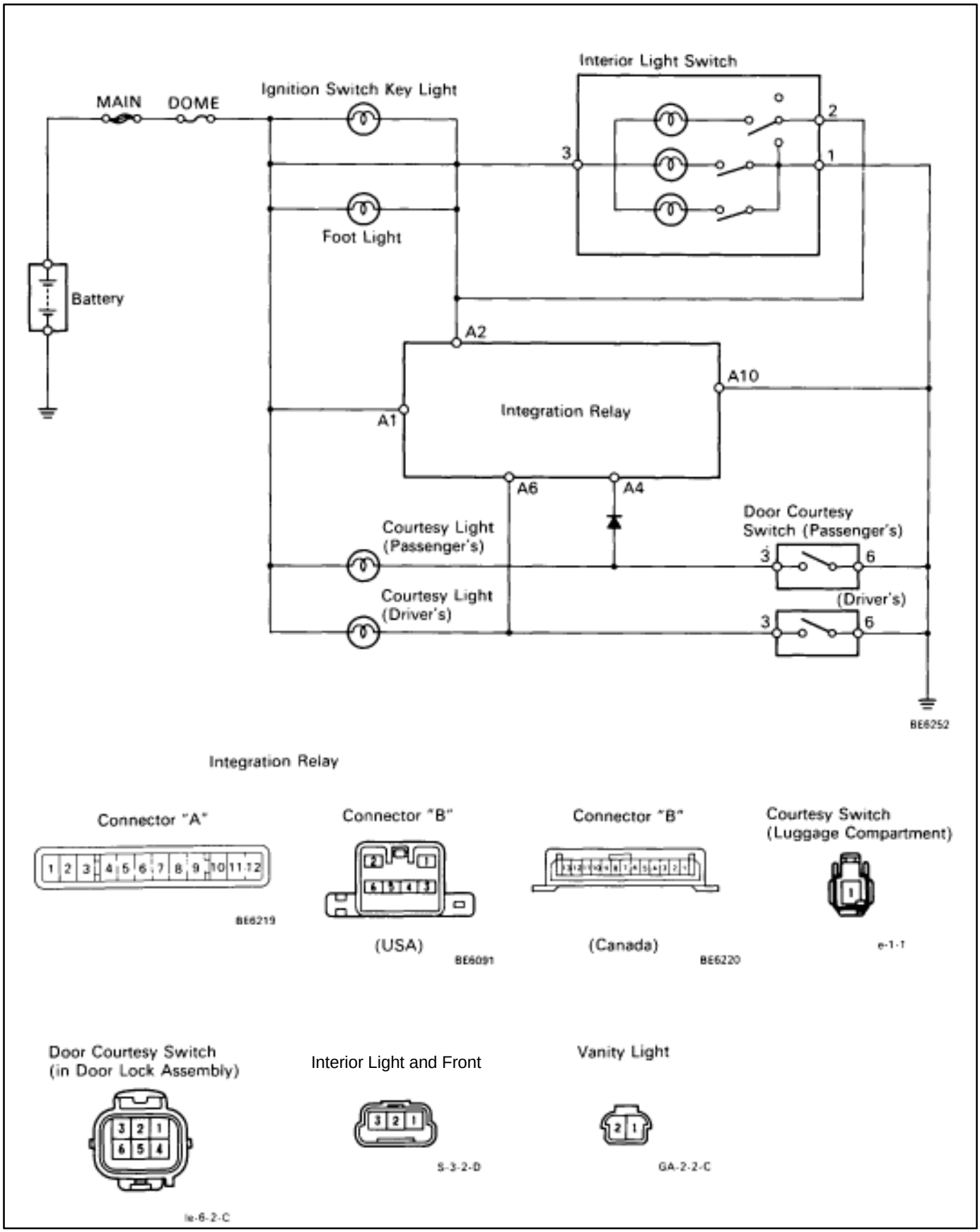

WhereEverybodyKnowsYourName

Parts Inspection – Interior Lights (Integration Relay)

REMOVAL AND INSTALLATION OF INTEGRATION RELAY

(See page BE–49)

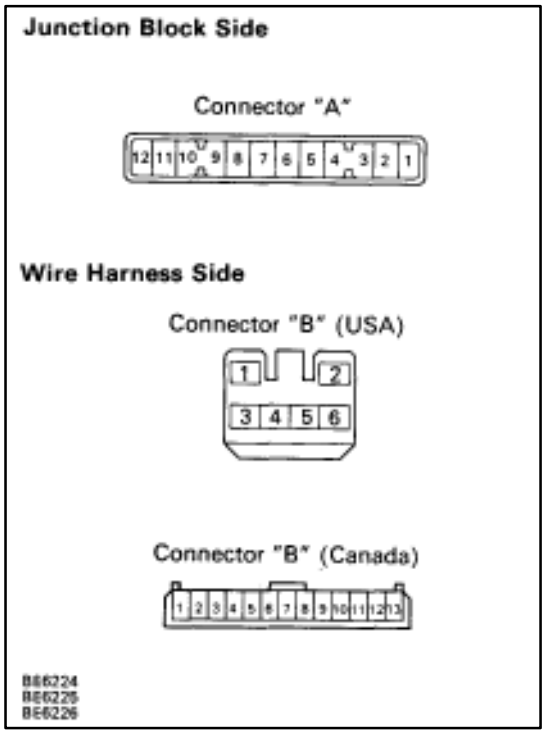

INSPECTION OF INTEGRATION RELAY

INSPECT INTEGRATION RELAY

(Relay Circuit/Illuminated Entry System)

Remove the relay from junction block and inspect the connector on the junction block side as shown in the chart.

Check for	Tester connection	Condition		Specified value
Continuity	A1–Ground	Driver's or passenger's courtesy switch	OFF (Door closed)	No continuity
			ON (Door opened)	Continuity
	A4–Ground	Passenger's courtesy switch	OFF (Door closed)	No continuity
			ON (Door opened)	Continuity
	A6–Ground	Driver's courtesy switch	OFF (Door closed)	No continuity
			ON (Door opened)	Continuity
	A10–Ground	Constant		Continuity
Voltage	A1–Ground	Constant		*Battery voltage
	A2–Ground	Constant		*Battery voltage
	A10–Ground	Interior light switch	ON	*Battery voltage
			OFF	No voltage
*: There is resistance because this circuit is grounded through the bulb.				

If the circuit is as specified, try replacing the relay with a new one.

If the circuit is not as specified, refer to BE–77 wiring diagram and inspect the circuits connected to other parts.

WhereEverybodyKnowsYourName

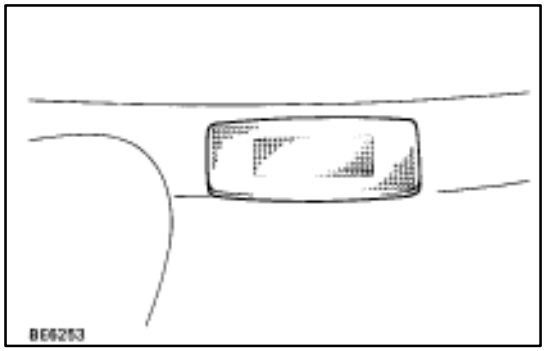

(Courtesy Switch)

REMOVAL AND INSTALLATION OF COURTESY SWITCH

1. REMOVE COURTESY SWITCH

(a) Remove door lock assembly.
(See page BO–36)
(b) Remove a screw.
(c) Remove courtesy switch from door lock assembly.

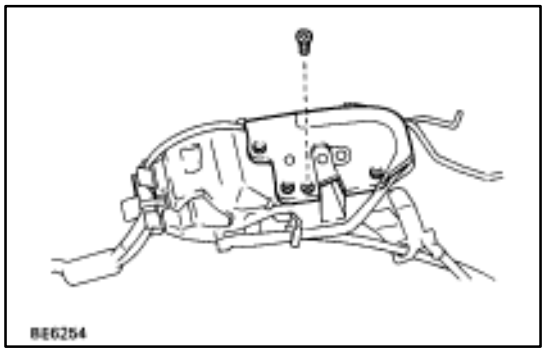

2. INSTALL COURTESY SWITCH

For installation, follow the removal procedure in reverse.

INSPECTION OF COURTESY SWITCH

INSPECT COURTESY SWITCH

(Continuity)

Inspect the switch continuity between terminals.

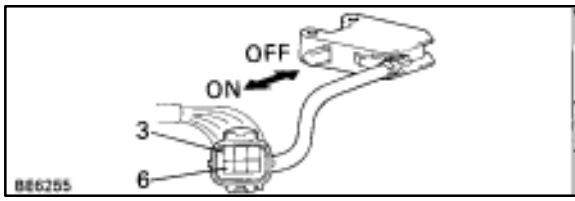

Terminal / Switch position	3	6
ON (Switch pin released)	O	O
OFF (Switch pin pushed in)		

If continuity is not as specified, replace the switch.

(Switch Circuit)

Disconnect the connector from the switch and inspect the connector on the wire harness side as shown.

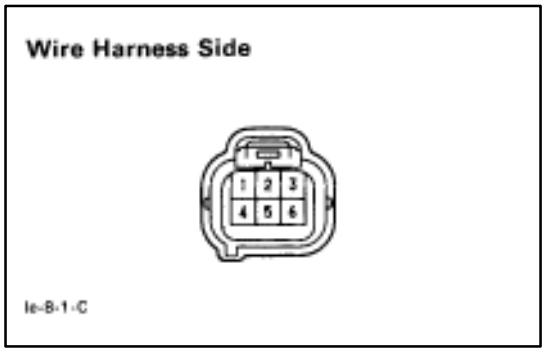

Check for	Tester connection	Condition	Specified value
Continuity	6–Ground	Constant	Continuity
Voltage	3–Ground	Constant	Battery voltage

If circuit is not as specified, inspect power source or wire harness.

WhereEverybodyKnowsYourName

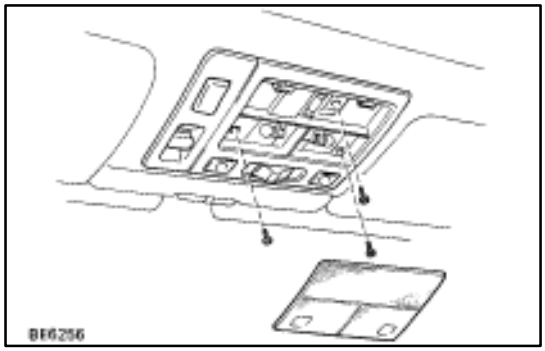

(Front Personal Light Switch)

REMOVAL AND INSTALLATION OF FRONT PERSONAL LIGHT

1. REMOVE FRONT PERSONAL LIGHT

(a) Release eight tabs and remove the lens.

(b) Remove three screws and separate front personal light.

(c) Disconnect connector and remove front personal light.

2. INSTALL FRONT PERSONAL LIGHT

For installation, follow the removal procedure in reverse.

INSPECTION OF FRONT PERSONAL LIGHT

INSPECT FRONT PERSONAL LIGHT SWITCH

(Continuity)

Inspect the light switch continuity between terminals.

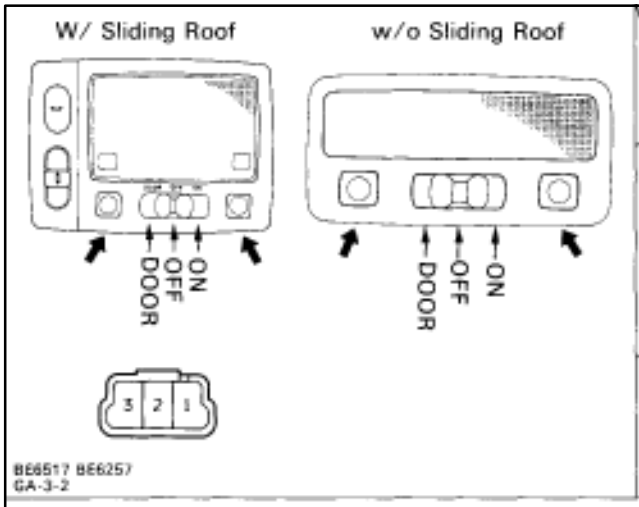

Terminal / Switch position		1	2	3
Interior Light Switch (Lever Switch)	DOOR		○——	——○
	OFF			
	ON	○——	——	——○
Personal Light (Push Switch)	*ON	○——	——	——○
	OFF			

*: Set to the interior light switch to OFF or DOOR

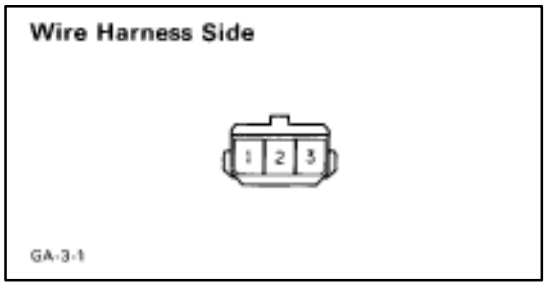

If continuity is not as specified, replace the light assembly or bulb.

(Switch Circuit)

Disconnect the connector from the switch and inspect the connector on the wire harness side as shown.

Check for	Tester connection	Condition	Specified value
Voltage	3–Ground	Constant	Battery voltage
Continuity	1–Ground	Constant	Continuity

If circuit is not as specified, inspect power source or wire harness.

WhereEverybodyKnowsYourName

(Vanity Light Switch)

REMOVAL AND INSTALLATION OF VANITY LIGHT SWITCH

1. REMOVE VANITY LIGHT

(a) Release two tabs and remove the lens.

(b) Remove two screws and separate the vanity light from sun visor.

(c) Disconnect connector and remove vanity light.

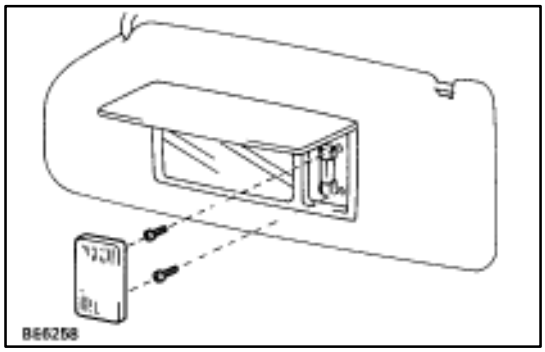

2. INSTALL VANITY LIGHT

For installation follow the removal procedure in reverse.

INSPECTION OF VANITY LIGHT

INSPECT VANITY LIGHT SWITCH

(Continuity)

Inspect the vanity light continuity between terminals.

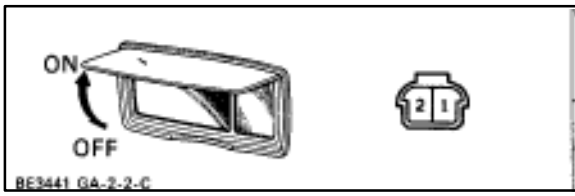

Terminal / Switch position	1	2
OFF (Closed)		
ON (Opened)	○	○

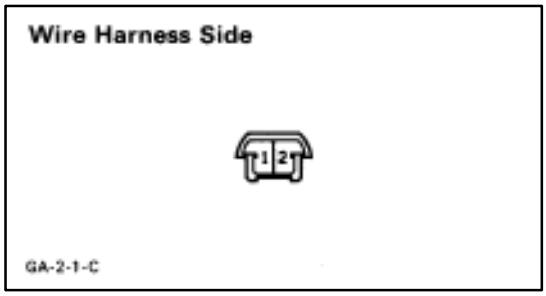

If continuity is not as specified, replace bulb or vanity light.

(Switch Circuit)

Disconnect the connector from the switch and inspect the connector on the wire harness side as shown.

Check for	Tester connection	Condition	Specified value
Voltage	1–Ground	Constant	Battery positive voltage
Continuity	2–Ground	Constant	Continuity

If circuit is not as specified, inspect power source or wire harness.

WhereEverybodyKnowsYourName

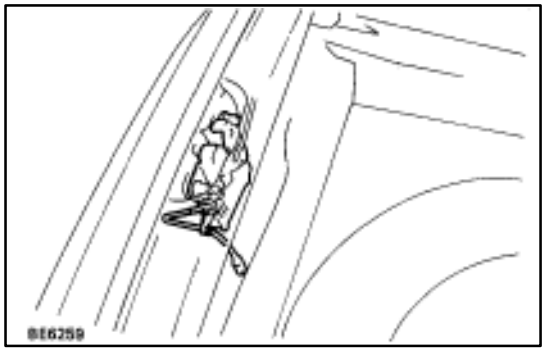

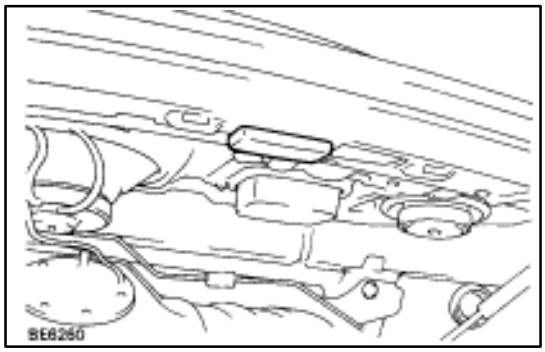

(Luggage Compartment Door Courtesy Switch)

REPLACEMENT OF LUGGAGE COMPARTMENT DOOR COURTESY SWITCH

1. REMOVE COURTESY SWITCH

(a) Remove the opening trim.
(b) Remove a bolt and disconnect connector.
(c) Remove the switch.

2. INSTALL COURTESY SWITCH

For installation follow the removal procedure in reverse.

INSPECTION OF LUGGAGE COURTESY SWITCH

INSPECT LUGGAGE DOOR COURTESY SWITCH

(Continuity)

Inspect the switch continuity between terminal and switch body.

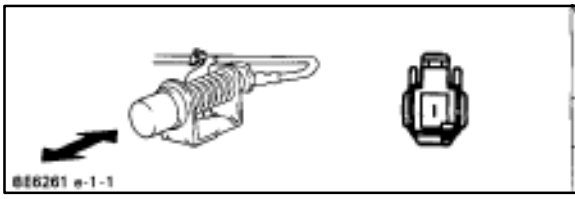

Terminal / Condition	1	Switch body
OFF (Closed)		
ON (Opened)	O———	———O

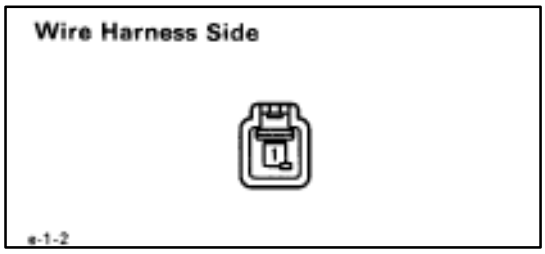

If operation is not as specified, replace the switch.

(Switch Circuit)

Disconnect the connector from the switch and inspect the connector on the wire harness as shown.

Check for	Tester connection	Condition	Specified value
Voltage	1–Ground	Constant	Battery positive voltage

If circuit is not as specified, inspect power source or wire harness.

WhereEverybodyKnowsYourName

TROUBLESHOOTING
Interior Light System

You will find the cause of trouble more easily using the table shown below. In this table, the numbers indicate the order priority of the causes in the trouble. Check each part in the order shown. If necessary, replace the parts.

See page / Part Name / Trouble	B–4,21	BE–79	BE–49	BE–80	BE–81	BE–82	–	BE–6
	DOME Fuse	Door Courtesy Switch	Integration Relay	Front Personal Light	Vanity Light	Luggage Compartment Door Courtesy Switch	Wire Harness	Bulb
Only one interior light does not light up.							2	1
Interior light does not light up. (All)	1						2	
”Illuminated Entry System” does not operate.		2	1				3	
Interior light does not light up. (in front personal light)				2			3	1
Front personal light does not light up.				2			3	1
Rear personal light does not light up.							2	1
Vanity light does not light up.					2		3	1
Luggage compartment light does not light up.						2	3	1
Courtesy light does not light up.		2					3	1

WhereEverybodyKnowsYourName

WIPER AND WASHER SYSTEM

DESCRIPTION

The component parts of this system and their functions are described in the following table.

Parts Name	Function
Wiper Switch	This switch changes the current from the wiper motor in order to operate the wiper motor at different speeds. It also has a built–in variable resistor which is used to adjust the interval for intermittent operation.
Wiper Relay	This relay turns the current to the wiper motor ON and OFF at intervals and operates the wipers continuously when the washer switch is ON.
Wiper Motor	Switching of the current at the wiper switch and wiper relay operates the motor at each speed (HI, LO) and at intervals (INT), thus moving the wiper arms and blades.
Washer Switch	By grounding current from the washer motor, this switch operates the washer motor.
Washer Motor	A pump in this motor pumps washer fluid and sprays it out from the washer nozzles.

Parts Location

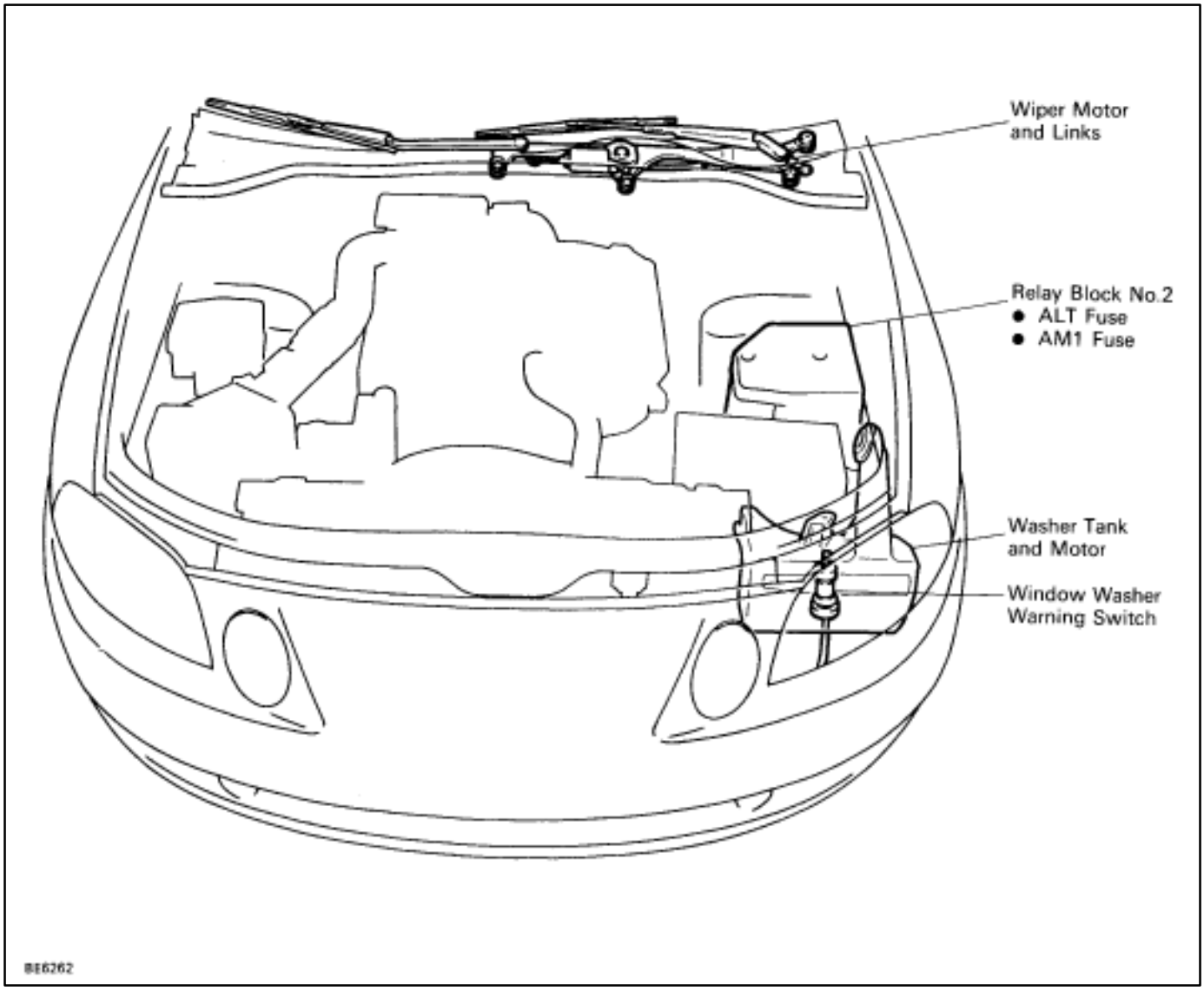

WhereEverybodyKnowsYourName

Parts Location (Cont'd)

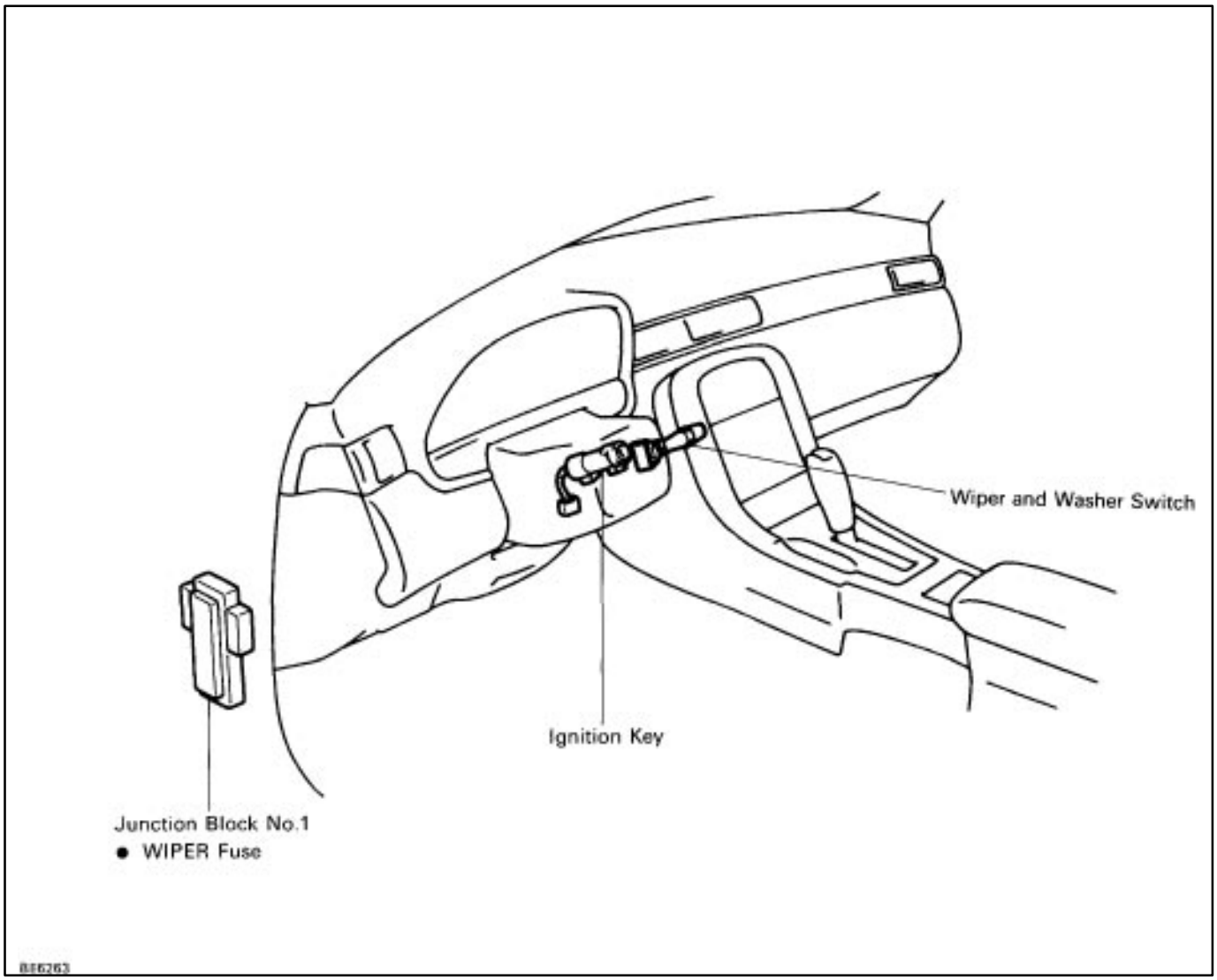

WhereEverybodyKnowsYourName

Wiring And Connector Diagrams

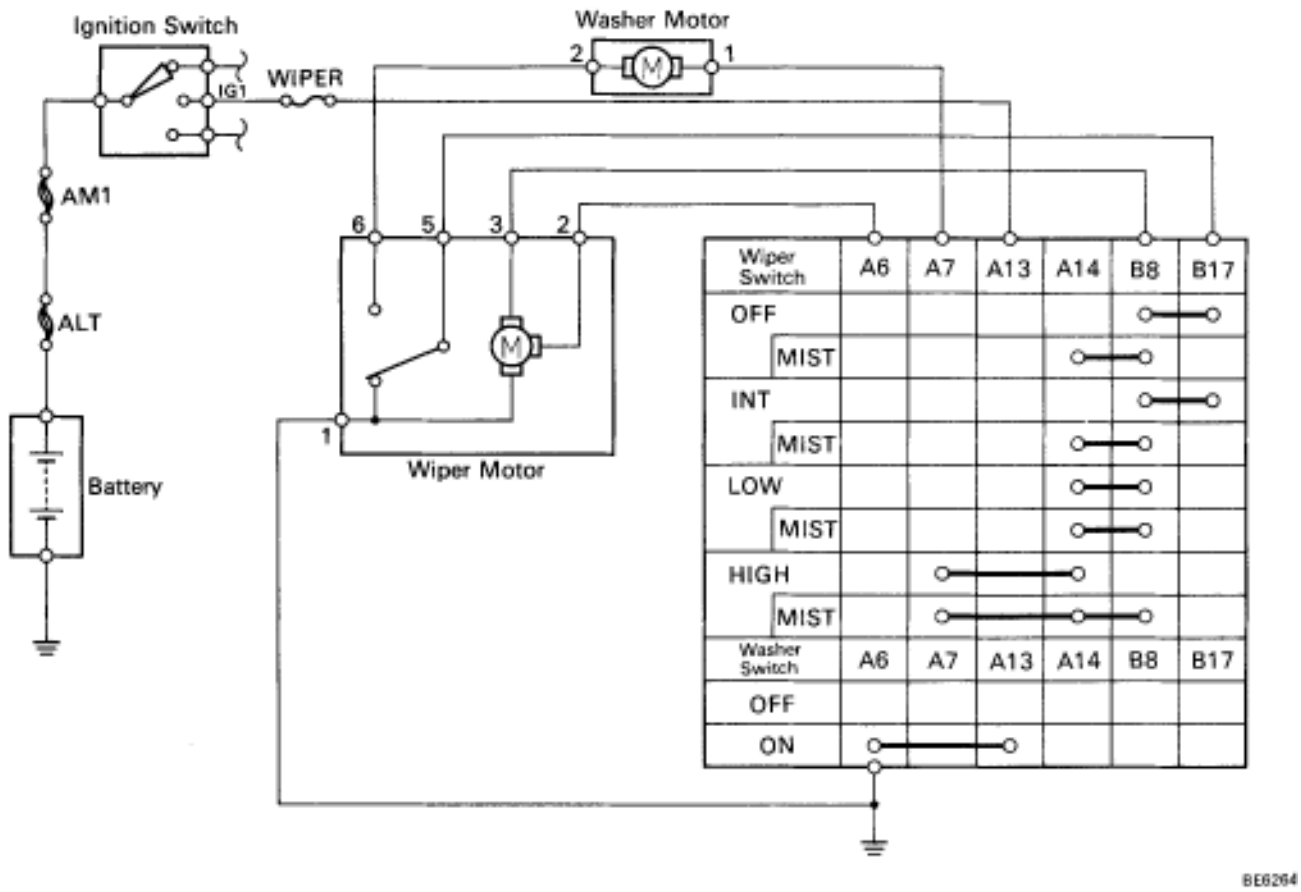

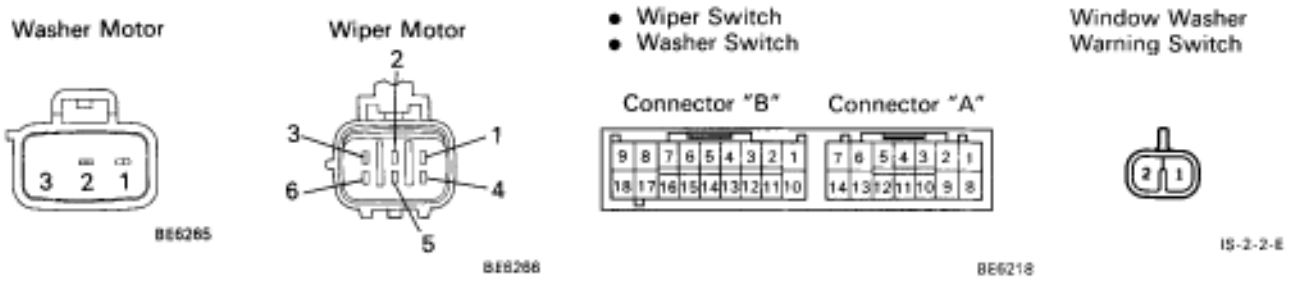

WhereEverybodyKnowsYourName

Parts Inspection
(Wiper Motor and Link Assembly)
COMPONENTS

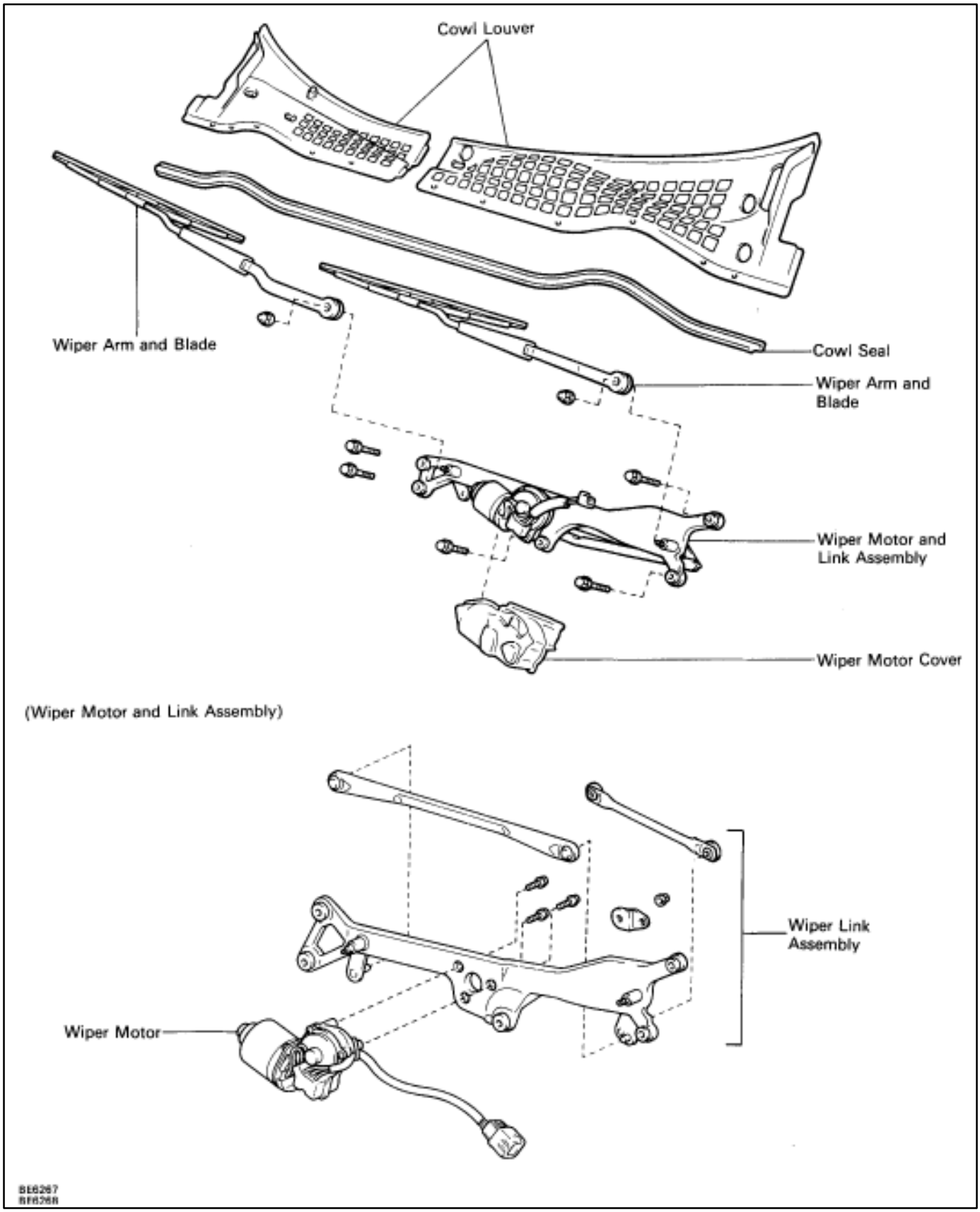

WhereEverybodyKnowsYourName

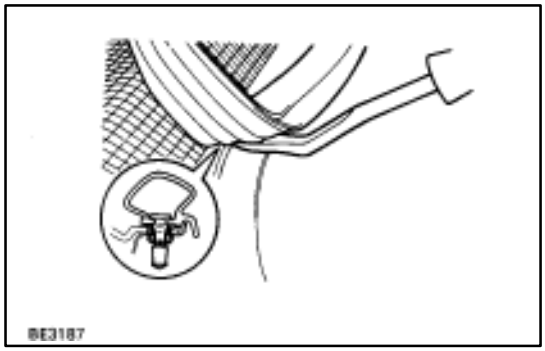

REMOVAL OF WIPER MOTOR AND LINK ASSEMBLY

1. REMOVE WIPER ARM AND BLADE ASSEMBLY

2. REMOVE COWL TOP LOUVER

(a) Remove hood to cowl seal.

(b) Remove cowl louver.

HINT: Raise the front side of the cowl louver up and remove the cowl louver.

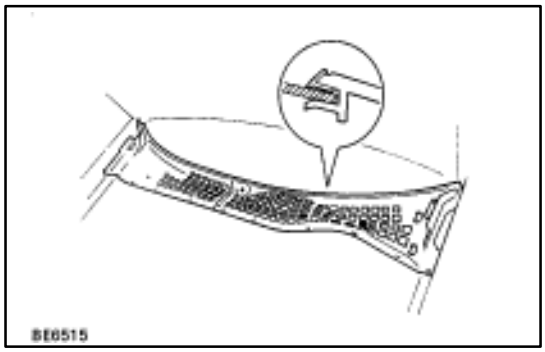

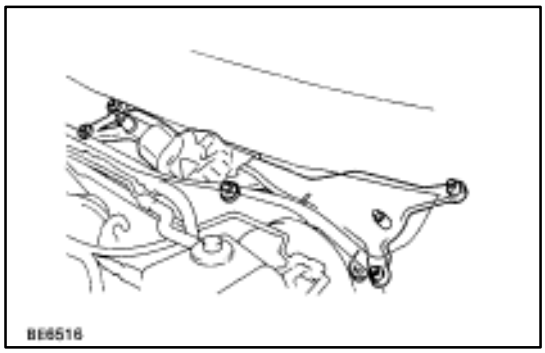

3. REMOVE WIPER MOTOR AND LINK ASSEMBLY

(a) Remove five set bolts.

(b) Disconnect connector.

(c) Raise the front side of the wiper motor and link assembly up and remove the wiper motor and link assembly.

(d) Remove wiper motor cover.

INSTALLATION OF WIPER MOTOR AND LINK ASSEMBLY

1. INSTALL WIPER MOTOR AND LINK ASSEMBLY

(a) Install wiper motor cover.

(b) Install wiper motor and link assembly.

(c) Connect the connector.

(d) Install and torque the four bolts.

Torque: 5.4 N·m (55 kgf·cm, 48 in.·lbf)

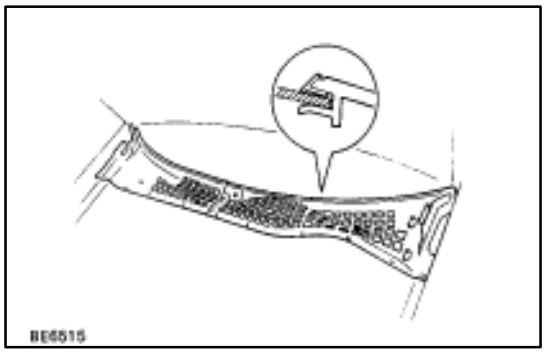

2. INSTALL COWL LOUVER

(a) Install cowl louver.

HINT: With the front side of the louver raised, install the protector on the glass, then push the louver down.

(b) Install hood to cowl seal.

WhereEverybodyKnowsYourName

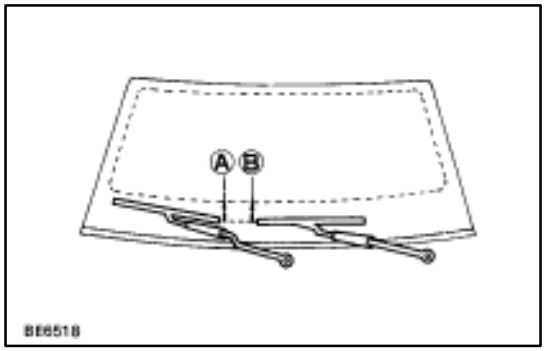

3. INSTALL WIPER ARM AND BLADE ASSEMBLY

(a) Install the wiper arms and blades, and operate the wipers once and turn the wiper switch OFF.

(b) Adjust the installation positions of the wiper arms and blades to the positions shown in the figure.

(A) Approx. 44.0 mm (1.734 in.)

(B) Approx. 45.0 mm (1.773 in.)

Torque the nut.

Torque: 20 N·m (205 kgf·cm, 15 ft·lbf)

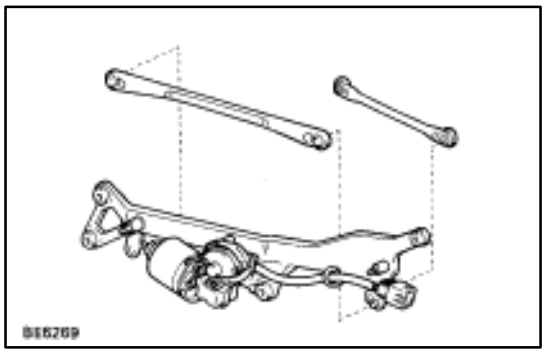

DISASSEMBLY OF WIPER MOTOR AND LINK ASSEMBLY

1. REMOVE CASE ROD AND WIPER LINK NO.1 ROD

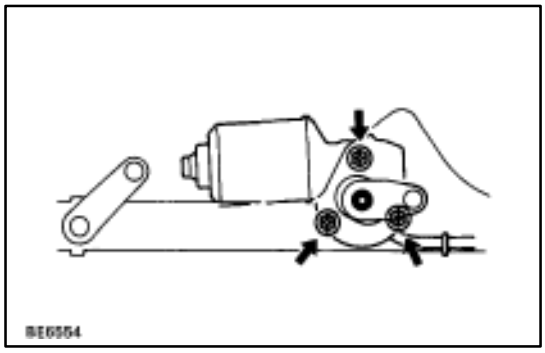

2. REMOVE WIPER MOTOR

(a) Remove wire harness clamp and three bolts and a nut.

(b) Remove wiper motor.

ASSEMBLY OF WIPER MOTOR AND LINK ASSEMBLY

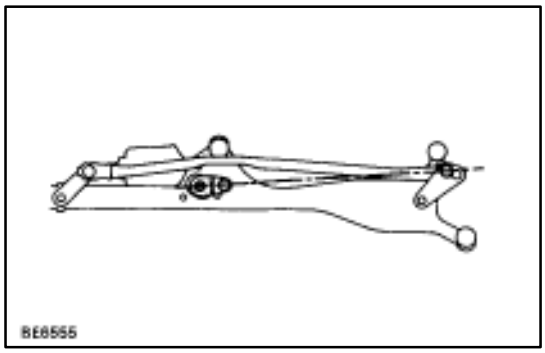

1. INSTALL WIPER MOTOR

(a) Connect the wiper motor connector.

(b) Operate the wiper motor once and turn the wiper switch OFF.

(c) Install wiper motor as shown in the figure.

(d) Install wire harness clamp.

(e) Install three bolts and a nut.

Torque:

BOLT: 5.4 N·m (55 kgf·cm, 48 in.·lbf)

NUT: 17 N·m (175 kgf·cm, 13 ft·lbf)

2. INSTALL CASE ROD AND WIPER LINK NO.1 ROD

WhereEverybodyKnowsYourName

INSPECTION OF WIPER MOTOR

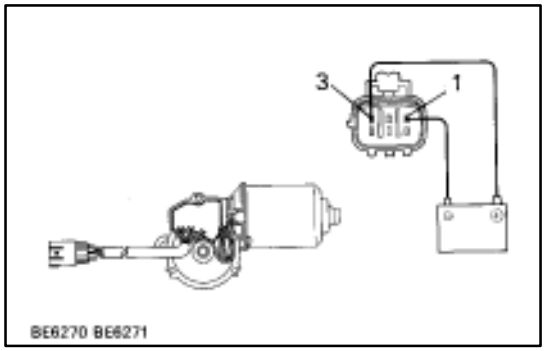

INSPECT MOTOR

(Operation at Low Speed)

Connect the positive (+) lead from the battery to terminal 3 and the negative (–) lead to terminal 1, check that the motor operates at low speed.

If operation is not as specified, replace the motor.

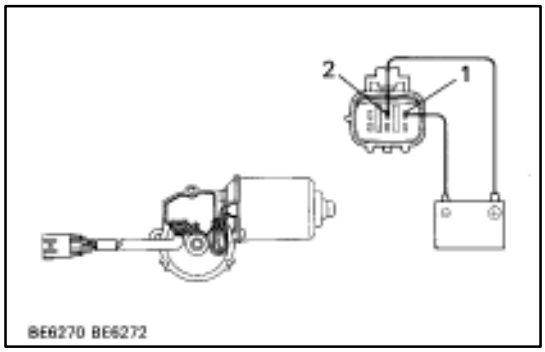

(Operation at High Speed)

Connect the positive (+) lead from the battery to terminal 2 and the negative (–) lead to terminal 1, check that the motor operates at high speed.

If operation is not as specified, replace the motor.

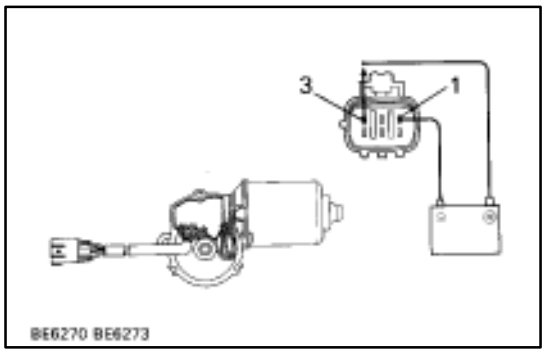

(Operation, Stopping at Stop Position)

(a) Operate the motor at low speed and stop the motor operation anywhere except at the stop position by disconnecting positive (+) lead from terminal 3.

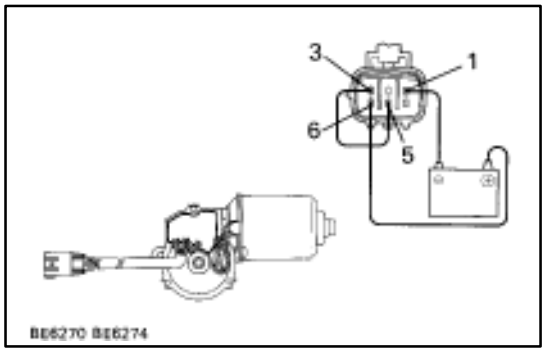

(b) Connect terminals 3 and 5.

(c) Connect the positive (+) lead from the battery to terminal 6 and the negative (–) lead to terminal 1, check that the motor stops running at the stop position after the motor operates again.

If operation is not as specified, replace the motor.

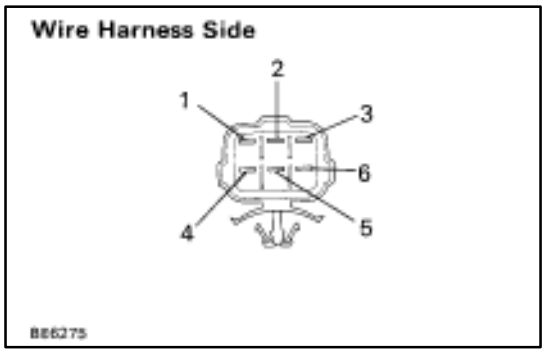

(Motor Circuit)

Disconnect the connector from the motor and inspect the connector on the wire harness side as shown.

WhereEverybodyKnowsYourName

Check for	Tester connection	Condition		Specified value
Continuity	1–Ground	Constant		Continuity
Voltage	2–Ground	Wiper switch position (Ignition switch ON)	HIGH or MIST	Battery positive voltage
			OFF or INT, LOW	No voltage
	3–Ground	Wiper switch position (Ignition switch ON)	LOW and MIST	Battery positive voltage
			OFF or INT, HIGH	No voltage
	6–Ground	Ignition switch	LOCK or ACC	No voltage
			ON	Battery positive voltage

If circuit is not as specified, refer to BE–86 wiring diagram and inspect the circuits connected to other parts.

(Combination Switch)

INSPECT WIPER AND WASHER SWITCH
(See page BE–46)

(Continuity)
Inspect the switch continuity between terminals.

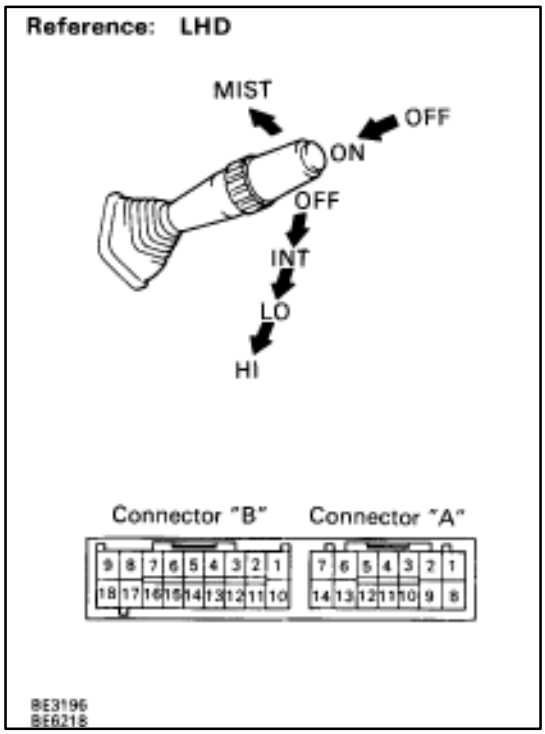

Terminal / Switch position			A6	A7	A13	A14	B8	B17
Wiper	OFF	OFF					○—○	
		MIST				○—○		
	INT	OFF					○—○	
		MIST				○—○		
	LO	OFF				○—○		
		MIST				○—○		
	HI	OFF		○—○				
		MIST		○—○		○—○		
Washer	OFF							
	ON		○—○					

If continuity is not as specified, replace the switch.
(Resistance)
Inspect the switch resistance between terminals.

Terminal / Switch position			A14	A17	Specified value
Wiper	INT	SLOW	○—⁄⁄—○		Approx. 50 kΩ
		FAST			Less then 10 kΩ

If resistance value is not as specified, replace the switch.
(Switch Circuit)
Disconnect the switch and wiper relay connector, inspect each connector on the wire harness side as shown.

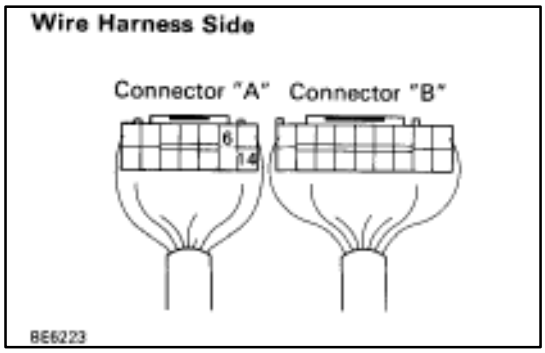

WhereEverybodyKnowsYourName

Check for	Tester connection	Condition		Specified value
Voltage	A14–Ground	Ignition switch position	LOCK or ACC	No voltage
			ON	Battery positive voltage
Continuity	A6–Ground	Constant		Continuity

(Washer Motor and Tank)

REMOVAL AND INSTALLATION OF WASHER MOTOR AND TANK

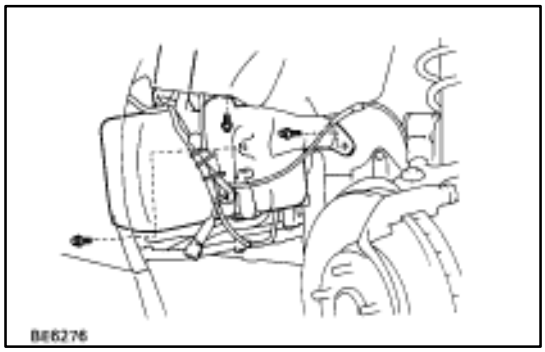

1. REMOVE WASHER TANK AND WASHER MOTOR

(a) Remove fender liner.
(b) Disconnect connector and hose.
(c) Remove three screws and tank.
(d) Separate tank and washer motor.

2. INSTALL WASHER TANK AND MOTOR

For installation follow the removal procedure in reverse.

INSPECTION OF WASHER MOTOR

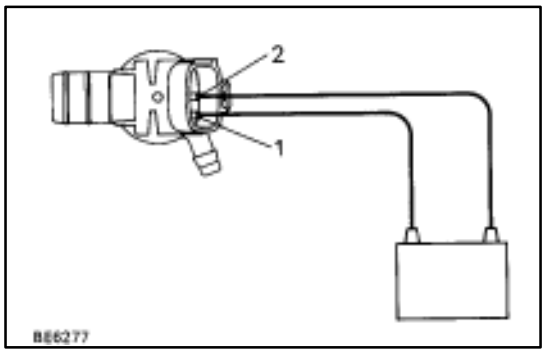

INSPECT WASHER MOTOR

(Operation)

Connect the positive (+) lead from the battery to terminal 2 and the negative (–) lead to terminal 1, check that the motor operates.

NOTICE: There tests must be performed quickly (within 20 seconds) to prevent the coil from burning out.

If operation is not as specified, replace the motor.

(Circuit)

Disconnect the connector from the washer motor and inspect the connector on harness side as shown.

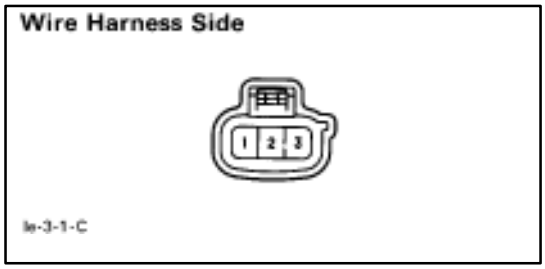

Check for	Tester connection	Condition	Specified value
Continuity	1–Ground	Push washer switch ON	Continuity
Voltage	2–Ground	Turn ignition switch ON	Battery positive voltage

If circuit is not as specified, inspect wire harness, power source or wiper switch.

(Window Washer Level Warning Switch)

(See page BE–124)

WhereEverybodyKnowsYourName

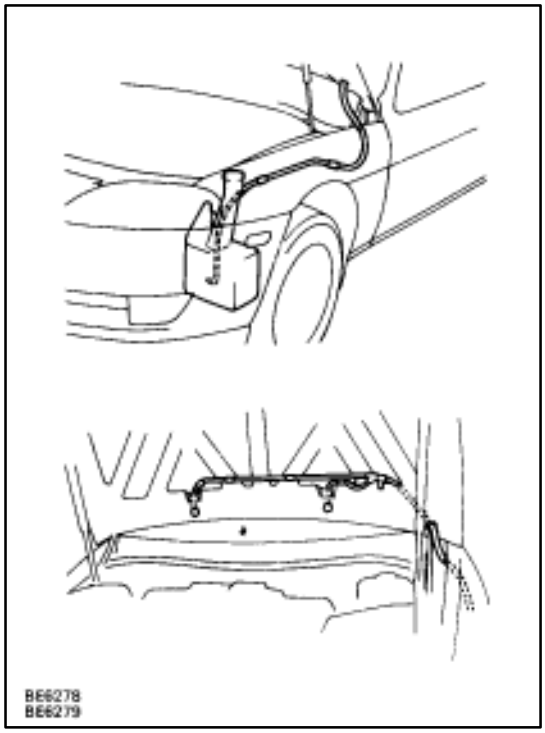

(Washer Hose and Nozzle)

REMOVAL AND INSTALLATION OF WASHER HOSE AND NOZZLE

1. REMOVE WASHER HOSE

(a) Remove fender liner.

(b) Disconnect washer hose from washer motor.

(c) Remove the hose clamps as shown.

HINT: When installing or removing the hose clamp on the underside of the engine hood, remove the clip on the underside of the silencer.

(d) Remove service hole grommet and disconnect the hose from washer nozzle.

2. INSTALL WASHER HOSE

For installation follow the removal procedure in reverse.

HINT: During assembly, the washer hose should be passed under neath the engine hood hinge on the body side.

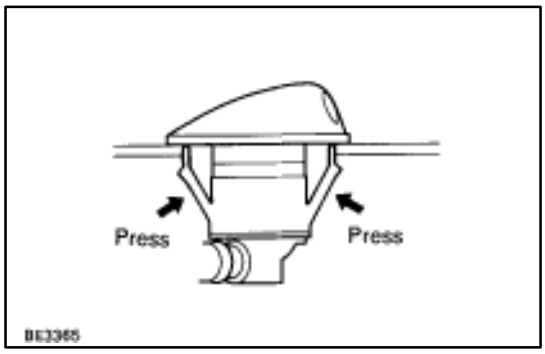

3. REMOVE WASHER NOZZLE

(a) Remove service hole grommet.

(b) Disconnect washer hose from nozzle.

(c) Press on the claw on the underside of the nozzle and remove it from above.

4. INSTALL WASHER NOZZLE

For installation follow the removal procedure in reverse.

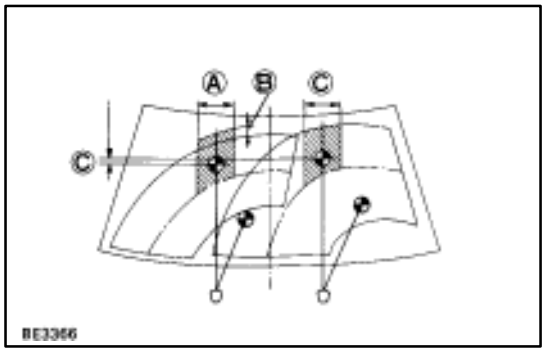

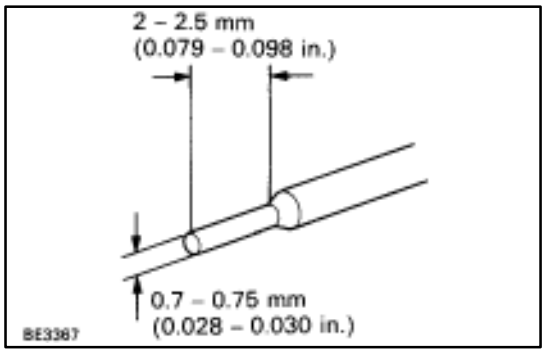

ADJUSTMENT OF WASHER NOZZLE

1. INSPECT WASHER NOZZLE

(a) While operating the washer, check whether the upper point where the washer fluid hits the windshield and the up surge area are within the range indicated by the hatched line.

(A) Approx. 150 mm (5.91 in.)

(B) Approx. 50 mm (1.99 in.)

(C) Approx. 0–1000 mm (0–3.94 in.)

(b) Check if the lower point where the washer fluid hits the windshield is within the range of the wiping pattern (the area of the glass which is wiped by the wiped blades.)

2. ADJUST WASHER NOZZLE

Using a tool like that shown in the figure, change the direction of the nozzle hole to adjust the point where washer fluid strikes the windshield.

WhereEverybodyKnowsYourName

TROUBLESHOOTING

You will find the cause of trouble more easily by properly using the table shown below. In this table, the numbers indicate the order priority of causes of trouble. Check each part in the order shown. If necessary, replace the parts.

See page / Part Name / Trouble	B–4,21	BE–26	BE–4,20	BE–91	BE–90	BE–92	BE–91	BE–93	–
	AM1 Fuse	Ignition Switch	WIPER Fuse	Wiper Switch	Wiper Motor	Washer Motor	Washer Switch	Washer Hose and Nozzle	Wire Harness
Wipers and washers do not operate.*1	1	3	2	4	5				6
Wipers and washers do not operate.*2		2	1	3	4				5
Wipers and washers do not operate.*3			1	2	3				4
Wipers do not operate in LO, HI or MIST.				1	2				3
Wipers do not operate in INT.				1	2				3
Washer motor does not operate.						2	1		3
Wipers do not operate when washer switch is ON.						1			2
Washer fluid does not spray.								1	

*1: Door Lock and Power Windows do not operate
*2: Door Lock and Power Window are normal. Combination Meter and Turn Signal do not operate.
*3: Combination Meter and Turn Signal are normal.

WhereEverybodyKnowsYourName

COMBINATION METER

WhereEverybodyKnowsYourName

DESCRIPTION

The combination meter has various meters and gauges which show the vehicle's condition, warning lights which monitor abnormalities in the vehicle and inform the driver, indicator lights which inform the driver of the condition of each part of vehicle, and a function for illumination and brightness adjustment of meters and gauges.
The component parts of this system and their functions are described in the following table.

Parts Name	Function
Speedometer	The speedometer needle moves in accordance with signals from the speed sensor to indicate the vehicle's speed.
Tachometer	The tachometer needle moves in accordance with signals from the igniter to indicate the engine's speed.
Water Temperatrue Gauge	The water temperature gauge's needle moves in accordance with signals from the sender gauge and indicates the temperature of the engine coolant.
Fuel Gauge	The fuel gauge needle moves in accordance with signals from the sender gauge, indicating the amount of fuel remaining in the fuel tank.
Odometer	The odometer counts the total distance traveled by the vehicle in accordance with pulse signals from the speed sensor.
Twin Trip Switch	The twin trip meter counts the distance traveled by the vehicle in accordance with pulse signals from the speed sensor. It can be reset using a switch and can be used to switch between trip meters A and B.
Circuit Plate	This plate contains the circuitry for each meter and gauge and for each warning light and indicator light, as well as an internal engine oil level warning drive circuit, drive circuits for the odometer and trip meter and brightness adjustment circuitry for each indicator.
Speed Sensor	Mounted in the transmission, this sensor outputs pulse signals to the combination meter in accordance with the speed of the output shaft.
Twin Trip Switch	Operation of this switch switches between the A and B trip meters and sends reset signals to the combination meter.
Water Temperature Sender Gauge	This sender converts engine coolant temperatures to a resistance value in signal form to the combination meter.
Fuel Sender Gauge	This sender converts the level of fuel remaining in fuel tank to resistance value and sends the resistance value in signal form to combination meter.
Rheostat Light Control Volume	In order to adjust the degree of illumination of the combination meter, the resistance value of the built–in variable resistor is sent to the combination meter and rheostat light control.
Fuel Level Warning Switch	When the level of fuel remaining falls below a predetermined level, continuity is established with this switch, which is built into the fuel sender gauge, causing a warning light to light up.
Low Oil Pressure Warning Switch	This switch is mounted on the engine block. Continuity is established in this switch when the oil pressure is low, causing a warning light to light up.
Integration Relay (Seat Belt Warning Relay)	This relay receives current from fuse GAUGE and DOME and is connected to each buckle switch, door courtesy switch, key unlock warning switch and warning light. As part of the seat belt warning system, it sounds a chime and lights a warning light when seat belts are unfastened. As part of the key unlock warning system, it sounds a chime when the set conditions are fulfilled.
Light Failure Sensor	This sensor senses when a bulb in rear combination light is burnt out and lights up a warning light.

WhereEverybodyKnowsYourName

Parts Name	Function
Coolant Level Warning Switch	This switch is installed in the radiator reservoir tank. It lights up a warning light when the coolant level becomes low.
Engine Oil Level Warning Switch	This switch is mounted in the engine oil pan. It lights a warning light when the engine oil level is low.
Brake Fluid Level Warning Switch	This switch is mounted in the brake master cylinder reservoir tank. It lights up a warning light when the brake fluid level is low.
Parking Brake Switch	This switch is on the parking brake lever bracket. Continuity in this switch is established when the lever is released, causing a warning light to light up.
Door Courtesy Switch	Continuity is established in this switch when a door is opened, causing a warning light to light up.
Warning Lights	When an abnormality is detected in the vehicle, current is sent to these lights, or they are grounded, causing them to light up.
Indicator Lights	Current is sent to these lights, or they are grounded, causing them to light up and indicate the vehicle's condition to the driver.
Window Washer Level Warning Switch	This switch is mounted in the window washer tank. It lights a warning light when the window washer level becomes low.

WhereEverybodyKnowsYourName

Parts Location

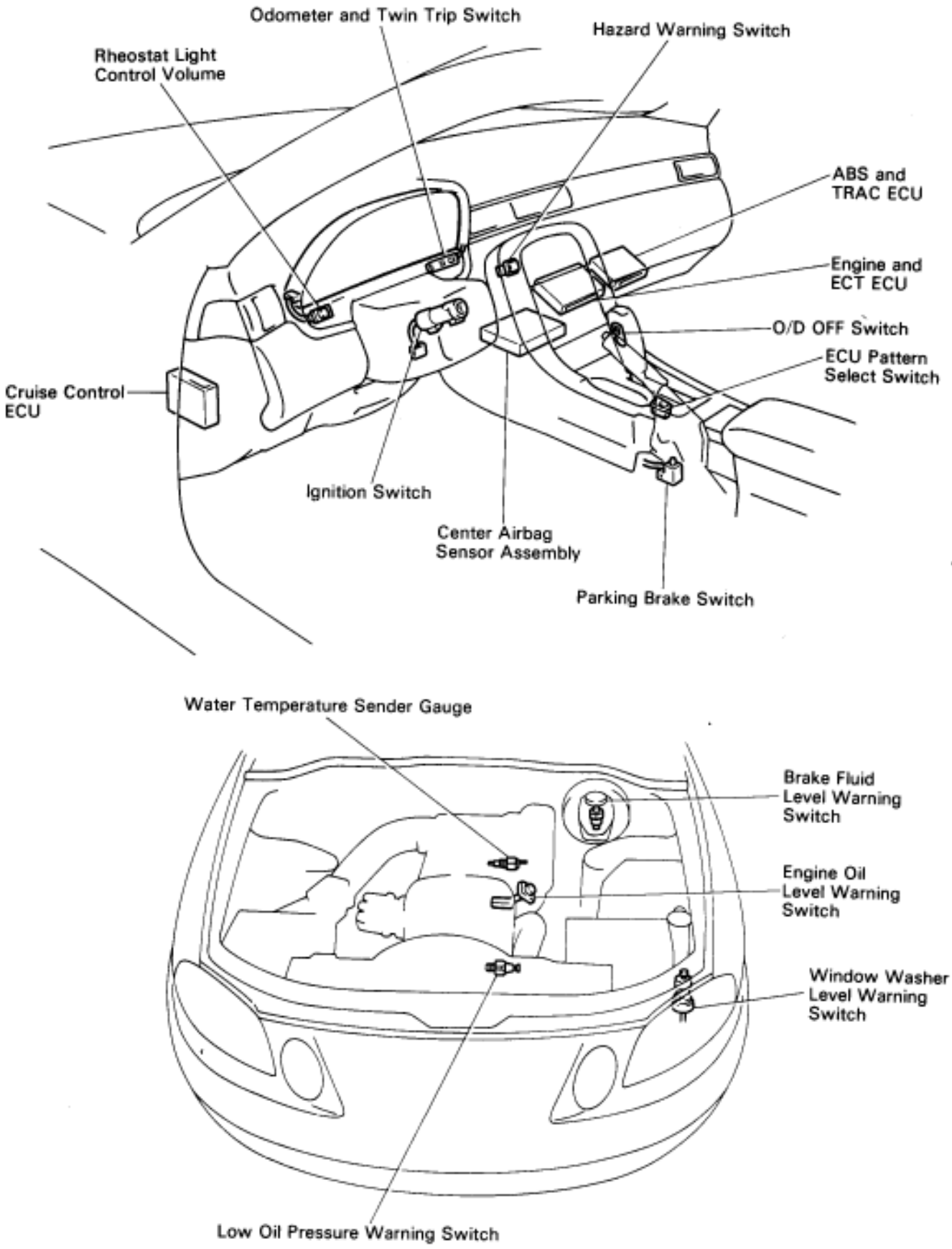

WhereEverybodyKnowsYourName

Parts Location (Cont'd)

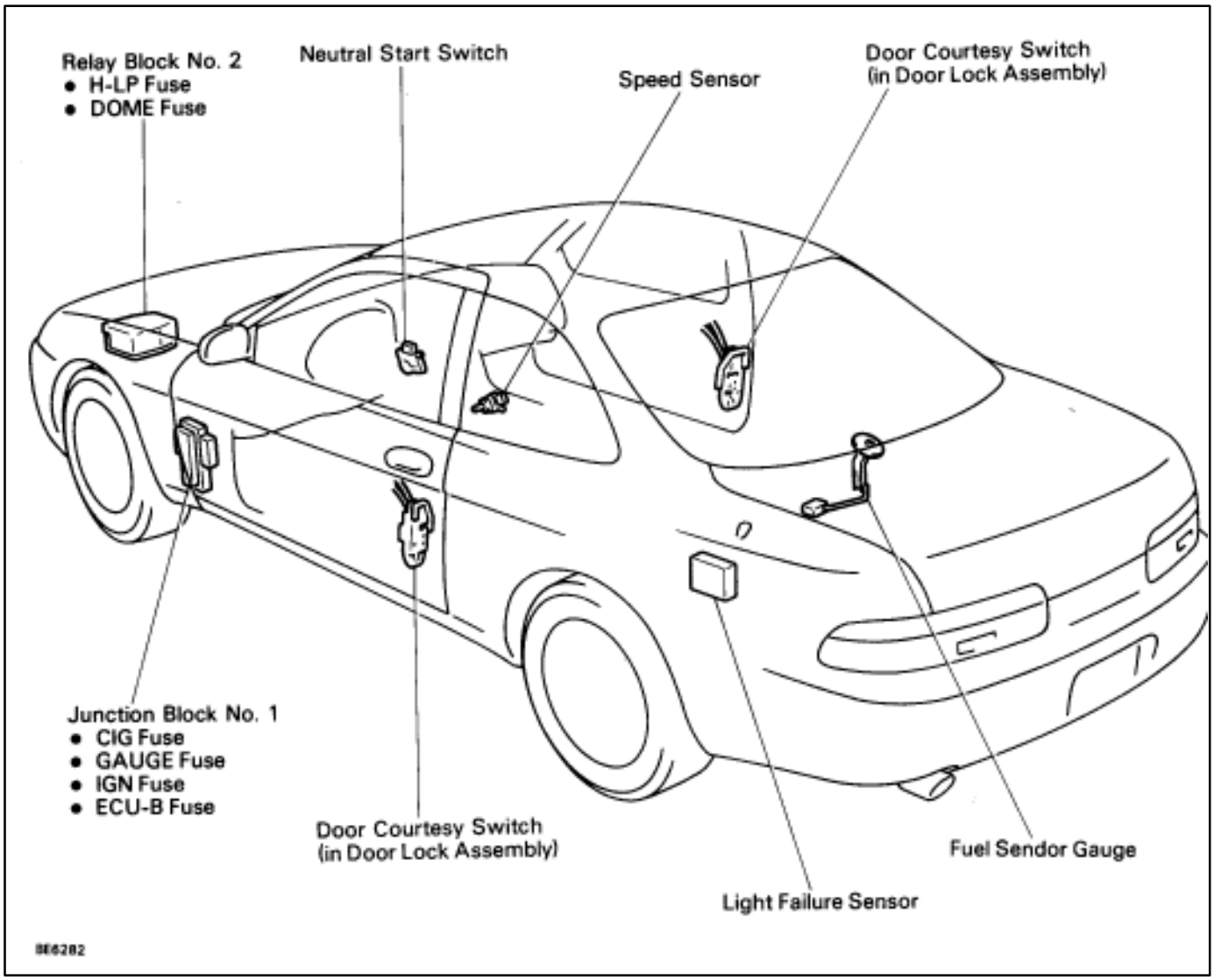

WhereEverybodyKnowsYourName

Wiring Diagram

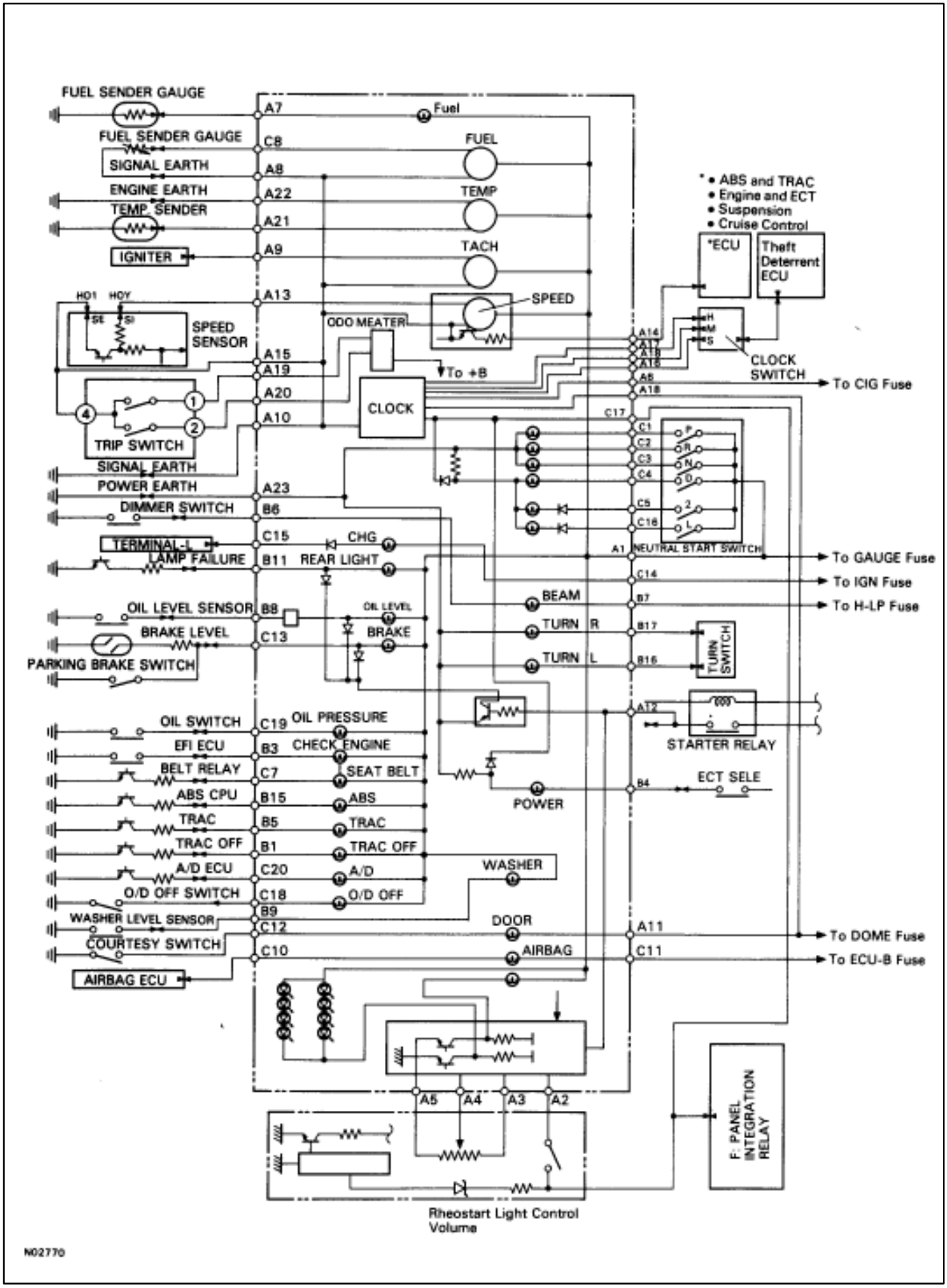

WhereEverybodyKnowsYourName

Connector Diagrams

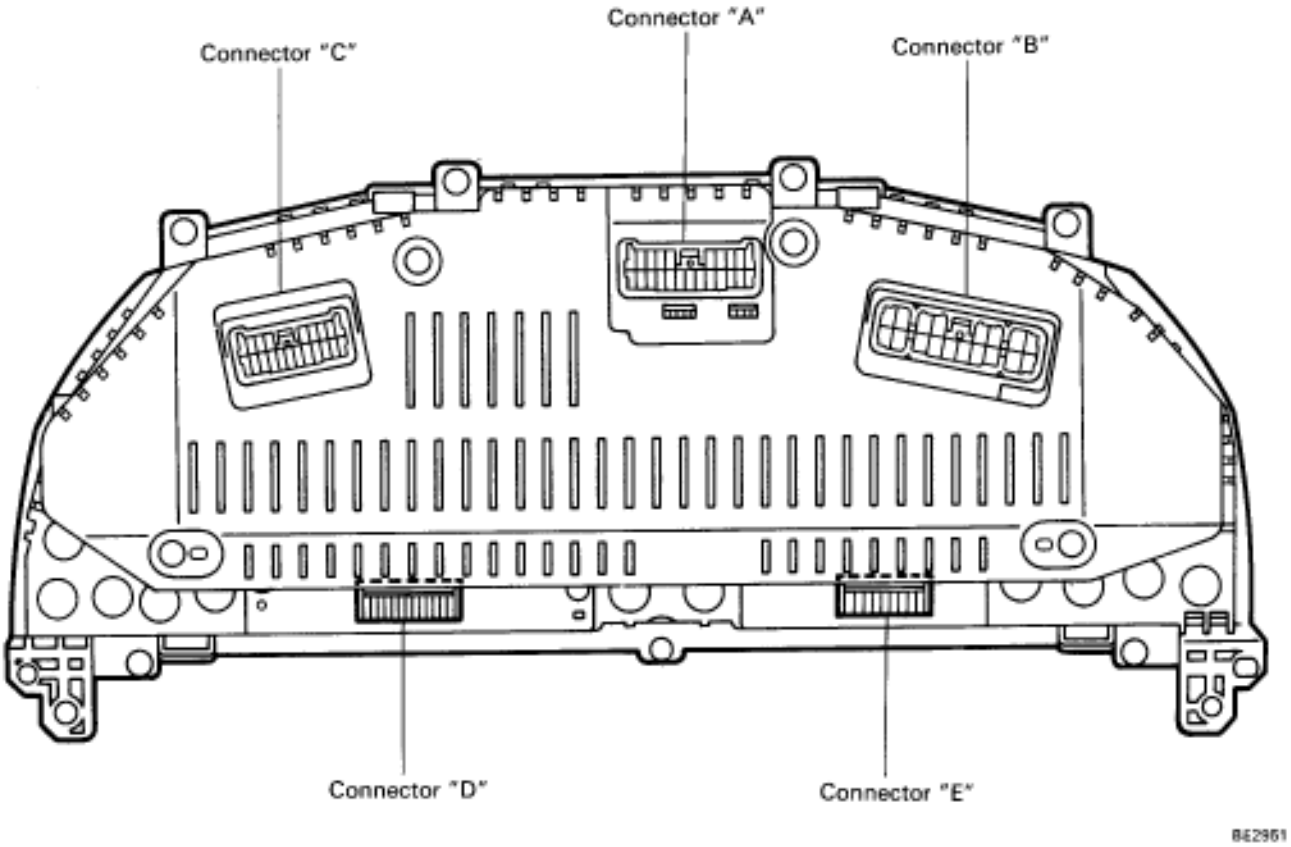

Combination Meter

Connector "A"

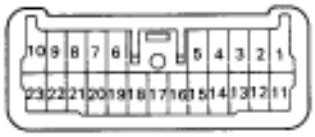

Connector "B"

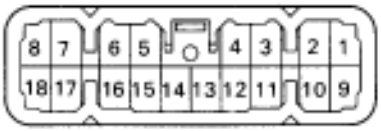

Connector "C"

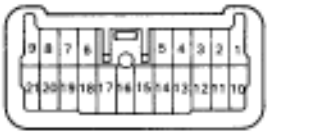

Connector "D"

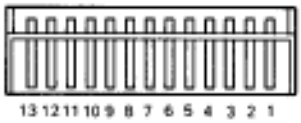

Connector "E"

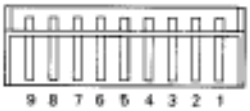

WhereEverybodyKnowsYourName

Connector Diagrams (Cont'd)

Speed Sensor

IS-3-2

Water Temperature Sender Gauge

BE2563

Fuel Sender

H-3-2

Parking Brake Switch

e-1-2

Odometer and Twin Trip Switch

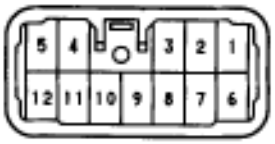

e-12-2-B

Engine Oil Level Warning Switch

BE3710

Low Oil Pressure Warning Switch

BE3928

Window Washer Level Warning Switch

IS-2-2-E

Brake Fluid Level Warning Switch

BE6289

Door Courtesy Switch (in Door Lock Assembly)

le-6-2-C

Integration Relay Connector "A"

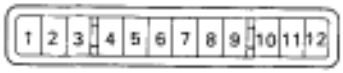

BE6219

(USA) Connector "B"

BE6091

Odometer and Twin Trip Meter

BE6290

Clock

BE6291

(Canada) Connector "B"

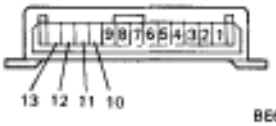

BE6220

Light Failure Sensor

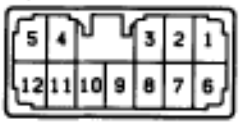

S-12-2

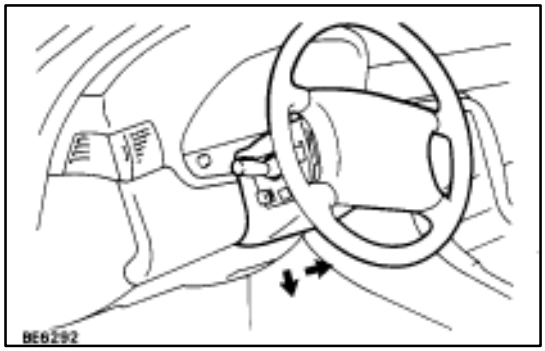

Parts Inspection (Combination Meter Assembly)

REMOVAL AND INSTALLATION OF COMBINATION METER ASSEMBLY

1. REMOVE COMBINATION METER ASSEMBLY

(a) Lower the steering wheel fully and set it in the far position.

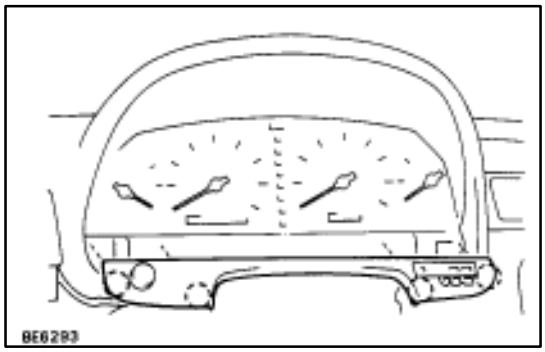

(b) Turn the ignition switch to LOCK and disconnect battery terminals.

CAUTION: Work must be started after approx. 20 seconds or longer from the time the ignition switch is turned to the "LOCK" position and negative (–) terminal cable is disconnected from the battery.

(c) Remove instrument cluster finish panel.

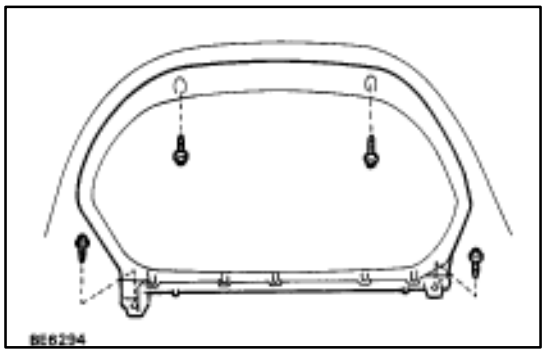

(d) Remove four screws and disconnect three connectors.

(e) Remove combination meter assembly.

2. INSTALL COMBINATION METER ASSEMBLY

For installation, follow the removal procedure in reverse.

WhereEverybodyKnowsYourName

DISASSEMBLY OF COMBINATION METER ASSEMBLY (Components)

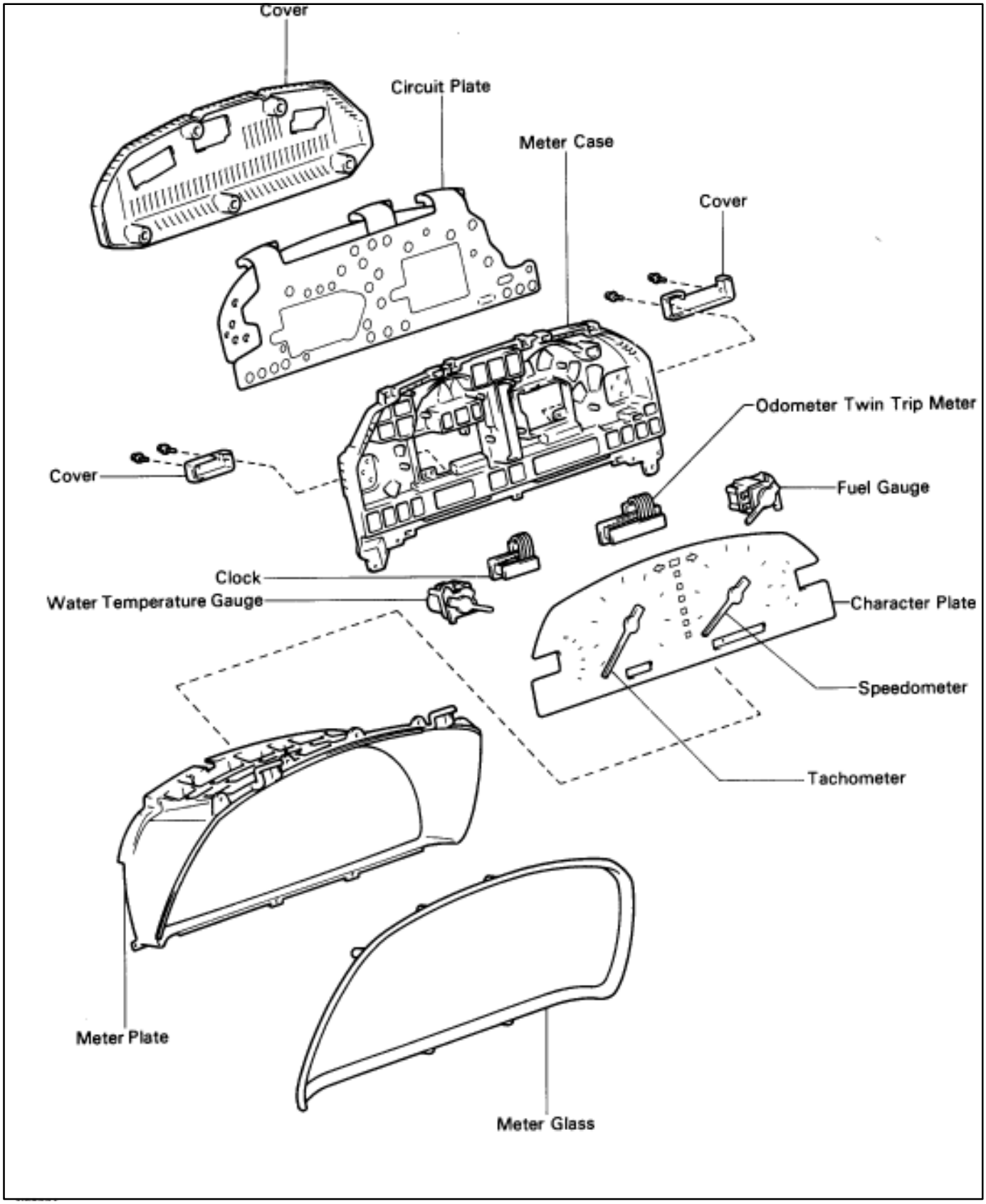

WhereEverybodyKnowsYourName

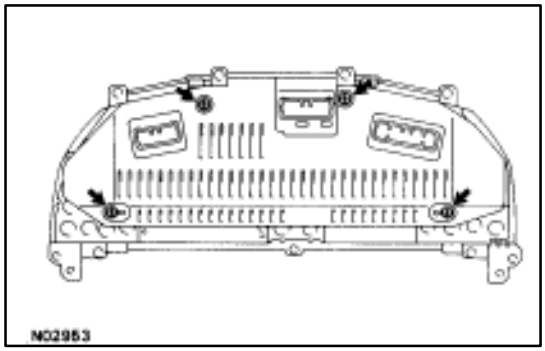

1. REMOVE COVER

(a) Remove the seven screws.

(b) Remove the cover from the meter case.

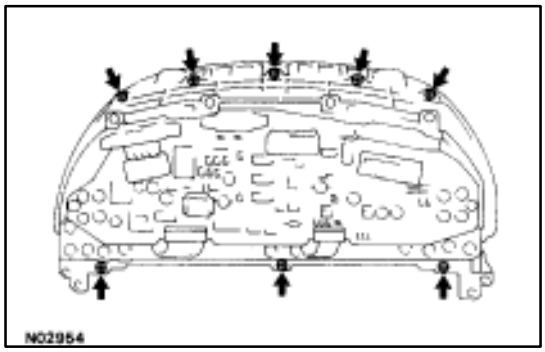

2. REMOVE METER GLASS

(a) Remove the twelve screws.

(b) Remove the character plate from the meter plate.

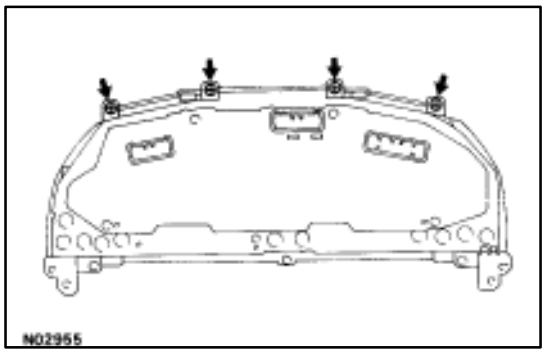

3. REMOVE METER PLATE

(a) Remove the four screws.

(b) Remove the meter plate from the meter case.

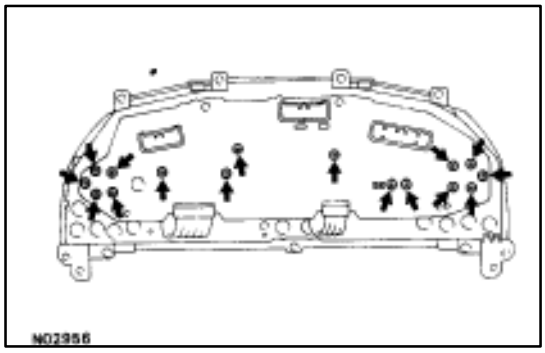

4. REMOVE METER CIRCUIT PLATE

(a) Remove the sixteen screws.

(b) Disconnect the two connectors from the meter circuit plate.

(c) Remove bulbs from the meter circuit plate.

(d) Remove the meter circuit plate.

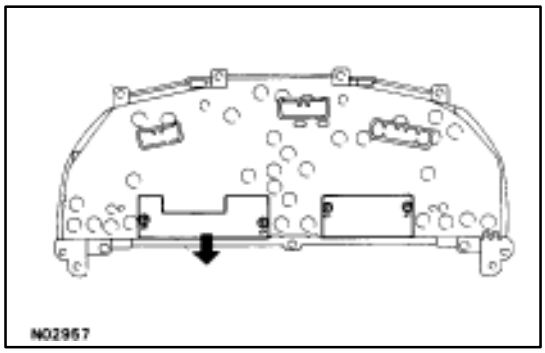

5. REMOVE ODOMETER/TRIP METER

Remove the two screws and the odometer/trip meter.

WhereEverybodyKnowsYourName

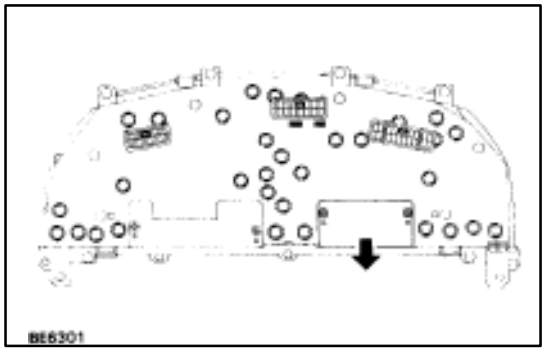

6. REMOVE CLOCK

Remove the two screws and the clock.

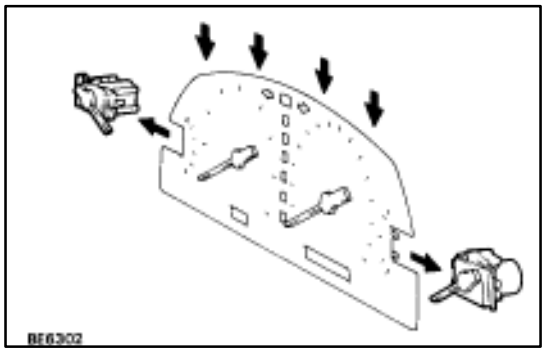

7. REMOVE FUEL AND TEMPERATURE GAUGE

Release the four lugs, and separate the two gauges from the meter lens.

ASSEMBLY OF COMBINATION METER ASSEMBLY

For installation, follow the removal procedure in reverse.

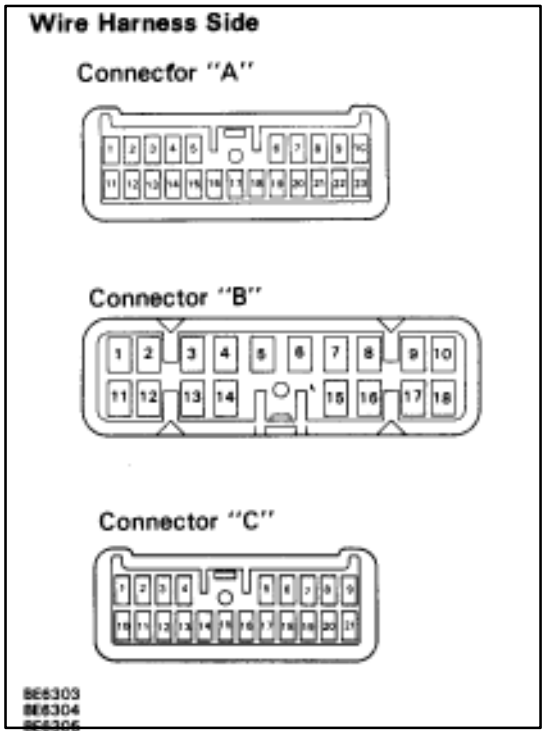

INSPECTION OF COMBINATION METER ASSEMBLY

1. INSPECT COMBINATION METER WIRING CIRCUIT

Disconnect connector A, connector B and connector C from the combination meter and inspect the connectors on the wire harness side as follows.

WhereEverybodyKnowsYourName

Connection	Check for	Tester connection	Condition		Specified value
Trip switch	Continuity	A19–A15	Trip switch A/B	Push	Continuity
				Free	No continuity
		A20–A15	Trip switch RESET	Push	Continuity
				Free	No continuity
DOME Fuse	Voltage	A11–Ground	Constant		Battery positive voltage
Speed Sensor	Voltage	A13–A15	Ignition switch ON	*3 Revolve propeller shaft	0V ± 11V
				*3 Stop propeller shaft	0V or 11V
Neutral start switch	Voltage	C1–Ground	Ignition switch ON and shift lever position	P	Battery positive voltage
		C2–Ground		R	Battery positive voltage
		C3–Ground		N	Battery positive voltage
		C4–Ground		D	Battery positive voltage
		C5–Ground		2	Battery positive voltage
		C16–Ground		L	Battery positive voltage
O/D OFF Switch	Continuity	C18–Ground	O/D OFF switch	ON	Continuity
				OFF	No continuity
Alternator ”L” terminal	Continuity	C15–Ground	Engine stop		Continuity
	Voltage	C14–Ground	Engine running		Battery positive voltage
Fuel Sender Gauge	Continuity	A7–Ground	Fuel remainder	Full	No continuity
				Empty	Continuity
	Resistance	A8–C8	Float position	Full, Approx. 79.3 mm (3.12 in.)	Approx. 6 ?
				1/2, Approx. 193.1 mm (76.0 in.)	Approx. 32.5 ?
				Empty, Approx. 308.1 mm (12.13 in.)	Approx. 97 ?
*Window washer level warning switch	Continuity	B9–Ground (Canada)	ON (float down)		Continuity
			OFF (float up)		No continuity
Brake fluid Level warning SW and Parking brake SW	Continuity	C13–Ground	Brake fluid level warning SW	ON (float down)	Continuity
				OFF (float up)	No continuity
			Parking brake SW	ON (Depress the Pedal))	Continuity
				OFF (Release the Pedal)	No continuity
Low oil Pressure Warning SW	Continuity	C19–Ground	Engine condition	Running	No continuity
				Stop	Continuity
Door courtesy Switch	Continuity	C12–Ground	Driver’s and passenger’s door	Open (ON)	Continuity
				Closed (OFF)	No continuity
IGN fuse	Voltage	C14–Ground	Ignition switch	ON	Battery positive voltage
				LOCK or ACC	No voltage
CIG fuse	Voltage	A6–Ground	Ignition switch	ACC or ON	Battery positive voltage
				LOCK or START	No voltage

WhereEverybodyKnowsYourName

Connection	Check for	Tester connection	Condition		Specified value
Turn signal SW and Hazard Warning Switch	Voltage	B–16–Ground	Hazard warning switch ON		Battery positive voltage ↔ 0V
			IG SW ON and turn signal SW ”Left”		Battery positive voltage ↔ 0V
		B–17–Ground	Hazard warning switch ON		Battery positive voltage ↔ 0V
			IG SW ON and turn signal SW ”Right”		Battery positive voltage ↔ 0V
Headlight	Voltage	B7–Ground	Light control SW ”HEAD”	Dimmer SW ”HI” or ”Flash”	Battery positive voltage
				Dimmer SW ”LO”	No voltage
	Continuity	B6–Ground	Light control SW ”HEAD”	Dimmer SW ”HI” or ”Flash”	Continuity
				Dimmer SW ”LO”	No continuity
Igniter	Voltage	A9–Ground	Engine Running		Voltage fluctuates
ECT pattern Select switch	Voltage	B4–Ground	IG SW ON and ECT pattern select SW position	PWR	Battery positive voltage
				NORM	No voltage
Engine oil Level warning Switch	Continuity	B8–Ground	Oil temperature below approx. 55°C (131°F)		Continuity
			Oil temperature above approx. 55°C (131°F) and SW position	ON (float up)	Continuity
				OFF (float off)	No continuity
GAUGE fuse	Voltage	A1–Ground	Ignition switch position	ON	Battery positive voltage
				LOCK, ACC, START	No voltage
Neutral Start switch	Voltage	A12–Ground	Ignition switch position	START (”P” or ”N” range)	Battery positive voltage
				LOCK, ACC, ON	No voltage
ECU–B Fuse	Voltage	C11–Ground	Ignition switch position	ON	Battery positive voltage
				LOCK, ACC, START	No voltage
Rheostat Light control Volume	Voltage	A2–Ground	Light control SW HEAD or TAIL and rheostat volume knob position	ON (Rheostat knob turned any position except fully clockwise)	Battery voltage or 5V or more
				OFF (Rheostat knob) turned fully clockwise)	No voltage
Ground	Continuity	A8–Ground	Constant		Continuity
		A10–Ground	Constant		Continuity
		A22–Ground	Constant		Continuity
		A23–Ground	Constant		Continuity

*1 Jack up the vehicle.
*2 Shift lever position is ”P” range.

If circuit is not as specified, refer to BE–100 wiring diagrams and inspect the circuits connected to other parts.

WhereEverybodyKnowsYourName

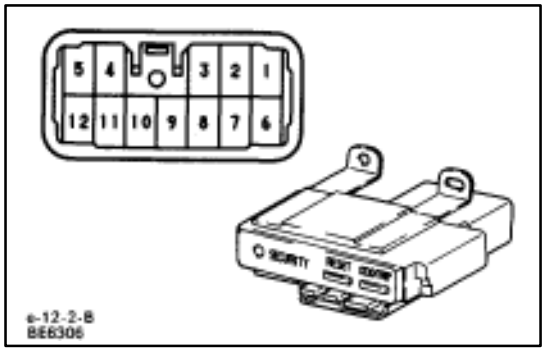

(Odometer and Twin Trip Switch)

REMOVAL AND INSTALLATION OF ODOMETER AND TWIN TRIP SWITCH

(See page BE–103)

INSPECTION OF ODOMETER AND TWIN TRIP SWITCH

INSPECT ODOMETER AND TWIN TRIP SWITCH

(Continuity)

Inspect continuity between terminals.

Terminal / Switch position		1	2	3	4	7	8	9	12
RESET	Free								
	Pushed in		○	—	○				
A/B	Free								
	Pushed in	○	—	—	○				
SECURITY				○	○				
SET	Free								
	Pushed in							○	○
HOUR	Free								
	Pushed in						○	—	○
MINUTE	Free								
	Pushed in					○	—	—	○

If continuity is not as specified, replace the odometer and twin trip switch.

(Speedometer)

INSPECTION OF SPEEDOMETER

INSPECT SPEEDOMETER (ON–VEHICLE)

Using a speedometer tester, inspect the speedometer for allowable indication error and check the operation of the odometer.

HINT: Tire wear and tire over or under inflation will increase the indication error.

If error is excessive, replace the speedometer.

(mph/USA)

Standard indication	Allowable range
20	20 – 23
40	40 – 43.5
60	60 – 64
80	80 – 84.5
100	100 – 105
120	120 – 125.5
140	140 – 146

(km/h CANADA)

Standard indication	Allowable range
20	18 – 34
40	40 – 44
60	60 – 64.5
80	80 – 85
100	100 – 105
120	120 – 125.5
140	140 – 146
160	160 – 167
180	180 – 188
200	200 – 209
220	220 – 230
240	240 – 251

WhereEverybodyKnowsYourName

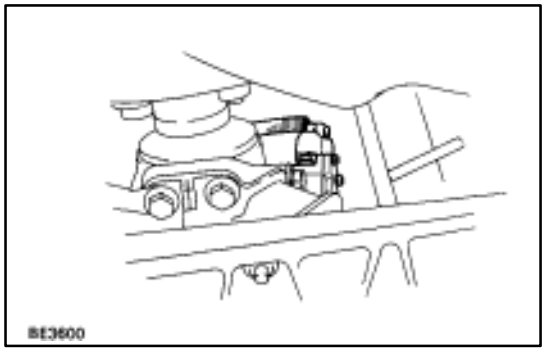

(Speed Sensor)

REMOVAL AND INSTALLATION OF SPEED SENSOR

1. REMOVE SPEED SENSOR

(a) Jack up the vehicle.
(b) Disconnect connector and control rod.
(c) Remove a bolt and sensor.

2. INSTALL SPEED SENSOR

For installation, follow the removal procedure in reverse.

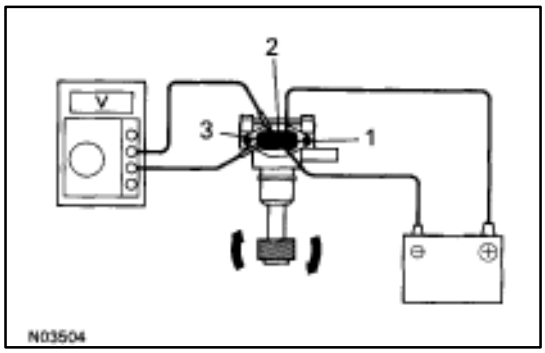

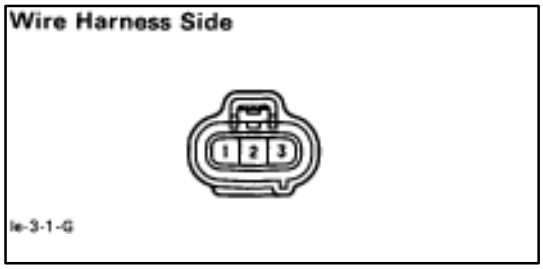

INSPECTION OF SPEED SENSOR

INSPECT SPEED SENSOR

(Operation)

(a) Connect the positive (+) lead from battery to terminal 1 and negative (–) lead to terminal 2.
(b) Connect the positive (+) lead from tester to terminal 3 and negative (–) lead to terminal 2.
(c) Revolve shaft.
(d) Check that there is voltage change from approx. 0V to 11V or more between terminal 2 and 3.

HINT: The voltage change should be 4 times per each revolution of the speed sensor shaft.

If operation is not as specified, replace the sensor.

(Sensor circuit)

Disconnect connector from sensor and inspect the connector on wire harness side as shown.

Check for	Tester connection	Condition		Specified value
Voltage	1–Ground	Ignition switch position	ON	Battery positive voltage
			LOCK or ACC	No voltage

If circuit is not as specified, inspect power source or wire harness.

WhereEverybodyKnowsYourName

TRAC PUMP AND ACCUMULATOR
TRAC PUMP AND ACCUMULATOR
REMOVAL AND INSTALLATION

BR0F9–03

Remove and install the part, as shown.

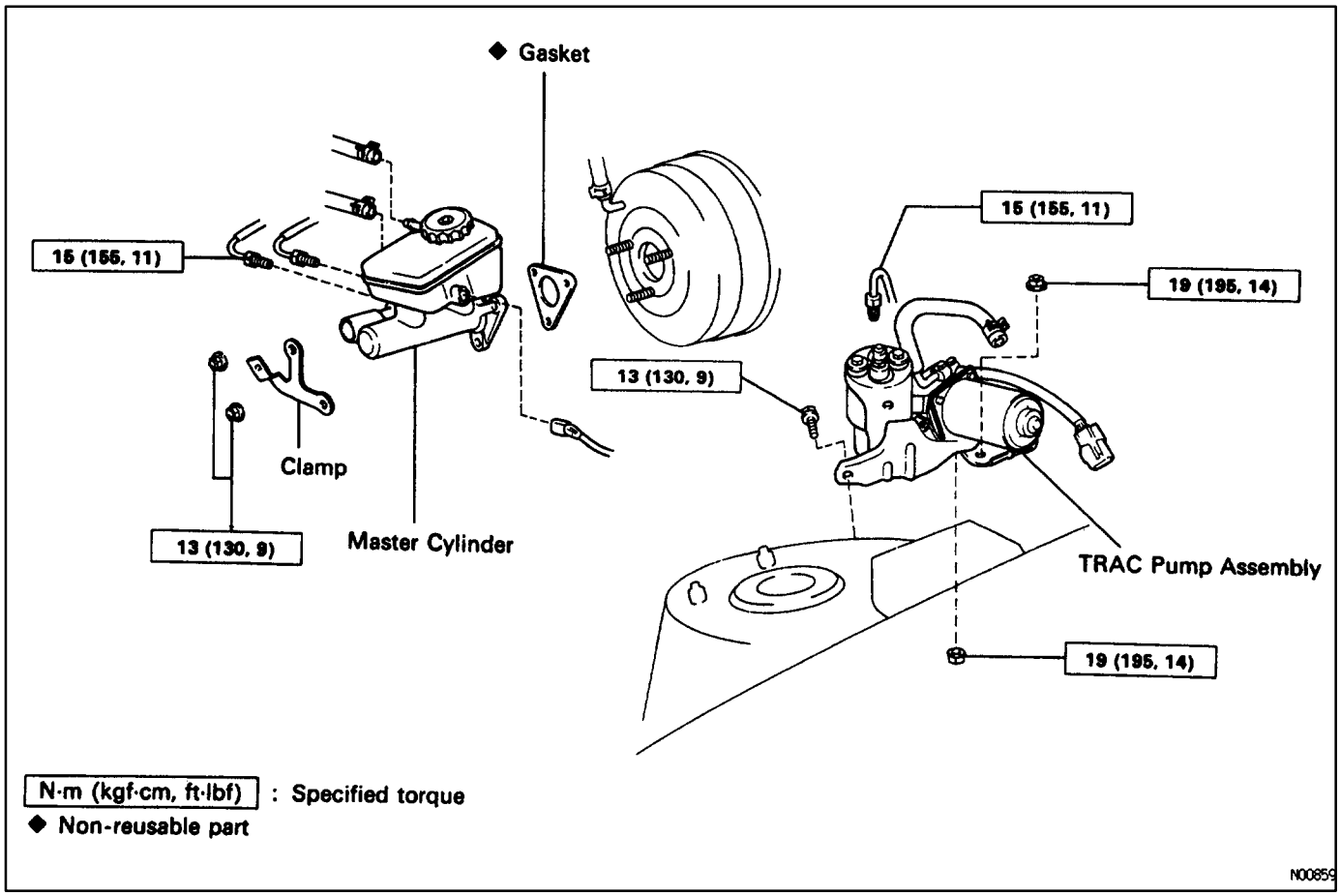

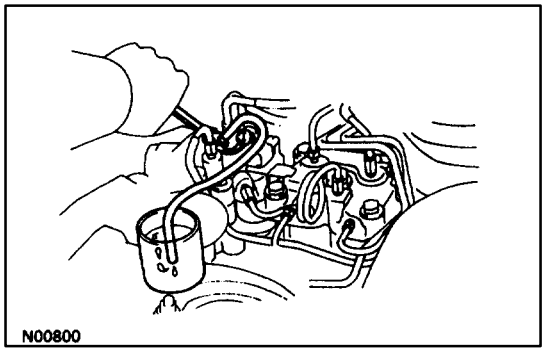

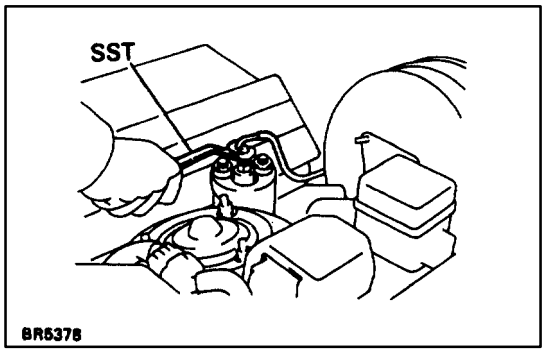

MAIN POINTS OF REMOVAL AND INSTALLATION

1. DRAIN OUT HIGH PRESSURE FLUID

(a) Connect a vinyl tube to the TRAC actuator bleeder plug, then loosen the bleeder plug.

(b) When the fluid has flowed out, tighten the bleeder plug.
CAUTION: Since the fluid is under high pressure, it could spray out with great force, so be careful.

2. DISCONNECT AND CONNECT BRAKE LINE

Using SST, disconnect and connect the brake line from/to the accumulator.
SST 09751–36011
Torque: 15 N·m (155 kgf·cm, 11 ft·lbf)

3. BLEED BRAKE SYSTEM AND TRAC SYSTEM
(See page BR–8)

WhereEverybodyKnowsYourName

TRAC PUMP AND ACCUMULATOR DISASSEMBLY AND ASSEMBLY

BR0FA–03

Disassemble and assemble the parts, as shown.

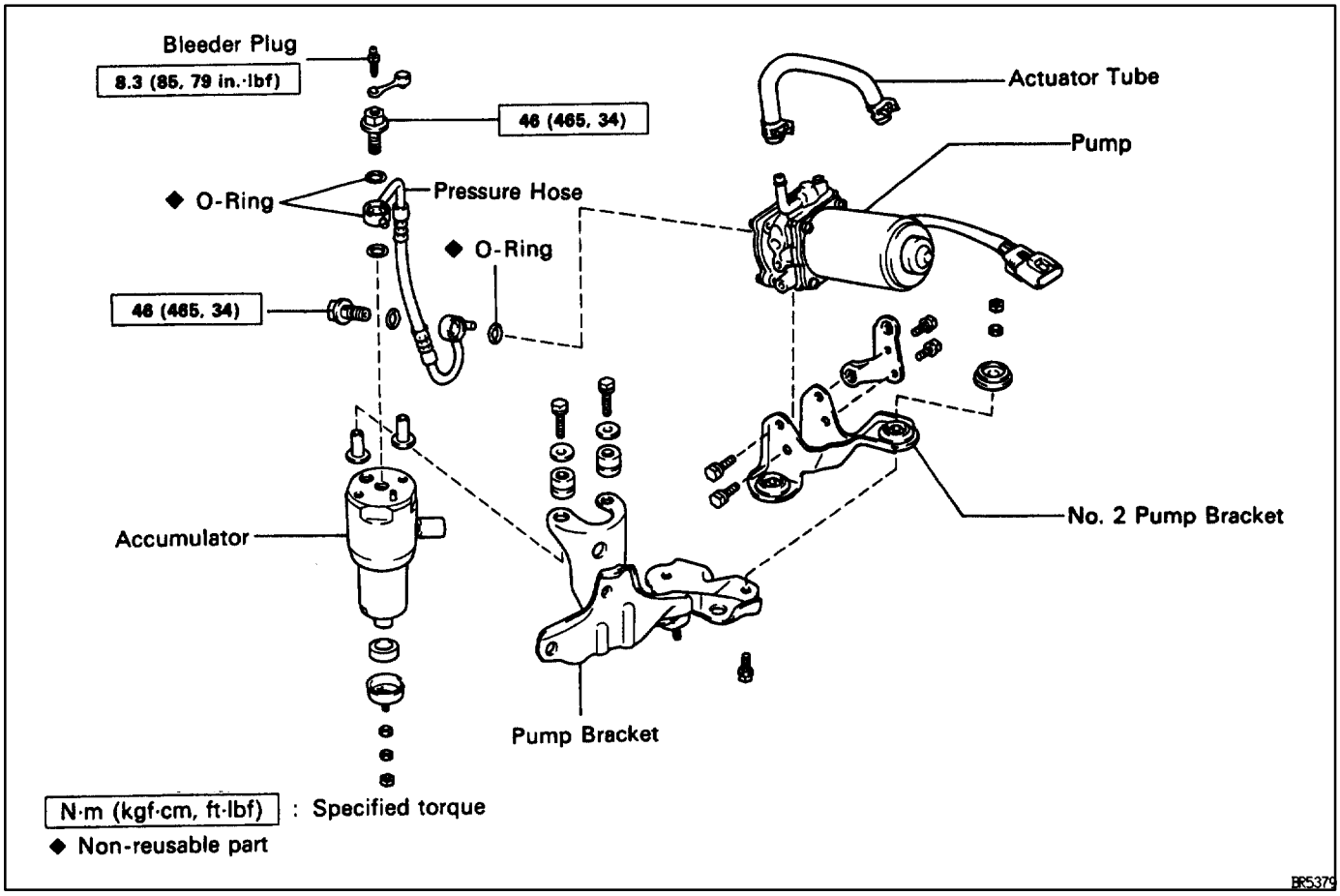

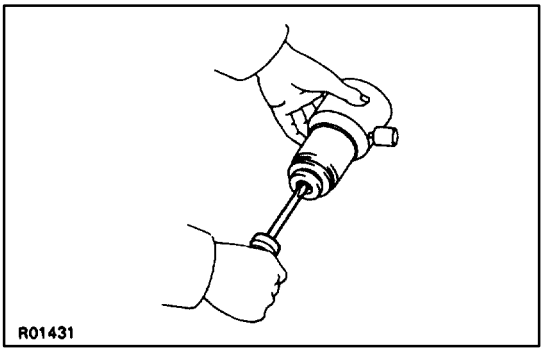

MAIN POINT

DISPOSAL METHOD OF TRAC ACCUMULATOR

(a) Loosen the gas plug about 2 turns to a position where the gas can leak out.

(b) After confirming that all the gas has been drained out remove the gas plug and dispose of the accumulator.
HINT: If the gas does not leak out even after the gas plug has been loosened 2 turns, repeat the operation, turning the gas plug a half turn to the left or right.

WhereEverybodyKnowsYourName

TROUBLESHOOTING

How to proceed with troubleshooting

Perform troubleshooting in accordance with the procedure on the following page.

▼ CUSTOMER PROBLEM ANALYSIS

Using the customer problem analysis check sheet for reference, ask the customer in as much detail as possible about the problem.

2 CHECK AND CLEAR THE DIAGNOSTIC TROUBLE CODES (PRECHECK)

If the TRAC indicator light lights up, and the TRAC control does not operate, the ECU stores diagnostic trouble codes corresponding to the problem in memory.

Before confirming the trouble, first check the diagnostic trouble code for any malfunction codes stored in memory. When there are malfunction codes, make a note of them, then clear them and proceed to "2 Problem Symptom Confirmation".

2 PROBLEM SYMPTOM CONFIRMATION, 10 SYMPTOM SIMULATION

Confirm the problem symptoms. If the problem does not reoccur, simulate the problem by initially checking the circuits indicated by the diagnostic trouble code in step 2, using "Problem simulation method".

5 DIAGNOSTIC TROUBLE CODE CHECK

Check the diagnostic trouble codes. If a malfunction code is output, proceed to "6 Diagnostic Trouble Code Chart".

If the normal code is output, proceed to "7 Problem Symptoms Chart".

Be sure to proceed to "6 diagnostic Trouble Code Chart" after steps 2 and 2 are completed.

If troubleshooting is attempted only by following the malfunction code stored in the memory, errors could be made in the diagnosis.

6 DIAGNOSTIC TROUBLE CODE CHART

If a malfunction code is confirmed in the diagnostic trouble code check, proceed to the inspection procedure indicated by the matrix chart for each diagnostic trouble code.

7 PROBLEM SYMPTOMS CHART

If the normal code is confirmed in the diagnostic trouble code check, perform inspection in accordance with the inspection order in the problem symptoms chart.

9 CIRCUIT INSPECTION

Proceed with diagnosis of each circuit in accordance with the inspection order confirmed in 6 and 7.

Determine whether the cause of the problem is in the sensor, actuators, wire harness and connectors or the ECU.

2 SENSOR CHECK

Use the ABS warning light to check if each of the signals from speed sensors is being input correctly to the ECU. Instructions for this check are given in the circuit inspection.

[10] REPAIRS

After the cause of the problem is located, perform repairs by following the inspection and replacement procedures in this manual.

[11] CONFIRMATION TEST

After completing repairs, confirm not only that the malfunction is eliminated, but also conduct a test drive to make sure the entire TRAC system is operating correctly. And also check the ABS is operating correctly.

WhereEverybodyKnowsYourName

Items inside are ▱ titles of pages in this manual, with the page number in the bottom portion. See the pages for detailed explanations.

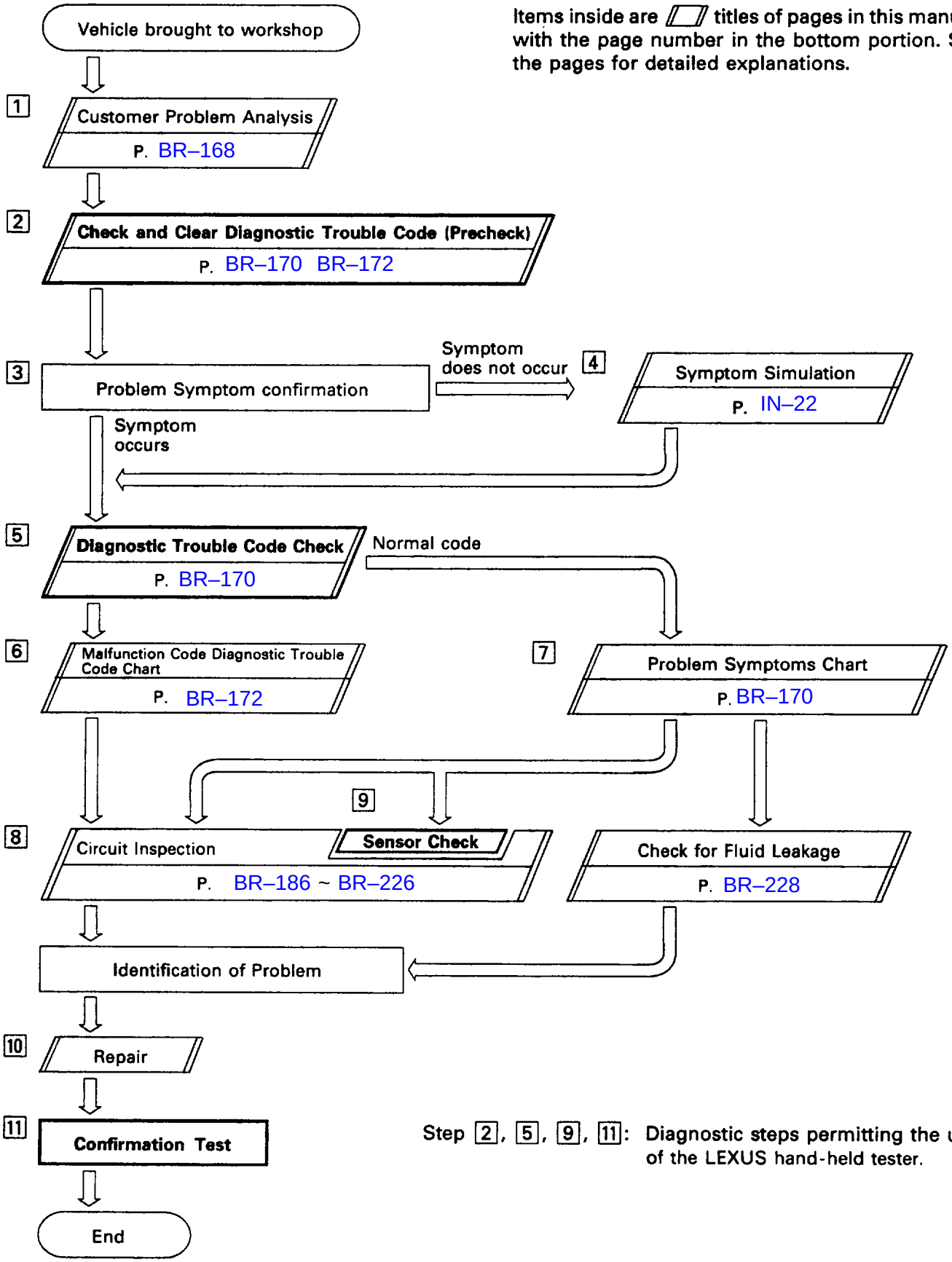

Step 2, 5, 9, 11: Diagnostic steps permitting the use of the LEXUS hand-held tester.

WhereEverybodyKnowsYourName

CUSTOMER PROBLEM ANALYSIS CHECK SHEET

TRAC Check Sheet

Inspector's Name :

Customer's Name		**Registration No.**	
		Registration Year	/ /
		Frame No.	
Date Vehicle Brought In	/ /	**Odometer Reading**	km Miles

Date Problem First Occurred	/ /
Frequency Problem Occurs	☐ Continuous ☐ Intermittent (times a day)

Symptoms	☐ TRAC does not operate. (Wheels spin when starting rapidly).	
	TRAC Indicator Light Abnormal	☐ Remains ON ☐ Blinks ☐ Does not Light Up
	TRAC OFF Indicator Light Abnormal	☐ Remains ON ☐ Does not Light Up

Check Item	**ABS Warning Light**	☐ Normal ☐ Malfunction Code (Code)
	Malfunction Indicator Lamp	☐ Normal ☐ Malfunction Code (Code)

Diagnostic Trouble Code Check	**1st Time**	☐ Normal Code ☐ Malfunction Code (Code)
	2nd Time	☐ Normal Code ☐ Malfunction Code (Code)

WhereEverybodyKnowsYourName

MEMO–

WhereEverybodyKnowsYourName

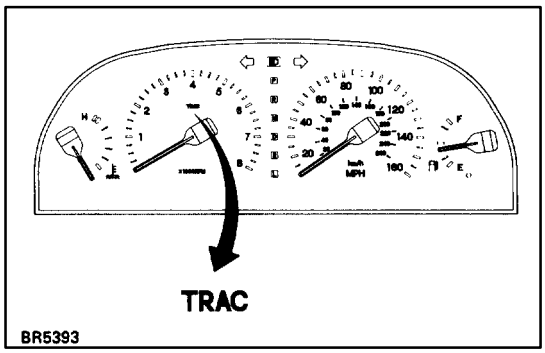

DIAGNOSIS SYSTEM

INDICATOR CHECK

When the ignition switch is turned on, check that the TRAC indicator light goes on for 3 seconds.

HINT: If the indicator check result is not normal, proceed to troubleshooting for the TRAC indicator light circuit (see page BR–225).

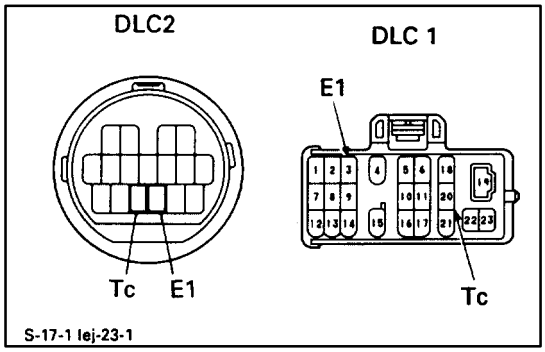

DIAGNOSTIC TROUBLE CODE CHECK

1. **Turn the ignition switch ON.**
2. **Using SST, connect terminals Tc and E1 of DLC2 or DLC 1.**
   SST 09843–18020
3. **Read the diagnostic trouble code from the TRAC indicator light on the combination meter.**
   HINT: If no code appears, inspect the diagnostic circuit or TRAC indicator light circuit (BR–226 orBR–225).

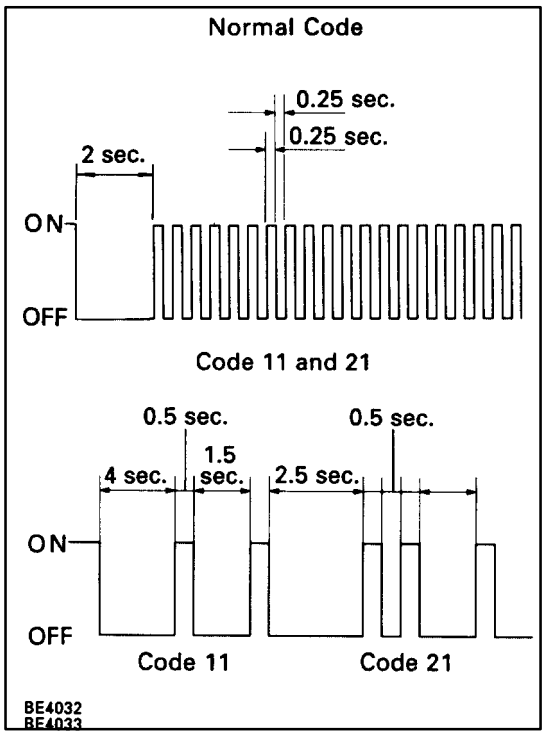

As an example, the blinking patterns for normal code and codes 11 and 21 are shown on the left.

4. **Codes are explained in the code table on the next page.**
5. **After completing the check, disconnect terminals Tc and E1, and turn off the display.**
   If two or more malfunctions are indicated at the same time, the lowest numbered diagnostic trouble code will be displayed 1st.

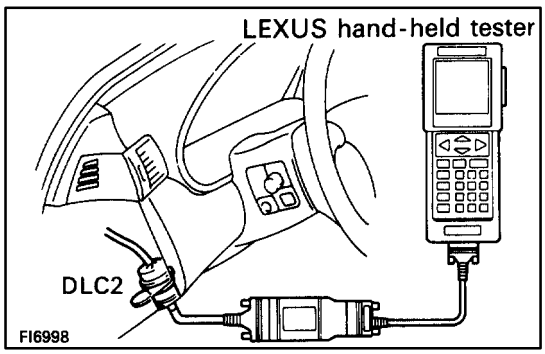

ECU DATA MONITOR USING LEXUS HAND–HELD TESTER

1. **Hook up the LEXUS hand–held tester to the DLC2.**
2. **Monitor the ECU data by following the prompts on the tester screen.**
   HINT: LEXUS hand–held tester has a “Snapshot” function which records the monitored data.
   Please refer to the LEXUS hand–held tester operator’s manual for further details.

WhereEverybodyKnowsYourName

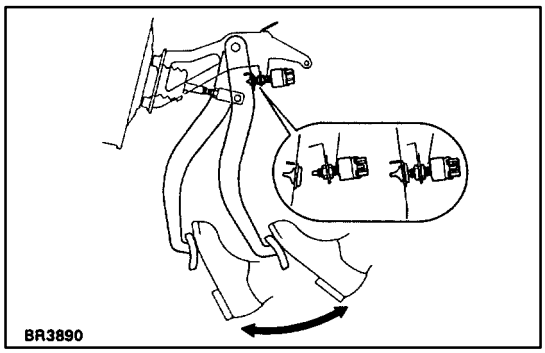

DIAGNOSTIC TROUBLE CODE CLEARANCE

1. Using SST, connect terminals Tc and E1 of DLC2 or DLC1.
   SST 09843–18020
2. IG switch ON.
3. Clear the diagnostic trouble codes stored in ECU by depressing the brake pedal 8 or more times within 3 seconds.
4. Check that the TRAC indicator light shows the normal code.
5. Remove the SST from the terminals of DLC2 or DLC1.
   HINT: Cancellation can also be done by removing the DOME fuse, but in this case, other memory systems will also be cancelled out.

WhereEverybodyKnowsYourName

DIAGNOSTIC TROUBLE CODE CHART

If a malfunction code is displayed during the diagnostic trouble code check, check the circuit listed for that code in the table below and proceed to the page given.

HINT: If the TRAC indicator light lights up and the TRAC indicator light does not blink when the Diag. code is checked, check the blinking pattern of the ABS warning light and perform troubleshooting of the ABS system.

Code	TRAC Indicator Light Blinking Pattern	Diagnosis	See page
24	BE3932	Open or short in sub-throttle actuator circuit	BR–186
25	BE3932	Step motor does not move to a position decided by ECU	BR–189
26	BE3932	Sub-throttle valve does not move even when the sub-throttle valve is controlled to fully open position by ECU	BR–189
27	BE3932	Sub-throttle valve return spring breakage	BR–189
31	BE3933	Right front wheel speed sensor signal malfunction	BR–190
32	BE3933	Left front wheel speed sensor signal malfunction	BR–190
33	BE3933	Right rear wheel speed sensor signal malfunction	BR–190
34	BE3933	Left rear wheel speed sensor signal malfunction	BR–190
41	BE3934	Low battery voltage or abnormally high battery positive voltage	BR–192
43*1	BE3934	Malfunction in ABS or TRAC (BRAKE) control system	BR–196
44	BE3934	Open or short in NE signal circuit	BR–198
45	BE3934	Main throttle position sensor circuit malfunction	BR–200
46*2	BE3934	Short in main throttle position sensor circuit	BR–200
47	BE3934	Sub-throttle position sensor circuit malfunction	BR–208
48	BE3934	Open or short in sub-throttle position sensor circuit	BR–208
49	BE3934	Open or short in engine communication circuit (TR2 circuit)	BR–216
51*1	BE3935	Engine & ECT system malfunction	BR–218
61	BE3936	ABS & TRAC ECU communication circuit malfunction	BR–220
Always ON		Malfunction in TRAC ECU	—

*1: If a malfunction is detected, the TRAC OFF indicator light lights up.
*2: Indicator light does not lights up even if an error is detected.
*3: If a malfunction is detected, the TRAC OFF indicator light or TRAC indicator light light up.

WhereEverybodyKnowsYourName

PROBLEM SYMPTOMS CHART

If a normal code is displayed during the diagnostic trouble code check but the problem still occurs, check the circuits for each problem symptom in the order given in the table below and proceed to the page for troubleshooting.

Symptoms	Inspection Circuit	See page
TRAC does not operate.	Only when 1.~5. are all normal and the problem is still occurring, replace the TRAC ECU. 1. Check the diagnostic trouble code, reconfirming that the normal code is output. 2. IG Power Source Circuit. 3. Check the hydraulic circuit for leakage. 4. Speed Sensor Circuit. 5. Park/neutral position switch circuit.	BR–170 BR–192 BR–228 BR–190
TRAC indicator light abnormal.	1. TRAC Indicator Light Circuit. 2. TRAC ECU.	BR–224
TRAC OFF indicator light abnormal.	Only when 1. and 2. are all normal and the problem is still occurring, replace the TRAC ECU. 1. TRAC OFF indicator Light Circuit. 2. TRAC cut switch circuit.	BR–222
Diagnostic trouble code check cannot be performed.	Only when 1. and 2. are all normal and the problem is still occurring, replace the TRAC ECU. 1. TRAC Indicator Light Circuit. 2. Tc terminal Circuit.	BR–224 BR–226

WhereEverybodyKnowsYourName

LOCATION OF CONNECTORS

Location of Connectors in Engine Compartment

SC300:

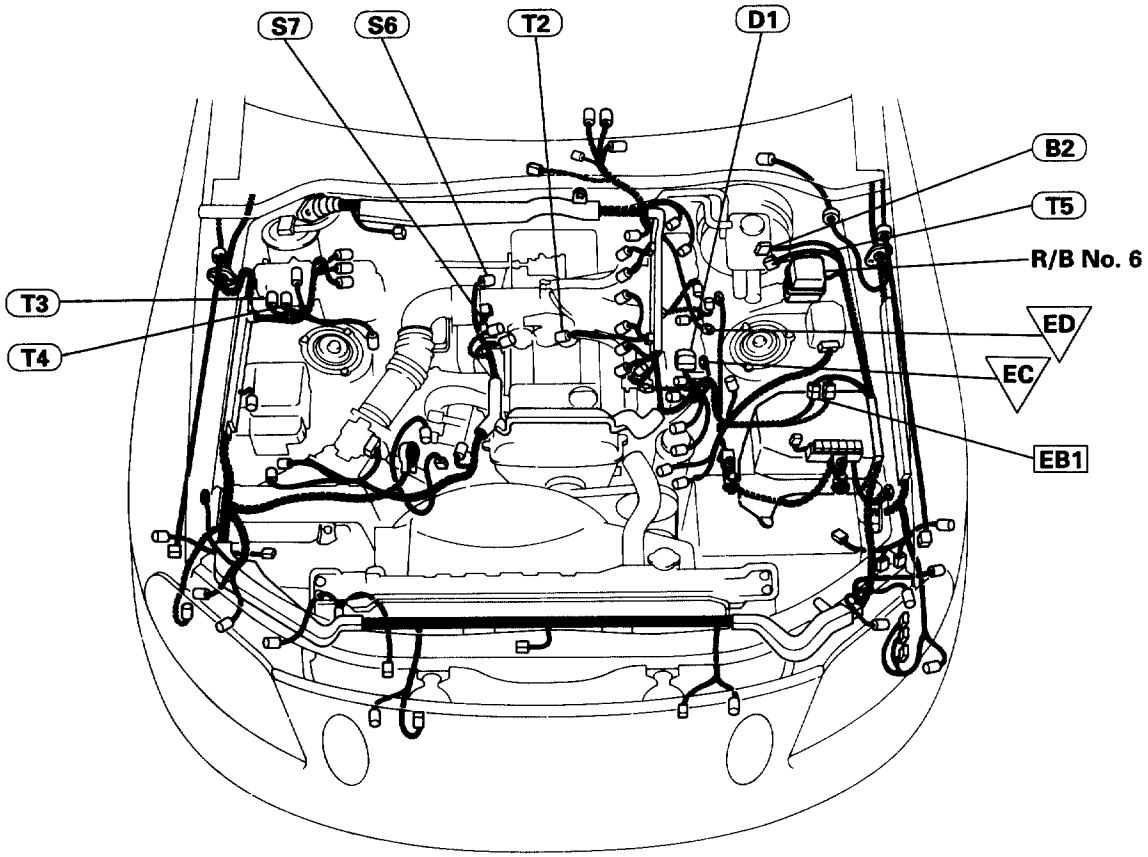

WhereEverybodyKnowsYourName

SC400:

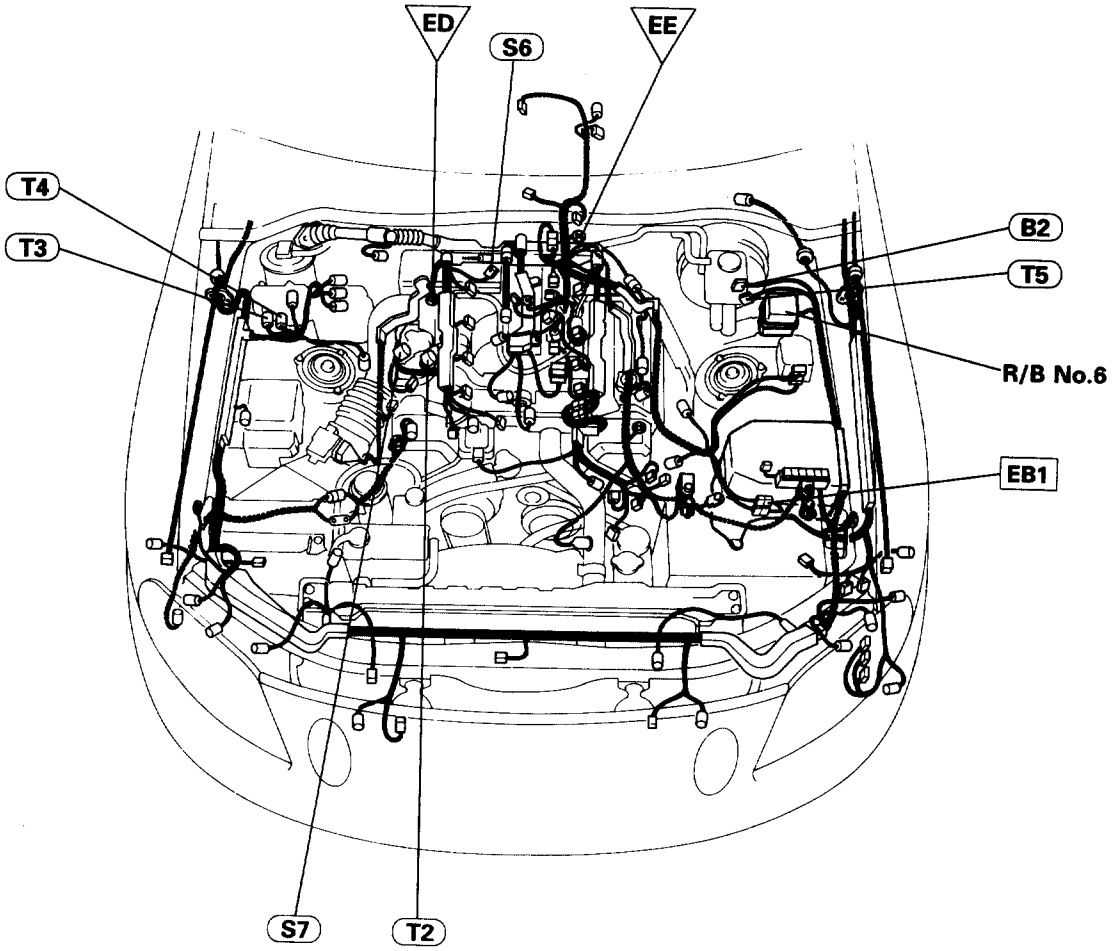

WhereEverybodyKnowsYourName

B2

Brake Fluid Level SW

Ie-2-1-d

D1

Data Link Connector 1

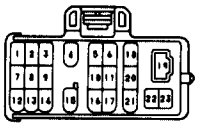

Iej-23-1

S6

Sub-Throttle Actuator Sensor

Ie-6-1-D

S7 (SC300)

Sub-Throttle Position Sensor

IS-4-1-C

S7 (SC400)

Sub-Throttle Position Sensor

IV-4-1

T2

Throttle Position Sensor

IV-4-1-A

T3

TRAC Brake Actuator

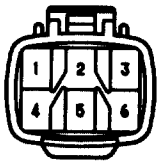

Ie-6-1-E

T4

TRAC Brake Actuator

IS-4-1-B

T5

TRAC Pump and Motor

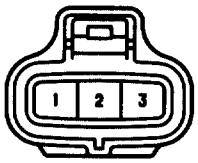

Ig-3-1-A

EB1

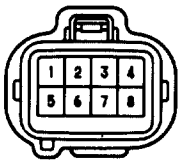

Ie-8-1-A

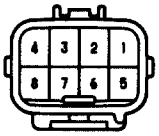

Ie-8-2-A

R/B NO.6

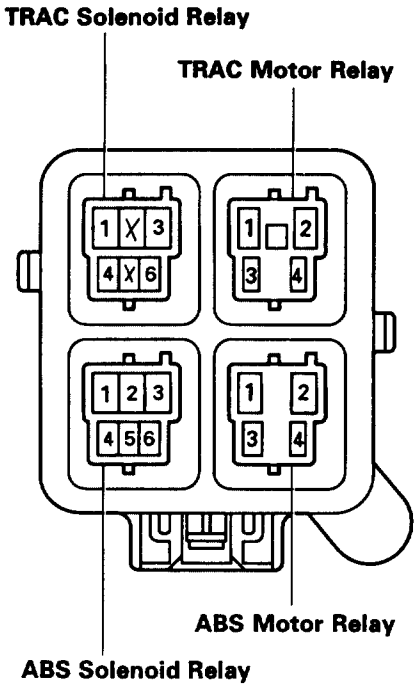

WhereEverybodyKnowsYourName

Location of Connectors in Instrument Panel
SC300:

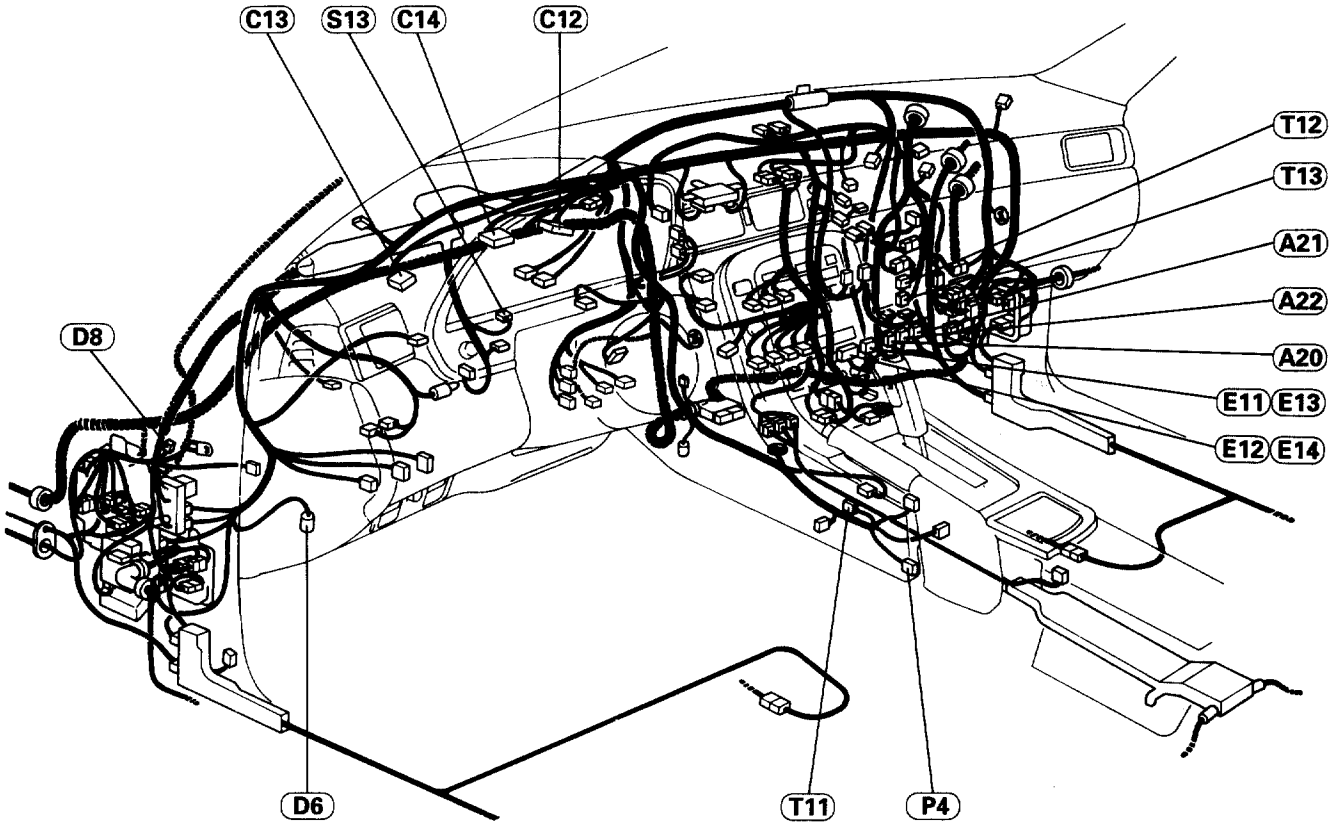

WhereEverybodyKnowsYourName

SC400:

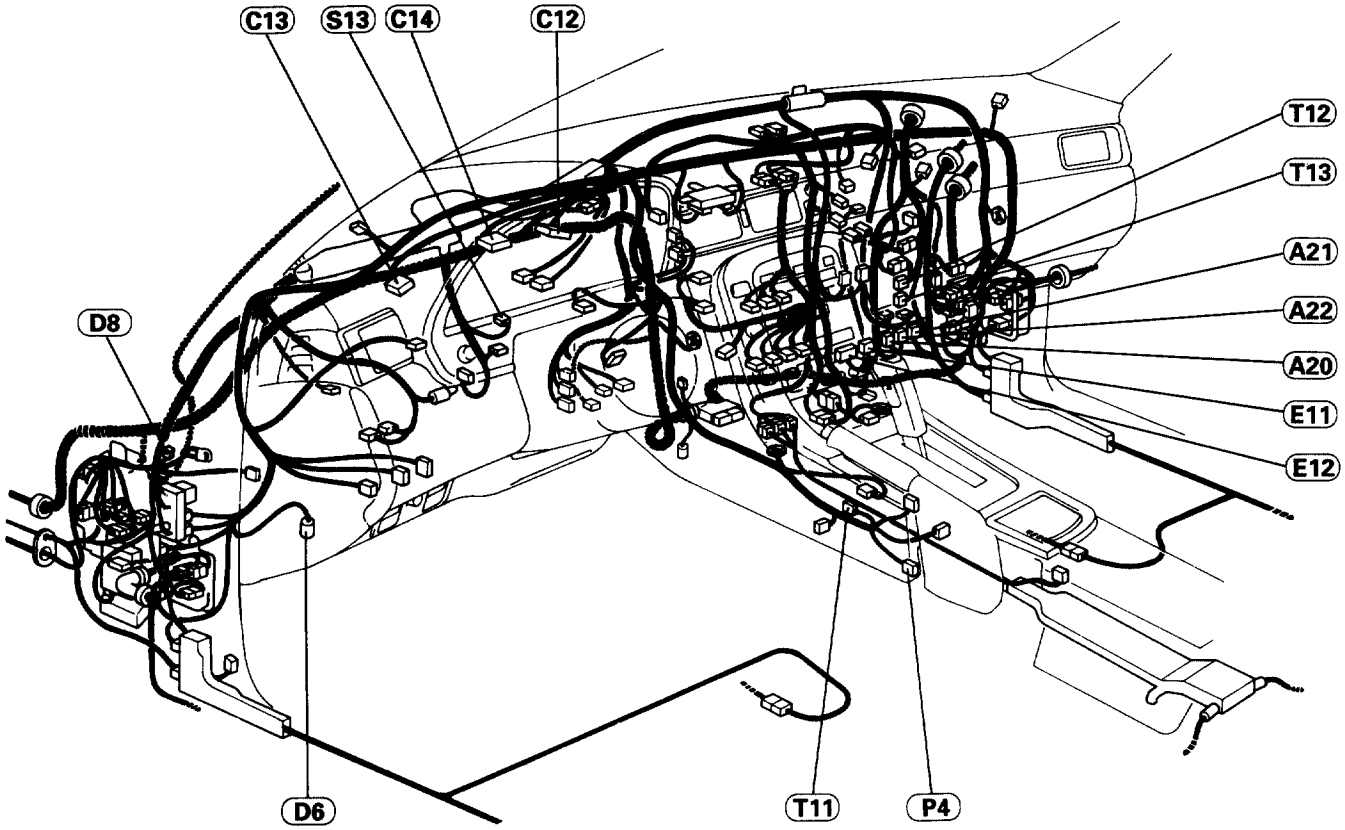

N09568

WhereEverybodyKnowsYourName

A20

ABS and TRAC ECU

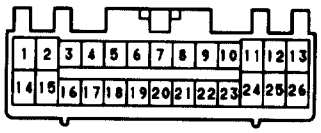

Vd-26-1

A21

ABS and TRAC ECU

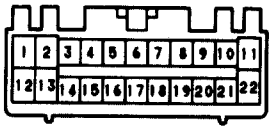

Vd-22-1

A22

ABS and TRAC ECU

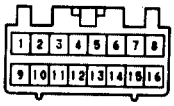

Vd-16-1

C12

Brake Warning Light

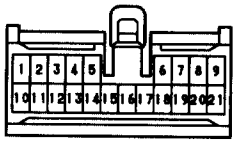

h–21–1

C13

Malfunction Indicator Light
TRAC OFF Indicator Light
TRAC Indicator Light

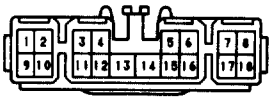

e-18-1

C14

Brake Warning Light
TRAC Indicator Light
TRAC OFF Indicator Light
Malfunction Indicator

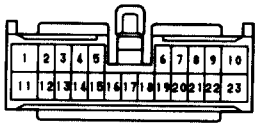

eh-23-1

D6

DLC 2

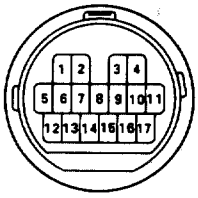

S-17-1

D8

TRAC Brake Actuator

e-2-1-l

(AT) (MT)
E11 E13

ECM

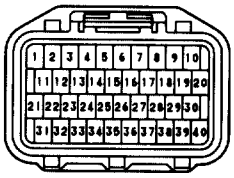

ld-40-1

(AT) (MT)
E12 E14

ECM

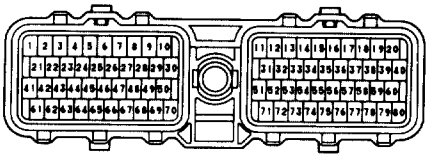

ld-80-1

P4

Parking Brake Switch

e-1-1

S13

Stop Light Switch

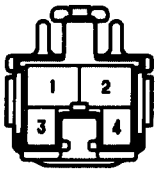

eg-4-1

T11

TRAC Cut Switch

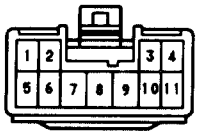

e-11-1

T12

TRAC ECU

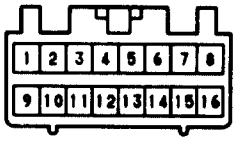

Vd-16-1

T13

TRAC ECU

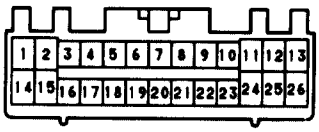

Vd-26-1

WhereEverybodyKnowsYourName

Location of Connectors in Instrument Panel

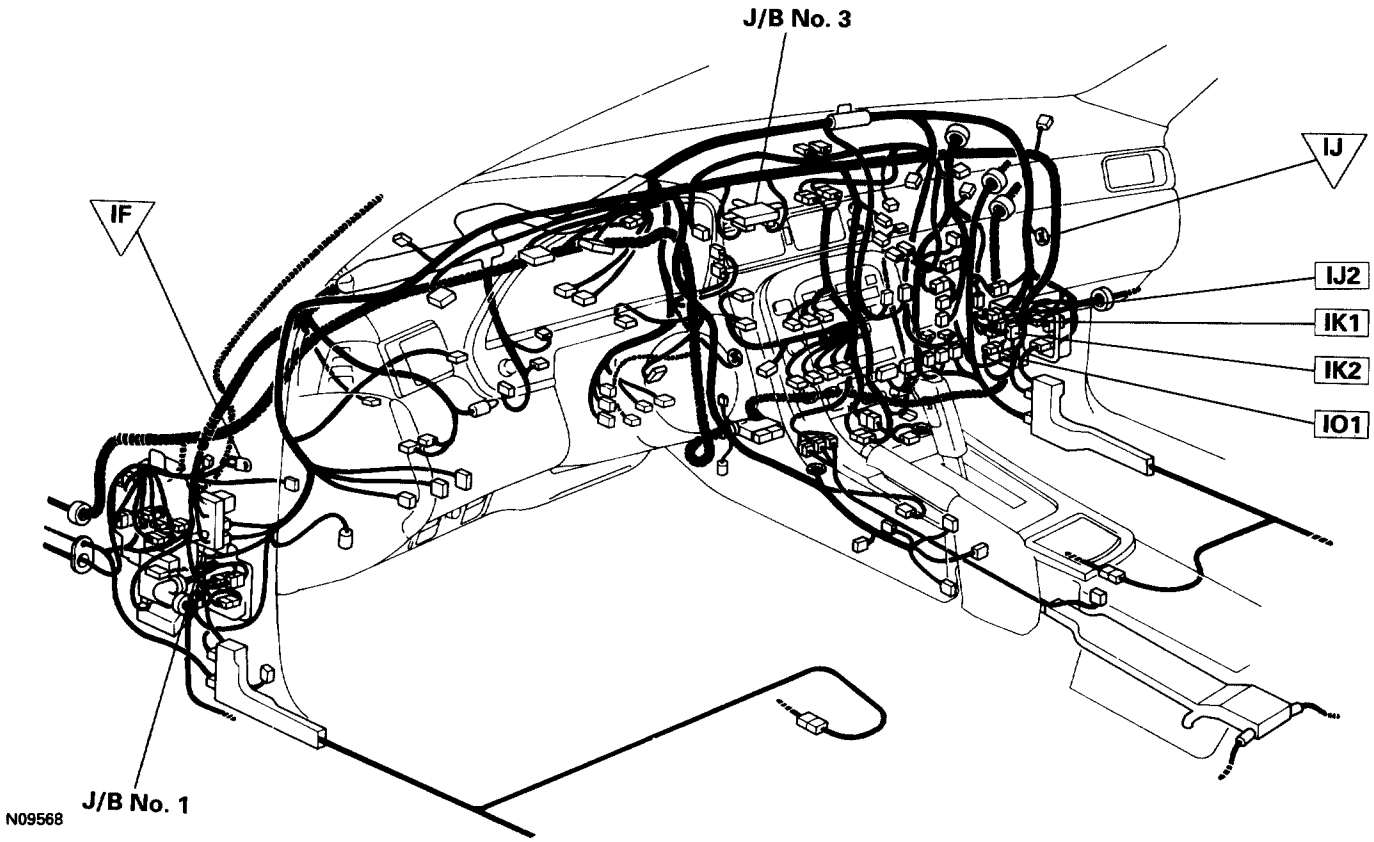

SC400:

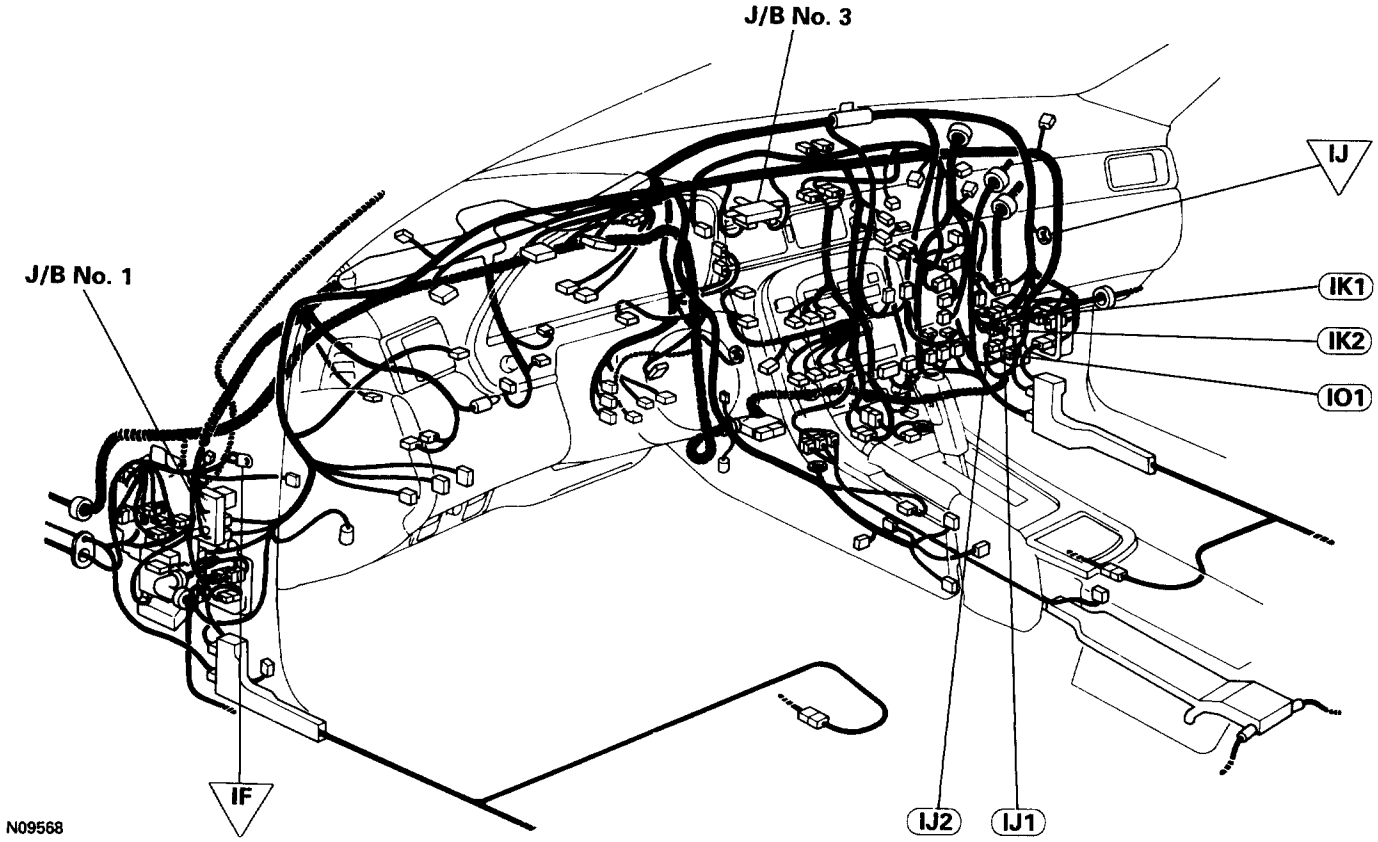

WhereEverybodyKnowsYourName

IJ1

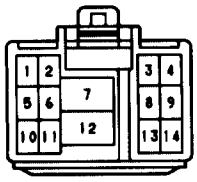

e-14-1

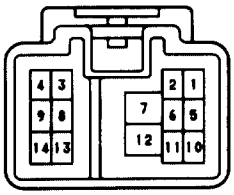

e-14-2

IJ2

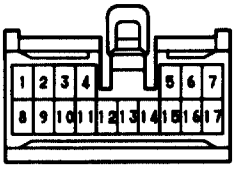

h-17-1

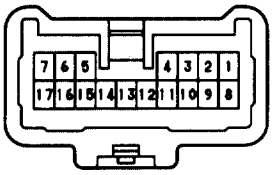

h-17-2

IK1

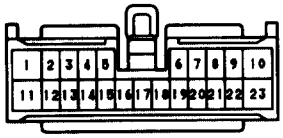

eh-23-1

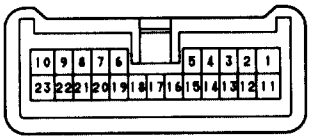

eh-23-2

IK2

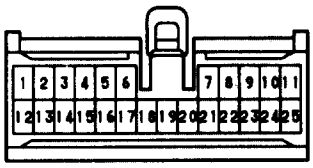

h-25-1-A

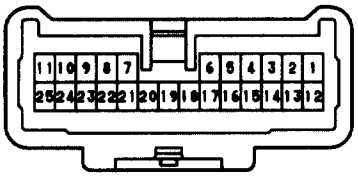

h-25-2-A

IO1

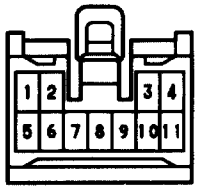

h-11-1-A

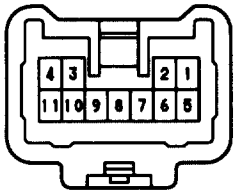

h-11-2-A

WhereEverybodyKnowsYourName

J/B No.1

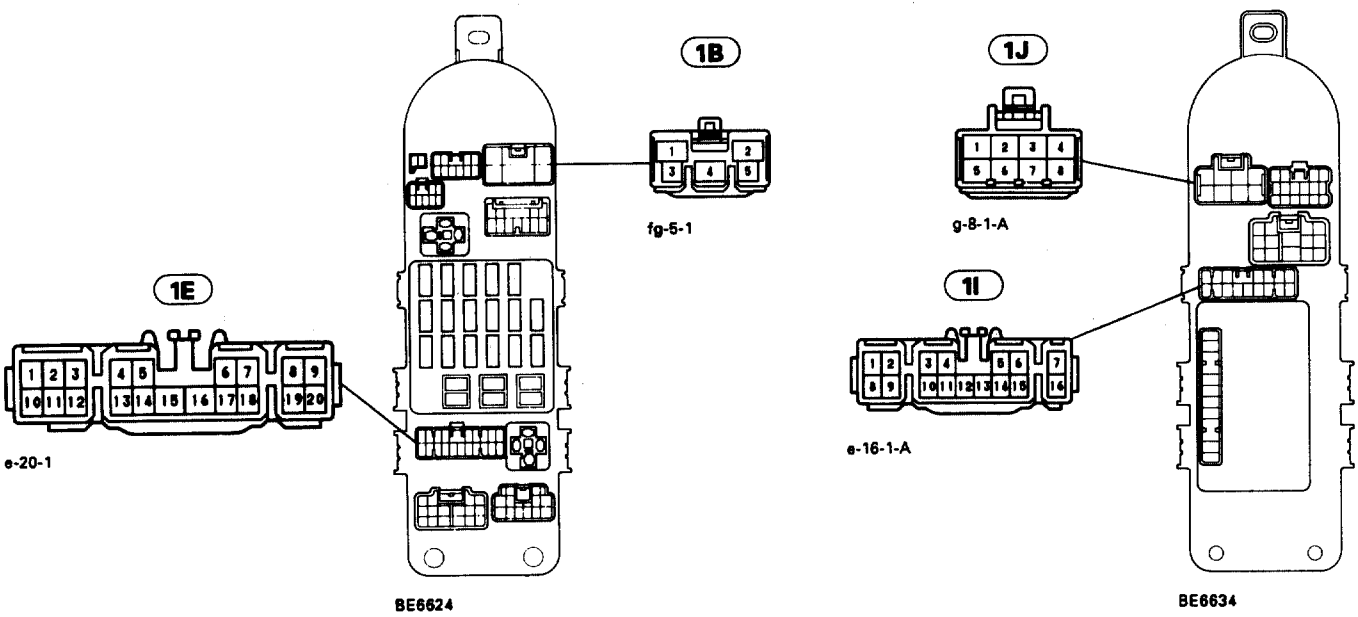

J/B No.3

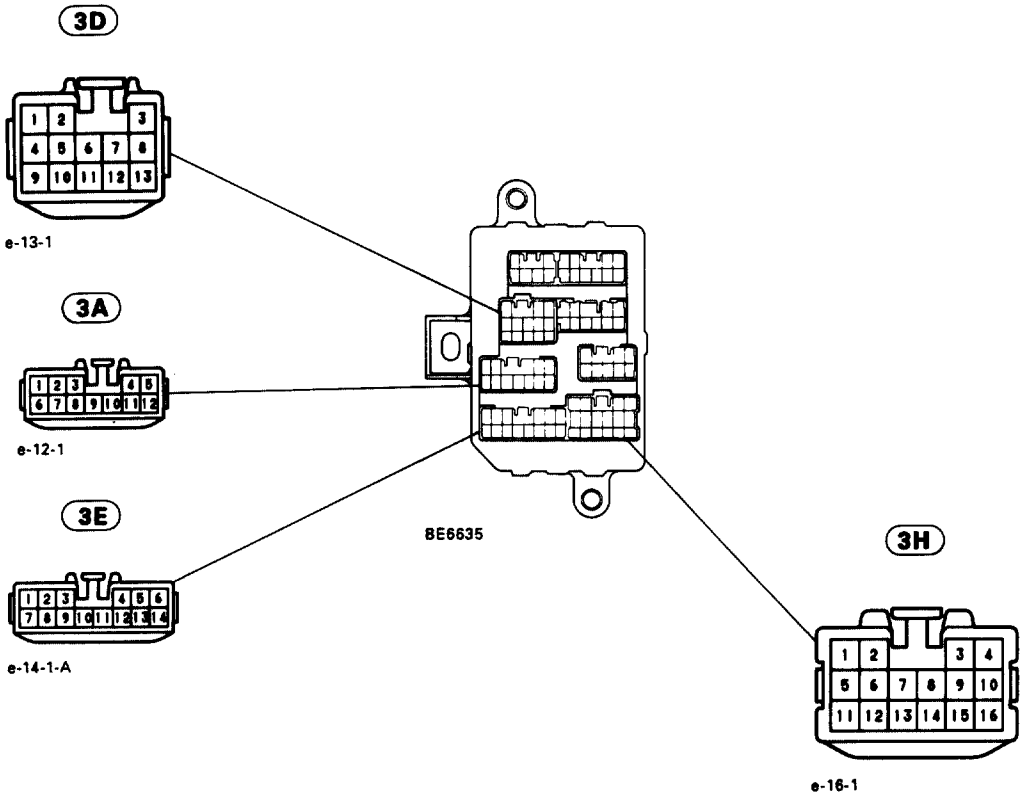

WhereEverybodyKnowsYourName

–MEMO–

WhereEverybodyKnowsYourName

Location of Connectors in Body

SC300

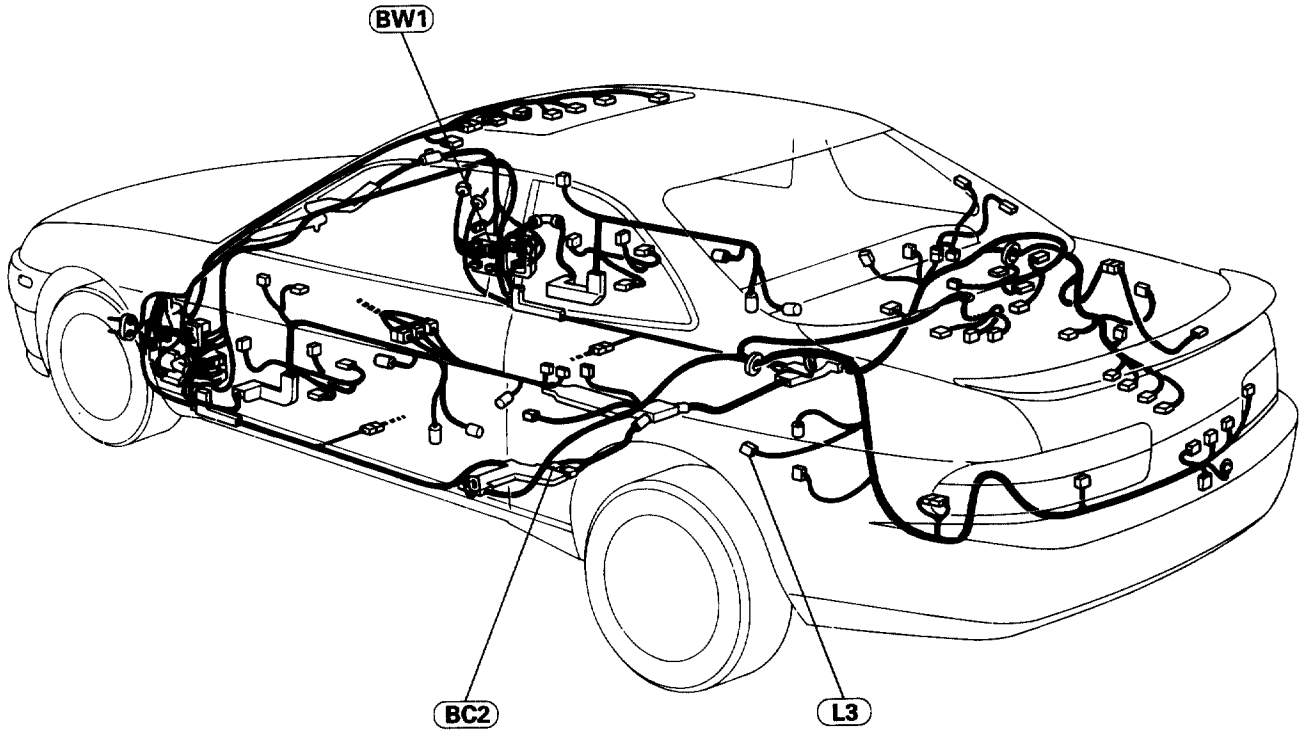

N09569

SC400:

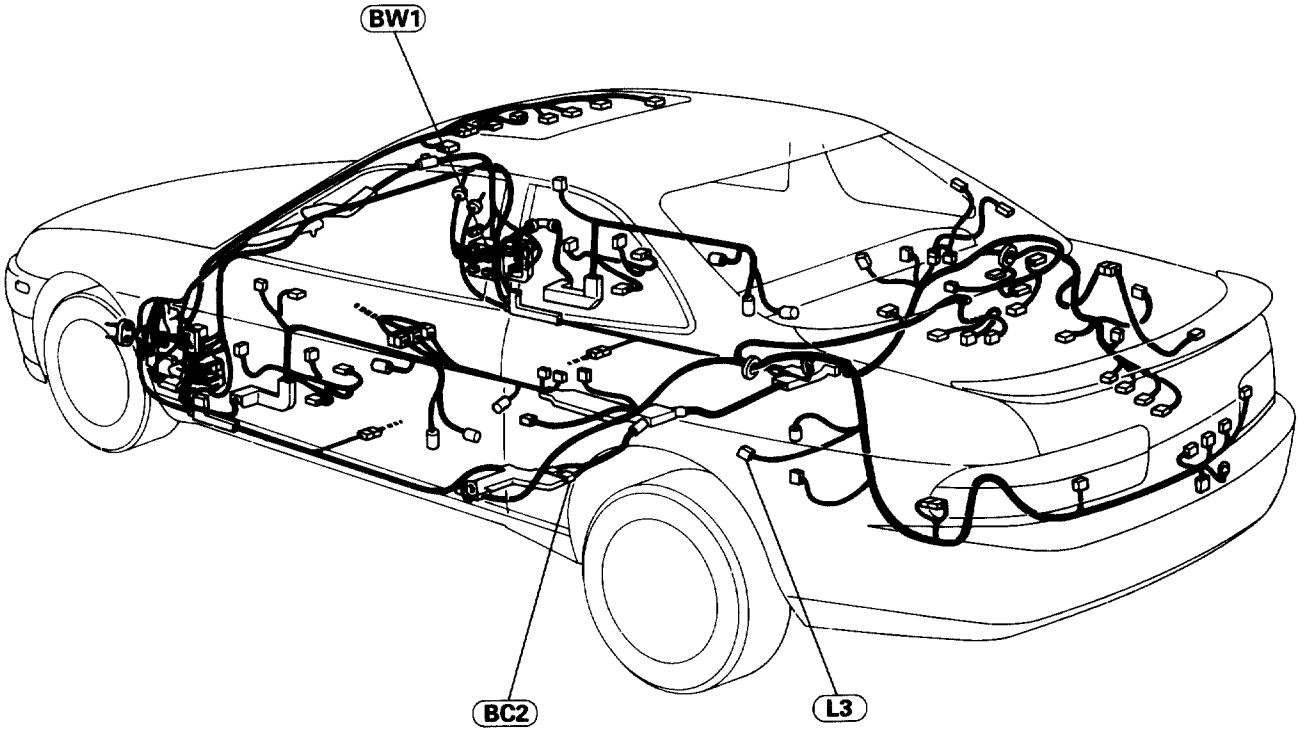

N09569

WhereEverybodyKnowsYourName

L3

Light Failure Sensor

e-12-1

BW1

e-8-1

e-8-2

BC2

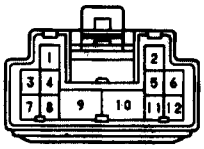

eg-12-1

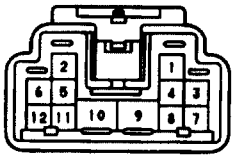

eg-12-2

WhereEverybodyKnowsYourName

DTC 24 TRAC Sub–Throttle Actuator Circuit

CIRCUIT DESCRIPTION

The sub–throttle actuator operates in accordance with signals from the ECU, controlling the opening and closing of the sub–throttle valve.

DTC No.	DTC Detecting Condition	Trouble Area
24	Open or short in sub–throttle actuator circuit	•TRAC fuse •Open or short in BM circuit. •Sub–throttle actuator. •Open or short in sub–throttle actuatorcircuit. •ECU

DIAGNOSTIC CHART

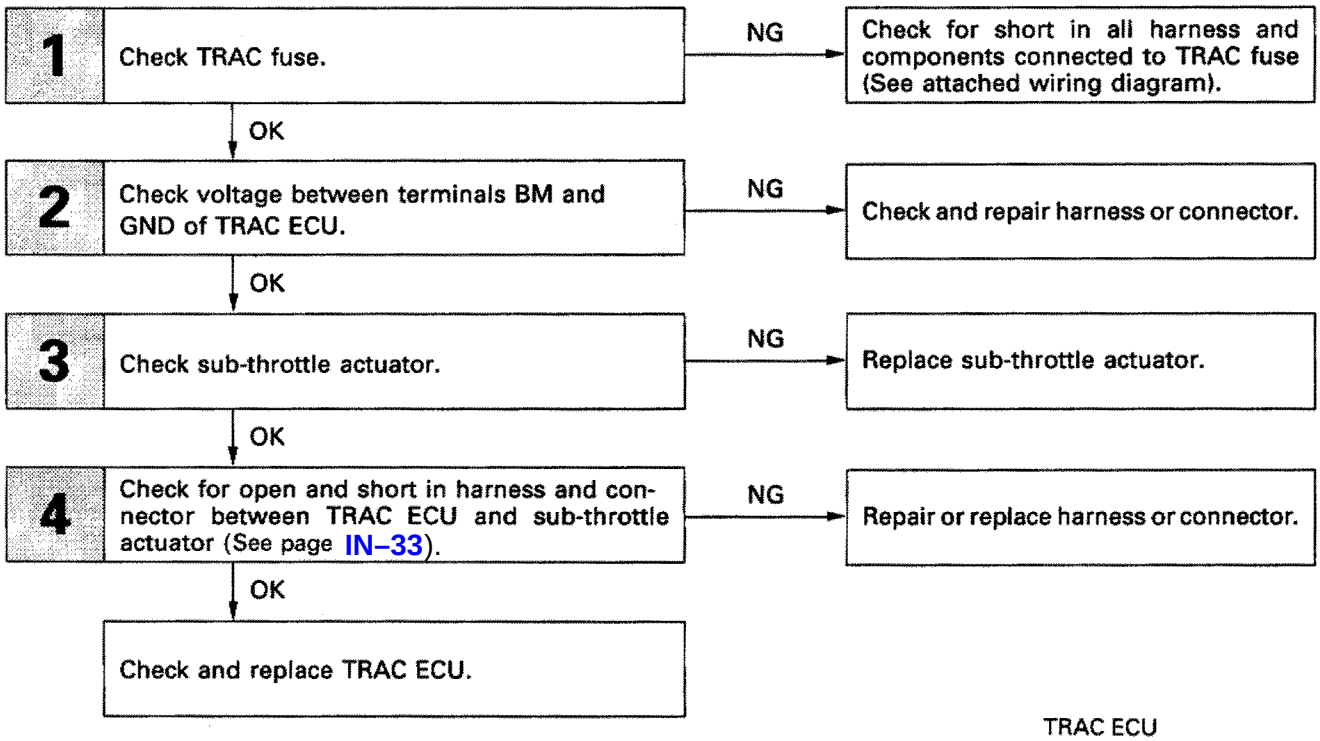

WIRING DIAGRAM

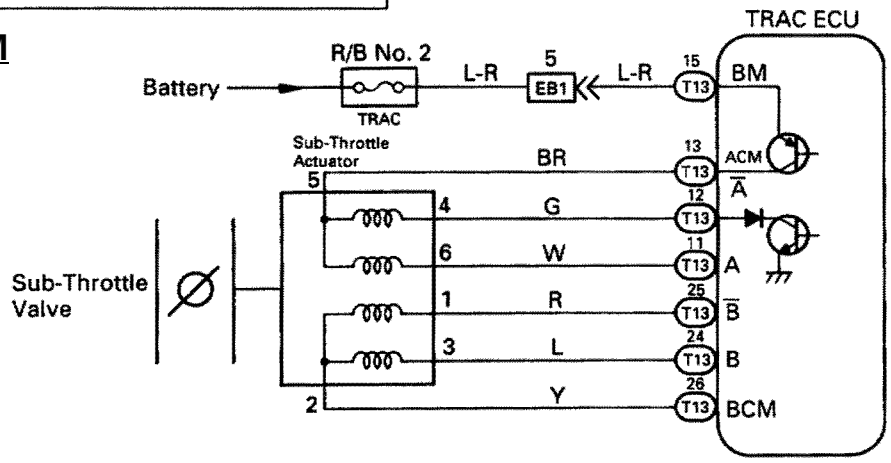

WhereEverybodyKnowsYourName

INSPECTION PROCEDURES

1	Check TRAC fuse.
R/B No. 2 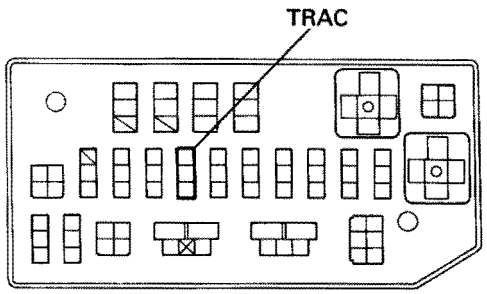 BE6204	**P** Remove TRAC fuse from R/B No. 2. **C** Check continuity of TRAC fuse. **OK** **Continuity**

OK

NG **Check for short in all harness and components connected to TRAC fuse (See attached wiring diagram).**

2	Check voltage between terminals BM and GND or TRAC ECU.
OFF IG OFF 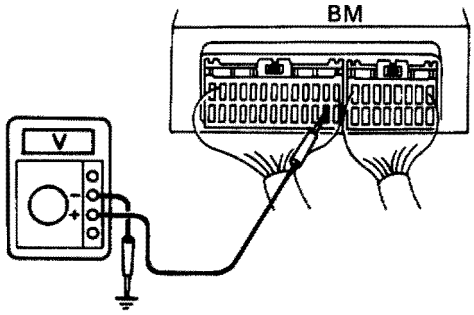 BE6653 R07961	**P** Remove TRAC ECU with connectors still connected. **C** Measure voltage between terminals BM and GND of TRAC ECU. **OK** **Voltage: 10 – 14 V**

OK

NG **Check and repair harness or connector.**

WhereEverybodyKnowsYourName

3 **Check sub–throttle actuator.**

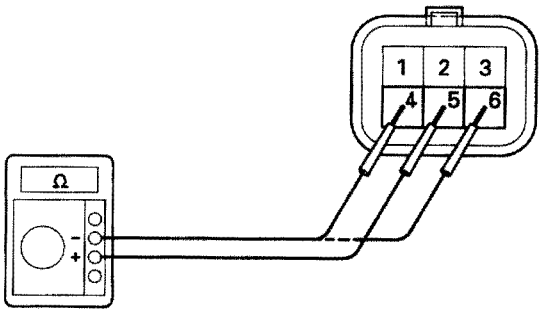

The illustration shows checking for continuity between 4 – 5, and 5 – 6.

R05022

P Disconnect sub–throttle actuator connector.

C Check continuity between each terminal of sub–throttle actuator connector shown below.

OK

Terminals 1 and 2	Continuity (Reference value 0.9 Ω)
Terminals 2 and 3	
Terminals 4 and 5	
Terminals 5 and 6	

OK

NG **Replace sub–throttle actuator.**

4 **Check for open and short in harness and connector between TRAC ECU and sub–throttle actuator (See page IN–33).**

OK

NG **Repair or replace harness or connector.**

Check and replace TRAC ECU.

WhereEverybodyKnowsYourName

DTC 25, 26, 27 TRAC Sub–Throttle Valve

CIRCUIT DESCRIPTION

DTC No.	DTC Detecting Condition	Trouble Area
25	The difference between the sub–throttle sensor signal voltage and the voltage required by the step count is 1 V or more.	•Sub–throttle actuator. •Throttle body (sub–throttle valve is truck or operation is faulty). •Sub–throttle position sensor. •Open or short in sub–throttle position sensor circuit. •ECM •TRAC ECU
26	Even when sub–throttle valve is driven to the fully open position, input voltage at terminal VSH does not come within range of the specifications 3 ~ 4.5 V.	•Sub–throttle actuator. •Throttle body (sub–throttle valve is truck or operation is faulty). •Sub–throttle position sensor. •Open or short in sub–throttle position sensor circuit. •ECM •TRAC ECU
27	When input voltage at ECU terminal VSH is less than the specification by about 2.5 V for 0.2 sec. or more.	•Sub–throttle actuator (return spring is disconnected). •Sub–throttle position sensor. •Open or short in sub–throttle position sensor circuit. •ECM •TRAC ECU

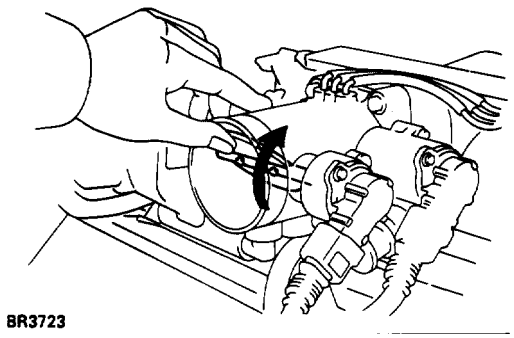

P Remove air cleaner and duct.

C Open and close the sub–throttle valve manually and check the condition during operation.

OK **The valve should operate smoothly without catching.**

Hint If sub–throttle actuator, sub–throttle valve, sub–throttle position sensor and harness are free from any defect, ECM may be defective. If ECM is free from any defect, TRAC ECU may be defective.

WIRING DIAGRAM

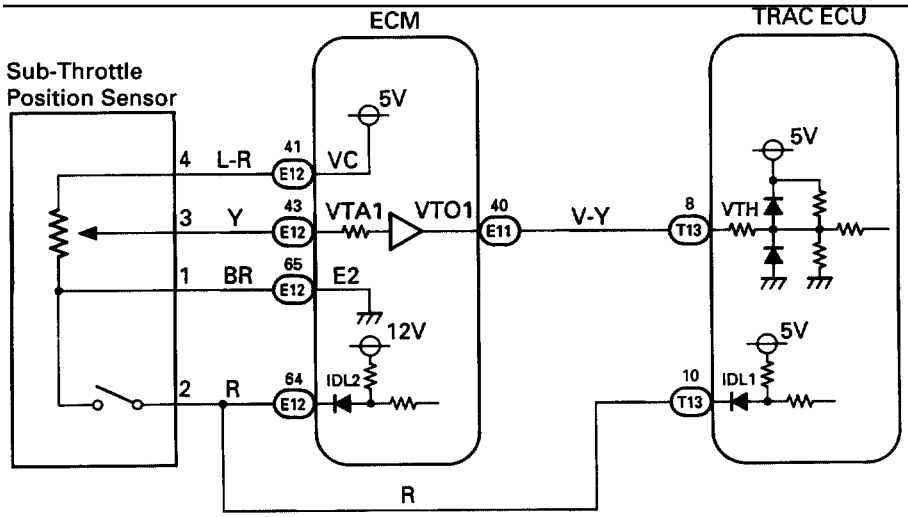

WhereEverybodyKnowsYourName

DTC	31, 32, 33, 34	Speed Sensor Circuit

CIRCUIT DESCRIPTION

The speed sensor detects the wheel speed and sends the appropriate signals to the ECU. These signals are used for control of both the ABS and TRAC control systems. The front and rear rotors each have 48 serrations. When the rotors rotate, the magnetic field emitted by the permanent magnet in the speed sensor generates an AC voltage. Since the frequency of this AC voltage changes in proportion to the speed of the rotors (wheels), the frequency is used by the ECU to detect the speed of each wheel.

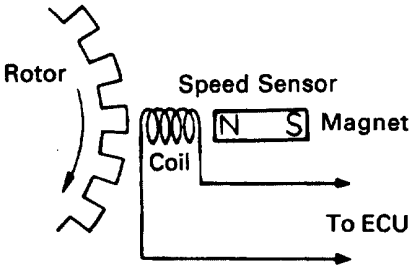

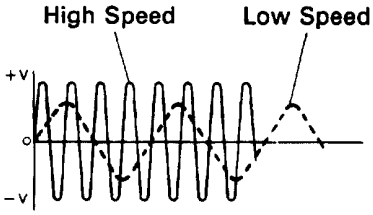

BR3583

BR3582

DTC No.	DTC Detecting Condition	Trouble Area
31, 32, 33, 34	Detection of any of conditions (1) through (3): (1) At vehicle speed of 10 km/h (6 mph) or more, pulses are not input for 5 sec. (2) Momentary interruption of the vehicle speed sensor signal occurs at least 7 times in the time between switching the ignition switch ON and switching it OFF. (3) Abnormal fluctuation of speed sensor signals with the vehicle speed 20 km/h (12 mph) or more.	•Right front, left front, right rear and left rear speed sensor. •Open or short in each speed sensor circuit. •ECU

Hint: DTC No. 31 is for the right front wheel speed sensor.
DTC No. 32 is for the left front wheel speed sensor.
DTC No. 33 is for the right rear wheel speed sensor.
DTC No. 34 is for the left rear wheel speed sensor.

Fail safe function: If trouble occurs in the speed sensor circuit, the ECU prohibits TRAC control.

WhereEverybodyKnowsYourName

DIAGNOSTIC CHART

HINT: If the same code is output from the ABS warning light, troubleshoot the ABS first.

1 Check for open and short in harness and connector between terminals FRO, FLO, PRO, RLO of ABS & TRAC ECU and TRAC ECU.
- NG → Repair or replace harness or connector.
- OK ↓

2 Check speed sensor.
- NG → Replace speed sensor.
- OK ↓

3 Check for open and short in harness and connector between each speed sensor and ABS & TRAC ECU.
- NG → Repair or replace harness or connector.
- OK ↓

4 Check sensor rotor and sensor installation.
- NG → Replace speed sensor or rotor.
- OK ↓

Check and replace TRAC ECU or ABS & TRAC ECU.

For inspection procedure, see page BR–120

WIRING DIAGRAM

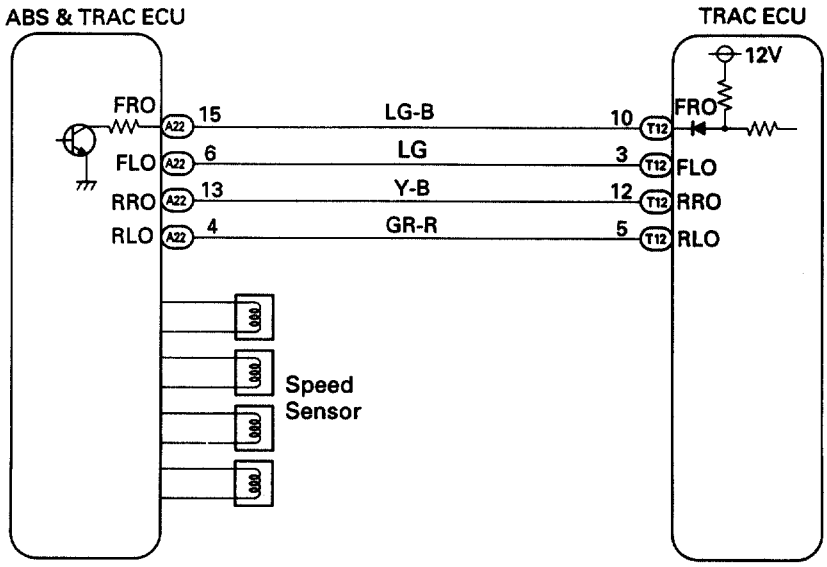

3R5402

WhereEverybodyKnowsYourName

DTC 41 IG Power Source Circuit

CIRCUIT DESCRIPTION

This is the power source for the ECU and becomes power source for the CPU and actuators.

DTC No.	DTC Detecting Condition	Trouble Area
41	When either of the following (1) or (2) is detected: (1) Voltage at ECU terminal IG is less than 9.5 V for more than 10 sec. while engine speed is 500 rpm or higher. (2) Voltage at ECU terminal IG is more than 17 V for more than 5 sec.	•Battery •IC regulator •Open or short in power source circuit •ECU

Fail safe function: If trouble occurs in the power source circuit, the ECU prohibits TRAC control.

DIAGNOSTIC CHART

1 Check battery positive voltage.
- NG → Check and repair the charging system.
- OK ↓

2 Check voltage between terminals IG and GND of TRAC ECU connector.
- NG → Check and replace the TRAC ECU.
- OK ↓

3 Check continuity between terminal GND of TRAC ECU connector and body ground.
- NG → Repair or replace harness or connector.
- OK ↓

4 Check ECU-IG fuse.
- NG → Check for short in all the harness and components connected to ECU-IG fuse (See attached wiring diagram).
- OK ↓

Check for open in harness and connector between TRAC ECU and battery (See page IN–33).

WIRING DIAGRAM

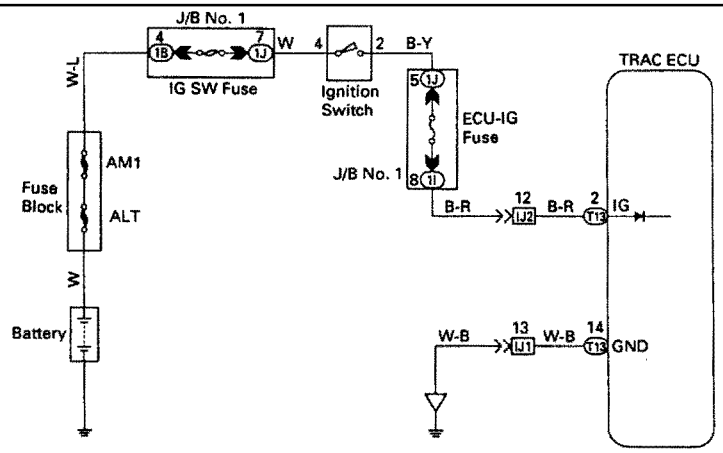

WhereEverybodyKnowsYourName

INSPECTION PROCEDURE

1	Check battery positive voltage.
OK	Voltage: 10 – 14 V

OK

NG → Check and repair the charging system.

2	Check voltage between terminals IG and GND of TRAC ECU connector.
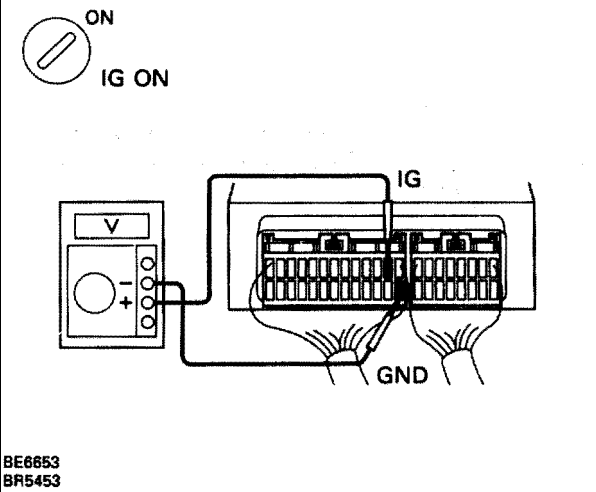	P 1. Remove TRAC ECU with connectors still connected. 2. Turn ignition switch on. C Measure voltage between terminals IG and GND of TRAC ECU connector. OK Voltage: 10 – 14 V

NG

OK → Check and replace TRAC ECU.

3	Check continuity between terminals GND of TRAC ECU connector and body ground.
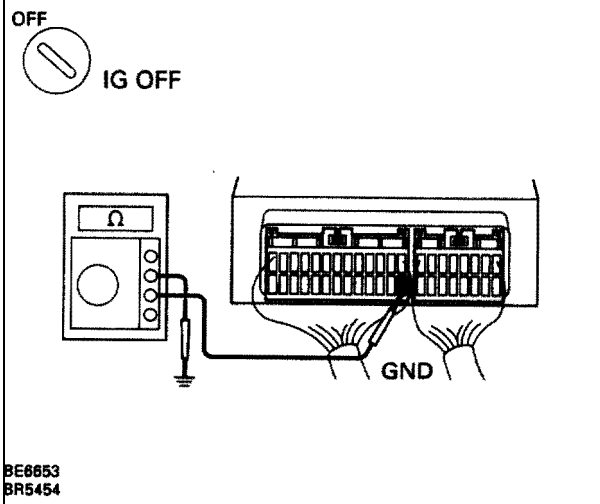	C Measure resistance between terminal GND or TRAC ECU connector and body ground. OK Resistance: 1 or less

OK

NG → Repair or replace harness or connector.

WhereEverybodyKnowsYourName

4	Check ECU–IG fuse.
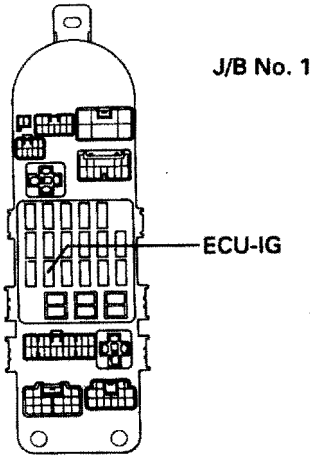	**P** Remove ECU–IG fuse from J/B No. 1. **C** Check continuity of ECU–IG fuse. **OK** **Continuity**

OK

NG **Check for short in all the harness and components connected to ECU–IG fuse (See attached wiring diagram).**

Check for open in harness and connector between TRAC ECU and battery (See page IN–33).

WhereEverybodyKnowsYourName

–MEMO–

WhereEverybodyKnowsYourName

DTC 43 ABS & TRAC ECU Malfunction

CIRCUIT DESCRIPTION

DTC No.	DTC Detecting Condition	Trouble Area
43	ABS control system or TRAC (BRAKE) control system or communication circuit is abnormal.	•ABS & TRAC ECU •Open or short in BRFA circuit

DIAGNOSTIC CHART

HINT: If an error code is output from the ABS & TRAC ECU, it should be repaired first.
If an error code is not output from the ABS & TRAC ECU, the wire harness between the BRFA terminals may be defective.

1 Check voltage between terminal BRFA of TRAC ECU and body ground.
- OK → Check and replace TRAC ECU.
- NG ↓

2 Check voltage between terminal BRFA of TRAC ECU and body ground with TRAC ECU connector is disconnected.
- OK → Check and replace TRAC ECU.
- NG ↓

3 Check for open and short in harness and connector between ABS & TRAC ECU and TRAC ECU.
- NG → Repair or replace harness or connector.
- OK ↓

Check and replace ABS & TRAC ECU.

WIRING DIAGRAM

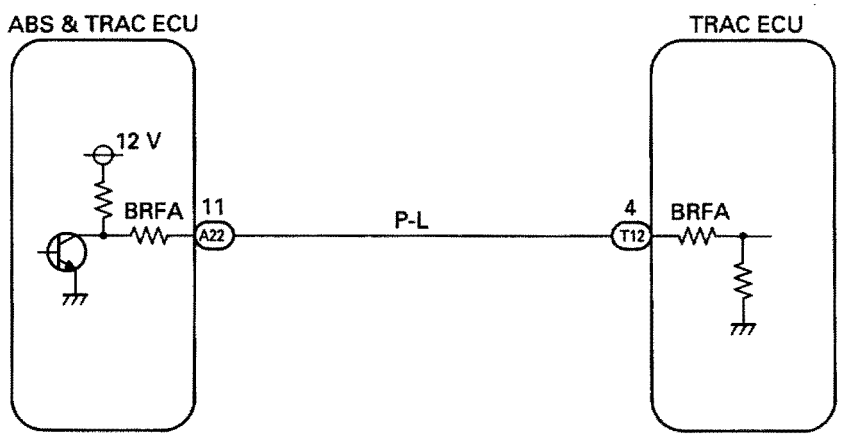

WhereEverybodyKnowsYourName

INSPECTION PROCEDURE

1 **Check voltage between terminal BRFA of TRAC ECU and body ground.**

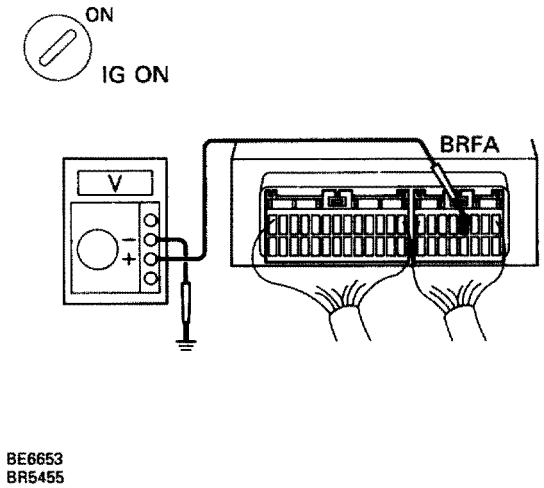

P 1. Remove TRAC ECU with connectors still connected.

2. Turn ignition switch ON.

C Measure voltage between terminal BRFA of TRAC ECU and body ground.

OK **Voltage: About 6 V (Pulse)**

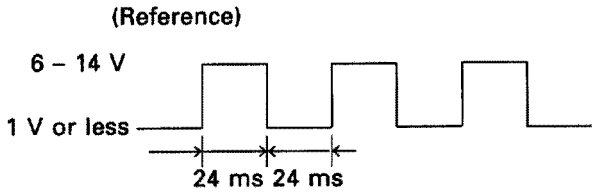

NG → **OK** → **Check and replace TRAC ECU.**

2 **Check voltage between terminal BRFA of TRAC ECU and body ground with TRAC ECU connector is disconnected.**

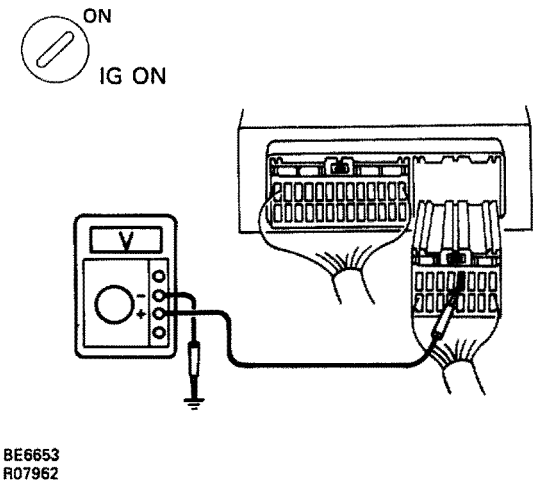

P Disconnect TRAC ECU connector.

C Measure voltage between terminal BRFA of TRAC ECU connector and body ground.

Hint Measure voltage within 8 seconds from the time TRAC ECU connector is disconnected.

OK **Voltage: See step 1.**

NG → **OK** → **Check and replace TRAC ECU.**

3 **Check for open and short in harness and connector between ABS & TRAC ECU and TRAC ECU (See page IN–33).**

OK → **Check and replace ABS & TRAC ECU.**

NG → **Repair or replace harness or connector.**

WhereEverybodyKnowsYourName

DTC 44 NE Signal Circuit

CIRCUIT DESCRIPTION

The TRAC ECU receives engine speed signals (NE signals) from the ECM.

DTC No.	DTC Detecting Condition	Trouble Area
44	No signal is input to terminal NEO 0.24 sec. after traction control is initiated.	•Open or short in NEO circuit •ECM •TRAC ECU

DIAGNOSTIC CHART

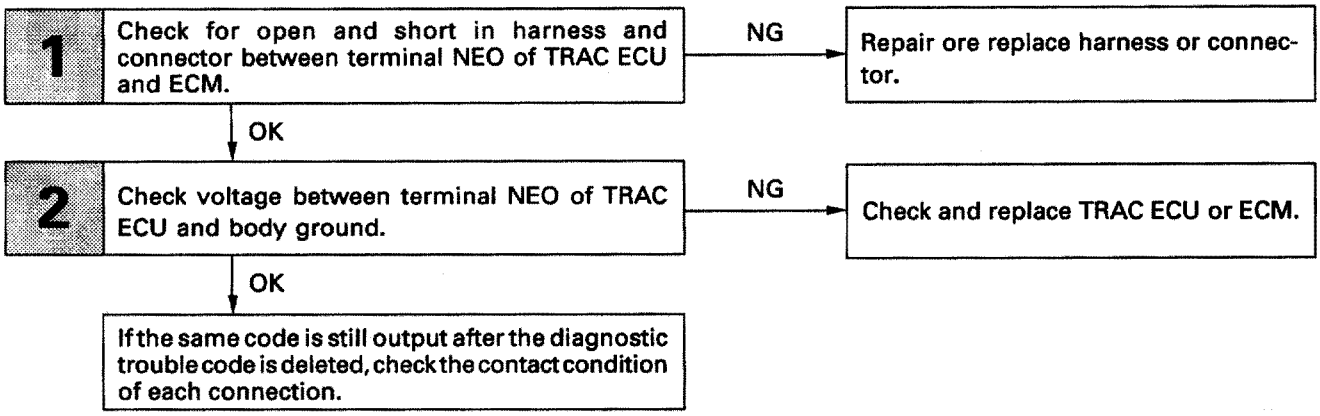

WIRING DIAGRAM

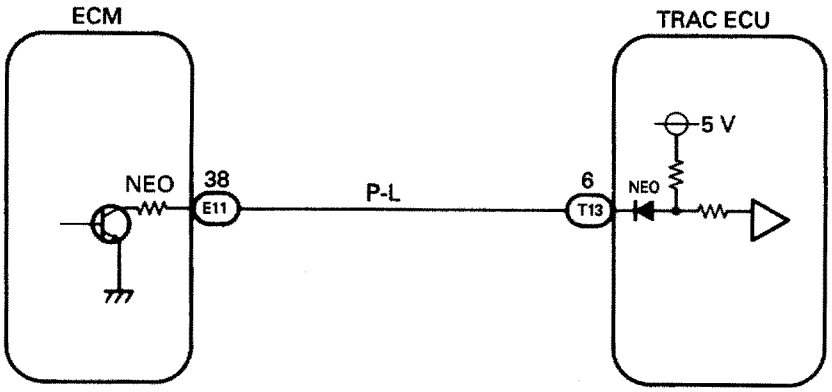

BR5440

WhereEverybodyKnowsYourName

INSPECTION PROCEDURES

1	**Check for open and short in harness and connector between terminal NEO of TRAC ECU and terminal NEO of ECM (See page IN–33).**

OK

NG → **Repair or replace harness or connector.**

2	**Check voltage between terminal NEO of TRAC ECU and body ground.**

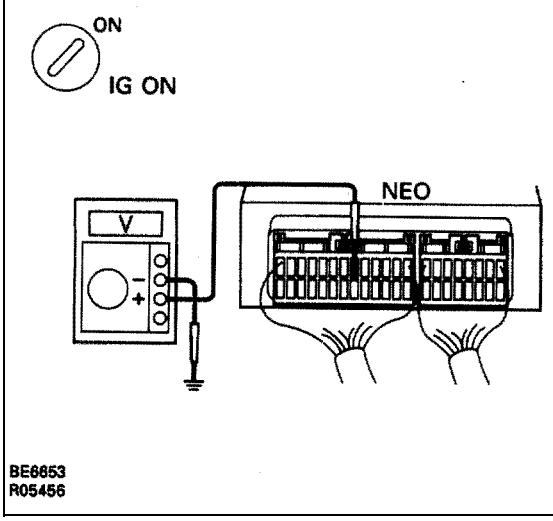

P

1. Remove TRAC ECU with connectors still connected.
2. Turn ignition switch on.

C

Measure voltage between terminal NEO of TRAC ECU and body ground for the engine conditions below.

OK

Engine condition	Voltage
OFF (IG ON)	4 – 6 V or Below 1 V
ON (Idling)	2 – 3 V (Pulse)

OK

NG → **Check and replace TRAC ECU or ECM.**

If the same code is still output after the diagnostic code is deleted, check the contact condition of each connection.

WhereEverybodyKnowsYourName

DTC 45, 46 Main Throttle Position Sensor Circuit

— CIRCUIT DESCRIPTION

This circuit is not directly related to the TRAC control, but as it has an influence on TRAC control when trouble occurs in this circuit, it is used to switch off the TRAC system as a fail safe function.

DTC No.	DTC Detecting Condition	Trouble Area
45	Either of the following (1) and (2) continues for 0.12 sec.: (1) IDL switch of main throttle position sensoris ON. (2) Input voltage of TRAC ECU terminal VTH:1.45 V or more.	•Main throttle position sensor •Open in VTH circuit •Short in IDL1 circuit •ECM •TRAC ECU
46	Either of the following (1) or (2) continues for0.12 sec.: (1) Input voltage of TRAC ECU terminal VTH:4.3 V or more. (2) Input voltage of TRAC ECU terminal VTHwhile IDL1 switch is OFF: 0.2 V or less	•Main throttle position sensor •Short in VTH circuit •ECM •TRAC ECU

WhereEverybodyKnowsYourName

DIAGNOSTIC CHART

HINT: The main throttle position sensor signal is transmitted to the TRAC ECU from ECM, so if an error occurs at the engine side, the TRAC ECU also detects it.
If diagnostic trouble code No. 41 is being output for the engine, conduct engine troubleshooting first.

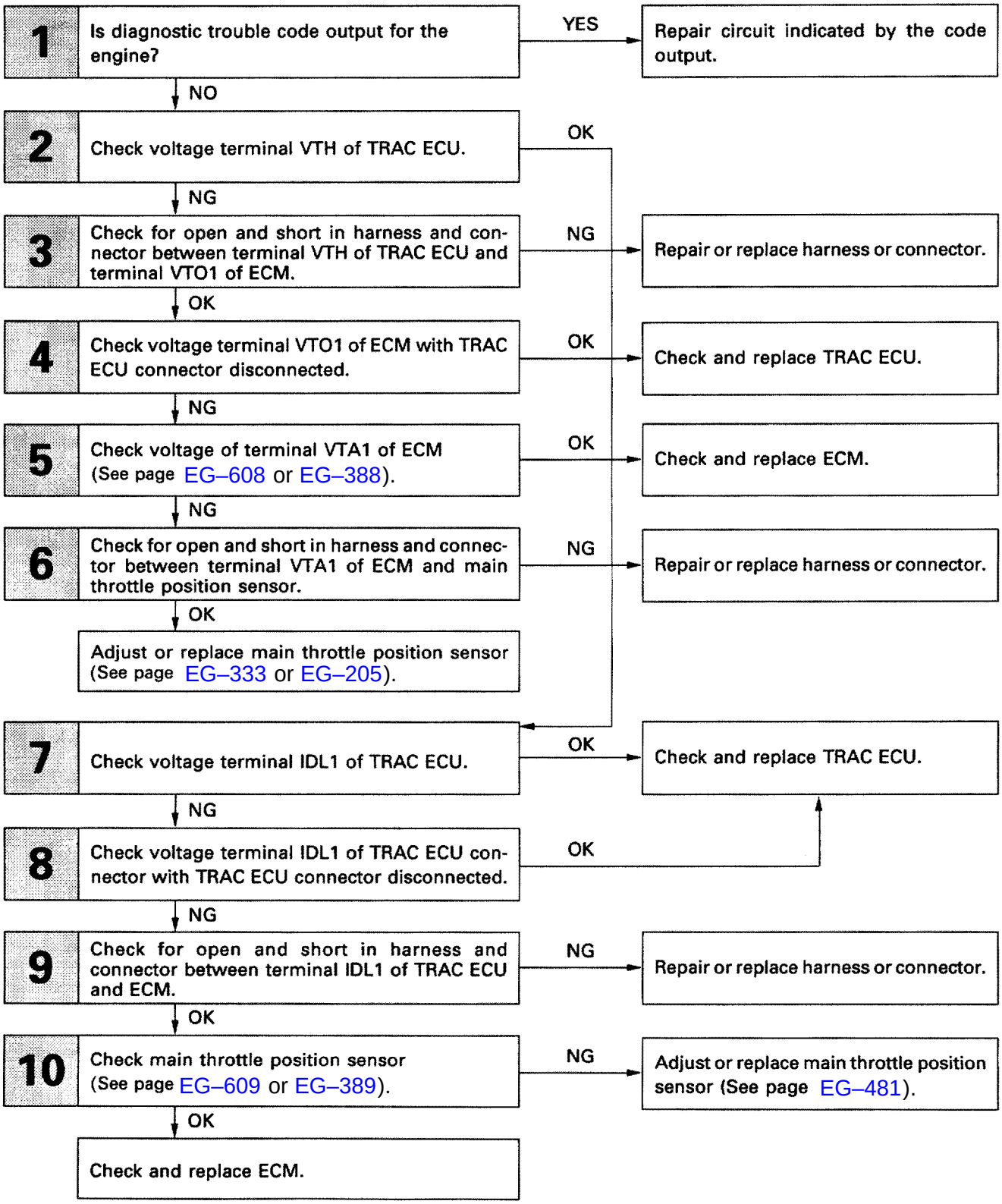

WhereEverybodyKnowsYourName

WIRING DIAGRAM

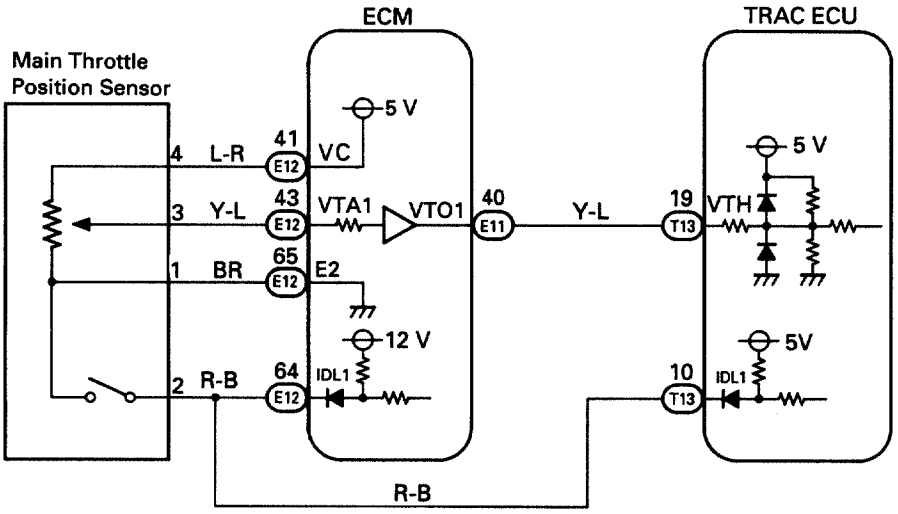

BR5401

WhereEverybodyKnowsYourName

INSPECTION PROCEDURE

1	Is diagnostic trouble code output for the engine?
Perform diagnostic trouble code check on page EG–523 or EG–305.	

NO

YES → **Repair circuit indicated by the code output.**

2	Check voltage between terminal VTH of TRAC ECU and body ground.

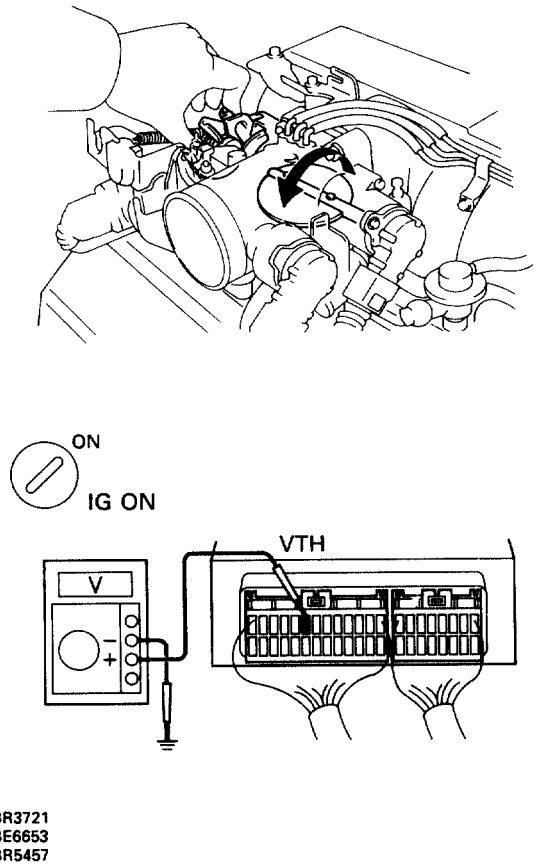

P

1. Remove TRAC ECU with connectors still connected.
2. Remove intake air duct.
3. Turn ignition switch on.

C

Measure voltage between terminal VTH of TRAC ECU and body ground, when the main throttle valve is turned from fully closed position to fully opened position by hand

OK

Main throttle valve position	Voltage
Fully closed	Below 1.5 V
Fully opened	3 – 4.5 V

In addition, as the main throttle valve is turned, the voltage should increase gradually with out interruption.

NG

OK → **Go to step 7.**

3	Check for open and short in harness and connector between terminal VTH of TRAC ECU and terminal VTO1 of ECM (See page IN–33).

OK

NG → **Repair or replace harness or connector.**

WhereEverybodyKnowsYourName

4 **Check voltage between terminal VTO1 of ECM and body ground with TRAC ECU connector disconnected.**

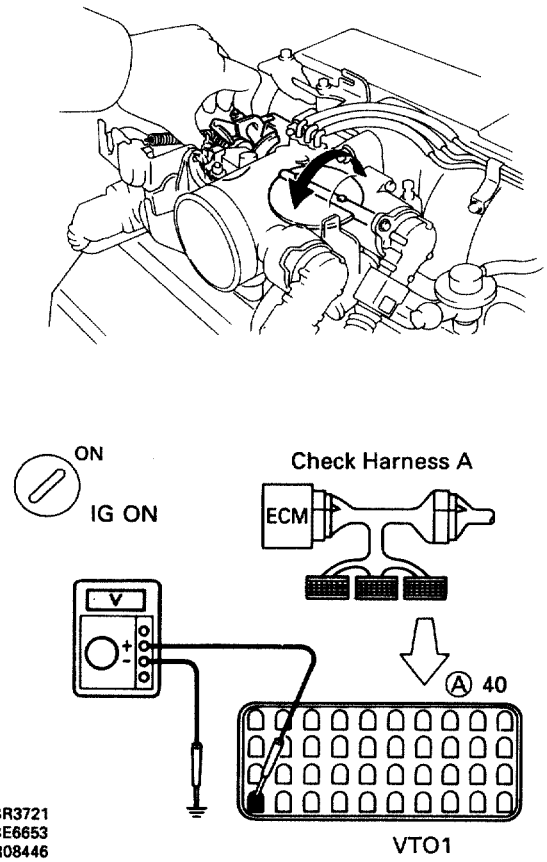

P

1. Connect the Check Harness A. (See page EG–542 or EG–328).
2. Disconnect the TRAC ECU connector.
3. Turn ignition switch on.

C Measure voltage between terminal VTO1 or ECM and body ground, when the main throttle valve is fully closed and fully opened.

OK

Main throttle valve position	Voltage
Fully closed	Below 1.0 V
Fully opened	10 – 14 V

NG

OK **Check and replace TRAC ECU.**

5 **Check voltage of terminal VTA1 of ECM (See page EG–608 or EG–388).**

NG

OK **Check and replace ECM.**

WhereEverybodyKnowsYourName

6	Check for open and short in harness and connector between terminal VTA1 of ECM and main throttle position sensor (See page IN–33).

OK

NG → Repair or replace harness or connector.

Adjust or replace main throttle position sensor (See page EG–333 or EG–205).

7	Check voltage between terminal IDL1 of TRAC ECU and body ground.

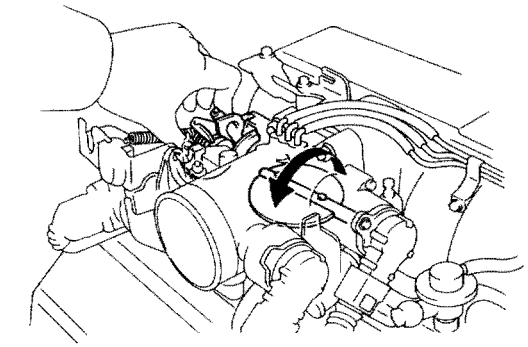

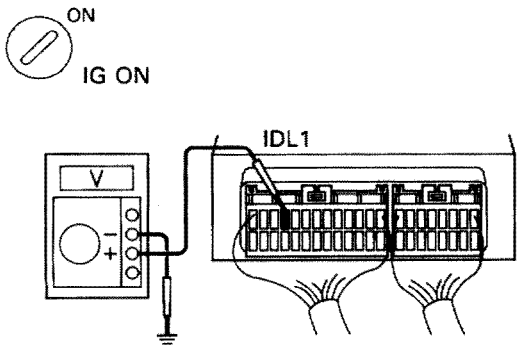

BR3721
BE6653
BR5458

P Turn ignition switch on.

C Measure voltage between terminal IDL1 of TRAC ECU and body ground, when the main throttle valve is fully closed and fully opened.

OK

Main throttle valve position	Voltage
Fully closed	Below 1.0 V
Fully opened	10 – 14 V

NG

OK → Check and replace TRAC ECU.

WhereEverybodyKnowsYourName

8 **Check voltage between terminal IDL1 of TRAC ECU connector and body ground with TRAC ECU connector disconnected.**

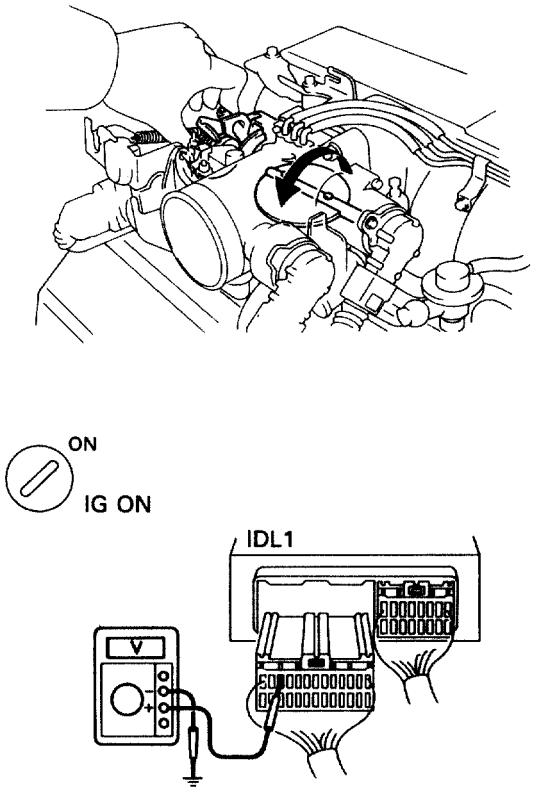

P
1. Disconnect the TRAC ECU connector.
2. Turn ignition switch on.

C Measure voltage between IDL1 of TRAC ECU connector and body ground, when the main throttle valve is fully closed and fully opened.

OK

Main throttle valve position	Voltage
Fully closed	Below 1.0 V
Fully opened	10 – 14 V

NG

OK **Check and replace TRAC ECU>**

9 **Check for open and short in harness and connector between terminal IDL1 of TRAC ECU and ECM (See page IN–33).**

OK

NG **Repair or replace harness or connector.**

WhereEverybodyKnowsYourName

10	**Check main throttle position sensor (See page** EG–609 **or EG–389).**

OK

NG **Adjust or replace main throttle position sensor (See page EG–333 or EG–205).**

Check and replace ECM.

WhereEverybodyKnowsYourName

DTC 47, 48 Sub–Throttle Position Sensor Circuit

— CIRCUIT DESCRIPTION

This sensor detects the opening angle of the sub–throttle valve and sends the appropriate signals to the ECU. If a trouble signal is input, the ECU prohibits TRAC control.

DTC No.	DTC Detecting Condition	Trouble Area
47	When any of the following (1) through (3) is detected: (1) Deviation of 5 steps or more to the closedside of the idle step during sub–throttleinitial check. (2) Voltage at terminal IDL2 switch is OFF evenafter sub–throttle is driven to fully closedposition during sub–throttle initial check 4. (3) Voltage at terminal VSH is 1.45 V or morefor at least 0.15 sec. while idle switch is ON.	•Sub–throttle position sensor •Open or short in IDL2 circuit •ECM •TRAC ECU
48	Either of the following (1) or (2) continues for atleast 0.12 sec. (1) Input voltage of TRAC ECU terminal VSH:4.3 V or more. (2) Input voltage of TRAC ECU terminal VSHis 0.2 V or less while IDL2 switch OFF.	•Sub–throttle position sensor •Open or short in VSH circuit •ECM •TRAC ECU

WhereEverybodyKnowsYourName

DIAGNOSTIC CHART

HINT: The main throttle position sensor signal is transmitted to the TRAC ECU from ECM, so if an error occurs at the engine side, the TRAC ECU also detects it.
If diagnostic trouble code No. 47 is being output for the engine, conduct engine troubleshooting first.

1 Is diagnostic trouble code output for the engine?
- YES → Repair circuit indicated by the code output.
- NO ↓

2 Check voltage terminal VSH of TRAC ECU.
- OK → **7**
- NG ↓

3 Check for open and short in harness and connector between terminal VSH of TRAC ECU and terminal VTO2 of ECM.
- NG → Repair or replace harness or connector.
- OK ↓

4 Check voltage terminal VTO2 of ECM with TRAC ECU connector disconnected.
- OK → Check and replace TRAC ECU.
- NG ↓

5 Check voltage of terminal VTA2 of ECM (See page EG–608 or EG–388).
- OK → Check and replace ECM.
- NG ↓

6 Check for open and short in harness and connector between terminal VTA2 of ECM and sub-throttle position sensor.
- NG → Repair or replace harness or connector.
- OK ↓

Adjust ore replace sub-throttle position sensor (See page EG–333 or EG–205).

7 Check voltage terminal IDL2 of TRAC ECU.
- OK → Check and replace TRAC ECU.
- NG ↓

8 Check voltage terminal IDL2 of TRAC ECU connector with TRAC ECU connector disconnected.
- OK → Check and replace TRAC ECU.
- NG ↓

9 Check for open and short in harness and connector between terminal IDL2 of TRAC ECU and ECM.
- NG → Repair or replace harness or connector.
- OK ↓

10 Check sub-throttle position sensor (See page **EG–333** or EG–389).
- NG → Adjust or replace sub-throttle position sensor (See page EG–481).
- OK ↓

Check and replace ECM.

WhereEverybodyKnowsYourName

WIRING DIAGRAM

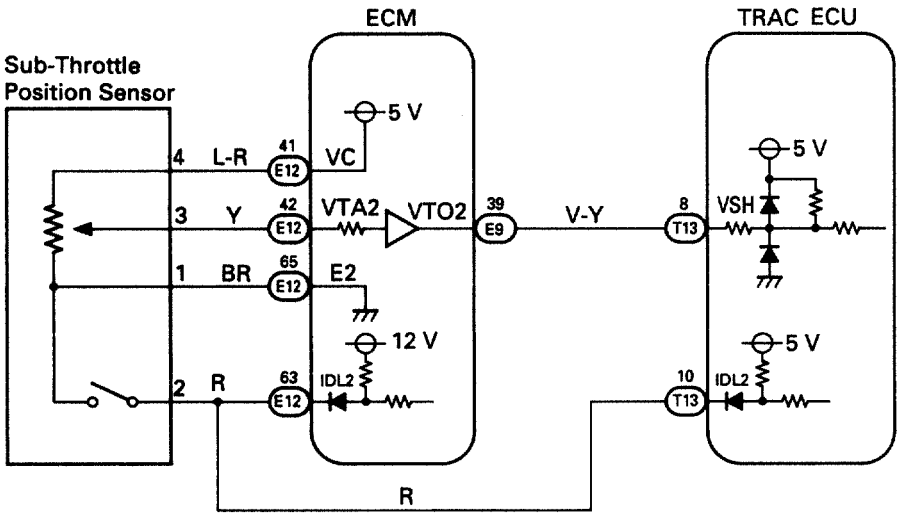

BR5401

WhereEverybodyKnowsYourName

INSPECTION PROCEDURE

1	Is diagnostic trouble code output for the engine?
Perform diagnostic trouble code check on page EG–523 or EG–305.	

NO

YES **Repair circuit indicated by the code output.**

2	Check voltage between terminal VSH or TRAC ECU and body ground.

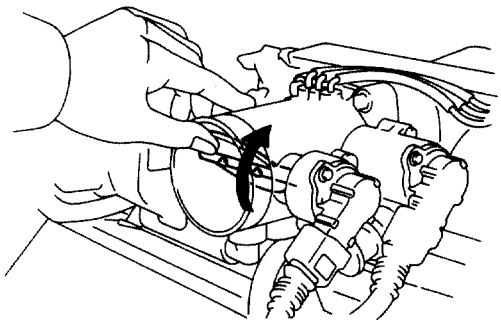

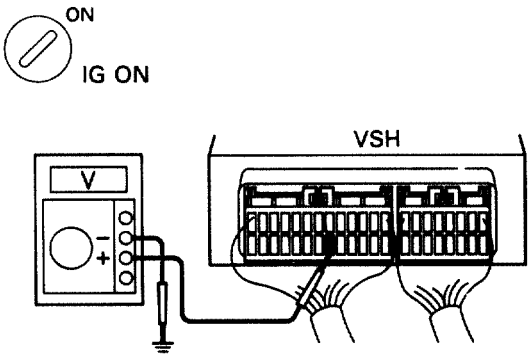

BR3723
BE6653
BR5460

P

1. Remove TRAC ECU with connectors still connected.
2. Remove intake air duct.
3. Disconnect step motor connector.
4. Turn ignition switch on.

C Measure voltage between terminal VSH or TRAC ECU and body ground, when the sub–throttle valve is turned from fully opened position to fully closed position.

OK

Sub-throttle valve position	Voltage
Fully closed	Below 1.5 V
Fully opened	3 – 4.5 V

In addition, as the sub–throttle valve is turned, the voltage should increase gradually with out interruption.

NG

OK **Go to step .**

3	Check for open and short in harness and connector between terminal VSH of TRAC ECU and terminal VTO2 of ECM (See page IN–33).

OK

NG **Repair or replace harness or connector.**

WhereEverybodyKnowsYourName

4 **Check voltage between terminal VTO2 of ECM and body ground with TRAC ECU connector disconnected.**

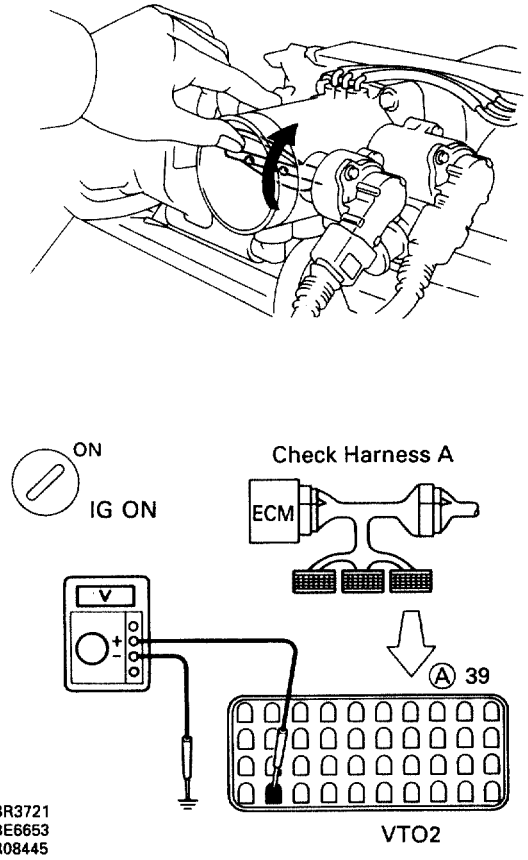

P
1. Connect the Check Harness A. (See page EG–562 or EG–328).
2. Disconnect the TRAC ECU connector.
3. Turn ignition switch on.

C Measure voltage between terminal VTO2 of ECM and body ground, when the sub–throttle valve is fully closed and fully opened.

OK

Sub-throttle valve position	Voltage
Fully closed	Below 1.0 V
Fully opened	10 – 14 V

NG

OK **Check and replace TRAC ECU.**

5 **Check voltage of terminal VTA2 of ECM (See page EG–608 or EG–388).**

NG

OK **Check and replace ECM.**

WhereEverybodyKnowsYourName

6	Check for open and short in harness and connector between terminal VTA2 of ECM and sub–throttle position sensor (See page IN–33)

OK

NG → **Repair or replace harness or connector.**

Adjust or replace sub–throttle position sensor (See page EG–333 or EG–205).

7	Check voltage between terminal IDL2 of TRAC ECU and body ground.

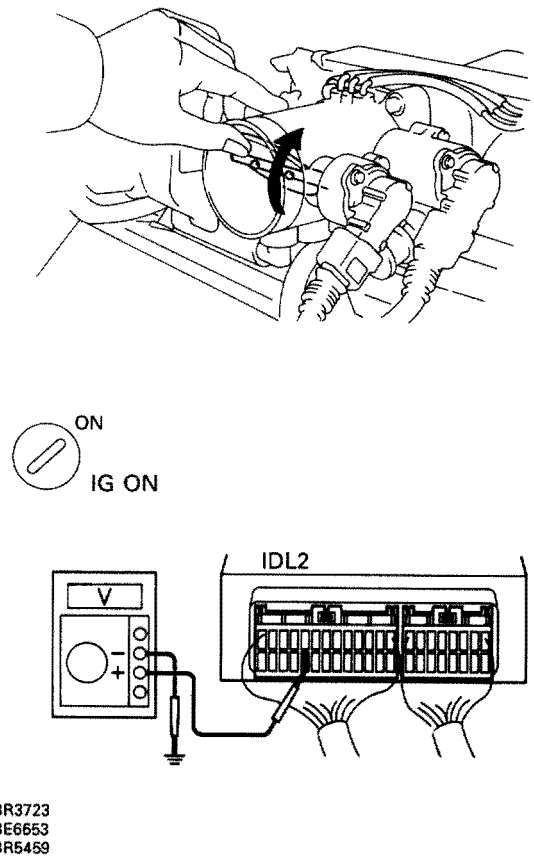

P Turn ignition switch on.

C Measure voltage between terminal IDL2 or TRAC ECU connector and body ground, when the sub–throttle valve is fully closed and fully opened.

OK

Sub-throttle valve position	Voltage
Fully closed	Below 1.0 V
Fully opened	10 – 14 V

NG

OK → **Check and replace TRAC ECU.**

WhereEverybodyKnowsYourName

8 **Check voltage between terminal IDL2 of TRAC ECU connector and body ground with TRAC ECU connector disconnected.**

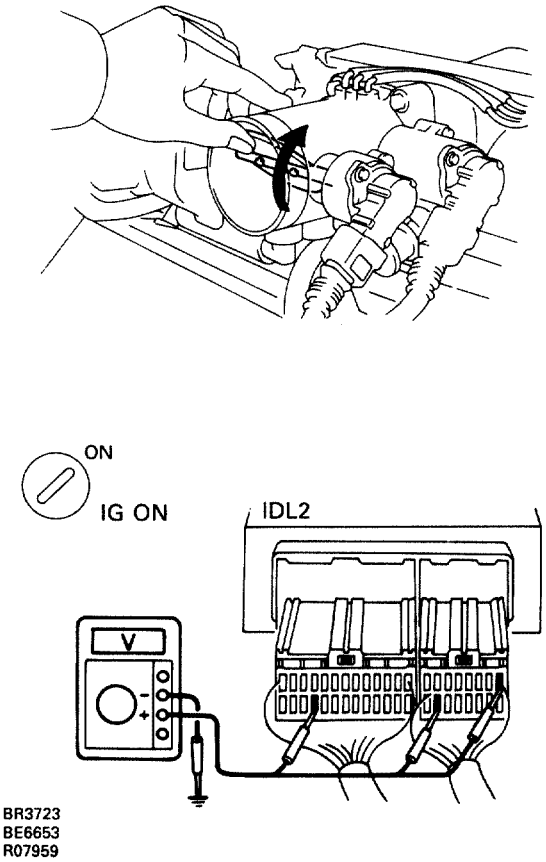

P 1. Disconnect the TRAC ECU connector.

C 2. Turn ignition switch on.

OK Measure voltage between terminal IDL2 of TRAC ECM connector and body ground, when the sub–throttle valve is fully closed and fully opened.

Hint

Sub-throttle valve position	Voltage
Fully closed	Below 1.0 V
Fully opened	10 – 14 V

NG → **OK** → **Check and replace TRAC ECU.**

9 **Check for open and short in harness and connector between terminal IDL2 of TRAC ECU and ECM (See page IN–33).**

OK → **NG** → **Repair or replace harness or connector.**

WhereEverybodyKnowsYourName

10	**Check sub–throttle position sensor (See page** EG–609 **or** EG–389**).**

OK

NG **Adjust or replace sub–throttle position sensor (See page EG–333 or EG–205).**

Check and replace ECM.

WhereEverybodyKnowsYourName

DTC 49 Engine Communication Circuit

CIRCUIT DESCRIPTION

This circuit is used to send ignition timing retard request signals from the TRAC ECU to the ECM in order to retard the engine ignition timing.

DTC No.	DTC Detecting Condition	Trouble Area
49	TR2 output voltage differs from TR2 monitorvoltage in TRAC ECU.	•Open or short in TR2 circuit •ECM •TRAC ECU

DIAGNOSTIC CHART

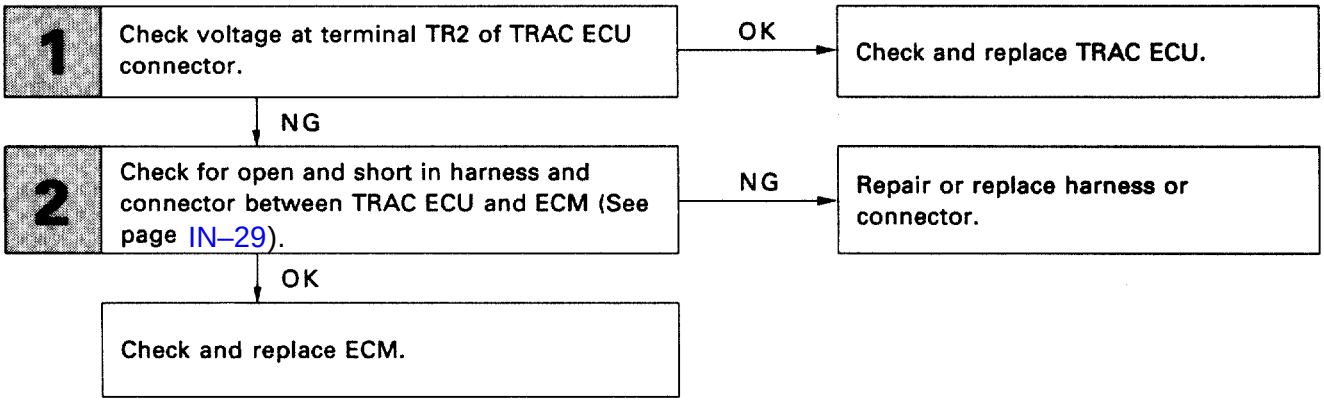

WIRING DIAGRAM

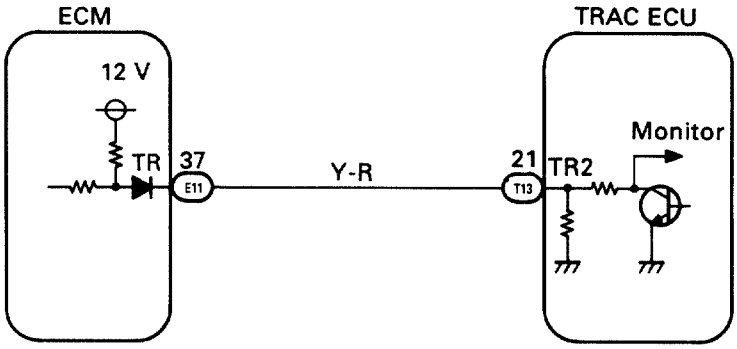

BR5400

WhereEverybodyKnowsYourName

INSPECTION PROCEDURE

1 **Check voltage between terminal TR2 of TRAC ECU and body ground.**

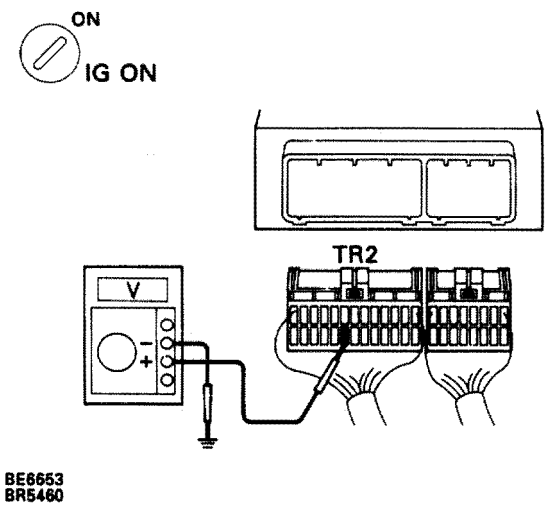

P 1. Disconnect TRAC ECU connector.

C 2. Turn ignition switch on.

OK Measure voltage between terminal TR2 of TRAC ECU and body ground.

Voltage: 8 – 14 V

Hint

NG → **OK** → **Check and replace TRAC ECU.**

2 **Check for open and short in harness and connector between TRAC ECU and ECM (See page IN–29).**

OK → **Check and replace ECM.**

NG → **Repair or replace harness or connector.**

WhereEverybodyKnowsYourName

DTC 51 Engine Malfunction Detection Circuit

CIRCUIT DESCRIPTION

If trouble (trouble which causes the malfunction indicator light to light up) occurs in the engine control system, this circuit senses the trouble and prohibits TRAC control.

DTC No.	DTC Detecting Condition	Trouble Area
51	Either of the following (1) and (2) continues formore than 1 sec.: (1) Engine speed: 500 RPM or more (2) Voltage of TRAC ECU terminal TR5: 1 V or less	•Short in TR5 circuit •ECM •TRAC ECU

DIAGNOSTIC CHART

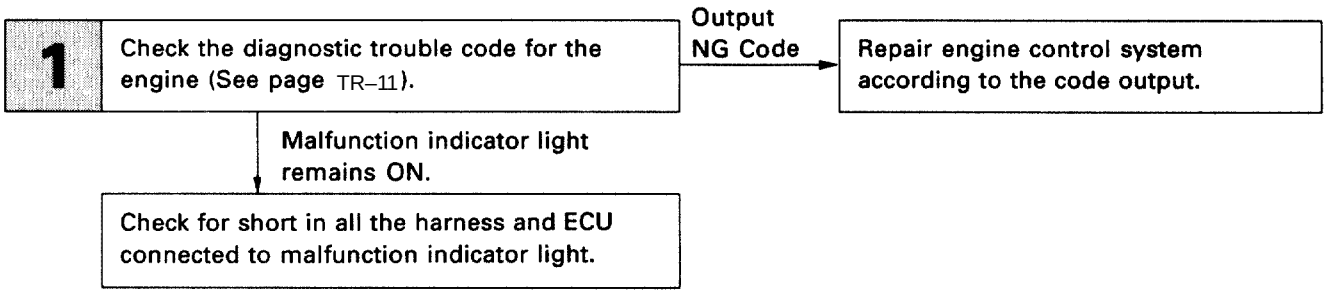

WIRING DIAGRAM

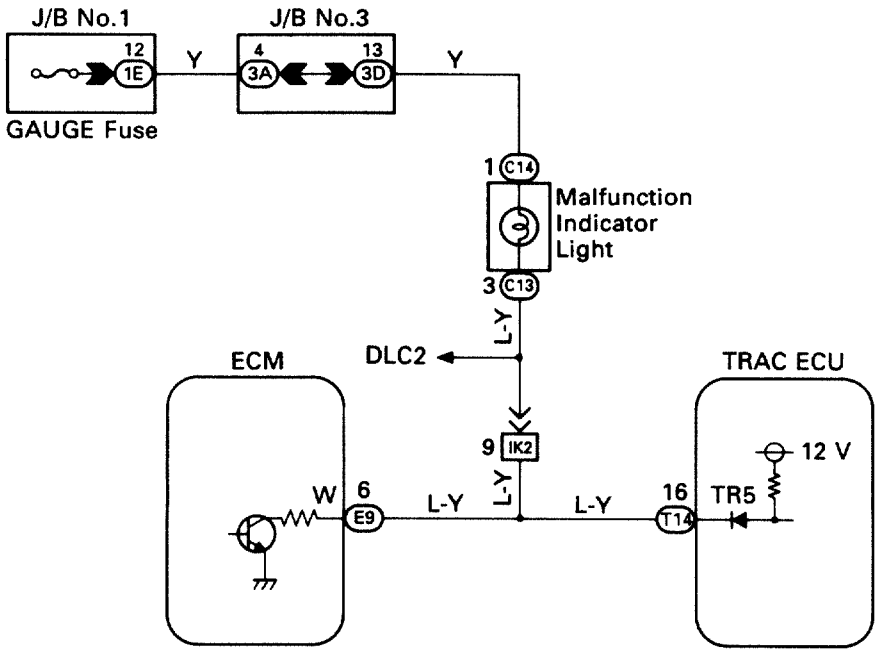

WhereEverybodyKnowsYourName

–MEMO–

WhereEverybodyKnowsYourName

DTC	61	ABS & TRAC ECU Communication Circuit Malfunction

CIRCUIT DESCRIPTION

DTC No.	DTC Detecting Condition	Trouble Area
61	Malfunction in ABS & TRAC ECU communication circuit.	•Open or short in ABSO, BRC, BRP circuit •ABS & TRAC ECU •TRAC ECU

DIAGNOSTIC CHART

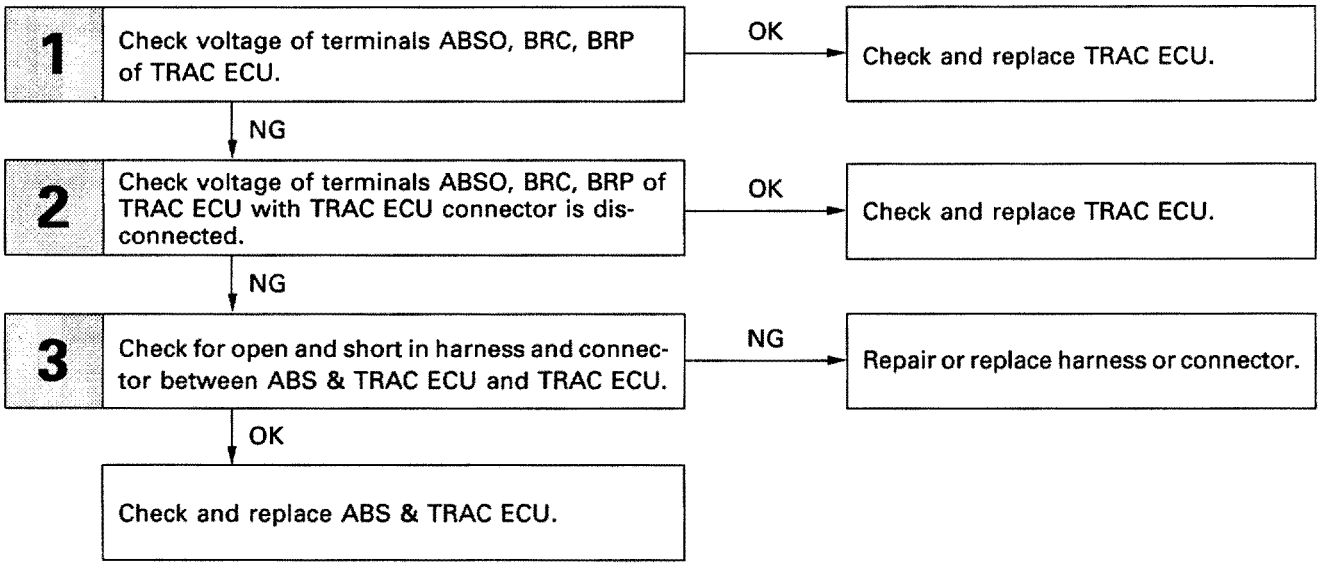

WIRING DIAGRAM

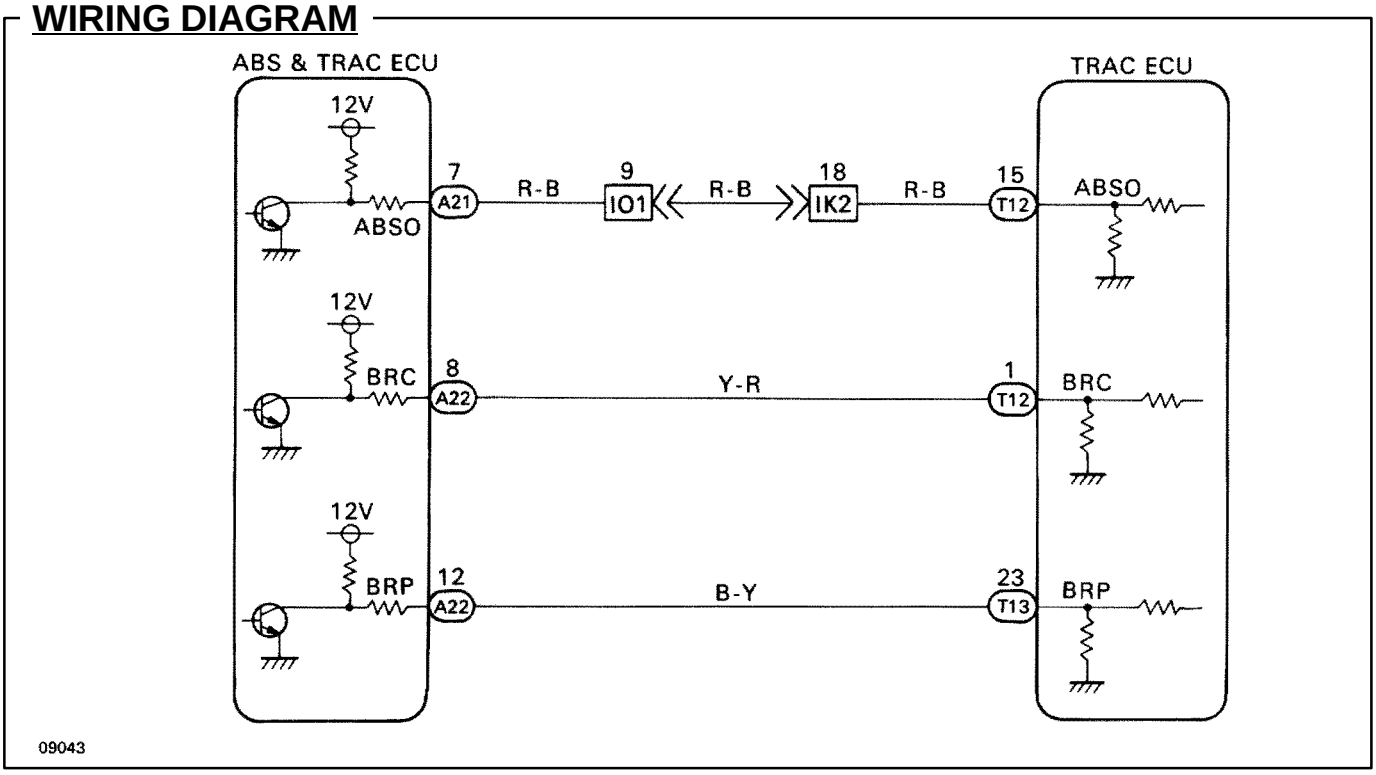

WhereEverybodyKnowsYourName

INSPECTION PROCEDURE

1 **Check voltage between terminals ABSO, BRC, BRP of TRAC ECU and body ground.**

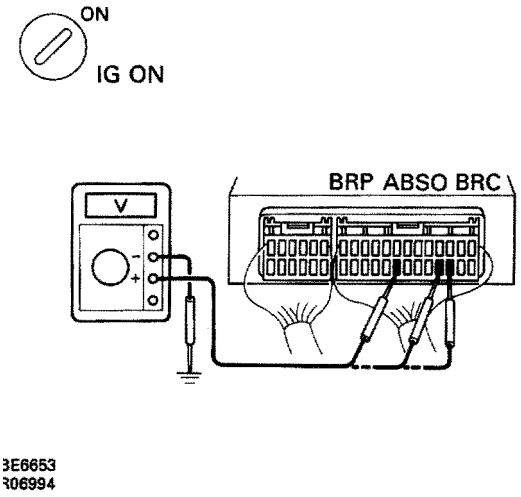

P Remove TRAC ECU with connectors still connected.

C

OK Measure voltage between terminals ABSO, BRC, BRP of TRAC ECU and body ground when ignition switch is turned ON.

Voltage: **ABSO, BRC: 6 – 14 V**
BRP: About 7 V (Pulse)

(Reference)

Hint

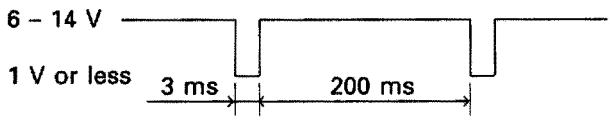

OK

NG **Check and replace TRAC ECU.**

2 **Check voltage between terminals ABSO, BRC, BRP or TRAC ECU and body ground with TRAC ECU connector is disconnected.**

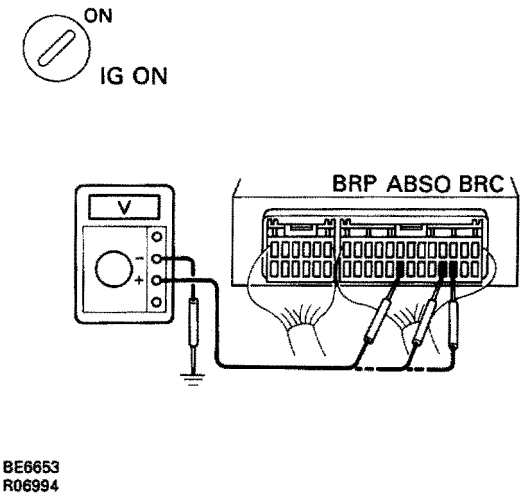

P Disconnect TRAC ECU connector.

C

OK Measure voltage between terminals ABSO, BRC, BRP or TRAC ECU connector and body ground when ignition switch is turned ON.

Voltage: **See step 1.**

Hint

NG

OK **Check and replace TRAC ECU.**

3 **Check for open and short in harness and connector between ABS & TRAC ECU and TRAC ECU (See page IN–33).**

OK

NG **Repair or replace harness or connector.**

Check and replace ABS & TRAC ECU.

WhereEverybodyKnowsYourName

TRAC OFF Indicator, TRAC Cut Switch Circuit

CIRCUIT DESCRIPTION

This is the TRAC control main switch. When the TRAC cut switch is pushed on, TRAC control goes off and the TRAC OFF indicator lights up. This indicator is also used for warnings when the trouble occurs.

DIAGNOSTIC CHART

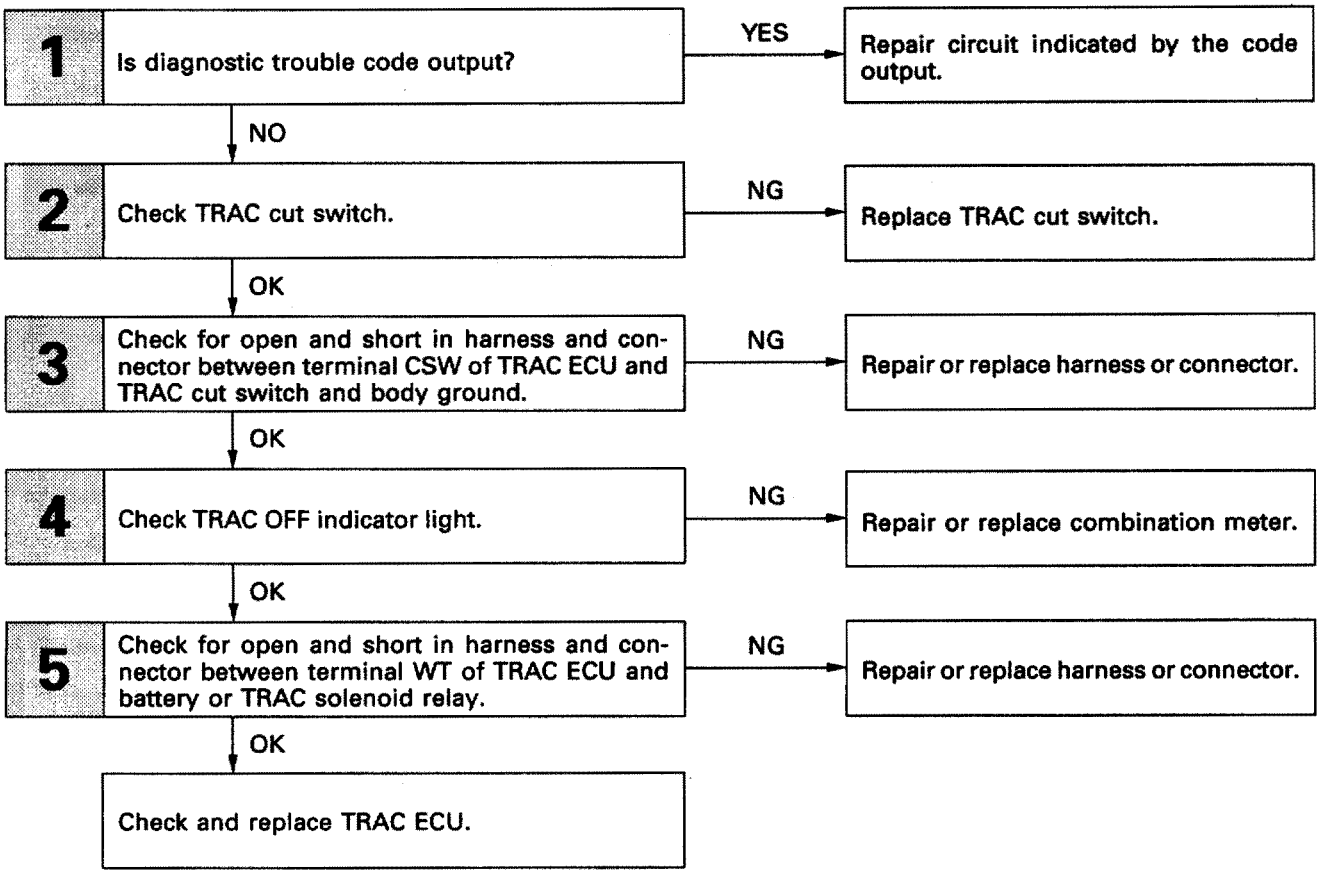

WhereEverybodyKnowsYourName

WIRING DIAGRAM

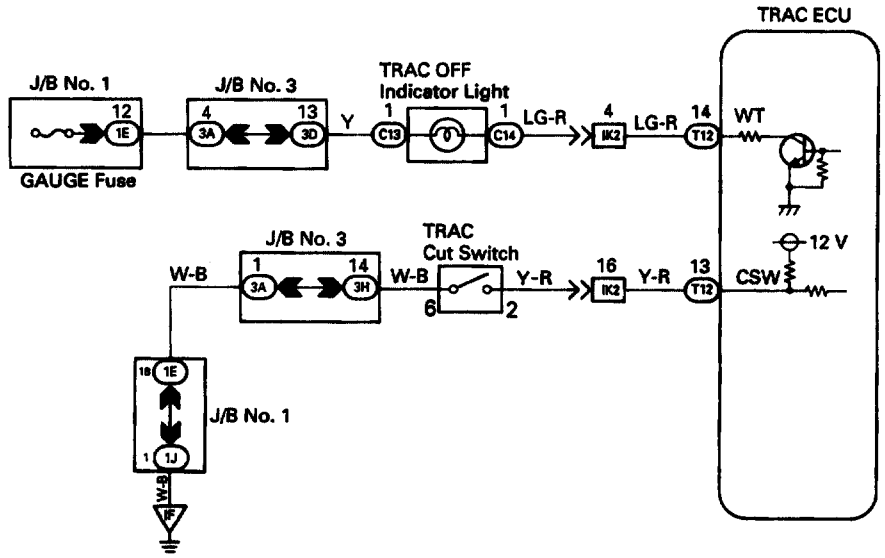

R01415

WhereEverybodyKnowsYourName

INSPECTION PROCEDURES

1	Is diagnostic trouble code output?
Perform diagnostic trouble code check on page BR–184.	

NO

YES → Repair circuit indicated by the code output.

2	Check TRAC cut switch

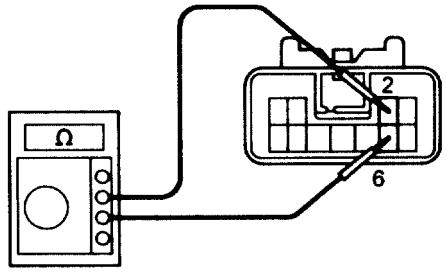

R5430

P

1. Remove TRAC cut switch.
2. Disconnect TRAC cut switch connector.

C Measure resistance between terminals 1 and 2 of TRAC cut switch when TRAC cut switch is on and off.

OK

TRAC cut switch	Resistance
Pushed in	Continuity
Released	1 MΩ or higher

OK

NG → Replace TRAC cut switch.

3	Check for open and short in harness and connector between terminal CSW of TRAC ECU and TRAC cut switch and body ground (See page IN–33).

OK

NG → Repair or replace harness or connector.

4	Check TRAC OF indicator light.
See combination meter troubleshooting on page BE–191.	

OK

NG → Repair or replace combination meter.

5	Check for open and short in harness and connector between terminal WT of TRAC ECU and battery or TRAC solenoid relay (See page IN–33).

OK

NG → Repair or replace harness or connector.

Check and replace TRAC ECU.

WhereEverybodyKnowsYourName

TRAC Indicator Light Circuit

CIRCUIT DESCRIPTION

The TRAC indicator blinks during TRAC operation.
This indicator is also used for warnings when the trouble occurs and for displaying diagnostic trouble codes.

DIAGNOSTIC CHART

Perform troubleshooting in accordance with flow chart instructions for each trouble symptom.

TRAC Indicator light does not light up

Go to combination meter troubleshooting on page BE–163.

TRAC Indicator light remains ON

1 Check diagnostic trouble code (See page BR–150).
- Output NG code → Repair circuit indicated by the code output.
- Indicator light remains ON ↓

2 Check for short in harness and connector between TRAC ECU and TRAC indicator light (See page IN–33).
- NG → Repair or replace harness or connector.
- OK ↓

Check and replace TRAC ECU.

WIRING DIAGRAM

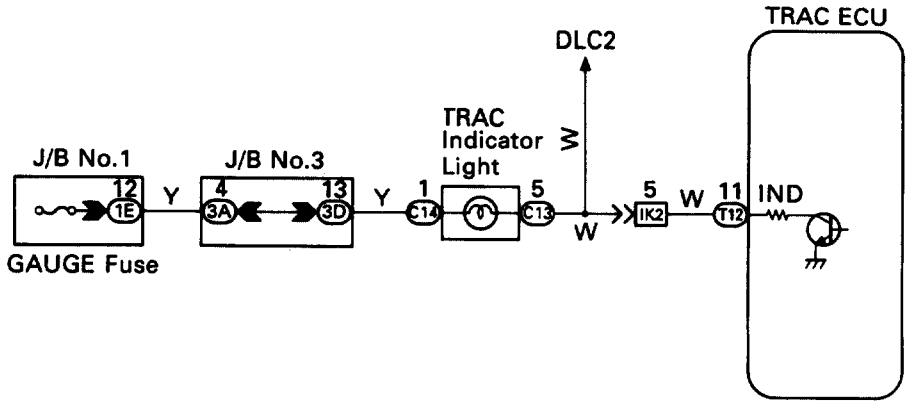

R5427

WhereEverybodyKnowsYourName

Tc Terminal Circuit

CIRCUIT DESCRIPTION

By connecting between terminals Tc and E1 of DLC1 or DLC2, the ECU displays the diagnostic trouble code by blinking the TRAC indicator light.

DIAGNOSTIC CHART

1 Check voltage between terminals Tc and E1 of DLC2 or DLC1.

- OK → Proceed to next circuit inspection shown on problem symptoms chart (See page BR–160).
- NG ↓

2 Check for open and short in harness and connector between ABS & TRAC ECU, TRAC ECU and DLC2 (or DLC1), DLC2 (or DLC1) and body ground (See page IN–33).

- NG → Repair or replace harness or connector.
- OK ↓

Check and replace TRAC ECU.

WIRING DIAGRAM

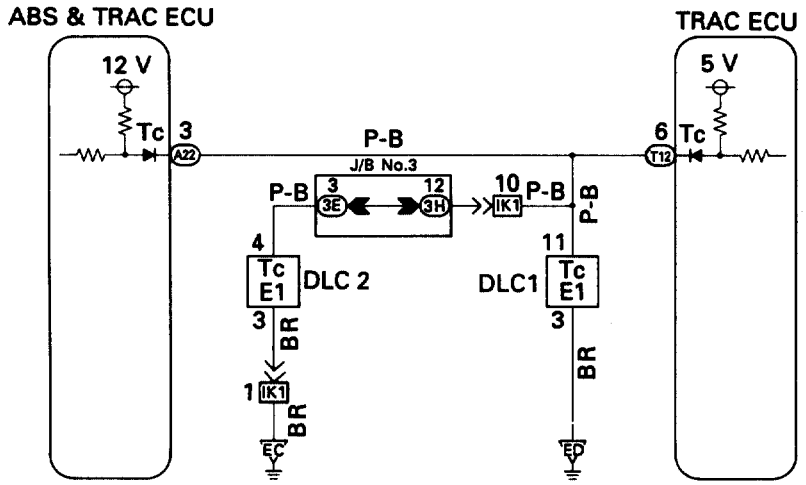

R01416

WhereEverybodyKnowsYourName

INSPECTION PROCEDURE

1	Check voltage between terminals Tc and E1 of DLC 2 or DLC 1.
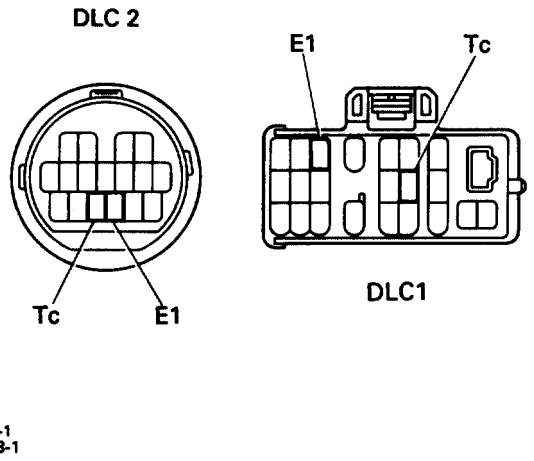	**P** Turn ignition switch ON. **C** Measure voltage between terminals TC and E1 of DLC 2 or DLC 1. **OK** **Voltage: 10 – 14 V**

NG

OK **Proceed to next circuit inspection shown on problem symptoms chart (See page BR–160).**

2	Check for open and short in harness and connector between ABS & TRAC ECU, TRAC ECU and DLC 2 (or DLC 1), DLC 2 (or DLC 1) and body ground (See page IN–33).

OK

NG **Repair or replace harness or connector.**

Check and replace TRAC ECU.

WhereEverybodyKnowsYourName

Check for Fluid Leakage

Check for fluid leakage from actuators or hydraulic lines.

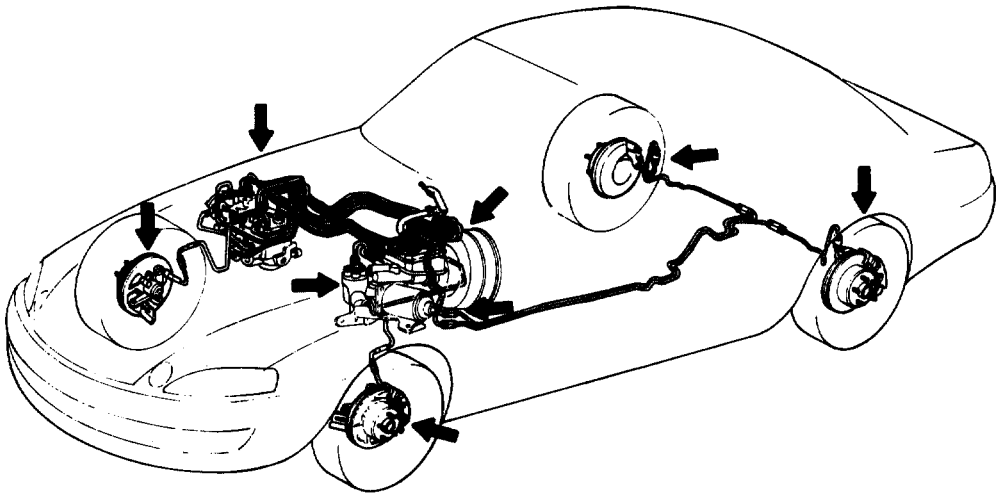

R00002

WhereEverybodyKnowsYourName

SERVICE SPECIFICATIONS

SERVICE DATA

BR03A–0G

Brake pedal height from asphalt sheet (LHD)		150.4–160.4 mm (5.92–6.31 in.)
Brake pedal freeplay		1–6 mm (0.04–0.24 in.)
Brake pedal reserve distance at 490 N (50 kgf, 110.2 lbf)		More than 89 mm (3.50 in.)
Brake booster push rod to piston clearance (w/ SST)		0 mm (0 in.)
Front brake pad thickness	STD	11.0 mm (0.433 in.)
Front brake pad thickness	Limit	1.0 mm (0.039 in.)
Front brake disc thickness (SC 300)	STD	28.0 mm (1.102 in.)
Front brake disc thickness (SC 300)	Limit	26.0 mm (1.024 in.)
Front brake disc thickness (SC 400)	STD	32.0 mm (1.260 in.)
Front brake disc thickness (SC 400)	Limit	30.0 mm (1.181 in.)
Front brake disc runout	Limit	0.05 mm (0.0020 in.)
Rear brake disc pad thickness	STD	10.0 mm (0.394 in.)
Rear brake disc pad thickness	Limit	1.0 mm (0.039 in.)
Rear brake disc thickness	STD	16.0 mm (0.630 in.)
Rear brake disc thickness	Limit	15.0 mm (0.591 in.)
Rear brake disc runout	Limit	0.05 mm (0.0020 in.)
Rear brake disc inside diameter	STD	190 mm (7.48 in.)
Rear brake disc inside diameter	Limit	191 mm (7.52 in.)
Parking brake lining thickness	STD	2.5 mm (0.098 in.)
Parking brake lining thickness	Limit	1.0 mm (0.039 in.)
Parking brake lever travel at 196 N (20 kgf, 44.1 lbf)		5–8 clicks
Parking brake clearance between rear shoe and lever		Less than 0.35 mm (0.012 in.)
Parking brake adjusting shim thickness for rear disc brake		0.3 mm (0.012 in.) 0.6 mm (0.024 in.) 0.9 mm (0.035 in.)

WhereEverybodyKnowsYourName

TORQUE SPECIFICATIONS

BR03B–0G

Part tightened	N·m	kgf·cm	ft·lbf
Master cylinder x Piston stopper bolts	10	100	7
Master cylinder x Reservoir	1.7	17.5	15.2 in.·lbf
Master cylinder x Brake booster	13	130	9
Brake tube union nut	15	155	11
Brake booster clevis lock nut	25	260	19
Brake booster x Pedal bracket	15	150	11
Bleeder plug (TRAC actuator and TRAC accumulator)	8.3	85	74 in.·lbf
Bleeder plug	11	110	8
Front disc brake torque plate x Steering knuckle	118	1,200	87
Front disc brake cylinder installation bolt	34	350	25
Front disc brake cylinder x Flexible hose bolt	30	310	22
Rear disc brake torque plate x Axle carrier	104	1,065	77
Rear disc brake cylinder installation bolt	34	350	25
Rear disc brake x Flexible hose union bolt	30	310	22
Parking brake lever x Floor	59	600	43
Parking brake cable No.1 x Floor	9	80	69 in.·lbf
Parking brake cable retainer x Floor	5.4	55	48 in.·lbf
Parking brake cable clamp x Floor	19	190	14
ABS actuator x Actuator bracket	5.4	55	48 in.·lbf
ABS actuator bracket x Body	19	195	14
Front speed sensor installation bolt	7.8	80	69 in.·lbf
Rear speed sensor installation bolt	7.8	80	69 in.·lbf
TRAC pump bracket x Body	19	195	14
TRAC pump or accumulator x Union bolt	46	465	34

WhereEverybodyKnowsYourName

BRAKE SYSTEM

WhereEverybodyKnowsYourName

GENERAL DESCRIPTION

BR03E–06

1. **Care must be taken to replace each part properly as it could affect the performance of the brake system and result in a driving hazard. Replace the parts with parts of the same part number or equivalent.**
2. **It is very important to keep parts and the area clean when repairing the brake system.**
3. **If the vehicle is equipped with a mobile communication system, refer to the precaution in the IN section.**

DESCRIPTION

BR03F–03

The service brakes consist of a foot brake which changes rotational energy to thermal energy to stop the vehicle while it is being driven and a parking brake to keep the vehicle from moving while it is parked.

OPERATION

FOOT BRAKE

BR03G–06

When the brake pedal is depressed, a vacuum builds up in the booster which amplifies the pedal force, pressing on the piston in the master cylinder. The piston movement raises the hydraulic pressure in the cylinder. This hydraulic pressure is then applied to each respective brake cylinder, and acts to press the brake pads against the rotating discs. The resulting friction converts the rotational energy to thermal energy, stopping the vehicle.

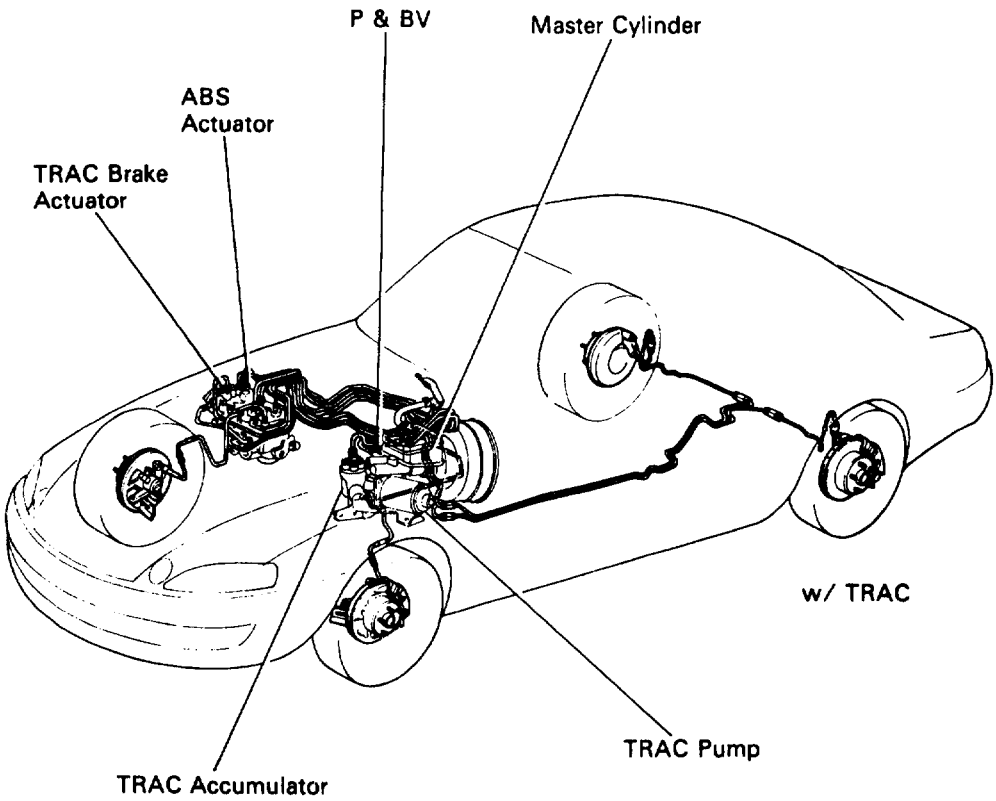

WhereEverybodyKnowsYourName

GENERAL DESCRIPTION

BR03E–06

1. **Care must be taken to replace each part properly as it could affect the performance of the brake system and result in a driving hazard. Replace the parts with parts of the same part number or equivalent.**
2. **It is very important to keep parts and the area clean when repairing the brake system.**
3. **If the vehicle is equipped with a mobile communication system, refer to the precaution in the IN section.**

DESCRIPTION

BR03F–03

The service brakes consist of a foot brake which changes rotational energy to thermal energy to stop the vehicle while it is being driven and a parking brake to keep the vehicle from moving while it is parked.

OPERATION

FOOT BRAKE

BR03G–06

When the brake pedal is depressed, a vacuum builds up in the booster which amplifies the pedal force, pressing on the piston in the master cylinder. The piston movement raises the hydraulic pressure in the cylinder. This hydraulic pressure is then applied to each respective brake cylinder, and acts to press the brake pads against the rotating discs. The resulting friction converts the rotational energy to thermal energy, stopping the vehicle.

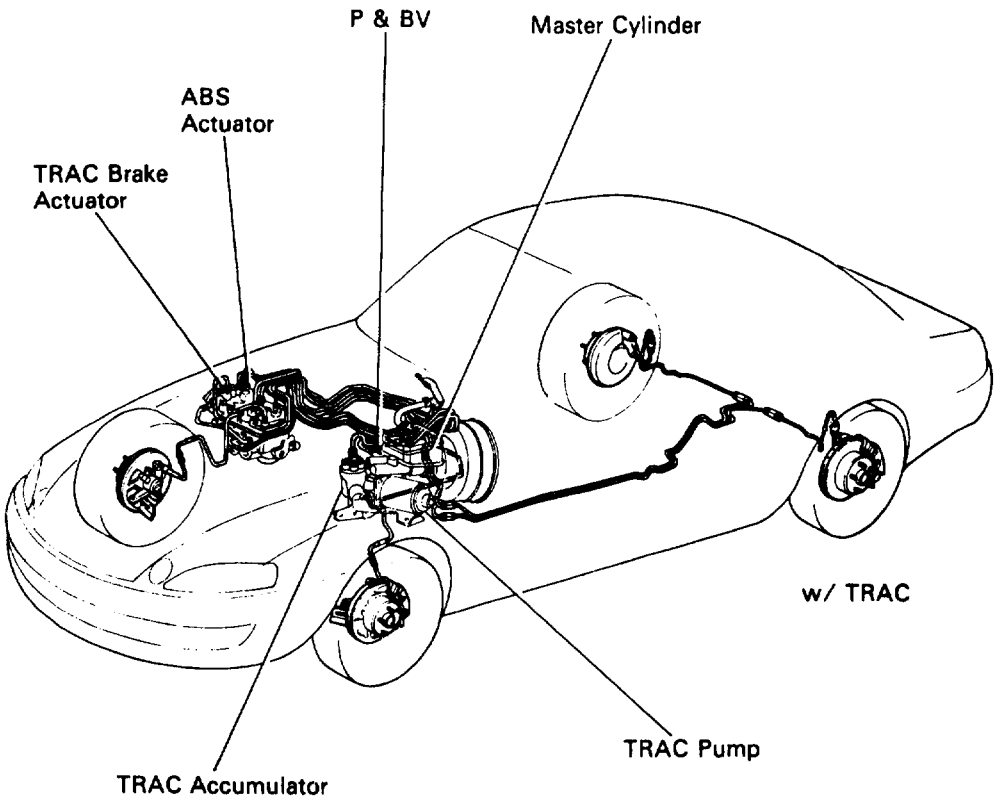

WhereEverybodyKnowsYourName

PARKING BRAKE

BR03H–04

When the parking brake lever is pulled up, the parking brake shoe lever is pulled via the parking brake wire. This causes the shoe strut to push the front shoe, which expands and is pressed against the disc. If the parking brake lever continues to be pulled up, the contact point of the parking brake shoe lever and shoe strut then becomes the fulcrum so that the parking brake shoe lever causes the rear shoe to expand. This results in the disc being locked by the front shoe and rear shoe.

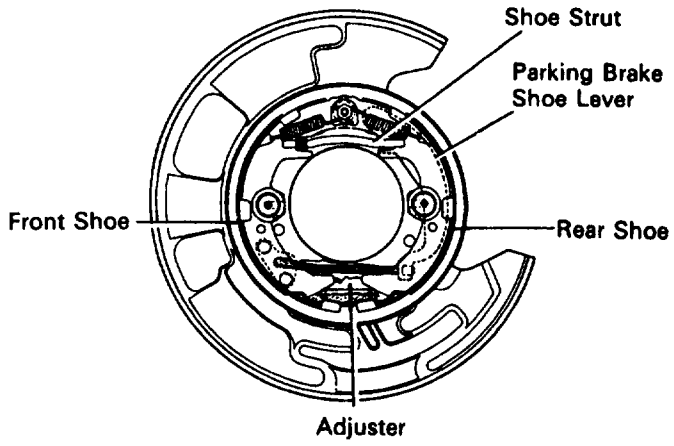

BR5361R

Z04259

WhereEverybodyKnowsYourName

PREPARATION

SST (SPECIAL SERVICE TOOLS)

BR03J–04

	09709–29017	LSPV Gauge Set	
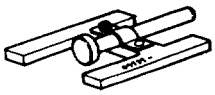	09737–00010	Brake Booster Push Rod Gauge	
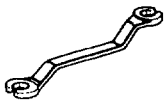	09751–36011	Brake Tube Union Nut 10 x 12 mm Wrench	
	09843–18020	Diagnosis Check Wire	
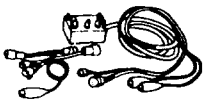	09990–00150	ABS Actuator Checker and Sub–harness	
	09990–00163	ABS Actuator Checker Sheet "A"	w/ TRAC
	09990–00210	ABS Actuator Checker Sub–harness "E"	w/o TRAC
	09990–00250	ABS Actuator Checker Sub–harness "G"	
	09990–00280	ABS Actuator Checker Sub–harness "H"	w/o TRAC

RECOMMENDED TOOLS

BR0EB–01

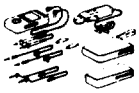	09082–00050	TOYOTA Electrical Tester Set	
	09905–00013	Snap Ring Pliers	

WhereEverybodyKnowsYourName

EQUIPMENT

BR03K–03

Torque wrench	
Micrometer	Brake disc
Dial indicator	Brake disc
Vernier calipers	Brake disc

LUBRICANT

BR03L–03

Item	Capacity	Classification
Brake fluid	—	SAEJ1703 or FMVSS No. 116, DOT 3

WhereEverybodyKnowsYourName

TROUBLESHOOTING

BR03M–06

Use the table below to help you find the cause of the problem. The numbers indicate the priority of the likely cause of the problem. Check each part in order. If necessary, replace these parts.

See page	–	–	BR–21, 29, 37	BR–21, 29, 37	BR–7	BR–12	BR–49	BR–11	–	BR–19	BR–44	BR–21, 29, 37	BR–21, 29, 37	BR–21, 29, 37	BR–21, 29, 37	BR–8	BR–21, 29, 37	BR–21, 29, 37	BR–21, 29, 37	BR–21, 29, 37	BR–21, 29, 37	BR–21, 29, 37	BR–21, 29, 37	BR–444
Part Name / Trouble	Brake system (Fluid leaks)	Brake system (Air in)	Brake pads (Worn)	Piston seals (Worn or damaged)	Brake pedal (Freeplay minimal)	Master cylinder (Faulty)	Parking brake (Shoe clearance out of adjustment)	Parking brake (Lever travel out of adjustment)	Parking brake wire (Sticking)	Booster push rod (Out of adjustment)	Tension or return spring (Faulty)	Pad (Cracked or distorted)	Piston (Stuck)	Pad (Oily)	Piston (Frozen)	Booster system (Vacuum leaks)	Pad support plate (Loose)	Installation bolt (Loose)	Sliding pin (Worn)	Rotor (Scored)	Pad (Dirty)	Pad (Hardened)	Anti-squeal shim (Damaged)	Hold-down spring (Damaged)
Low pedal or spongy pedal	1	2		3		4				5														
Brake drag					1	11	4	2	3	9	8	5	6		7	10								
Brake pull												5	1	2	3					4				
Hard pedal but brake inefficient	1	2	3							8		4		5		9				7		6		
Noise from brakes											8	1					4	2	5	3	6	7	9	10

WhereEverybodyKnowsYourName

CHECK AND ADJUSTMENT

BR0EC–07

BRAKE PEDAL CHECK AND ADJUSTMENT

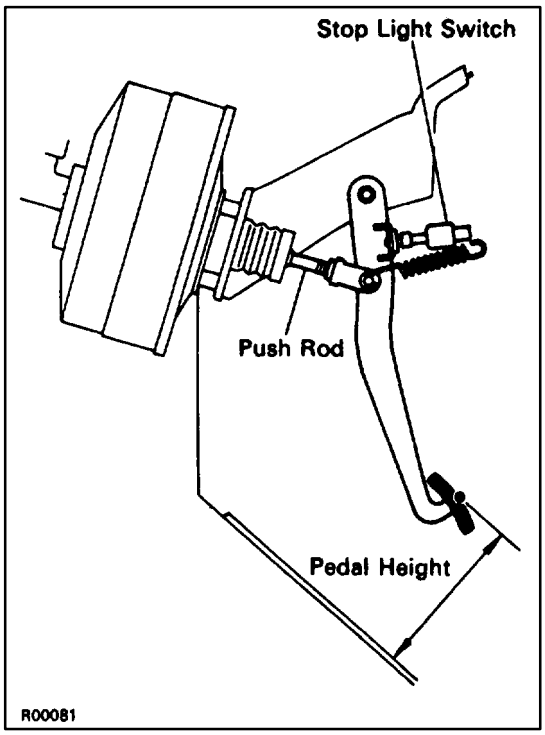

1. CHECK THAT PEDAL HEIGHT IS CORRECT

Pedal height from asphalt sheet:

150.4–160.4 mm (5.92–6.31 in.)

If the pedal height is incorrect, adjust it.

2. IF NECESSARY, ADJUST PEDAL HEIGHT

(a) Disconnect the connector from the stop light switch.

(b) Loosen the stop light switch lock nut and remove the stop light switch.

(c) Loosen the push rod lock nut.

(d) Adjust the pedal height by turning the pedal push rod.

(e) Tighten the push rod lock nut.

Torque: 25 N·m (260 kgf·cm, 19 ft·lbf)

(f) Install the stop light switch and turn it until it lightly contacts the pedal stopper.

(g) Turn the stop light switch back one turn.

(h) Check the clearance (A) between stop light switch and pedal.

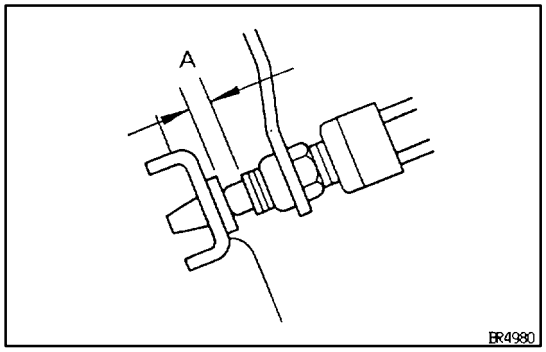

Clearance:

0.5–2.4 mm (0.02–0.09 in.)

(i) Tighten the stop light switch lock nut.

(j) Connect the connector to the stop light switch.

(k) Check that the stop lights come on when the brake pedal is depressed, and go off when the brake pedal is released.

(l) After adjusting the pedal height, check the pedal free–play.

HINT: If clearance (A) between the stop light switch and the brake pedal stopper has been adjusted correctly, the pedal freeplay will meet the specifications.

3. CHECK THAT PEDAL FREEPLAY IS CORRECT, AS SHOWN

(a) Stop the engine and depress the brake pedal several times until there is no more vacuum left in the booster.

(b) Push in the pedal by hand until the beginning of the second point of resistance is felt, then measure the distance, as shown.

Pedal freeplay:

1–6 mm (0.04–0.24 in.)

If incorrect, check the stop light switch clearance. And if the clearance is OK, then troubleshoot the brake system.

HINT: The freeplay to the first point of resistance is due to the play between the clevis and pin. It is 1–3 mm (0.04–0.12 in.) on the pedal.

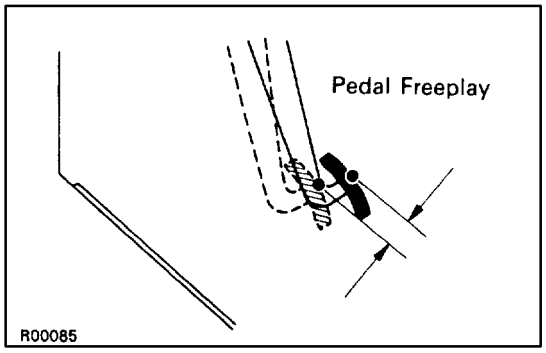

WhereEverybodyKnowsYourName

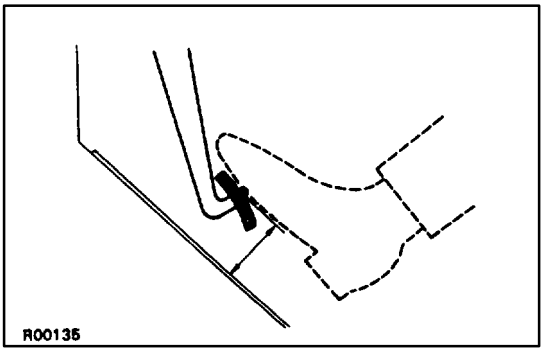

4. CHECK THAT PEDAL RESERVE DISTANCE IS CORRECT, AS SHOWN

Release the parking brake.

With the engine running, depress the pedal and measure the pedal reserve distance, as shown.

Pedal reserve distance at 490 N (50 kgf, 110.2 lbf):

More than 89 mm (3.50 in.)

If the reserve distance is incorrect, troubleshoot the brake system.

BRAKE BOOSTER OPERATIONAL TEST

BR03P–0B

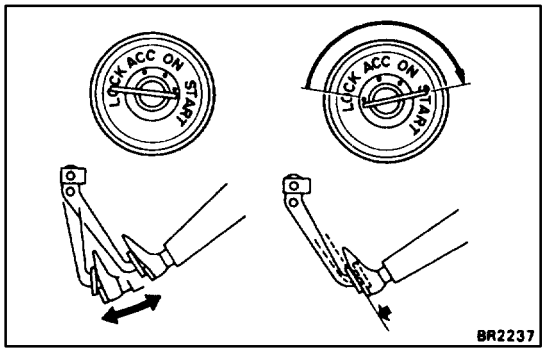

1. OPERATING CHECK

(a) Depress the bake pedal several times with the engine off and check that there is no change in the pedal reserve distance.

(b) Depress the brake pedal and start the engine. If the pedal goes down slightly, operation is normal.

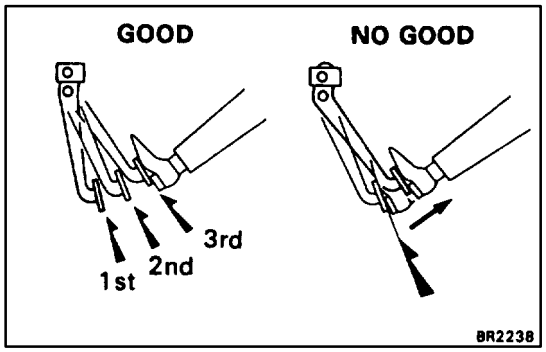

2. AIR TIGHTNESS CHECK

(a) Start the engine and stop it after 1 or 2 minutes. Depress the brake pedal several times slowly. If the pedal goes down the farthest the 1st time, but gradually rises after the 2nd or 3rd time, the booster is air tight.

(b) Depress the brake pedal while the engine is running, and stop the engine with the pedal depressed. If there is no change in the pedal reserve travel after holding the pedal for 30 seconds, the booster is air tight.

BRAKE SYSTEM BLEEDING

BR0ED–04

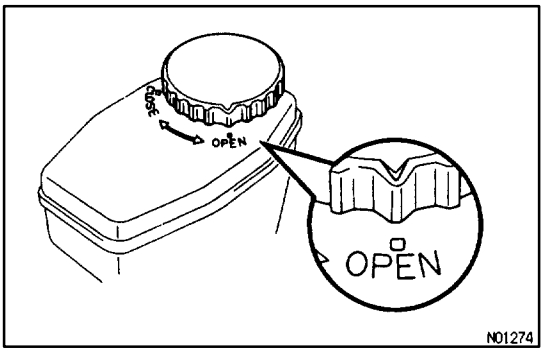

HINT: If any work is done on the brake system or if air in the brake lines is suspected, bleed the system of air.

NOTICE: Do not let brake fluid remain on painted surfaces. Wash it off immediately.

1. REMOVE RESERVOIR CAP

Turn the reservoir cap to the “open” side and remove it.

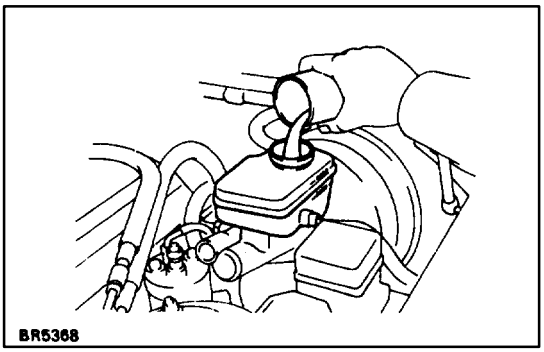

2. FILL RESERVOIR WITH BRAKE FLUID

Fluid: SAE J1703 or FMVSS NO.116DOT3

WhereEverybodyKnowsYourName

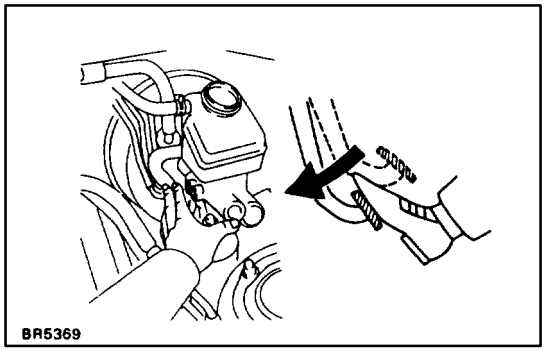

3. BLEED MASTER CYLINDER

HINT: If the master cylinder has been disassembled or if the reservoir becomes empty, bleed the air from the master cylinder.

(a) Disconnect the brake lines from the master cylinder.

(b) Slowly depress the brake pedal and hold it.

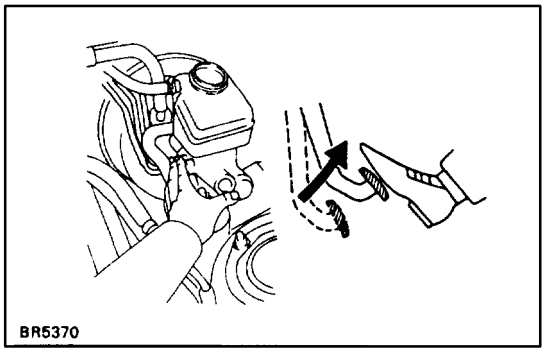

(c) Block off the outer holes with your fingers, and release the brake pedal.

(d) Repeat (b) and (c) 3 or 4 times.

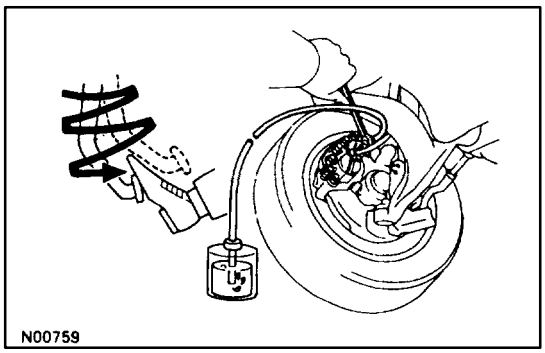

4. BLEED BRAKE LINE

(a) Connect the vinyl tube to the brake caliper.

(b) Depress the brake pedal several times, then loosen the bleeder plug with the pedal held down.

(c) At the point when fluid stops coming out, tighten the bleeder plug, then release the brake pedal.

(d) Repeat (b) and (c) until all the air in the fluid has been bled out.

(e) Repeat the above procedure to bleed the air out of the brake line for each wheel.

Torque: 11 N·m (110 kgf·cm, 8 ft·lbf)

5. CHECK FLUID LEVEL IN RESERVOIR

Check the fluid level and add fluid if necessary.

Fluid:

SAE J1703 or FMVSS NO.116DOT3

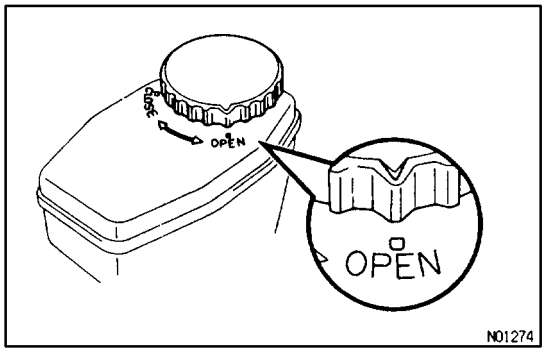

6. INSTALL RESERVOIR CAP

(a) Align the matchmark on the reservoir cap with the matchmark on the “open” side of reservoir.

(b) Push down on the reservoir cap and turn it clockwise until it locks.

(c) Check that the matchmark on the reservoir cap is now aligned with the matchmark on the “close” side of the reservoir.

WhereEverybodyKnowsYourName

TRAC CONTROL SYSTEM BLEEDING

BR0EE–03

1. BLEED TRACTION CONTROL SYSTEM

CAUTION:

- **The fluid is under high pressure, and could spray out with great force, so exercise caution.**
- **When repairing the brake master cylinder or TRAC system, bleed the air out of the TRAC system.**

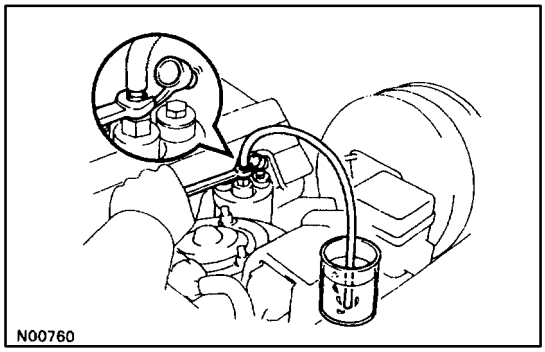

(a) Connect a vinyl tube to the bleeder plug of accumulator, then loosen the bleeder plug.

(b) Start the engine to allow the TRAC pump motor to operate until all the air has been bled out of the fluid.

(c) Tighten the bleeder plug and stop the engine.
Torque: 8.3 N·m (85 kgf·cm, 74 in.·lbf)

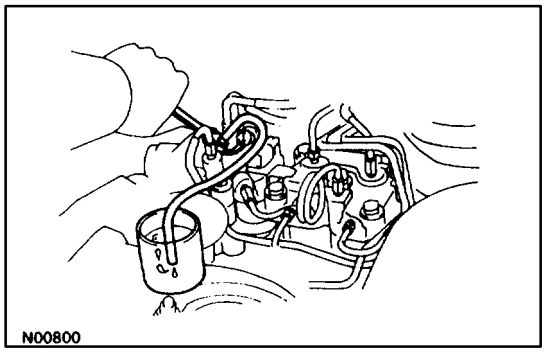

(d) Connect a vinyl tube to the bleeder plug of the TRAC actuator, then loosen the bleeder plug.

(e) Start the engine to allow the TRAC pump motor to operate until all the air has been bled out of the fluid.

(f) Tighten the bleeder plug and stop the engine.
Torque: 8.3 N·m (85 kgf·cm, 74 in.·lbf)

(g) Check if any diagnostic trouble code is output which indicates trouble. If there is, clear the diagnostic trouble code.

2. CHECK FLUID LEVEL IN RESERVOIR

Check the fluid level and add fluid if necessary.

Fluid:

SAE J1703 or FMVSS NO. 116DOT3

HINT: Add fluid with the engine idling.

WhereEverybodyKnowsYourName

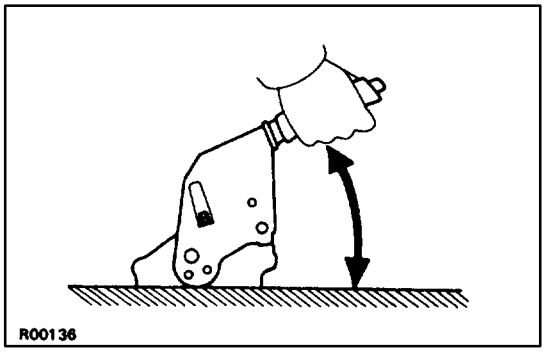

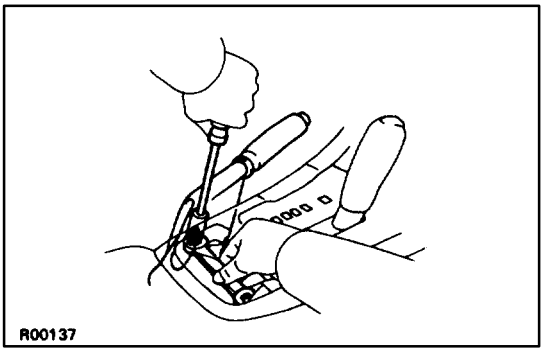

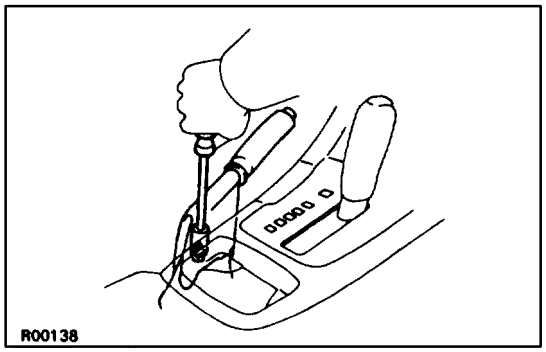

PARKING BRAKE CHECK AND ADJUSTMENT

BR03R–04

1. CHECK THAT PARKING BRAKE LEVER TRAVEL IS CORRECT

Pull the parking brake lever all the way up, and count the number of clicks.

Parking brake lever travel at 196 N (20 kgf, 44.1 lbf):

5–8 clicks

If incorrect, adjust the parking brake.

2. IF NECESSARY, ADJUST PARKING BRAKE

HINT: Before adjusting the parking brake, make sure that the rear brake shoe clearance has been adjusted.

For shoe clearance adjustment, see page BR–49.

(a) Remove the cup holder.

(b) Using a socket driver and spanner wrench, remove the adjusting lock nut.

HINT: Tape the socket driver before use.

(c) Turn the adjusting nut until the lever travel is correct.

(d) Install the adjusting lock nut.

(e) Using a socket driver and spanner wrench, tighten the adjusting lock nut.

Torque: 5.4 N·m (55 kgf·cm, 48 in.·lbf)

(f) Install the cup holder.

WhereEverybodyKnowsYourName

MASTER CYLINDER

MASTER CYLINDER REMOVAL

BR0EF–03

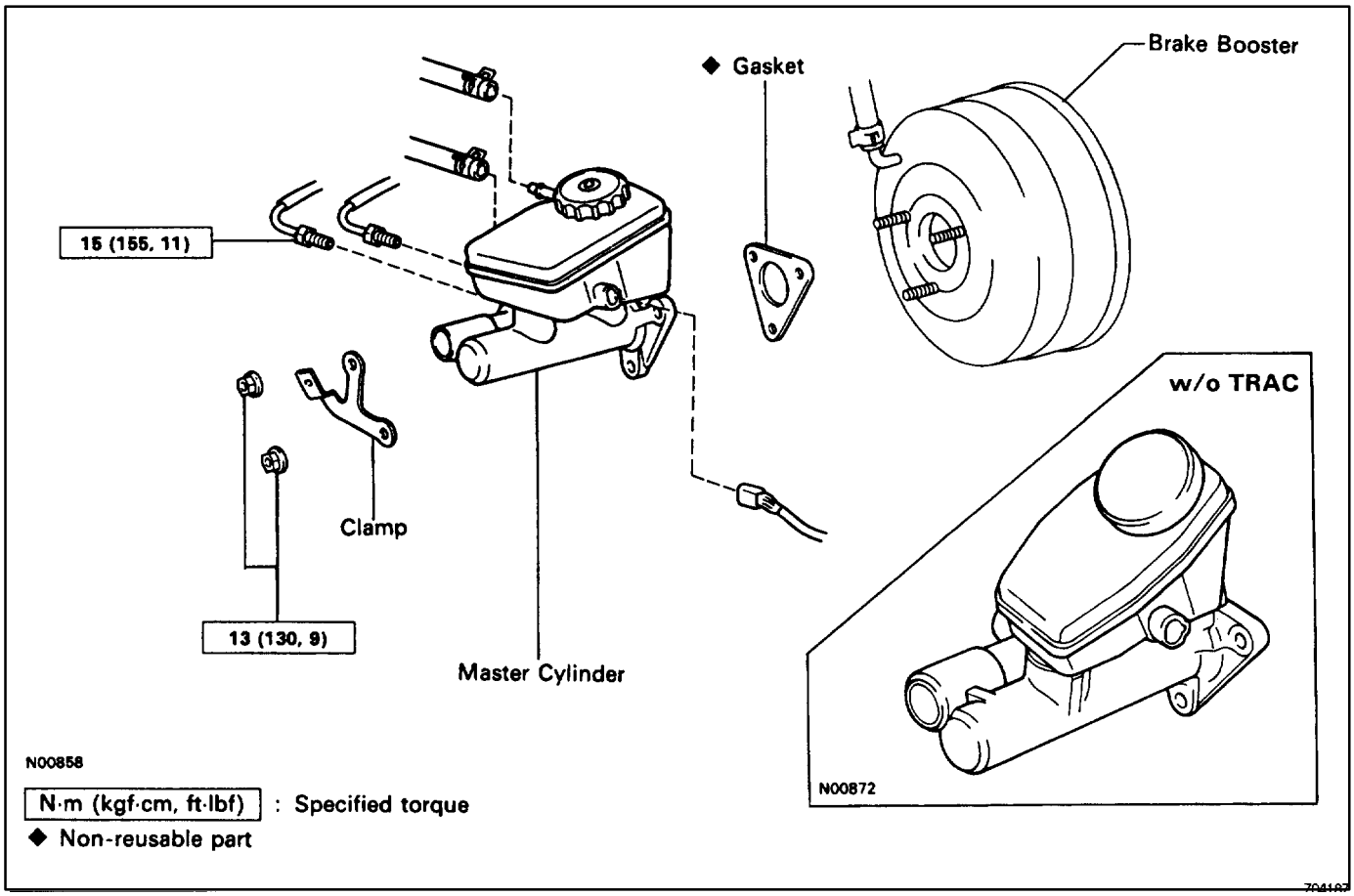

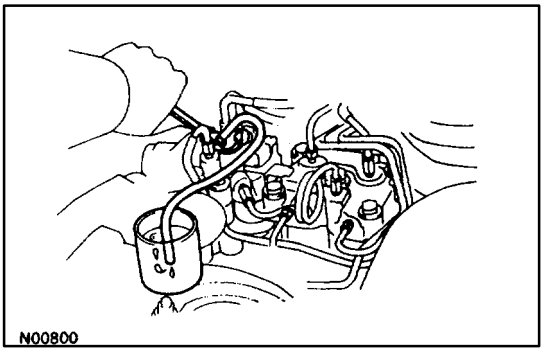

1. w/ TRAC:
DRAIN OUT HIGH PRESSURE FLUID

(a) Connect a vinyl tube to the bleeder plug of the TRAC actuator, then loosen the bleeder plug with the ignition switch in the OFF position.
CAUTION: The fluid is under high pressure, and could spray out with great force, so exercise caution.

(b) Tighten the plug when fluid stops flowing out.

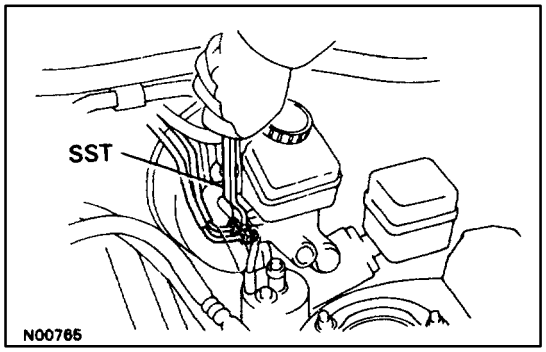

2. DISCONNECT LEVEL WARNING SWITCH CONNECTOR

3. DRAW OUT FLUID WITH SYRINGE
NOTICE: Do not let brake fluid remain on a painted surface. Wash it off immediately.

4. DISCONNECT BRAKE LINES
Using SST, disconnect the brake lines from the master cylinder.
SST 09023–00100

WhereEverybodyKnowsYourName

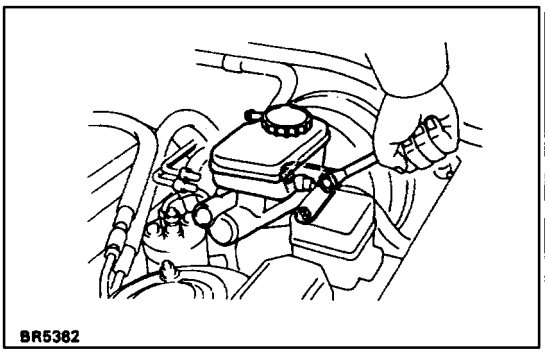

5. REMOVE MASTER CYLINDER

(a) Remove the nuts and clamp.

(b) Remove the master cylinder and gasket from the brake booster.

WhereEverybodyKnowsYourName

COMPONENTS

BR03T–05

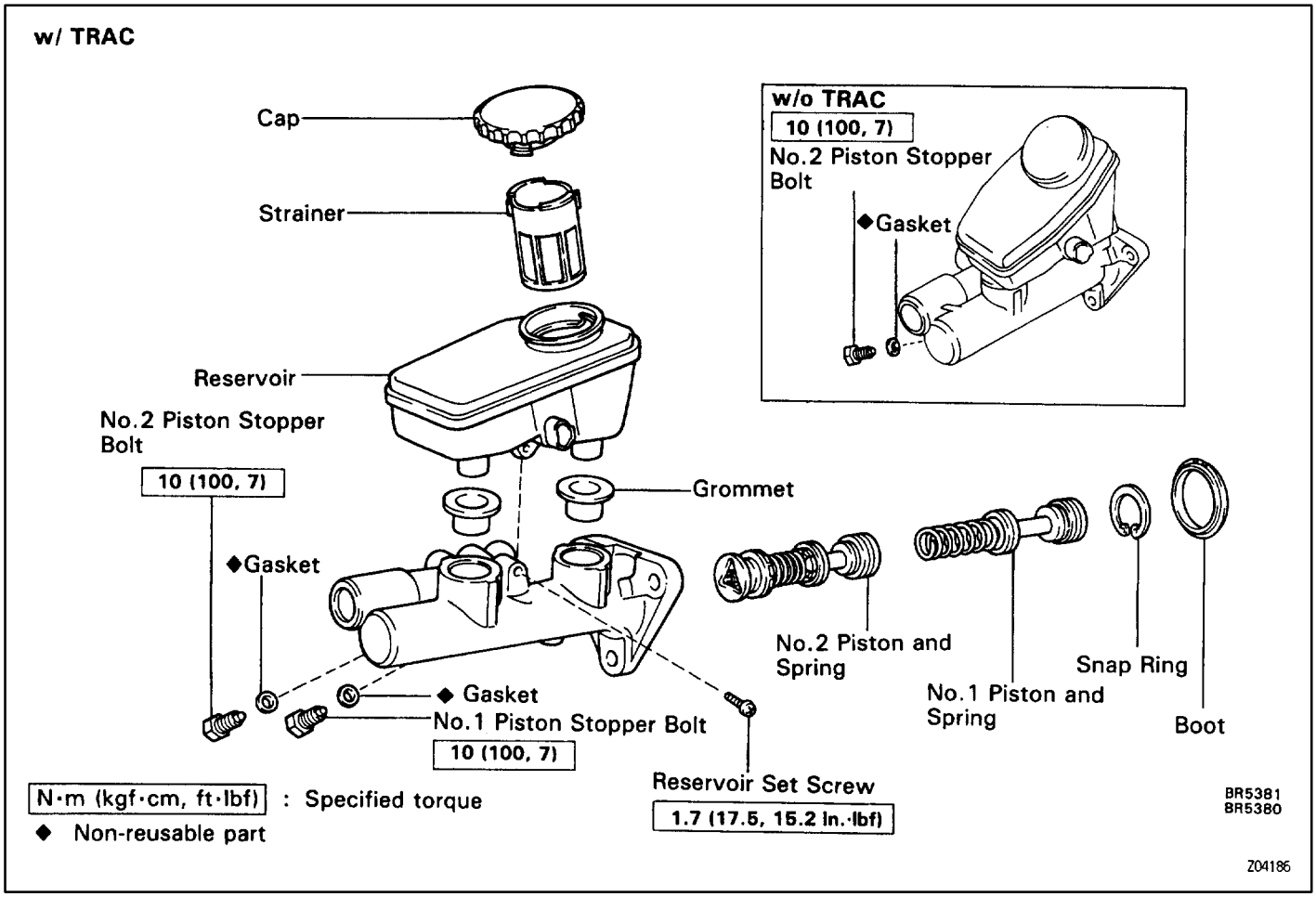

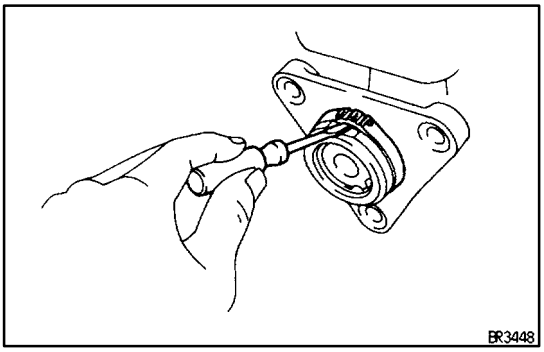

MASTER CYLINDER DISASSEMBLY

BR0EG–05

1. REMOVE MASTER CYLINDER BOOT

Using a screwdriver, remove the master cylinder boot.

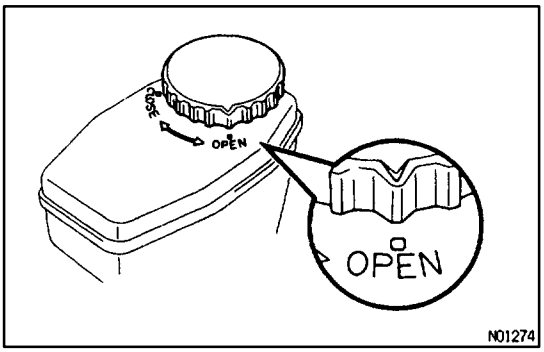

2. REMOVE RESERVOIR CAP AND STRAINER

(a) Turn the reservoir cap the “open” side and remove it.

(b) Remove the strainer.

WhereEverybodyKnowsYourName

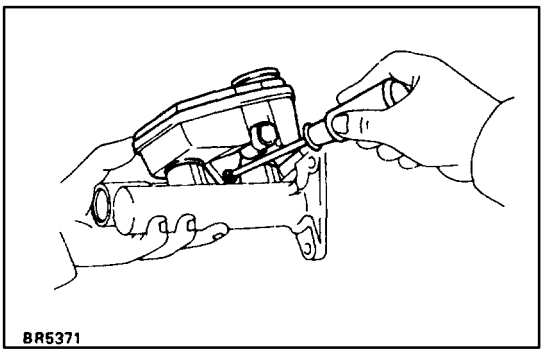

3. REMOVE RESERVOIR
Remove the set screw and pull out the reservoir.

4. REMOVE 2 GROMMETS

5. PLACE CYLINDER IN VISE

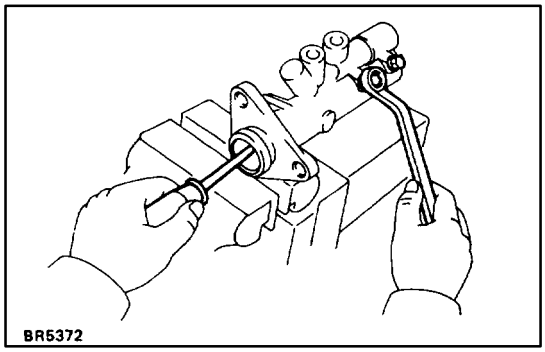

6. w/ TRAC:
REMOVE NO.1 PISTON STOPPER BOLT
Using a screwdriver, push the pistons in all the way and remove the No.1 piston stopper bolt and gasket.
HINT: Tape the screwdriver tip before use.

7. REMOVE NO.2 PISTON STOPPER BOLT
Using a screwdriver, push the pistons in all the way and remove the No.2 piston stopper bolt and gasket.

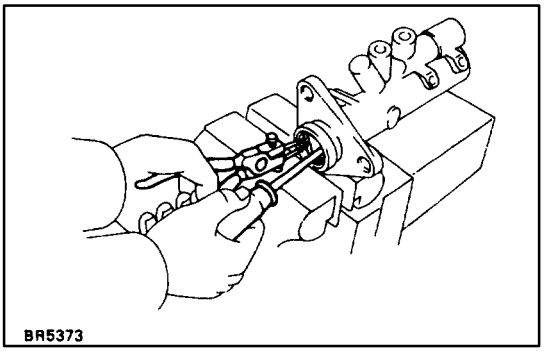

8. REMOVE PISTONS

(a) Push in the piston with a screwdriver and remove the snap ring with snap ring pliers.

(b) Remove the No. 1 piston and spring by hand, pulling straight out, not at an angle.
NOTICE: If pulled out at an angle, there is a possibility that the cylinder bore could be damaged.

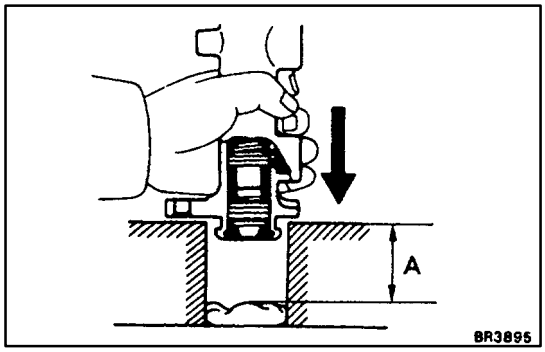

(c) Place a rag and 2 wooden blocks on the work table and lightly tap the cylinder flange against the block edges until the piston drops out of the cylinder.
HINT: Make sure the distance (A) from the rag to the top of the blocks is at least 100 mm (3.94 in.).

MASTER CYLINDER COMPONENTS INSPECTION

BR03V–05

HINT: Clean the disassembled parts with compressed air.

1. INSPECT CYLINDER BORE FOR RUST OR SCORING

2. INSPECT CYLINDER FOR WEAR OR DAMAGE
If necessary, clean or replace the cylinder.

WhereEverybodyKnowsYourName

MASTER CYLINDER ASSEMBLY

BR0EH–05

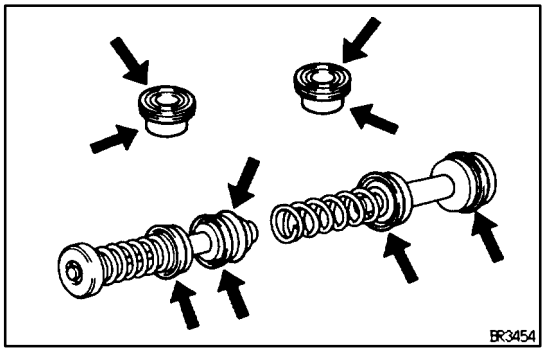

1. APPLY LITHIUM SOAP BASE GLYCOL GREASE TO RUBBER PARTS INDICATED BY ARROWS

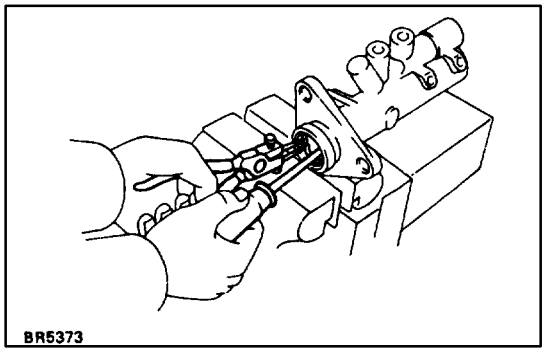

2. INSTALL PISTONS

NOTICE: Be careful not to damage the rubber lips on the pistons.

(a) Insert the 2 pistons straight in, not at an angle.

NOTICE: If inserted at an angle, there is a possibility that the cylinder bore could be damaged.

(b) Push in the piston with a screwdriver and install the snap ring with snap ring pliers.

HINT: Tape the screwdriver tip before use.

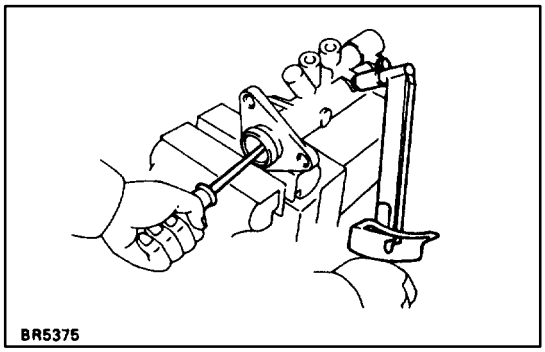

3. w/ TRAC:

INSTALL NO. 1 PISTON STOPPER BOLT

Using a screwdriver, push the piston in all the way and install the No. 1 piston stopper bolt over a new gasket.

Torque: 10 N·m (100 kgf·cm, 7 ft·lbf)

4. INSTALL NO. 2 PISTON STOPPER BOLT

Using a screwdriver, push the piston in all the way and install the No. 2 piston stopper bolt over a new gasket.

Torque: 10 N·m (100 kgf·cm, 7 ft·lbf)

5. INSTALL 2 GROMMETS

6. INSTALL RESERVOIR

(a) Install the strainer to the reservoir.

(b) Push the reservoir onto the cylinder.

(c) Install the set screw while pushing on the reservoir.

Torque: 1.7 N·m (17.5 kgf·cm, 15.2 in.·lbf)

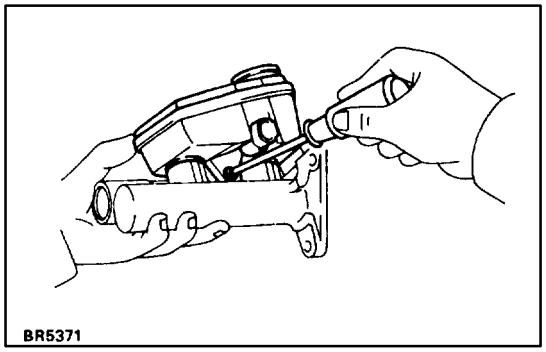

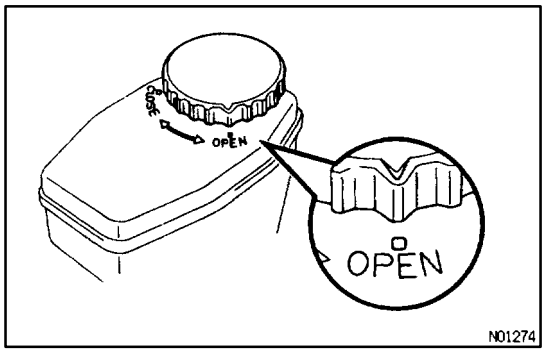

7. INSTALL RESERVOIR CAP

(a) Align the matchmark on the reservoir cap with the matchmark on the “open” side of reservoir.

(b) Push down on the reservoir cap and turn it clockwise until it locks.

(c) Check that the matchmark on the reservoir cap is now aligned with the matchmark on the “close” side of the reservoir.

WhereEverybodyKnowsYourName

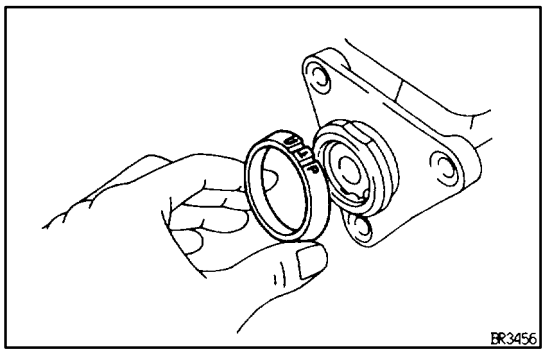

8. INSTALL MASTER CYLINDER BOOT

With the UP mark on the master cylinder boot facing upwards, install the cylinder boot on the master cylinder.

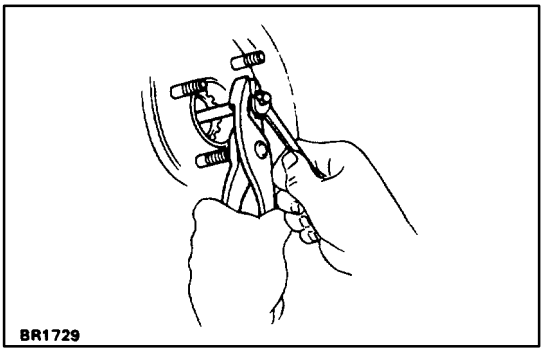

MASTER CYLINDER INSTALLATION

BR0EJ–05

1. ADJUST LENGTH OF BRAKE BOOSTER PUSH ROD BEFORE INSTALLING MASTER CYLINDER

(See page BR–19**)**

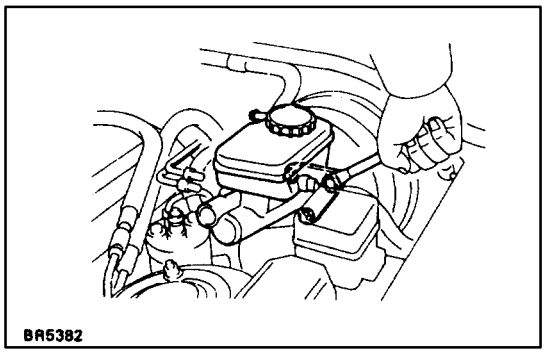

2. INSTALL MASTER CYLINDER

Install the master cylinder and a new gasket on the brake booster with 3 nuts.

Torque: 13 N·m (130 kgf·cm, 9 ft·lbf)

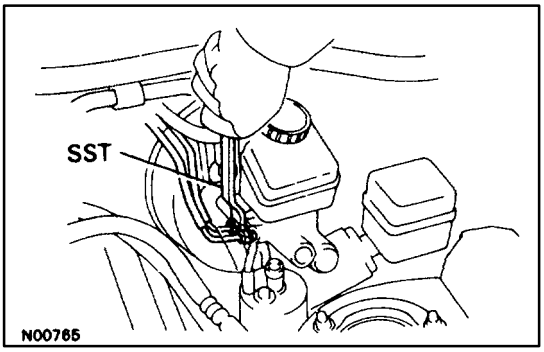

3. CONNECT BRAKE LINES

Using SST, connect the brake lines to the master cylinder. Torque the union nuts.

SST 09023–00100

Torque: 12 N·m (125 kgf·cm, 9 ft·lbf)

4. CONNECT LEVEL WARNING SWITCH CONNECTOR

5. FILL BRAKE RESERVOIR WITH BRAKE FLUID AND BLEED BRAKE SYSTEM

(See page BR–8**)**

6. w/ TRAC:

BLEED TRAC SYSTEM

(See page BR–10)

7. CHECK FOR FLUID LEAKAGE

8. CHECK AND ADJUST BRAKE PEDAL

(See page BR–7**)**

WhereEverybodyKnowsYourName

BRAKE BOOSTER

BRAKE BOOSTER REMOVAL

BR0EK–03

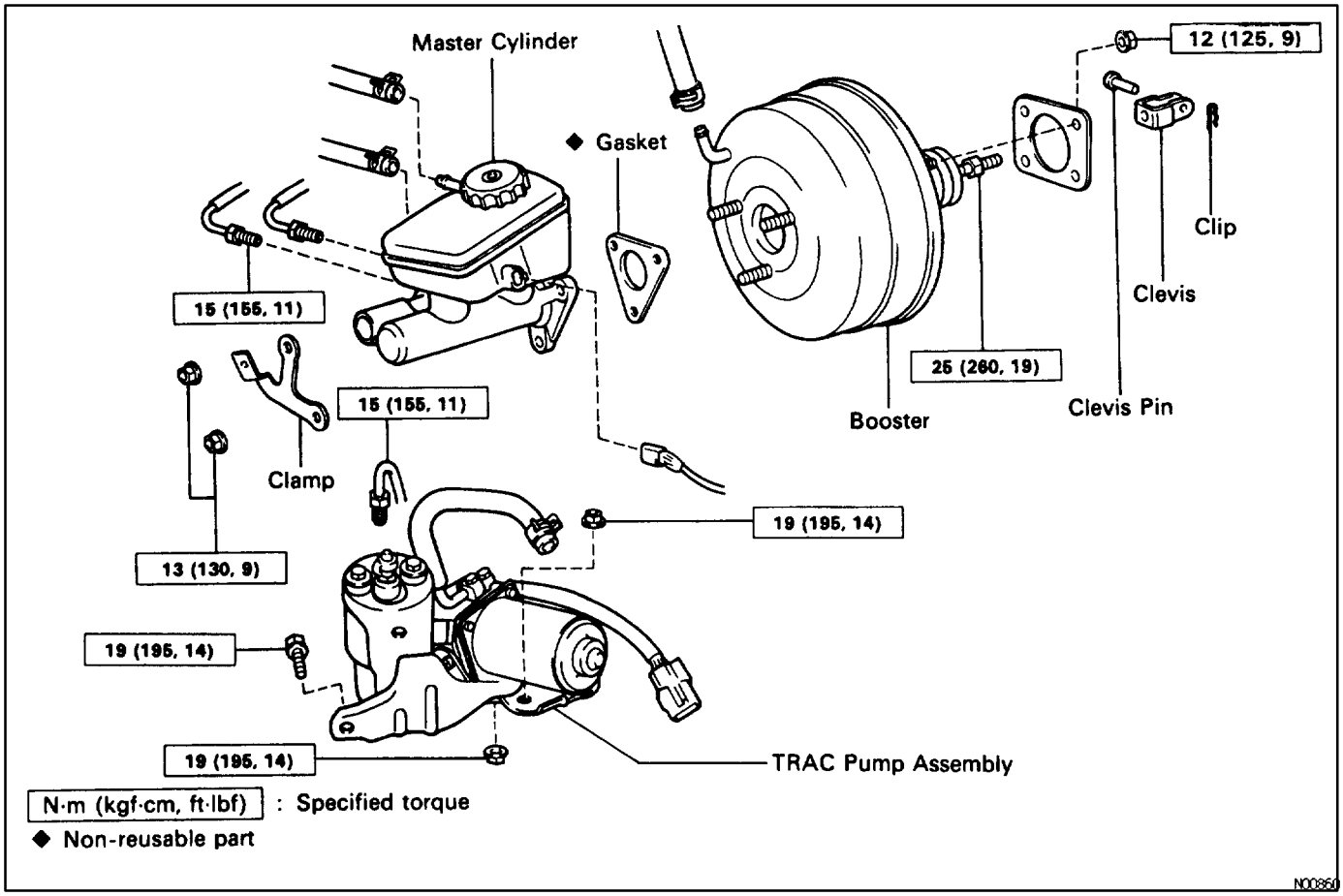

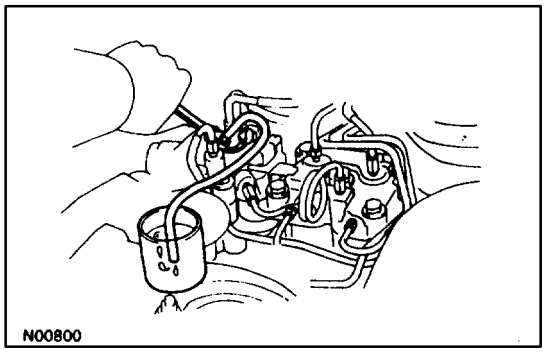

1. w/ TRAC:
DRAIN OUT HIGH PRESSURE FLUID

(a) Connect a vinyl tube to the bleeder plug of the TRAC actuator, then loosen the bleeder plug with the ignition switch in the OFF position.
CAUTION: The fluid is under high pressure, and could spray out with great force, so exercise caution.

(b) Tighten the plug when fluid stops flowing out.

2. REMOVE FOLLOWING PARTS:

- Master cylinder
  (See page BR–12)
- w/ TRAC:
  TRAC pump assembly
  (See page BR–162)
- Vacuum hose
- Clip and return spring

WhereEverybodyKnowsYourName

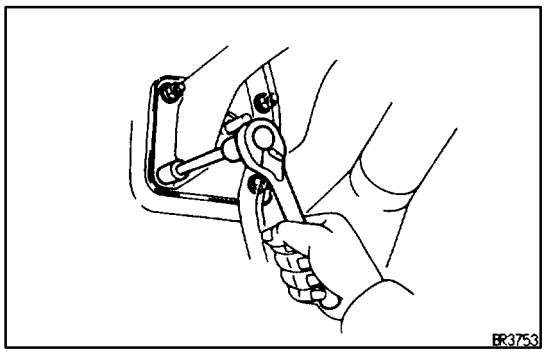

3. REMOVE BRAKE BOOSTER

(a) Remove the booster installation nuts.

(b) Remove the booster and gasket.

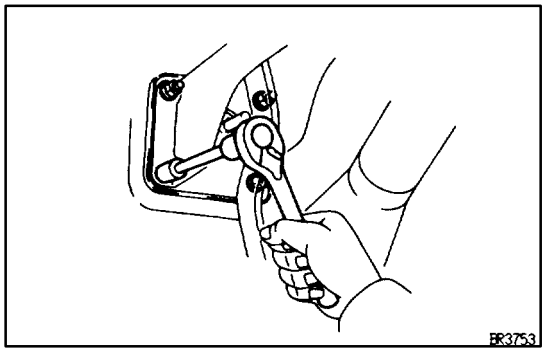

BRAKE BOOSTER INSTALLATION

BR03Z–08

1. INSTALL BRAKE BOOSTER

(a) Install the booster and gasket.

(b) Install and torque the booster installation nuts.
Torque: 12 N·m (125 kgf·cm, 9 ft·lbf)

(c) Insert the clevis pin into the clevis and brake pedal, and install the clip to the clevis pin.

(d) Install the pedal return spring.

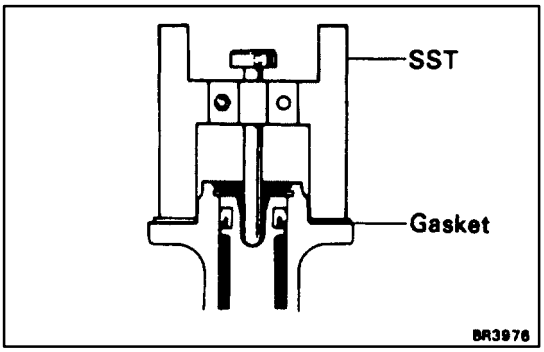

2. ADJUST LENGTH OF BOOSTER PUSH ROD

(a) Install the gasket on the master cylinder.

(b) Set the SST on the gasket, and lower the pin until its tip slightly touches the piston.
SST 09737–00010

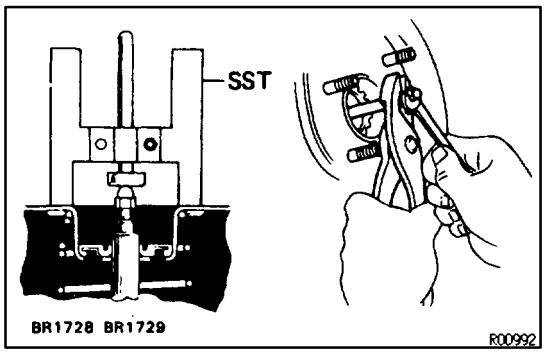

(c) Turn the SST upside down, and set it on the booster.
SST 09737–00010

(d) Measure the clearance between the booster push rod and pin head (SST).
Clearance:
0 mm (0 in.)

(e) Adjust the booster push rod length until the push rod lightly touches the pin head.
HINT: When adjusting the push rod, depress the brake pedal enough so that the push rod sticks out.

3. INSTALL FOLLOWING PARTS:

- Vacuum hose
- Master cylinder
  (See page BR–12)
- w/ TRAC:
  TRAC pump assembly
  (See page BR–162)

WhereEverybodyKnowsYourName

4. **FILL BRAKE RESERVOIR WITH BRAKE FLUID AND BLEED BRAKE SYSTEM**
   (See page BR–8)
5. **w/ TRAC:**
   BLEED TRAC SYSTEM
   (See page BR–10)
6. **CHECK FOR FLUID LEAKAGE**
7. **CHECK AND ADJUST BRAKE PEDAL**
   (See page BR–7)
8. **PERFORM OPERATIONAL CHECK**
   (See page BR–8)

WhereEverybodyKnowsYourName

FRONT BRAKE (SC400)

COMPONENTS

BR040–0A

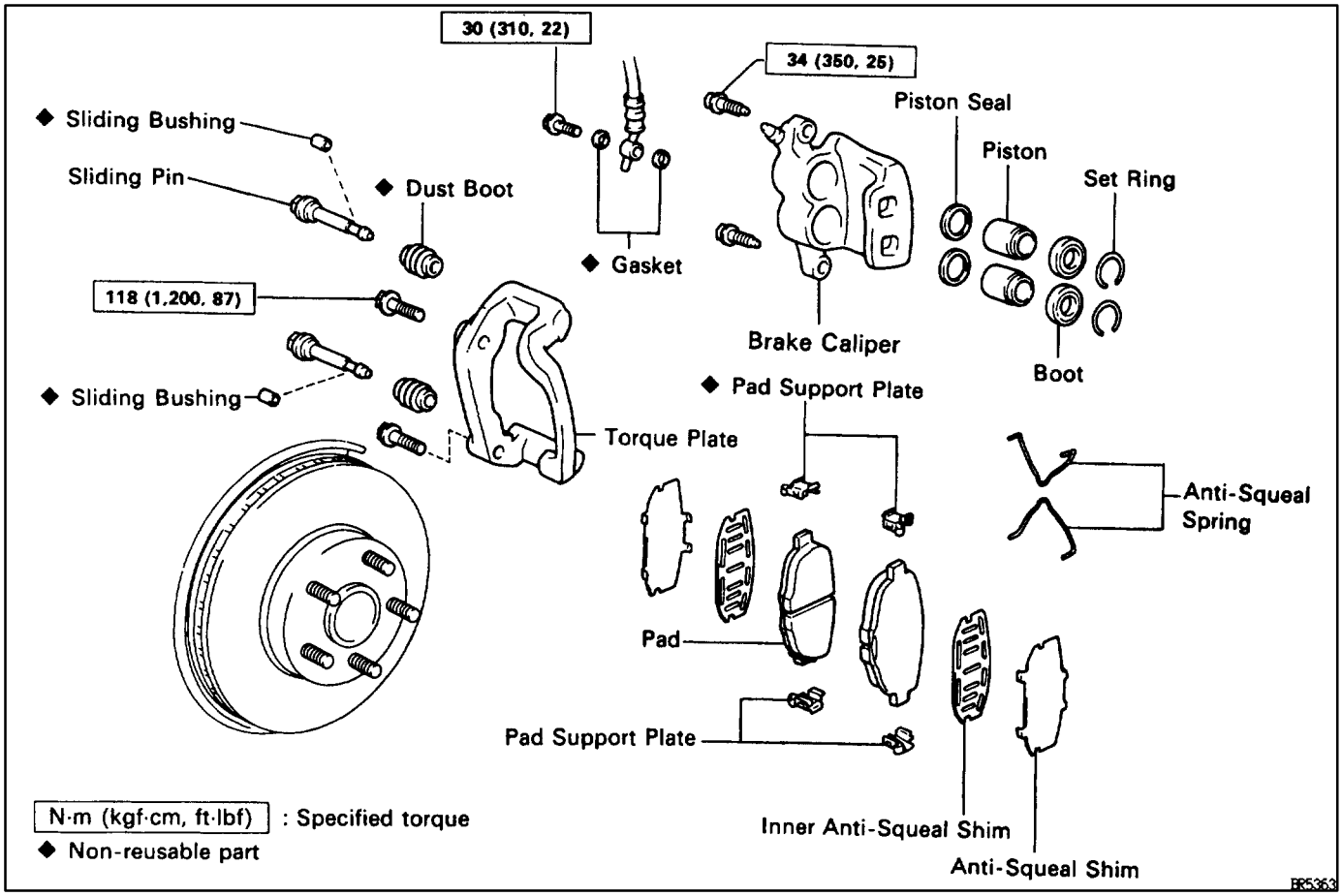

BRAKE PADS REPLACEMENT

BR0PU–01

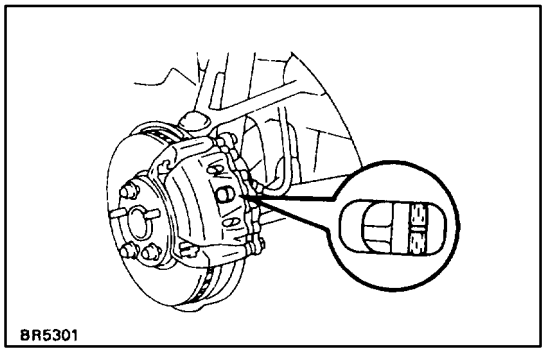

1. **REMOVE FRONT WHEEL**
   Remove the wheel and temporarily fasten the disc with the hub nuts.
2. **INSPECT PAD LINING THICKNESS**
   Check the pad thickness through the caliper inspection hole and replace the pads if it is not within the specification.
   Minimum thickness:
   1.0 mm (0.039 in.)

WhereEverybodyKnowsYourName

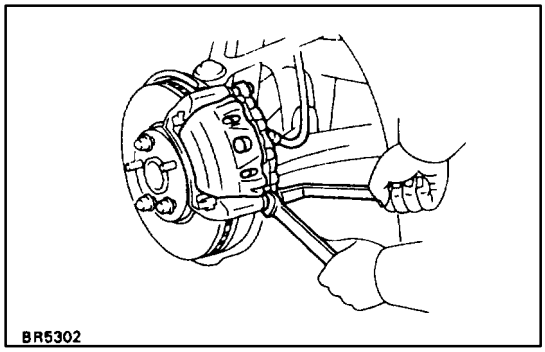

3. LIFT UP CALIPER

(a) Hold the sliding pin on the bottom and loosen the installation bolt.

(b) Remove the installation bolt.

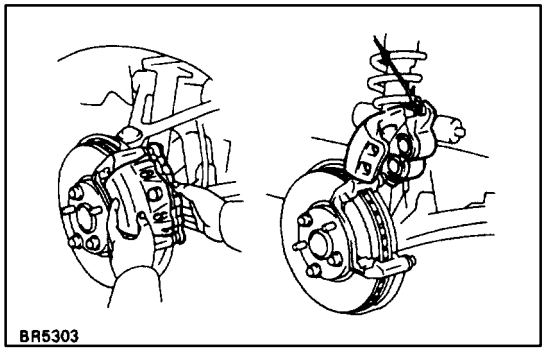

(c) Lift up and suspend the caliper.
HINT: Do not disconnect the flexible hose from the caliper.

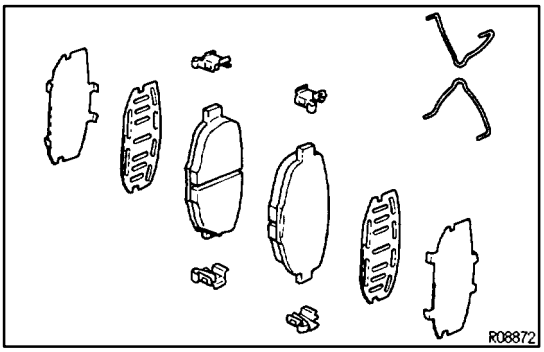

4. REMOVE FOLLOWING PARTS:

(a) 2 anti–squeal springs

(b) 2 brake pads

(c) 4 anti–squeal shims

(d) 4 pad support plates

5. CHECK DISC THICKNESS AND RUNOUT
(See page BR–33)

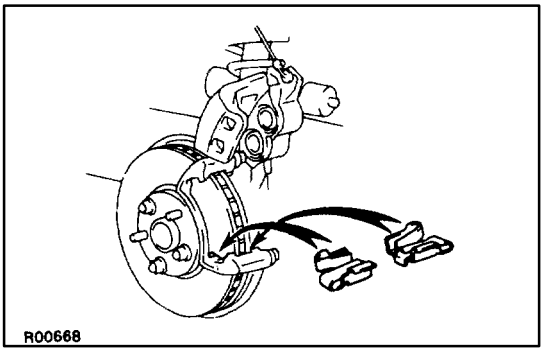

6. INSTALL UNDER SIDE PAD SUPPORT PLATES

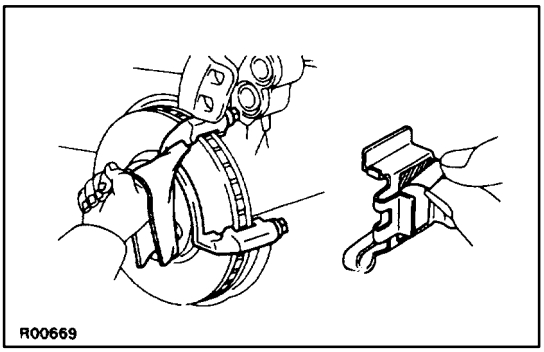

7. INSTALL UPPER SIDE PAD SUPPORT PLATES

(a) Using cleaner, wipe off dust, water, oil, etc. from the pad support plate contact area of the torque plate.

(b) Remove the pad support cover sheets from new pad support plate.

WhereEverybodyKnowsYourName

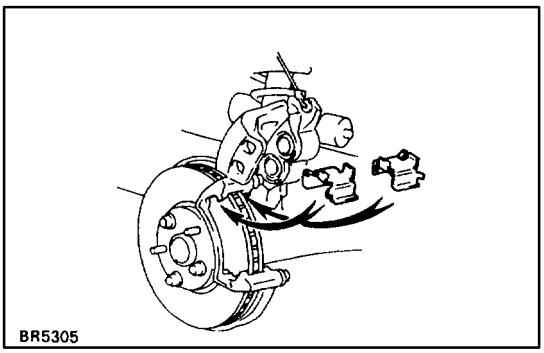

(c) Install the new pad support plates.

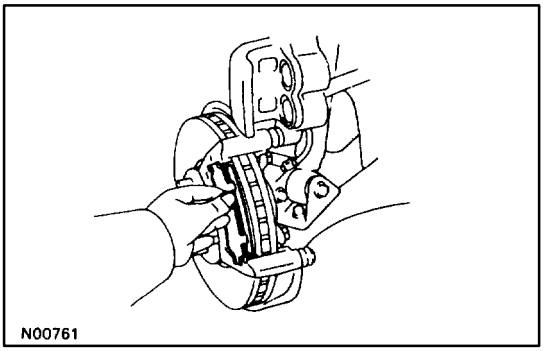

8. INSTALL NEW PADS

(a) Apply disc brake grease to both sides of the inner anti–squeal shim.

(b) Install the 2 anti–squeal shims on each pad.

(c) Install inner pad with the pad wear indicator plates facing downward.

(d) Install the outer pad.

NOTICE: There should be no oil or grease adhering to the friction surfaces of the pads or the disc.

(e) Install the 2 anti–squeal springs.

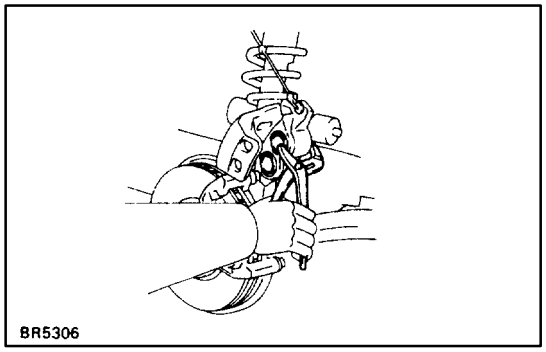

9. INSTALL CALIPER

(a) Draw out a small amount of brake fluid from the reservoir.

(b) Press in the piston with water pump pliers or similar implement.

HINT: If the piston is difficult to push in, loosen the bleeder plug and push in the piston while letting some brake fluid escape.

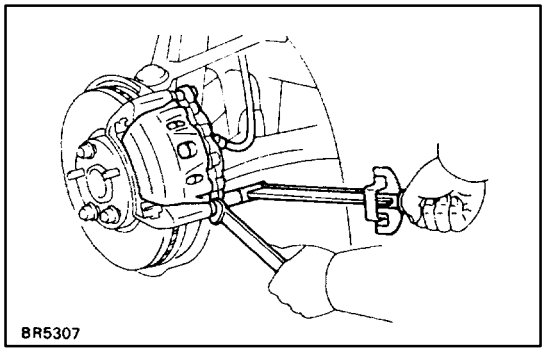

(c) Install the caliper.

(d) Hold the sliding pin and torque the installation bolt.

Torque: 34 N·m (350 kgf·cm, 25 ft·lbf)

10. INSTALL FRONT WHEEL

11. CHECK THAT FLUID LEVEL IS AT MAX LINE

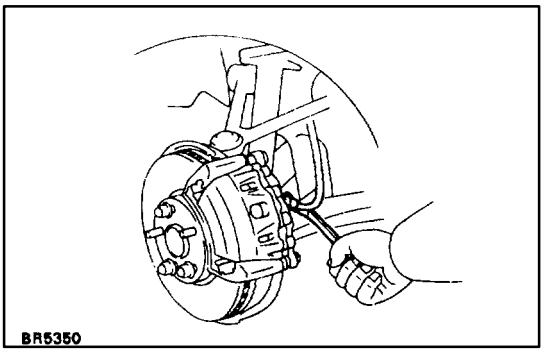

CALIPER REMOVAL

BR042–0C

1. DISCONNECT FLEXIBLE HOSE

(a) Remove the union bolt and 2 gaskets from the caliper, then disconnect the flexible hose from the caliper.

(b) Use a container to catch the brake fluid as it drains out.

WhereEverybodyKnowsYourName

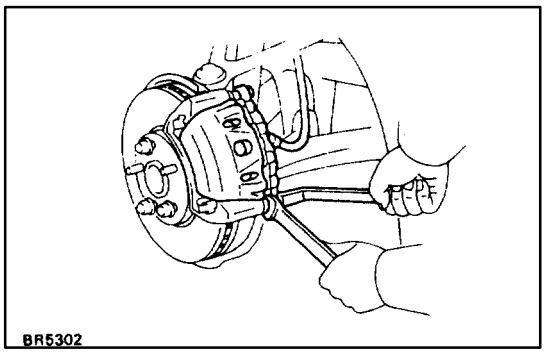

2. REMOVE CALIPER

(a) Hold the sliding pin and loosen the 2 installation bolts.

(b) Remove the 2 installation bolts.

(c) Remove the caliper from the torque plate.

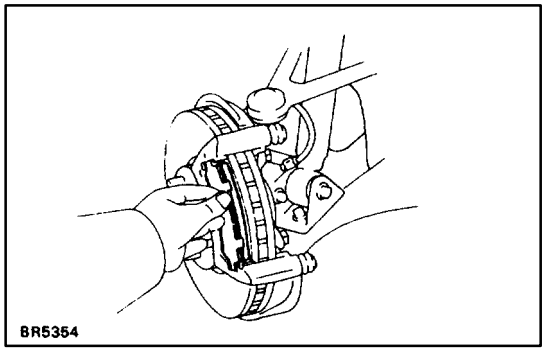

3. REMOVE FOLLOWING PARTS:

(a) 2 anti–squeal springs

(b) 2 brake pads

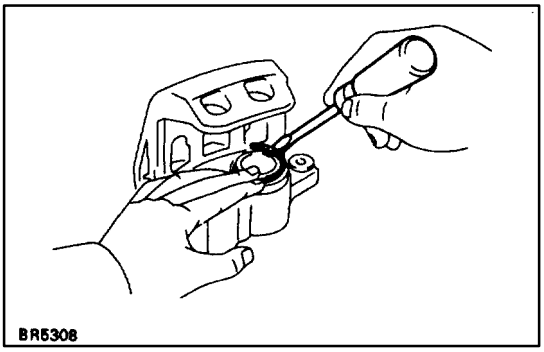

CALIPER DISASSEMBLY

BR043–0B

1. REMOVE CYLINDER BOOT SET RINGS AND CYLINDER BOOT

Using a screwdriver, remove the 2 cylinder boot set rings and cylinder boots from the caliper.

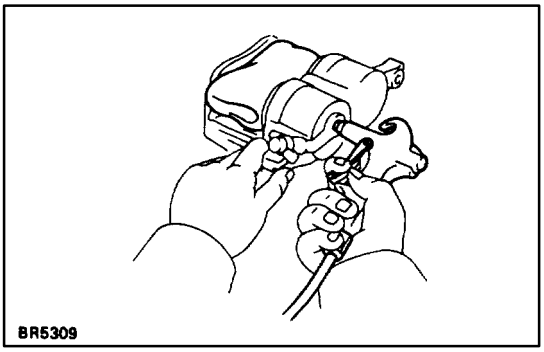

2. REMOVE PISTONS

(a) Place a piece of cloth or similar article between the piston and the caliper.

(b) Use compressed air to remove the pistons from the caliper.
CAUTION: Do not place your fingers in front of the piston when using compressed air.

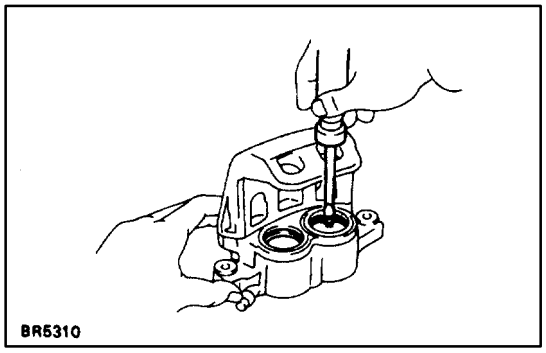

3. REMOVE PISTON SEALS

Using a screwdriver, remove the piston seal from the caliper.

WhereEverybodyKnowsYourName

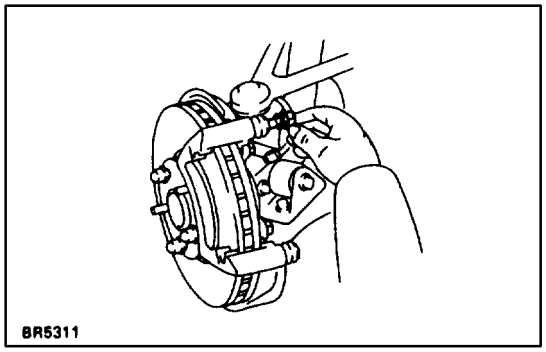

4. REMOVE SLIDING PINS AND DUST BOOTS

(a) Remove the 2 sliding pins from the torque plate.

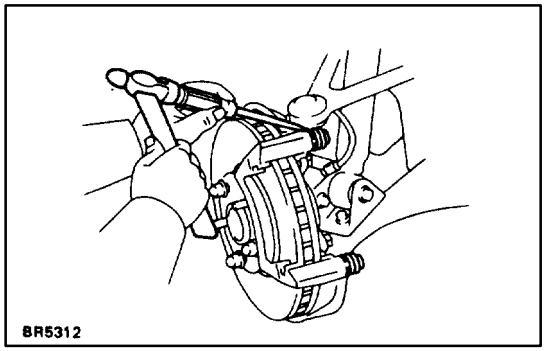

(b) Using a screwdriver and hammer, tap out the 2 dust boots.

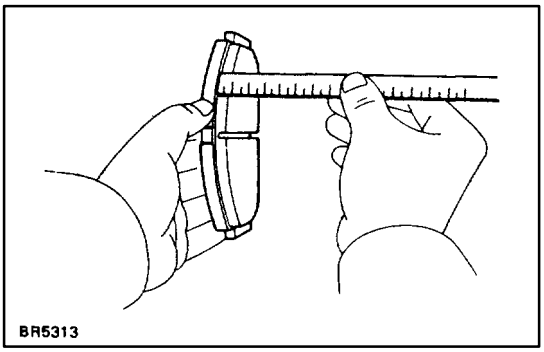

FRONT BRAKE COMPONENTS INSPECTION AND REPAIR

BR044–08

1. MEASURE PAD LINING THICKNESS

Using a ruler, measure the pad lining thickness.

Standard thickness:

11.0 mm (0.433 in.)

Minimum thickness:

1.0 mm (0.039 in.)

Replace the pad if the pad's thickness is at the minimum thickness or less, or if the pad has severely uneven wear.

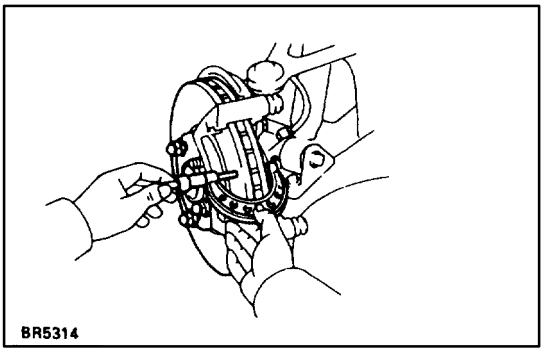

2. MEASURE DISC THICKNESS

Using a micrometer, measure the disc thickness.

Standard thickness:

32 mm (1.260 in.)

Minimum thickness:

30 mm (1.181 in.)

Replace the disc if the thickness of the disc is at the minimum thickness or less. Replace the disc or grind it on a lathe if it is scored or is worn unevenly.

WhereEverybodyKnowsYourName

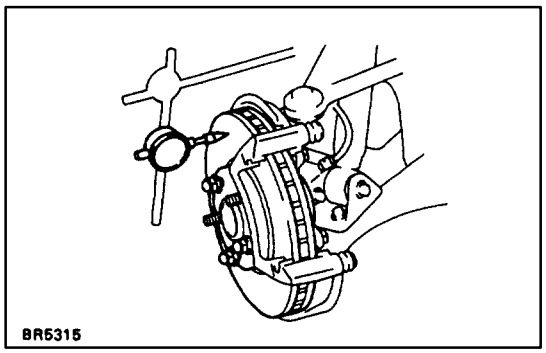

3. MEASURE DISC RUNOUT

Using a dial indicator, measure the disc runout at a position 10 mm (0.39 in.) from the outside edge.

Maximum disc runout:

0.05 mm (0.0020 in.)

If the disc's runout is at the maximum value or greater, check the bearing play in the axial direction and check the axle hub runout (See page SA–30). If the bearing play and axle hub runout are not abnormal, adjust the disc runout.

4. IF NECESSARY, ADJUST DISC RUNOUT

(a) Remove the 2 bolts and torque plate from the knuckle.

(b) Remove the hub nuts and the disc. Reinstall the disc 1/5 of a turn round from its original position on the hub. Install and torque the hub nuts.

Torque: 103 N·m (1,050 kgf·cm, 76 ft·lbf)

Remeasure the disc runout. Make a not of the runout and disc's position on the hub.

(c) Repeat (b) until the disc has been install on the 3 remaining hub position.

(d) If the minimum runout recorded in (b) and (c) is less than 0.05 mm (0.0020 in.), install the disc in that position.

(e) If the minimum runout recorded in (b) and (c) is greater than 0.05 mm (0.0020 in.), replace the disc and repeat step 3.

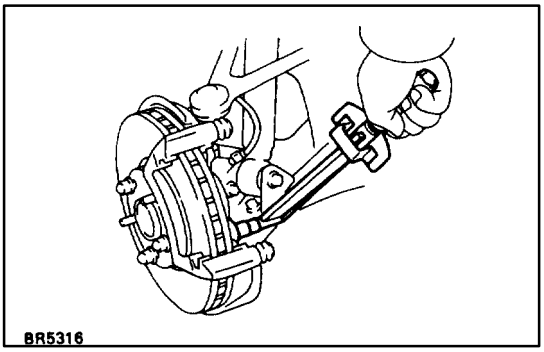

(f) Install the torque plate and torque the 2 bolts.

Torque: 118 N·m (1,200 kgf·cm, 87 ft·lbf)

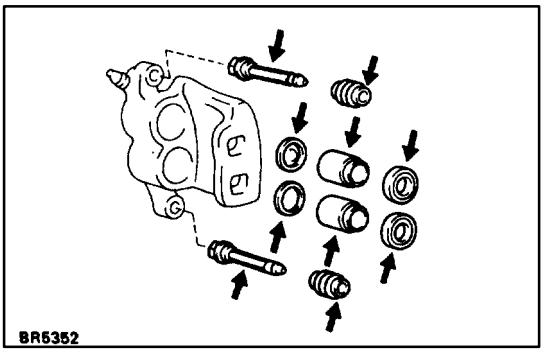

CALIPER ASSEMBLY

BR045–0B

1. APPLY LITHIUM SOAP BASE GLYCOL GREASE TO PARTS INDICATED WITH ARROWS

WhereEverybodyKnowsYourName

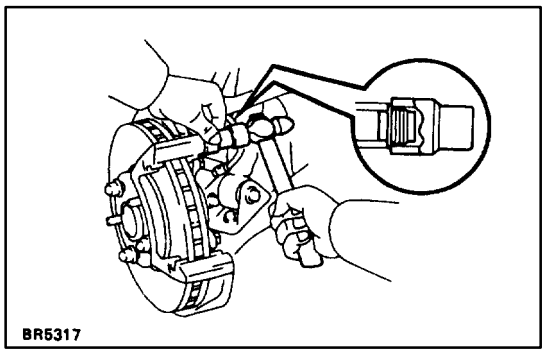

2. INSTALL DUST BOOTS AND SLIDING PINS

(a) Using a 19 mm socket and hammer, tap in 2 new dust boots into the torque plate.

(b) Confirm that the metal plate portion of the dust boot fits snugly in the torque plate.

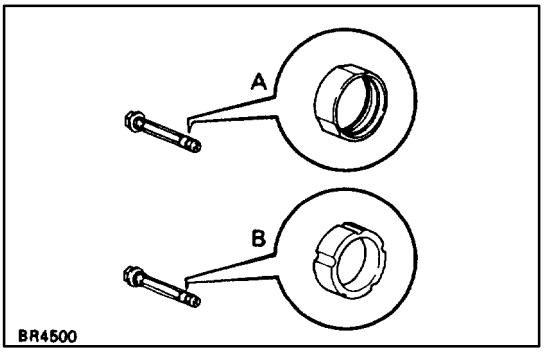

(c) Insert 2 sliding pins into the torque plate.
NOTICE: Insert the sliding pin with sliding bushing A into the upper part, and insert the sliding pin with sliding bushing B into the lower part.

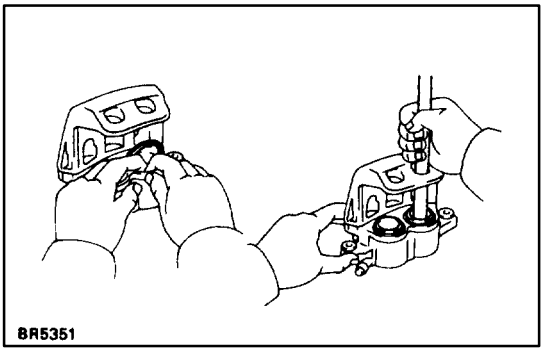

3. INSTALL PISTON SEALS AND PISTONS IN CALIPER

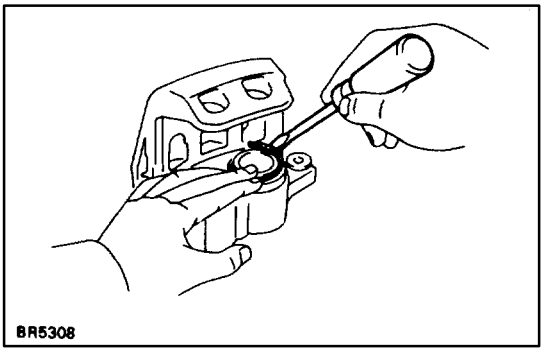

4. INSTALL CYLINDER BOOTS AND CYLINDER BOOT SET RINGS

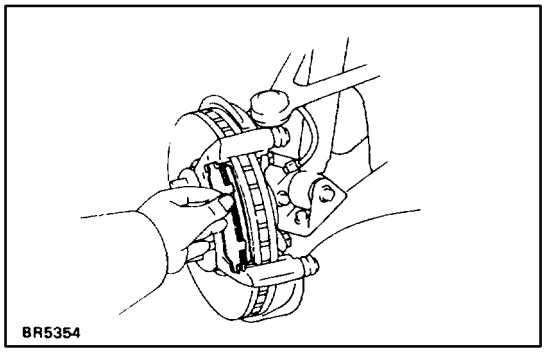

CALIPER INSTALLATION

BR046–0C

1. INSTALL FOLLOWING PARTS:

(a) 2 brake pads

(b) 2 anti–squeal springs

WhereEverybodyKnowsYourName

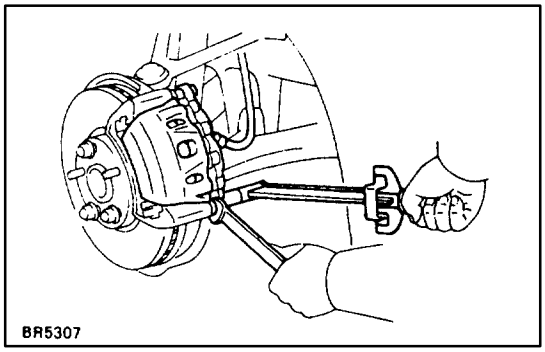

2. INSTALL CALIPER

(a) Temporarily install the caliper on the torque plate with 2 installation bolts.

(b) Hold the sliding pin and torque the installation bolt.
Torque: 34 N·m (350 kgf·cm, 25 ft·lbf)

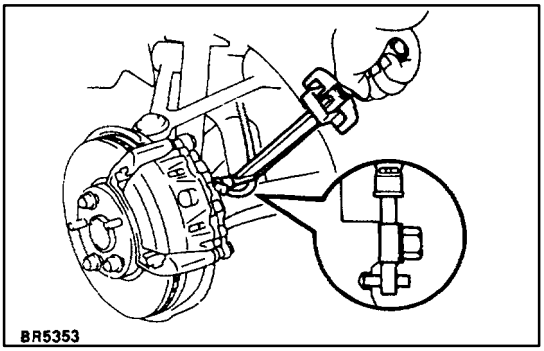

3. CONNECT FLEXIBLE HOSE

Install the flexible hose on the caliper with 2 new gaskets.
Torque: 30 N·m (310 kgf·cm, 22 ft·lbf)

HINT: Insert the flexible hose lock securely in the lock hole in the caliper.

4. FILL BRAKE RESERVOIR WITH BRAKE FLUID AND BLEED BRAKE SYSTEM
(See page BR–8)

5. CHECK FOR LEAKS

WhereEverybodyKnowsYourName

REAR BRAKE (Disc Brake)

COMPONENTS

BR047–06

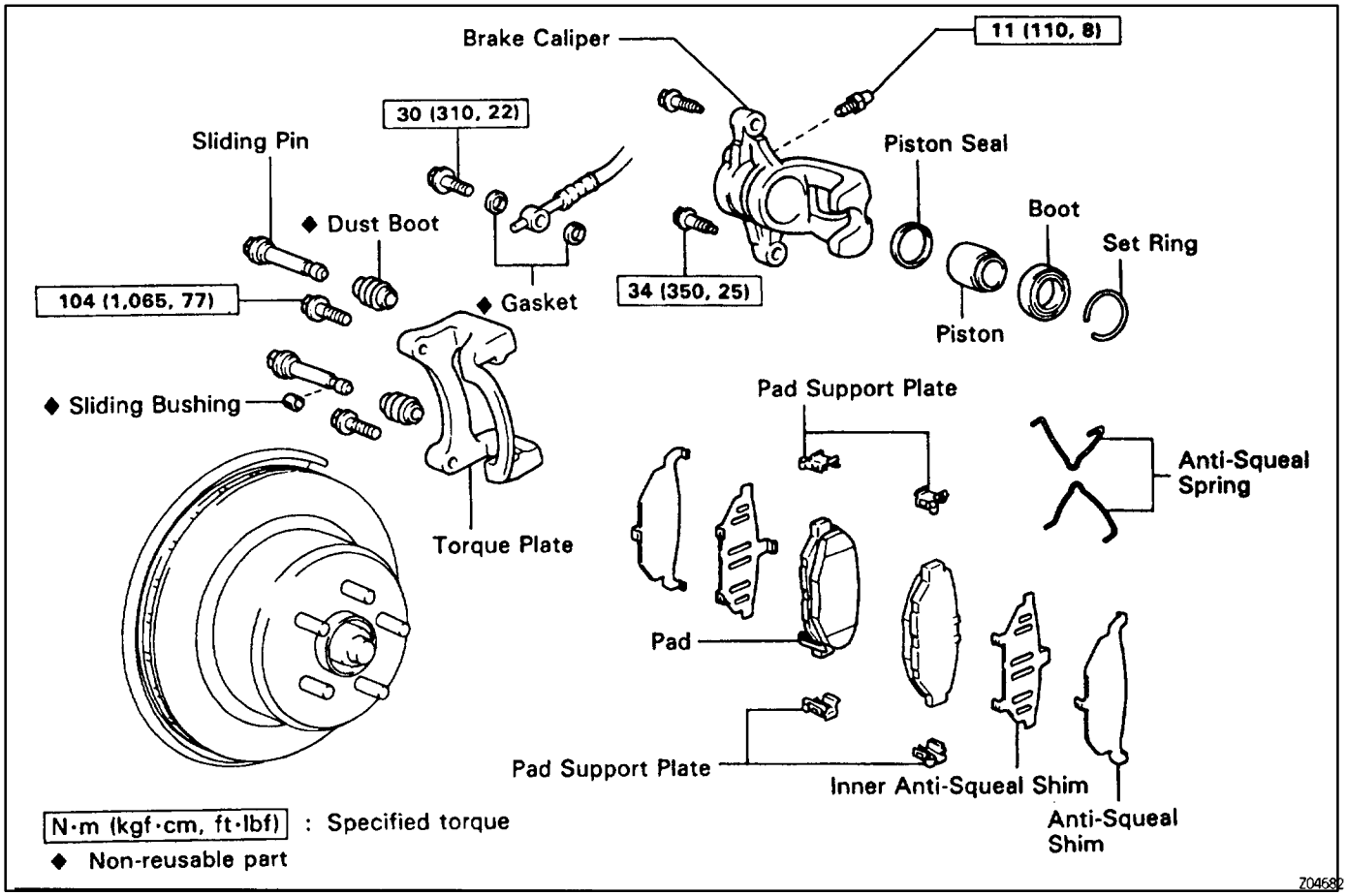

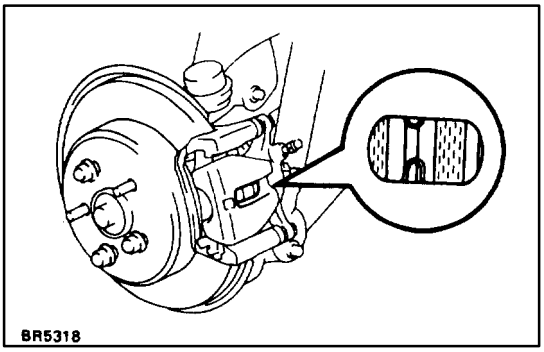

REPLACEMENT OF BRAKE PADS

BR0PV–01

1. **REMOVE REAR WHEEL**
   Remove the wheel and temporarily fasten the disc with the hub nuts.
2. **INSPECT PAD LINING THICKNESS**
   Check the pad thickness through the caliper inspection hole and replace pads if the thickness is not within the specification.
   Minimum thickness:
   1.0 mm (0.039 in.)

WhereEverybodyKnowsYourName

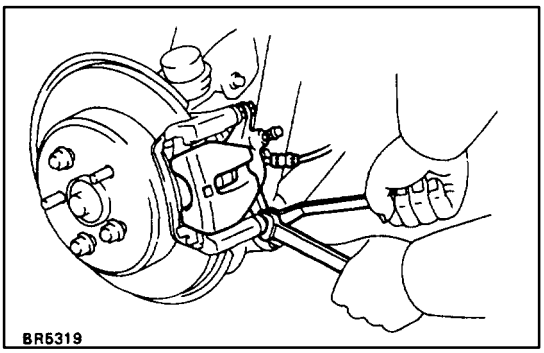

3. LIFT UP CALIPER

(a) Hold the sliding pin on the bottom and loosen the installation bolt.

(b) Remove the installation bolt.

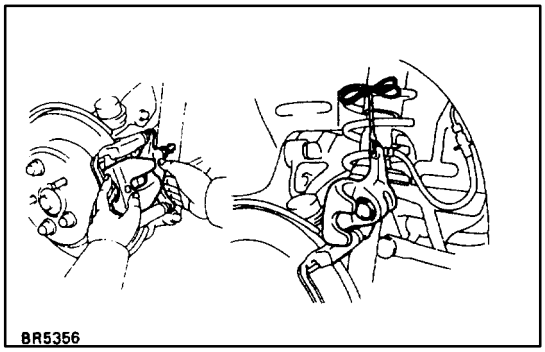

(c) Lift up and suspend the caliper.
HINT: Do not disconnect the flexible hose from the caliper.

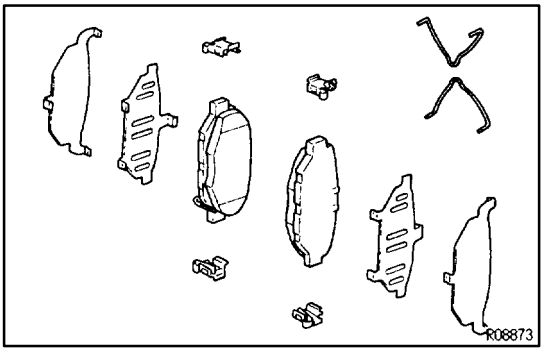

4. REMOVE FOLLOWING PARTS:

(a) 2 anti–squeal springs

(b) 2 brake pads

(c) 4 anti–squeal shims

(d) 4 pad support plates

5. CHECK DISC THICKNESS
(See page BR–41)

6. CHECK DISC RUNOUT
(See page BR–41)

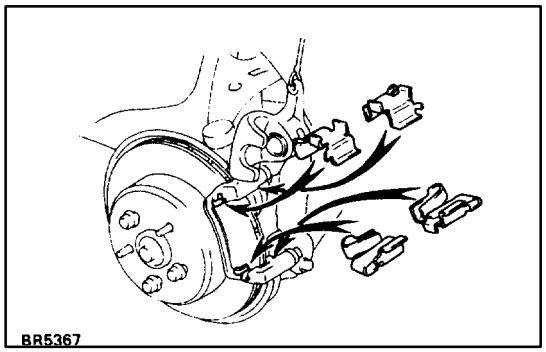

7. INSTALL PAD SUPPORT PLATES

WhereEverybodyKnowsYourName

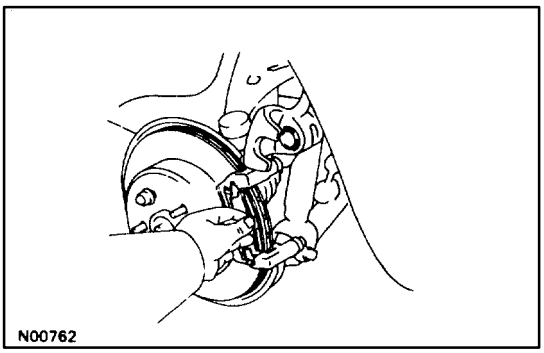

8. INSTALL NEW PADS

(a) Apply disc brake grease to both sides of the inner anti–squeal shim.

(b) Install the 2 anti–squeal shims on each pad.

(c) Install the inner pad with the pad wear indicator plates facing downward.

(d) Install the outer pad.

NOTICE: There should be no oil or grease adhering to the friction surfaces of the pads or the disc.

(e) Install the 2 anti–squeal springs.

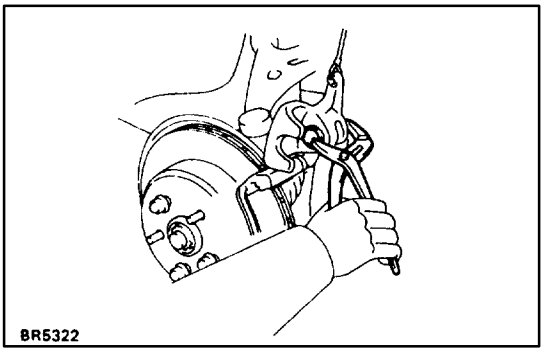

9. INSTALL CALIPER

(a) Draw out a small amount of brake fluid from the reservoir.

(b) Press in the piston with water pump pliers or similar implement.

HINT: If the piston is difficult to push in, loosen the bleeder plug and push in the piston while letting some brake fluid escape.

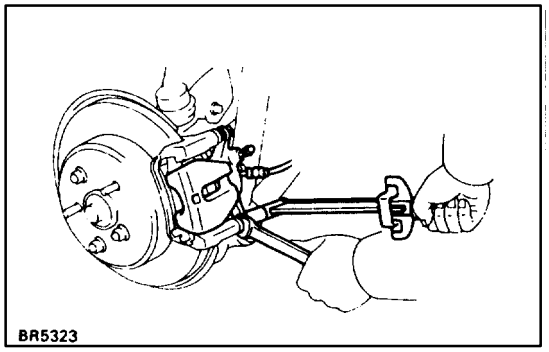

(c) Install the caliper.

(d) Hold the sliding pin and torque the installation bolt.

Torque: 34 N·m (350 kgf·cm, 25 ft·lbf)

10. INSTALL REAR WHEEL

11. CHECK THAT FLUID LEVEL IS AT MAX LINE

CALIPER REMOVAL

BR0EN–04

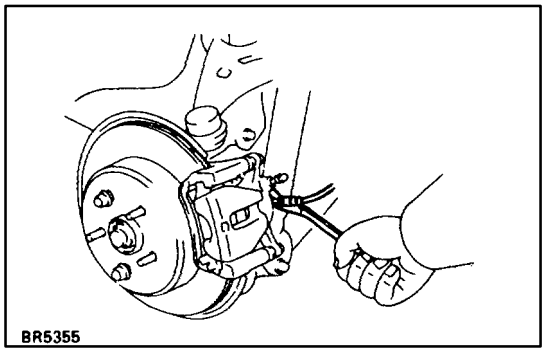

1. DISCONNECT FLEXIBLE HOSE

(a) Remove the union bolt and 2 gaskets from the caliper, then disconnect the flexible hose from the caliper.

(b) Use a container to catch the brake fluid as it drains out.

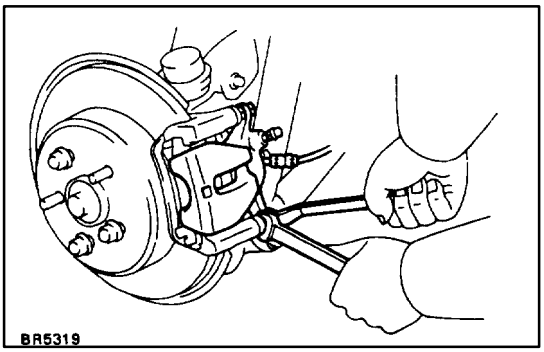

2. REMOVE CALIPER

(a) Hold the sliding pin and loosen the 2 installation bolts.

(b) Remove the 2 installation bolts.

(c) Remove the caliper from the torque plate.

WhereEverybodyKnowsYourName

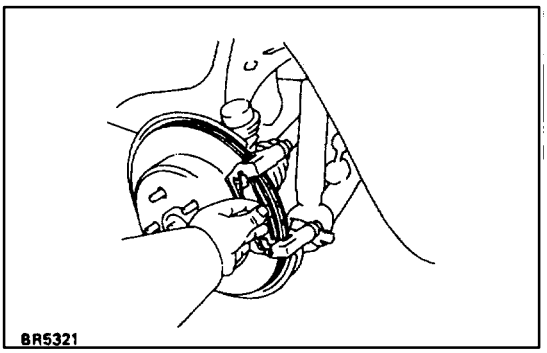

3. REMOVE FOLLOWING PARTS:

(a) 2 anti–squeal springs

(b) 2 brake pads

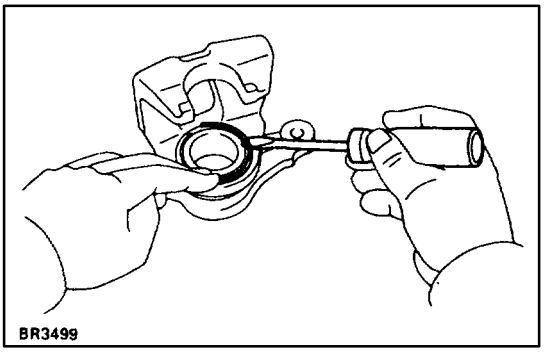

CALIPER DISASSEMBLY

BR0EP–04

1. REMOVE CYLINDER BOOT SET RING AND CYLINDER BOOT

Using a screwdriver, remove the cylinder boot set ring and cylinder boot from the caliper.

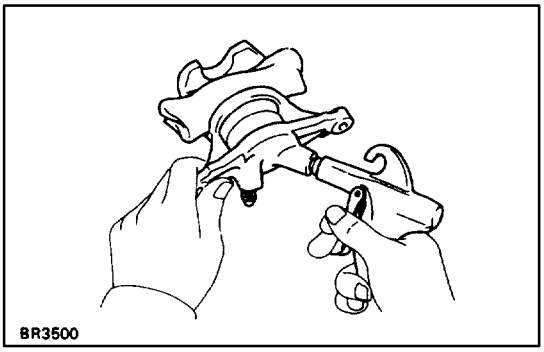

2. REMOVE PISTON

(a) Place a piece of cloth or similar article between the piston and the caliper.

(b) Use compressed air to remove the piston from the caliper.
CAUTION: Do not place your fingers in front of the piston when using compressed air.

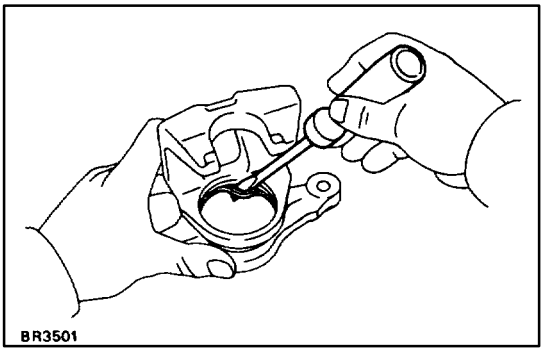

3. REMOVE PISTON SEAL

Using a screwdriver, remove the piston seal from the caliper.

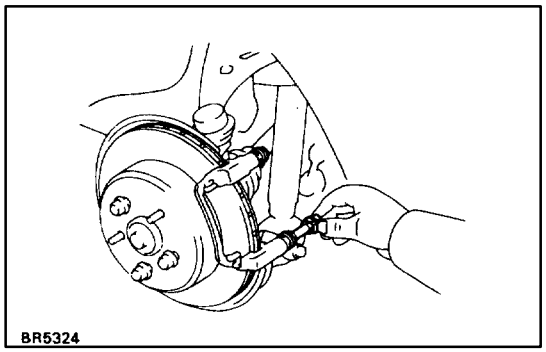

4. REMOVE SLIDING PINS AND DUST BOOTS

(a) Remove the 2 sliding pins from the torque plate.

WhereEverybodyKnowsYourName

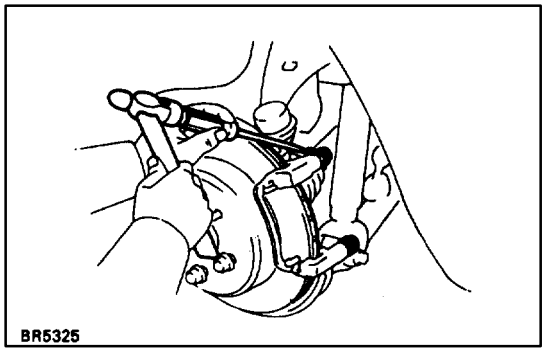

(b) Using a screwdriver and hammer, tap out the 2 dust boots.

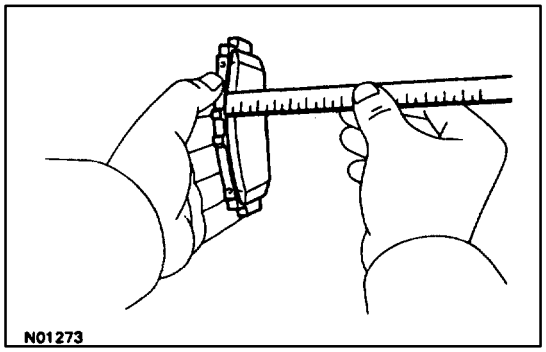

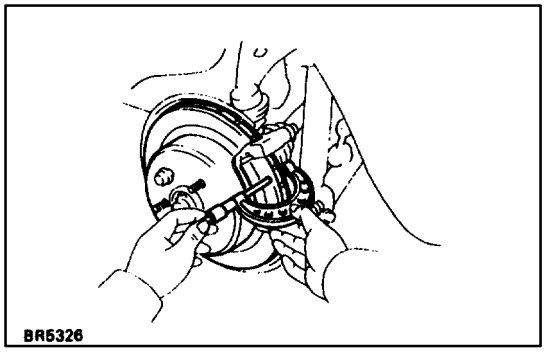

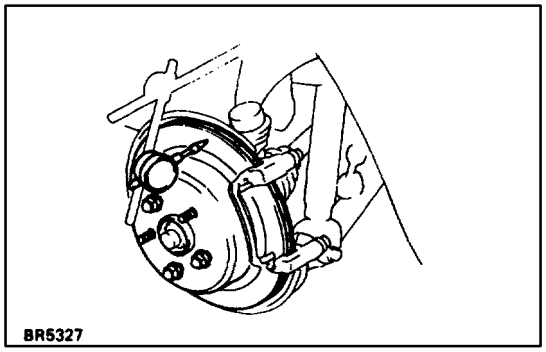

REAR BRAKE COMPONENTS INSPECTION AND REPAIR

BR04B–06

1. MEASURE PAD LINING THICKNESS

Using a ruler, measure the pad lining thickness.

Standard thickness:

10.0 mm (0.394 in.)

Minimum thickness:

1.0 mm (0.039 in.)

Replace the pad if the pad's thickness is at the minimum thickness or less, or if the pad has severely uneven wear.

2. MEASURE DISC THICKNESS

Using a micrometer, measure the disc thickness.

Standard thickness:

16.0 mm (0.630 in.)

Minimum thickness:

15.0 mm (0.591 in.)

Replace the disc if the thickness of the disc is at the minimum thickness or less. Replace the disc or grind it on a lathe if it is scored or is worn unevenly.

3. MEASURE DISC RUNOUT

Measure the disc runout at 10 mm (0.39 in.) from the outer edge of the disc.

Maximum disc runout:

0.05 mm (0.0020 in.)

If the disc's runout is at the maximum value or greater, check the bearing play in the axial direction and check the axle hub runout (See page SA–52). If the bearing play and axle hub runout are not abnormal, adjust the disc runout.

4. IF NECESSARY, ADJUST DISC RUNOUT

(a) Remove the 2 bolt and torque plate from the carrier.

(b) Remove the hub nuts and the disc. Reinstall the disc 1/5 of a turn round from its original position on the hub. Install and torque the hub nuts.

Torque: 103 N·m (1,050 kgf·cm, 76 ft·lbf)

Remeasure the disc runout. Make a note of the runout and the disc's position on the hub.

WhereEverybodyKnowsYourName

(c) Repeat (b) until the disc has been installed on the 3 remaining hub positions.
(d) If the minimum runout recorded in (b) and (c) is less than 0.05 mm (0.0020 in.), install the disc in that position.
(e) If the minimum runout recorded in (b) and (c) is greater than 0.05 mm (0.0020 in.), replace the disc and repeat step 3.

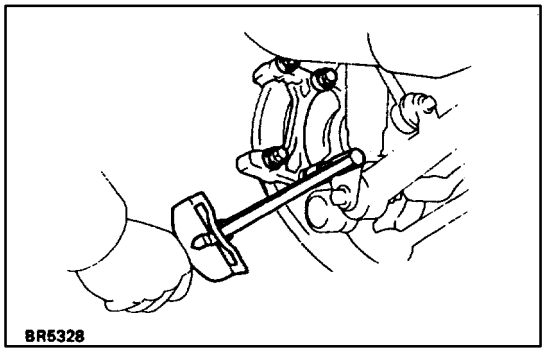

(f) Install the torque plate and tighten the 2 bolts.
Torque: 104 N·m (1,065 kgf·cm, 77 ft·lbf)

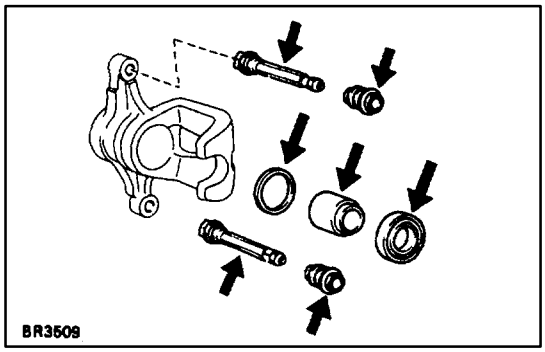

CALIPER ASSEMBLY

BR0EQ–04

1. APPLY LITHIUM SOAP BASE GLYCOL GREASE TO PARTS INDICATED WITH ARROWS

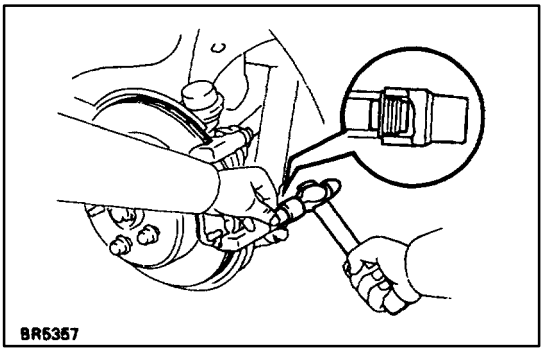

2. INSTALL DUST BOOTS AND SLIDING PINS

(a) Using a 19 mm socket and hammer, tap in 2 new dust boots into the torque plate.
(b) Confirm that the metal plate portion of the dust boot fits snugly in the torque plate.

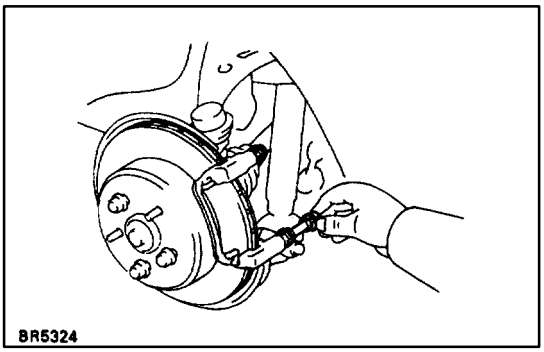

(c) Insert 2 sliding pins into the torque plate.
NOTICE: Insert the sliding pin with the sliding bushing into the bottom side.

WhereEverybodyKnowsYourName

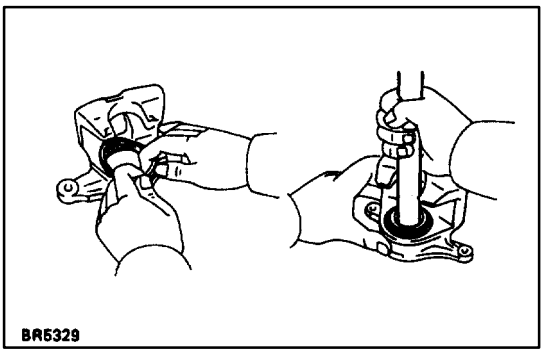

3. INSTALL PISTON SEAL AND PISTON IN CALIPER

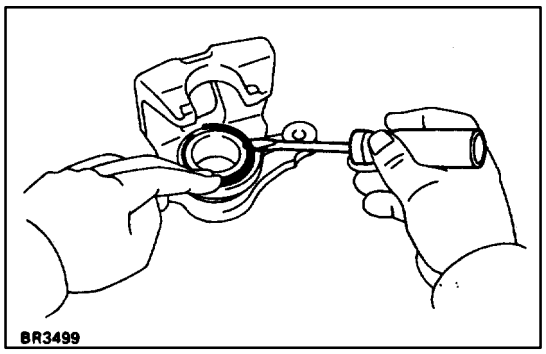

4. INSTALL CYLINDER BOOT AND CYLINDER BOOT SET RING

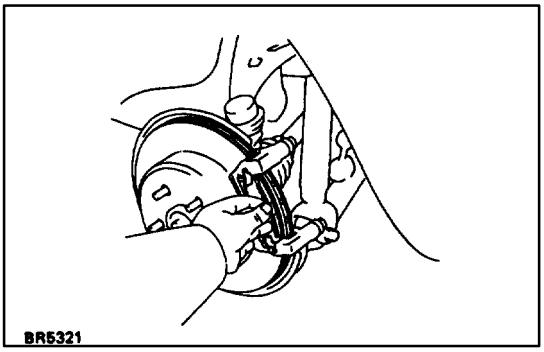

CALIPER INSTALLATION

BR0ER–04

1. INSTALL FOLLOWING PARTS:

(a) 2 brake pads

(b) 2 anti–squeal springs

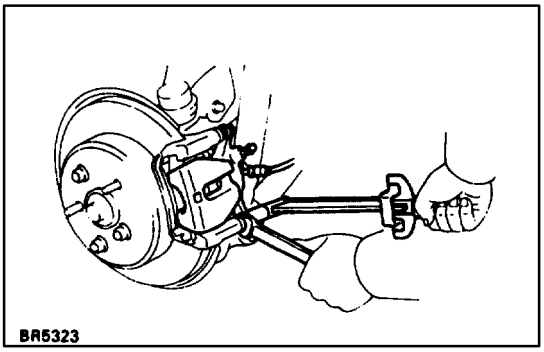

2. INSTALL CALIPER

(a) Temporarily install the caliper on the torque plate with 2 installation bolts.

(b) Hold the sliding pin and torque the installation bolts.
Torque: 34 N·m (350 kgf·cm, 25 ft·lbf)

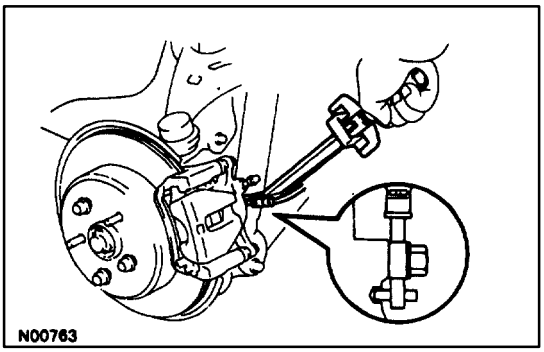

3. CONNECT FLEXIBLE HOSE
Install the flexible hose on the caliper with 2 new gaskets.
Torque: 30 N·m (310 kgf·cm, 22 ft·lbf)
HINT: Install the flexible hose lock securely in the lock hole in the caliper.

4. FILL BRAKE RESERVOIR WITH BRAKE FLUID AND BLEED BRAKE SYSTEM
(See page BR–8)

5. CHECK FOR LEAKS

WhereEverybodyKnowsYourName

REAR BRAKE (Parking Brake)

COMPONENTS

BR04E–06

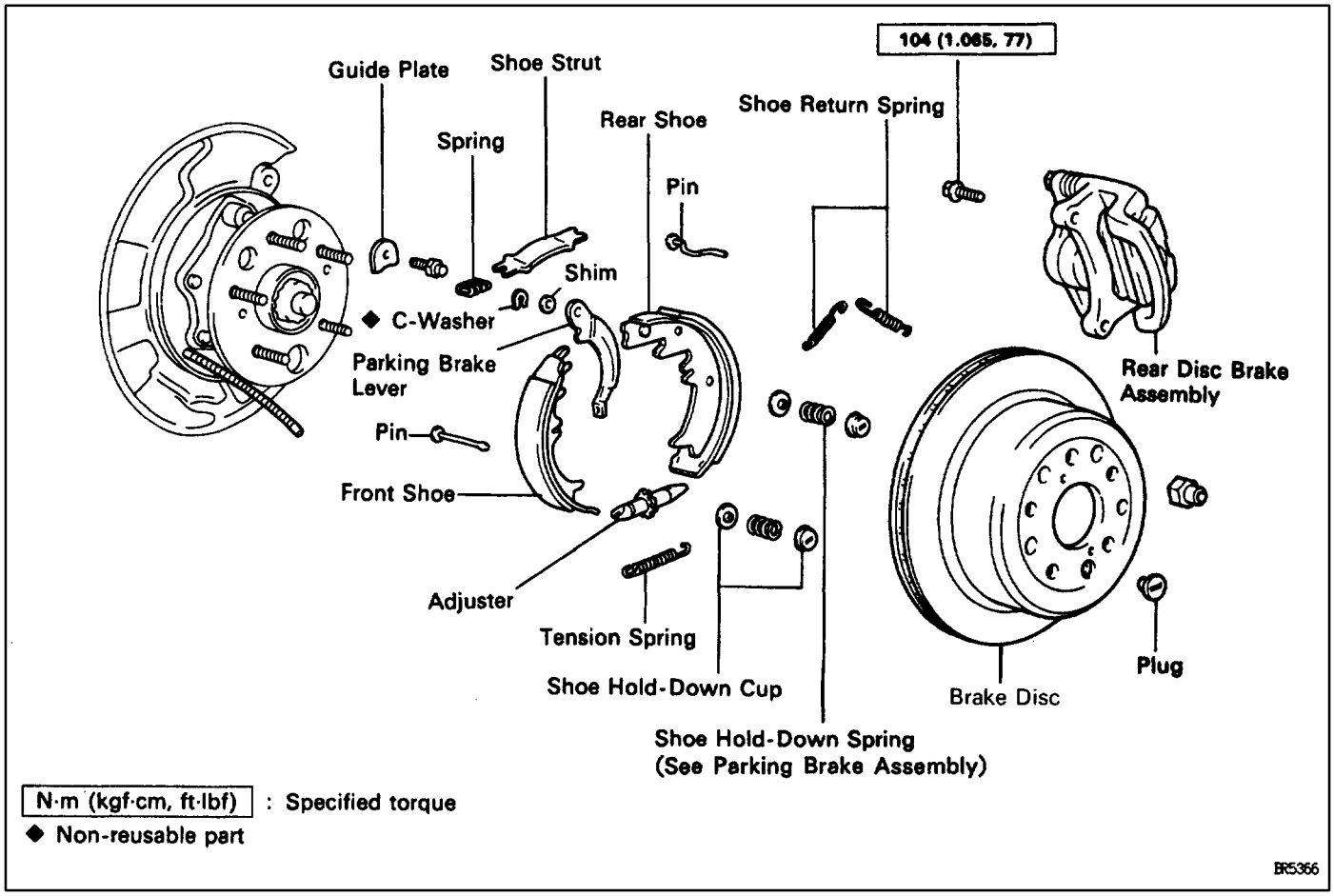

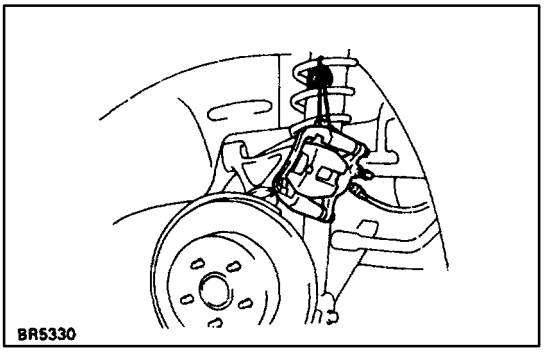

PARKING BRAKE DISASSEMBLY

BR04F–09

1. REMOVE REAR WHEEL

2. REMOVE REAR DISC BRAKE ASSEMBLY

(a) Remove the 2 mounting bolts and remove the disc brake assembly.

(b) Suspend the disc brake so the hose is not stretched.

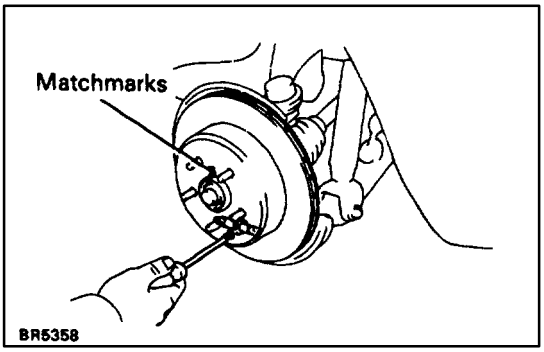

3. REMOVE DISC

(a) Place matchmarks on the disc and rear axle hub.

(b) Remove the disc.

HINT: If the disc can not be removed easily, return the shoe adjuster until the wheel turns freely.

WhereEverybodyKnowsYourName

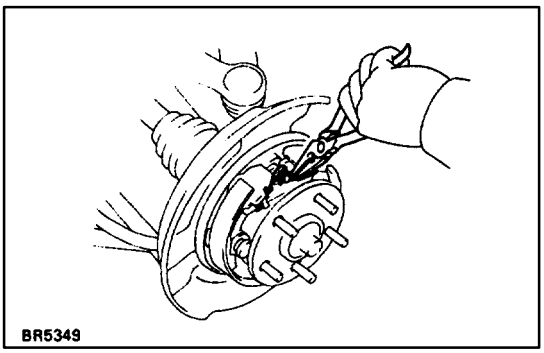

4. REMOVE SHOE RETURN SPRINGS

Using needle–nose pliers, remove the 2 shoe return springs.

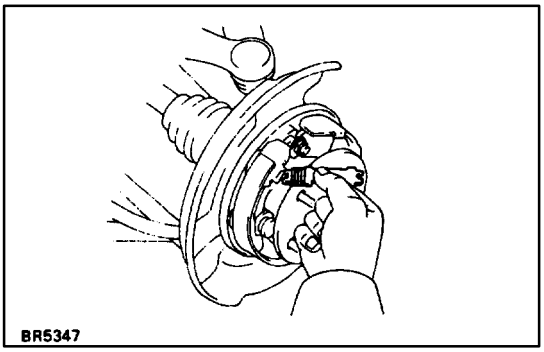

5. REMOVE SHOE STRUT WITH SPRING

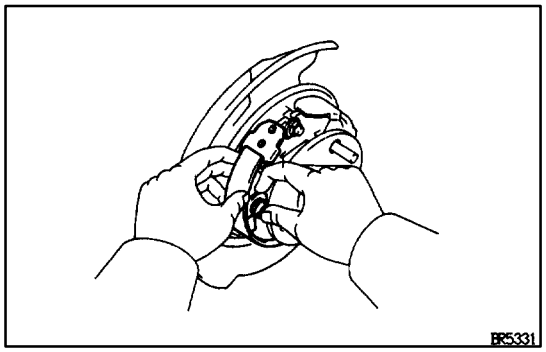

6. REMOVE FRONT SHOE ADJUSTER AND TENSION SPRING

(a) Slide out the front shoe and remove the shoe adjuster.
(b) Disconnect the tension spring and remove the front shoe.

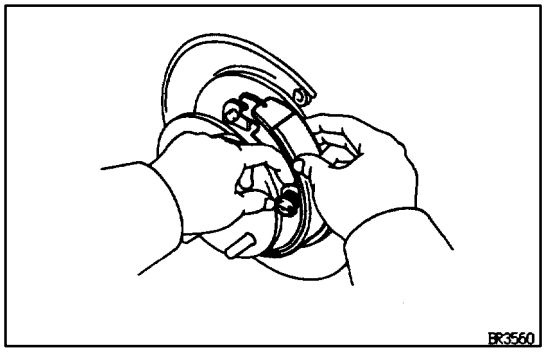

7. REMOVE REAR SHOE

(a) Slide out the rear shoe.
(b) Remove the tension spring from the rear shoe.

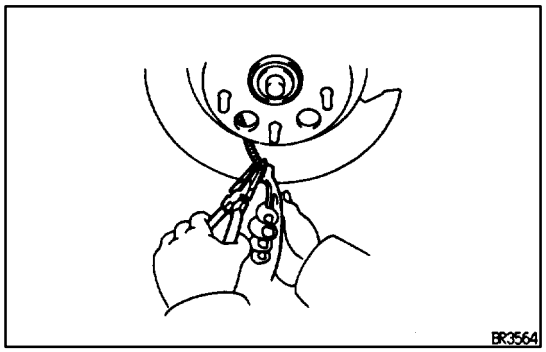

(c) Disconnect the parking brake cable from the parking brake shoe lever.
(d) Remove the shoe hold–down spring cups, springs and pins.

WhereEverybodyKnowsYourName

PARKING BRAKE COMPONENTS INSPECTION AND REPAIR

BR04G–0B

1. INSPECT DISASSEMBLED PARTS

Inspect the disassembled parts for wear, rust or damage.

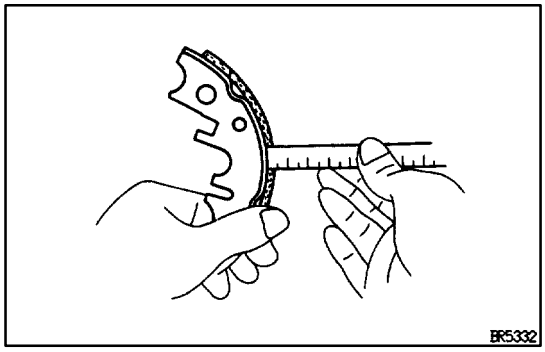

2. MEASURE BRAKE SHOE LINING THICKNESS

Using a scale, measure the thickness of the shoe lining.

Standard thickness:

2.5 mm (0.098 in.)

Minimum thickness:

1.0 mm (0.039 in.)

If the lining thickness is at the minimum thickness or less, or if there is extremely uneven wear, replace the brake shoe.

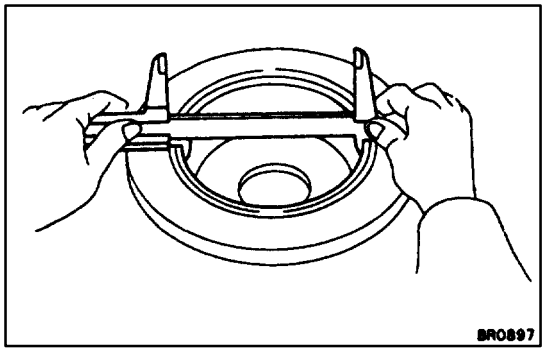

3. MEASURE BRAKE DISC INSIDE DIAMETER

Using a vernier caliper, measure the inside diameter of the disc.

Standard inside diameter:

190 mm (7.48 in.)

Maximum inside diameter:

191 mm (7.52 in.)

Replace the disc if the inside diameter is at the maximum value or more. Replace the disc or grind it with a lathe if the disc is scored or is worn unevenly.

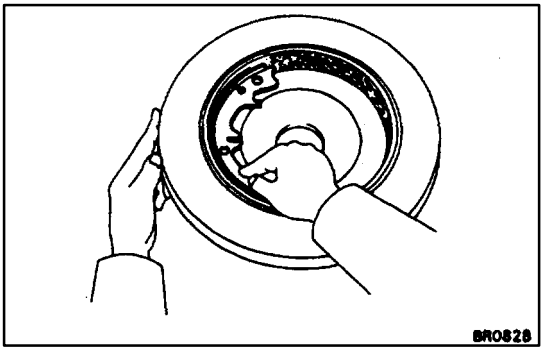

4. INSPECT PARKING BRAKE LINING AND DISC FOR PROPER CONTACT

Apply chalk to the inside surface of the disc, then grind down the brake shoe lining to fit. If the contact between the disc and the brake shoe lining is improper, repair it using a brake shoe grinder or replace the brake shoe assembly.

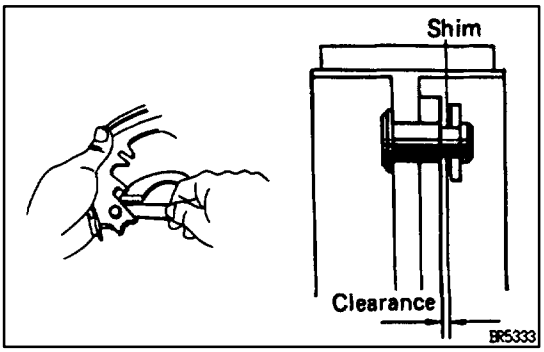

5. MEASURE CLEARANCE BETWEEN PARKING BRAKE SHOE AND LEVER

Using a feeler gauge, measure the clearance.

Standard clearance:

Less than 0.35 mm (0.0138 in.)

If the clearance is not within the specification, replace the shim with one of the correct size.

WhereEverybodyKnowsYourName

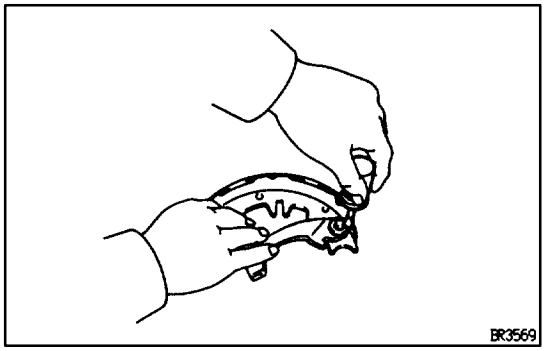

Thickness	mm(in.)	Thickness	mm(in.)
0.3	(0.012)	0.9	(0.035)
0.6	(0.024)		

6. IF NECESSARY, REPLACE SHIM

(a) Remove the parking brake shoe lever, and install the correct size shim.

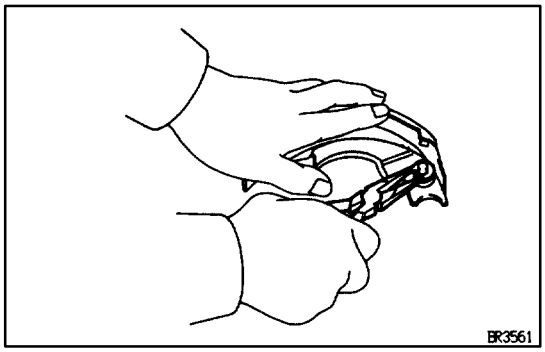

(b) Install the parking brake shoe lever with a new Cwasher.

(c) Remeasure the clearance.

PARKING BRAKE ASSEMBLY

BR0ES–04

HINT: Assemble the parts in the correct direction, as shown.

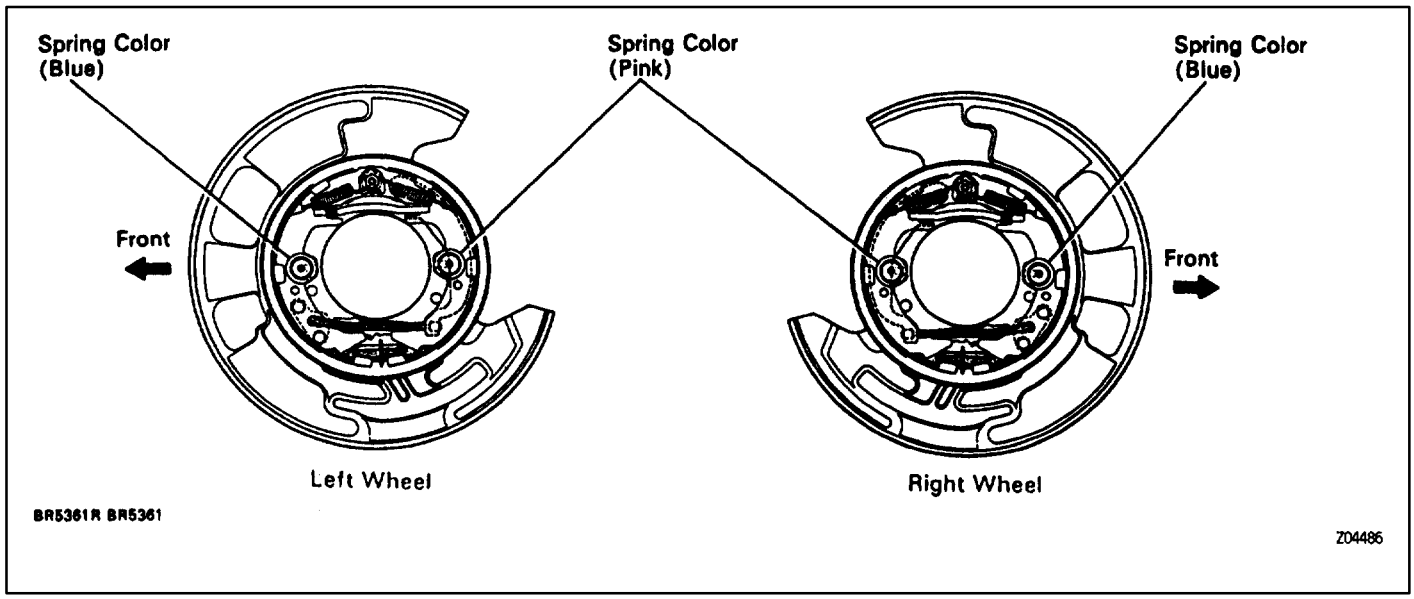

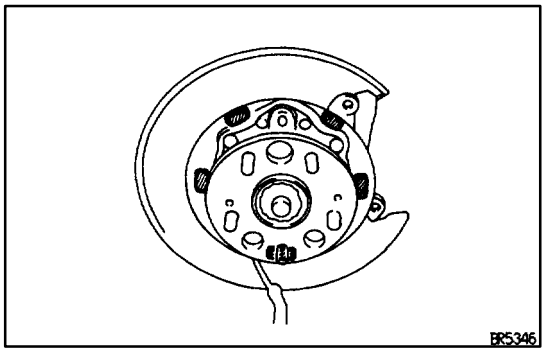

1. APPLY HIGH TEMPERATURE GREASE ON BACK– ING PLATE

WhereEverybodyKnowsYourName

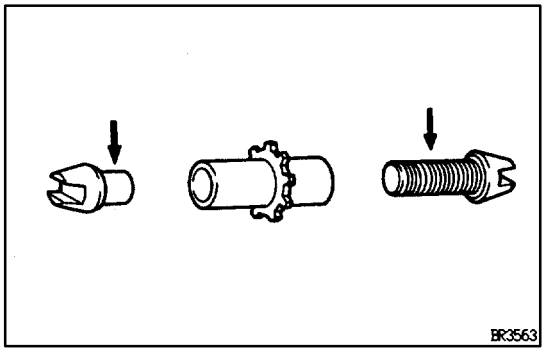

2. APPLY HIGH TEMPERATURE GREASE TO ADJUSTER

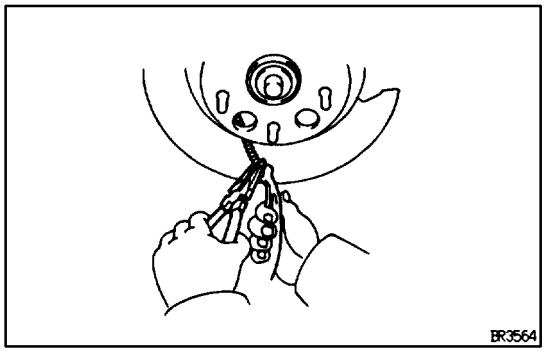

3. CONNECT PARKING BRAKE CABLE TO PARKING BRAKE LEVER

(a) Install the shoe hold–down springs, cups and pins.
(b) Connect the parking brake cable to the parking brake shoe lever of the rear shoe.

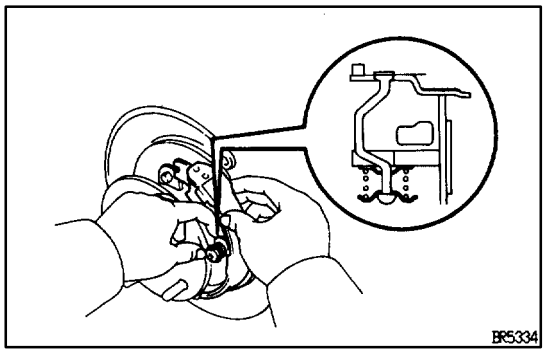

4. INSTALL REAR SHOE

Slide in the rear shoe between the shoe hold–down spring cup and the backing plate.

NOTICE: Do not allow oil or grease to get on the rubbing face.

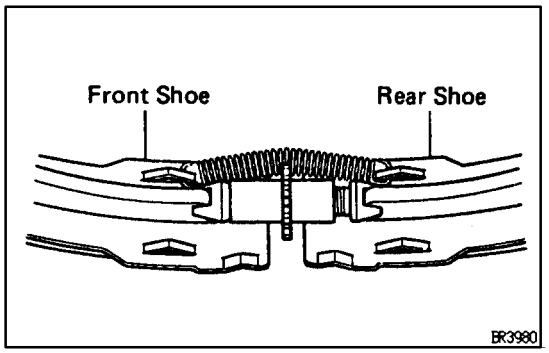

5. INSTALL TENSION SPRING, FRONT SHOE AND ADJUSTER

(a) Install the tension spring on the rear shoe.
(b) Install the front shoe on the tension spring.
(c) Install the adjuster between the front and rear shoes.

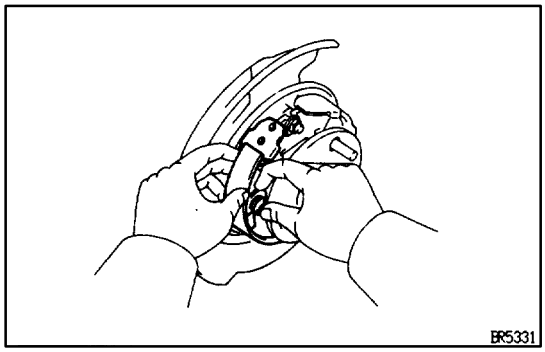

(d) Slide in the front shoe between the shoe hold–down spring cup and the backing plate.

WhereEverybodyKnowsYourName

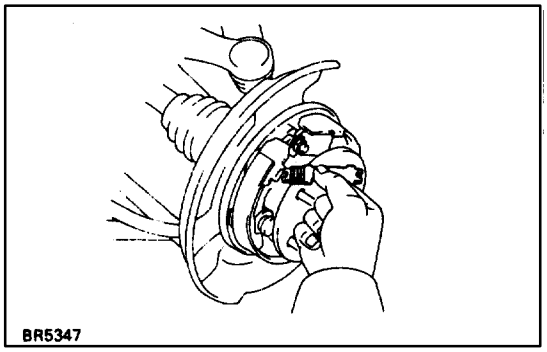

6. INSTALL SHOE STRUT WITH SPRING

Install the strut with the spring forward.

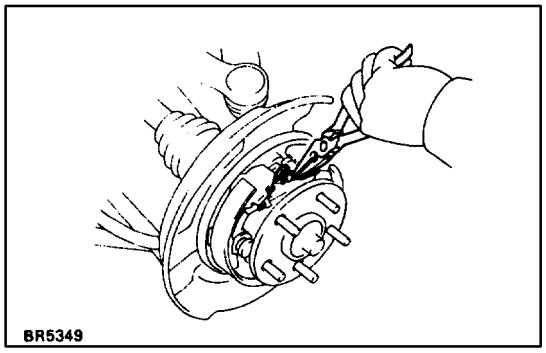

7. INSTALL SHOE RETURN SPRINGS

Using needle–nose pliers, install the front shoe return spring and then install the rear shoe return spring.

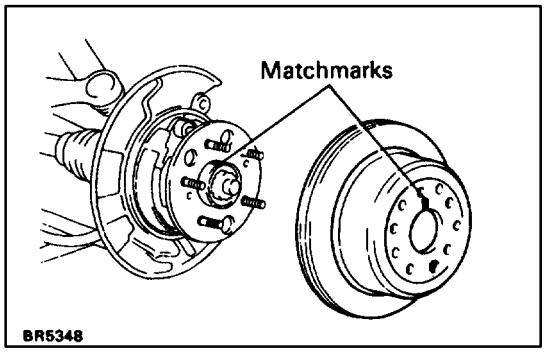

8. INSTALL DISC

(a) Before installing, polish the disc and shoe surfaces with sandpaper.

(b) Align the matchmarks and install the disc.

HINT: If there are no matchmarks, temporarily install the disc, then measure the disc runout and install the disc in the position.

(See page BR–41)

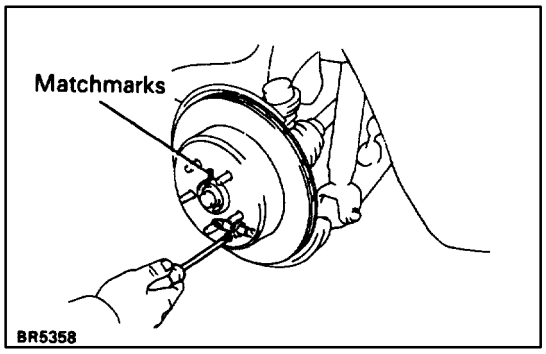

9. ADJUST PARKING BRAKE SHOE CLEARANCE

(a) Temporarily install the hub nuts.

(b) Remove the hole plug.

(c) Turn the adjuster and expand the shoes until the disc locks.

(d) Return the adjuster 8 notches.

(e) Install the hole plug.

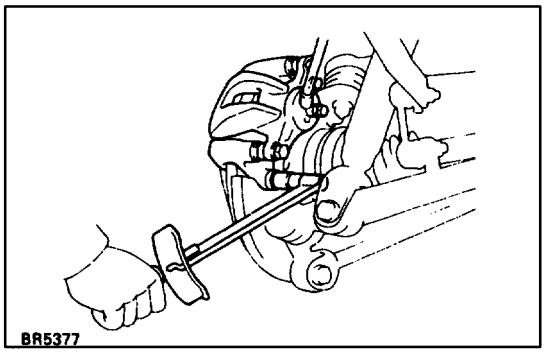

10. INSTALL REAR DISC BRAKE ASSEMBLY

Install the disc brake assembly and torque the 2 mounting bolts.

Torque: 104 N·m (1,065 kgf·cm, 77 ft·lbf)

11. INSTALL REAR WHEEL

WhereEverybodyKnowsYourName

12. SETTLING PARKING BRAKE SHOES AND DISC

(a) Drive the vehicle at about 50 km/h (31 mph) on a safe, level and dry road.

(b) With the parking brake release button pushed in, pull on the lever with 88 N (9 kgf, 19.8 lbf) of force.

(c) Drive the vehicle for about 400 meters (0.25 mile) in this condition.

(d) Repeat this procedure 2 or 3 times.

13. CHECK AND ADJUST PARKING BRAKE LEVER TRAVEL

WhereEverybodyKnowsYourName

PROPORTIONING AND BY–PASS VALVE (P & B VALVE)

FLUID PRESSURE INSPECTION

BR0ET–01

1. INSTALL LSPV GAUGE (SST) AND BLEED AIR

SST 09709–29017

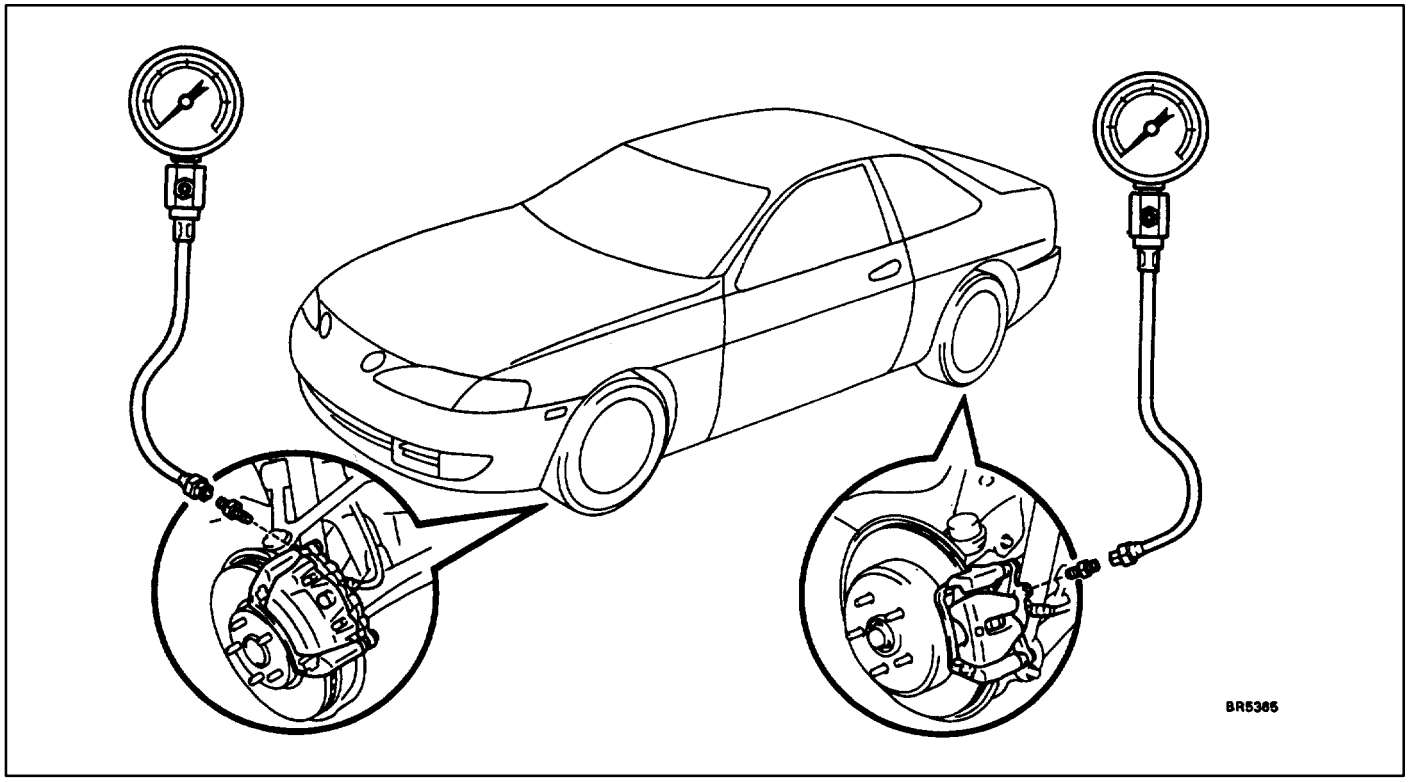

2. RAISE MASTER CYLINDER PRESSURE AND CHECK REAR WHEEL CYLINDER PRESSURE

Master cylinder pressure	Rear wheel cylinder pressure
1,961 kPa (20 kgf/cm^2, 284 psi)	1,961 kPa (20 kgf/cm^2, 284 psi)
7,845 kPa (80 kgf/cm^2, 1,138 psi)	5,492 kPa (56 kgf/cm^2, 796 psi)

Specifications: If the rear wheel cylinder pressure is incorrect, replace the master cylinder.

3. BLEED BRAKE SYSTEM

4. CHECK FOR FLUID LEAKAGE

WhereEverybodyKnowsYourName

ANTI–LOCK BRAKE SYSTEM (ABS)

BR0EU–04

DESCRIPTION

▼ ABS is a brake system which controls the brake cylinder hydraulic pressure to all 4 wheels during sudden braking and braking on slippery road surfaces, preventing the wheels from locking. ABS provides the following benefits:
(1) Enables steering round an obstacle with a greater degree of certainty even when panic braking.
(2) Enables stopping during panic braking while keeping the effect upon stability and steerability to a minimum, even on curves.

▼ In case a malfunction occurs, a diagnosis function and fail–safe system have been adopted for the ABS.

SYSTEM PARTS LOCATION

BR02L–05

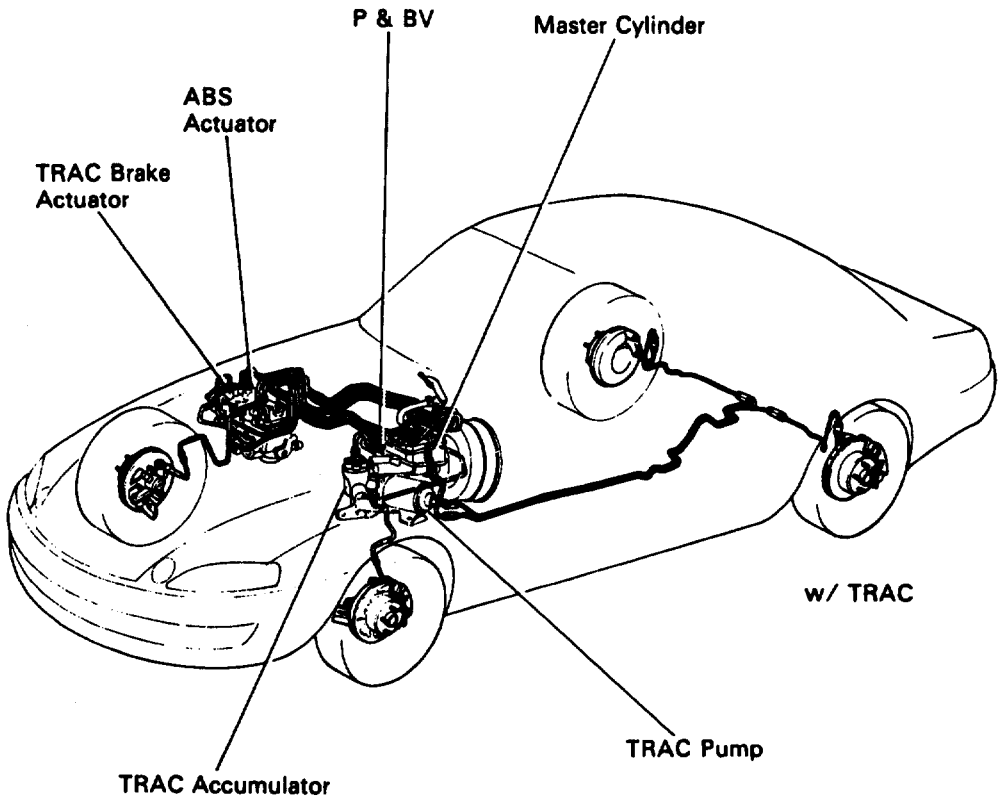

R00002

WhereEverybodyKnowsYourName

BR0EV–04

HYDRAULIC SYSTEM DIAGRAM w/o TRAC:

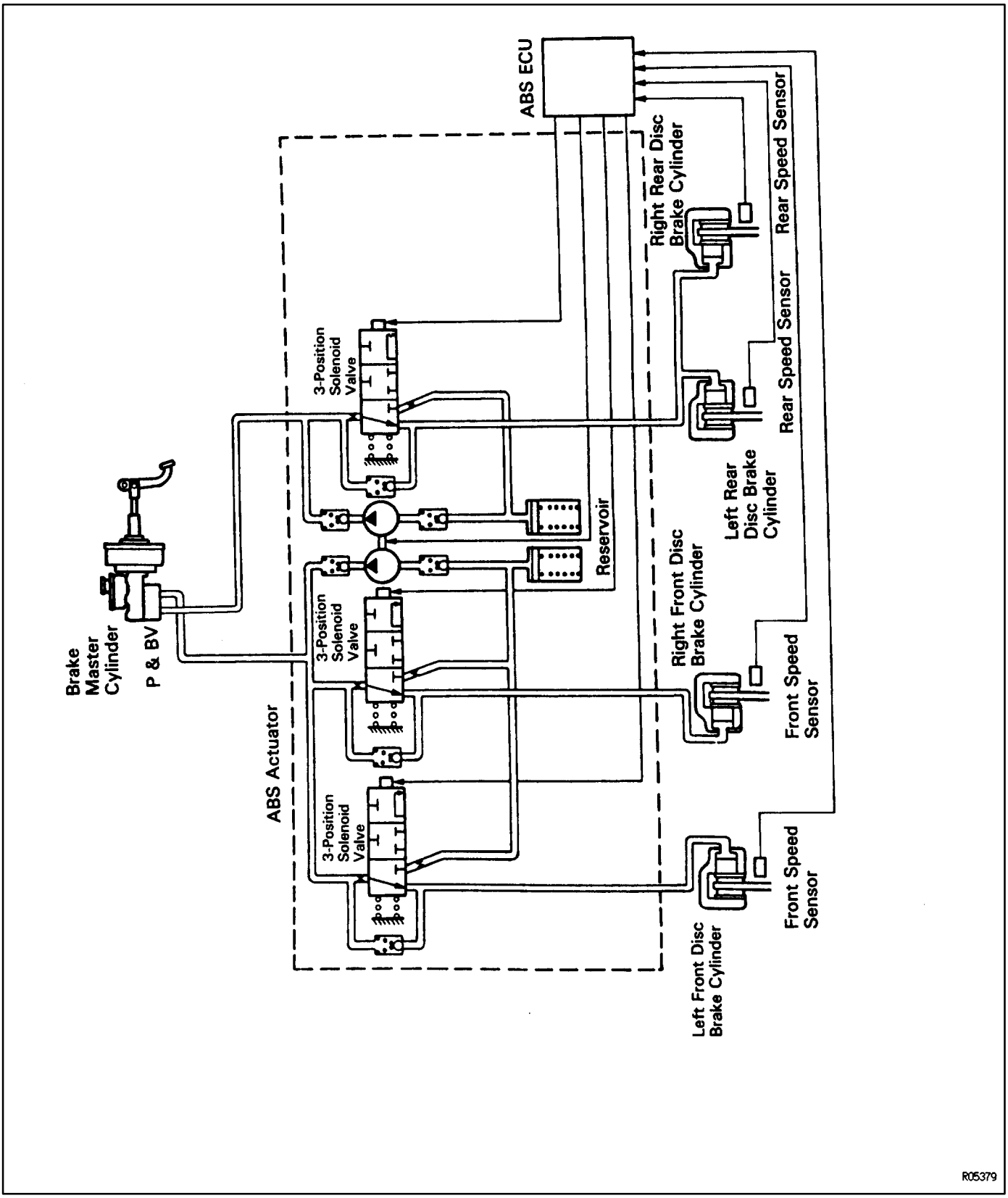

WhereEverybodyKnowsYourName

w/ TRAC:

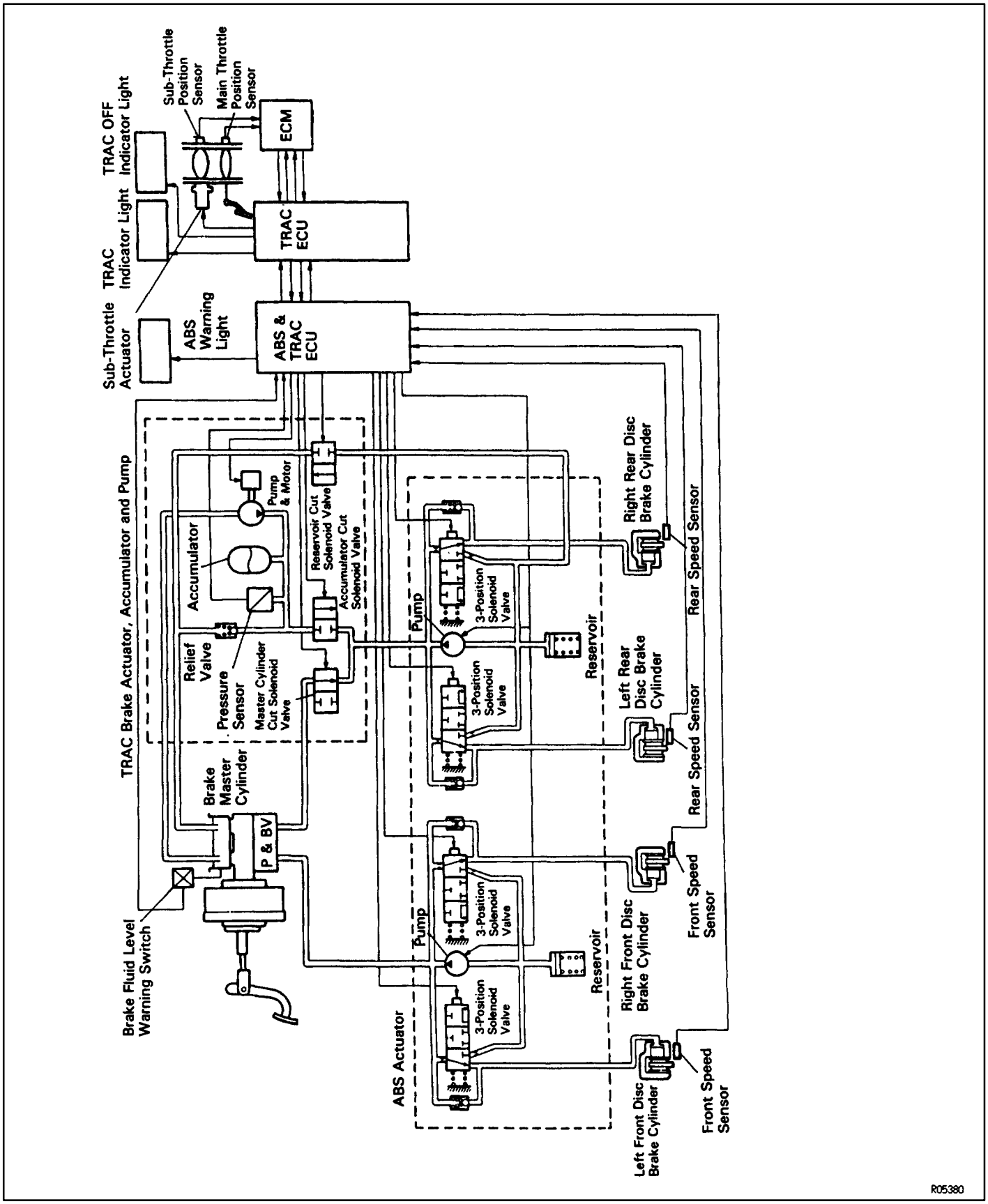

WhereEverybodyKnowsYourName

BR0EW–05

WIRING DIAGRAM w/o TRAC:

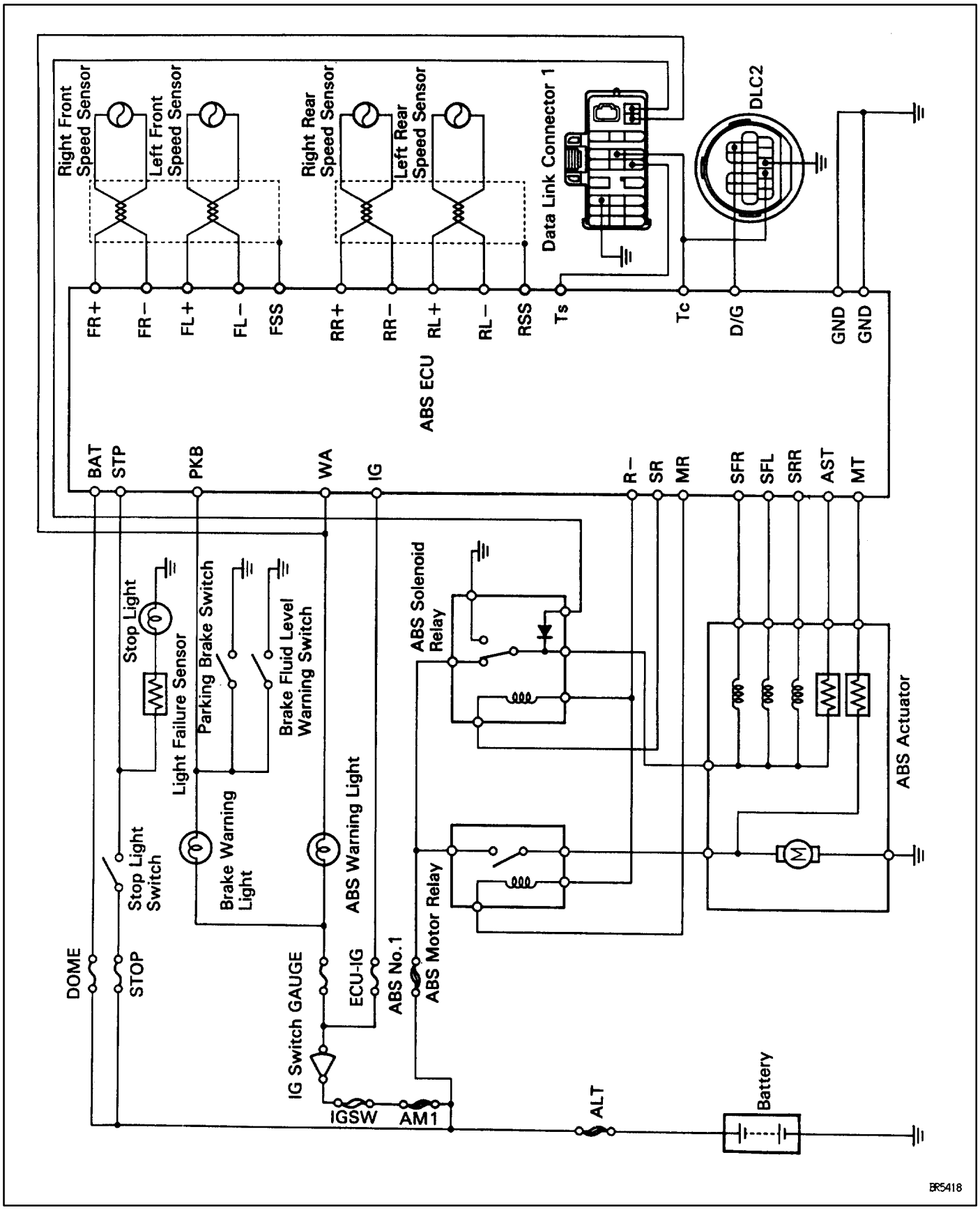

WhereEverybodyKnowsYourName

w/ TRAC:

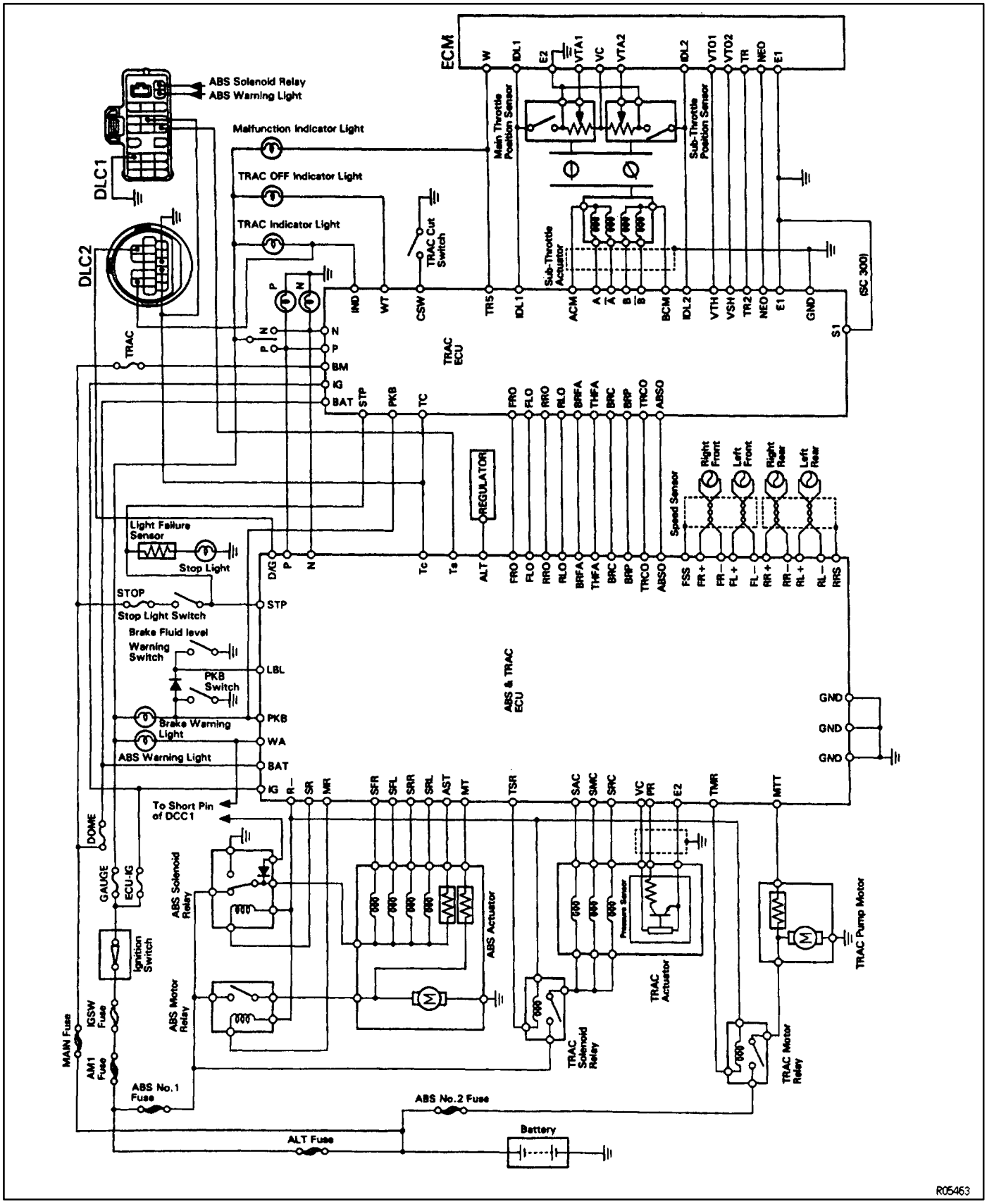

WhereEverybodyKnowsYourName

BR0EX–01

ECU TERMINALS

w/o TRAC

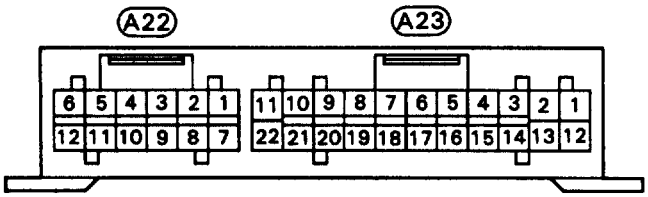

BR5385

Terminal No.	Symbol	Connection	Terminal No.	Symbol	Connection
A22- 1	FR +	Right front speed sensor	A23- 1	SFR	Right front solenoid
2	FSS	Sealed wiring harness	2	GND	Ground
3	FL +	Left front speed sensor	3	RL –	Left rear speed sensor
4	R –	Relay ground	4	———	———
5	SR	ABS solenoid relay	5	———	———
6	SFL	Left front solenoid	6	Ts	DLC1
7	FR –	Right front speed sensor	7	STP	Stop light switch
8	AST	ABS solenoid relay monitor	8	RSS	Sealed wiring harness
9	MT	ABS motor relay monitor	9	———	———
10	FL –	Left front speed sensor	10	WA	ABS warning light
11	MR	ABS motor relay	11	IG	Ignition switch
12	SRR	Rear solenoid	12	———	———
			13	GND	Ground
			14	RL +	Left rear speed sensor
			15	———	———
			16	PKB	Parking brake switch
			17	Tc	DLC1, DLC2
			18	———	———
			19	RR +	Right rear speed sensor
			20	RR –	Right rear speed sensor
			21	D/G	DLC1, DLC2
			22	BAT	Battery

WhereEverybodyKnowsYourName

w/ TRAC

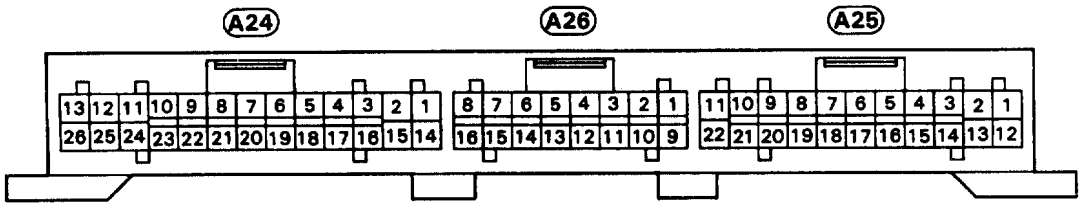

BR5387

Terminal No.	Symbol	Connection	Terminal No.	Symbol	Connection
A24- 1	TSR	TRAC solenoid relay	A26- 7	THFA	TRAC ECU
2	SMC	M/C cut solenoid	8	BRC	TRAC ECU
3	——	——	9	——	——
4	FR–	Right front speed sensor	10	P	Park/Neutral position switch
5	FL+	Left front speed sensor	11	BRFA	TRAC ECU
6	——	——	12	BRP	TRAC ECU
7	MT	ABS motor relay monitor	13	RRO	TRAC ECU
8	AST	ABS solenoid relay monitor	14	TRCO	TRAC ECU
9	TMR	TRAC motor relay	15	FRO	TRAC ECU
10	PR	Accumulator pressure sensor	16	——	——
11	——	——	A25- 1	SFR	Right front solenoid
12	SAC	Accumulator cut solenoid	2	GND	Ground
13	SFL	Left front solenoid	3	RR–	Right rear speed sensor
14	——	——	4	RL+	Left rear speed sensor
15	SRC	Reservoir cut solenoid	5	RSS	Sealed wiring harness
16	FSS	Sealed wiring harness	6	LBL	Brake fluid level warning switch
17	FR+	Right front speed sensor	7	ABSO	TRAC ECU
18	FL–	Left front speed sensor	8	ALT	Alternator
19	VC	Accumulator pressure sensor	9	WA	ABS warning light
20	E2	Pressure sensor ground	10	STP	Stop light switch
21	——	——	11	——	——
22	SR	ABS solenoid relay	12	SRL	Left rear solenoid
23	MTT	TRAC pump motor relay monitor	13	GND	Ground
24	IG	Ignition switch	14	RR+	Right rear speed sensor
25	R–	Relay ground	15	RL–	Left rear speed sensor
26	SRR	Right rear solenoid	16	MR	ABS motor relay
A26- 1	Ts	DLC1	17	PKB	Parking brake switch
2	——	——	18	——	——
3	Tc	DLC1, DLC2	19	——	——
4	RLO	TRAC ECU	20	D/G	DLC1, DLC2
5	N	Park/Neutral position switch	21	BAT	Battery
6	FLO	TRAC ECU	22	GND	Ground

WhereEverybodyKnowsYourName

BR0EY–05

ECU TERMINALS STANDARD VALUE w/o TRAC:

Symbols (Terminals No.)			STD Voltage (V)	Condition
BAT (A23–22)	–	GND (A23–13)	10–14	Always
IG (A23–11)	–	GND (A23–2)	10–14	IG switch ON
SR (A22–5)	–	R– (A22–4)	8.3–14	IG switch ON, ABS warning light OFF
MR (A22–11)	–	R– (A22–4)	Below 1.0	IG switch ON
SFR (A23–1)	–	GND (A23–2)	10–14	IG switch ON, ABS warning light OFF
SFL (A22–6)	–	GND (A23–13)	10–14	IG switch ON, ABS warning light OFF
SRR (A22–12)	–	GND (A23–13)	10–14	IG switch ON, ABS warning light OFF
AST (A22–8)	–	GND (A23–13)	10–14	IG switch ON, ABS warning light OFF
WA (A23–10)	–	GND (A23–13)	Below 2.0	IG switch ON, ABS warning light ON
			10–14	IG switch ON, ABS warning light OFF
PKB (A23–16)	–	GND (A23–13)	Below 1.5	IG switch ON, PKB switch ON
			10–14	IG switch ON, PKB switch OFF
STP (A23–7)	–	GND (A23–2)	Below 1.5	Stop light switch OFF
			8–14	Stop light switch ON
D/G (A23–21)	–	GND (A23–13)	10–14	IG switch ON, ABS warning light OFF
Tc (A23–17)	–	GND (A23–13)	10–14	IG switch ON
Ts (A23–6)	–	GND (A23–2)	10–14	IG switch ON
FR+ (A22–1)	–	FR– (A22–7)	AC generation	IG switch ON Slowly turn right front wheel
FL+ (A22–3)	–	FL– (A22–10)	AC generation	IG switch ON Slowly turn left front wheel
RR+ (A23–19)	–	RR– (A23–20)	AC generation	IG switch ON Slowly turn right rear wheel
RL+ (A23–14)	–	RL– (A23–3)	AC generation	IG switch ON Slowly turn left rear wheel

WhereEverybodyKnowsYourName

w/TRAC:

Symbols (Terminals No.)			STD Voltage (V)	Condition
BAT (A25–21)	–	GND (A25–22)	10–14	Always
IG (A24–24)	–	GND (A25–22)	10–14	IG switch ON
SR (A24–22)	–	R– (A24–25)	8.3–14	IG switch ON, ABS warning light OFF
MR (A25–16)	–	R– (A24–25)	Below 1.0	IG switch ON
TSR (A24–1)	–	R– (A24–25)	8.3–14	IG switch ON, TRAC indicator light OFF
TMR (A24–9)	–	R– (A24–25)	Below1.0	IG switch ON
SFR (A25–1)	–	GND (A25–2)	10–14	IG switch ON, ABS warning light OFF
SFL (A24–13)	–	GND (A25–22)	10–14	IG switch ON, ABS warning light OFF
SRR (A24–26)	–	GND (A25–22)	10–14	IG switch ON, ABS warning light OFF
SRL (A25–12)	–	GND (A25–13)	10–14	IG switch ON, ABS warning light OFF
AST (A24–8)	–	GND (A25–22)	10–14	IG switch ON, ABS warning light OFF
SAC (A24–12)	–	GND (A25–22)	10–14	IG switch ON, TRAC indicator light OFF
SMC (A24–2)	–	GND (A25–22)	10–14	IG switch ON, TRAC indicator light OFF
SRC (A24–15)	–	GND (A25–22)	10–14	IG switch ON, TRAC indicator light OFF
PR (A24–10)	–	E2 (A24–20)	5–7	IG switch ON
VC (A24–19)	–	E2 (A24–20)	4–6	IG switch ON
ALT (A25–8)	–	GND (A25–22)	Below 1.0	IG switch ON
			10–14	Idling
WA (A25–9)	–	GND (A25–22)	Below 2.0	IG switch ON, ABS warning light ON
			10–14	IG switch ON, ABS warning light OFF
PKB (A25–17)	–	GND (A25–22)	Below 1.5	IG switch ON, PKB switch ON, Fluid in M/C reservoir above MIN level
			10–14	IG switch ON, PKB switch OFF, Fluid in M/C reservoir above MIN level

WhereEverybodyKnowsYourName

Symbols (Terminals No.)			STD Voltage (V)	Condition
LBL (A25–6)	–	GND (A25–22)	10–14	IG switch ON Fluid in M/C reservoir tank above MIN level.
STP (A25–10)	–	GND (A25–22)	Below 1.5	Stop light switch OFF
			8–14	Stop light switch ON
D/G (A25–20)	–	GND (A25–22)	10–14	IG switch ON, ABS warning light OFF
Tc (A26–3)	–	GND (A25–22)	10–14	IG switch ON
Ts (A26–1)	–	GND (A25–22)	10–14	IG switch ON
P (A26–10)	–	GND (A25–22)	10–14	IG switch ON, Shift position in “P” position
			Below 1.5	IG switch ON, Other shift position in “P” position
N (A26–5)	–	GND (A25–22)	10–14	IG switch ON, Shift position in “N” position
			Below 1.5	IG switch ON, Other shift position in “N” position
FR+ (A24–17)	–	FR– (A24–4)	AC generation	IG switch ON Slowly turn right front wheel.
FL+ (A24–5)	–	FL– (A24–18)	AC generation	IG switch ON Slowly turn left front wheel.
RR+ (A25–14)	–	RR– (A25–3)	AC generation	IG switch ON Slowly turn right rear wheel.
RL+ (A25–4)	–	RL– (A25–15)	AC generation	IG switch ON Slowly turn left rear wheel.
FRO (A26–15)	–	GND (A25–22)	Pulse generation	IG switch ON Slowly turn right front wheel.
FLO (A26–6)	–	GND (A25–22)	Pulse generation	IG switch ON Slowly turn left front wheel.
RRO (A26–13)	–	GND (A25–22)	Pulse generation	IG switch ON Slowly turn right rear wheel.
RLO (A26–4)	–	GND (A25–22)	Pulse generation	IG switch ON Slowly turn left rear wheel.

WhereEverybodyKnowsYourName

BR0EZ–03

ABS ACTUATOR
ABS ACTUATOR REMOVAL AND INSTALLATION

Remove and install the parts, as shown.

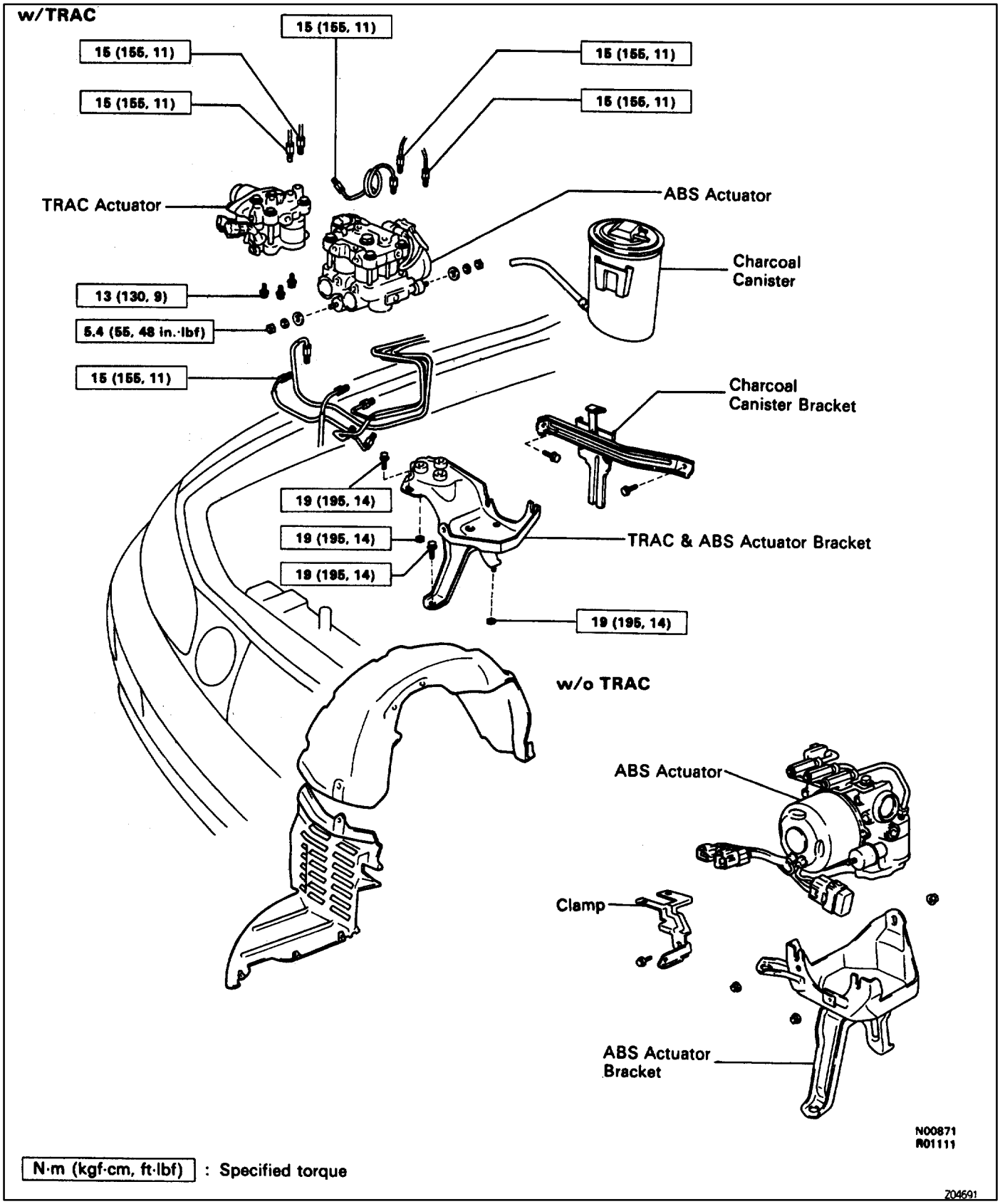

WhereEverybodyKnowsYourName

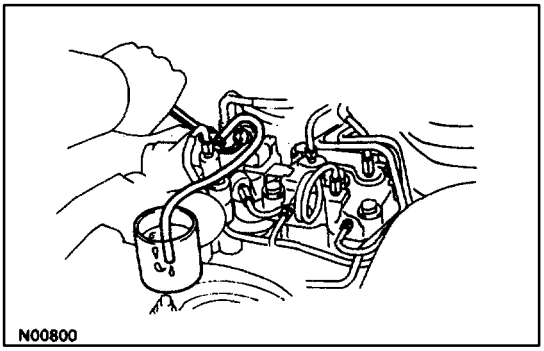

MAIN POINT OF REMOVAL AND INSTALLATION

1. w/ TRAC:
DRAIN OUT HIGH PRESSURE FLUID

(a) Connect a vinyl tube to the TRAC actuator bleeder plug, then loosen the bleeder plug.

(b) When the fluid has flowed out, tighten the bleeder plug.
CAUTION: Since the fluid is under high pressure, it could stray out with great force, so be careful.

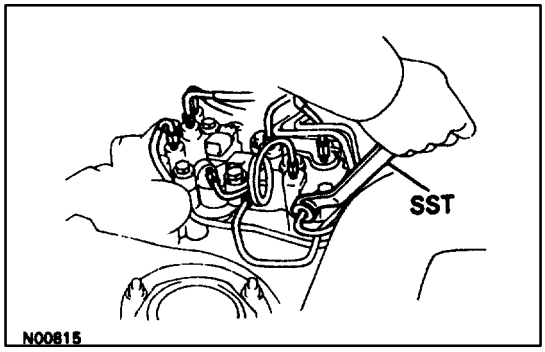

2. DISCONNECT AND CONNECT BRAKE LINE
w/ TRAC:
Using SST, disconnect and connect the brake lines from/to the ABS actuator and TRAC actuator.
SST 09023–00100
Torque: 15 N·m (155 kgf·cm, 11 ft·lbf)
w/o TRAC:
Using SST, disconnect and connect the brake lines from/to the ABS actuator.
SST 09023–00100
Torque: 15 N·m (155 kgf·cm, 11 ft·lbf)

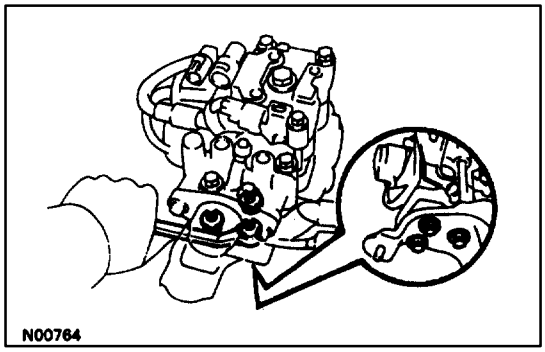

3. w/ TRAC:
REMOVE AND INSTALL TRAC ACTUATOR
Loosen and tighten the 3 bolts.
Torque: 15 N·m (155 kgf·cm, 11 ft·lbf)
HINT: When loosening or tightening TRAC actuator installation bolts, lift the actuator bracket up slightly from the body.

4. BLEED BRAKE SYSTEM
(See page BR–8)

5. w/ TRAC:
BLEED TRAC SYSTEM
(See page BR–10)

WhereEverybodyKnowsYourName

BR0F0–04

ABS ACTUATOR DISASSEMBLY AND ASSEMBLY

Remove and install the parts, as shown.

COMPONENTS

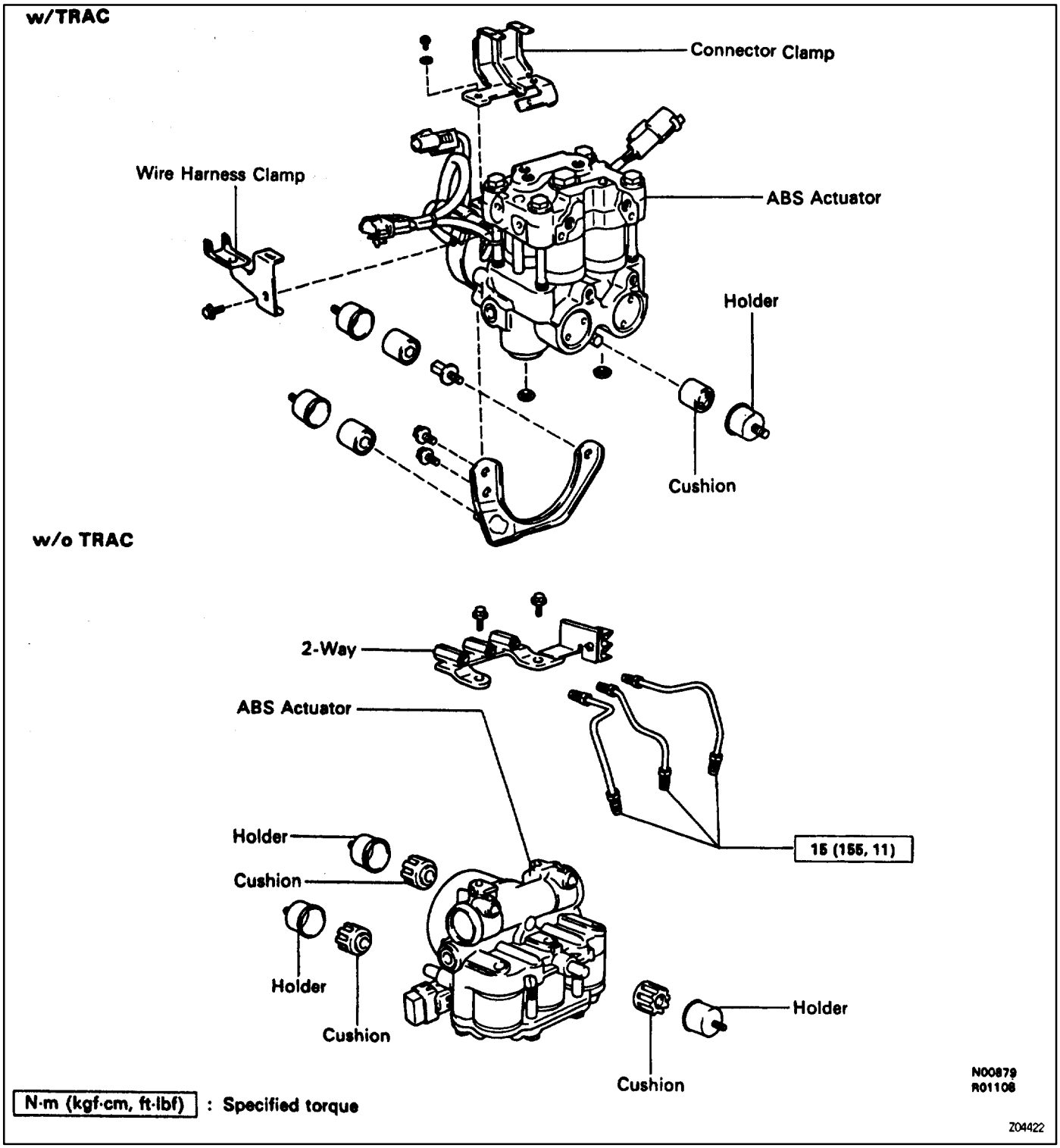

WhereEverybodyKnowsYourName

ABS ACTUATOR INSPECTION

BR0F1–03

HINT: Using the ABS actuator checker (SST), check the operation of the actuator. If the actuator does not operate, check the operation of sub–wire harness G according to instructions on pages BR–97 and BR101. If the solenoid and/or pump motor relay are abnormal, replace the relay and inspect the actuator operation again.

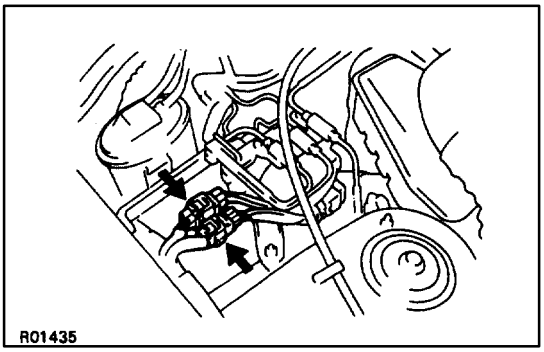

w/o TRAC:

1. INSPECT BATTERY POSITIVE VOLTAGE

Battery positive voltage:

10–14V

2. DISCONNECT CONNECTORS FROM ACTUATOR

Disconnect the 2 connectors from the actuator.

3. CONNECT ACTUATOR CHECKER (SST) TO ACTUATOR

(a) Connect the actuator checker (SST) to the actuator side wire harnesses via the sub–wire harnesses (SST), as shown.
SST 09990–00150, 09990–00210, 09990–00250 and 09990–00280

(b) Connect the red cable of the checker to the battery positive (+) terminal and the black cable to negative (–) terminal. Connect the black cable of the sub–wire harnesses to the battery negative (–) terminal or body ground.

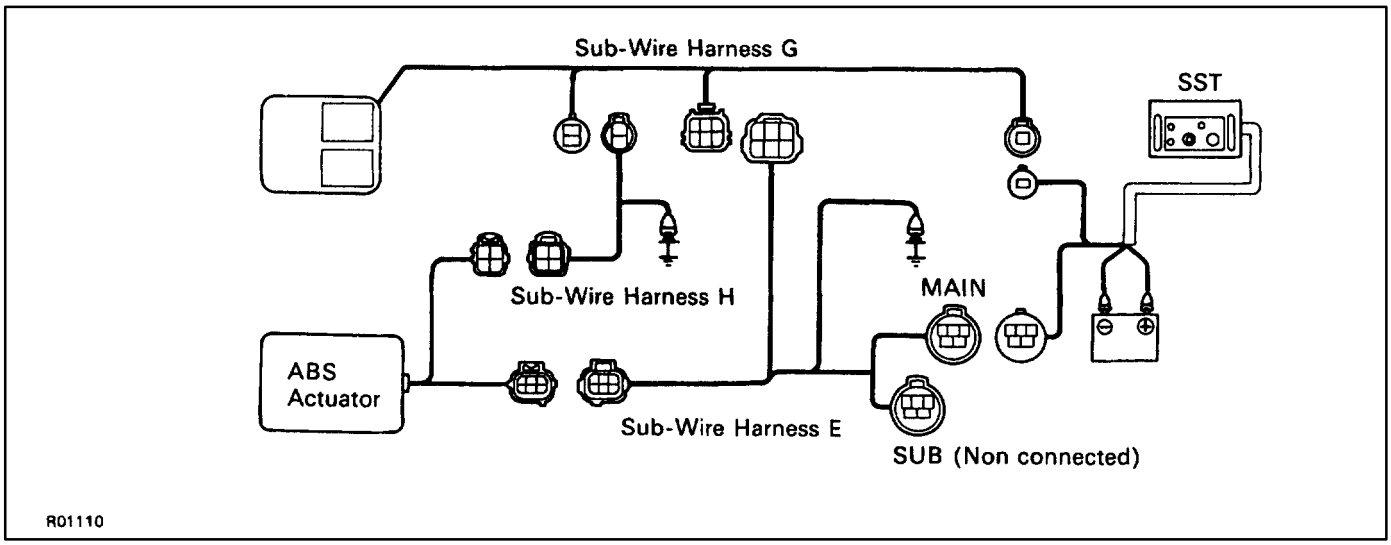

WhereEverybodyKnowsYourName

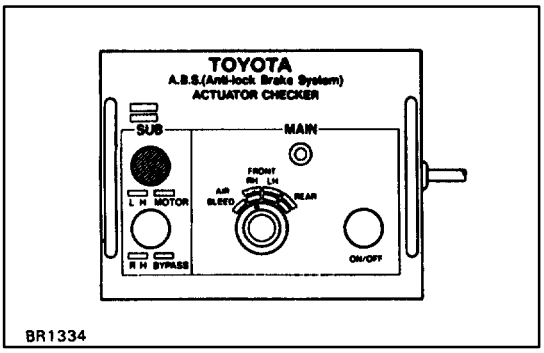

4. INSPECT BRAKE ACTUATOR OPERATION

(a) Start the engine, and run it at idle speed.

(b) Turn the MAIN selector switch of the actuator checker to the “FRONT RH” position.

(c) Push and hold in the SUB MOTOR switch for a few seconds.

(d) Depress the brake pedal and hold it until step (g) is completed.

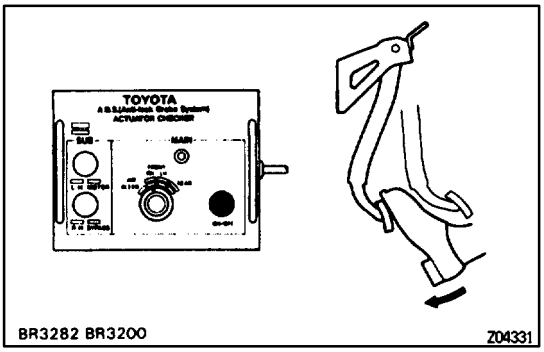

(e) Push the MAIN push switch and check that the brake pedal can not be depressed.
NOTICE: Do not keep the MAIN push switch pushing more than 10 seconds.

(f) Release the switch, and check that the pedal can be depressed.

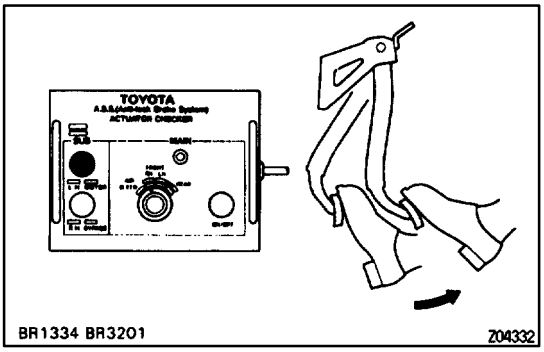

(g) Push and hold in the SUB MOTOR switch for a few seconds, and check that the pedal returns.

(h) Release the brake pedal.

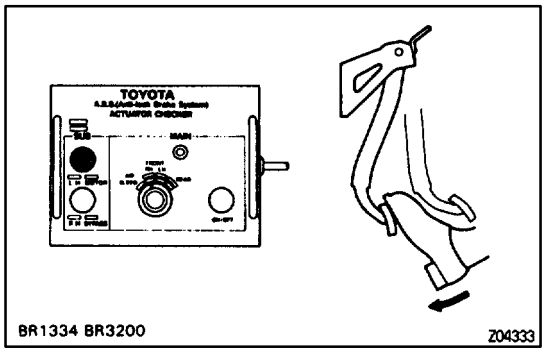

(i) Push and hold in the SUB MOTOR switch for a few seconds.

(j) Depress the brake pedal and hold it for about 15 seconds. As you hold the pedal down, push the SUB MOTOR switch for a few seconds. Check that the brake pedal does not pulsate.

5. INSPECT FOR OTHER WHEELS

(a) Turn the MAIN selector switch to the “FRONT LH” position.

(b) Repeat (c) to (j) of step 4, checking the actuator operation in the same way.

(c) Also, inspect the “REAR” positions following the same procedure.

WhereEverybodyKnowsYourName

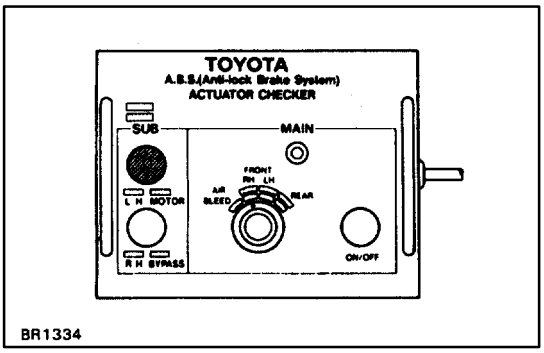

6. PUSH SUB MOTOR SWITCH

Push and hold in the SUB MOTOR switch for a few seconds.

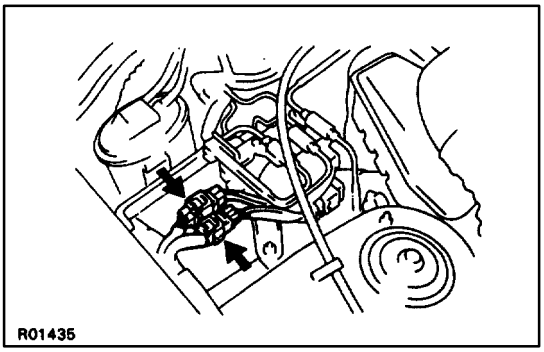

7. DISCONNECT ACTUATOR CHECKER (SST) FROM ACTUATOR

(a) Disconnect the actuator checker (SST) and sub–wire harnesses (SST) from the actuator.
SST 09990–00150, 09990–00210, 09990–00250 and 09990–00280

(b) Connect the actuator connectors.

(c) Clear the diagnostic trouble codes.
(See page BR–77)

WhereEverybodyKnowsYourName

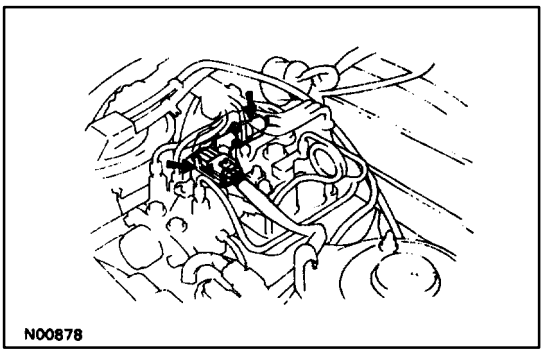

w/ TRAC:

1. INSPECT BATTERY POSITIVE VOLTAGE

Battery positive voltage:

10–14 V

2. DISCONNECT CONNECTORS FROM ACTUATOR

Disconnect the 2 connectors from the actuator.

3. CONNECT ACTUATOR CHECKER (SST) TO ACTUATOR

(a) Connect the actuator checker (SST) to the actuator side wire harnesses via the sub–wire harnesses (SST), as shown.
SST 09990–00150 and 09990–00250

(b) Connect the red cable of the checker to the battery positive (+) terminal and the black cable to negative (–) terminal. Connect the black cable of the sub–wire harnesses to the battery negative (–) terminal or body ground.

(c) Place “SHEET A” (SST) on the actuator checker.
SST 09990–00163

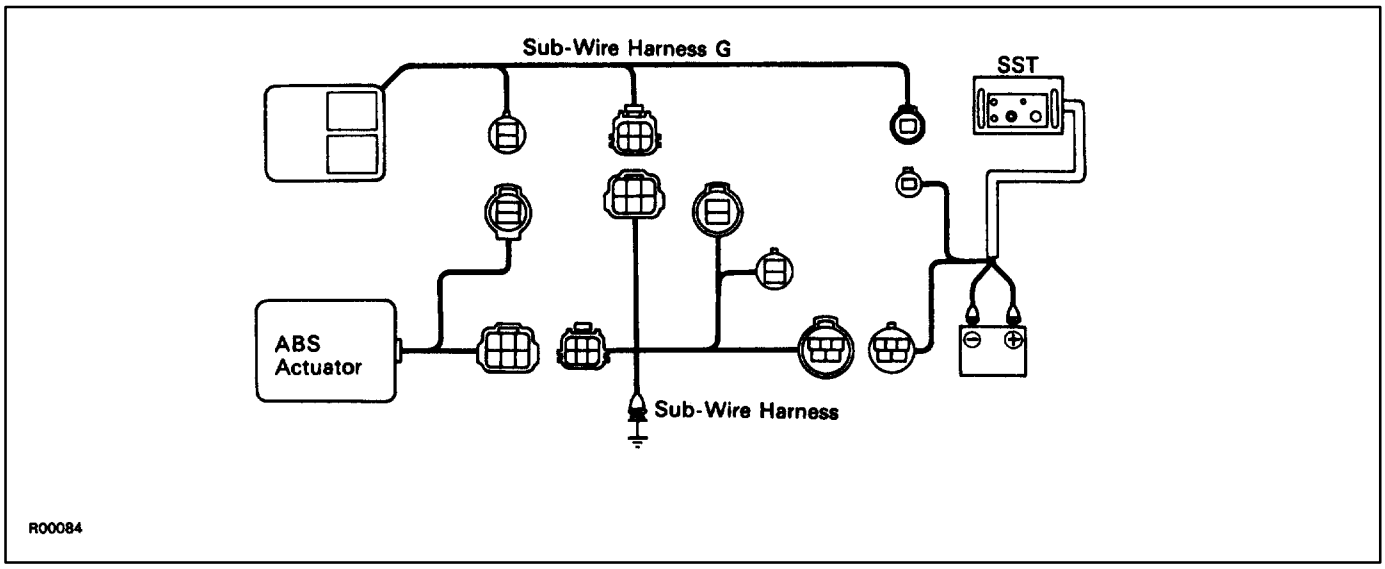

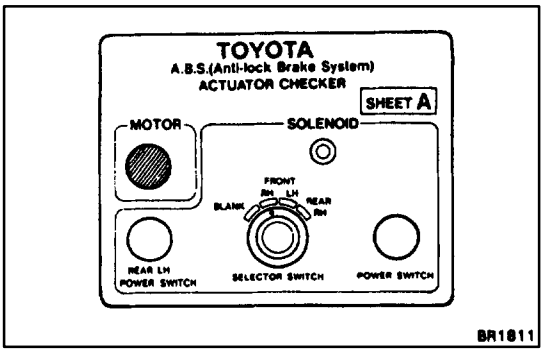

4. INSPECT BRAKE ACTUATOR OPERATION

(a) Start the engine, and run it at idle speed.

(b) Turn the selector switch of the actuator checker to the “FRONT RH” position.

(c) Push and hold in the MOTOR switch for a few seconds.

(d) Depress the brake pedal and hold it until step (g) is completed.

WhereEverybodyKnowsYourName

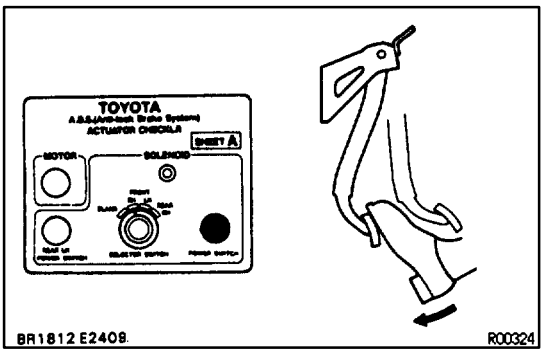

(e) Push the POWER SWITCH, and check that the brake pedal can not be depressed.
NOTICE: Do not keep the MAIN push switch pushing more than 10 seconds.

(f) Release the switch, and check that the pedal can be depressed.

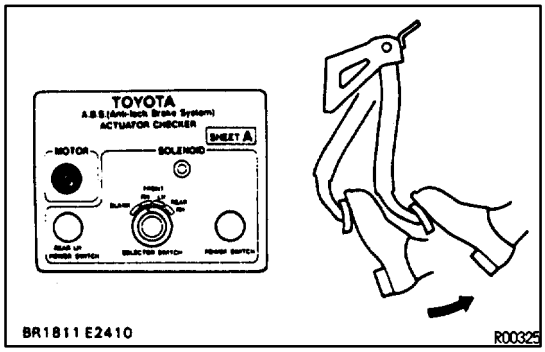

(g) Push and hold in the MOTOR switch for a few seconds, and check that the pedal returns.

(h) Release the brake pedal.

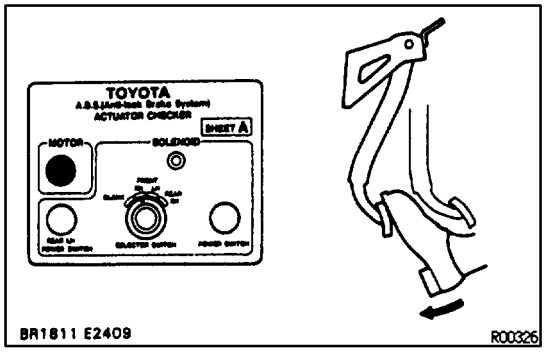

(i) Push and hold in the MOTOR switch for a few seconds.

(j) Depress the brake pedal and hold it for about 15 seconds. As you hold the pedal down, push the SUB MOTOR switch for a few seconds. Check that the brake pedal does not pulsate.

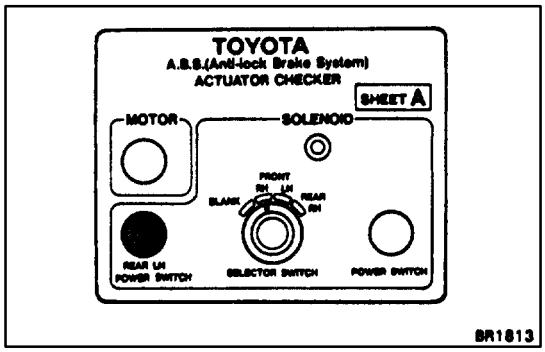

5. INSPECT FOR OTHER WHEELS

(a) Turn the MAIN selector switch to the “FRONT LH” position.

(b) Repeat (c) to (j) of step 4, checking the actuator operation in the same way.

(c) Also, inspect the “REAR RH” and “REAR LH” positions following the same procedure.
HINT: When inspecting the “REAR LH” position, push the REAR LH switch instead of the POWER SWITCH. This makes it possible to inspect wherever the selector switch position indicates.

WhereEverybodyKnowsYourName

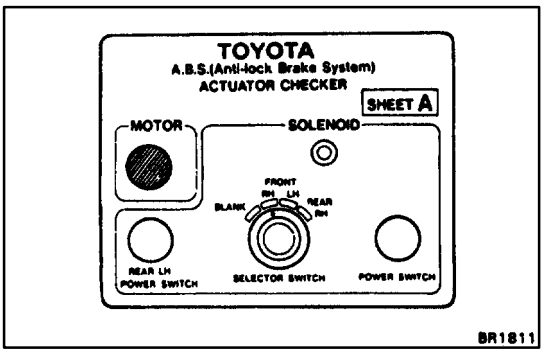

6. PUSH MOTOR SWITCH

Push and hold in the MOTOR switch for a few seconds.

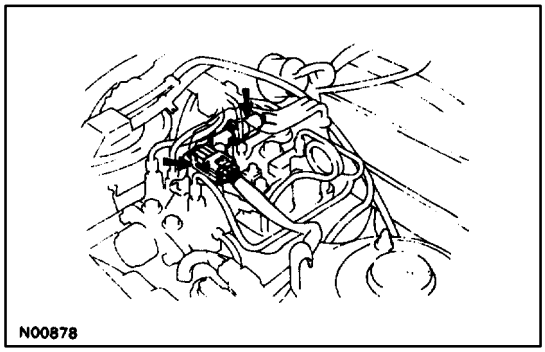

7. DISCONNECT ACTUATOR CHECKER (SST) FROM ACTUATOR

(a) Disconnect the actuator checker (SST) and sub–wire harnesses (SST) from the actuator.
SST 09990–00150, 09990–00163, and 09990–00250

(b) Connect the actuator connectors.

(c) Clear the diagnostic trouble codes.
(See page BR–77)

WhereEverybodyKnowsYourName

BR0F2–02

SPEED SENSOR

SPEED SENSOR REMOVAL AND INSTALLATION

Remove and install the parts, as shown.

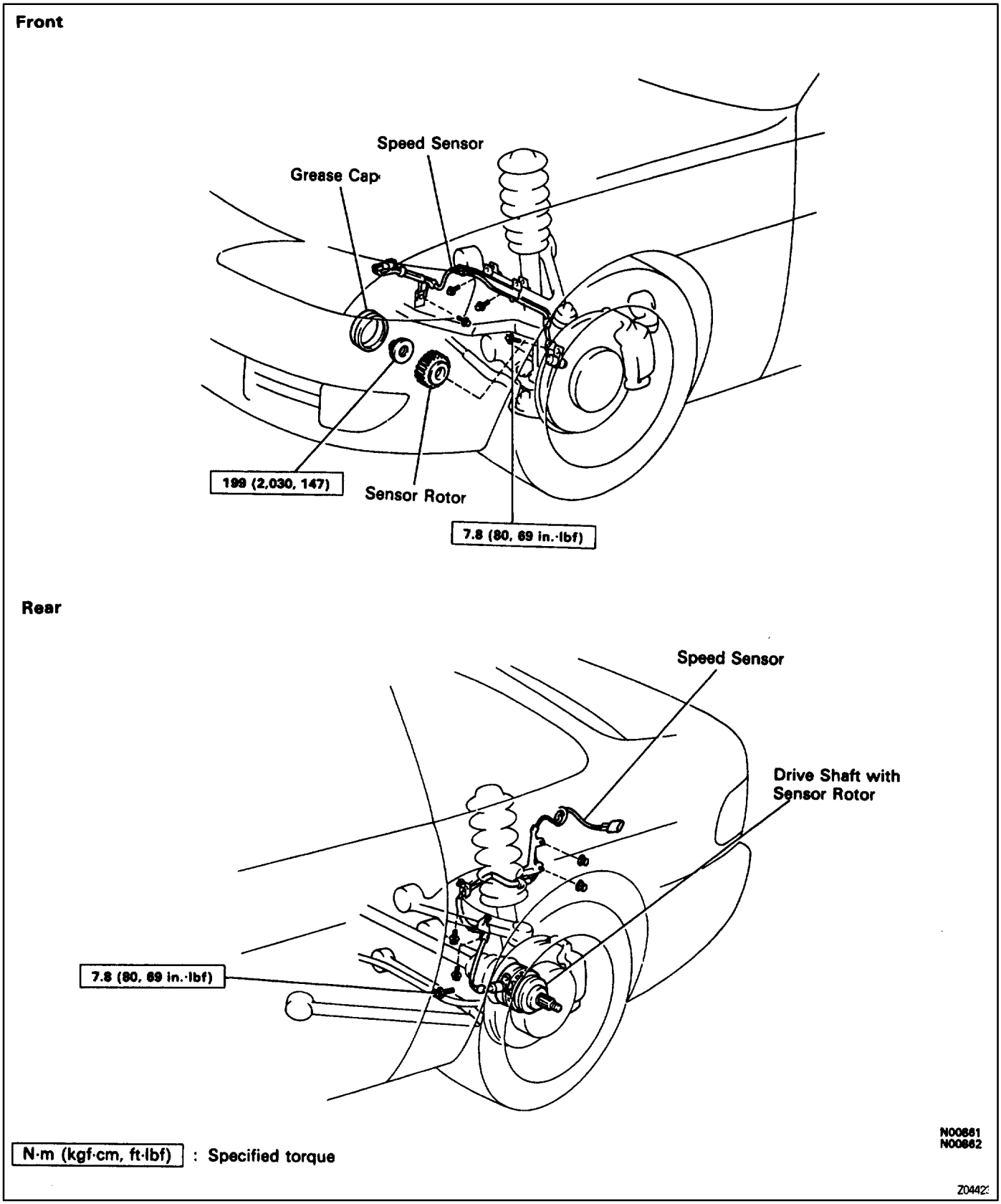

WhereEverybodyKnowsYourName

TROUBLESHOOTING

How to proceed with troubleshooting

Perform troubleshooting in accordance with the procedure on the following pages.

▼ **CUSTOMER PROBLEM ANALYSIS**

Using the customer problem analysis check sheet for reference, ask the customer in as much detail as possible about the problem.

2 **CHECK AND CLEAR THE DIAGNOSTIC TROUBLE CODES (PRECHECK)**

If the ABS warning light lights up, and the ABS does not operate, the ECU stores diagnostic trouble codes corresponding to the problem in memory.

Before confirming the trouble, 1st check the diagnostic trouble codes for any malfunction codes stored in memory. When there are malfunction codes, make a note of them, then clear them and proceed to "2 Problem Symptom Confirmation".

2 **PROBLEM SYMPTOM CONFIRMATION, 10 SYMPTOM SIMULATION**

Confirm the problem symptoms. If the problem does not reoccur, simulate the problem by initially checking the circuits indicted by the diagnostic trouble code in step 2, using "Problem simulation method".

5 **DIAGNOSTIC TROUBLE CODE CHECK**

Check the diagnostic trouble codes. If a malfunction code is output, proceed to "6 Diagnostic Trouble Code Chart". If the normal code is output, proceed to "7 Problem Symptoms Chart". Be sure to proceed to "6 diagnostic Trouble Code Chart" after steps 2 and 2 are completed.

If troubleshooting is attempted only by following the malfunction code stored in the memory, errors could be made in the diagnosis.

6 **DIAGNOSTIC TROUBLE CODE CHART**

If a malfunction code is confirmed in the diagnostic trouble code check, proceed to the inspection procedure indicated by the matrix chart for each diagnostic trouble code.

7 **PROBLEM SYMPTOMS CHART**

If the normal code is confirmed in the diagnostic trouble code check, perform inspection in accordance with the inspection order in the problem symptoms chart.

9 **CIRCUIT INSPECTION**

Proceed with diagnosis of each circuit in accordance with the inspection order confirmed in 6 and 7.

Determine whether the cause of the problem is in the sensor, actuators, wire harness and connectors or the ECU.

2 **SENSOR CHECK**

Use the ABS warning light to check if each of the signals from speed sensors are being input correctly to the ECU. Instructions for this check are given in the circuit inspection.

[10] REPAIRS

After the cause of the problem is located, perform repairs by following the inspection and replacement procedures in this manual.

[11] CONFIRMATION TEST

After completing repairs, confirm not only that the malfunction is eliminated, but also conduct a test drive to make sure the entire ABS system is operating correctly. (In vehicles with the TRAC system, also check the TRAC system.)

WhereEverybodyKnowsYourName

Items inside are ▱ titles of pages in this manual, with the page number in the bottom portion. See the pages for detailed explanations.

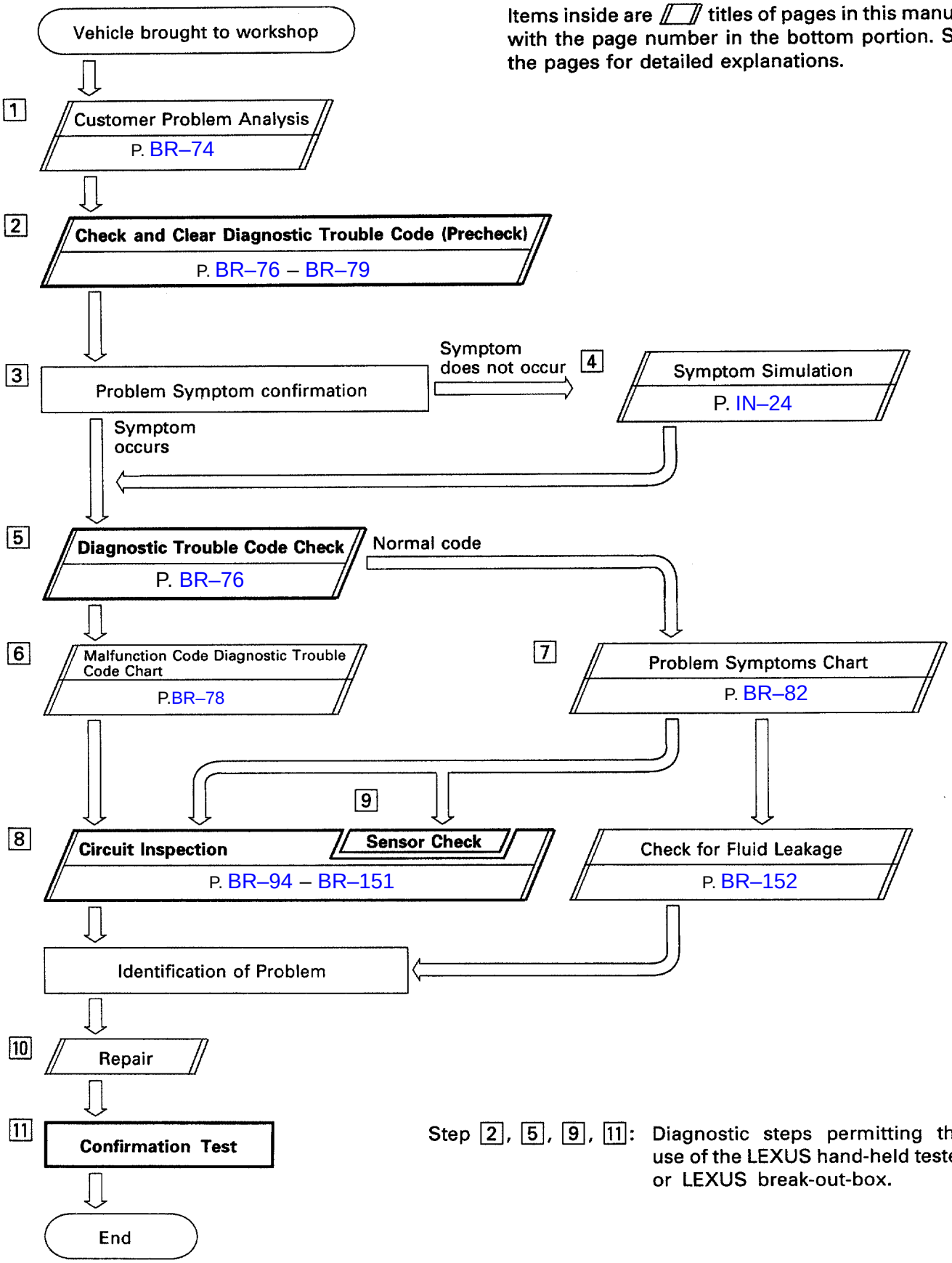

Step 2, 5, 9, 11: Diagnostic steps permitting the use of the LEXUS hand-held tester or LEXUS break-out-box.

WhereEverybodyKnowsYourName

CUSTOMER PROBLEM ANALYSIS CHECK SHEET

ABS Check Sheet

Inspector's Name :

Customer's Name		**Registration No.**	
		Registration Year	/ /
		Frame No.	
Date Vehicle Brought In	/ /	**Odometer Reading**	km Miles

Date Problem First Occurred	/ /
Frequency Problem Occurs	☐ Continuous ☐ Intermittent (times a day)

Symptoms	☐ ABS does not operate.	
	☐ ABS does not operate efficiently.	
	ABS Warning Light Abnormal	☐ Remains ON ☐ Does not Light Up

Check Item	**TRAC Indicator Light**	☐ Normal ☐ Does not Light Up

Diagnostic Trouble Code Check	**1st Time**	☐ Normal Code ☐ Malfunction Code (Code)
	2nd Time	☐ Normal Code ☐ Malfunction Code (Code)

WhereEverybodyKnowsYourName

–MEMO–

WhereEverybodyKnowsYourName

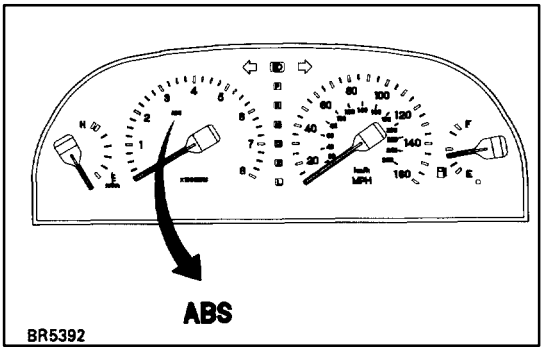

DIAGNOSIS SYSTEM

INDICATOR CHECK

When the ignition switch is turned on, check that the ABS warning light goes on for 3 seconds.

HINT: If the indicator check result is not normal, proceed to trouble shooting for the ABS warning light circuit (see page BR–144).

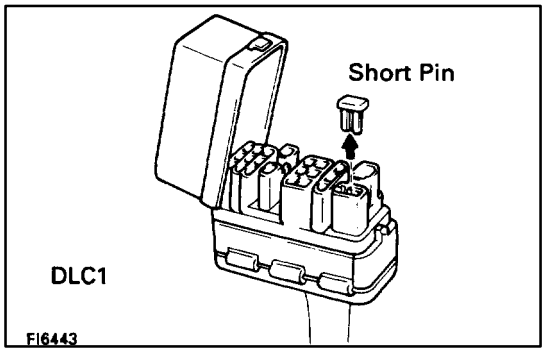

DIAGNOSTIC TROUBLE CODE CHECK

1. Turn the ignition switch to ON.
2. Disconnect the Short Pin from DLC1.

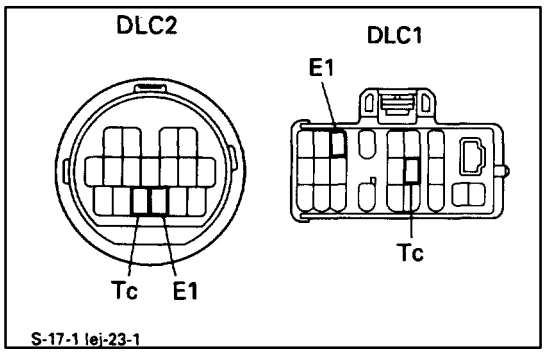

3. Using SST, connect terminals Tc and E1 of DLC2 or DLC1.
   SST 09843–18020
4. Read the diagnostic trouble code from the ABS warning light on the combination meter.
   HINT: If no code appears, inspect the diagnostic circuit or ABS warning light circuit (See page BR–148 or BR–144).

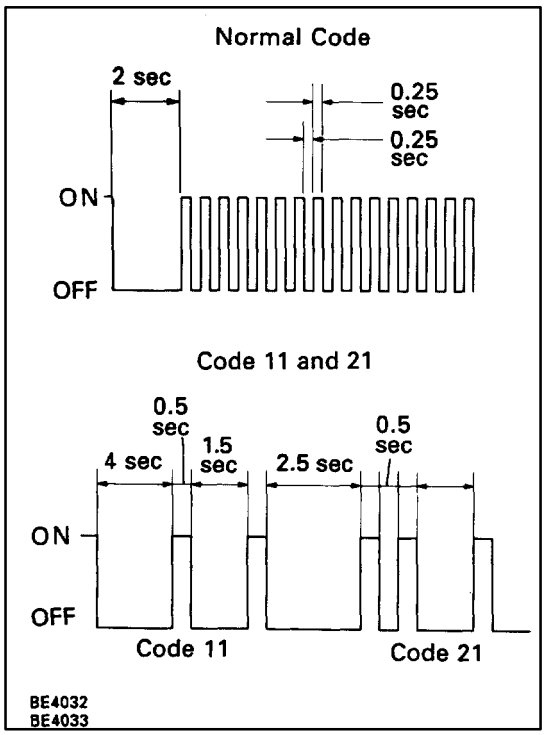

As an example, the blinking patterns for normal code and codes 11 and 21 are shown on the left.

5. Codes are explained in the code table on page **BR–78**.
6. After completing the check, disconnect terminals Tc and E1, and turn off the display.
   If 2 or more malfunctions are indicated at the same time, the lowest numbered diagnostic trouble code will be displayed first.

WhereEverybodyKnowsYourName

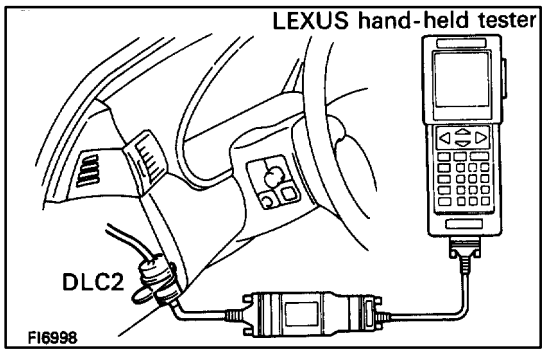

ECU DATA MONITOR USING LEXUS HAND–HELD TESTER

1. Hook up the LEXUS hand–held tester to the DLC2.
2. Monitor the ECU data by following the prompts on the tester screen.
   HINT: LEXUS hand–held tester has a “Snapshot” function which records the monitored data.
   Please refer to the LEXUS hand–held tester operator’s manual for further details.

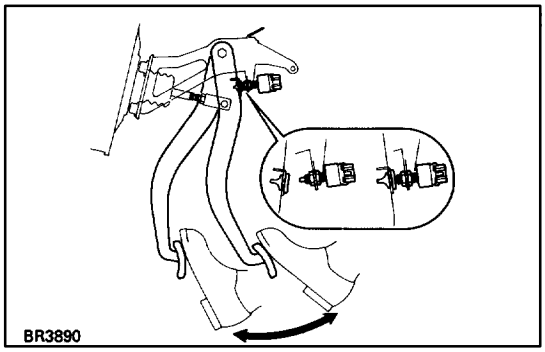

DIAGNOSTIC TROUBLE CODE CLEARANCE

1. Using SST, connect terminals Tc and E1 of DLC2 or DLC1.
   SST 09843–18020
2. IG switch ON.
3. Clear the diagnostic trouble codes stored in ECU by depressing the brake pedal 8 or more times within 3 seconds.
4. Check that the warning light shows the normal code.
5. Remove the SST from the terminals of DLC2 or DLC1.

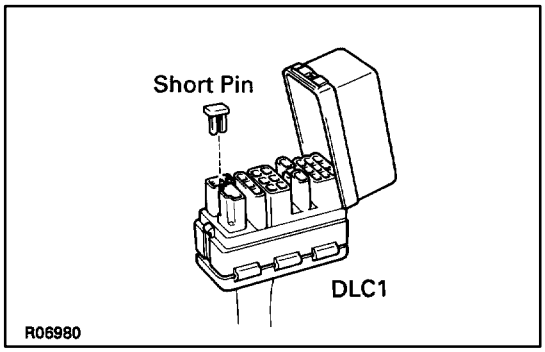

6. Connect the Short Pin to DLC1.
   HINT: Cancellation can also be done by removing the DOME fuse, but in this case, other memory systems will also be cancelled out.

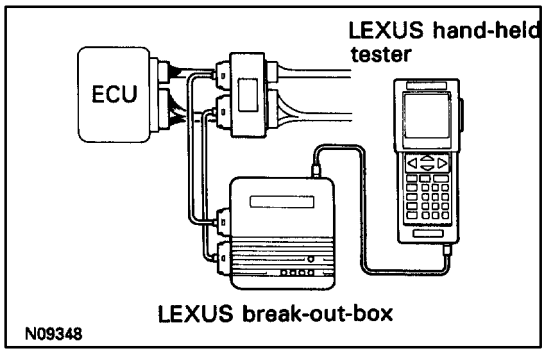

ECU TERMINAL VALUES MEASUREMENT USING LEXUS BREAK–OUT–BOX AND LEXUS HANDHELD TESTER

1. **Hook up the LEXUS hand–held tester and LEXUS break–out–box to the vehicle.**
2. **Read the ECU input/output values by following the prompts on the scan tool screen.**
   HINT: LEXUS hand–held tester has a “Snapshot” function. This records the measured values and is effective in the diagnosis of intermittent problems.
   Please refer to the LEXUS hand–held tester/LEXUS break–out–box operator’s manual for further details.

WhereEverybodyKnowsYourName

DIAGNOSTIC TROUBLE CODE CHART

If a malfunction code is displayed during the diagnostic trouble code check, check the circuit listed for that code, in the table below and proceed to the relevant page.
HINT: Using SST 09843–18020, connect the terminals Tc and E1, and remove the short pin.

Code	ABS Warning Light Blinking Pattern	Indicator *2			Diagnosis	See page
		ABS Warning Light	TRAC Indicator Light	TRAC OFF Light		
11	BE3931	ON	OFF	ON	Open or short in ABS solenoid relay circuit	BR–94
12	BE3931	ON	OFF	ON	B+ short in ABS solenoid relay circuit	BR–94
13	BE3931	ON	OFF	ON	Open or short in ABS motor relay circuit	BR–98
14	BE3931	ON	OFF	ON	B+ short in ABS motor relay circuit	BR–98
15	BE3931	ON	ON	ON	Open or short in TRAC solenoid relay circuit	BR–102
16	BE3931	ON	ON	ON	B+ short in TRAC solenoid relay circuit	BR–102
17	BE3931	OFF*1	ON	ON	Open or short in TRAC motor relay circuit	BR–106
18	BE3931	OFF*1	ON	ON	B+ short in TRAC motor relay circuit	BR–106
21	BE3932	ON	OFF	ON	Open or short in ABS actuator solenoid circuit (SFR circuit)	BR–110
22	BE3932	ON	OFF	ON	Open or short in ABS actuator solenoid circuit (SFL circuit)	BR–110
23	BE3932	ON	OFF	ON	Open or short in ABS actuator solenoid circuit (SRR circuit)	BR–110
24	BE3932	ON	OFF	ON	Open or short in ABS actuator solenoid circuit (SRL circuit)	BR–110
25	BE3932	ON	ON	ON	Open or short in TRAC actuator solenoid circuit (SMC circuit)	BR–114
26	BE3932	ON	ON	ON	Open or short in TRAC actuator solenoid circuit (SAC circuit)	BR–114
27	BE3932	ON	ON	ON	Open or short in TRAC actuator solenoid circuit (SRC circuit)	BR–114
31	BE3933	ON	OFF	ON	Right front wheel speed sensor signal malfunction	BR–118
32	BE3933	ON	OFF	ON	Left front wheel speed sensor signal malfunction	BR–118
33	BE3933	ON	OFF	ON	Right rear wheel speed sensor signal malfunction	BR–118
34	BE3933	ON	OFF	ON	Left rear wheel speed sensor signal malfunction	BR–118

WhereEverybodyKnowsYourName

Code	ABS Warning Light Blinking Pattern	Indicator *2			Diagnosis	See page
		ABS Warning Light	TRAC Indicator Light	TRAC OFF Light		
35	BE3933	ON	OFF	ON	Open circuit in left front or right rear speed sensor circuit	BR–118
36	BE3933	ON	OFF	ON	Open circuit in right front or left rear speed sensor circuit	BR–118
41	BE3934	ON	OFF	ON	Low battery voltage or abnormally high battery voltage	BR–122
51	BE3935	ON	OFF	ON	Pump motor is locked Open in pump motor ground	BR–125
○53	BE3935	OFF*1	ON	ON	TRAC pump motor long time energizing TRAC pump motor is locked.	BR–126
○54	BE3935	OFF*1	ON	ON	TRAC pump motor operation frequency excessive	BR–130
○55	BE3935	OFF*1	ON	ON	Brake fluid reservoir level low	BR–132
○56	BE3935	OFF*1	ON	ON	Open or short in pressure sensor circuit	BR–134
○57	BE3935	OFF*1	ON	ON	Pressure sensor malfunction	BR–134
○61	BE3936	OFF*1	ON	ON	TRAC ECU communication abnormal	BR–138
○62	BE3936	OFF*1	ON	ON	Wheel speed sensor signal malfunction	BR–140
Always ON		ON	ON	OFF	Malfunction in ABS (& TRAC) ECU	—

○: Only vehicles with TRAC

*1: Even if the malfunction's indication code is detected, the ABS warning light does not light up.

*2: When a malfunction causing code No. 17, 18, 53, 54, 55, 56, 57, 61 or 62 is detected, the ABS warning light does not light up, but the TRAC indicator light does. However, when checking the DTC check the blinking pattern of the ABS warning light.

WhereEverybodyKnowsYourName

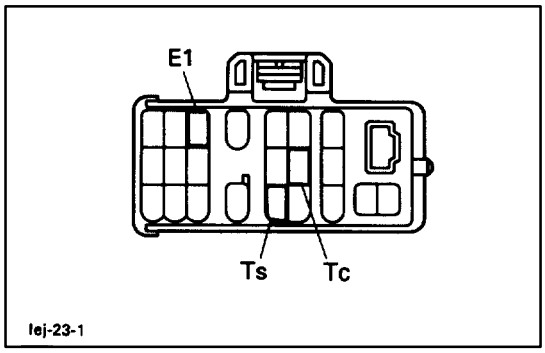

SPEED SENSOR SIGNAL CHECK

1. Turn the ignition switch to OFF.
2. Using SST, connect terminals Ts and E1 of DLC1.
   SST 09843–18020
3. Start the engine.

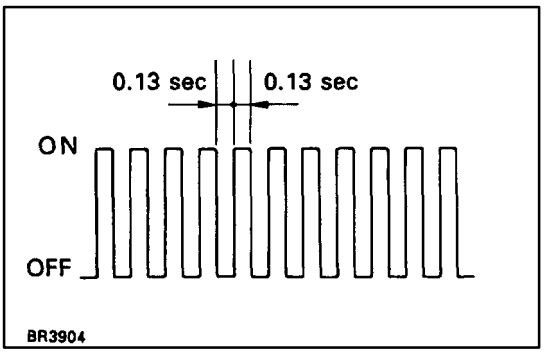

4. Check that the ABS warning light blinks.
   HINT: If the ABS warning light does not blink, inspect the ABS warning light circuit (see page BR–144).
5. Drive vehicle straight forward.
   HINT: Drive vehicle faster than 45 km/h (28 mph) for several seconds.
6. Stop the vehicle.
7. Using SST, connect terminals Tc and E1 of DLC1.
   SST 09843–18020
8. Read the number of blinks of the ABS warning light.
   HINT: See the list of diagnosis trouble codes shown on the next page.
   If every sensor is normal, a normal code is output (A cycle of 0.25 sec. on and 0.25 sec. OFF is repeated).
   If 2 or more malfunction are indicated at the same time, the lowest numbered code will be displayed 1st.

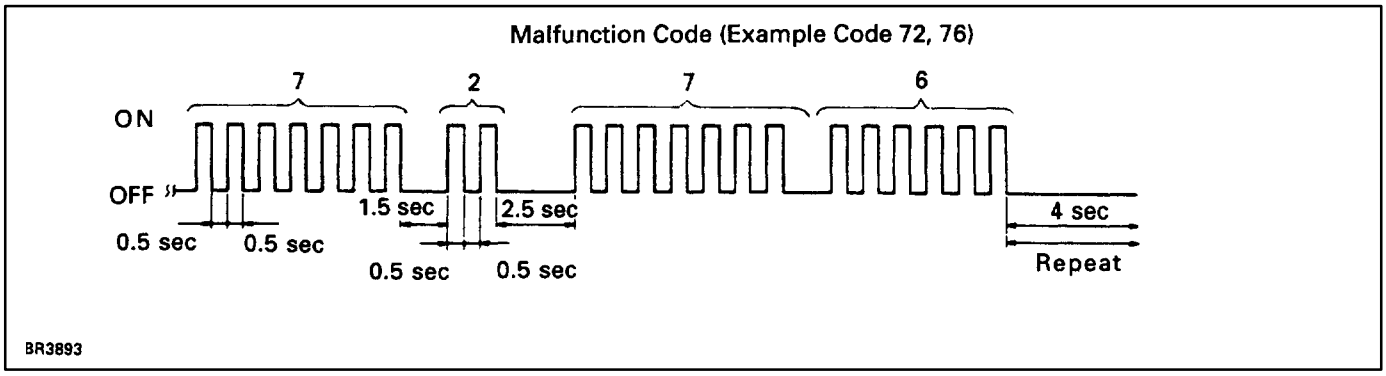

9. After performing the check, disconnect terminals Ts and E1, Tc and E1 of DLC1, and ignition switch turned off.

WhereEverybodyKnowsYourName

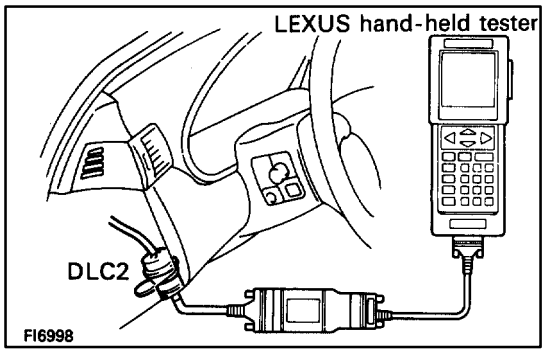

ECU DATA MONITOR USING LEXUS HAND–HELD TESTER

1. Hook up the LEXUS hand–held tester to the DLC2.
2. Monitor the ECU data by following the prompts on the tester screen.
   HINT: LEXUS hand–held tester has a “Snapshot” function which records the monitored data.
   Please refer to the LEXUS hand–held tester operator’s manual for further details.

Diagnostic Trouble Code of Speed Sensor Check Function

Code No.	Diagnosis	Trouble Area
71	Low output voltage of right front speed sensor	• Right front speed sensor • Sensor installation
72	Low output voltage of left front speed sensor	• Left front speed sensor • Sensor installation
73	Low output voltage of right rear speed sensor	• Right rear speed sensor • Sensor installation
74	Low output voltage of left rear speed sensor	• Left rear speed sensor • Sensor installation
75	Abnormal change in output voltage of right front speed sensor	• Right front speed sensor rotor
76	Abnormal change in output voltage of left front speed sensor	• Left front speed sensor rotor
77	Abnormal change in output voltage of right rear speed sensor	• Right rear speed sensor rotor
78	Abnormal change in output voltage of left rear speed sensor	• Left rear speed sensor rotor

WhereEverybodyKnowsYourName

PROBLEM SYMPTOMS CHART

If a normal code is displayed during the diagnostic trouble code check but the problem still occurs, check the circuits for each problem symptom in the order given in the table below and proceed to the page for troubleshooting.

Symptoms	Inspection Circuit	See page
ABS does not operate.	Only when 1.–4. are all normal and the problem is still occurring, replace the ABS (& TRAC) ECU.	BR–76
	1. Check the diagnostic trouble code, reconfirming that the normal code is output.	BR–122 BR–118
	2. IG Power Source Circuit.	BR–65 or 68
	3. Speed sensor circuit.	
	4. Check the ABS actuator with a checker. If abnormal, check the hydraulic circuit for leakage (see page BR–138).	
ABS does not operate efficiently.	Only when 1.–4. are all normal and the problem is still occurring, replace the ABS (& TRAC) ECU.	BR–76
	1. Check the diagnostic trouble code, reconfirming that the normal code is output.	BR–118 BR–142
	2. Speed sensor circuit.	BR–65 or 68
	3. Stop light switch circuit	
	4. Check the ABS actuator with a checker. If abnormal, check the hydraulic circuit for leakage (see page BR–138).	
ABS warning light abnormal.	1. ABS warning light circuit.	BR–144
	2. ABS (& TRAC) ECU.	
Diagnostic trouble code check cannot be performed.	Only when 1. and 2. are all normal and the problem is still occurring, replace the ABS (& TRAC) ECU.	BR–144
	1. ABS warning light circuit	BR–148
	2. To terminal circuit.	
Speed sensor signal check cannot be performed.	1. Ts terminal circuit.	BR–150
	2. ABS (& TRAC) ECU.	

WhereEverybodyKnowsYourName

–MEMO–

WhereEverybodyKnowsYourName

LOCATION OF CONNECTORS

Location of Connectors in Engine Compartment

SC300:

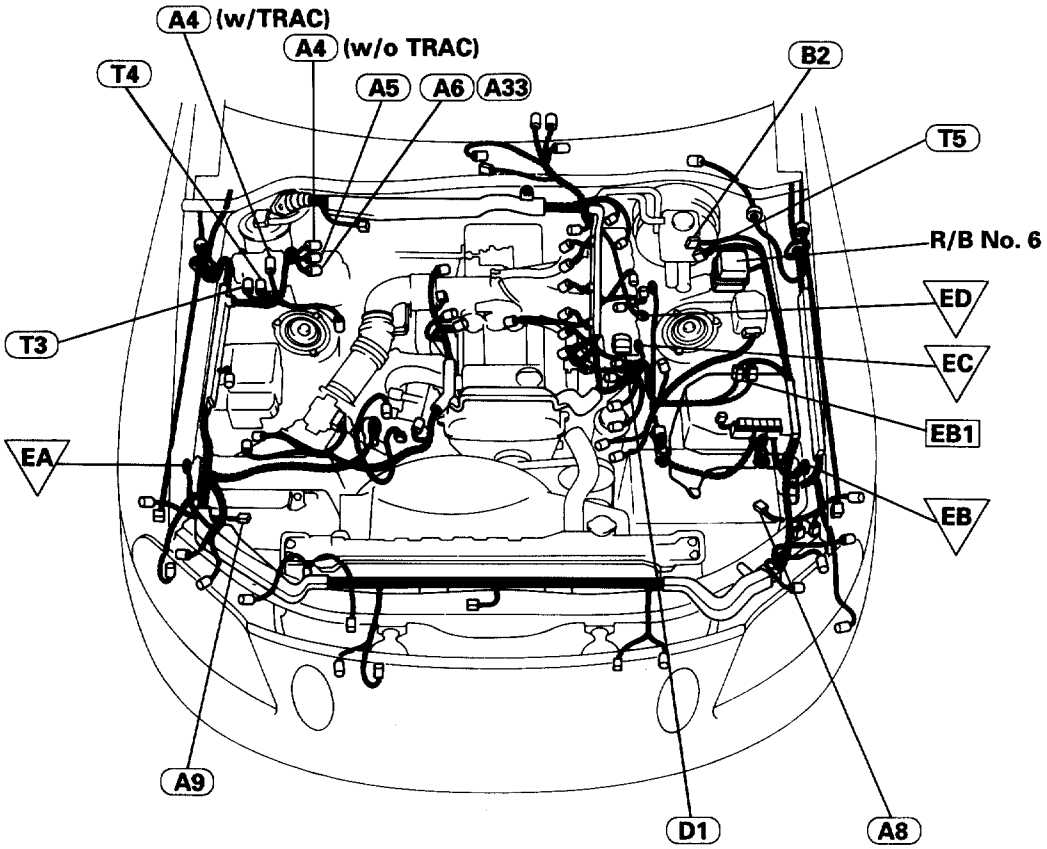

N09567

WhereEverybodyKnowsYourName

SC400:

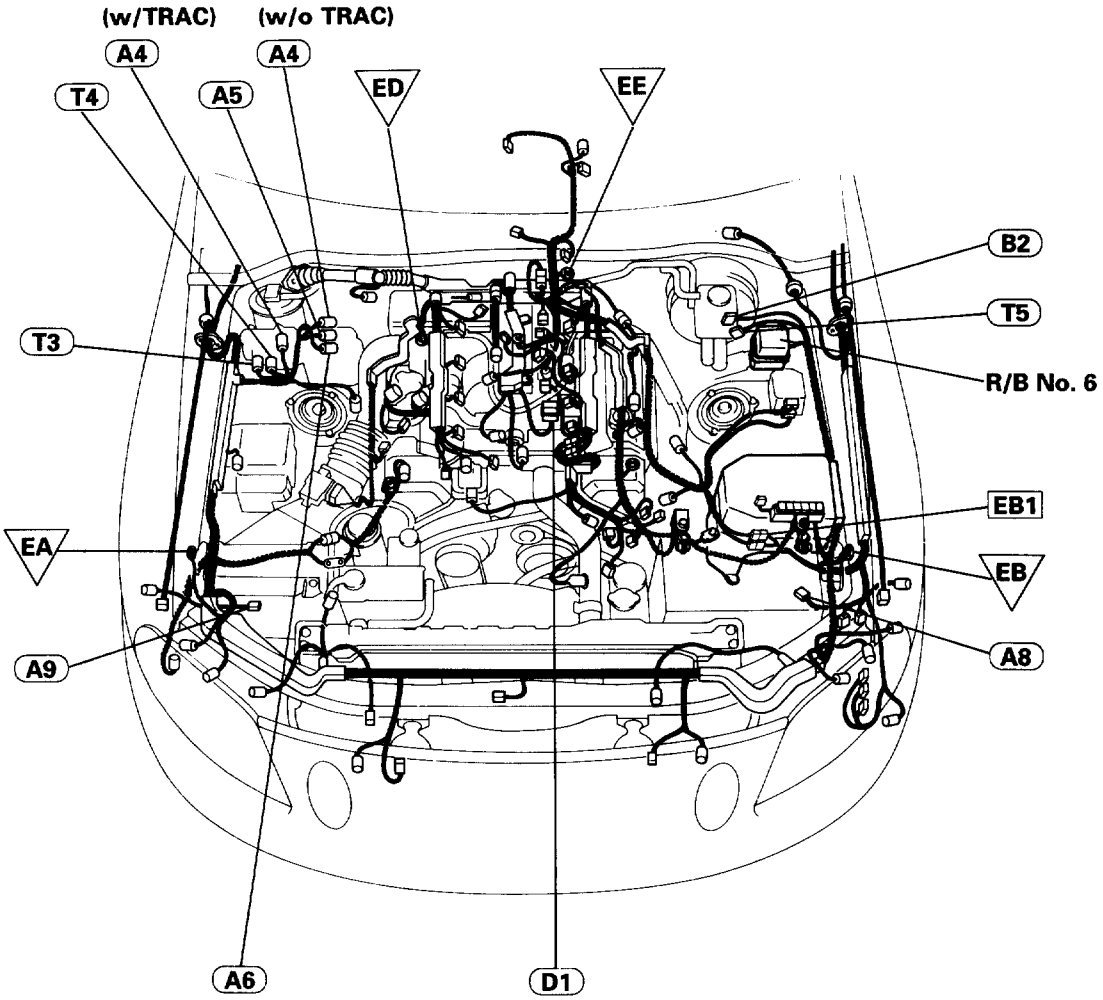

WhereEverybodyKnowsYourName

A4
ABS Actuator (w/TRAC)

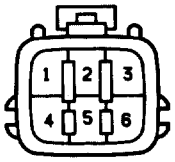

IS-6-1-B

A4
ABS Actuator (w/o TRAC)

Ie-6-1-C

A5
ABS Actuator

Ig-1-1

A6
ABS Actuator

ID-2-1

A8
ABS Speed Sensor LH Front

Ie-2-1-T

A9
ABS Speed Sensor RH Front

Ie-2-1-T

B2
Brake Fluid Level SW

Ie-2-1-d

D1
DLC1

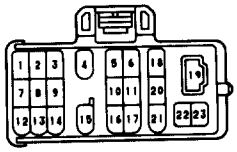

Iej-23-1

T3
TRAC Brake Actuator

Ie-6-1-E

T4
TRAC Brake Actuator

IS-4-1-B

T5
TRAC Pump and Motor

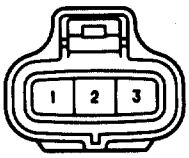

Ig-3-1-A

EB1

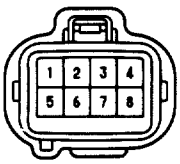

Ie-8-1-A

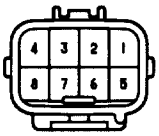

Ie-8-2-A

R/B No.6

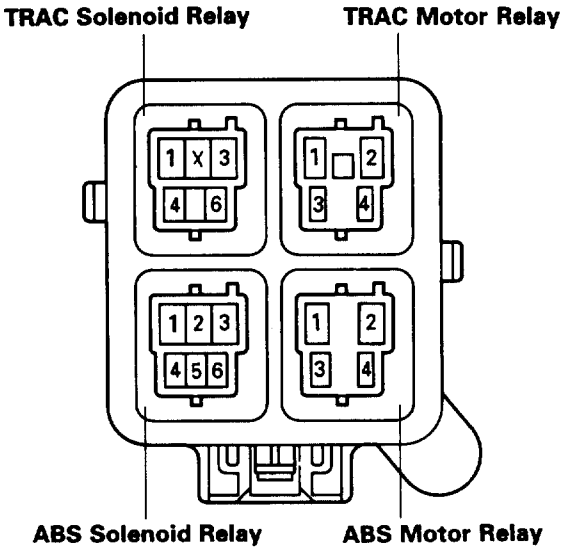

BE6143

WhereEverybodyKnowsYourName

Location of Connectors in Instrument Panel

SC300:

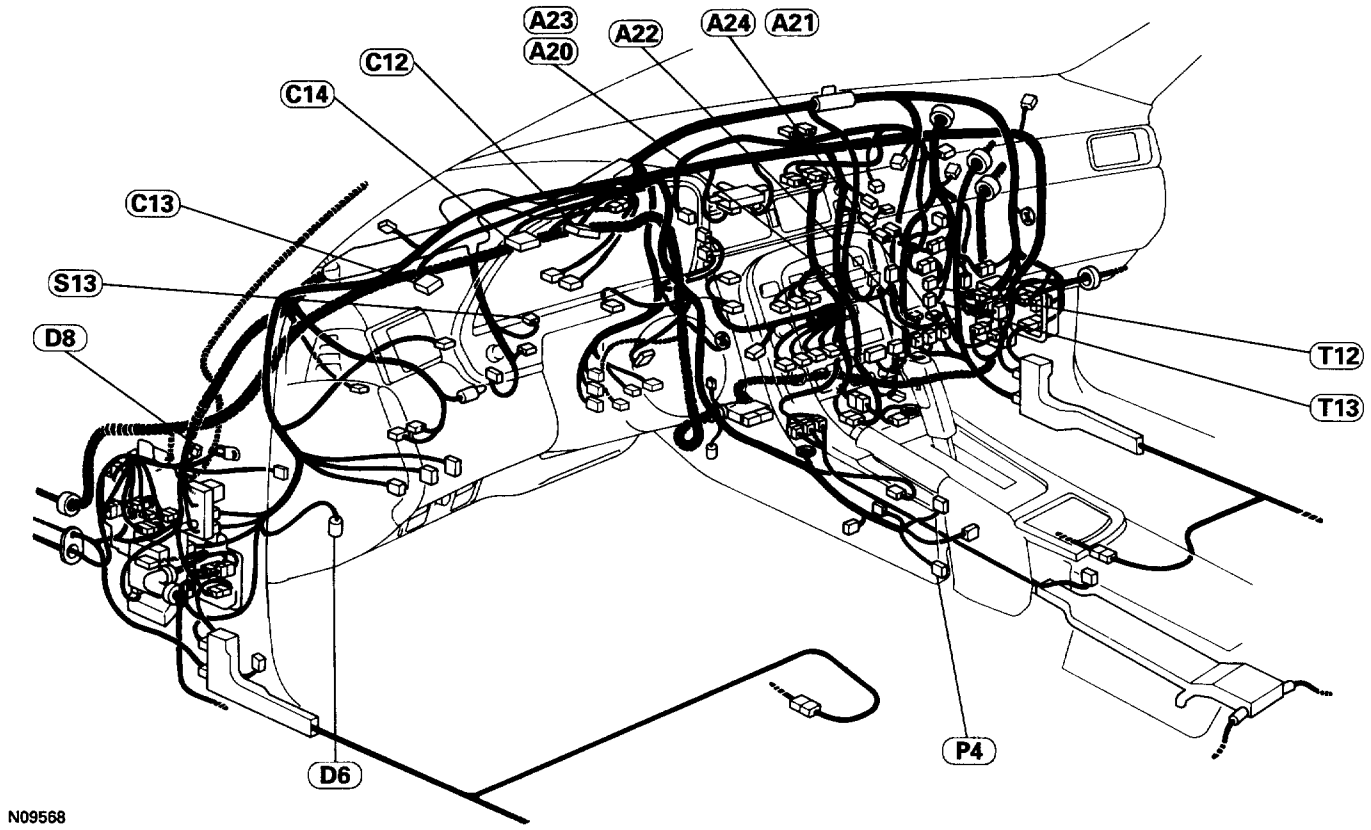

SC400:

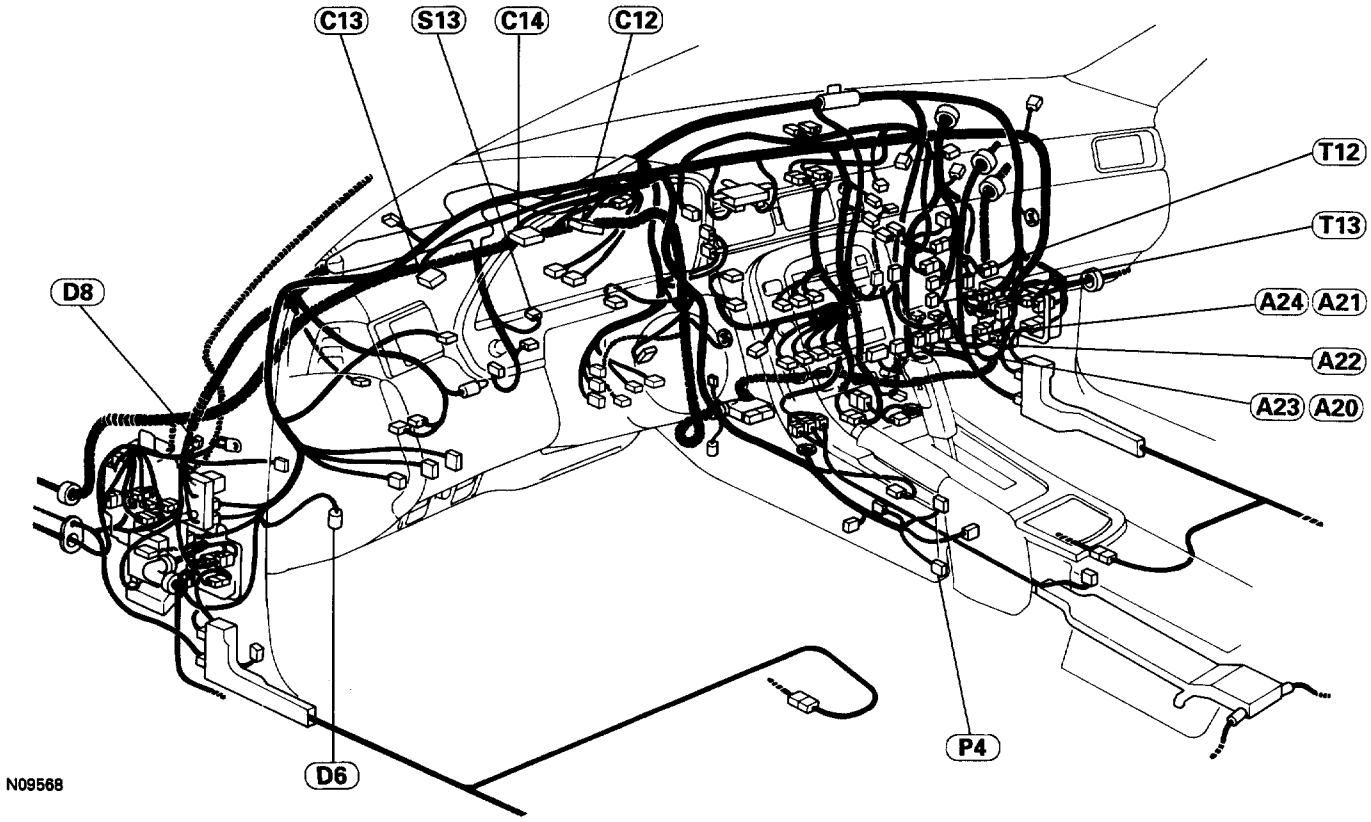

WhereEverybodyKnowsYourName

A20
ABS and TRAC ECU

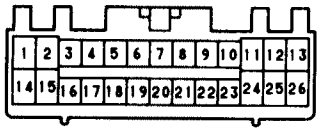

Vd-26-1

A21
ABS and TRAC ECU

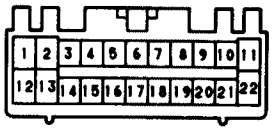

Vd-22-1

A22
ABS and TRAC ECU

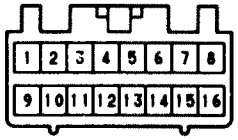

Vd-16-1

A23
ABS ECU (w/o TRAC)

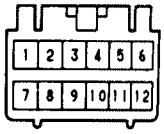

V-12-1-B

A24
ABS ECU (w/o TRAC)

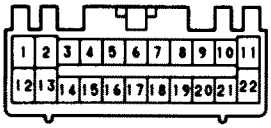

Vd-22-1

C12
Brake Warning Light

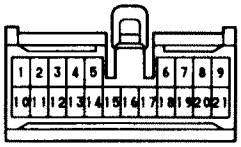

h-21-1

C13
ABS Warning Light

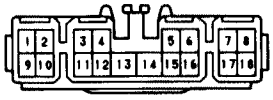

e-18-1

C14
ABS Warning Light
Brake Warning Light

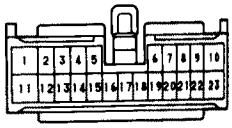

eh-23-1

D6
DLC2 (Data Link Connector 2)

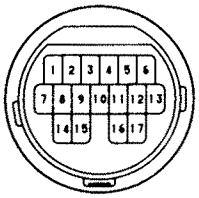

S-17-1

D8
Diode (for Parking Brake)

e-2-1-1

P4
Parking Brake Switch

e-1-1

S12
Stop Light Switch

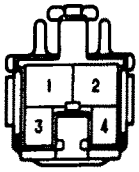

eg-4-1

T12
TRAC ECU

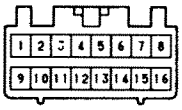

Vd-16-1

T13
TRAC ECU

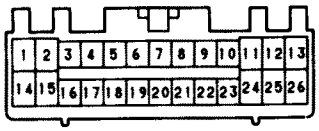

Vd-26-1

WhereEverybodyKnowsYourName

Location of Connectors in Instrument Panel

SC300:

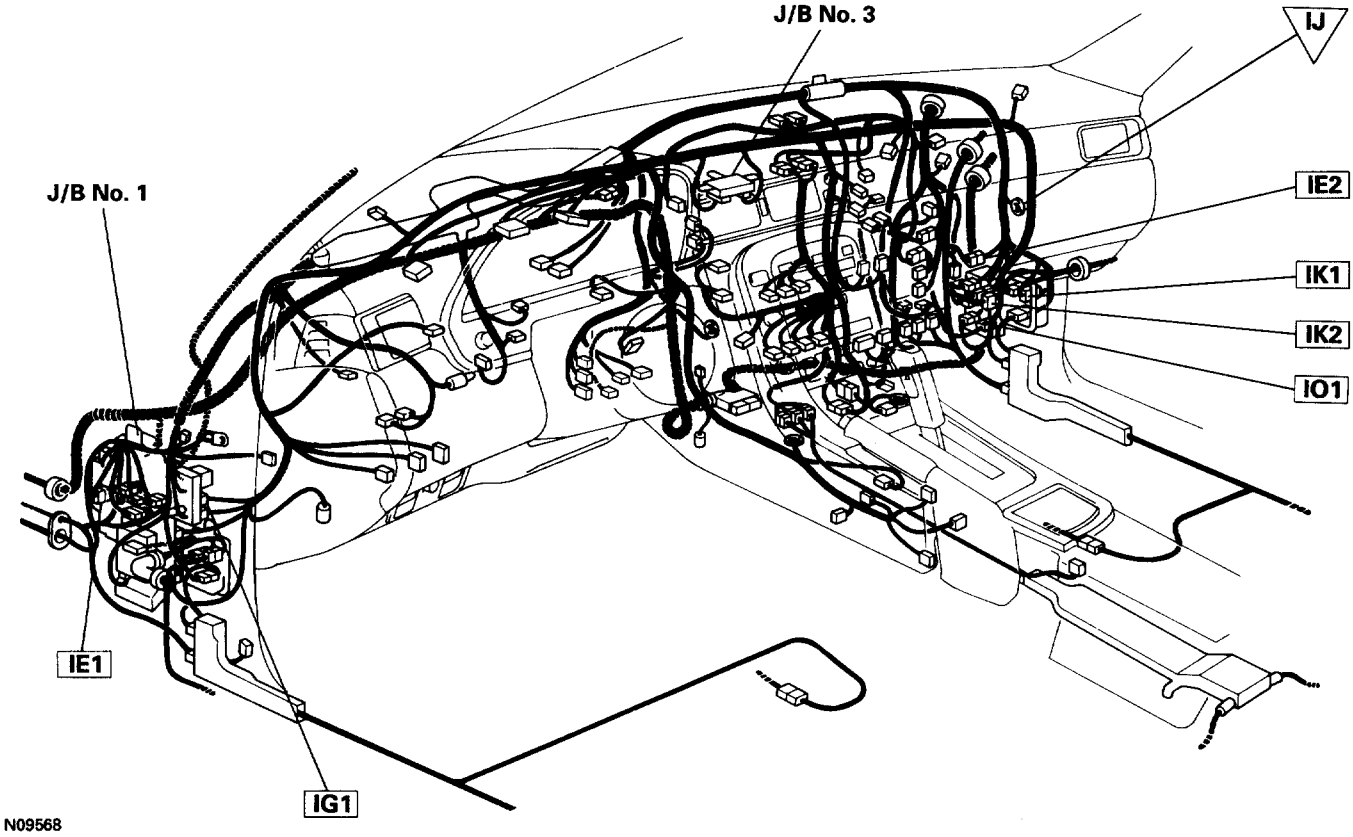

SC400:

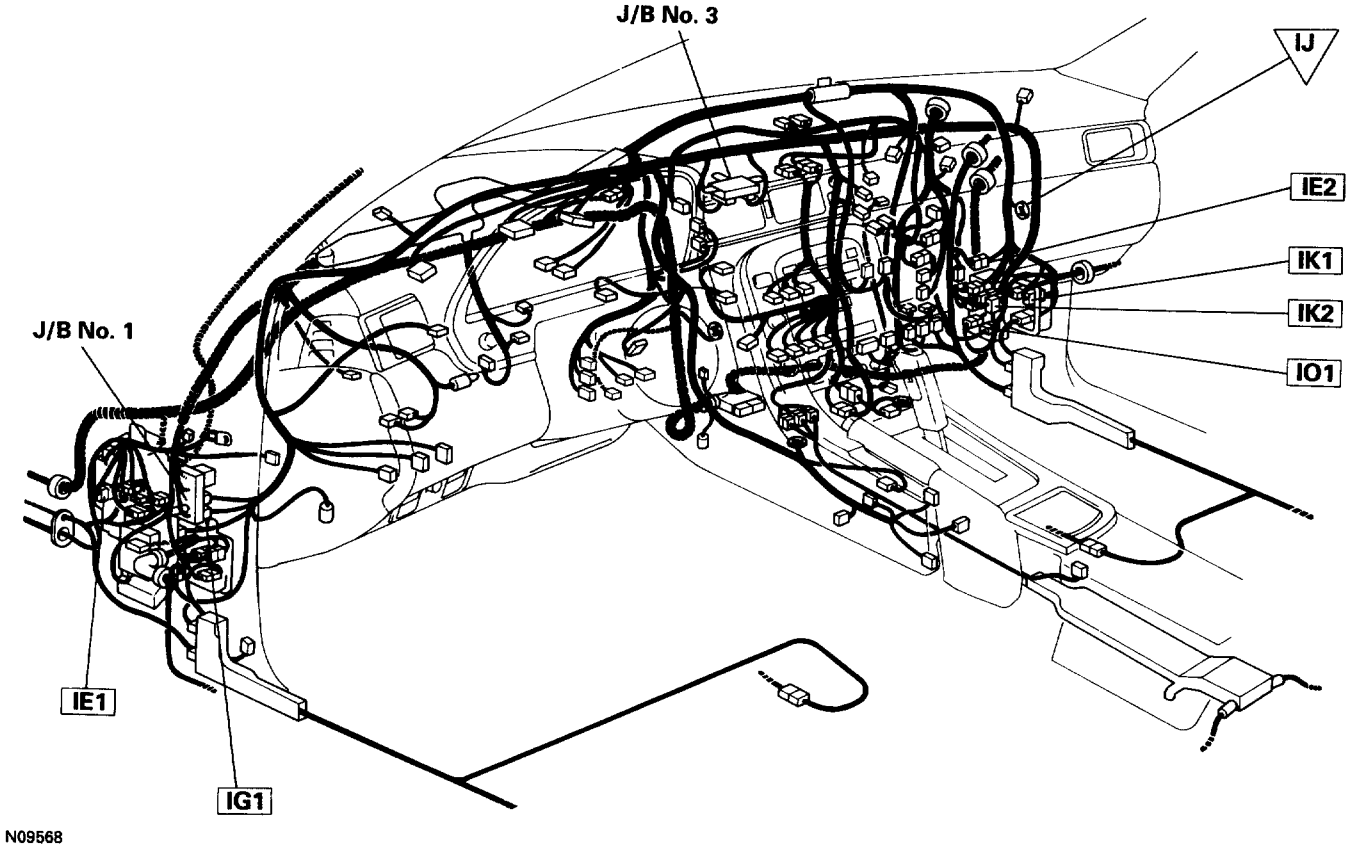

WhereEverybodyKnowsYourName

IE1

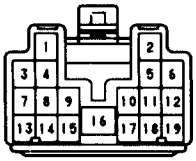

eg-19-1

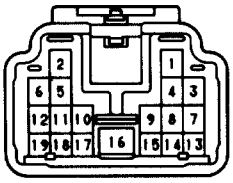

eg-19-2

IE2

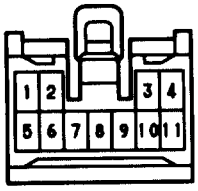

e-14-1

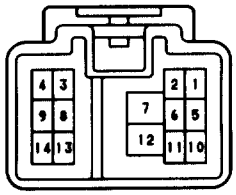

e-14-2

IG1

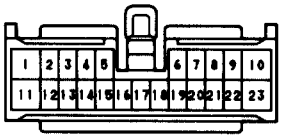

eh-23-1

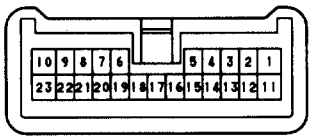

eh-23-2

IK1

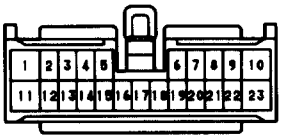

eh-23-1

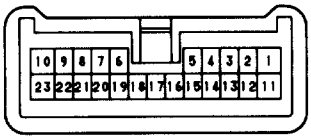

eh-23-2

IK2

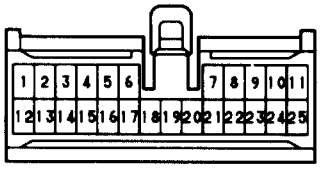

h-25-1-A

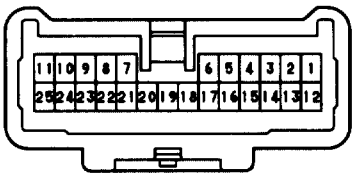

h-25-2-A

IO1

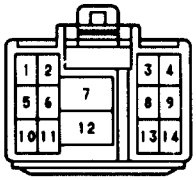

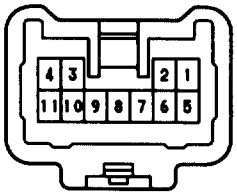

WhereEverybodyKnowsYourName

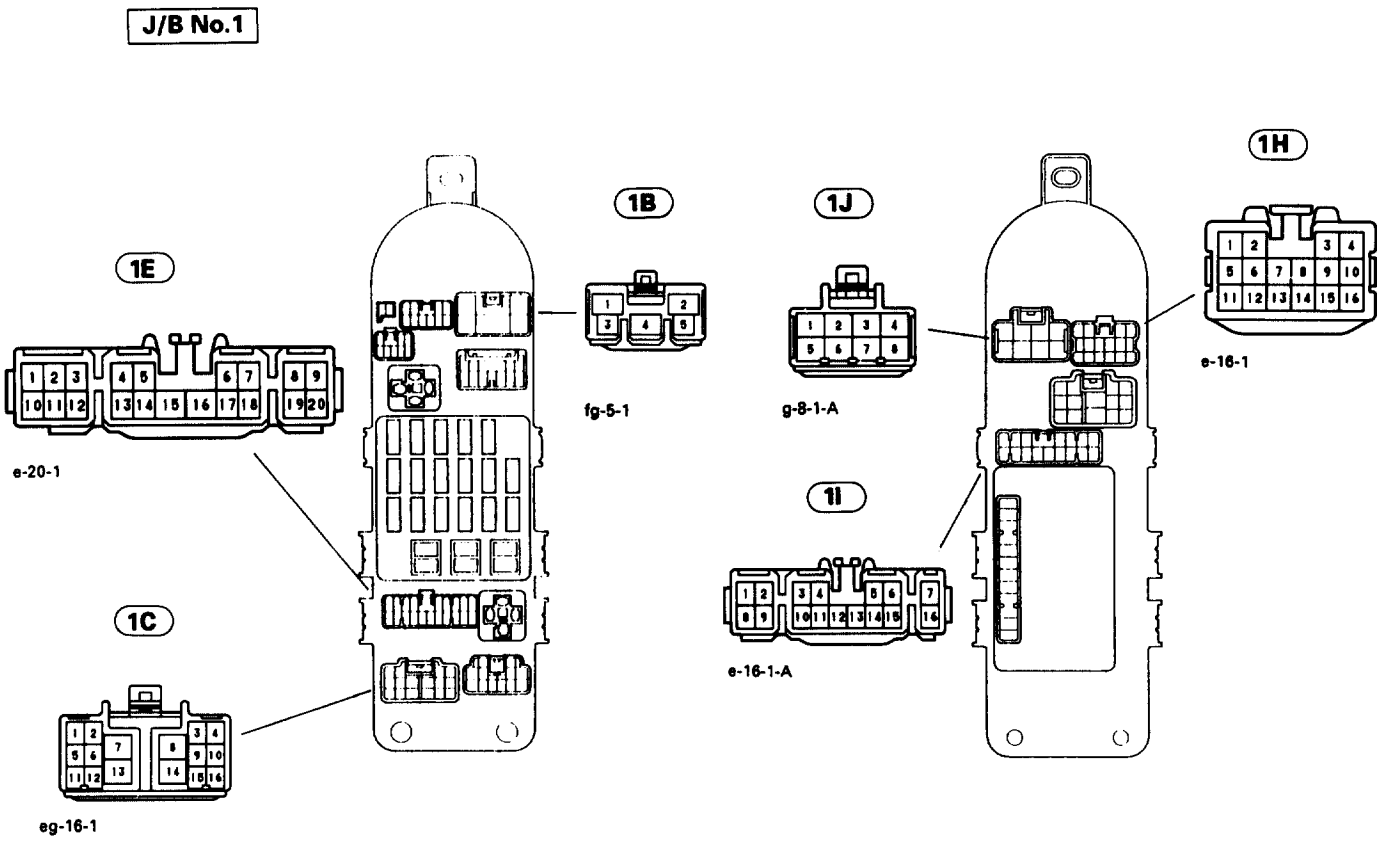

BE6624

BE6635

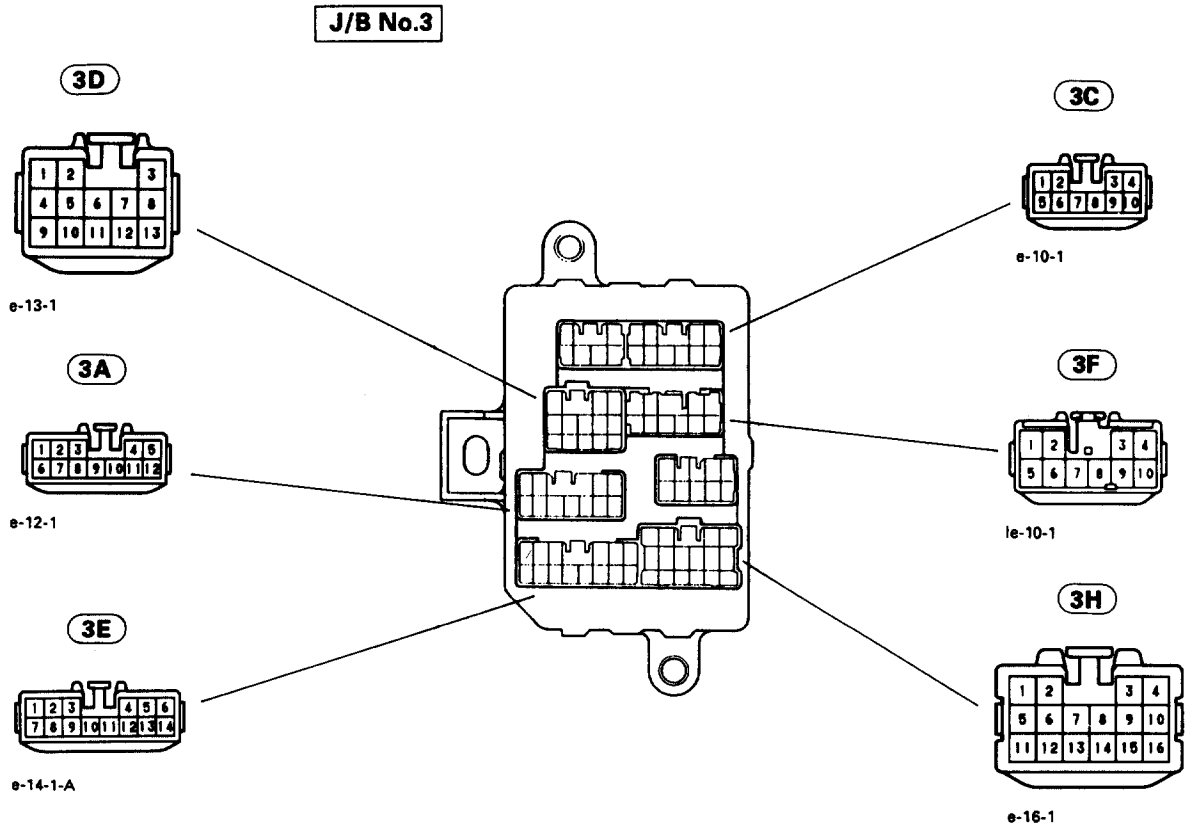

BE6634

WhereEverybodyKnowsYourName

Location of Connectors in Body

SC300:

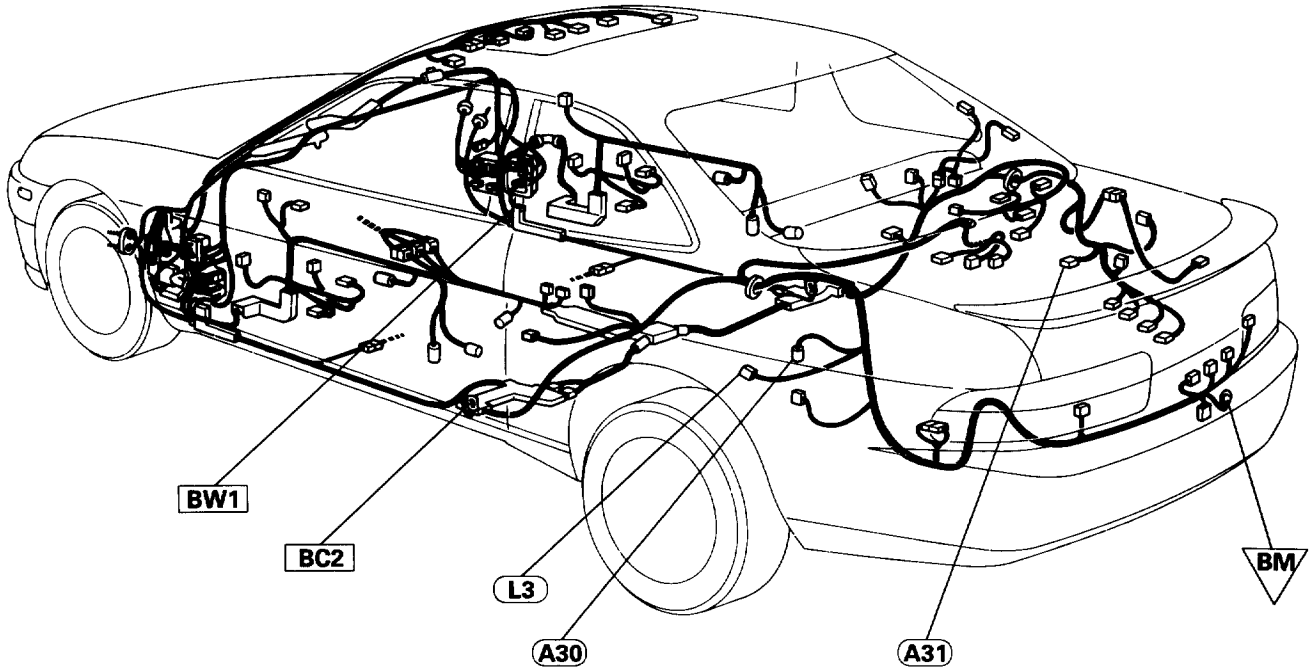

N09569

SC400:

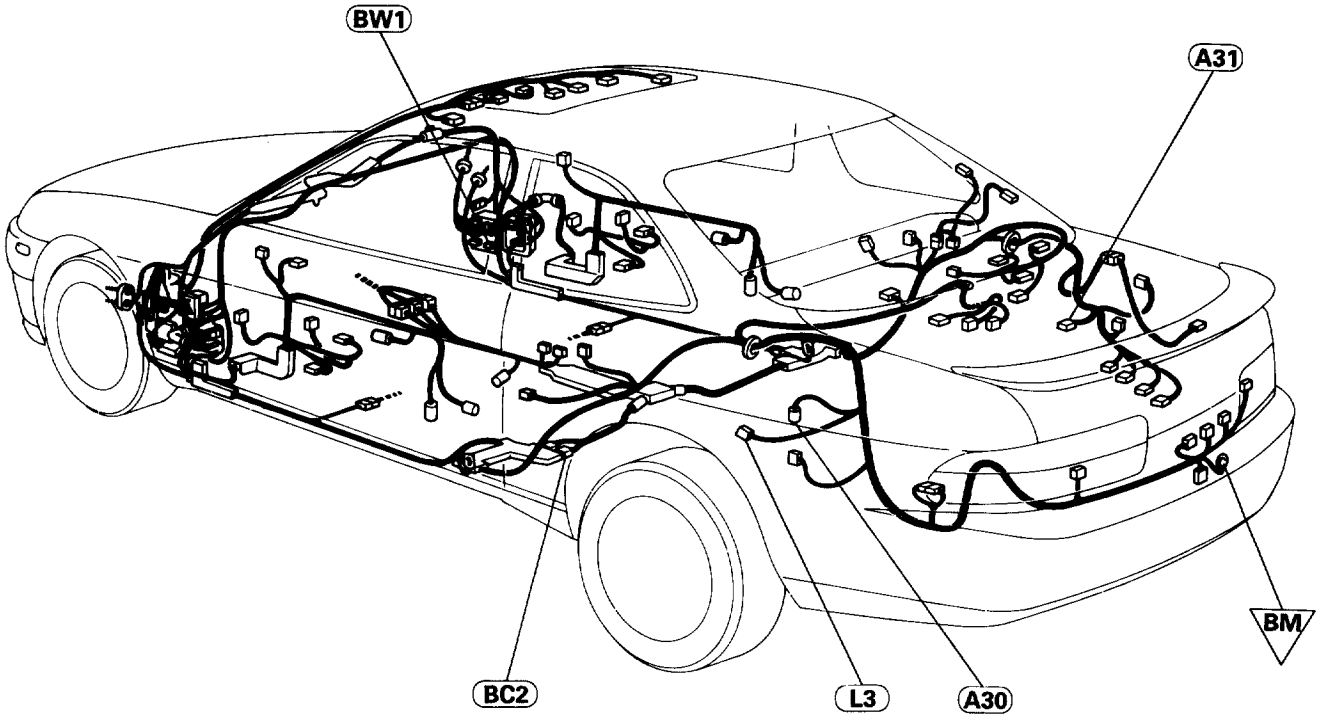

WhereEverybodyKnowsYourName

A31

ABS Speed Sensor LH Rear

le-2-2-T

A32

ABS Speed Sensor RH Rear

le-2-2-T

L3

Light Failure Sensor

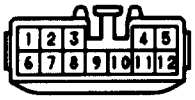

e-12-1

BW1

e-8-1

e-8-2

BC2

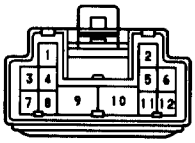

eg-12-1

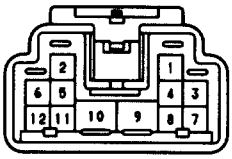

eg-12-2

WhereEverybodyKnowsYourName

DTC 11, 12 ABS Solenoid Relay Circuit

CIRCUIT DESCRIPTION

This relay supplies power to each ABS solenoid. After the ignition switch is turned on, if the initial check is OK, the relay goes on.

DTC No.	DTC Detecting Condition	Trouble Area
11	Conditions (1) and (2) continue for 0.2 sec. or more: (1) ABS solenoid relay (SR) terminal voltage: Battery positive voltage (2) Solenoid relay monitor (AST) terminal voltage: 0V	•ABS solenoid relay •Open or short in ABS solenoid relay circuit •ECU
12	Conditions (1) and (2) continue for 0.2 sec. or more: (1) ABS solenoid relay (SR) terminal voltage: 0V (2) Solenoid relay monitor (AST) terminal voltage: Battery positive voltage	•ABS solenoid relay •B+ short in ABS solenoid relay circuit •ECU

Fail safe function: If trouble occurs in the solenoid relay circuit, the ECU cuts off current to the solenoid relay and prohibits ABS control.

DIAGNOSTIC CHART

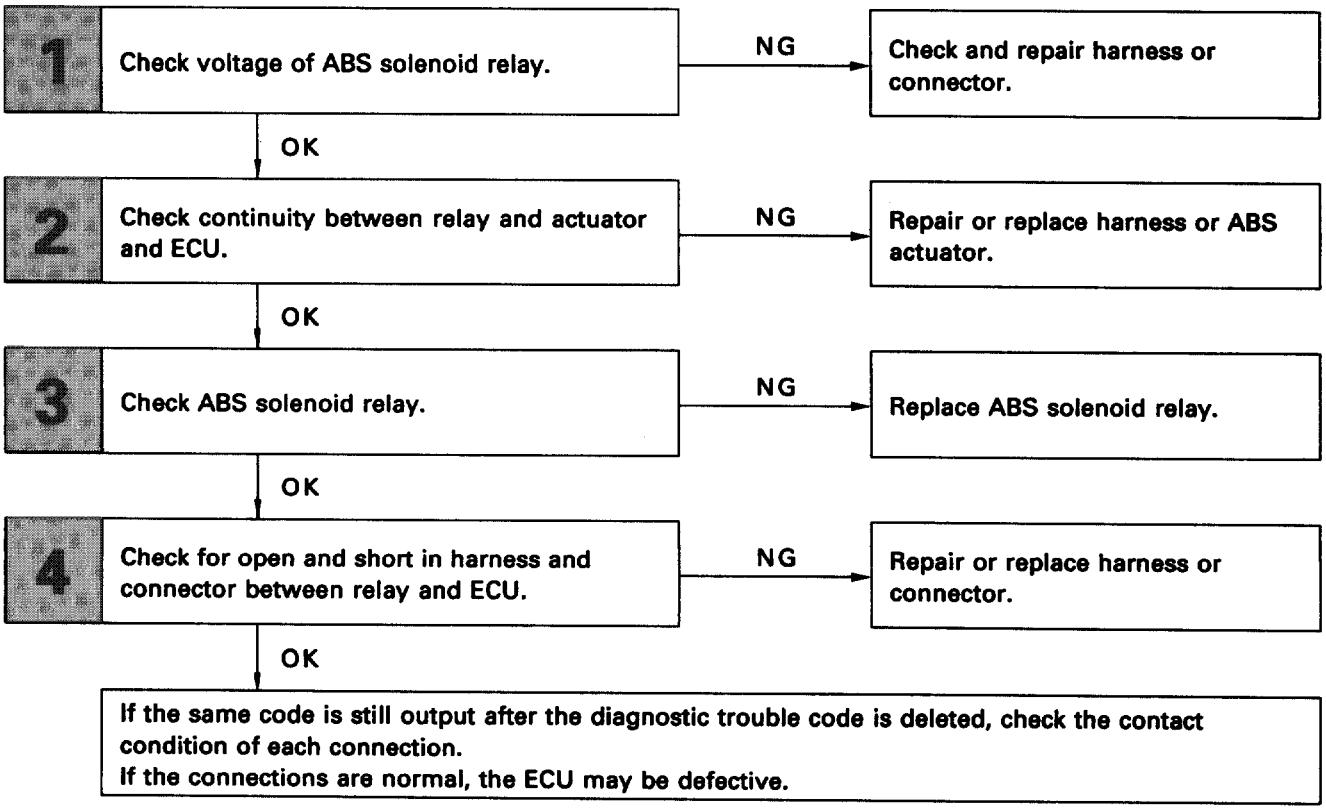

WhereEverybodyKnowsYourName

WIRING DIAGRAM

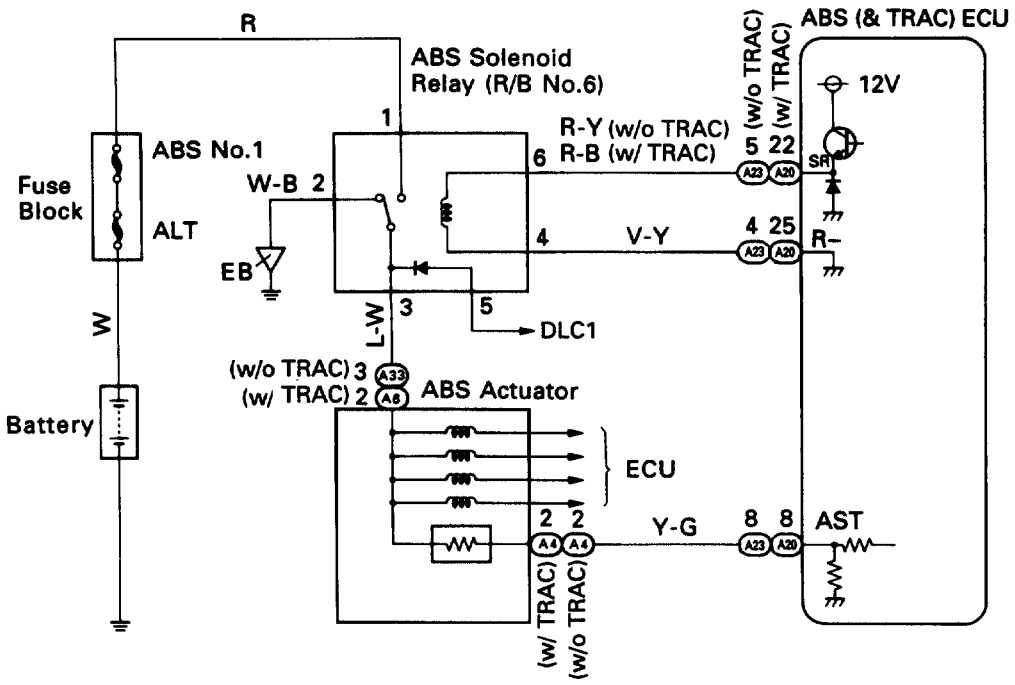

WhereEverybodyKnowsYourName

INSPECTION PROCEDURE

1 **Check voltage between terminals 1 and 2 of R/B No. 6 (For ABS solenoid relay).**

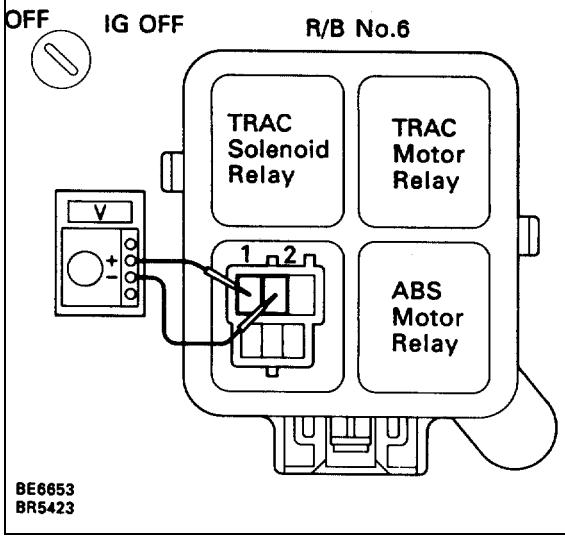

P Remove ABS solenoid relay from R/B No. 6.

C Measure voltage between terminals 1 and 2 of R/B No. 6 (for ABS solenoid relay).

OK **Voltage: 10 – 14 V**

OK

NG **Check and repair harness or connector.**

2 **Check continuity between terminal 3 or R/B No. 6 (for ABS solenoid relay) and terminal AST of ABS (& TRAC) ECU.**

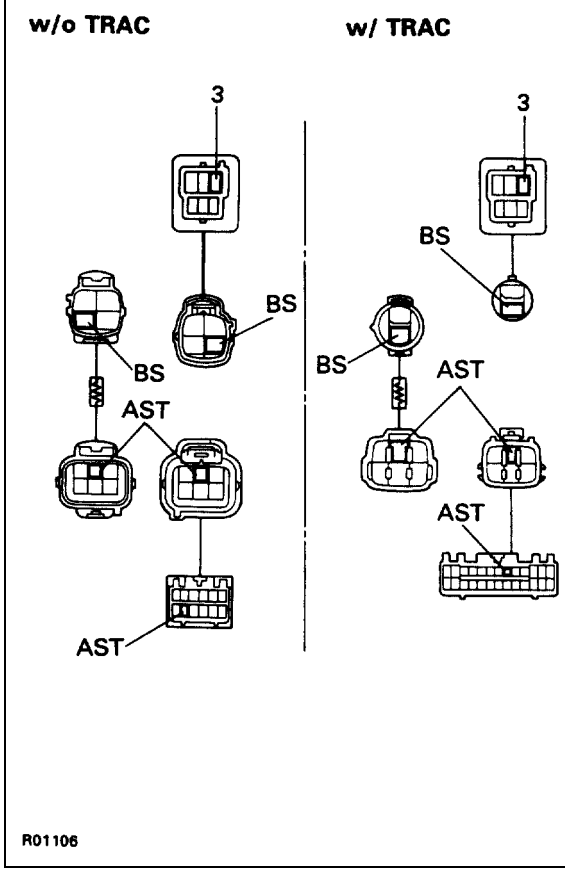

C Check continuity between 3 of R/B No. 6 (for ABS solenoid relay) and terminal AST of ABS (& TRAC) ECU.

OK **Continuity**

Hint There is a resistance of 4 ~ 6 ? between terminals BS and AST of ABS actuator.

OK

NG **Repair or replace harness or ABS actuator.**

WhereEverybodyKnowsYourName

3 **Check ABS solenoid relay.**

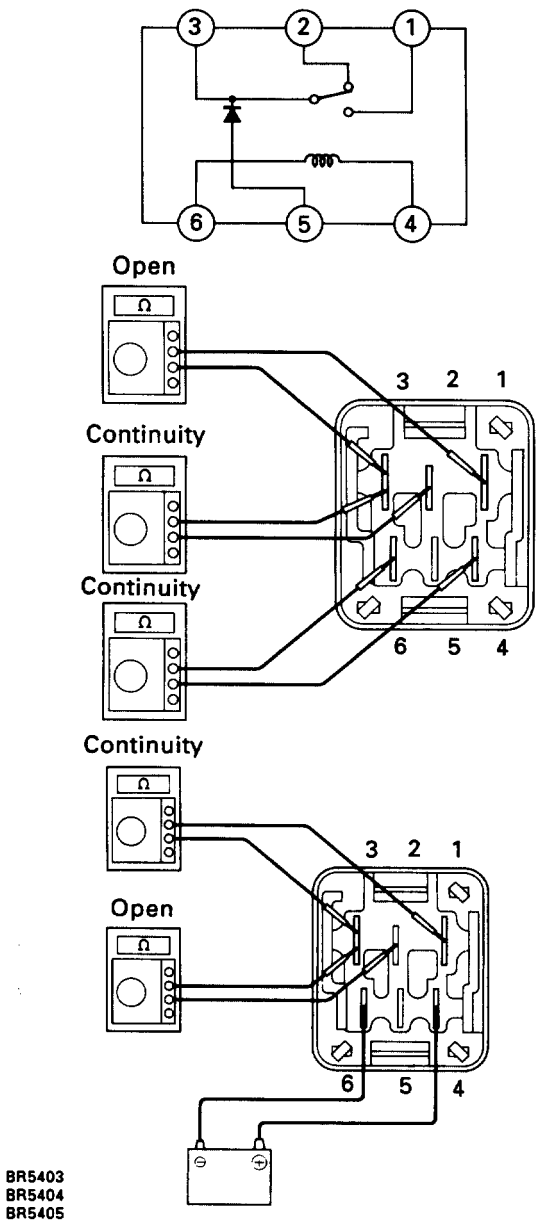

P Remove solenoid relay from R/B No. 6.

C Check continuity between each terminal of ABS solenoid relay shown below.

OK

Terminals 4 and 6	Continuity (Reference value 80Ω)
Terminals 2 and 3	Continuity
Terminals 1 and 3	Open

C

1. Apply battery voltage between terminals 4 and 6.
2. Check continuity between each terminal of ABS solenoid relay shown below.

OK

Terminals 2 and 3	Open
Terminals 1 and 3	Continuity

OK

NG **Replace ABS solenoid relay.**

4 **Check for open and short in harness and connector between ABS solenoid relay and ABS (& TRAC) ECU (See page IN–33).**

OK

NG **Repair or replace harness or connector.**

If the same code is still output after the diagnostic trouble code is deleted, check the contact condition of each connection.
If the connections are normal, the ECU may be defective.

WhereEverybodyKnowsYourName

DTC 13, 14 ABS Motor Relay Circuit

CIRCUIT DESCRIPTION

The ABS motor relay supplies power to the ABS pump motor. While the ABS is activate the ECU switches the motor relay ON and operates the ABS pump motor.

DTC No.	DTC Detecting Condition	Trouble Area
13	Conditions (1) and (2) continued for 0.2 sec. or more: (1) ABS motor relay (MR) terminal voltage: Battery positive voltage (2) Motor relay monitor (MT) terminal voltage: 0V	•ABS motor relay •Open or short in ABS motor relay circuit •ECU
14	Conditions (1) and (2) continued for 4 sec. or more: (1) ABS motor relay (MR) terminal voltage: 0V (2) Motor relay monitor (MT) terminal voltage: Battery positive voltage	•ABS motor relay •B+ short in ABS motor relay circuit. •ECU

Fail safe function: If trouble occurs in the motor relay circuit, the ECU cuts off the current to the solenoid relay and prohibits ABS control.

DIAGNOSTIC CHART

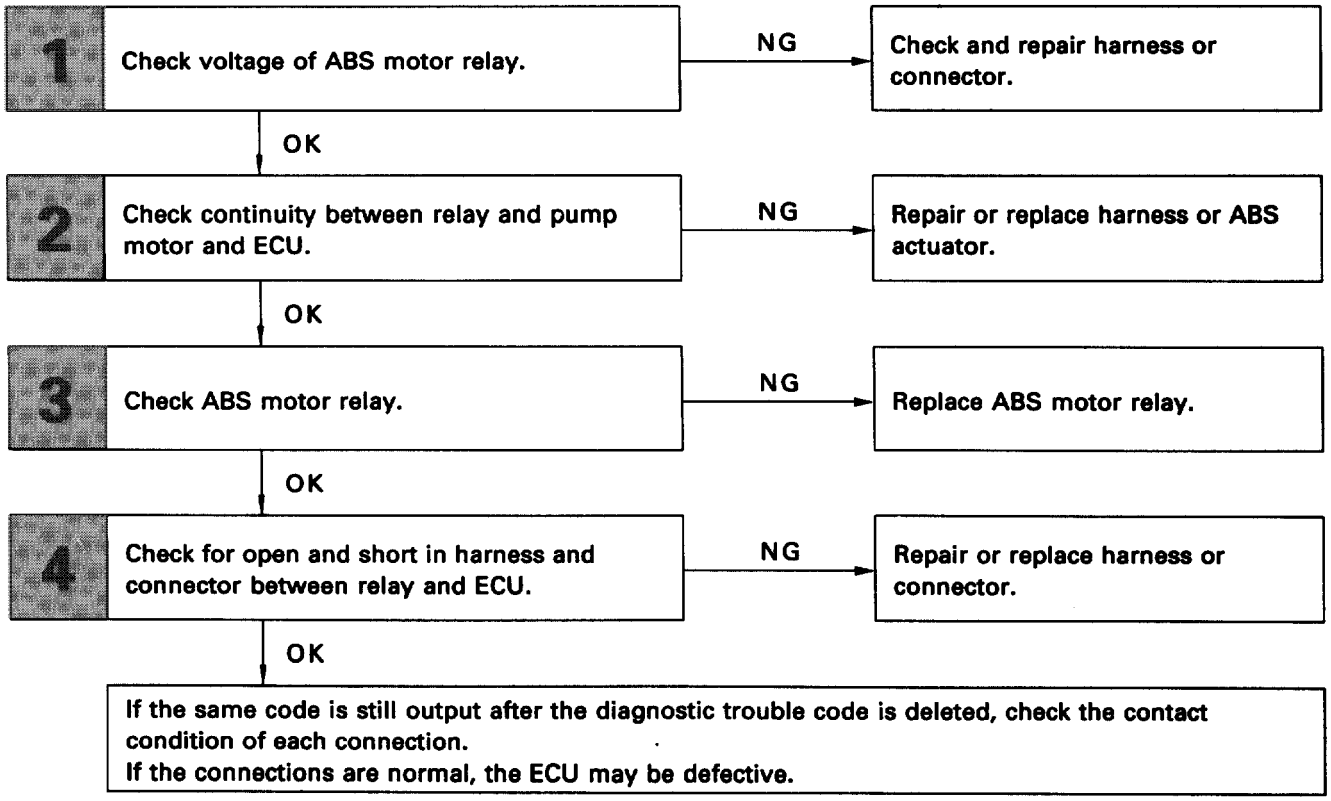

WhereEverybodyKnowsYourName

WIRING DIAGRAM

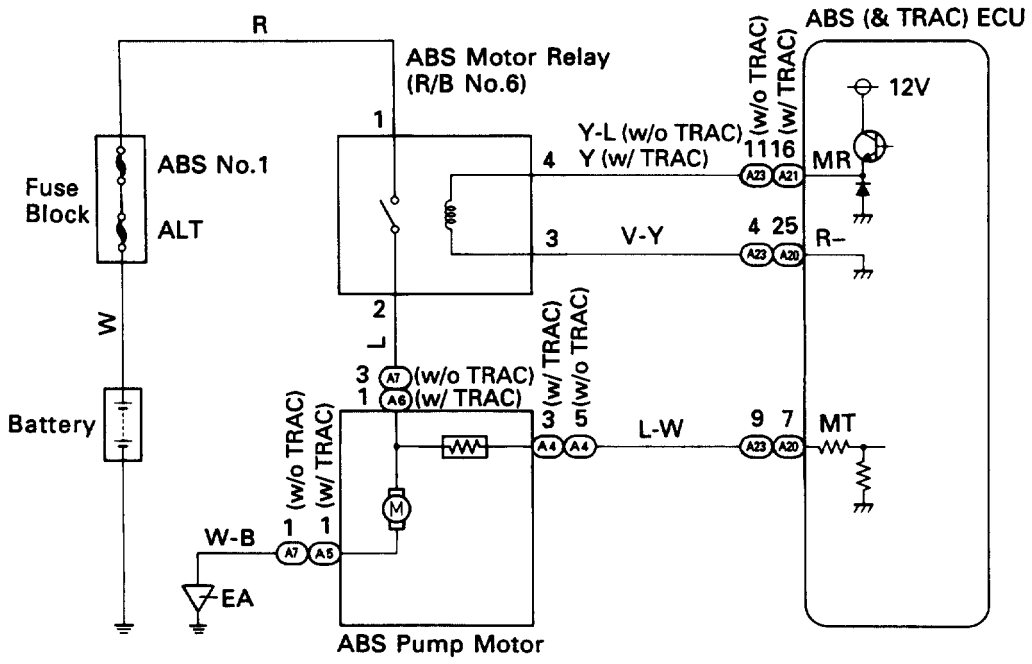

WhereEverybodyKnowsYourName

INSPECTION PROCEDURE

1 **Check voltage between terminal 1 of ABS motor relay and body ground.**

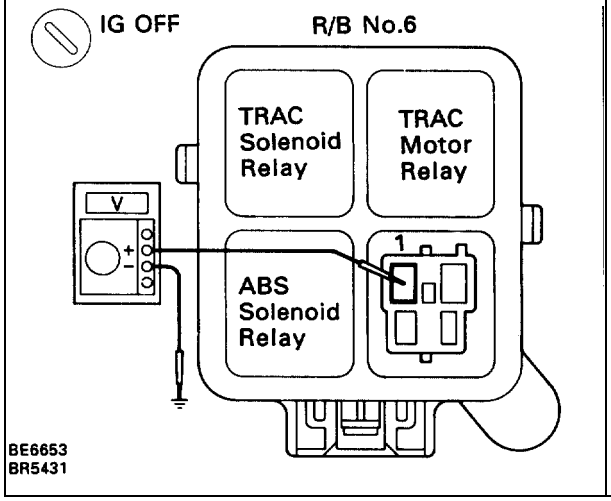

P Remove ABS motor relay from R/B No. 6.

C Measure voltage between terminal 1 of ABS motor relay and body ground.

OK **Voltage: 10 – 14 V**

OK

NG **Check and repair harness or connector**

2 **Check continuity between terminal 2 of R/B No. 6 (for ABS motor relay) and terminal MT of ABS (& TRAC) ECU.**

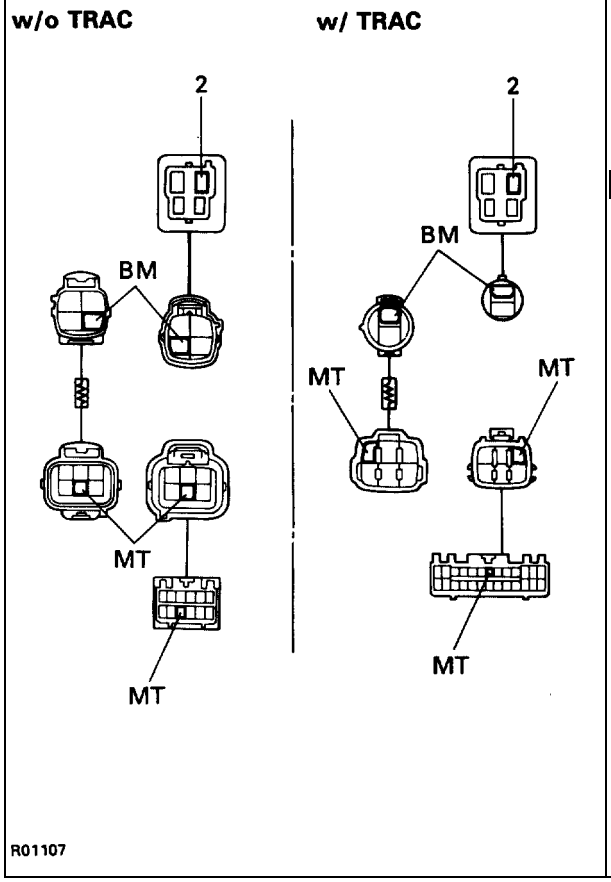

C Check continuity between terminal 2 or R/B No. 6 (for ABS motor relay) and terminal MT of ABS (& TRAC) ECU.

OK **Continuity**

Hint There is a resistance of 4 – 6 between terminals BM and MT for ABS actuator.

OK

NG **Repair or replace harness or ABS actuator.**

WhereEverybodyKnowsYourName

3 **Check ABS solenoid relay.**

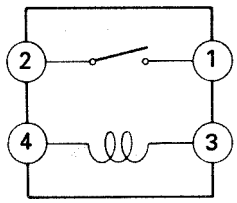

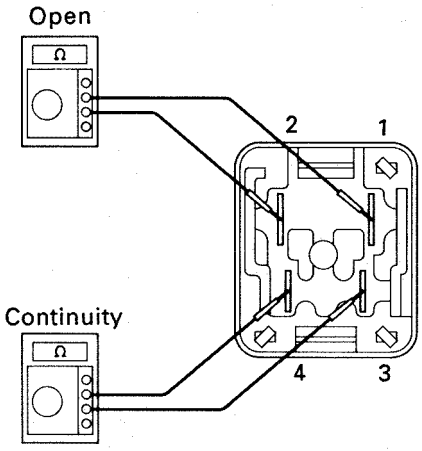

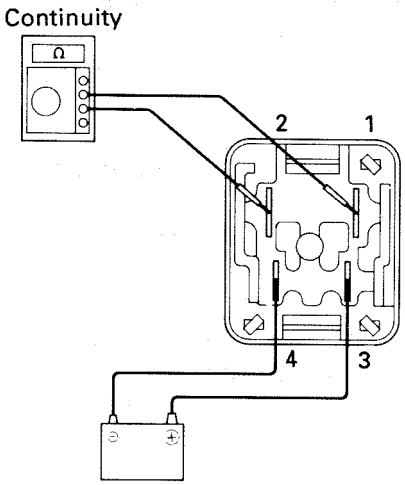

BE1840
BR5408
BR5409

P Remove solenoid relay from R/B No. 6

C Check continuity between each pair of terminal of motor relay shown below.

OK

Terminals 3 and 4	Continuity (Reference value 62Ω)
Terminals 1 and 2	Open

C
1. Apply battery voltage between terminals 3 and 4.
2. Check continuity between terminals shown below.

OK

Terminals 1 and 2	Continuity

OK → **NG** → **Replace ABS motor relay.**

4 **Check for open and short in harness and connector between ABS motor relay and ABS (& TRAC) ECU (See page IN–33).**

OK → **NG** → **Repair or replace harness or connector.**

If the same code is still output after the diagnostic trouble code is deleted, check the contact condition of each connection.
If the connections are normal, the ECU may be defective.

WhereEverybodyKnowsYourName

DTC 15, 16 TRAC Solenoid Relay Circuit

CIRCUIT DESCRIPTION

This relay circuit supplies power to each traction actuator solenoid.When the ignition switch is turned on, the relay goes on.

DTC No.	DTC Detecting Condition	Trouble Area
15	Conditions (1) through (3) continue for 0.2 sec.or more: (1) TRAC solenoid relay (TSR) terminal voltage: Battery positive voltage (2) All TRAC actuator solenoid: OFF(3) All TRAC actuator solenoid monitor voltage (in ECU): 0V	•TRAC solenoid relay •Open or short in TRAC solenoid relay circuit •ECU
16	Conditions (1) through (3) continue for 0.2 sec.or more: (1) TRAC solenoid relay (TSR) terminal voltage: 0V (2) All TRAC actuator solenoid: OFF (3) TRAC actuator solenoid monitor voltage (in ECU): Battery positive voltage	•TRAC solenoid relay •B+ short in TRAC solenoid relay circuit •ECU

Fail safe function: If trouble occurs in this relay circuit, the ECU cuts off the current to the ABS and TRAC solenoid relays and prohibits ABS and TRAC control.

DIAGNOSTIC CHART

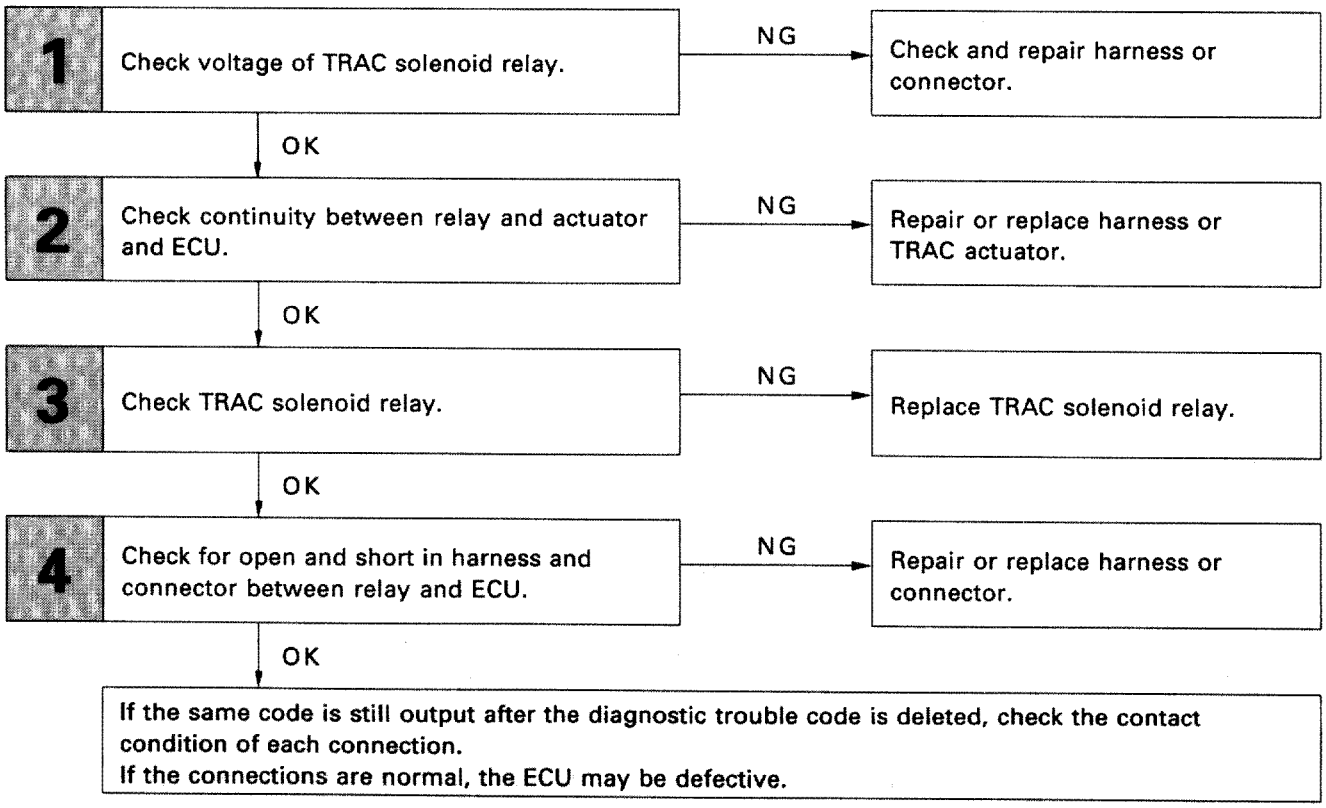

WhereEverybodyKnowsYourName

WIRING DIAGRAM

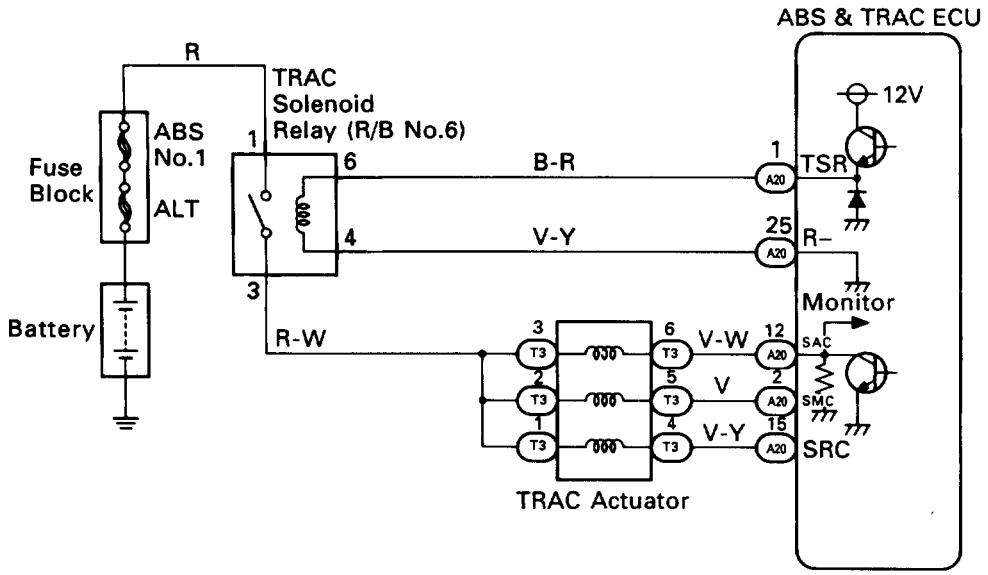

WhereEverybodyKnowsYourName

INSPECTION PROCEDURE

1 **Check voltage between terminal 1 of R/B No. 6 (for TRAC solenoid relay) and body ground.**

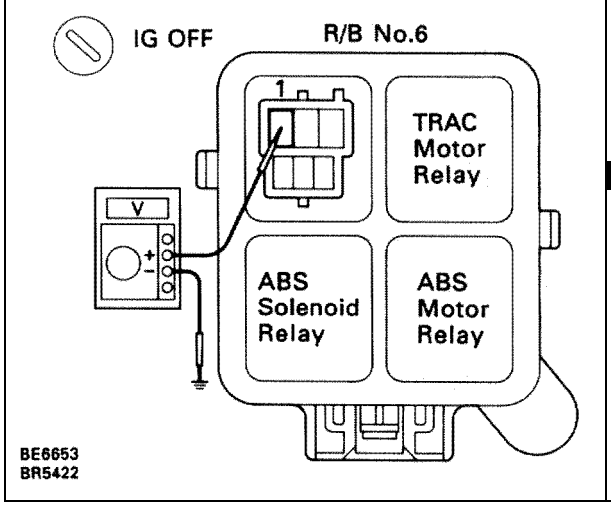

P Remove TRAC solenoid relay from R/B No. 6.

C Measure voltage between terminal 1 o R/B No. 6 (for TRAC solenoid relay) and body ground.

OK **Voltage: 10 – 14 V**

OK

NG **Repair or replace harness or connector.**

2 **Check continuity between terminal 3 of R/B No. 6 (for TRAC solenoid relay) and terminals SAC, SMC, SRC or ABS & TRAC ECU.**

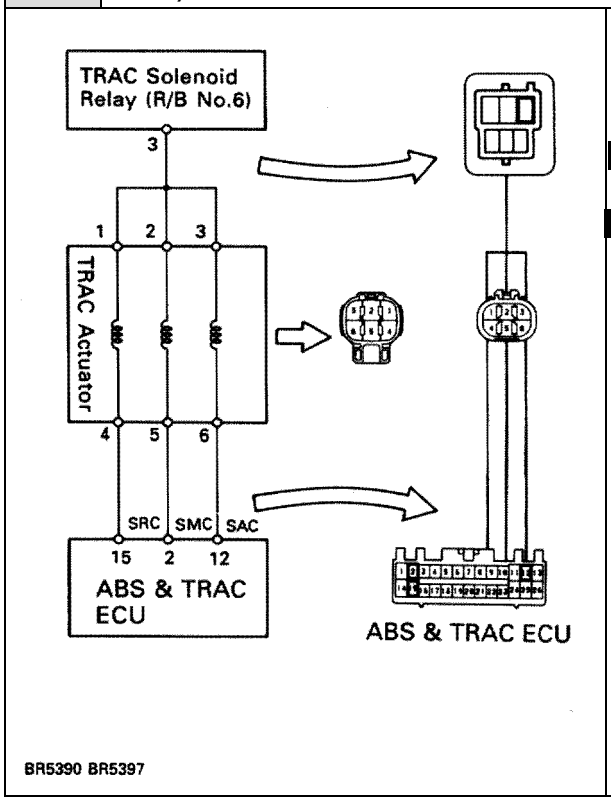

C Check continuity between terminal 3 of R/B No. 6 (for TRAC solenoid relay) and terminals SAC, SMC, SRC of ABS & TRAC ECU.

OK **Continuity**

Hint Resistance of the TRAC actuator solenoid is 2 ? .

OK

NG **Repair or replace harness or TRAC actuator.**

WhereEverybodyKnowsYourName

3 **Check TRAC solenoid relay.**

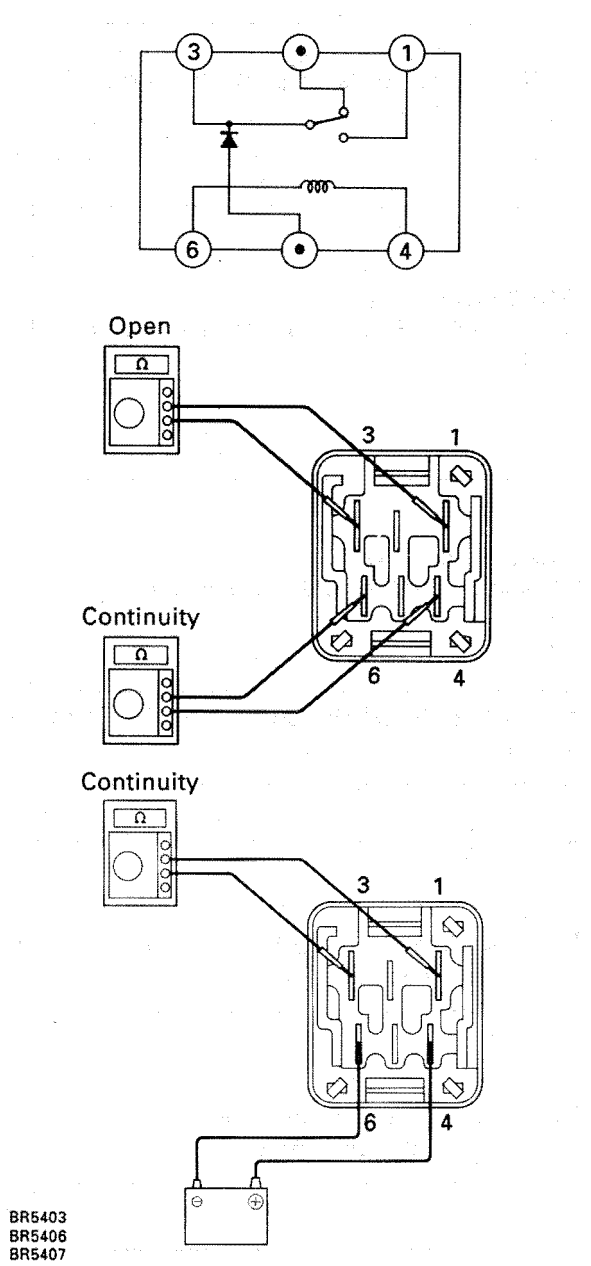

P Remove solenoid relay from R/B NO. 6.

C Check continuity between each terminal of TRAC solenoid relay shown below.

OK

Terminals 4 and 6	Continuity (Reference value 80Ω)
Terminals 1 and 3	Open

C
1. Apply battery voltage between terminals 4 and 6.
2. Check continuity between terminals shown below.

OK

Terminals 1 and 3	Continuity

OK

NG **Replace TRAC solenoid relay.**

4 **Check for open and short in harness and connector between TRAC solenoid relay and ABS & TRAC ECU (See page IN–33).**

OK

NG **Repair or replace harness or connector.**

If the same code is still output after the diagnostic trouble code is deleted, check the contact condition of each connection.
If the connections are normal, the ECU may be defective.

WhereEverybodyKnowsYourName

DTC 17, 18 TRAC Motor Relay Circuit

CIRCUIT DESCRIPTION

This relay circuit supplies power to the TRAC pump motor. If the accumulator pressure drops, the ECU switches the motor relay ON and operates the TRAC motor.

DTC No.	DTC Detecting Condition	Trouble Area
17	Conditions (1) through (2) continue for 0.2 sec.or more: (1) TRAC motor relay (TMR) terminal voltage: Battery positive voltage (2) Voltage of ABS & TRAC ECU terminal MTT: 0 V	•TRAC motor relay •Open or short in TRAC motor relay circuit •ECU
18	Conditions (1) and (2) continue for 2 sec. ormore: (1) TRAC motor relay (TSR) terminalvoltage: 0 V (2) Voltage of ABS & TRAC ECU terminal MTT: Battery positive voltage	•TRAC motor relay •B+ short in TRAC motor relay circuit •ECU

Fail safe function: If trouble occurs in this relay circuit, the ECU cuts off the current to the TRAC solenoid relay and prohibits TRAC control.

DIAGNOSTIC CHART

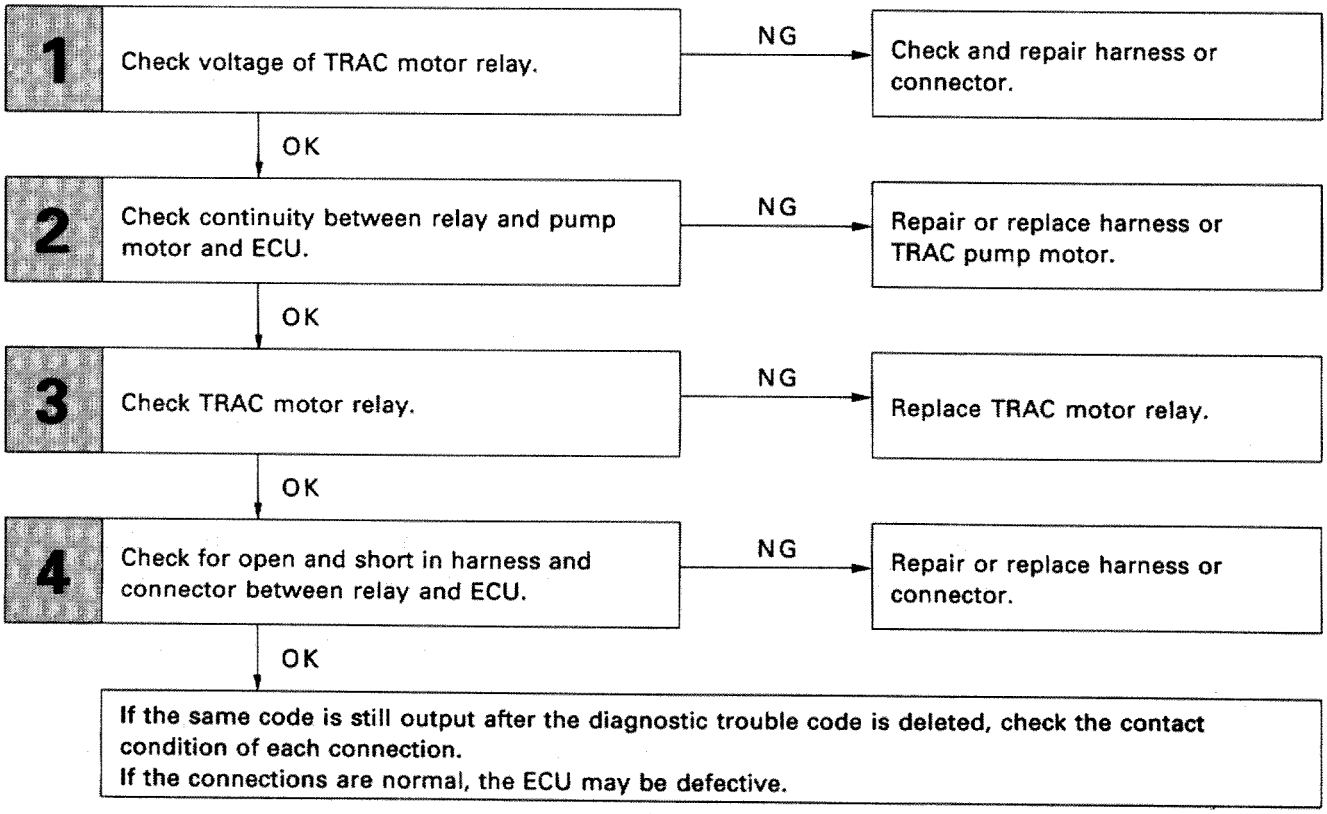

WhereEverybodyKnowsYourName

WIRING DIAGRAM

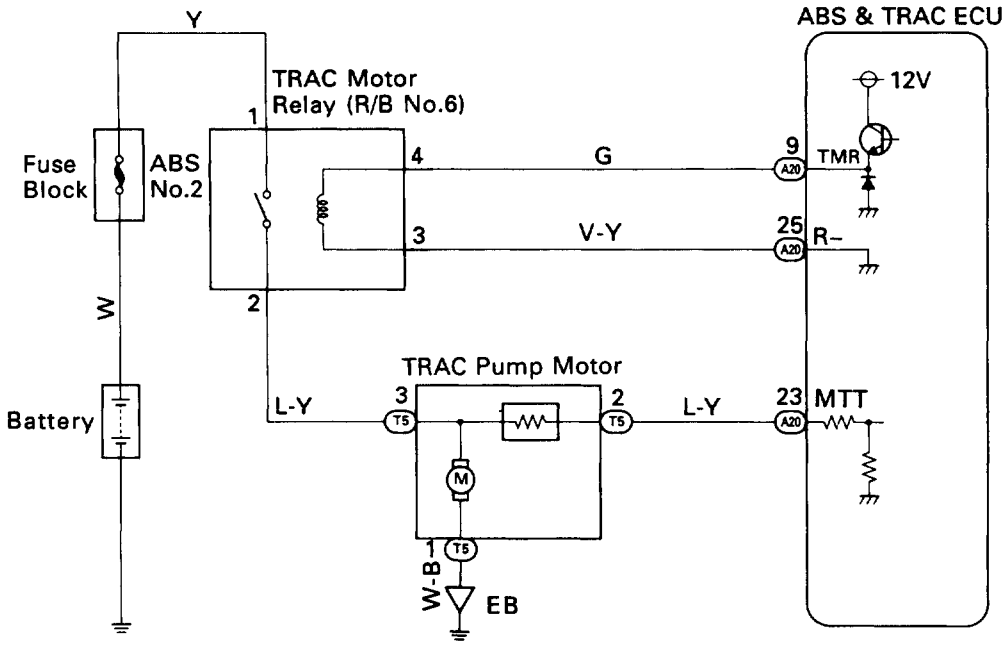

WhereEverybodyKnowsYourName

INSPECTION PROCEDURE

1 **Check voltage between terminal 1 of R/B No. 6 (for TRAC motor relay) and body ground.**

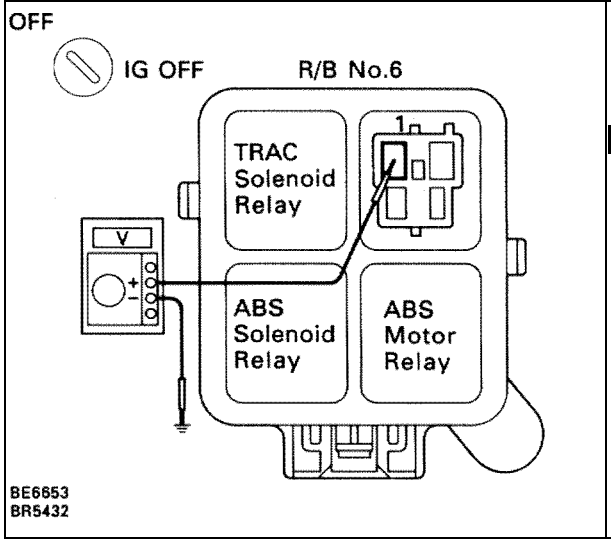

P Remove TRAC motor relay from R/B No. 6.

C Measure voltage between terminal 1 of R/B No. 6 (for TRAC motor relay) and body ground.

OK **Voltage: 10 – 14 V**

OK

NG **Check and repair harness or connector.**

2 **Check continuity between terminal 2 of R/B No. 6 (for TRAC motor relay) and terminal MTT of ABS & TRAC ECU.**

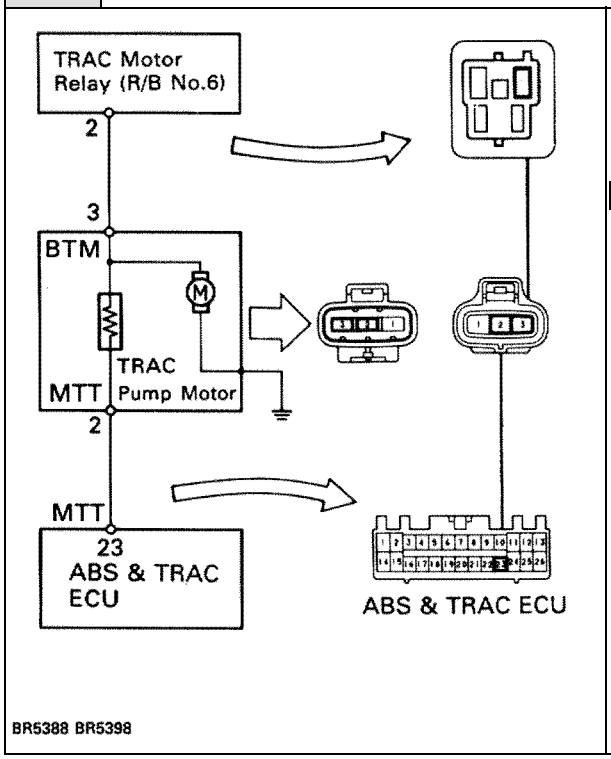

C Check continuity between terminal 2 or R/B No. 6 (for TRAC motor relay) and terminal MTT of ABS & TRAC ECU.

OK **Continuity**

Hint There is a resistance of 4 – 6 ? between terminals BTM and MTT of TRAC pump motor.

OK

NG **Repair or replace harness or TRAC pump motor.**

WhereEverybodyKnowsYourName

3 **Check TRAC motor relay.**

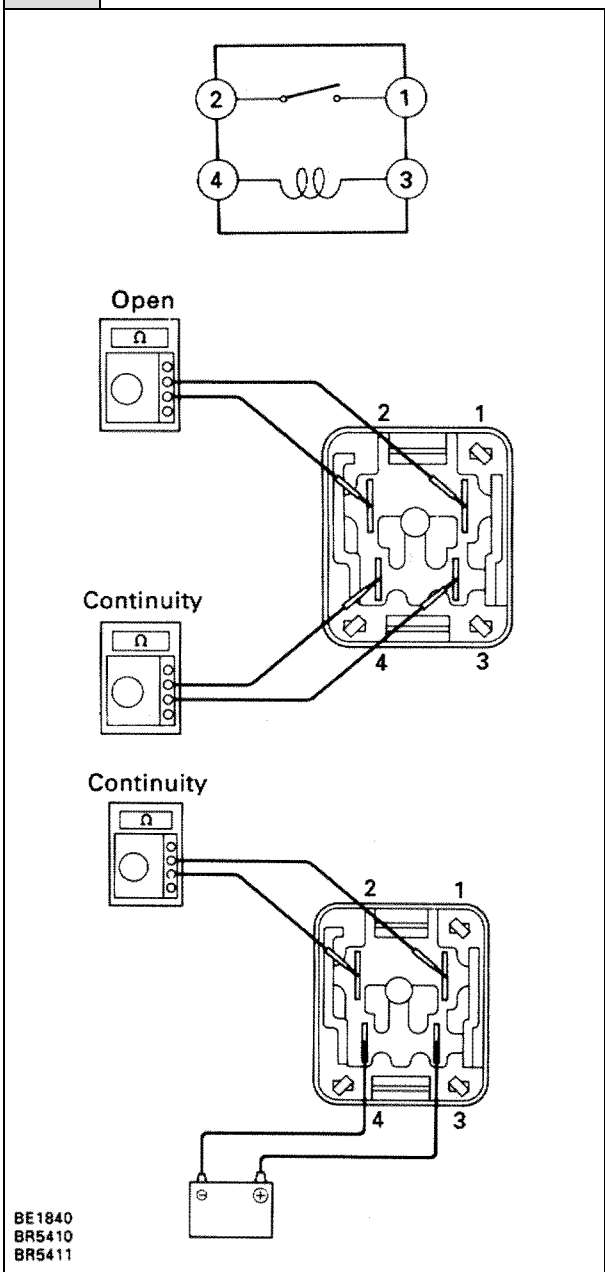

P Remove motor relay from R/B No. 6.

C Check continuity between each pair of terminal of motor relay shown below.

OK

Terminals 3 and 4	Continuity (Reference value 54Ω)
Terminals 1 and 2	Open

C
1. Apply battery voltage between terminals 3 and 4.
2. Check continuity between terminals shown below.

OK

Terminals 1 and 2	Continuity

OK

NG **Replace TRAC motor relay.**

4 **Check for open and short in harness and connector between TRAC motor relay and ABS & TRAC ECU (See page IN–33).**

OK

NG **Repair or replace harness or connector.**

If the same code is still output after the diagnostic trouble code is deleted, check the contact condition of each connection.
If the connections are normal, the ECU may be defective.

WhereEverybodyKnowsYourName

DTC	21, 22, 23, 24	ABS Actuator Solenoid Circuit

CIRCUIT DESCRIPTION

This solenoid goes on when signals are received from the ECU and controls the pressure acting on the wheel cylinders, thus controlling the braking force.

DTC No.	DTC Detecting Condition	Trouble Area
21	Conditions (1) through (3) continue for0.05 sec. or more: (1) ABS solenoid relay (SR) terminalvoltage: Battery positive voltage (2) Voltage of ABS (& TRAC) ECU terminal AST: Battery positive voltage (3) When power transistor of ECU is ON,voltage of terminal SFR is 0 V or batterypositive voltage.	•ABS actuator •Open or short in SFR circuit. •ECU
22	Conditions (1) through (3) continue for0.05 sec. or more: (1) ABS solenoid relay (SR) terminalvoltage: Battery positive voltage (2) Voltage of ABS (& TRAC) ECU terminal AST: Battery positive voltage (3) When power transistor of ECU is ON,voltage of terminal SFL is 0 V or batterypositive voltage.	•ABS actuator •Open or short in SFL circuit. •ECU
23	Conditions (1) through (3) continue for0.05 sec. or more: (1) ABS solenoid relay (SR) terminalvoltage: Battery positive voltage (2) Voltage of ABS (& TRAC) ECU terminal AST: Battery positive voltage (3) When power transistor of ECU is ON,voltage of terminal SRR is 0 V or batterypositive voltage.	•ABS actuator •Open or short in SRR circuit •ECU
24 (Only vehicles with TRAC)	Conditions (1) through (3) continue for0.05 sec. or more: (1) ABS solenoid relay (SR) terminalvoltage: Battery positive voltage (2) Voltage of ABS & TRAC ECU terminal AST: Battery positive voltage (3) When power transistor of ECU is ON,voltage of terminal SRL is 0 V or batterypositive voltage.	•ABS actuator •Open or short in SRL circuit. •ECU

Fail safe function: If trouble occurs in the actuator solenoid circuit, the ECU cuts off current to the solenoid relay and prohibits ABS control.

DIAGNOSTIC CHART

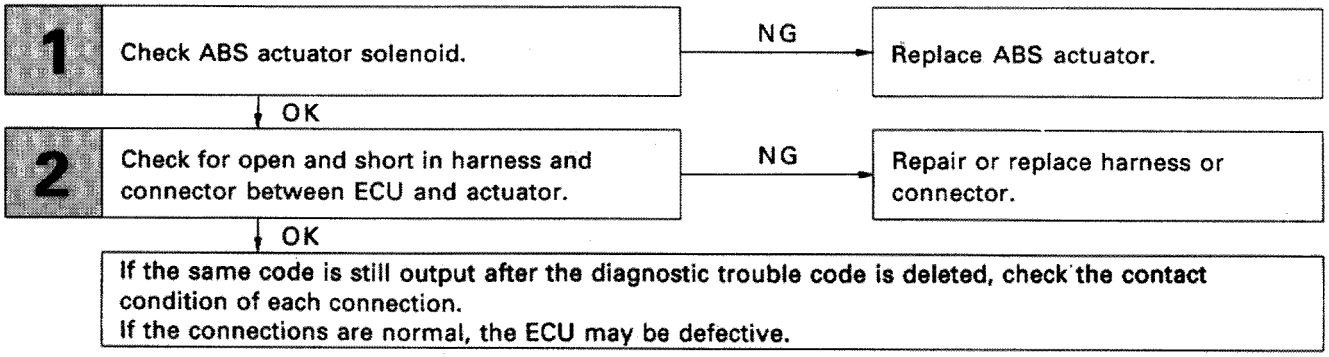

WhereEverybodyKnowsYourName

WIRING DIAGRAM

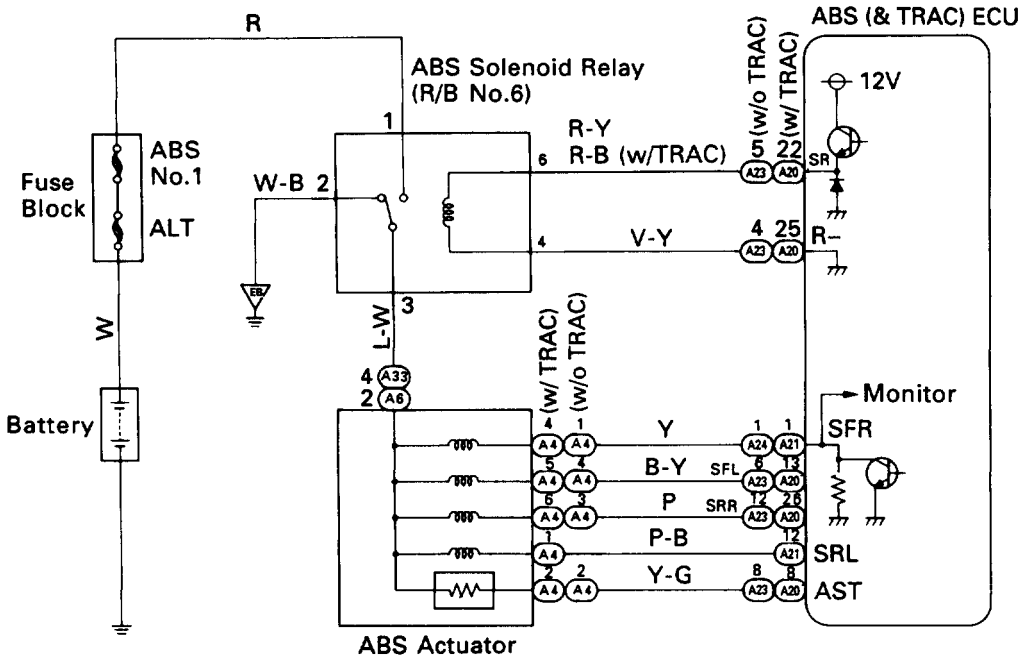

WhereEverybodyKnowsYourName

INSPECTION PROCEDURE

1 **Check ABS actuator solenoid.**

w/ TRAC

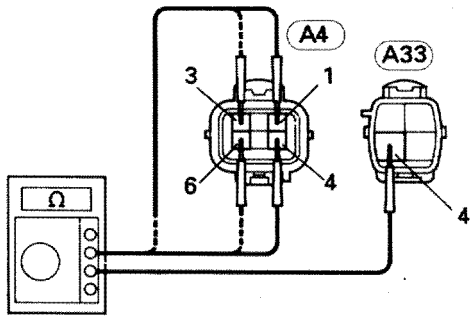

w/o TRAC

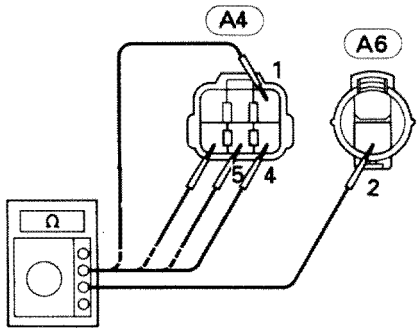

R00891
BR5420

w/o TRAC

C Check continuity between terminal A33 4 and A4 1, 3, 4, 6 of the ABS actuator connector.

OK **Continuity**

Hint Resistance of each solenoid coil is 1.2 ? .

w/ TRAC

C Check continuity between terminal A6 2 and A4 1, 4, 5, 6 of the ABS actuator connector.

OK **Continuity**

Hint Resistance of each solenoid coil is 1.2 ? .

OK

NG **Replace ABS actuator.**

2 **Check for open and short in harness and connector between ABS (& TRAC) ECU and actuator (See page IN–33).**

OK

NG **Repair or replace harness or connector.**

If the same code is still output after the diagnostic trouble code is deleted, check the contact condition of each connection.
If the connections are normal, the ECU may be defective.

WhereEverybodyKnowsYourName

–MEMO–

WhereEverybodyKnowsYourName

DTC	25, 26, 27	TRAC Actuator Solenoid Circuit

CIRCUIT DESCRIPTION

The TRAC actuator solenoid operates in accordance with signals from the ECU, changing TRAC to the normal, pressure increase, pressure reduction or holding mode.

DTC No.	DTC Detecting Condition	Trouble Area
25	Conditions (1) and (2) continue for 0.05 sec. ormore: (1) TRAC solenoid relay (TSR) terminalvoltage: Battery positive voltage (2) Voltage of ABS & TRAC ECU terminal SMC: 0 V	•TRAC actuator •Open or short in SMC circuit •ECU
26	Conditions (1) and (2) continue for 0.05 sec. ormore:(1) TRAC solenoid relay (TSR) terminalvoltage: Battery positive voltage(2) Voltage of ABS & TRAC ECU terminalSAC: 0V	•TRAC actuator •Open or short in SAC circuit •ECU
27	Conditions (1) and (2) continue for 0.05 sec. ormore:(1) TRAC solenoid relay (TSR) terminalvoltage: Battery positive voltage(2) Voltage of ABS (& TRAC) ECU terminal SRC: 0V	•TRAC actuator •Open or short in SRC circuit •ECU

Fail safe function: If trouble occurs in this solenoid circuit, the ECU cuts off the current to the ABS and TRAC solenoid relays and prohibits ABS and TRAC control.

DIAGNOSTIC CHART

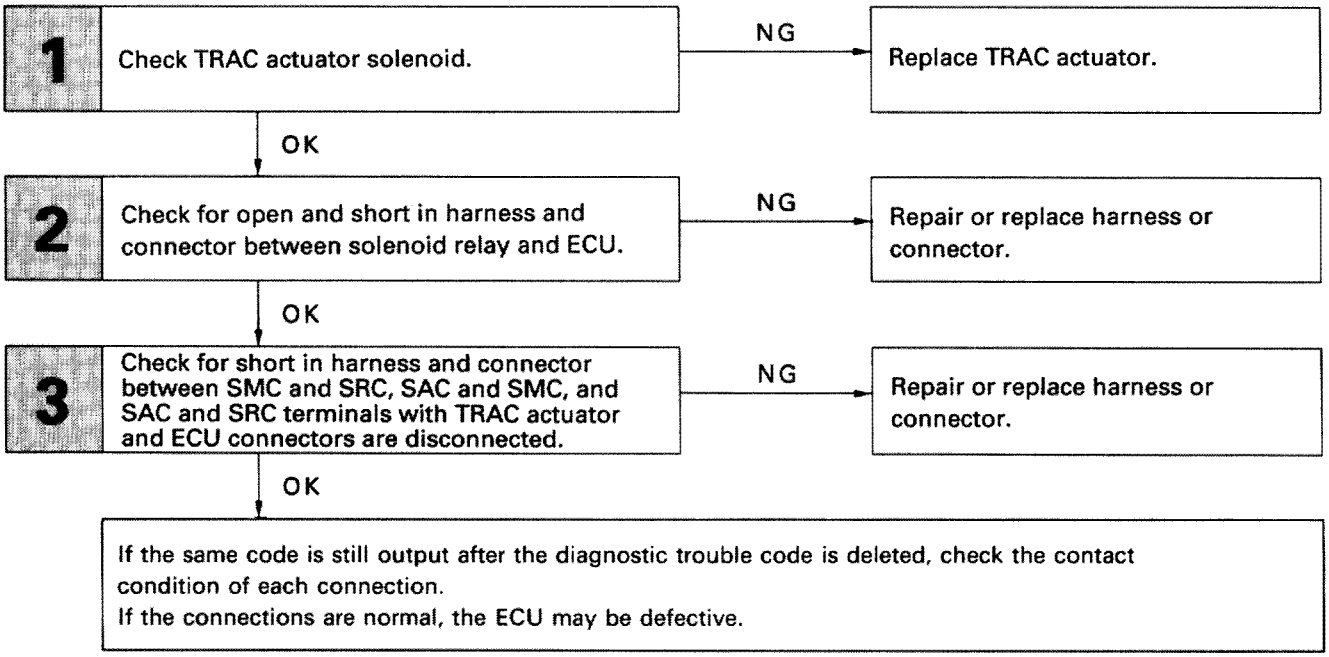

WhereEverybodyKnowsYourName

WIRING DIAGRAM

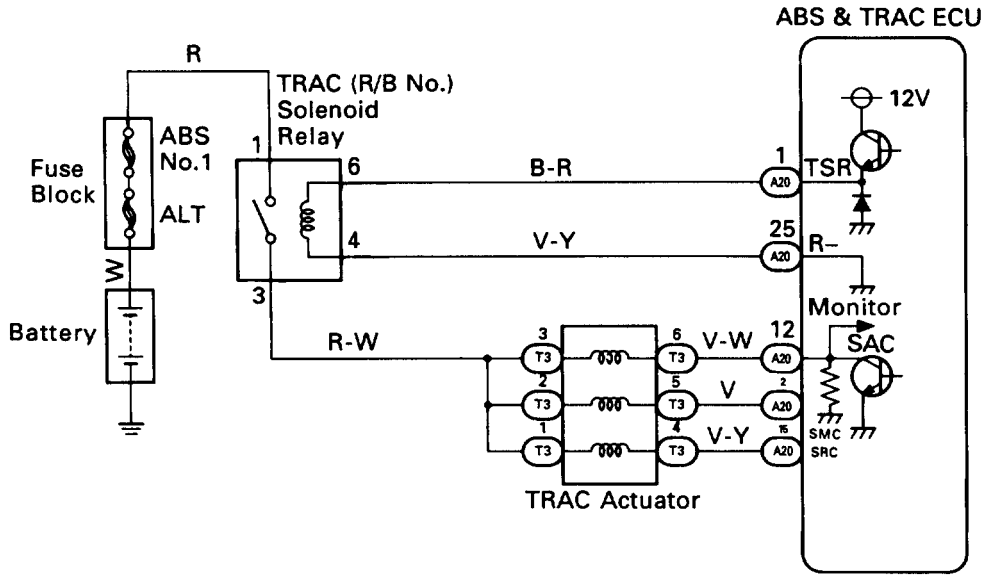

WhereEverybodyKnowsYourName

INSPECTION PROCEDURE

1 **Check TRAC actuator solenoid.**

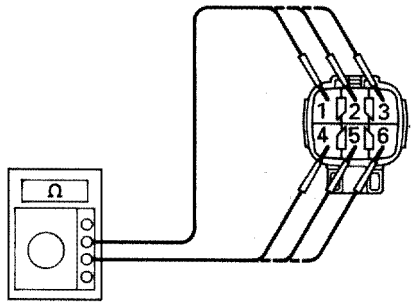

BR5421

P Disconnect TRAC actuator connector.

C Check continuity between each terminal of TRAC actuator shown below.

OK

Terminals 1 and 4	Continuity (Reference value 2.1 Ω)
Terminals 2 and 5	
Terminals 3 and 6	

OK → **NG** → **Replace TRAC actuator.**

2 **Check for open and short in harness and connector between solenoid relay and ECU (See page IN–33).**

OK → **NG** → **Repair or replace harness or connector.**

3 **Check for short in harness and connector between SMC and SRC, SAC and SMC, and SAC and SRC terminals with TRAC actuator and ECU connectors are disconnected.**

OK → **NG** → **Repair or replace harness or connector.**

If the same code is still output after the diagnostic trouble code is deleted, check the contact condition of each connection. If the connections are normal, the ECU may be defective.

WhereEverybodyKnowsYourName

–MEMO–

WhereEverybodyKnowsYourName

DTC	31, 32, 33, 34, 35, 36	Speed Sensor Circuit

CIRCUIT DESCRIPTION

The speed sensor detects the wheel speed and sends the appropriate signals to the ECU. These signals are used for control of both the ABS and TRAC control systems. The front and rear rotors each have 48 serrations. When the rotors rotate, the magnetic field emitted by the permanent magnet in the speed sensor generates an AC voltage. Since the frequency of this AC voltage changes in proportion to the speed of the rotors (wheels) the frequency is used by the ECU to detect the speed of each wheel.

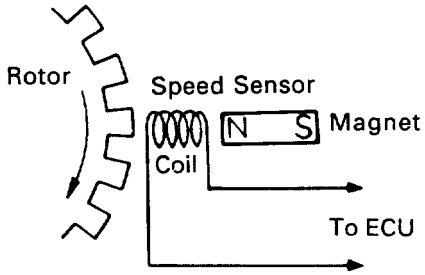

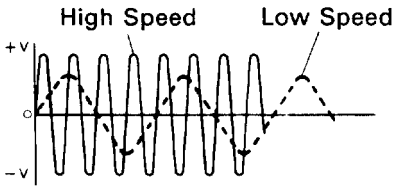

BR3583

BR3582

DTC No.	DTC Detecting Condition	Trouble Area
31, 32, 33, 34	Detection of any of conditions (1) through (3): (1) At vehicle speed of 10 km/h (6 mph) or more, pulses are not input for 5 sec. (2) Momentary interruption of the vehicle speed sensor signal occurs at least 7 times in the time between switching the ignition switch ON and switching it OFF. (3) Abnormal fluctuation of speed sensor signals with the vehicle speed 20 km/h (12 mph) or more.	•Right front, left front, right rear and left rear speed sensor. •Open or short in each speed sensor circuit. •ECU
35	Vehicle speed sensor signal is not input for about 1 sec. while the left front and right rear with the vehicle speed sensor signals are being checked IG switch ON.	•Open in left front, right rear speed sensor circuit. •ECU
36	Vehicle speed sensor signal is not input for about 1 sec. while the right front and left rear vehicle speed sensor signals are being checked with the IG switch ON.	•Open in right front, left rear speed sensor circuit. •ECU

HINT: DTC No. 31 is for the right front wheel speed sensor.
DTC No. 32 is for the left front wheel speed sensor.
DTC No. 33 is for the right rear wheel speed sensor.
DTC No. 34 is for the left rear wheel speed sensor.

Fail safe function: If trouble occurs in the speed sensor circuit, the ECU cuts off current to the ABS solenoid relay and prohibits ABS control.

WhereEverybodyKnowsYourName

DIAGNOSTIC CHART

1 Check speed sensor.
- NG → Replace speed sensor.
- OK ↓

2 Check for open and short in harness and connector between each speed sensor and ECU.
- NG → Repair or replace harness or connector.
- OK ↓

3 Check sensor rotor and sensor installation.
- NG → Replace speed sensor or rotor.
- OK ↓

Check and replace ABS (& TRAC) ECU.

WIRING DIAGRAM

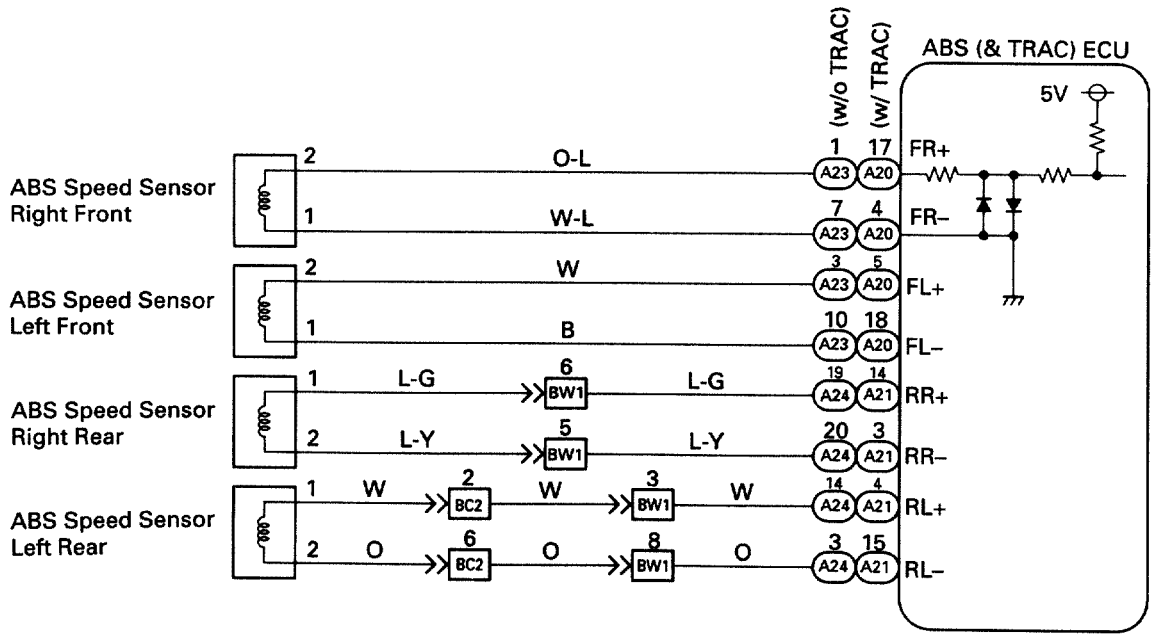

WhereEverybodyKnowsYourName

INSPECTION PROCEDURE

1 **Check speed sensor.**

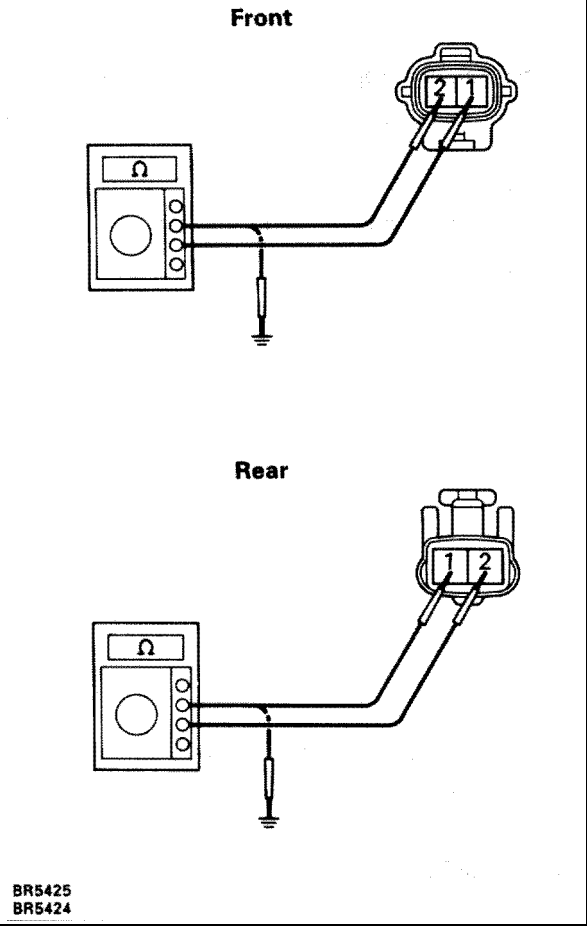

Front

P 1. Remove front fender liner.

2. Disconnect speed sensor connector.

C Measure resistance between terminals 1 and 2 of speed sensor connector.

OK **Resistance: 0.6 – 1.8 k**

Measure resistance between terminals 1 and 2 of speed sensor connector and body ground.

OK **Resistance: 1 M or higher**

Rear

P 1. Remove rear fender liner.

2. Disconnect speed sensor connector.

C Measure resistance between terminals 1 and 2 of speed sensor connector.

OK **Resistance: 0.6 – 1.7 k**

C Measure resistance between terminals 1 and 2 of speed sensor connector.

OK **Resistance: 1 M or higher**

OK

NG **Replace speed sensor.**

2 **Check for open and short in harness and connector between each speed sensor and ECU (See page IN–33).**

OK

NG **Repair or replace harness or connector.**

WhereEverybodyKnowsYourName

3	Check sensor rotor and sensor installation.

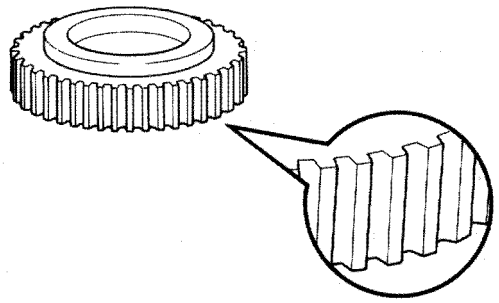

Front

P Remove front speed sensor rotor (See page BR–71).

C Check sensor rotor serrations.

OK No scratches or missing teeth.

C Check the front speed sensor installation.

OK **The installation bolt is tightened properly.**

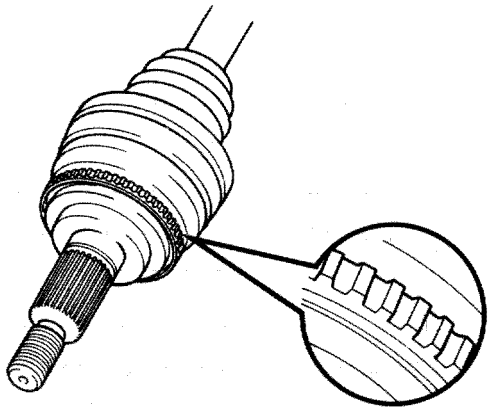

Rear

P Remove the drive shaft (See page SA–64).

C Check the sensor rotor serrations.

OK **No scratches or missing teeth.**

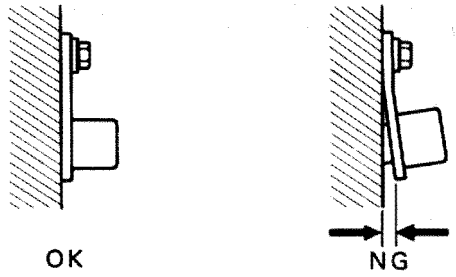

BR3719
BR3720
BR3795

C Check the rear speed sensor installation.

OK **The installation bolt is tightened properly and there is no clearance between the sensor and rear axle carrier.**

OK

NG **Replace speed sensor or rotor.**

Check and replace ABS (& TRAC) ECU.

WhereEverybodyKnowsYourName

DTC 41 IG Power Source Circuit

CIRCUIT DESCRIPTION

This is the power source for the ECU and becomes the power source for the CPU and actuators.

DTC No.	DTC Detecting Condition	Trouble Area
41	Vehicle speed is 3 km/h (1.9 mph) or moreand voltage of ECU terminal IG remains atmore than 17V or below 9.5V for more than10 sec.	•Battery •IC regulator •Open or short in power source circuit •ECU

Fail safe function: If trouble occurs in the power source circuit, the ECU cuts off current to the ABS solenoid relay and prohibits ABS control.

DIAGNOSTIC CHART

1 Check battery positive voltage.
- NG → Check and repair the charging system.
- OK ↓

2 Check voltage between terminals IG1 and GND of ABS (& TRAC) ECU connector.
- OK → Check and replace ABS (& TRAC) ECU.
- NG ↓

3 Check continuity between terminal GND of ABS (& TRAC) ECU connector and body ground.
- NG → Repair or replace harness or connector.
- OK ↓

4 Check ECU-IG fuse.
- NG → Check for short in all the harness and components connected to ECU-IG fuse (See attached wiring diagram).
- OK ↓

Check for open in harness and connector between ABS (& TRAC) ECU and battery (See page IN–33).

WIRING DIAGRAM

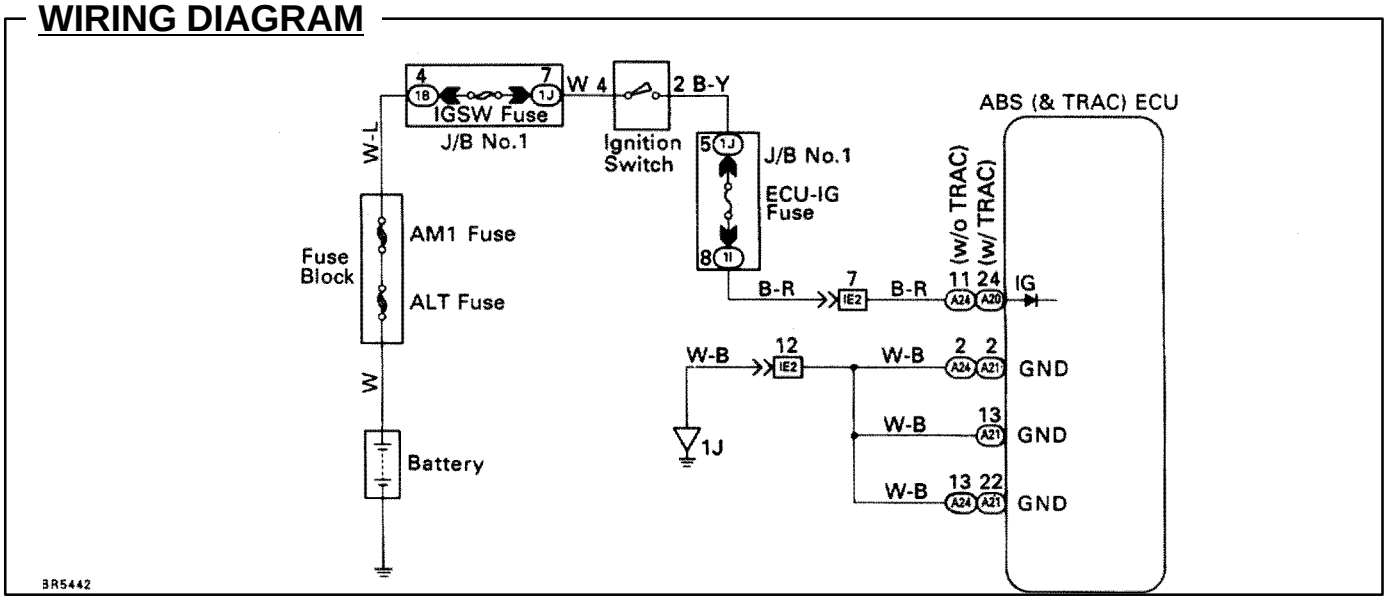

WhereEverybodyKnowsYourName

INSPECTION PROCEDURE

1	Check battery positive voltage.
OK	Voltage: 10 – 14 V

OK

NG → Check and repair the charging system.

2	Check voltage between terminals IG1 and GND or ABS (& TRAC) ECU connector.

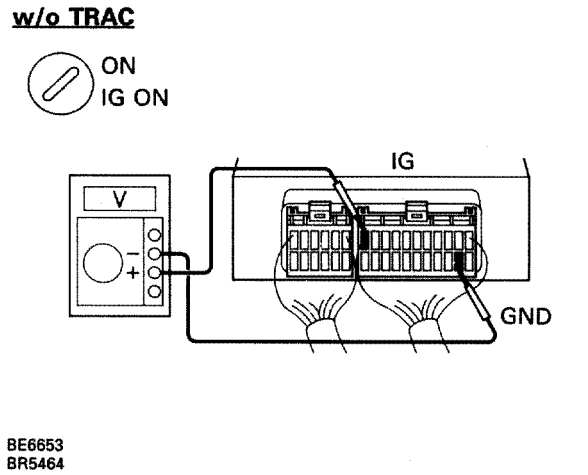

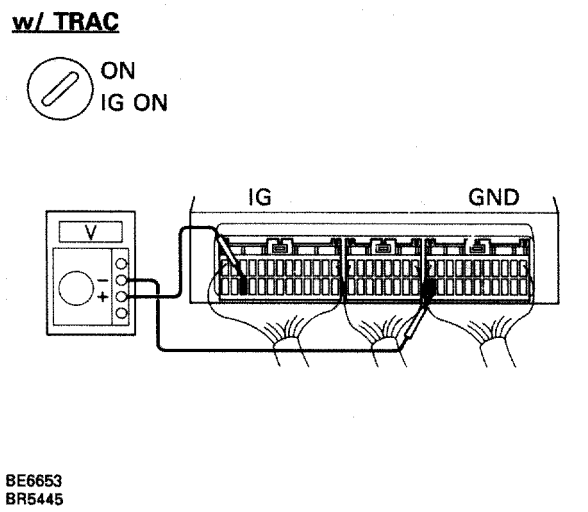

P Remove ABS (& TRAC) ECU with connectors still connected.

C
1. Turn ignition switch on.
2. Measure voltage between terminals IG1 and GND of ABS (& TRAC) ECU connector.\

OK **Voltage: 10 – 14 V**

NG

OK → Check and replace ABS (& TRAC) ECU.

WhereEverybodyKnowsYourName

3	Check continuity between terminal GND of ABS (& TRAC) ECU connector and body ground.
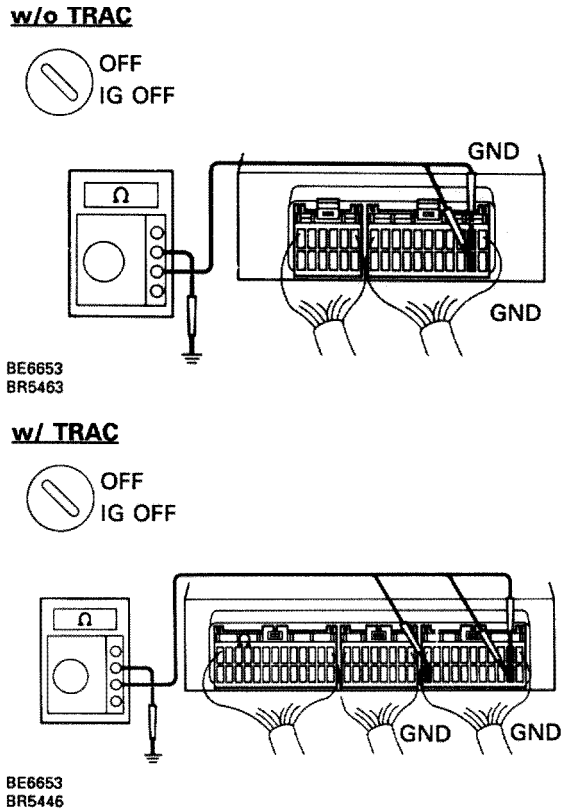	**C** Measure resistance between terminals GND or ABS (& TRAC) ECU connector and body ground. **OK** **Resistance: 1 or less**

OK

NG **Repair or replace harness or connector.**

4	Check ECU–IG fuse.
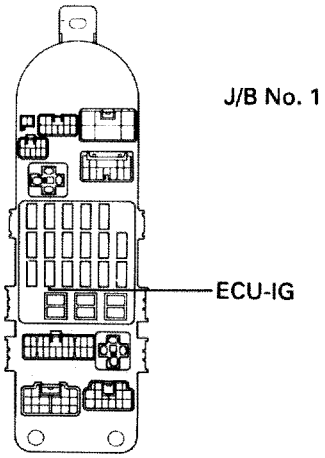	**P** Remove ECU–IG fuse from J/B No. 1. **C** Check continuity of ECU–IG fuse. **OK** **Continuity**

OK

NG **Check for short in all the harness and components connected to ECU–IG fuse (See attached wiring diagram).**

Check for open in harness and connector between ABS (& TRAC) ECU and battery (See page IN–33).

WhereEverybodyKnowsYourName

DTC 51 ABS Pump Motor Lock

CIRCUIT DESCRIPTION

DTC No.	DTC Detecting Condition	Trouble Area
51	Pump motor is not operating normally duringinitial check.	•ABS pump motor

Fail safe function: If trouble occurs in the ABS pump motor, the ECU cuts off the current to the solenoid relay and prohibits ABS control.

DIAGNOSTIC CHART

See inspection of ABS pump motor (See page BR–65 or BR–68).

WIRING DIAGRAM

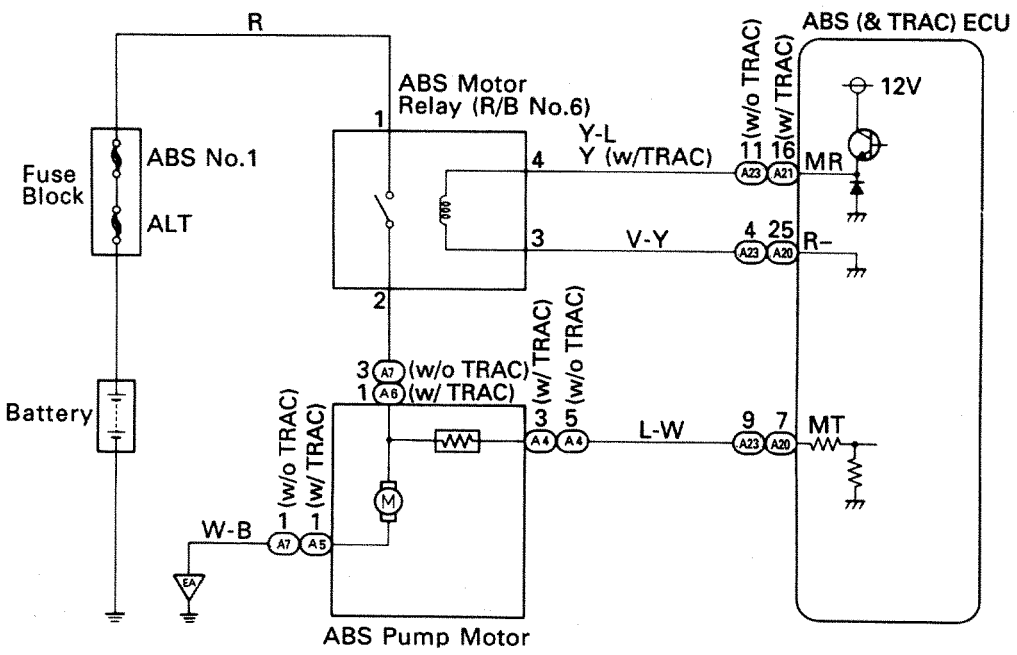

WhereEverybodyKnowsYourName

DTC 53 TRAC–Pump Motor Lock

CIRCUIT DESCRIPTION

DTC No.	DTC Detecting Condition	Trouble Area
53	• TRAC pump motor is locked • Open for TRAC pump motor ground.	•TRAC pump motor •Harness or connector between TRAC pump& motor and body ground. •TRAC Actuator •ABS & TRAC ECU

DIAGNOSTIC CHART

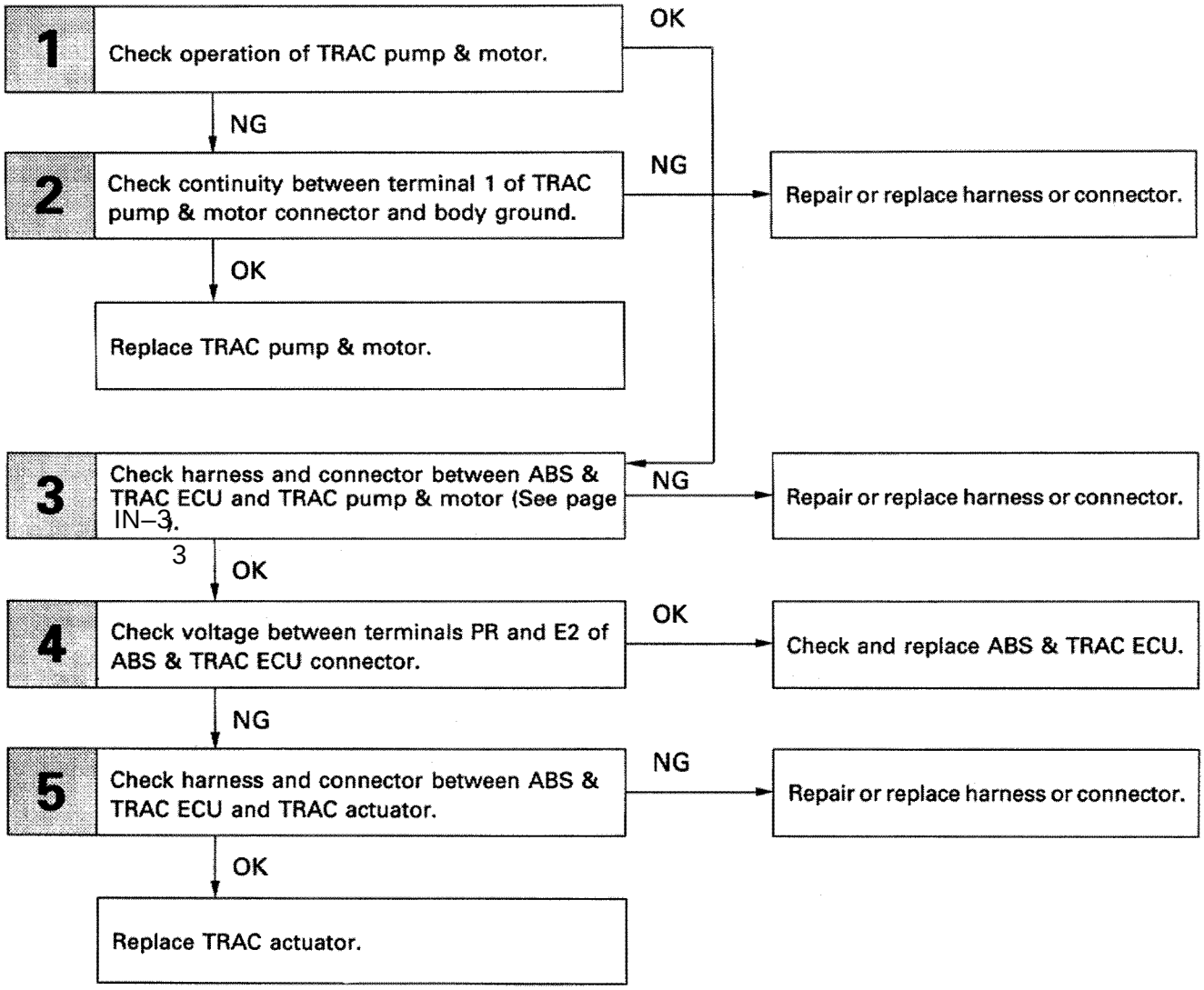

WhereEverybodyKnowsYourName

WIRING DIAGRAM

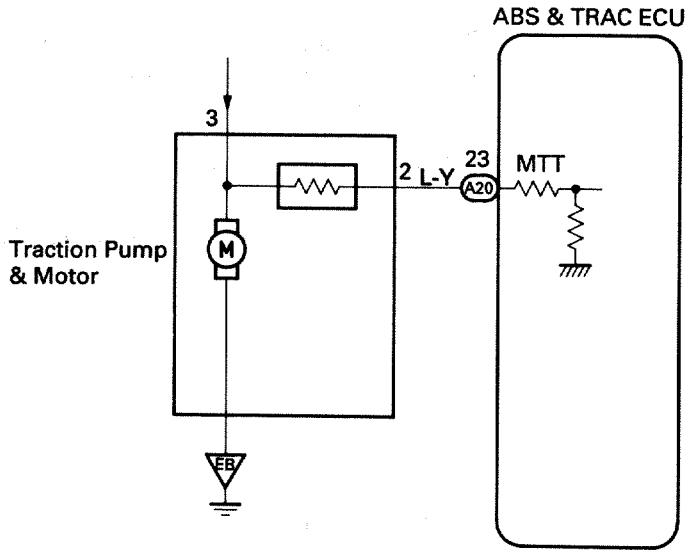

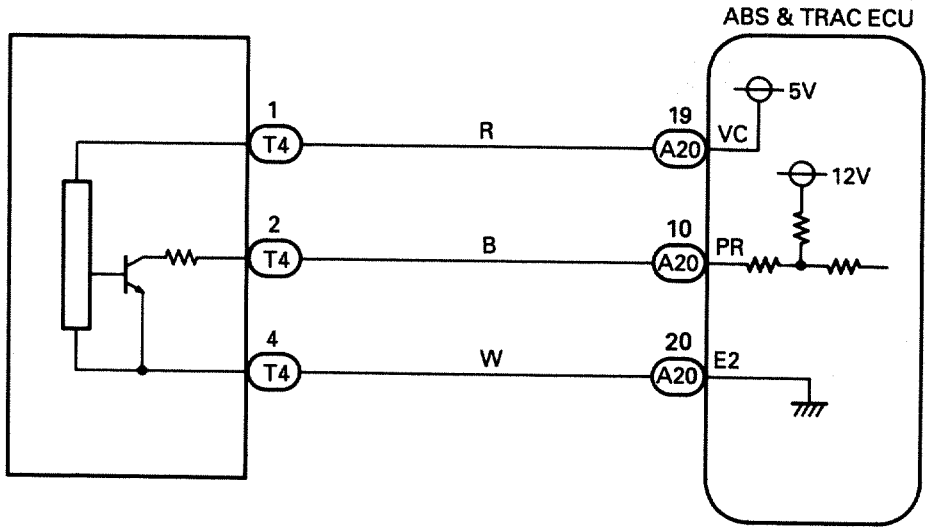

Low pressure ... Transistor OFF
High pressure ... Transistor ON

R05396
BR4377

WhereEverybodyKnowsYourName

INSPECTION PROCEDURES

1 **Check operation of TRAC pump & motor.**

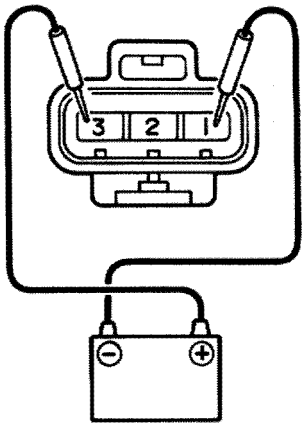

R08442

P Disconnect TRAC pump & motor connector.

C Connect positive ≦ lead to terminal 3 or TRAC pump & motor connector and negative ↔ lead to terminal 1.

Notice **Do not apply battery voltage for more than 3 sec.**

OK **The TRAC pump motor should emit an operating sound.**

NG

OK **Go to step 3.**

2 **Check continuity between terminal 1 of TRAC pump & motor connector and body ground.**

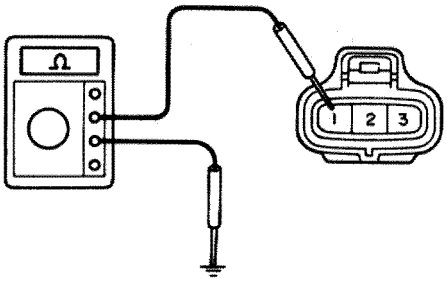

R07340

C Measure resistance between terminal 1 of TRAC pump & motor connector and body ground.

OK **Resistance: 0 (Continuity)**

OK

NG **Repair or replace harness or connector.**

Replace TRAC pump & motor.

WhereEverybodyKnowsYourName

3	Check harness and connector between ABS & TRAC ECU and TRAC pump & motor (See page IN–33).

OK

NG → **Repair or replace harness or connector.**

4	Check voltage between terminals PR and E2 of ABS & TRAC ECU connector.

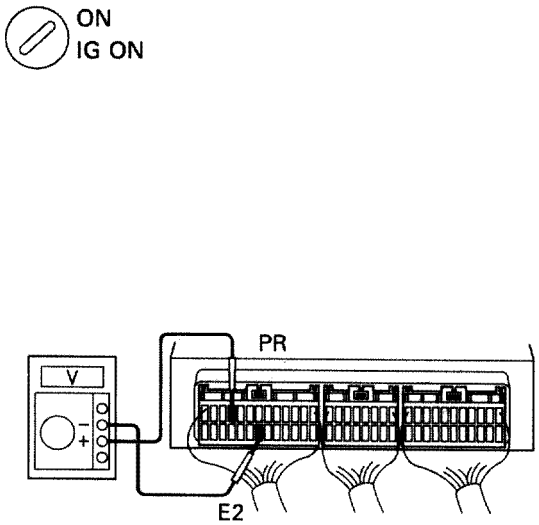

BE6653
BR5447

P
1. Remove ABS & TRAC ECU with connectors still connected.
2. Operate the engine for about 30 seconds at idle speed to raise the pressure of the TRAC actuator to a high level.

C
1. Stop the engine and then turn ignition switch ON.
2. Measure voltage between terminals PR and E2 of ABS & TRAC ECU connector.

OK **Voltage: 4 – 8 V**

C
1. Drain the fluid out of the actuator to reduce the pressure.
2. Measure voltage between terminal PR and E2 of ABS & TRAC ECU connector.

OK **Voltage: 10 – 14 V**

Notice **Add fluid to reservoir after the check.**

NG

OK → **Check and replace ABS & TRAC ECU.**

5	Check harness and connector between ABS & TRAC ECU and TRAC actuator (See page IN–33).

OK

NG → **Repair or replace harness or connector.**

Replace TRAC actuator.

WhereEverybodyKnowsYourName

DTC 54 Excessive Operation of TRAC Pump Motor

CIRCUIT DESCRIPTION

DTC No.	DTC Detecting Condition	Trouble Area
54	TRAC motor relay ON is output continuously10 times at intervals of less than 24 sec.when traction control is not being executed.	•TRAC Actuator •TRAC Accumulator •Brake fluid leakage •ECU

DIAGNOSTIC CHART

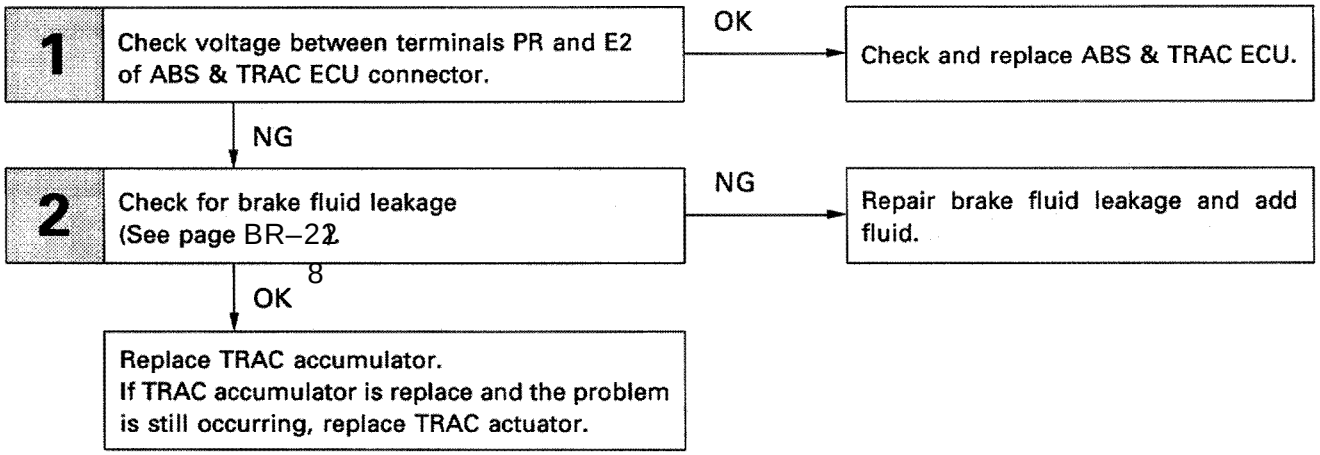

WIRING DIAGRAM

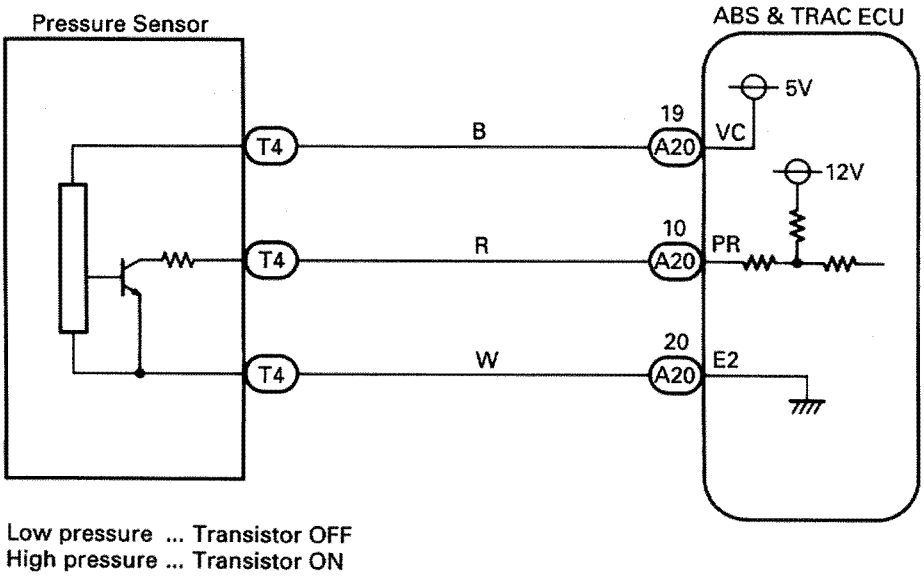

WhereEverybodyKnowsYourName

INSPECTION PROCEDURES

1	Check voltage between terminals PR and E21 of ABS & TRAC ECU connector.

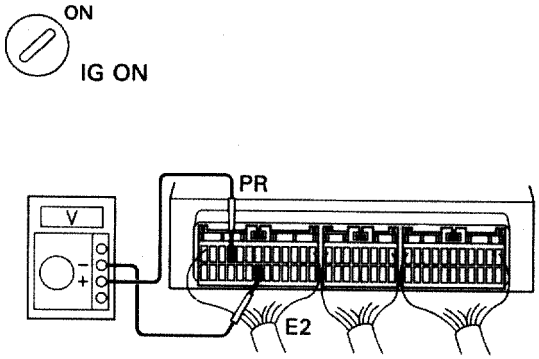

BE6653
BR5447

P
1. Remove ABS & TRAC ECU with connectors still connected.
2. Operate the engine for about 30 seconds at idle speed to raise the pressure of the TRAC actuator to a high level.

C
1. Stop the engine and then turn ignition switch ON.
2. Measure voltage between terminals PR and E2 of ABS & TRAC ECU connector.

OK **Voltage: 4 – 8 V for more than 24 sec.**

NG

OK → **Check and replace ABS & TRAC ECU.**

2	Check for brake fluid leakage.

See page BR–150**.**

OK

NG → **Repair brake fluid leakage and add fluid.**

Replace TRAC accumulator.
If TRAC accumulator is replaced and the problem is still occurring, replace TRAC actuator.

WhereEverybodyKnowsYourName

DTC 55 Brake Fluid Level Warning Switch Circuit

CIRCUIT DESCRIPTION

The brake fluid level warning switch sends the appropriate signal to the ECU when the brake fluid level drops.

DTC No.	DTC Detecting Condition	Trouble Area
55	Voltage at ECU terminal LBL is 0Vcontinuously for 10 sec. or more.	•Brake fluid level. •Brake fluid level warning switch. •Short in brake fluid level warning switchcircuit. •ECU

Fail safe function: If trouble occurs in this circuit, the ECU cuts off current to the TRAC solenoid relay and prohibits TRAC control.

DIAGNOSTIC CHART

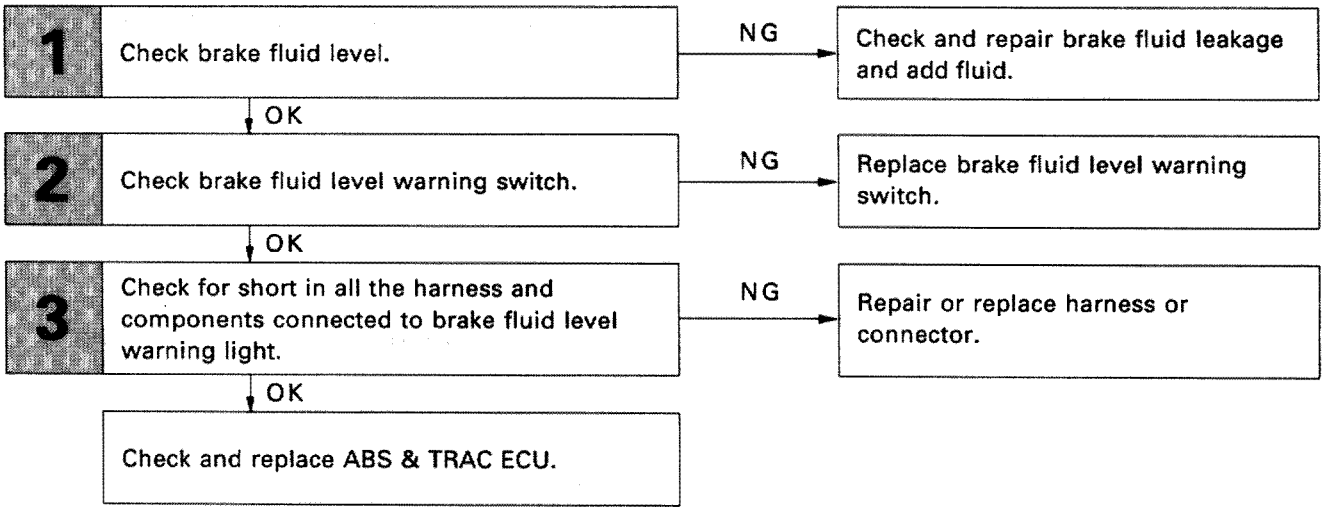

WIRING DIAGRAM

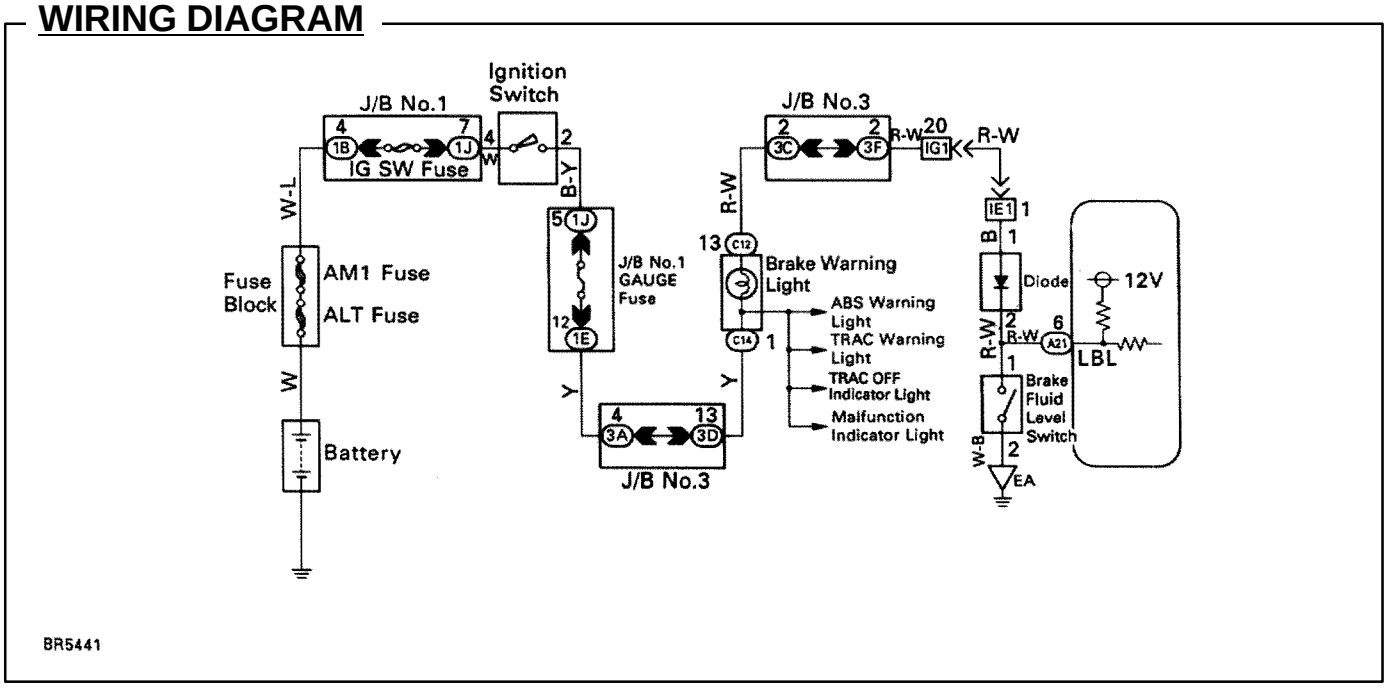

WhereEverybodyKnowsYourName

INSPECTION PROCEDURE

1	**Check brake fluid level.**
C	Check the amount of fluid in the bake reservoir.

OK

NG → **Check and repair brake fluid leakage and add fluid.**

2	**Check brake fluid level warning switch.**
See page BE–142.	

OK

NG → **Replace brake fluid level warning switch.**

3	**Check for short in all the harness and components connected to brake fluid level warning light (See page IN–33).**

OK

NG → **Repair or replace harness or connector.**

Check and replace ABS & TRAC ECU.

WhereEverybodyKnowsYourName

DTC 56, 57 Pressure Sensor Circuit

— CIRCUIT DESCRIPTION

The pressure sensor detects the TRAC accumulator hydraulic pressure and if it is low, it sends signals to the ECU to operate the pump. If the pressure is high, it sends signals to the ECU to stop the pump.

DTC No.	DTC Detecting Condition	Trouble Area
56	Pressure sensor terminal PR outputs below 1 V for about 1 sec. or more.	•Open or short in pressure sensor circuit.
57	TRAC (BRAKE) control is executed continuouslymore than 255 times while pressure sensor ONsignal is not output.	•Pressure sensor

Fail safe function: If trouble occurs in the pressure sensor circuit, the ECU cuts off current to the TRAC solenoid relay and prohibits TRAC control.

WhereEverybodyKnowsYourName

DIAGNOSTIC CHART

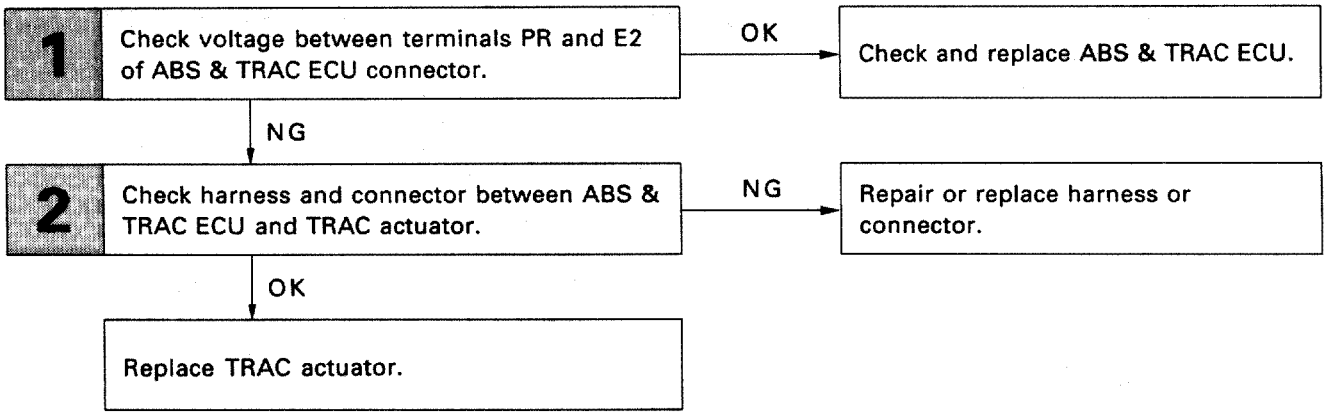

HINT: Check for leakage of brake fluid at each part when DTC No.53 is output.

WIRING DIAGRAM

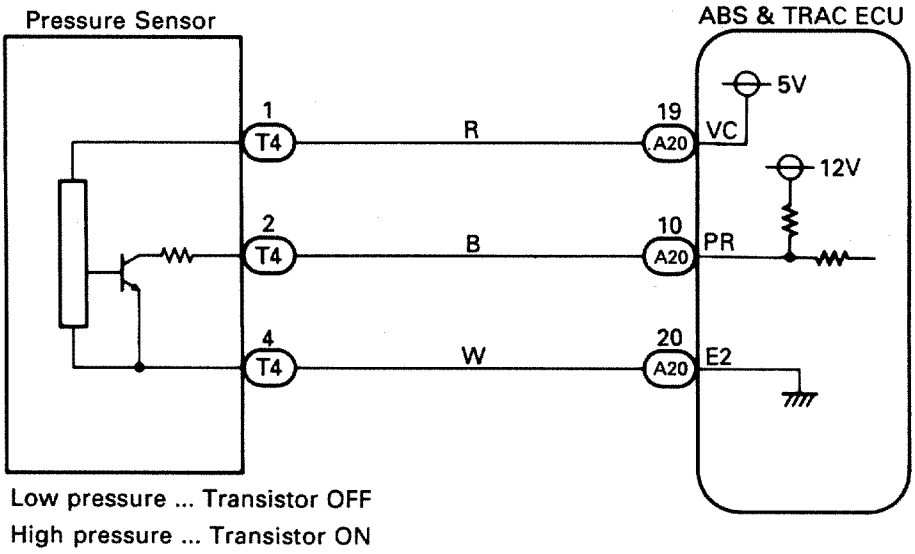

Low pressure ... Transistor OFF
High pressure ... Transistor ON

3R4377

WhereEverybodyKnowsYourName

INSPECTION PROCEDURE

1 **Check voltage between terminals PR and E2 of ABS & TRAC ECU connector.**

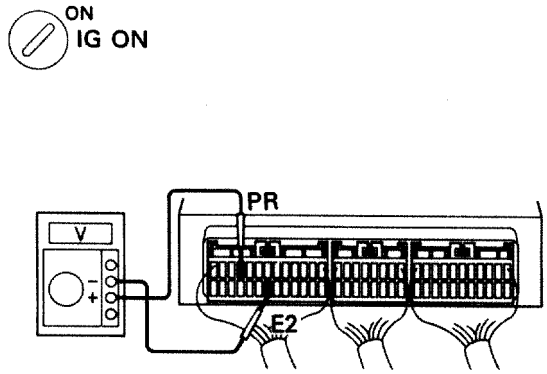

BE6653
BR5447

P
1. Remove ABS & TRAC ECU with connectors still connected.
2. Operate the engine for about 30 seconds at idle speed to raise the pressure of TRAC actuator to a high level.

C
1. Stop the engine and then turn ignition switch ON.
2. Measure voltage between terminals PR and E2 of ABS & TRAC ECU connector.

OK **Voltage: 4 – 8 V**

1. Drain the fluid out of the actuator to reduce the pressure (See page BR–48).
2. Measure voltage between terminals PR and E2 of ABS & TRAC ECU connector.

C **Voltage: 10 – 14 V**

Notice **Add fluid to reservoir after the check.**

NG → **OK** → **Check and replace ABS & TRAC ECU.**

2 **Check harness and connector between ABS & TRAC ECU and TRAC actuator (See page IN–33).**

OK → **NG** → **Repair or replace harness or connector.**

Replace TRAC actuator.

WhereEverybodyKnowsYourName

–MEMO–

WhereEverybodyKnowsYourName

DTC	61	TRAC ECU Communication Circuit Malfunction.

CIRCUIT DESCRIPTION

DTC No.	DTC Detecting Condition	Trouble Area
61	Either of the following (1) or (2) continues for more than 8 sec.: (1) Vehicle speed signal of 4 wheels is less than 1 km/h (1 mph) when TRCO signal is input. (2) THFA signal is 0V when TRCO signal is not input.	•Open or short in THFA, TRCO circuit •ABS & TRAC ECU •TRAC ECU

DIAGNOSTIC CHART

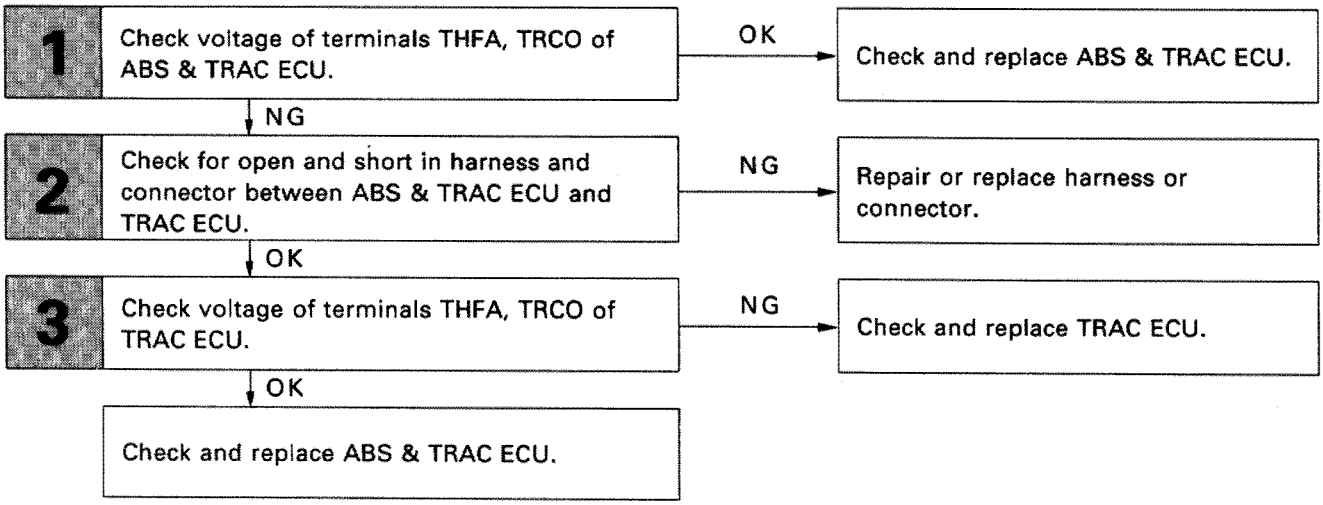

WIRING DIAGRAM

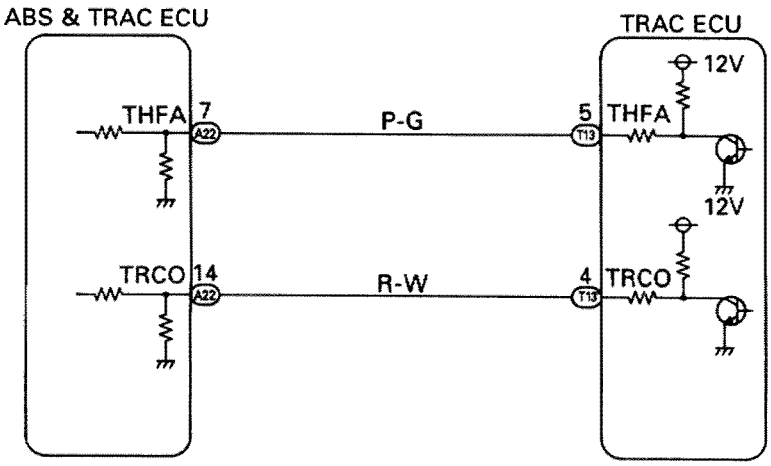

BR5413

WhereEverybodyKnowsYourName

INSPECTION PROCEDURE

1 **Check voltage between terminals THFA, TRCO of ABS & TRAC ECU and body ground.**

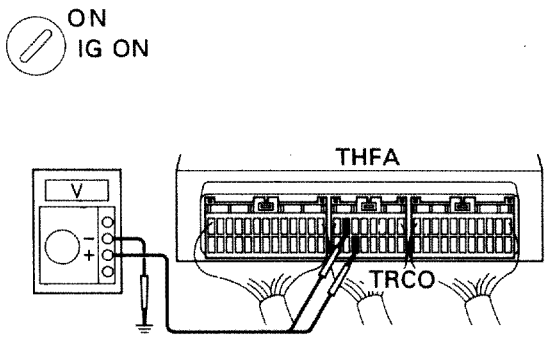

P Remove ABS & TRAC ECU with connectors still connected.

C Measure voltage between terminals THFA, TRCO of ABS & TRAC ECU and body ground when ignition switch is turned ON.

OK **Voltage: 10 – 14 V**

OK

OK **Check and replace ABS & TRAC ECU.**

2 **Check for open and short in harness and connector between ABS & TRAC ECU and TRAC ECU (See page IN–33).**

OK

NG **Repair or replace harness or connector.**

3 **Check voltage of terminals THFA, TRCO of TRAC ECU.**

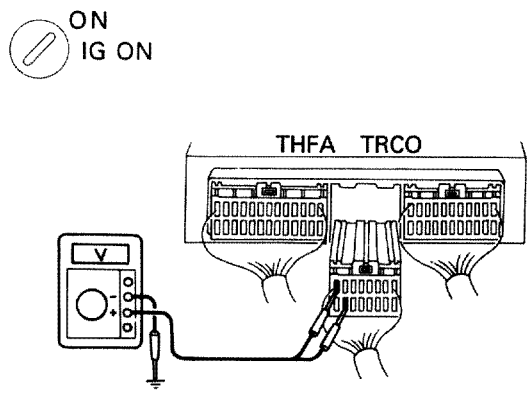

P Disconnect ABS & TRAC ECU connector.

C Measure voltage between terminals THFA, TRCO of TRAC ECU and body ground when ignition switch is turned ON.

OK **Voltage: 10 – 14 V**

OK

NG **Check and replace TRAC ECU.**

Check and replace ABS & TRAC ECU.

WhereEverybodyKnowsYourName

DTC 62 TRAC Vehicle Speed Malfunction

CIRCUIT DESCRIPTION

DTC No.	DTC Detecting Condition	Trouble Area
62	Detection of any of conditions (1) through (3): At vehicle speed of 10 km/h (6 mph) or more, pulses are not input for 5 sec.	•ECU

HINT: When DTC Nos. 31–36 are recorded in memory, DTC No. 62 is not recorded.

DIAGNOSTIC CHART

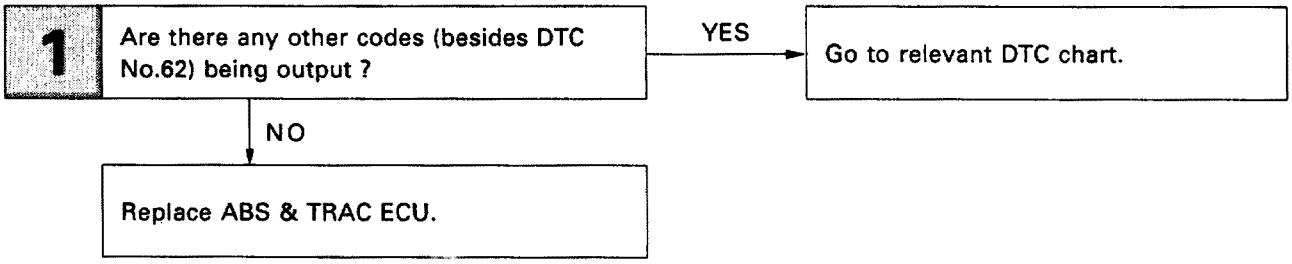

WhereEverybodyKnowsYourName

–MEMO–

WhereEverybodyKnowsYourName

Stop Light Switch Circuit

CIRCUIT DESCRIPTION

The stop light switch senses whether the brake pedal is depressed or released, and sends a signal to the ECU.

DIAGNOSTIC CHART

1 Check operation of stop light.
- NG → Repair stop light circuit (see page BE–78).
- OK ↓

2 Check voltage of terminal STP.
- OK → Proceed to next circuit inspection shown on problem symptoms chart (See page BR–74).
- NG ↓

3 Check for open in harness and connector between ABS (& TRAC) ECU and stop light switch (See page IN–33).
- NG → Repair or replace harness or connector.
- OK ↓

Check and replace ABS (& TRAC) ECU.

WIRING DIAGRAM

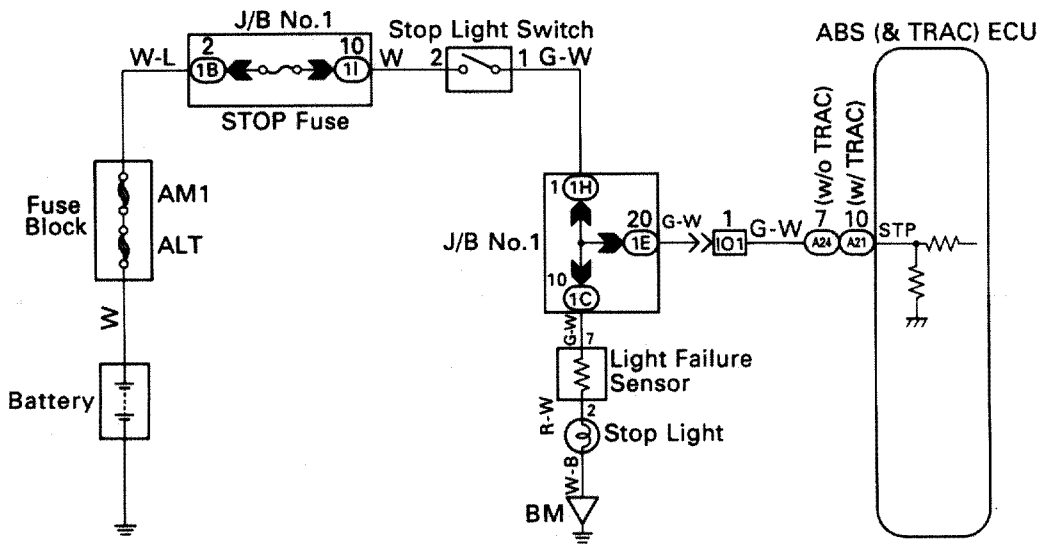

BR5428

WhereEverybodyKnowsYourName

INSPECTION PROCEDURE

1	Check operation of stop light.
C	Check that stop light lights up when brake pedal is depressed and turns off when brake pedal is released.

OK

NG → **Repair stop light circuit (See page BE–78).**

2	Check voltage between terminal STP of ABS (& TRAC) ECU and body ground.

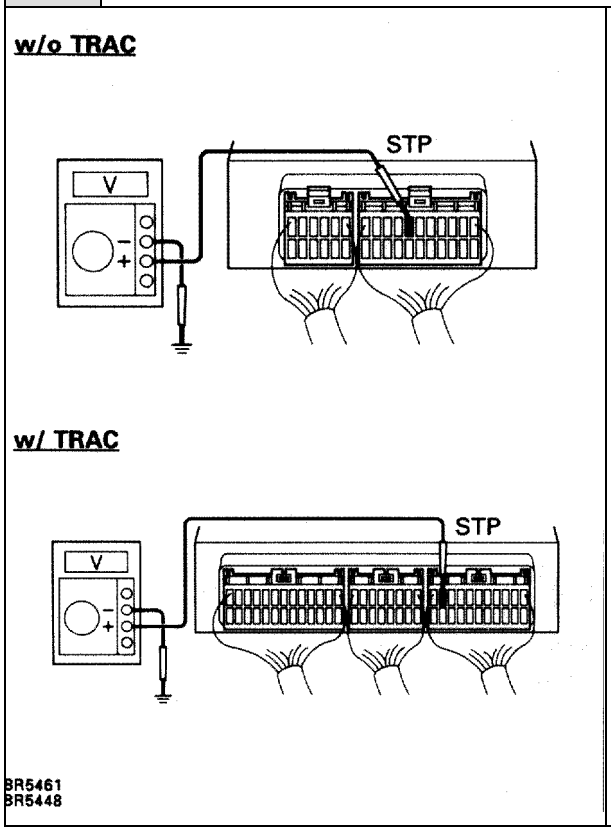

P Remove ABS (& TRAC) ECU with connectors still connected.

C Measure voltage between terminal STP of ABS (& TRAC) ECU and body ground when brake pedal is depressed.

OK **Voltage: 8 – 14 V**

NG

OK → **Proceed to next circuit inspection shown on problem symptoms chart (See page BR–74).**

3	Check for open in harness and connector between ABS (& TRAC) ECU and stop light switch (See page IN–33).

OK

NG → **Repair or replace harness or connector.**

Check and replace ABS (& TRAC) ECU.

WhereEverybodyKnowsYourName

ABS Warning Light Circuit

CIRCUIT DESCRIPTION

If the ECU detects trouble, it lights the ABS warning light while at the same time prohibiting ABS control. At this time, the ECU records a diagnostic trouble code in memory.After removing the short pin of the DLC1, connect a DLC1 or connect terminals Tc and E1 of the DLC2 to make the ABS warning light to blink and output the diagnostic trouble code.DIAGNOSTIC CHARTPerform troubleshooting in accordance with the chart below for each trouble symptom.

DIAGNOSTIC CHART

Perform troubleshooting in accordance with the chart below for each trouble symptom.

ABS warning light does not light up	Go to step
ABS warning light remains on	Go to step

WIRING DIAGRAM

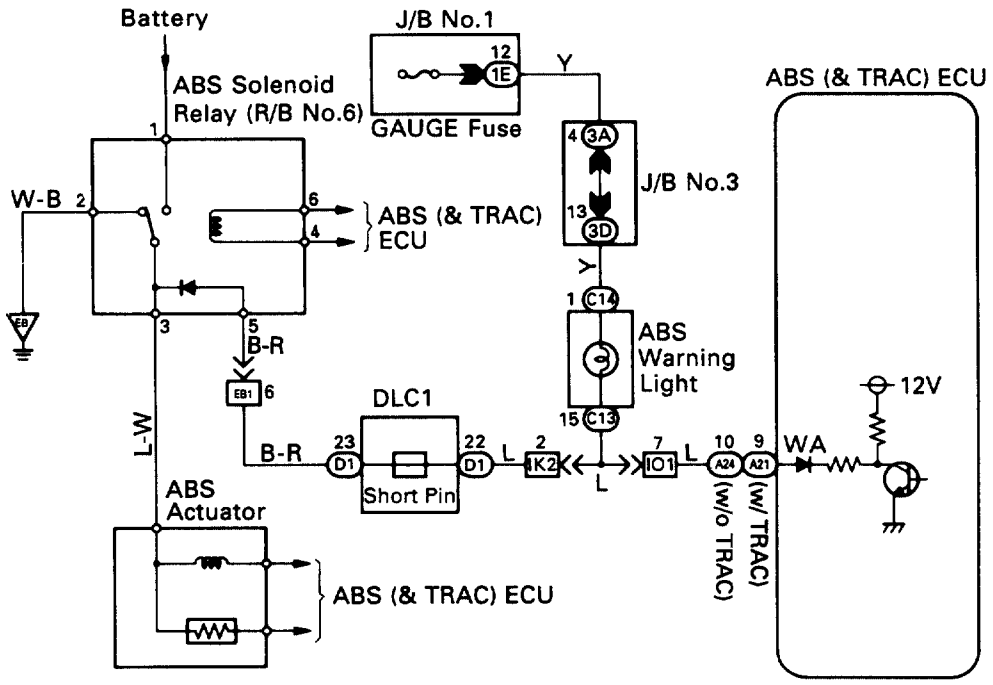

WhereEverybodyKnowsYourName

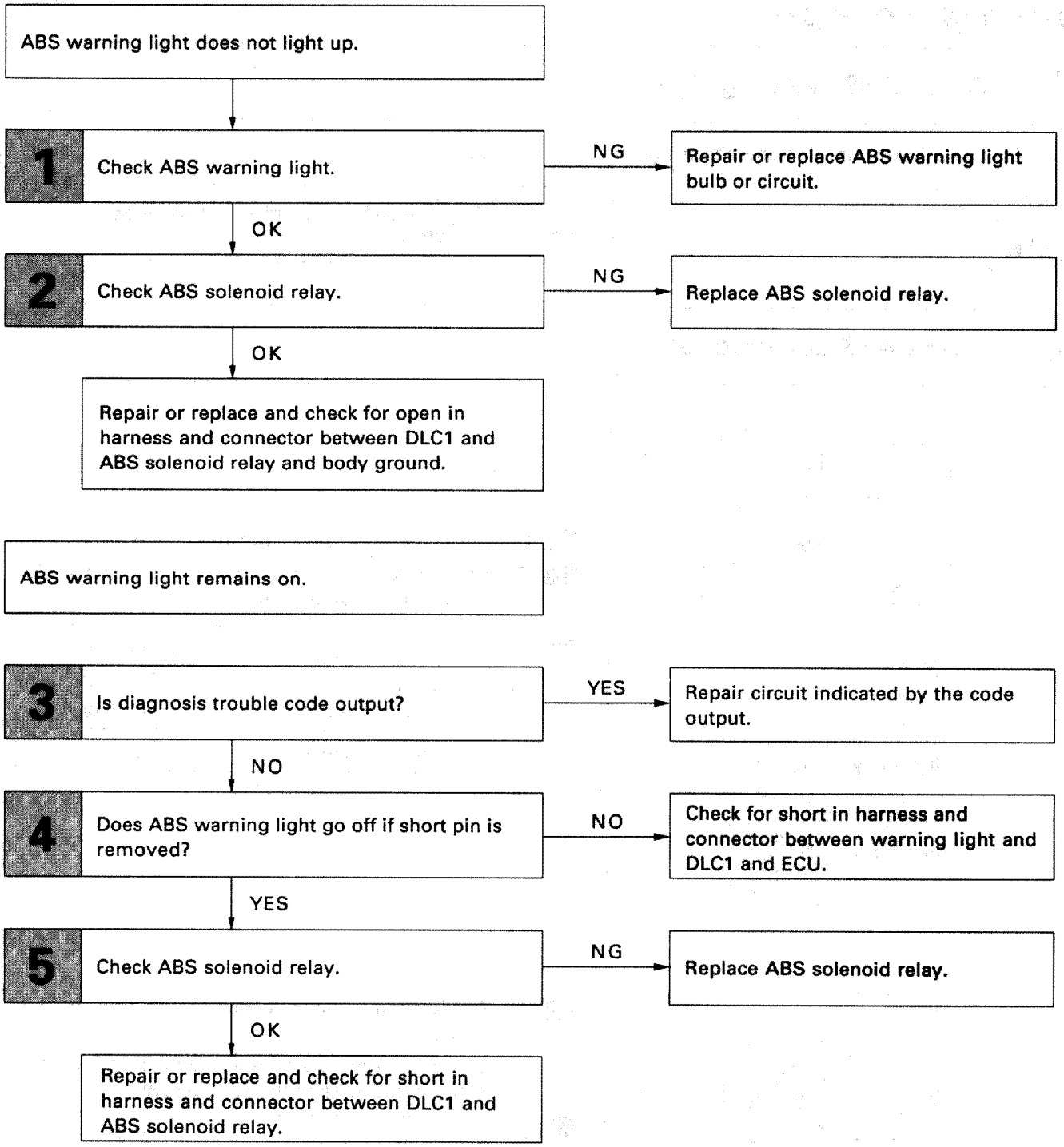

WhereEverybodyKnowsYourName

INSPECTION PROCEDURE

1	Check ABS warning light.
See Combination Meter Troubleshooting on page BE–159.	

OK

NG **Replace bulb or combination meter assembly.**

2	Check ABS solenoid relay.

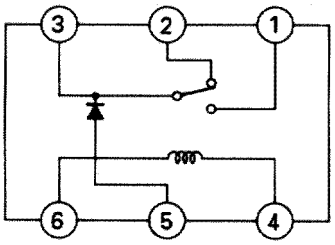

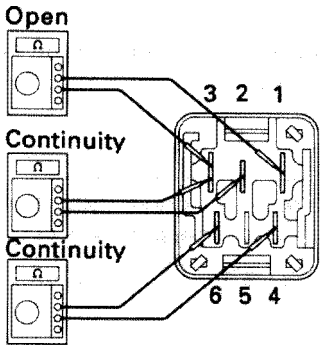

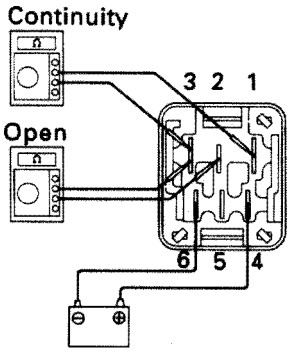

BR5403
BR5404
BR5405

P Remove solenoid relay from R/B No. 6.

C Check continuity between each terminal of ABS solenoid relay shown below.

OK

Terminals 4 and 6	Continuity (Reference value 80Ω)
Terminals 2 and 3	Continuity
Terminals 1 and 3	Open

C
1. Apply battery voltage between terminals 4 and 6.
2. Check continuity between each terminal of ABS solenoid relay shown below.

OK

Terminals 2 and 3	Open
Terminals 1 and 3	Continuity

OK

NG **Replace ABS solenoid relay.**

Repair or replace and check for open in harness and connector between check connector and ABS solenoid relay and body ground (See page IN–33).

WhereEverybodyKnowsYourName

INSPECTION PROCEDURE

3	Is diagnosis trouble code output?
Perform diagnostic trouble code check on page BR–76.	

NO

YES → **Repair circuit indicated by the code output.**

4	Does ABS warning light go off if short pin is removed?

YES

NO → **Check for short in harness and connector between warning light and data link connector 1 and ECU (See page IN–33).**

5	Check ABS solenoid relay (See step No. 2).

OK

NG → **Replace ABS solenoid relay.**

Repair or replace and check for short in harness and connector between data link connector 1 and ABS solenoid relay (See page IN–33).

WhereEverybodyKnowsYourName

Tc Terminal Circuit

CIRCUIT DESCRIPTION

Connecting between terminals Tc and E1 of the DLC1 or the DLC2 causes the ECU to display the diagnostic trouble code by flashing the ABS warning light.

DIAGNOSTIC CHART

HINT: First confirm that the ABS warning light is operating normally.

1 Check voltage between terminals Tc and E1 of DLC2 or DLC1.
- OK → If ABS warning light does not blink even after Tc and E1 are connected, the ECU may be defective. *
- NG ↓

2 Check for open and short in harness and connector between ABS (& TRAC) ECU and DLC2 or DLC1, DLC2 or DLC1 and body ground (See page IN–33).
- NG → Repair or replace harness or connector.
- OK ↓

Check and replace ABS (& TRAC) ECU.

*: Provided that the harness between terminal Tc of DLC2 or DLC1 and terminal Tc of ECU is not open.

WIRING DIAGRAM

w/o TRAC

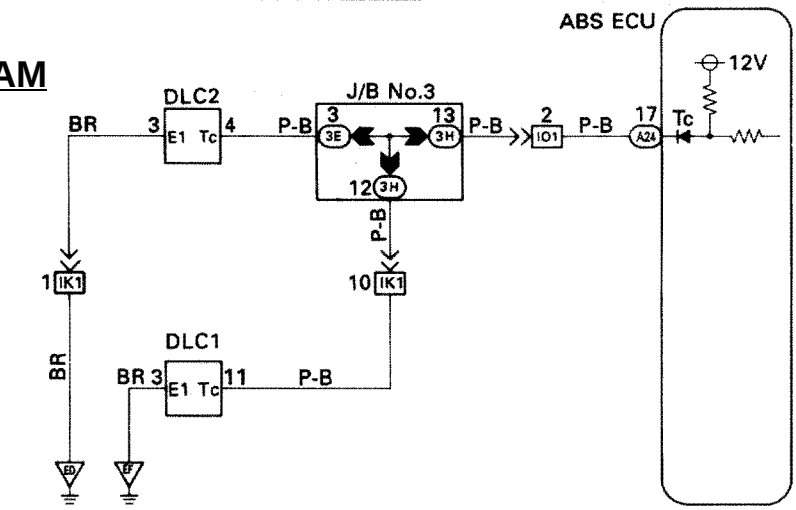

w/ TRAC

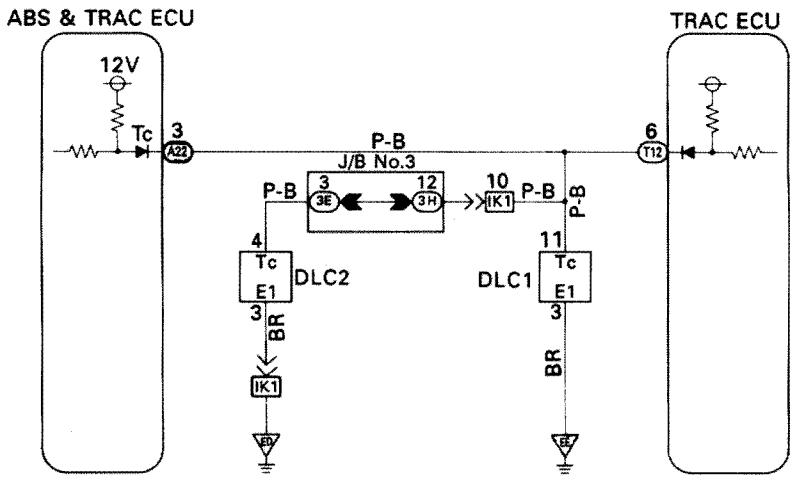

R01417
R01416

WhereEverybodyKnowsYourName

INSPECTION PROCEDURE

1	Check voltage between terminals Tc and E1 of DLC2 or DLC1.
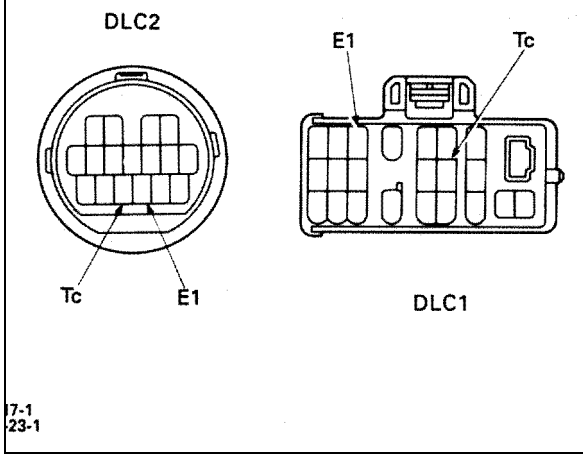	**P** Turn ignition switch ON. **C** Measure voltage between terminals Tc and E1 of DLC2 or DLC1. **OK** **Voltage: 10 – 14 V**

NG

OK **If ABS warning light does not blink even after Tc and E1 are connected,t he ECU may be defective.**

2	Check for open and short in harness and connector between ABS (& TRAC) ECU and DLC2 or DLC1, DLC2 or DLC1 and body ground (See page IN–33).

OK

NG **Repair or replace harness or connector.**

Check and replace ABS (& TRAC) ECU.

WhereEverybodyKnowsYourName

Ts Terminal Circuit

CIRCUIT DESCRIPTION

The sensor check circuit detects abnormalities in the speed sensor signal which can not be detected with the diagnostic trouble code check.Connecting terminals Ts and E1 of the DLC1 in the engine compartment starts the check.

DIAGNOSTIC CHART

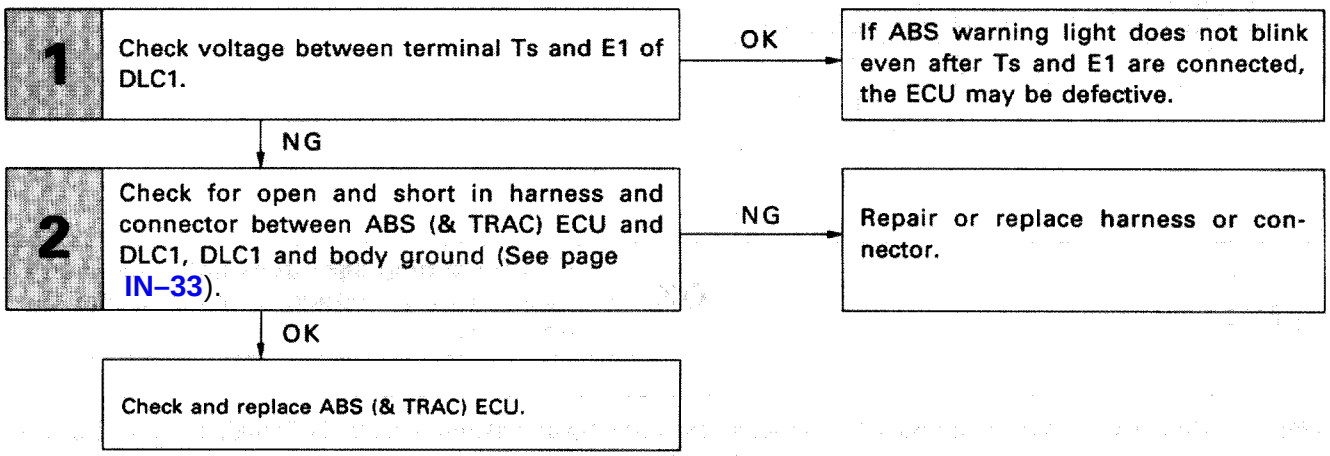

WIRING DIAGRAM

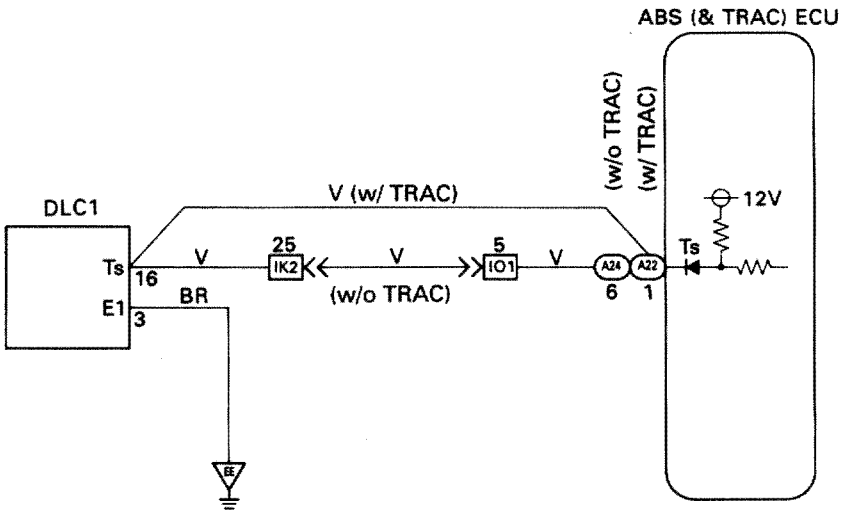

R01414

WhereEverybodyKnowsYourName

INSPECTION PROCEDURE

1	Check voltage between terminal Ts and E1 of data link connector 1.
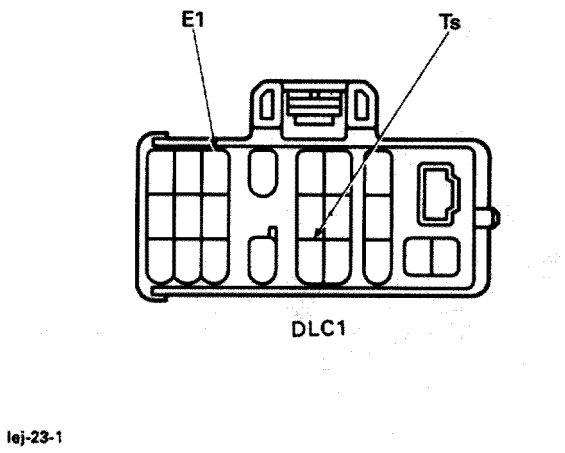	**P** Turn ignition switch ON. **C** Measure voltage between terminals Ts and E1 of DLC1. **OK** **Voltage: 10 – 14 V**

NG

OK **If ABS warning light does not blink even after Ts and E1 are connected, the ECU may be defective.**

2	Check for open and short in harness and connector between ABS (& TRAC) ECU and DLC1, DLC1 and body ground (See page IN–33).

OK

NG **Repair or replace harness or connector.**

Check and replace ABS (& TRAC) ECU.

WhereEverybodyKnowsYourName

Check for Fluid Leakage.

Check for fluid leakage from actuator or hydraulic lines.

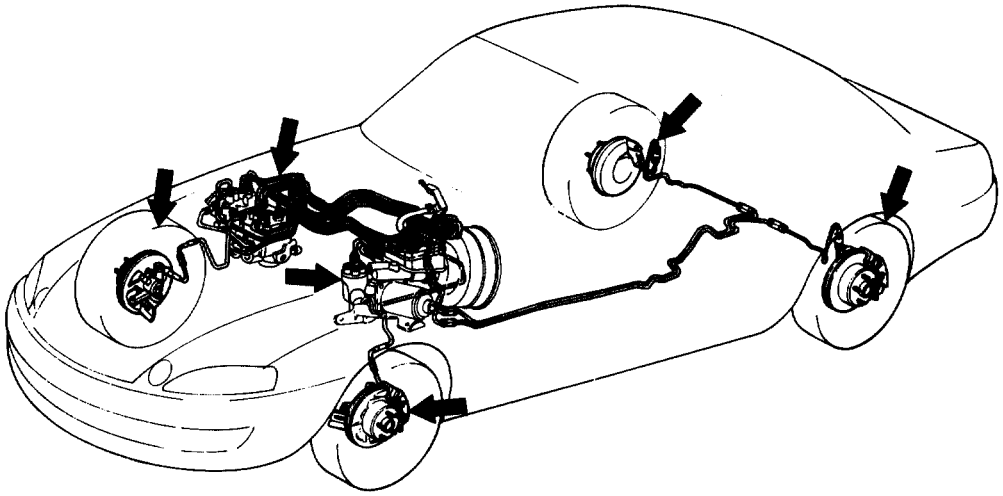

R00002

WhereEverybodyKnowsYourName

TRACTION CONTROL SYSTEM (TRAC)

DESCRIPTION

BR0F3–01

The TRAC (Traction Control) system totally controls the engine torque and the braking of the driving wheels (rear wheels). It helps avoid slippage of the driving wheels that tends to happen during starting and acceleration and to maintain an optimal driving force according to the road surface conditions. The system eliminates the need for a subtle accelerator pedal operation and improves vehicle stability when starting, accelerating or turning on slippery roads.
The TRAC system is an option.

SYSTEM PARTS LOCATION

BR0F4–01

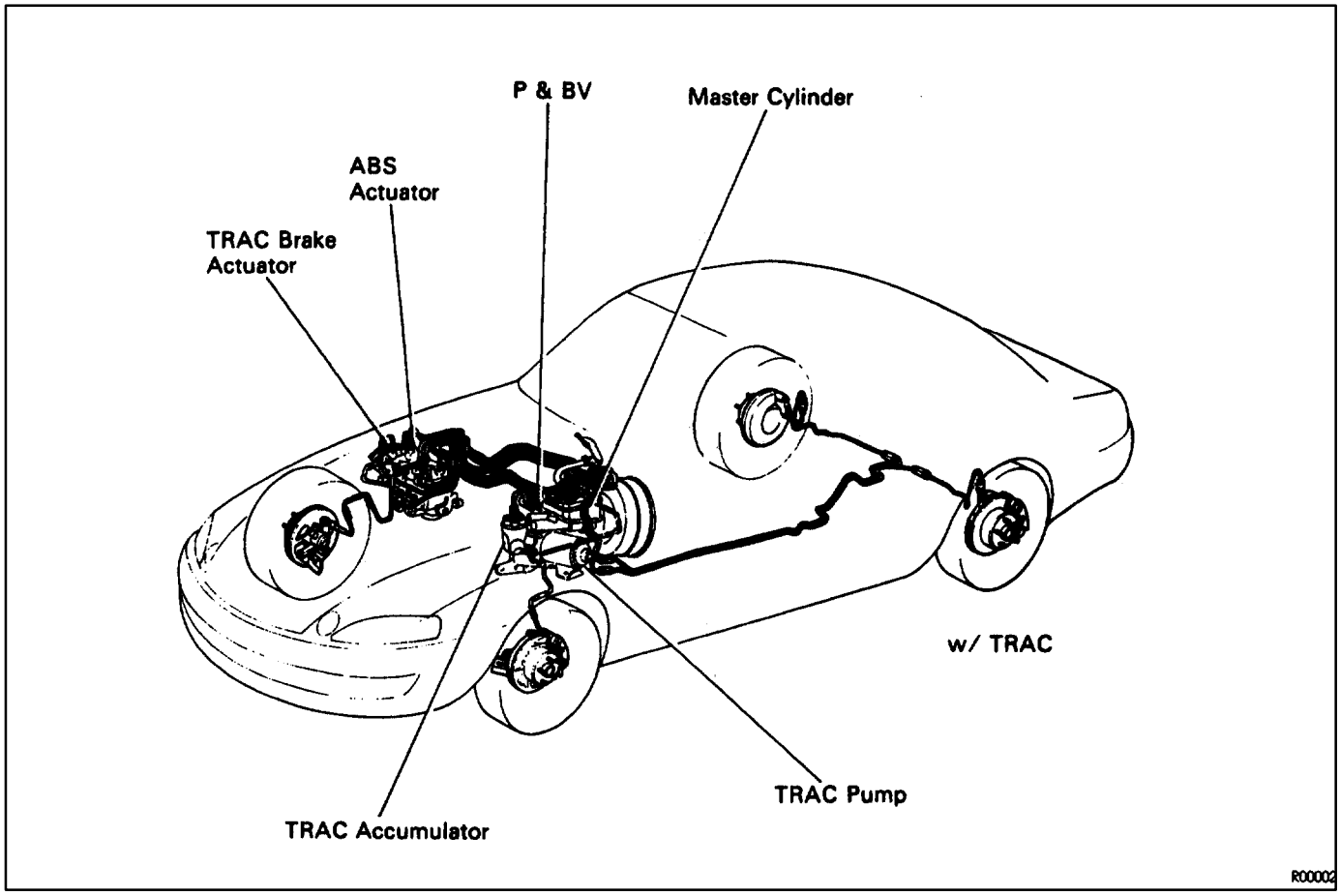

WhereEverybodyKnowsYourName

HYDRAULIC SYSTEM DIAGRAM

BR0F5–01

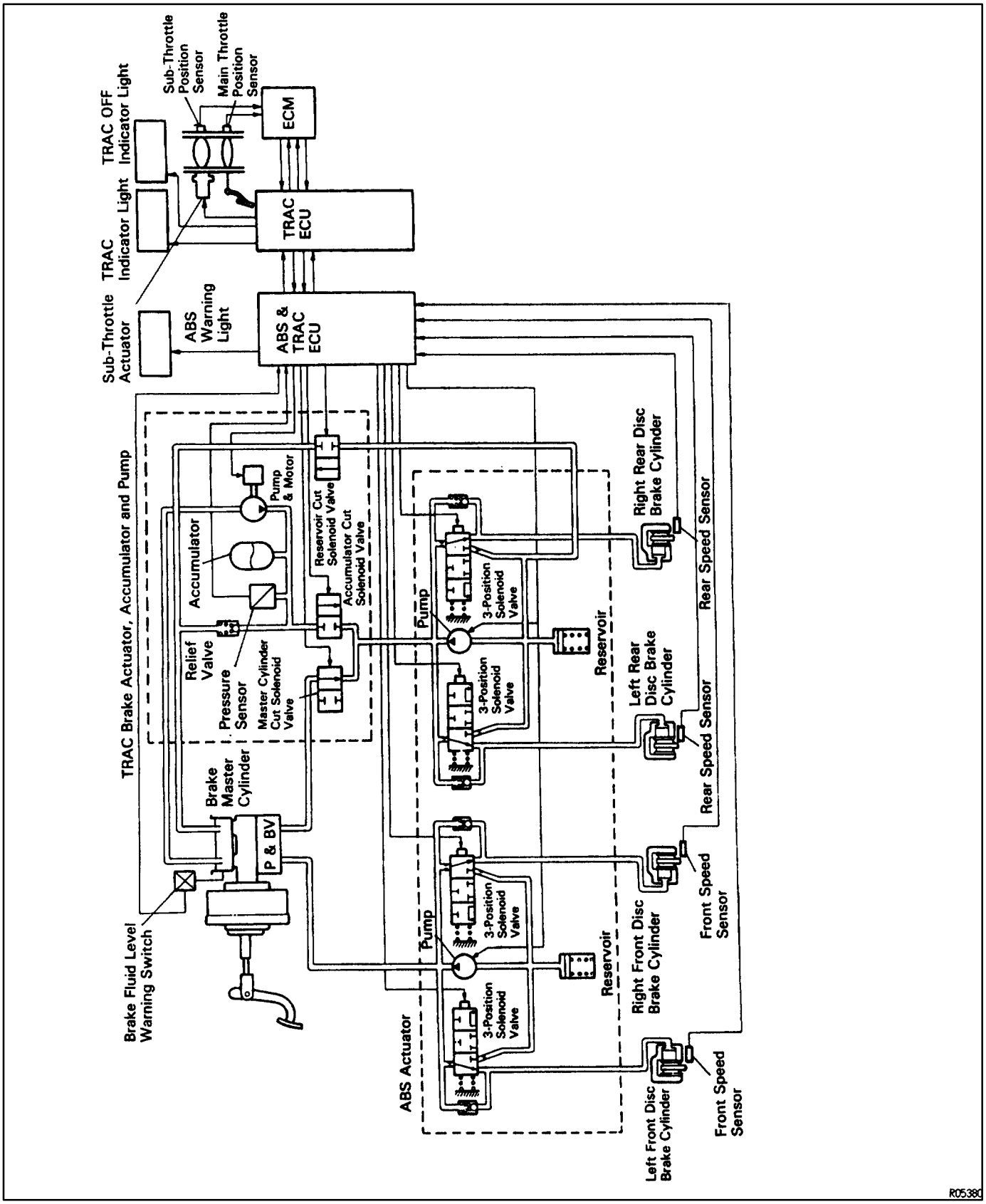

WhereEverybodyKnowsYourName

WIRING DIAGRAM

BR0F6–01

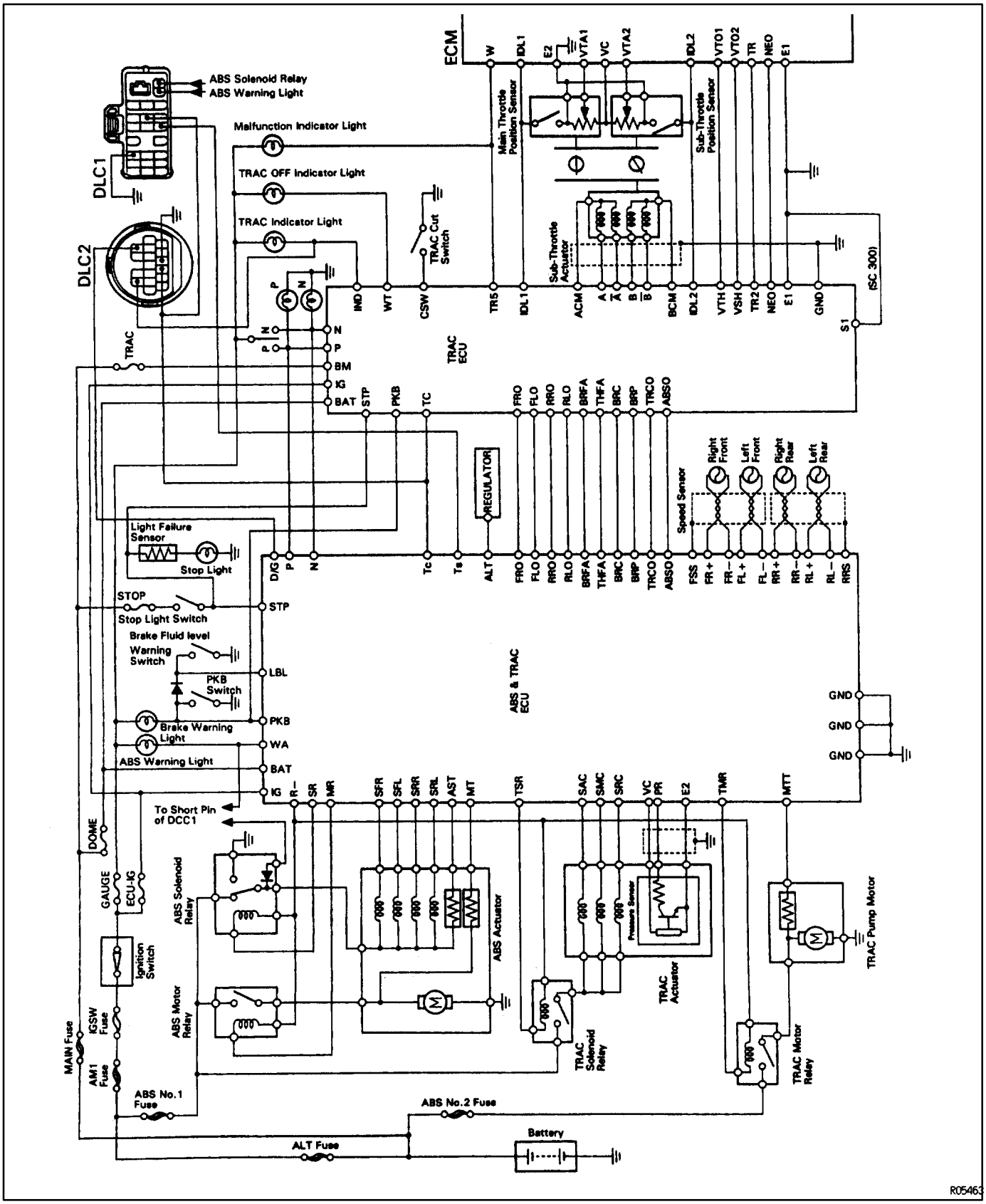

WhereEverybodyKnowsYourName

ECU TERMINALS
ABS & TRAC ECU:

BR0F7–05

w/ TRAC

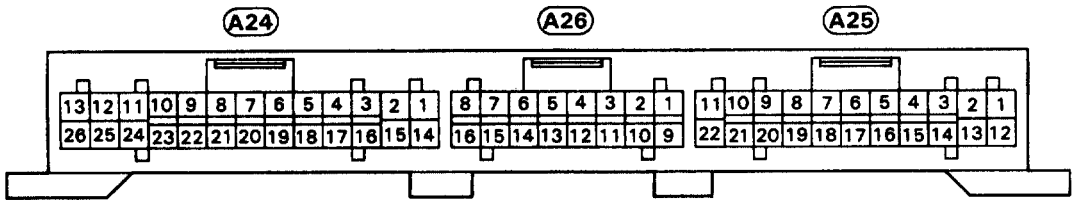

BR5387

Terminal No.	Symbol	Connection	Terminal No.	Symbol	Connection
A24- 1	TSR	TRAC solenoid relay	A26- 7	THFA	TRAC ECU
2	SMC	M/C cut solenoid	8	BRC	TRAC ECU
3	———	———	9	———	———
4	FR –	Right front speed sensor	10	P	Park/Neutral position switch
5	FL +	Left front speed sensor	11	BRFA	TRAC ECU
6	———	———	12	BRP	TRAC ECU
7	MT	ABS motor relay monitor	13	RRO	TRAC ECU
8	AST	ABS solenoid relay monitor	14	TRCO	TRAC ECU
9	TMR	TRAC motor relay	15	FRO	TRAC ECU
10	PR	Accumulator pressure sensor	16	———	———
11	———	———	A25- 1	SFR	Right front solenoid
12	SAC	Accumulator cut solenoid	2	GND	Ground
13	SFL	Left front solenoid	3	RR –	Right rear speed sensor
14	———	———	4	RL +	Left rear speed sensor
15	SRC	Reservoir cut solenoid	5	RSS	Sealed wiring harness
16	FSS	Sealed wiring harness	6	LBL	Brake fluid level warning switch
17	FR +	Right front speed sensor	7	ABSO	TRAC ECU
18	FL –	Left front speed sensor	8	ALT	Alternator
19	VC	Accumulator pressure sensor	9	WA	ABS warning light
20	E2	Pressure sensor ground	10	STP	Stop light switch
21	———	———	11	———	———
22	SR	ABS solenoid relay	12	SRL	Left rear solenoid
23	MTT	TRAC pump motor relay monitor	13	GND	Ground
24	IG	Ignition switch	14	RR +	Right rear speed sensor
25	R –	Relay ground	15	RL –	Left rear speed sensor
26	SRR	Right rear solenoid	16	MR	ABS motor relay
A26- 1	Ts	DLC1	17	PKB	Parking brake switch
2	———	———	18	———	———
3	Tc	DLC1, DLC2	19	———	———
4	RLO	TRAC ECU	20	D/G	DLC1, DLC2
5	N	Park/Neutral position switch	21	BAT	Battery
6	FLO	TRAC ECU	22	GND	Ground

WhereEverybodyKnowsYourName

TRAC ECU:

TRAC ECU terminals

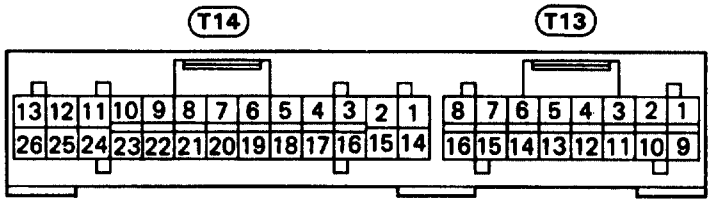

BR5386

Terminal No.	Symbol	Connection	Terminal No.	Symbol	Connection
T14—1	PKB	Parking brake switch	T14—22	IDL2	Sub-throttle idle switch
2	IG	Ignition switch	23	BRP	ABS & TRAC ECU
3	S1 (SC300)	Ground	24	B	Sub-throttle actuator
4	TRCO	ABS & TRAC ECU	25	$\overline{B}$	Sub-throttle actuator
5	THFA	ABS & TRAC ECU	26	BCM	Sub-throttle actuator
6	NEO	ECM	T13—1	BRC	ABS & TRAC ECU
7	—	—	2	STP	Stop light switch
8	VTH	ECM	3	FLO	ABS & TRAC ECU
9	—	—	4	BRFA	ABS & TRAC ECU
10	IDL1	Main throttle idle switch	5	RLO	ABS & TRAC ECU
11	A	Sub-throttle actuator	6	Tc	DLC2
12	$\overline{A}$	Sub-throttle actuator	7	P	Park/Neutral position switch
13	ACM	Sub-throttle actuator	8	BAT	Battery
14	GND	Ground	9	—	—
15	BM	Battery	10	FRO	ABS & TRAC ECU
16	TR5	ECM	11	IND	TRAC indicator light
17	—	—	12	RRO	ABS & TRAC ECU
18	—	—	13	CSW	TRAC cut switch
19	VSH	ECM	14	WT	TRAC OFF indicator
20	E1	Ground	15	ABSO	ABS & TRAC ECU
21	TR2	ECM	16	N	Park/Neutral position switch

WhereEverybodyKnowsYourName

ECU TERMINALS STANDARD VALUE
ABS & TRAC ECU:

BR0F8–03

Symbols (Terminals No.)			STD Voltage (V)	Condition
BAT (A25–21)	–	GND (A25–22)	10–14	Always
IG (A24–24)	–	GND (A25–22)	10–14	IG switch ON
SR (A24–22)	–	R– (A24–25)	8.3–14	IG switch ON, ABS warning light OFF
MR (A25–16)	–	R– (A24–25)	Below 1.0	IG switch ON
TSR (A24–1)	–	R– (A24–25)	8.3–14	IG switch ON, TRAC indicator light OFF
TMR (A24–9)	–	R– (A24–25)	Below 1.0	IG switch ON
SFR (A25–1)	–	GND (A25–2)	10–14	IG switch ON, ABS warning light OFF
SFL (A24–13)	–	GND (A25–22)	10–14	IG switch ON, ABS warning light OFF
SRR (A24–26)	–	GND (A25–22)	10–14	IG switch ON, ABS warning light OFF
SRL (A25–12)	–	GND (A25–13)	10–14	IG switch ON, ABS warning light OFF
AST (A24–8)	–	GND (A25–22)	10–14	IG switch ON, ABS warning light OFF
SAC (A24–12)	–	GND (A25–22)	10–14	IG switch ON, TRAC indicator light OFF
SMC (A24–2)	–	GND (A25–22)	10–14	IG switch ON, TRAC indicator light OFF
SRC (A24–15)	–	GND (A25–22	10–14	IG switch ON, TRAC indicator light OFF
PR (A24–10)	–	E2 (A24–20)	5–7	IG switch ON
VC (A24–19)	–	E2 (A24–20)	4–6	IG switch ON
ALT (A25–8)	–	GND (A25–22)	Below 1.0	IG switch ON
			10–14	Idling
WA (A25–9)	–	GND (A25–22)	Below 2.0	IG switch ON, ABS warning light ON
			10–14	IG switch ON, ABS warning light OFF
PKB (A25–17)	–	GND (A25–22)	Below 1.5	IG switch ON, PKB switch ON, Fluid in M/C reservoir above MIN level
			10–14	IG switch ON, PKB switch OFF, Fluid in M/C reservoir above MIN level

WhereEverybodyKnowsYourName

Symbols (Terminals No.)			STD Voltage (V)	Condition
LBL (A25–6)	–	GND (A25–22)	10–14	IG switch ON Fluid in M/C reservoir tank above MIN level.
STP (A25–10)	–	GND (A25–22)	Below 1.5	Stop light switch OFF
			8–14	Stop light switch ON
D/G (A25–20)	–	GND (A25–22)	10–14	IG switch ON, ABS warning light OFF
Tc (A26–3)	–	GND (A25–22)	10–14	IG switch ON
Ts (A26–1)	–	GND (A25–22)	10–14	IG switch ON
P (A26–10)	–	GND (A25–22)	10–14	IG switch ON, Shift position in “P” position
			Below 1.5	IG switch ON, Other shift position in “P” position
N (A26–5)	–	GND (A25–22)	10–14	IG switch ON, Shift position in “N” position
			Below 1.5	IG switch ON, Other shift position in “N” position
FR+ (A24–17)	–	FR– (A24–4)	AC generation	IG switch ON Slowly turn right front wheel.
FL+ (A24–5)	–	FL– (A24–18)	AC generation	IG switch ON Slowly turn left front wheel.
RR+ (A25–14)	–	RR– (A25–3)	AC generation	IG switch ON Slowly turn right rear wheel.
RL+ (A25–4)	–	RL– (A25–15)	AC generation	IG switch ON Slowly turn left rear wheel.
FRO (A26–15)	–	GND (A25–22)	Pulse generation	IG switch ON Slowly turn right front wheel.
FLO (A26–6)	–	GND (A25–22)	Pulse generation	IG switch ON Slowly turn left front wheel.
RRO (A26–13)	–	GND (A25–22)	Pulse generation	IG switch ON Slowly turn right rear wheel.
RLO (A26–4)	–	GND (A25–22)	Pulse generation	IG switch ON Slowly turn left rear wheel.

WhereEverybodyKnowsYourName

TRAC ECU:

Symbols (Terminals No.)		STD Voltage (V)	Condition
BAT (T13–8)	– GND (T14–14)	10–14	Always
BM (T14–15)	– GND (T14–14)	10–14	Always
IG (T14–2)	– GND (T14–14)	10–14	IG switch ON
ACM (T14–13)	– GND (T14–14)	4–5	IG switch ON Sub throttle valve fully open
A (T14–11)	– GND (T14–14)	4–5	IG switch ON Sub throttle valve fully open
A (T14–12)	– GND (T14–14)	4–5	IG switch ON Sub throttle valve fully open
BCM (T14–26)	– GND (T14–14)	4–5	IG switch ON Sub throttle valve fully open
B (T14–24)	– GND (T14–14)	4–5	IG switch ON Sub throttle valve fully open
B (T14–25)	– GND (T14–14)	4–5	IG switch ON Sub throttle valve fully open
TR5 (T14–16)	– E1 (T14–20)	Below 1.0	IG switch ON, Engine stopped
		10–14	Engine idling
IDL1 (T14–10)	– E1 (T14–20)	Below 1.0	Engine idling, Main throttle valve fully closed
		10–14	Engine idling, Main throttle valve fully open
IDL2 (T14–22)	– E1 (T14–20)	Below 1.0	IG switch ON, Sub–throttle valve fully closed
		10–14	IG switch ON, Sub–throttle valve fully open
VTH (T14–8)	– E1 (T14–20)	Below 1.5	IG switch ON, Main throttle valve fully closed
		3.0–5.5	IG switch ON, Main throttle valve fully open
VSH (T14–19)	– E1 (T14–20)	Below 1.5	IG switch ON, Sub–throttle valve fully closed
		3.0–5.5	IG switch ON, Sub–throttle valve fully open
TR2 (T14–21)	– E1 (T14–20)	10–14	IG switch ON
NEO (T14–6)	– E1 (T14–20)	Pulse generation	Engine idling
CSW (T13–13)	– GND (T14–14)	Below 1.5	IG switch ON, TRAC cut switch pushed in
		10–14	IG switch ON, TRAC cut switch released
PKB (T14–1)	– GND (T14–14)	Below 1.5	IG switch ON, PKB switch ON,
			Fluid in M/C reservoir above MIN level
		10–14	IG switch ON, PKB switch OFF,
			Fluid M/C reservoir above MIN level

WhereEverybodyKnowsYourName

Symbols (Terminals No.)		STD Voltage (V)	Condition
IND (T13–11)	– GND (T14–14)	10–14	IG switch ON, TRAC indicator light OFF
WT (T13–14)	– GND (T14–14)	Below 2.0	IG switch ON, TRAC OFF indicator light ON
		10–14	IG switch ON, TRAC OFF indicator light OFF
STP (T13–2)	– GND (T14–14)	Below 1.5	Stop light switch OFF
		8–14	Stop light switch ON
P (T13–7)	– GND (T14–14)	10–14	IG switch ON, Shift position in “P” position
		Below 1.5	IG switch ON, Other shift position in “P” position
N (T13–16)	– GND (T14–14)	10–14	IG switch ON, Shift position in “N” position
		Below 1.5	IG switch ON, Other shift position in “N” position
Tc (T13–6)	– GND (T14–14)	10–14	IG switch ON
FRO (T13–10)	– GND (T14–14)	Pulse generation	IG switch ON Slowly turn right front wheel
FLO (T13–3)	– GND (T14–14)	Pulse generation	IG switch ON Slowly turn left front wheel
RRO (T13–12)	– GND (T14–14)	Pulse generation	IG switch ON Slowly turn right rear wheel
RLO (T13–5)	– GND (T14–14)	Pulse generation	IG switch ON Slowly turn left rear wheel

WhereEverybodyKnowsYourName

SERVICE SPECIFICATIONS

SERVICE DATA

Battery	Specific gravity		1.27–1.29 (when fully charged at 20°C (68°F))	
Alternator	Rated output		12 V–100 A	
	Rotor coil resistance		2.8–3.0 ?	
	Slip ring diameter	STD	14.2–14.4 mm	0.559–0567 in.
		Limit	12.8 mm	0.504 in.
	Brush exposed length	STD	10.5 mm	0.413 in.
		Limit	1.5 mm	0.059 in.
Alternator regulator	Regulating voltage	at 25°C (77°F)	13.9–15.1 V	
		at 115°C (239°F)	13.5–14.3 V	

TORQUE SPECIFICATIONS

Part tightened	N·m	kgf·cm	ft·lbf
Alternator pulley X Rotor	110	1,125	81
Alternator X Alternator bracket	37	380	27
Alternator X Cylinder block	37	380	27

WhereEverybodyKnowsYourName

CHARGING SYSTEM

WhereEverybodyKnowsYourName

DESCRIPTION

The alternator is a small, high–rpm, high–performance type with an IC regulator incorporated. The IC regulator uses integrated circuits and controls the voltage produced by the alternator.

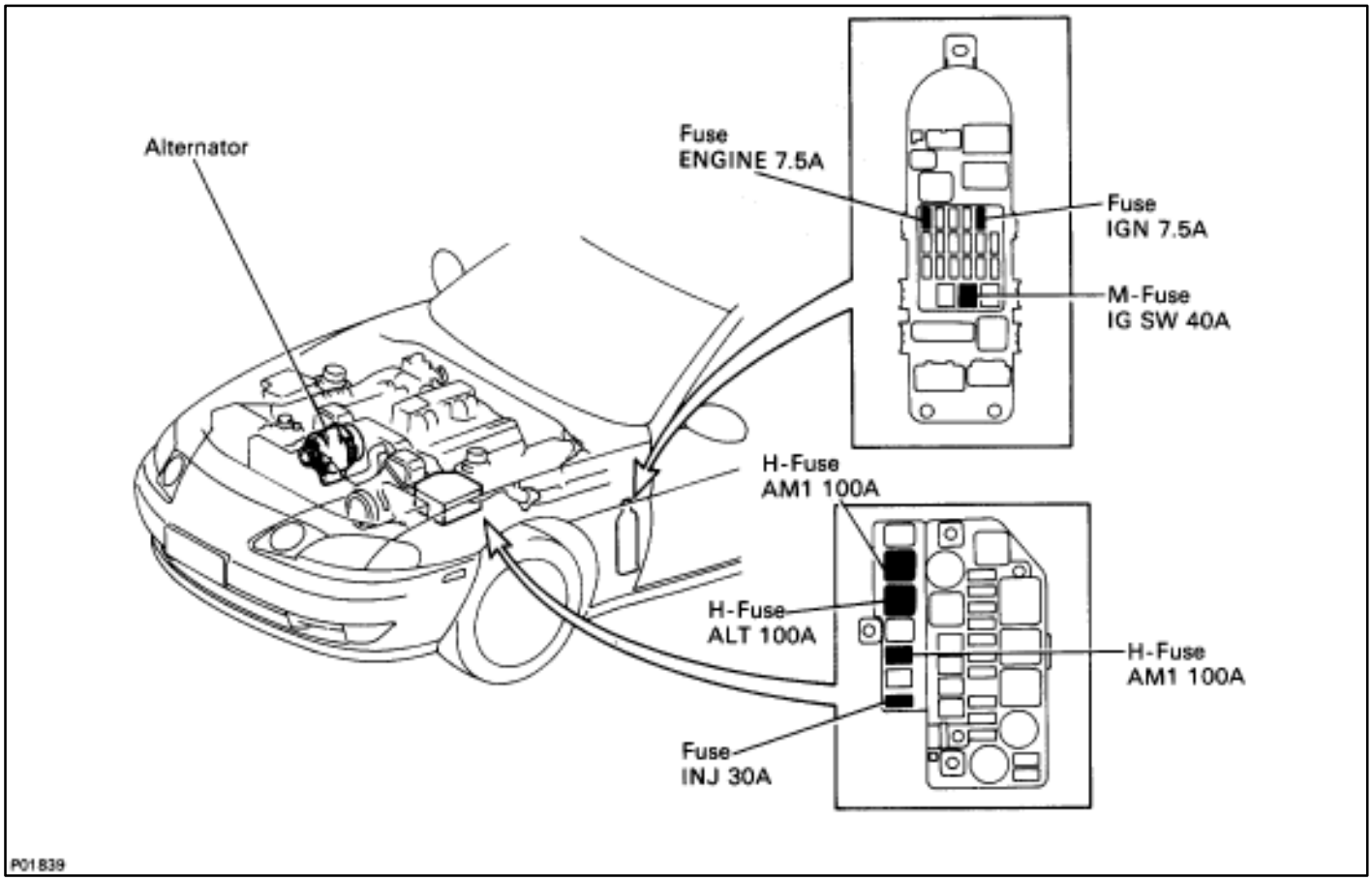

PRECAUTIONS

1. **Check that the battery cables are connected to the correct terminals.**
2. **Disconnect the battery cables when the battery is given a quick charge.**
3. **Do not perform tests with a high voltage insulation resistance tester.**
4. **Never disconnect the battery when the engine is running.**

WhereEverybodyKnowsYourName

DESCRIPTION

The alternator is a small, high–rpm, high–performance type with an IC regulator incorporated. The IC regulator uses integrated circuits and controls the voltage produced by the alternator.

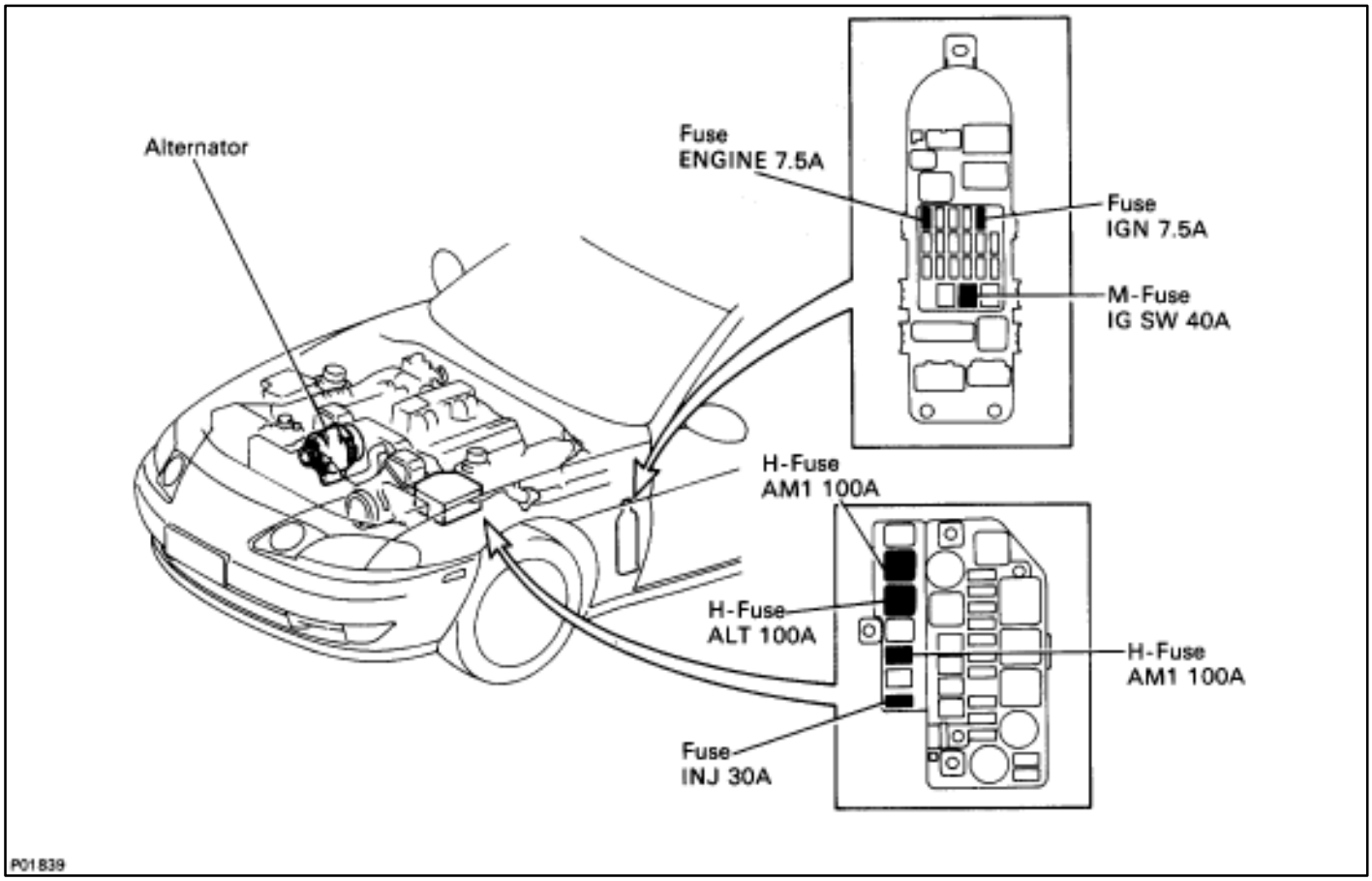

PRECAUTIONS

1. **Check that the battery cables are connected to the correct terminals.**
2. **Disconnect the battery cables when the battery is given a quick charge.**
3. **Do not perform tests with a high voltage insulation resistance tester.**
4. **Never disconnect the battery when the engine is running.**

WhereEverybodyKnowsYourName

SYSTEM CIRCUIT

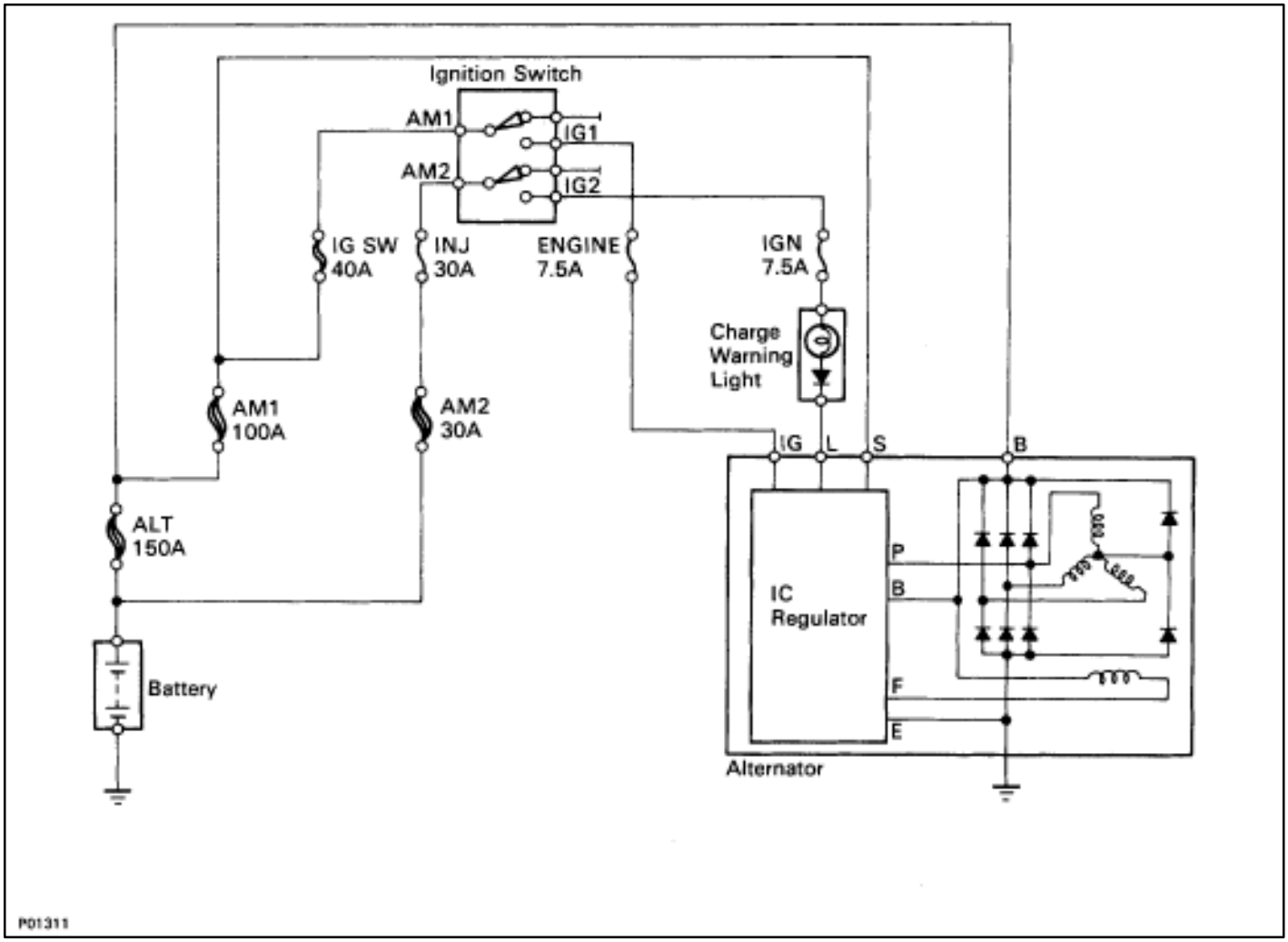

OPERATION

When the ignition switch is turned ON, current from the battery flows from terminal L of the alternator through the IC regulator to terminal E, causing the discharge warning light to light up.

Then when the engine is started, the voltage output increases as the alternator rpm increases. When the voltage output becomes greater than the battery voltage, current for recharging flows from terminal B. Simultaneously, voltage at terminal L increases and the potential difference between battery and terminal L disappears, causing the discharge warning light to go off. When the voltage output exceeds the regulator adjustment voltage, the transistor inside the IC regulator regulates the voltage so that the voltage from the alternator remains constant.

WhereEverybodyKnowsYourName

PREPARATION

SST (SPECIAL SERVICE TOOLS)

Illustration	Part No.	Part Name	Note
	09285–76010	Injection Pump Camshaft Bearing Cone Replacer	Rotor rear bearing
	09286–46011	Injection Pump Spline Shaft Puller	Rectifier end frame
	09608–20012	Front Hub & Drive Pinion Bearing Tool Set	
	(09608–00030)	(Replacer)	Rotor front bearing
	09820–00021	Alternator Rear Bearing Puller	
	09820–00030	Alternator Rear Bearing Replacer	
	09820–63010	Alternator Pulley Set Nut Wrench Set	

RECOMMENDED TOOLS

Illustration	Part No.	Part Name	Note
	09082–00015	TOYOTA Electrical Tester	
	09200–00010	Engine Adjust Kit	

EQUIPMENT

Part Name	Note
Battery specific gravity gauge	Battery
Vernier caliper	Rotor (Slip ring)
Torque wrench	

WhereEverybodyKnowsYourName

ON–VEHICLE INSPECTION

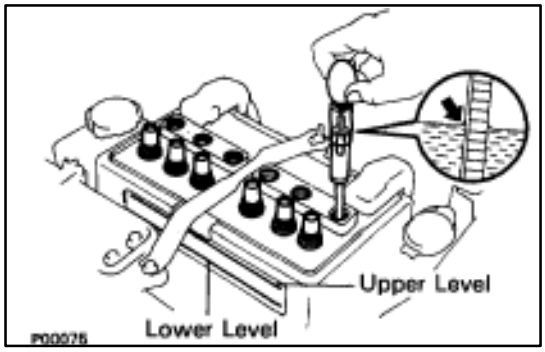

1. INSPECT BATTERY SPECIFIC GRAVITY AND ELECTROLYTE LEVEL

(a) Check the specific gravity of each cell.

Standard specific gravity:

1.27–1.29 when fully charged at 20°C (68°F)

If gravity is less than specification, charge the battery.

(b) Check the electrolyte quantity of each cell.

If insufficient, refill with distilled (or purified) water.

HINT: Check the indicator as shown in the illustration.

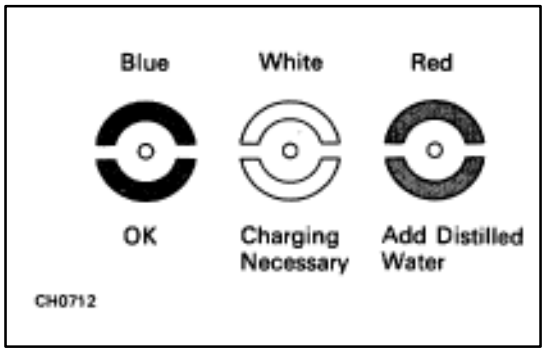

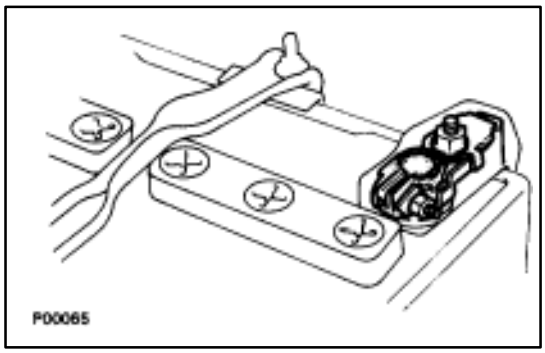

2. CHECK BATTERY TERMINALS, FUSIBLE LINKS AND FUSES

(a) Check that the battery terminals are not loose or corroded.

(b) Check the fusible links and fuses for continuity.

H–fuse:	**ALT 150A**
	AM1 100A
	AM2 30A
M–fuse:	**IG SW 40A**
Fuse:	**IGN 7.5A**
	ENGINE 7.5A
	INJ 30A

3. INSPECT DRIVE BELT

HINT: A belt tensioner is used, so checking the belt tension is not necessary.

(a) Visually check the drive belt for excessive wear, frayed cords, etc.

If necessary, replace the drive belt.

HINT:

- Cracks on rib side of a drive belt are considered acceptable. If the drive belt has chunks missing from the ribs, it should be replaced.
- The drive belt tension can be released by turning the belt tensioner counterclockwise. The pulley bolt for the belt tensioner has a left–hand thread.

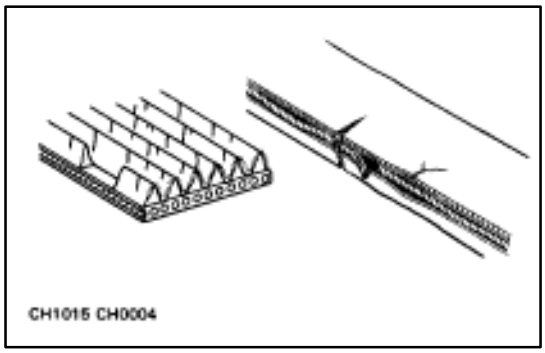

WhereEverybodyKnowsYourName

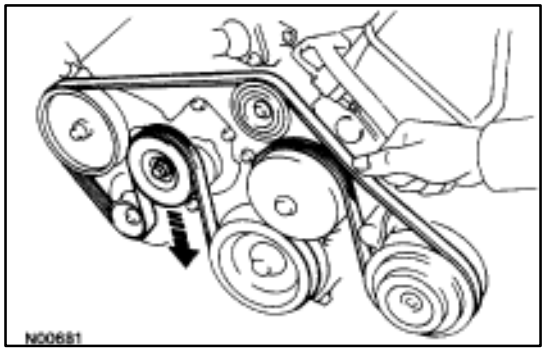

(b) Check the belt tensioner operation.
- Check that the belt tensioner moves downward when the drive belt is pressed down at the points indicated in the illustration with approx. 98 N (10 kgf, 22.0 lbf) of force.
- Check the alignment of the belt tensioner pulley to make sure the drive belt has not slipped off the pulley.

If necessary, replace the belt tensioner.

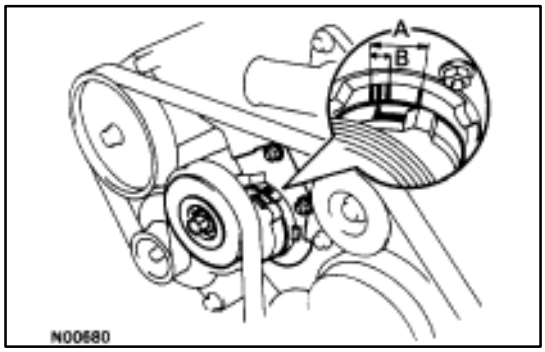

- Check that the arrow mark on the belt tensioner falls within area A of the scale.

If it is outside area A, replace the drive belt.

HINT:
- When a new belt is installed, it should lie within area B. If not, the drive belt is not correct.

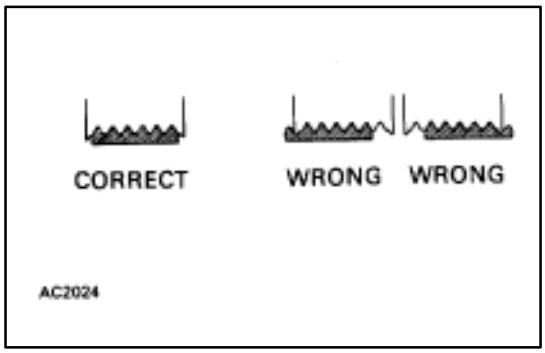

- After installing a belt, check that it fits properly in the ribbed grooves.
- Check by hand to confirm that the belt has not slipped out of the groove on the bottom of the pulley.

4. REMOVE ENGINE UNDER COVER

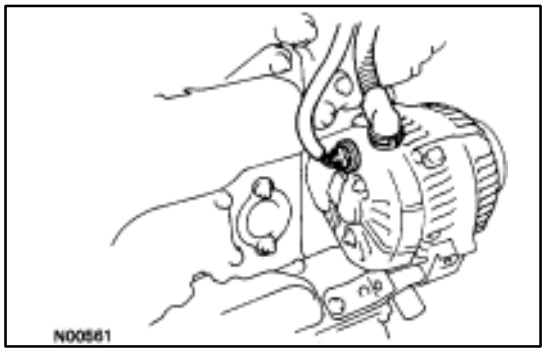

5. VISUALLY CHECK ALTERNATOR WIRING AND LISTEN FOR ABNORMAL NOISES

(a) Check that the wiring is in good condition.

(b) Check that there is no abnormal noise from the alternator while the engine is running.

6. INSPECT CHARGE WARNING LIGHT CIRCUIT

(a) Warm up the engine and then turn it off.

(b) Turn off all accessories.

(c) Turn the ignition switch ON. Check that the charge warning light is lit.

(d) Start the engine. Check that the light goes off.

If the light does not go off as specified, troubleshoot the charge light circuit.

WhereEverybodyKnowsYourName

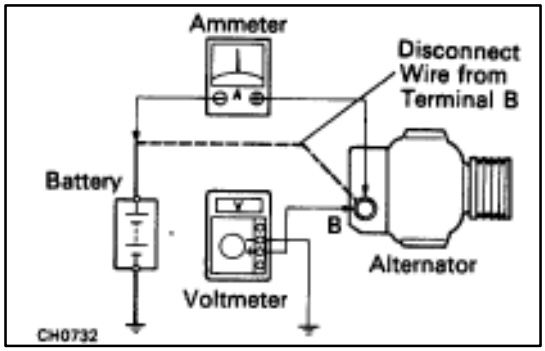

7. INSPECT CHARGING CIRCUIT WITHOUT LOAD

HINT: If a battery/alternator tester is available, connect the tester to the charging circuit as per manufacturer's instructions.

(a) If a tester is not available, connect a voltmeter and ammeter to the charging circuit as follows:
- Disconnect the wire from terminal B of the alternator and connect it to the negative (–) probe of the ammeter.
- Connect the positive (+) probe of the ammeter to terminal B of the alternator.
- Connect the positive (+) probe of the voltmeter to terminal B of the alternator.
- Ground the negative (–) probe of the voltmeter.

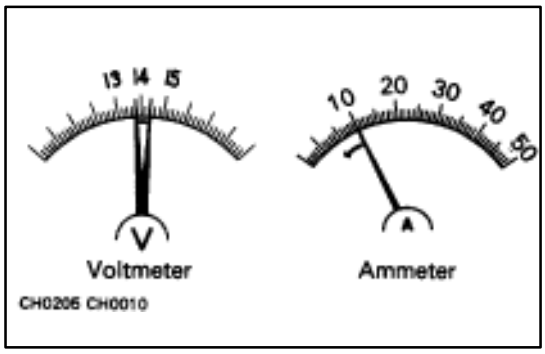

(b) Check the charging circuit as follows:

With the engine running from idling to 2,000 rpm, check the reading on the ammeter and voltmeter.

Standard amperage: 10 A or less

Standard voltage: 13.9–15.1 V at 25°C (77°F)

13.5–14.3 V at 115°C (239°F)

If the voltmeter reading is greater than standard voltage, replace the IC regulator.

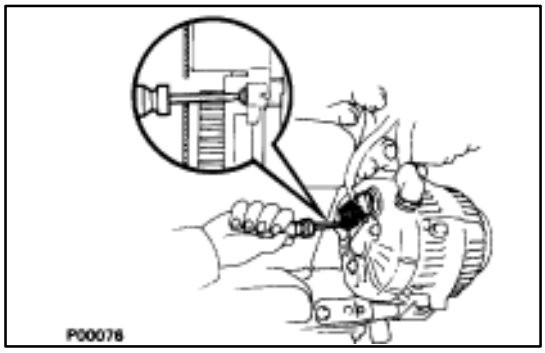

If the voltmeter reading is less than standard voltage, check the IC regulator and alternator as follows:
- Remove the engine under cover.
- With terminal F grounded, start the engine and check the voltmeter reading of terminal B.

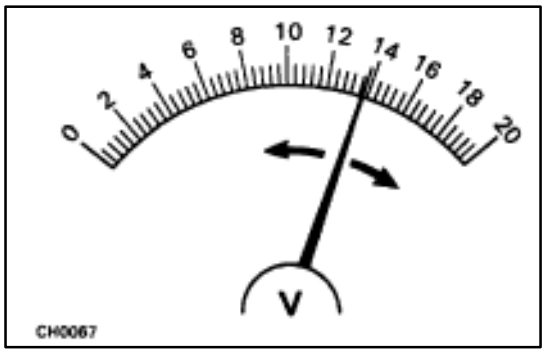

- If the voltmeter reading is greater than standard voltage, replace the IC regulator.
- If the voltmeter reading is less than standard voltage, check the alternator.
- Reinstall the engine under cover.

WhereEverybodyKnowsYourName

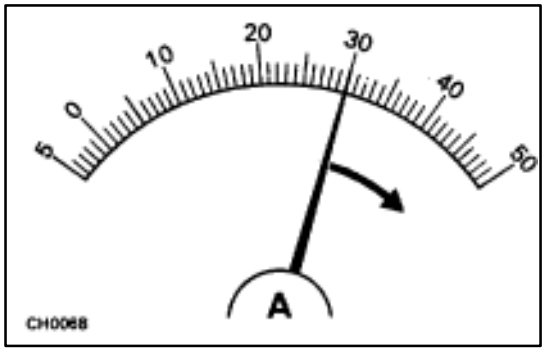

8. INSPECT CHARGING CIRCUIT WITH LOAD

(a) With the engine running at 2,000 rpm, turn on the high beam headlights and place the heater blower switch at ”HI”.

(b) Check the reading on the ammeter.

Standard amperage: 30 A or more

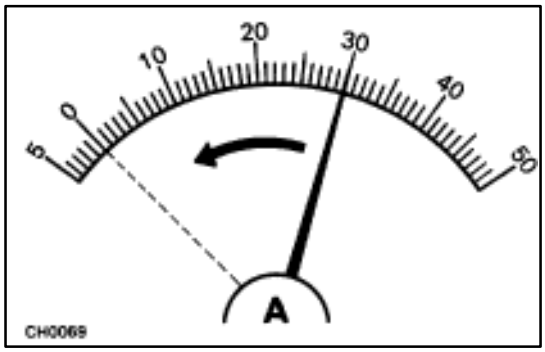

If the ammeter reading is less than standard amperage, repair the alternator. (See page CH–9)

HINT: With the battery fully charged, the indication will sometimes be less than standard amperage.

9. REINSTALL ENGINE UNDER COVER

WhereEverybodyKnowsYourName

ALTERNATOR

COMPONENTS FOR REMOVAL AND INSTALLATION

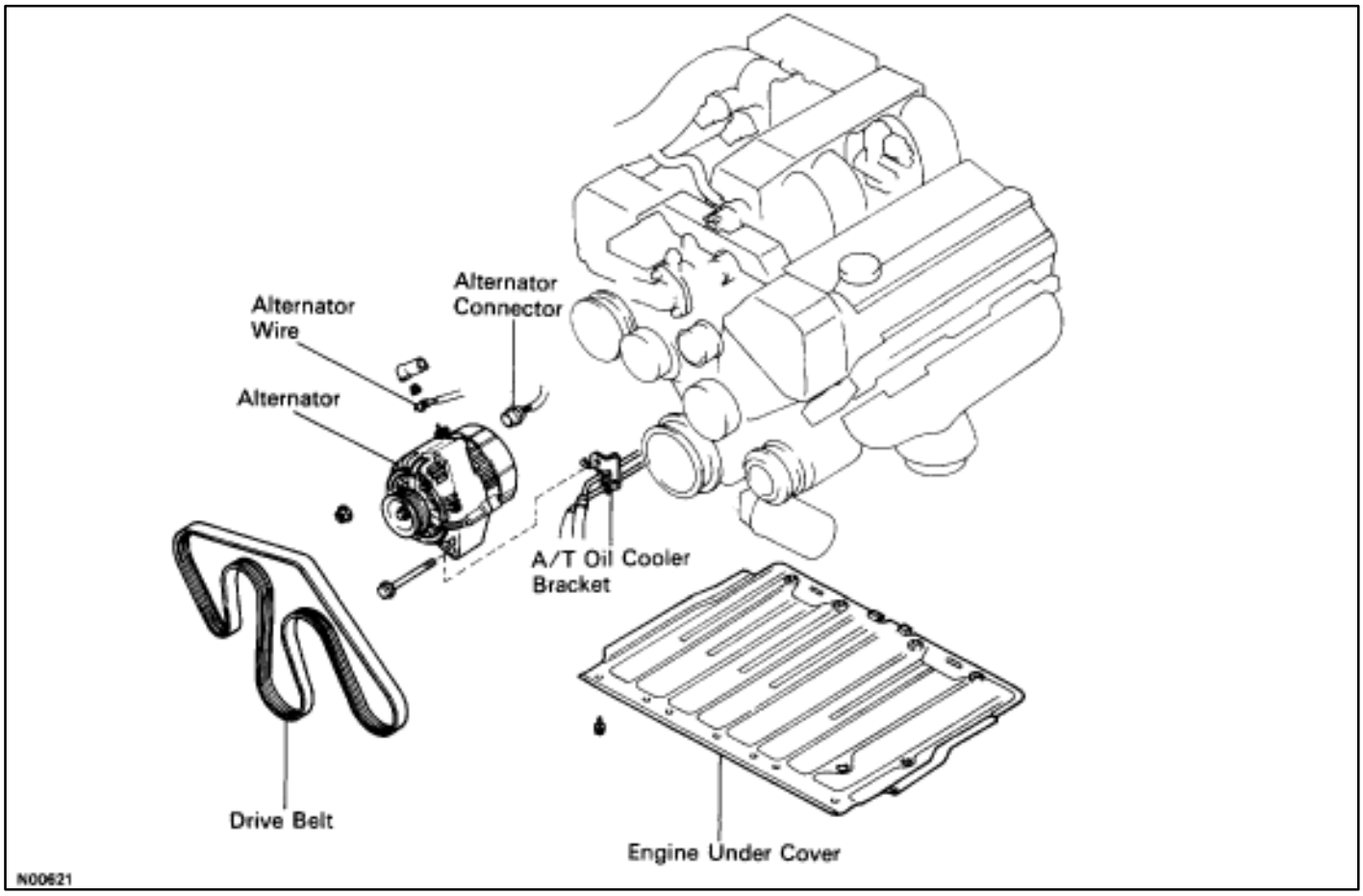

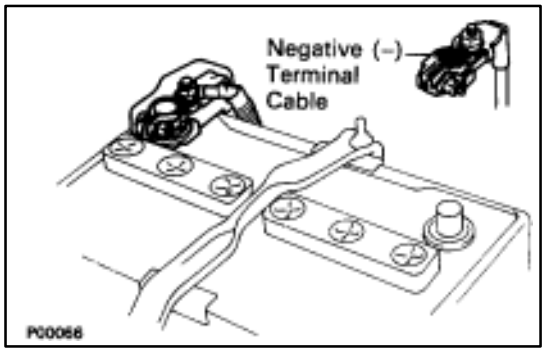

REMOVAL OF ALTERNATOR

1. **DISCONNECT CABLE FROM NEGATIVE TERMINAL OF BATTERY**
   CAUTION: Work must be started after approx. 20 seconds or longer from the time the ignition switch is turned to the "LOCK" position and the negative (–) terminal cable is disconnected from the battery.
2. **REMOVE ENGINE UNDER COVER**

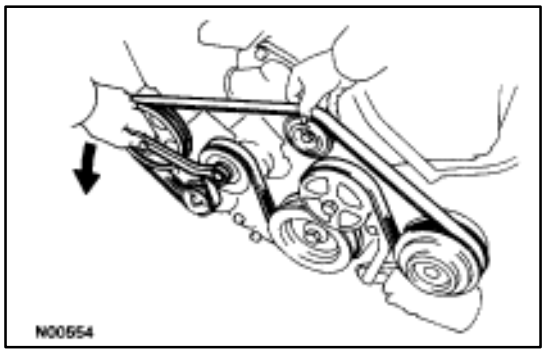

3. **REMOVE DRIVE BELT**
   Loosen the belt tension by turning the drive belt tensioner counterclockwise, and remove the drive belt.
   HINT: The pulley bolt for the belt tensioner has a left–hand thread.

WhereEverybodyKnowsYourName

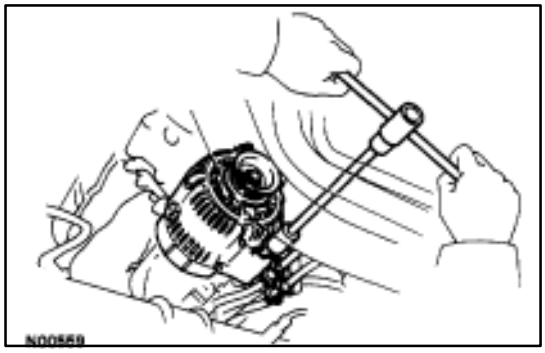

4. REMOVE ALTERNATOR

(a) Disconnect the alternator connector.

(b) Remove the cap and nut, and disconnect the alternator wire.

(c) Remove the bolt, and disconnect the A/T oil cooler pipe bracket.

(d) Remove the nut and alternator.

COMPONENTS FOR DISASSEMBLY AND ASSEMBLY

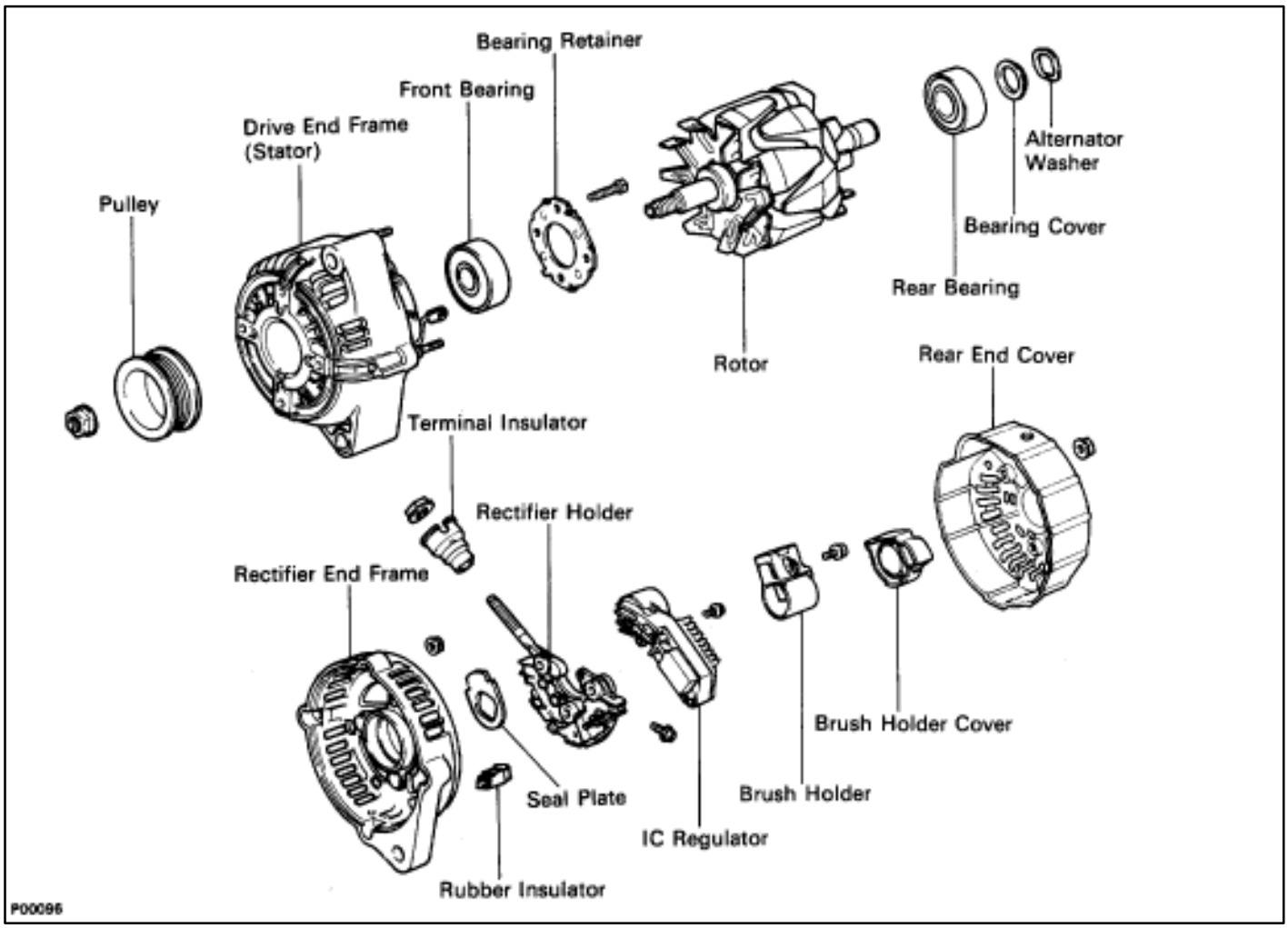

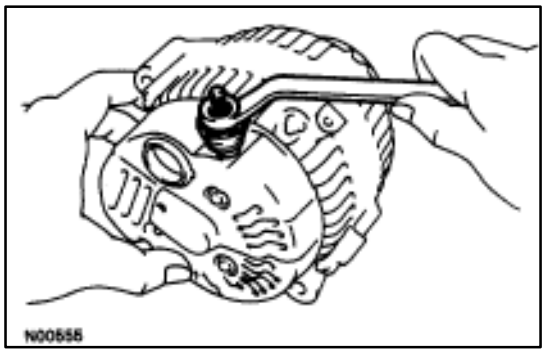

DISASSEMBLY OF ALTERNATOR

1. REMOVE REAR END COVER

(a) Remove the nut and terminal insulator.

WhereEverybodyKnowsYourName

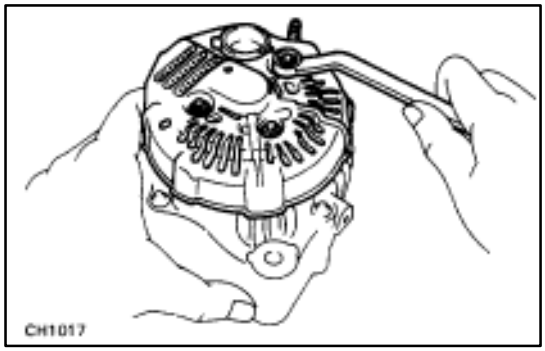

(b) Remove the three nuts and end cover.

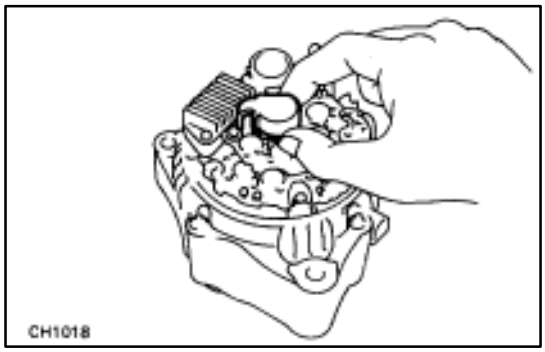

2. REMOVE BRUSH HOLDER AND IC REGULATOR

(a) Remove the brush holder cover from the brush holder.

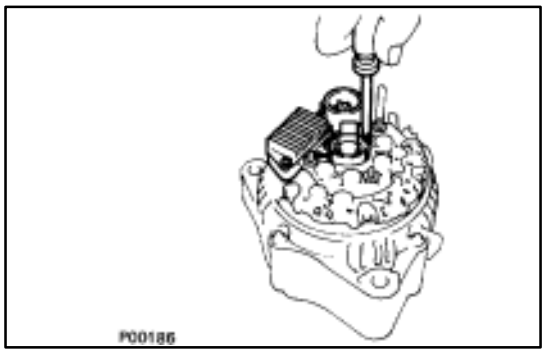

(b) Remove the five screws, brush holder and IC regulator.

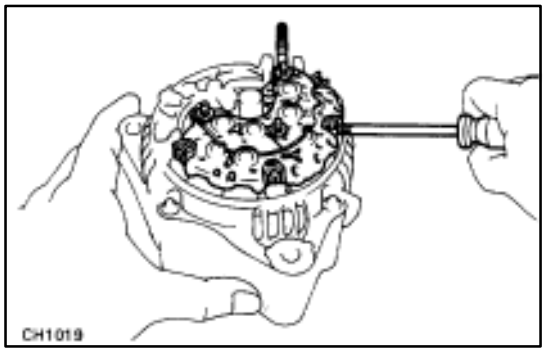

3. REMOVE RECTIFIER HOLDER

(a) Remove the four screws and rectifier holder.

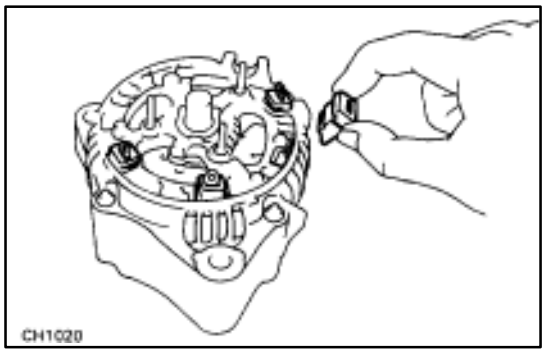

(b) Remove the four rubber insulators.

WhereEverybodyKnowsYourName

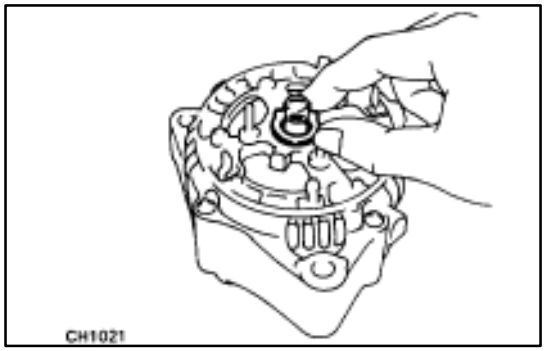

(c) Remove the seal plate.

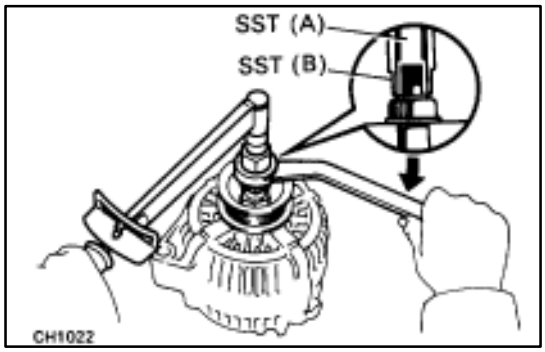

4. REMOVE PULLEY

(a) Hold SST (A) with a torque wrench, and tighten SST (B) clockwise to the specified torque.

SST 09820–63010

Torque: 39 N·m (400 kgf·cm, 29 ft·lbf)

(b) Check that SST (A) is secured to the rotor shaft.

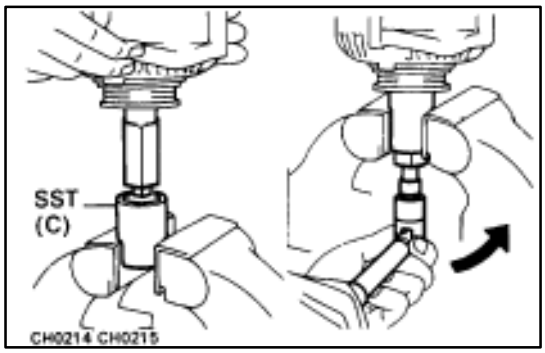

(c) As shown in the illustration, mount SST (C) in a vise, and install the alternator to SST (C).

(d) To loosen the pulley nut, turn SST (A) in the direction shown in the illustration.

NOTICE: To prevent damage to the rotor shaft, do not loosen the pulley nut more than one–half of a turn.

(e) Remove the alternator from SST (C).

(f) Turn SST (B) and remove SST (A and B).

(g) Remove the pulley nut and pulley.

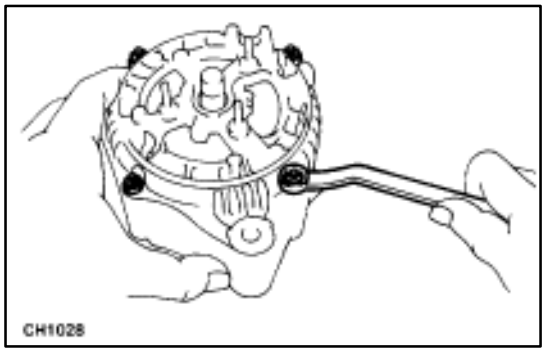

5. REMOVE RECTIFIER END FRAME

(a) Remove the four mounting nuts.

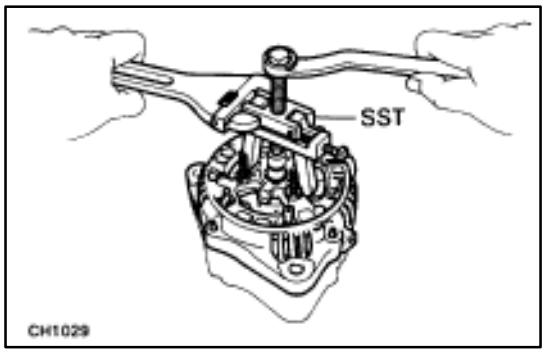

(b) Using SST, remove the rectifier end frame.

SST 09286–46011

WhereEverybodyKnowsYourName

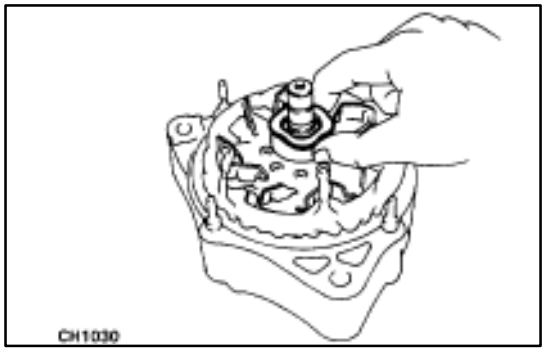

(c) Remove the alternator washer.

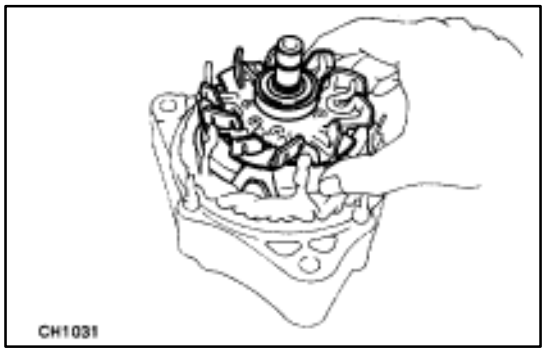

6. REMOVE ROTOR FROM DRIVE END FRAME

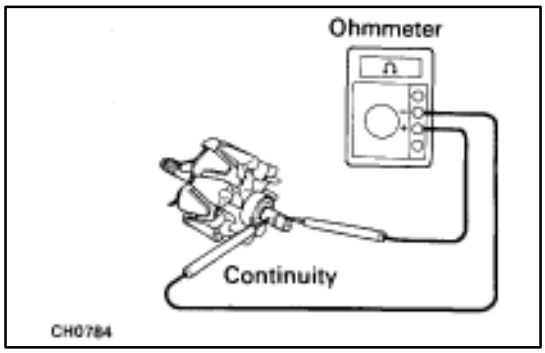

INSPECTION AND REPAIR OF ALTERNATOR

Rotor

1. INSPECT ROTOR FOR OPEN CIRCUIT

Using an ohmmeter, check that there is continuity between the slip rings.

Standard resistance (Cold): 2.8–3.0 ?

If there is no continuity, replace the rotor.

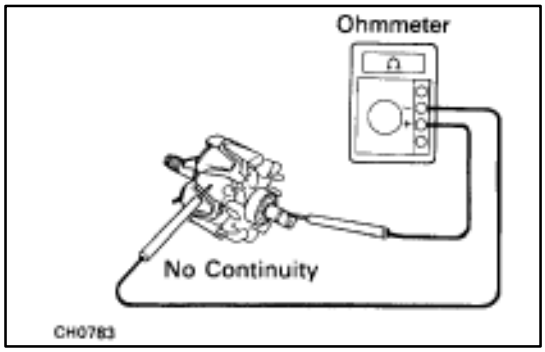

2. INSPECT ROTOR FOR GROUND

Using an ohmmeter, check that there is no continuity between the slip ring and rotor.

If there is continuity, replace the rotor.

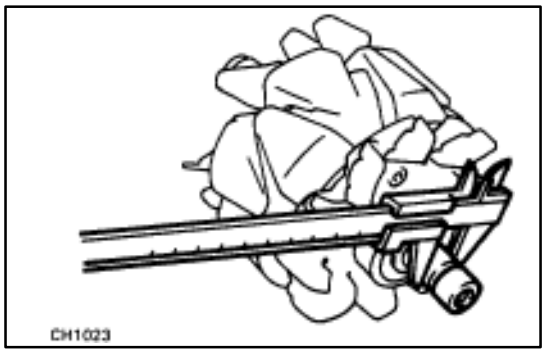

3. INSPECT SLIP RINGS

(a) Check that the slip rings are not rough or scored.

If rough or scored, replace the rotor.

(b) Using a vernier caliper, measure the slip ring diameter.

Standard diameter: 14.2–14.4 mm (0.559–0.567 in.)

Minimum diameter: 12.8 mm (0.504 in.)

If the diameter is less than minimum, replace the rotor.

WhereEverybodyKnowsYourName

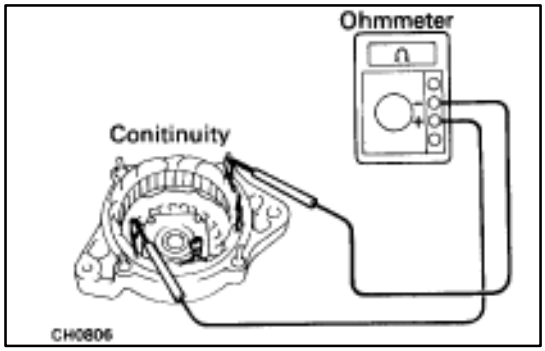

Stator (Drive End Frame)

1. INSPECT STATOR FOR OPEN CIRCUIT

Using an ohmmeter, check that there is continuity between the coil leads.

If there is no continuity, replace the drive end frame assembly.

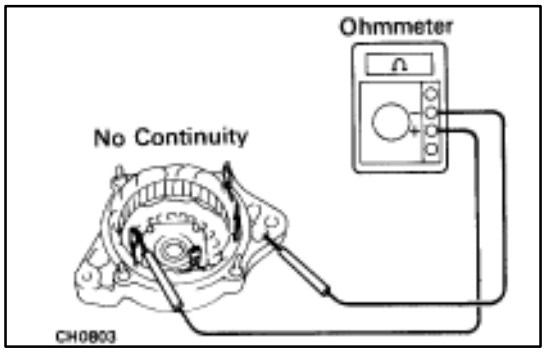

2. INSPECT STATOR FOR GROUND

Using an ohmmeter, check that there is no continuity between the coil lead and drive end frame.

If there is continuity, replace the drive end frame assembly.

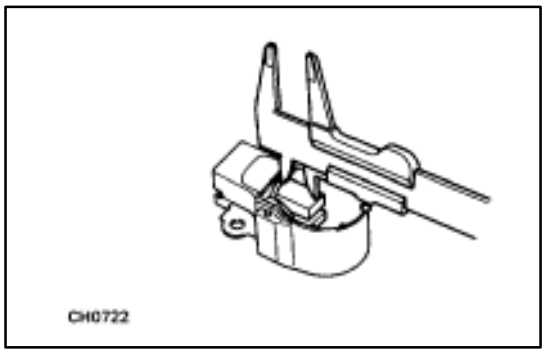

Brushes

INSPECT EXPOSED BRUSH LENGTH

Using a vernier caliper, measure the exposed brush length.

Standard exposed length: 10.5 mm (0.413 in.)

Minimum exposed length: 1.5 mm (0.059 in.)

If the exposed length is less than minimum, replace the brush holder.

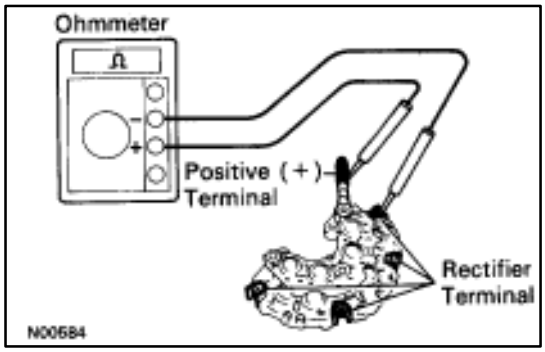

Rectifiers (Rectifier Holder)

1. INSPECT POSITIVE RECTIFIER

(a) Using an ohmmeter, connect one tester probe to the positive (+) terminal and the other to each rectifier terminal.

(b) Reverse the polarity of the tester and repeat (a).

(c) Check that one shows continuity and the other shows no continuity.

If continuity is not as specified, replace the rectifier holder.

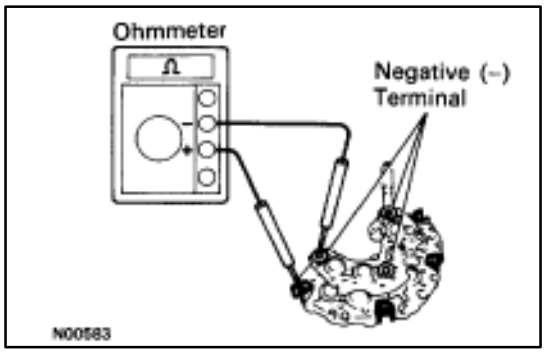

2. INSPECT NEGATIVE RECTIFIER

(a) Using an ohmmeter, connect one tester probe to each negative (–) terminal and the other to each rectifier terminal.

(b) Reverse the polarity of the tester probes and repeat (a).

(c) Check that one shows continuity and the other shows no continuity.

If continuity is not as specified, replace the rectifier holder.

WhereEverybodyKnowsYourName

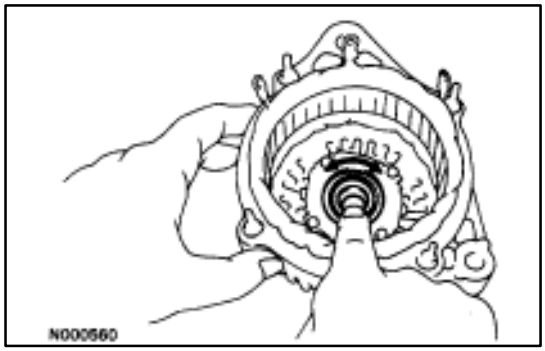

Bearings

1. INSPECT FRONT BEARING

Check that the bearing is not rough or worn.

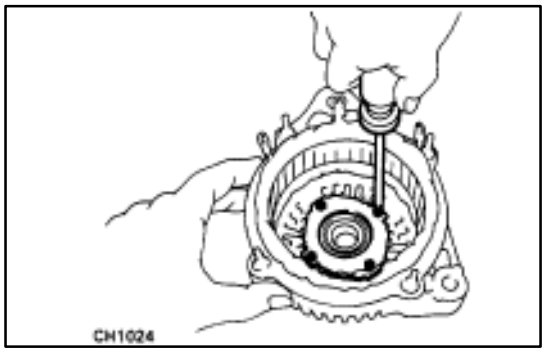

2. IF NECESSARY, REPLACE FRONT BEARING

(a) Remove the four screws, bearing retainer and bearing.

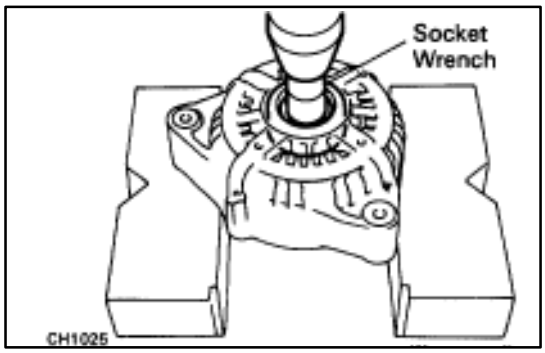

(b) Using a socket wrench and press, press out the bearing.

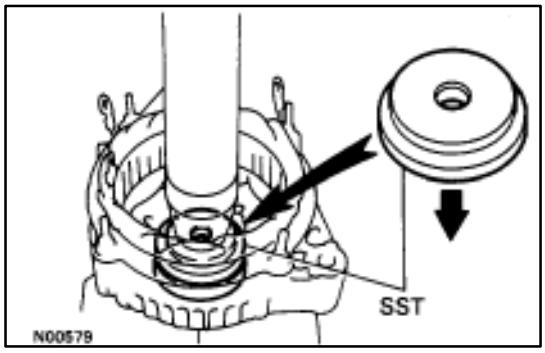

(c) Using SST and a press, press in a new bearing.

SST 09608–20012 (09608–00030)

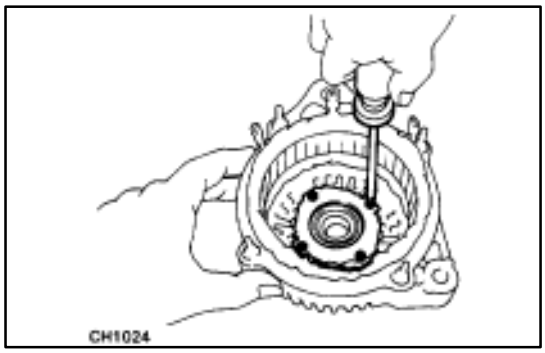

(d) Install the bearing retainer with the four screws.

WhereEverybodyKnowsYourName

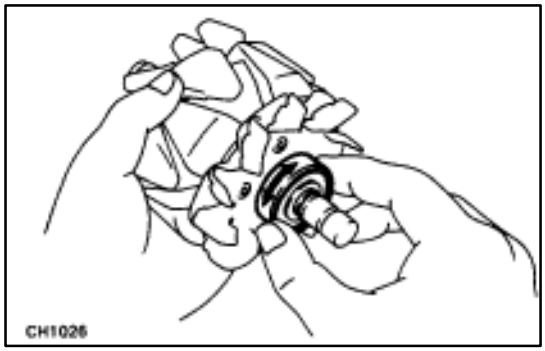

3. INSPECT REAR BEARING

Check that the bearing is not rough or worn.

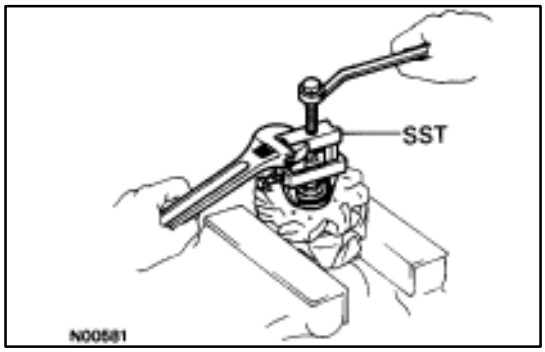

4. IF NECESSARY, REPLACE REAR BEARING

(a) Using SST, remove the bearing cover and bearing.

SST 09820–00021

NOTICE: Be careful not to damage the fan.

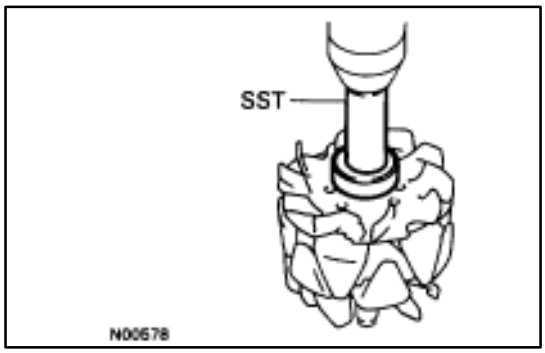

(b) Using SST and a press, press in a new bearing.

SST 09820–00030

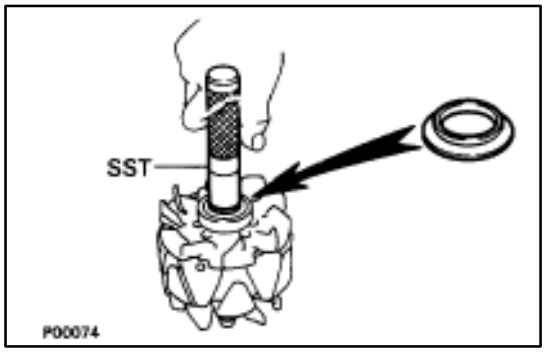

(c) Using SST, push in the bearing cover.

SST 09285–76010

WhereEverybodyKnowsYourName

ASSEMBLY OF ALTERNATOR

(See Components on page CH–10)

1. PLACE RECTIFIER END FRAME ON PULLEY

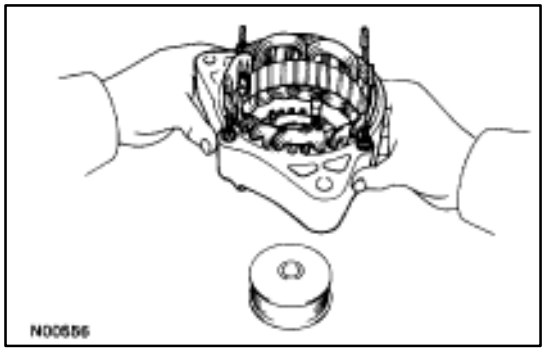

2. INSTALL ROTOR TO RECTIFIER END FRAME

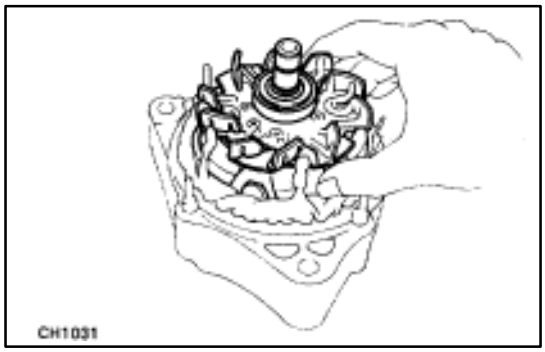

3. INSTALL RECTIFIER END FRAME

(a) Place the alternator washer on the rotor.

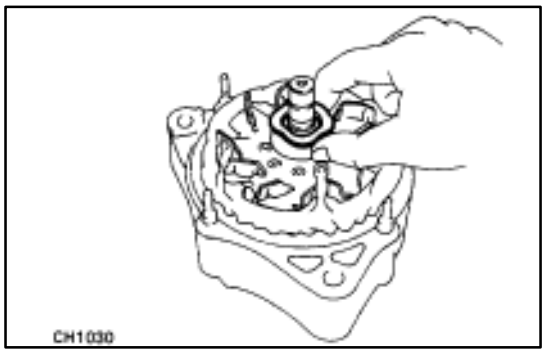

(b) Using a 29 mm socket wrench and press, slowly press in the rectifier end frame.

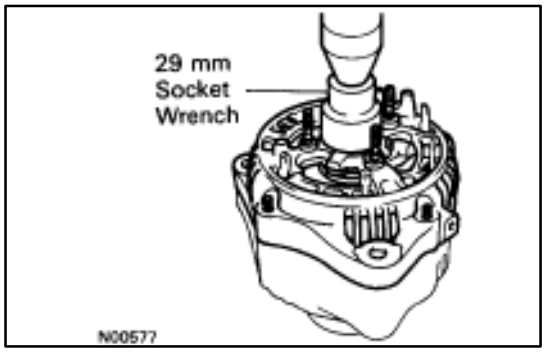

(c) Install the four mounting nuts.

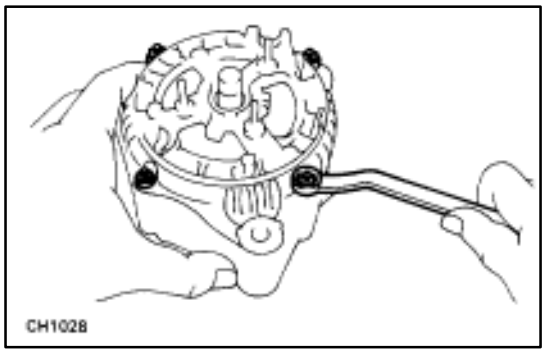

WhereEverybodyKnowsYourName

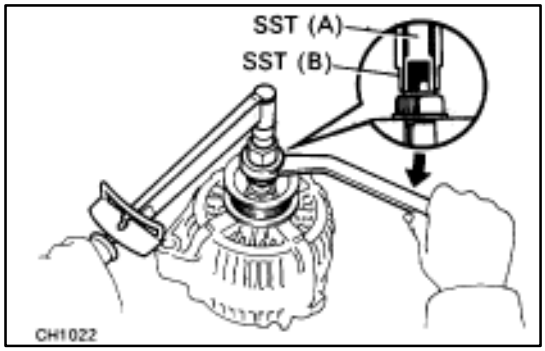

4. INSTALL PULLEY

(a) Install the pulley to the rotor shaft by tightening the pulley nut by hand.

(b) Hold SST (A) with a torque wrench, and tighten SST (B) clockwise to the specified torque.

SST 09820–63010

Torque: 39 N·m (400 kgf·cm, 29 ft·lbf)

(c) Check that SST (A) is secured to the pulley shaft.

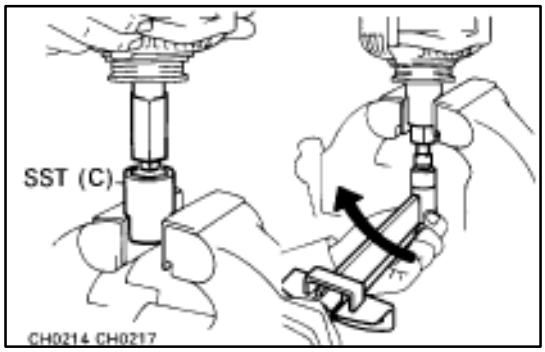

(d) As shown in the illustration, mount SST (C) in a vise, and install the alternator to SST (C).

(e) To torque the pulley nut, turn SST (A) in the direction shown in the illustration.

Torque: 110 N·m (1,125 kgf·cm, 81 ft·lbf)

(f) Remove the alternator from SST (C).

(g) Turn SST (B) and remove SST (A and B).

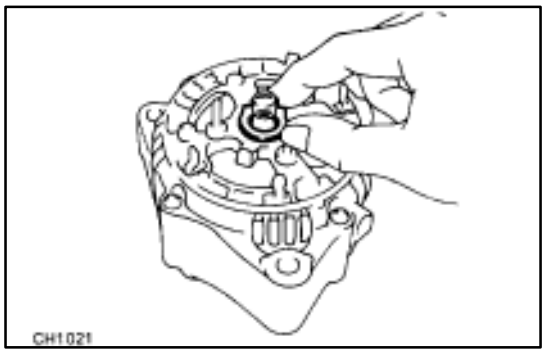

5. INSTALL RECTIFIER HOLDER

(a) Place the seal plate on the rectifier end frame.

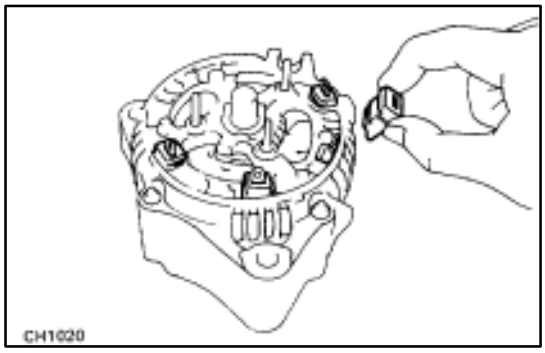

(b) Install the four rubber insulators on the lead wires.

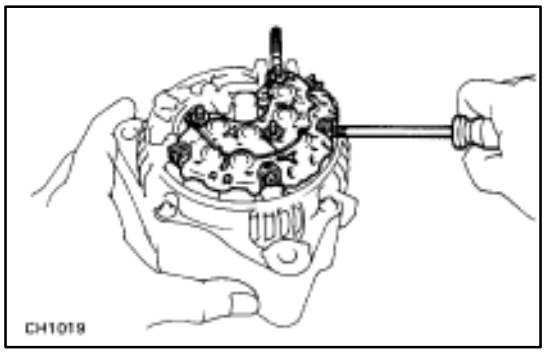

(c) Install the rectifier holder with the four screws.

WhereEverybodyKnowsYourName

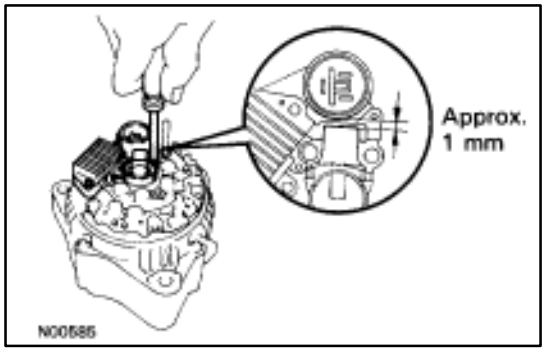

6. INSTALL IC REGULATOR AND BRUSH HOLDER

(a) Place the IC regulator together and brush holder on the rectifier end frame.

NOTICE: Be careful of the holder installation direction.

(b) Install the five mounting screws until there is a clearance of approx. 1 mm (0.04 in.) between the brush holder and connector.

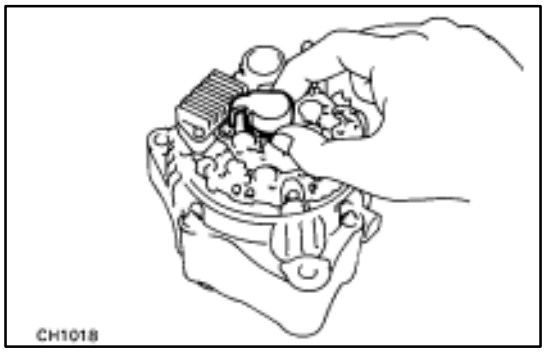

(c) Place the brush holder cover on the brush holder.

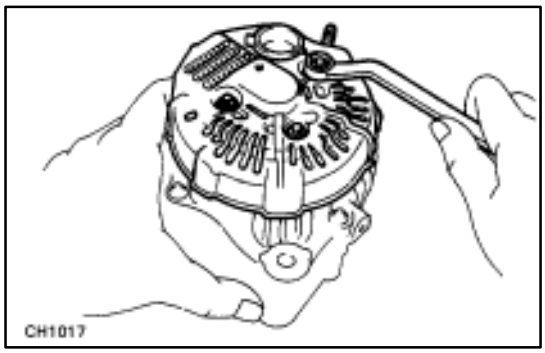

7. INSTALL REAR END COVER

(a) Install the end cover with the three nuts.

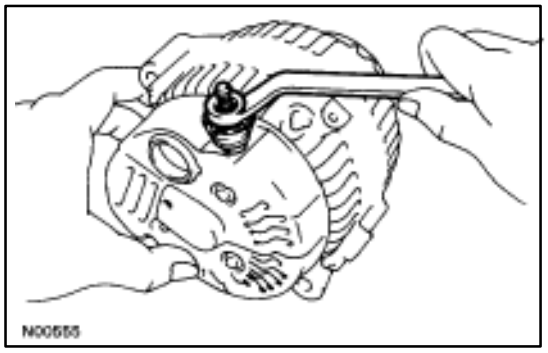

(b) Install the terminal insulator with the nut.

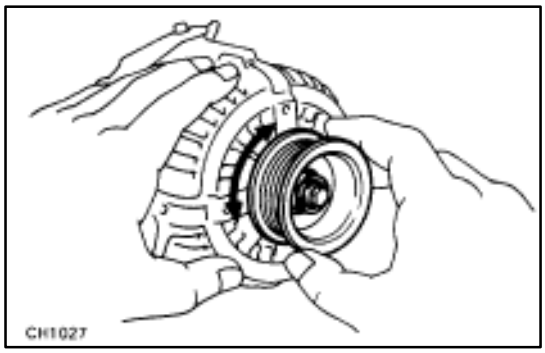

8. CHECK THAT ROTOR ROTATES SMOOTHLY

WhereEverybodyKnowsYourName

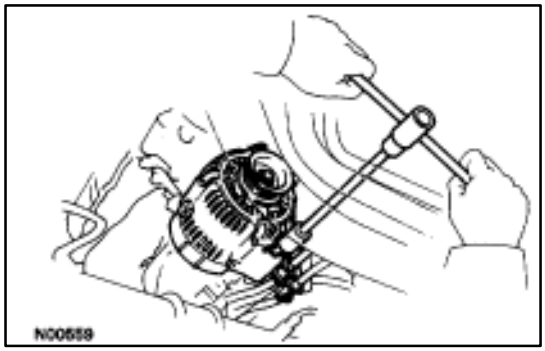

INSTALLATION OF ALTERNATOR

(See Components on page CH–9)

1. INSTALL ALTERNATOR

(a) Install the alternator and A/T oil cooler bracket with the bolt and nut.

Torque: 37 N·m (380 kgf·cm, 27 ft·lbf)

(b) Connect the alternator connector.

(c) Connect the alternator wire with the nut and cap.

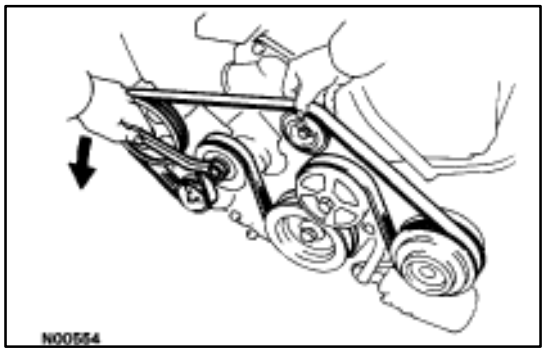

2. INSTALL DRIVE BELT

Install the drive belt by turning the drive belt tensioner counterclockwise.

HINT: The pulley bolt for the belt tensioner has a left–hand thread.

3. CONNECT CABLE TO NEGATIVE TERMINAL OF BATTERY

4. PERFORM ON–VEHICLE INSPECTION

(See steps 6 to 8 on pages CH–6 to 8)

5. INSTALL ENGINE UNDER COVER

WhereEverybodyKnowsYourName

ABBREVIATIONS USED IN THIS MANUAL

For convenience, the following abbreviations are used in this manual.

ABS	Antilock Brake System
assy	assembly
ECT	Electronic Controlled Transmission
ECU	Electronic Control Unit
e.g.	Exempi Gratia (For Example)
Ex.	Except
in.	inch
LH	Left-hand
MIG	Metal Inert Gas
M/Y	Model Year
PPS	Progressive Power Steering
RH	Right-hand
w/	with
w/o	without

WhereEverybodyKnowsYourName

HANDLING PRECAUTIONS

1. The repair procedure for plastic body parts must conform with the type of plastic material.
2. Plastic body parts are identified by the codes in the following chart.
3. When repairing metal body parts adjoining plastic body parts (by brazing, frame cutting, welding, painting, etc.), consideration must given to the property of the plastic.

Code	Material name	Heat * resistant temperature limit °C (°F)	Resistance to alcohol or gasoline	Notes
AAS	Acrylonitrile Acrylic Styrene	80 (176)	Alcohol is harmless if applied only for short time in small amounts (e.g., quick wiping to remove grease).	Avoid gasoline and organic or aromatic solvents.
ABS	Acrylonitrile Butadiene Styrene	80 (176)	Alcohol is harmless if applied only for short time in small amounts (e.g., quick wiping to remove grease).	Avoid gasoline and organic or aromatic solvents.
AES	Acrylonitrile Ethylene Styrene	80 (176)	Alcohol is harmless if applied only for short time in small amounts (e.g., quick wiping to remove grease).	Avoid gasoline and organic or aromatic solvents.
BMC	Bulk Moulding Compound	150 (302)	Alcohol and gasoline are harmless.	Most solvents are harmless.
CAB	Cellulose Acetate	80 (176)	Alcohol is harmless if applied only for short time in small amounts (e.g., quick wiping to remove grease).	Avoid gasoline and organic or aromatic solvents.
EPDM	Ethylene Propylene	100 (212)	Alcohol is harmless. Gasoline is harmless if applied only for short time in small amounts.	Most solvents are harmless but avoid dipping in gasoline, solvents, etc.
PA	Polyamide (Nylon)	80 (176)	Alcohol and gasoline are harmless.	Avoid battery acid.
PBT	Polybutylene Terephthalate	160 (320)	Alcohol and gasoline are harmless.	Most solvents are harmless.
PC	Polycarbonate	120 (248)	Alcohol is harmless.	Avoid gasoline, brake fluid, wax, wax removers and organic solvents.
PE	Polyethylene	80 (176)	Alcohol and gasoline are harmless.	Most solvents are harmless.
PET	Polyethylene Terephthalate	75 (167)	Alcohol and gasoline are harmless.	Avoid dipping in water.

*Temperatures higher than those listed here may result in material deformation during repair.

WhereEverybodyKnowsYourName

Code	Material name	Heat* resistant temperature limit °C (°F)	Resistance to alcohol or gasoline	Notes
PMMA	Polymethyl Methacrylate	80 (176)	Alcohol is harmless if applied only for short time in small amounts.	Avoid dipping or immersing in alcohol, gasoline, solvents, etc.
POM	Polyoxymethylene (Polyacetal)	100 (212)	Alcohol and gasoline are harmless.	Most solvents are harmless.
PP	Polypropylene	80 (176)	Alcohol and gasoline are harmless.	Most solvents are harmless.
PPO	Modified Polyphenylene Oxide	100 (212)	Alcohol is harmless.	Gasoline is harmless if applied only for quick wiping to remove grease.
PS	Polystyrene	60 (140)	Alcohol and gasoline are harmless if applied only for short time in small amounts.	Avoid dipping or immersing in alcohol, gasoline, solvents, etc.
PUR	Polyurethane	80 (176)	Alcohol is harmless if applied only for very short time in small amounts (e.g., quick wiping to remove grease).	Avoid dipping or immersing in alcohol, gasoline, solvents, etc.
PVC	Polyvinylchloride (Vinyl)	80 (176)	Alcohol and gasoline are harmless if applied only for short time in small amounts (e.g., quick wiping to remove grease).	Avoid dipping or immersing in alcohol, gasoline, solvents, etc.
SAN	Styrene Acrylonitrile	80 (176)	Alcohol is harmless if applied only for short time in small amounts (e.g., quick wiping to remove grease).	Avoid dipping or immersing in alcohol, gasoline, solvents, etc.
SMC	Sheet Moulding Compound	180 (356)	Alcohol and gasoline are harmless.	Avoid alkali
TPO	Thermoplastic Olefine	80 (176)	Alcohol is harmless. Gasoline is harmless if applied only for short time in small amounts.	Most solvents are harmless but avoid dipping in gasoline, solvents, etc.
TPU	Thermoplastic Polyurethane	80 (176)	Alcohol is harmless if applied only for very short time in small amounts (e.g., quick wiping to remove grease).	Avoid dipping or immersing in alcohol, gasoline, solvents, etc.
UP	Unsaturated Polyester	110 (233)	Alcohol and gasoline are harmless.	Avoid alkali

* Temperatures higher than those listed here may result in material deformation during repair.

WhereEverybodyKnowsYourName

LOCATION OF PLASTIC BODY PARTS

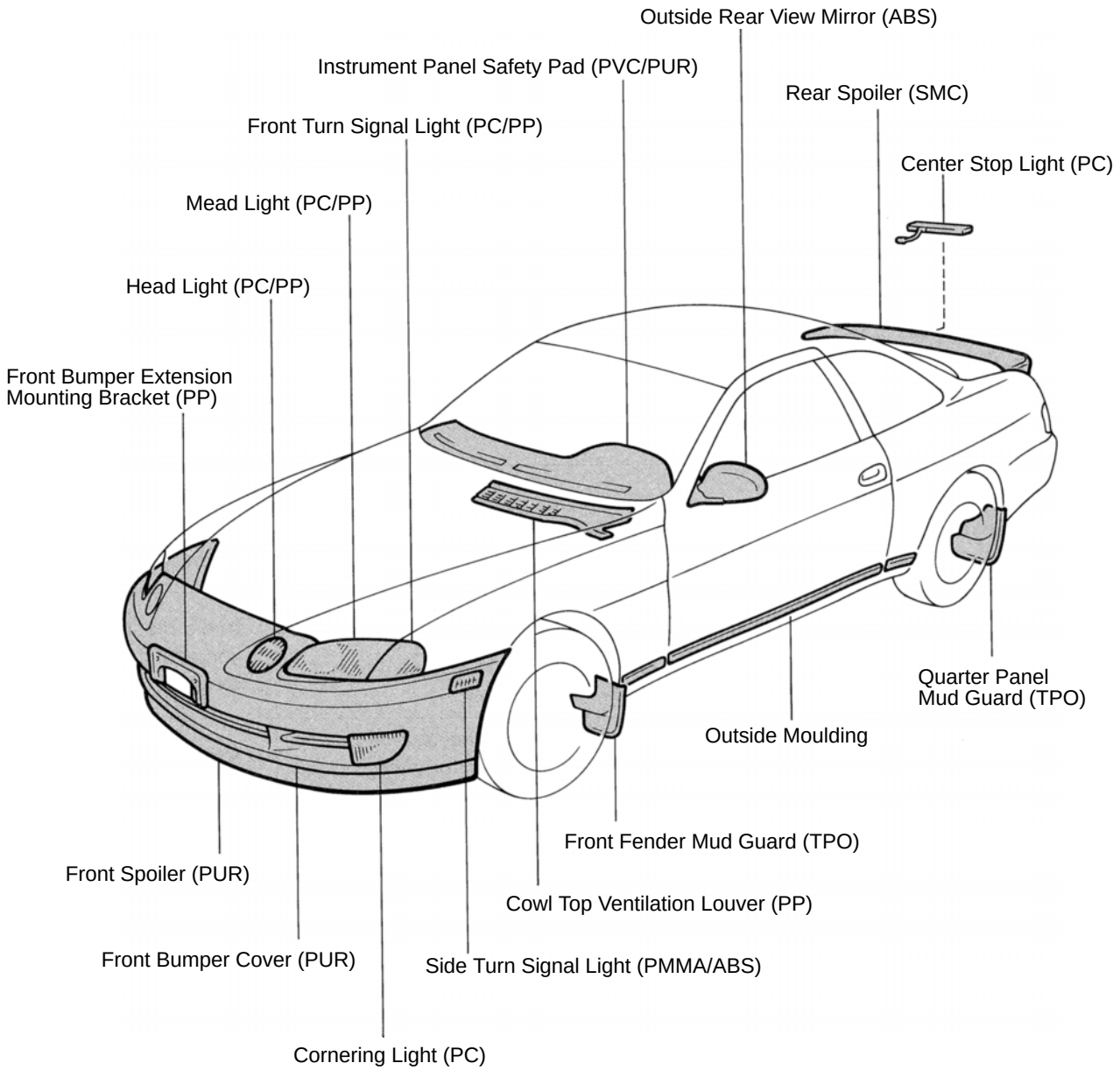

HINT:

- *Resin material differs with model.*

/ *Made up of 2 or more kinds of materials.*

WhereEverybodyKnowsYourName

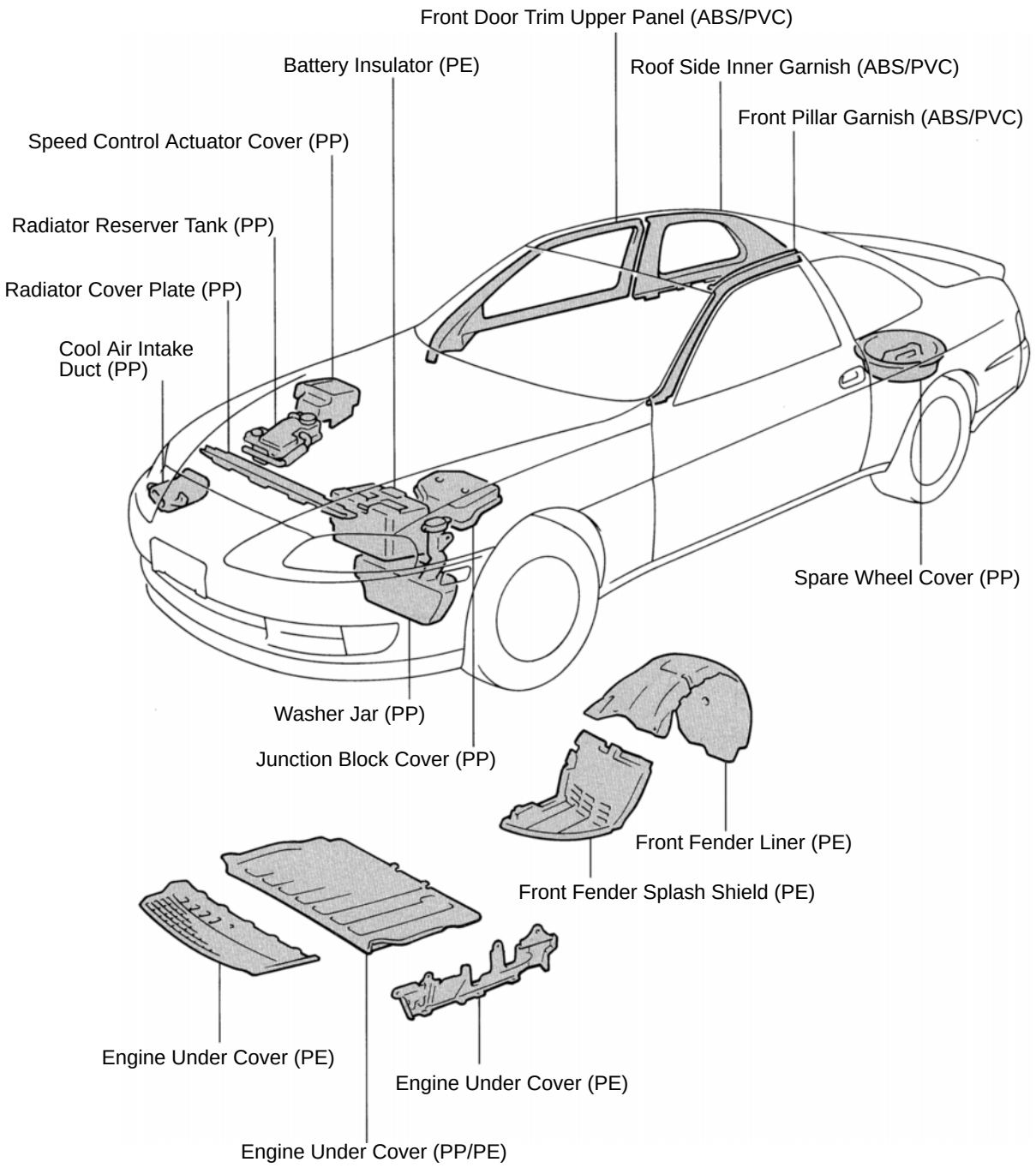

HINT:

- *Resin material differs with model.*

/ *Made up of 2 or more kinds of materials.*

WhereEverybodyKnowsYourName

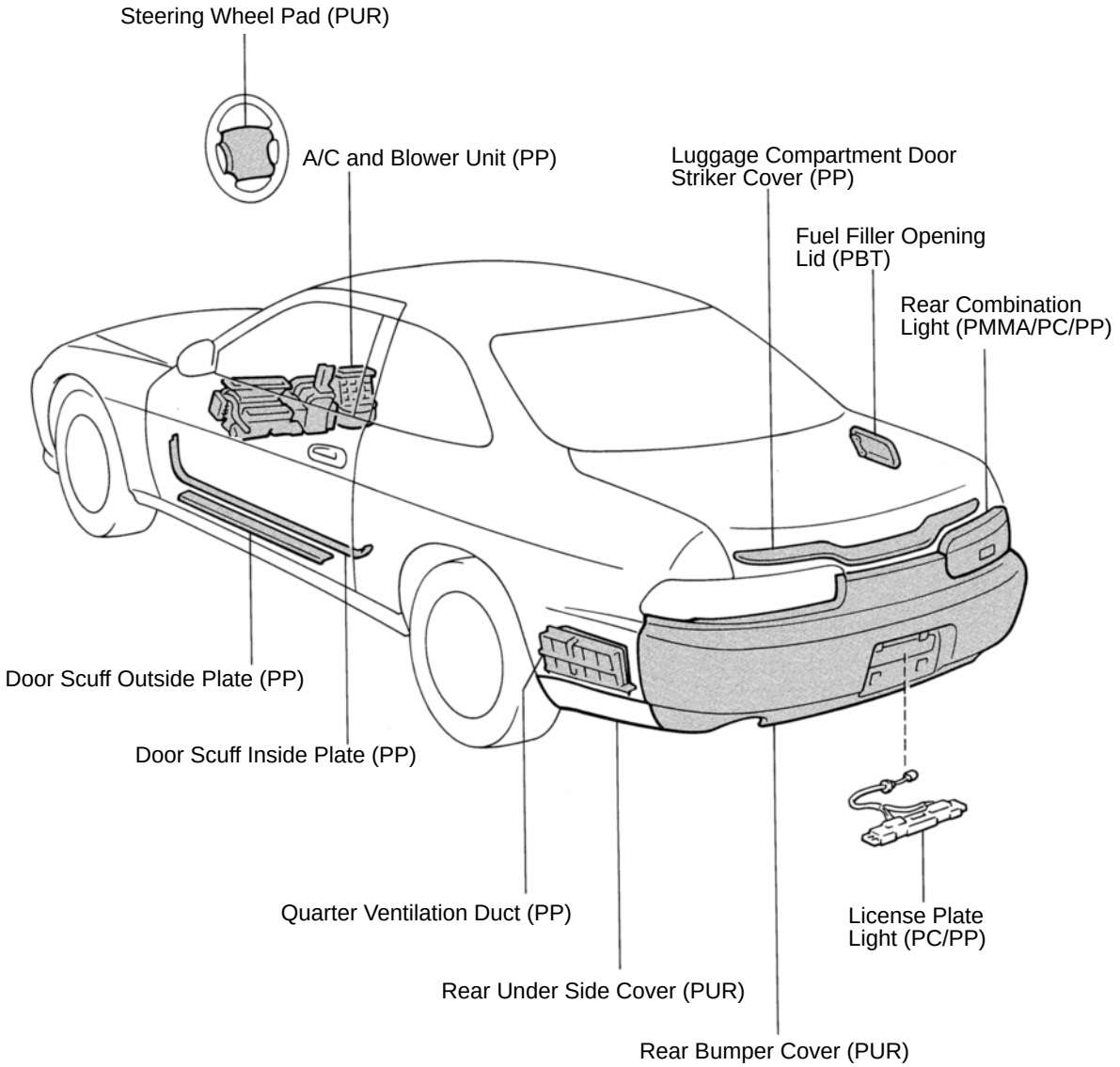

HINT:

- *Resin material differs with model.*

/ *Made up of 2 or more kinds of materials.*

WhereEverybodyKnowsYourName

RADIATOR UPPER SUPPORT (ASSY)

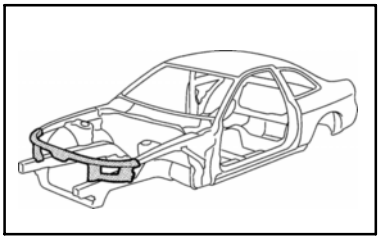

REMOVAL

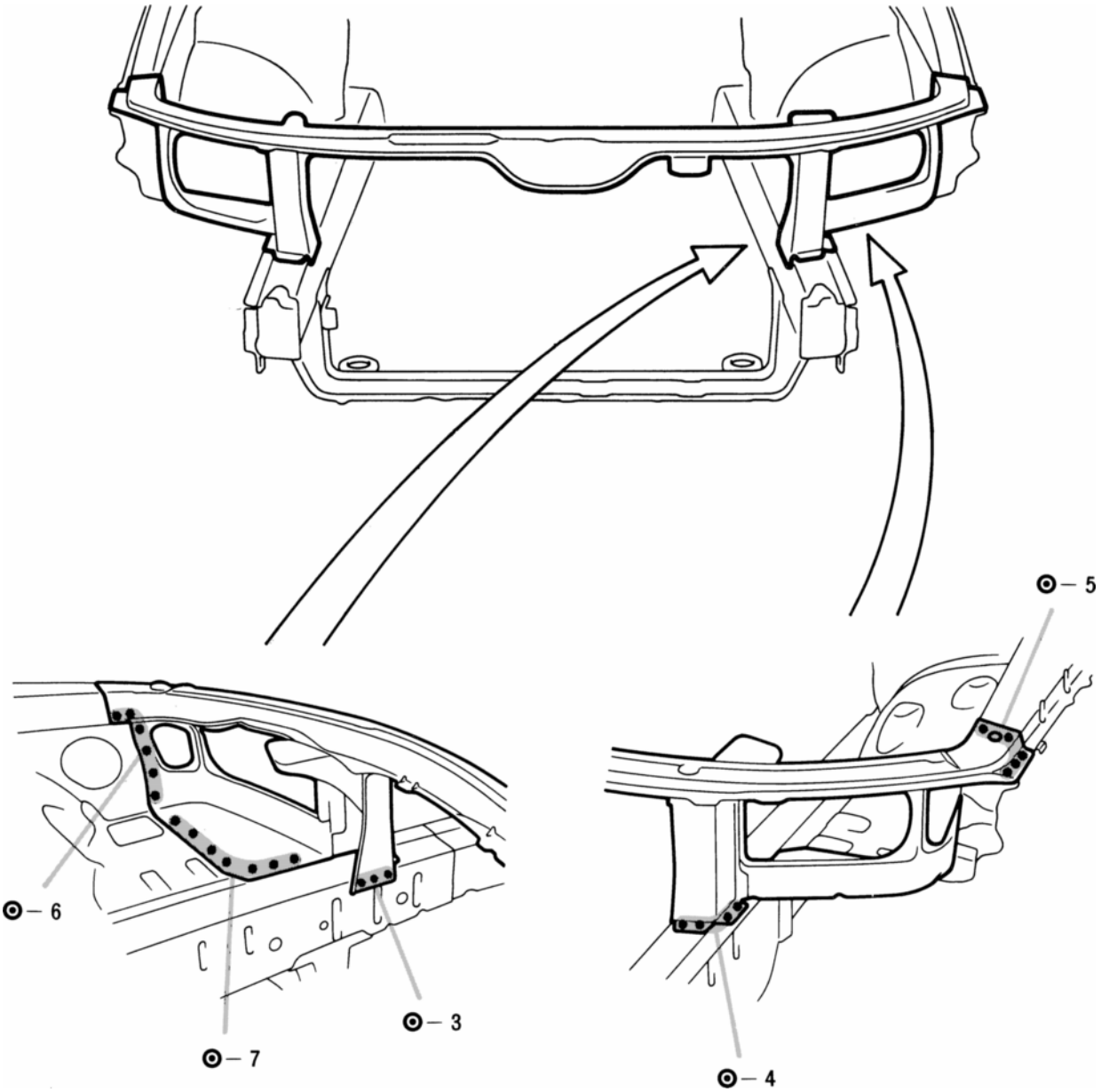

WhereEverybodyKnowsYourName

INSTALLATION

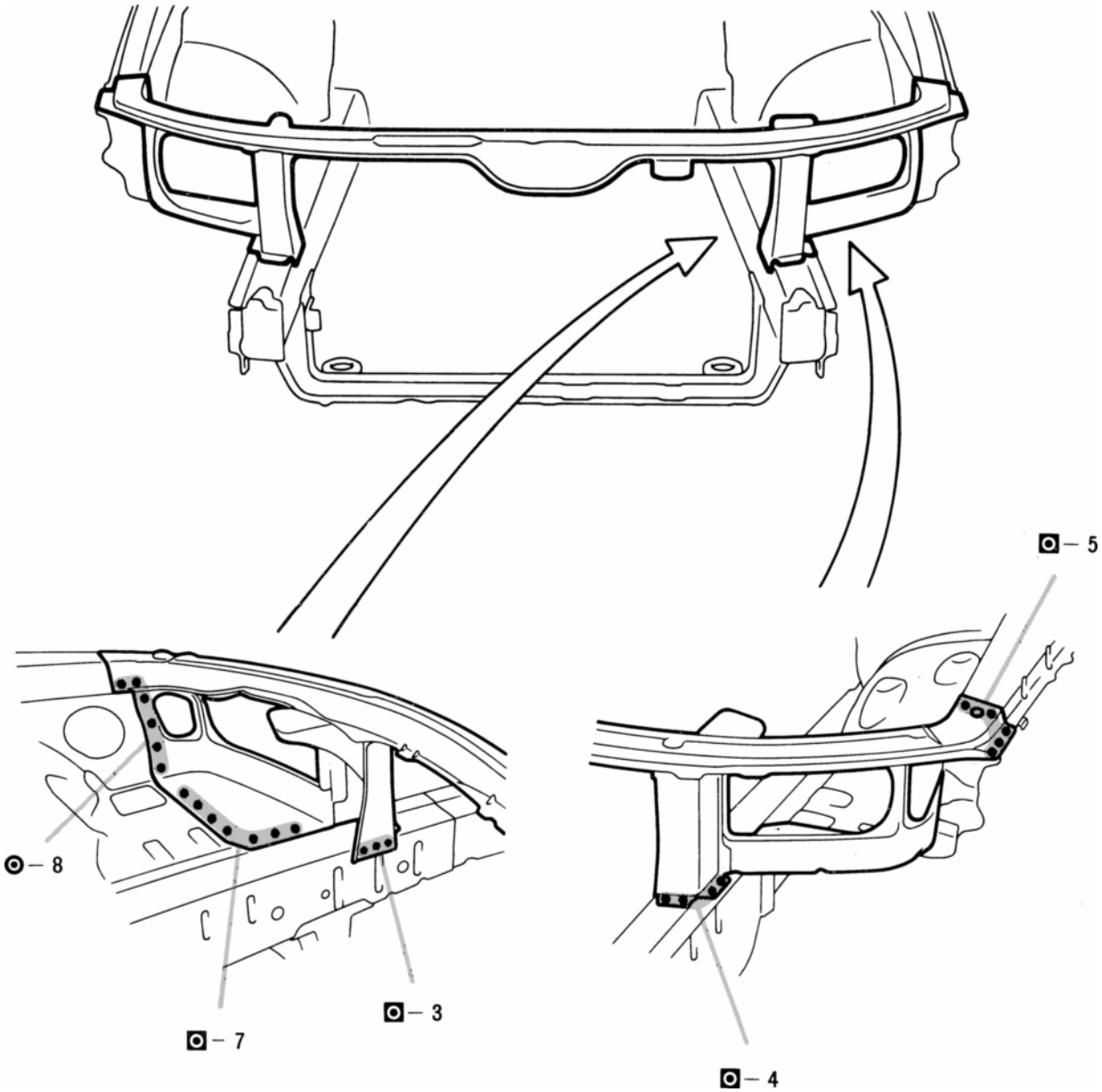

1. Temporarily install the new parts and measure each part in accordance with the body dimension diagram.

HINT: First install the hood lock support.

WhereEverybodyKnowsYourName

FRONT CROSSMEMBER (ASSY)

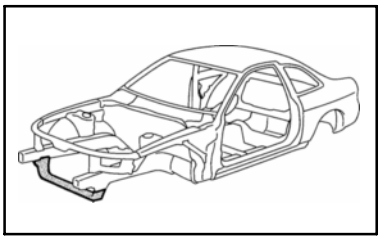

REMOVAL

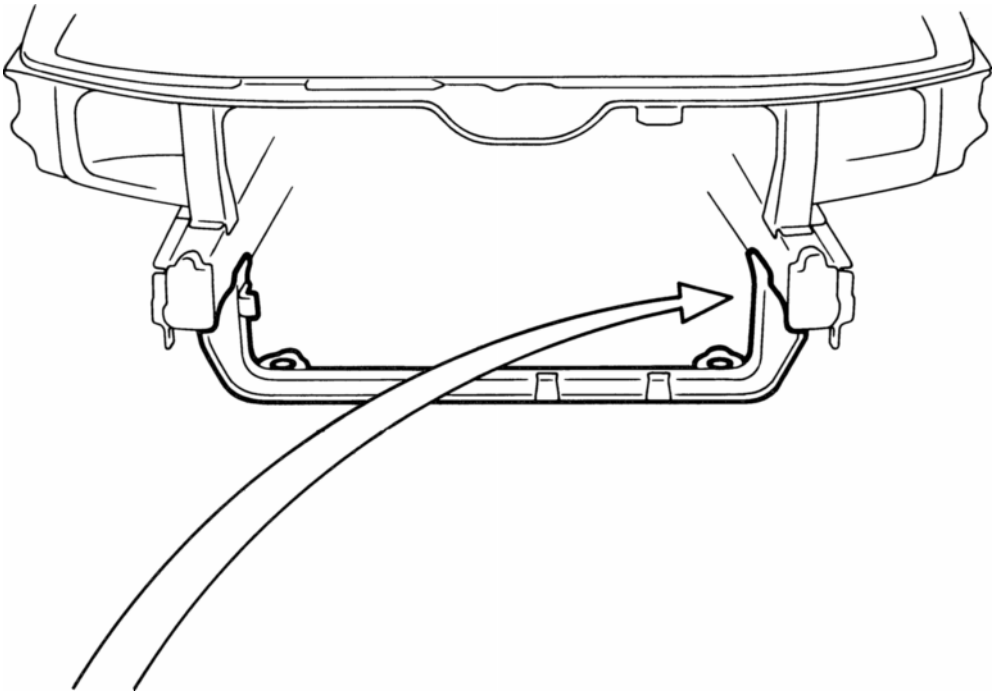

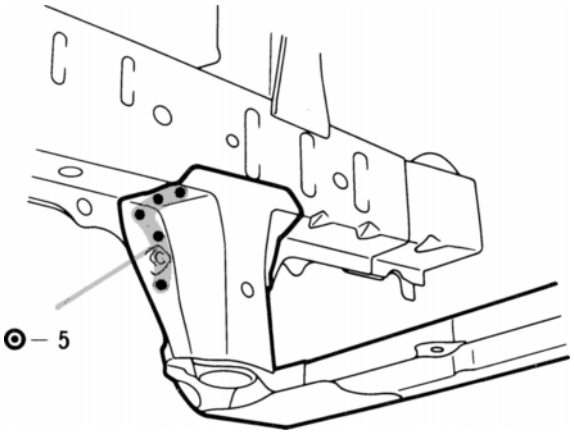

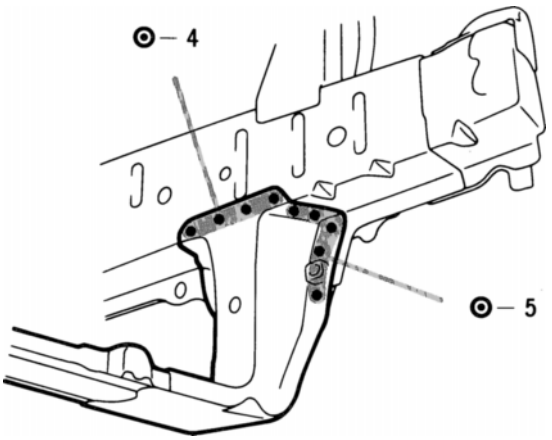

WhereEverybodyKnowsYourName

INSTALLATION

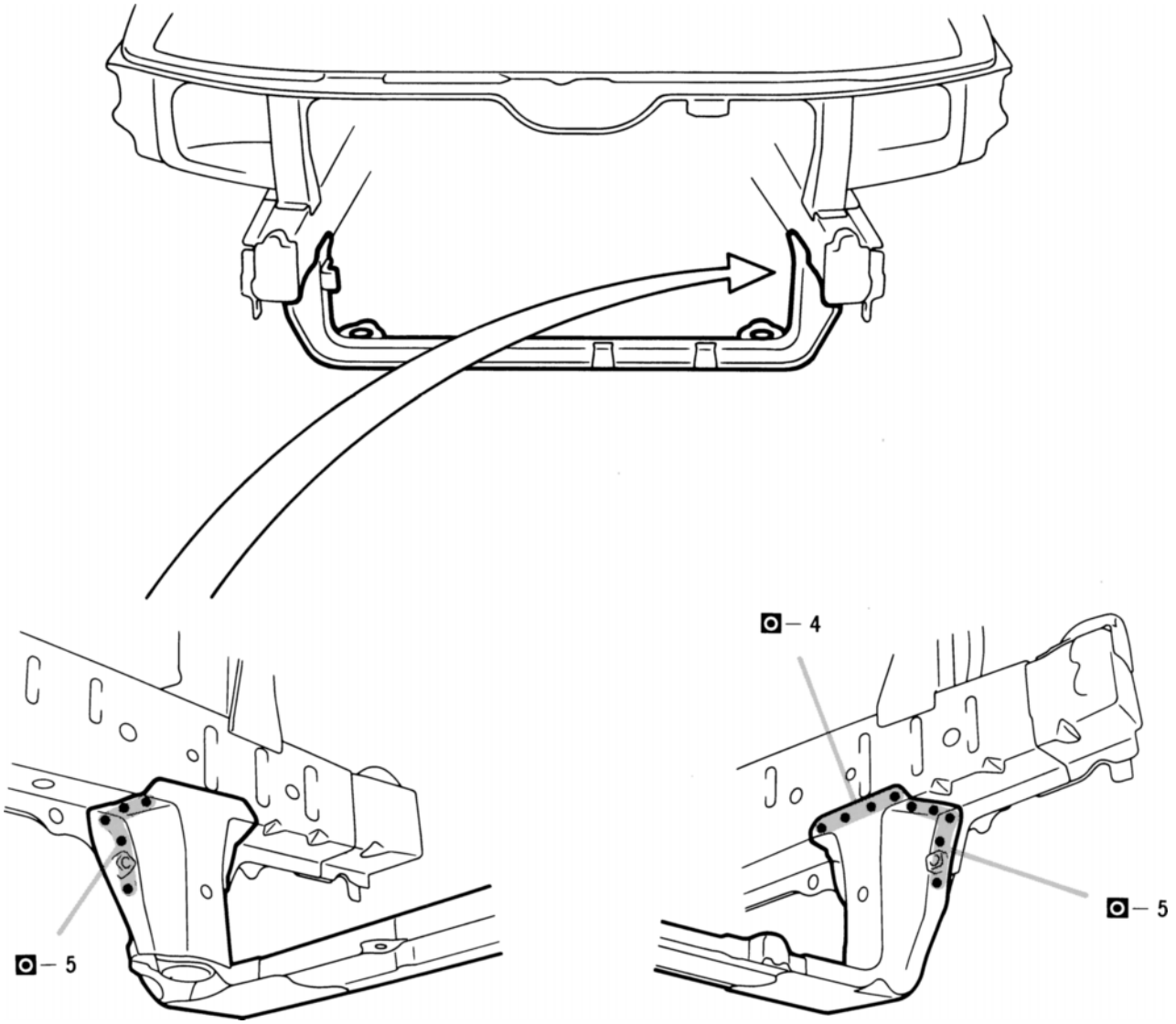

1. Temporarily install the new parts and measure each part in accordance with the body dimension diagram.

WhereEverybodyKnowsYourName

FRONT FENDER FRONT APRON (ASSY)

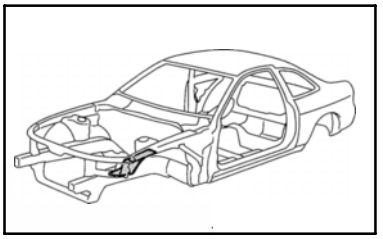

REMOVAL (With the radiator upper support removed.)

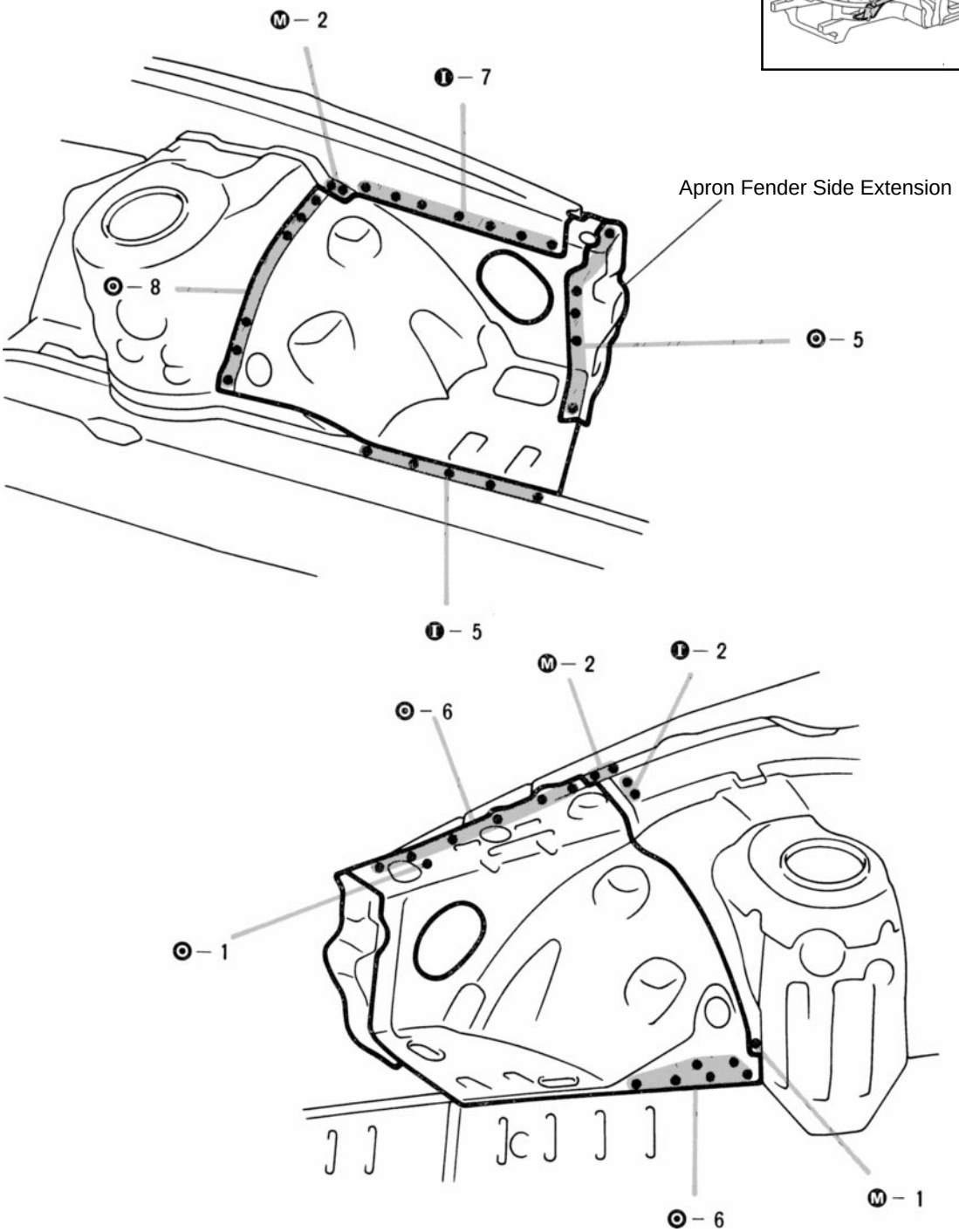

1. Replace the apron fender side extension at the same time.

WhereEverybodyKnowsYourName

INSTALLATION

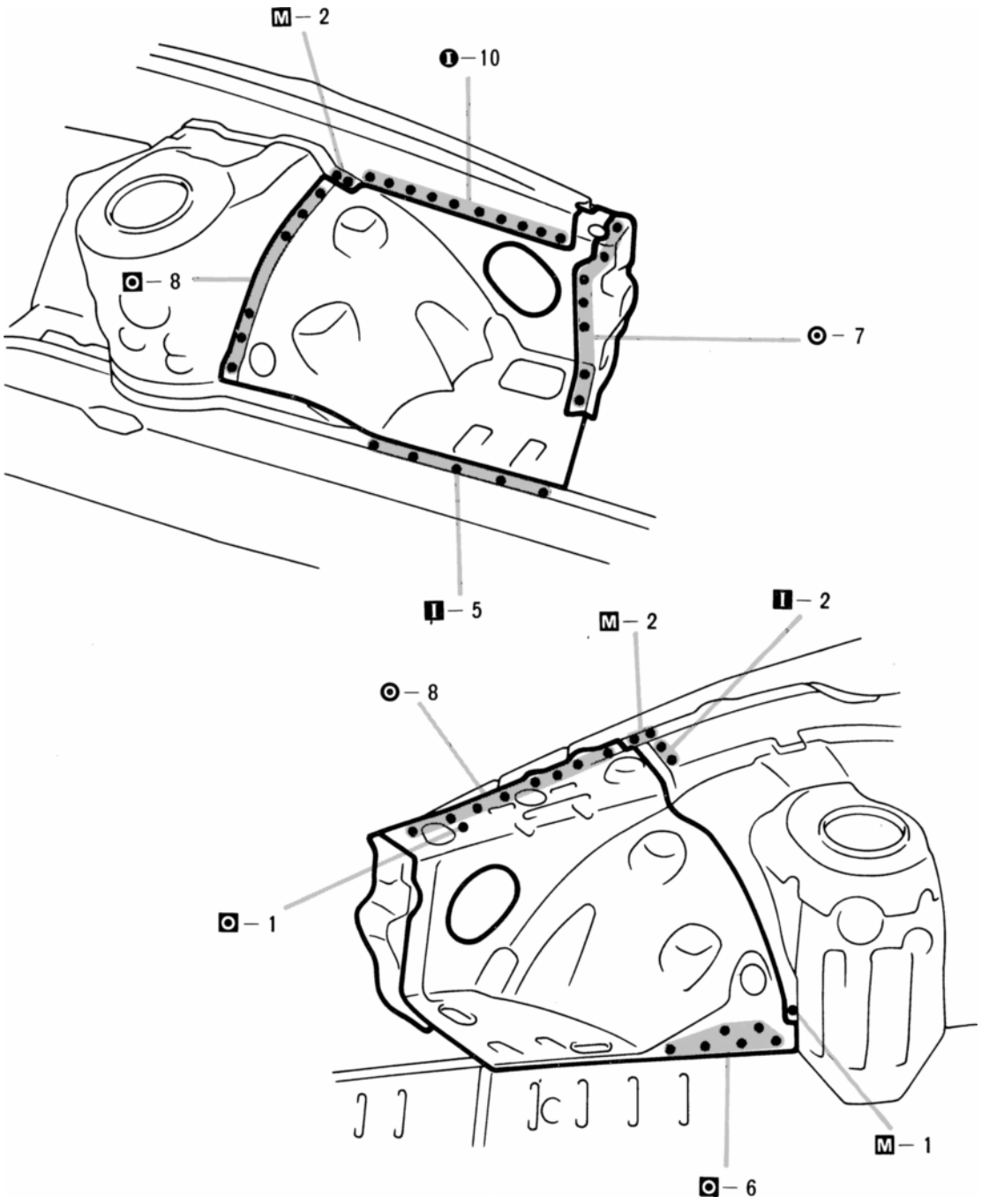

1. Temporarily install the new parts and measure each part in accordance with the body dimension diagram.

WhereEverybodyKnowsYourName

FRONT APRON TO COWL SIDE UPPER MEMBER (ASSY)

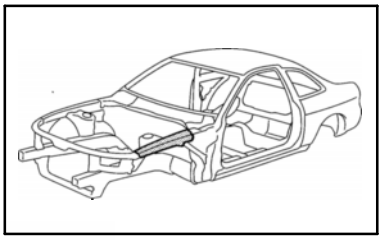

REMOVAL (With the front fender front apron removed.)

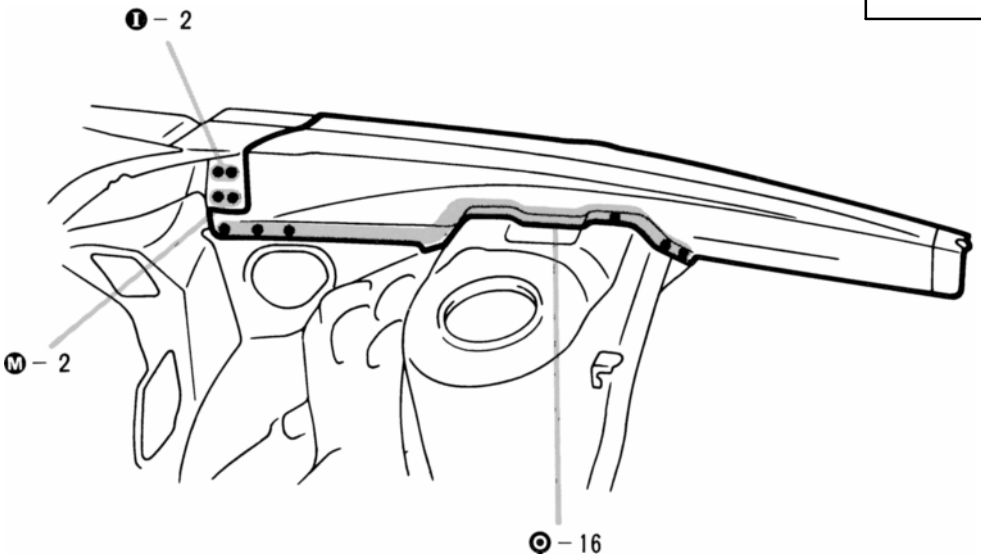

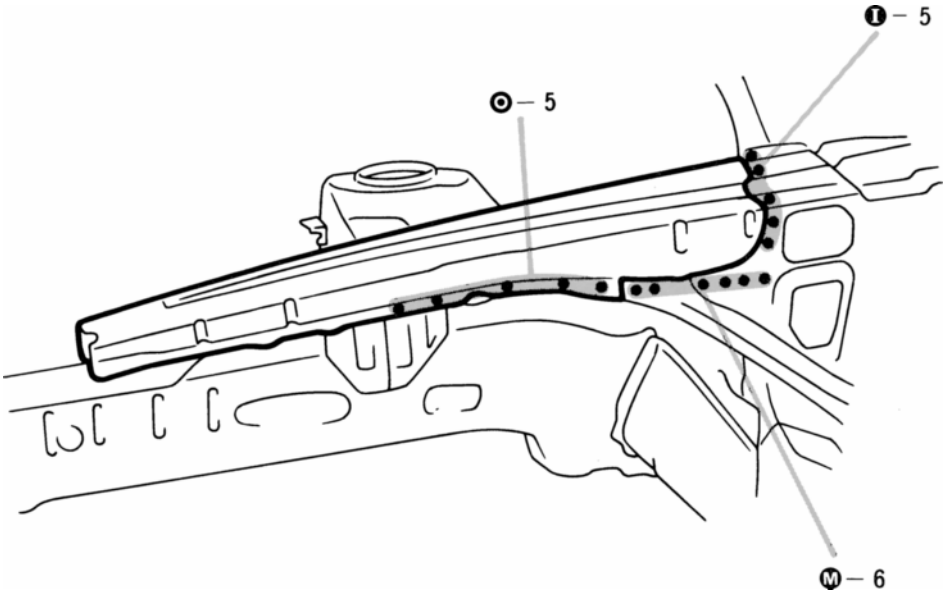

WhereEverybodyKnowsYourName

INSTALLATION

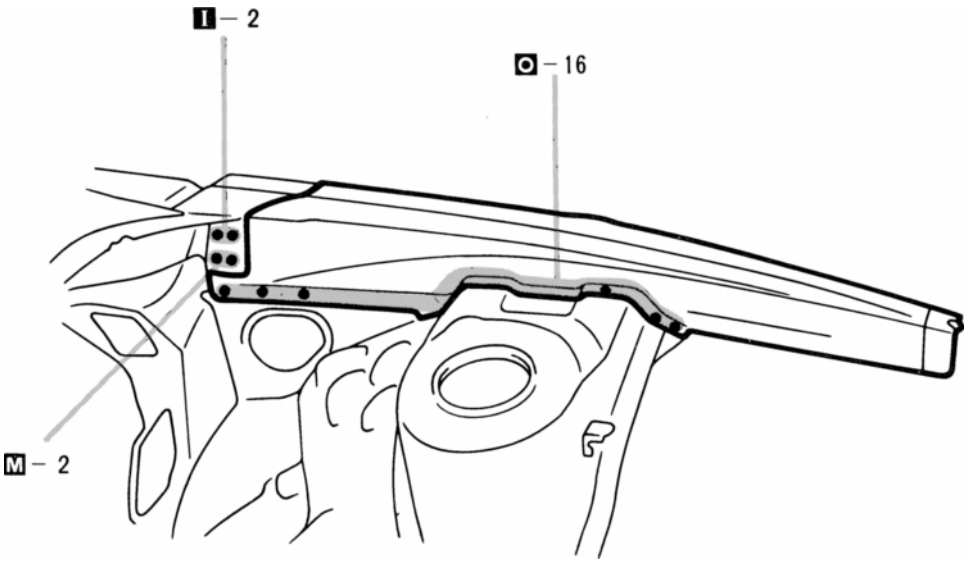

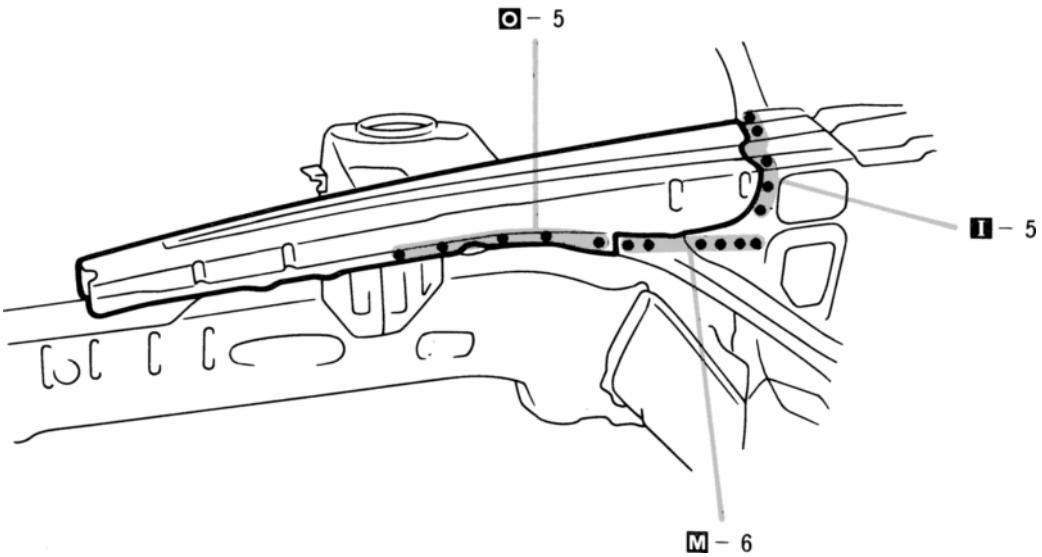

1. Temporarily install the new parts and measure each part in accordance with the body dimension diagram.
2. Temporarily install the front fender and the hood, and check the fit.

WhereEverybodyKnowsYourName

FRONT FENDER APRON (ASSY)

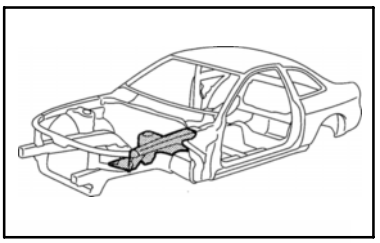

REMOVAL (With the radiator upper support removed.)

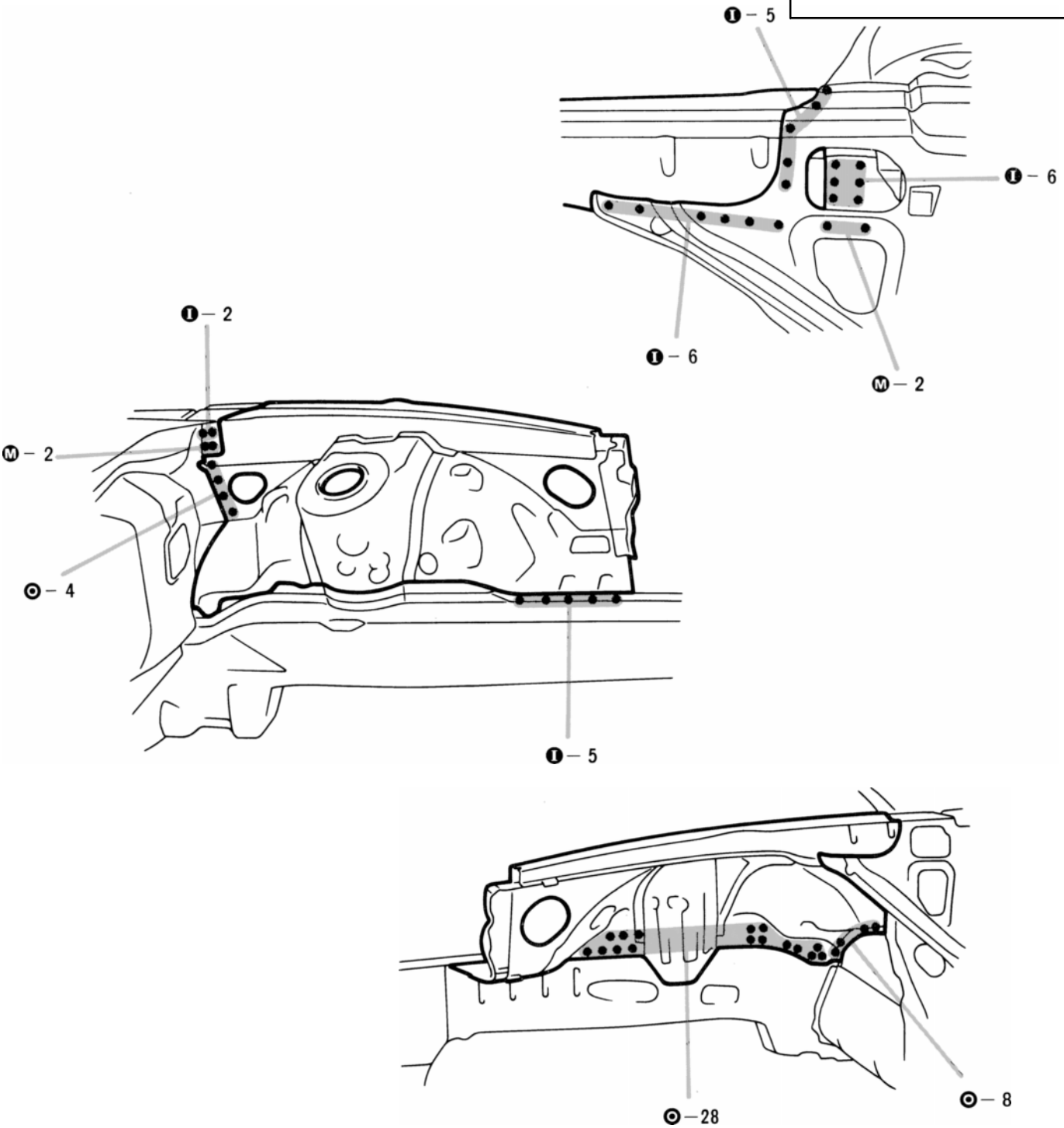

WhereEverybodyKnowsYourName

INSTALLATION

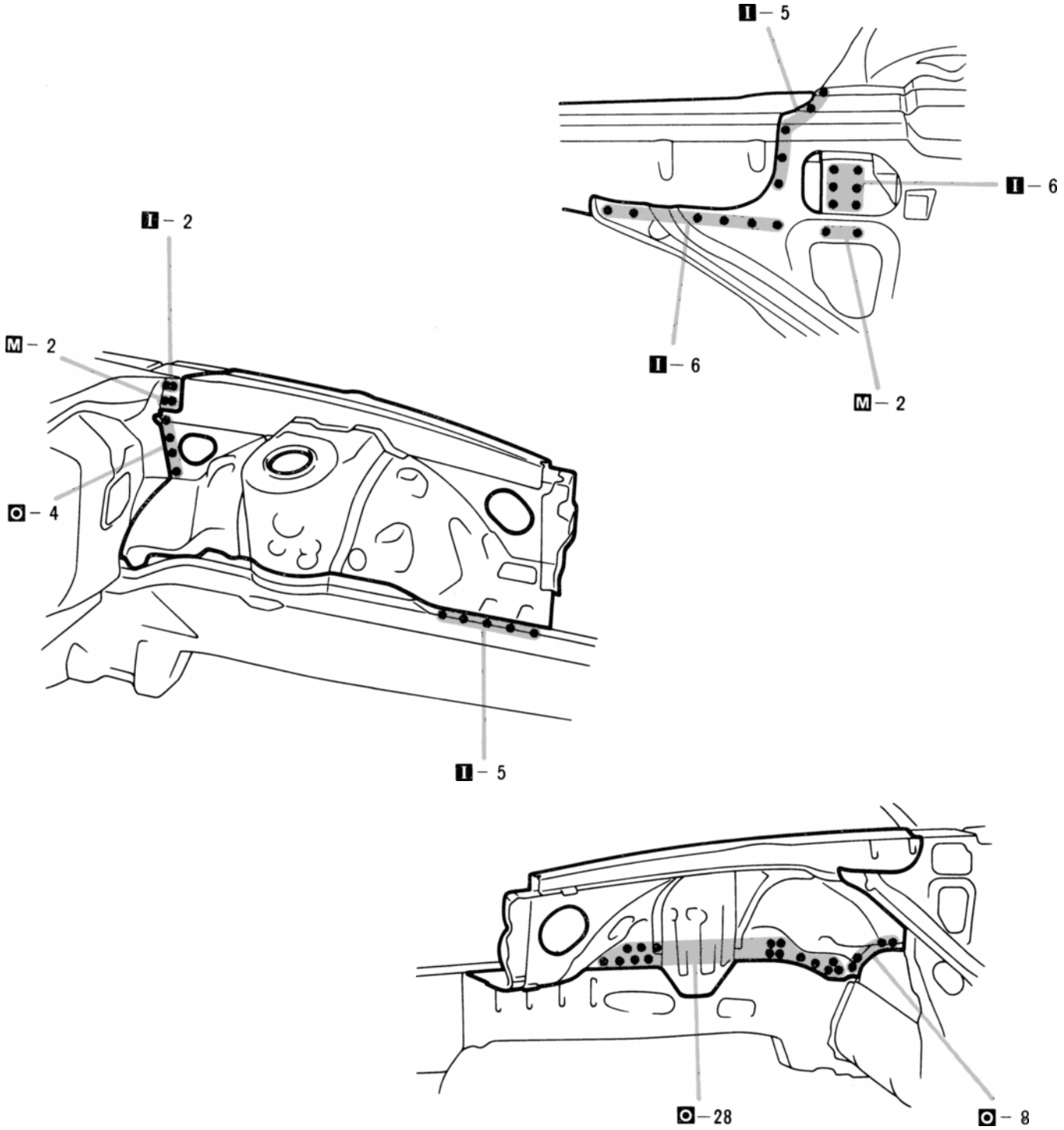

1. Temporarily install the new parts and measure each part in accordance with the body dimension diagram.

NOTICE: Make sure each measurement is correct, as this parts affects the front wheel alignment.

2. Temporarily install the front fender and the hood, and check the fit.

WhereEverybodyKnowsYourName

FRONT SIDE MEMBER NO. 2 REINFORCEMENT (CUT)

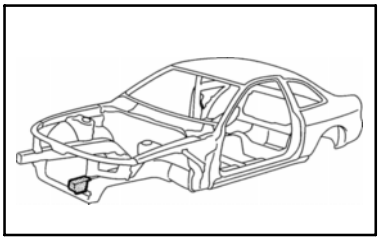

REMOVAL

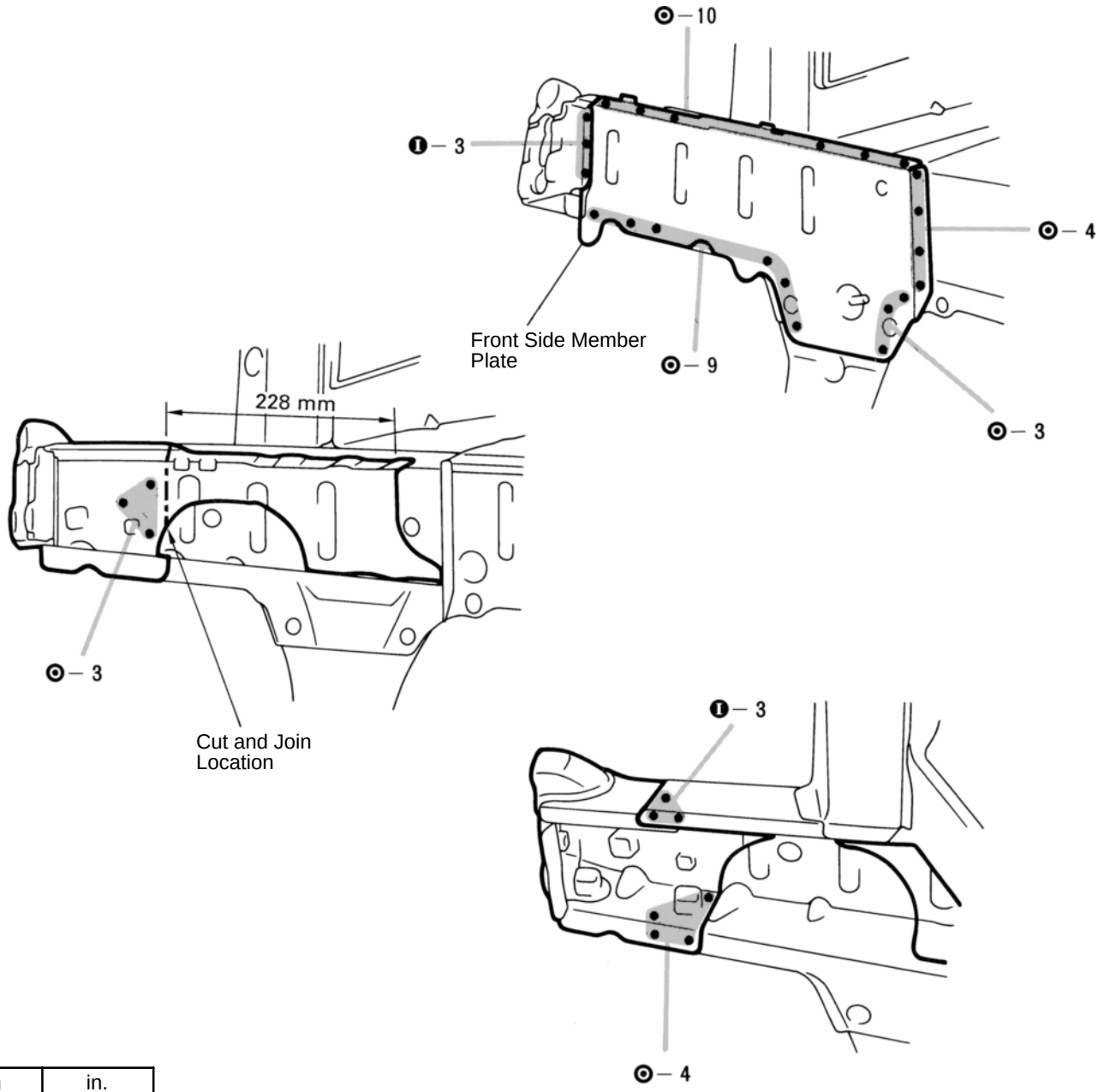

mm	in.
228	8.98

1. After removing the front side member plate, cut and join the parts at the location shown above.

HINT: Leaving the front side member inner on the vehicle, cut the reinforcement only.

WhereEverybodyKnowsYourName

INSTALLATION

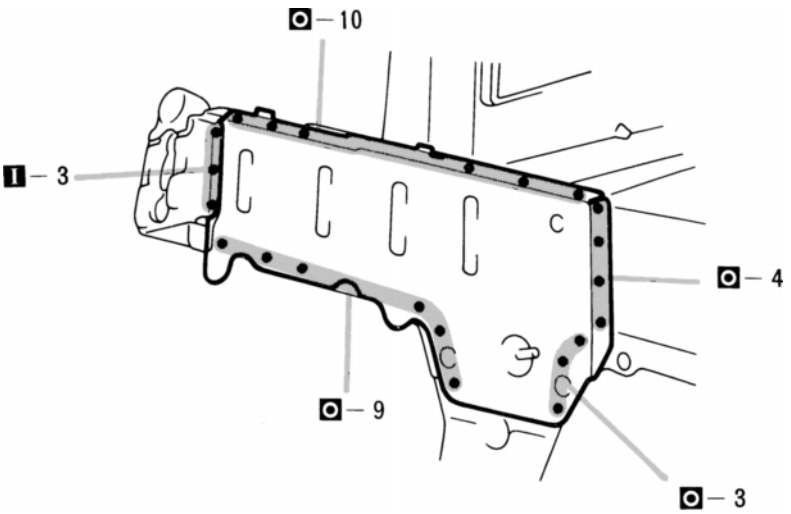

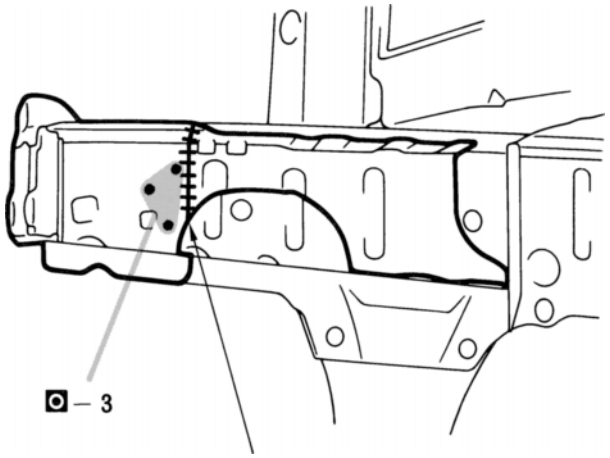

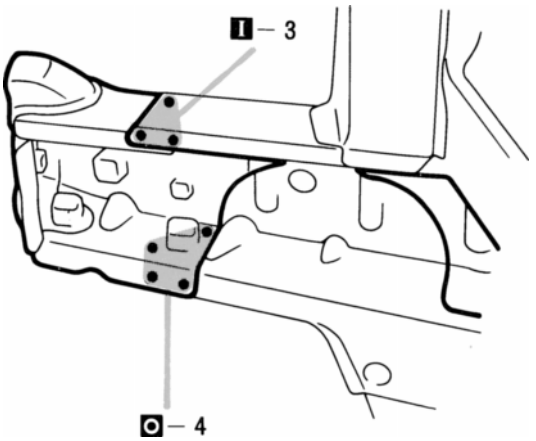

1. Temporarily install the new parts and measure each part in accordance with the body dimension diagram.

WhereEverybodyKnowsYourName

FRONT SIDE MEMBER (CUT-P)

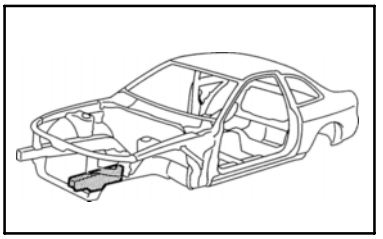

REMOVAL (With the radiator upper support and front crossmember removed.)

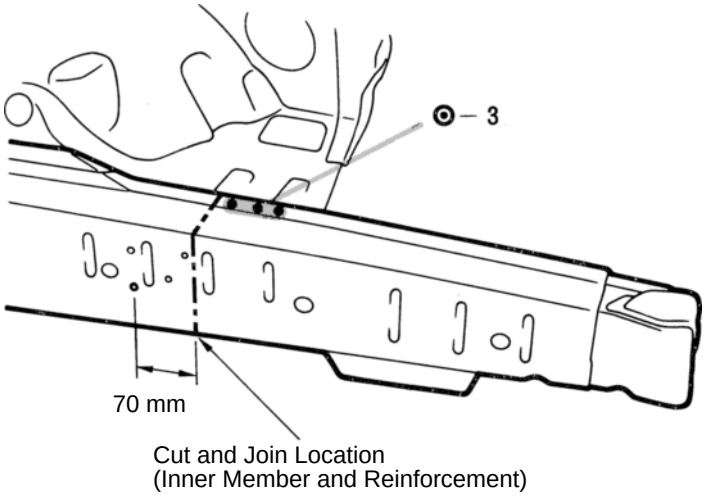

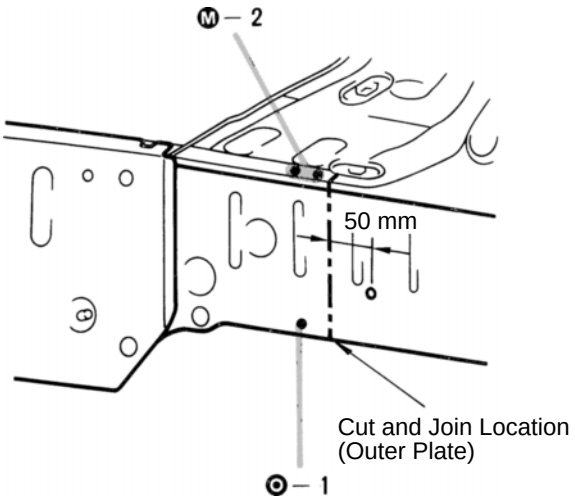

mm	in.
50 70	1.97 2.76

1. Cut and join the parts at the location shown above.

HINT: Shift the cut and join location of the outer plate, inner member and the reinforcement.

WhereEverybodyKnowsYourName

INSTALLATION

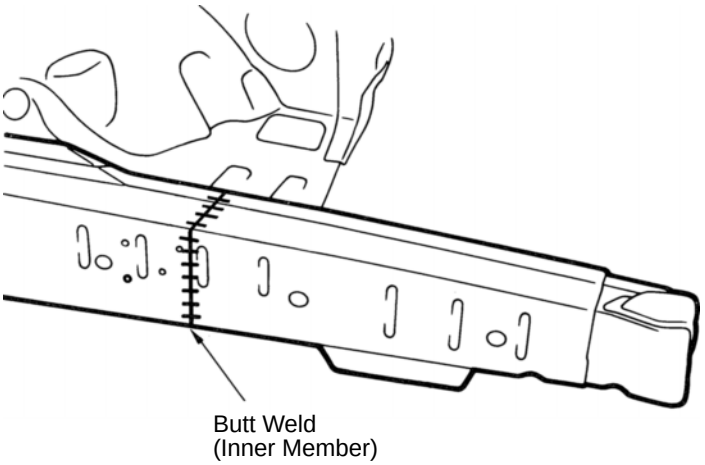

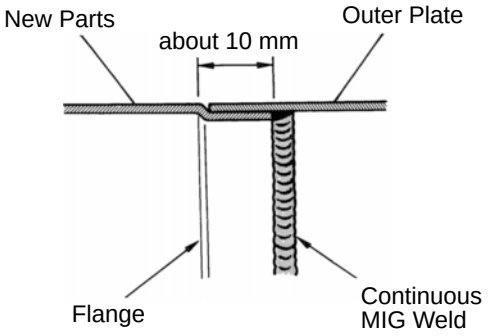

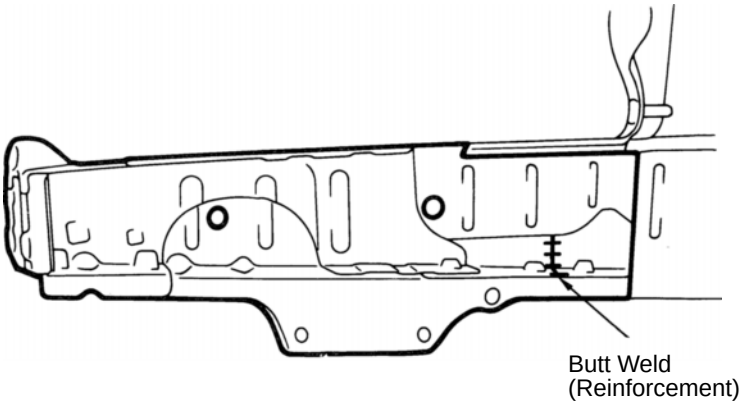

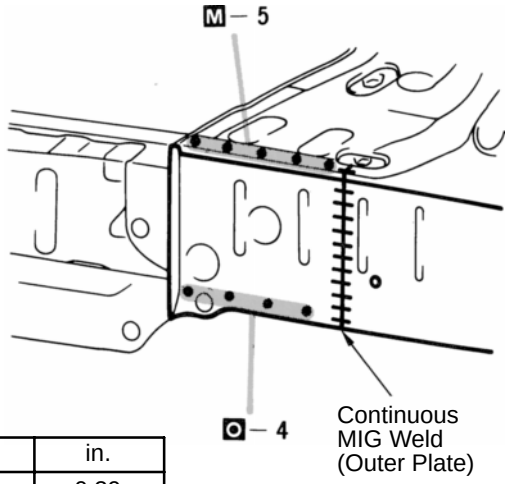

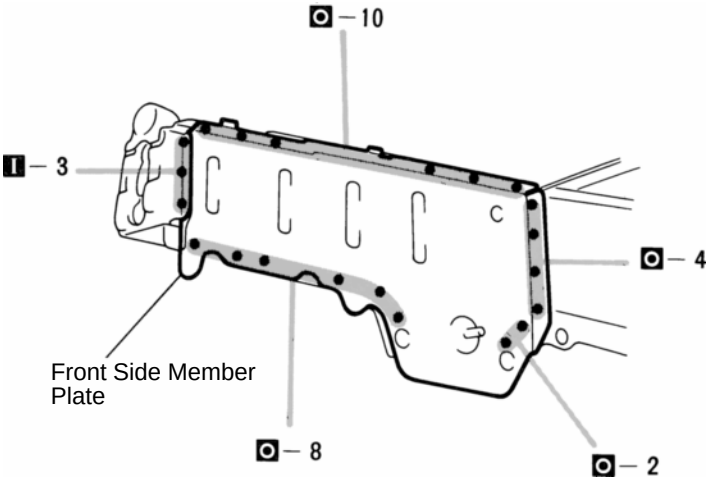

mm	in.
10	0.39

1. Temporarily install the new parts and measure each part in accordance with the body dimension diagram.

2. After butt welding the inner member and the reinforcement, install the outer plate.

HINT: Provide a flange of about 10 mm (0.39 in.) on the new outer plate, then overlap it with the vehicle side panel and weld them with a continuous MIG weld to the edge.

WhereEverybodyKnowsYourName

WhereEverybodyKnowsYourName

FRONT SIDE MEMBER (ASSY)

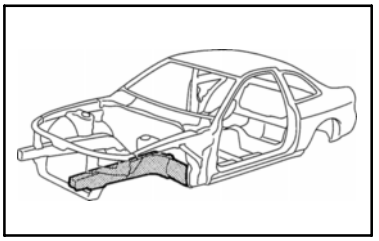

REMOVAL (With the front crossmember and the front fender apron removed.)

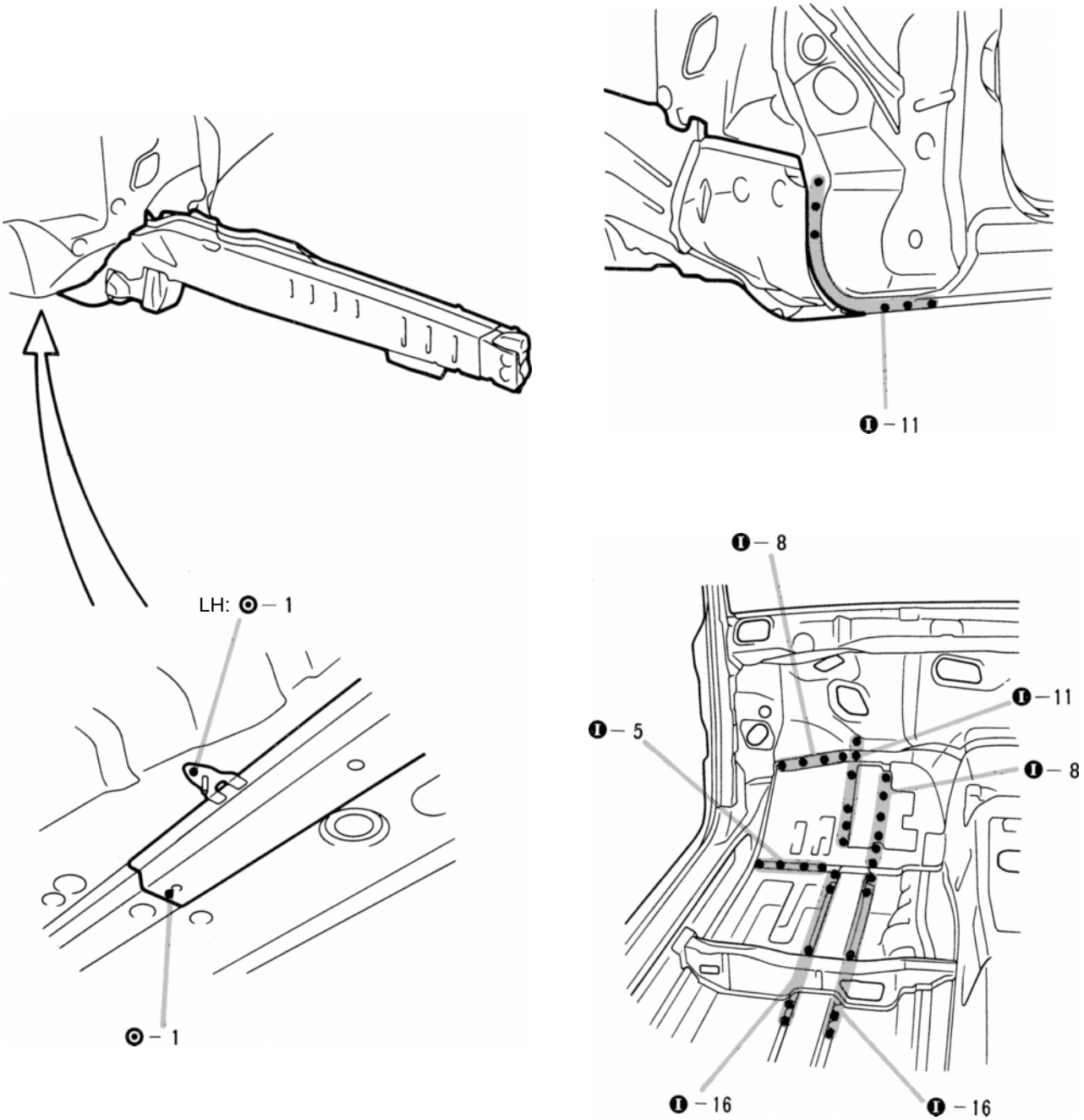

1. Replace the front side member No. 3 reinforcement at the same time.

WhereEverybodyKnowsYourName

INSTALLATION

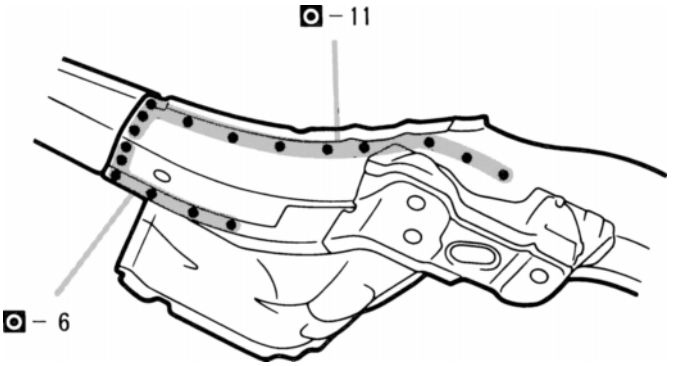

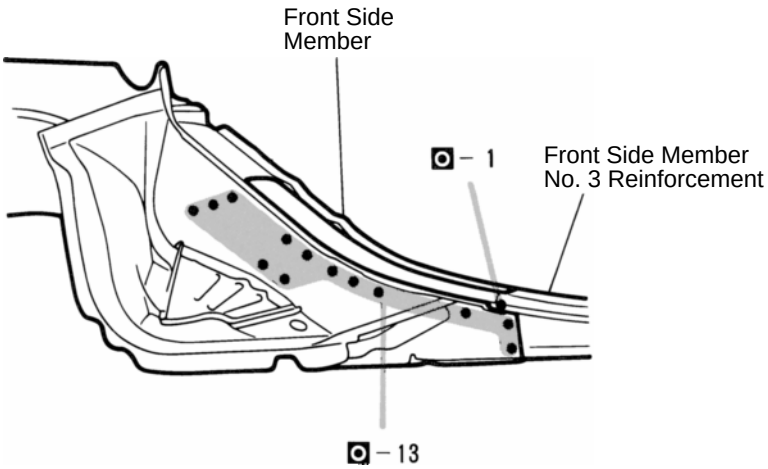

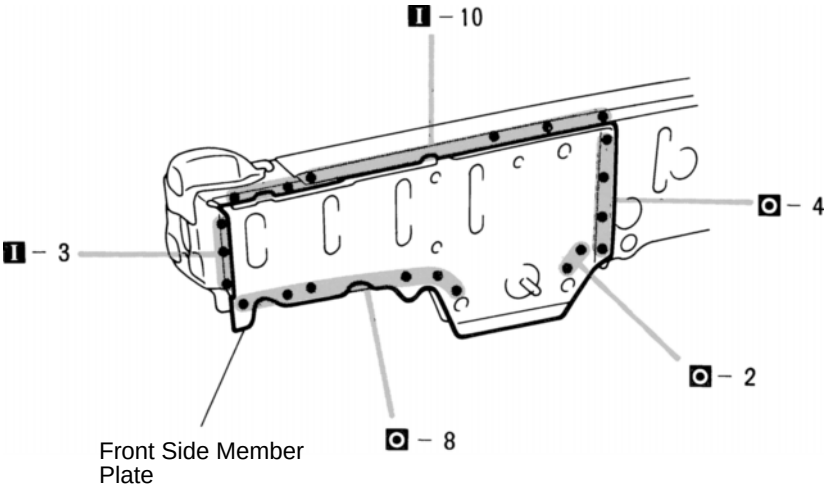

1. Before temporarily installing the new front side member, weld the front side member No. 3 reinforcement with standard points.

2. Temporarily install the new parts and measure each part in accordance with the body dimension diagram.

NOTICE: Make sure each measurement is correct, as this part affects the front wheel alignment.

WhereEverybodyKnowsYourName

INSTALLATION

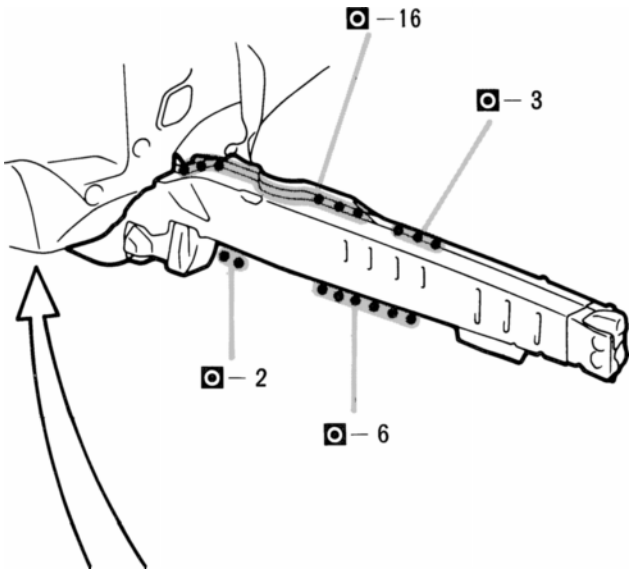

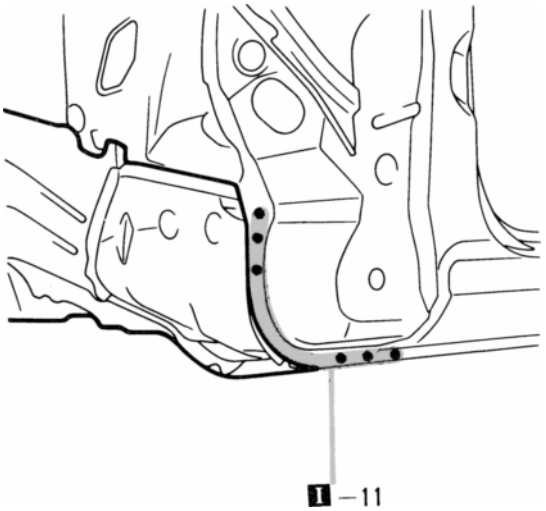

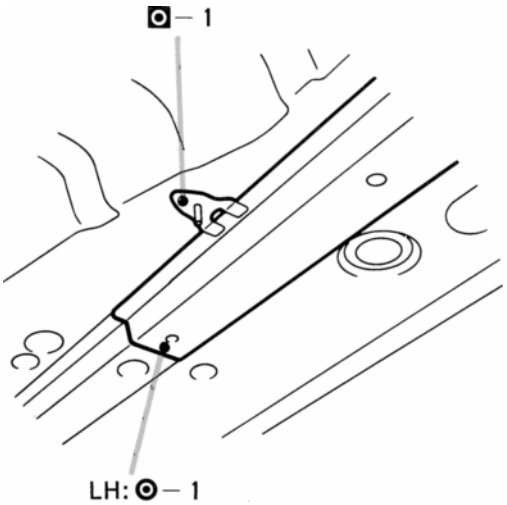

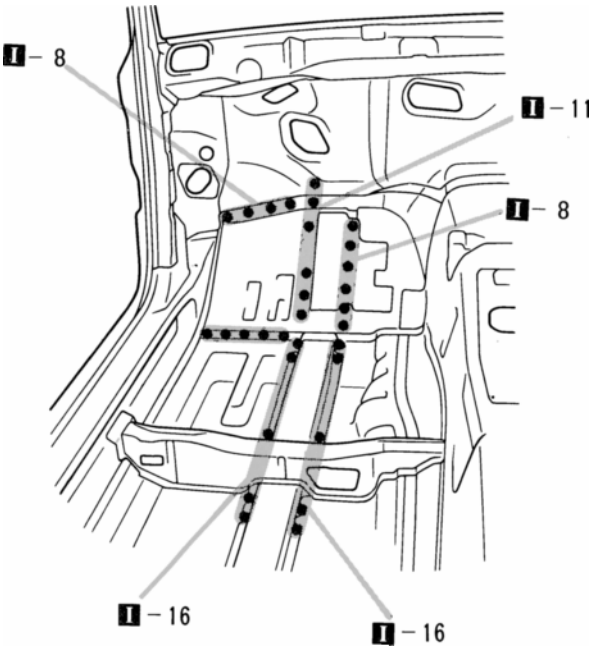

WhereEverybodyKnowsYourName

COWL SIDE OUTER PANEL UPPER (ASSY)

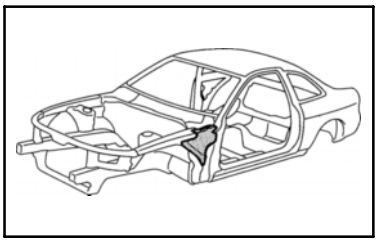

REMOVAL

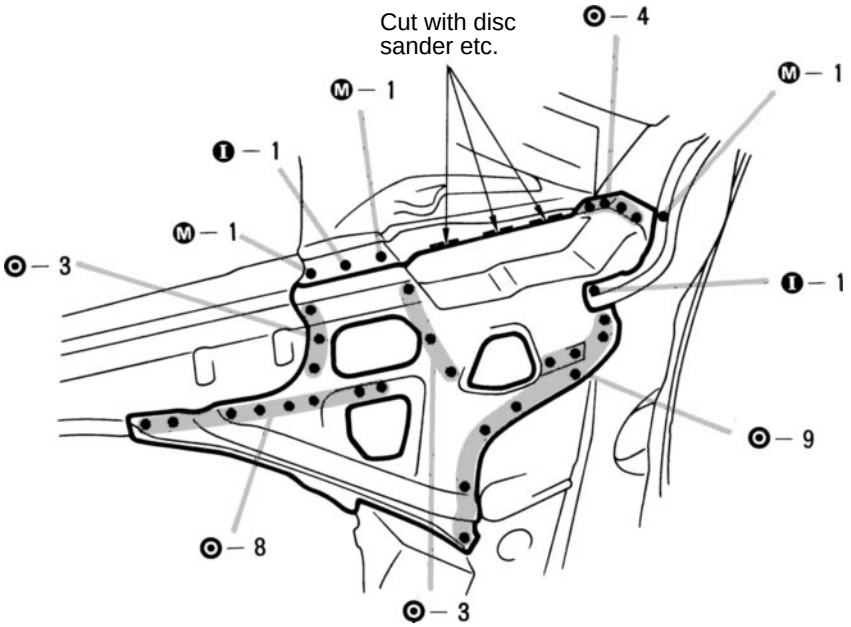

INSTALLATION

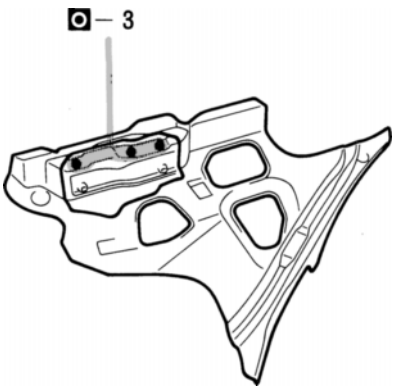

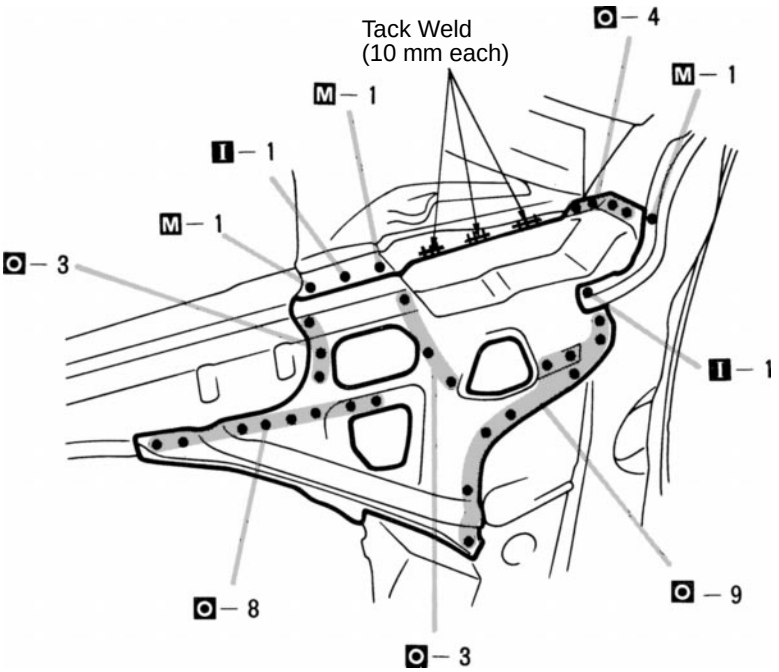

mm	in.
10	0.39

1. Temporarily install the new parts and measure each part in accordance with the body dimension diagram.

WhereEverybodyKnowsYourName

COWL TOP TO APRON BRACE (ASSY): Right Side

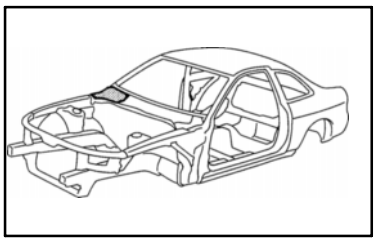

REMOVAL (With the cowl side outer panel upper removed.)

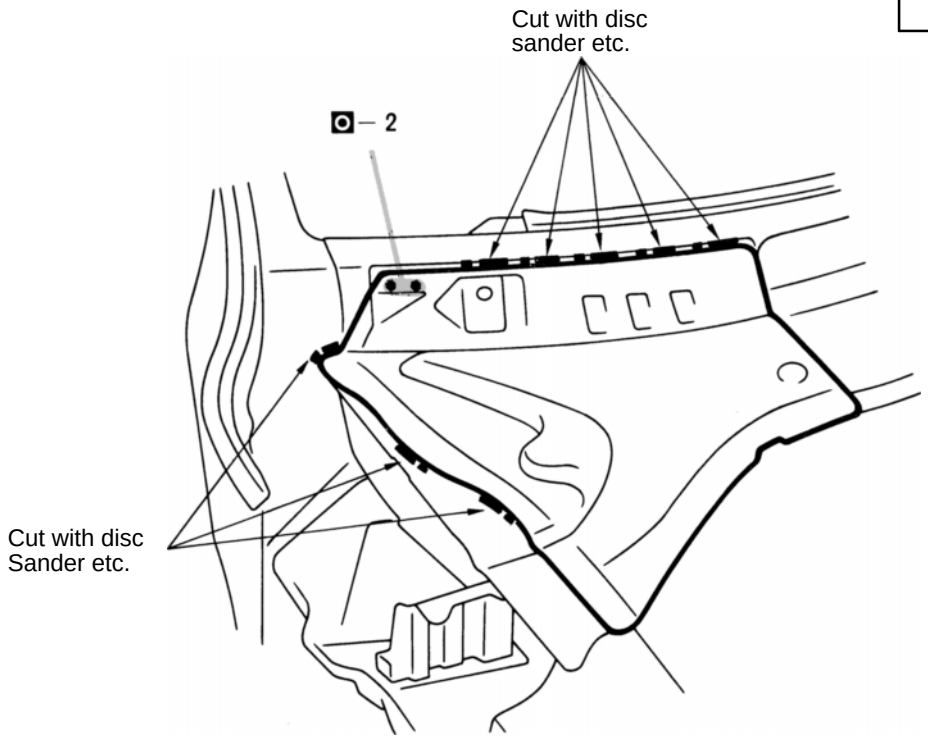

INSTALLATION

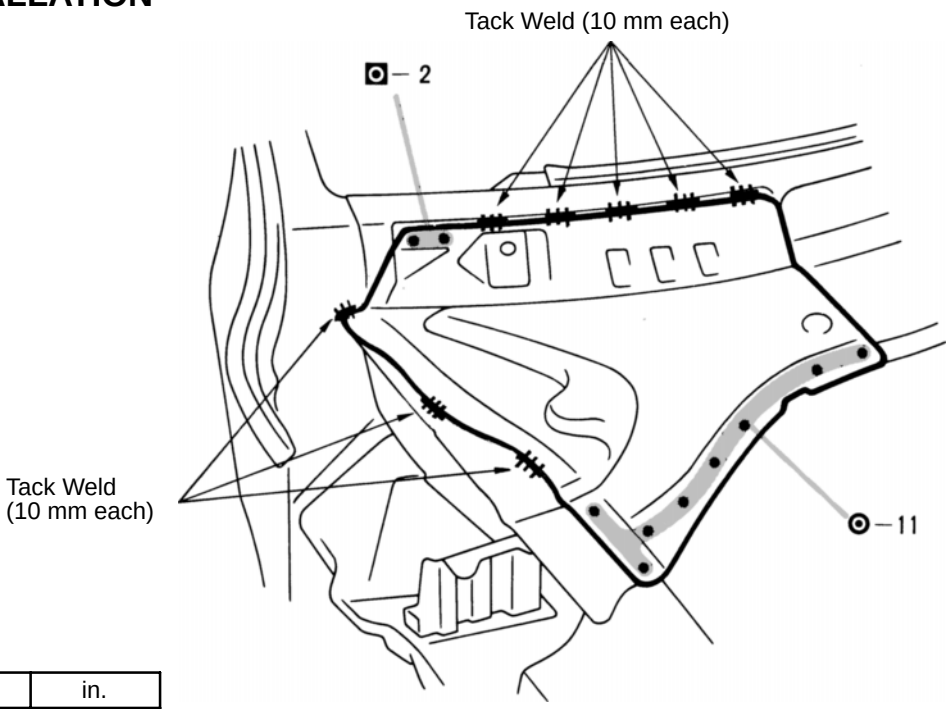

mm	in.
10	0.39

WhereEverybodyKnowsYourName

COWL TOP TO APRON BRACE (ASSY): Left Side

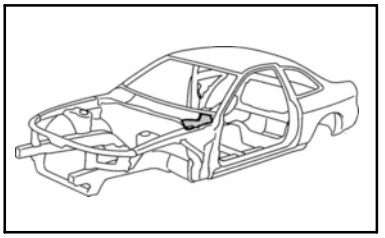

REMOVAL (With the cowl side outer panel upper removed.)

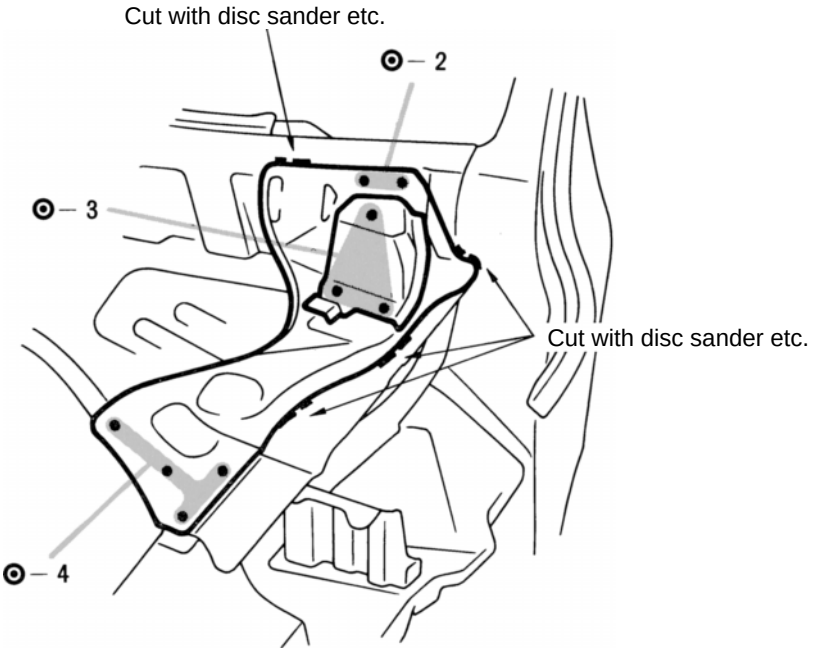

INSTALLATION

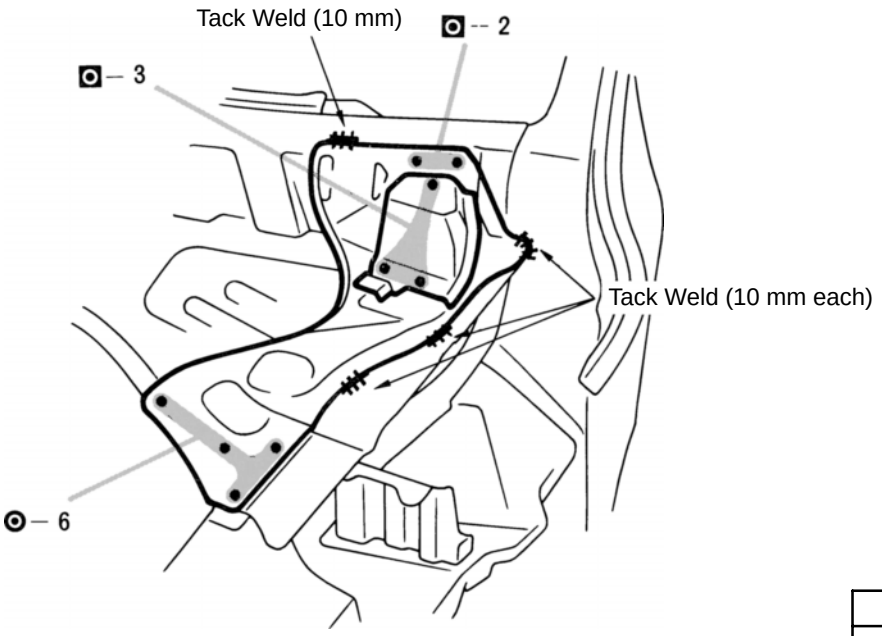

mm	in.
10	0.39

WhereEverybodyKnowsYourName

COWL TOP SIDE PANEL (ASSY)

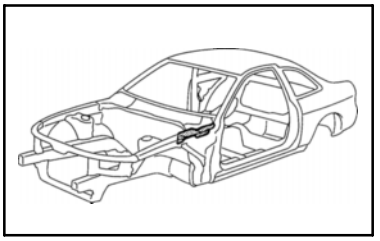

REMOVAL (With the cowl top to apron brace removed.)

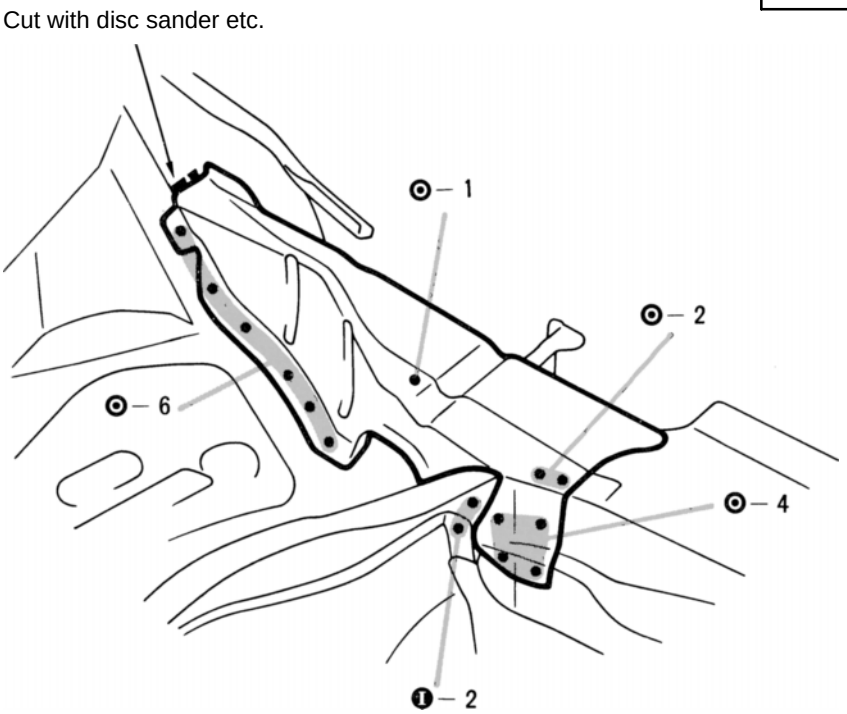

INSTALLATION

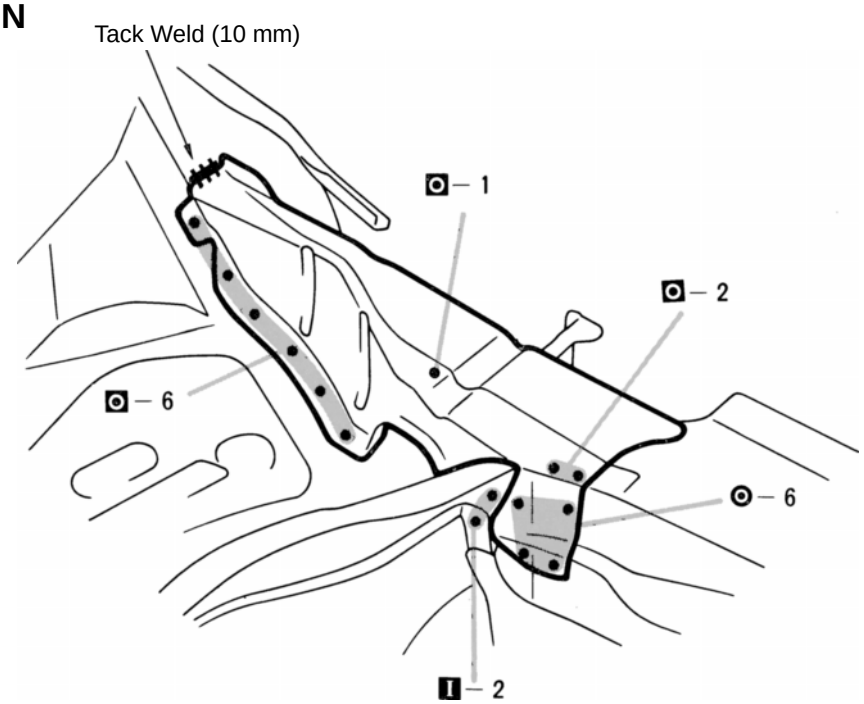

mm	in.
10	0.39

WhereEverybodyKnowsYourName

WhereEverybodyKnowsYourName

FRONT BODY PILLAR (CUT): w/o Moon Roof

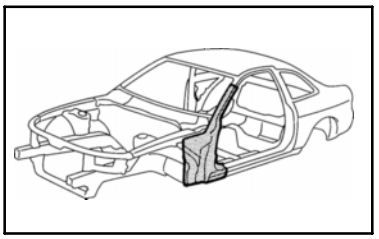

REMOVAL (With the cowl top side panel removed.)

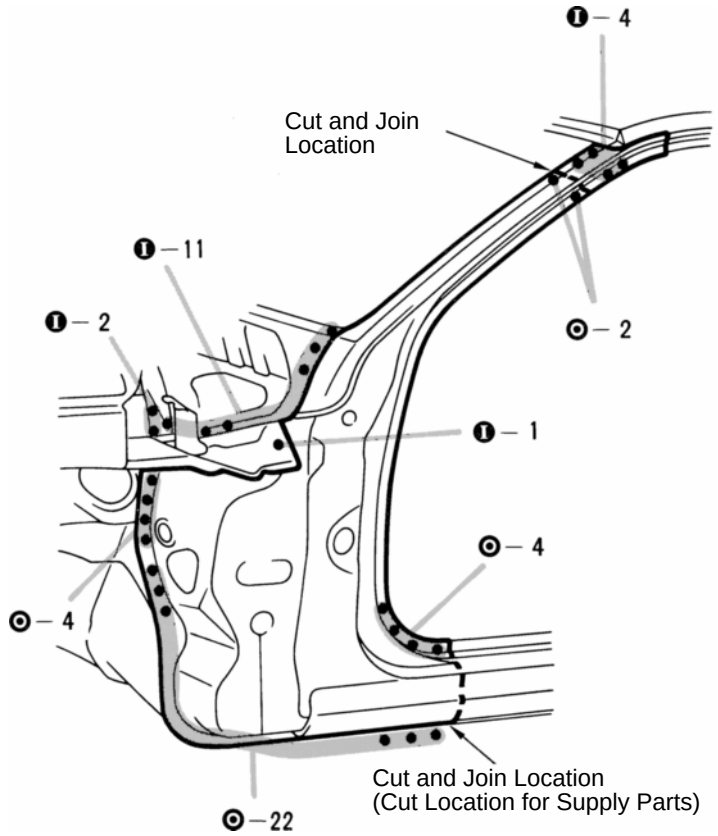

[Cut and Join Location]

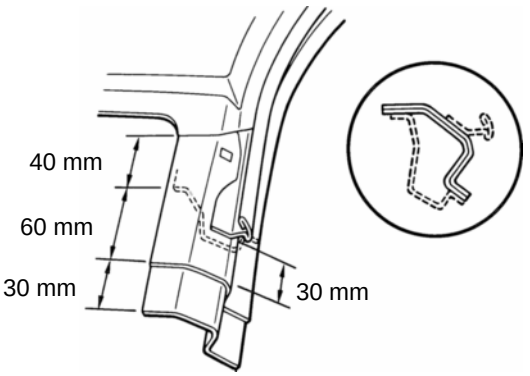

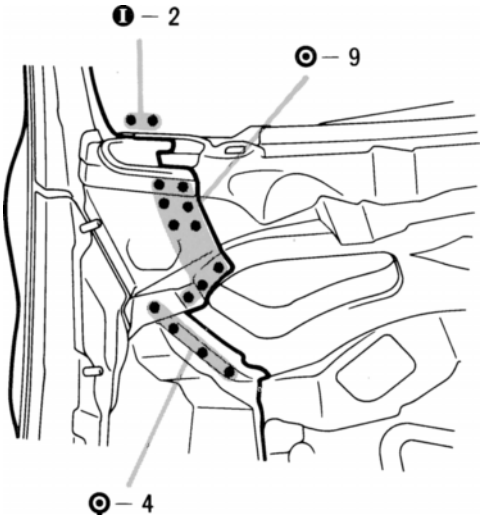

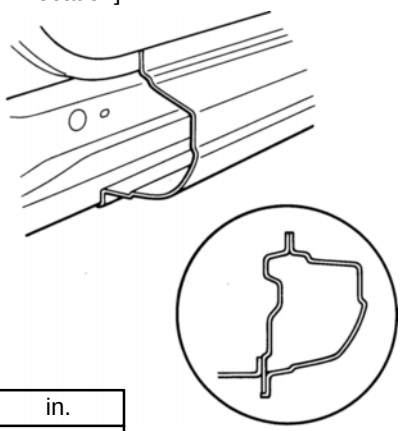

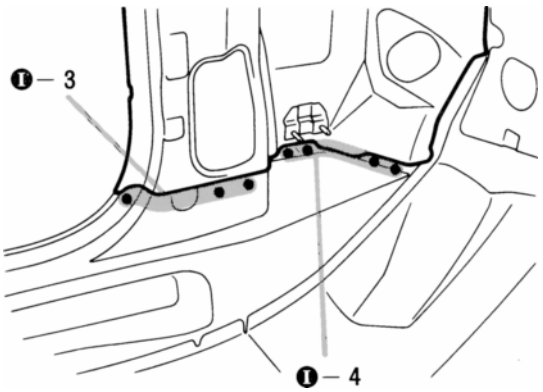

mm	in.
30	1.18
40	1.57
60	2.36

1. Cut and join the parts at the locations shown above.

HINT: Shift each cut and join location of the outer pillar, front body pillar upper reinforcement, inner pillar and the roof drip channel.

WhereEverybodyKnowsYourName

INSTALLATION

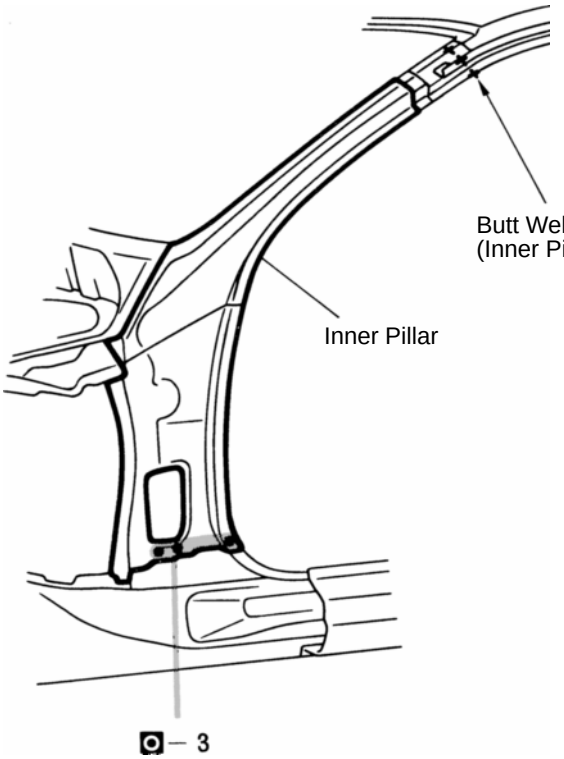

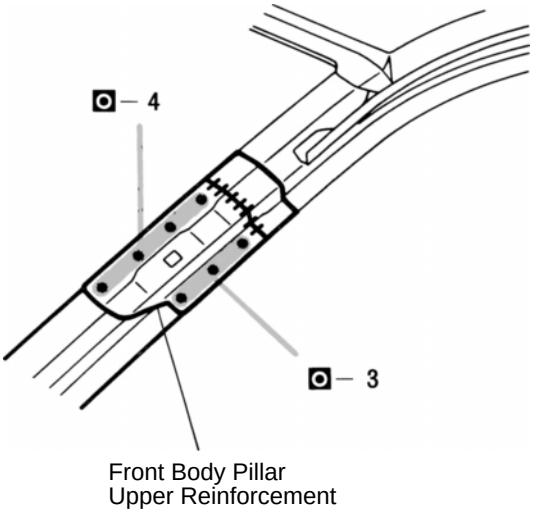

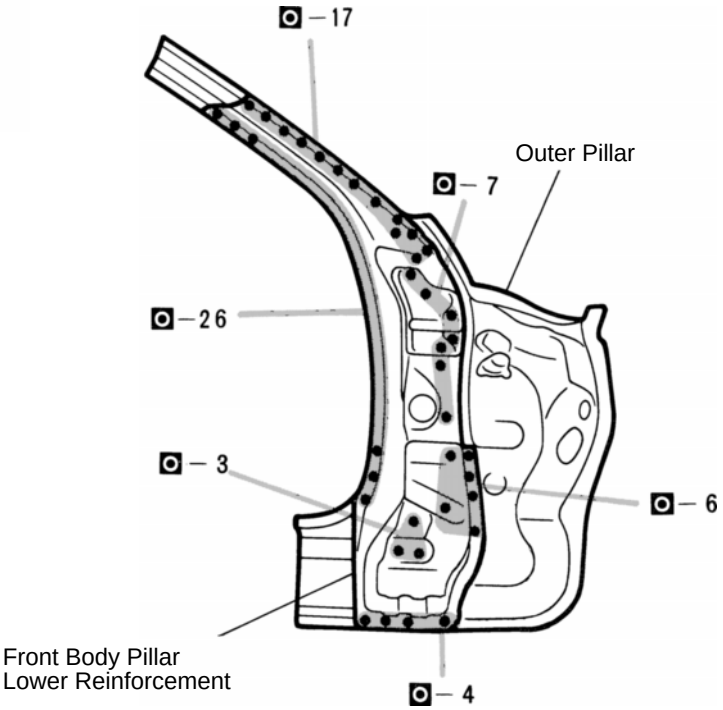

1. Before temporarily installing the new outer pillar, weld the front body pillar lower reinforcement with standard points.
2. After installing the inner pillar and the front body pillar upper reinforcement, install the outer pillar.
3. Temporarily install the new parts and measure each part in accordance with the body dimension diagram.
4. Before welding the new parts, check the fit of the front door, front fender and the windshield glass.

WhereEverybodyKnowsYourName

INSTALLATION

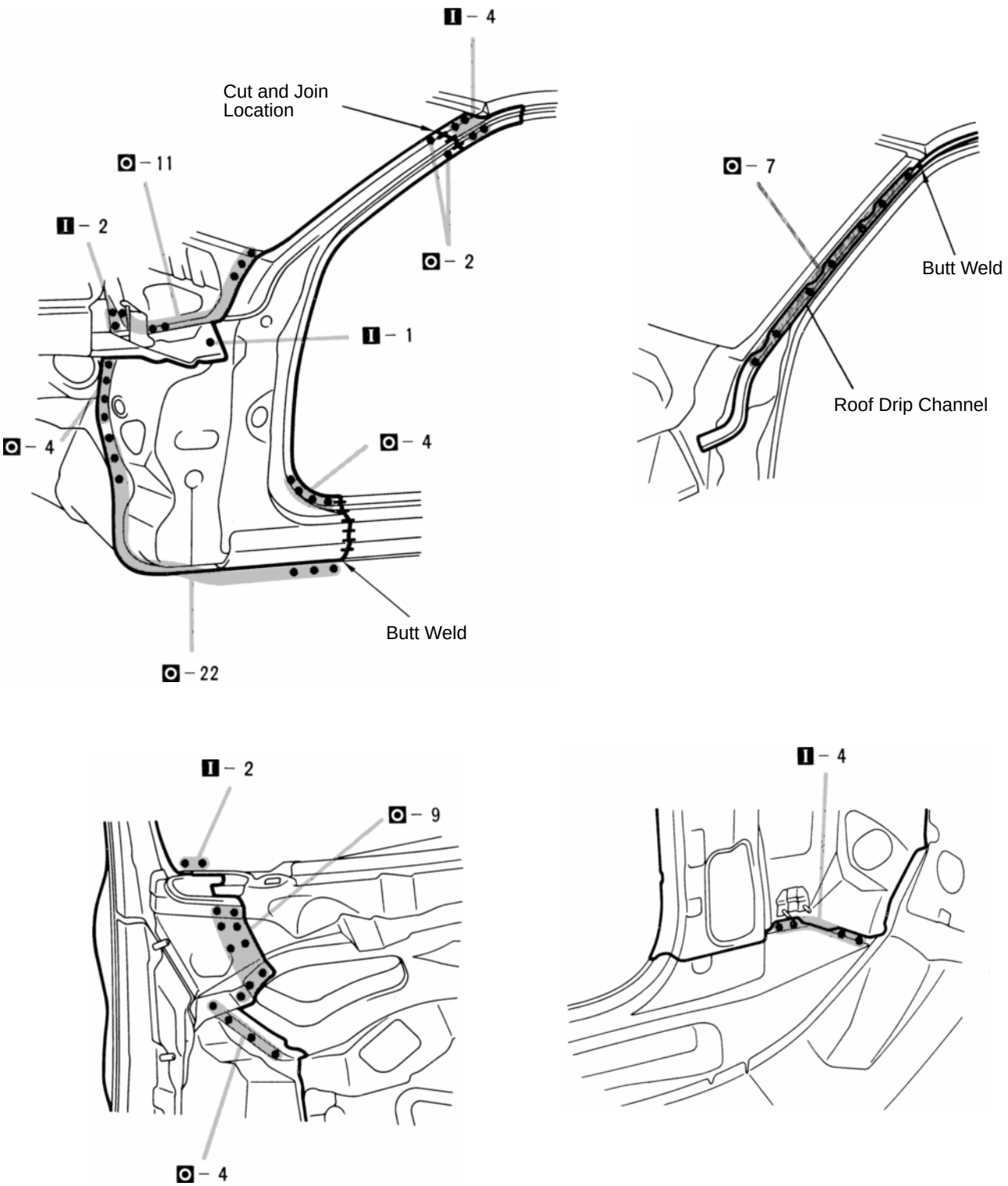

1. After installing the new parts, apply foamed material.

HINT: For the foamed material application areas, refer to page AP-4 .

WhereEverybodyKnowsYourName

FRONT BODY PILLAR (CUT): w/ Moon Roof

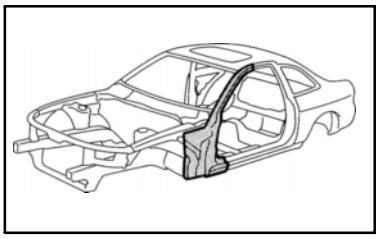

REMOVAL (With the cowl top side panel removed.)

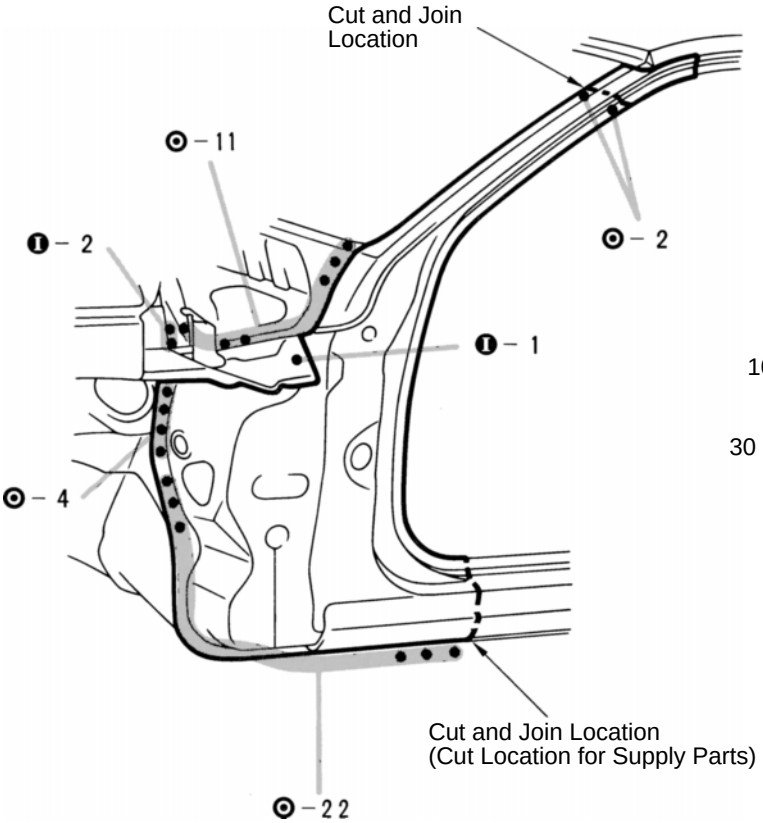

[Cut and Join Location]

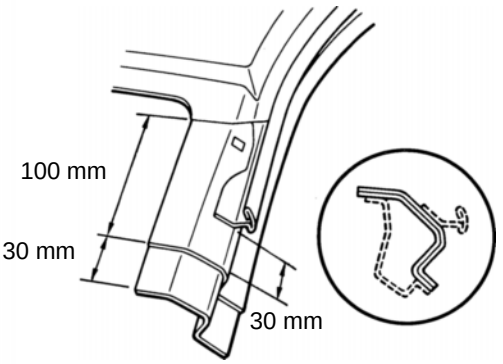

[Cut and Join Location]

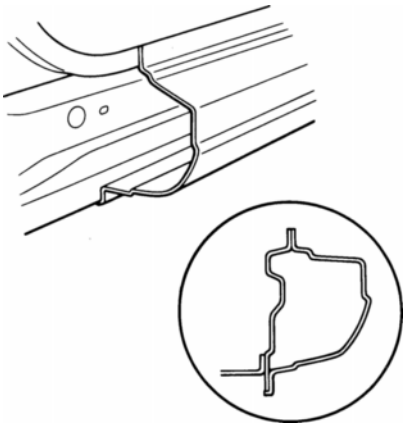

mm	in.
30 100	1.18 3.34

1. Cut and join the part at the locations shown above.

HINT: Shift each cut and join location of the outer pillar, front body pillar upper reinforcement and roof drip channel.

WhereEverybodyKnowsYourName

INSTALLATION

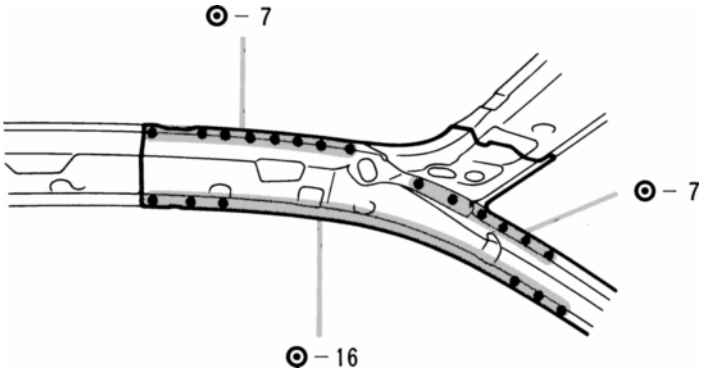

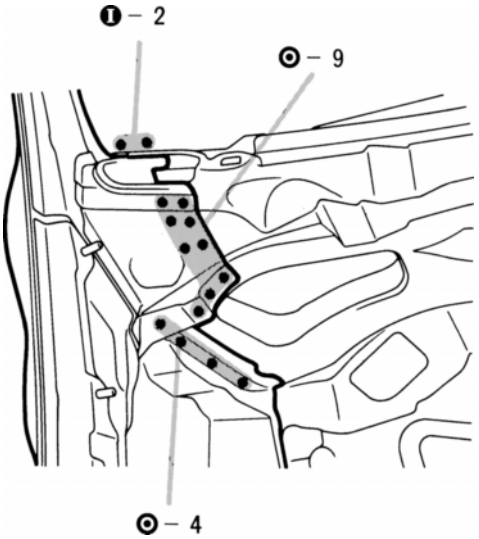

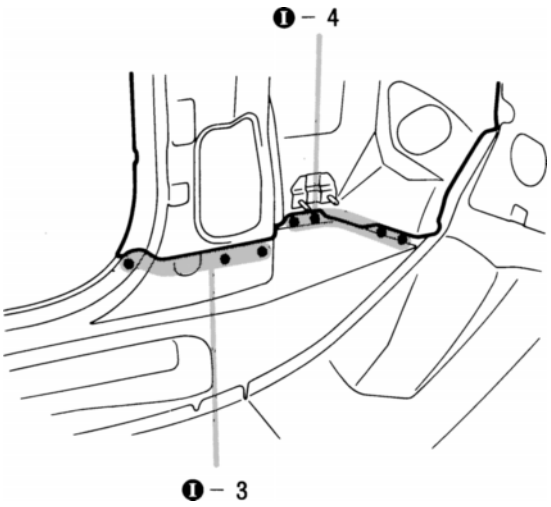

WhereEverybodyKnowsYourName

INSTALLATION

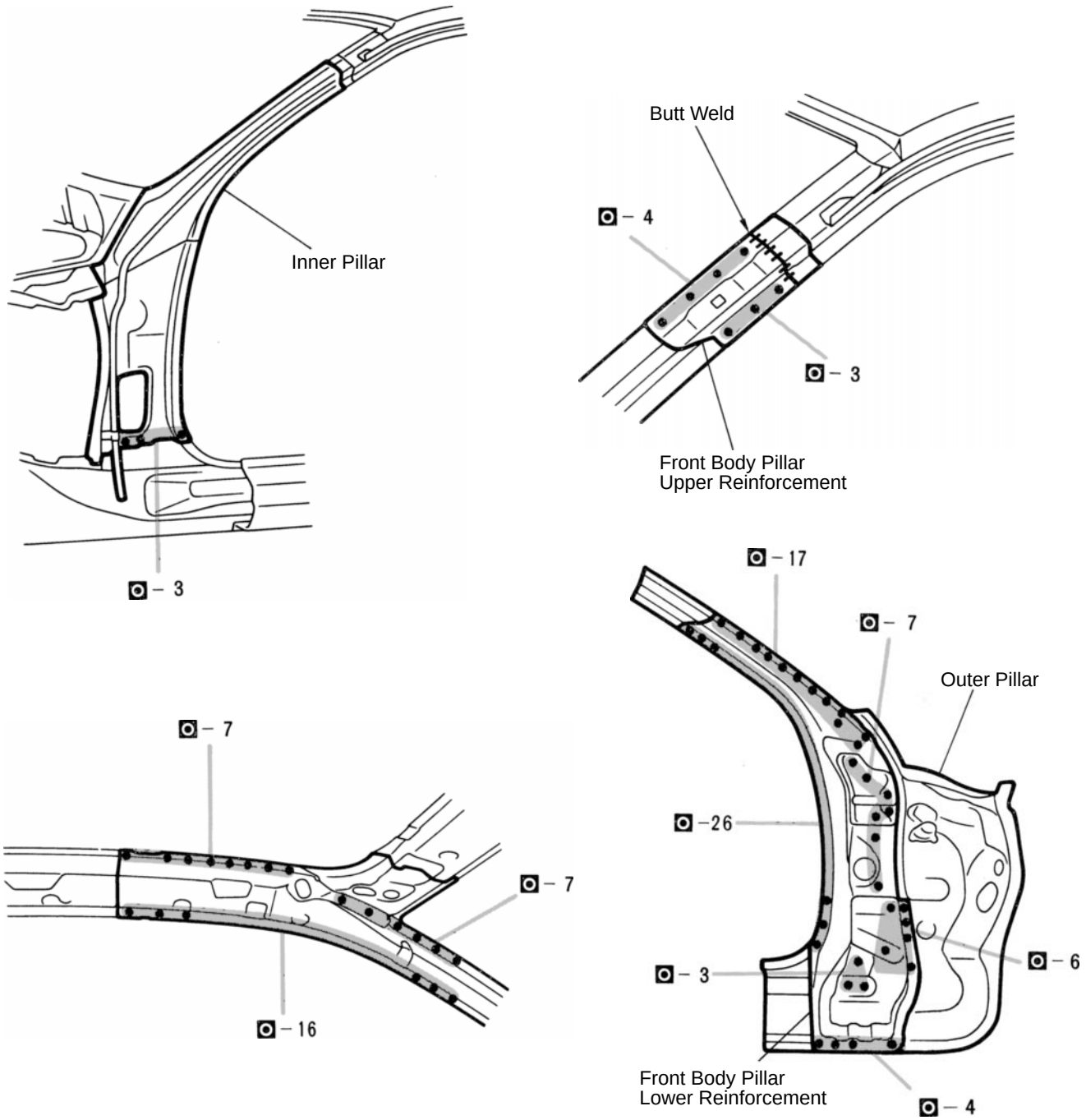

1. Before temporarily installing the new outer pillar, weld the front body pillar lower reinforcement with standard points.
2. After installing the inner pillar and the front body pillar upper reinforcement, install the outer pillar.
3. Temporarily install the new parts and measure each part in accordance with the body dimension diagram.
4. Before welding the new parts, check the fit of the front door, front fender and the windshield glass.

WhereEverybodyKnowsYourName

INSTALLATION

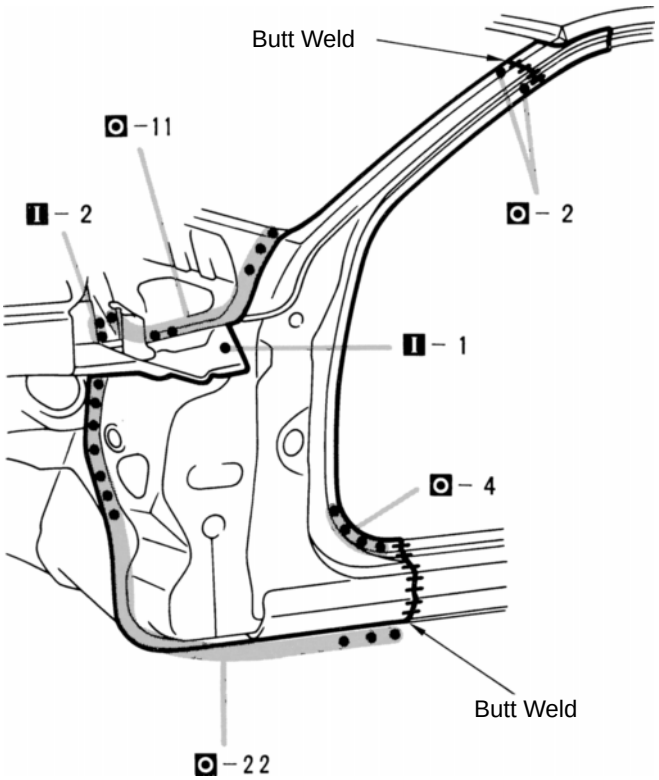

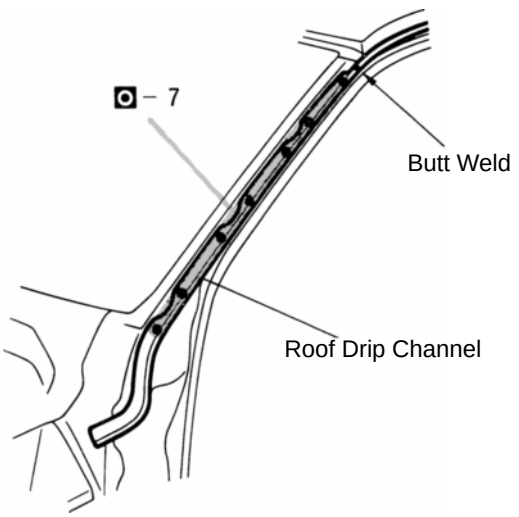

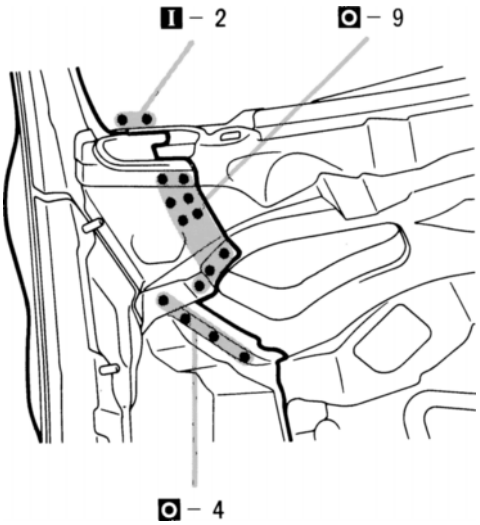

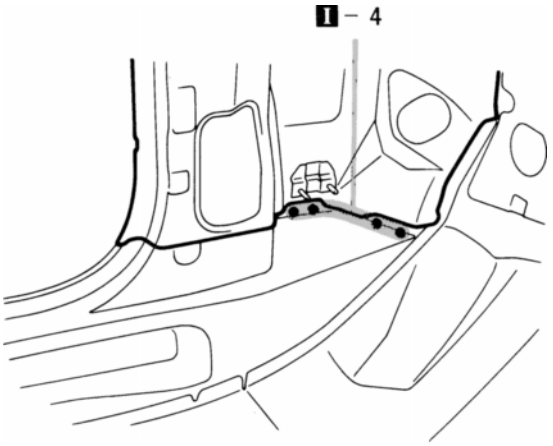

1. After installing the new parts, apply foamed material.

HINT: For the foamed material application areas, refer to AP-4 .

WhereEverybodyKnowsYourName

ROCKER OUTER PANEL (CUT)

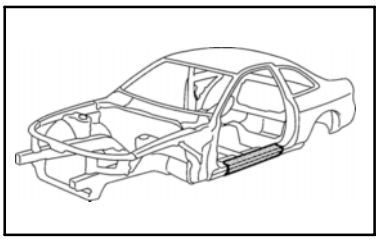

REMOVAL

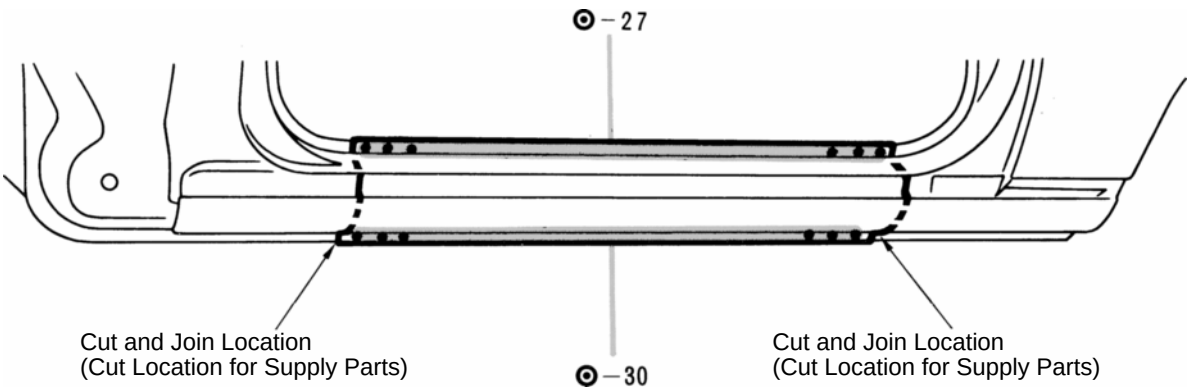

[Cut and Join Location]

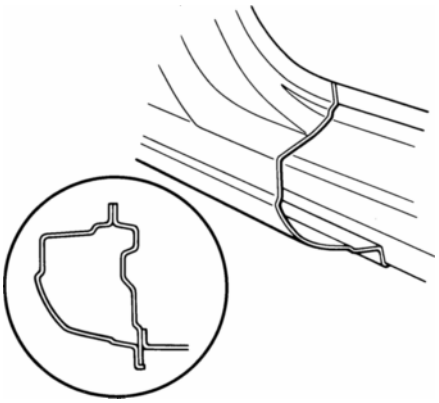

[Cut and Join Location]

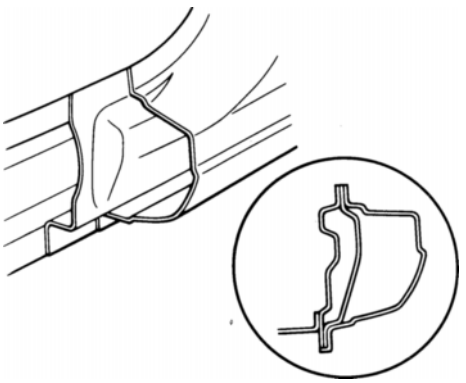

1. Cut and join the parts at the location as shown above.

NOTICE: When cutting the rear side of the parts, take care not to damage the internal reinforcement of the parts.

WhereEverybodyKnowsYourName

INSTALLATION

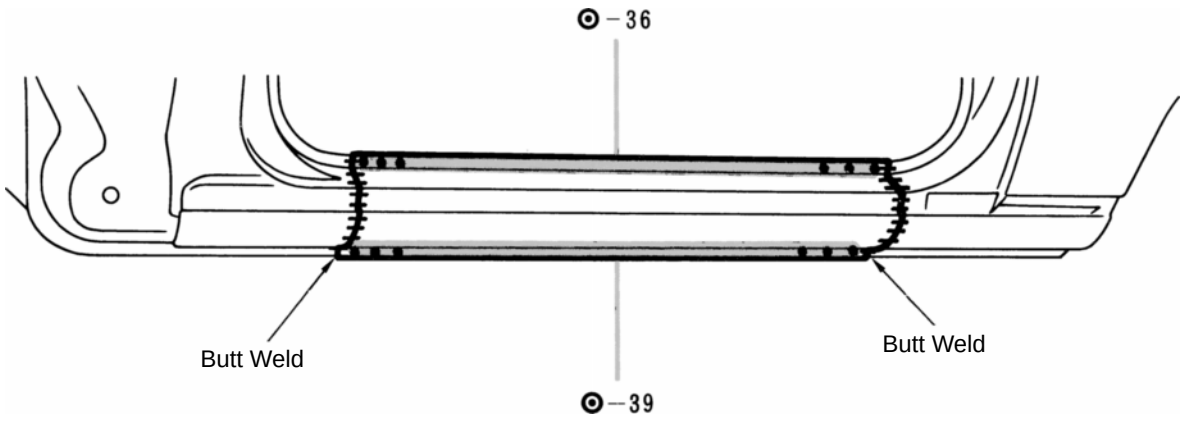

1. Temporarily install the new parts and check the fit of the front door.

WhereEverybodyKnowsYourName

ROOF PANEL (ASSY): w/o Moon Roof

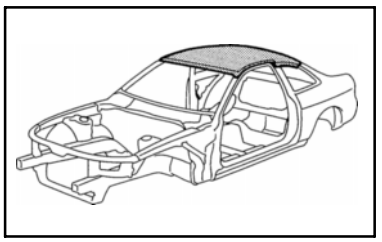

REMOVAL

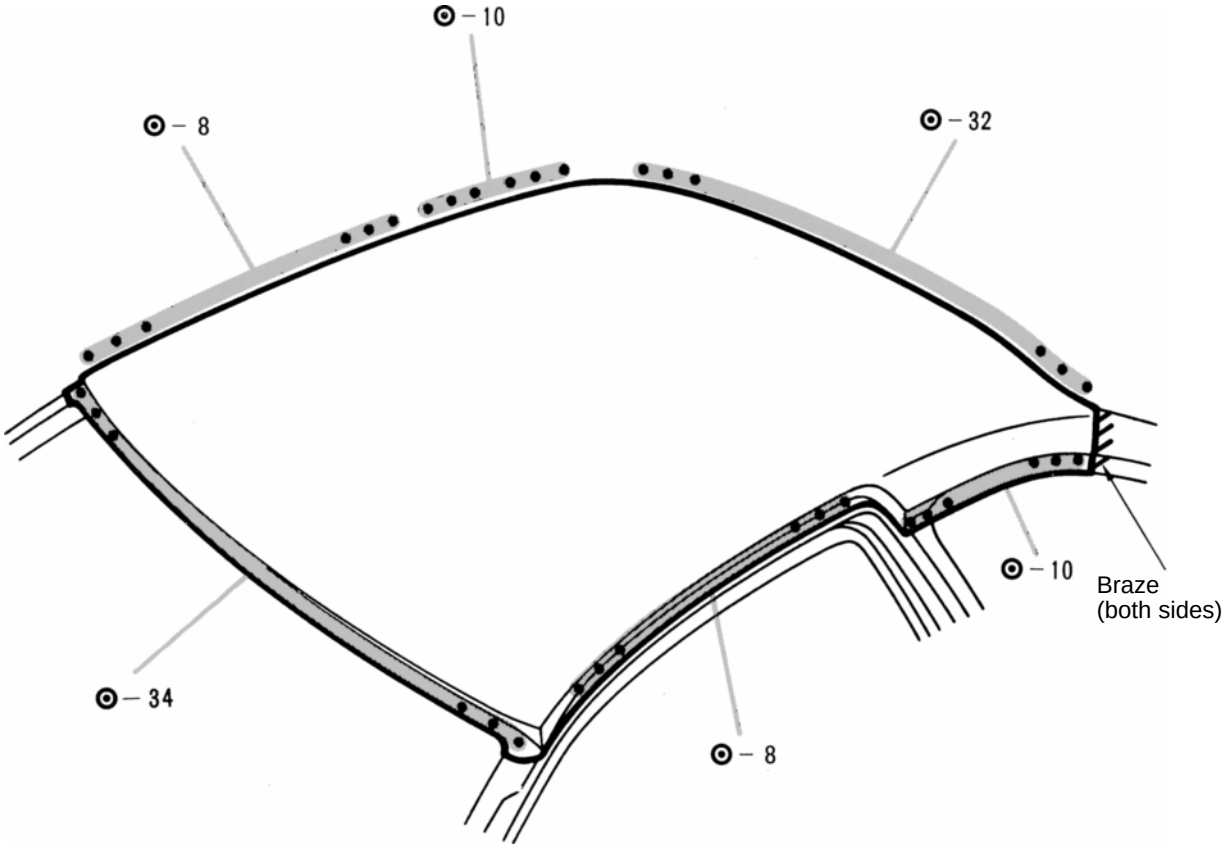

1. Heat the brazed area of the quarter panel and scrape off the brazing with a wire brush.

NOTICE: Be careful not to overheat the quarter panel.

WhereEverybodyKnowsYourName

INSTALLATION

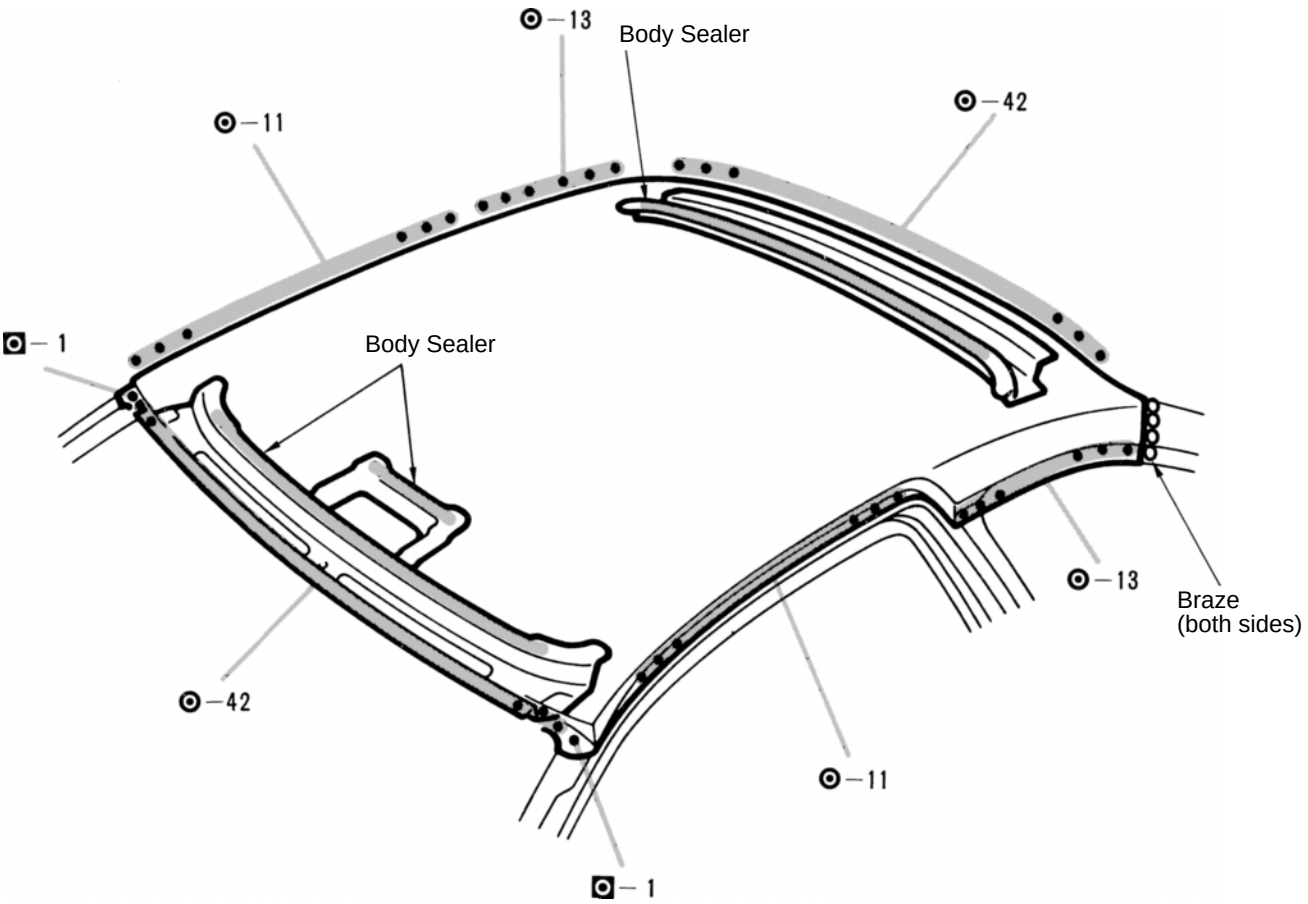

1. Before temporarily installing the new parts, apply body sealer to the windshield header panel and the back window upper frame.

HINT: Apply just enough sealer for the new parts to make contact.

2. Braze the quarter panel connection.

NOTICE: Before performing these operations, place a wet rag on the roof panel to protect it from damage.

WhereEverybodyKnowsYourName

ROOF PANEL (ASSY): w/ Moon Roof

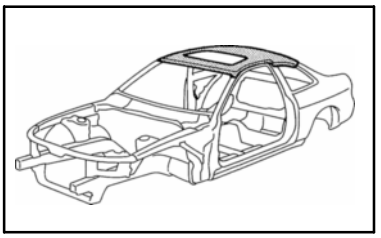

REMOVAL

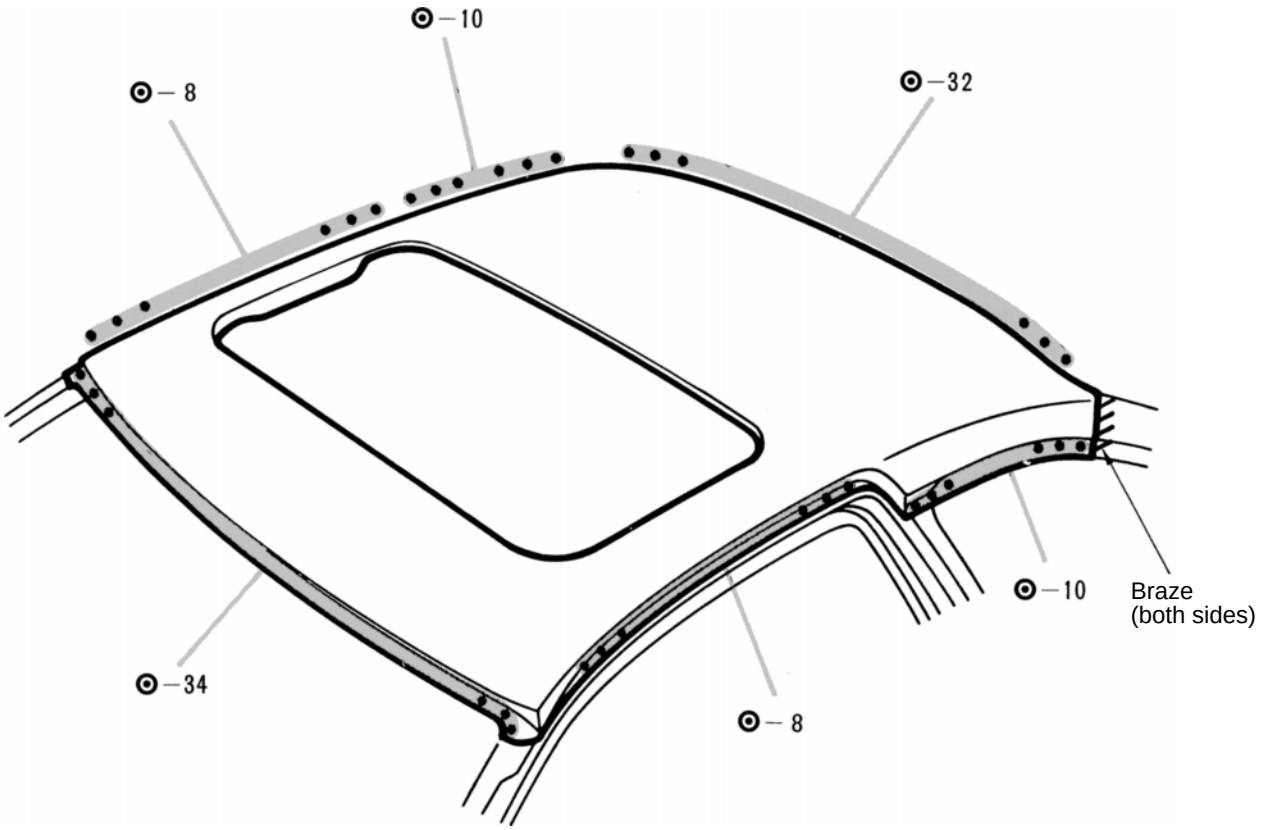

1. Heat the brazed area of the quarter panel and scrape off the brazing with a wire brush.

NOTICE: Be careful not to overheat the quarter panel.

WhereEverybodyKnowsYourName

INSTALLATION

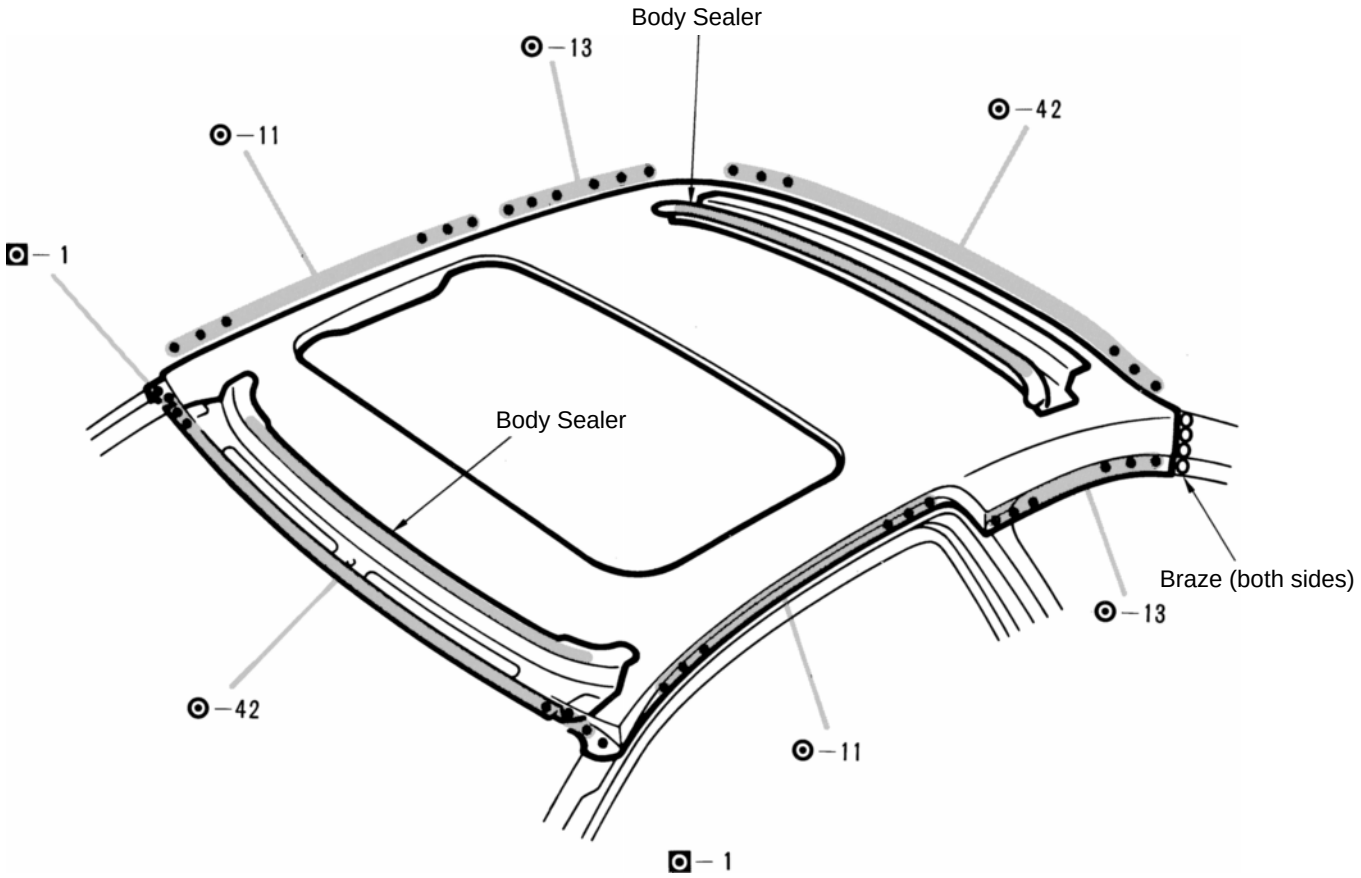

1. Before temporarily installing the new parts, apply body sealer to the windshield header panel and back window upper frame.

HINT: Apply just enough sealer for the new parts to make contact.

2. Braze the quarter panel connection.

NOTICE: Before performing these operations, place a wet rag on the roof panel to protect it from damage.

WhereEverybodyKnowsYourName

FRONT DOOR PANEL (CUT)

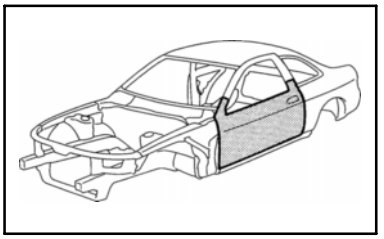

REMOVAL

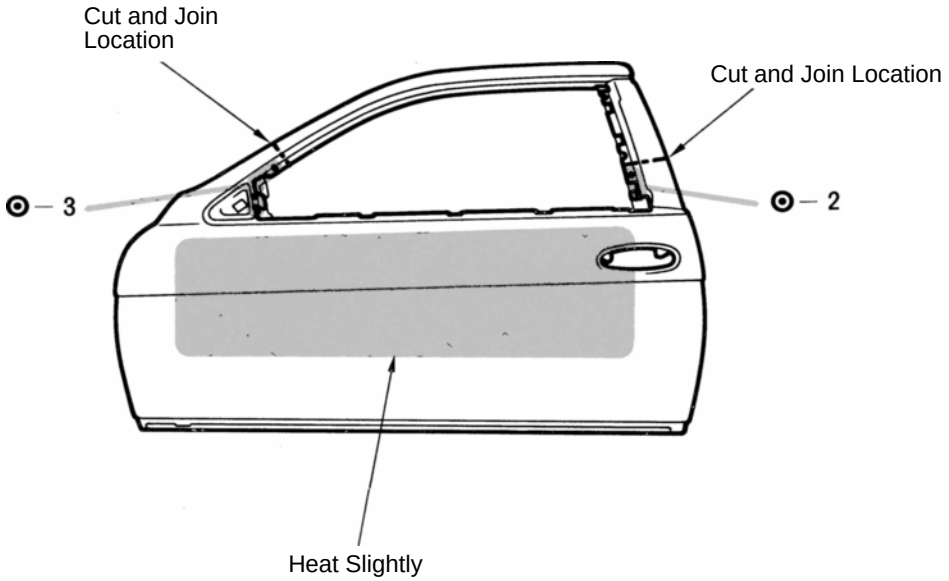

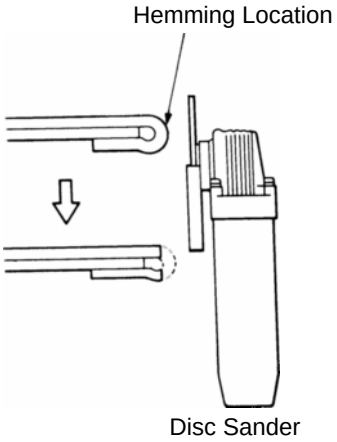

1. Cut and join the parts at the location shown above.
2. After grinding off the hemming location, remove the outer panel.

HINT: Slightly heating the outer panel will soften the sealer and make removal easier.

WhereEverybodyKnowsYourName

INSTALLATION

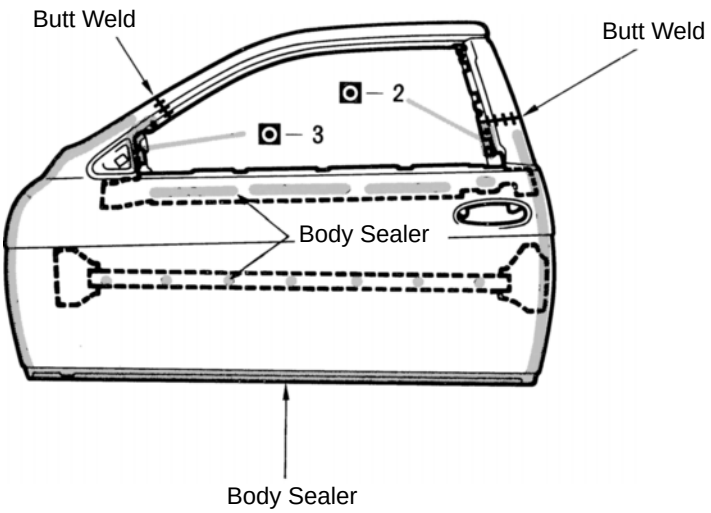

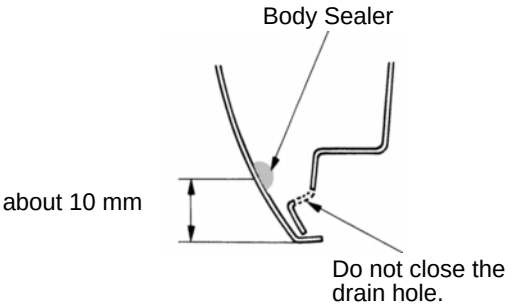

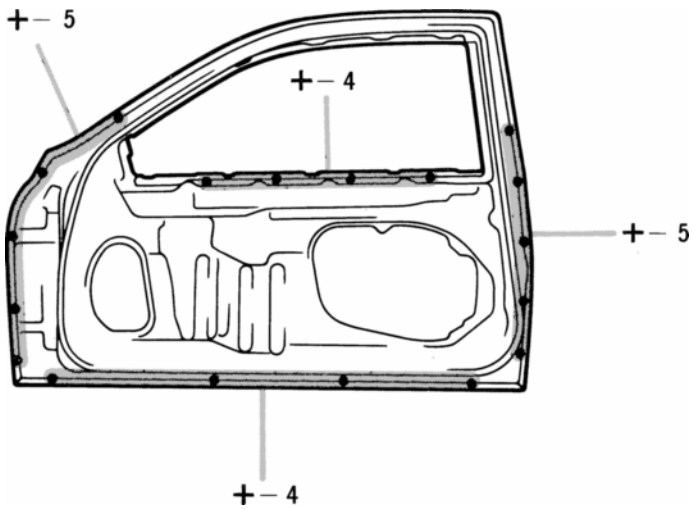

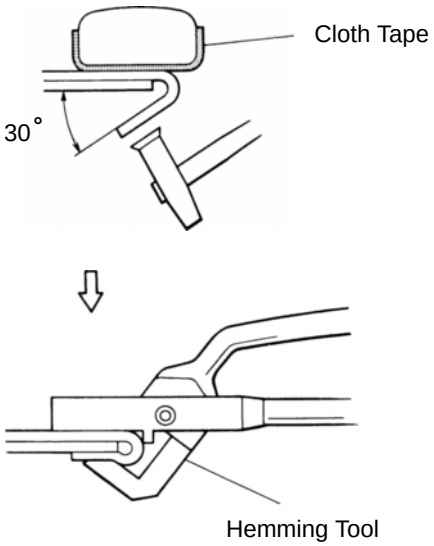

1. Before temporarily installing the new parts, apply body sealer to the back side of the new parts.

HINT:

1) Apply sealer evenly about 10 mm (0.39 in.) from the flange and 3 mm (0.12 in.) in diameter.

2) For other sealing-points, refer to section AR.

2. Bend the flange hem about 30° with a hammer and dolly, then fasten tightly with a hemming tool.

HINT:

1) Perform hemming in three steps, being careful not to warp the panel.

2) If a hemming tool cannot be used, hem with a hammer and dolly.

WhereEverybodyKnowsYourName

QUARTER PANEL (CUT)

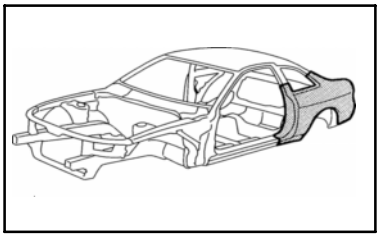

REMOVAL

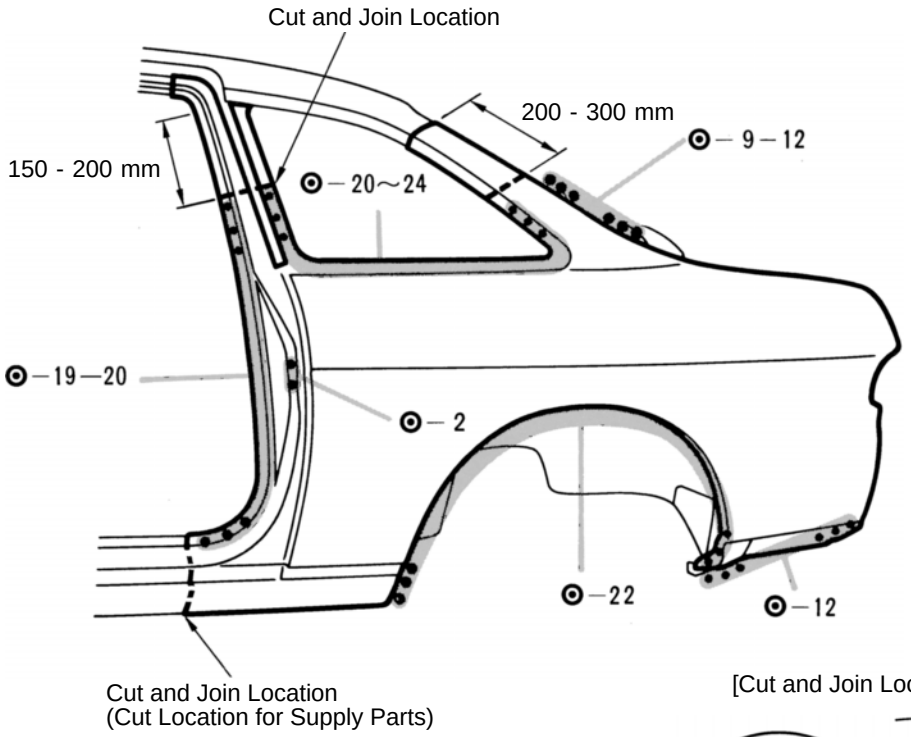

mm	in.
150	5.91
200	7.87
300	11.81

[Cut and Join Location]

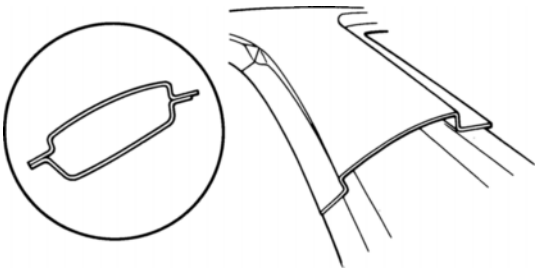

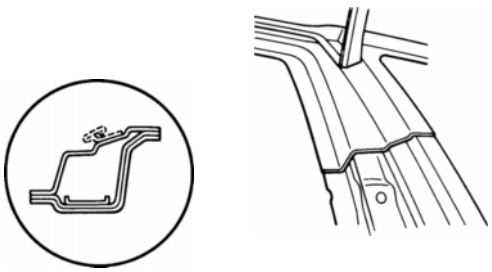

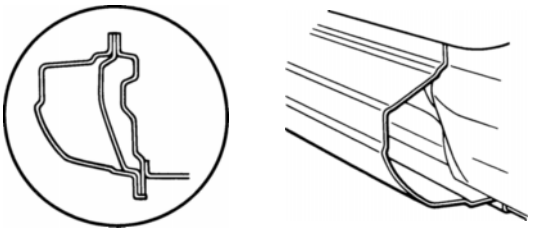

1. Cut and join the parts at the location shown above.

HINT: Make incision and bend the roof drip channel at the upper part of the cut and join location.

WhereEverybodyKnowsYourName

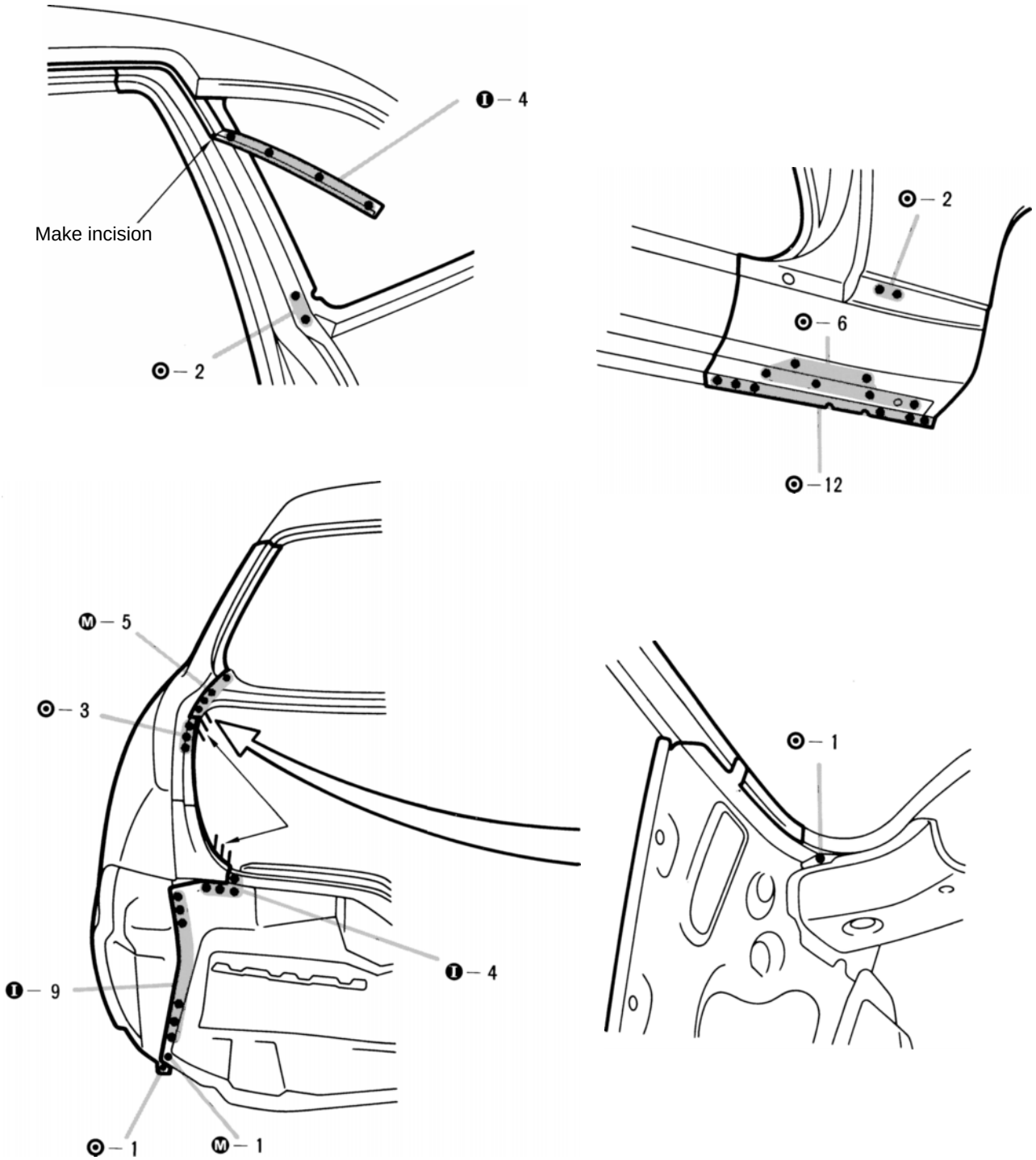

WhereEverybodyKnowsYourName

INSTALLATION

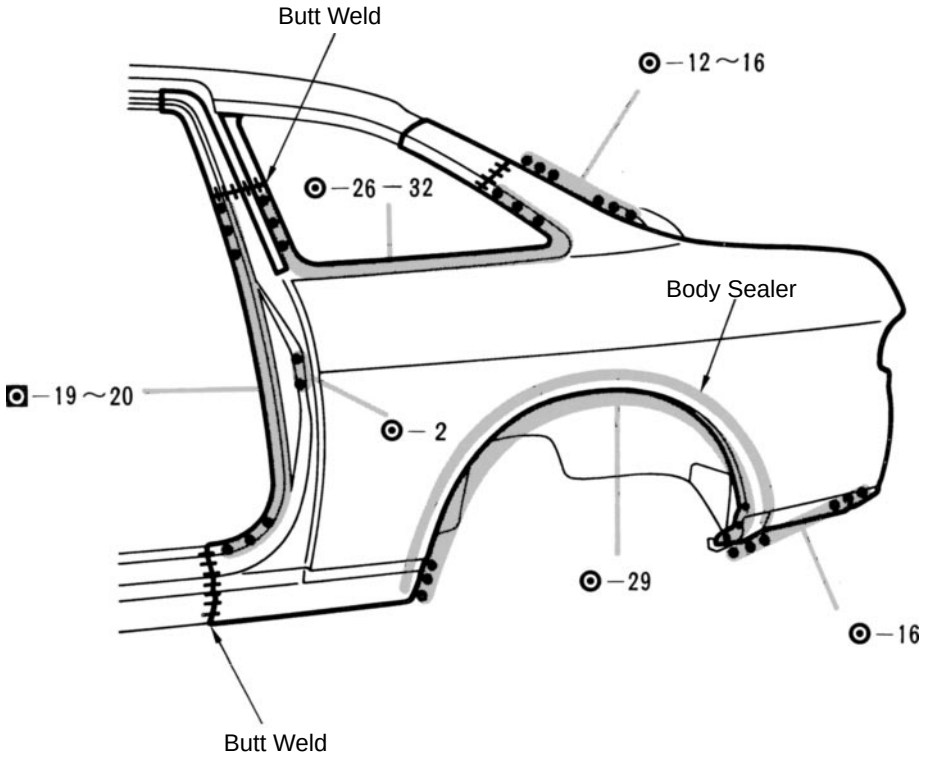

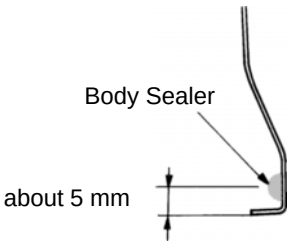

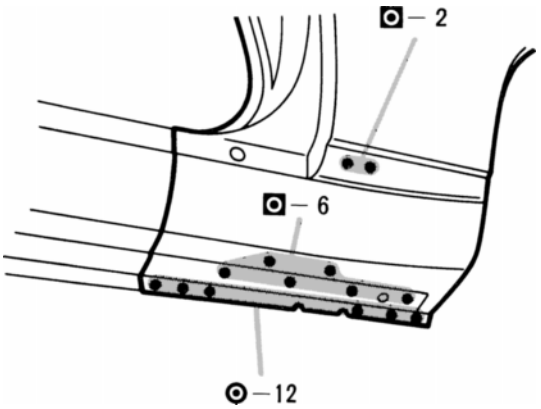

mm	in.
5	0.20

1. Before temporarily installing the new parts, apply body sealer to the wheel arch.

HINT:

1) Apply body sealer about 5 mm (0.20 in.) from the flange, avoiding any oozing.

2) Apply sealer evenly, about 3 - 4 mm (0.12 - 0.16 in.) in diameter.

3) For other sealing points, refer to section AR.

2. Temporarily install the new parts and check the fit of the front door, luggage compartment door and rear combination light.

3. Apply foamed material to the pillar section.

HINT: For the foamed material application areas, refer to page AP-4 .

WhereEverybodyKnowsYourName

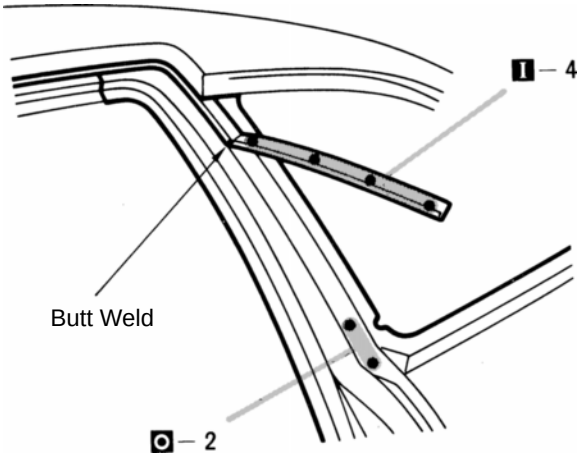

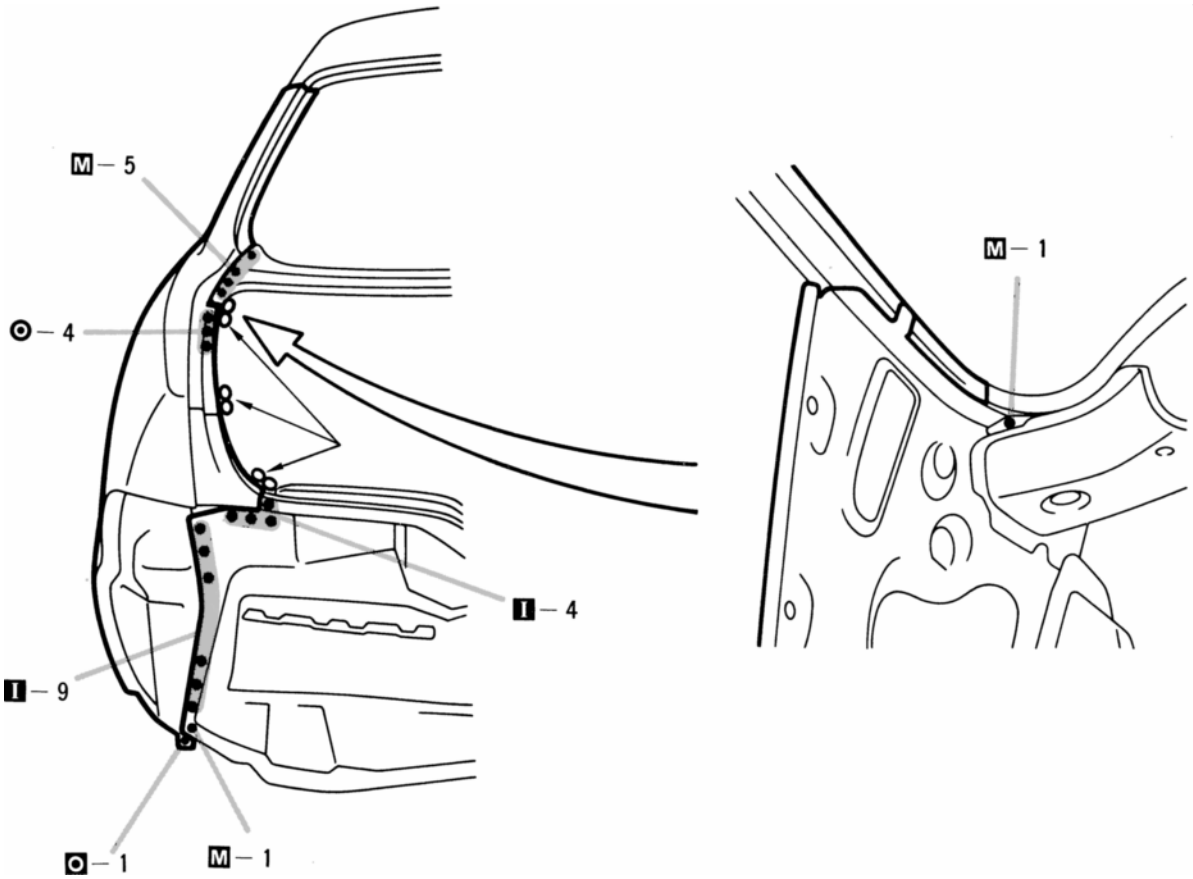

WhereEverybodyKnowsYourName

QUARTER PANEL (CUT-P)

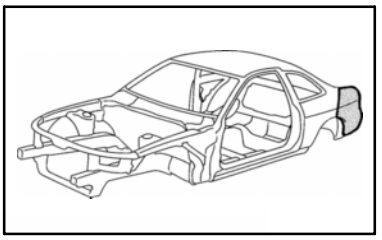

REMOVAL

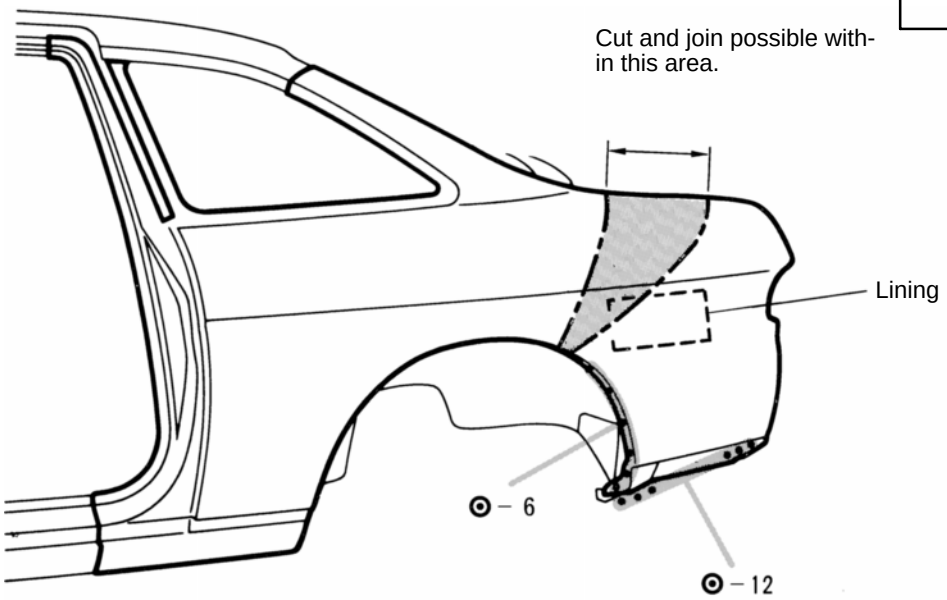

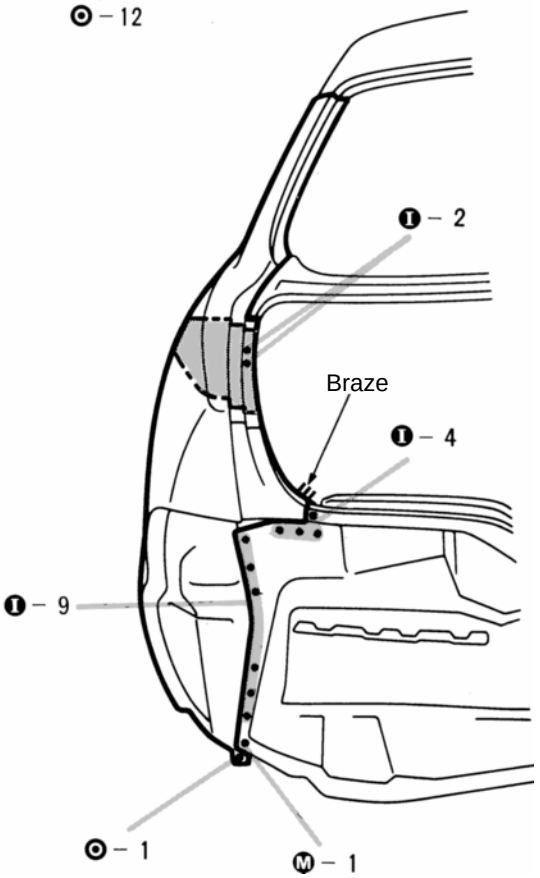

1. Cut and join the parts at the location shown above.

HINT: When the cutting line includes the lining, cut the lining together with quarter panel.

WhereEverybodyKnowsYourName

INSTALLATION

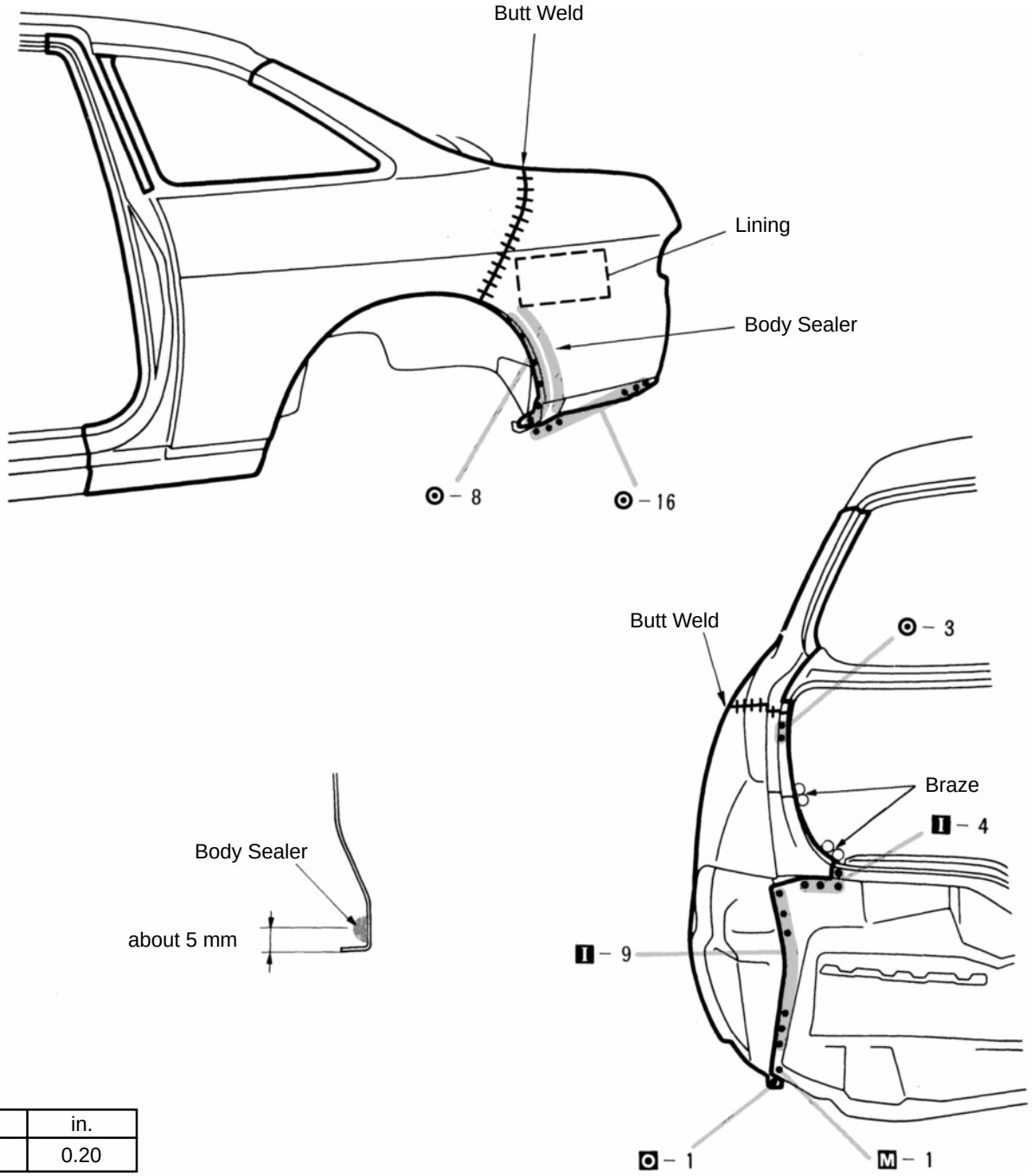

mm	in.
5	0.20

1. Before temporarily installing the new parts, apply body sealer to the wheel arch.

HINT:

1) Apply body sealer about 5 mm (0.20 in.) from the flange, avoiding any oozing.

2) Apply sealer evenly, about 3 - 4 mm (0.12 - 0.16 in.) diameter.

3) For other sealing points, refer to section AR.

2. Temporarily install the new parts and check the fit of the luggage compartment door and rear combination light.

3. Before welding, cut the lining away from the weld seams a little.

WhereEverybodyKnowsYourName

QUARTER WHEEL HOUSING OUTER PANEL (CUT)

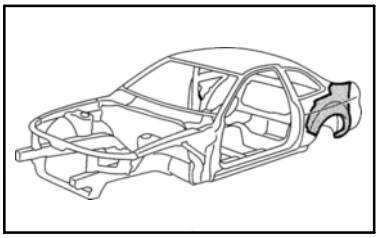

REMOVAL (With the quarter panel removed.)

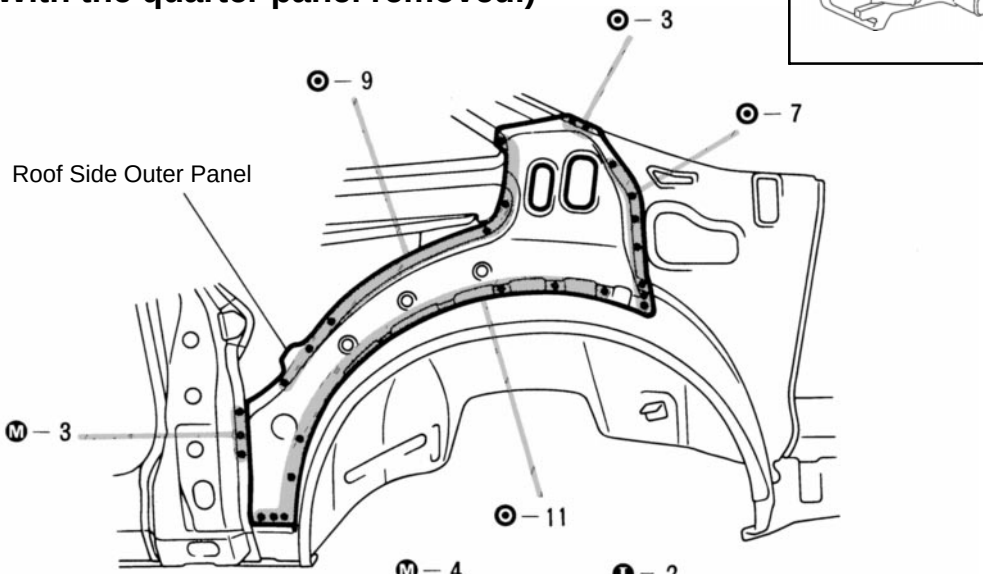

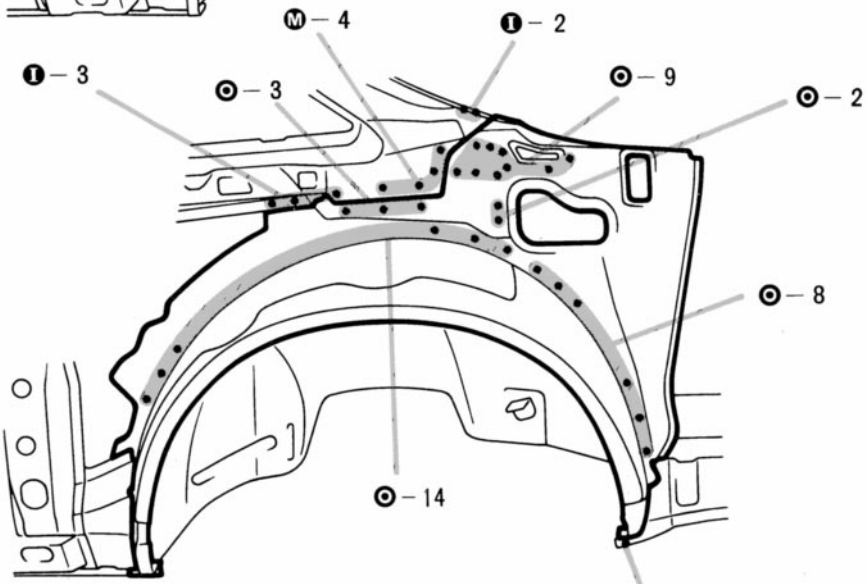

mm	in.
45	1.77

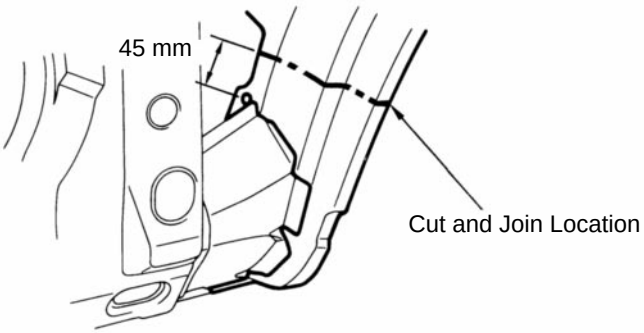

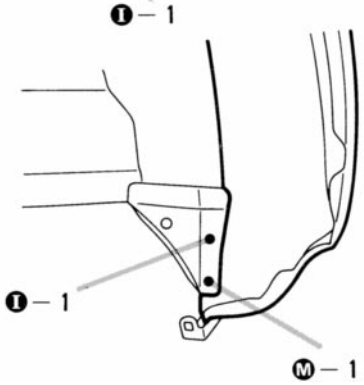

1. After removing the roof side outer panel, cut and join the quarter wheel housing outer panel at the location shown above.

WhereEverybodyKnowsYourName

INSTALLATION

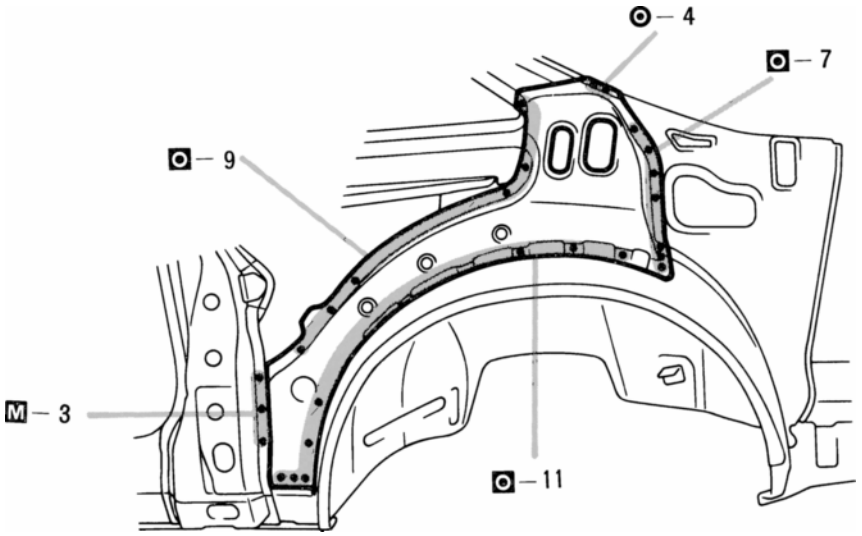

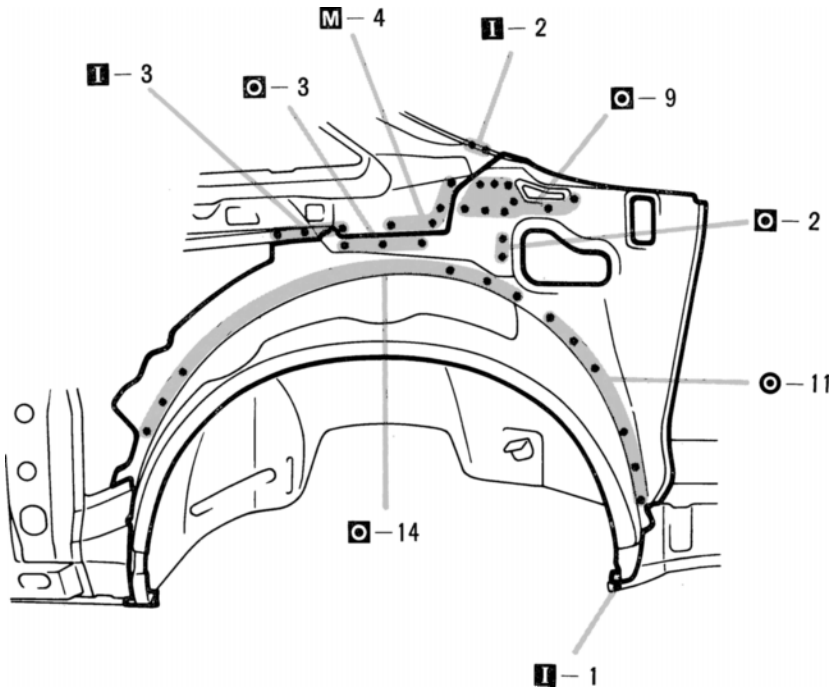

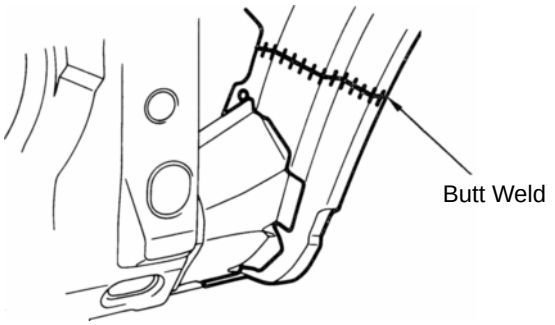

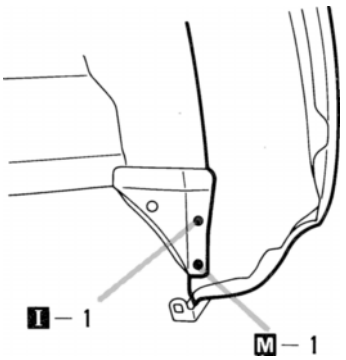

1. Before welding the new parts, temporarily install the quarter panel and check the fit.

2. After installing the new parts apply foamed material.

HINT: For the foamed material application areas, refer to page AP-4 .

WhereEverybodyKnowsYourName

BODY LOWER BACK PANEL (ASSY)

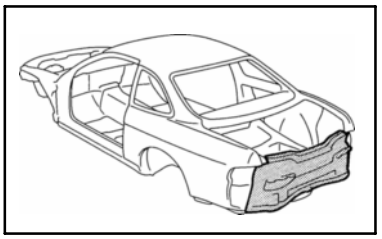

REMOVAL

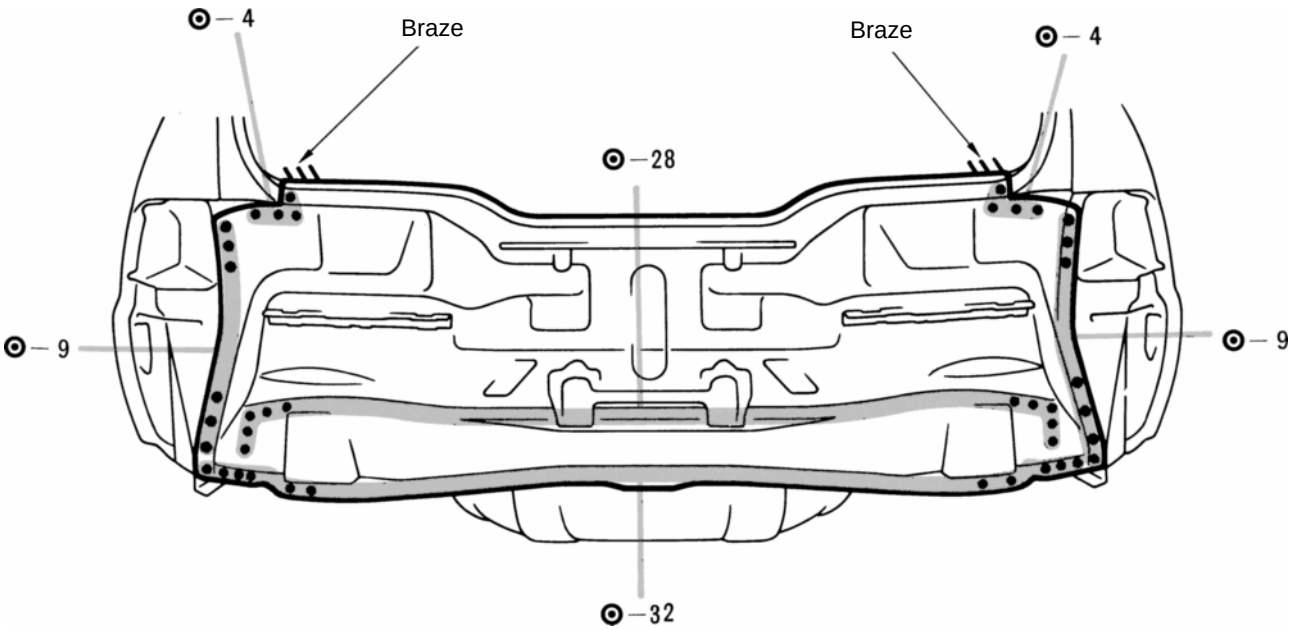

WhereEverybodyKnowsYourName

INSTALLATION

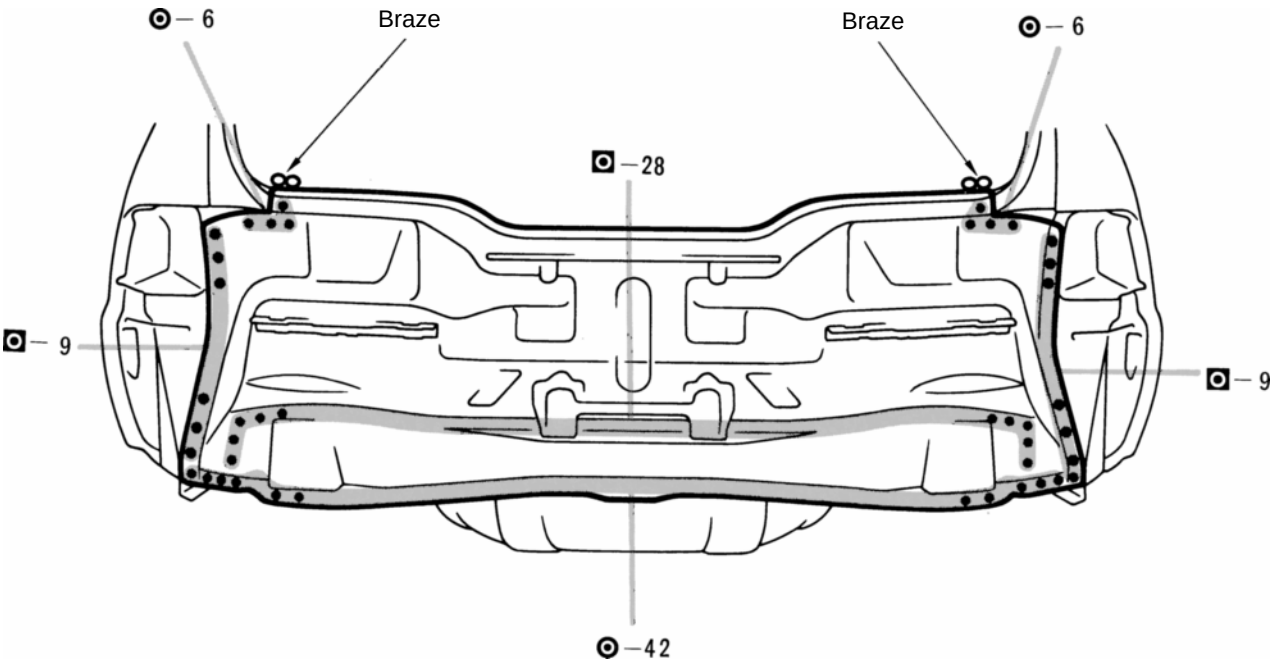

1. Temporarily install the new parts and check the fit of the luggage compartment door and rear combination light.

WhereEverybodyKnowsYourName

REAR FLOOR NO. 3 CROSSMEMBER (ASSY)

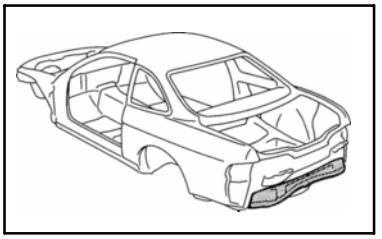

REMOVAL (With the body lower back panel removed.)

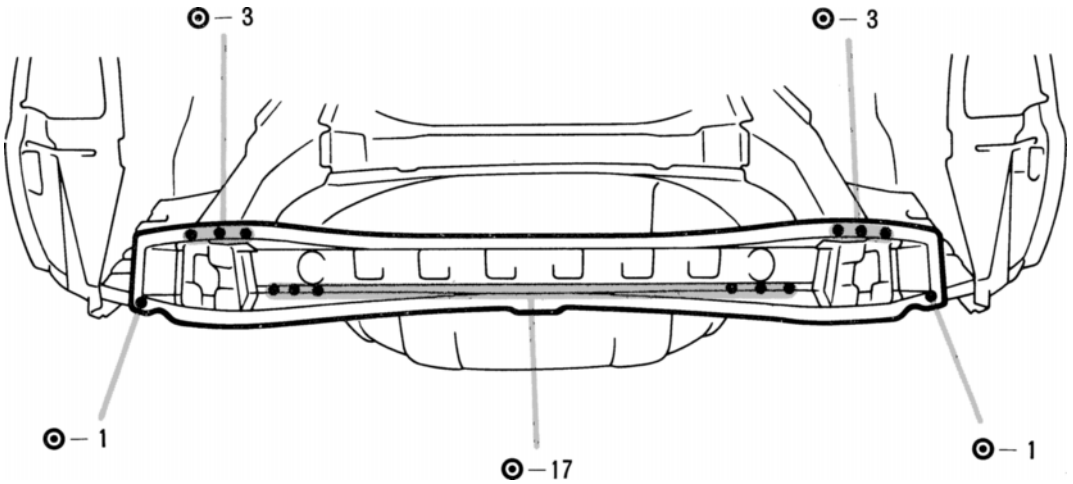

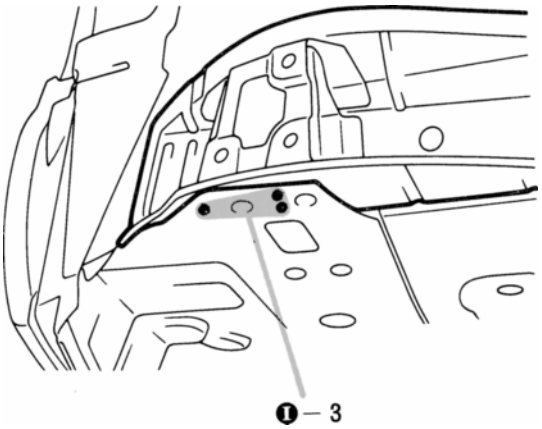

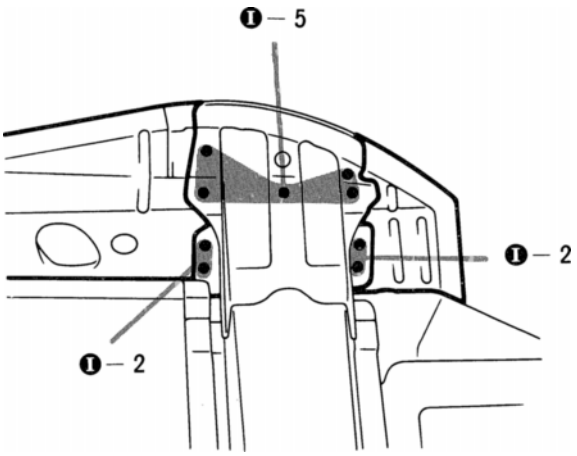

WhereEverybodyKnowsYourName

INSTALLATION

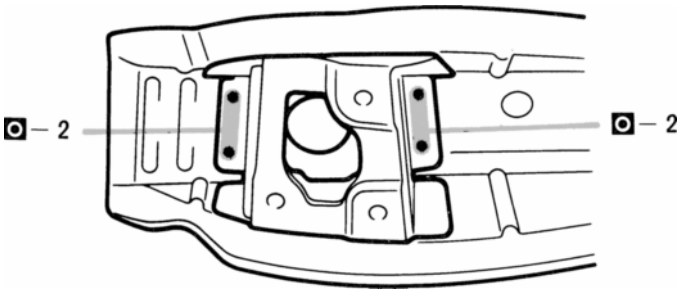

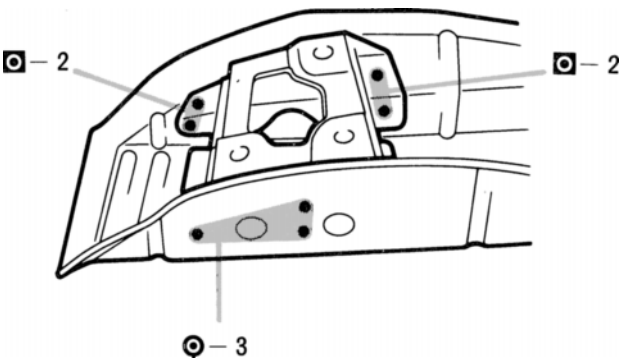

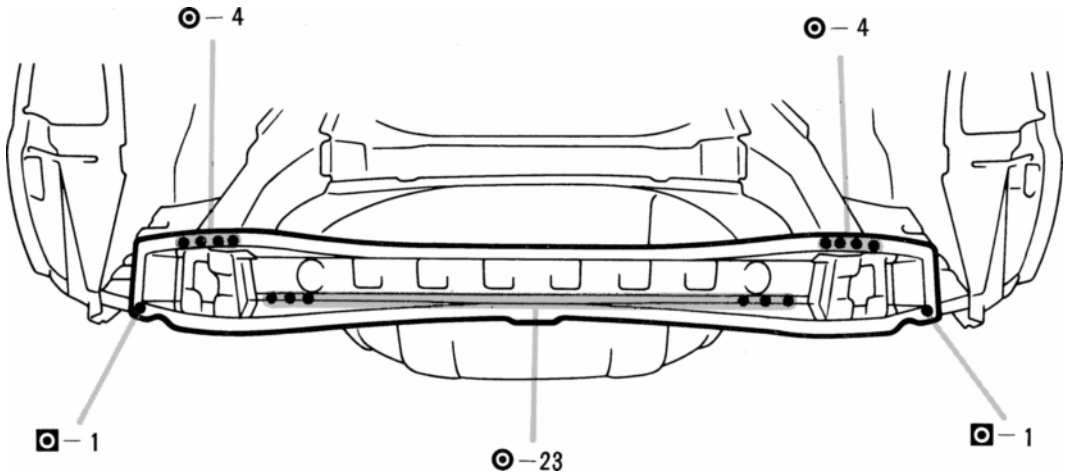

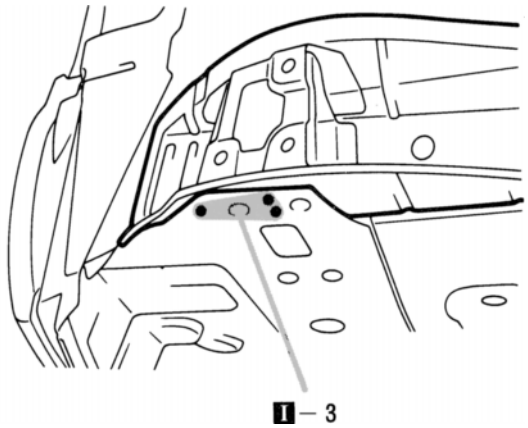

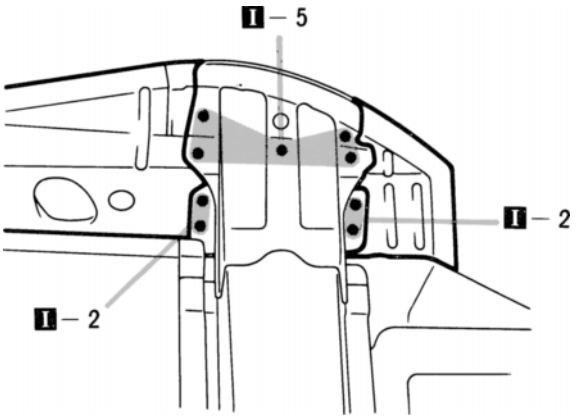

1. Before welding the new parts, temporarily install the body lower back panel and check the fit.

WhereEverybodyKnowsYourName

REAR FLOOR PAN (ASSY)

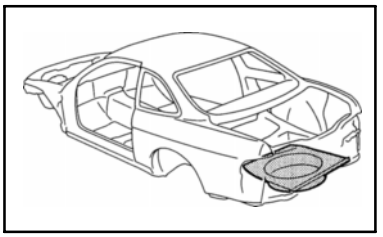

REMOVAL (With the rear floor No. 3 crossmember removed.)

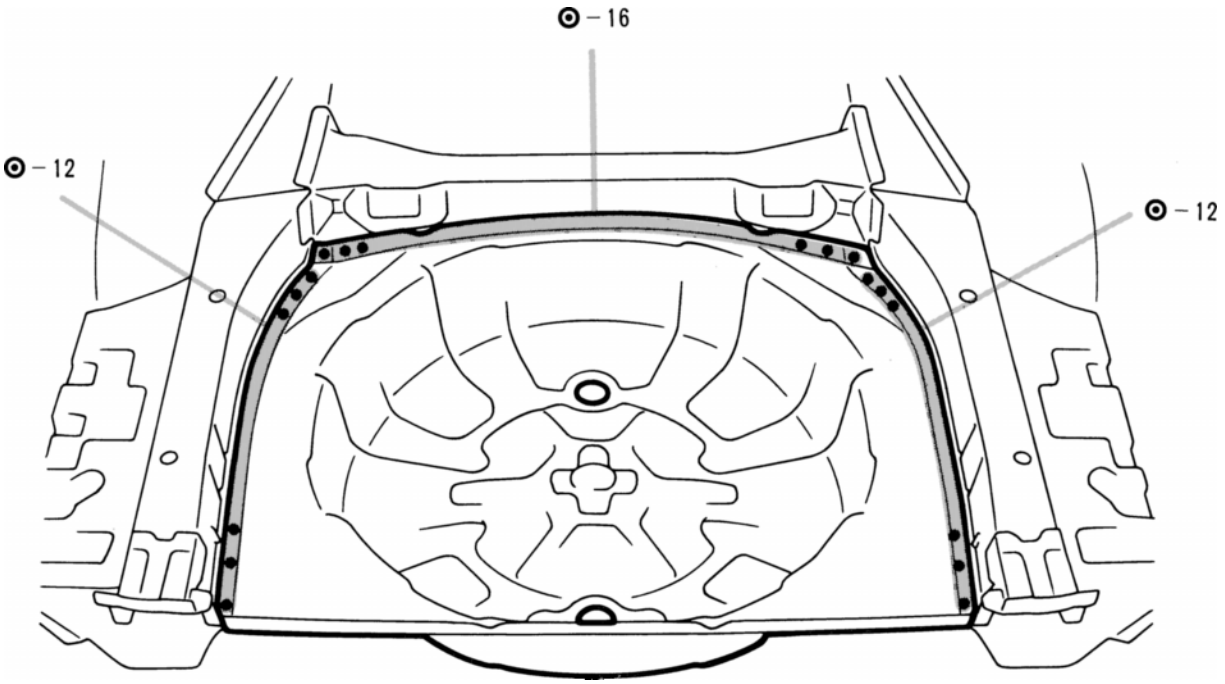

WhereEverybodyKnowsYourName

INSTALLATION

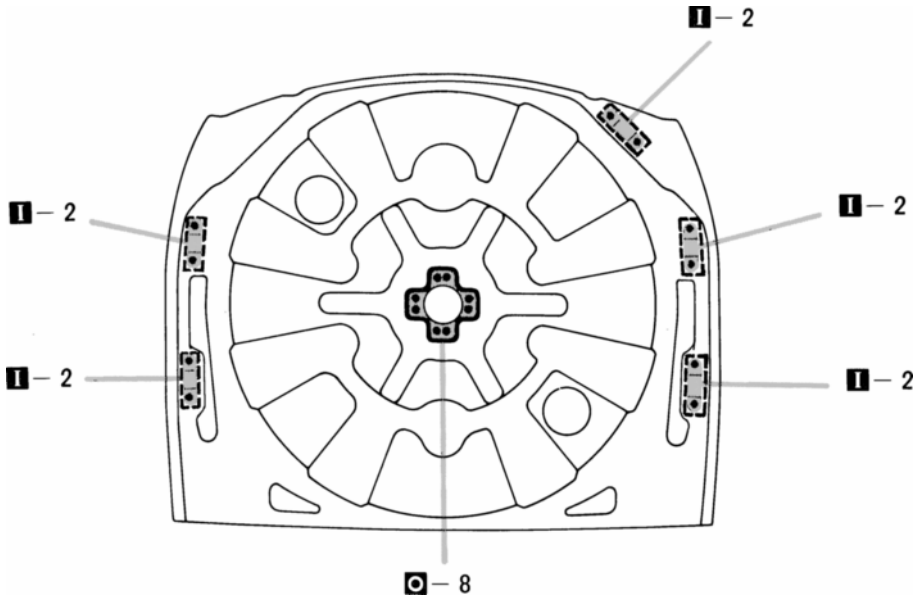

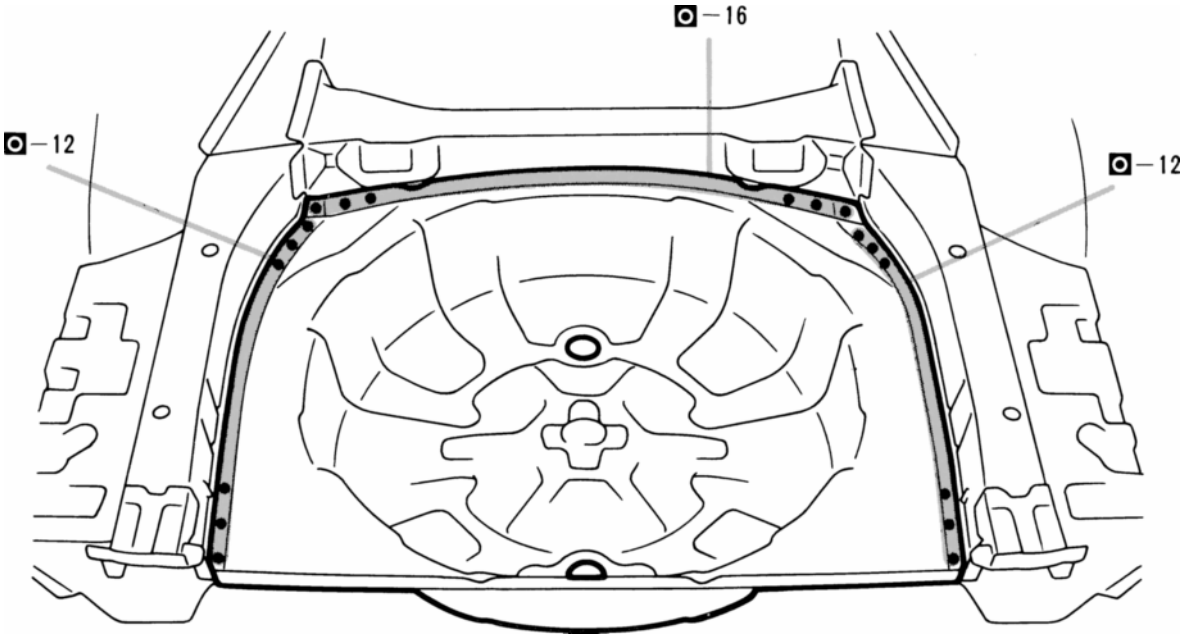

WhereEverybodyKnowsYourName

REAR FLOOR REAR SIDE MEMBER (ASSY)

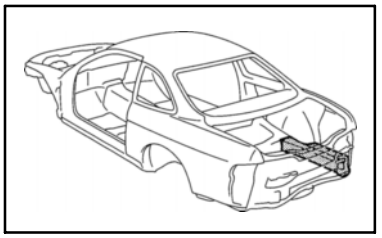

REMOVAL (With the rear floor No. 3 crossmember removed.)

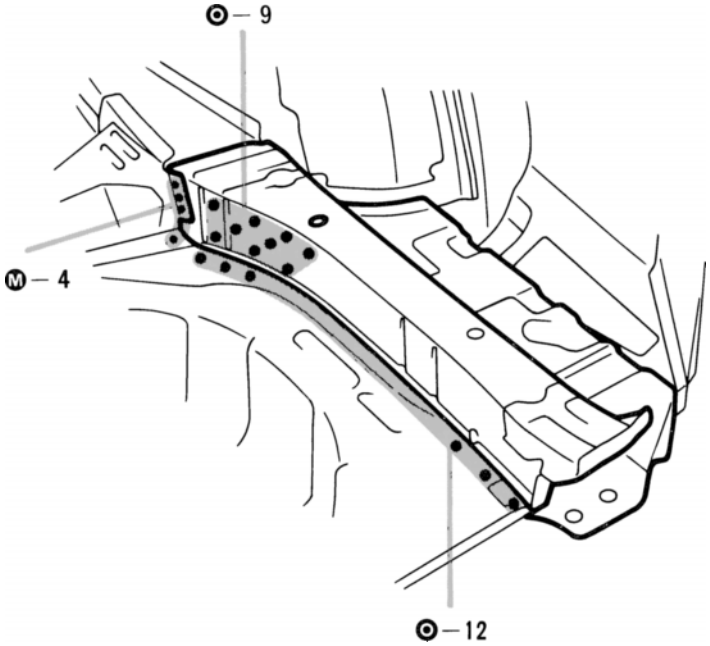

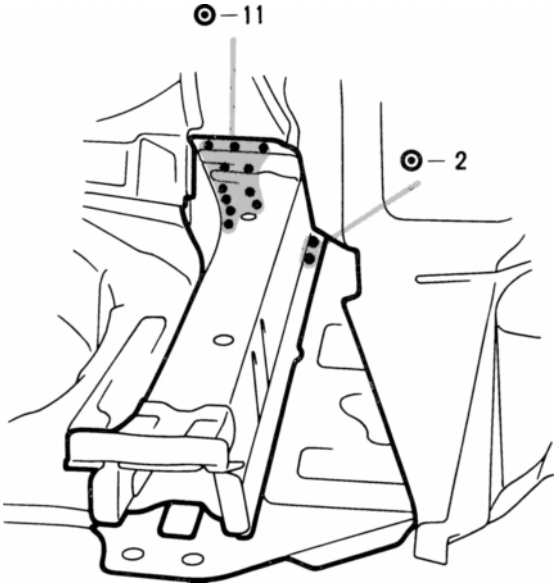

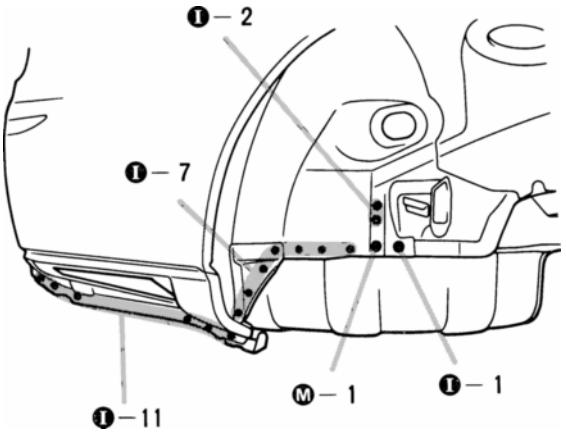

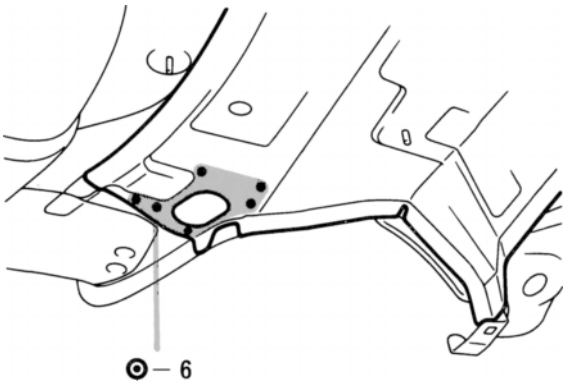

1. Replace the rear floor pan to quarter panel extension at the same time.

WhereEverybodyKnowsYourName

INSTALLATION

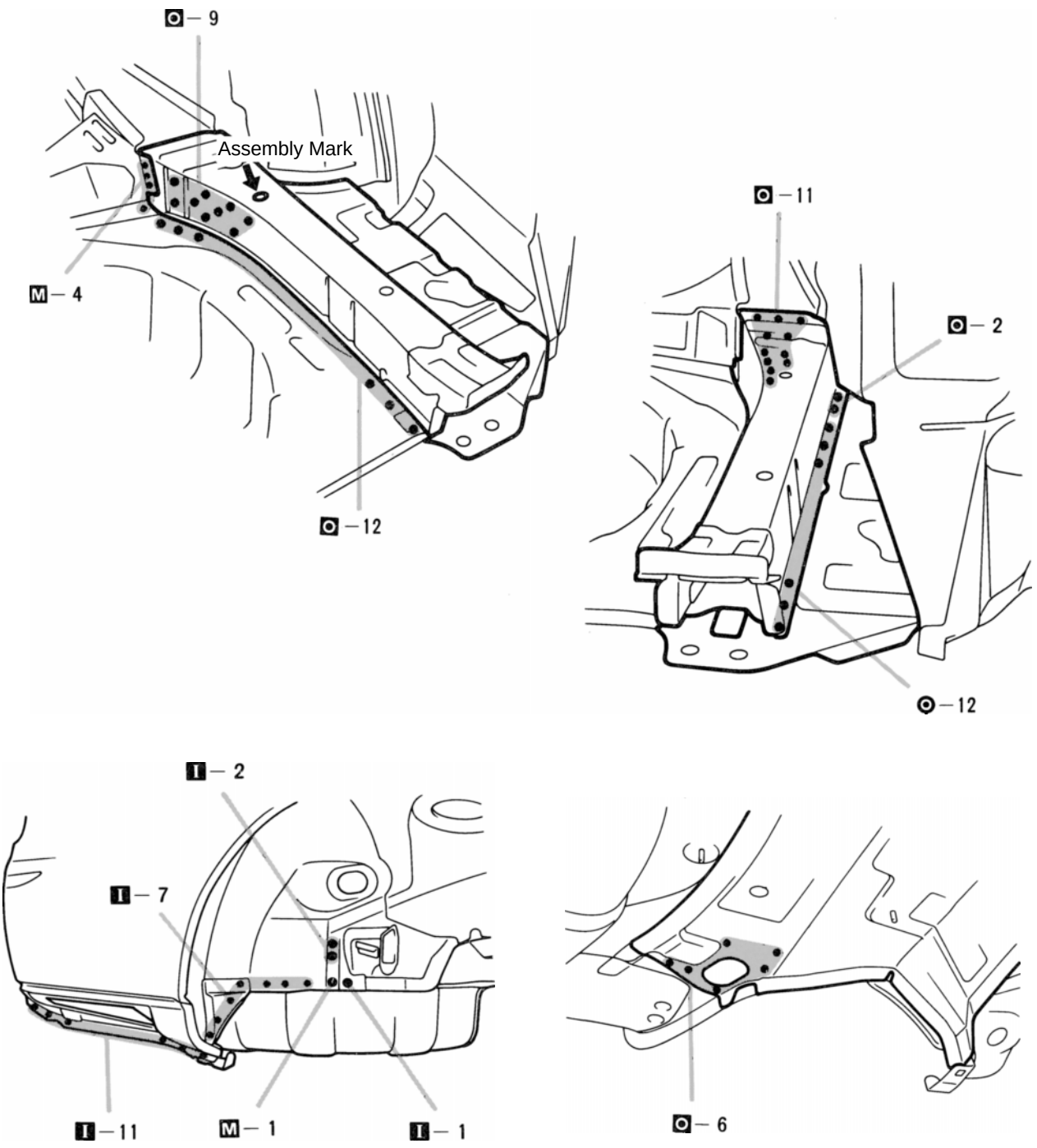

1. When temporarily installing the new parts, determine the installation position by the assembly mark. Then, measure each part in accordance with the body dimension diagram.

WhereEverybodyKnowsYourName

REAR FLOOR NO. 1 CROSSMEMBER (ASSY), REAR FLOOR NO. 2 CROSSMEMBER (ASSY)

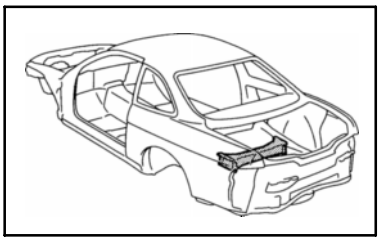

REMOVAL (With the rear floor pan removed.)

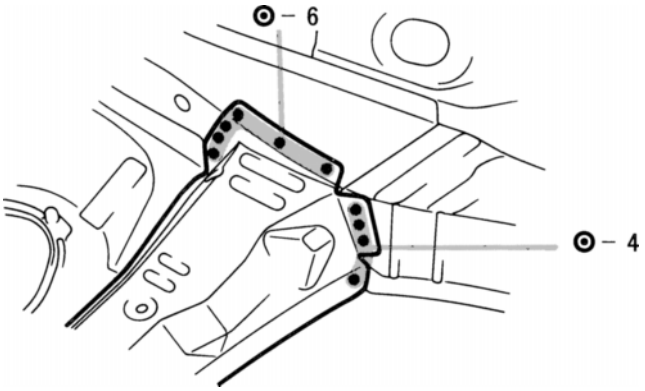

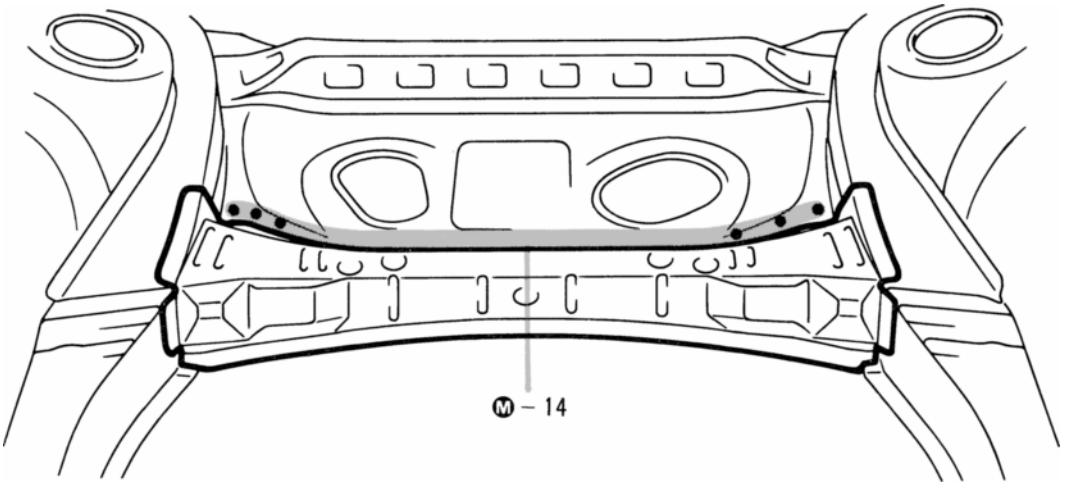

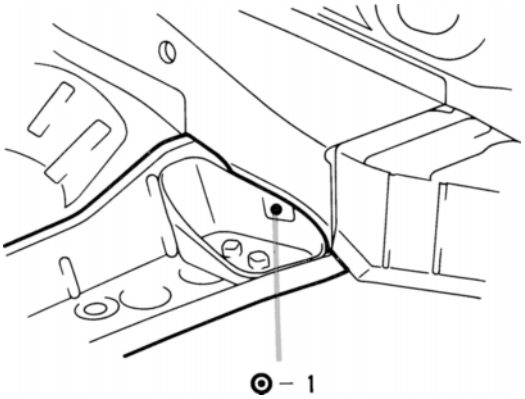

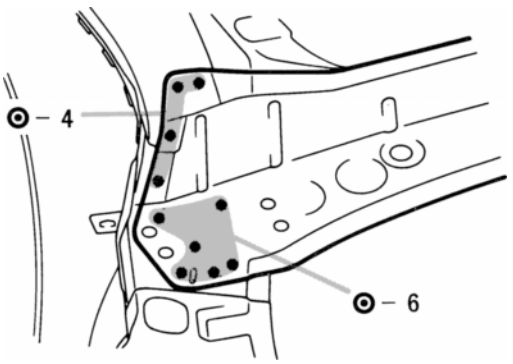

1. After removing the rear floor No. 1 cross-member, disconnect the welding between the rear floor crossmember reinforcement and the rear floor side member.

WhereEverybodyKnowsYourName

INSTALLATION

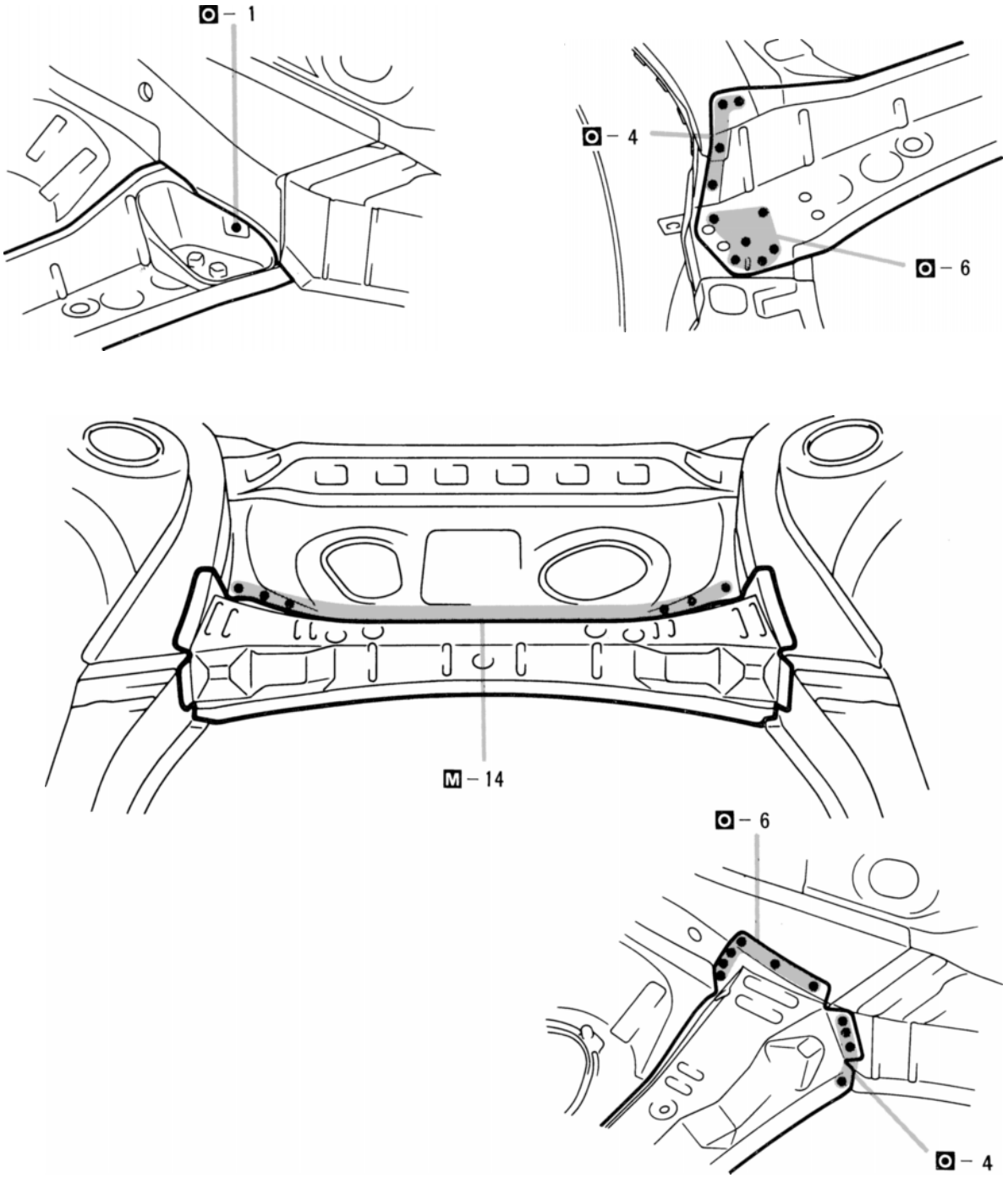

1. Temporarily install the new parts and measure each part in accordance with the body dimension diagram.
2. After welding the rear floor No. 2 cross-member, install the rear floor No. 1 cross-member.

WhereEverybodyKnowsYourName

FOREWORD

This repair manual has been prepared to provide information on the repair methods (including cutting and welding operations, but excluding painting) for collision- damaged body components of the LEXUS SC400.

Applicable models: UZZ30 series

This manual consists of body repair methods, exploded diagrams and illustrations of the body components and other information relating to body panel replacement such as handling precautions, etc. However, it should be noted that the front fenders of the LEXUS model is bolted on and require no welding.

For the repair procedures and specifications other than collision-damaged body components of the LEXUS SC400 refer to the following repair manuals.

Manual Name	Pub. No.
▼SC400 Repair Manual	M/Y Version
▼SC400 Electrical Wiring Diagrar's Manual	M/Y Version
▼Fundamental Painting Procedures	BRM019U
▼Fundamental Body Repair Procedures	BRM020U

If you require the above manuals, please contact your LEXUS Dealer.

All information contained in this manual is the most up-to-date at the time of publication. However, specifications and procedures are subject to change without prior notice.

TOYOTA MOTOR CORPORATION

WhereEverybodyKnowsYourName

FIT STANDARDS

After doors and the engine hood are installed, be sure to perform flit adjustment to prevent abnormal wind noise and ensure a good appearance.

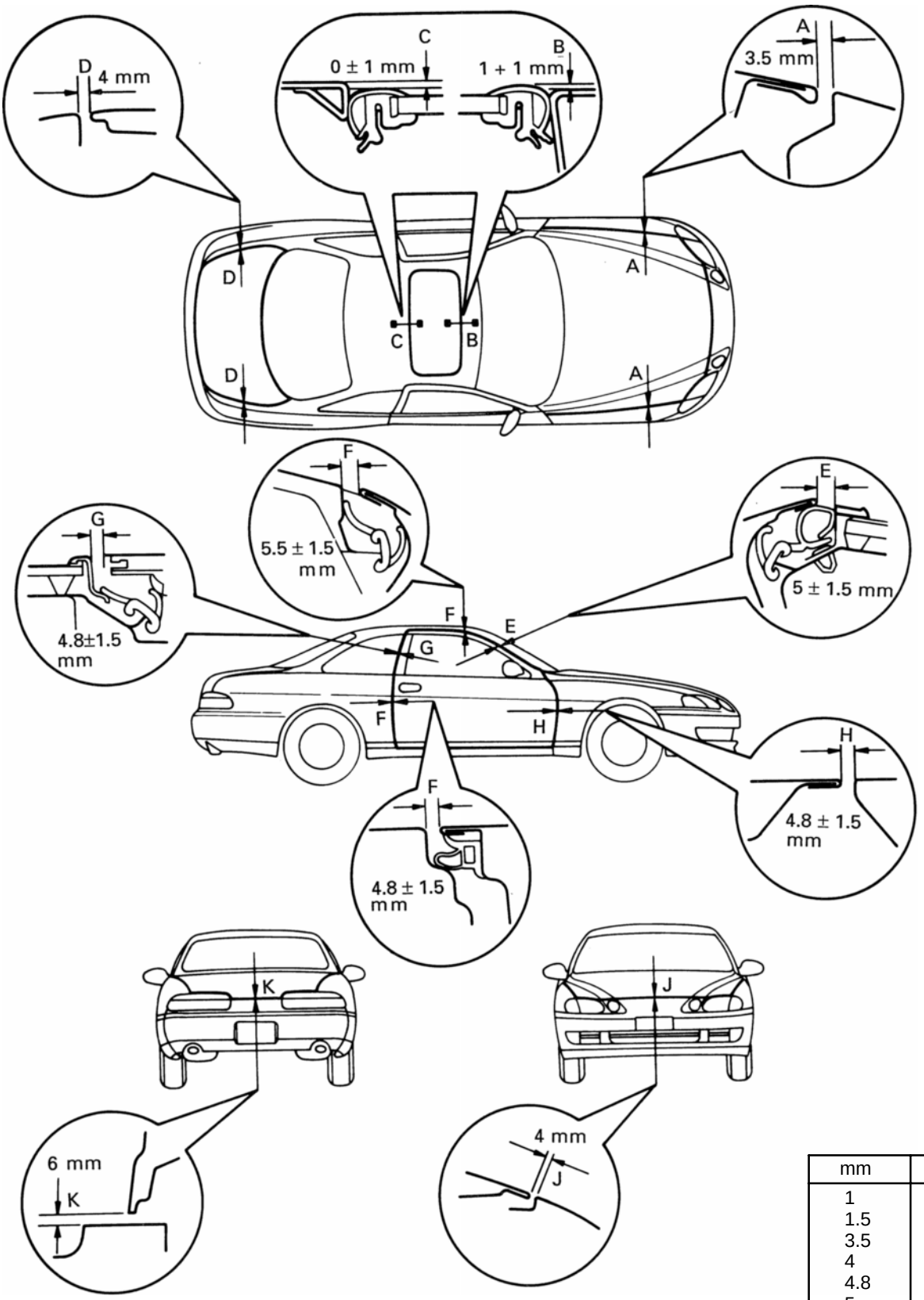

mm	in.
1	0.04
1.5	0.06
3.5	0.14
4	0.16
4.8	0.19
5	0.20
5.5	0.22
6	0.24

WhereEverybodyKnowsYourName

SILENCER SHEET INSTALLATION AREAS

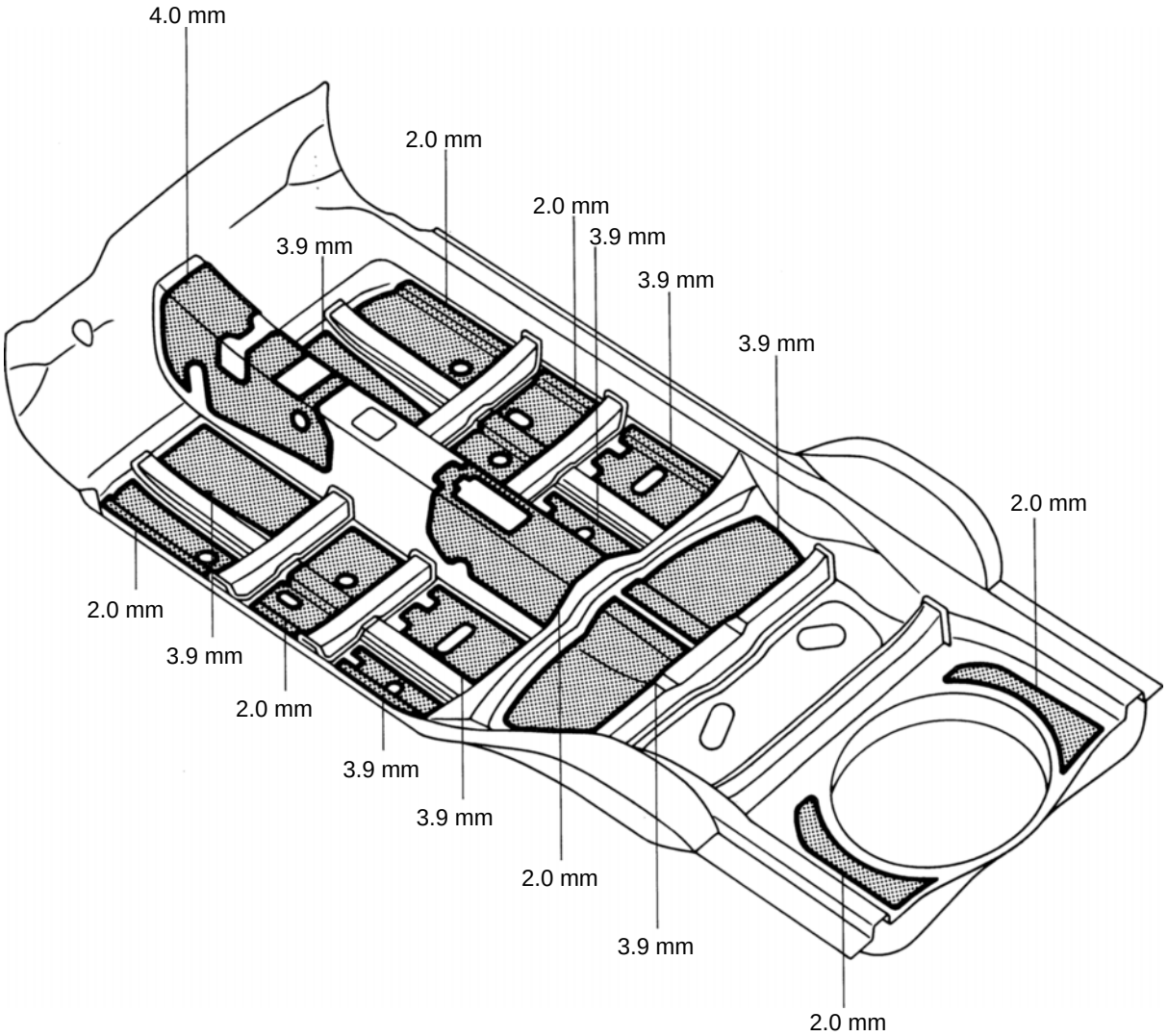

mm	in.
2.0	0.08
3.9	0.15
4.0	0.16

The figures in the illustration show the silencer sheet thickness.

WhereEverybodyKnowsYourName

FOAMED MATERIAL APPLICATION AREAS

The sections shown in the figure below are filled with foamed material to provide noise insullation.
After repairing these sections or their peripheries, refill with foamed material.
HINT:

1. *Use the service holes located on the reverse side of the body panel to refill with foamed material.*
2. *When handling foamed material, follow the directions of the material's manufacturer.*

WhereEverybodyKnowsYourName

GENERAL INFORMATION

Anti-rust treatment is necessary before welding and before and after the painting process.

ANTI-RUST TREATMENT BEFORE WELDING

1. WELD-THROUGH PRIMER (SPOT SEALER) APPLICATION

For anti-corrosion measures, always apply the weld-through primer (spot sealer) to welding surfaces where the paint film has been removed.
HINT: Apply the weld-through primer (spot sealer) so that it does not ooze out from the joining surfaces.

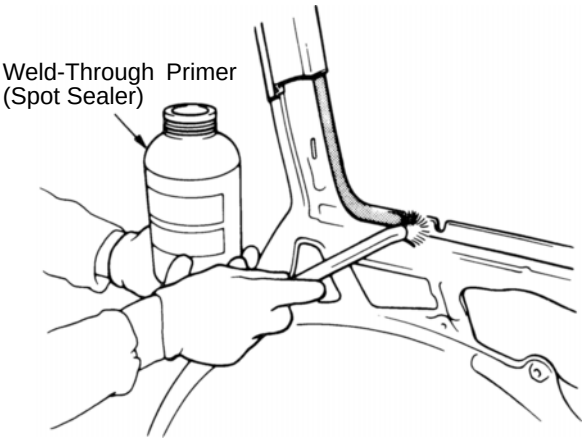

WELD-THROUGH PRIMER (SPOT SEALER) APPLICATION

ANTI-RUST TREATMENT BEFORE PAINTING PROCESS

1. BODY SEALER APPLICATION

For water-proofing and anti-corrosion measures, always apply the body sealer to the body panel seams and hems of the doors, hoods, etc.

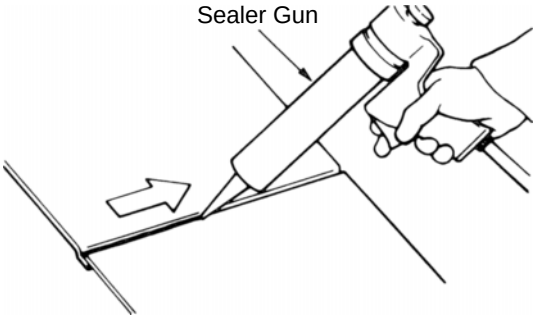

BODY SEALER APPLICATION

2. UNDERCOAT APPLICATION

To prevent corrosion and protect the body from damage by flying stones, always apply sufficient undercoat to the bottom surface of the under body and inside of the wheel housings.

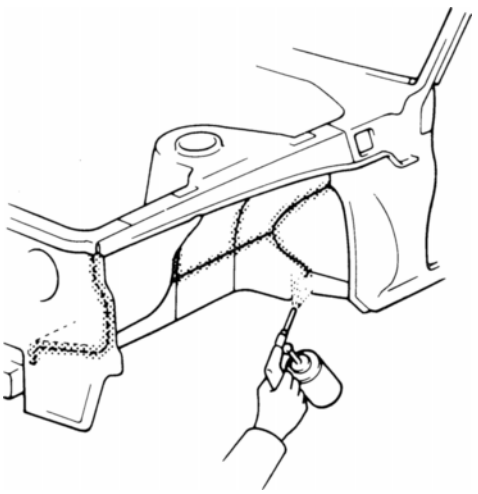

UNDERCOAT APPLICATION

WhereEverybodyKnowsYourName

ANTI-RUST TREATMENT AFTER PAINTING PROCESS

1. ANTI-RUST AGENT (WAX) APPLICATION

To preserve impossible to paint areas from corrosion, always apply sufficient anti-rust agent (wax) to the inside of the hemming areas of the doors and hoods, and around the hinges, or the welded surfaces inside the boxed cross-section structure of the side member, body pillar, etc.

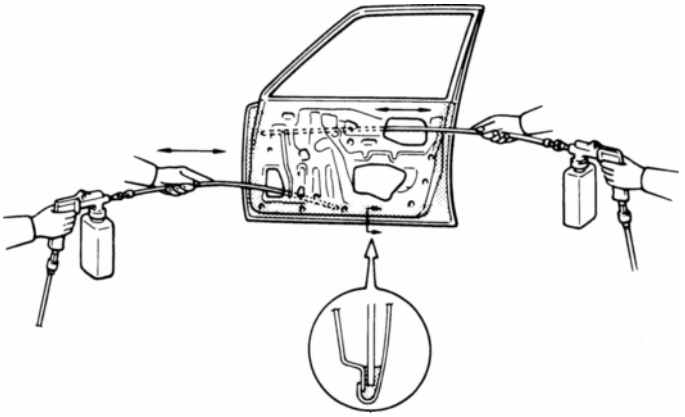

ANTI-RUST AGENT (WAX) APPLICATION

REFERENCE: ANTI-RUST TREATMENT BY PAINTING

Painting prevents corrosion and protects the sheet metal from damage. In this section, anti-chipping paint only for anti-corrosion purpose is described.

1. ANTI-CHIPPING PAINT

To prevent corrosion and protect the body from damage by flying stones, etc., apply anti-chipping paint to the rocker panel, wheel arch areas, valance panel, etc.
HINT:
Depending on the model or the application area, there are cases where the application of anti-chipping paint is necessary before the second coat or after the top coat.

▼Apply the anti-chipping paint after the top coat.

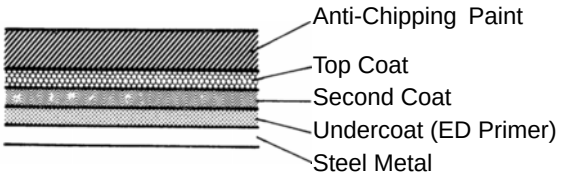

▼Apply the anti-chipping paint before the second coat.

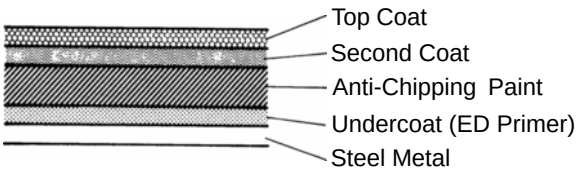

WhereEverybodyKnowsYourName

BODY PANEL SEALING AREAS

HINT:

1. *Prior to applying body sealer, clean the area with a rag soaked in a grease, wax and silicone remover.*
2. *If weld-through primer was used, first wipe off any excess and coat with anticorrosion primer before applying body sealer.*
3. *Wipe off any excess body sealer with a rag soaked in a grease, wax and silicone remover.*
4. *If body sealer is damaged by peeling, cracks, etc., be sure to repair as necessary.*

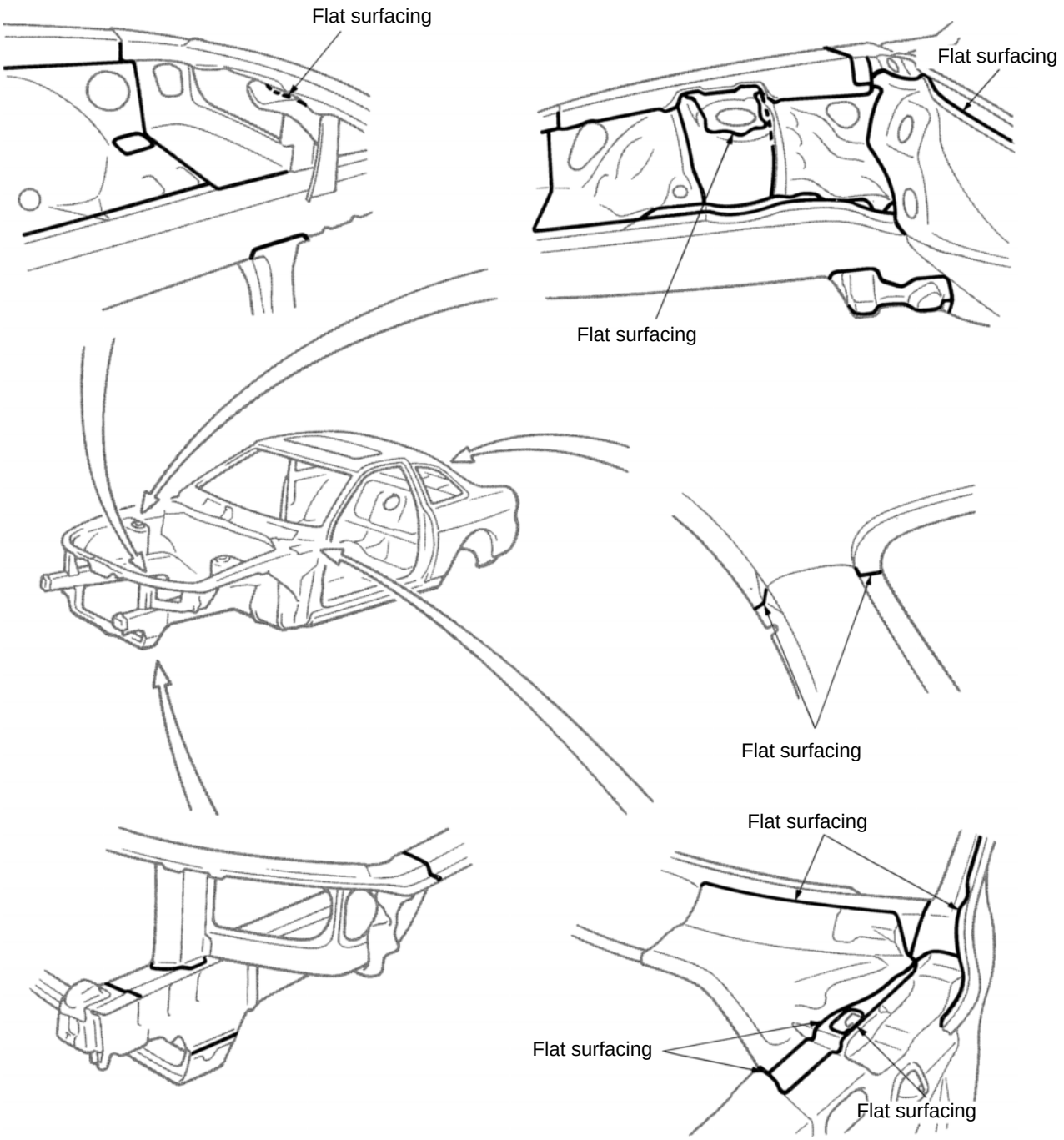

WhereEverybodyKnowsYourName

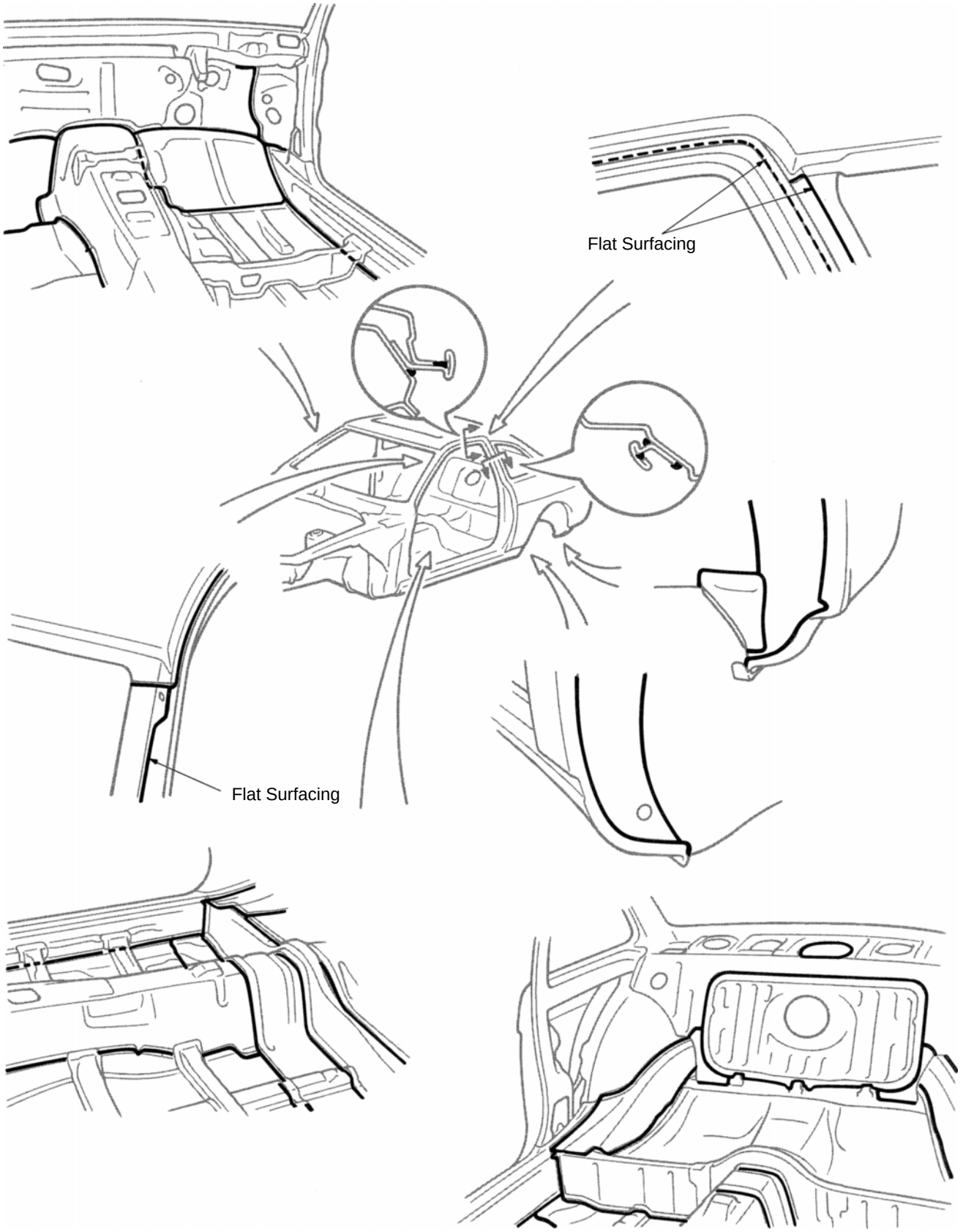

WhereEverybodyKnowsYourName

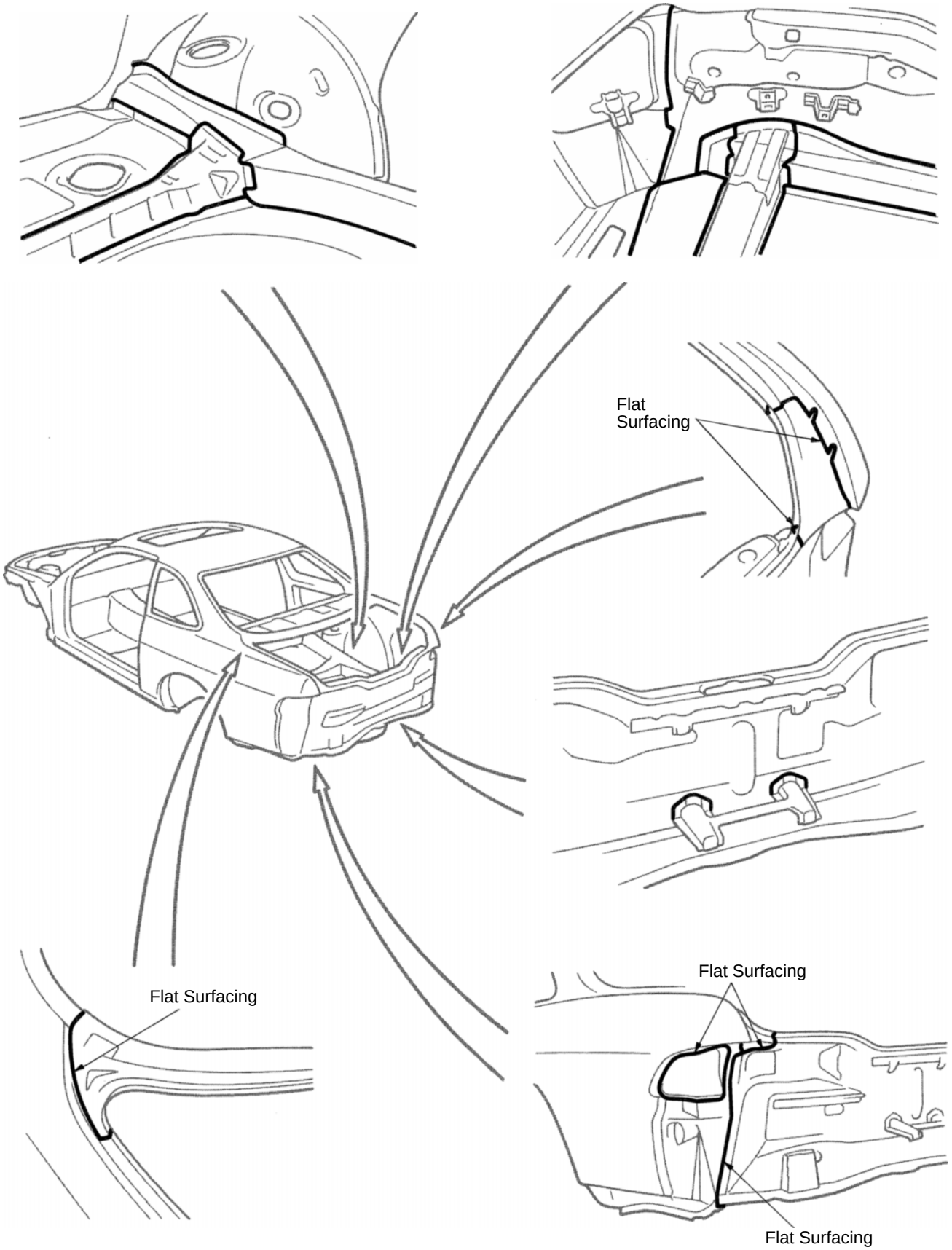

WhereEverybodyKnowsYourName

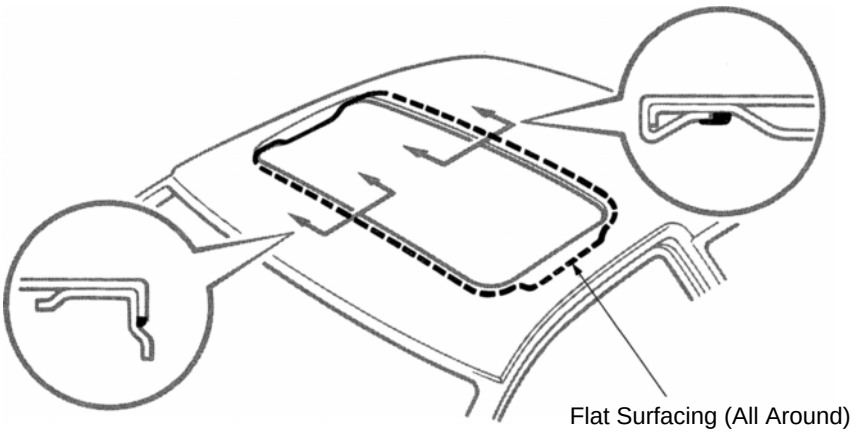

Hood

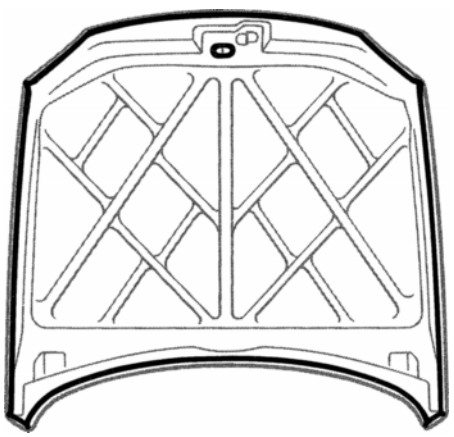

Luggage Compartment Door

Front Door

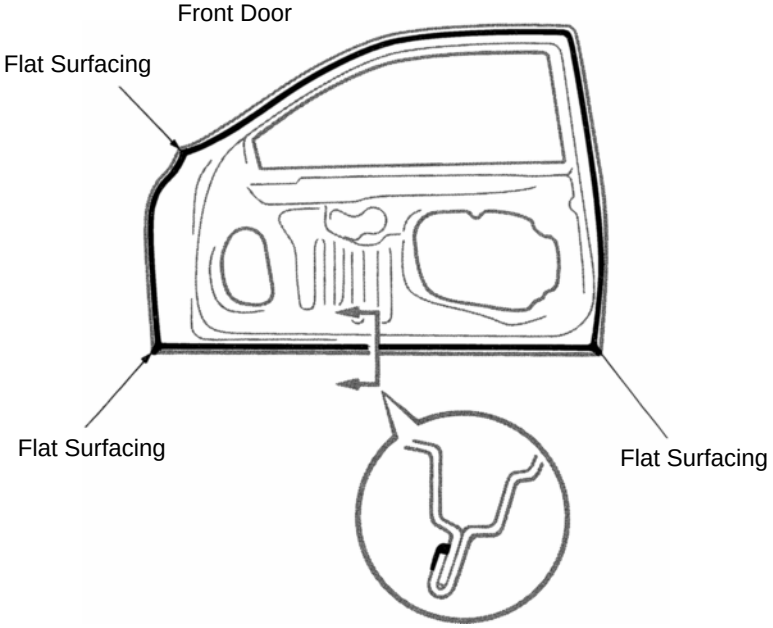

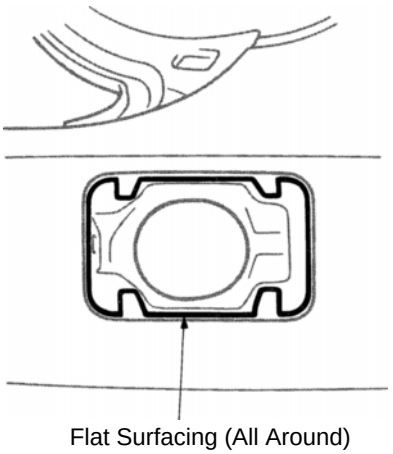

WhereEverybodyKnowsYourName

BODY PANEL UNDERCOATING AREAS

HINT:

1. *First wipe off any dirt, grease or oil with a rag soaked in a grease, wax and silicone remover.*
2. *Cover the surrounding areas with masking paper to avoid coating unnecessary areas. If other areas are accidently coated, wipe off the coating immediately.*
3. *Apply the first coating of undercoat to all welded areas and panel joints, then apply a second coat over the entire area.*
4. *Do not coat parts which become hot, such as the tailpipe, or moving parts, such as the propeller shaft.*
5. *Besides the locations described below, apply undercoating to all weld points under the body to insure corrosion prevention.*
6. *Be sure to seal the edge of the flange of the member and bracket with undercoating.*
7. *If undercoat is damaged by peeling, cracks, etc, be sure to repair as necessary.*

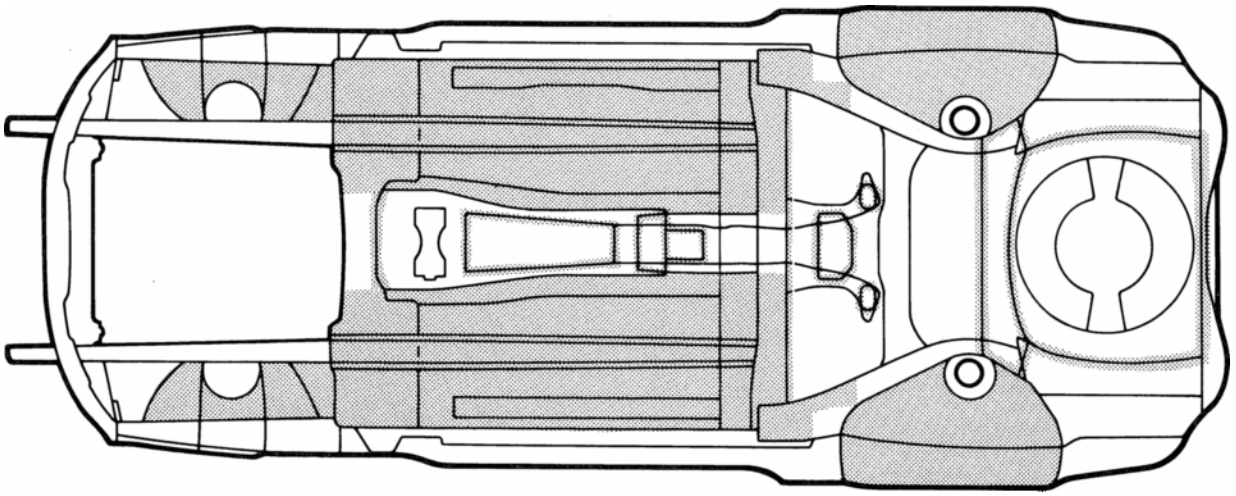

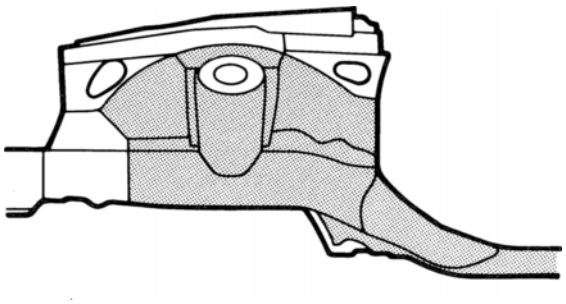

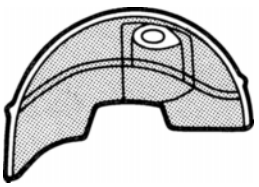

REFERENCE: Referring to the notes above, undercoating should be applied according to the specifications for your country.

WhereEverybodyKnowsYourName

BODY PANEL ANTI-RUST AGENT (WAX) APPLICATION AREAS

HINT:

1. *Whenever adjusting the doors and hoods, apply anti-rust agent (wax) around the hinges.*
2. *Even if partially repairing a part, apply anti-rust agent (wax) over the entire application area of the part.*
3. *Wipe off the anti-rust agent immediately with a rag soaked in a grease, wax and silicone remover, if accidently applied to other areas.*

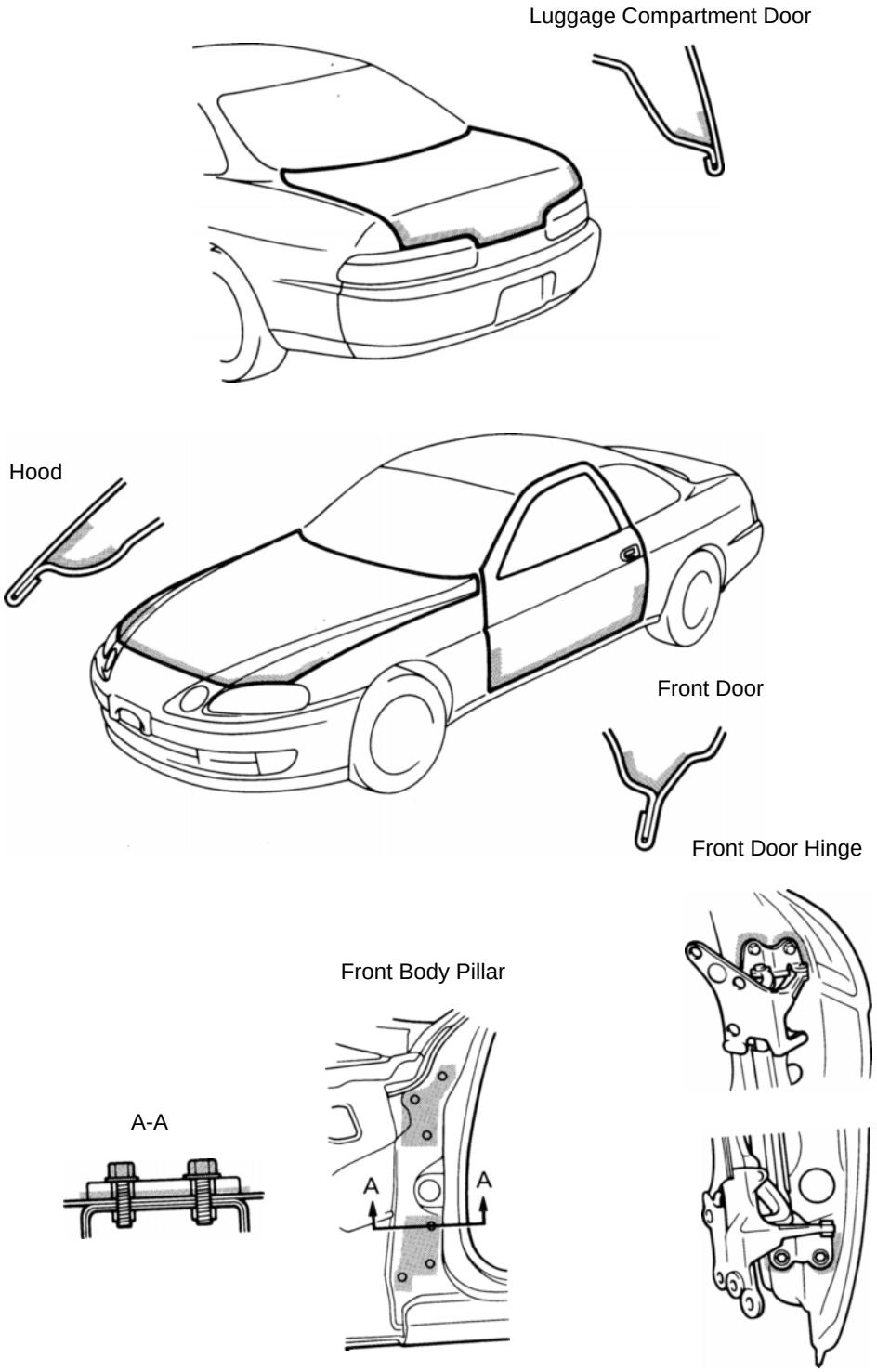

WhereEverybodyKnowsYourName

BODY PANEL ANTI-CHIPPING PAINT APPLICATION AREAS

HINT:

1. *Anti-chipping paint should be applied to some areas before the second coat and to others after the top coat.*
2. *If other areas are accidentally coated, wipe of the paint immediately with a rag soaked in a grease, wax and silicone remover.*

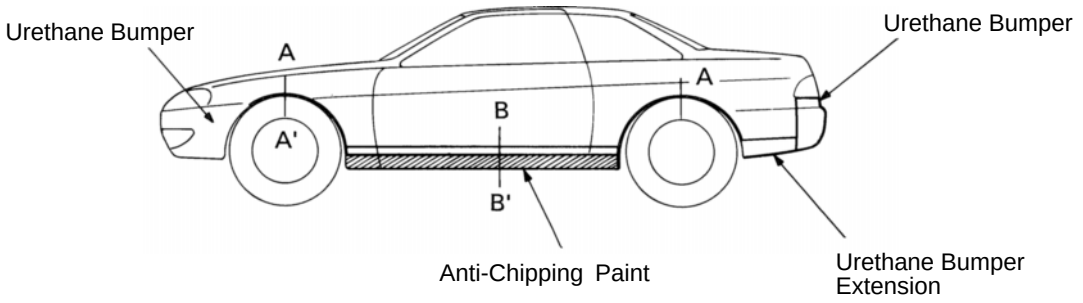

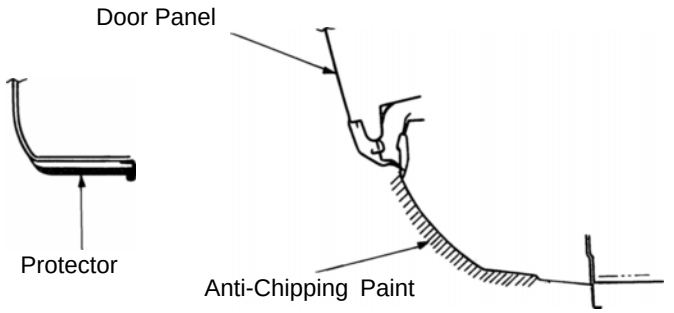

A-A' Cross Section **B-B' Cross Section**

Apply anti-chipping paint after the top coat.

HINT: Apply anti-chipping paint to a thickness of about 300 microns.

WhereEverybodyKnowsYourName

STANDARD BODY MARKS

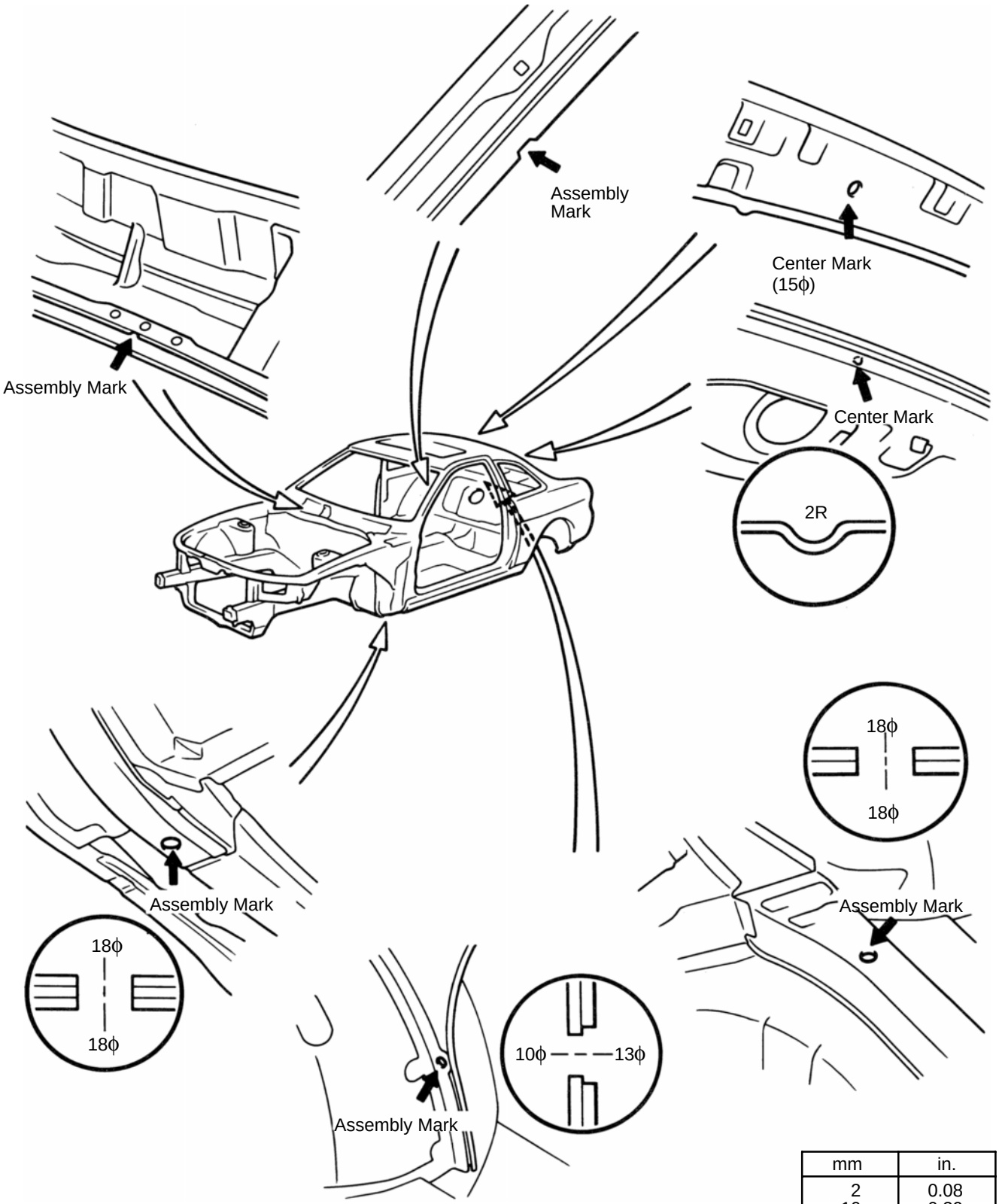

mm	in.
2	0.08
10	0.39
13	0.51
15	0.59
18	0.71

WhereEverybodyKnowsYourName

HIGH-STRENGTH STEEL (HSS) PARTS

Generally, High-Strength Steel (HSS) is that which has an intensity value of at least 35 kgf/mm^2 (343 MPa), and distinguished from mild steel.

The handling of HSS is the same as for mild steel, but the following should be observed.

1. Panel Hammering: Because HSS is thinner than mild steel, care should be taken to avoid warping during hammering operations.
2. Removing Spot Welds: Because HSS is tougher than mild steel, damage will occur more easily to a regular drill. Therefore, an HSS Spot Cutter is recommended.
   Also, use a high-torque drill at low speed, and supply grinding oil to the drill during use.
3. Panel Welding: Panel welding procedures for HSS are exactly the same as for mild steel. Plug welding should be done with a MIG (Metal Inert Gas) welder. Do not gas weld or braze panels at areas other than specified.

REFERENCE:

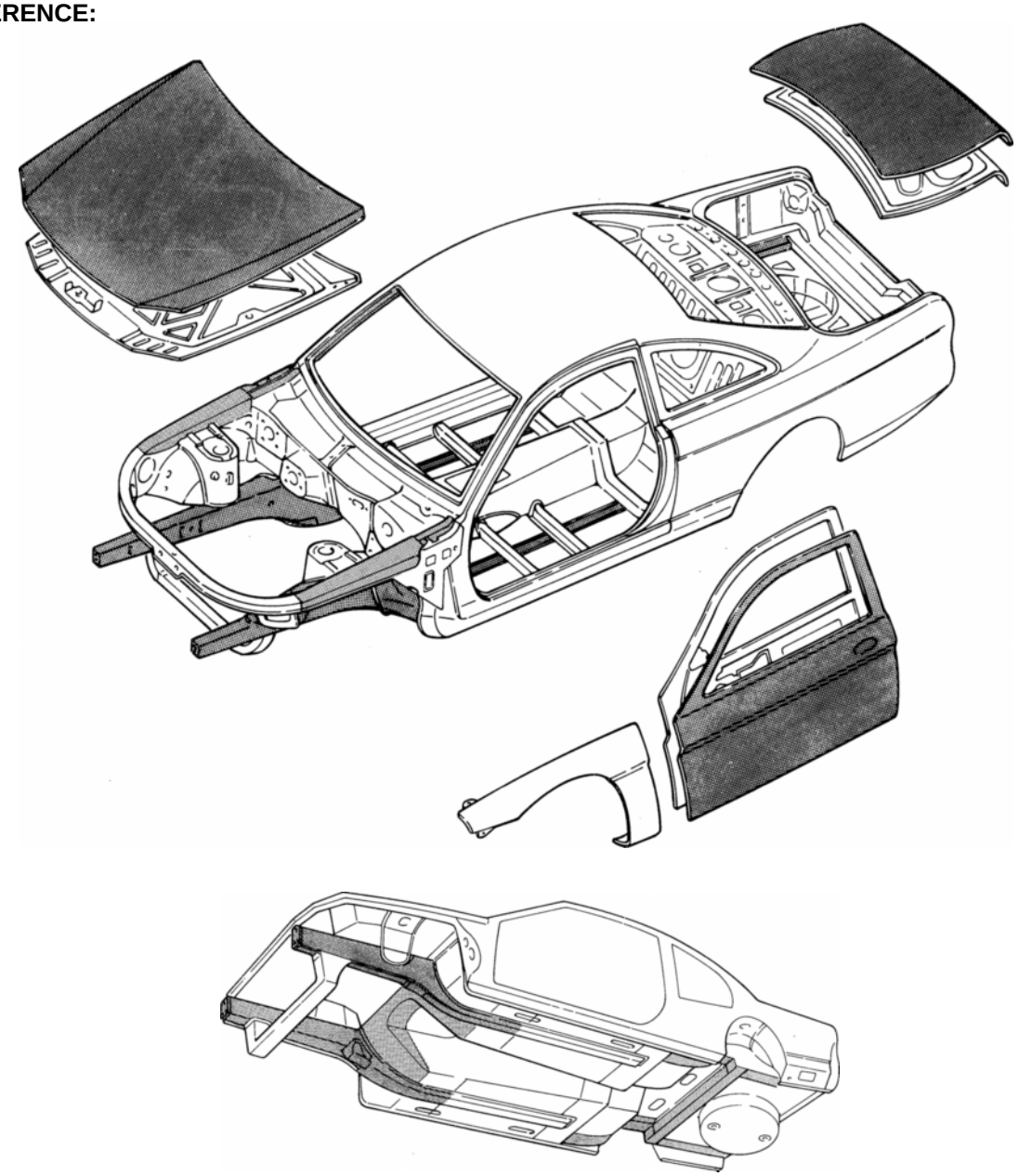

WhereEverybodyKnowsYourName

RUST-RESISTANT STEEL SHEET PARTS

Rust-Resistant Steel Sheets have zinc, tin or aluminum etc, plating over the base metal surface in order to improve the corrosion resistance of the sheet metal. For the vehicle's body panels, galvanized steel sheet is widely used.
Body panel on LEXUS models are made of two different galvanized steel sheet. The ordinary galvanized steel sheet has a zinc-iron alloy plating over the base metal surface. Excelite II has zinc-iron alloy plating on both the outside and the back surface, plus a further iron-rich zinc-iron alloy plating which good paint adherence. These two galvanized steel sheets are used selectively according to need.

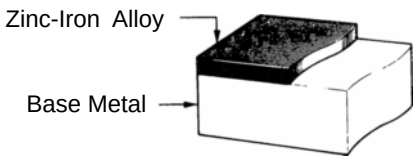

Ordinary Galvanized Steel Sheet

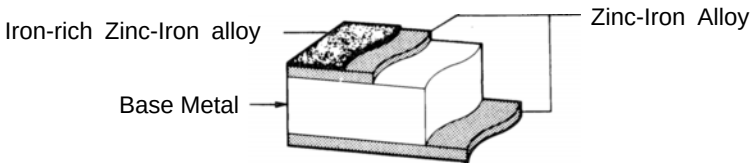

Excelite II

The handling of Rust-Resistant Steel Sheet is the same as for ordinary steel sheet, but the following should be observed.

1. Panel welding: The paint as well as the zinc portion must be removed completely from the welding area to guarantee good welding integrity.
2. Anti-rust treatment: Since the zinc plating is lost after welding, anti-rust treatment of the welded area must be thoroughly performed (refer to section AR).

REFERENCE:

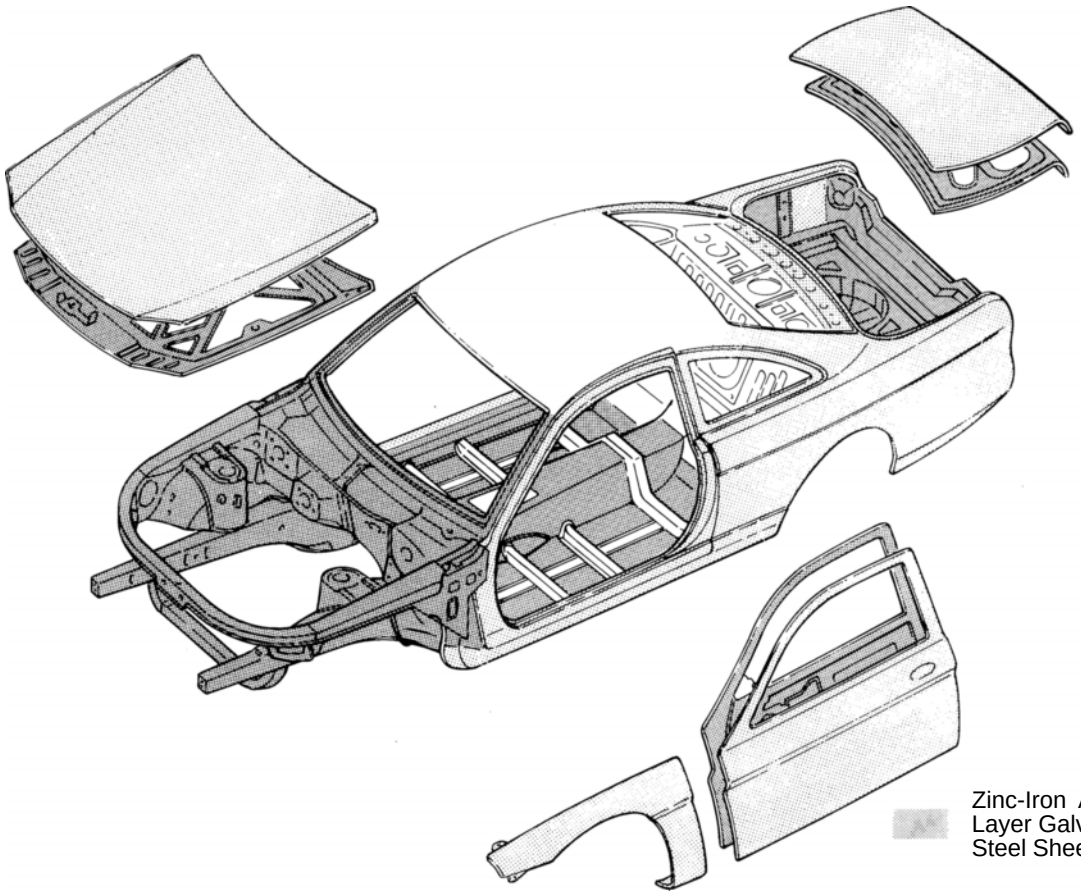

Zinc-Iron Alloy Double-Layer Galvannealed Steel Sheet

Ordinary Galvannealed Steel Sheet

WhereEverybodyKnowsYourName

GENERAL INFORMATION

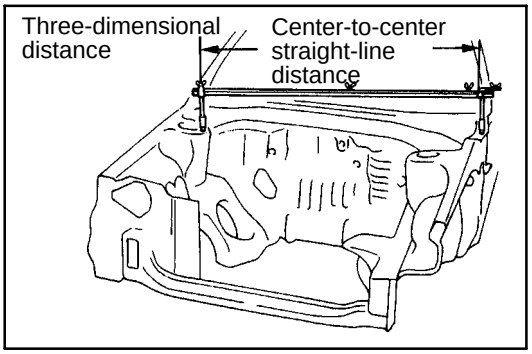

1. BASIC DIMENSIONS

(a) There are two types of dimensions in the diagram. (Three-dimensional distance)

▼Straight-line distance between the centers of two measuring points.

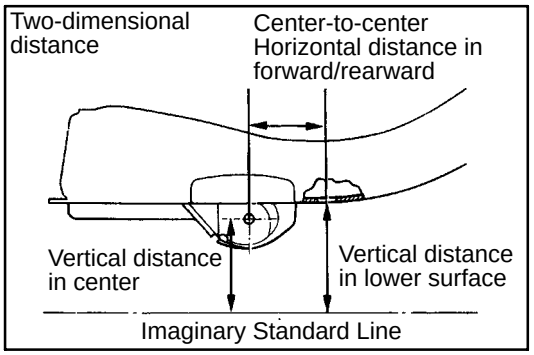

(Two-dimensional distance)

▼Horizontal distance in forward/rearward between the centers of two measuring points.

▼The height from an imaginary standard line.

(b) In cases in which only one dimension is given, left and right are symmetrical.

(c) The dimensions in the following drawing indicate actual distance. Therefore, please use the dimensions as a reference.

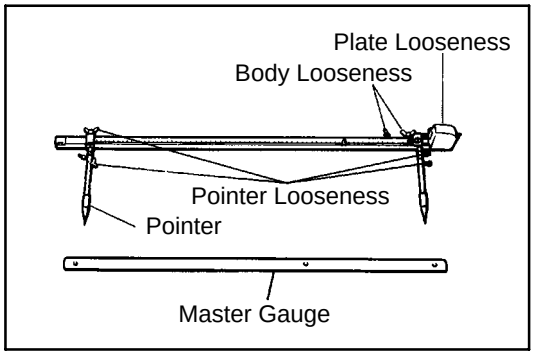

2. MEASURING

(a) Basically, all measurements are to be done with a tracking gauge. For portions where it is not possible to use a tracking gauge, a tape measure should be used.

(b) Use only a tracking gauge that has no looseness in the body, measuring plate, or pointers.

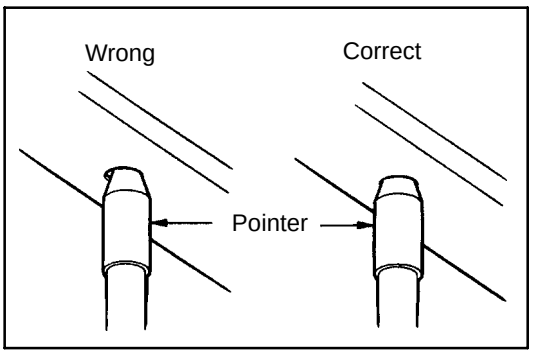

HINT:

1. *The height of the left and right pointers must be equal.*
2. *Always calibrate the tracking gauge before measuring or after adjusting the pointer height.*
3. *Take care not to drop the tracking gauge or otherwise shock it.*
4. *Confirm that the pointers are securely in the holes.*

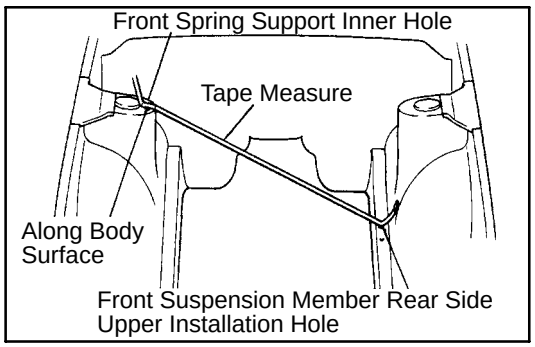

(c) When using a tape measure, avoid twists and bends in the tape.

(d) When tracking a diagonal measurement from the front spring support inner hole to the suspension member upper rear installation hole, measure along the front spring support panel surface.

WhereEverybodyKnowsYourName

BODY DIMENSION DRAWINGS

ENGINE COMPARTMENT

(Three-Dimensional Distance)

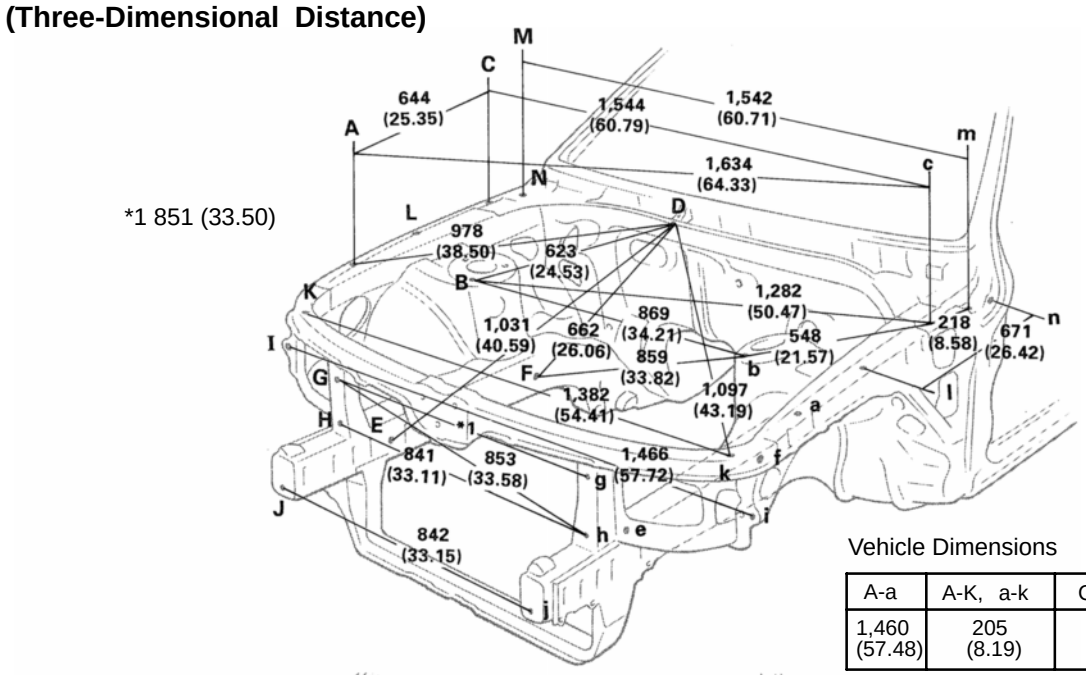

Vehicle Dimensions

A-a	A-K, a-k	C-K, c-k	C-K, c-k
1,460 (57.48)	205 (8.19)	847 (33.35)	1,689 (66.50)

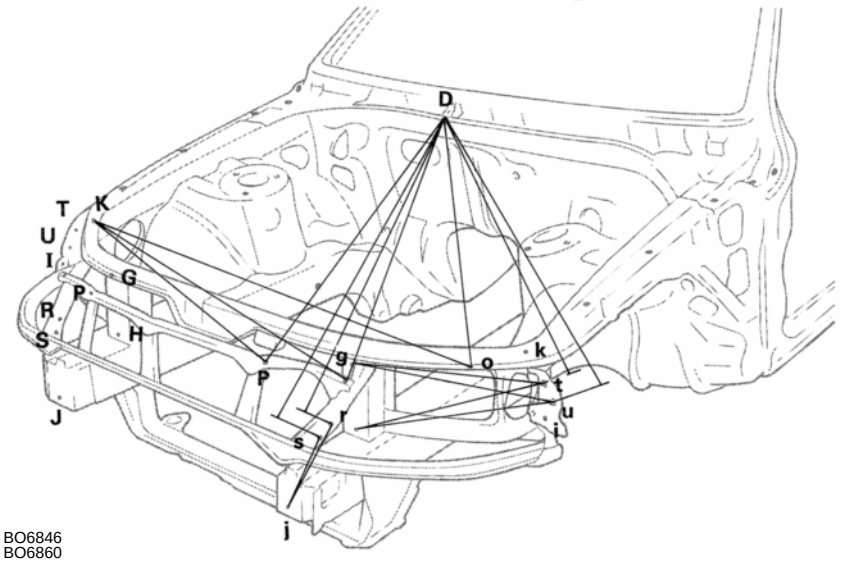

BO6846
BO6860

Vehicle Dimensions

D-O D-o	1,143 (45.0)	K-p k-P	1,033 (40.67)
D-P D-p	1,201 (47.28)	K-q k-Q	1,192 (45.92)
D-Q D-q	1,215 (47.83)	J-R j-r	187 (7.36)
D-R D-r	1,260 (49.61)	J-S j-s	151 (5.94)
D-S D-s	1,299 (51.14)	G-T g-t	366 (14.41)
D-T D-t	1,158 (45.59)	G-U g-u	379 (14.92)
D-U D-u	1,186 (46.69)	H-T h-t	393 (15.47)
K-o k-O	1,218 (47.95)	H-U h-u	392 (15.43)

mm (in.)

Symbol	Name	Hole dia.	Symbol	Name	Hole dia.
A, a	Front fender apron standard hole	10 (0.39)	L, l	Front fender installation nut	6 (0.24) nut
B, b	Front spring support hole-front	11 (0.43)	M, m	Hood hinge installation nut-rear	8 (0.31) nut
C, c	Cowl side panel standard hole	10 (0.39)	N, n	Front fender installation nut-rear	6 (0.24) nut
D	Cowl top panel center mark	—	O, o	Head light installation nut	6 (0.24) nut
E, e	Front side member working hole	18 (0.71)	P, p	Head light installation nut	6 (0.24) nut
F, f	Front side member working hole	18 (0.71)	Q, q	Head light installation nut	6 (0.24) nut
G, g	Radiator support standard hole	10 (0.39)	R, r	Head light installation nut	6 (0.24) nut
H, h	Radiator support standard hole	10 (0.39)	S, s	Head light installation hole	11 (0.43)
I, i	Front fender apron standard hole	10 (0.39)	T, t	Head light installation hole	10 (0.39)
J, j	Front side member standard hole	8 (0.31)	U, u	Head light installation hole	10 (0.39)
K, k	Front fender installation nut-front	6 (0.24) screw	—	—	—

WhereEverybodyKnowsYourName

UNDER BODY

(Three-Dimensional Distance)

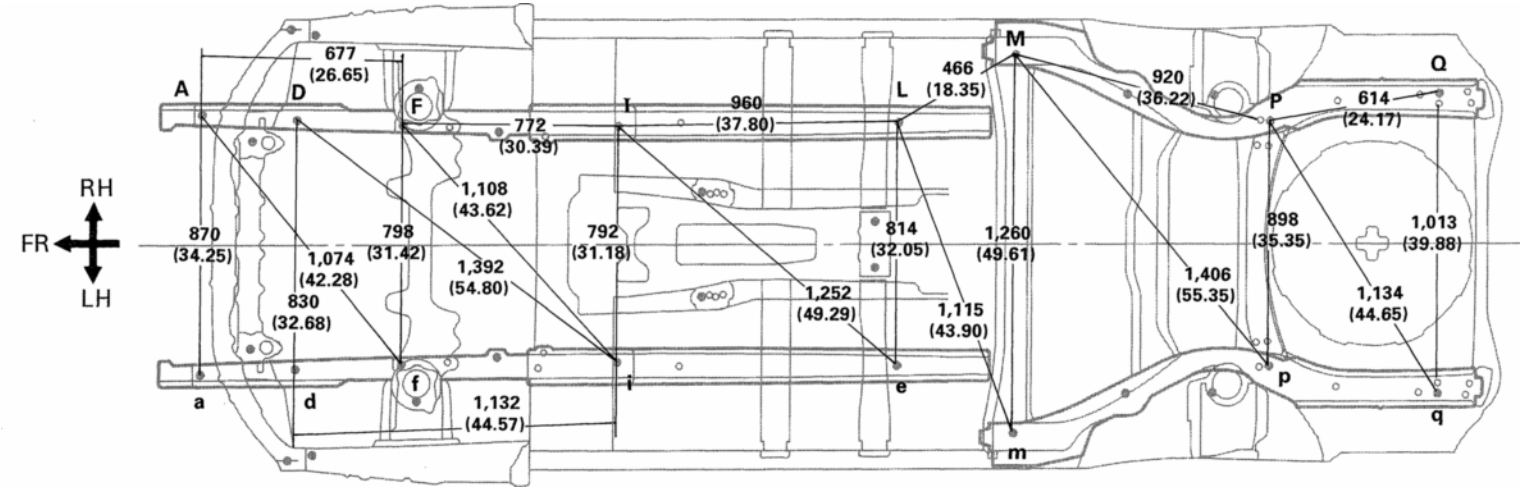

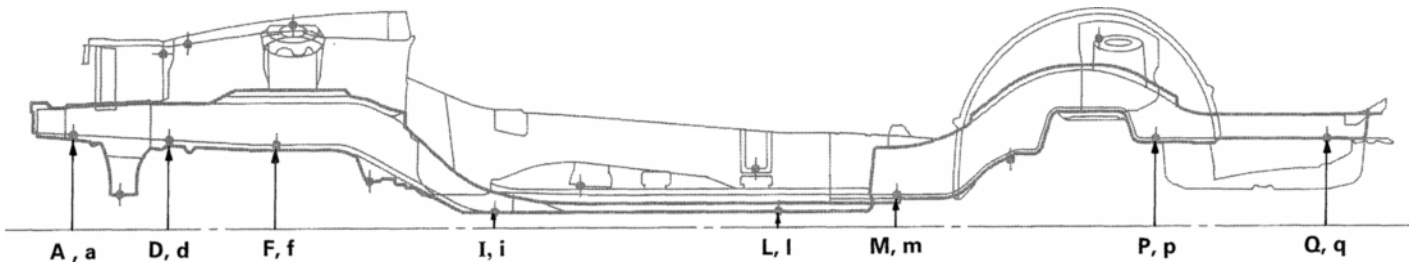

mm (in.)

Symbol	Name	Hole dia.	Symbol	Name	Hole dia.
A, a	Radiator duct installation nut	6 (0.24) screw	L, l	Front floor reinforcement standard hole	18 (0.71)
D, d	Front side member standard hole	18 (0.71)	M, m	Rear floor side member standard hole	18 (0.71)
F, f	Front suspension crossmember installation hole	13 (0.51)	P, p	Suspension member bracket installation nut rear = outer	10 (0.39) screw
I, i	Front side member standard hole	18 (0.71)	Q, q	Transport hook installation nut front = outer	12 (0.47) screw

WhereEverybodyKnowsYourName

UNDER BODY (Cont'd)

(Three-Dimensional Distance)

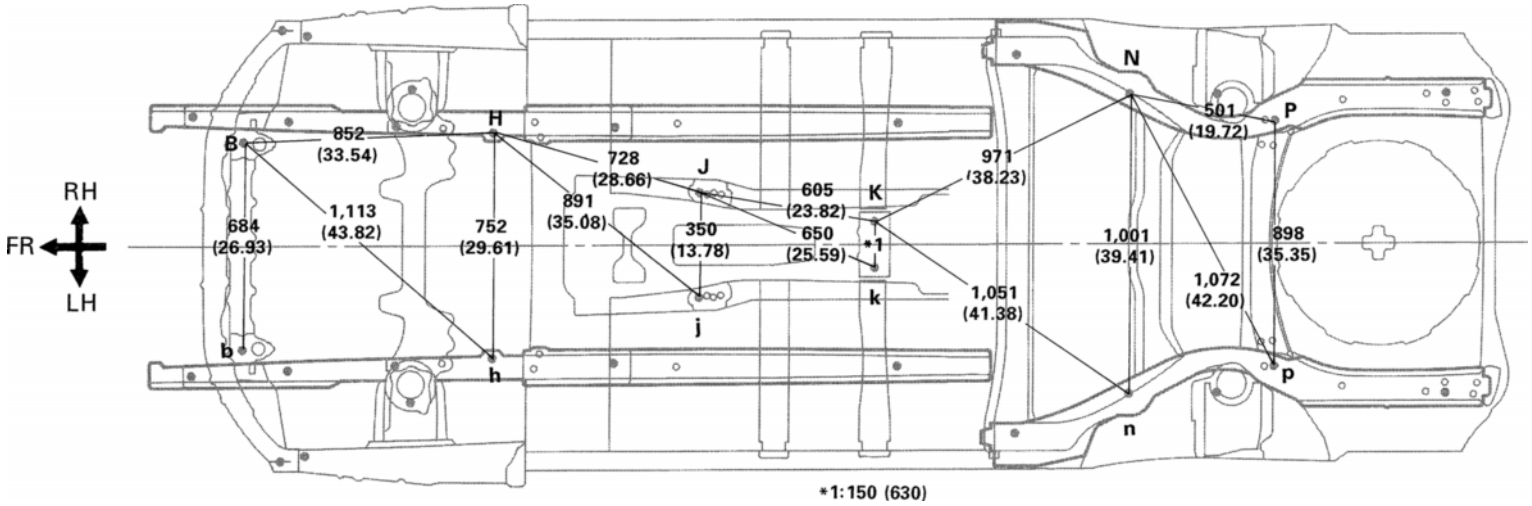

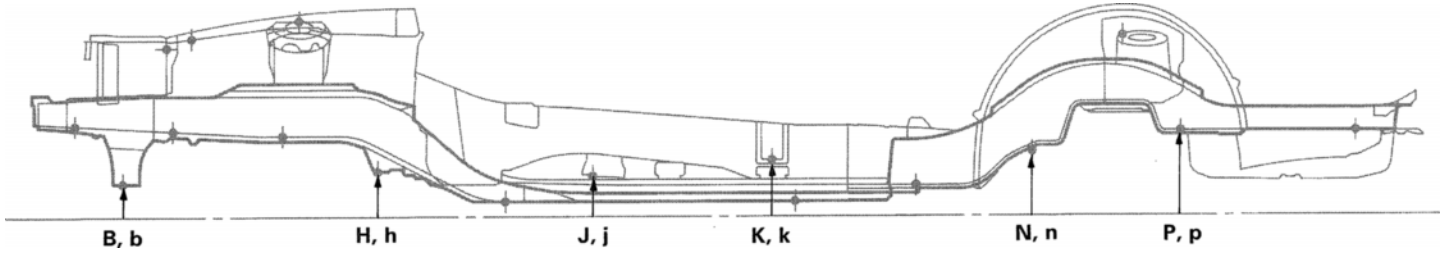

mm (in.)

Symbol	Name	Hole dia.	Symbol	Name	Hole dia.
B, b	Front crossmember working hole	9 (0.35)	K, k	Propeller shaft center support bearing installation nut	10 (0.39) screw
H, h	Front suspension crossmember installation nut	18 (0.71)	N, n	Rear suspension member installation nut	14 (0.55) screw
J, j	Engine rear mounting member installation hole	10 (0.39) screw	P, p	Suspension member bracket installation nut rear = outer	10 (0.39) screw

WhereEverybodyKnowsYourName

UNDER BODY (Cont'd)

(Two-Dimensional Distance)

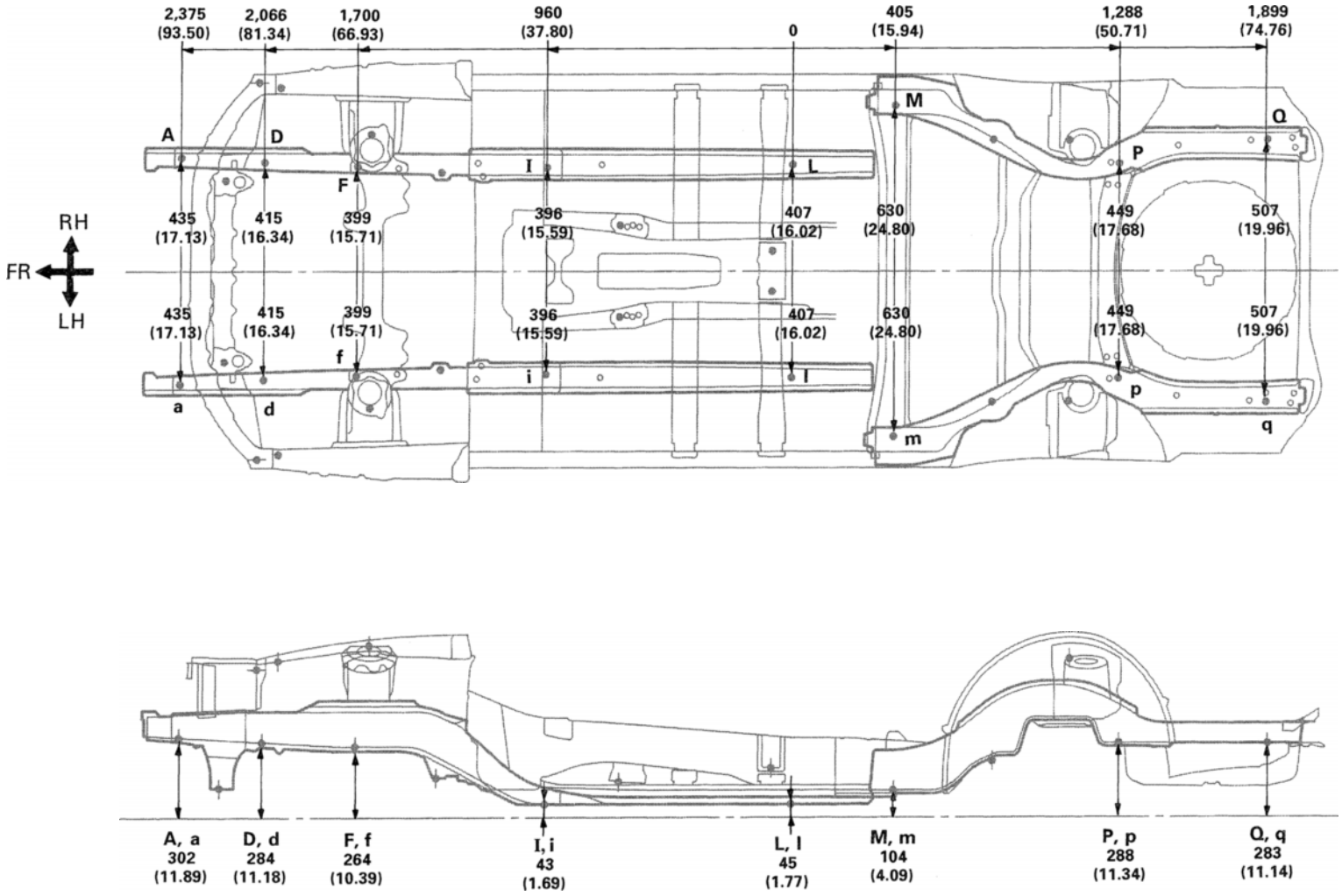

mm (in.)

Symbol	Name	Hole dia.	Symbol	Name	Hole dia.
A, a	Radiator duct installation nut	6 (0.24) screw	L, l	Front floor reinforcement standard hole	18 (0.71)
D, d	Front side member standard hole	18 (0.71)	M, m	Rear floor side member standard hole	18 (0.71)
F, f	Front suspension crossmember installation hole	13 (0.51)	P, p	Suspension member bracket installation nut rear = outer	10 (0.39) screw
I, i	Front side member standard hole	18 (0.71)	Q, q	Transport hook installation nut front = outer	12 (0.47) screw

WhereEverybodyKnowsYourName

UNDER BODY (Cont'd)

(Two-Dimensional Distance)

BO6847

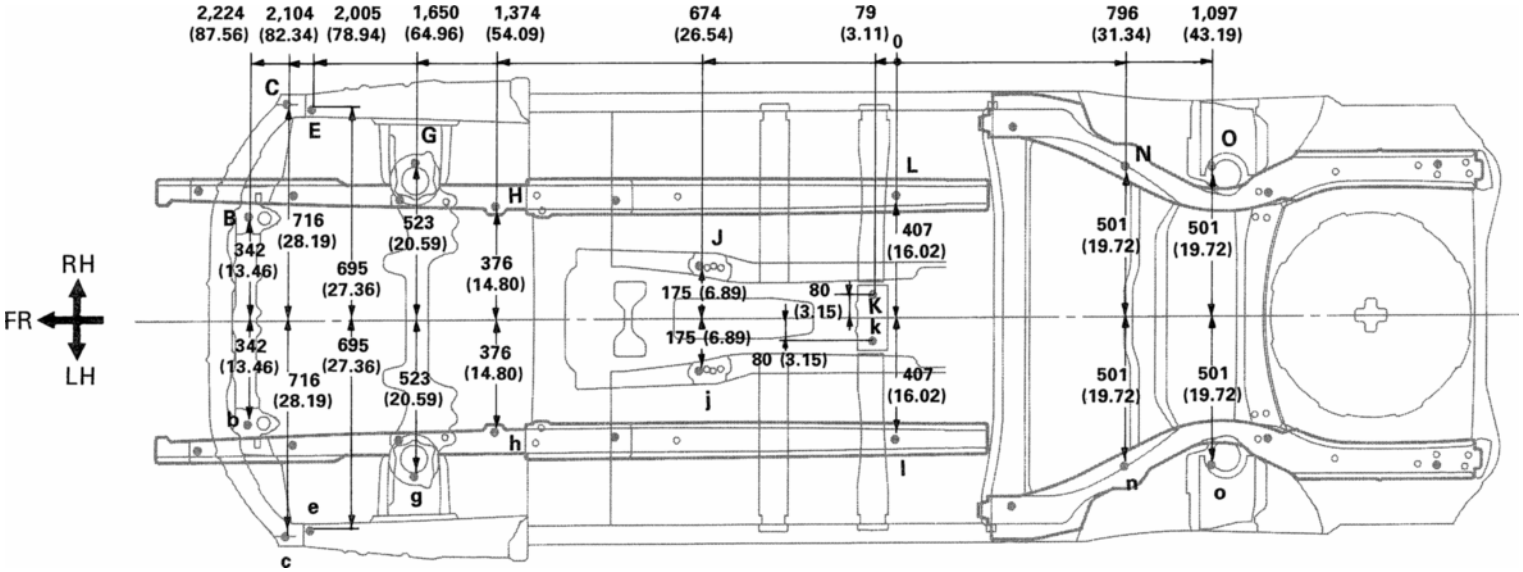

NOTICE: True up the mounting section of the front airbag sensor very carefully and accurately so that the sensor can be mounted at the correct angle.

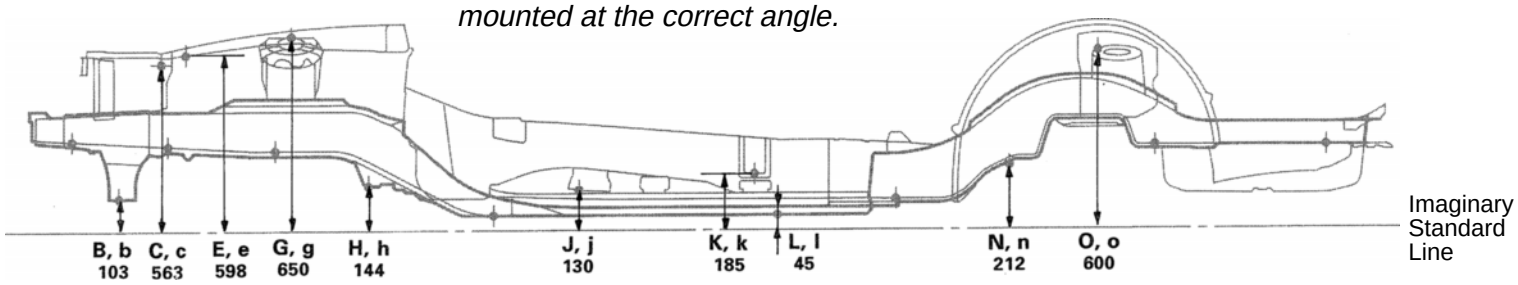

mm (in.)

Symbol	Name	Hole dia.	Symbol	Name	Hote dia.
B, b	Front crossmember working hole	9 (0.35)	J, j	Engine rear mounting member installation nut-front	10 (0.39) nut
C, c	Airbag front sensor installation hole	9 (0.35)	K, k	Propeller shaft center support bearing installation nut	10 (0.33) nut
E, e	Airbag front sensor installation nut	8 (0.31) nut	L, l	Front floor reinforcement standard hole	18 (0.71)
G, g	Front spring support hole = outer	13 ×11 (0.51×0.43)	N, n	Rear suspension member installation nut	14 (0.55) nut
H, h	Front suspension crossmember installation nut	14 (0.55) nut	O, o	Rear spring support hole-front	9 (0.35)

WhereEverybodyKnowsYourName

BODY OPENING AREAS (Side View)

(Three-Dimensional Distance)

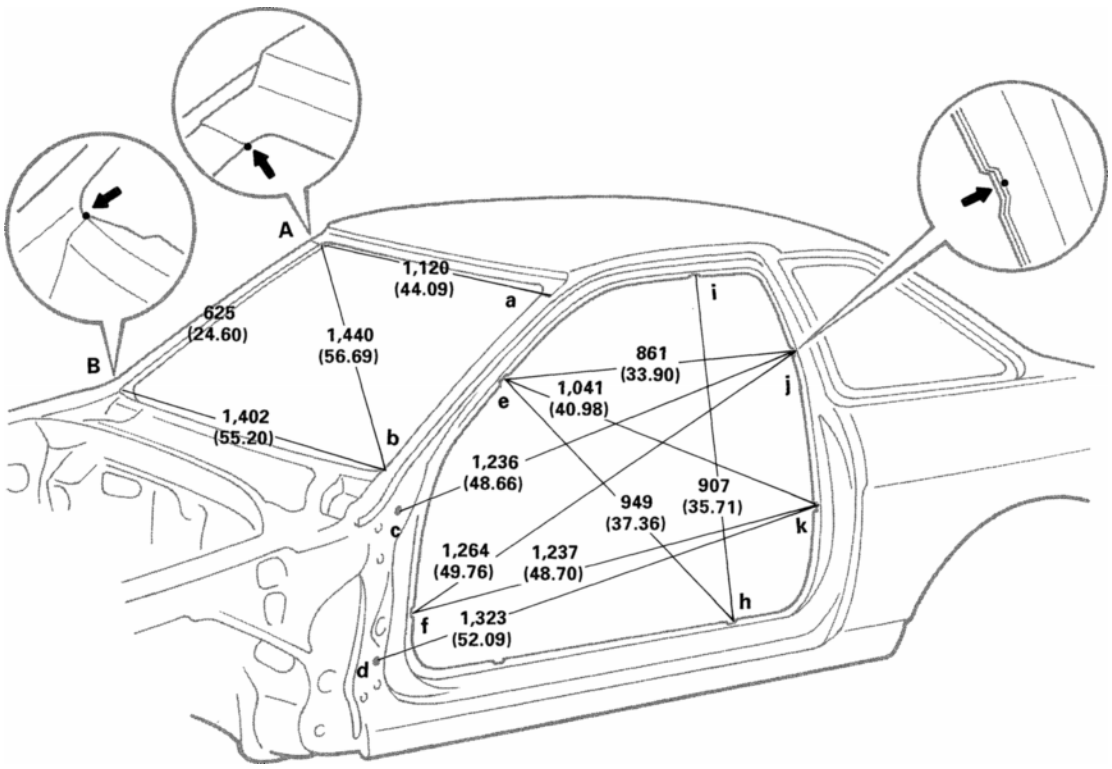

HINT: For symbols, Capital letters indicate right side of vehicle, small letters indicate left side of vehicle (See from rear).

Vehicle Dimensions Left↔Right

E-e	F-f	G-g	H-h	I-i	J-j	K-k
1,304 (51.34)	1,500 (69.06)	1,511 (59.49)	1,511 (59.49)	1,083 (42.64)	1,363 (53.66)	1,503 (59.17)

E-f or e-F	E-g or e-G	E-h or e-H	E-j or e-J	F-j or f-J	F-k or f-K	G-h or g-H	H-i or h-I	H-j or h-J	J-k or j-K
1,536 (60.47)	1,577 (62.09)	1,694 (66.69)	1,587 (62.48)	1,909 (75.16)	1,945 (76.57)	1,665 (65.55)	1,568 (61.73)	1,595 (62.80)	1,490 (58.66)

mm (in.)

Symbol	Name	Hole dia.	Symbol	Name	Hote dia.
A, a	Roof panel/Front body pillar adjoining portion	—	G, g	Rocker panel adjoining portion mark	—
B, b	Cowl top panel/Front body pillar adjoining portion	—	H, h	Rocker panel adjoining portion mark	—
C, c	Front door hinge installation nut	10 (0.39) screw	I, i	Roof side rail adjoining portion mark	—
D, d	Front door hinge installation nut	10 (0.39) screw	J, j	Quarter panel adjoining portion mark	—
E, e	Front body pillar adjoining portion mark	—	K, k	Quarter panel adjoining portion mark	—
F, f	Front body pillar adjoining portion mark	—	—	—	—

WhereEverybodyKnowsYourName

BODY OPENING AREAS (Rear View)

(Three-Dimensional Distance)

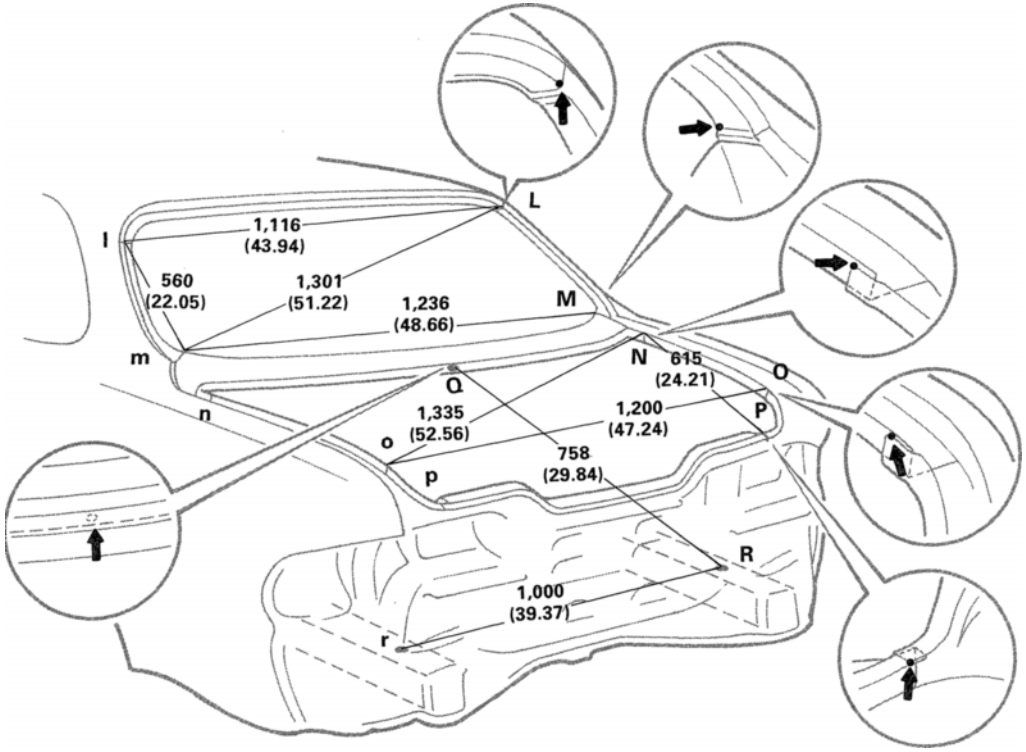

BO6849

mm (in.)

Symbol	Name	Hole dia.	Symbol	Name	Hole dia.
L, l	Roof panel/Quarter panel adjoining portion	—	P, p	Opening trough/Lower back panel adjoining portion	—
M, m	Quarter panel/Upper back panel adjoining portion	—	Q	Upper back panel center mark	—
N, n	Quarter panel/Upper beck panel adjoining portion	—	R, r	Rear floor side member standard hole	18 (0.71)
O, o	Opening trough/Quarter panel adjoining portion	—	—	—	—

WhereEverybodyKnowsYourName

SUSPENSION CROSSMEMBER DIMENSION DRAWINGS

(Three-Dimensional Distance)

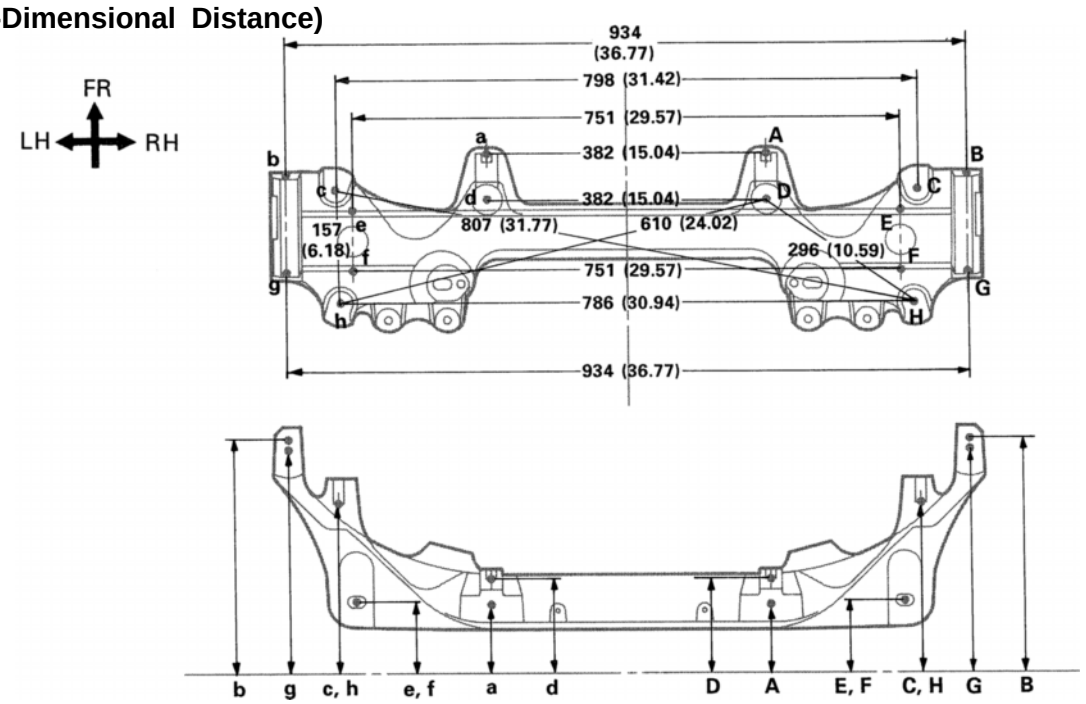

(Three-Dimensional Distance)

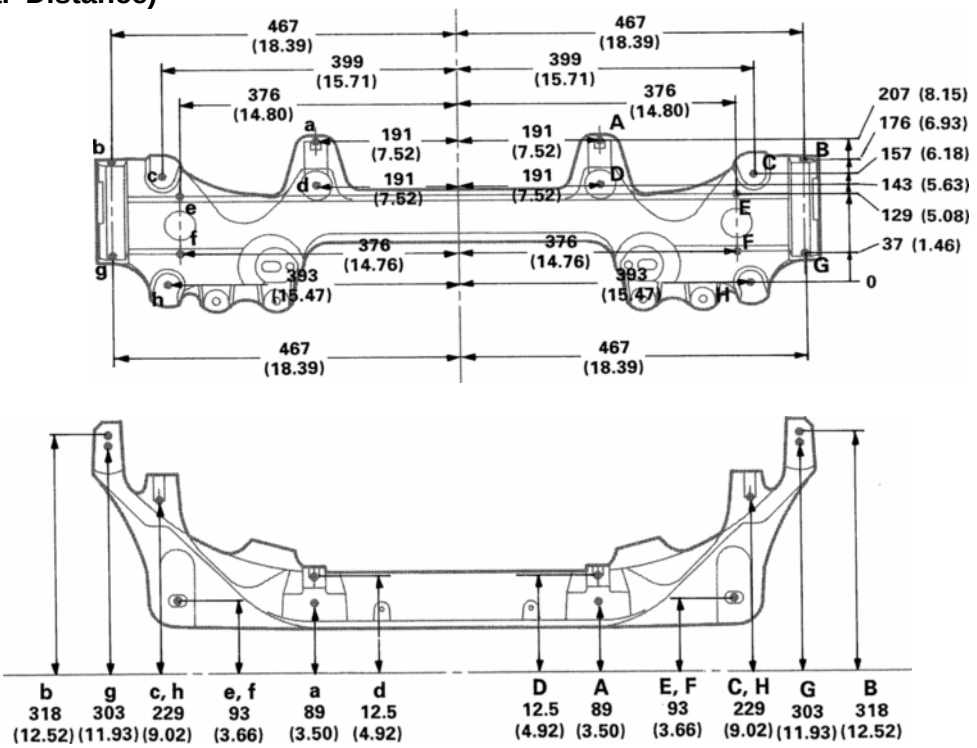

BO6850
BO6850

mm (in.)

Symbol	Name	Hole dia.	Symbol	Name	Hole dia.
A, a	Steering gear box installation hole front	12 (0.47)	E, e	Lower arm installation hole-front	25×16 (0.98×0.63)
B, b	Upper arm installation hole front	14 (0.55)	F, f	Lower arm installation hole rear	25×16 (0.98×0.63)
C, c	Suspension crossmember installation hole front - lower	15 (0.59)	G, g	Upper arm installation hole rear	14 (0.55)
D, d	Steering gear box installation hole-lower	12 (0.47)	H, h	Suspension crossmember installation hole rear-lower	RH 15×33 (0.59×0.51) LH 13 (0.51)

WhereEverybodyKnowsYourName

Suspension Crossmember (Cont'd)

(Three-Dimensional Distance)

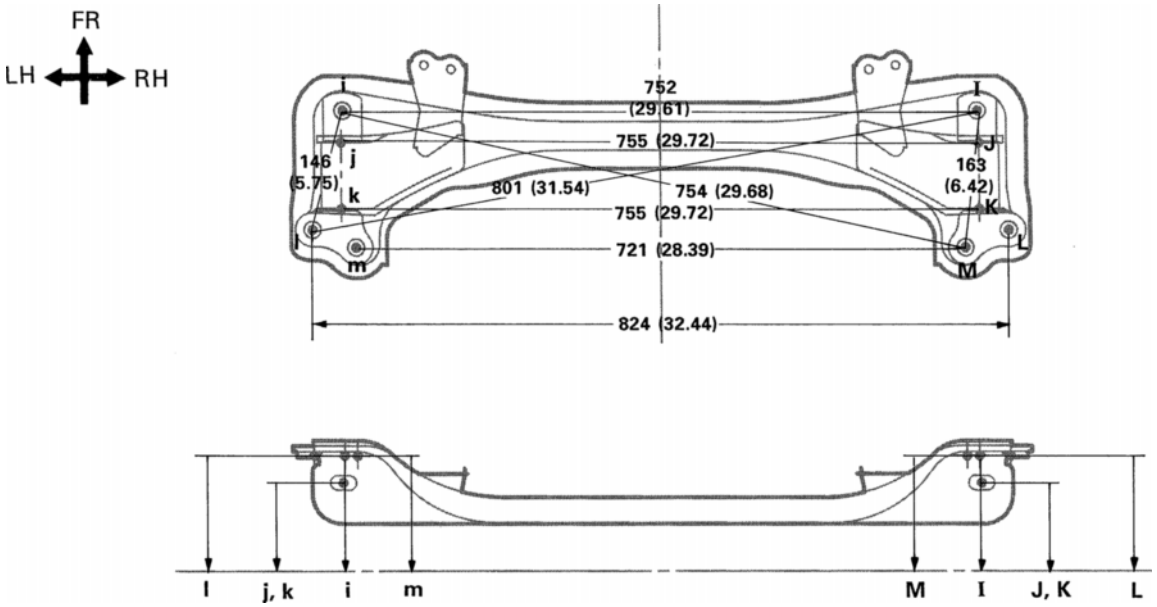

(Two-Dimensional Distance)

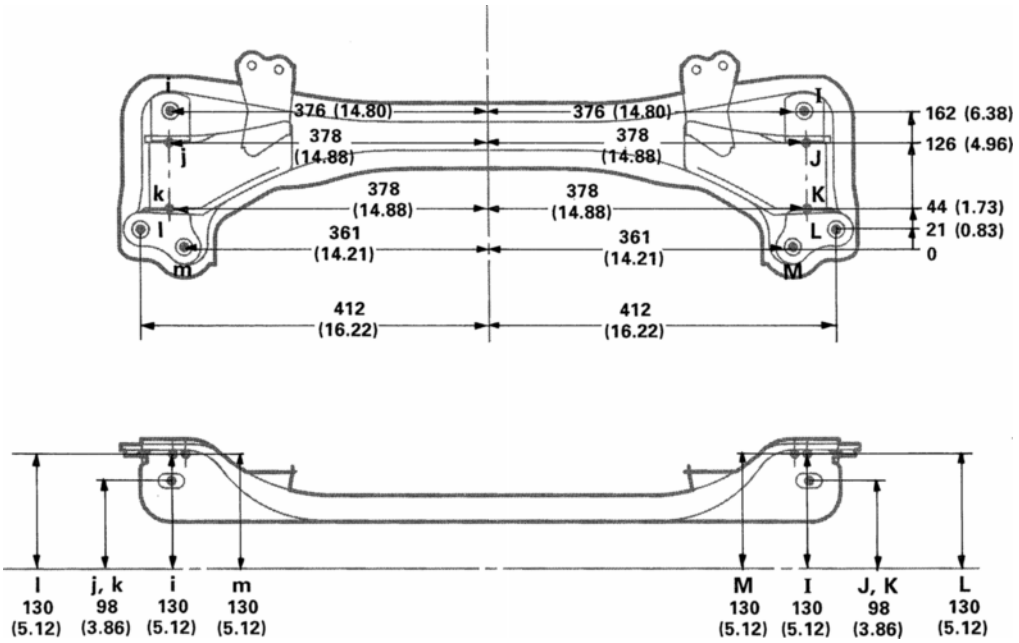

BO6851
BO6851

mm (in.)

Symbol	Name	Hole dia.	Symbol	Name	Hole die.
I, i	Suspension crossmember installation hole front-lower	18 (0.71)	L, l	Suspension crossmember installation hole rear-lower	18 (0.71)
J, j	Lower arm installation hole-front	30×16 (1.18×0.63)	M, m	Suspension crossmember installation hole rear-lower	18 (0.71)
K, k	Lower arm installation hole rear	30×16 (1.18×0.63)	—	—	—

WhereEverybodyKnowsYourName

Suspension Crossmember (Cont'd)

(Three-Dimensional Distance)

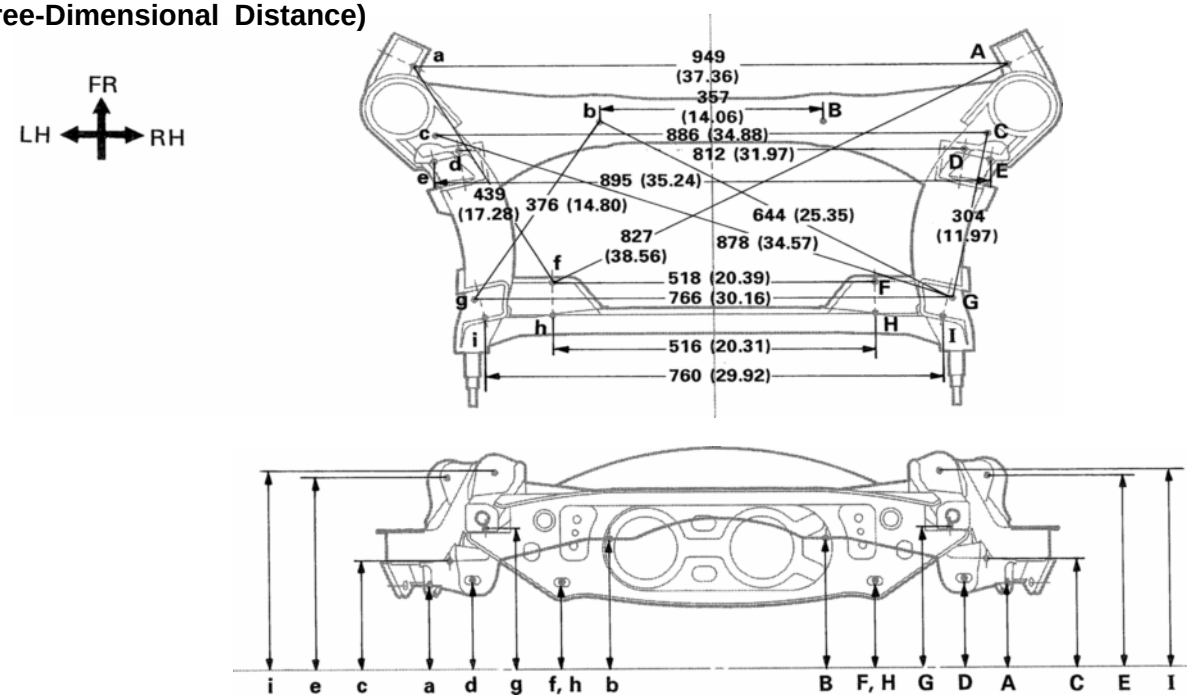

(Two-Dimensional Distance)

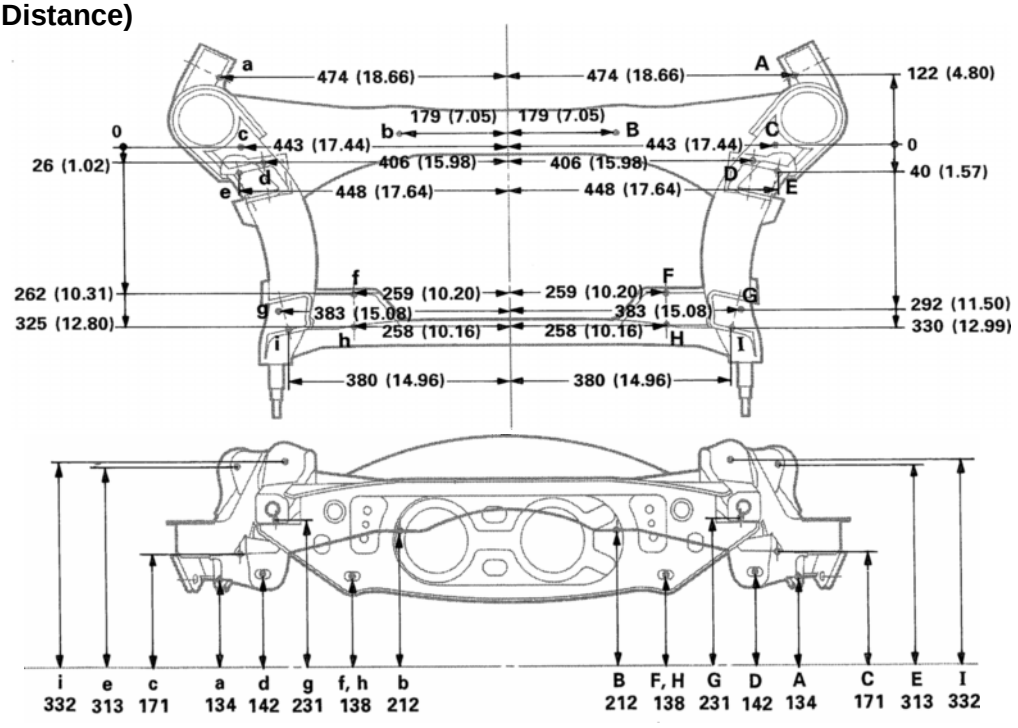

BO6852
BO6852

mm (in.)

Symbol	Name	Hole dia.	Symbol	Name	Hole dia.
A, a	Strut bar installation hole inner	14 (0.55)	F, f	Lower arm installation hole front	26×14 (1.02×0.55)
B, b	Differential carrier installation nut	12 (0.47) nut	G, g	Rear suspension member standard hole	20 (0.78)
C, c	Rear suspension member standard hole	20 (0.78)	H, h	Lower arm installation hole rear	26×14 (1.02×0.55)
D, d	Lower arm installation hole front	26×l4 1.02×0.55	I, i	Upper arm installation hole rear	14 (0.55)
E, e	Upper arm installation hole front	14 (0.55)	—	—	—

WhereEverybodyKnowsYourName

HOW TO USE THIS MANUAL

Each repair method description provided in Section RE of this manual comprises two pages, divided into 2 blocks (REMOVAL AND INSTALLATION) and includes illustrations to facilitate body repair.

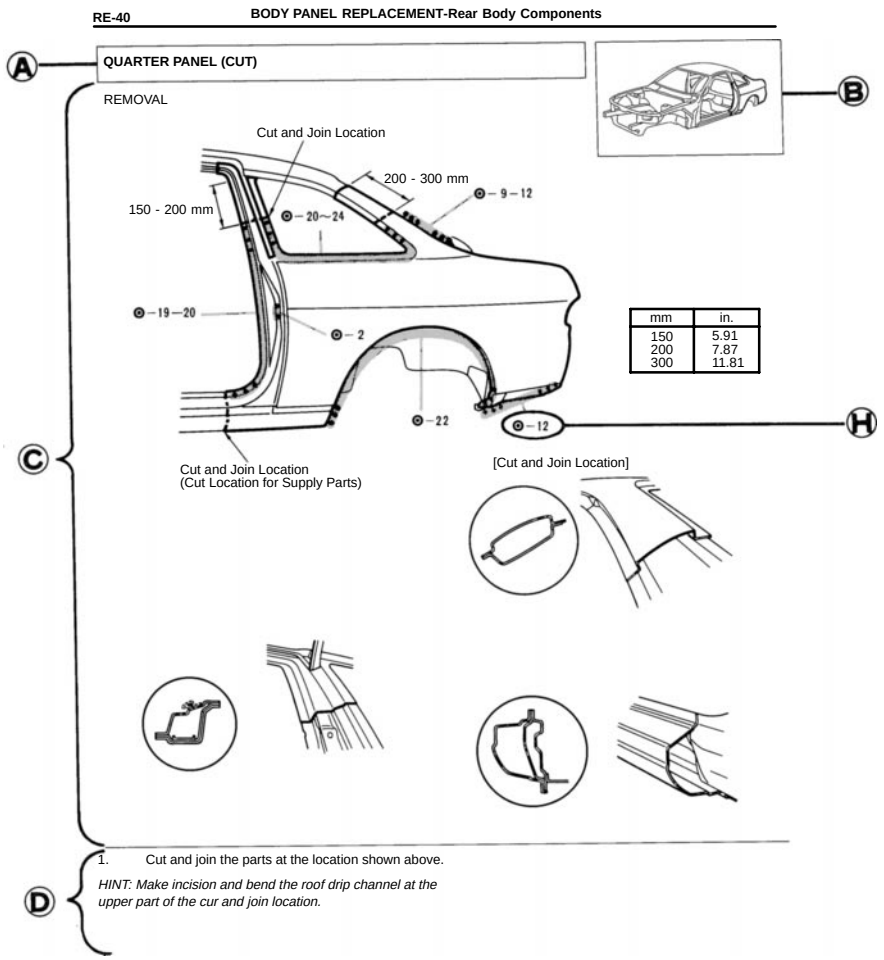

Ⓐ : REPLACEMENT PARTS AND METHOD

QUARTER PANEL **(CUT)**

- Replacement method
  - (ASSY) . . . . . Assembly replacement
  - (CUT) . . . . . Major cutting (less than 1/2 of parts used)
  - (CUT-H) . . . . Half cutting (about 1/2 of parts used)
  - (CUT-P) . . . . Partial cutting (most of parts used)
- Replacement parts

Ⓑ : PARTS LOCATION

Ⓒ : REMOVAL DIAGRAM
Describes in detail removal of the damaged parts involving repair by cutting.

Ⓓ : REMOVAL GUIDE
Provides additional information to more efficiently help you perform the removal.

WhereEverybodyKnowsYourName

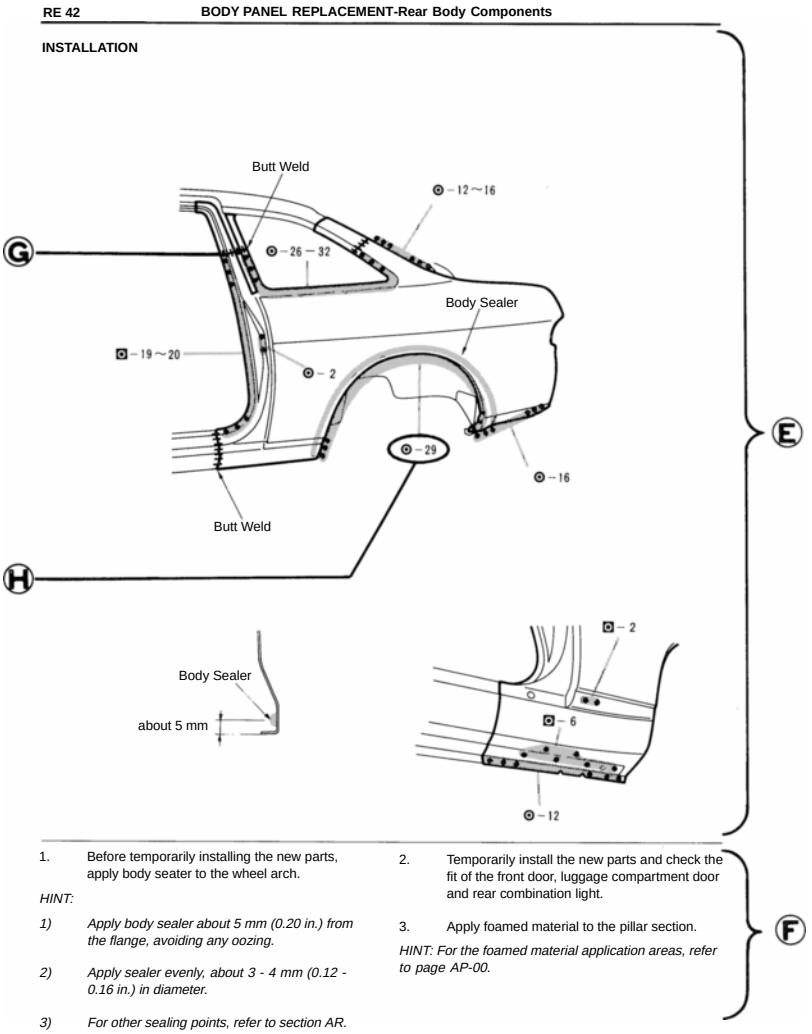

Ⓔ : INSTALLATION DIAGRAM
Describes in detail installation of the new parts involving repair by welding and/or cutting, but excluding painting.

Ⓕ : INSTALLATION GUIDE
Provides additional information to more efficiently help you perform the installation.

Ⓖ : SYMBOLS
See page IN-4 .

Ⓗ : ILLUSTRATION OF WELD POINTS
Weld method and panel position symbols.
See page IN-5 .

WhereEverybodyKnowsYourName

SYMBOLS

The following symbols are used in the welding Diagrams in Section RE of this manual to indicate cutting areas and the types of weld required.

SYMBOLS	MEANING	ILLUSTRATION
	SAW CUT OR ROUGH CUT	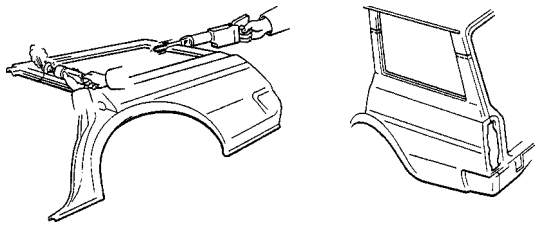
	REMOVE BRAZE	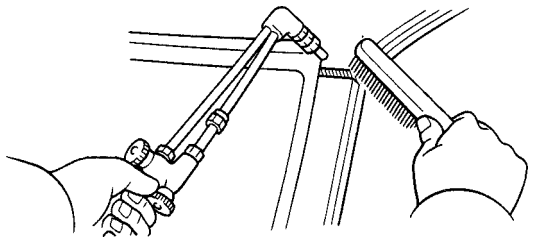
O M I O M I	WELD POINTS SPOT WELD OR MIG PLUG WELD (See page IN-5)	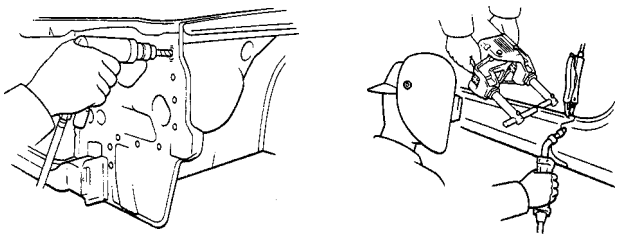
	CONTINUOUS MIG WELD (BUTT WELD OR TACK WELD)	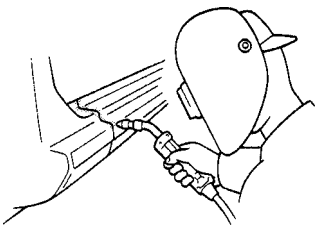
	BRAZE	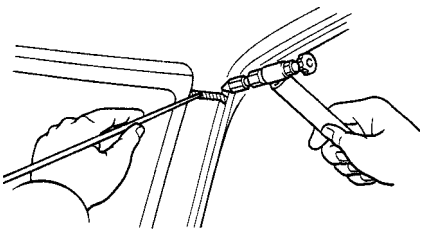
	BODY SEALER	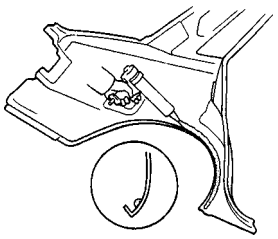

WhereEverybodyKnowsYourName

Illustration of Weld Point Symbols

EXAMPLE:

REMOVAL

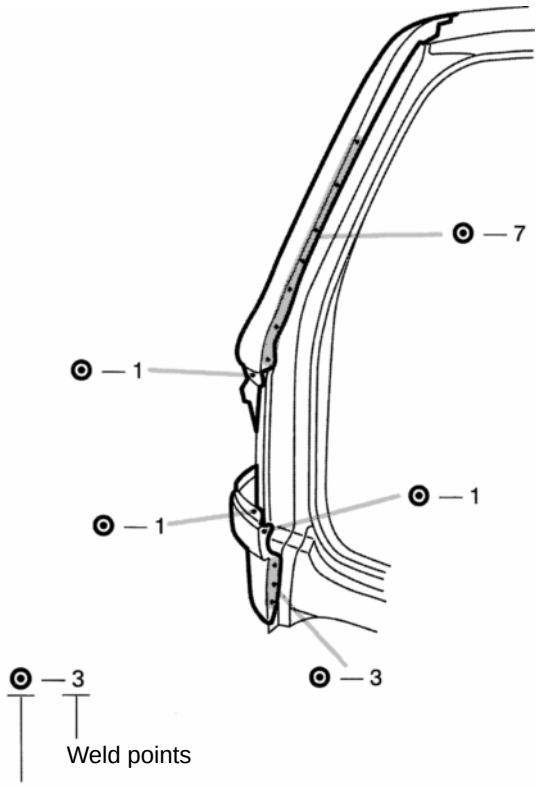

Remove weld point and panel position

INSTALLATION

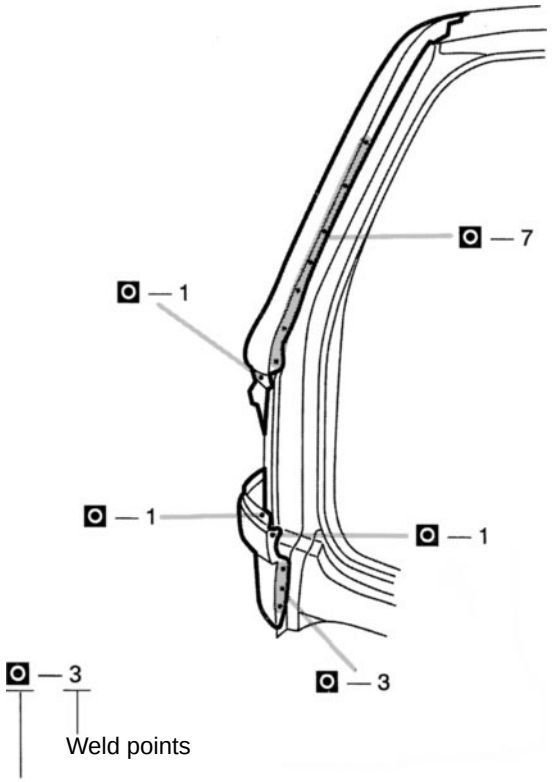

Weld method and panel position

SYMBOL	MEANING	ILLUSTRATION
⊙ M I	Remove Weld Points	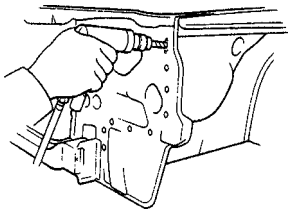
⊙	(Outside)	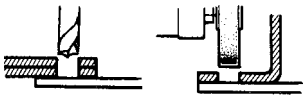
M	(Middle)	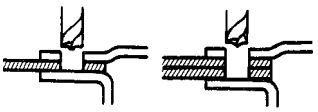
I	(Inside)	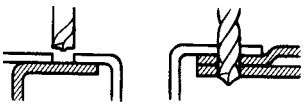

HINT: Panel position syrnbols are as seen from the working posture.

SYMBOL	MEANING	ILLUSTRATION
⊙ M I	Spot Weld	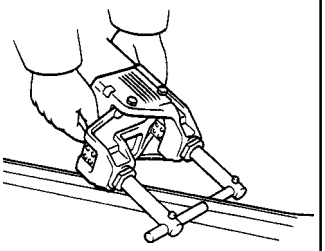
⊙ M I	Mig Plug Weld	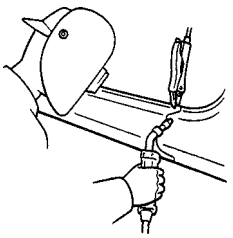
+	Spot MIG Weld	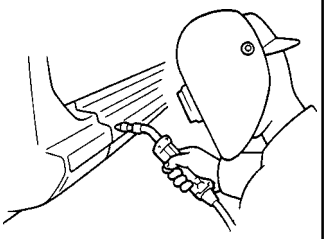

WhereEverybodyKnowsYourName

HANDLING PRECAUTIONS ON RELATED COMPONENTS

1. SRS AIRBAG

Locations of Airbag Components

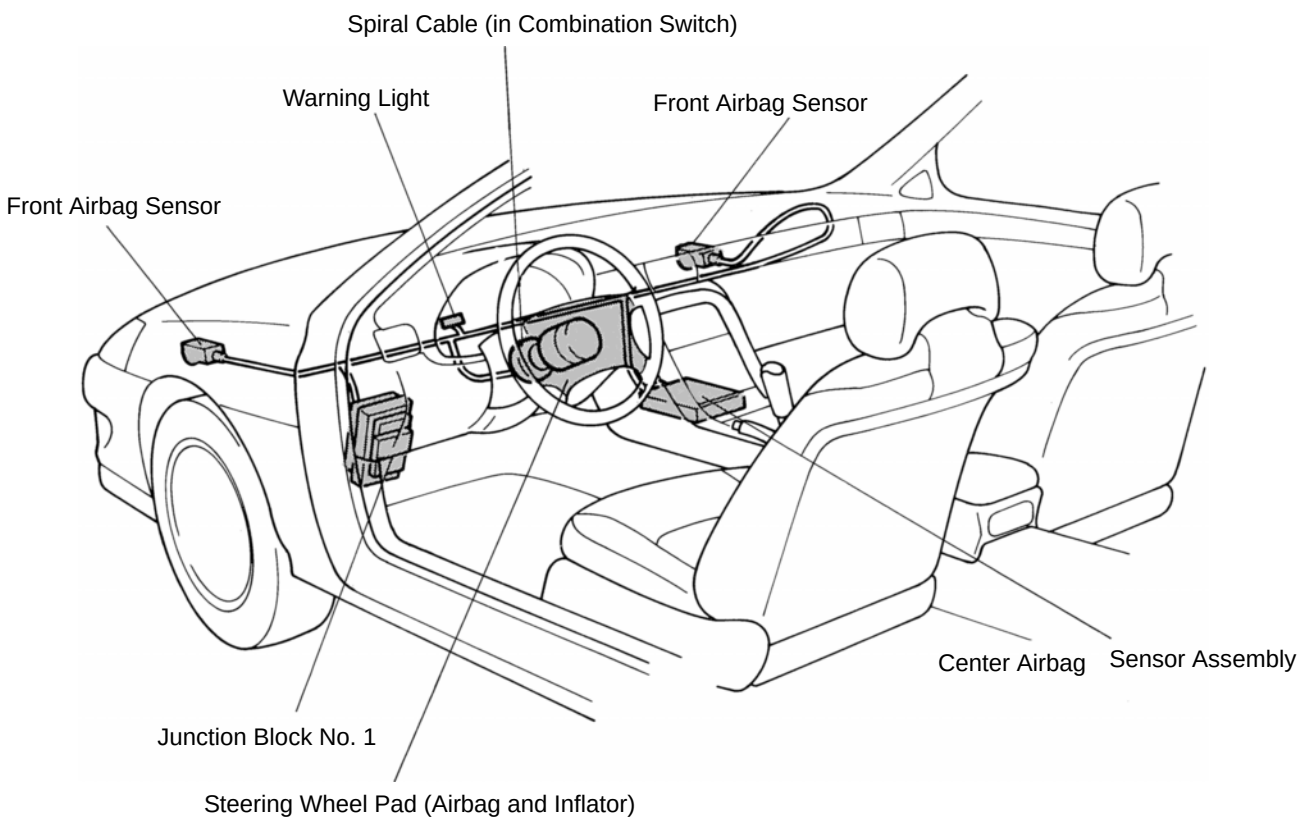

This vehicle has an SRS AIRBAG (referred to as the airbag in the remainder of this manual).
When handling airbag components (removal, installation or inspection, etc.), always follow the directions given in the repair manual for the relevant model year to prevent the occurrence of accidents and airbag malfunction.
Also take the following precautions when repairing the body:

▼Work must be started after 20 seconds or longer from the time the ignition switch is set to the LOCK position and the negative (-) terminal cable is disconnected from the battery.
(The airbag system is equipped with a back-up power source so that if work is started within 20 seconds of disconnecting the negative (-) terminal cable of the battery, the airbag may be deployed.)
When the negative (-) terminal cable is disconnected from the battery, memory of the clock and audio systems will be cancelled. So before starting work, make a record of the contents memorized by each memory system. Then when work is finished, reset the clock and audio systems as before.
When the vehicle has tilt and telescopic steering, power seat, and outside rear view mirror, which are all equipped with memory function, it is not possible to make a record of the memory contents.
So when the operation is finished, it will be necessary to explain this fact to the customer, and request the customer to adjust the features and reset the memory.
To avoid erasing the memory of each memory system, never use back-up power supply from outside the vehicle.

▼When using electric welding, first disconnect the airbag connector (yellow color and 2 pins) under the steering column near the combination switch connector before starting work.

WhereEverybodyKnowsYourName

▼Before repairing the body, remove the airbag sensors if, during repair, shocks are likely to, be applied to the sensors due to vibrations of the body or direct tapping with tools or other parts.

▼Do not expose the airbag sensors or the steering wheel pad directly to hot air or flames.

NOTICE:

1) *The maximum ambient temperature tolerance is 120˚C (248˚F) for the front airbag sensor, 105˚C (221˚F) for the center airbag sensor assembly and 93˚C (200˚F) for the steering wheel pad. If it is possible that the ambient temperature may reach or exceed the temperature limit, remove the sensors and the steering wheel pad from the vehicle or protect them with a hot insulation material before starting work.*
2) *Prior to welding, remove adjacent airbag sensors or the steering wheel pad from the vehicle or protect them with fire-proof covers.*

▼If the front fender or periphery of the vehicle is damaged, visually inspect for damage to the front airbag sensor using the inspection procedures described in section AB of the repair manual for the relevant model year.
Also check that the dimensions of the body where the front airbag sensor is installed match those in the body dimension drawings.
(The airbag may malfunction; or may not work, if the mounting angle or dimensions of the sensor mount are not correct.)

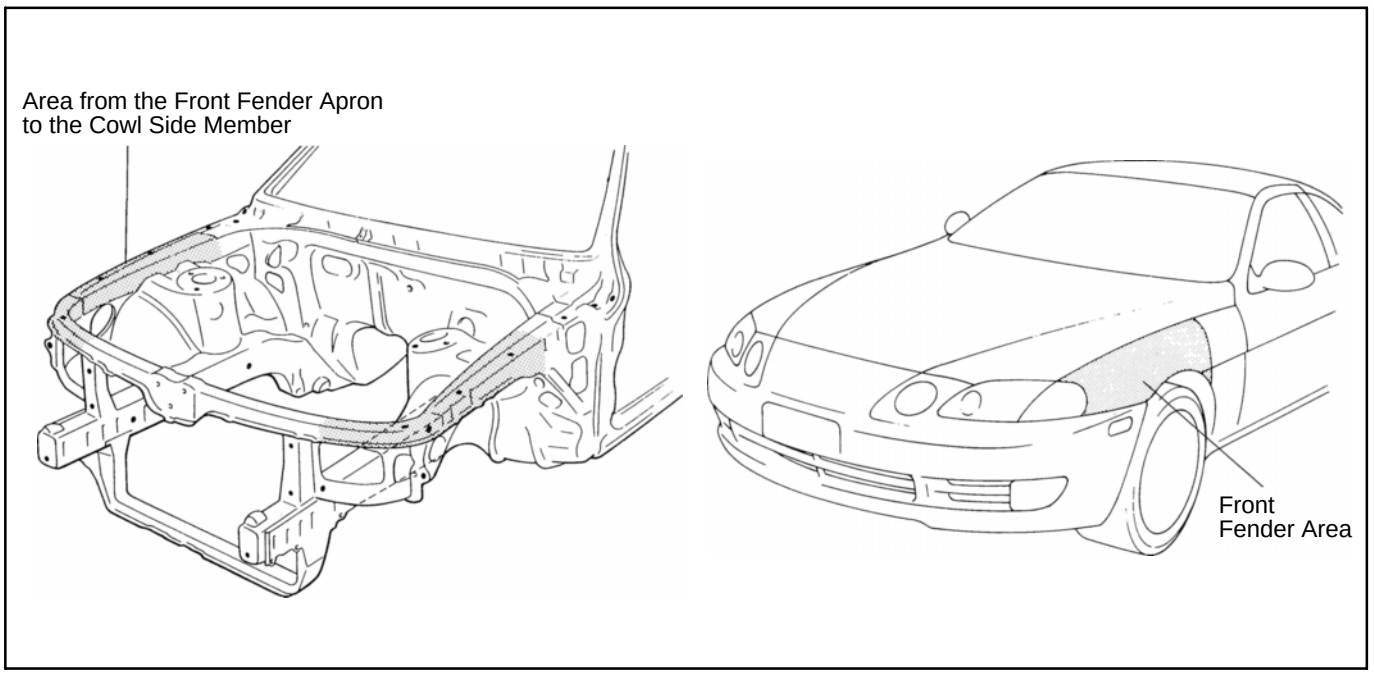

▼If the vehicle is damaged, visually inspect for damage to the steering wheel pad using the inspection procedures described in section AB of the repair manual for the relevant model year.

▼When removing the steering wheel pad or handling a new steering wheel pad, keep the pad upper surface facing upward. Also, lock the lock lever of the twin lock type connector at the rear of the pad and take care not to damage the connector.
(Storing the pad with its metallic surface up may lead to a serious accident if the airbag inflates for some reason.)

▼Store the steering wheel pad where the ambient temperature remains below 93˚C (200˚F), without high humidity and away from electrical noise.

▼Be careful not to let painting materials contact the airbag sensors.

▼Information labels are attached to the periphery of the airbag components. Follow the NOTICES.

WhereEverybodyKnowsYourName

2. BRAKE SYSTEM

The brake system is one of the most important safety components. Always follow the directions and notes given in section BR of the repair manual for the relevant model year when handling brake system parts.
NOTICE: When repairing the brake master cylinder or TRAC system, bleed the air out of the TRAC system.

3. DRIVE TRAIN AND CHASSIS

The drive train and chassis are components that can have great effects on the running performance and vibration resistance of the vehicle. After installing components in the sections listed in the table below, perform alignments to ensure correct mounting angles and dimensions. Particularly accurate repair of the body must also be done to ensure correct alignment.
HINT: Correct procedures and special tools are required for alignment. Always follow the directions given in the repair manual for the relevant model year during alignment and section DI of this manual.

Component to be aligned	Section of repair manual for relevant model year
Front Wheels	Suspension and Axle (SA) section
Rear Wheels	Suspension and Axle (SA) section
Propeller Shaft	Propeller Shaft (PR) section

4. ECU (ELECTRONIC CONTROL UNIT)

Locations of ECUs

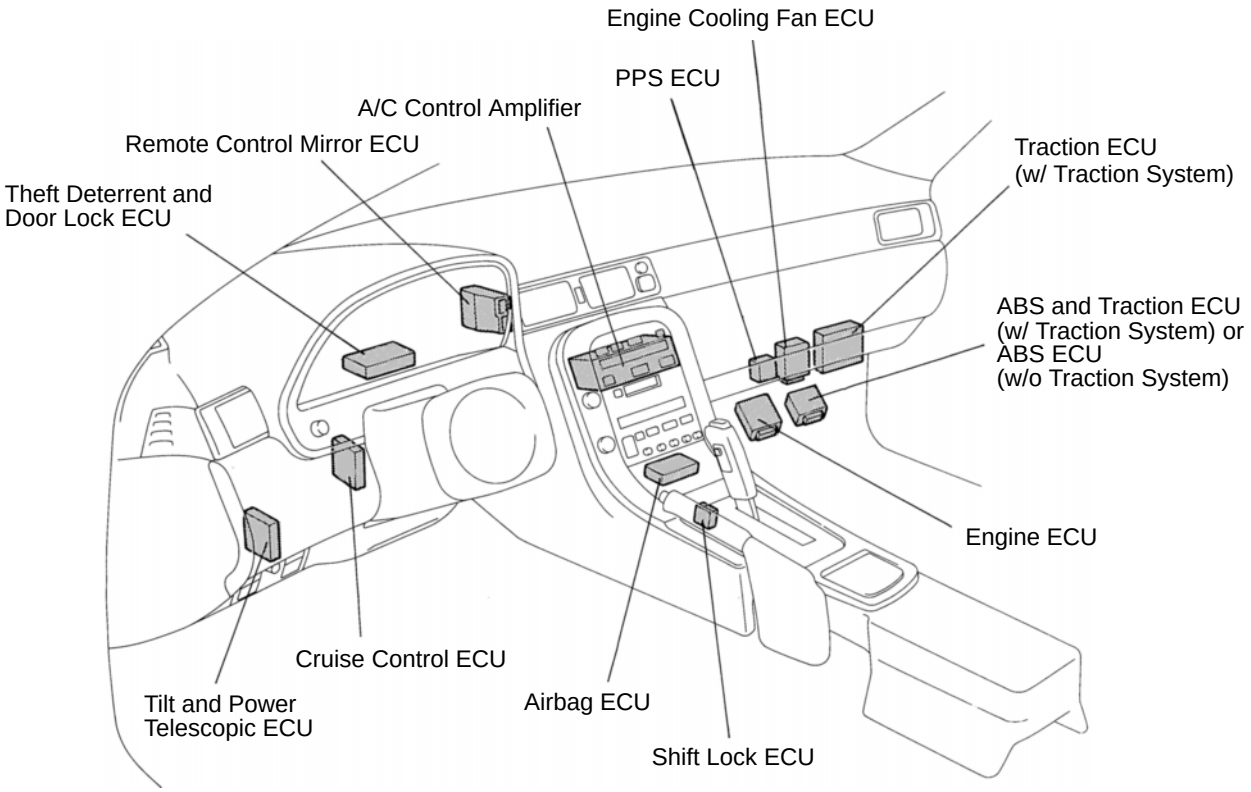

WhereEverybodyKnowsYourName

Locations of ECUs (Cont'd)

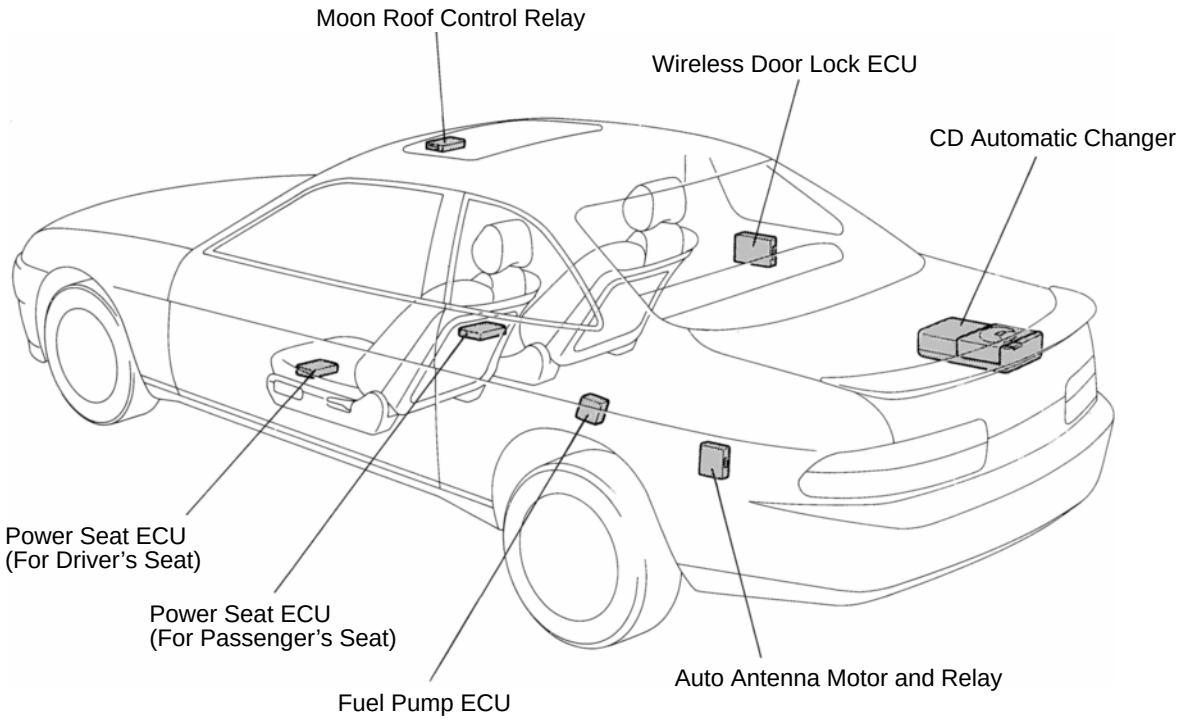

Many ECUs are mounted in this vehicle.
Take the following precautions during body repair to prevent damage to the ECUs.

▼Before starting electric welding operations, disconnect the negative (-) terminal cable from the battery. When the negative (-) terminal cable is disconnected from the battery, memory of the clock and audio systems will be cancelled. So before starting work, make a record of the contents memorized by each memory system. Then when work is finished, reset the clock and audio systems as before.
When the vehicle has tilt and telescopic steering, power seat and outside rear view mirror, which are all equipped with memory function, it is not possible to make a record of the memory contents.
So when the operation is finished, it will be necessary to explain this fact to the customer, and request the customer to adjust the features and reset the memory.

▼Do not expose the ECUs to ambient temperatures above 80˚C (176˚F).

NOTICE: If it is possible the ambient temperature may reach 80˚C (176˚F) or, more, remove the ECUs from the vehicle before starting work.

▼Be careful not to drop the ECUs and not to apply physical shocks to them.

5. COMPONENTS ADJACENT TO THE BODY PANELS

Various types of component parts are mounted directly on or adjacently to the body panels.
Strictly observe the following precautions to prevent damaging these components and the body panels during handling.

▼Before repairing the body panels, remove their adjacent components or apply protective covers over the components.

▼Before prying components off using a screwdriver or a scraper, etc., attach protective tape to the tool tip or blade to prevent damaging the components and the body paint.

▼Before removing components from the outer surface of the body, attach protective tape to the body to ensure no damage to painted areas.

HINT: Apply touch-up paint to any damaged paint surfaces.

▼Before drilling or cutting sections, make sure that there are no wires, hoses, etc., on the reverse side.

WhereEverybodyKnowsYourName

GENERAL REPAIR INSTRUCTIONS

Work Precautions

SAFETY
Never stand in direct line with the chain when using a puller on the body or frame, and be sure to attach a safety cable.

VEHICLE PROTECTION
When welding, protect the painted surfaces, windows, seats and carpet with heat resistant, fire-proof covers.

SAFETY

1. Before performing repair work, check for fuel leaks. If a leak is found, be sure to close the opening totally.
2. If it is necessary to use a frame in the area of the fuel tank, first remove the tank and plug the fuel line.

WRONG

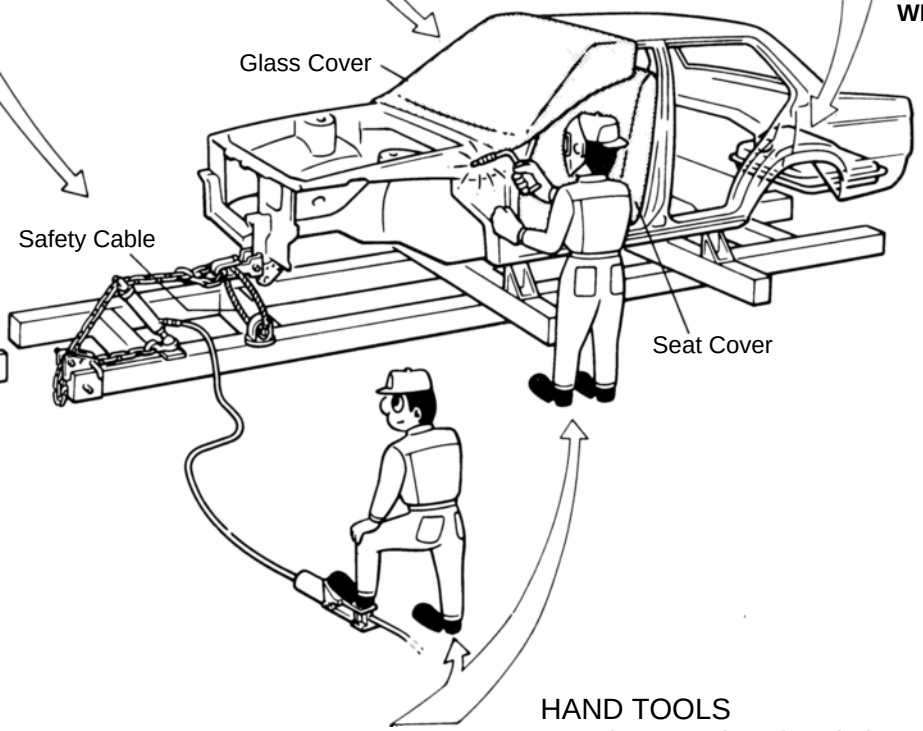

WRONG

SAFETY WORK CLOTHES
In addition to the usual mechanic's wear, cap and safety shoes, the appropriate gloves, head protector, glasses, ear plugs, face protector, dust-prevention mask, etc. should be worn as, the situation demands.

HAND TOOLS
Keeping your hand tools in neat order improve your work efficiency.

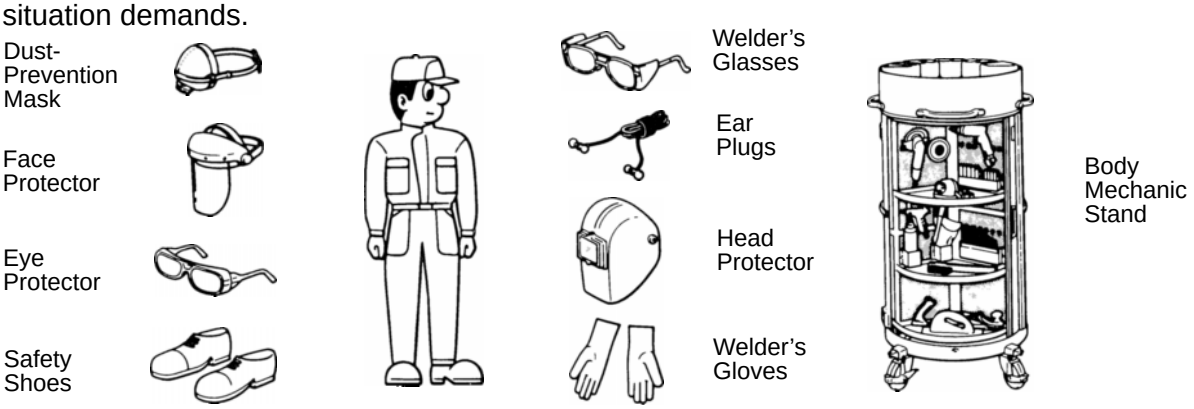

WhereEverybodyKnowsYourName

Proper and Efficient Work Procedures

REMOVAL

PRE-REMOV AL MEASURING
Before removal or cutting operations, take measurements in accordance with the dimension diagram. Always use a puller to straighten a damaged body or frame.

NUMBER OF SPOT WELDS AND PANEL POSITIONS
The number of spot welds and the panel positions to be removed are shown for your reference.
HINT: See "Symbols " on page IN-4 ,5.

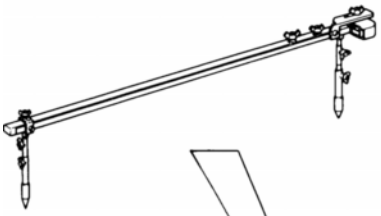

REMOVAL of ADJACENT COMPONENTS
When removing adjacent components, apply protective tape to the surrounding body and your tools to prevent damage.
HINT: See "Handling Precautions on Related Components " on page IN-9 .

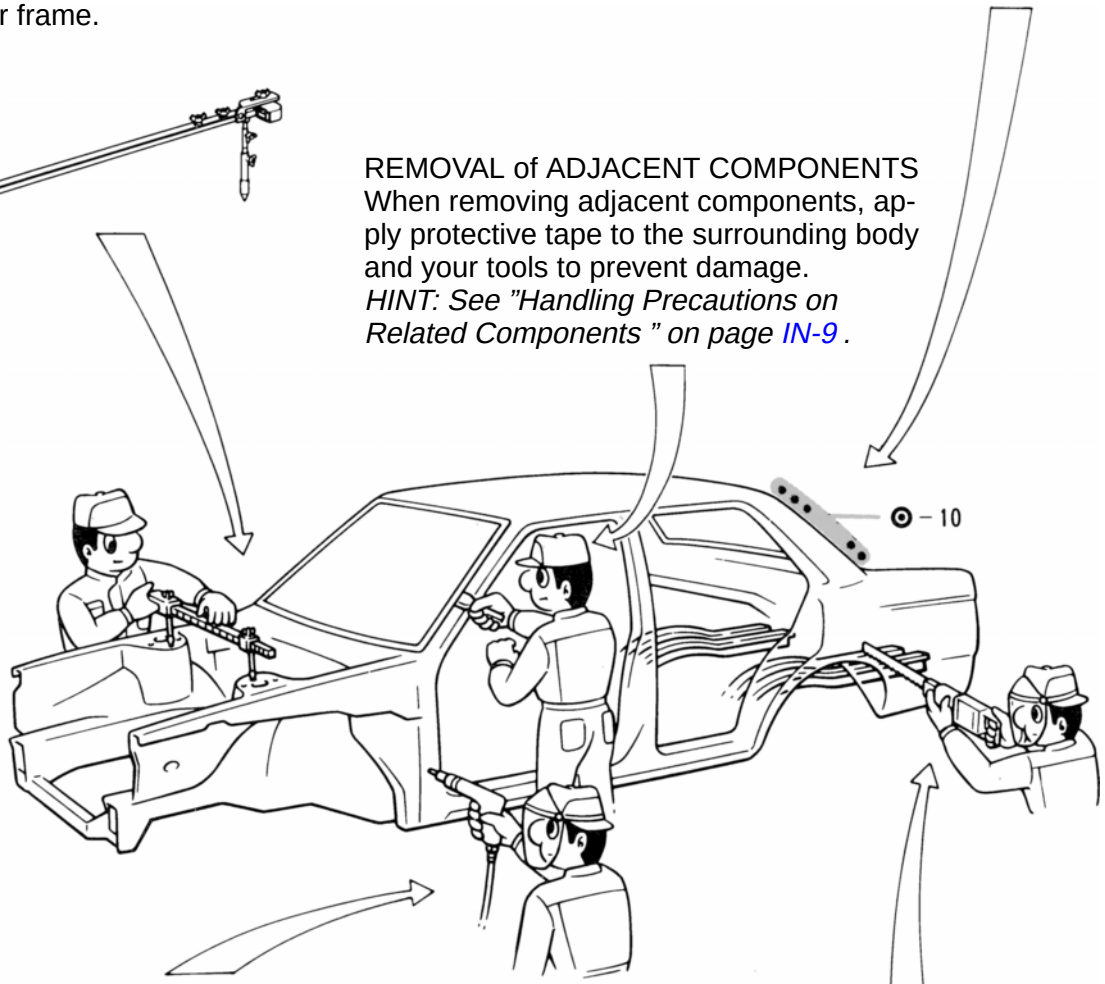

PRECAUTIONS FOR DRILLING OR CUTTING
Check behind any area to be drilled or cut to insure that there are no hoses, wires, etc., that may be damaged.
HINT: See "Handling Precautions on Related Components " on page IN-9 .

CUTTING AREA
Always cut in a straight line and avoid reinforced areas.

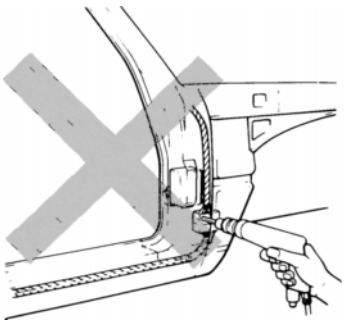

WRONG

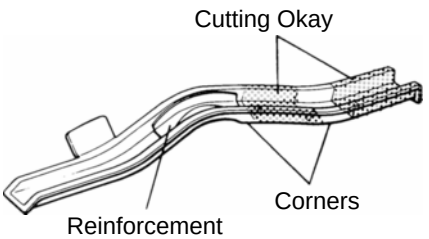

WhereEverybodyKnowsYourName

PREPARATION FOR INSTALLATION

SPOT WELD POINTS

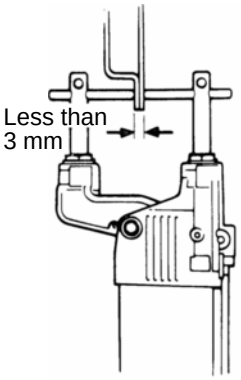

When welding panels with a combined thickness of over 3 mm (0.12 in.), use a MIG (Metal Inert Gas) welder for plug welding.
HINT: Spot welding will not provide sufficient durability for panels over 3 mm (0.12 in.) thick.

APPLICATION OF WELD-THROUGH PRIMER (SPOT SEALER)

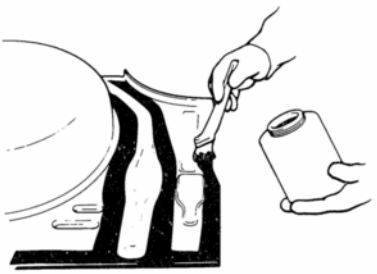

Remove the paint from the portion of the new parts and body to be welded, and apply weld-through primer.
HINT: See "ANTI-RUST TREATMENT " on page AR-9 .

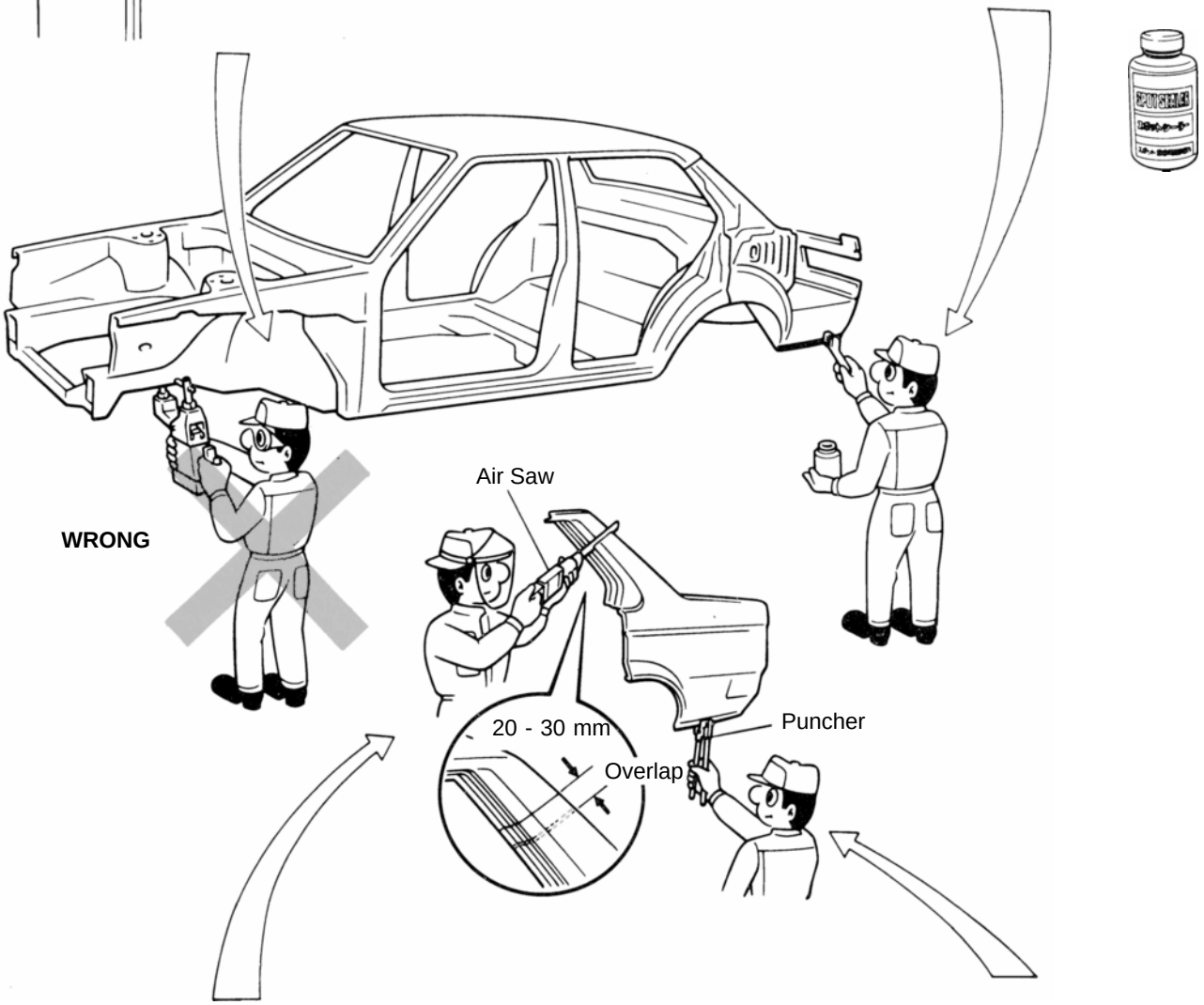

ROUGH CUTTING OF JOINT
For joint areas, rough cut the new parts, leaving 20 - 30 mm (0.79 - 1.18 in.) overlap.

MAKING HOLES FOR PLUG WELDING
For areas where a spot welder cannot be used, use a puncher or drill to make holes for plug welding.

REFERENCE: mm (in.)

Thickness of welded portion	Size of plug hole
1.0 (0.04) under	5 (0.20) ϕ over
1.0 (0.04) - 1.5 (0.06)	6.5 (0.26) ϕ over
1.5 (0.06) over	8 (0.31) ϕ over

WhereEverybodyKnowsYourName

INSTALLATION

PRE-WELDING MEASUREMENTS
Always take measurements before installing underbody or engine components to insure correct assembly. After installation, confirm proper fit.

WELDING PRECAUTIONS

1. The number of welding spots should be as follows.
   Spot weld: 1.3 x No. of manufacturer's spots.
   Plug weld: More than No. of manufacturer's plugs.

WRONG

2. Plug welding should be done with a MIG (Metal Inert Gas) welder. Do not gas weld or braze panels at areas other than specified.

POST-WELDING REFINISHING

1. Always check the welded spots to insure they are secure.
2. When smoothing out the weld spots with a disc grinder, be careful not to grind off too much as this would weaken the weld.

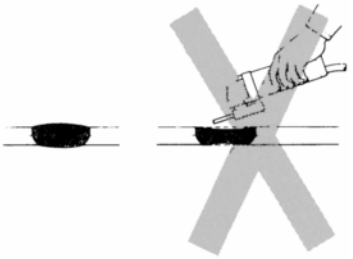

OKAY WRONG

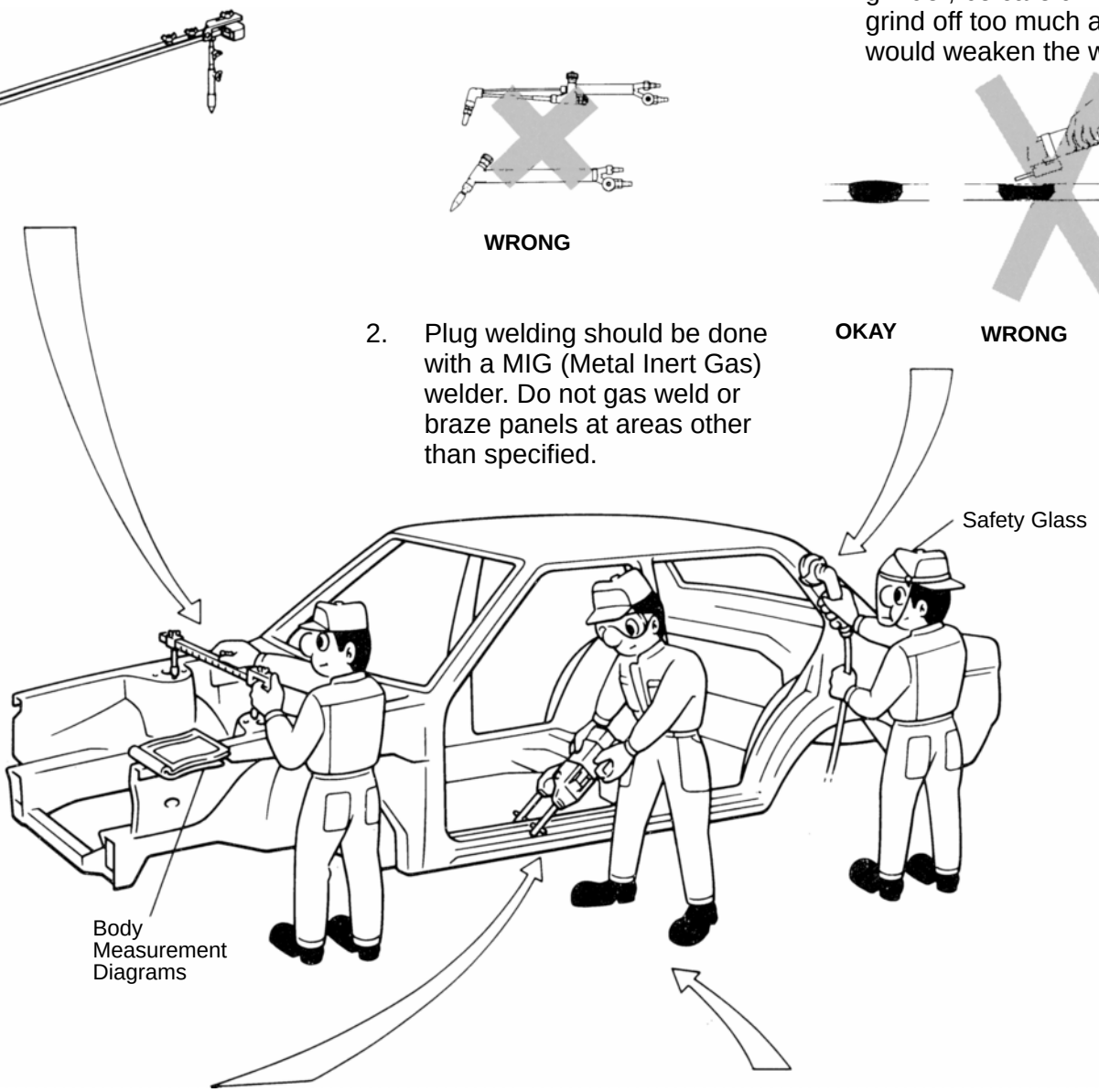

SPOT WELD LOCATIONS
Try to avoid welding over previous spots.

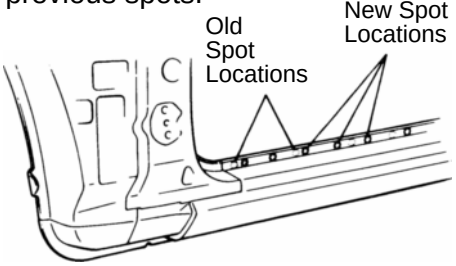

SPOT WELDING PRECAUTIONS

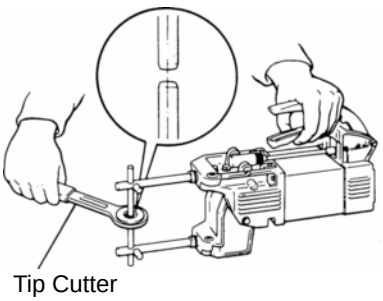

1. The shape of the welding tip point has an effect on the strength of the weld.
2. Always insure that the seams and welding tip are free of paint.

WhereEverybodyKnowsYourName

ANTI-RUST TREATMENT

When replacing body panels, always apply body sealer, anti-rust agent or undercoat according to the requirements of your country.
HINT: For further details, see the description given in Section AR of this manual.

BODY SEALER
Apply body sealer to the required areas.

ANTI-RUST AGENT (WAX)
Apply anti-rust agent to following sections.

- ▼Inside of the hems of the doors and hood.
- ▼Around the hinges of the doors and hood.
- ▼Inside of the welded parts with boxed cross-section.

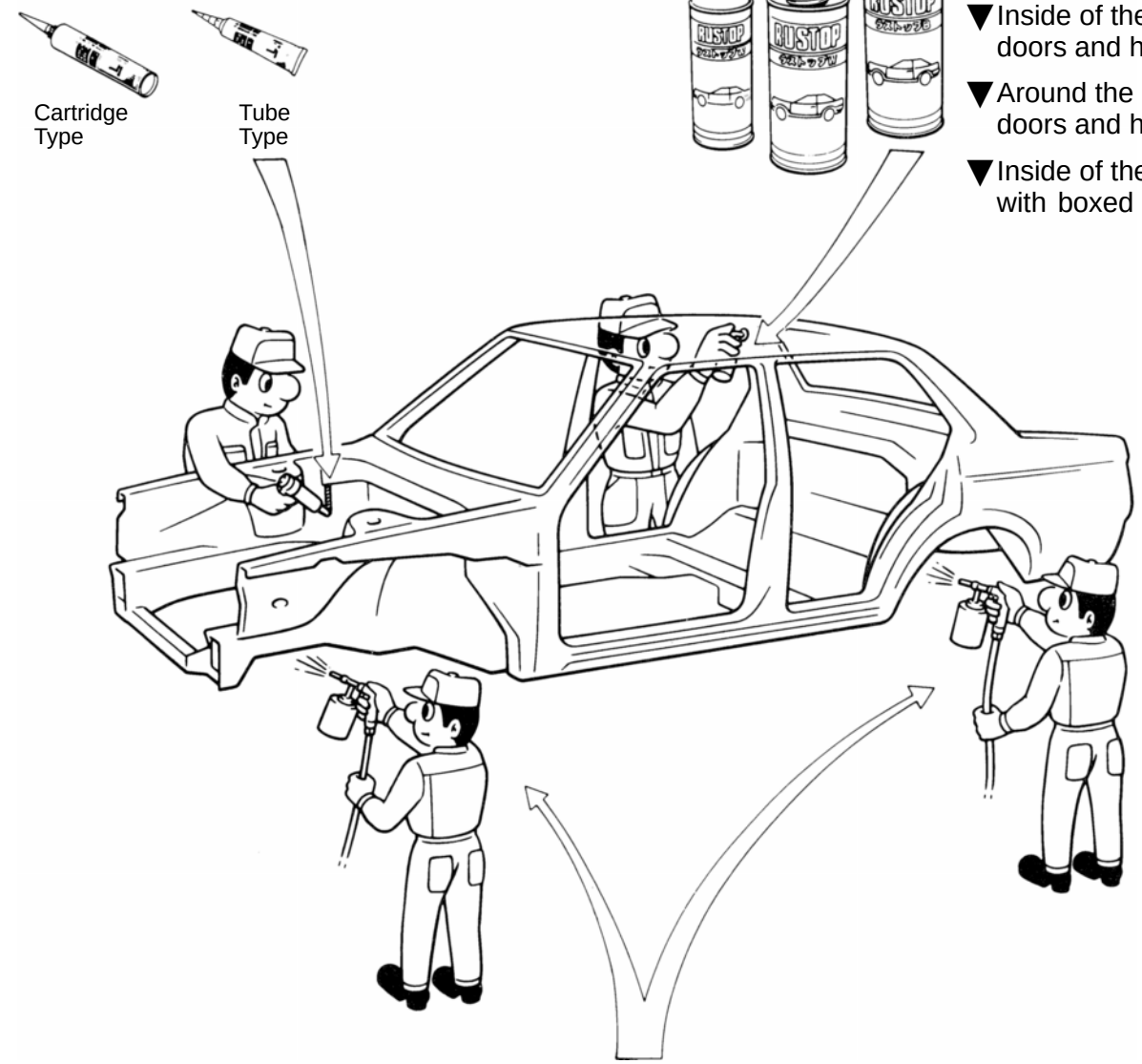

UNDERCOAT
Apply undercoat to the underbody and wheel housings.

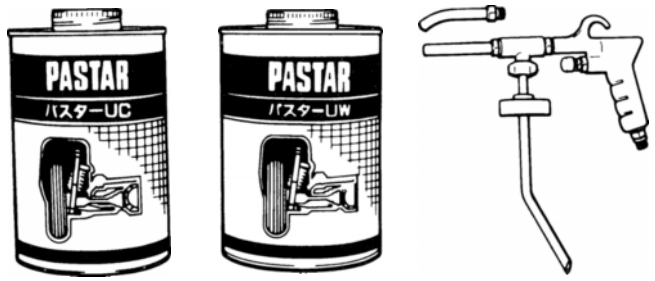

Undercoating (Oil base) Undercoating (Water base) Spray Gun

WhereEverybodyKnowsYourName

VEHICLE LIFT AND SUPPORT LOCATIONS

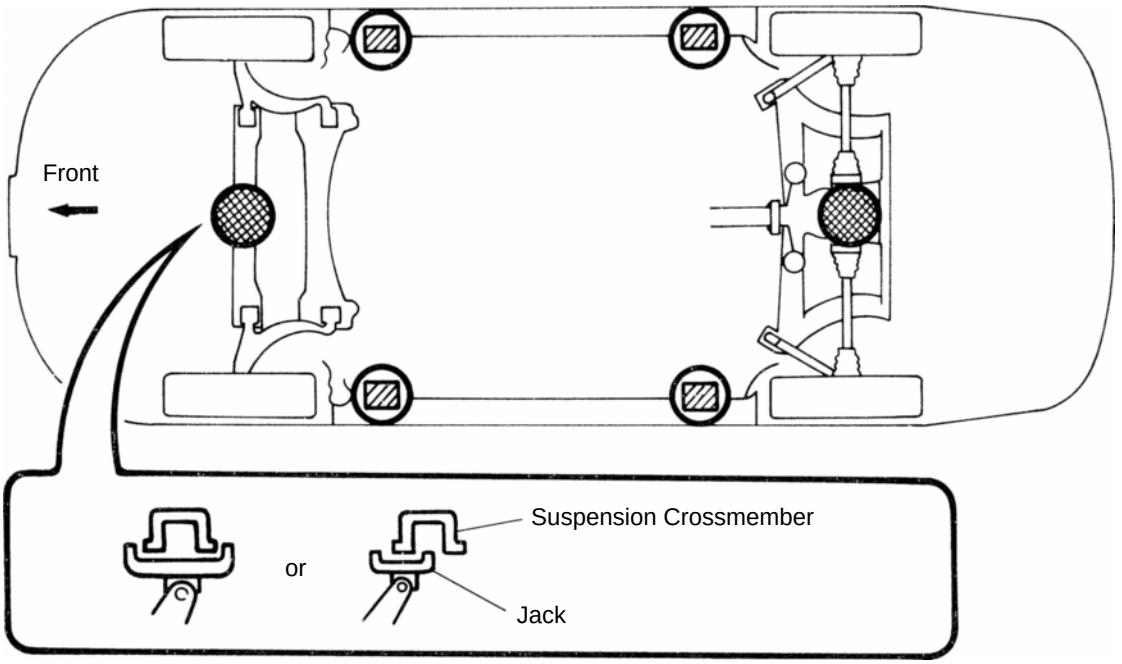

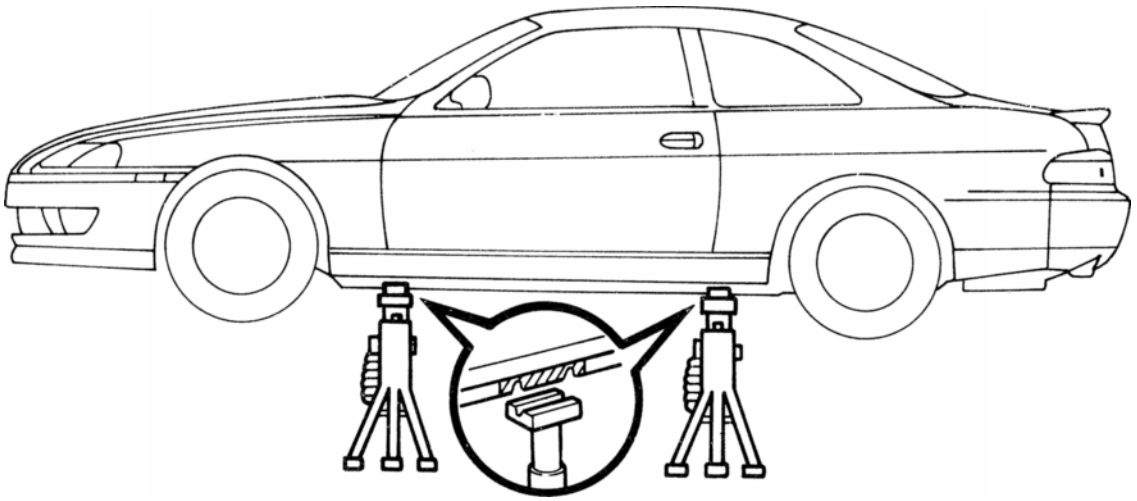

JACK POSITION

Front . . . . . Center of suspension crossmember
Rear . . . . . Jack up support of differential carrier

PANTOGRAPH JACK POSITION

SUPPORT POSITION

Safety stand . . . . . .

N01093
N01094

WhereEverybodyKnowsYourName

SERVICE SPECIFICATIONS

SERVICE DATA

Thermostat	Valve opening temperature			80–84°C	176–183°F
	Valve lift		at 95°C (203°F)	10 mm	0.39 in.
Radiator cap	Relief valve opening pressure		STD	74–103 kPa	
				(0.75–1.05 kgf/cm, 10.7–14.9 psi)	
			Limit	59 kPa	0.6 kgf/cm 8.5 psi
On–vehicle inspection for hydraulic cooling fan	Oil pressure			1,177–2,452 kPa	
				(12–25 kgf/cm, 171–356 psi)	
Hydraulic pump	Spool valve			45.8 mm	1.803 in.
	Rotor side clearance	STD	Drive rotor	0.02 mm	0.0008 in.
			Driven rotor	0.03 mm	0.0012 in.
		Limit	Drive rotor	0.03 mm	0.0012 in.
			Driven rotor	0.04 mm	0.0016 in.
	Rotor body clearance		STD	0.05–0.09 mm	0.0020–0.0035 in.
			Limit	0.10 mm	0.0039 in.
	Rotor tip clearance		STD	0.02 mm	0.0008 in.
			Limit	0.03 mm	0.0012 in.
	Drive shaft bushing inside diameter			17.00–17.05 mm	0.6693–0.6713 in.
	Drive shaft diameter			16.97–16.98 mm	0.6681–0.6685 in.
	Drive shaft oil clearance		STD	0.02–0.08 mm	0.0008–0.0031 in.
			Limit	0.08 mm	0.0031 in.
	Drive shaft preload (rotating torque)			0.3 N·m	3.0 kgf·cm 2.6 in.·lbf
	Solenoid valve resistance		at cold	7.5–8.5 ?	
Hydraulic motor	Rotor side clearance		STD	0.01–0.04 mm	0.0004–0.0016 in.
			Limit	0.05 mm	0.0020 mm
	Drive shaft hole inside diameter			14.000–14.011 mm	0.5512–0.5516 in.
	Drive shaft diameter			13.973–13.984 mm	0.5501–0.5506 in.
	Drive shaft oil clearance		STD	0.016–0.038 mm	0.0006–0.0015 in.
			Limit	0.04 mm	0.0031 in.
	Drive shaft preload (rotating torque)			0.3 N·m	3.0 kgf·cm 2.6 in.·lbf
Water temp. sensor	Resistance		at 80°C (176°F)	1.48–1.58 k?	

WhereEverybodyKnowsYourName

TORQUE SPECIFICATIONS

Part tightened		N·m	kgf·cm	ft·lbf
Engine drain plug X Cylinder block		18	180	13
Coolant filler plug X Water inlet housing		44	450	33
Water pump X Cylinder block		18	185	13
Water inlet housing X Water pump		18	185	13
Water inlet X Water inlet housing		18	185	13
Radiator fan shroud X Radiator		4.9	50	43 in.·lbf
Radiator X Body		12	120	9
Cooling fan reservoir tank X Radiator fan shroud		4.9	50	43 in.·lbf
Cooling fan inlet pipe X Radiator fan shroud		4.9	50	43 in.·lbf
Cooling fan pressure hose X Hydraulic motor		64	650	47
Radiator reservoir tank X Upper radiator support		4.9	50	43 in.·lbf
Radiator reservoir tank X Radiator reservoir tank support		4.9	50	43 in.·lbf
Hydraulic pump rear housing X End plug (for spool valve)		19	200	14
Hydraulic pump front housing X Rear housing		21	210	15
Hydraulic pump pulley X Drive shaft		59	600	43
Solenoid valve X Hydraulic pump rear housing		39	400	28
Hydraulic pump suction port union X Rear housing		13	135	10
Hydraulic pump X Cylinder block	12 mm head	16	160	12
	14 mm head	20	310	22
Cooling fan pressure hose X Hydraulic pump		64	650	47
RH No.2 timing belt cover X Cylinder block		16	160	12
Drive belt idler pulley X Hydraulic pump		37	380	27
A/C compressor X Hydraulic pump		49	500	36
A/C compressor X Cylinder block		49	500	36
A/C compressor stay X Oil filter bracket		29	300	22
Hydraulic motor cover X Motor housing		28	290	21
Hydraulic motor X Radiator fan shroud		4.9	50	43 in.·lbf
Cooling fan X Hydraulic motor		15	150	11
Cooling fan oil cooler X Body		18	180	13
Water temperature sensor X Radiator		7.4	75	65 in.·lbf

WhereEverybodyKnowsYourName

COOLING SYSTEM

WhereEverybodyKnowsYourName

DESCRIPTION

This engine utilizes a pressurized forced circulation cooling system which includes a hermostat equipped with a by–pass valve mounted on the inlet side.

The cooling system is composed of the water jacket (inside the cylinder block and cylinderhead), radiator, water pump, thermostat, cooling fan, hoses and other components.

OPERATION

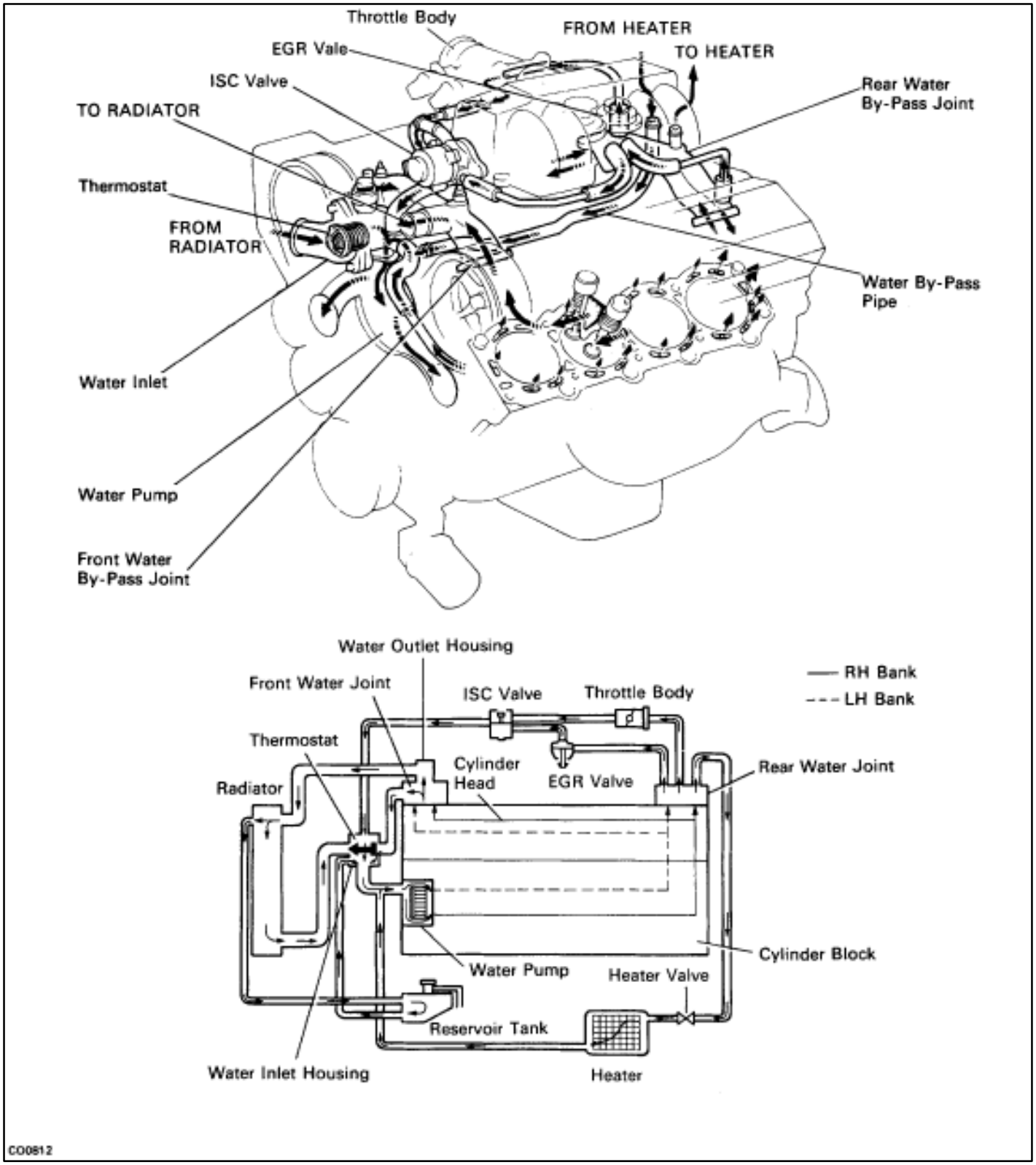

WhereEverybodyKnowsYourName

DESCRIPTION

This engine utilizes a pressurized forced circulation cooling system which includes a hermostat equipped with a by–pass valve mounted on the inlet side.

The cooling system is composed of the water jacket (inside the cylinder block and cylinderhead), radiator, water pump, thermostat, cooling fan, hoses and other components.

OPERATION

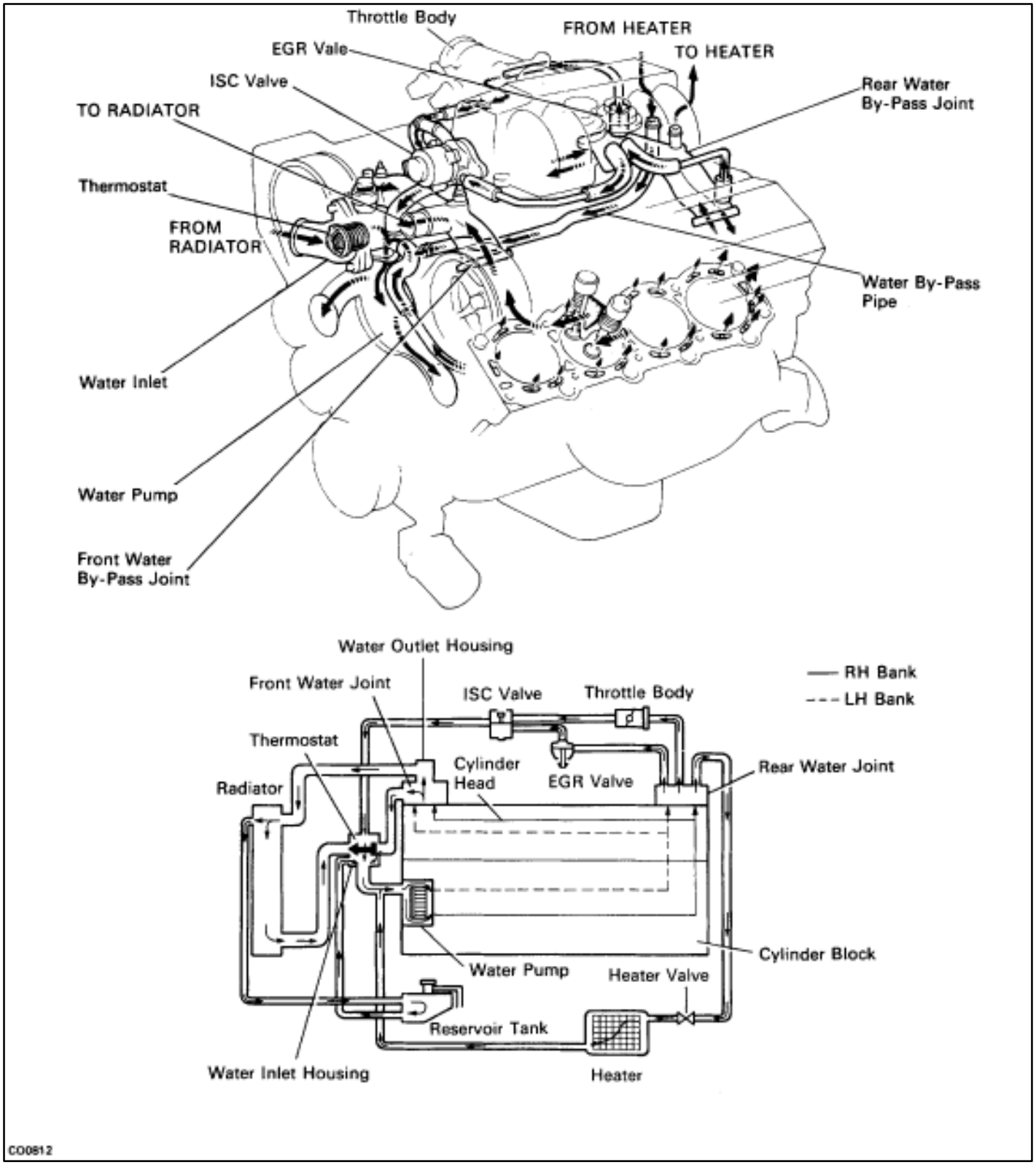

WhereEverybodyKnowsYourName

Coolant which is heated in the water jacket is pumped to the radiator, through which a cooling fan blows air to cool the coolant as it passes through. Coolant which has been cooled is then sent back to the engine by the water pump, where it cools the engine.

The water jacket is a network of channels in the shell of the cylinder block and cylinderhead through which coolant passes. It is designed to provide adequate cooling through the cylinders and combustion chambers which become heated during engine operation.

RADIATOR

The radiator performs the function of cooling the coolant which has passed through the waterjacket and become hot, and it is mounted in the front of the vehicle. The radiator consists of an upper tank and lower tank, and a core which connects the two tanks. The upper tank contains the inlet for coolant from the water jacket and the filler inlet. It also has a hose attached through which excess coolant or steam can flow. The lower tank contains the outlet for coolant and drain plug. The core contains many tubes through which coolant flows from the upper tank to the lower tank as well as cooling fins which radiate heat away from the coolant in the tubes. The air sucked through the radiator by the cooling fan, as well as the wind generated by the vehicle's travel, passes through the radiator, cooling the coolant. Models with automatic transmission include an automatic transmission fluid cooler built into the lower tank of the radiator. A cooling fan is mounted behind radiator to assist the flow of air through the radiator. When the coolant temperature is low, the fan operates slowly to help the warm up, and when the coolant temperature becomes high, the fan speed is increased to provide the air flow required for cooling.

RADIATOR CAP (on Reservoir Tank)

The radiator cap is a pressure type cap which seals the radiator, resulting in pressurization of the radiator as the coolant expands. The pressurization prevents the coolant from boiling even when the coolant temperature exceeds 100°C (212°F). A relief valve (pressurization valve) and a vacuum valve (negative pressure valve) are built into the radiator cap. The relief valve opens and lets steam escape through the overflow pipe when the pressure generated inside the cooling system exceeds the limit (coolant temperature: 110–120°C (230–248°F) pressure; 29.4–98.1 kPa (0.3–1.0 kgf/cm2, 4.3–14.2 psi)). The vacuum valve opens to alleviate the vacuum which develops in the coolant system after the engine is stopped and the coolant temperature drops.

RESERVOIR TANK

The purpose of the reservoir tank is to catch coolant overflows created by volumetrix expansion when the coolant temperature increases. The cap of the reservoir tank is a pressure type which prevents deterioration of the LLC (Long Life Coolant) caused by contact with atmospheric air, increases vaporization performance and reduces loss of the coolant volume.

WATER PUMP

The water pump is mounted on the front of the cylinder block and driven by the reverse side of the timing belt.

THERMOSTAT

The thermostat has a wax type by–pass valve and is mounted in the water inlet housing. The thermostat begins to open at the temperature of 80°C (180°F). When the coolant temperature is low, the valve closes to prevent coolant flow to the radiator, thus permitting the engine to warm up rapidly. When the by–pass valve opens the by–pass circuit, the engine coolant continues to circulate inside the engine, quickly and uniformly warming up to the appropriate temperature. When the coolant temperature is high, the valve opens and coolant flows to the radiator where it is cooled. When the wax inside the thermostat is heated, it expands and thus creates pressure which overpowers the force of the spring which keeps the valve closed. When the wax cools, its contraction causes the force of the spring to take effect once more, closing the valve.

ELECTRONICALLY CONTROLLED HYDRAULIC COOLING FAN (See page CO–22)

WhereEverybodyKnowsYourName

PREPARATION

SST (SPECIAL SERVICE TOOLS)

Illustration	Part No.	Part Name	Note
	09278–54012	Drive Shaft Holding Tool	Hydraulic pump pulley
	09286–46011	Injection Pump Spline Shaft Puller	Hydraulic pump pulley
	09620–30010	Steering Gear Box Replacer Set	
	(09627–30010)	Steering Sector Shaft Bushing Replacer	Oil seal for hydraulic motor
	(09631–00020)	(Handle)	Oil seal for hydraulic motor
	09631–10030	Oil Seal Remover	Oil seal for hydraulic pump
	09843–18020	Diagnosis Check Wire	

RECOMMENDED TOOLS

Illustration	Part No.	Part Name	Note
	09025–00010	Small Torque Wrench	For measuring preload
	09082–00015	TOYOTA Electrical tester	
	09200–00010	Engine Adjust Kit	
	09258–00030	Hose Plug Set	Plug for the vacuum hose, oil hose ect.
	09904–00010	Expander Set	Oil seal for hydraulic pump
	09905–00013	Snap Ring Pliers	Oil seal for hydraulic pump

WhereEverybodyKnowsYourName

EQUIPMENT

Part Name	Note
Caliper gauge	Hydraulic pump, Hydraulic motor
Micrometer	Hydraulic pump, Hydraulic motor
Precision straight edge	Hydraulic pump, Hydraulic motor
Pressure gauge	
Radiator cap tester	
Thermometer	
Torque wrench	
Vernier caliper	Hydraulic pump

COOLANT

Item	Capacity			Classification
	Liters	US qts	Imp. qts	
Engine coolant	10.8	11.4	9.5	Ethylene–glycol base

LUBRICANT

Item	Capacity	Classification
Cooling fan fluid	–	ATF DEXRON®II

SSM (SPECIAL SERVICE MATERIALS)

Part Name	Part No.	Use etc.
Seal packing 1282B, Three bond 1282B or equivalent	08826–00100	Water pump, Water inlet housing

WhereEverybodyKnowsYourName

CHECK AND REPLACEMENT OF ENGINE COOLANT

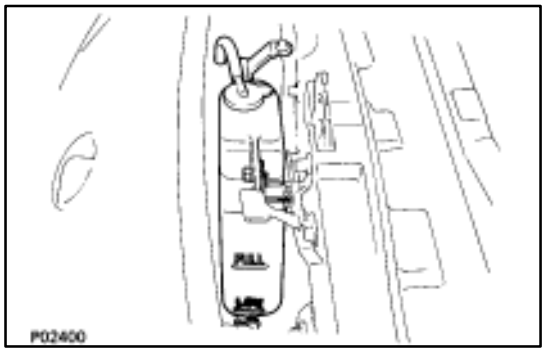

1. CHECK ENGINE COOLANT LEVEL AT RESERVOIR TANK

The coolant level should be between the ”LOW” and ”FULL” lines at low temperature.

If low, check for leaks and add coolant up to the ”FULL” line.

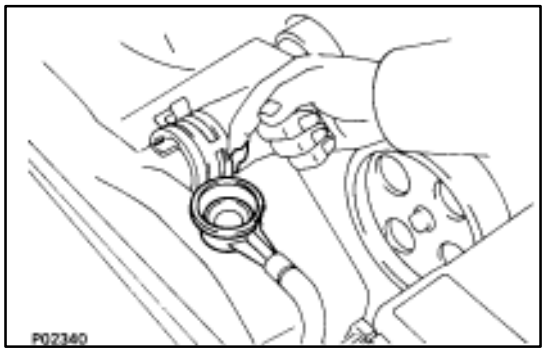

2. CHECK ENGINE COOLANT QUALITY

There should be no excessive deposits of rust or scales around the radiator cap or radiator filler hole, and the coolant should be free from oil.

If excessively dirty, replace the coolant

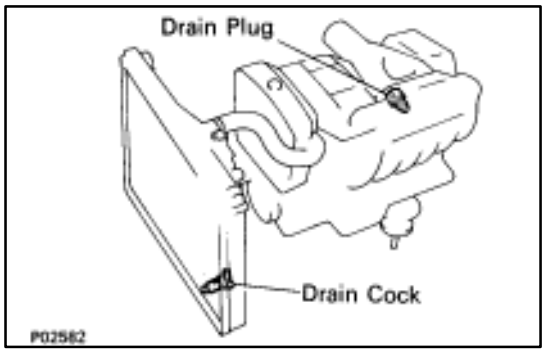

3. REPLACE ENGINE COOLANT

(a) Remove the radiator cap.

CAUTION: To avoid the danger of being burned, do not remove it while the engine and radiator are still hot, as fluid and steam can be blown out under pressure.

(b) Drain the coolant from the radiator drain cock and engine drain plug.

(c) Close the drain cock and plug.

Torque (Engine drain plug):
29 N·m (300 kgf·cm, 22 ft·lbf)

(d) Fill the system with coolant.

- Use a good brand of ethylene–glycol base coolant, mixed according to the manufacturer’s direction.
- Using coolant which includes more than 50 % ethylene–glycol (but not more than 70%) is recommended.

NOTICE:

- **Do not use alcohol type coolant.**
- **The coolant should be mixed with demineralized water or distilled water.**

Coolant capacity (w/ Heater):
M/T 8.5 liters (9.0 US qts, 7.5 Imp. qts)
A/T 8.4 liters (8.9 US qts, 7.4 Imp. qts)

(e) Install the radiator cap.

(f) Start the engine and check for leaks.

(g) Recheck the coolant level and refill as necessary.

WhereEverybodyKnowsYourName

CHECK AND REPLACEMENT OF ENGINE COOLANT

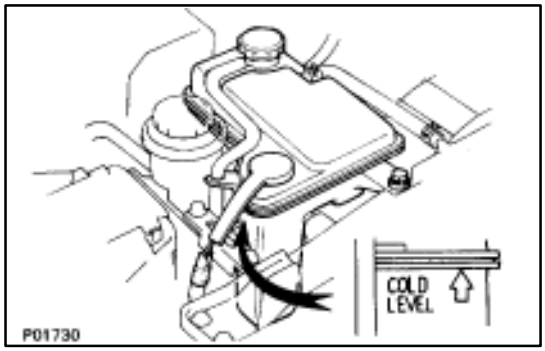

1. CHECK ENGINE COOLANT LEVEL AT RESERVE TANK

The coolant level should be above the ”COLD LEVEL” at normal temperature (20°C (68°F)).

If low, check for leaks and add coolant up to the ”COLD LEVEL”.

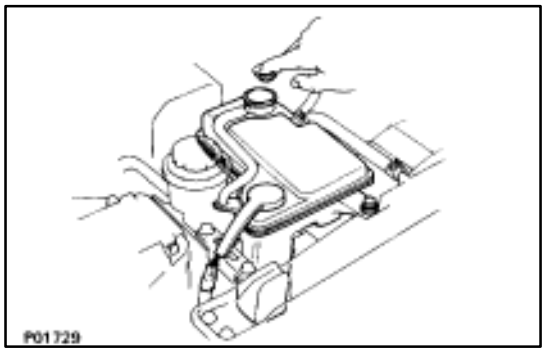

2. CHECK ENGINE COOLANT QUALITY

There should not be any excessive deposits of rust or scales around the radiator cap or reservoir tank filler hole, and the coolant should be free from oil.

If excessively dirty, clean the coolant passages and replace the coolant.

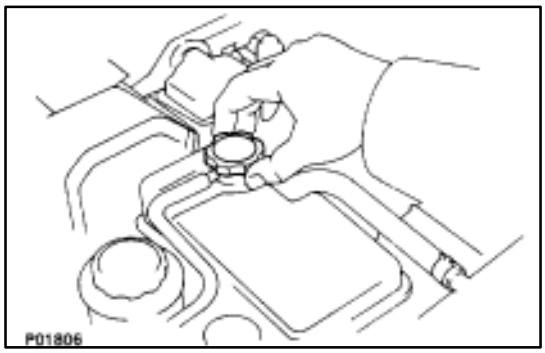

3. REPLACE ENGINE COOLANT

(a) Remove the radiator cap from the reservoir tank.

CAUTION: To avoid the danger of being burned, do not remove the cap while the engine and radiator are still hot, as fluid and steam can be blown out under pressure.

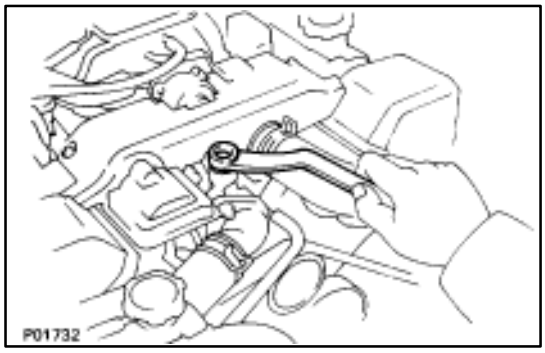

(b) Remove the filler plug from the water inlet housing.

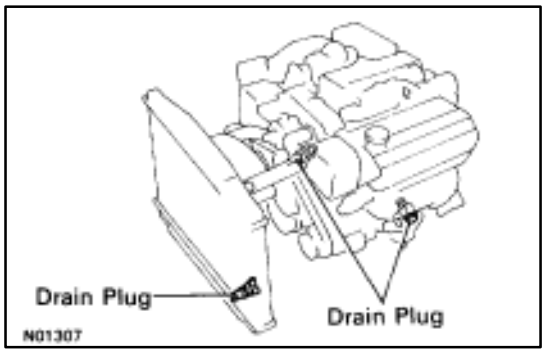

(c) Loosen the three drain plugs on the radiator and cylinder block, drain the coolant from the radiator and engine.

(d) Clean the coolant passages.

(e) Close the three drain plugs.

Torque (Engine drain plug):

18 N·m (180 kgf·cm, 13 ft·lbf)

WhereEverybodyKnowsYourName

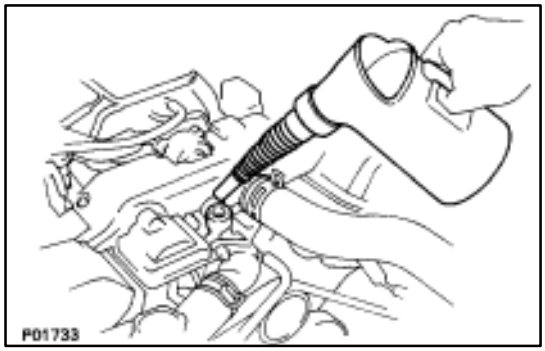

(f) Slowly add coolant to water inlet housing until it is full.
- Use a good brand of ethylene–glycol base coolant, mixed according to the manufacturer's directions.
- Using coolant which includes more than 50% ethylene–glycol (but not more 70%) than is recommended.

NOTICE:

- **Do not use alcohol type coolant.**
- **The coolant should be mixed with demineralized water or distilled water.**

Capacity (w/ Heater):

10.8 liters (11.4 US qts, 9.5 Imp. qts)

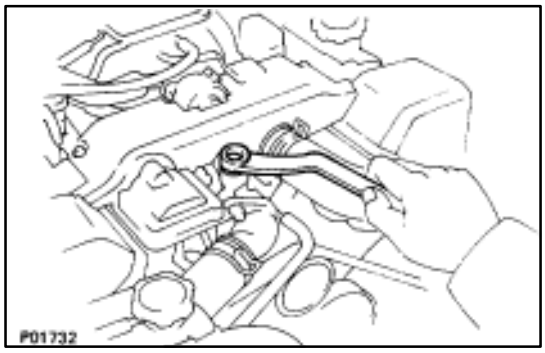

(g) Reinstall a new gasket and filler plug to the water inlet housing.

Torque: 44 N·m (450 kgf·cm, 33 ft·lbf)

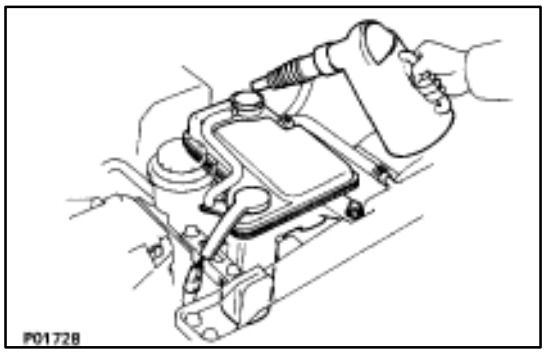

(h) Slowly add coolant to reservoir tank until it is full.

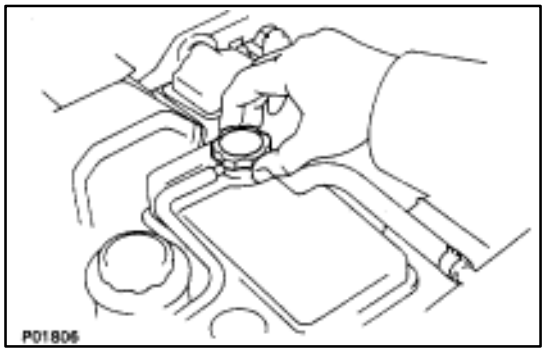

(i) Reinstall the radiator cap.

(j) Bleed the cooling system.
- Start the engine, and open the heater water valve.
- Maintain the engine speed at 2,000 rpm, and warm up the engine.

(k) Check for leaks.

(l) Recheck the coolant level and refill as necessary.

WhereEverybodyKnowsYourName

WATER PUMP

COMPONENTS FOR REMOVAL AND INSTALLATION

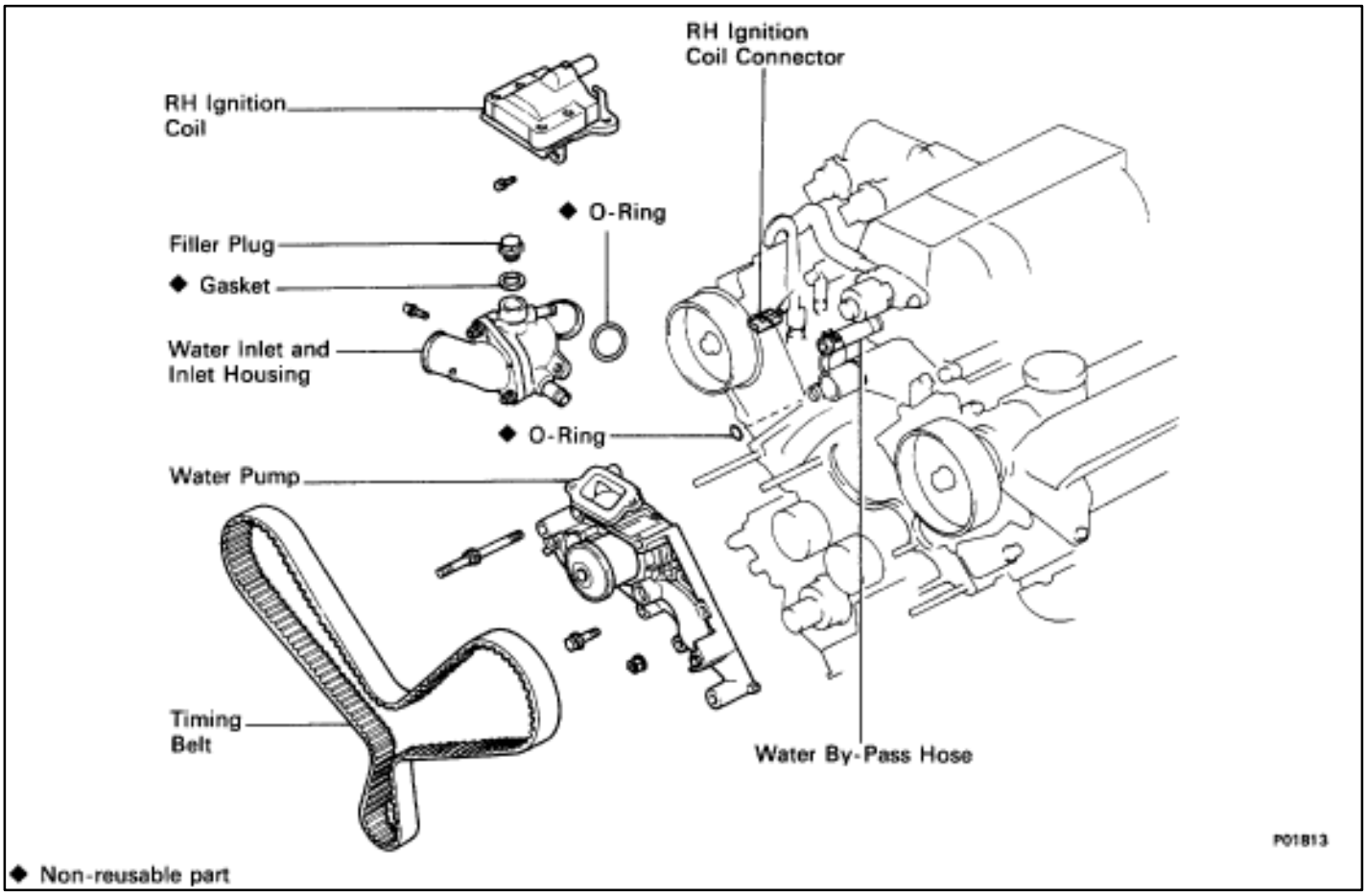

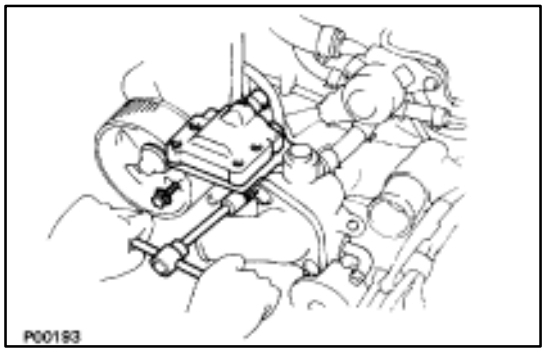

REMOVAL OF WATER PUMP

1. **REMOVE TIMING BELT**
   (See steps 1 to 35 on pages EM–35 to 43)
2. **REMOVE RH IGNITION COIL**
   (a) Disconnect the ignition coil connector.
   (b) Remove the two bolts and ignition coil.

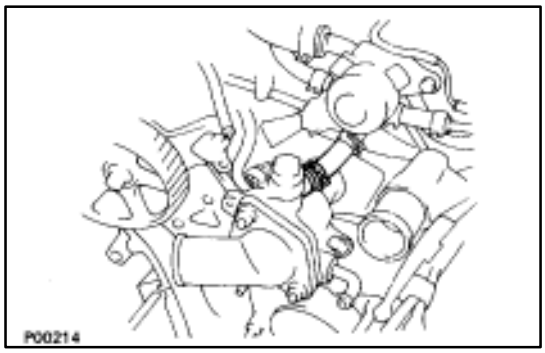

3. **REMOVE WATER INLET AND INLET HOUSING**
   (a) Disconnect the water by–pass hose from the water inlet housing.

WhereEverybodyKnowsYourName

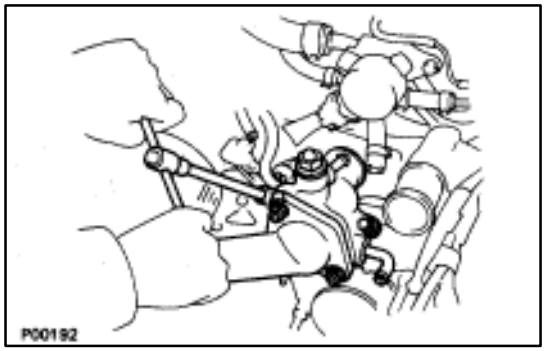

(b) Remove the two bolts holding the water inlet housing to the water pump.
(c) Pull out the water inlet and inlet housing assembly.
(d) Remove the O–ring from the water inlet housing.

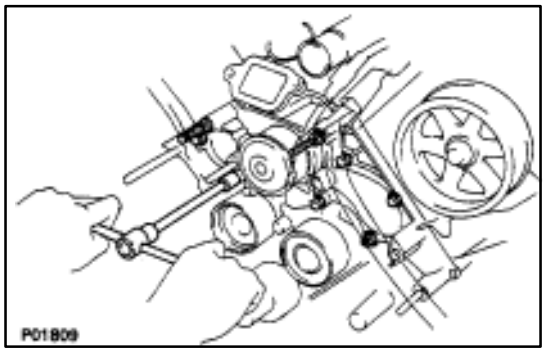

4. REMOVE WATER PUMP

(a) Remove the five mounting bolts, two stud bolts and nut.

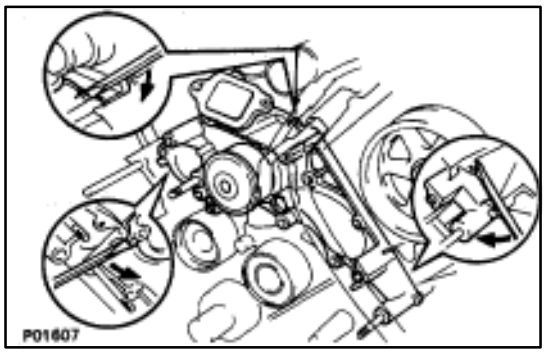

(b) Remove the water pump by prying the portions between the water pump and cylinder block with a screwdriver.
(c) Remove the O–ring from the water by–pass pipe.

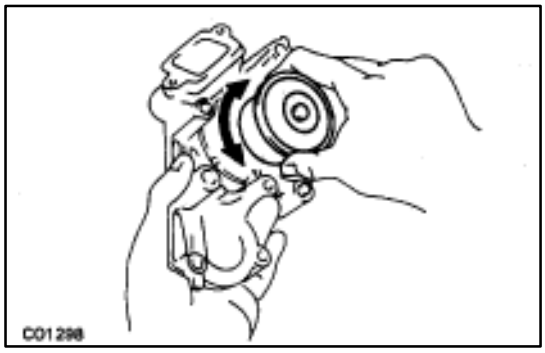

INSPECTION OF WATER PUMP

INSPECT WATER PUMP

Turn the pulley and check that the water pump bearing moves smoothly and quietly.

WhereEverybodyKnowsYourName

INSTALLATION OF WATER PUMP

(See Components on page CO–8)

1. INSTALL WATER PUMP

(a) Remove any old packing (FIPG) material and be careful not to drop any oil on the contact surfaces of the water pump and cylinder block.
- Using a razor blade and gasket scraper, remove all the old packing (FIPG) material from the gasket surfaces and sealing groove.
- Thoroughly clean all components to remove all the loose material.
- Using a non–residue solvent, clean both sealing surfaces.

(b) Apply seal packing to the sealing groove of the water pump as shown in the illustration.

Seal packing: Part No. 08826–00100 or equivalent

- Install a nozzle that has been cut to a 2–3 mm (0.08–0.12 in.) opening.

HINT: Avoid applying an excessive amount to the surface.

- Parts must be assembled within 5 minutes of application. Otherwise the material must be removed and reapplied.
- Immediately remove nozzle from the tube and reinstall cap.

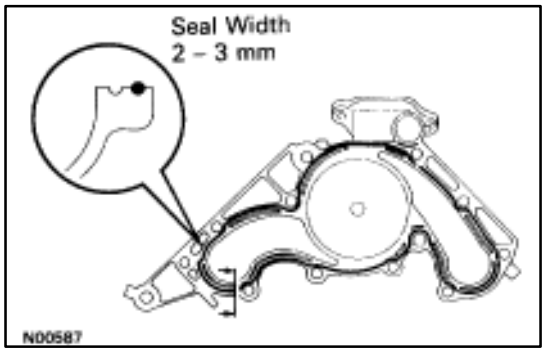

(c) Install a new O–ring to the water by–pass pipe end.

(d) Apply soapy water to the O–ring.

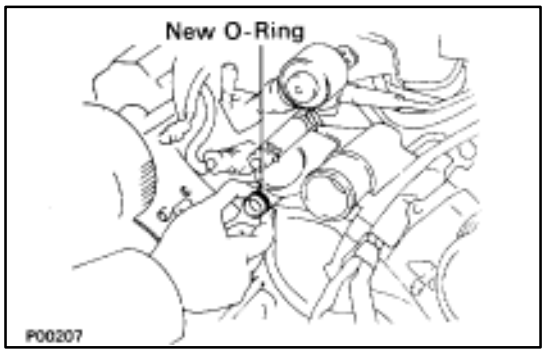

(e) Connect the water by–pass pipe end to water pump.

(f) Install the water pump with the five bolts, two stud bolts and nut. Uniformly tighten the bolts, stud bolts and nut.

Torque: 18 N·m (185 kgf·cm, 13 ft·lbf)

HINT: Use bolts 30 mm (1.18 in.) in length.

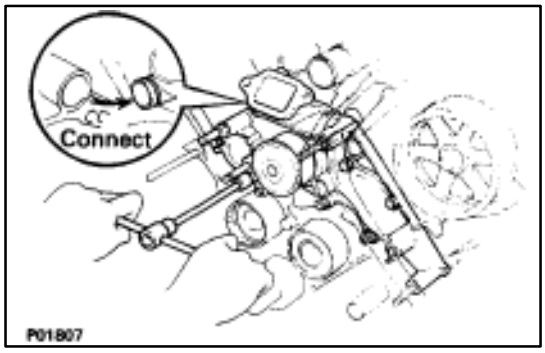

2. INSTALL WATER INLET AND INLET HOUSING

(a) Remove any old packing (FIPG) material and be careful not to drop any oil on the contact surfaces of the water inlet housing and water pump.
- Using a razor blade and gasket scraper, remove all the old packing (FIPG) material from the gasket surfaces and sealing groove.
- Thoroughly clean all components to remove all the loose material.
- Using a non–residue solvent, clean both sealing surfaces.

WhereEverybodyKnowsYourName

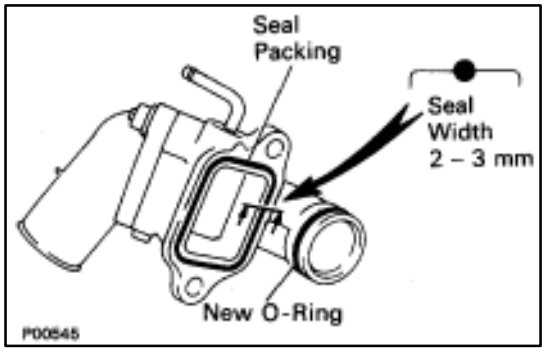

(b) Apply seal packing to the sealing groove of the water inlet housing as shown in the illustration.

Seal packing: Part No. 08826–00100 or equivalent

- Install a nozzle that has been cut to a 2–3 mm (0.08–0.12 in.) opening.

HINT: Avoid applying an excessive amount to the surface.

- Parts must be assembled within 5 minutes of application. Otherwise the material must be removed and reapplied.
- Immediately remove nozzle from the tube and reinstall cap.

(c) Install a new O–ring to the water inlet housing.

(d) Apply soapy water to the O–ring.

(e) Push the water inlet housing end into water pump hole.

(f) Install the water inlet and inlet housing assembly with the two bolts. alternately tighten the bolts.

Torque: 18 N·m (185 kgf·cm, 13 ft·lbf)

HINT: Use bolts 25 mm (0.98 in.) in length.

(g) Connect the water by–pass hose to the water inlet housing.

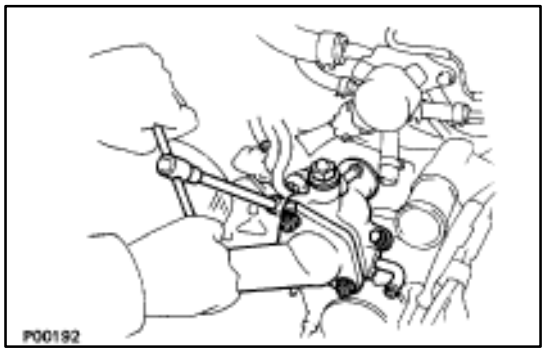

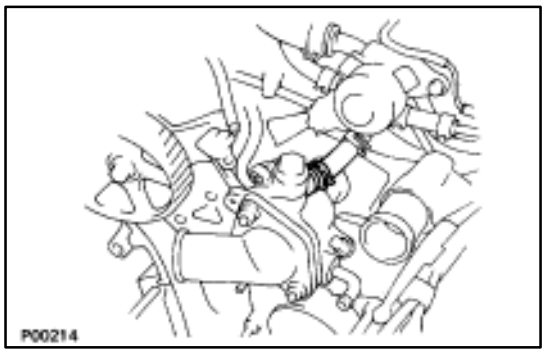

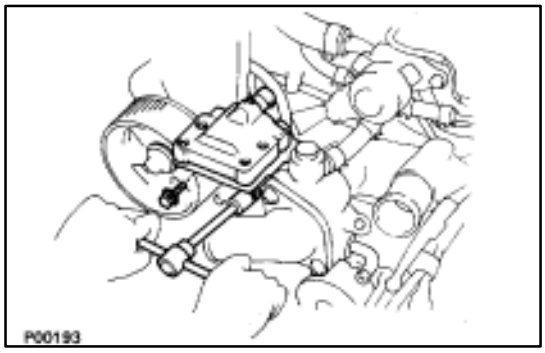

3. INSTALL RH IGNITION COIL

(a) Install the ignition coil with the two bolts.

(b) Connect the ignition coil connector.

4. INSTALL TIMING BELT

(See steps 4 to 43 on pages EM–47 to 57)

WhereEverybodyKnowsYourName

THERMOSTAT

HINT: Removing the thermostat would decrease the cooling efficiency. Do not remove the thermostat, even if it tends to overheat.

COMPONENTS

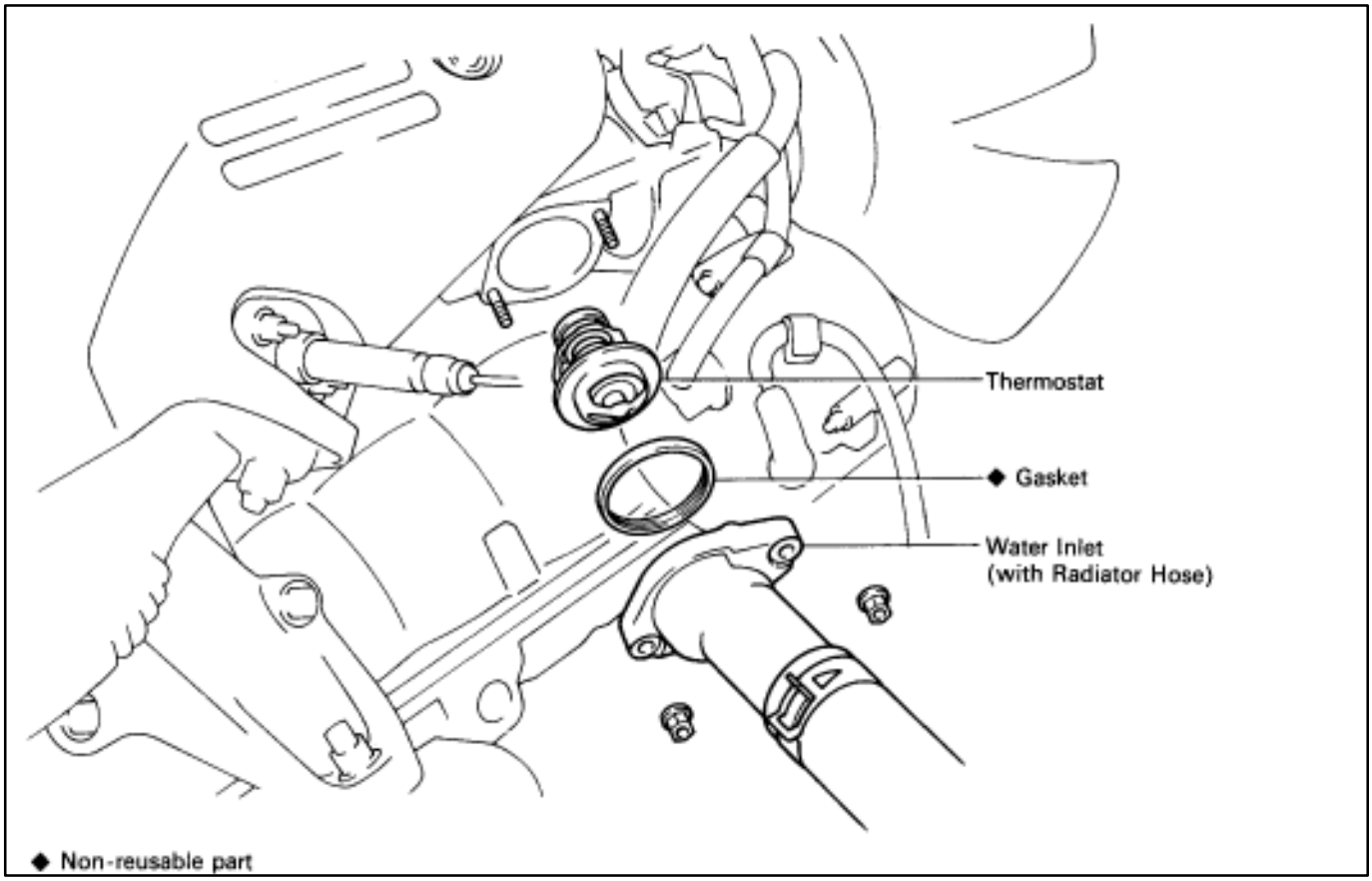

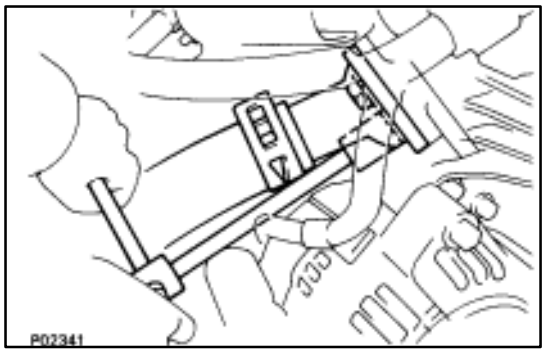

REMOVAL OF THERMOSTAT

1. **DRAIN ENGINE COOLANT (See page CO–5)**
2. **REMOVE THERMOSTAT**
   (a) Remove the two nuts holding the water inlet to the water pump, and disconnect the water inlet from the water pump.
   (b) Remove the thermostat.
   (c) Remove the gasket from the thermostat.

WhereEverybodyKnowsYourName

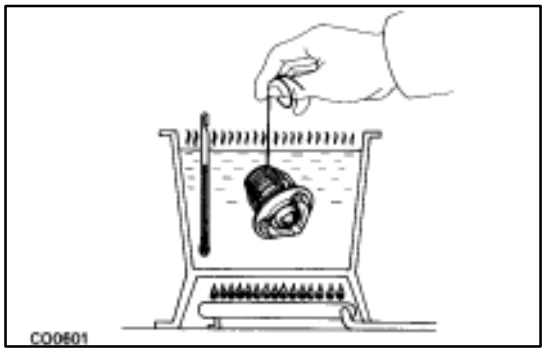

INSPECTION OF THERMOSTAT

INSPECT THERMOSTAT

HINT: The thermostat is numbered with the valve opening temperature.

(a) Immerse the thermostat in water and gradually heat the water.

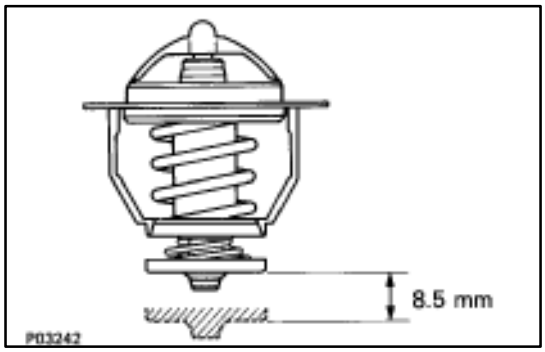

(b) Check the valve opening temperature.

Valve opening temperature:

80–84°C (176–183°F)

If the valve opening temperature is not as specified, replace the thermostat.

(c) Check the valve lift.

Valve lift:

8.5 mm (0.335 in.) or more at 95°C (203°F)

If the valve lift is less than specification, replace the thermostat.

(d) Check that the valve spring is tight when the thermostat is fully closed.

If not closed, replace the thermostat.

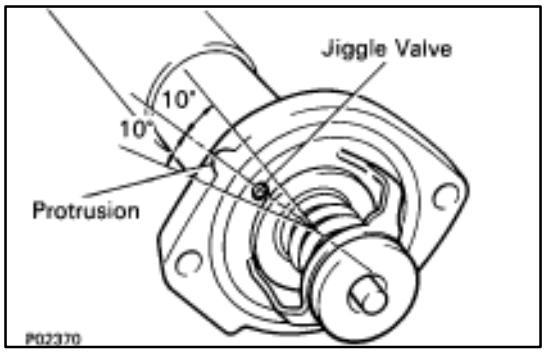

INSTALLATION OF THERMOSTAT

(See Components on page CO–10)

1. PLACE THERMOSTAT IN WATER INLET

(a) Install a new gasket to the thermostat.

(b) Align the jiggle valve of the thermostat with the protrusion, and insert the thermostat in the water inlet.

HINT: The jiggle valve may be set within 10° of either side of the prescribed position.

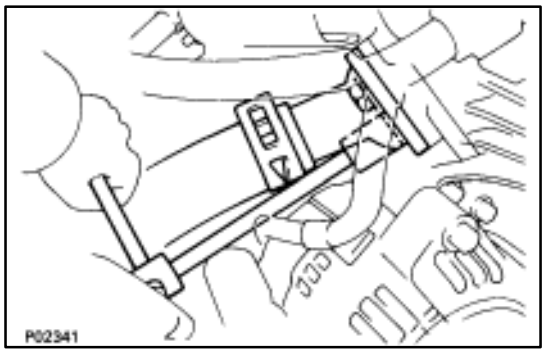

2. INSTALL WATER INLET

Install the water inlet with the two nuts.

Torque: 8.8 N·m (90 kgf·cm, 78 in.·lbf)

3. FILL WITH ENGINE COOLANT (See page CO–6)

Capacity (w/ Heater):

M/T 8.5 liters (9.0 US qts, 7.5 Imp. qts)

A/T 8.4 liters (8.9 US qts, 7.4 Imp. qts)

4. START ENGINE AND CHECK FOR LEAKS

WhereEverybodyKnowsYourName

THERMOSTAT

HINT: Removal of the thermostat would have an adverse effect, causing a lowering of cooling efficiency. Do not remove the thermostat, even if the tends to overheat.

COMPONENTS FOR REMOVAL AND INSTALLATION

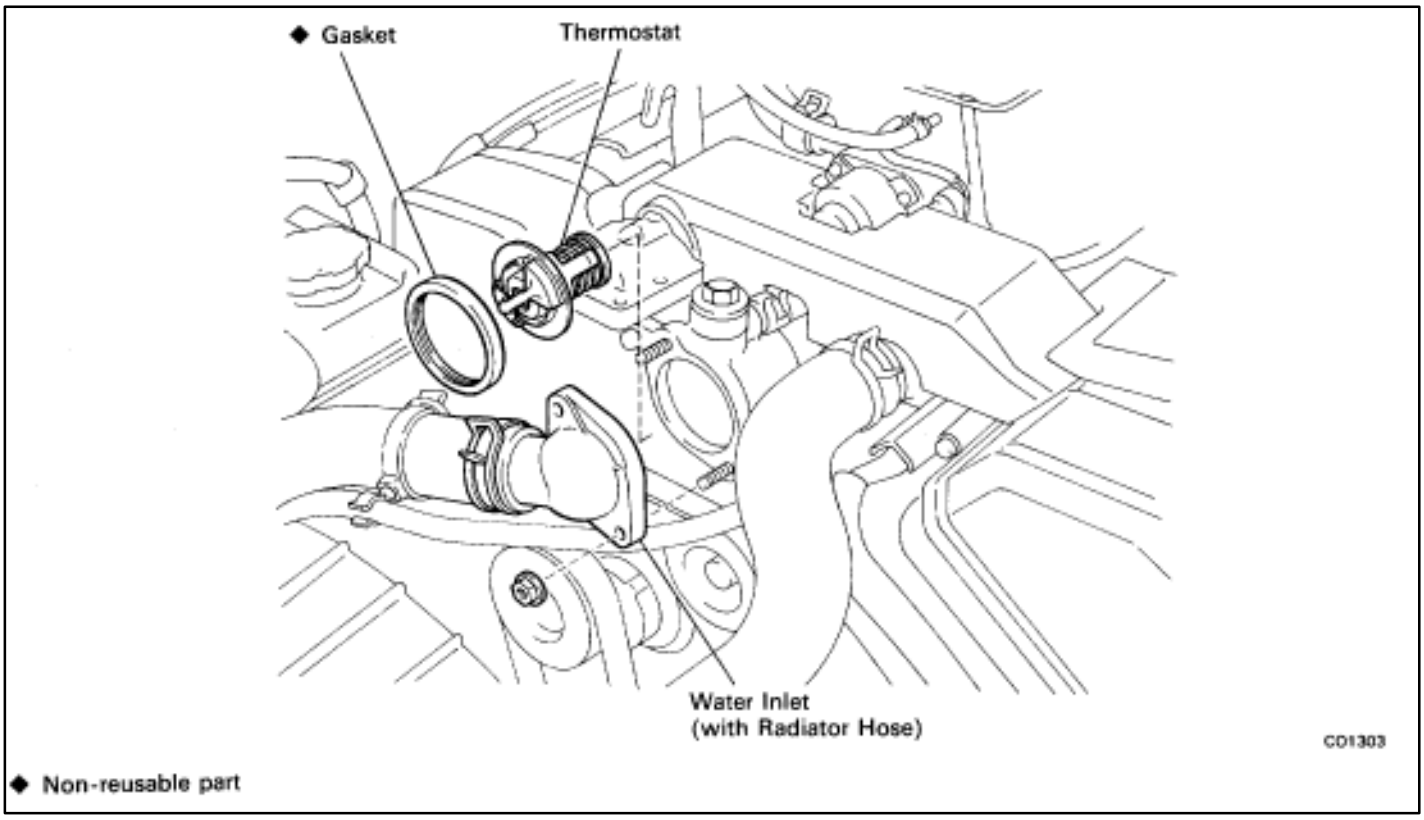

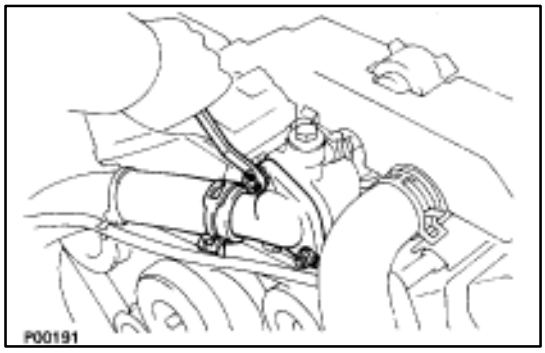

REMOVAL OF THERMOSTAT

1. **DRAIN ENGINE COOLANT (See page CO–6)**
2. **REMOVE THERMOSTAT**
   (a) Remove the two nuts holding the water inlet to the inlet housing, and disconnect the water inlet from the inlet housing.
   (b) Remove the thermostat.
   (c) Remove the gasket from the thermostat.

WhereEverybodyKnowsYourName

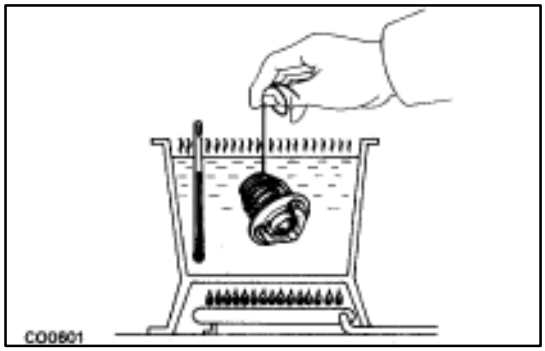

INSPECTION OF THERMOSTAT

INSPECT THERMOSTAT

HINT: The thermostat is numbered with the valve opening temperature.

(a) Immerse the thermostat in water and gradually heat the water.

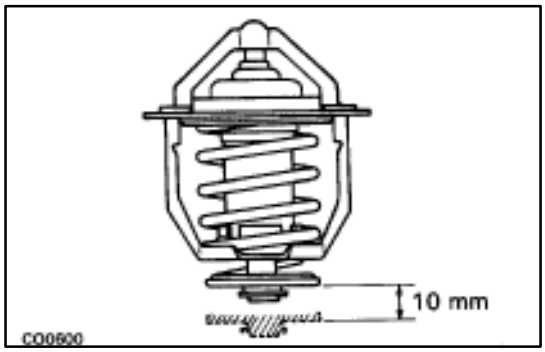

(b) Check the valve opening temperature.

Valve opening temperature:

80–84°C (176–183°F)

If the valve opening temperature is not as specified, replace the thermostat.

(c) Check the valve lift.

Valve lift:

10 mm (0.39 in.) or more at 95°C (203°F)

If the valve lift is less than specification, replace the thermostat.

(d) Check that the valve spring is tight when the thermostat is fully closed.

If necessary, replace the thermostat.

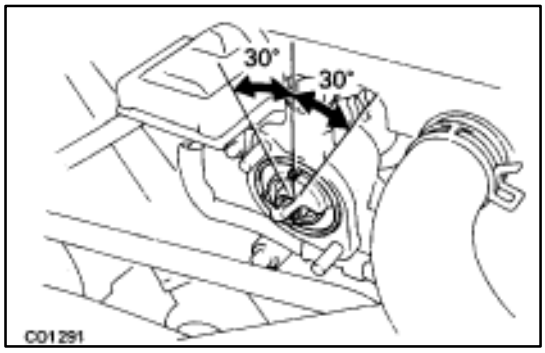

INSTALLATION OF THERMOSTAT

(See Components on page CO–12)

1. PLACE THERMOSTAT IN WATER INLET HOUSING

(a) Install a new gasket to the thermostat.

(b) Insert the thermostat into the water inlet housing with the jiggle valve facing straight upward.

HINT: The jiggle valve may be set within 30° of either side of the prescribed position.

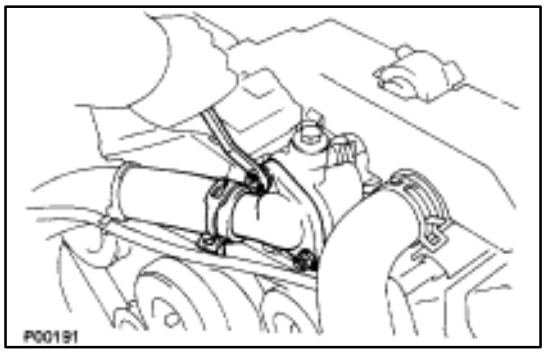

2. INSTALL WATER INLET

Install the water inlet with the two nuts.

Torque: 18 N·m (185 kgf·cm, 13 ft·lbf)

3. FILL WITH ENGINE COOLANT (See page CO–7)

4. START ENGINE AND CHECK FOR LEAKS

WhereEverybodyKnowsYourName

RADIATOR

CLEANING OF RADIATOR

Using water or a steam cleaner, remove any mud and dirt from the radiator core.

NOTICE: If using a high pressure type cleaner, be careful not to deform the fins of the radiator core. If the cleaner nozzle pressure is 2,942–3,432 kPa (30–35 kgf/cm2, 427–498 psi), keep a distance at least 40–50 cm (15.75–19.69 in.) between the radiator core and cleaner nozzle.

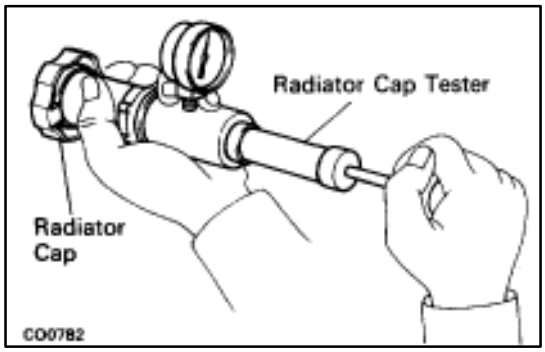

INSPECTION OF RADIATOR

1. **REMOVE RADIATOR CAP FROM RESERVOIR TANK**
2. **INSPECT RADIATOR CAP**

   Using a radiator cap tester, pump the tester and measure the relief valve opening pressure.

   Standard opening pressure:

   74–103 kPa

   (0.75–1.05 kgf/cm, 10.7–14.9 psi)

   Minimum opening pressure:

   59 kPa (0.6 kgf/cm, 8.5 psi)

   If the opening pressure is less than minimum, replace the radiator cap.

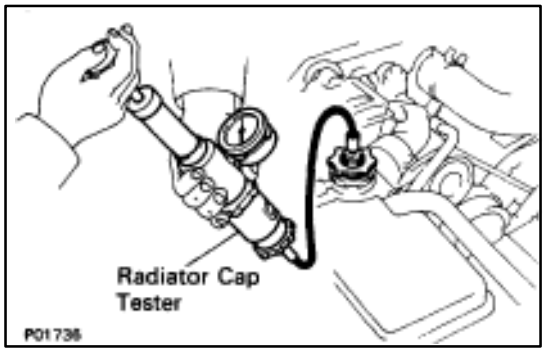

3. **INSPECT COOLING SYSTEM FOR LEAKS**
   (a) Fill the radiator with coolant and attach a radiator cap tester to the reservoir tank.
   (b) Warm up the engine.
   (c) Pump it to 118 kPa (1.2 kgf/cm2, 17.1 psi), check that pressure does not drop.

   If the pressure drops, check for leaks as the hoses, radiator or water pump. If no external leaks are found, check the heater core, cylinder block and head.
4. **REINSTALL RADIATOR CAP**

WhereEverybodyKnowsYourName

COMPONENTS FOR REMOVAL AND INSTALLATION

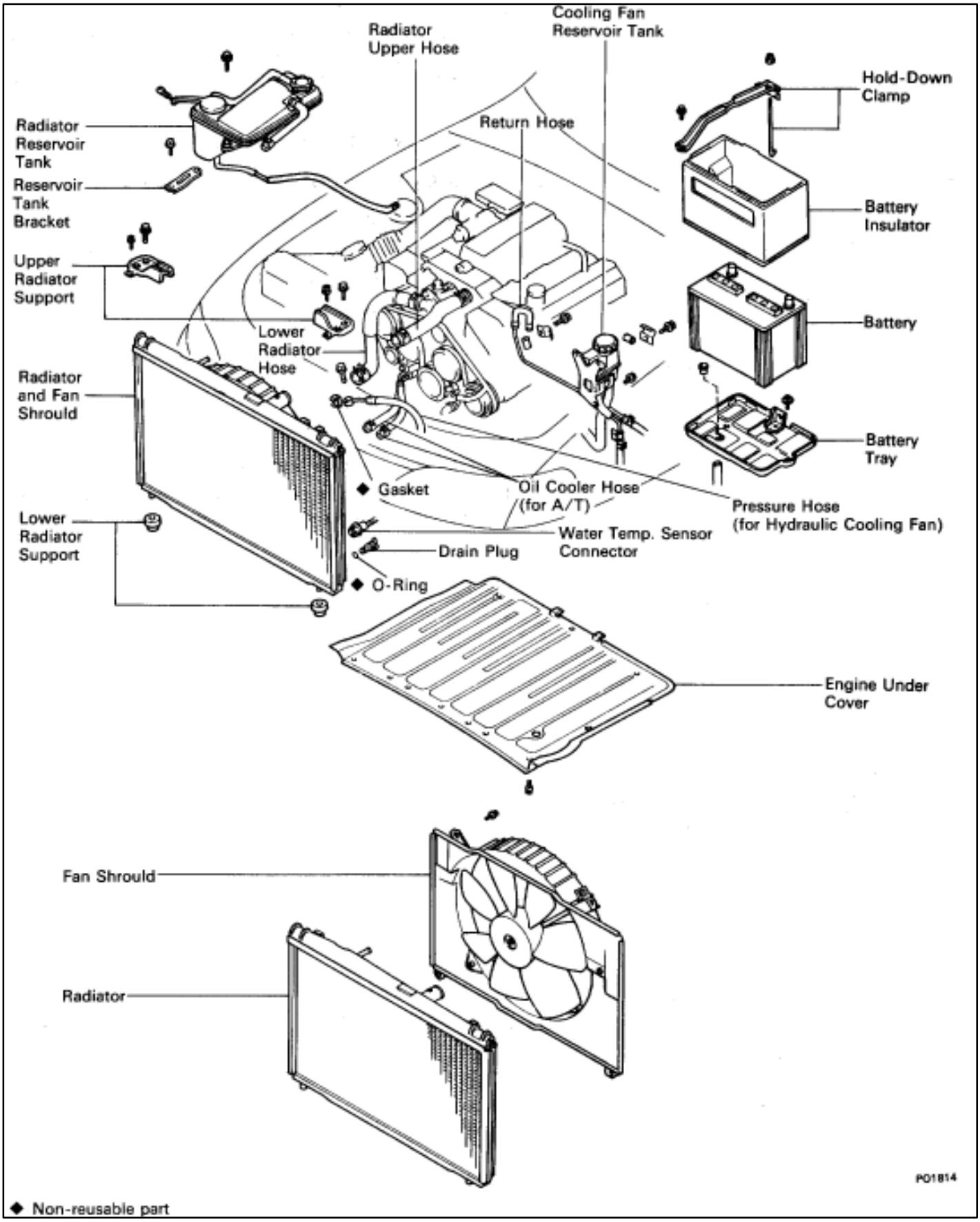

◆ Non-reusable part

WhereEverybodyKnowsYourName

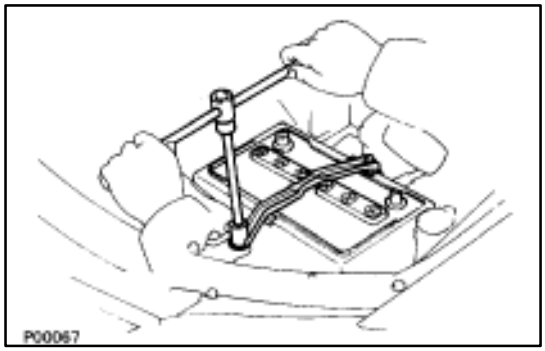

REMOVAL OF RADIATOR

(See Components on page CO–15)

1. REMOVE BATTERY

CAUTION: Work must be started after approx. 20 seconds or longer from the time the ignition switch is turned to the ”LOCK” position and the negative (–) terminal cable is disconnected from the battery.

2. REMOVE ENGINE UNDER COVERS

3. DRAIN ENGINE COOLANT (See page CO–6)

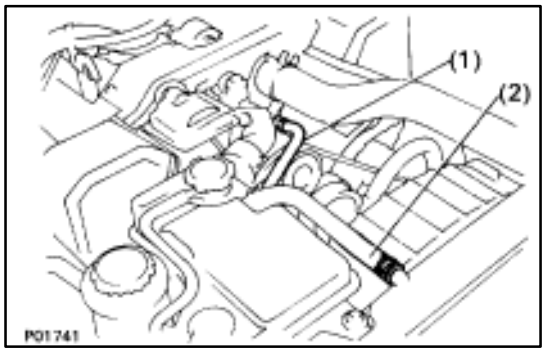

4. REMOVE RADIATOR RESERVOIR TANK

(a) Disconnect the coolant level sensor connector.

(b) Disconnect the following hoses:

(1) Reservoir hose from water inlet housing

(2) Reservoir hose from radiator

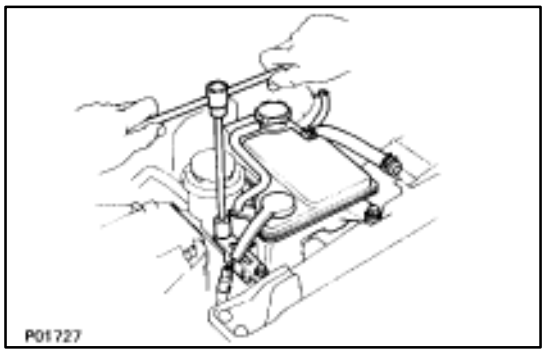

(c) Remove the two bolts and reservoir tank bracket.

(d) Disconnect the reservoir tank from the reservoir tank bracket, and remove the reservoir tank.

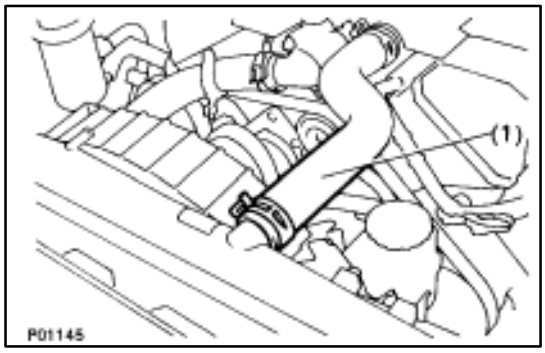

5. DISCONNECT HOSES

Disconnect the following hoses:

(1) Upper radiator hose from radiator

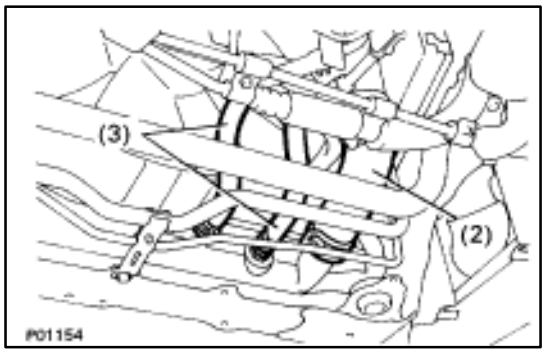

(2) Lower radiator hose from radiator

(3) Two oil cooler hoses (for A/T) from radiator. Plug hose end.

WhereEverybodyKnowsYourName

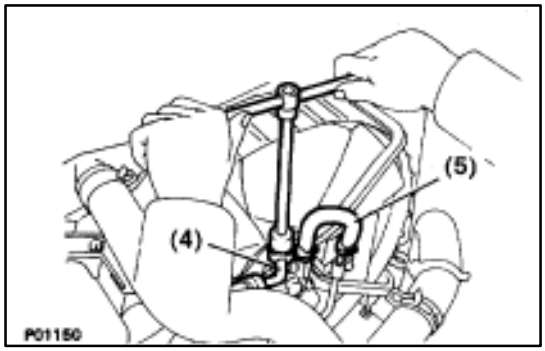

(4) Pressure hose from hydraulic motor
(5) Return hose from hydraulic motor

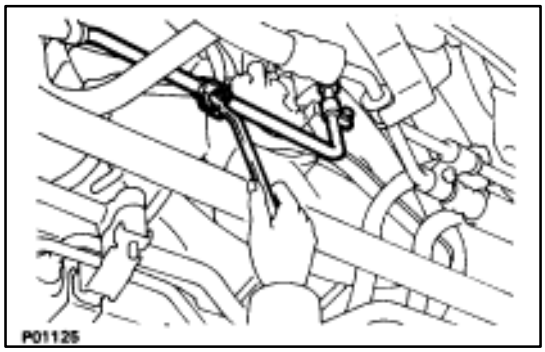

6. DISCONNECT COOLING FAN INLET PIPE FROM FAN SHROULD

Remove the two bolts, brackets and bushings, and disconnect the inlet pipe.

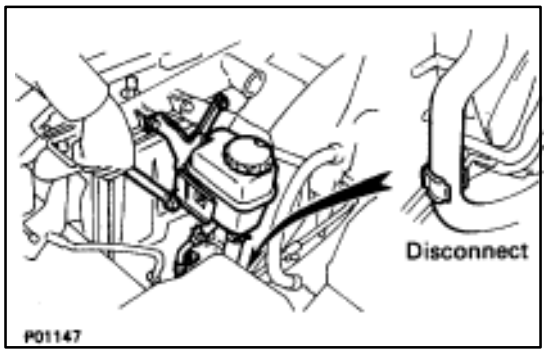

7. DISCONNECT COOLING FAN RESERVOIR TANK FROM FAN SHROULD

(a) Disconnect the suction hose from the clamp on the fan shrould.
(b) Remove the four bolts, and disconnect the reservoir tank.

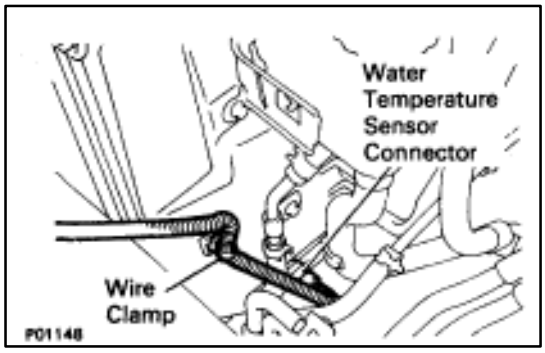

8. DISCONNECT WATER TEMPERATURE SENSOR CONNECTOR

(a) Disconnect the water temperature sensor connector.
(b) Disconnect the wire clamp from the radiator fan shrould.

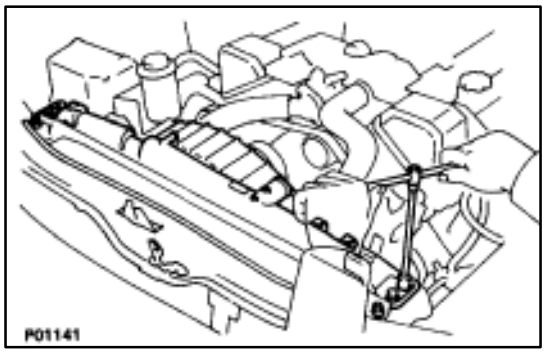

9. REMOVE RADIATOR

(a) Remove the two bolts, screw and upper radiator support. Remove the two upper radiator supports.

WhereEverybodyKnowsYourName

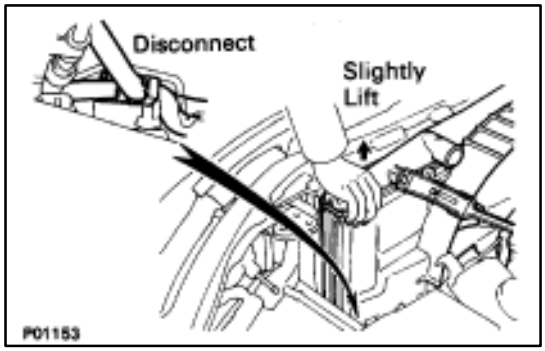

(b) Slightly lift the radiator, and disconnect the two oil cooler hoses (for cooling fan) from the hose clamp on the radiator fan shroud.
(c) Remove the radiator.
(d) Remove the two lower radiator supports.

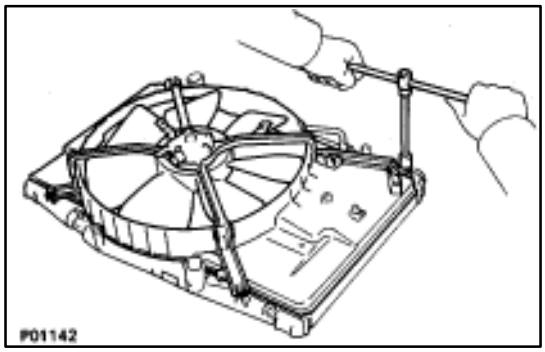

10. REMOVE FAN SHROULD FROM RADIATOR
Remove the four bolts and fan shroud.

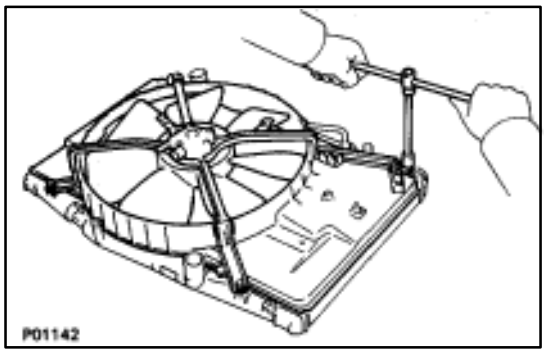

INSTALLATION OF RADIATOR

(See Components on page CO–15)

1. INSTALL FAN SHROULD TO RADIATOR
Install the fan shroud with the four bolts.
Torque: 4.9 N·m (50 kgf·cm, 43 in.·lbf)

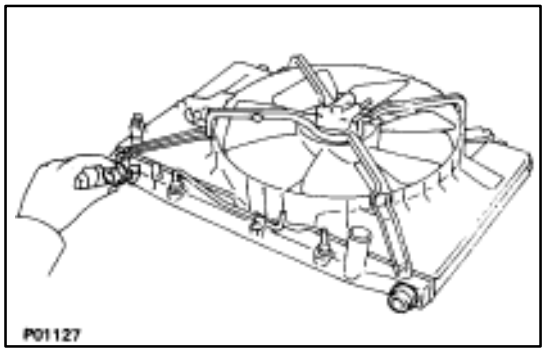

2. INSTALL RADIATOR
(a) Install the two lower radiator supports to the radiator.

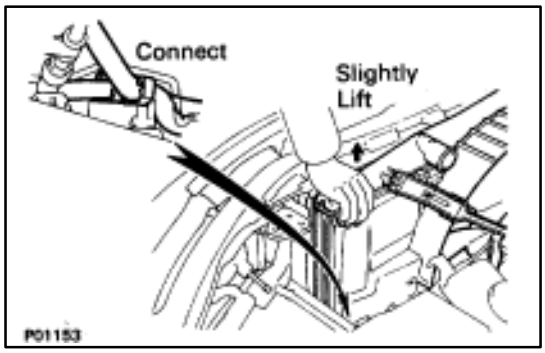

(b) Place the radiator on the body bracket.
(c) Slightly lift the radiator, and connect the two oil cooler hoses (for cooling fan) to the hose clamp on the radiator fan shroud.

WhereEverybodyKnowsYourName

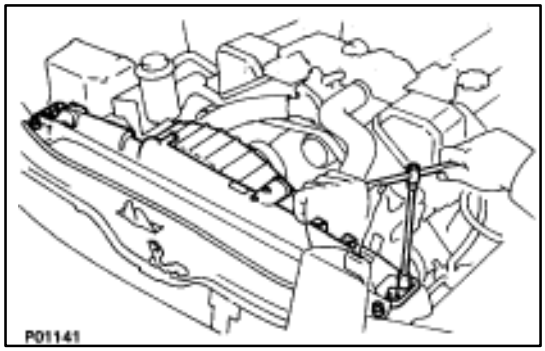

(d) Install the upper radiator support with the two bolts and screw. Install the two upper radiator supports.

Torque: 12 N·m (120 kgf·cm, 9 ft·lbf)

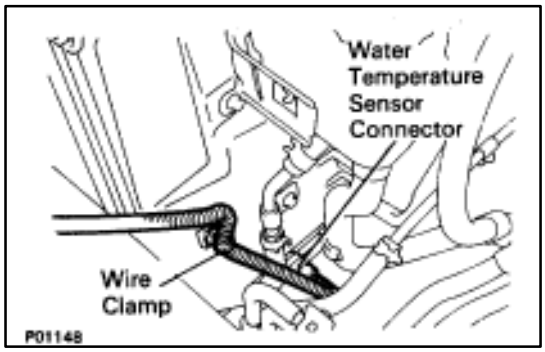

3. CONNECT WATER TEMPERATURE SENSOR CONNECTOR

(a) Connect the water temperature sensor connector.

(b) Install the wire clamp to the radiator fan shrould.

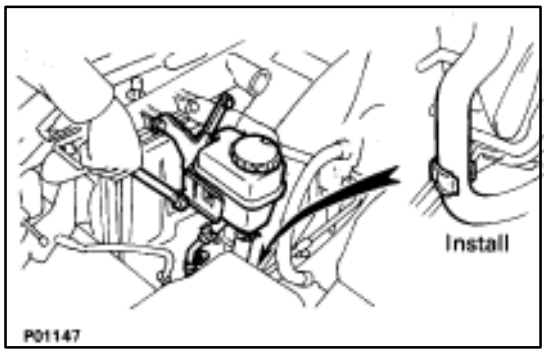

4. INSTALL COOLING FAN RESERVOIR TANK TO FAN SHROULD

(a) Install the reservoir tank with the four bolts.

Torque: 4.9 N·m (50 kgf·cm, 43 in.·lbf)

(b) Install the suction hose to the clamp on the fan shrould.

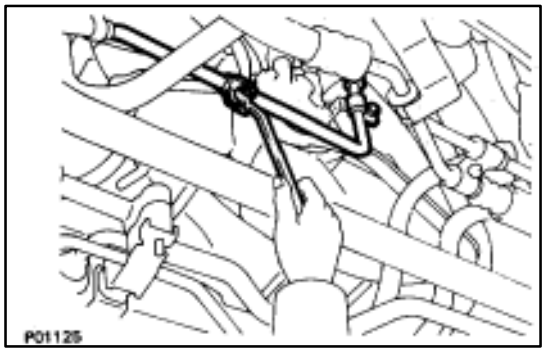

5. INSTALL COOLING FAN INLET PIPE TO FAN SHROULD

Install the inlet pipe with the two bushings, brackets and bolts.

Torque: 4.9 N·m (50 kgf·cm, 43 in.·lbf)

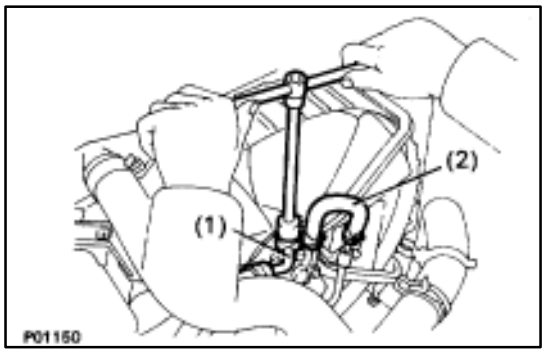

6. CONNECT HOSES

Connect the following hoses:

(1) Pressure hose to hydraulic motor Connect the pressure hose with a new gasket and union bolt.

Torque: 64 N·m (650 kgf·cm, 47 ft·lbf)

(2) Return hose to hydraulic motor

WhereEverybodyKnowsYourName

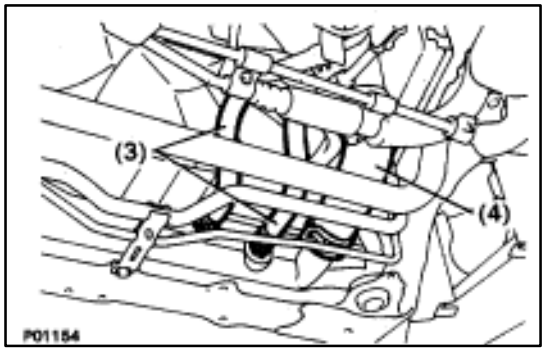

(3) Two oil cooler hoses (for A/T) to radiator.
(4) Lower radiator hose to radiator

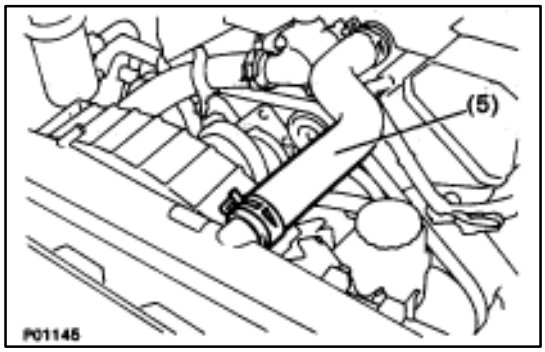

(5) Upper radiator hose to radiator

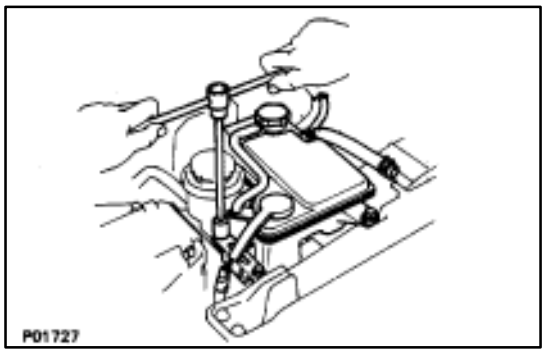

7. INSTALL RADIATOR RESERVOIR TANK

(a) Install the reservoir tank to the reservoir tank bracket.
(b) Install the reservoir tank bracket with two bolts.
Torque: 4.9 N·m (50 kgf·cm, 43 in.·lbf)

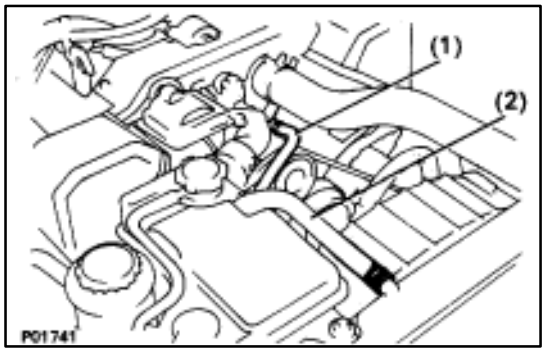

(c) Connect the following hoses:
(1) Reservoir hose to water inlet housing
(2) Reservoir hose to radiator
(d) Connect the coolant level sensor connector.

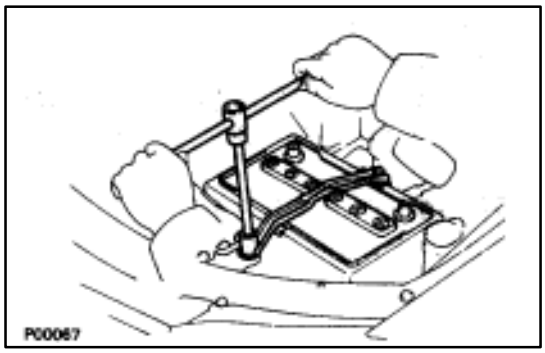

8. INSTALL BATTERY

WhereEverybodyKnowsYourName

9. **FILL ENGINE WITH COOLANT (See page CO–7)**
10. **FILL COOLING FAN RESERVOIR TANK WITH FLUID (See pages CO–23 and 24)**
11. **CHECK AUTOMATIC TRANSMISSION FLUID LEVEL (See page MA–11)**
    NOTICE: Do not overfill.
12. **START ENGINE AND CHECK FOR LEAKS**
13. **INSTALL ENGINE UNDER COVER**

WhereEverybodyKnowsYourName

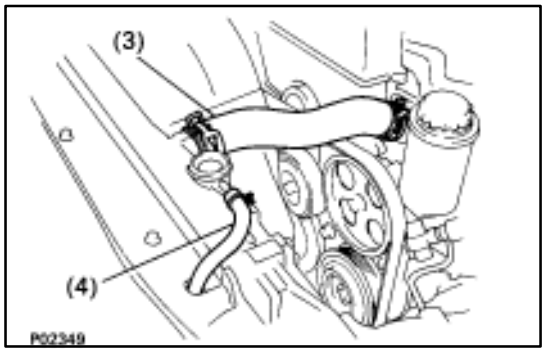

(3) Upper radiator hose or radiator
(4) Reservoir hose to radiator

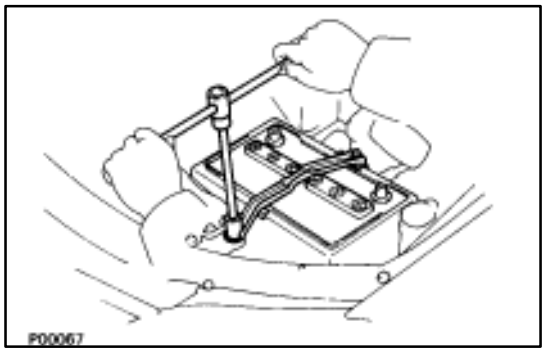

5. **INSTALL BATTERY**
6. **FILL ENGINE WITH COOLANT (See page CO–5)**
   Capacity (w/ Heater):
   M/T 8.5 liters (9.0 US qts, 7.5 Imp. qts)
   A/T 8.4 liters (8.9 US qts, 7.4 Imp. qts)
7. **(A/T)**
   CHECK AUTOMATIC TRANSMISSION FLUID LEVEL (See page MA–11)
   NOTICE: Do not overfill.
8. **START ENGINE AND CHECK FOR LEAKS**
9. **INSTALL ENGINE UNDER COVER**

SERVICE SPECIFICATIONS

SERVICE DATA

Thermostat	Valve opening temperature		80–84°c	176–183°F	
	Valve lift	at 95°C (203°F)	8.5 mm	0.335 in.	
Radiator cap	Relief valve opening pressure	STD	74–103 kPa (0.75–1.05 kgf/cm, 10.7–14.9 psi)		
		Limit	59 kPa	0.6 kgf/cm^2	8.5 psi

TORQUE SPECIFICATIONS

Part tightened	N▼m	kgf▼cm	ft▼lbf
Engine drain plug X Cylinder block	29	300	22
Water pump X Cylinder block	21	210	15
Water pump X Water by–pass pipe	21	210	15
Water by–pass outlet X Cylinder head	8.8	90	78 in.▼lbf
Water inlet X Water pump	8.8	90	78 in.▼lbf
Oil cooler X Radiator lower tank (A/T)	8.3	85	74 in.▼lbf
Oil cooler X Pipe (A/T)	15	150	11
Radiator fan shroud X Radiator	4.9	50	43 in.▼lbf
Radiator X Body	12	120	9

WhereEverybodyKnowsYourName

ELECTRONICALLY CONTROLLED HYDRAULIC COOLING FAN

Description

In this way system, the cooling fan ECU controls the hydraulic pressure acting on the hydraulic motor, thus controlling the speed of the cooling fan steplessly in response to the condition of the engine and air conditioner.

Operation

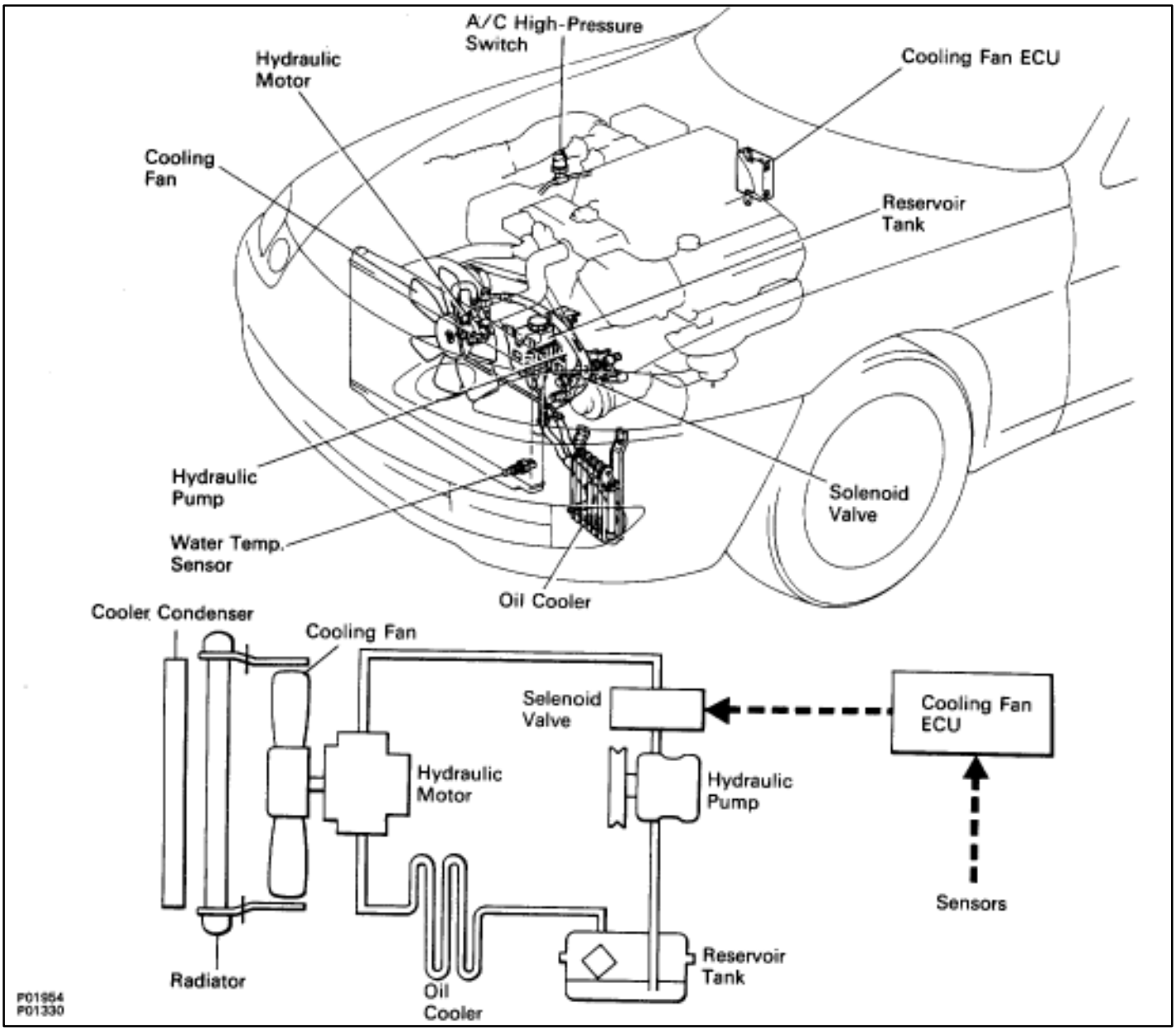

The hydraulic pump is driven by a drive belt (V–ribbed belt). The solenoid valve adjusts the volume of oil sent from the hydraulic pump to the hydraulic motor which drives the fan directly, thereby controlling the fan speed.

Oil which has passed through the hydraulic motor is cooled by the oil cooler before returning to the reservoir tank.

The solenoid valve is controlled by the computer in accordance with the E/G rpm, water temp. and A/C signals.

WhereEverybodyKnowsYourName

On–Vehicle Inspection

INSPECTION OF DRIVE BELT

(See step 1 on page CH–5)

INSPECTION OF FLUID LEVEL

1. KEEP VEHICLE LEVEL

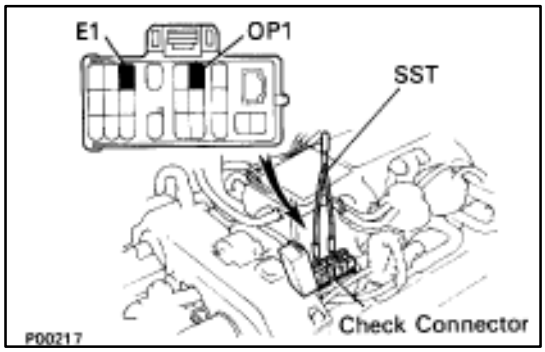

2. INSPECT FLUID LEVEL

(a) Using SST, connect terminals OP1 and E1 of the check (”DIAGNOSIS”) connector.

SST 09843–18020

HINT: When terminals OP1 and E1 are connected, the circuit of the water temp. sensor is grouded, fixing the fan speed at approx. 1,100 rpm. (Fail–safe operation occurs.)

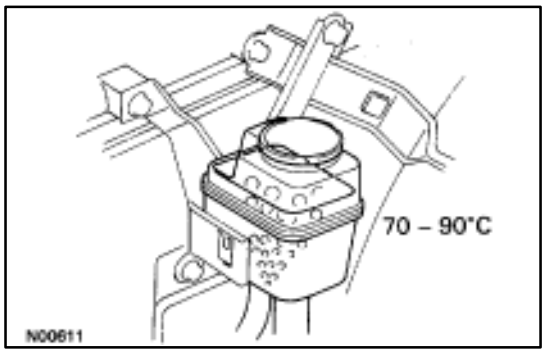

(b) Keep the engine speed at 2,000 rpm until the fluid temperature reaches the specified temperature.

Fluid temp.: 70–90°C (158–195°F)

(c) Check that there is no foaming and emulsification of the fluid in the reservoir tank.

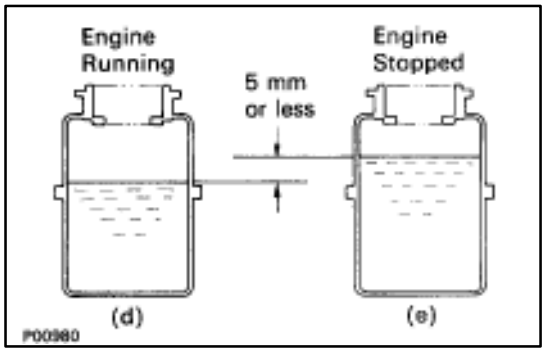

(d) Measure the fluid level with the engine running.

(e) Stop the engine, and measure the fluid level.

(f) Subtract (d) from (e).

Maximum stroke: 5 mm (0.20 in.)

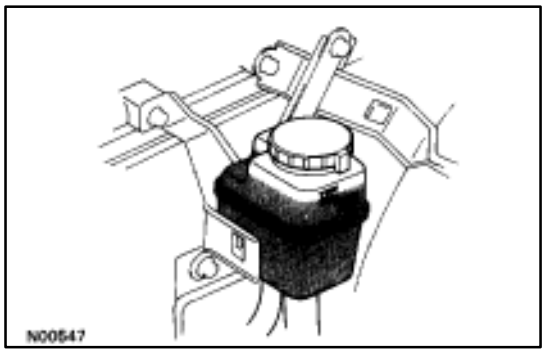

(g) Check the fluid level.

If low, add fluid.

Fluid: ATF DEXRON II

HINT: Check that fluid level is within the ”HOT” level on reservoir tank. If the fluid is cold, check that it is within the ”COLD” level on the tank.

(h) Remove the SST from the check connector.

SST 09843–18020

WhereEverybodyKnowsYourName

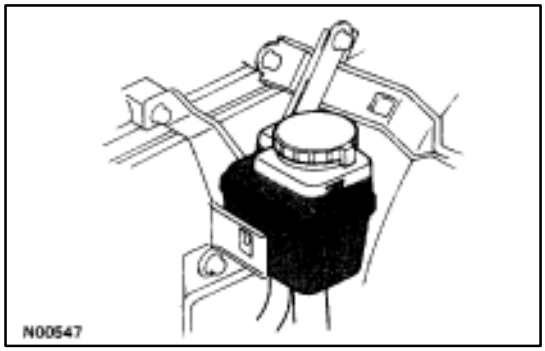

BLEEDING OF HYDRAULIC COOLING SYSTEM

1. CHECK FLUID LEVEL IN RESERVOIR TANK

If low, add fluid.

Fluid: ATF DEXRON II

HINT: Check that fluid level is within the ”HOT” level on reservoir tank. If the fluid is cold, check that it is within the ”COLD” level on the tank.

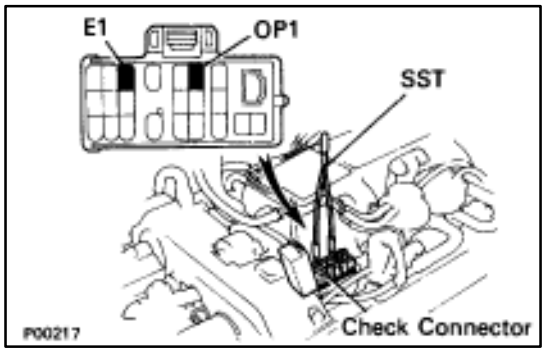

2. BLEED COOLING SYSTEM

(a) Using SST, connect terminals OP1 and E1 of the check (”DIAGNOSIS”) connector.

SST 09843–18020

HINT: When terminals OP1 and E1 are connected, the circuit of the water temp. sensor is grounded, fixing the fan speed at approx. 1,100 rpm. (Fail–safe operation occurs.)

(b) Start the engine without depressing the accelerator pedal.

(c) Leave the engine running for several seconds.

(d) Check that there is no foaming and emulsification of the fluid in the reservoir tank.

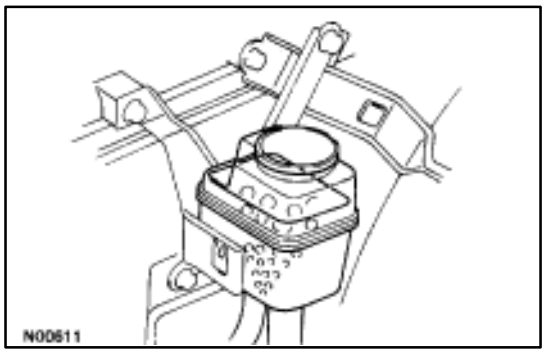

INSPECTION OF OIL PRESSURE

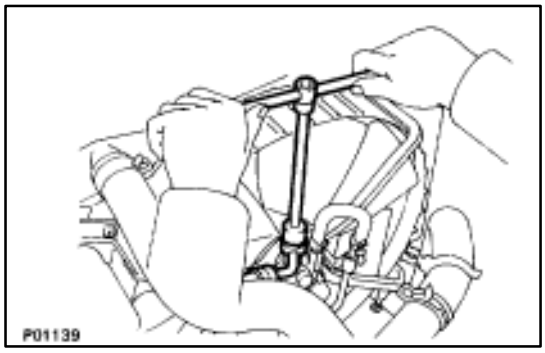

1. CONNECT PRESSURE GAUGE

(a) Remove the union bolt and gasket, and disconnect the pressure hose from the hydraulic motor.

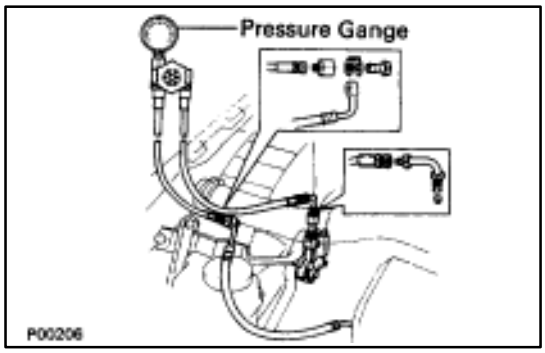

(b) Connect the gauge side of a pressure gauge to pressure hose, and the valve side to the hydraulic motor.

WhereEverybodyKnowsYourName

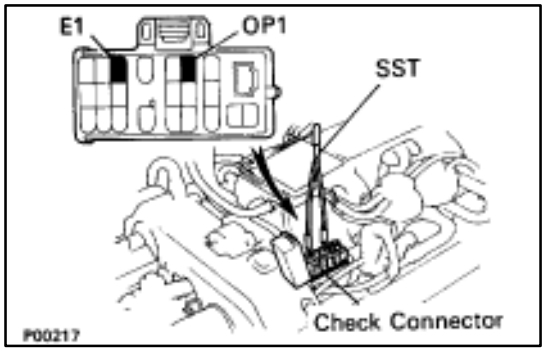

2. INSPECT OIL PRESSURE

HINT: Before inspecting the oil pressure, first check that the A/C is off.

(a) Using SST, connect terminals OP1 and E1 of the check (”DIAGNOSIS”) connector.

SST 09843–18020

HINT: When terminals OP1 and E1 are connected, the circuit of the water temp. sensor is grounded, fixing the fan speed at approx. 1,100 rpm. (Fail–safe operation occurs.)

(b) Bleed the hydraulic cooling system

(See page CO–24)

(c) Keep the engine speed at 2,000 rpm until the fluid temperature reaches the specified temperature.

Fluid temp.: 70–90°C (158–195°F)

(d) Check the fluid level is correct.

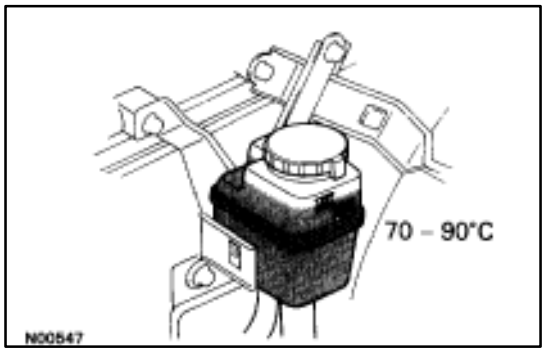

(e) Measure the oil pressure at idling.

Oil pressure: 1,177–2,452 kPa
(12–25 kgf/cm, 171–356 psi)

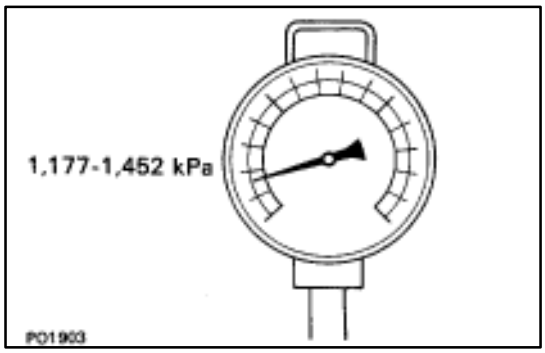

(f) Remove the SST from the check connector.

SST 09843–18020

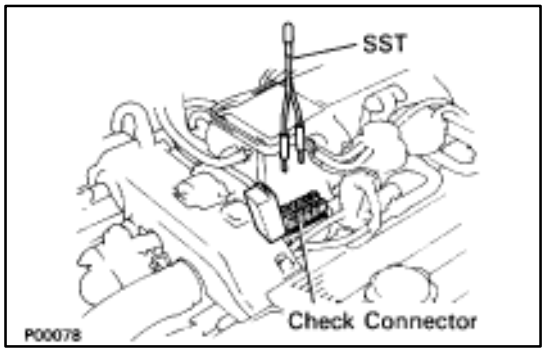

(g) Check that the oil pressure decreases.

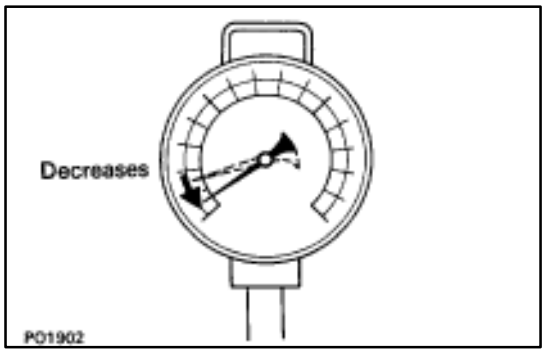

3. REMOVE PRESSURE GAUGE, AND CONNECT PRESSURE HOSE

Torque: 64 N·m (650 kgf·cm, 47 ft·lbf)

WhereEverybodyKnowsYourName

Hydraulic Pump

COMPONENTS FOR REMOVAL AND INSTALLATION

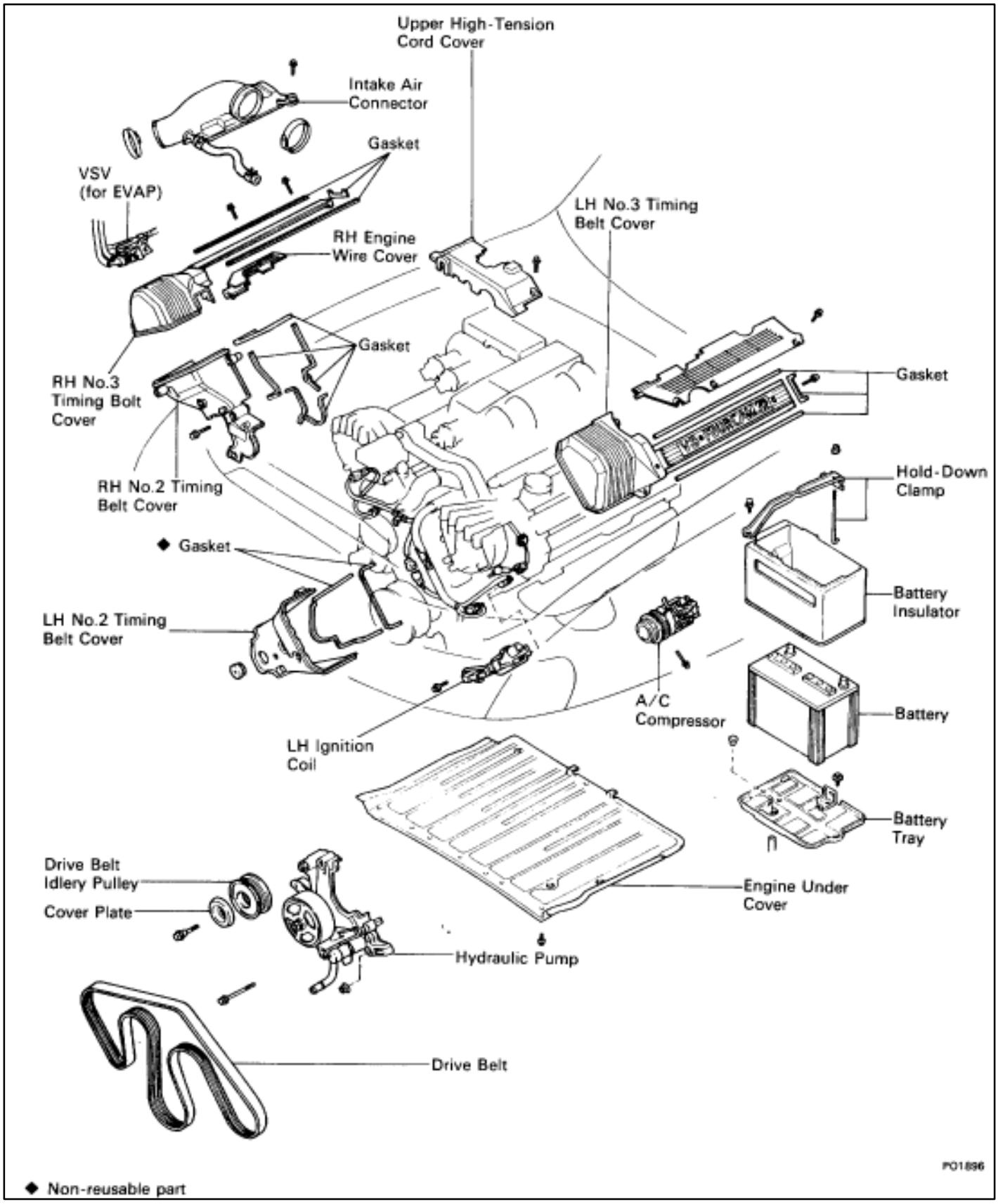

◆ Non-reusable part

WhereEverybodyKnowsYourName

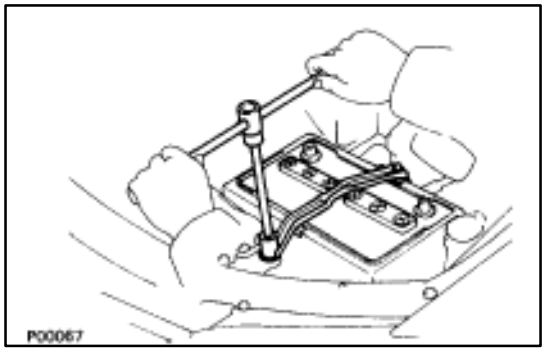

REMOVAL OF HYDRAULIC PUMP

(See Components on page CO–26)

1. **REMOVE BATTERY**
   CAUTION: Work must be started after approx. 20 seconds or longer from the time the ignition switch is turned to the "LOCK" position and the negative (–) terminal cable is disconnected from the battery.

2. **REMOVE ENGINE UNDER COVER**

3. **DRAIN ENGINE COOLANT (See page CO–6)**

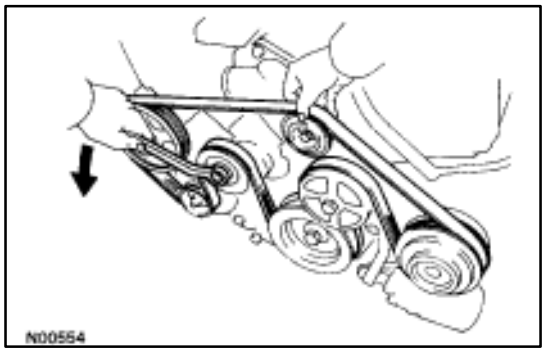

4. **REMOVE DRIVE BELT**
   Loosen the drive belt tension by turning the drive belt tensioner counterclockwise, and remove the drive belt.
   HINT: The pulley bolt for the belt tensioner has a left–hand thread.

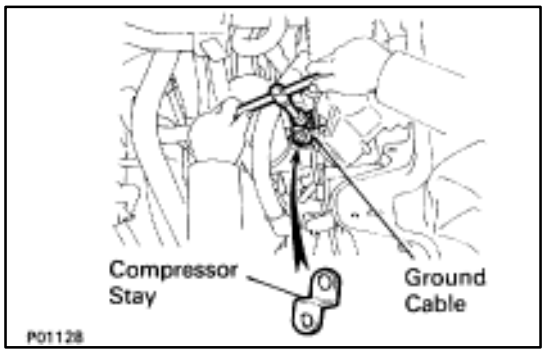

5. **DISCONNECT A/C COMPRESSOR**
   (a) Disconnect the A/C compressor connector.
   (b) Remove the nut, and disconnect the ground cable.
   (c) Remove the bolt and A/C compressor stay.

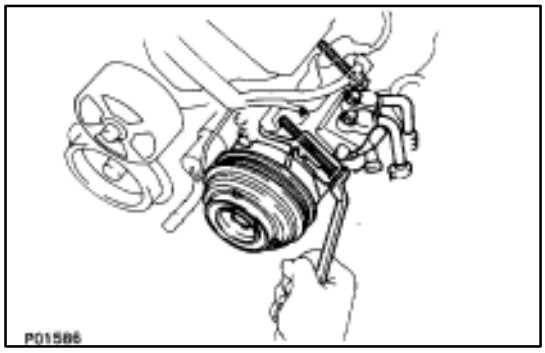

   (d) Remove the two bolts, and disconnect the A/C compressor from the engine.

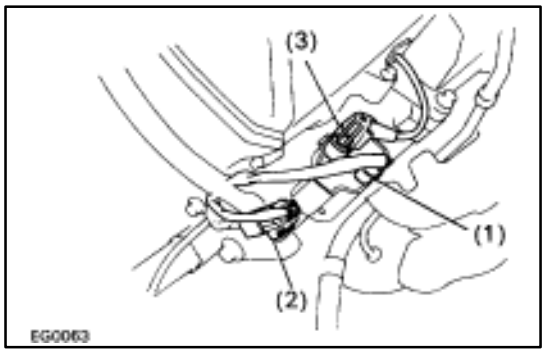

6. **REMOVE LH IGNITION COIL**
   (a) Disconnect the following connectors and cord:
      (1) Ignition coil connector
      (2) Noise filter connector
      (3) High–tension cord

WhereEverybodyKnowsYourName

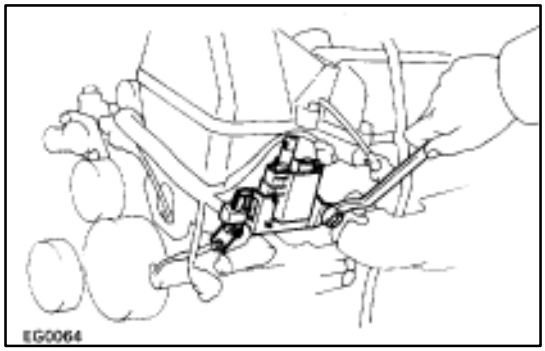

(b) Remove the two bolts and ignition coil.

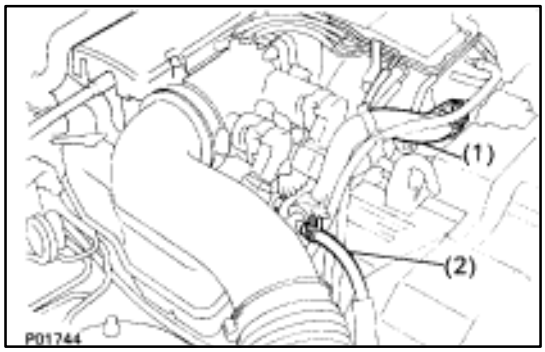

7. REMOVE INTAKE AIR CONNECTOR

(a) Disconnect the following hoses:
(1) Air hose from ISC valve
(2) Air hose (from PS air control valve) from intake air connector

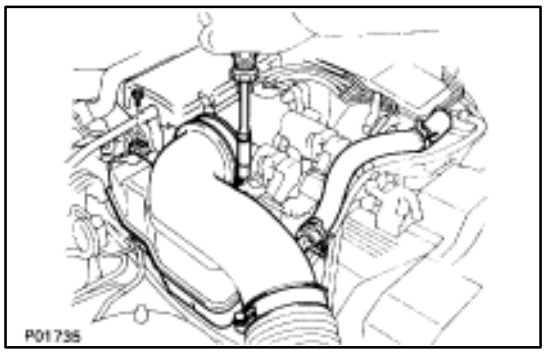

(b) Remove the bolt holding the intake air connector to the cylinder head cover.
(c) Loosen the two hose clamps.
(d) Disconnect the intake air connector from the throttle body and air cleaner hose, and remove the throttle body.

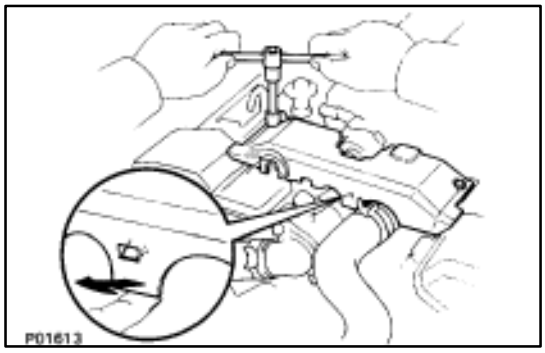

8. REMOVE UPPER HIGH–TENSION CORD COVER

(a) Remove the two mounting bolts.
(b) Disconnect the front side claw groove of the cord cover from the claw of the lower cover, and remove the cord cover.

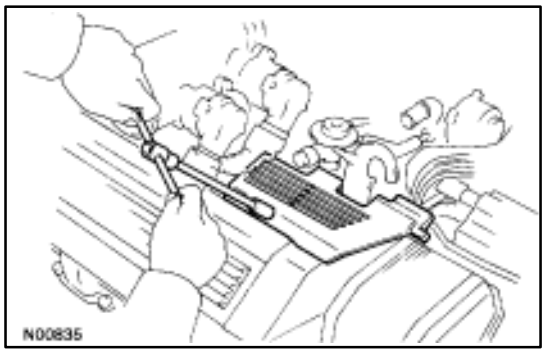

9. REMOVE RH ENGINE WIRE COVER

Remove the bolt and engine wire cover.

WhereEverybodyKnowsYourName

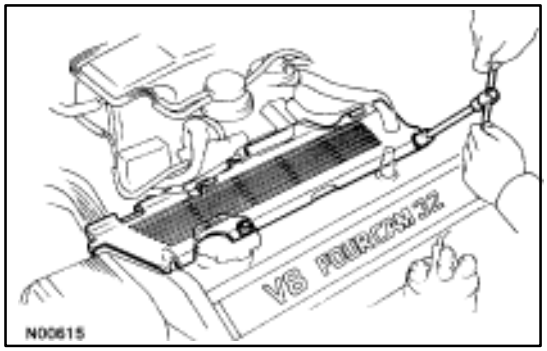

10. REMOVE LH ENGINE WIRE COVER

Remove the two bolts and engine wire cover.

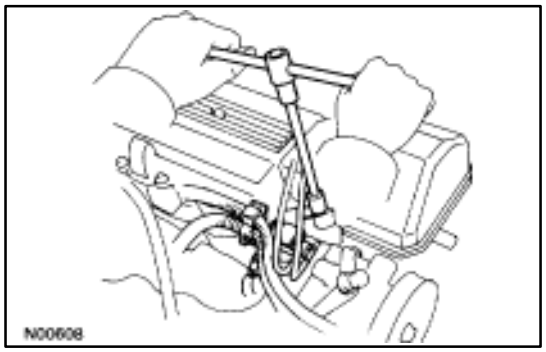

11. REMOVE VSV FOR EVAP SYSTEM

Remove the two bolts, and disconnect the VSV from cylinder head and timing belt cover.

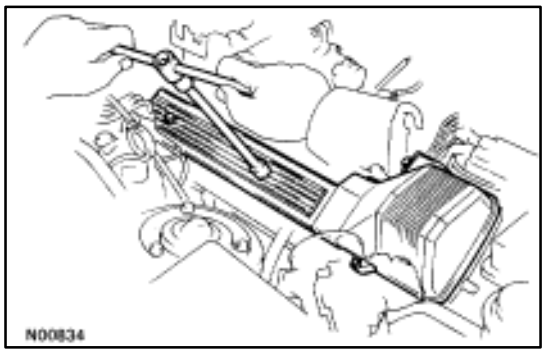

12. REMOVE RH NO.3 TIMING BELT COVER

Remove the three bolts and timing belt cover.

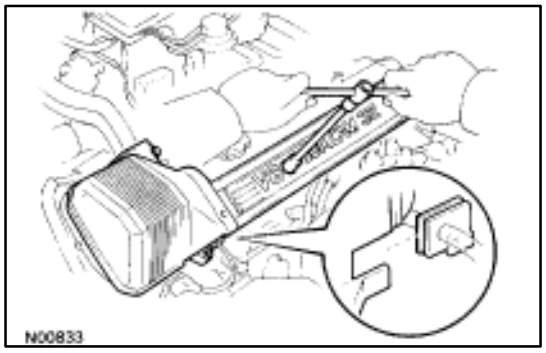

13. REMOVE LH NO.3 TIMING BELT COVER

(a) Remove the four mounting bolts.
(b) Disconnect the cord grommet from the timing belt cover, and remove the timing belt cover.
(c) Remove the cord grommet from the high–tension cord.

14. DISCONNECT RADIATOR HOSE FROM WATER INLET

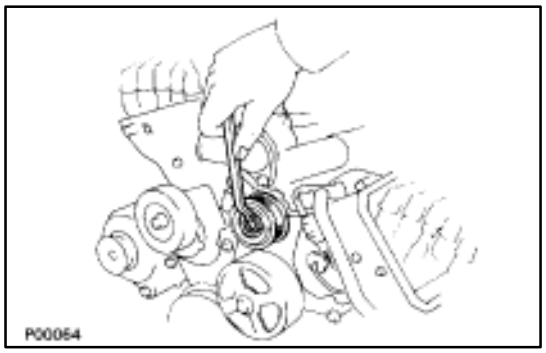

15. REMOVE DRIVE BELT IDLER PULLEY

Remove the pulley bolt, cover plate and idler pulley.

WhereEverybodyKnowsYourName

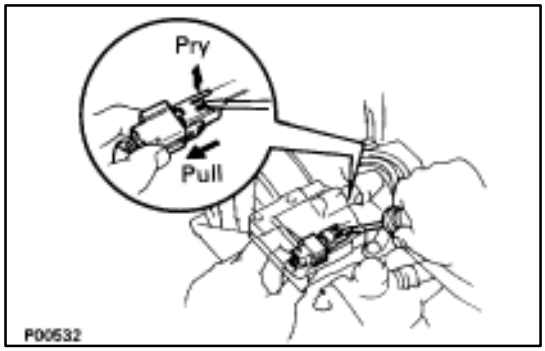

15. REMOVE RH NO.2 TIMING BELT COVER

(a) Disconnect the cam position sensor connector from the ignition coil bracket.

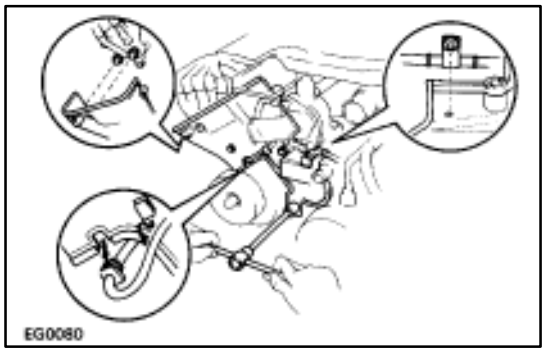

(b) Disconnect the cam position sensor wire from the clamp on the timing belt cover.
(c) Remove the five mounting bolts.
(d) Disconnect the wire clamp from the timing belt cover, and remove the timing belt cover and four gasket.

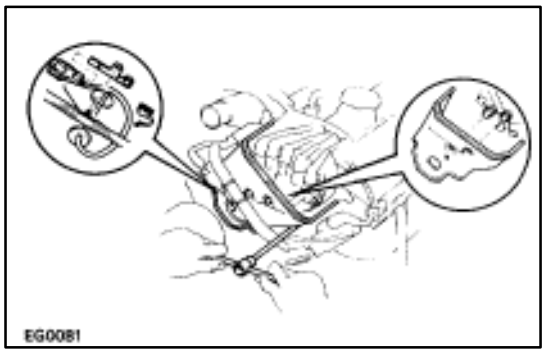

16. REMOVE LH NO.2 TIMING BELT COVER

(a) Disconnect the cam position sensor wire from the clamp on the timing belt cover.
(b) Disconnect the cam position sensor connector.
(c) Remove the three mounting bolts.
(d) Disconnect the connector grommet from the timing belt cover, and remove the timing belt cover and two gaskets.

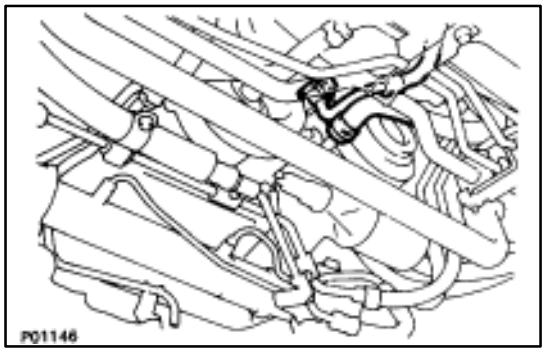

17. DISCONNECT PRESSURE AND SUCTION HOSES FROM HYDRAULIC PUMP

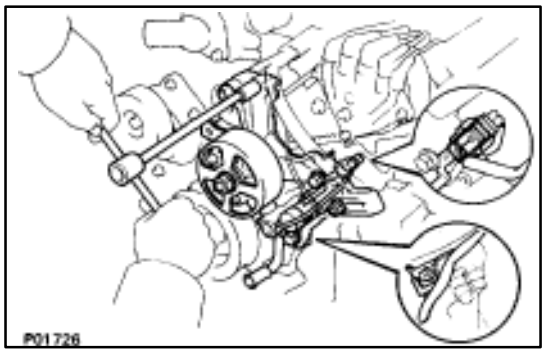

18. REMOVE HYDRAULIC PUMP

(a) Disconnect the solenoid valve connector.
(b) Remove the two mounting bolts and two nuts.
(c) Disconnect the engine speed sensor wire clamp.
(d) Remove the hydraulic pump.

WhereEverybodyKnowsYourName

COMPONENTS FOR DISASSEMBLY AND ASSEMBLY

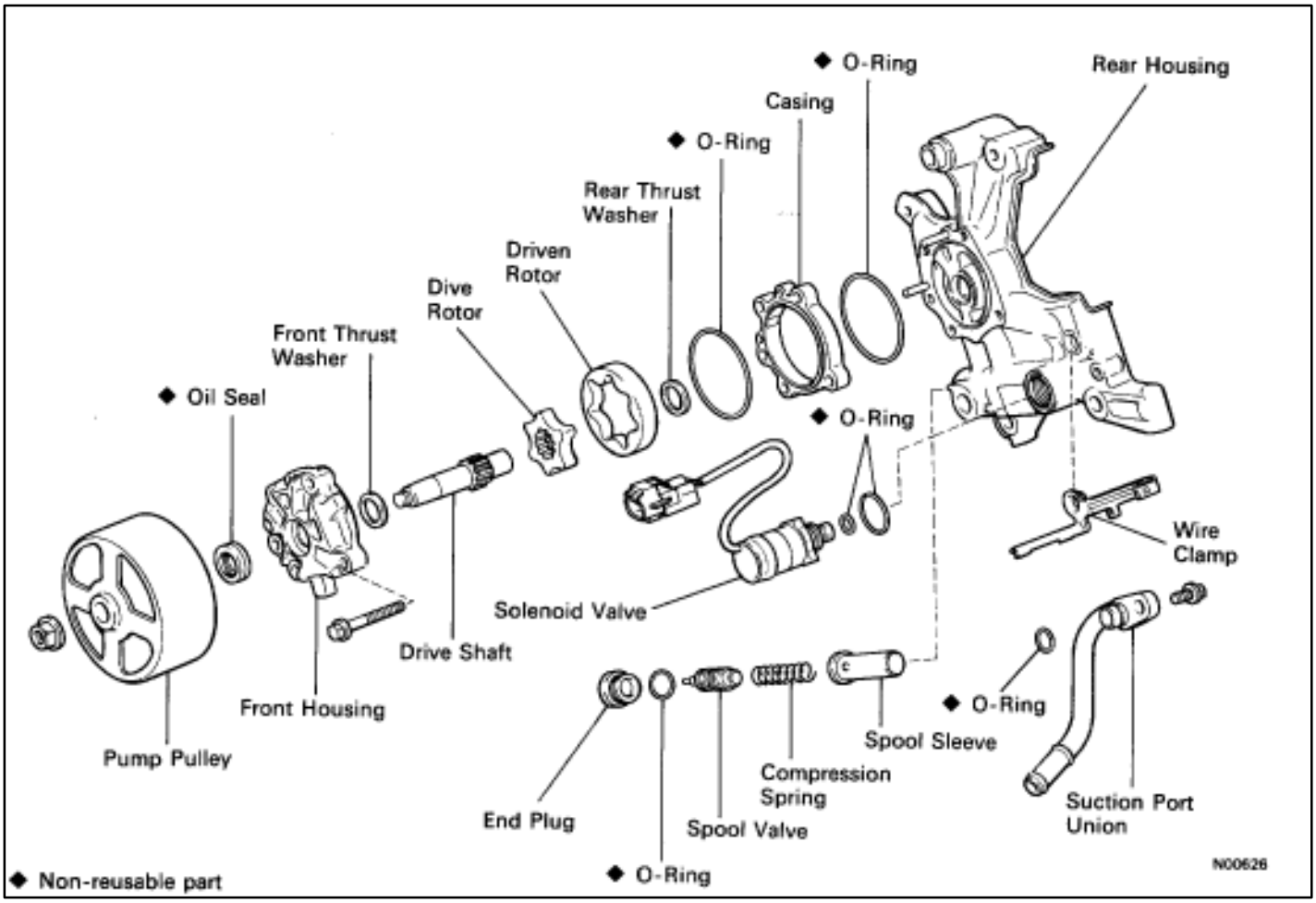

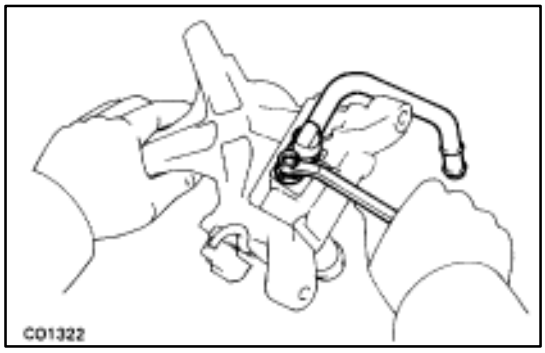

DISASSEMBLY OF HYDRAULIC PUMP

1. REMOVE SUCTION PORT UNION

(a) Remove the mounting bolt.
(b) Pull out the port union.
(c) Remove the O–ring from the port union.

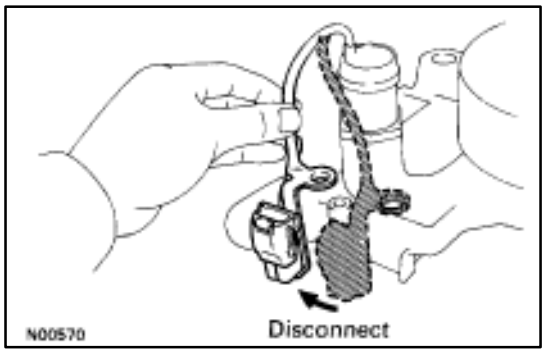

2. REMOVE WIRE CLAMP

(a) Disconnect the wire clamp from the rear housing.
(b) Remove the wire clamp from the read wire.

WhereEverybodyKnowsYourName

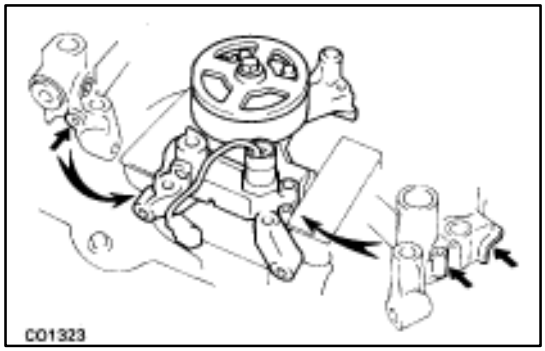

3. MOUNT REAR HOUSING

HINT: Mount the parts in a vise as shown in the illustration.

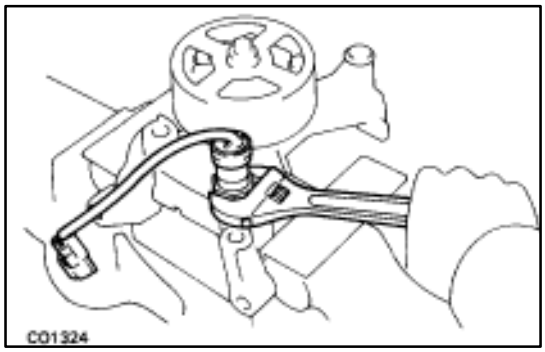

4. REMOVE SOLENOID VALVE

(a) Remove the solenoid valve.
(b) Remove the O–ring from the solenoid valve.
(c) Remove the O–ring from the rear housing.

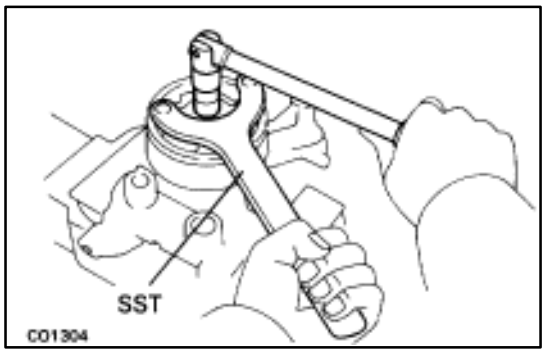

5. REMOVE PUMP PULLEY

(a) Using SST, remove the pulley nut by turning it clockwise.
SST 09278–54012

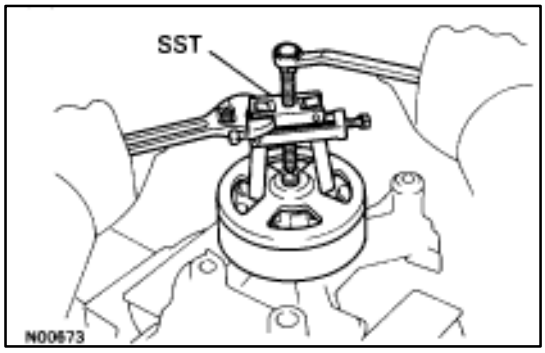

(b) Using SST, remove the pulley.
SST 09286–46011

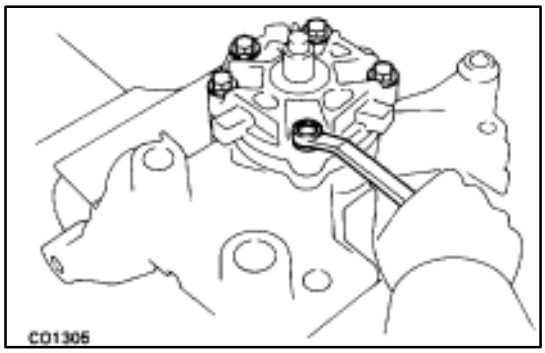

6. REMOVE FRONT HOUSING

(a) Remove the five mounting bolts.

WhereEverybodyKnowsYourName

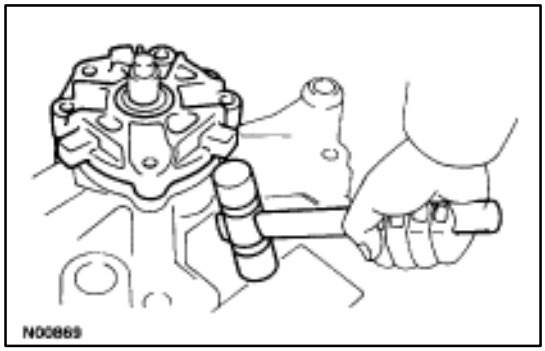

(b) Using a plastic–faced hammer, carefully tap out the front housing.
(c) Remove the O–ring from the casing.

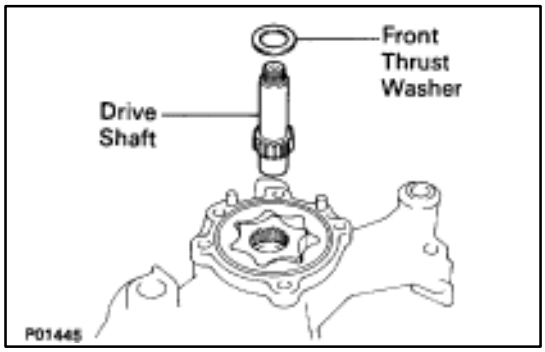

7. REMOVE FRONT THRUST WASHER AND DRIVE SHAFT

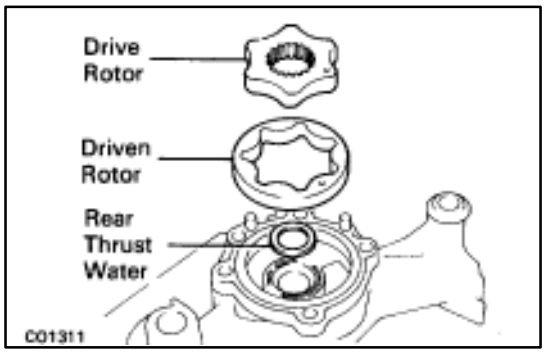

8. REMOVE DRIVE AND DRIVEN ROTORS
9. REMOVE REAR THRUST WASHER

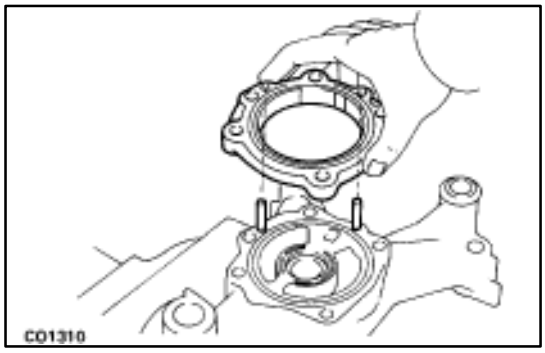

10. REMOVE CASING
(a) Remove the casing.
(b) Remove the O–ring from the rear housing.

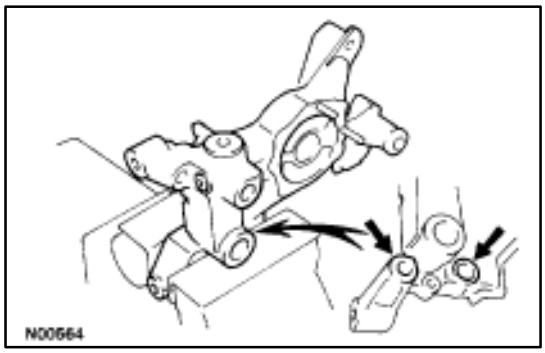

11. REMOUNT REAR HOUSING
HINT: Mount the parts in a vise as shown in the illustration.

WhereEverybodyKnowsYourName

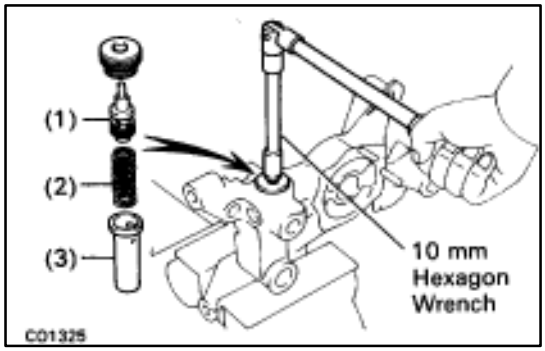

12. REMOVE SPOOL VALVE

(a) Using a 10 mm hexagon wrench, remove the end plug and following parts:
  (1) Spool valve
  (2) Compression spring
  (3) Spool sleeve

(b) Remove the O–ring from the end plug.

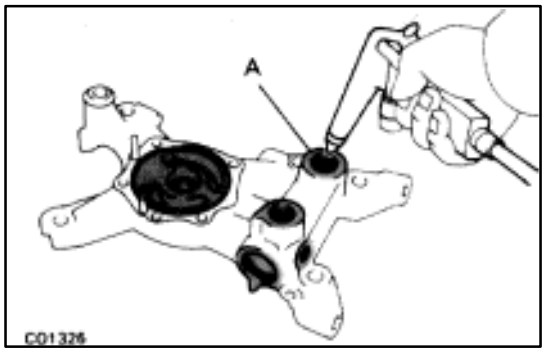

INSPECTION OF HYDRAULIC PUMP

1. CLEAN DISASSEMBLED PARTS

Using a cleaner and compressed air, clean the disassembled parts.

CAUTION: Thoroughly clean the oil passages of the rear housing. Oil passage A includes a filter which should be cleaned carefully.

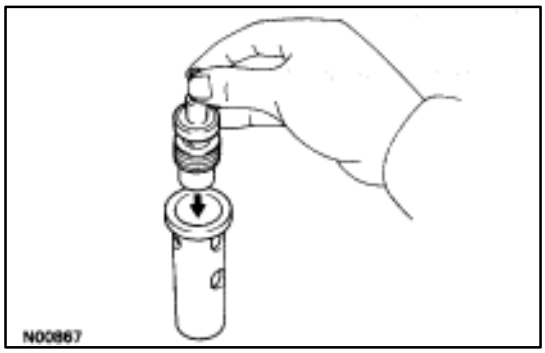

2. INSPECT SPOOL VALVE

(a) Coat the spool valve with PS fluid, and check that it falls smoothly into the spool sleeve by its own weight.

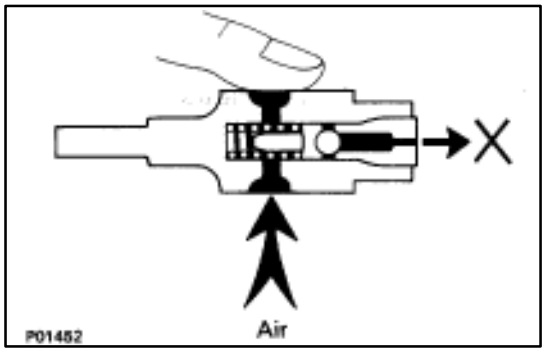

(b) Check the spool valve for leakage.
Close one of the holes and apply compressed air 392–490 kPa (4–5 kgf/cm2, 57–71 psi) into the opposite side, check that air does not come out of the end hole.

If it doesn't, replace the spool valve and sleeve as a set.

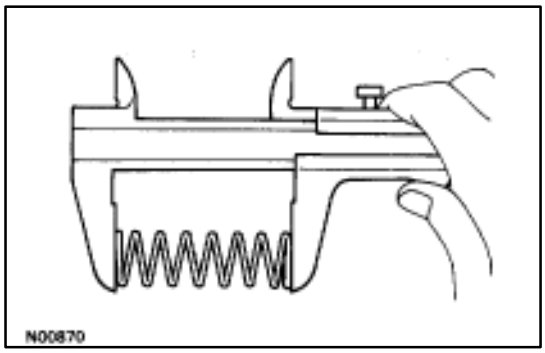

3. INSPECT SPOOL COMPRESSION SPRING

Using a vernier calipers, measure the free length of the compression spring.

Free length: 45.8 mm (1.803 in.)

If the free length is not as specified, replace the compression spring.

WhereEverybodyKnowsYourName

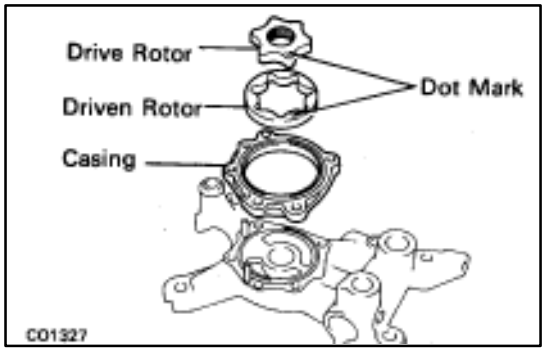

4. INSPECT DRIVE AND DRIVEN ROTORS

A. Install casing and rotors to rear housing

Face the dot mark of the rotors upward.

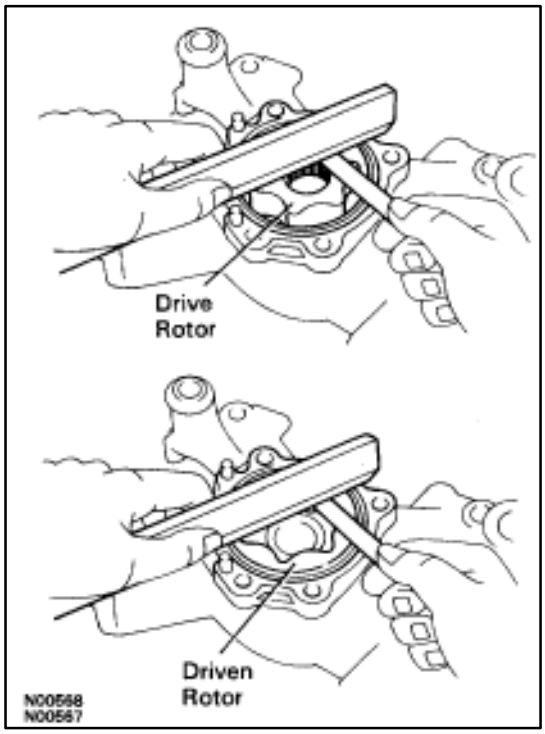

B. Inspect rotor side clearance

HINT: Before measuring the clearance, remove one side of the rotor.

Using a feeler gauge and precision straight edge, measure the clearance between the rotor and precision straight edge.

Standard side clearance:

Drive rotor 0.02 mm (0.0008 in.)

Driven rotor 0.03 mm (0.0012 in.)

Maximum side clearance:

Drive rotor 0.03 mm (0.0012 in.)

Driven rotor 0.04 mm (0.0016 in.)

If the clearance is greater than maximum, replace the rotors as a set. If necessary, replace the housings.

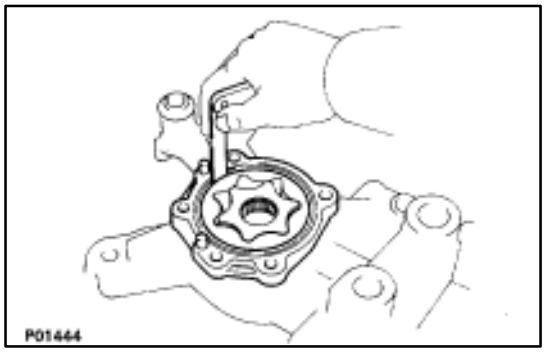

C. Inspect rotor body clearance

Using a feeler gauge, measure the clearance between the driven rotor and casing.

Standard body clearance: 0.05–0.09 mm (0.0020–0.0035 in.)

Maximum body clearance: 0.10 mm (0.0039 in.)

If the clearance is greater than maximum, replace the rotors as a set. If necessary, replace the casing.

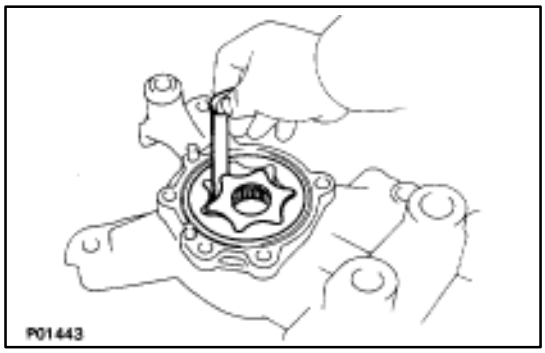

D. Inspect rotor tip clearance

Using a feeler gauge, measure the clearance of all the six drive rotor tips between the drive and driven rotors.

Standard tip clearance: 0.02 mm (0.0008 in.)

Maximum tip clearance: 0.03 mm (0.0012 in.)

If the clearance is greater than maximum, replace the rotors as a set.

E. Remove rotors and causing from rear housing

WhereEverybodyKnowsYourName

5. INSPECT OIL CLEARANCE OF DRIVE SHAFT

(a) Using a caliper gauge, measure the bushing inside diameter on the housing.

Bushing inside diameter: 17.00–17.05 mm (0.6693–0.6713 in.)

(b) Using a micrometer, measure the drive shaft diameter.

Shaft diameter: 16.97–16.98 mm (0.6681–0.6685 in.)

(c) Subtract the drive shaft diameter measurement from the bushing inside diameter measurement.

Standard clearance: 0.02–0.08 mm (0.0008–0.0031 in.)

Maximum clearance: 0.08 mm (0.0031 in.)

If the clearance is greater than maximum, replace the shaft. If necessary, replace the housings.

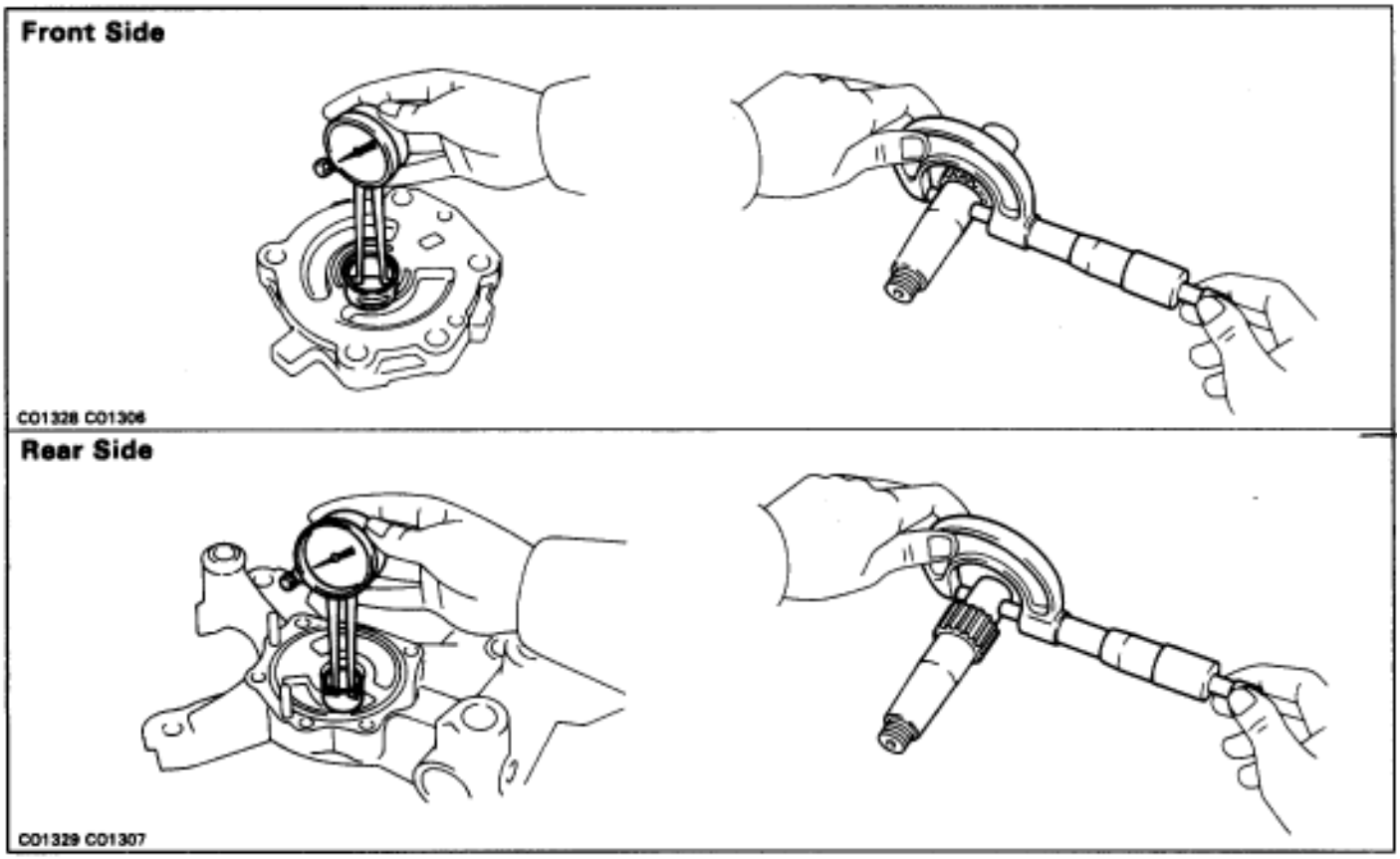

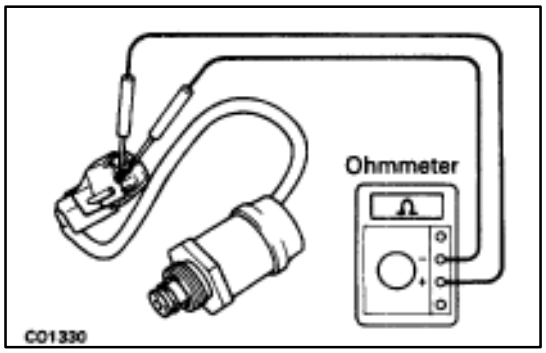

6. INSPECT SOLENOID VALVE RESISTANCE

Using an ohmmeter, measure the resistance between the terminals.

Resistance (Cold): 7.5–8.5 ?

WhereEverybodyKnowsYourName

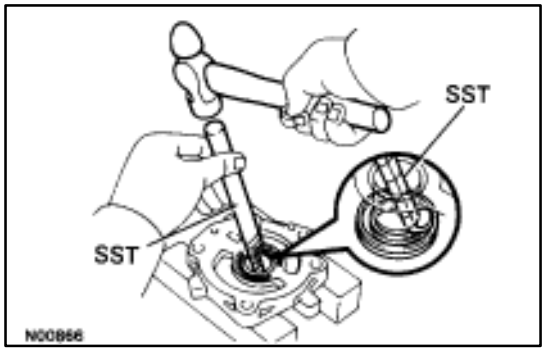

REPLACEMENT OF OIL SEAL

1. REMOVE OIL SEAL

Using SST and a hammer, tap out the oil seal.
SST 09631–10030

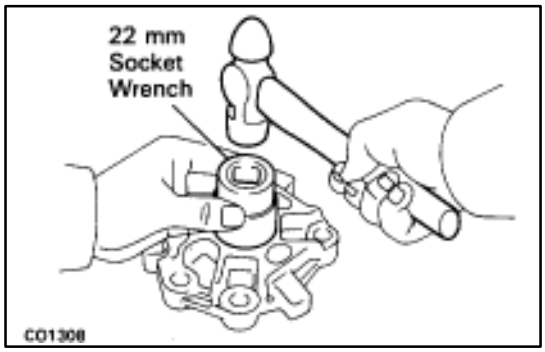

2. INSTALL OIL SEAL

(a) Using a 22 mm socket wrench and hammer, tap in a new oil seal until its surface is flush with the housing edge.
(b) Apply fluid to the oil seal lip.

ASSEMBLY OF HYDRAULIC PUMP

(See Components on page CO–31)

HINT:

- Thoroughly clean all parts to be assembled.
- Before installing the parts, apply new fluid to all sliding and rotating surfaces.

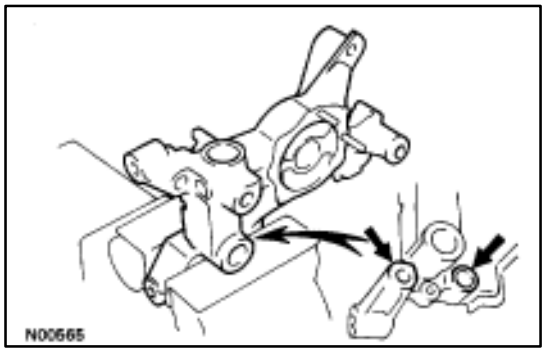

1. MOUNT REAR HOUSING

HINT: Mount the parts in a vise as shown in the illustration.

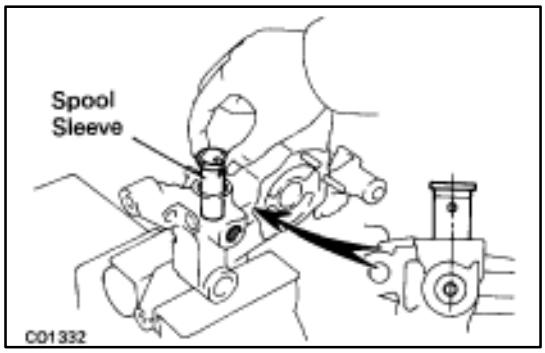

2. INSTALL SPOOL VALVE

(a) Align the small hole of the spool sleeve with the hole of the rear housing, and insert the spool body into the rear housing.

WhereEverybodyKnowsYourName

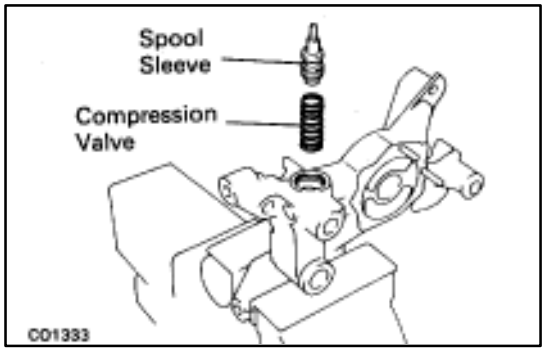

(b) Insert the compression spring and spool valve into the rear housing.

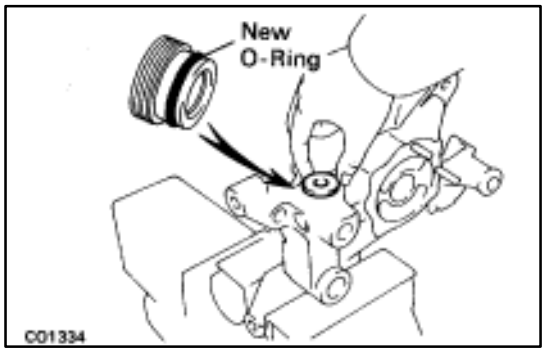

(c) Install a new O–ring to the end plug.
(d) Apply fluid to the O–ring.
(e) Temporarily install the end plug.

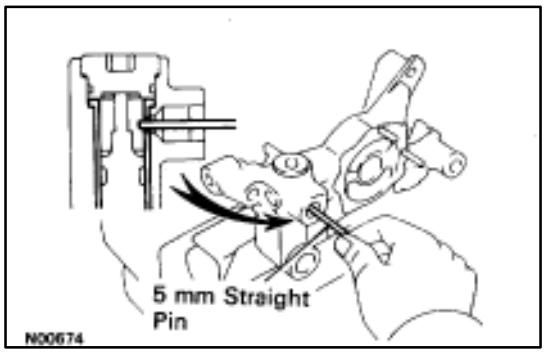

(f) Insert a 5 mm (0.19 in.) straight pin through the holes of the rear housing and spool sleeve.

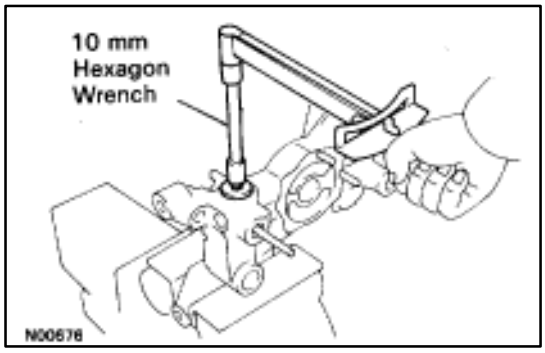

(g) Using a 10 mm hexagon wrench, install the end plug.
Torque: 19 N·m (200 kgf·cm, 14 ft·lbf)

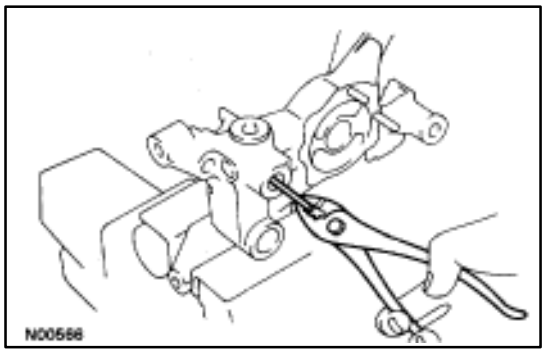

(h) Pull out the straight pin.

WhereEverybodyKnowsYourName

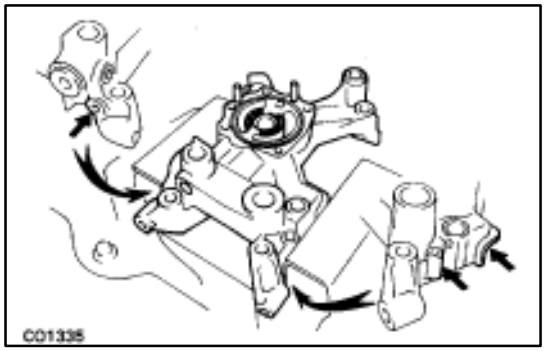

3. REMOUNT REAR HOUSING

HINT: Mount the parts in a vise as shown in the illustration.

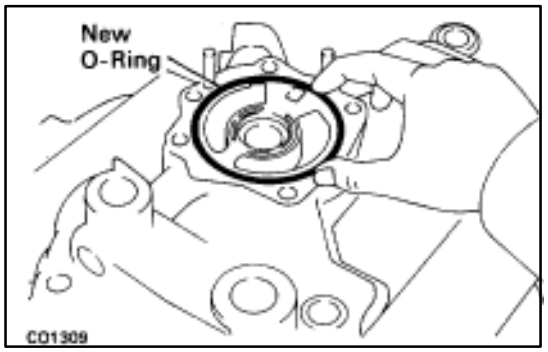

4. INSTALL CASING

HINT: If rubber from the O–rings adheres to the O–ring installation location, replace the casing.

(a) Install a new O–ring to the rear housing groove.

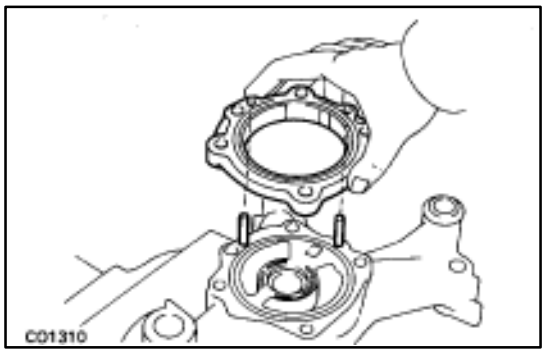

(b) Align the pin hole of the casing with the straight pin on the rear housing, and install the casing.

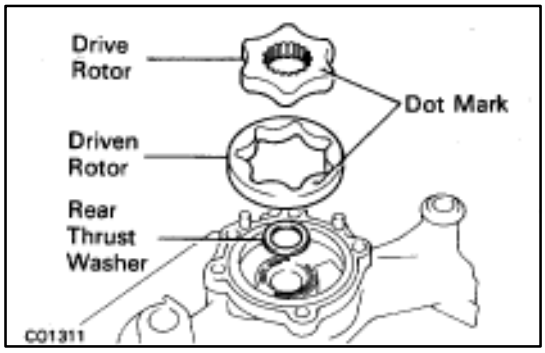

5. INSTALL REAR THRUST WASHER

6. INSTALL DRIVEN AND DRIVE ROTORS

Install the drive and driven rotors with the dot mark facing upward.

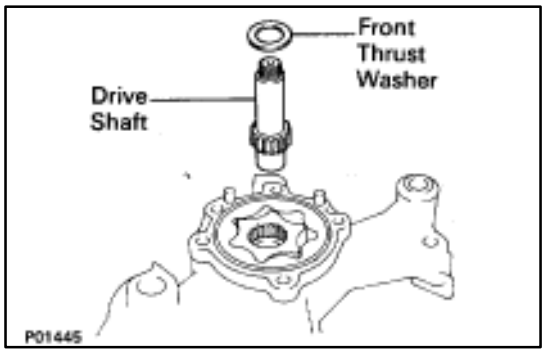

7. INSTALL DRIVE SHAFT

8. INSTALL FRONT THRUST WASHER

WhereEverybodyKnowsYourName

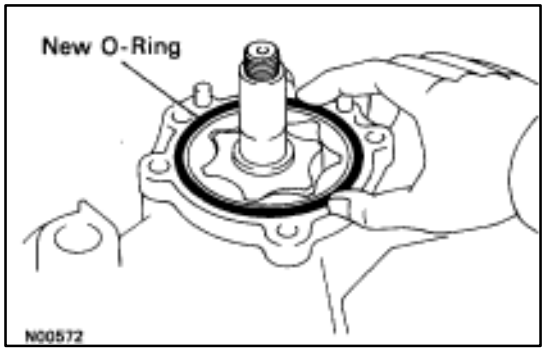

9. INSTALL FRONT HOUSING

(a) Install a new O–ring to the casing groove.

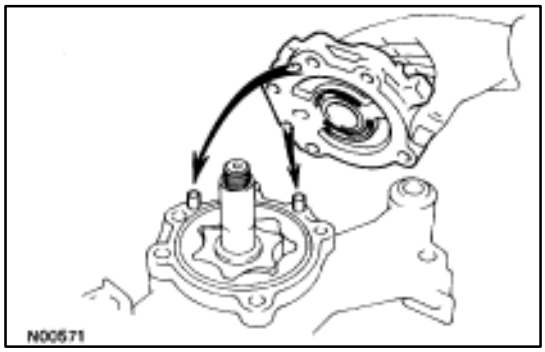

(b) Align the pin holes of the front housing with the straight pin.

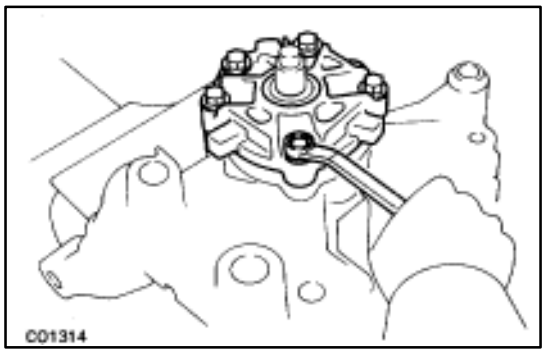

(c) Apply a light coat of fluid on the threads and under the heads of the mounting bolts.

(d) Install the front housing with the five bolts.

Torque: 21 N·m (210 kgf·cm, 15 ft·lbf)

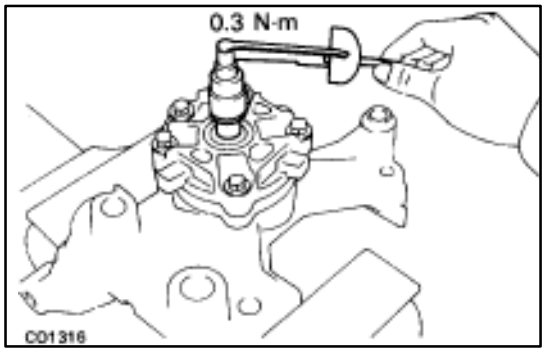

10. INSTALL DRIVE SHAFT PRELOAD

(a) Check that the drive shaft rotates smoothly without abnormal noise.

(b) Temporarily install the pulley nut, and check the rotating torque.

Rotating torque:

0.3 N·m (3.0 kgf·cm, 2.6 in.·lbf)

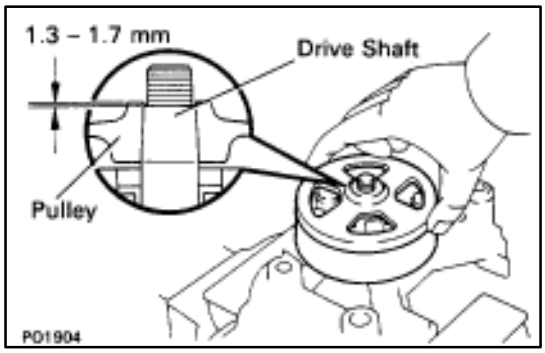

11. INSTALL PUMP PULLEY

(a) Slide the pulley onto the drive shaft.

(b) Measure the clearance between the pulley end and drive shaft end.

Standard: 1.3–1.7 mm (0.051–0.067 in.)

Minimum: 1.0 mm (0.039 in.)

If the clearance is less than minimum, replace the pulley.

WhereEverybodyKnowsYourName

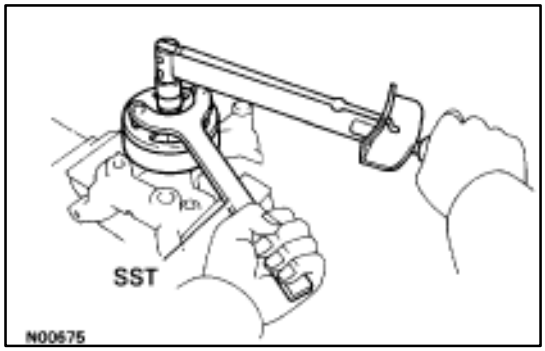

(c) Using SST, install the pulley with the nut. Tighten the nut by turning it counterclockwise.

SST 09278–54012

Torque: 59 N·m (600 kgf·cm, 43 ft·lbf)

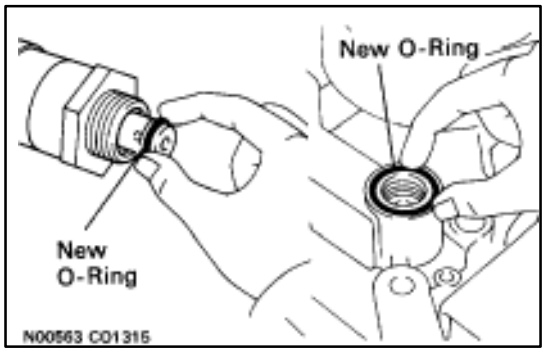

12. INSTALL SOLENOID VALVE

(a) Install a new O–ring to the solenoid valve.
(b) Install a new O–ring to the rear housing groove.
(c) Apply fluid to the two O–rings.

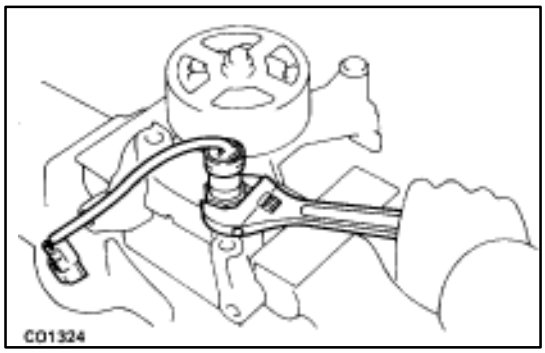

(d) Install the solenoid valve.

Torque: 39 N·m (400 kgf·cm, 28 ft·lbf)

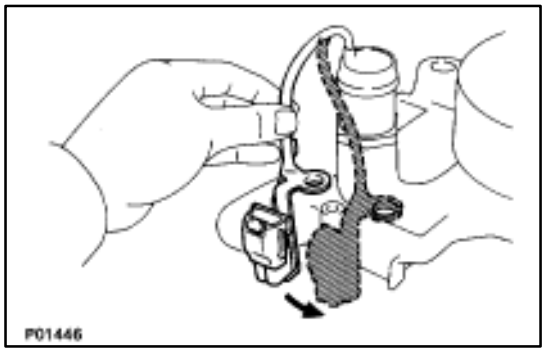

13. INSTALL WIRE CLAMP

(a) Install the wire clamp to the read wire.
(b) Install the wire clamp to the rear housing.

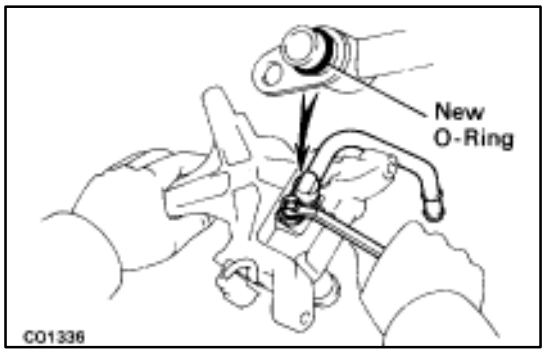

14. INSTALL SUCTION PORT UNION

(a) Install the O–ring to the port union.
(b) Apply fluid to the O–ring.
(c) Install the port union with the bolt.

Torque: 13 N·m (135 kgf·cm, 10 ft·lbf)

WhereEverybodyKnowsYourName

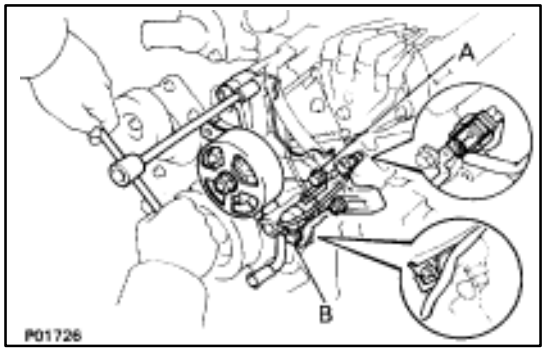

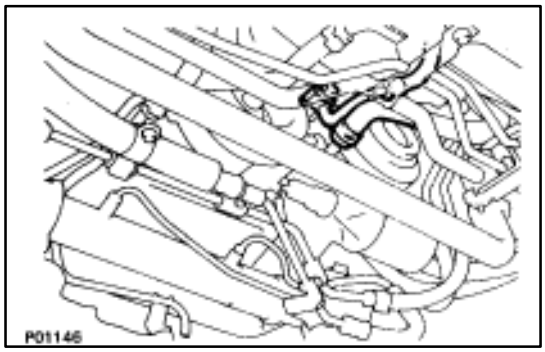

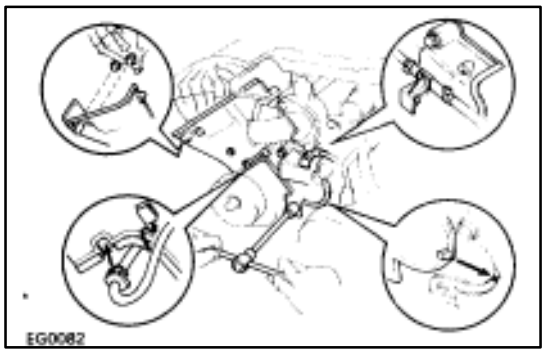

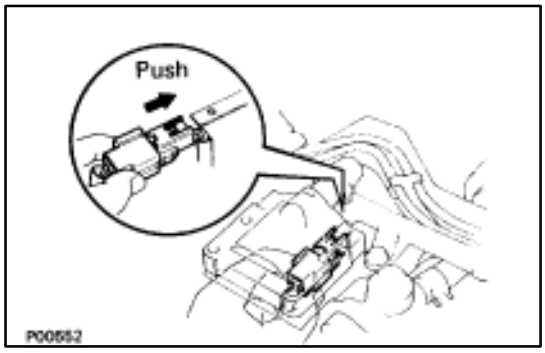

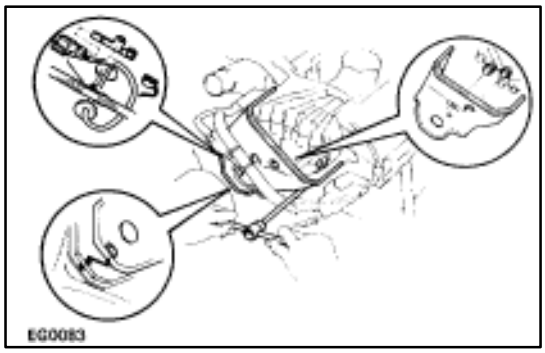

INSTALLATION OF HYDRAULIC PUMP

(See Components on page CO–26)

1. INSTALL HYDRAULIC PUMP

(a) Install the hydraulic pump, solenoid valve connector clamp and engine speed sensor wire clamp with the two bolts and two nuts.

Torque:

12 mm head 16 N·m (160 kgf·cm, 12 ft·lbf)

14 mm head 20 N·m (310 kgf·cm, 22 ft·lbf)

HINT: Each bolt length is indicated in the illustration.

Bolt length:

A 106 mm (4.17 in.) for 12 mm head

B 114 mm (4.49 in.) for 14 mm head

(b) Connect the solenoid valve connector.

2. CONNECT PRESSURE AND SUCTION HOSES TO HYDRAULIC PUMP

(a) Connect the pressure hose with new gasket and union bolt.

Torque: 64 N·m (650 kgf·cm, 47 ft·lbf)

(b) Connect suction hose.

3. INSTALL RH NO.2 TIMING BELT COVER

(a) Install the four gaskets to the timing belt cover.

(b) Install the connector grommet to the timing belt cover.

(c) Install the timing belt cover with the five bolts.

Torque: 16 N·m (160 kgf·cm, 12 ft·lbf)

HINT (12 mm head bolt): Use bolts 106 mm (4.17 in.) in length.

(d) Install the wire clamp to the timing belt cover.

(e) Install the cam position sensor wire to the wire clamp on the timing belt cover.

(f) Install the cam position sensor connector to the ignition coil bracket.

4. INSTALL LH NO.2 TIMING BELT COVER

(a) Install the two gaskets to the timing belt cover.

(b) Run the cam position sensor wire through the timing belt cover hole.

(c) Install the timing belt cover and connector bracket with the three bolts.

(d) Connect the cam position sensor connector.

(e) Install the cam position sensor connector to the connector bracket.

(f) Install the cam position sensor wire to the wire clamp on the timing belt cover.

(g) Install the connector grommet to the timing belt cover.

WhereEverybodyKnowsYourName

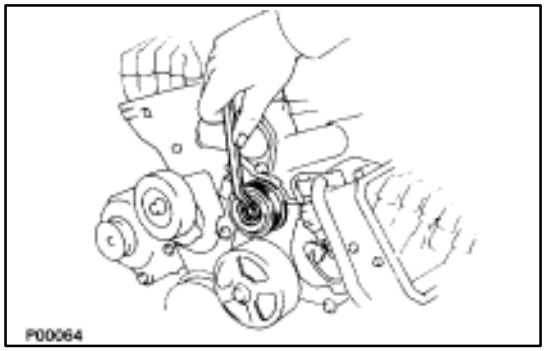

5. INSTALL DRIVE BELT IDLER PULLEY

Install the idler pulley and cover plate with the pulley bolt.

Torque: 37 N·m (380 kgf·cm, 27 ft·lbf)

6. CONNECT RADIATOR HOSE TO WATER INLET

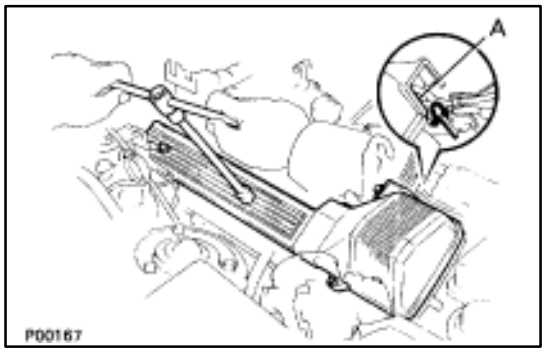

7. INSTALL RH NO.3 TIMING BELT COVER

(a) Install the three gaskets to the timing belt cover.
(b) Fit portion A of the timing belt cover, matching it with the lower high–tension cord cover.
(c) Install the timing belt cover with the three bolts.

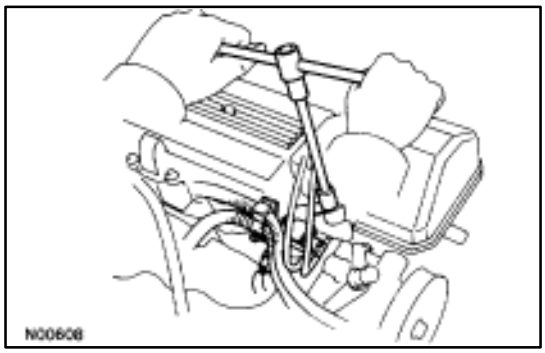

8. INSTALL VSV FOR EVAP SYSTEM

Install the VSV with the two bolts.

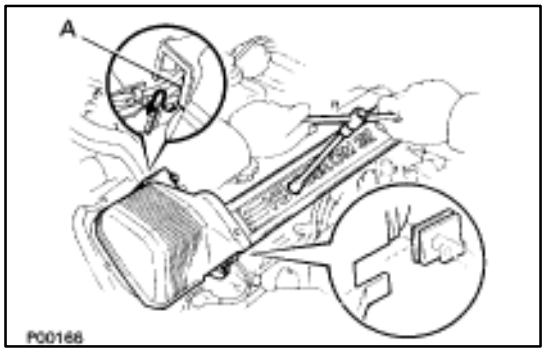

9. INSTALL LH NO.3 TIMING BELT COVER

(a) Install the three gaskets to the timing belt cover.
(b) Install the cord grommet to the high–tension cord.
(c) Install the cord grommet to the timing belt cover.
(d) Fit portion A of the timing belt cover, matching it with the lower high–tension cord cover.
(e) Install the timing belt cover with the four bolts.

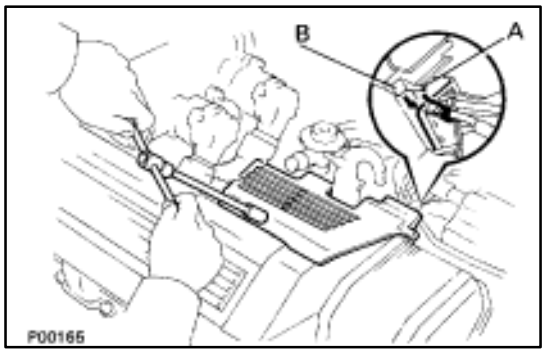

10. INSTALL RH ENGINE WIRE COVER

(a) Fit portions A and B of the engine wire cover, matching them with the lower high–tension cord cover and No.3 timing belt cover.
(d) Install the engine wire cover with the bolt.

WhereEverybodyKnowsYourName

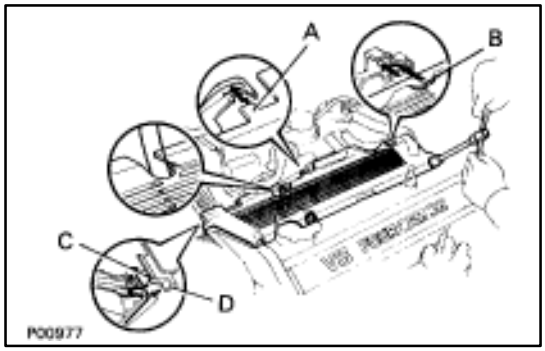

11. INSTALL LH ENGINE WIRE COVER

(a) Connect portions A and B engine wire cover to the wire brackets.

(b) Set the VSV (for fuel pressure control system) wire in original position.

(c) Fit portions C and D of the engine wire cover, matching them with the lower high–tension cord cover and No.3 timing belt cover.

(d) Install the engine wire cover with the two bolts.

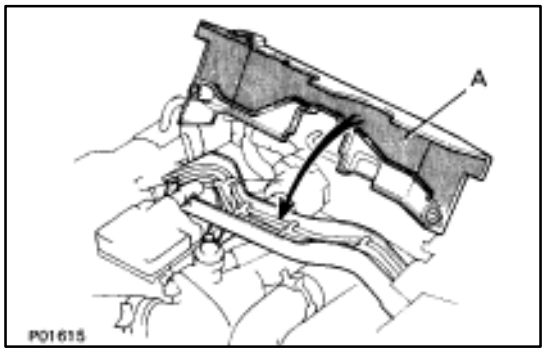

12. INSTALL UPPER HIGH–TENSION CORD COVER

(a) Fit portion A of the upper high–tension cover, matching it with the top of the lower high–tension cord cover.

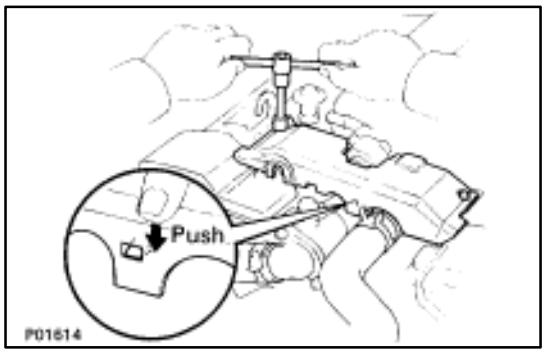

(b) Push the front side of the high–tension cord cover, and connect the front side claw groove of the upper high–tension cord cover to the claw of the lower high–tension cord cover.

(c) Install the upper high–tension cord cover with the two bolts.

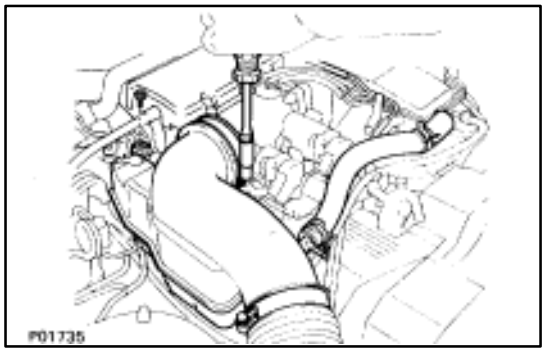

13. INSTALL INTAKE AIR CONNECTOR

(a) Connect the end portions of the intake air connector to the throttle body and air cleaner hose.

(b) Tighten the two hose clamps.

(c) Install the bolt holding the intake air connector to the cylinder head cover.

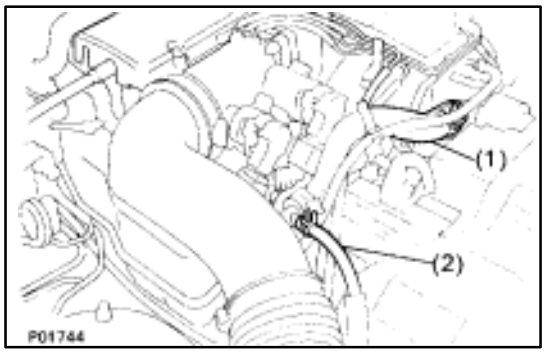

(d) Connect the following hoses:

(1) Air hose to ISC valve

(2) Air hose (from PS air control valve) to intake air connector

WhereEverybodyKnowsYourName

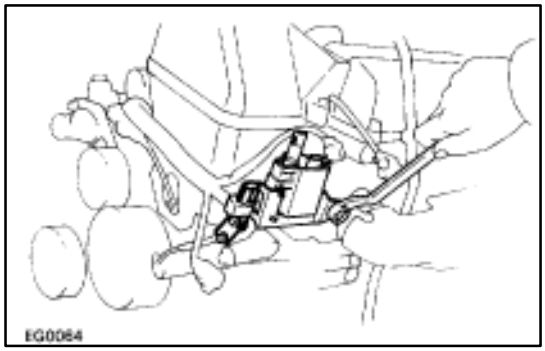

14. INSTALL IGNITION COIL

(a) Install the ignition coil with the two bolts.

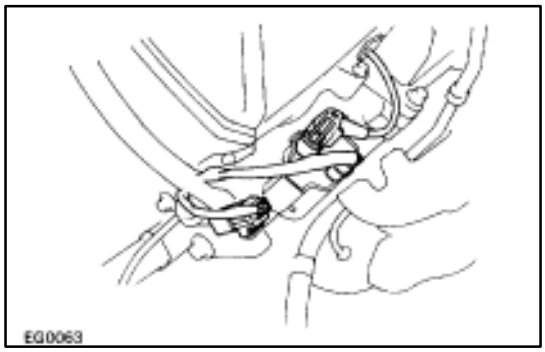

(b) Connect the following connectors and cord:
   (1) Ignition coil connector
   (2) Noise filter connector
   (3) High–tension cord

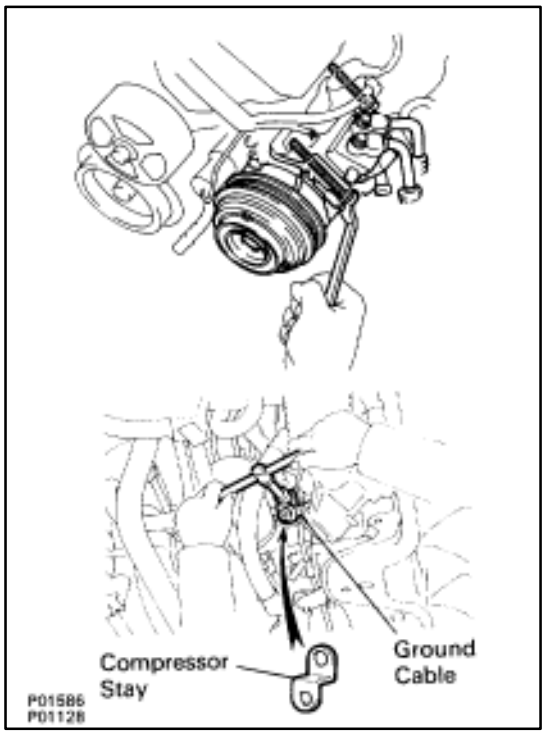

15. INSTALL A/C COMPRESSOR

(a) Install the A/C compressor, compressor stay and ground cable with the three bolts and nut.

Torque: Bolt 49 N·m (500 kgf·cm, 36 ft·lbf)
Nut 29 N·m (300 kgf·cm, 22 ft·lbf)

(b) Connect the A/C compressor connector.

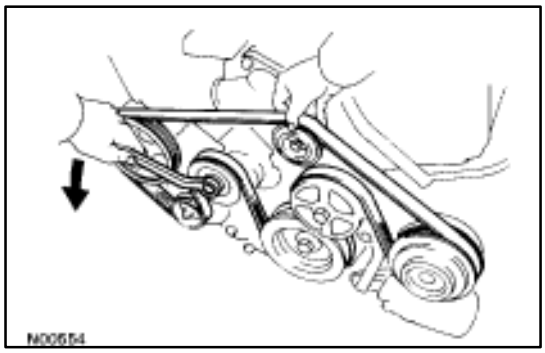

16. INSTALL DRIVE BELT

Install the drive belt by turning the drive belt tensioner counterclockwise.

HINT: The pulley bolt for the belt tensioner has a left–hand thread.

17. CONNECT RADIATOR HOSE TO WATER INLET

WhereEverybodyKnowsYourName

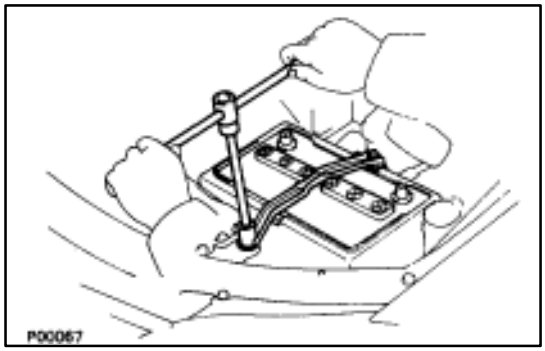

18. INSTALL BATTERY

19. FILL ENGINE WITH COOLANT (See page CO–7)
20. FILL COOLING FAN RESERVOIR TANK WITH FLUID (See pages CO–23 and 24)
21. START ENGINE AND CHECK FOR LEAKS
22. INSTALL ENGINE UNDER COVER

WhereEverybodyKnowsYourName

Hydraulic Motor

COMPONENTS FOR REMOVAL AND INSTALLATION

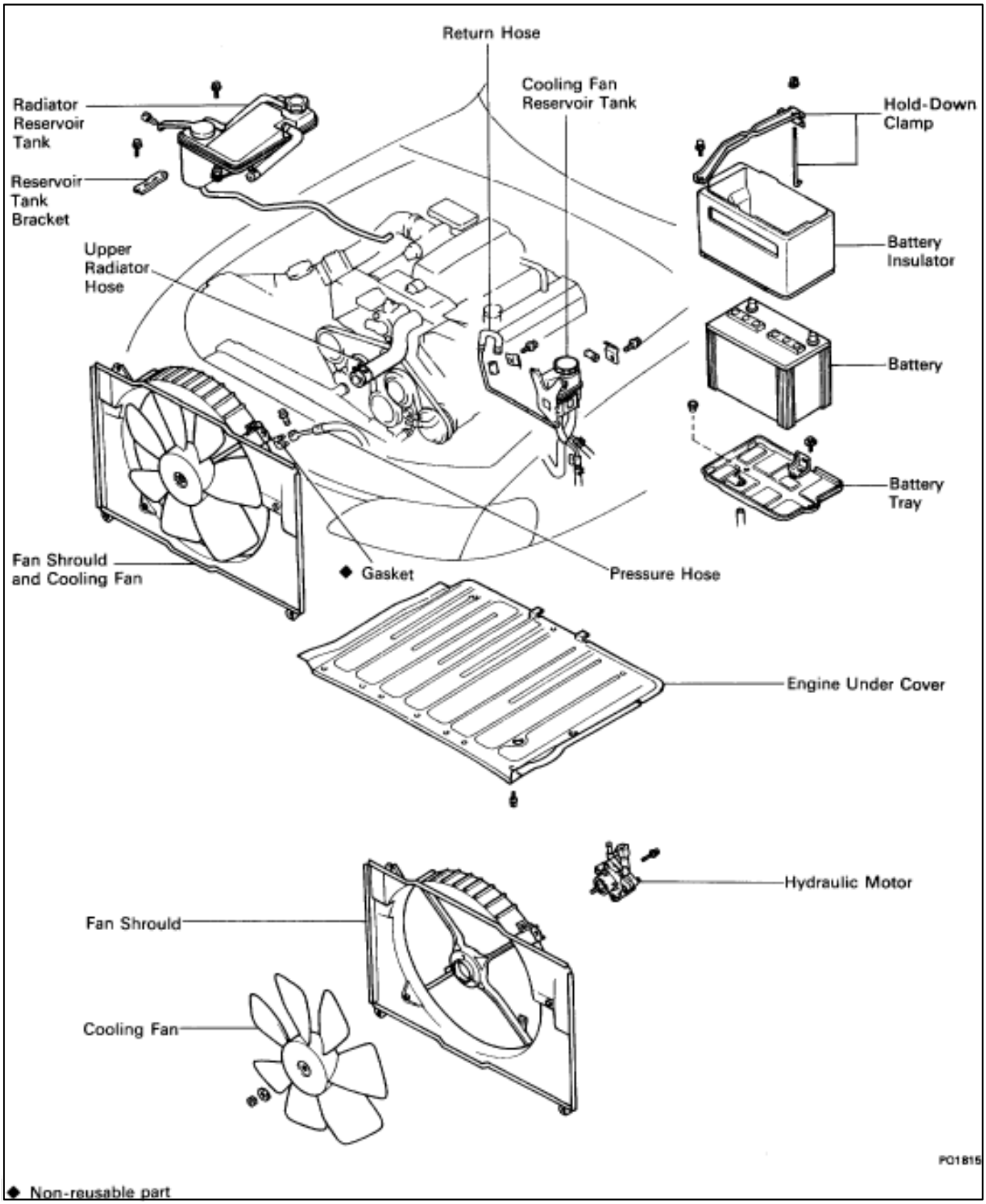

WhereEverybodyKnowsYourName

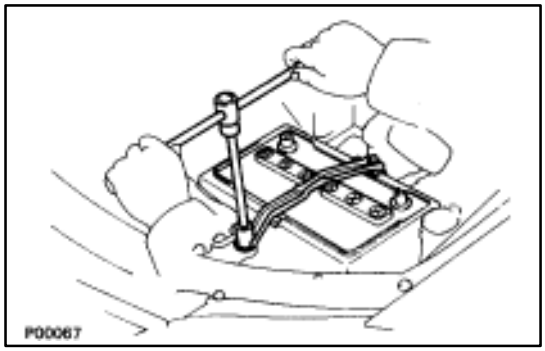

REMOVAL OF HYDRAULIC MOTOR

(See Components on page CO–47)

1. **REMOVE BATTERY**
   CAUTION: Work must be started after approx. 20 seconds or longer from the time the ignition switch is turned to the "LOCK" position and the negative (–) terminal cable is disconnected from the battery.
2. **REMOVE ENGINE UNDER COVERS**
3. **DRAIN ENGINE COOLANT (See page CO–6)**

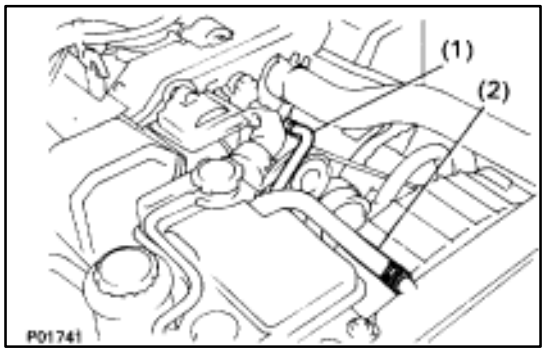

4. **REMOVE RADIATOR RESERVOIR TANK**
   (a) Disconnect the coolant level sensor connector.
   (b) Disconnect the following hoses:
      (1) Reservoir hose from water inlet housing
      (2) Reservoir hose from radiator

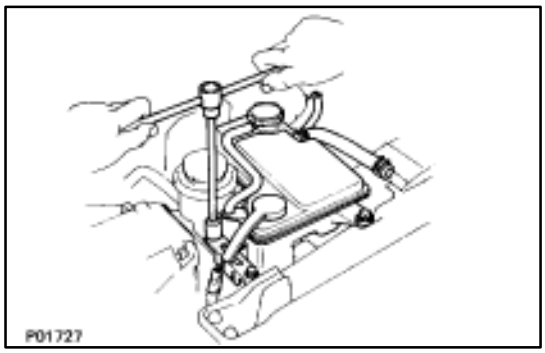

   (c) Remove the two bolts and reservoir tank bracket.
   (d) Disconnect the reservoir tank from the reservoir tank bracket, and remove the reservoir tank.

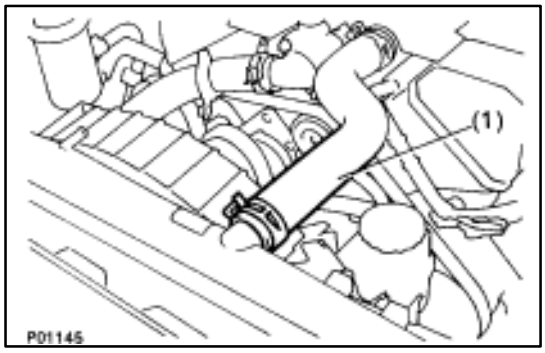

5. **DISCONNECT HOSES**
   Disconnect the following hoses:
      (1) Upper radiator hose from radiator

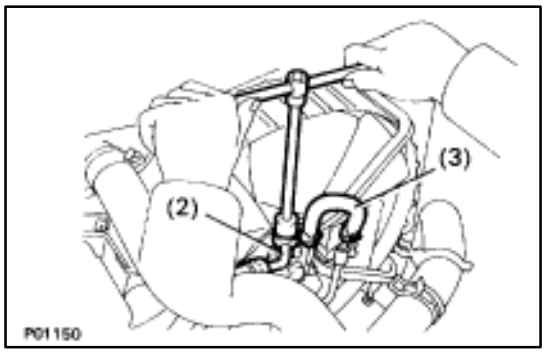

      (2) Pressure hose from hydraulic motor
      (3) Return hose from hydraulic motor

WhereEverybodyKnowsYourName

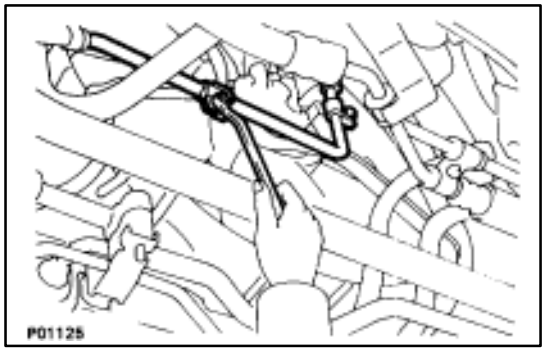

6. DISCONNECT COOLING FAN INLET PIPE FROM FAN SHROULD

Remove the two bolts, brackets and bushings, and disconnect the inlet pipe.

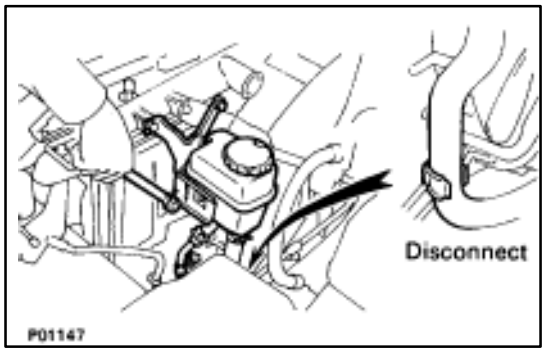

7. DISCONNECT COOLING FAN RESERVOIR TANK FROM FAN SHROULD

(a) Disconnect the suction hose from the clamp on the fan shrould.

(b) Remove the four bolts, and disconnect the reservoir tank.

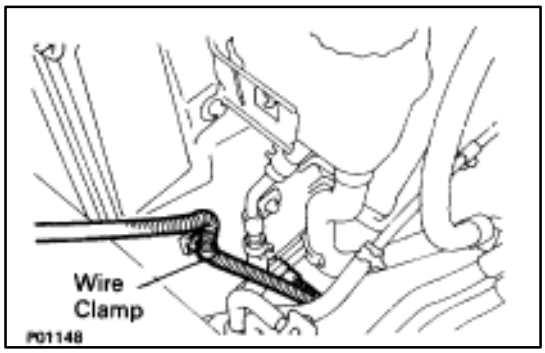

8. REMOVE RADIATOR FAN SHROULD

(a) Disconnect the wire clamp (for temperature sensor) from the radiator fan shrould.

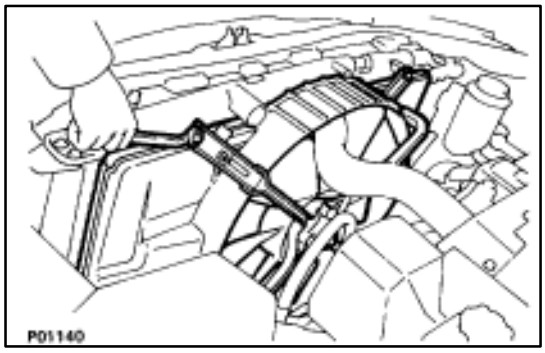

(b) Remove the four bolts, and disconnect the fan shrould from the radiator.

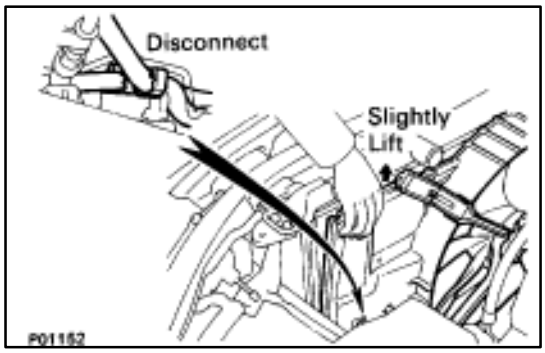

(c) Slightly lift the fan shrould, and disconnect the two oil cooler hoses (for cooling fan) from the hose clamp on the fan shrould.

(d) Remove the fan shrould.

WhereEverybodyKnowsYourName

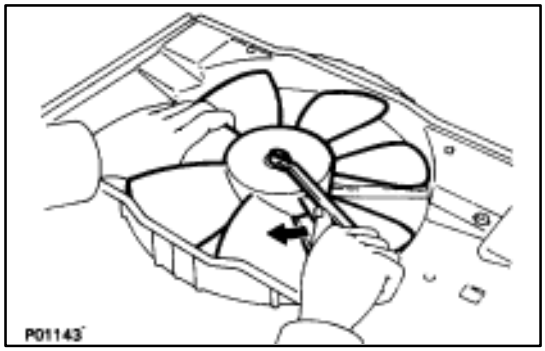

9. REMOVE COOLING FAN FROM HYDRAULIC MOTOR
Loosen the pulley nut clockwise, and remove the nut, plate washer and fan.

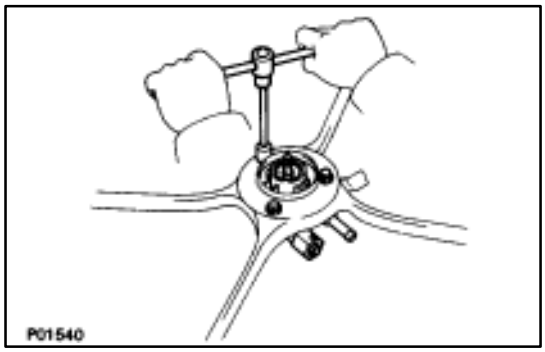

10. REMOVE HYDRAULIC MOTOR FROM FAN SHROULD
Remove the three bolts and hydraulic motor.

COMPONENTS FOR DISASSEMBLY AND ASSEMBLY

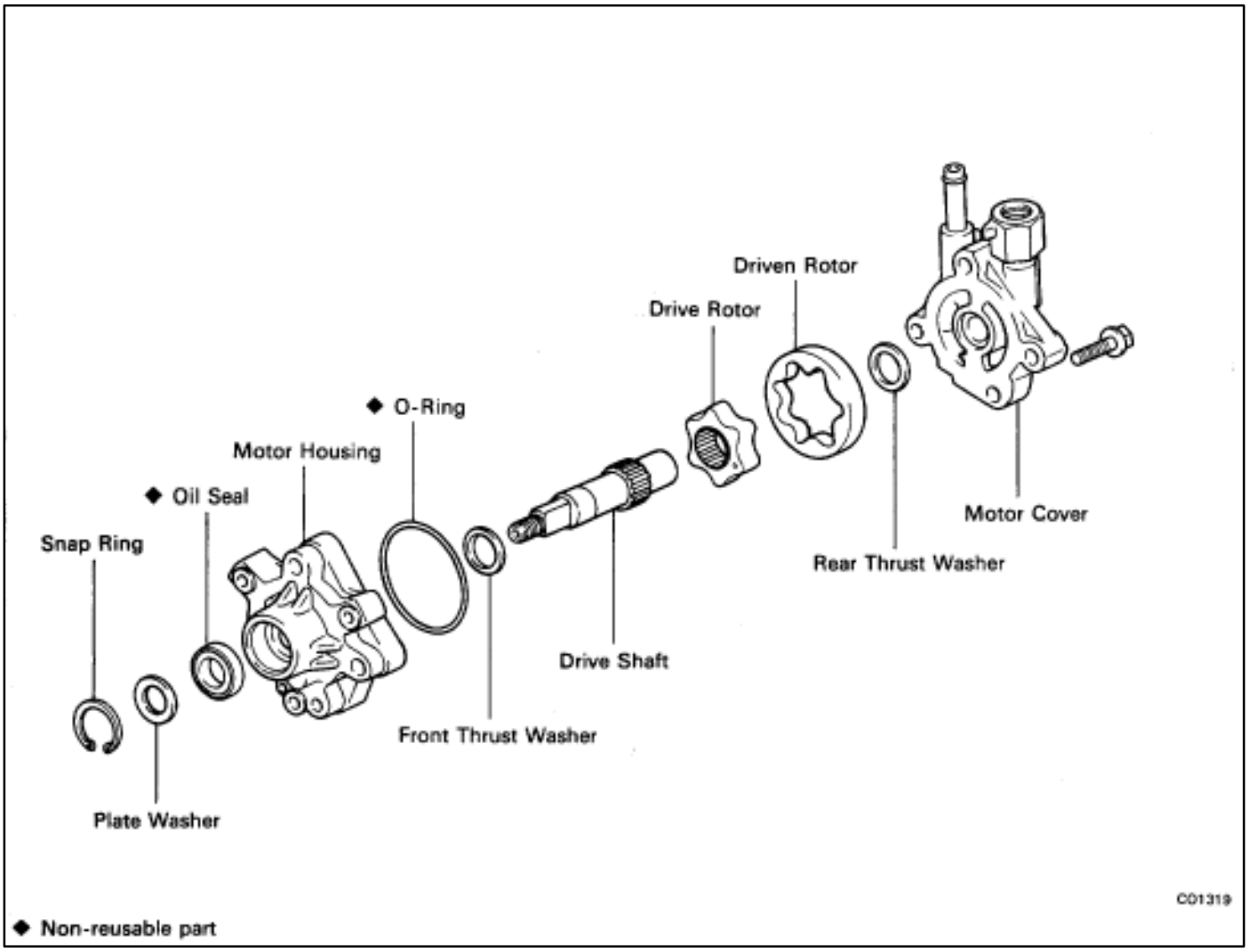

WhereEverybodyKnowsYourName

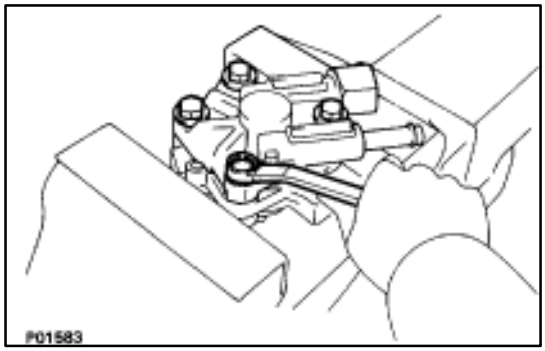

DISASSEMBLY OF HYDRAULIC MOTOR

(See Components on page CO–50)

1. **MOUNT MOTOR HOUSING**
   Slightly mount the motor housing in a vise.
   NOTICE: Be careful not to damage the motor housing.
2. **REMOVE MOTOR COVER**
   (a) Remove the four bolts and motor cover.
   (b) Remove the O–ring from the motor housing.

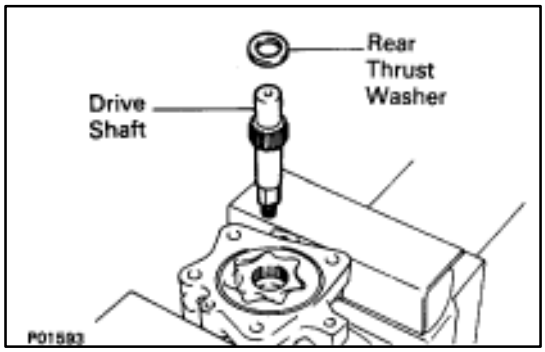

3. **REMOVE REAR THRUST WASHER AND DRIVE SHAFT**

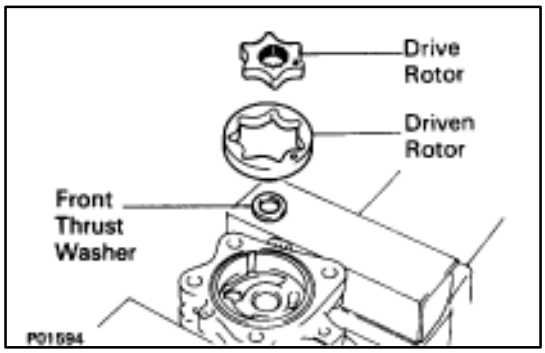

4. **REMOVE DRIVE AND DRIVEN ROTORS**
5. **REMOVE FRONT THRUST WASHER**

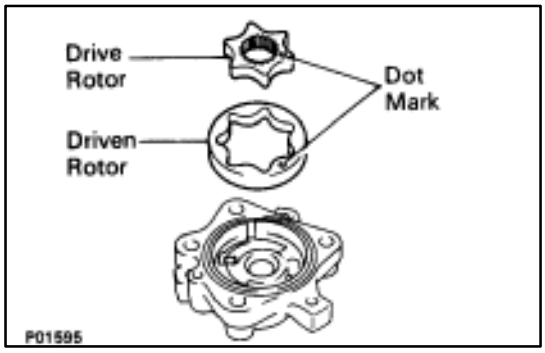

INSPECTION OF HYDRAULIC MOTOR

1. **INSPECT DRIVE AND DRIVEN ROTORS**
   (a) Install the drive and driven rotor to the motor housing with the dot mark facing upward.

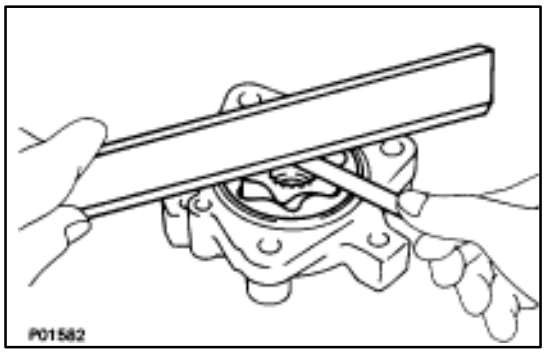

   (b) Using a feeler gauge and precision straight edge, measure the side clearance between the rotor and precision straight edge.

Standard side clearance: 0.01–0.04 mm (0.0004–0.0016 in.)

Maximum side clearance: 0.05 mm (0.0020 in.)

If the clearance is greater than maximum, replace the rotors as a set. If necessary, replace the motor assembly.

WhereEverybodyKnowsYourName

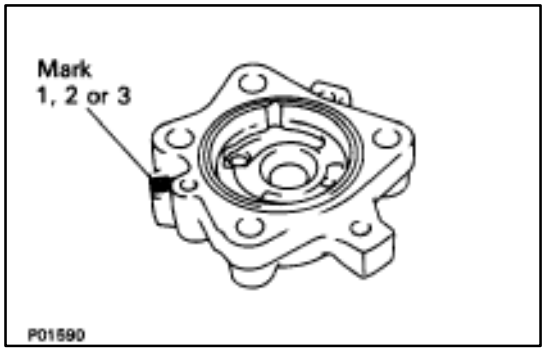

HINT: When replacing the rotors, select the rotor set according to the imprinted mark on the motor housing.

Imprinted mark on housing	Rotor set
1	16906–50010
2	16906–50020
3	16906–50030

2. INSPECT OIL CLEARANCE OF DRIVE SHAFT

(a) Using a caliper gauge, measure the shaft hole inside diameter of the housing and cover.

Shaft hole inside diameter: 14.000–14.011 mm (0.5512–0.5516 in.)

(b) Using a micrometer, measure the drive shaft diameter.

Shaft diameter: 13.973–13.984 mm (0.5501–0.5506 in.)

(c) Subtract the drive shaft diameter measurement from the shaft hole diameter measurement.

Standard clearance: 0.016–0.038 mm (0.0006–0.0015 in.)

Maximum clearance: 0.04 mm (0.0016 in.)

If the clearance is greater than maximum, replace the shaft. If necessary, replace the motor assembly.

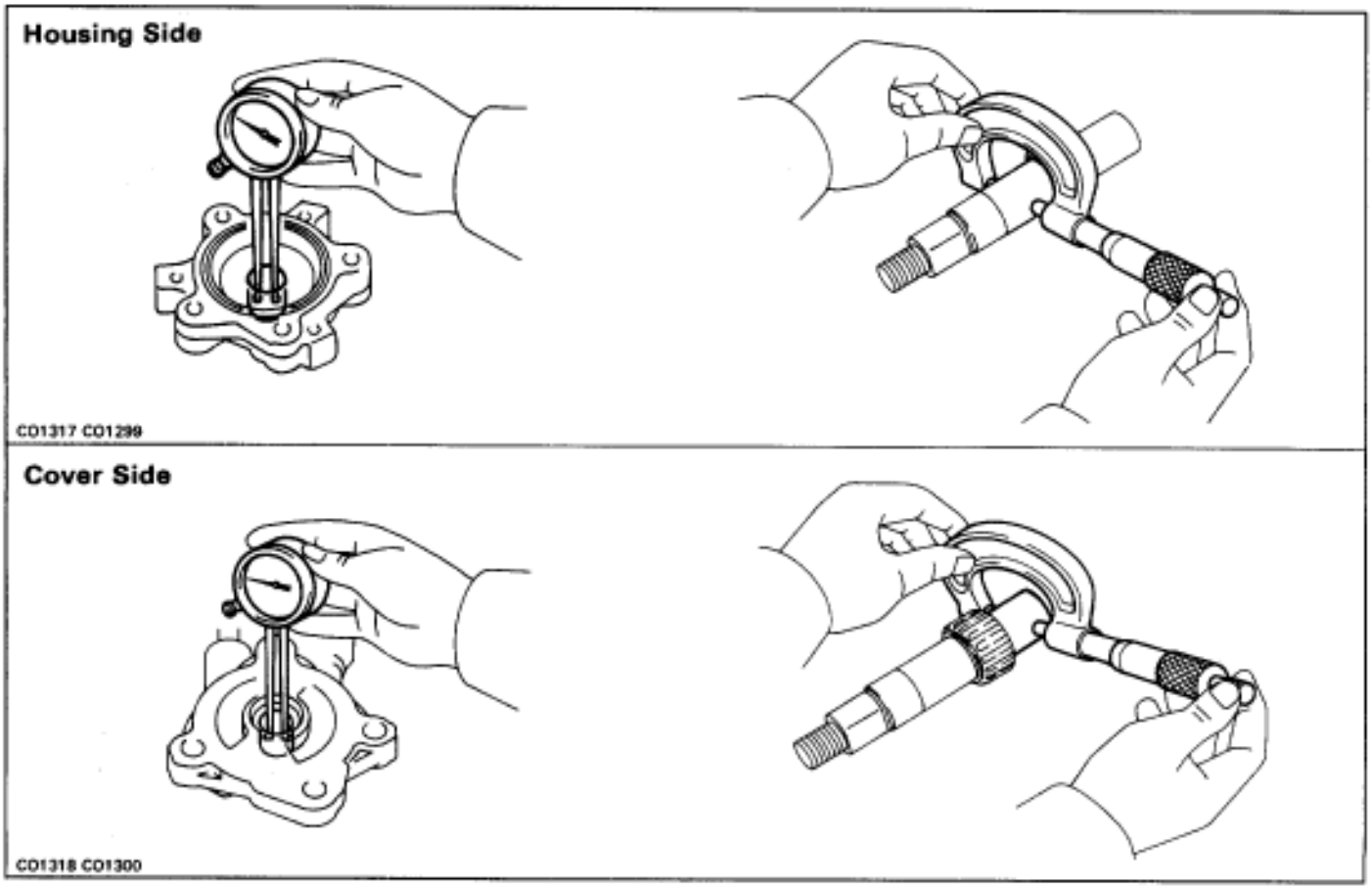

WhereEverybodyKnowsYourName

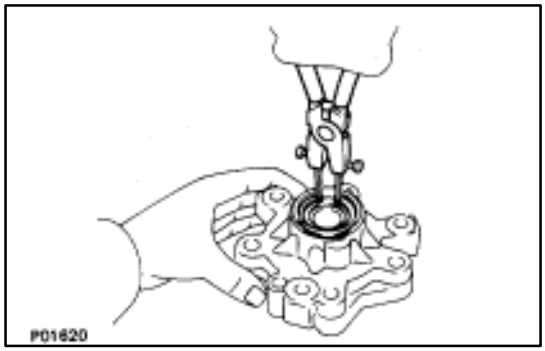

REPLACEMENT OF OIL SEAL

1. REMOVE OIL SEAL

(a) Using snap ring pliers, remove the snap ring and plate washer.

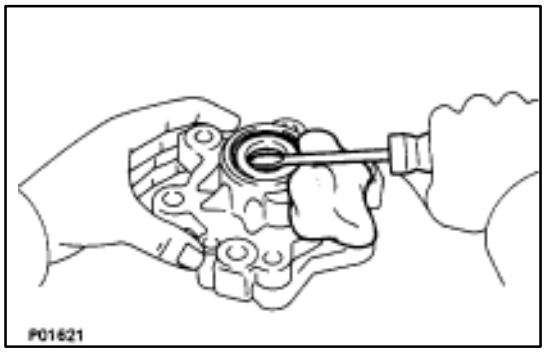

(b) Using a screwdriver, pry out the oil seal.

NOTICE: Be careful not to damage the housing.

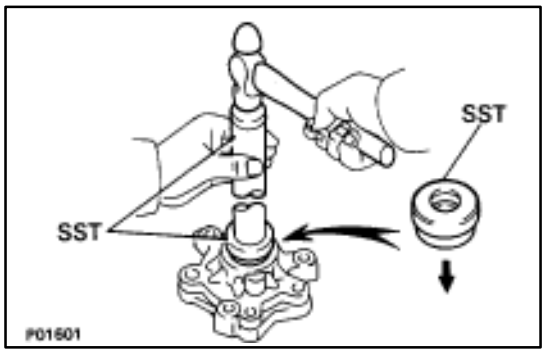

2. INSTALL OIL SEAL

(a) Using SST and a hammer, tap in a new oil seal to a depth of 4.5–5.5 mm (0.177–0.217 in.) from the housing edge.

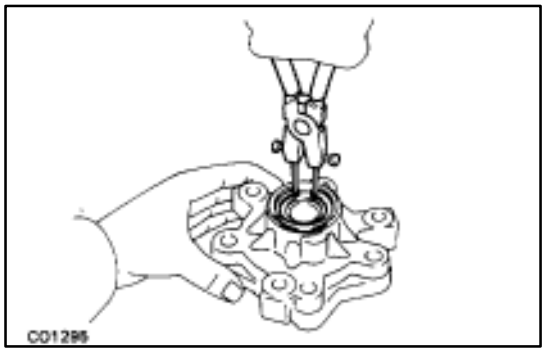

(b) Using snap ring pliers, install the plate washer and snap ring.

(c) Apply fluid to the oil seal lip.

WhereEverybodyKnowsYourName

ASSEMBLY OF HYDRAULIC MOTOR

(See Components on page CO–50)

HINT:

- Thoroughly clean all parts to be assembled.
- Before installing the parts, apply new fluid to all sliding and rotating surfaces.

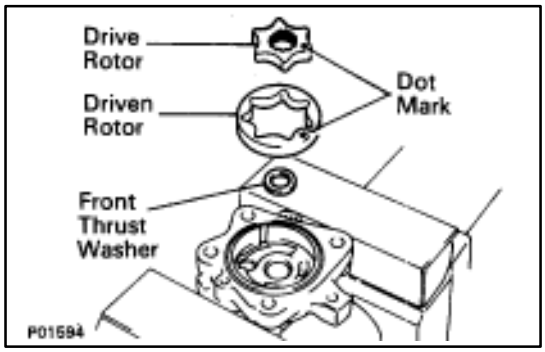

1. MOUNT MOTOR HOUSING

Slightly mount the motor housing in a vise.

NOTICE: Be careful not to damage the motor housing.

2. INSTALL FRONT THRUST WASHER

3. INSTALL DRIVEN AND DRIVE ROTORS

Install the drive and driven rotors with the dot mark facing upward.

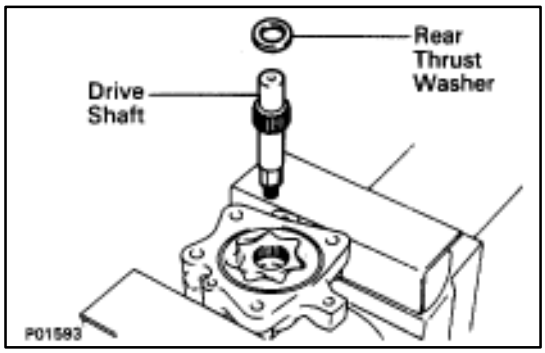

4. INSTALL DRIVE SHAFT

5. INSTALL REAR THRUST WASHER

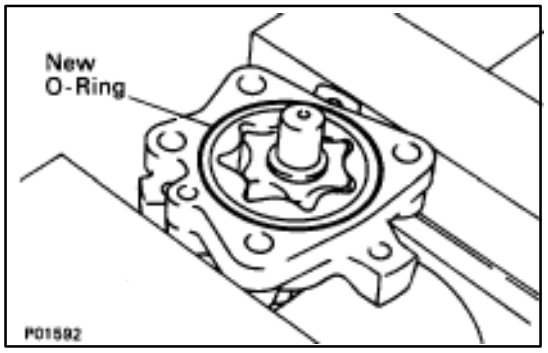

6. INSTALL MOTOR COVER

(a) Install a new O–ring to the motor housing groove.

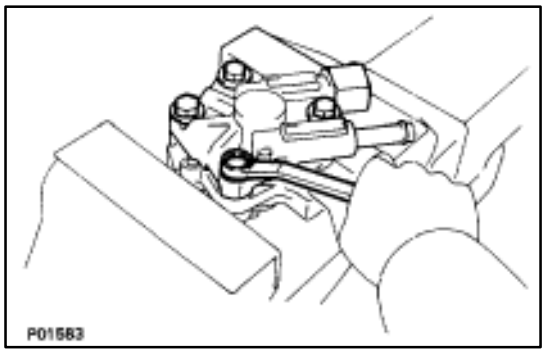

(b) Install the motor cover with the four bolts.

Torque: 28 N·m (290 kgf·cm, 21 ft·lbf)

WhereEverybodyKnowsYourName

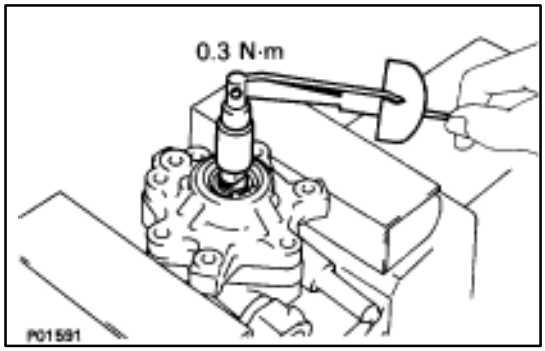

7. INSTALL DRIVE SHAFT PRELOAD

(a) Check that the drive shaft rotates smoothly without abnormal noise.

(b) Temporarily install the pulley nut, and check the rotating torque.

Rotating torque:

0.3 N·m (3.0 kgf·cm, 2.6 in.·lbf)

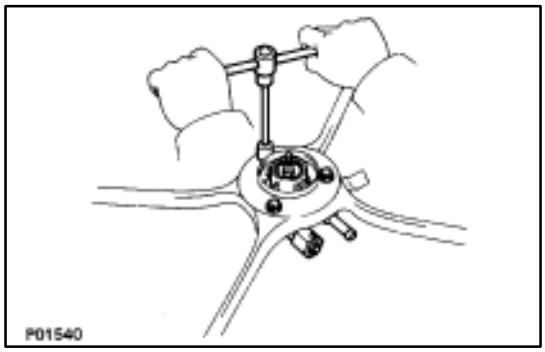

INSTALLATION OF HYDRAULIC MOTOR

(See Components on page CO–47)

1. INSTALL HYDRAULIC MOTOR TO FAN SHROULD

Install the hydraulic motor with the three bolts.

Torque: 4.9 N·m (50 kgf·cm, 43 in.·lbf)

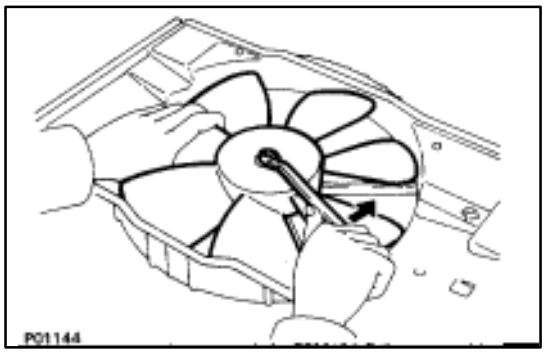

2. INSTALL COOLING FAN TO HYDRAULIC MOTOR

Install the fan with the plate washer bolt.

Tighten the nut by turning it counterclockwise.

Torque: 15 N·m (150 kgf·cm, 11 ft·lbf)

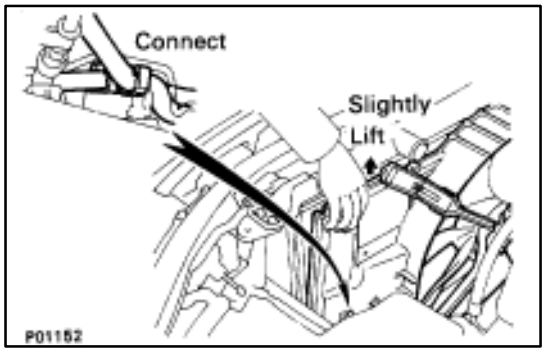

3. INSTALL RADIATOR FAN SHROULD

(a) Place the fan shroud on the radiator.

(b) Slightly lift the fan shroud, and connect the two oil cooler hoses (for cooling fan) to the hose clamp on the fan shroud.

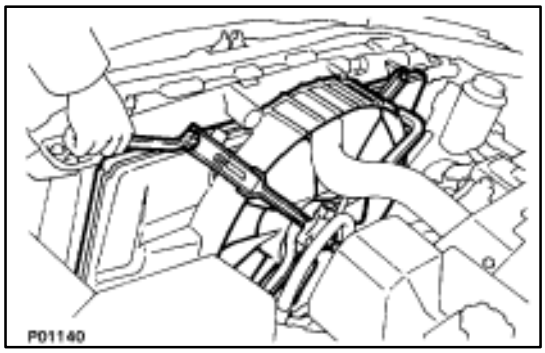

(c) Install the fan shroud with the four bolts.

Torque: 4.9 N·m (50 kgf·cm, 43 in.·lbf)

WhereEverybodyKnowsYourName

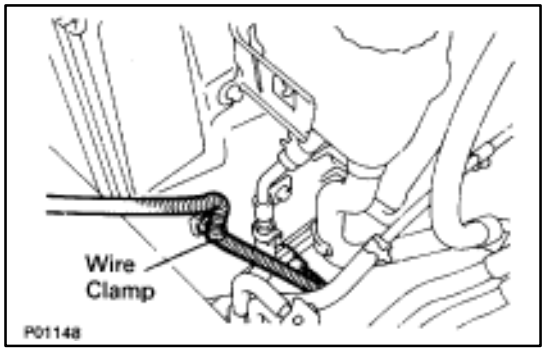

(d) Install the wire clamp to the fan shrould.

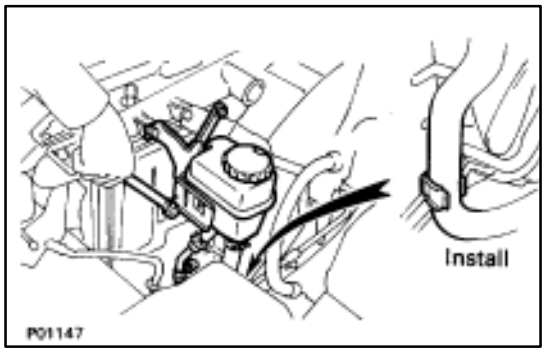

4. INSTALL COOLING FAN RESERVOIR TANK TO FAN SHROULD

(a) Install the reservoir tank with the four bolts.

Torque: 4.9 N·m (50 kgf·cm, 43 in.·lbf)

(b) Install the suction hose to the clamp on the fan shrould.

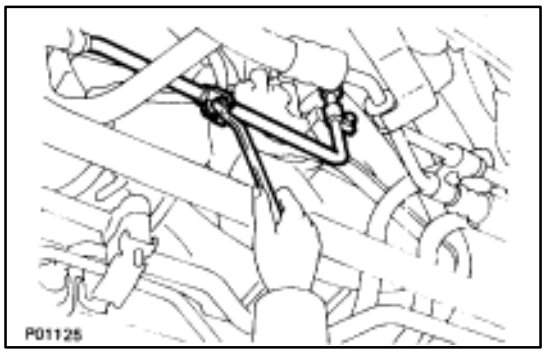

5. INSTALL COOLING FAN INLET PIPE TO FAN SHROULD

Install the inlet pipe with the two bushings, brackets and bolts.

Torque: 4.9 N·m (50 kgf·cm, 43 in.·lbf)

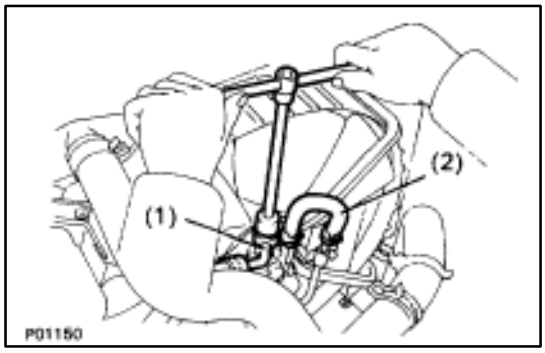

6. CONNECT HOSES

Connect the following hoses:

(1) Pressure hose to hydraulic motor Connect the pressure hose with a new gasket and union bolt.

Torque: 64 N·m (650 kgf·cm, 47 ft·lbf)

(2) Return hose to hydraulic motor.

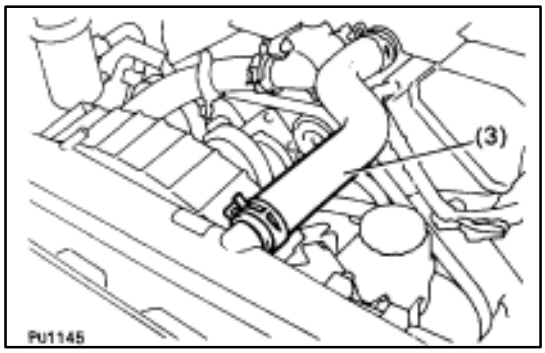

(3) Upper radiator hose to radiator.

WhereEverybodyKnowsYourName

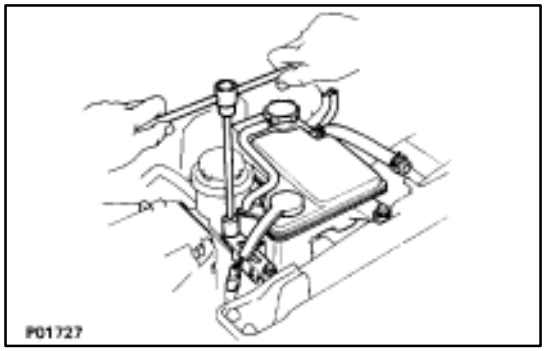

7. INSTALL RADIATOR RESERVOIR TANK

(a) Install the reservoir tank to the reservoir tank bracket.

(b) Install the reservoir tank bracket with two bolts.

Torque: 4.9 N·m (50 kgf·cm, 43 in.·lbf)

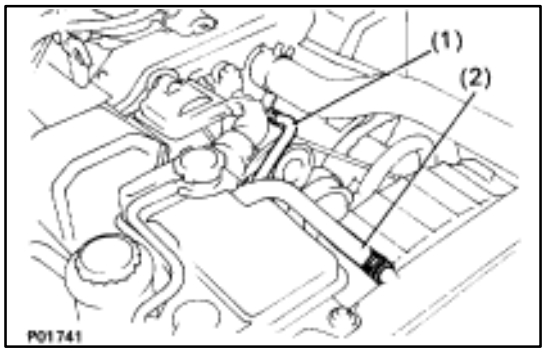

(c) Connect the following hoses:

(1) Reservoir hose to water inlet housing

(2) Reservoir hose to radiator

(d) Connect the coolant level sensor connector.

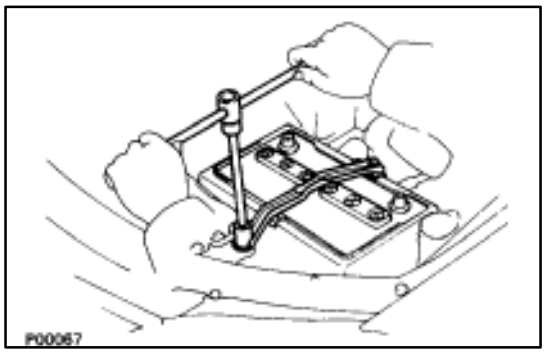

8. INSTALL BATTERY

9. FILL ENGINE WITH COOLANT (See page CO–7)

10. FILL COOLING FAN RESERVOIR TANK WITH FLUID (See pages CO–23 and 24)

11. START ENGINE AND CHECK FOR LEAKS

12. INSTALL ENGINE UNDER COVER

WhereEverybodyKnowsYourName

Oil Cooler

COMPONENTS FOR REMOVAL AND INSTALLATION

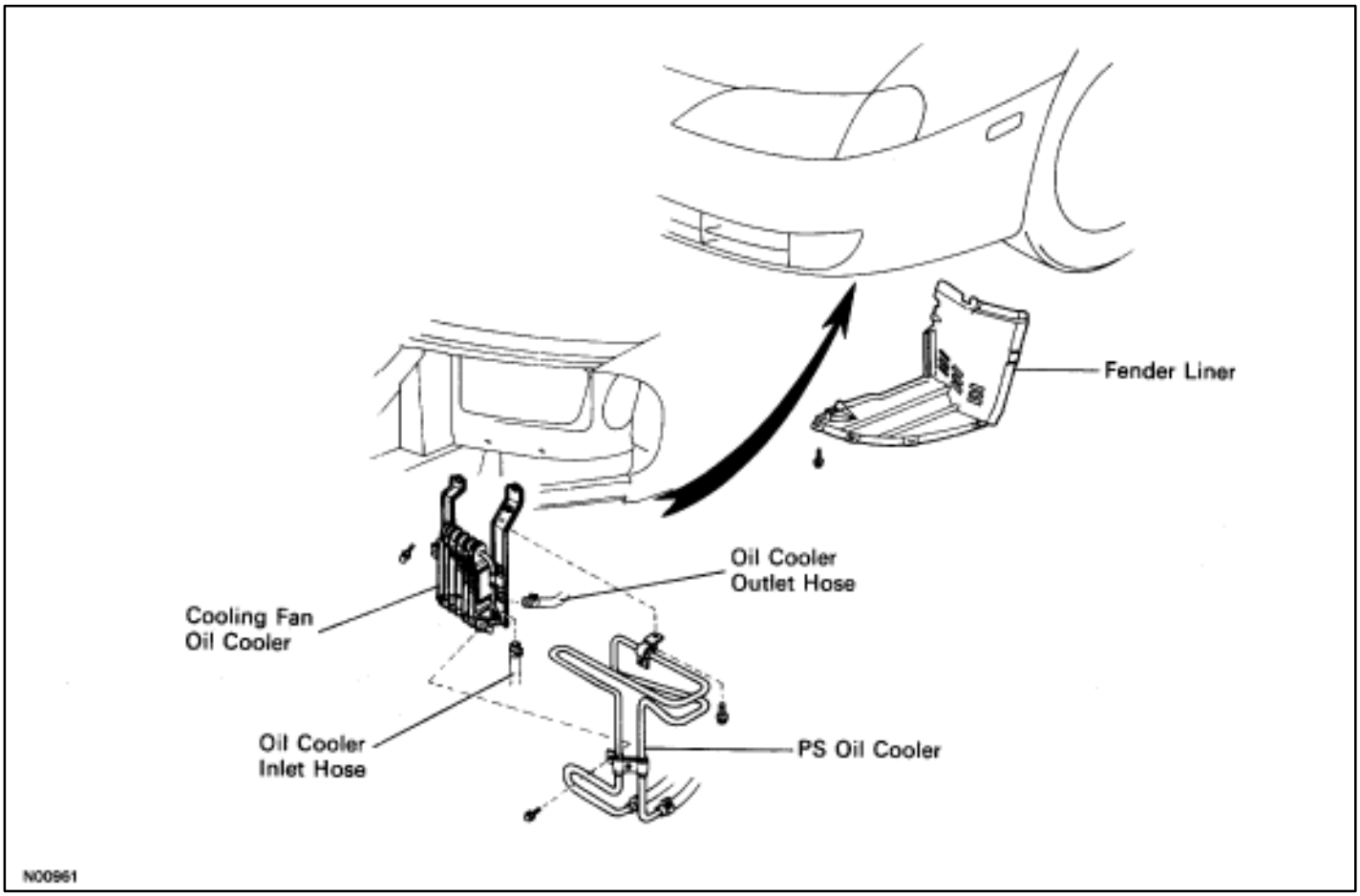

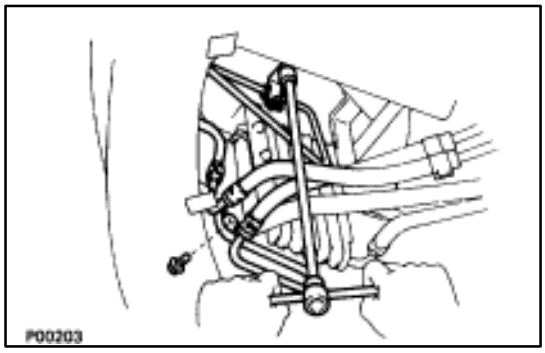

REMOVAL OF OIL COOLER

1. **REMOVE FENDER LINER**
2. **DISCONNECT PS OIL COOLER**
   Remove the two bolts, and disconnect the PS oil cooler from cooling fan oil cooler.

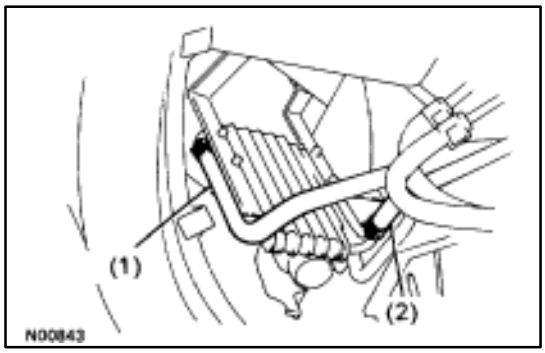

3. **DISCONNECT HOSES FROM OIL COOLER**
   Disconnect the following hoses:
   (1) Inlet hose (from reservoir tank)
   (2) Outlet hose (from hydraulic motor)

WhereEverybodyKnowsYourName

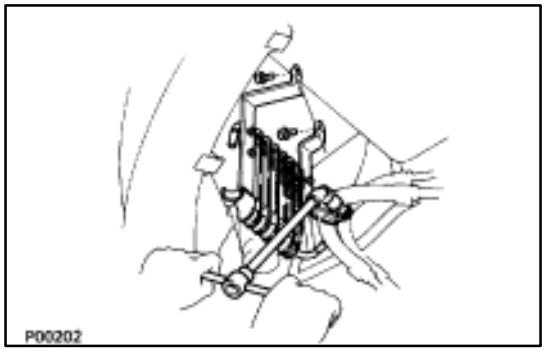

4. REMOVE OIL COOLER

Remove the three bolts and oil cooler.

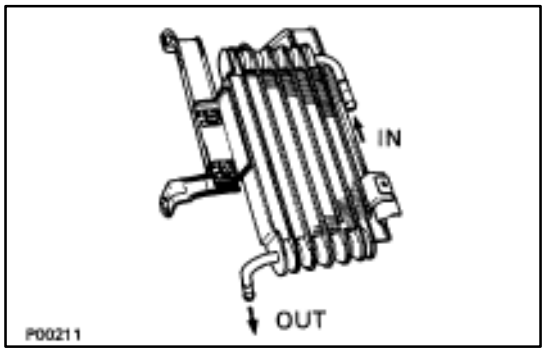

INSPECTION OF OIL COOLER

INSPECT OIL COOLER

Check the oil cooler for damage or clogging.

If necessary, replace the oil cooler.

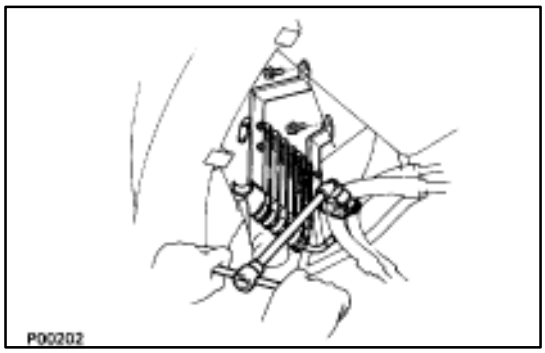

INSTALLATION OF OIL COOLER

(See Components on page CO–58)

1. INSTALL OIL COOLER

Install the oil cooler with the three bolts.

Torque: 18 N·m (180 kgf·cm, 13 ft·lbf)

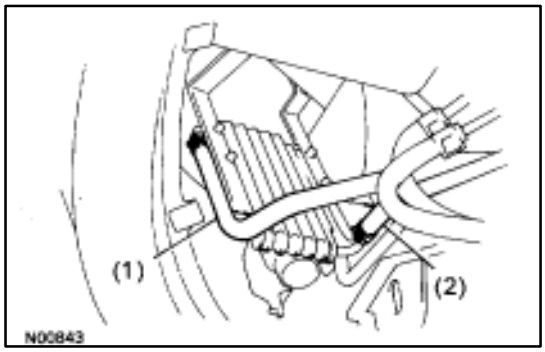

2. CONNECT HOSES FROM OIL COOLER

Connect the following hoses:

(1) Inlet hose (from reservoir tank)

(2) Outlet hose (from hydraulic motor)

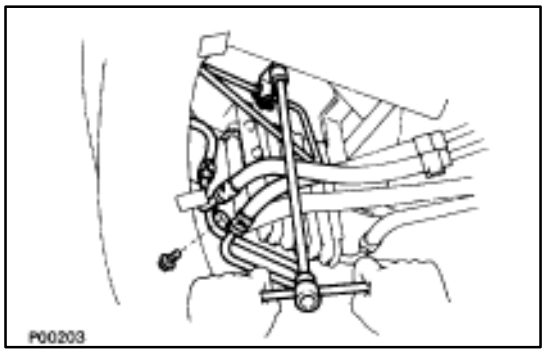

3. INSTALL PS OIL COOLER

Install the oil cooler with the two bolts.

4. REMOVE FENDER LINER

5. FILL COOLING FAN RESERVOIR TANK WITH FLUID

(See pages CO–23 and 24)

6. START ENGINE AND CHECK FOR LEAKS

WhereEverybodyKnowsYourName

Electronic Control Parts
(System Circuit)

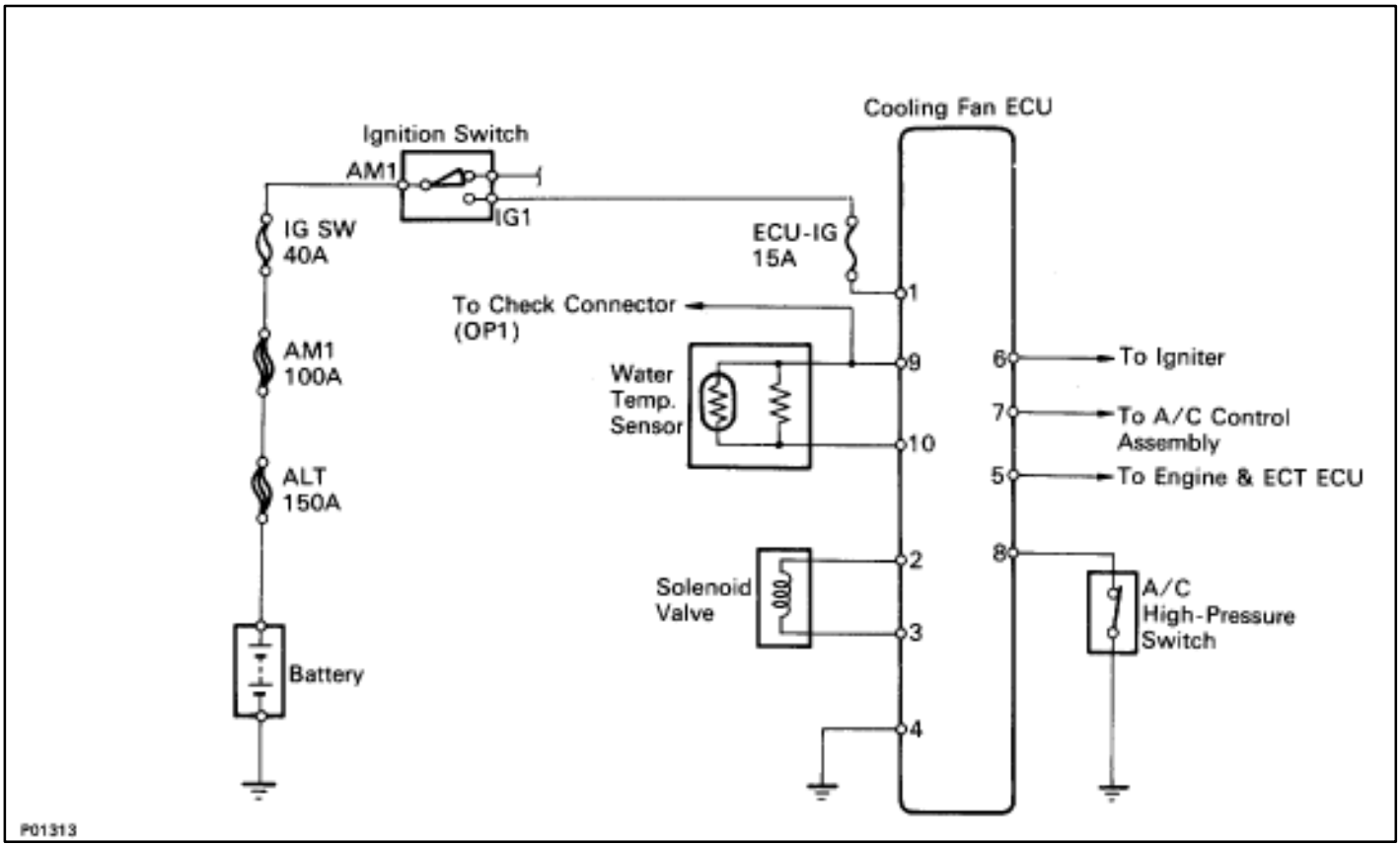

(Cooling Fan ECU)
COMPONENTS FOR REMOVAL AND INSTALLATION

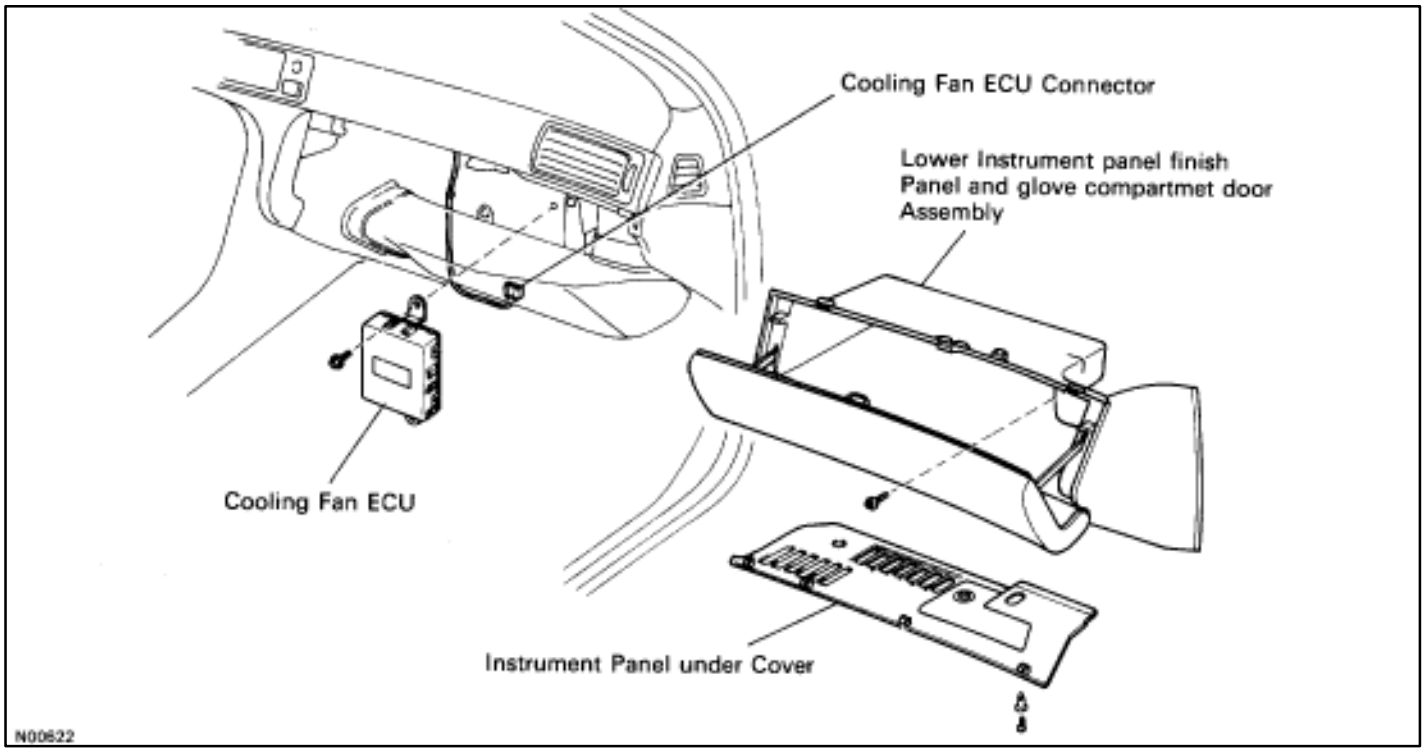

WhereEverybodyKnowsYourName

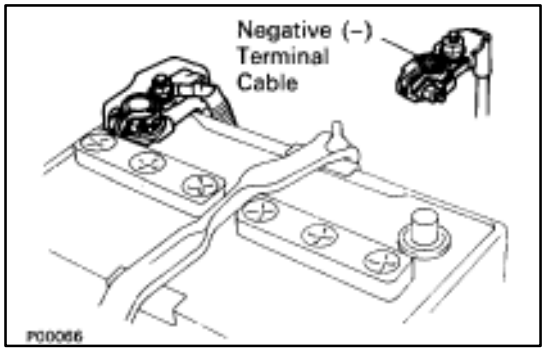

INSPECTION OF COOLING FAN ECU

1. DISCONNECT CABLE FROM NEGATIVE TERMINAL OF BATTERY

CAUTION: Work must be started after 20 seconds or longer from the time the ignition switch is turned to the ”LOCK” position and the negative (–) terminal cable is disconnected from the battery.

2. DISCONNECT COOLING FAN ECU CONNECTOR

(See Components on page CO–60)

(a) Remove the instrument panel under cover.
(b) Remove the lower instrument panel finish panel and glove compartment door assembly.
(c) Disconnect the cooling fan ECU connector.

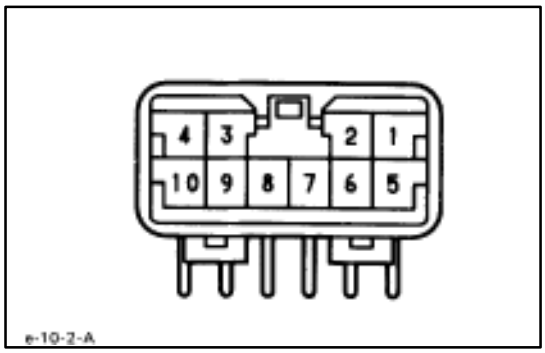

3. INSPECT COOLING FAN ECU

(a) Connect the cable to the negative (–) terminal of the battery.
(b) Check the connector on the wiring harness side as shown in the chart.

Check for	Tester connection	Condition	Specified value
Voltage	1–Ground	Ignition switch ON	Battery voltage
Resistance	2–3	Solenoid valve at cold (20°C (68°F))	7.5–8.5 ?
Continuity	4–Ground	–	Continuity
Continuity	5–Ground	Throttle valve open	No continuity
		Throttle valve closed	Continuity
Resistance	9–10	Coolant temp. at 80°C (176°F)	1.48–1.58 k?

(c) Disconnect the cable from the negative (–) terminal of the battery.

4. RECONNECT COOLING FAN ECU CONNECTOR

5. RECONNECT CABLE TO NEGATIVE TERMINAL OF BATTERY

WhereEverybodyKnowsYourName

(Water Temperature Sensor)

COMPONENTS FOR REMOVAL AND INSTALLATION

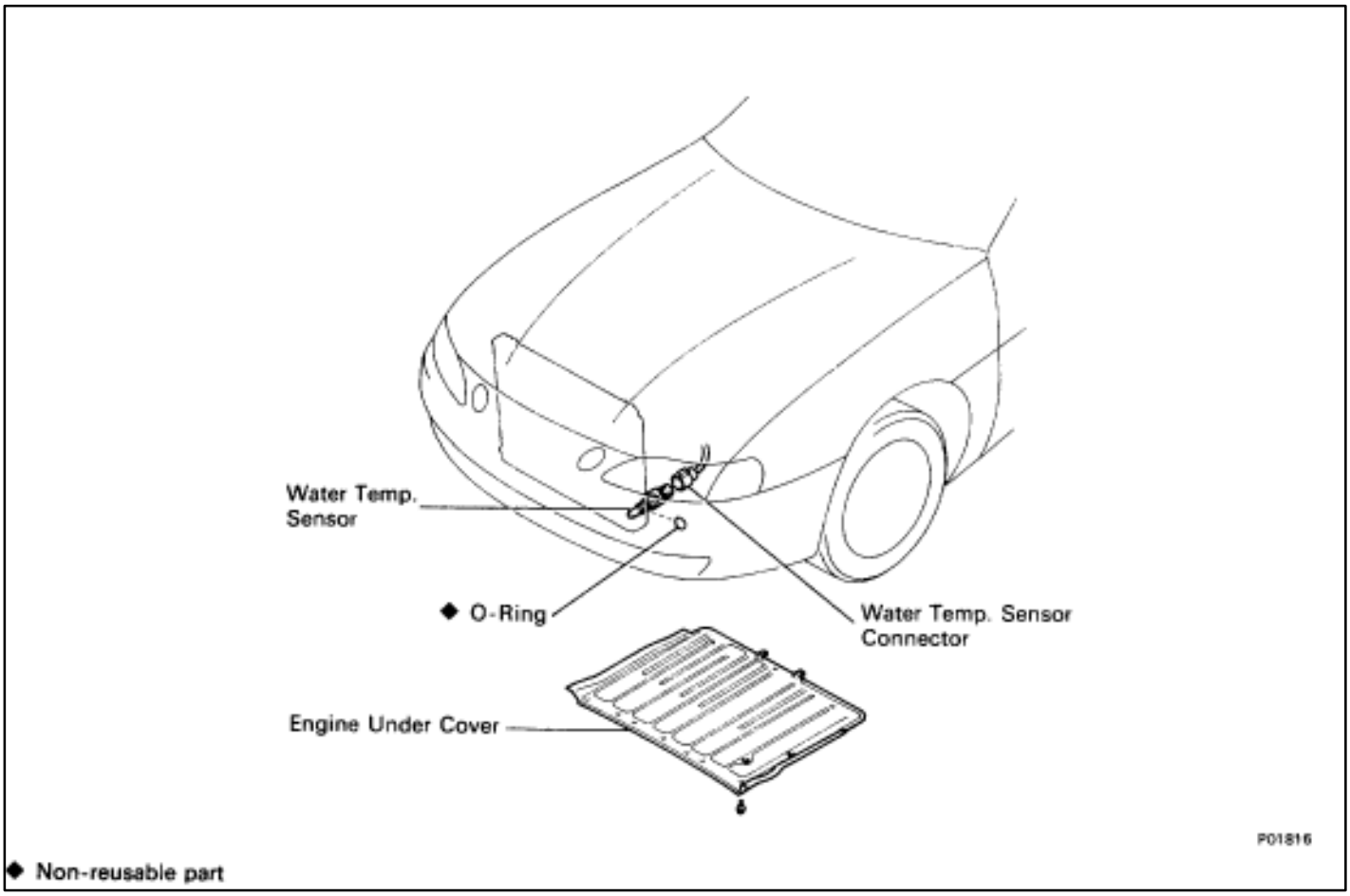

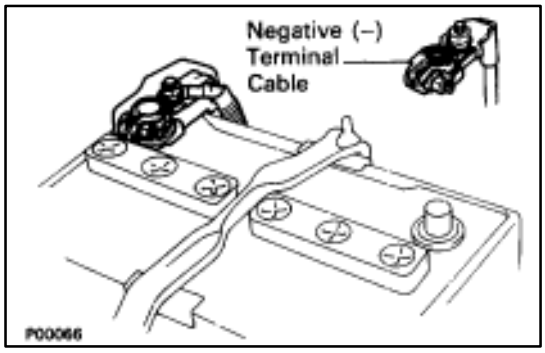

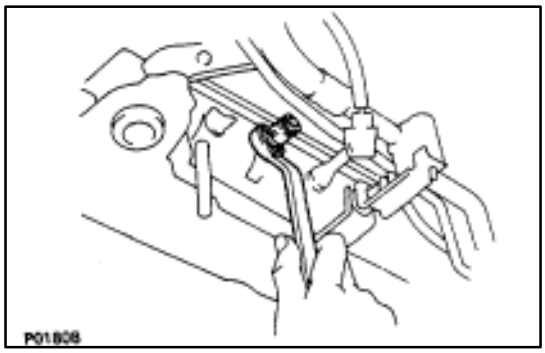

INSPECTION OF WATER TEMPERATURE SENSOR

1. **DISCONNECT CABLE FROM NEGATIVE TERMINAL OF BATTERY**
   CAUTION: Work must be started after 20 seconds or longer from the time the ignition switch is turned to the "LOCK" position and the negative (–) terminal cable is disconnected from the battery.
2. **REMOVE ENGINE UNDER COVER**
3. **DRAIN ENGINE COOLANT (See page CO–6)**
4. **REMOVE WATER TEMPERATURE SENSOR**
   (a) Disconnect the water temperature sensor connector.
   (b) Remove the water temperature sensor from left side of the radiator lower tank.
   (c) Remove the O–ring from the water temperature sensor.

WhereEverybodyKnowsYourName

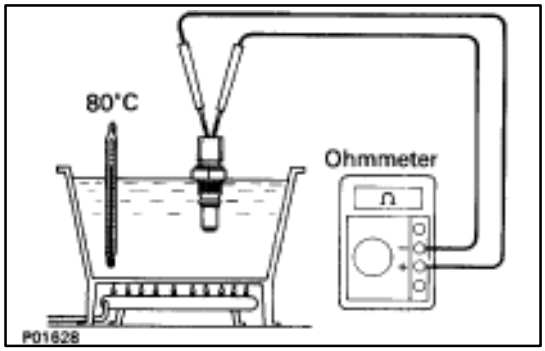

5. INSPECT WATER TEMPERATURE SENSOR

Using an ohmmeter, measure the resistance between the terminals.

Resistance: 1.48–1.58 k? at 80°C (176°F)

If the resistance is not as specified, replace the sensor.

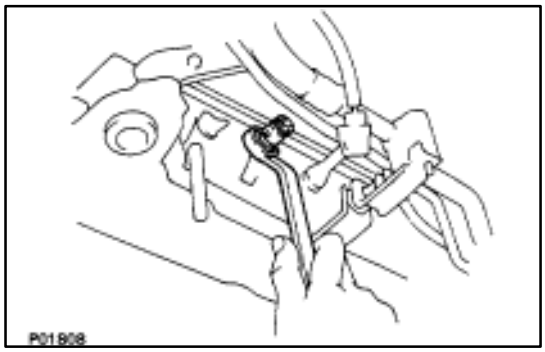

6. REINSTALL WATER TEMPERATURE SENSOR

(a) Install a new O–ring to the water temperature sensor.
(b) Apply soapy water to the O–ring.
(c) Install the water temperature sensor to the radiator.

Torque: 7.4 N·m (75 kgf·cm, 65 in.·lbf)

(d) Connect the water temperature sensor connector.

7. REFILL WITH ENGINE COOLANT (See page CO–7)
8. REINSTALL ENGINE UNDER COVER
9. RECONNECT CABLE FROM NEGATIVE TERMINAL OF BATTERY

(A/C High–Pressure Switch)

INSPECTION OF A/C HIGH–PRESSURE SWITCH

1. DISCONNECT HIGH–PRESSURE SWITCH CONNECTOR
2. INSTALL MANIFOLD GAUGE SET (See AC section)
3. INSPECT HIGH–PRESSURE SWITCH

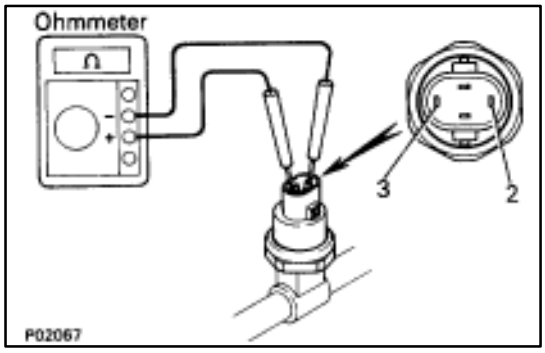

(a) When the A/C switch is OFF, check that there is continuity between terminals 2 and 3. (When the pressure is 1,226 kPa (12.5 kgf/cm^2, 178 psi) or lower.)
(b) When the A/C switch and blower switch are ON, check that there is no continuity between terminals 2 and 3. (When the pressure is 1,520 kPa (15.5 kgf/cm^2, 220 psi) or higher.)

If continuity is not as specified, replace the switch.

4. REMOVE MANIFOLD GAUGE SET
5. RECONNECT HIGH–PRESSURE SWITCH CONNECTOR

(Solenoid Valve)

(See page CO–36)

WhereEverybodyKnowsYourName

SERVICE SPECIFICATIONS

SPECIFICATIONS

VSV (For EVAP)	Resistance	30–34 ?
VSV (For EGR)	Resistance	33–39 ?

TORQUE SPECIFICATIONS

Part tightened	N m	kgf cm	ft·lbf
VSV for EGR X Intake manifold	18	185	13
EGR valve X Intake manifold	18	185	13
EGR valve X EGR Pipe	64	650	47
Catalytic converter (Front) X Exhaust manifold	62	630	46
Catalytic converter (Front) X Front Exhaust pipe	43	440	32
Front exhaust pipe X Center exhaust pipe	43	440	32
Sub–oxygen sensor X Front exhaust pipe	18	180	13

WhereEverybodyKnowsYourName

THREE–WAY CATALYST (TWC) SYSTEM

DESCRIPTION

To reduce HC, CO and NOx emissions, they are oxidized, reduced and converted to nitrogen (N2), carbon dioxide (CO2) and water (H2O) by the catalyst.

OPERATION

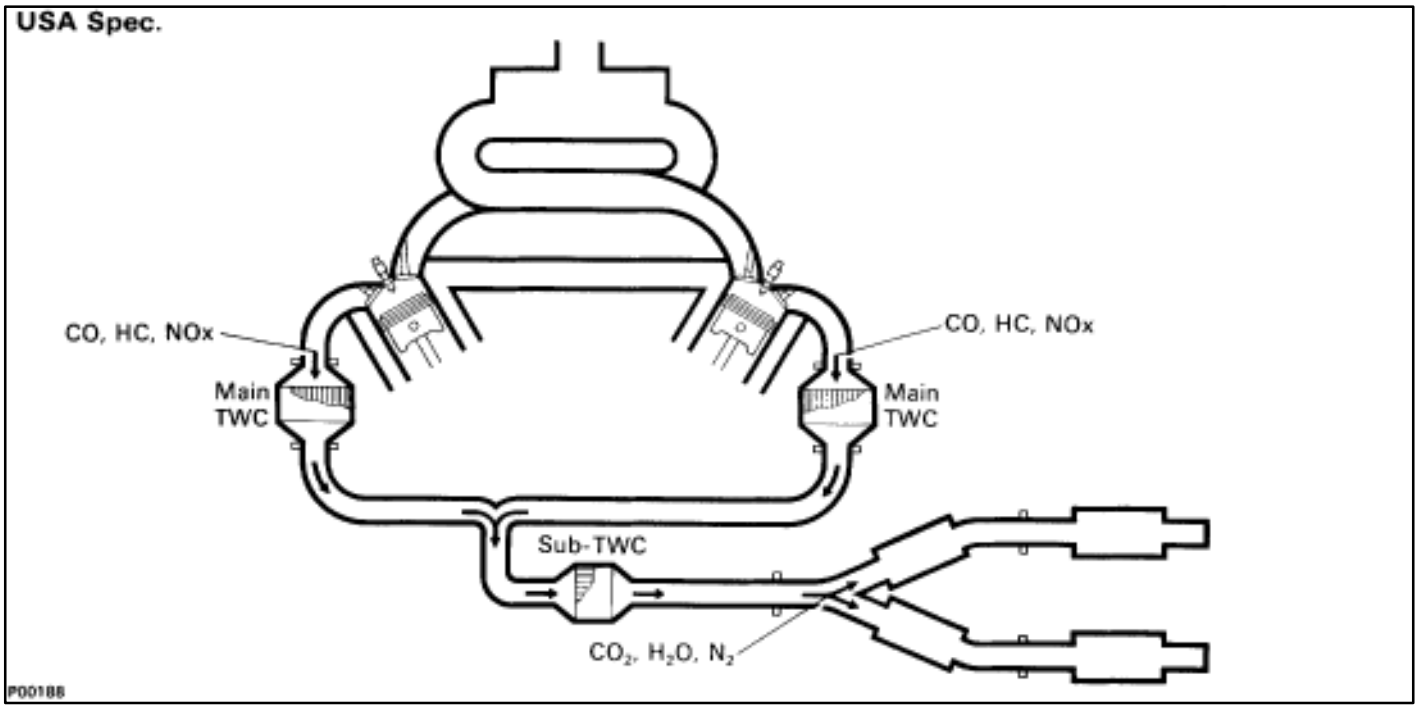

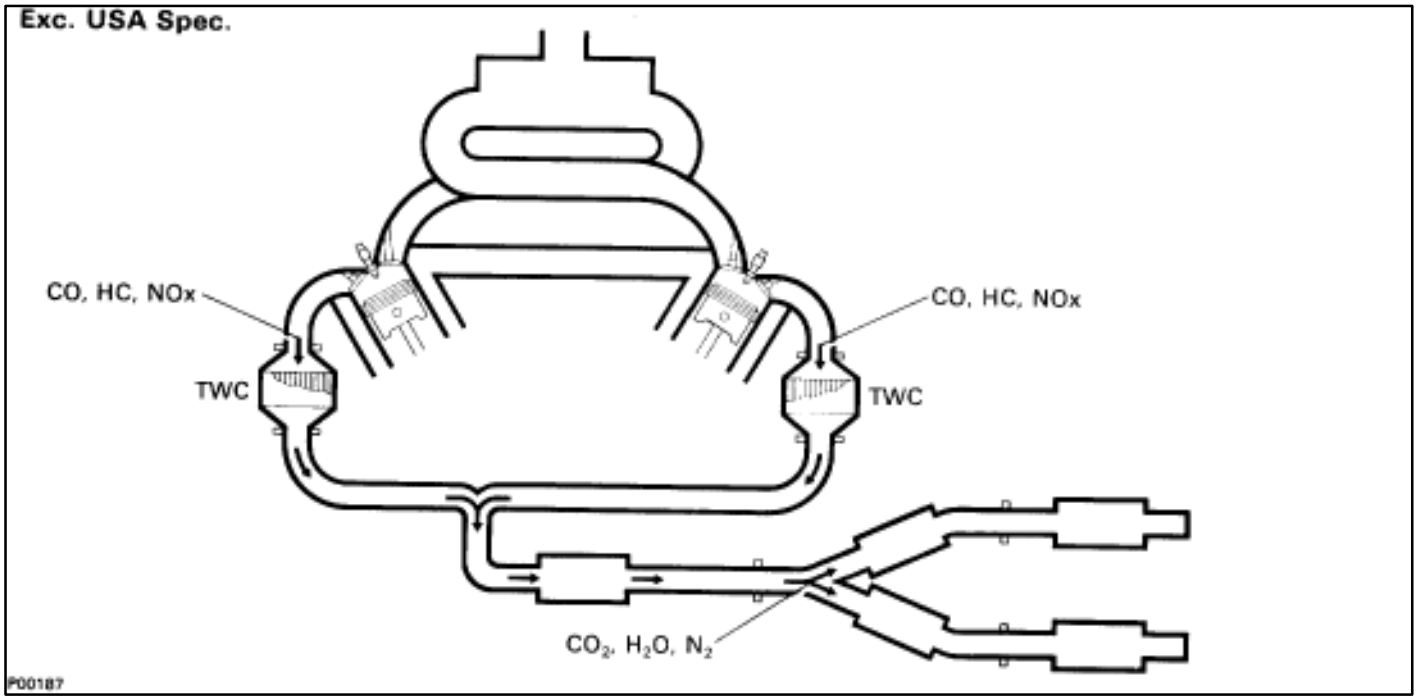

Exhaust Port		TWC (Main)		Sub-TWC (USA Spec. only)		Exhaust Gas
CO HC NOx	⇒	OXIDATION AND REDUCTION	⇒	OXIDATION AND REDUCTION	⇒	CO_2 H_2O N_2

WhereEverybodyKnowsYourName

INSPECTION OF EXHAUST PIPE ASSEMBLY

1. **CHECK CONNECTIONS FOR LOOSENESS OR DAMAGE**
2. **CHECK CLAMPS FOR WEAKNESS, CRACKS OR DAMAGE**

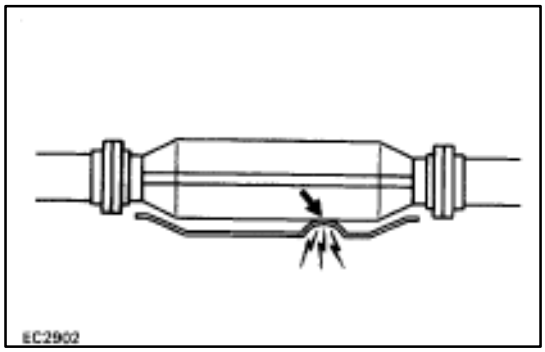

INSPECTION OF CATALYTIC CONVERTERS

CHECK FOR DENTS OR DAMAGE

If any part of protector is damaged or dented to the extent that it contacts the converter, repair or replace it.

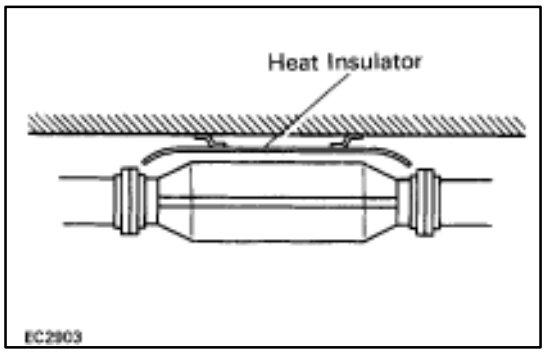

INSPECTION OF HEAT INSULATORS

1. **CHECK HEAT INSULATOR FOR DAMAGE**
2. **CHECK FOR ADEQUATE CLEARANCE BETWEEN CATALYTIC CONVERTER AND HEAT INSULATOR**

COMPONENTS FOR REPLACEMENT OF CATALYTIC CONVERTERS

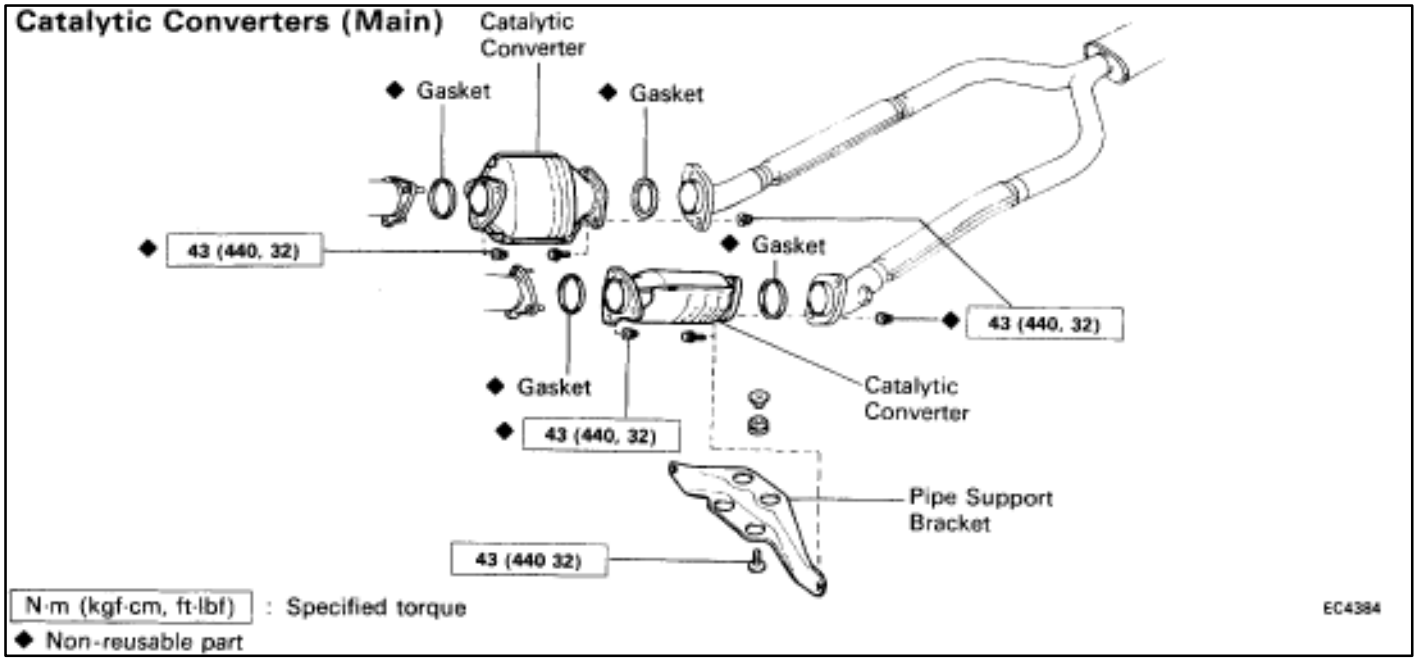

WhereEverybodyKnowsYourName

COMPONENTS FOR REPLACEMENT OF CATALYTIC CONVERTERS (Cont'd)

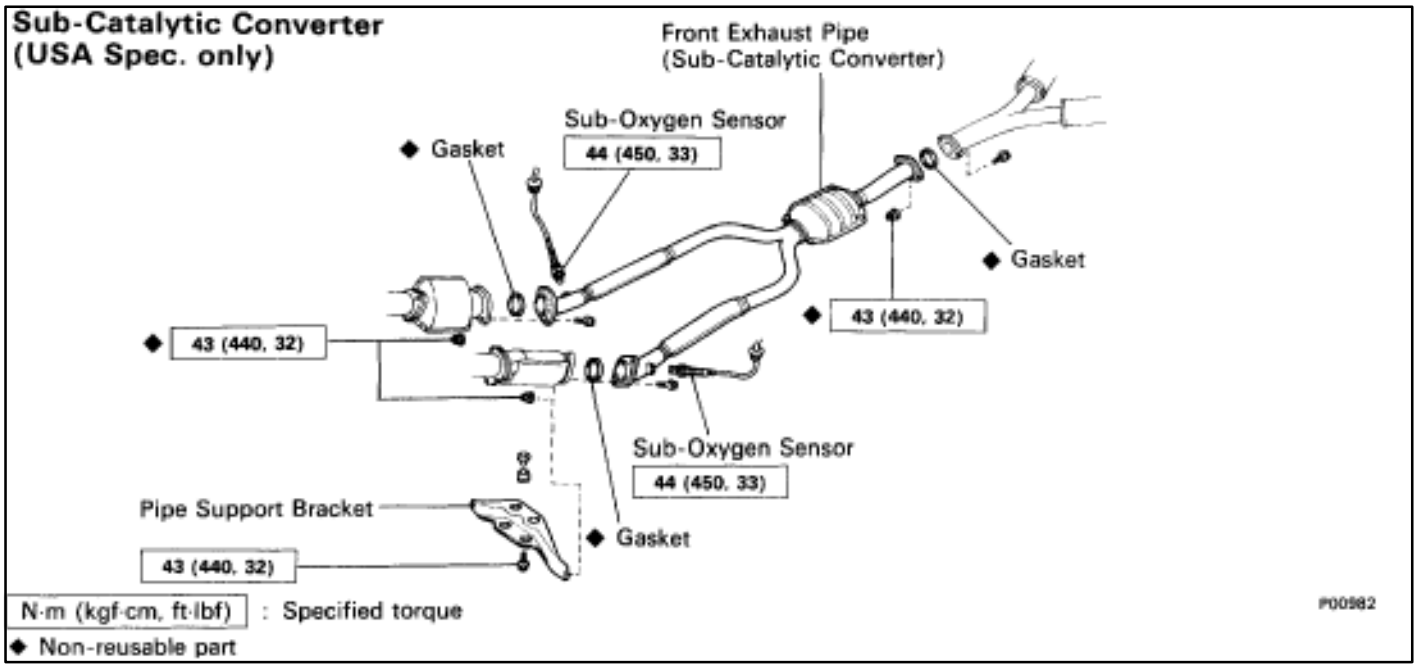

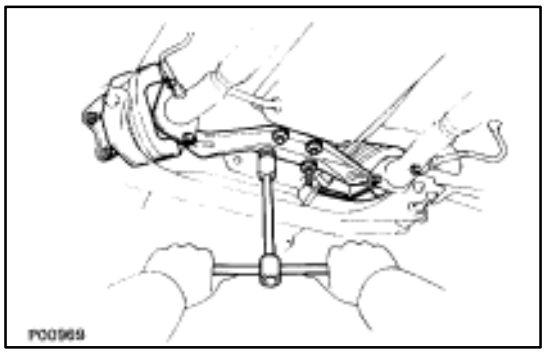

REPLACEMENT OF CATALYTIC CONVERTERS (Main Catalytic Converters)

1. REMOVE CATALYTIC CONVERTERS (MAIN)

(a) Check that the converter is cool.

(b) Remove the four bolts holding the pipe support bracket to the transmission.

(c) Remove the four bolt and nuts holding the catalytic converters to the front exhaust pipe. Remove the support bracket.

(d) Disconnect the front exhaust pipe from the catalytic converter, and remove the two gaskets.

(e) Remove the three nuts, converter and gasket. remove the two catalytic converters.

2. REINSTALL MAIN CATALYTIC CONVERTER

(a) Install a new gasket and the catalytic converter to the exhaust manifold with three new nuts. Install the two catalytic converters.

Torque: 62 N·m (630 kgf·cm, 46 ft·lbf)

(b) Install a new gasket to each front end of the front exhaust pipe, and temporarily connect the front exhaust pipe to the catalytic converters.

(c) Temporarily install the pipe support bracket to the transmission with the four bolts.

(d) Connect the front exhaust pipe to the catalytic converter with the four bolts and new nuts.

Torque: 43 N·m (440 kgf·cm, 32 ft·lbf)

(e) Tighten the four bolts holding the pipe support bracket to the transmission.

Torque: 43 N·m (440 kgf·cm, 32 ft·lbf)

WhereEverybodyKnowsYourName

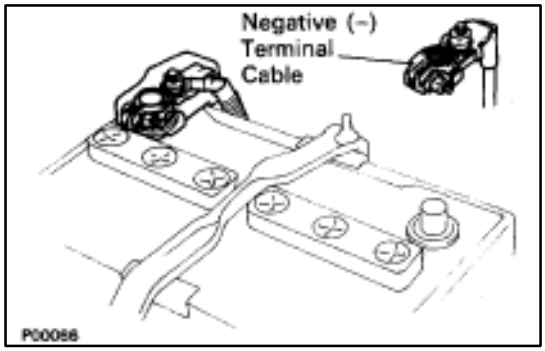

(Sub–Catalytic Converter (USA Spec. only)

1. **DISCONNECT CABLE FROM NEGATIVE TERMINAL OF BATTERY**

   CAUTION: Work must be started after, approx. 20 seconds or longer from the time the ignition switch is turned to the ”LOCK” position and the negative (–) terminal cable is disconnected from the battery.

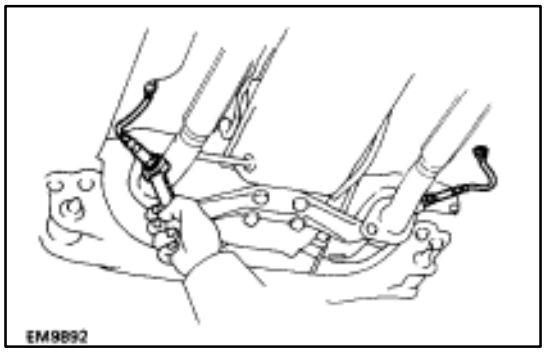

2. **DISCONNECT SUB–OXYGEN SENSOR CONNECTORS**

   Disconnect the grommet from the floor, and disconnect the sub–oxygen sensor from the front exhaust pipe.

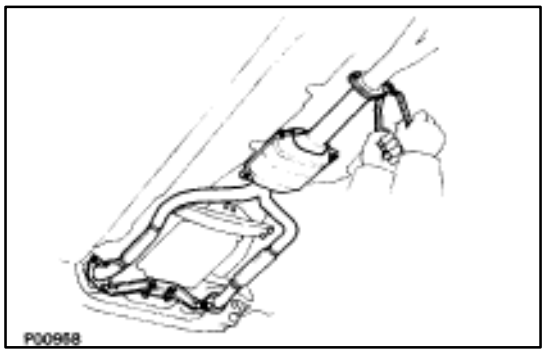

3. **REMOVE FRONT EXHAUST PIPE (SUB–CATALYTIC CONVERTER)**
   (a) Remove the four bolts holding the front exhaust pipe to the transmission.
   (b) Remove the two bolts and nuts holding the front exhaust pipe to the center exhaust pipe.
   (c) Remove the four bolts and nuts holding the front pipe to the catalytic converter, and remove the pipe support bracket, front pipe and three gaskets.

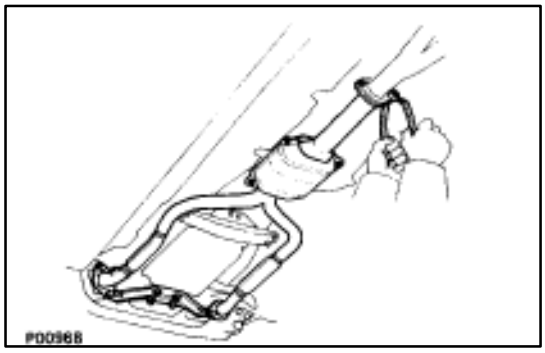

4. **REINSTALL FRONT EXHAUST PIPE (SUB–CATALYTIC CONVERTER)**
   (a) Temporarily install the pipe support bracket to the transmission with the four bolts.
   (b) Install three new gaskets, the front exhaust pipe and pipe support bracket with the six bolts and new nuts.

   Torque: 43 N·m (440 kgf·cm, 32 ft·lbf)

   (c) Tighten the four bolts holding the pipe support bracket to the transmission.

   Torque: 43 N·m (440 kgf·cm, 32 ft·lbf)

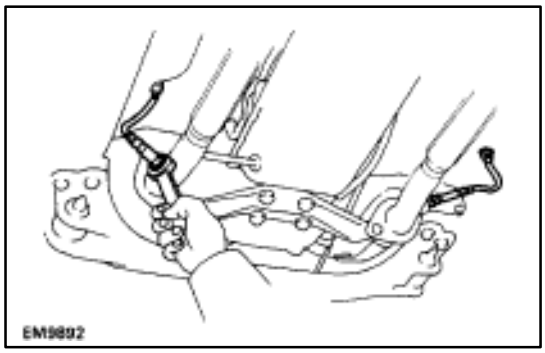

5. **RECONNECT SUB–OXYGEN SENSOR CONNECTORS**
   (a) Install the two sub–oxygen sensors to the front exhaust pipe.

   Torque: 44 N·m (450 kgf·cm, 33 ft·lbf)

   HINT:
   - Before installing the sub–oxygen sensor, twist the sensor wire counterclockwise 3 \frb\1/2\fre\ turns.
   - After installing the sub–oxygen sensor, check that the sensor wire is not twisted. If it is twisted, remove the sub–oxygen sensor and reinstall it.

   (b) Install the two wire grommets to the floor.
6. **RECONNECT CABLE TO NEGATIVE TERMINAL OF BATTERY**

WhereEverybodyKnowsYourName

SERVICE SPECIFICATIONS

SERVICE DATA

VSV for EVAP	Resistance	30–34 ?
VSV for EGR	Resistance	33–39 ?
EGR valve (CALIF. only)	Resistance	19.9–23.4 ?

TORQUE SPECIFICATIONS

Part tightened	N·m	kgf·cm	ft·lbf
VSV for EGR X Air intake chamber (Exc. USA Spec.)	18	185	13
EGR valve X Air intake chamber	18	185	13
Catalytic converter (Main) X Exhaust manifold	62	630	46
Catalytic converter (Main) X Front exhaust pipe	43	440	32
Front exhaust pipe support bracket X Transmission	43	440	32
Front exhaust pipe X Center exhaust pipe	43	440	32
Main oxygen sensor X Front exhaust pipe	44	450	33

WhereEverybodyKnowsYourName

EMISSION CONTROL SYSTEM

NOTE: The specification descriptions ”**USA Spec.**” and ”**Exc. USA Spec.**” used in this section indicate the following specifications.
USA Spec.: USA (50 States) Specifications
Exc. USA Spec.: USA (except California) and Canadian Specifications.

WhereEverybodyKnowsYourName

DESCRIPTION

The emission control systems are installed to reduce the amount of HC, CO, and NOx emitted from the engine, and to also prevent the release of evaporated fuel from the gasoline tank and prevent atmospheric release of blow–by gas.

The system consists of the PCV, EVAP, EGR and TWC.

The function of each system is shown in the following table.

System	Abbreviation	Purpose
Positive crankcase ventilation	PCV	Reduces blow–by gas (HC)
Fuel evaporative emission control	EVAP	Reduces evaporative HC
Exhaust gas recirculation	EGR	Reduces NOx
Three–way catalyst	TWC	Reduces HC, CO, and NOx
Electronic fuel injection*	EFI	Regulates all engine conditions for reduction of exhaust emissions.

Remarks: * For inspection and repair of the EFI system, refer to EFI section.

COMPONENTS LAYOUT

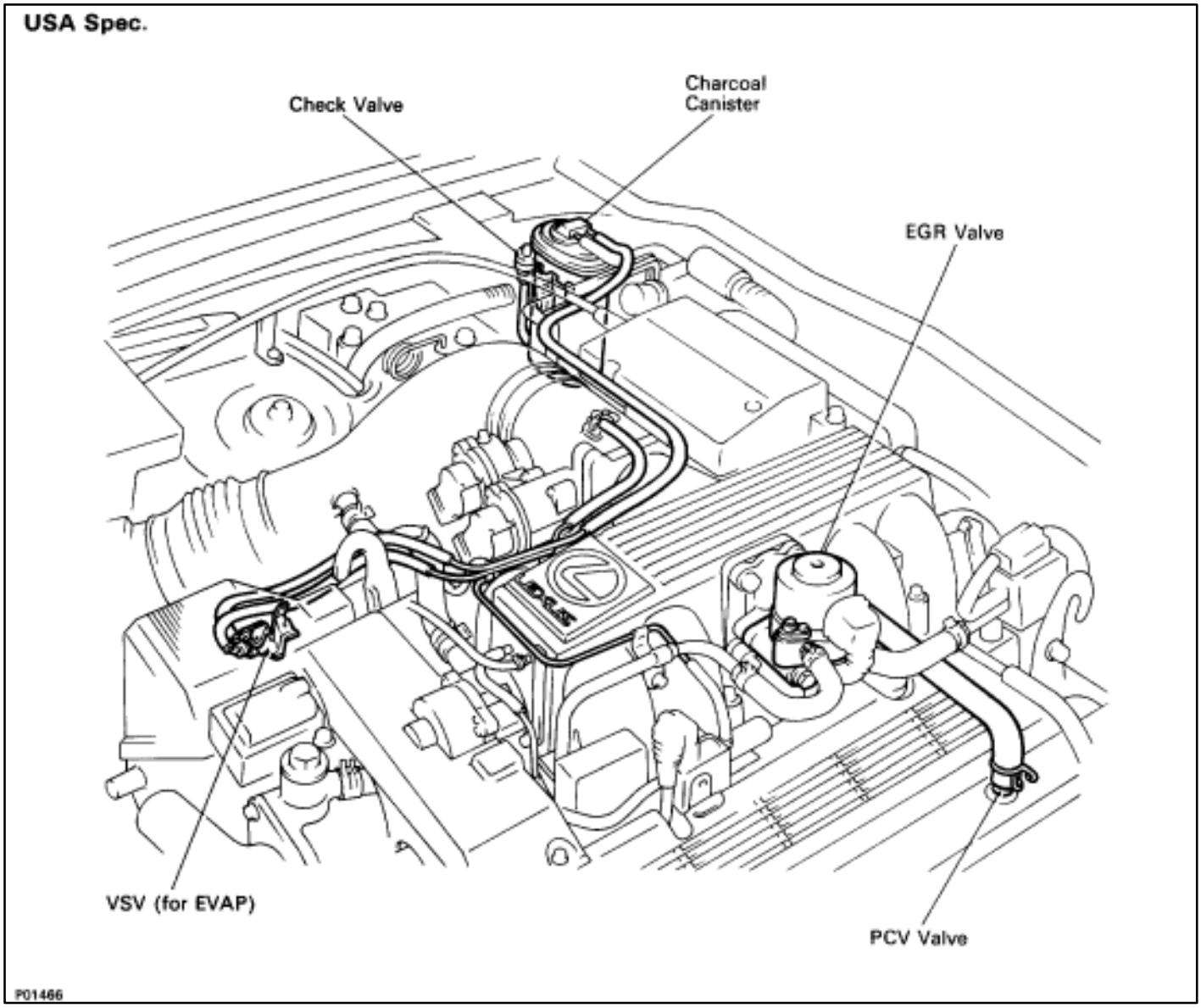

WhereEverybodyKnowsYourName

COMPONENTS LAYOUT (Cont'd)

Exc. USA Spec.

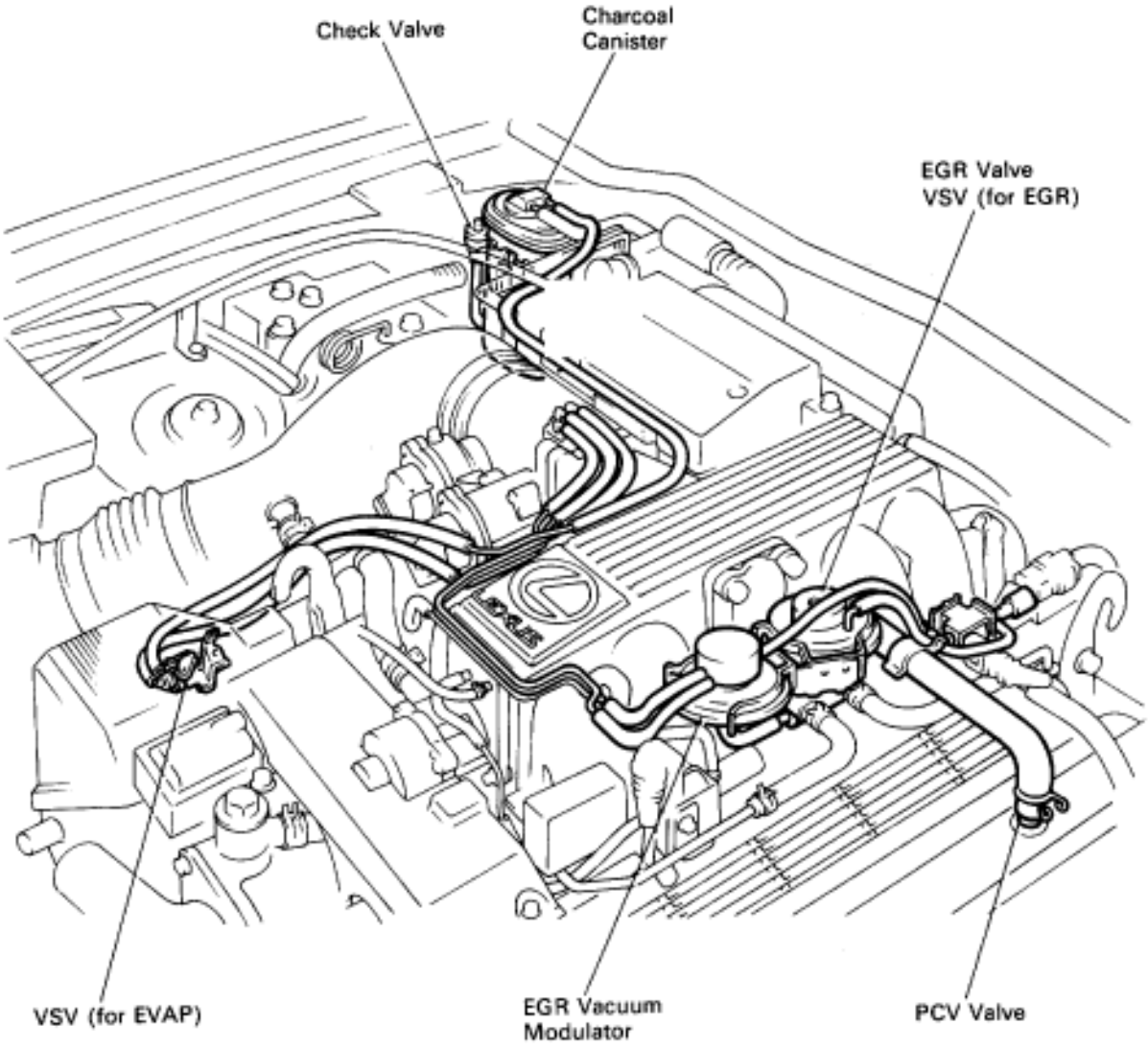

P01466

WhereEverybodyKnowsYourName

SCHEMATIC DRAWING

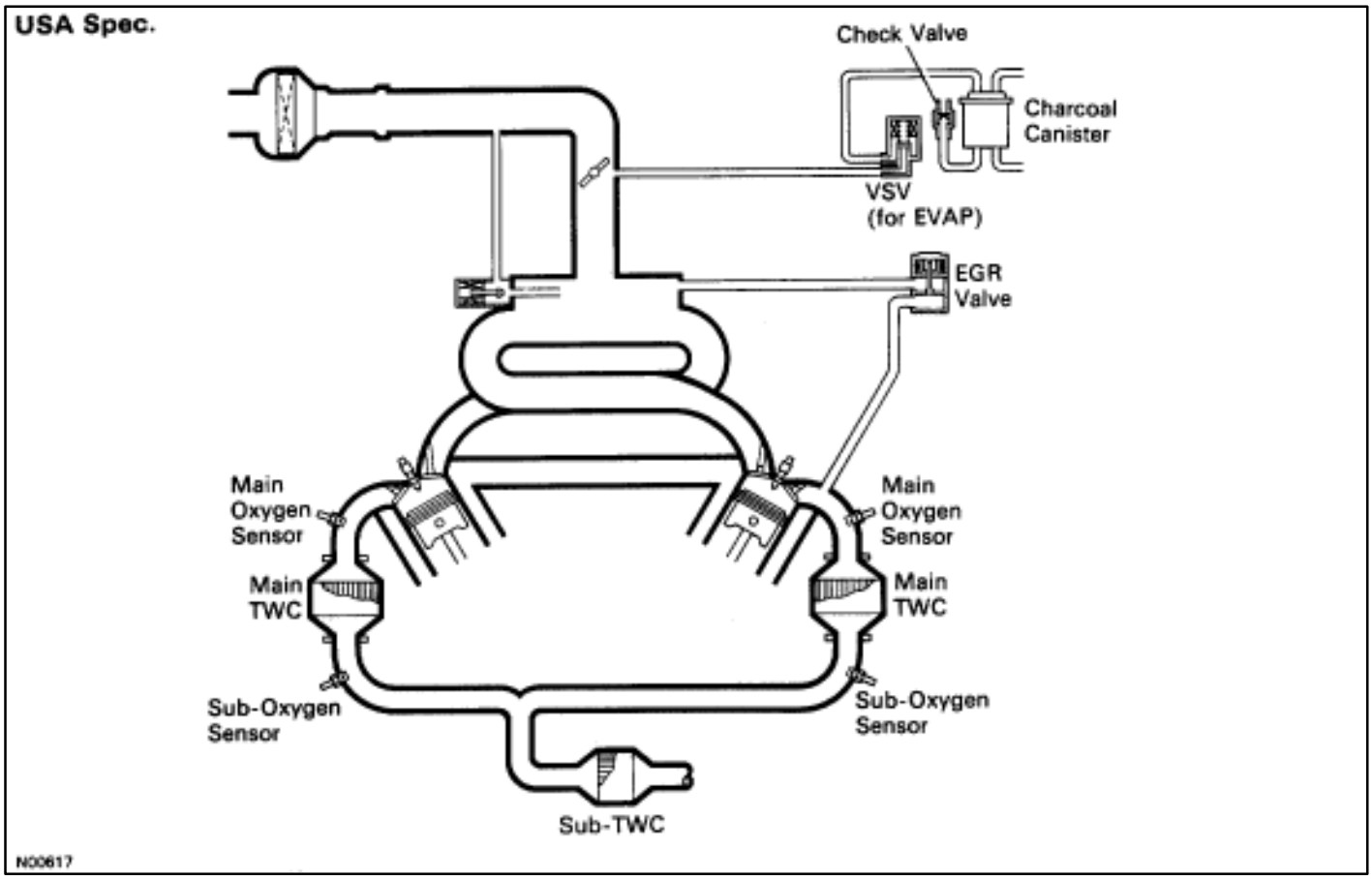

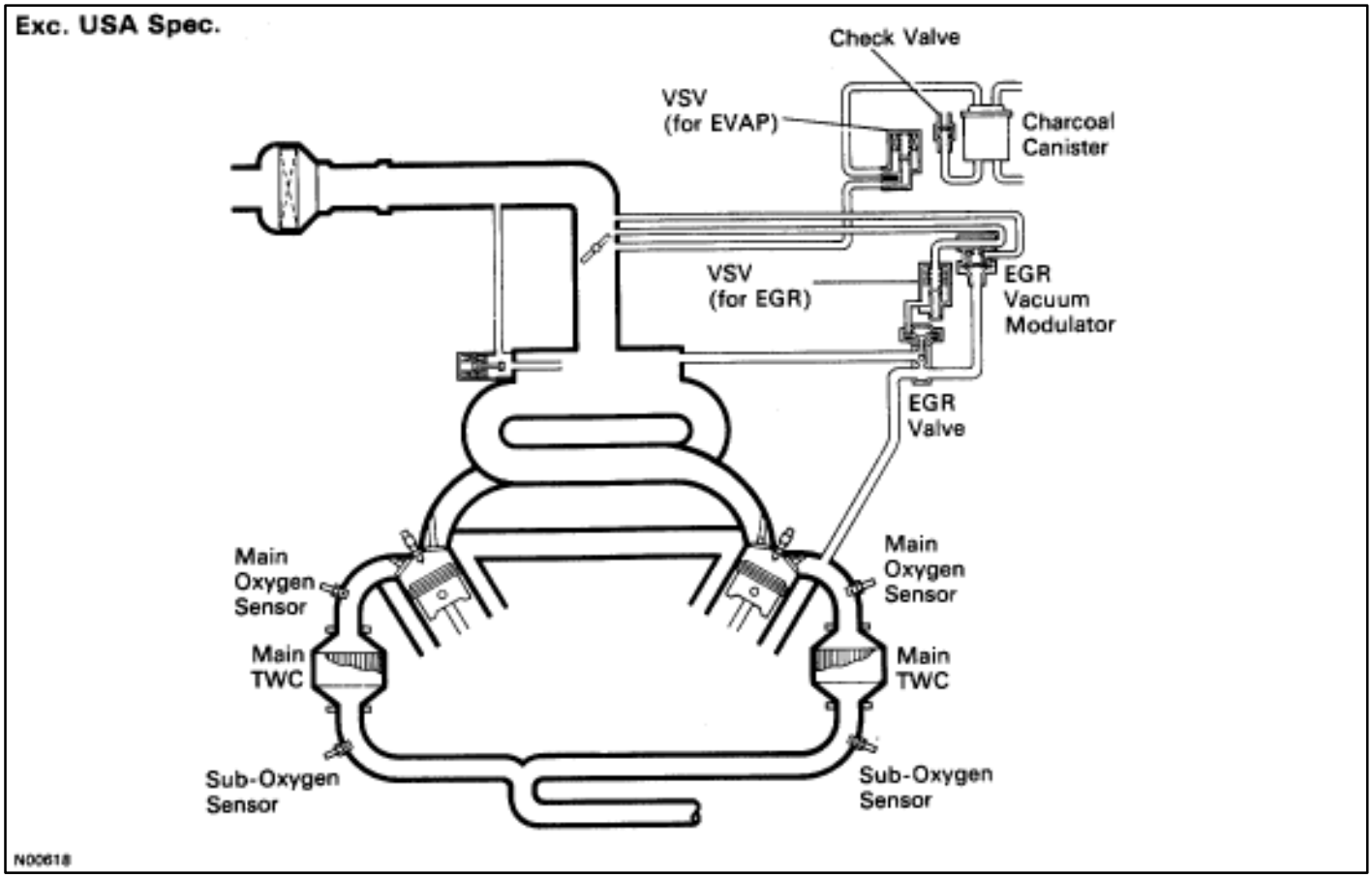

WhereEverybodyKnowsYourName

POSITIVE CRANKCASE VENTILATION (PCV) SYSTEM

DESCRIPTION

To reduce HC emission, crankcase blow–by gas (HC) is routed through the PCV valve to the air intake chamber for combustion in the cylinders.

OPERATION

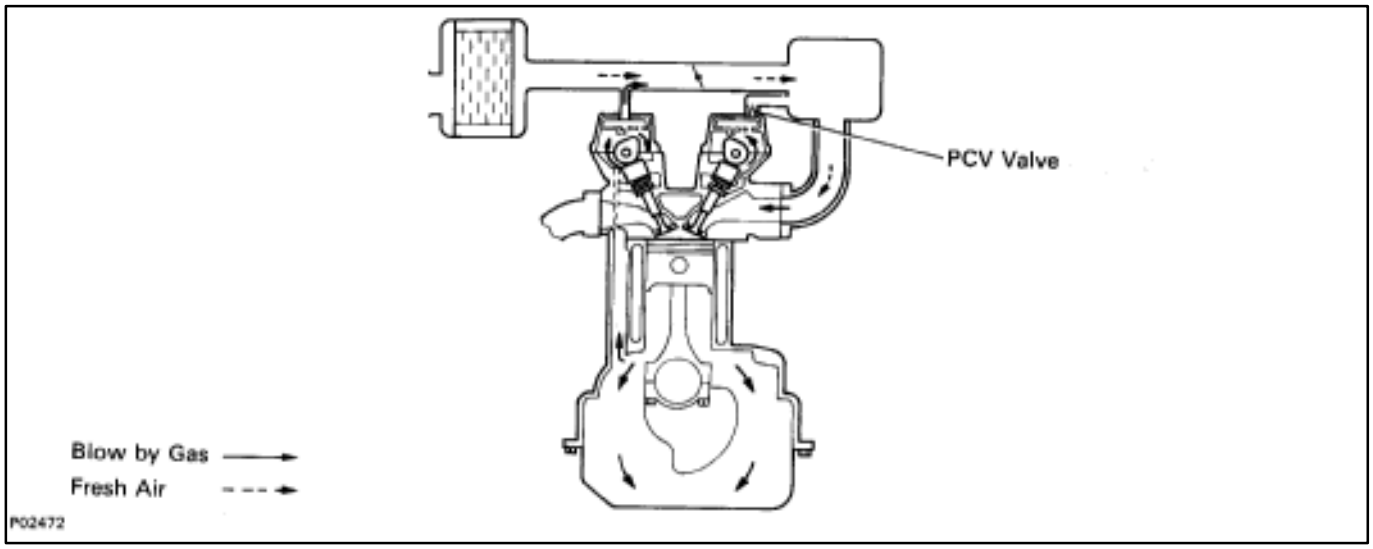

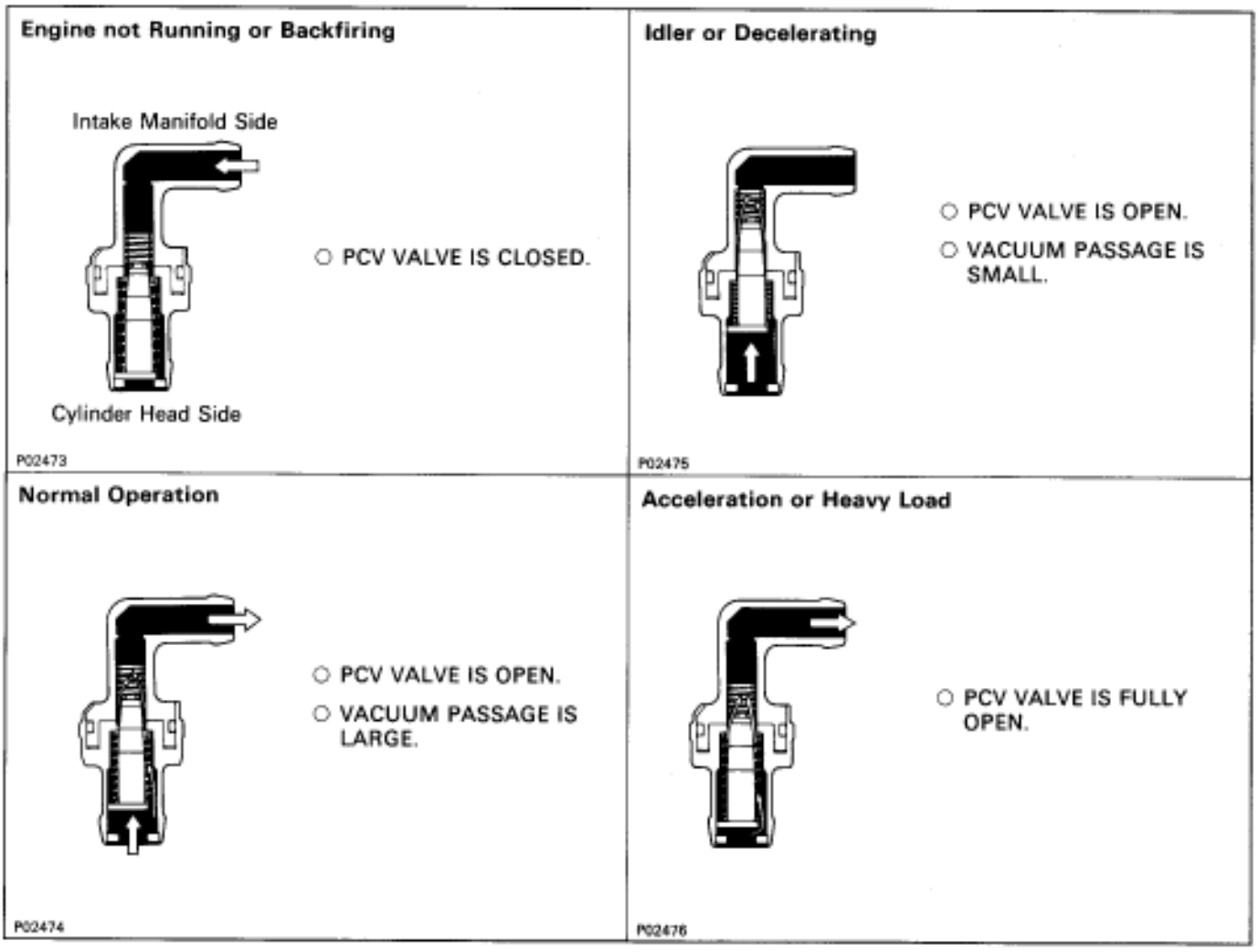

WhereEverybodyKnowsYourName

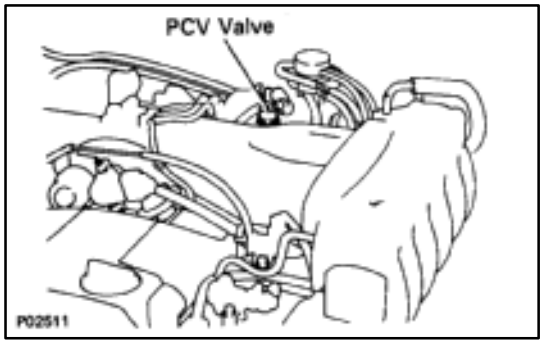

INSPECTION OF PCV VALVE

1. REMOVE PCV VALVE

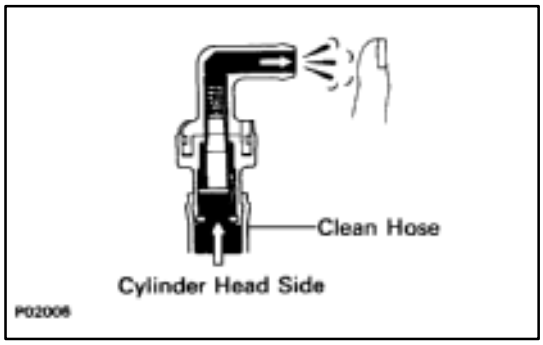

2. ATTACH CLEAN HOSE TO PCV VALVE

3. BLOW AIR FROM CYLINDER HEAD SIDE

Check that air passes through easily.

NOTICE: Do not suck air through the valve.

Petroleum substances inside the valve are harmful.

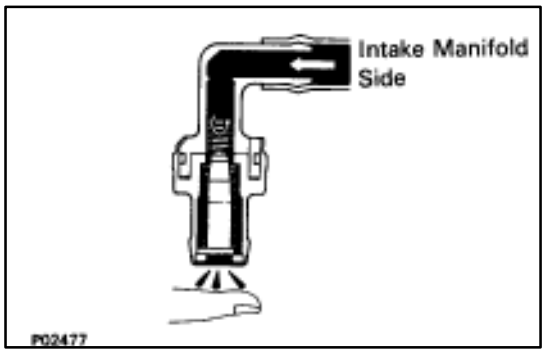

4. BLOW AIR FROM INTAKE MANIFOLD SIDE

Check that air passes through with difficulty.

If the PCV valve fails either check, replace it.

5. REINSTALL PCV VALVE

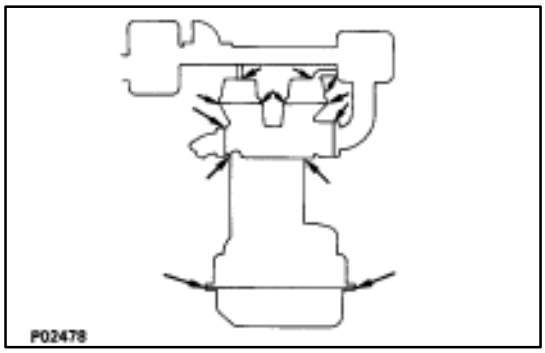

INSPECTION OF PCV HOSES AND CONNECTORS

VISUALLY INSPECT HOSES, CONNECTIONS AND GASKETS

Check for cracks, leaks or damage.

WhereEverybodyKnowsYourName

SCHEMATIC DRAWING

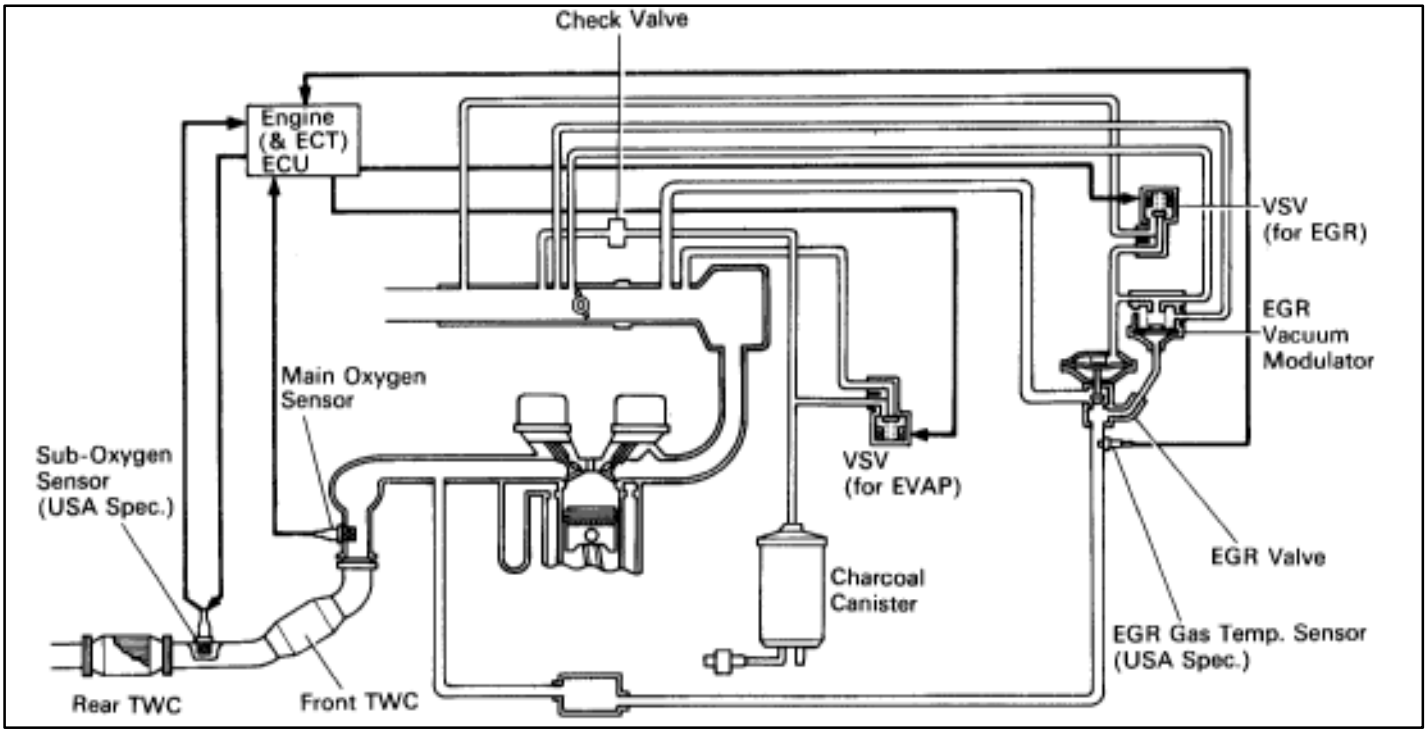

PREPARATION

SST (SPECIAL SERVICE TOOLS)

Illustration	Part No.	Part Name	Note
	09843–18020	Diagnosis Check Wire	for EGR system inspection

RECOMMENDED TOOLS

Illustration	Part No.	Part Name	Note
	09082–00015	TOYOTA Electrical Tester	

EQUIPMENT

Part Name	Note
Vacuum gauge	EGR system
Engine tune–up tester	Engine speed

SSM (SPECIAL SERVICE MATERIALS)

Part Name	Part No.	Note
08833–00070	THREE BOND 1324	BVSV

WhereEverybodyKnowsYourName

PREPARATION

SST (SPECIAL SERVICE TOOL)

Illustration	Part No.	Part Name	Note
	09843-18020	Diagnosis Check Wire	for EGR system inspection

RECOMMENDED TOOLS

Illustration	Part No.	Part Name	Note
	09082-00015	TOYOTA Electrical Tester	

EQUIPMENT

Part Name	Note
Engine tune–up tester	Engine speed

WhereEverybodyKnowsYourName

POSITIVE CRANKCASE VENTILATION (PCV) SYSTEM

DESCRIPTION

To reduce HC emission, crankcase blow–by gas (HC) is routed through the PCV valve to the air intake chamber for combustion in the cylinders.

OPERATION

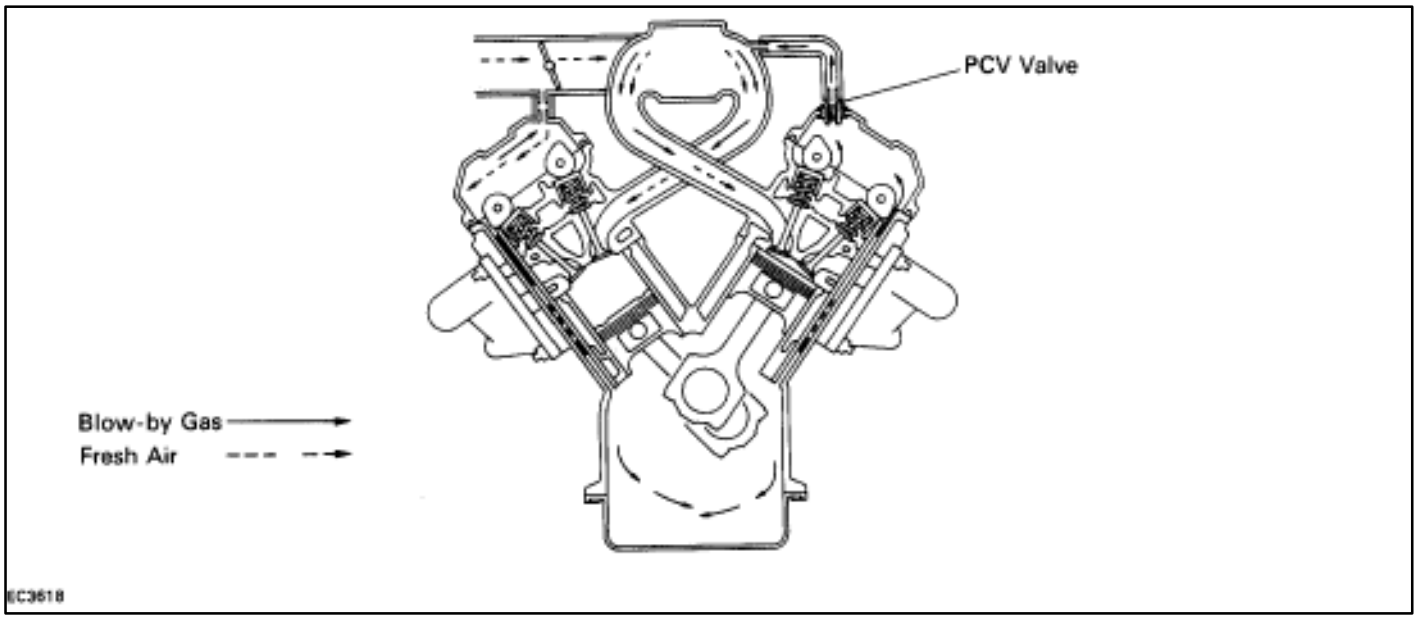

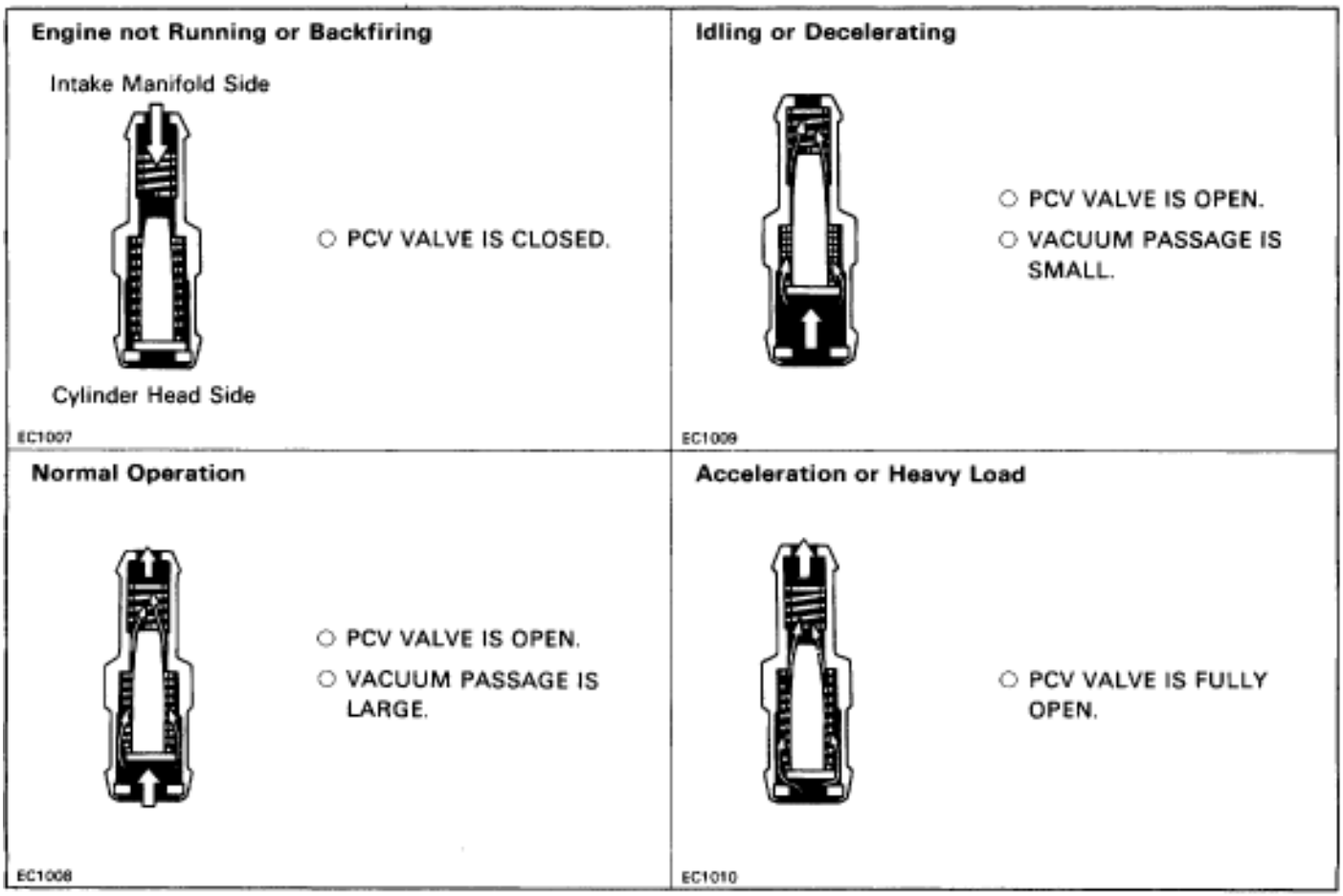

WhereEverybodyKnowsYourName

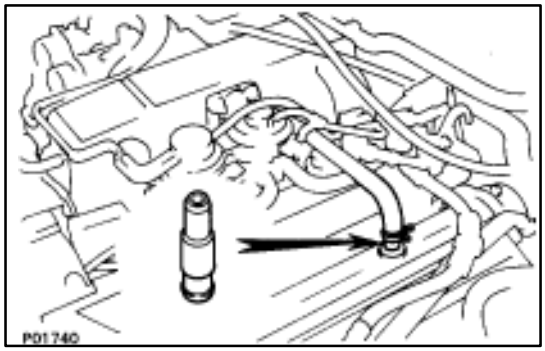

INSPECTION OF PCV VALVE

1. REMOVE PCV VALVE

(a) Disconnect the PCV hose from the PCV valve.

(b) Remove the PCV valve.

2. INSTALL CLEAN HOSE TO PCV VALVE

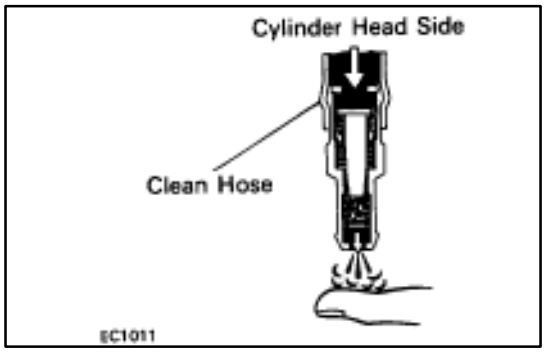

3. INSPECT PCV VALVE OPERATION

(a) Blow air into the cylinder head side, and check that air passes through easily.

CAUTION: Do not suck air through the valve. Petroleum substances inside the valve are harmful.

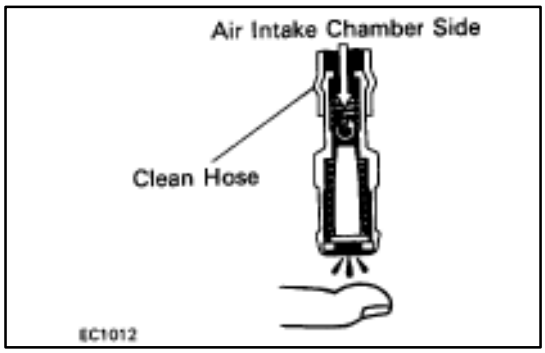

(b) Blow air into the air intake chamber side, and check that air passes through with difficulty.

If operation is not as specified, replace the PCV valve.

4. REMOVE CLEAN HOSE FROM PCV VALVE

5. REINSTALL PCV VALVE

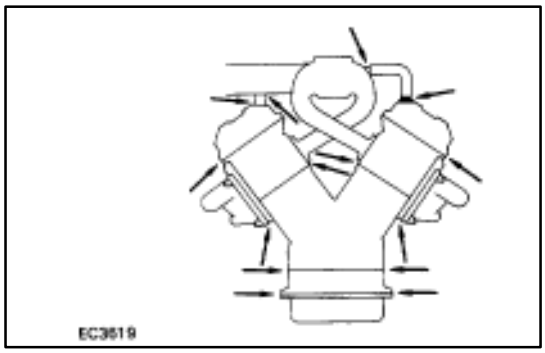

INSPECTION OF PCV HOSE AND CONNECTIONS

VISUALLY INSPECT HOSE, CONNECTIONS AND GASKETS

Check for cracks, leaks or damage.

WhereEverybodyKnowsYourName

FUEL EVAPORATIVE EMISSION CONTROL (EVAP) SYSTEM

DESCRIPTION

To reduce HC emission, evaporated fuel from the fuel tank is routed through the charcoal canister to the intake manifold for combustion in the cylinders.

OPERATION

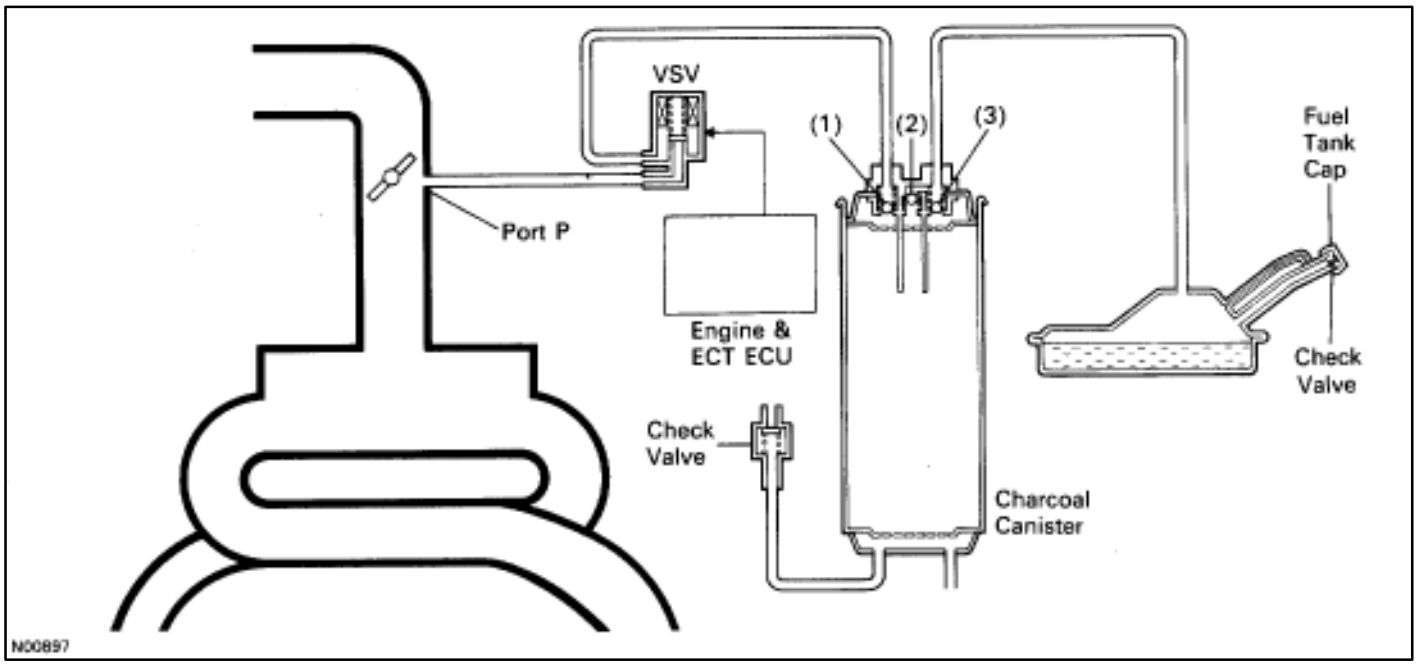

Coolant Temp.	VSV	Throttle Valve Opening	Canister Check Valve			Check Valve in Cap	Evaporated Fuel (HC)
			(1)	(2)	(3)		
Below 40°C (104°F)	No Operation	Fulley closed.	–	–	–	–	Small volume of HC from canister enters air intake chamber.
Above 40°C (104°F)	Operation	Fully closed or bellow Specified air volume.	–	–	–	–	
		Conditions other than above.	–	–	–	–	HC from canister enters air intake chamber in the amout programmed in accordance with the intake air volume.
High pressure in tank	–	–	–	OPEN	CLOSED	CLOSED	HC from tank is absorbed into the canister.
High vacuum in tank	–	–	–	CLOSED	OPEN	OPEN	Air is led into the fuel tank.

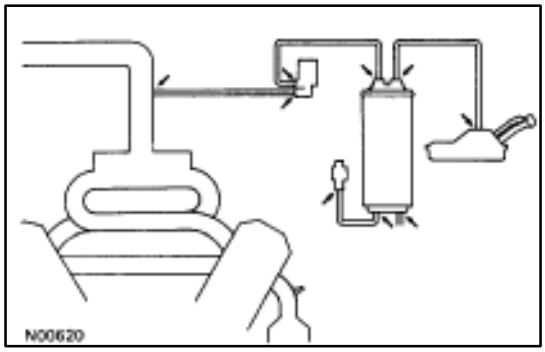

INSPECTION OF FUEL VAPOR LINES, FUEL TANK AND TANK CAP

1. **VISUALLY INSPECT LINES AND CONNECTIONS**
   Look for loose connections, sharp bends or damage.
2. **VISUALLY INSPECT FUEL TANK**
   Look for deformation, cracks or fuel leakage.

WhereEverybodyKnowsYourName

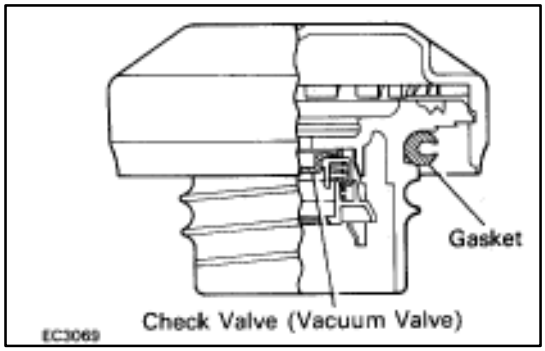

3. VISUALLY INSPECT FUEL TANK CAP

Check if the cap and/or gasket are deformed or damaged. If necessary, repair or replace the cap.

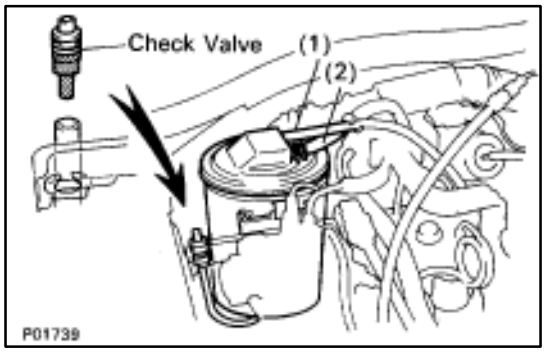

INSPECTION OF CHARCOAL CANISTER

1. REMOVE CHARCOAL CANISTER

(a) Disconnect the following hoses:
(1) Vacuum hose (from VSV) from charcoal canister
(2) EVAP hose from charcoal canister

(b) Disconnect the grommet on the check valve from the bracket, and remove the charcoal canister.

(c) Remove the check valve from the hose end on the charcoal canister.

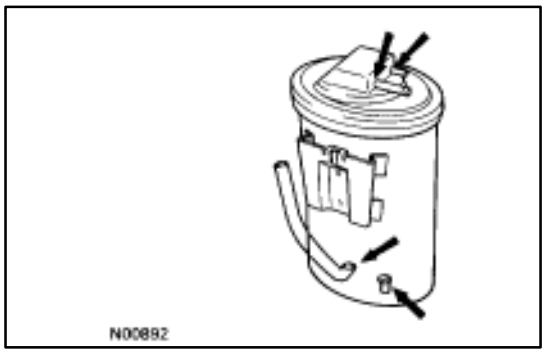

2. VISUALLY INSPECT CHARCOAL CANISTER

Look for cracks or damage.

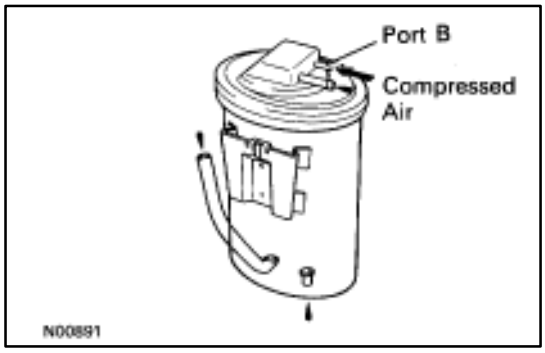

3. CHECK FOR CLOGGED FILTER AND STUCK CHECK VALVE

(a) Using low pressure compressed air, blow into port A and check that air flows without resistance from the other ports.

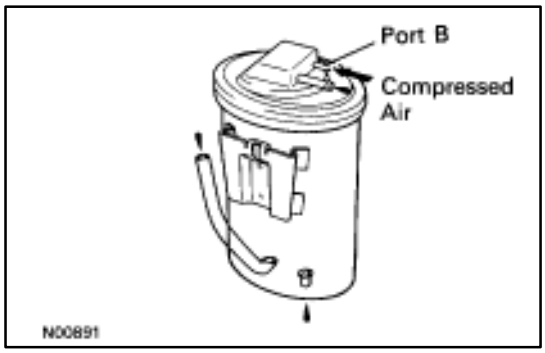

(b) Blow into port B and check that air does not flow from the other ports.

If a problem is found, replace the charcoal canister.

WhereEverybodyKnowsYourName

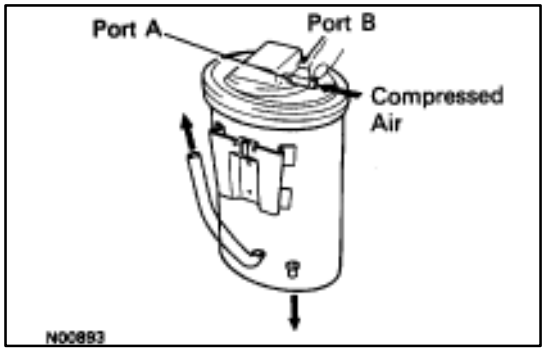

4. CLEAN FILTER IN CANISTER

Clean the filter by blowing 294 kPa (3 kgf/cm2, 43 psi) of compressed air into port A while holding port B closed.

NOTICE:

- **Do not attempt to wash the canister.**
- **No activated carbon should come out.**

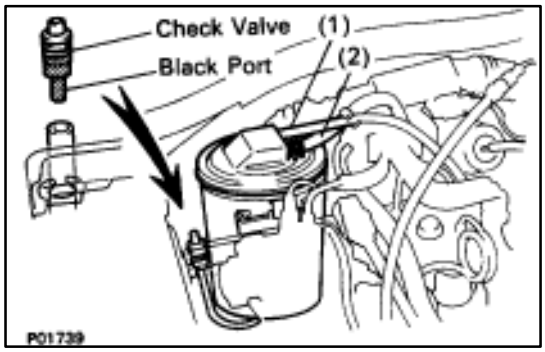

5. REINSTALL CHARCOAL CANISTER

HINT: Install the check valve with black port facing the charcoal canister side.

(a) Install the check valve to the hose end on the charcoal canister.
(b) Install the charcoal canister.
(c) Install the grommet on the check valve to the bracket.
(d) Connect the following hoses:
  (1) Vacuum hose (from VSV) to charcoal canister
  (2) EVAP hose to charcoal canister

COMPONENTS FOR REMOVAL AND INSTALLATION OF VSV

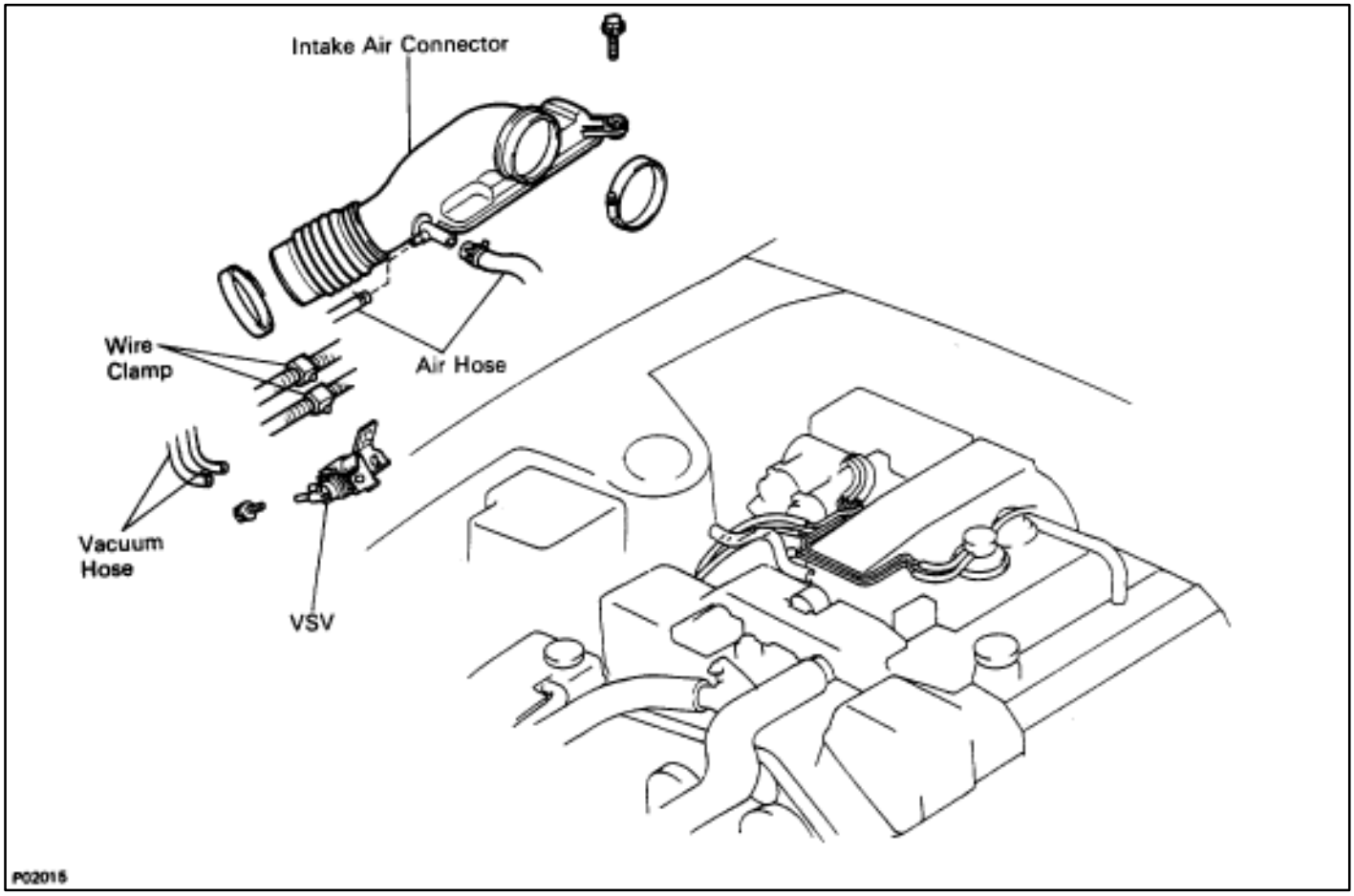

WhereEverybodyKnowsYourName

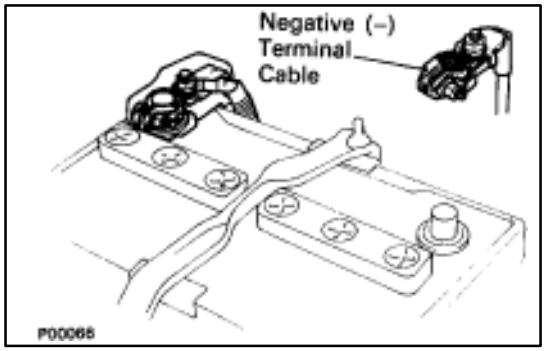

INSPECTION OF VSV

1. DISCONNECT CABLE FROM NEGATIVE TERMINAL OF BATTERY

CAUTION: Work must be started after approx. 20 seconds or longer from the time the ignition switch is turned to the "LOCK" position and the negative (–) terminal cable is disconnected from the battery.

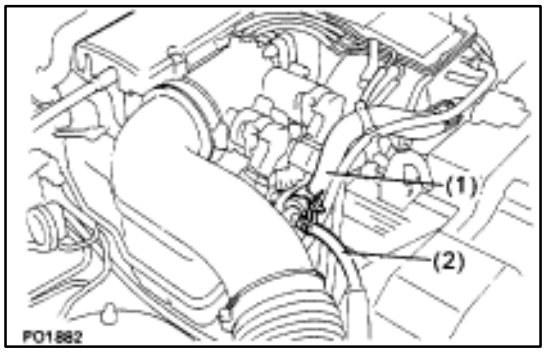

2. REMOVE INTAKE AIR CONNECTOR

(a) Disconnect the following hoses:
  (1) Air hose (from ISC valve) from intake air connector
  (2) Air hose (from PS air control valve) from intake air connector

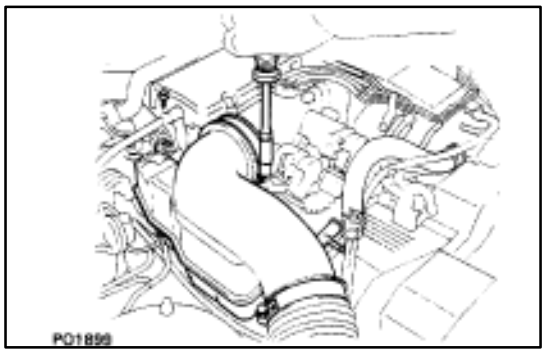

(b) Remove the bolt holding the intake air connector to the cylinder head cover.
(c) Loosen the two hose clamps.
(d) Disconnect the intake air connector from the throttle body and air cleaner hose, and remove the intake air connector.

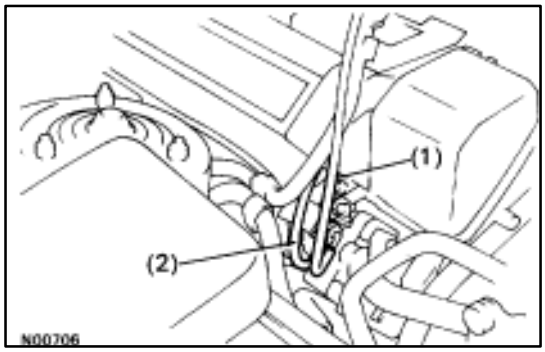

3. REMOVE VSV

(a) Disconnect the VSV connector.
(b) Disconnect the following hoses:
  (1) Vacuum hose (from vacuum pipe) from VSV
  (2) Vacuum hose (from charcoal canister) from VSV

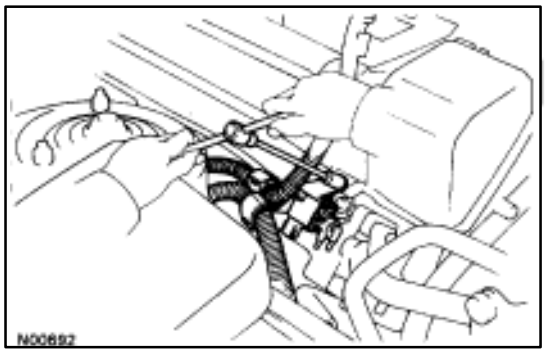

(c) Remove the two bolts and VSV from the cylinder head.
(d) Disconnect the two wire clamps from the VSV bracket, and remove the VSV.

WhereEverybodyKnowsYourName

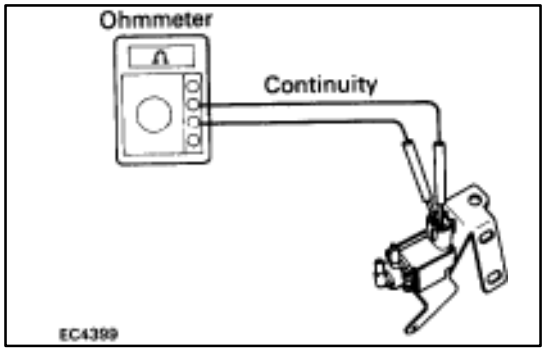

4. INSPECT VSV

A. Inspect VSV for open circuit

Using an ohmmeter, check that there is continuity between the terminals.

Resistance (Cold): 30–34 ?

If there is no continuity, replace the VSV.

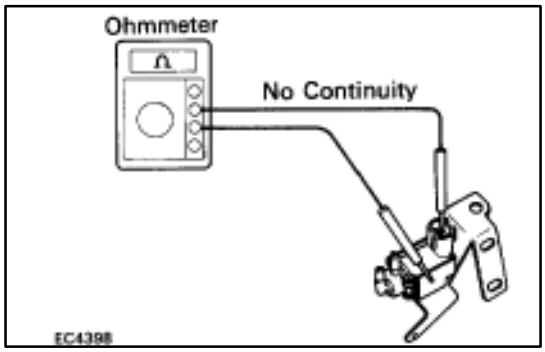

B. Inspect VSV for ground

Using an ohmmeter, check that there is no continuity between each terminal and the body.

If there is continuity, replace the VSV.

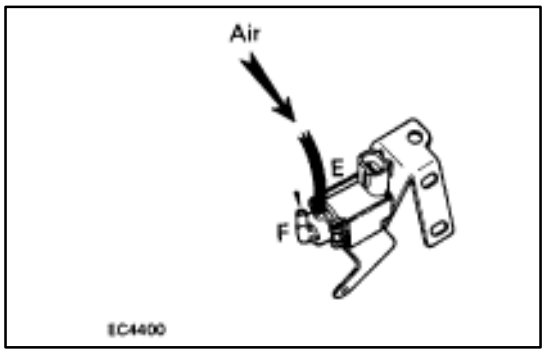

C. Inspect VSV operation

(a) Check that the air flows with difficulty from ports E to F.

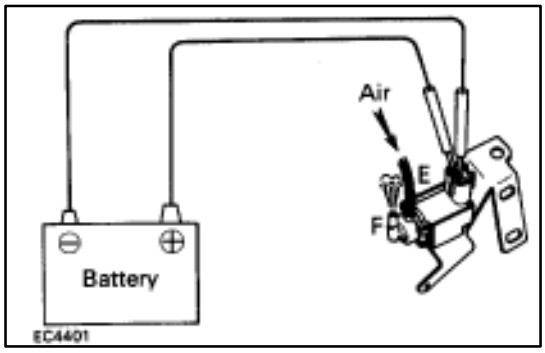

(b) Apply battery voltage across the terminals.

(c) Check that the air flows without resistance from port E to F.

If operation is not as specified, replace the VSV.

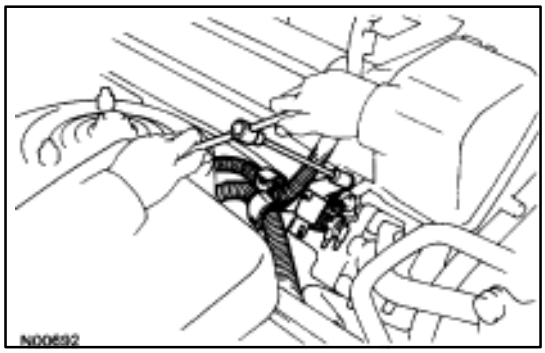

5. REINSTALL VSV

(a) Install the VSV with the two bolts.

(b) Connect the two wire clamps to the VSV bracket.

WhereEverybodyKnowsYourName

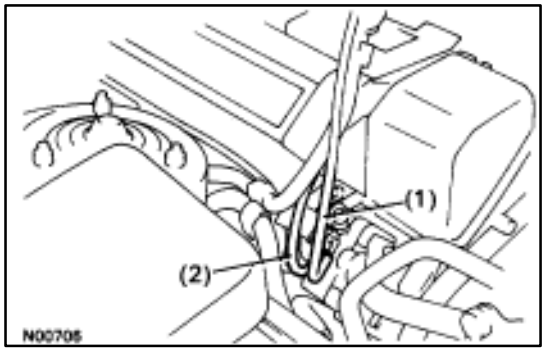

(c) Connect the following hoses:
  (1) Vacuum hose (from vacuum pipe) to VSV
  (2) Vacuum hose (from charcoal canister) to VSV
(d) Connect the VSV connector.

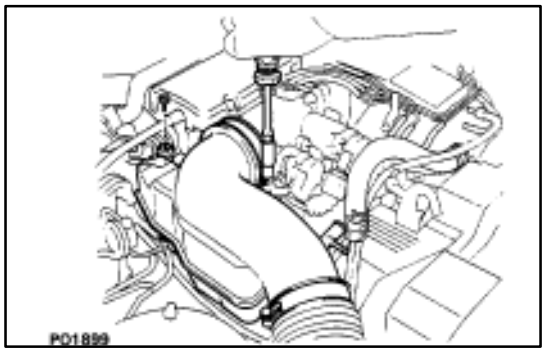

6. REINSTALL INTAKE AIR CONNECTOR
(a) Connect the end portions of the intake air connector to the throttle body and air cleaner hose.
(b) Tighten the two hose clamps.
(c) Install the bolt holding the intake air connector to the cylinder head cover.

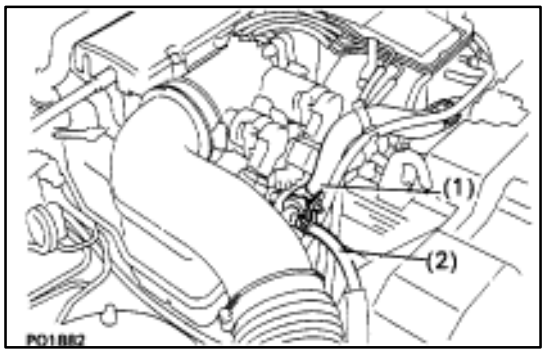

(d) Connect the following hoses:
  (1) Air hose (from ISC valve) to intake air connector
  (2) Air hose (from PS air control valve) to intake air connector

7. RECONNECT CABLE TO NEGATIVE TERMINAL OF BATTERY

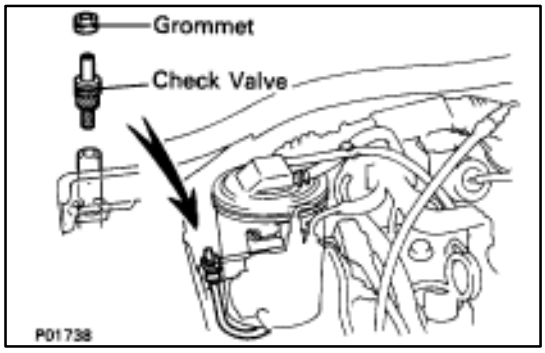

INSPECTION OF CHECK VALVE

1. REMOVE CHECK VALVE
(a) Disconnect the grommet on the check valve from the bracket.
(b) Remove the check valve from the hose end on the charcoal canister.
(c) Remove the grommet from the check valve.

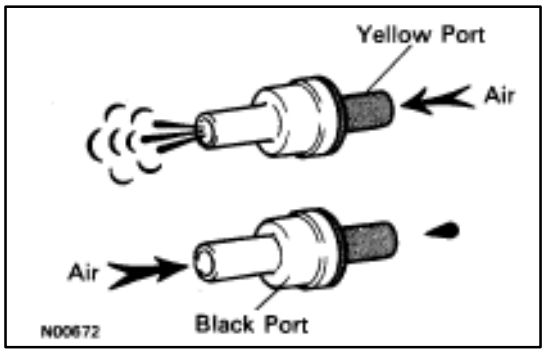

2. INSPECT CHECK VALVE
(a) Check that air flows from the yellow port to the black port.
(b) Check that air does not flow from the black port to the yellow port.

If operation is not as specified, replace the check valve.

WhereEverybodyKnowsYourName

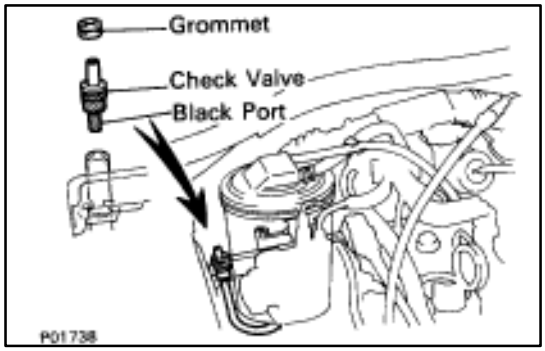

3. REINSTALL CHECK VALVE

HINT: Reinstall the check valve with the black port facing the charcoal canister side.

(a) Install the grommet to the check valve.

(b) Install the check valve to the hose end on the charcoal canister.

(c) Install the grommet on the check valve to the bracket.

WhereEverybodyKnowsYourName

EXHAUST GAS RECIRCULATION (EGR) SYSTEM

DESCRIPTION

To reduce NOx emission, part of the exhaust gases are recirculated through the EGR valve to the intake manifold to lower the maximum combustion temperature.

OPERATION

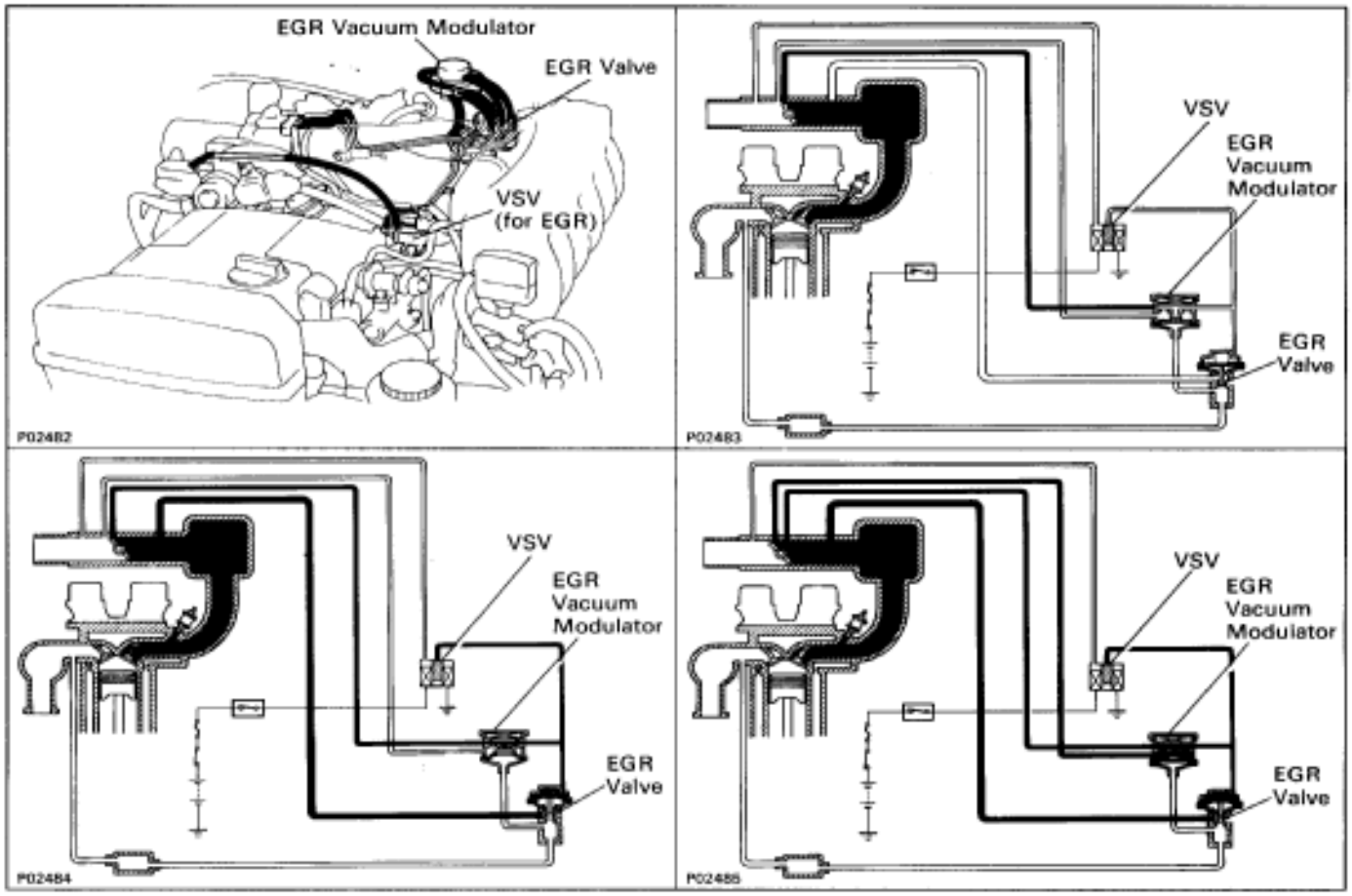

To reduce NOx emission, part of the exhaust gases are recirculated through the EGR valve to the intake manifold to lower the maximum combustion temperature.

Coolant Temp.	VSV	Throttle Valve Opening	Pressure in the EGR Valve Pressure Chamber		EGR Vacuum Modulator	EGR Valve	Exhaust Gas
Below 45°C (113°F)	OPEN	–	–		–	CLOSED	Not recirculated
Above 50°C (122°F)	CLOSED	Positioned below EGR port	–		–	CLOSED	Not recirculated
		Positioned between EGR port and R port	(1) LOW	* Pressure constantly alternating between low and high	OPENS passage to atmosphere	CLOSED	Not recirculated
			(2) HIGH		OPENS passage to atmosphere	OPEN	Recirculated
Above 50°C (122°F)	CLOSED	Positioned above R port	(3) HIGH	**	CLOSES passage to atmosphere	OPEN	Recirculated (increase)

* Pressure increases → Modulator closes → EGR valve open → Pressure drops → EGR Valve closes → Modulator open

** When the throttle valve is positioned above the R port, the EGR vacuum modulator will close the atmosphere passage and open the EGR valve to increase the EGR gas, even if the exhaust pressure is insufficiently low.

WhereEverybodyKnowsYourName

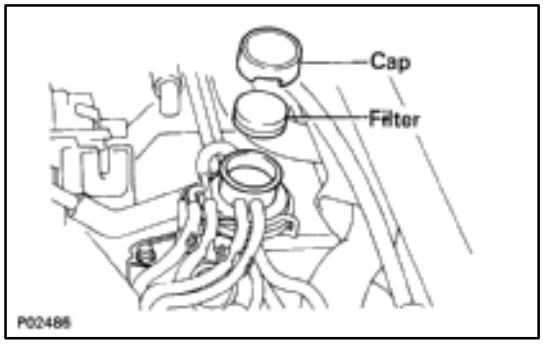

INSPECTION OF EGR SYSTEM

1. CHECK AND CLEAN FILTER IN EGR VACUUM MODULATOR

(a) Remove the cap and filter.
(b) Check the filter for contamination or damage.
(c) Using compressed air, clean the filter.
(d) Reinstall the filter and cap.

HINT: Install the filter with the coarser surface facing the atmospheric side (out ward).

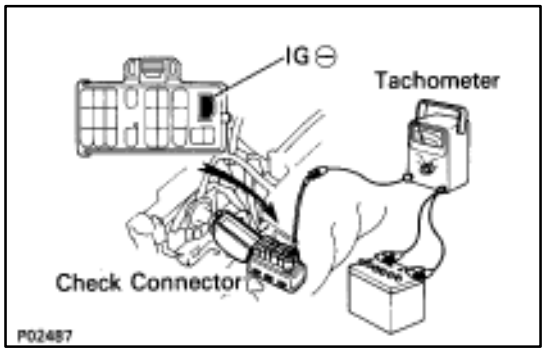

2. INSPECT SYSTEM OPERATION

(a) Connect the tachometer to terminal IG – of the check (”DIAGNOSIS”) connector.

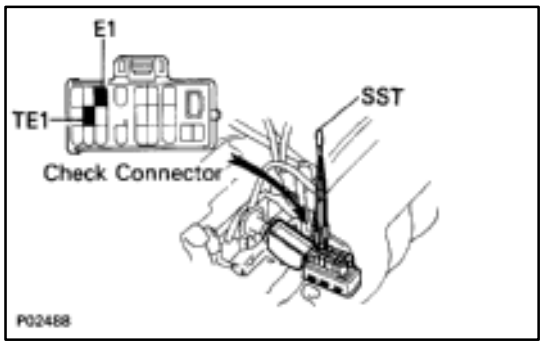

(b) Using SST connect the terminals TE1 and E1 of the check (”DIAGNOSIS”) connector.

SST 09843–18020

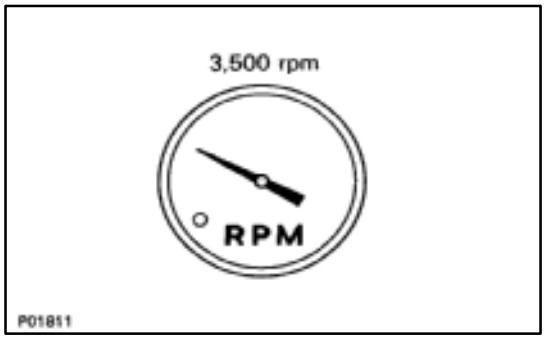

(c) Keep the engine at 3,500 rpm with the transmission in ”N” position.

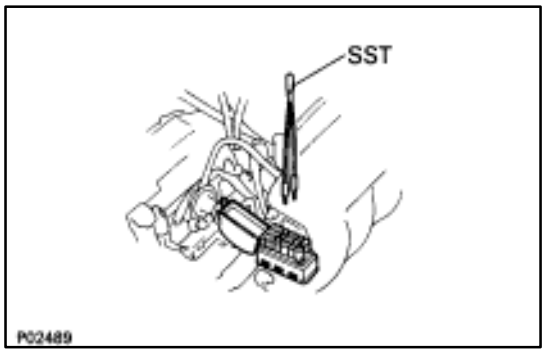

(d) Remove the SST from the check connector.

SST 09843–18020

WhereEverybodyKnowsYourName

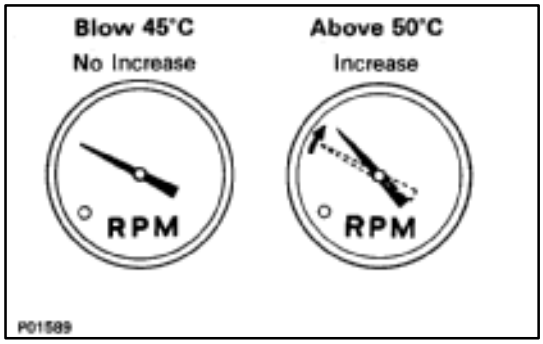

(e) Check whether the engine rpm increases 100–300 rpm under the following conditions:

Coolant temp.

Below 45°C (113°F) . . . NO increase

Above 50°C (122°F) . . . Increases

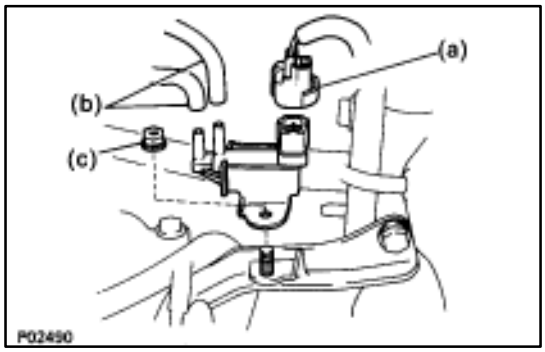

INSPECTION OF VSV

1. REMOVE VSV

(a) Disconnect the VSV connector.

(b) Disconnect the two vacuum hoses from VSV.

(c) Remove the bolt and VSV from the intake manifold.

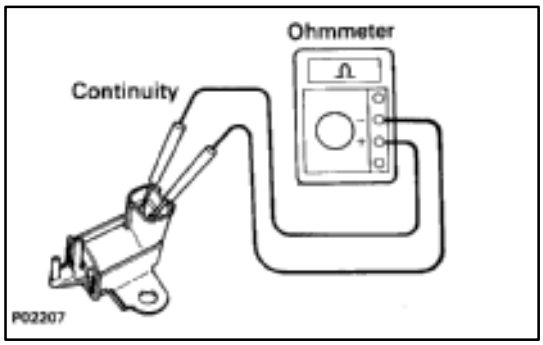

2. INSPECT VSV

(a) Inspect VSV for open circuit.

Using an ohmmeter, check that there is continuity between the terminals.

Resistance (Cold): 33–39 ?

If there is no continuity, replace the VSV.

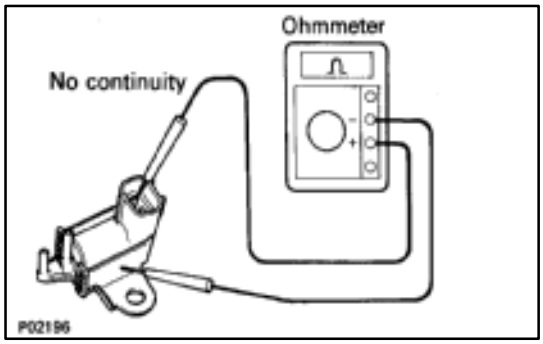

(b) Inspect VSV for ground.

Using an ohmmeter, check that there is no continuity between each terminal and the body.

If there is continuity, replace the VSV.

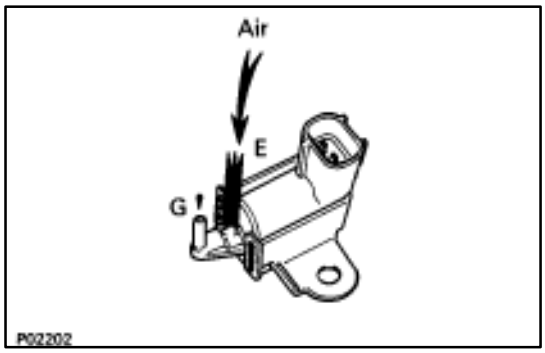

(c) Inspect VSV operation:

1) Check that the air flows from ports E to G

WhereEverybodyKnowsYourName

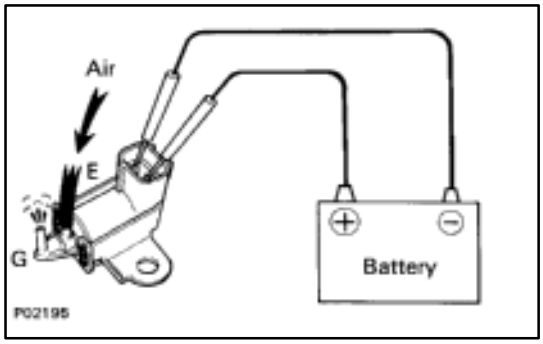

2) Apply battery voltage across the terminals
3) Check that the air flows from port E to port G

If operation is not as specified, replace the VSV.

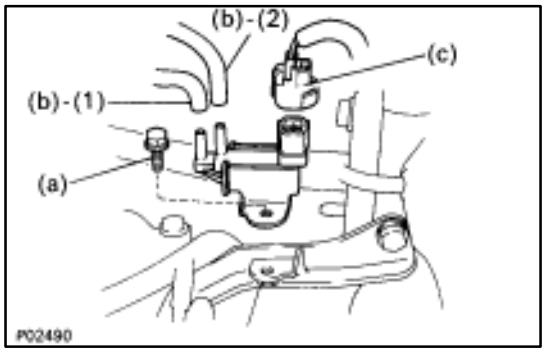

3. REINSTALL VSV

(a) Install the VSV with the nut.

Torque: 18 N·m (185 kgf·cm, 13 ft·lbf)

(b) Connect the following hoses:
(1) Vacuum hose (from throttle body)
(2) Vacuum hose (from EGR vacuum modulator)

(c) Connect the VSV connector.

INSPECTION OF EGR VACUUM MODULATOR

1. DISCONNECT VACUUM HOSES FROM EGR VACUUM MODULATOR

Disconnect the three vacuum hoses from ports P, Q and R of the EGR vacuum modulator.

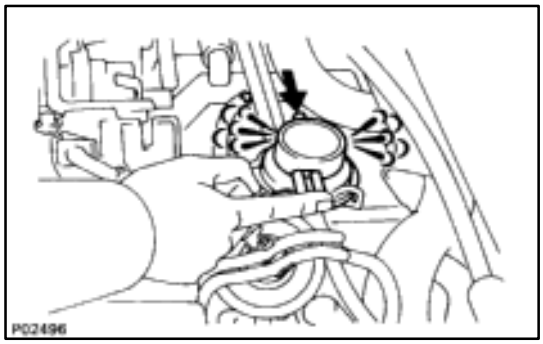

2. INSPECT EGR VACUUM MODULATOR OPERATION

(a) Block ports P and R with your finger.

(b) Blow air into port Q, and check that the air passes through to the air filter side freely.

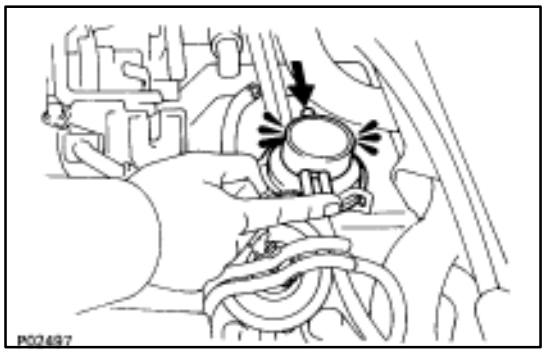

(c) Start the engine, and maintain speed at 2,500 rpm.

(d) Repeat the above test. Check the there is a strong resistance to air flow.

3. RECONNECT VACUUM HOSES TO EGR VACUUM MODULATOR

Connect the three vacuum hoses to the proper locations.

WhereEverybodyKnowsYourName

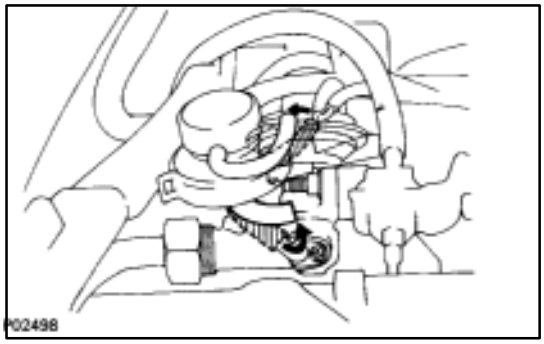

INSPECTION OF EGR VALVE

1. REMOVE EGR VALVE

(a) Disconnect the following hoses:
(1) Vacuum hose from EGR vacuum modulator
(2) Pressure hose from EGR vacuum modulator (USA Spec.)

(b) Disconnect the EGR Gas Temp. Sensor connector

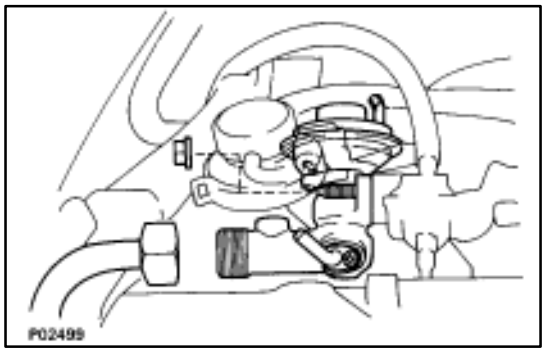

(c) Loosen the nut for EGR pipe.

(d) Remove the two nuts, EGR valve and gasket.

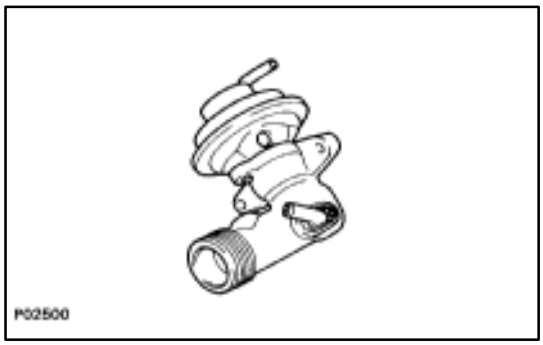

2. INSPECT EGR VALVE

Check for sticking and heavy carbon deposits.
If a problem is found, replace the EGR valve assembly.

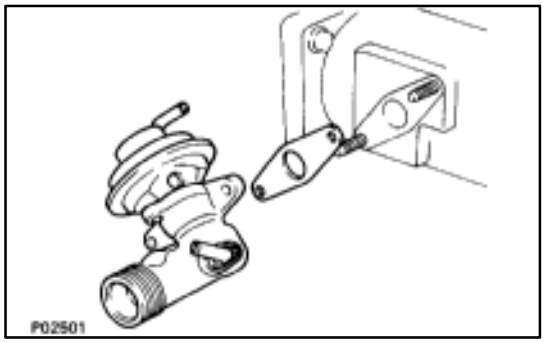

3. REINSTALL EGR VALVE

(a) Place a new gasket on the intake manifold.

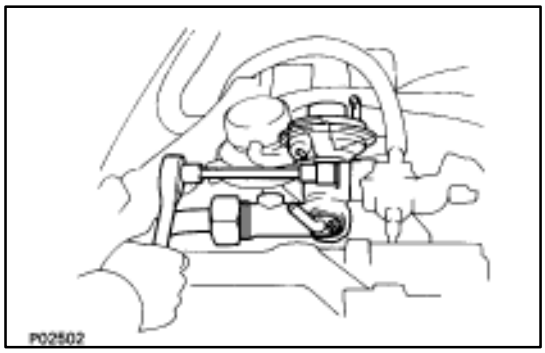

(b) Install the EGR valve with the two nuts.
Torque: 18 N·m (185 kgf·cm, 13 ft·lbf)

(c) Torque the nut for EGR pipe.
Torque: 64 N·m (650 kgf·cm, 47 ft·lbf)

WhereEverybodyKnowsYourName

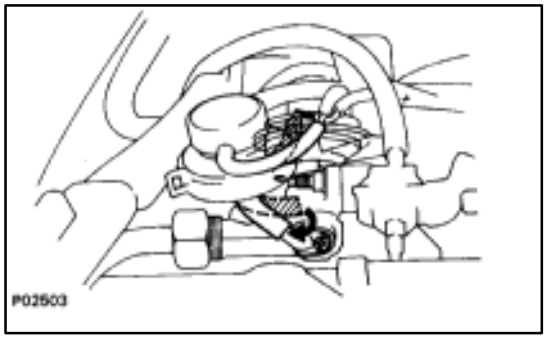

(d) Connect the following hoses:
(1) Vacuum hose from EGR vacuum modulator
(2) Pressure hose from EGR vacuum modulator (USA Spec.)

(e) Connect the EGR Gas Temp. Sensor connector.

WhereEverybodyKnowsYourName

EXHAUST GAS RECIRCULATION (EGR) SYSTEM

DESCRIPTION

To reduce NOx emission, part of the exhaust gases are recirculated through the EGR valve to the intake manifold to lower the maximum combustion temperature.

OPERATION

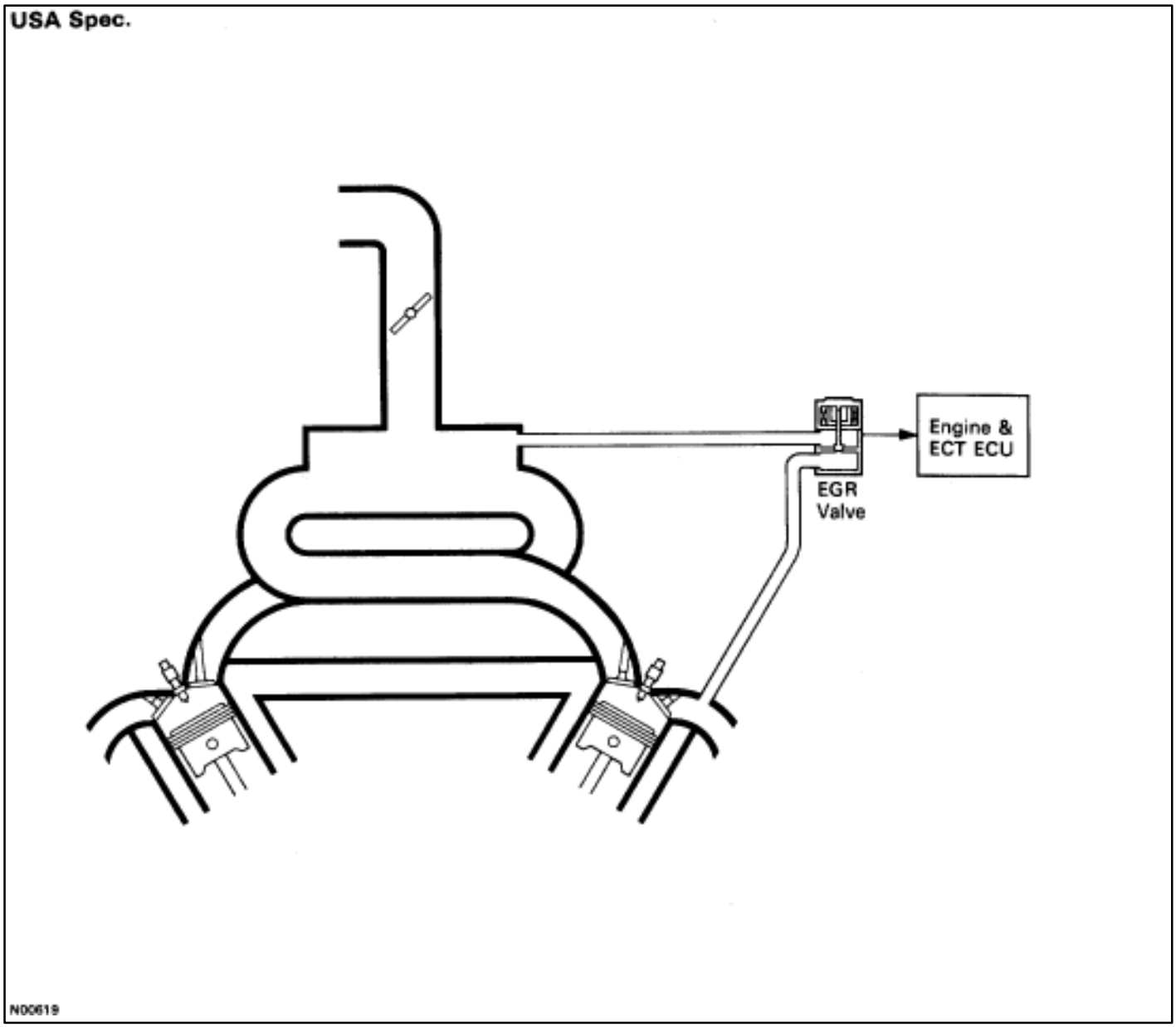

Coolant Temp.	Condition	EGR Valve	Exhaust Gas
Below 53°C (127°F)	–	CLOSED	Not recirculated
Above 55°C (131°F)	(a) Idling, Deceleration, Neutral, Low air volume, High Engine speed	CLOSED	Not recirculated
	Except (a)	OPEN	*Recirculated
* The ECU calculates the appropriate number of steps according to the intake air volume and the engine speed, then drives the stepping motor to maintain the EGR volume at a level appropriate to the driving conditions.			

WhereEverybodyKnowsYourName

OPERATION (Cont'd)

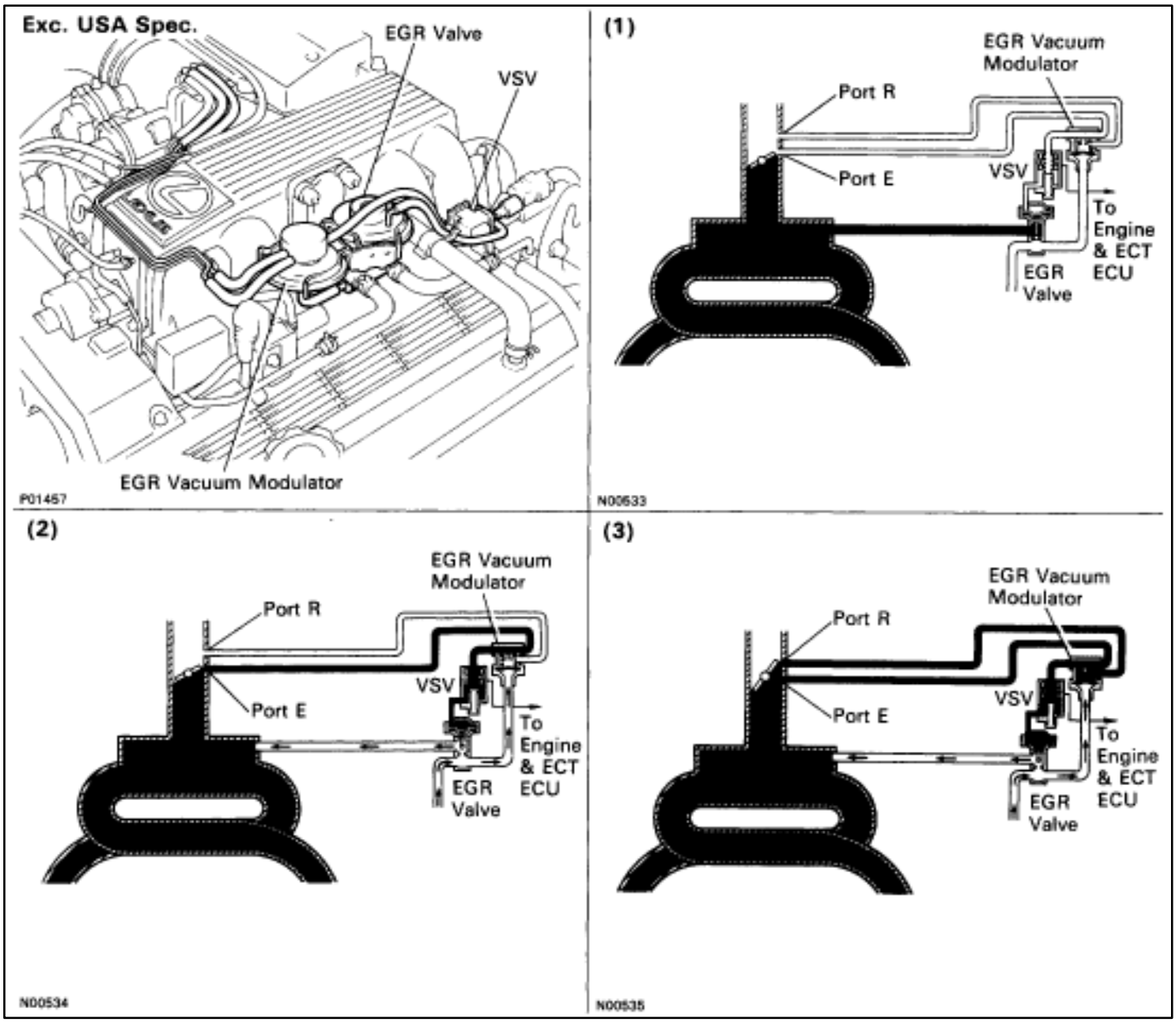

Coolant Temp.	Engine RPM	VSV	Throttle Valve Opening Angle	Pressure in EGR Valve Pressure Chamber		EGR Vacuum Modulator	EGR Valve	Exhaust Gas
Below 53°C (127°F)	–	CLOSED	–	–		–	CLOSED	Not recirculated
Above 55°C (131°F)	Below 3,800 rpm	CLOSED	–	(1)	–	–	CLOSED	Not recirculated
		OPEN	Positioned between Ports E and R	(2) HIGH	*	CLOSED passage to atmosphere	OPEN	Recirculated
			Positioned above Port R	(3) HIGH	**	CLOSES passage to atmosphere	OPEN	Recirculated (increase)
	Above 4,000 rpm	CLOSED	–	–		–	CLOSED	NOT Recirclated

* Pressure increase → Modulator closes → EGR valve opens → Pressure drops → EGR valve close → Modulator opens

** When the throttle valve is positioned above port R, the EGR vacuum modulator will close the atmosphere passage and open the EGR valve to increase the EGR gas, even if the exhaust pressure is insufficiently low.

WhereEverybodyKnowsYourName

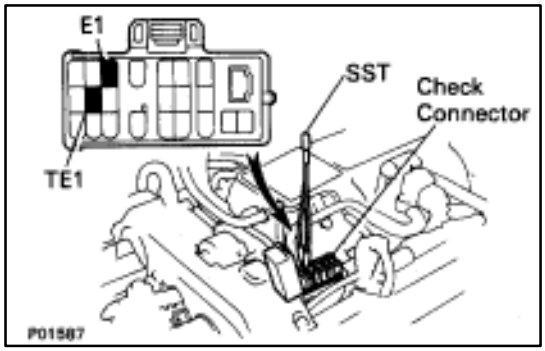

INSPECTION OF EGR SYSTEM (USA Spec.)

INSPECT SYSTEM OPERATION

(a) Using SST, connect terminals TE1 and E1 of the check (”DIAGNOSIS”) connector.

SST 09843–18020

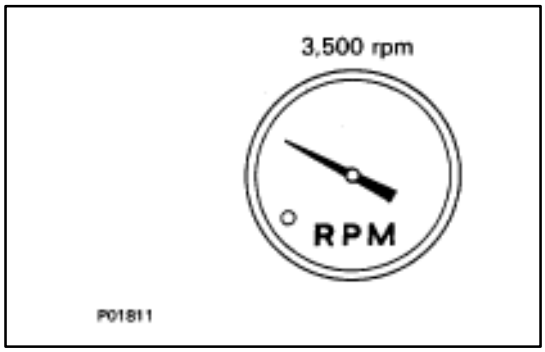

(b) Keep the engine at 3,500 rpm.

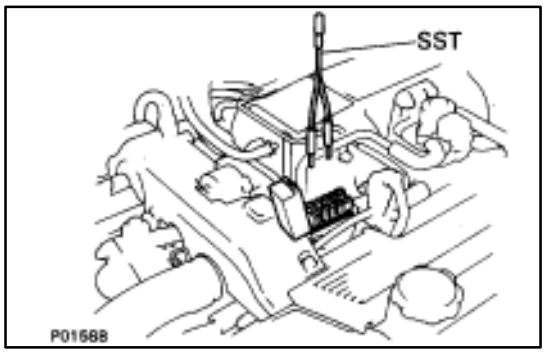

(c) Set the transmission shift lever to the ”N” position.

(d) Remove the SST from the check connector.

SST 09843–18020

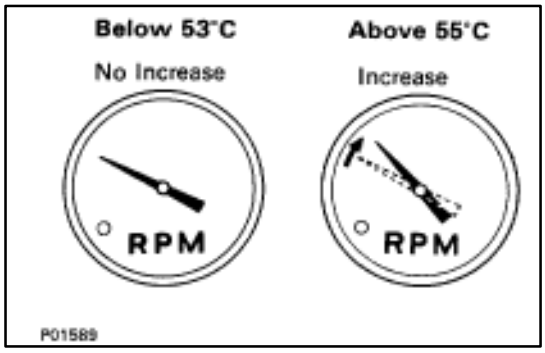

(e) Check whether the engine rpm increases 100–300 rpm under the following conditions.

Coolant temp.

Below 53°C (127°F) No increase

Above 55°C (131°F) Increases

WhereEverybodyKnowsYourName

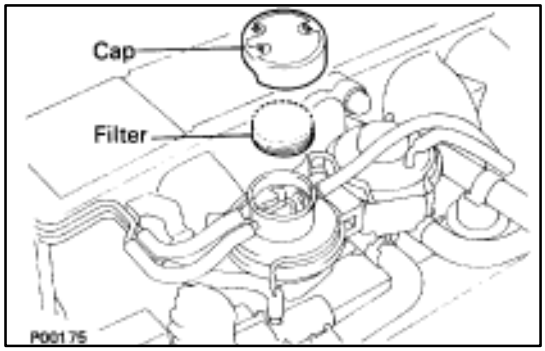

INSPECTION OF EGR SYSTEM (Exc. USA Spec.)

1. CHECK AND CLEAN FILTERS IN EGR VACUUM MODULATOR

(a) Remove the cap and filter.
(b) Check the filter for contamination or damage.
(c) Using compressed air, clean the filters.
(d) Reinstall the filter and cap.

HINT: Install the filter with the coarser surface facing the atmospheric side (outward).

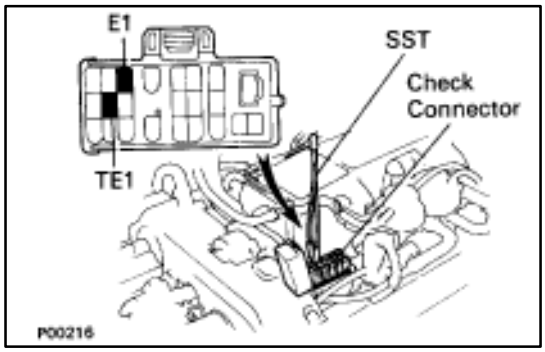

2. INSPECT SYSTEM OPERATION

(a) Using SST, connect terminals TE1 and E1 of the check (”DIAGNOSIS”) connector.

SST 09843–18020

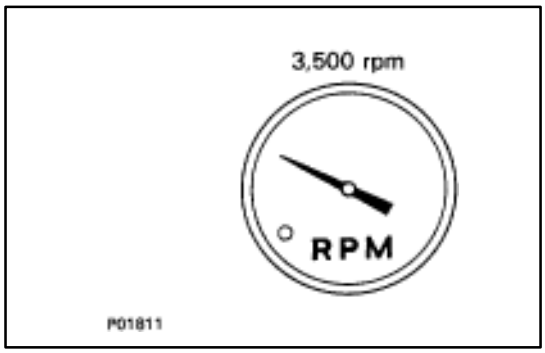

(b) Keep the engine at 3,500 rpm.

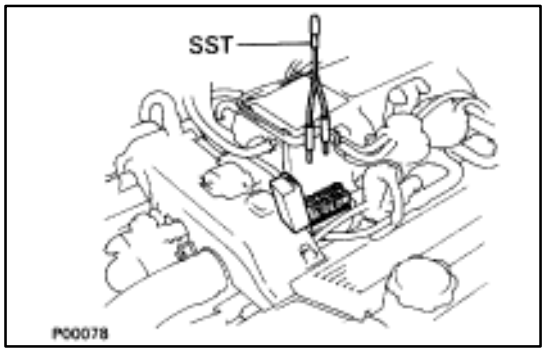

(c) Set the transmission shift lever to the ”N” position.
(d) Remove the SST from the check connector.

SST 09843–18020

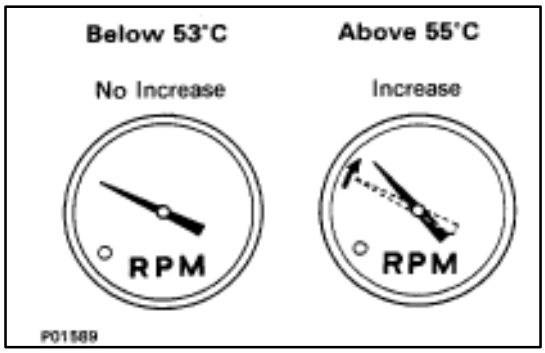

(e) Check whether the engine rpm increases 100–300 rpm under the following conditions:

Coolant temp.
Below 53°C (127°F) No increase
Above 55°C (131°F) Increases

WhereEverybodyKnowsYourName

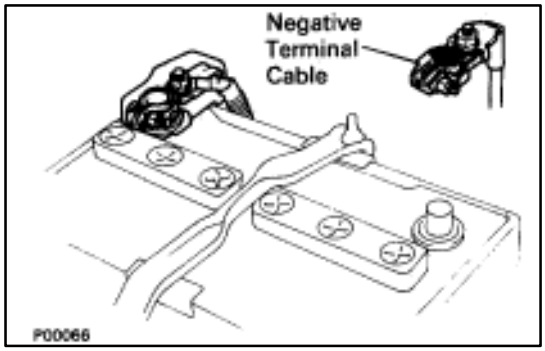

INSPECTION OF VSV (Exc. USA Spec.)

1. DISCONNECT CABLE FROM NEGATIVE TERMINAL OF BATTERY

CAUTION: Work must be started after approx. 20 seconds or longer from the time the ignition switch is turned to the "LOCK" position and the negative (–) terminal cable is disconnected from the battery.

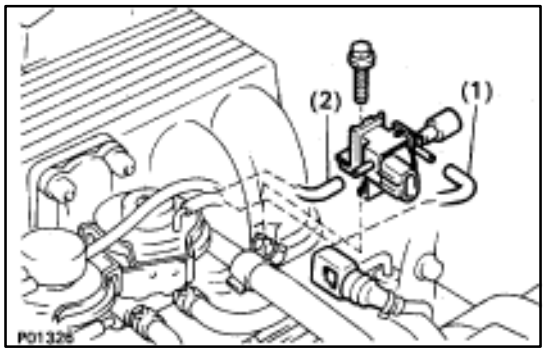

2. REMOVE VSV

(a) Disconnect the VSV connector.

(b) Disconnect the following hoses:

(1) Vacuum hose (from EGR valve) from VSV

(2) Vacuum hose (from EGR vacuum modulator) from VSV

(c) Remove the bolt and VSV.

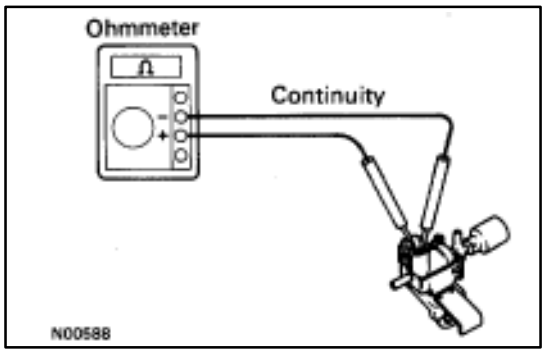

3. INSPECT VSV

A. Inspect VSV for open circuit

Using an ohmmeter, check that there is continuity between the terminals.

Resistance (Cold): 33–39 ?

If there is no continuity, replace the VSV.

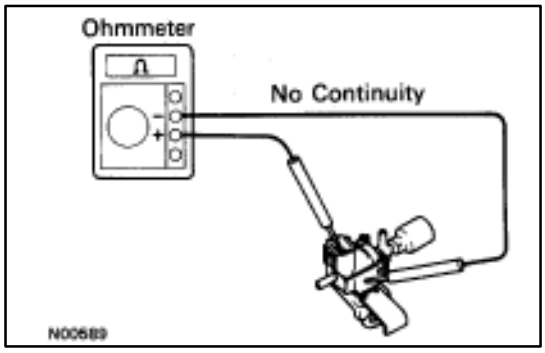

B. Inspect VSV for ground

Using an ohmmeter, check that there is no continuity between each terminal and the body.

If there is continuity, replace the VSV.

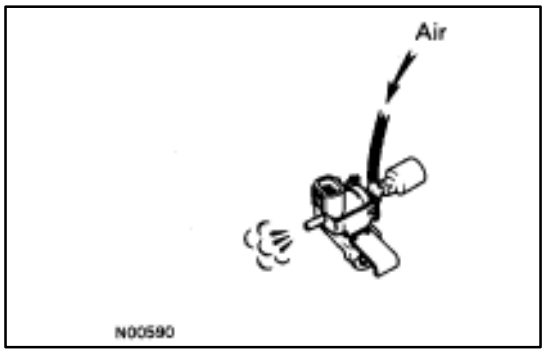

C. Inspect VSV operation

(a) Check that the air flows from ports E to G.

WhereEverybodyKnowsYourName

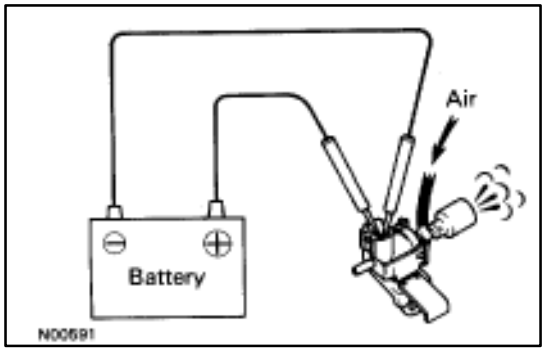

(b) Apply battery voltage across the terminals.
(c) Check that the air flows from port E to the filter.

If operation is not as specified, replace the VSV.

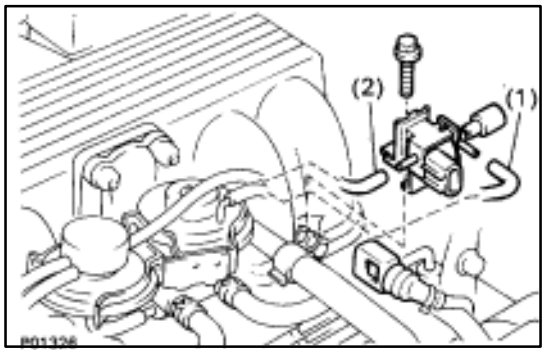

4. REINSTALL VSV

(a) Install the VSV with the bolt.

Torque: 18 N·m (185 kgf·cm, 13 ft·lbf)

(b) Connect the following hoses:
  (1) Vacuum hose (from EGR valve) to VSV
  (2) Vacuum hose (from EGR vacuum modulator) to VSV
(c) Connect the VSV connector.

5. RECONNECT CABLE TO NEGATIVE TERMINAL OF BATTERY

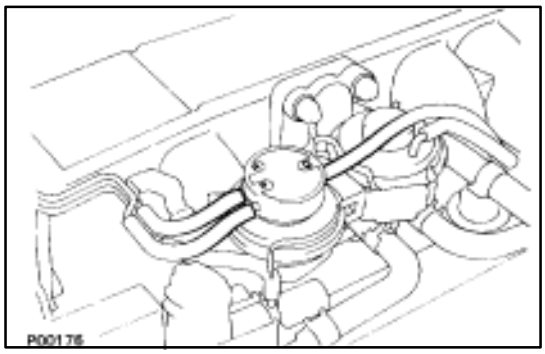

INSPECTION OF EGR VACUUM MODULATOR (Exc. USA Spec.)

1. DISCONNECT VACUUM HOSES FROM EGR VACUUM MODULATOR

Disconnect the three vacuum hoses from ports P, Q and R of the EGR vacuum modulator.

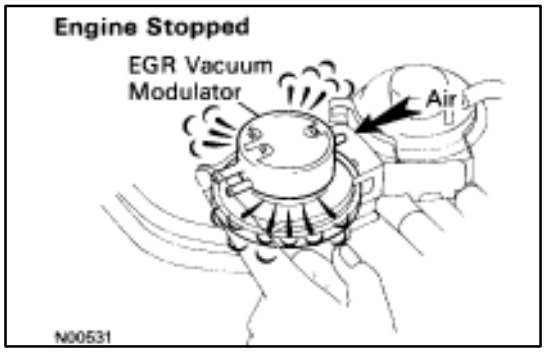

2. INSPECT EGR VACUUM MODULATOR OPERATION

(a) Block ports P and R with your finger.
(b) Blow air into port Q, and check that the air passes through to the air filter side freely.

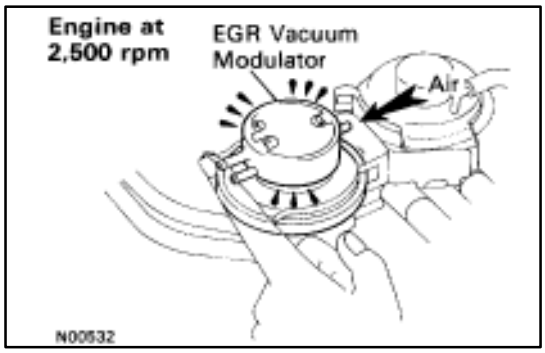

(c) Start the engine, and maintain speed at 2,500 rpm.
(d) Repeat the above test. Check that there is a strong resistance to air flow.

3. RECONNECT VACUUM HOSES TO EGR VACUUM MODULATOR

Connect the three vacuum hoses to the proper locations.

WhereEverybodyKnowsYourName

COMPONENTS FOR REMOVAL AND INSTALLATION OF EGR VALVE

USA Spec.

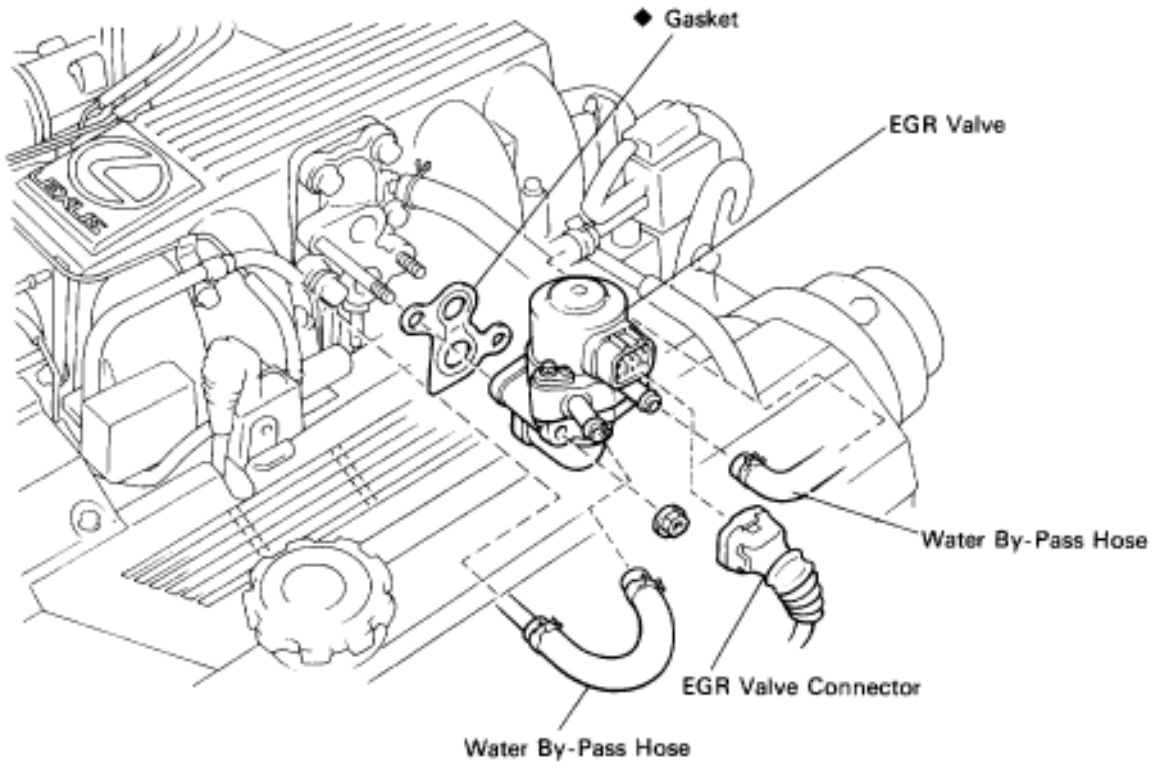

◆ Non-reusable part

Exc. USA Spec.

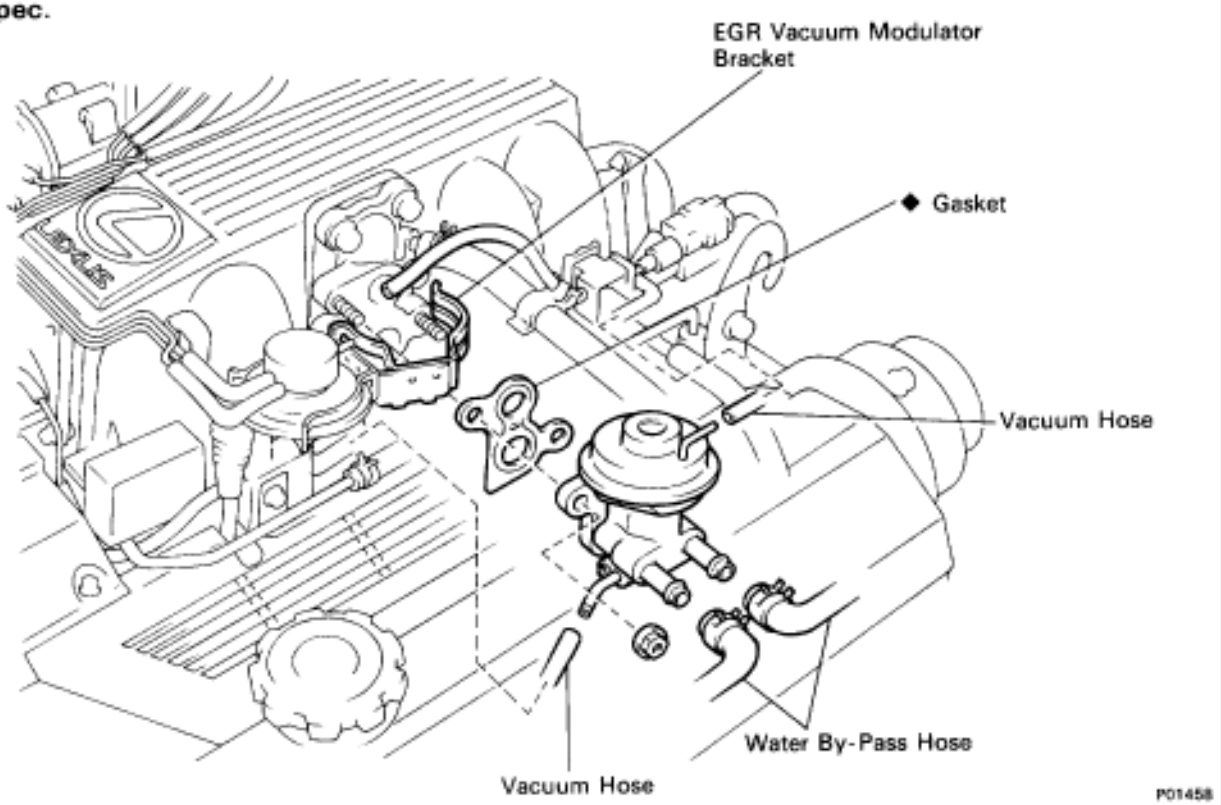

◆ Non-reusable part

WhereEverybodyKnowsYourName

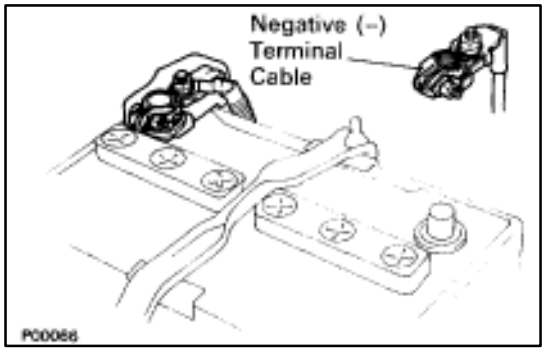

INSPECTION OF EGR VALVE (USA Spec.)

1. DISCONNECT CABLE FROM NEGATIVE TERMINAL OF BATTERY

CAUTION: Work must be started after approx. 20 seconds or longer from the time the ignition switch is turned to the "LOCK" position and the negative (–) terminal cable is disconnected from the battery.

2. DISCONNECT EGR VALVE CONNECTOR

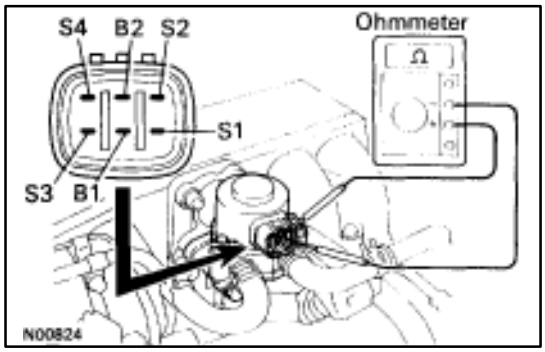

3. INSPECT EGR VALVE RESISTANCE

Using an ohmmeter, measure the resistance between terminal B1 (or B2) and other terminals (S1, S2, S3 and S4).

Resistance (Cold): 19.9–23.4 ?

4. DRAIN ENGINE COOLANT (See page CO–6)

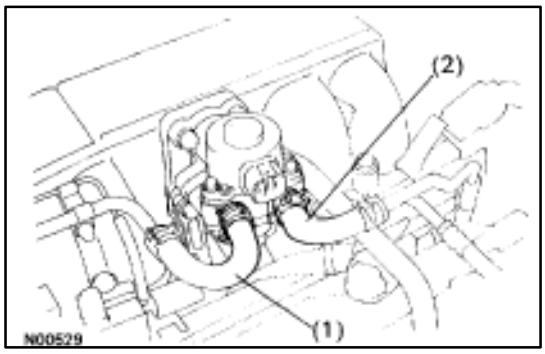

5. REMOVE EGR VALVE

(a) Disconnect the following hoses:

(1) Water by–pass hose (from ISC valve) from the EGR valve

(2) Water by–pass hose (from rear water by–pass joint) from the EGR valve

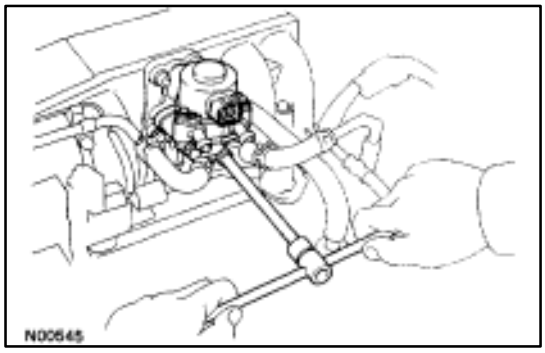

(b) Remove the two nuts, EGR valve and gasket.

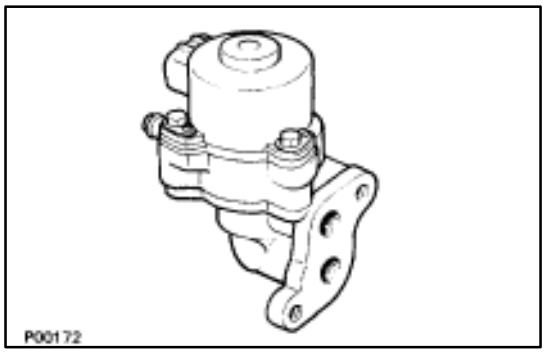

6. INSPECT EGR VALVE

A. Visually inspect EGR valve

Check for sticking and heavy carbon deposits.

If a problem is found, replace the EGR valve assembly.

WhereEverybodyKnowsYourName

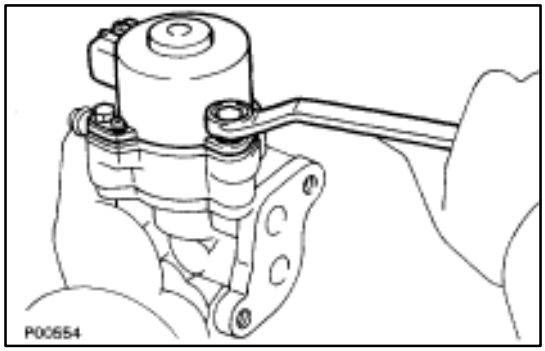

B. Inspect EGR valve operation

(a) Remove the three bolts and stepping motor from the housing.

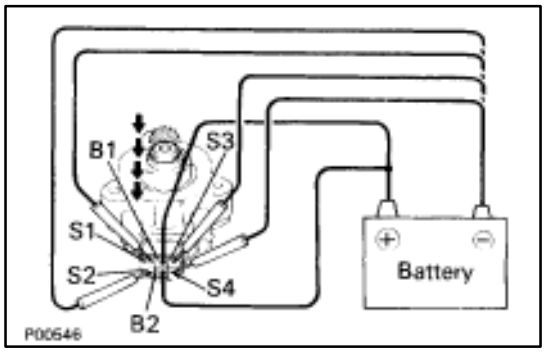

(b) Apply battery voltage to terminal B1 (or B2), and while repeately grounding (*S4)–(S4 and *S3)–(S3 and *S2)–(S2 and *S1)–(S1 and *S4) in sequence, check that the valve moves toward the open position.

HINT: Keep the terminal marked with an asterisk (*) grounded while proceeding to the next grounding.

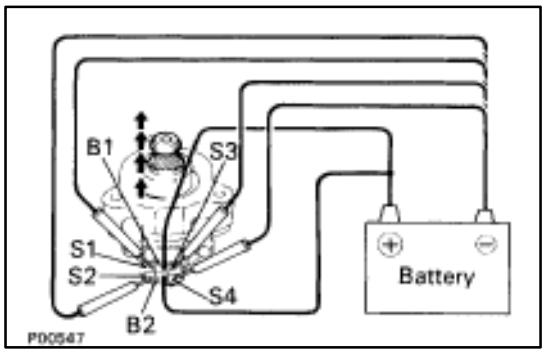

(c) Apply battery voltage to terminal B1 (or B2), and while repeately grounding (*S1)–(S1 and *S2)–(S2 and *S3)–(S3 and *S4)–(S4 and *S1) in sequence, check that the valve moves toward the closed position.

HINT:

- Keep the terminal marked with an asterisk (*) grounded while proceeding to the next grounding.
- Perform this operation after opening the valve by performing step (b) above.

If operation is not as specified, replace the EGR valve assembly.

(d) Reinstall the stepping motor to the housing with the three bolts.

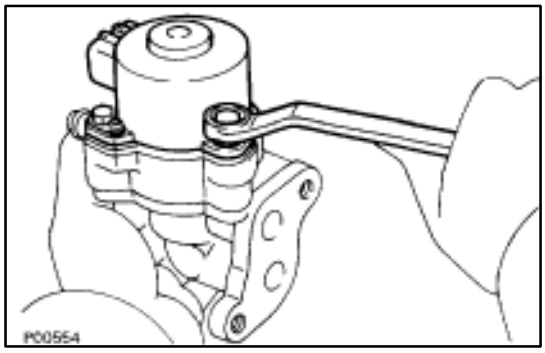

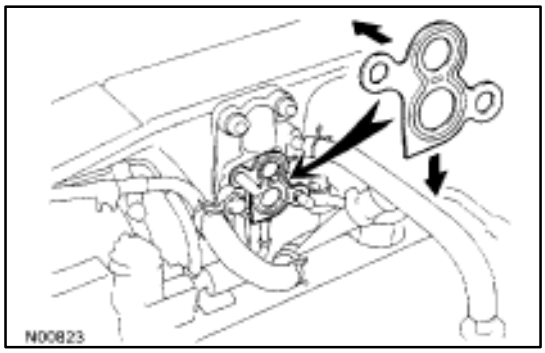

7. REINSTALL EGR VALVE

(a) Place a new gasket on the EGR valve adaptor.

NOTICE:

- **Do not touch the adaptor and EGR valve surfaces of the gasket with your hand.**
- **Align the port holes of the gasket and adaptor. Be careful of the installation direction.**

WhereEverybodyKnowsYourName

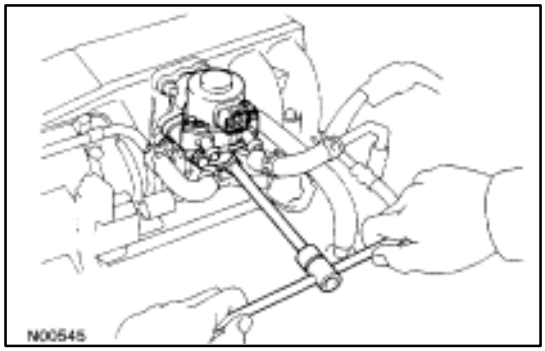

(b) Install the EGR valve with the two nuts.
Torque: 18 N·m (185 kgf·cm, 13 ft·lbf)

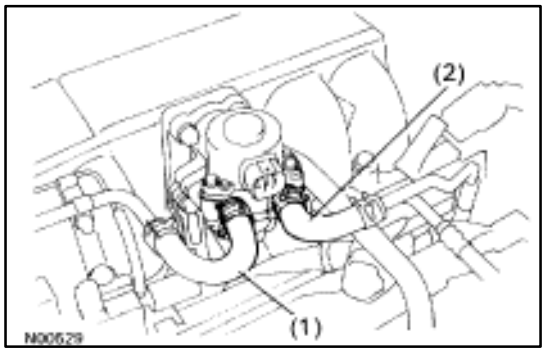

(c) Connect the following hoses:
(1) Water by–pass hose (from ISC valve) to the EGR valve
(2) Water by–pass hose (from rear water by–pass joint) to the EGR valve

8. RECONNECT EGR VALVE CONNECTOR

9. RECONNECT CABLE TO NEGATIVE TERMINAL OF BATTERY

10. REFILL WITH ENGINE COOLANT (See page CO–7)

INSPECTION OF EGR VALVE (Exc. USA Spec.)

1. DRAIN ENGINE COOLANT (See page CO–6)

2. REMOVE EGR VALVE

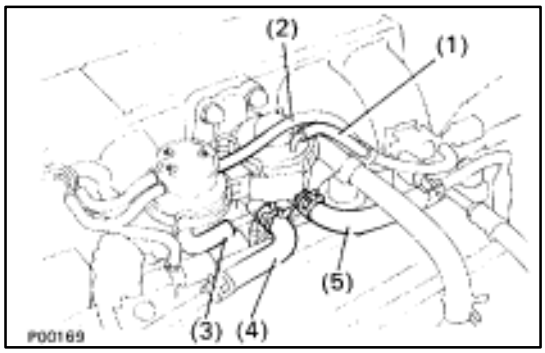

(a) Disconnect the following hoses:
(1) Vacuum hose (from VSV) from EGR valve
(2) Vacuum hose (from VSV) from EGR vacuum modulator
(3) Vacuum hose (from EGR vacuum modulator) f rom EGR valve
(4) Water by–pass hose (from ISC valve) from the EGR valve
(5) Water by–pass hose (from rear water by–pass joint) from the EGR valve

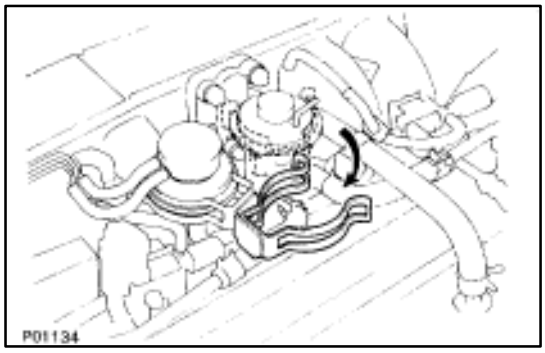

(b) Disconnect the vacuum modulator bracket from the EGR valve.

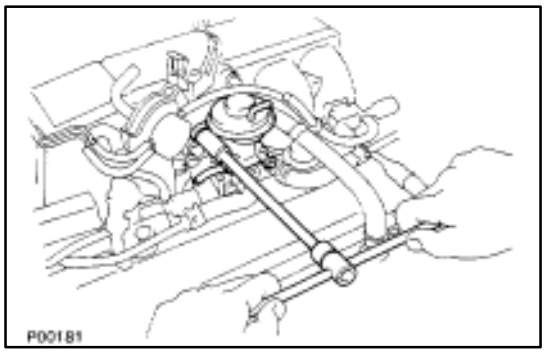

(c) Remove the two nuts, EGR valve and gasket.

WhereEverybodyKnowsYourName

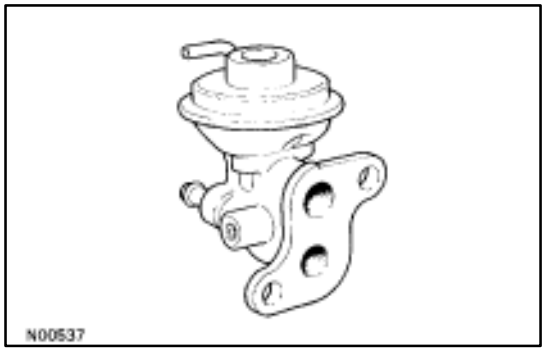

3. INSPECT EGR VALVE

Check for sticking and heavy carbon deposits.
If a problem is found, replace the EGR valve assembly.

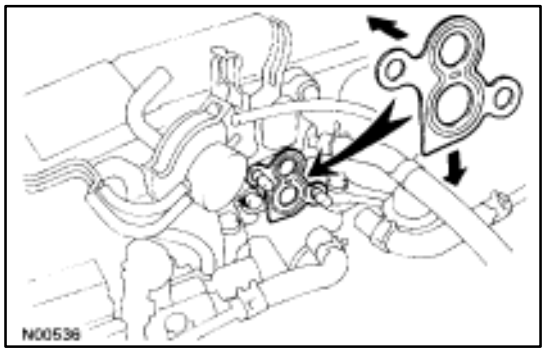

4. REINSTALL EGR VALVE

(a) Place a new gasket on the EGR valve adaptor.

NOTICE:

- **Do not touch the adaptor and EGR valve surfaces of the gasket with your hand.**
- **Align the port holes of the gasket and adaptor. Be careful of the installation direction.**

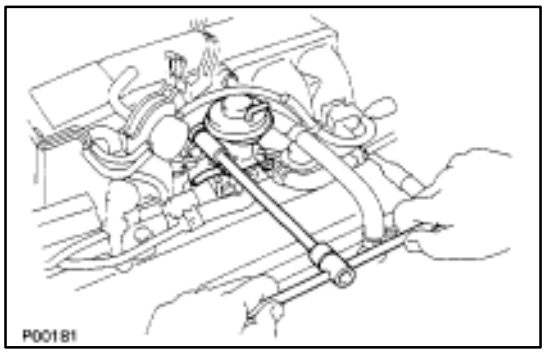

(b) Install the EGR valve with the two nuts.

Torque: 18 N·m (185 kgf·cm, 13 ft·lbf)

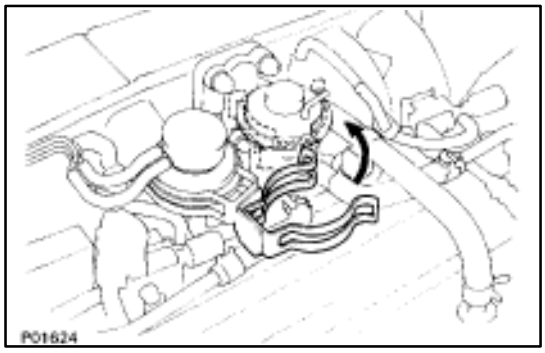

(c) Install the vacuum modulator bracket to the EGR valve.

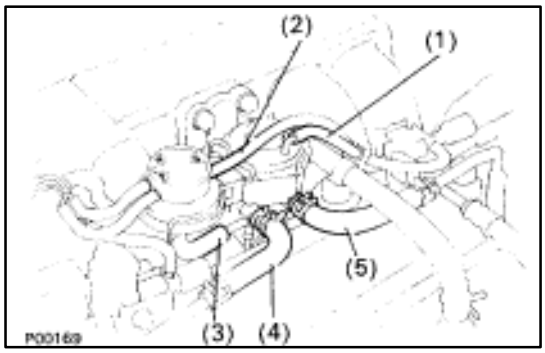

(d) Connect the following hoses:
  (1) Vacuum hose (from VSV) to EGR valve
  (2) Vacuum hose (from VSV) to EGR vacuum modulator
  (3) Vacuum hose (from EGR vacuum modulator) to EGR valve
  (4) Water by–pass hose (from ISC valve) to the EGR valve
  (5) Water by–pass hose (from rear water by–pass joint) to the EGR valve

5. REFILL WITH ENGINE COOLANT (See page CO–7)

WhereEverybodyKnowsYourName

THREE–WAY CATALYST (TWC) SYSTEM

DESCRIPTION

To reduce HC, CO and NOx emissions, they are oxidized, reduced and converted to nitrogen (N), carbon dioxide (CO) and water (HO) by the catalyst.

OPERATION

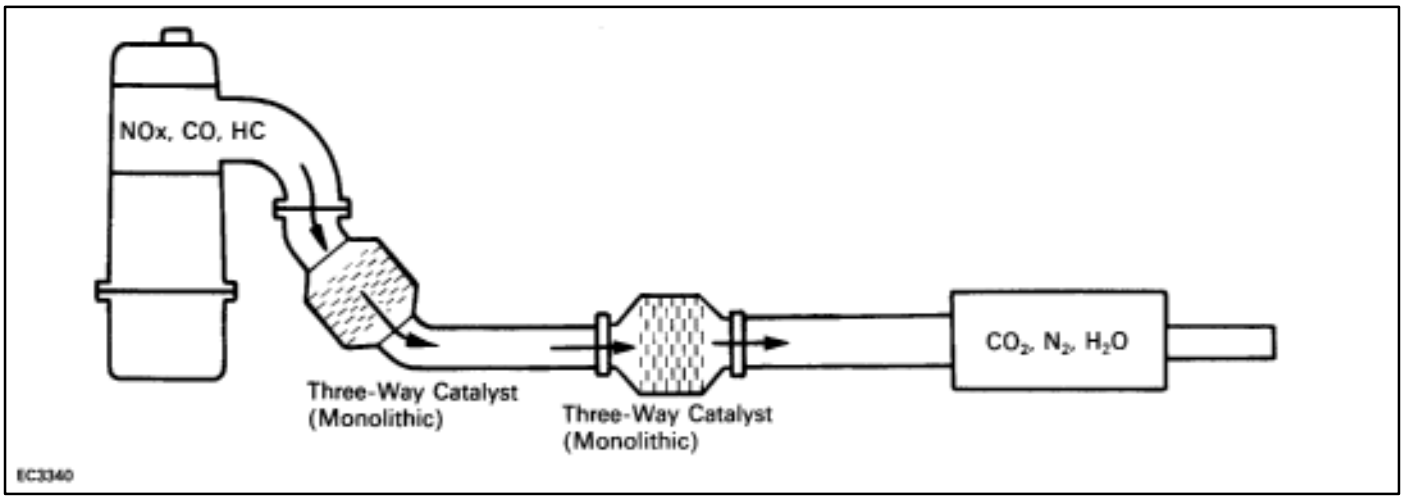

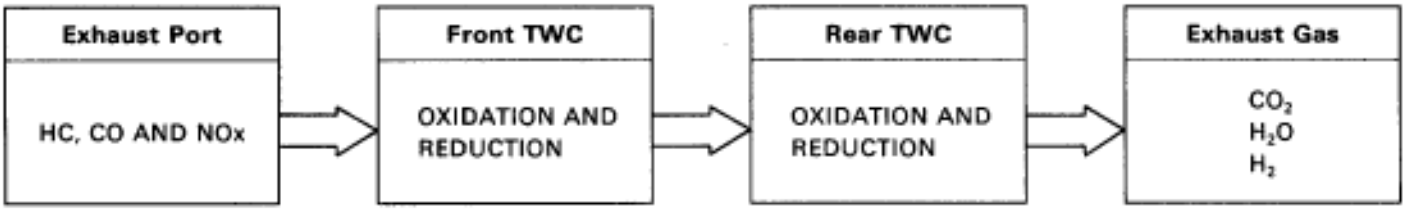

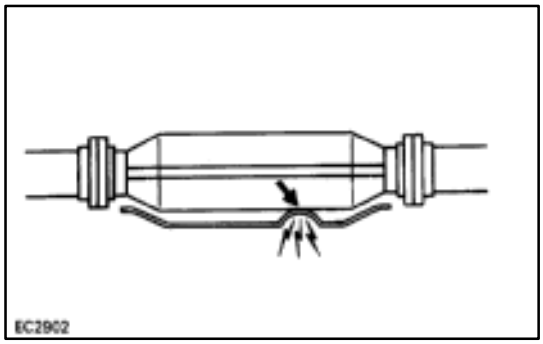

INSPECTION OF EXHAUST PIPE ASSEMBLY

1. CHECK CONNECTIONS FOR LOOSENSESS OR DAMAGE
2. CHECK CLAMPS FOR WEAKNESS, CRACKS OR DAMAGE

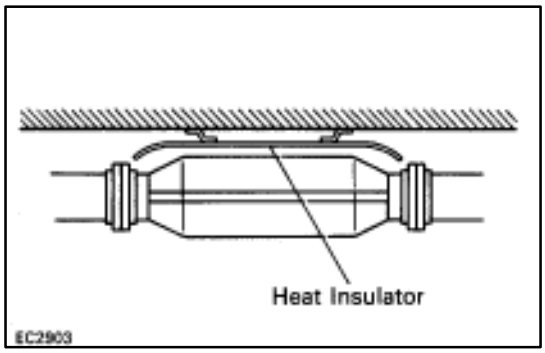

INSPECTION OF CATALYTIC CONVERTER

CHECK FOR DENTS OR DAMAGE

If any part of the protector is damaged or dented to the extent that is contacts the catalyst, repair or replace it.

INSPECTION OF HEAT INSULATOR

1. CHECK HEAT INSULATOR FOR DAMAGE
2. CHECK FOR ADEQUATE CLEARANCE BETWEEN CATALYTIC CONVERTER AND HEAR INSULATOR

WhereEverybodyKnowsYourName

COMPONENTS

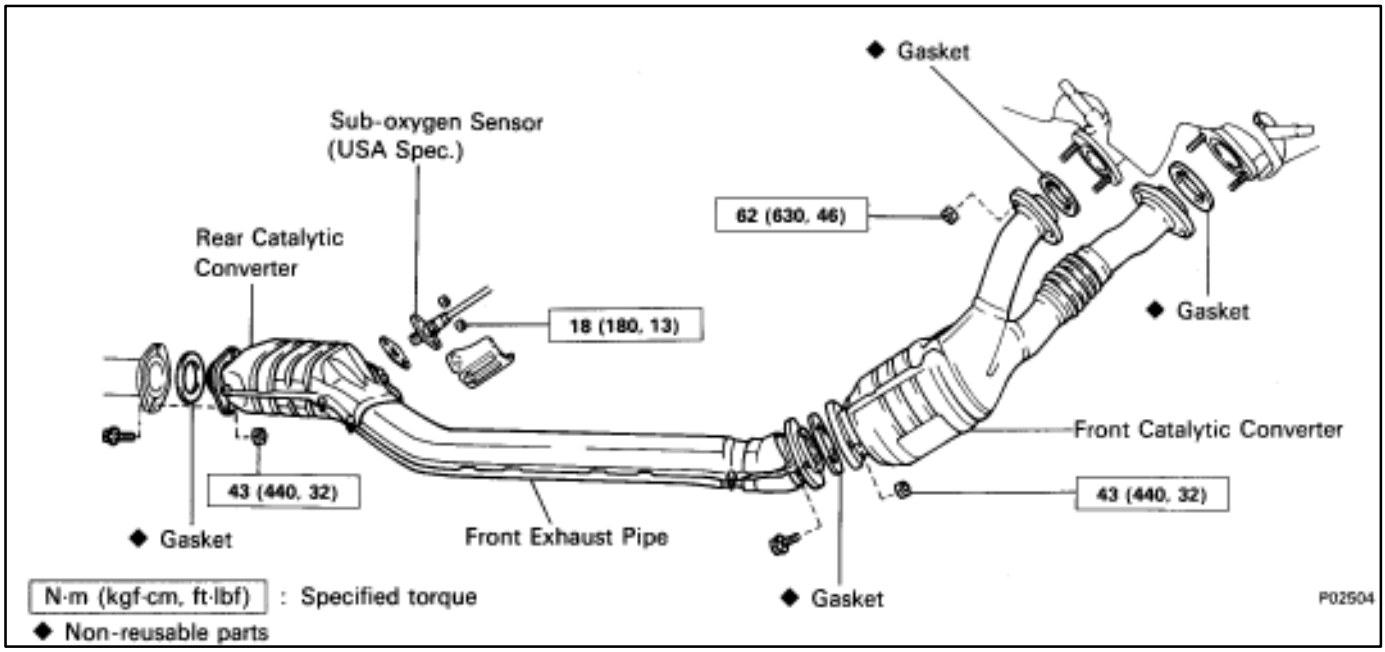

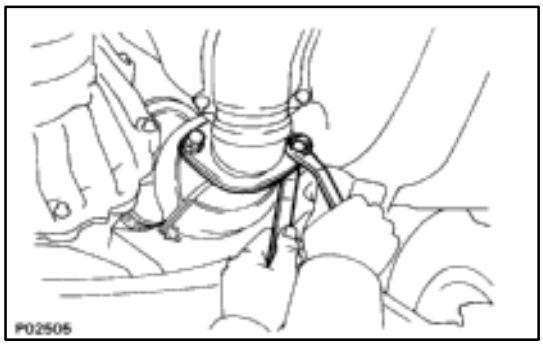

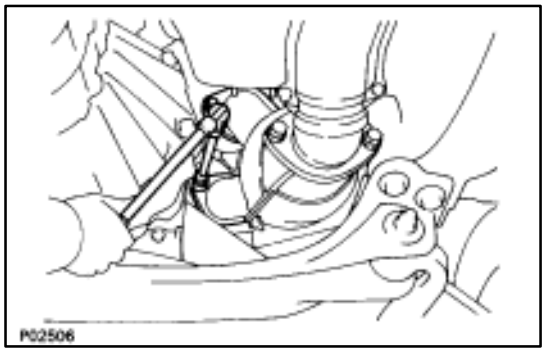

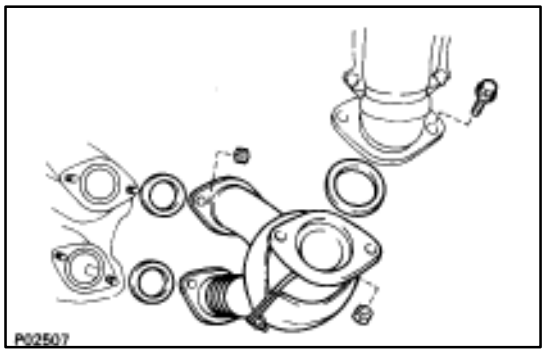

REPLACEMENT OF CATALYTIC CONVERTERS

(Front Catalytic Converter)

1. REMOVE CATALYTIC CONVERTER (FRONT)

(a) Check that the converter is cool.

(b) Remove the two bolts and nuts holding the catalytic converters to the front exhaust pipe.

(c) Disconnect the front exhaust pipe from the catalytic converter, and remove the gasket.

(d) Remove the four nuts holding the catalytic converter to the exhaust manifold.

2. REINSTALL CATALYTIC CONVERTER

(a) Install a new gasket and the catalytic converter to the exhaust manifold with four new nuts.

Torque: 62 N·m (630 kgf·cm, 46 ft·lbf)

(b) Install a new gasket to front end of the front exhaust pipe, and torque the front exhaust pipe to the catalytic converter.

Torque: 43 N·m (440 kgf·cm, 32 ft·lbf)

WhereEverybodyKnowsYourName

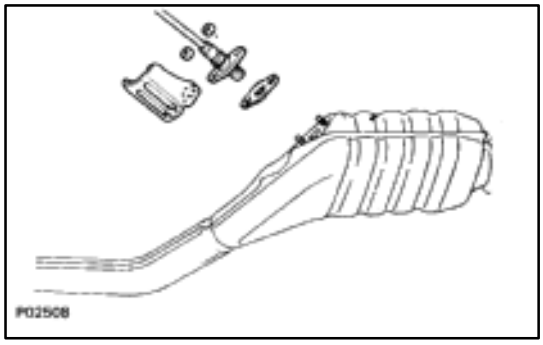

(Rear Catalytic Converter)

1. **(USA Spec.)**
   REMOVE SUB–OXYGEN SENSOR
   Remove the two nuts and sub–oxygen sensor from the front exhaust pipe.

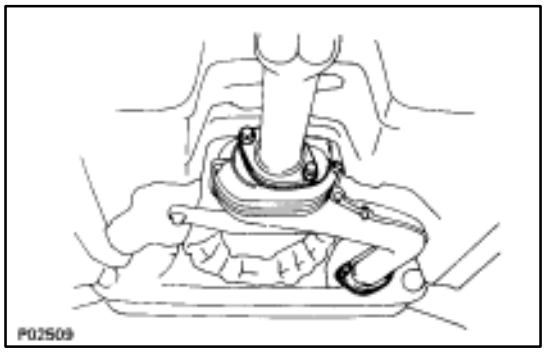

2. **REMOVE REAR CATALYTIC CONVERTER (FRONT EXHAUST PIPE)**
   (a) Remove the two bolts and nuts holding the front exhaust pipe to the center exhaust pipe.
   (b) Remove the two bolts and nuts holding the front exhaust pipe to the front catalytic converter, and remove the front exhaust pipe and two gaskets.

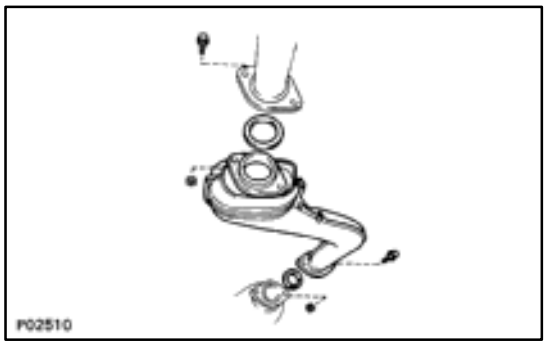

3. **REINSTALL REAR CATALYTIC CONVERTER (FRONT EXHAUST PIPE)**
   Install the two new gaskets, the front exhaust pipe with the four bolts and new nuts.
   Torque: 43 N·m (440 kgf·cm, 32 ft·lbf)

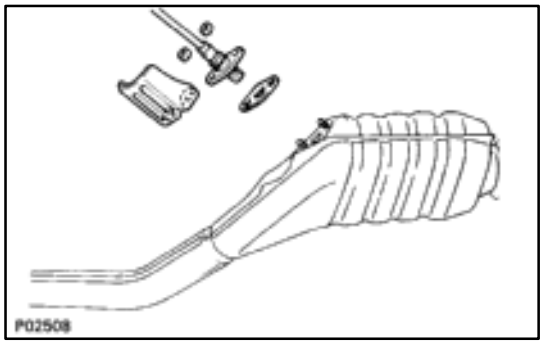

4. **(USA Spec.)**
   REINSTALL SUB–OXYGEN SENSOR
   Install the new gasket, the sub–oxygen sensor to the front exhaust pipe with the two nuts.
   Torque: 18 N·m (180 kgf·cm, 13 ft·lbf)

WhereEverybodyKnowsYourName

SERVICE SPECIFICATIONS

SERVICE DATA

EG065–0A

Tune–up	Battery specific gravity		1.27–1.29
			(when fully charged at 20°C (68°F))
	High–tension cord resistance	Limit	25 k? per cord
	Valve clearance (Cold)	Intake	0.15–0.25 mm (0.006–0.010 in.)
		Exhaust	0.25–0.35 mm (0.010–0.014 in.)
	Valve clearance adjusting shim	No.01	2.500 mm (0.0984 in.)
		No.62	2.525 mm (0.0994 in.)
		No.63	2.550 mm (0.1004 in.)
		No.64	2.575 mm (0.1014 in.)
		No.06	2.600 mm (0.1024 in.)
		No.65	2.625 mm (0.1033 in.)
		No.66	2.650 mm (0.1043 in.)
		No.67	2.675 mm (0.1053 in.)
		No.13	2.700 mm (0.1063 in.)
		No.68	2.725 mm (0.1073 in.)
		No.18	2.750 mm (0.1083 in.)
		No.19	2.775 mm (0.1093 in.)
		No.23	2.800 mm (0.1102 in.)
		No.70	2.825 mm (0.1112 in.)
		No.28	2.850 mm (0.1122 in.)
		No.71	2.875 mm (0.1132 in.)
		No.33	2.900 mm (0.1142 in.)
		No.72	2.925 mm (0.1152 in.)
		No.38	2.950 mm (0.1161 in.)
		No.73	2.975 mm (0.1171 in.)
		No.43	3.000 mm (0.1181 in.)
		No.74	3.025 mm (0.1191 in.)
		No.48	3.050 mm (0.1201 in.)
		No.75	3.075 mm (0.1211 in.)
		No.51	3.100 mm (0.1220 in.)
		No.76	3.125 mm (0.1230 in.)
		No.77	3.150 mm (0.1240 in.)
		No.78	3.175 mm (0.1250 in.)
		No.56	3.200 mm (0.1260 in.)
		No.79	3.225 mm (0.1270 in.)
		No.80	3.250 mm (0.1280 in.)
		No.81	3.275 mm (0.1289 in.)
		No.61	3.300 mm (0.1299 in.)
	Ignition timing		8 – 12° BTDC @ idle
			(w/ Terminals TE1 and E1 connected of DLC1)
	Idle speed		700 ± 50 rpm
Intake manifold vacuum	at idle speed		60 kPa (450 mmHg. 17.7 in.Hg)

WhereEverybodyKnowsYourName

Compression pressure	at 250 rpm	STD	1,226 kPa (12.5 kgf/cm^2, 178 psi) or more
		Limit	981 kPa (10.0 kgf/cm^2, 142 psi)
	Difference of pressure between each cylinder		98 kPa (1.0 kgf/cm^2, 14 psi) or less
Timing belt tensioner	Protrusion from housing end		10.5–11.5 mm (0.413–0.453 in.)
Cylinder head	Warpage	Limit	0.10 mm (0.039 in.)
	Valve seat		
	Refacing angle		30°, 45°, 75°
	Contacting angle		45°
	Contacting width		1.0–1.4 mm (0.039–0.055 in.)
	Cylinder head bolt thread inside diameter	STD	9.770–9.960 mm (0.3846–0.3921 in.)
		Limit	9.60 mm (0.3780 in.)
Valve guide bushing	Inside diameter		6.010–6.030 mm (0.2366–0.2374 in.)
	Outside diameter (for repair part)	STD	11.048–11.059 mm (0.4350–0.4354 in.)
		O/S 0.05	11.098–11.109 mm (0.4369–0.4374 in.)
Valve	Valve overall length	STD (Intake)	94.95 mm (3.7382 in.)
		(Exhaust)	96.90 mm (3.8150 in.)
		Limit (Intake)	94.45 mm (3.7185 in.)
		(Exhaust)	96.40 mm (3.7953 in.)
	Vale face angle		44.5°
	Stem diameter	Intake	5.970–5.985 mm (0.2350–0.2356 in.)
		Exhaust	5.965–5.980 mm (0.2348–0.2354 in.)
	Stem oil clearance	STD (Intake)	0.025–0.060 mm (0.0010–0.0024 in.)
		(Exhaust)	0.030–0.065 mm (0.0012–0.0026 in.)
		Limit (Intake)	0.08 mm (0.0031 in.)
		(Exhaust)	0.10 mm (0.0039 in.)
	Margin thickness	STD	1.0 mm (0.039 in.)
		Limit	0.5 mm (0.020 in.)
Valve spring	Squareness	Limit	2.0 mm (0.079 in.)
	Free length		43.6 mm (1.717 in.)
	Installed tension at 32.9 mm (1.295 in.)		186–206 N (19.0–21.0 kgf, 41.9–46.3 lbf)
Valve lifter	Lifter diameter		30.966–30.976 mm (1.2191–2.2195 in.)
	Lifter bore diameter		31.000–31.016 mm (1.2205–1.2211 in.)
	Oil clearance	STD	0.024–0.050 mm (0.0009–0.0020 in.)
		Limit	0.07 mm (0.0028 in.)

WhereEverybodyKnowsYourName

Camshaft	Thrust clearance	STD	0.040–0.090 mm (0.0016–0.0035 in.)
		Limit	0.12 mm (0.0047 in.)
	Journal oil clearance		
	Exhaust camshaft thrust portion	STD	0.025–0.061 mm (0.0010–0.0024 in.)
	Others	STD	0.030–0.067 mm (0.0012–0.0026 in.)
		Limit	0.10 mm (0.0039 in.)
	Journal diameter		
	Exhaust camshaft thrust portion		23.959–23.975 mm (0.9433–0.9539 in.)
	Others		26.954–26.970 mm (1.0612–1.0618 in.)
	Circle runout	Limit	0.08 mm (0.0031 in.)
	Cam lobe height	STD (Intake)	41.710–41.810 mm (1.6421–1.6461 in.)
		(Exhaust)	41.910–42.010 mm (1.6500–1.6539 in.)
		Limit (Intake)	41.56 mm (1.6362 in.)
		(Exhaust)	41.76 mm (1.6441 in.)
	Camshaft gear backslash	STD	0.020–0.200 mm (0.0008–0.0079 in.)
		Limit	0.30 mm (0.0188 in.)
	Camshaft gear spring end free distance		18.2–18.8 mm (0.712–0.740 in.)
Air intake chamber	Warpage	Limit	0.15 mm (0.0059 in.)
Manifold	Warpage	Limit (Intake)	0.15 mm (0.0059 in.)
		(Exhaust)	1.00 mm (0.0394 in.)
Cylinder block	Cylinder head surface warpage	Limit	0.07 mm (0.0028 in.)
	Cylinder bore–diameter	Mark 1	87.500–87.510 mm (3.4449–3.4453 in.)
		Mark 2	87.510–87.520 mm (3.4453–3.4457 in.)
		Mark 3	87.520–87.530 mm (3.4457–3.4461 in.)
		Limit	87.73 mm (3.4539 in.)
	Main journal bore diameter (Reference)	Mark 00	72.000 mm (2.8346 in.)
		Mark 01	72.001 mm (2.8347 in.)
		Mark 02	72.002 mm (2.8347 in.)
		Mark 03	72.003 mm (2.8348 in.)
		Mark 04	72.004 mm (2.8348 in.)
		Mark 05	72.005 mm (2.8348 in.)
		Mark 06	72.006 mm (2.8349 in.)
		Mark 07	72.007 mm (2.8349 in.)
		Mark 08	72.008 mm (2.8350 in.)
		Mark 09	72.009 mm (2.8350 in.)
		Mark 10	72.010 mm (2.8350 in.)
		Mark 11	72.011 mm (2.8351 in.)
		Mark 12	72.012 mm (2.8351 in.)
		Mark 13	72.013 mm (2.8352 in.)
		Mark 14	72.014 mm (2.8352 in.)
		Mark 15	72.015 mm (2.8352 in.)
		Mark 16	72.016 mm (2.8353 in.)
	Main bearing cap stud bolt tension portion diameter		
		STD	7.500–7.600 mm (0.2953–0.2992 in.)
		Limit	7.40 mm (0.2913 in.)

WhereEverybodyKnowsYourName

Piston and piston ring	Piston diameter	STD (Mark 1)	87.470–87.480 mm (3.4437–3.4441 in.)
		(Mark 2)	87.480–87.490 mm (3.4441–3.4445 in.)
		(Mark 3)	87.490–87.500 mm (3.4445–3.4449 in.)
	Piston oil clearance	STD	0.020–0.040 mm (0.0008–0.0016)
		Limit	0.06 mm (0.0024 in.)
	Piston ring groove clearance	No.1	0.020–0.060 mm (0.0008–0.0024 in.)
		No.2	0.015–0.055 mm (0.0006–0.0022 in.)
	Piston ring end gap	STD (No.1)	0.250–0.450 mm (0.0098–0.0177 in.)
		(No.2)	0.350–0.600 mm (0.0138–0.0236 in.)
		(Oil)	0.150–0.500 mm (0.0059–0.0197 in.)
		Limit (No.1)	1.05 mm (0.0413 in.)
		(No.2)	1.20 mm (0.0472 in.)
		(Oil)	1.10 mm (0.0433 in.)
Connecting rod	Thrust clearance	STD	0.160–0.290 mm (0.0063–0.0138 in.)
		Limit	0.35 mm (0.0138 in.)
	Connecting rod thickness		22.880–22.920 mm (0.9008–0.9024 in.)
	Connecting rod big end inside diameter (Reference)		
		Mark 1	55.000–55.006 mm (2.1654–2.1656 in.)
		Mark 2	55.006–55.012 mm (2.1656–2.1658 in.)
		Mark 3	55.012–55.018 mm (2.1658–2.1661 in.)
		Mark 4	55.018–55.024 mm (2.1661–2.1663 in.)
	Connecting rod bearing center wall thickness (Reference)	Mark 2	1.484–1.487 mm (0.0584–0.0585 in.)
		Mark 3	1.487–1.490 mm (0.0585–0.0587 in.)
		Mark 4	1.490–1.493 mm (0.0587–0.0588 in.)
		Mark 5	1.493–1.496 mm (0.0588–0.0589 in.)
		Mark 6	1.496–1.499 mm (0.0589–0.0590 in.)
		Mark 7	1.499–1.502 mm (0.0590–0.0591 in.)
	Connecting rod oil clearance	STD	0.027–0.053 mm (0.0011–0.0021 in.)
		Limit	0.065 mm (0.0026 in.)
	Rod bend	Limit per 100 mm (3.94 in.)	0.05 mm (0.0020 in.)
	Rod twist	Limit per 100 mm (3.94 in.)	0.15 mm (0.0059 in.)
	Bushing inside diameter		22.005–22.017 mm (0.8663–0.8668 in.)
	Piston pin diameter		21.997–22.009 mm (0.8660–0.8665 in.)
	Bushing oil clearance	STD	0.005–0.011 mm (0.0002–0.0004 in.)
		Limit	0.05 mm (0.0020 in.)
	Connecting rod bolt tension portion diameter	STD	7.200–7.300 mm (0.2835–0.2874 in.)
		Limit	7.00 mm (0.2756 in.)

WhereEverybodyKnowsYourName

Crankshaft	Thrust clearance	STD	0.020–0.220 mm (0.0008–0.0087 in.)
		Limit	0.30 mm (0.0118 in.)
	Thrust washer thickness		2.440–2.490 mm (0.0961–0.0980 in.)
	Main journal bore diameter on cylinder block (with main bearing)		67.026–67.033 mm (2.8388–2.6391 in.)
	Main journal oil clearance	STD	0.026–0.045 mm (0.0010–0.0018 in.)
		Limit	0.055 mm (0.0022 in.)
	Main journal diameter		66.988–67.000 mm (2.6373–2.6378 in.)
	Main bearing center wall thickness (Reference)		
		Mark 1	2.486–2.489 mm (0.0979–0.0980 in.)
		Mark 2	2.489–2.492 mm (0.0980–0.0981 in.)
		Mark 3	2.492–2.495 mm (0.0981–0.0982 in.)
		Mark 4	2.495–2.498 mm (0.0982–0.0983 in.)
		Mark 5	2.498–2.501 mm (0.0983–0.0985 in.)
	Crank pin diameter		51.982–52.000 mm (2.0465–2.0472 in.)
	Circle runout	Limit	0.08mm (0.0031 in.)
	Main journal taper and out–of–round	Limit	0.02mm (0.0008 in.)
	Crank pin taper and out–of–round	Limit	0.02mm (0.0008.in)

EGOC6–0C

TORQUE SPECIFICATION

Part tightened		N·m	kgf·cm	ft·lbf
No.1 idler pulley x Cylinder Block		34	350	25
No.2 idler pulley x Cylinder block		34	350	25
Hydraulic pump x Cylinder block	for 12 mm head	16	160	12
	for 14 mm head	30	310	22
Crankshaft pulley x Crankshaft		245	2,500	181
Camshaft timing pulley x Camshaft		108	1,100	80
Timing belt tensioner x Oil pump		26	270	20
Spark plug x Cylinder head		18	180	13
Drive belt tensioner x Cylinder block		16	160	12
Generator x Generator bracket		37	380	27
Generator x Cylinder block		37	380	27
Distributor housing x Cylinder head		18	185	13
Distributor rotor x Camshaft timing pulley		3.8	39	34 in. lbf
Distributor cap x Distributor housing		3.8	39	34 in. lbf
RH No.2 timing belt cover x Cylinder block	for 12 mm head	18	185	13
Drive belt idler pulley x Fan bracket		37	380	27
A/C compressor x Cylinder block		49	500	36
A/C compressor x Fan bracket		49	500	36
A/C compressor stay x Oil filter bracket		29	300	22
Upper radiator support x Body		12	120	9
Exhaust manifold x Cylinder head		44	450	33
Cylinder head x Cylinder block	1st	39	400	29
	2nd	Turn 90°		
Camshaft bearing cap x Cylinder head		16	160	12
Cylinder head cover x Cylinder head		5.9	60	52 in.·lbf
Engine hanger x Cylinder head		37	380	27
EGR pipe x RH exhaust pipe		18	185	13
Rear water bypass joint x Cylinder head		18	185	13

WhereEverybodyKnowsYourName

Front water bypass joint x Cylinder head		18	185	13
Intake manifold x Cylinder head		18	185	13
Delivery pipe x Intake manifold		18	185	13
Fuel return pipe x Fuel pressure regulator		35	360	26
Fuel inlet hose x Delivery pipe		39	400	29
	for SST	33	340	24
Cold start injector x Air intake chamber		7.8	80	69 in.·lbf
Air intake chamber x Intake manifold		18	185	13
EGR pipe x Air intake chamber		18	185	13
EGR pipe x RH cylinder head		18	185	13
Cold start injector tube x Air intake chamber		15	150	11
Union (for brake booster) x Air intake chamber		29	300	22
Throttle body x Air intake chamber		18	185	13
IAC valve x Air intake chamber		18	185	13
EGR valve adaptor x Air intake chamber		18	185	13
EGR valve x EGR valve adaptor		18	185	13
Timing belt rear plate x Cylinder head		7.8	80	69 in.·lbf
Water outlet housing x Water pump		18	185	13
Main bearing stud bolt x Cylinder block		15	150	11
Main bearing cap x Cylinder block	for nut (1st)	27	275	20
	(2nd)	Turn 90°		
	for bolt	49	500	36
Connecting rod cap x Connecting rod	1st	25	250	18
	2nd	Turn 90°		
Rear oil seal retainer x Cylinder block		7.8	80	69 in.·lbf
Water seal plate x Cylinder block		14	145	10
Generator bracket x Cylinder block		18	185	13
Oil pump x Cylinder block	12 mm head	16	160	12
	14 mm head	30	310	22
No.1 oil pan x Cylinder block	10 mm head	7.8	80	69 in.·lbf
	12 mm head	18	185	13
No.1 oil pan x Oil pump		7.8	80	69 in.·lbf
No.1 oil pan x Rear oil seal retainer		7.8	80	69 in.·lbf
Oil strainer x Cylinder block		7.8	80	69 in.·lbf
Oil strainer x Oil pump		7.8	80	69 in.·lbf
Oil pan baffle plate x No.1 oil pan		7.8	80	69 in.·lbf
No.1 oil pan x No.2 oil pan		7.8	80	69 in.·lbf
Water pump x Cylinder block		18	185	13
Water bypass pipe x Cylinder Block		18	185	13
Knock sensor x Cylinder block		44	450	33
Starter x Cylinder block		39	400	29
Engine mounting bracket x Cylinder block		37	380	27
Drive plate x Crankshaft		98	1,000	72
Transmission x Cylinder block		57	580	42
Transmission x No.1 oil pan		39	400	29
Drive plate x Torque converter		33	340	25
Transmission oil cooler pipe x Transmission	for union nut	34	350	25
Rear engine mounting member x Body		25	250	19
Rear engine mounting member x Rear engine mounting insulator		13	135	10

WhereEverybodyKnowsYourName

Front suspension crossmember x Engine mounting insulator	59	600	43
PS pump x Cylinder head for bolt	39	400	29
for nut	43	440	32
Propeller shaft x Transmission	79	805	58
Propeller shaft x Differential	79	805	58
Propeller shaft x Body	37	375	27
Center floor crossmember brace x Body	13	130	9
Fuel inlet hose x Fuel tube	30	310	22
TWC (Front) x Exhaust manifold	62	530	46
Front exhaust pipe x TWC (Front)	43	440	32
Front exhaust pipe support bracket x Transmission	43	440	32
Front exhaust pipe x Center Exhaust pipe	43	440	32
Center exhaust pipe x Tailpipe	44	195	14
Main heated oxygen Exhaust manifold	44	450	33
Sub heated oxygen sensor x Front exhaust pipe	44	450	33

WhereEverybodyKnowsYourName

1UZ–FE ENGINE

WhereEverybodyKnowsYourName

EG10Y–03

ENGINE MECHANICAL

DESCRIPTION

The 1 UZ–FE engine is a V–8, 4.0 liter DOHC 32–valve engine.

OPERATION

EG21L–01

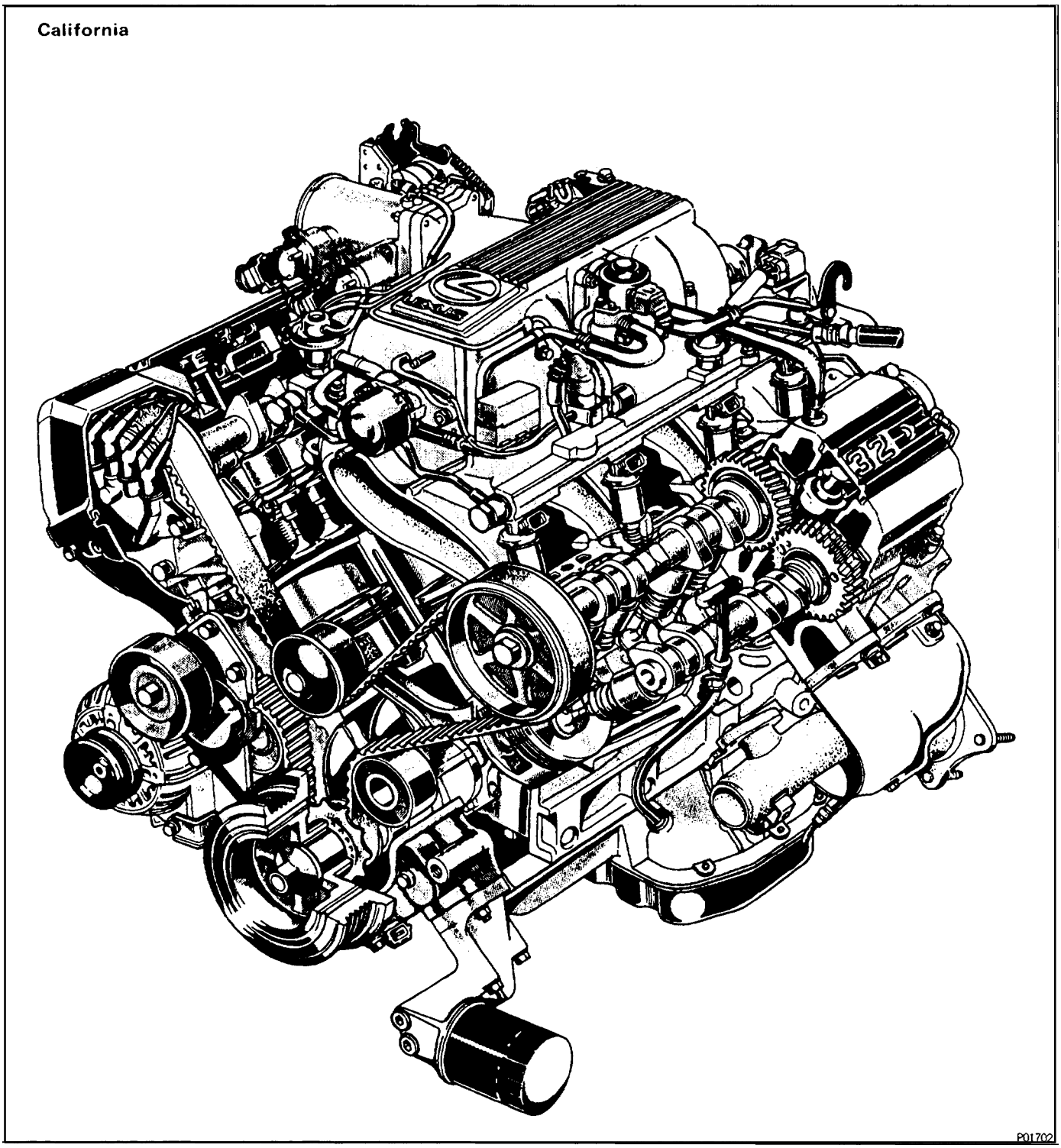

WhereEverybodyKnowsYourName

EG10Y–03

ENGINE MECHANICAL

DESCRIPTION

The 1 UZ–FE engine is a V–8, 4.0 liter DOHC 32–valve engine.

OPERATION

EG21L–01

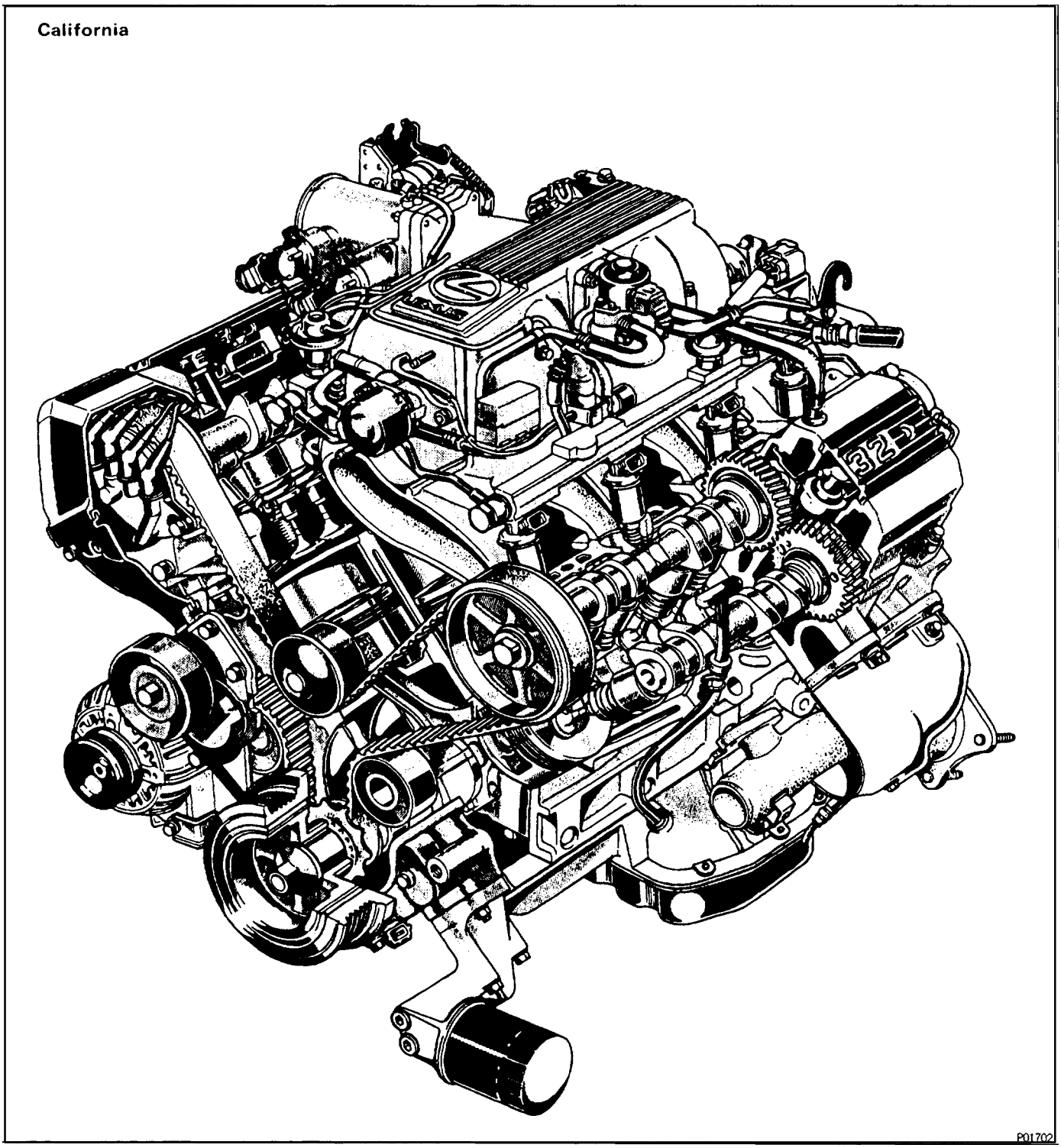

WhereEverybodyKnowsYourName

Except California

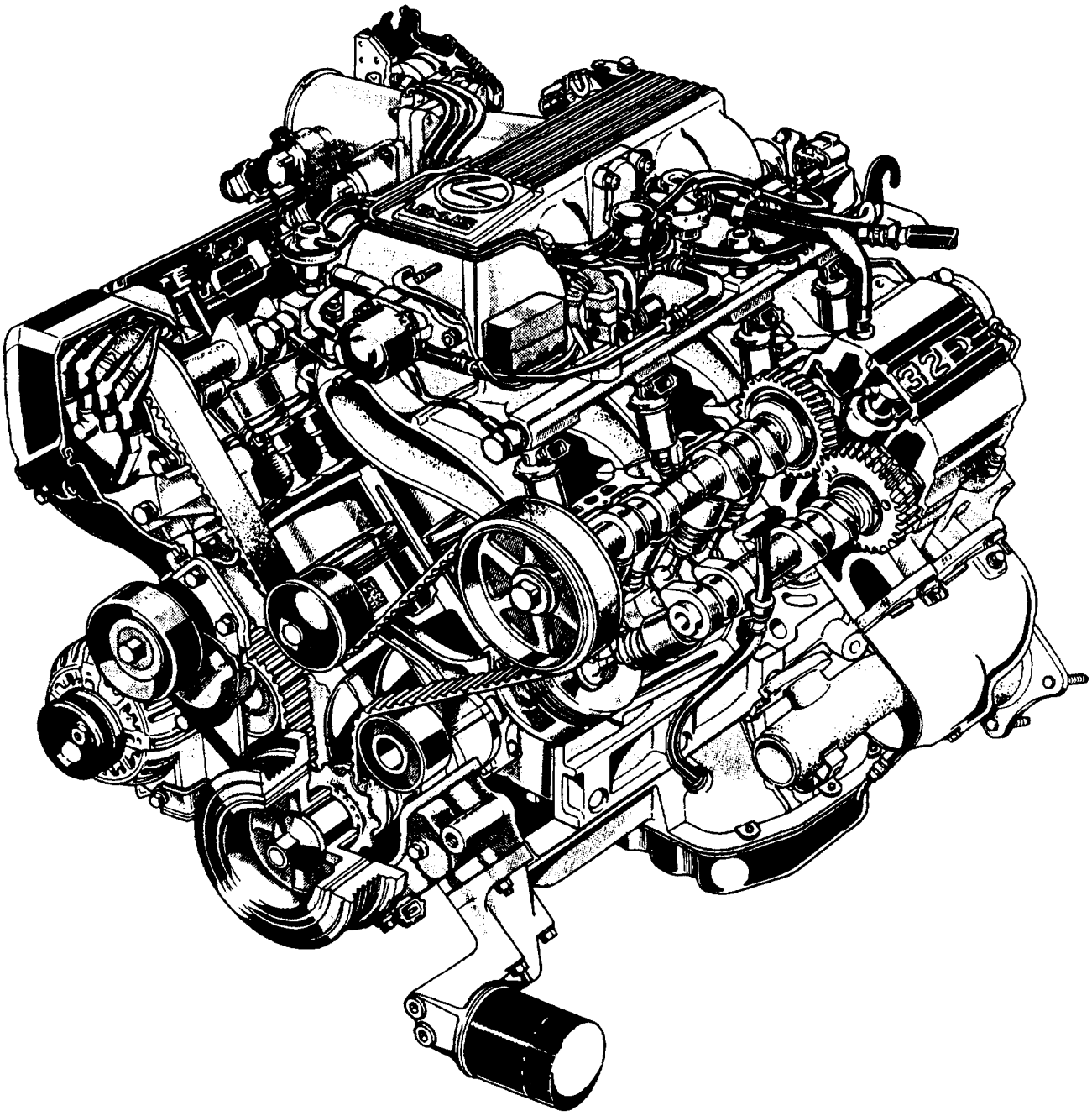

P01703

WhereEverybodyKnowsYourName

The 1 UZ–FE engine has 8–cylinders in a V–arrangement at a bank angle of 90°. From the front of the RH bank cylinders are numbered 2 – 4 – 6 – 8, and from the front of the LH bank cylinders are 1 – 3 – 5 – 7.
The crankshaft is supported by 5 bearings inside the crankcase. These bearings are made of a copper and lead alloy.
The crankshaft is integrated with 8 weights for balance. Oil holes are placed in the center of the crankshaft to supply oil to the connecting rods, bearing, pistons and other components.
The ignition order is 1 – 8 – 4 – 3 – 6 – 5 – 7 – 2. The cylinder head is made of alminum alloy, with a cross flow type intake and exhaust layout and with pent–roof type combustion chambers. The spark plugs are located in the center of the combustion chambers.
At the front and rear of the intake manifold, a water passage has been provided which connects the RH and LH cylinder heads.
Exhaust and intake valves are equipped with irregular pitch springs made of special valve spring carbon steel which are capable of functioning at all engine speeds.
The RH and LH intake camshaft are driven by a timing belt, and a gear on the intake camshaft engages with a gear on the exhaust camshaft to drive it. The cam journal is supported at 5 (intake) or 4 (exhaust) places between the valve lifters of each cylinder and on the front end of the cylinder head. Lubrication of the cam journals and gears is accomplished by oil being supplied through the oiler port in the center of the camshaft.
Adjustment of the valve clearance is done by means of an outer shim type system, in which valve adjusting shims are located above the valve lifters. This permits replacement of the shims without removal of the camshafts.
Pistons are made of high temperature–resistant aluminum alloy, and a depression is built into the piston head to prevent interference with the valves.
Piston pins are the full–floating type, with the pins fastened to neither the piston boss nor the connecting rods. Instead, snap rings are fitted on both ends of the pins, preventing the pins from falling out.
The No.1 compression ring is made of steel and the No.2 compression ring is made of cast iron. The oil ring is made of a combination of steel and stainless steel. The outer diameter of each piston ring is slightly larger than the diameter of the piston and the flexibility of the rings allows them to hug the cylinder walls when they are mounted on the piston. Compression rings No.1 and No.2 work to prevent gas leakage from the cylinder and the oil ring works to scrape oil off the cylinder walls to prevent it from entering the combustion chambers.
The cylinder block is made of aluminum alloy with a bank of 90°. Cast iron cylinders are installed inside the cylinder block. It has 8 cylinders which are approximately twice the length of the piston stroke. The top of each cylinder is closed off by the cylinder head and the lower end of the cylinders becomes the crankcase, in which the crankshaft is installed. In addition, the cylinder block contains a water jacket, through which coolant is pumped to cool the cylinders.
The No.1 and No.2 oil pans are bolted onto the bottom of the cylinder block. The No.1 oil pan is made of aluminum alloy. The No.2 oil pan is an oil reservoir made of pressed steel sheet. An oil level sensor is installed in the No.1 oil pan (If oil level drops below a set level, a warning lights up.). And oil pan baffle plate keeps sufficient oil in the bottom of the No.2 oil pan even when the vehicle is tilted. This dividing plate also prevents the oil from marking waves when the vehicle is stopped suddenly and the oil shifts away from the oil pump suction pipe.
Plastic region tighten bolts are used for the cylinder head, main bearing cap and connecting rod.

WhereEverybodyKnowsYourName

PREPARATION

EG0AY–0M

SST (SPECIAL SERVICE TOOLS)

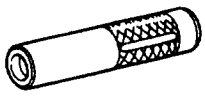	09201–41020	Valve Stem Oil Seal Replacer	
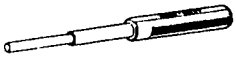	09201–70010	Valve Guide Bushing Remover & Replacer	
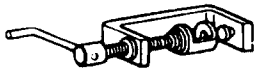	09202–70010	Valve Spring Compressor	
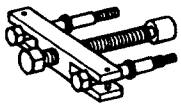	09213–31021	Crankshaft Pulley Puller	Crankshaft pulley
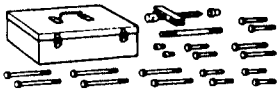	09213–60017	Crankshaft Pulley & Gear Puller Set	
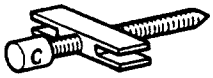	(09213–00020)	Body With Bolt	Crankshaft timing pulley
	(09213–00030)	Handle	Crankshaft timing pulley
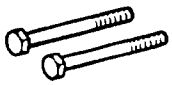	(09213–00050)	Bolt Set	Crankshaft timing pulley
	09213–70010	Crankshaft Pulley Holding Tool	
	09222–30010	Connecting Rod Bushing Remover & Replacer	
	09223–46011	Crankshaft Front Oil Seal Replacer	Crankshaft timing pulley Crankshaft pulley Camshaft oil seal
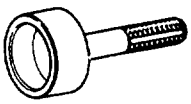	09223–56010	Crankshaft Rear Oil Seal Replacer	
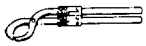	(09248–05410)	Valve Lifter Press	

WhereEverybodyKnowsYourName

	(09248–05021)	Valve Lifter Stopper	
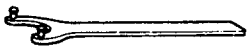	09278–54012	Drive Shaft Holding Tool	Camshaft timing pulley
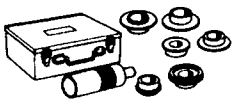	09316–60010	Transmission & Transfer Bearing Replacer	
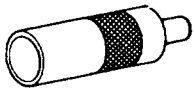	(09316–00010)	Replacer Pipe	Crankshaft front oil seal
	09330–00021	Companion Flange Holding Tool	Crankshaft pulley
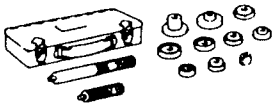	09550–10012	Replacer Set "B"	
	(09552–10010)	No. 2 Replacer Handle	Spark plug tube
	(09560–10010)	Knuckle Outer Bearing Replacer	Spark plug tube
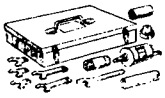	09612–24014	Steering Gear Housing Overhaul Tool Set	
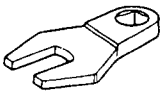	(09617–24011)	Steering Rack Wrench	Fuel pressure pulsation damper
	09816–30010	Oil Pressure Switch Socket	Knock sensor
	09843–18020	Diagnosis Check Wire	

WhereEverybodyKnowsYourName

EG0AZ–06

RECOMMENDED TOOLS

	09090–04010	Engine Sling Device	For suspension engine
	09200–00010	Engine Adjust Kit	
	09258–00030	Hose Plug Set	Plug for vacuum hose, fuel hose etc.
	09904–00010	Expander Set	

EG0B0–06

EQUIPMENT

Battery specific gravity gauge	
Caliper gauge	
CO/HC meter	
Compression gauge	
Connecting rod aligner	
Cylinder gauge	
Dial indicator	
Dye penetrant	
Engine tune–up tester	
Heater	
Magnetic finger	
Micrometer	
Piston ring compressor	
Piston ring expander	
Plastigage	
Precision straight edge	
Soft brush	

WhereEverybodyKnowsYourName

Spring tester	Valve spring
Steel square	Valve spring
Thermometer	
Torque wrench	
Valve seat cutter	
Vernier calipers	

EG0B1–0A

COOLANT

Item	Capacity	Classification
Engine coolant (w/ Heater)	10.8 liters (11.4 US qts, 9.5 Imp. qts)	Ethylene–glycol base

EG0B1–10

LUBRICANT

Item	Capacity	Classification
Engine oil		API grade SG or SH, Energy–Conserving II or ILSAC multigrade and recommended viscosity oil with SAE 5W–30 being the preferred engine oil
Dry fill	6.0 liters (6.3 US qts, 5.3 Imp. qts)	
Drain and refill		
w/ Oil filter change	4.8 liters (5.1 US qts, 4.2 Imp. qts)	
w/o Oil filter change	4.5 liters (4.8 US qts, 4.0 Imp. qts)	

EG0B1–0J

SSM (SERVICE SPECIAL MATERIALS)

08826–00080	Seal packing or equivalent	Camshaft bearing cap Cylinder head semi–circular plug Cylinder head cover Rear oil sear retainer
08826–00080	Seal packing or equivalent	Oil pump
08826–00100	Seal Packing 1282B, THREE BOND 1282B or equivalent	Water inlet housing Water seal plate Water pump
08833–00070	Adhesive 1311, THREE BOND 1311 or equivalent	Drive plate bolt
08833–00080	Adhesive 1344 THREE BOND 1344. LOCTITE 242 or equivalent	No.1 idler pulley bolt

WhereEverybodyKnowsYourName

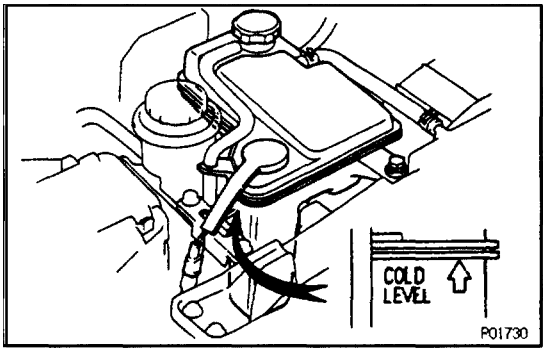

TUNE–UP

EG10Z–05

ENGINE COOLANT INSPECTION

1. CHECK ENGINE COOLANT LEVEL AT RESERVOIR TANK

The coolant level should be above the “COLD LEVEL” at normal temperature (20°C (68°F)).

If low, check for leaks and add coolant up to the “COLD LEVEL”

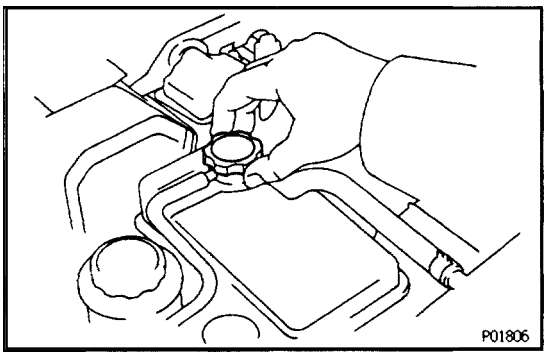

2. CHECK ENGINE COOLANT QUALITY

(a) Remove the radiator cap from the reservoir tank.

CAUTION: To avoid the danger of being burned, do not remove it while the engine and radiator are still hot as fluid and steam can be blown out under pressure

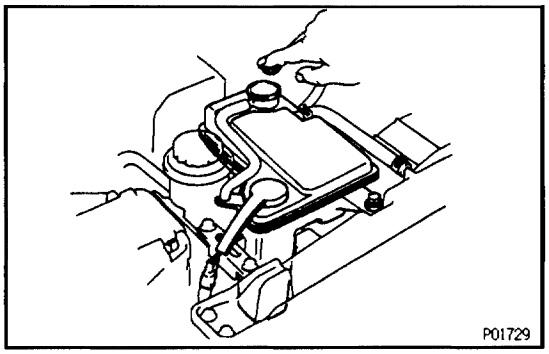

(b) There should not be any excessive deposits of rust or scale around the radiator cap or reservoir tank filler hole, and the coolant should be free from oil.

If excessively dirty, clean the coolant passages and replace the coolant.

Capacity (w/ Heater):

10.8 liters (11.4 US qts, 9.5 Imp. qts)

HINT:

- Use a good brand of ethylene–glycol base coolant and mix it according to the manufacturer’s directions.
- Using coolant which includes more than 50% ethylene–glycol(but not more than 70%) is recommended.

NOTICE:

- **Do not use a alcohol type coolant.**
- **The coolant should be mixed with demineralized water or distilled water.**

(c) Reinstall the radiator cap.

WhereEverybodyKnowsYourName

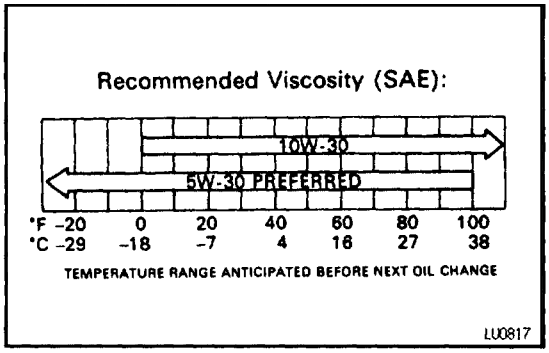

EG0B4–0K

ENGINE OIL INSPECTION

1. CHECK OIL QUALITY

Check the oil for deterioration, entry of water, discoloring or thinning.

If oil quality is visibly poor, replace the oil.

Oil grade:

API grade SG or SH, Energy–Conserving II or ILSAC multigrade engine oil. Recommended viscosity is as shown in the illustration, with SAE 5W–30 being the preferred engine oil.

Drain and refill capacity:

w/ Oil filter change

4.8 liters (5.1 US qts, 4.2 Imp. qts)

w/o Oil filter change

4.5 liters (4.8 US qts, 4.0 Imp. qts)

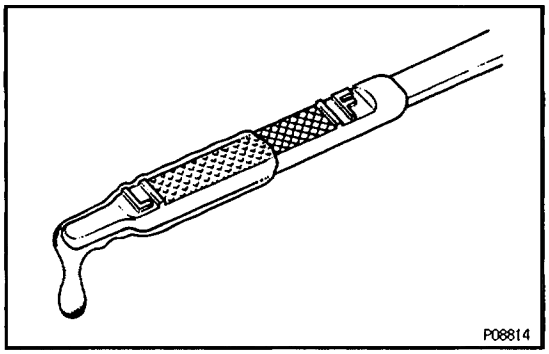

2. CHECK ENGINE OIL LEVEL

The oil level should be between the “L” and “F” marks on the dipstick.

If low, check for leakage and add oil up to the “F” mark.

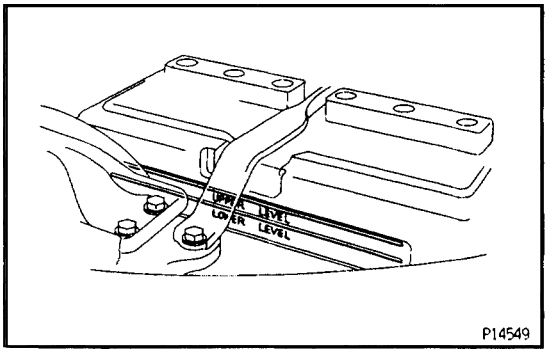

EG3E2–01

BATTERY INSPECTION

1. CHECK BATTERY ELECTROYTE LEVEL AND VOLTAGE

(a) Check the electrolyte quantity of each cell.

If under the lower level, replace the battery (or add distilled water if possible.). Need to check the charging system.

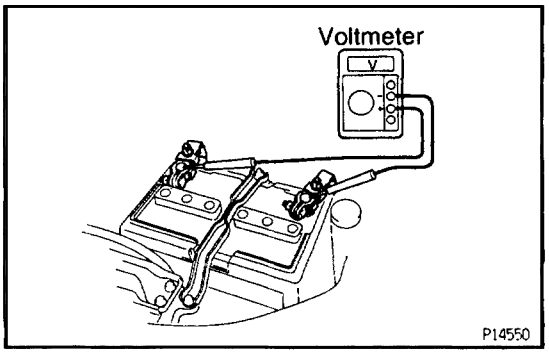

(b) Measure the battery voltage between the terminals negative (–) and positive (+) of the battery.

Standard voltage:

12.7–12.9 V at 20°C (68°F)

HINT:

- Before measuring the voltage, turn the ignition switch OFF and turn off the electrical systems (headlight, blower motor, rear defogger etc.) for 60 seconds to remove the surface charge.

WhereEverybodyKnowsYourName

- If the vehicle has been running, wait 5 minutes or more after the vehicle stops before measuring the battery voltage.

If the voltage is less than specification, charge the battery.

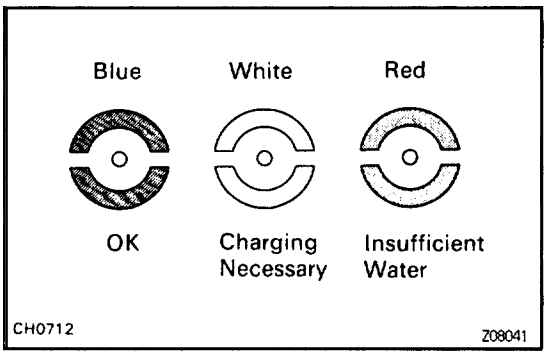

HINT: Check the indicator as shown in the illustration.

1. CHECK BATTERY SPECIFIC GRAVITY AND ELECTROLYTE LEVEL

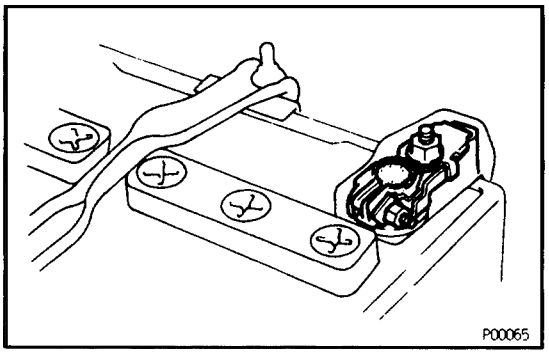

2. CHECK BATTERY TERMINALS AND FUSES

(a) Check that the battery terminals are not loose or corroded.

(b) Check the fuses for continuity.

EG3F9–01

AIR FILTER INSPECTION AND CLEANING

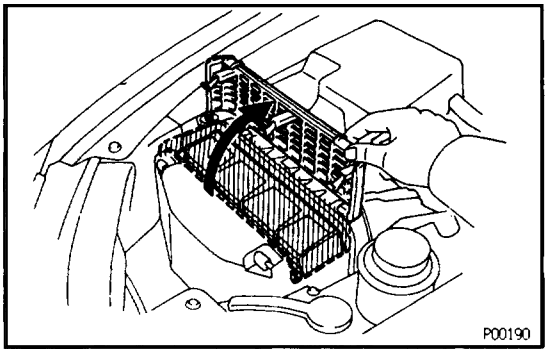

1. REMOVE AIR FILTER

(a) Open the air cleaner cap.

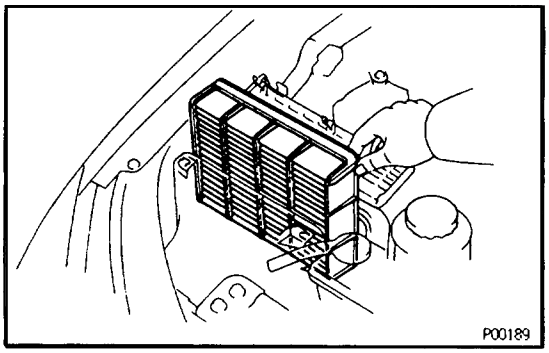

(b) Remove the air filter.

WhereEverybodyKnowsYourName

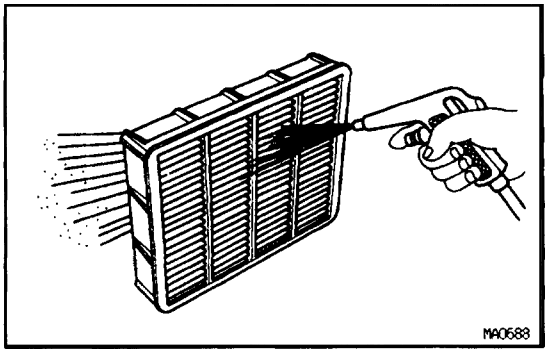

2. INSPECT AND CLEAN AIR FILTER

(a) Visually check that the air filter is not excessively damaged or only.
If necessary, replace the air filter.

(b) Clean the air filter with compressed air.
First blow from the inside thoroughly, then blow off the outside of the air filter.

3. REINSTALL AIR FILTER

EG1KB–02

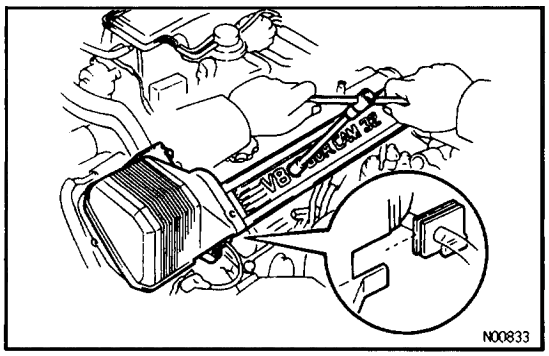

HIGH–TENSION CORDS INSPECTION

1. REMOVE NO.3 TIMING BELT COVERS
(See steps 10 to 14 on pages EG–16)

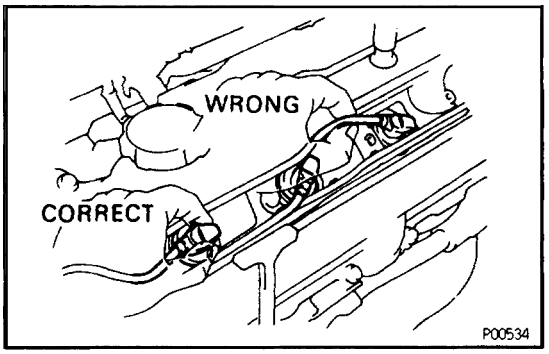

2. REMOVE HIGH–TENSION CORDS
(See step 1 on page IG–16)
NOTICE: Pulling on or bending the cords may damage the conductor inside.

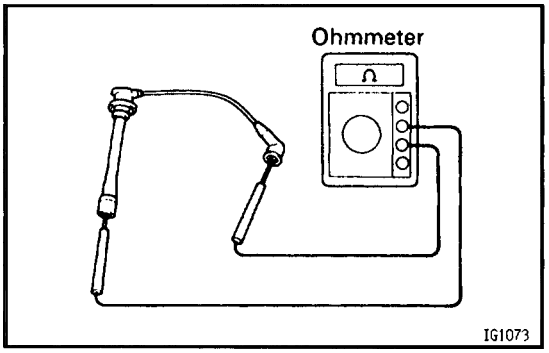

3. INSPECT HIGH–TENSION CORD RESISTANCE
Using an ohmmeter, measure the resistance.
Maximum resistance:
25 k? per cord
If the resistance is greater than maximum, replace the cord.

4. REINSTALL HIGT–TENSION CORDS
(See step 1 on page IG–19)

5. REINSTALL NO.3 TIMING BELT COVERS
(See steps 28 to 30 on pages EG–29)

WhereEverybodyKnowsYourName

EG0EY–02

DRIVE BELT INSPECTION

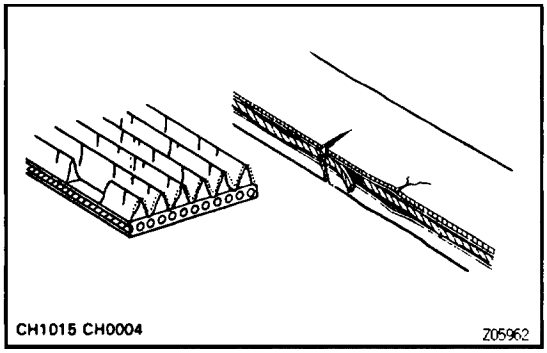

INSPECT DRIVE BELT

HINT: A belt tensioner is used, so checking the belt tension is not necessary.

(a) Visually check the belt for excessive wear, frayed cords etc. If necessary, replace the drive belt.

HINT:

- Cracks on the rib side of a belt are considered acceptable. If the drive belt has chunks missing from the ribs, it should be replaced.
- The drive belt tension can be released by turning the the belt tensioner counterclockwise. The pulley bolt for the belt tensioner has a left–hand thread.

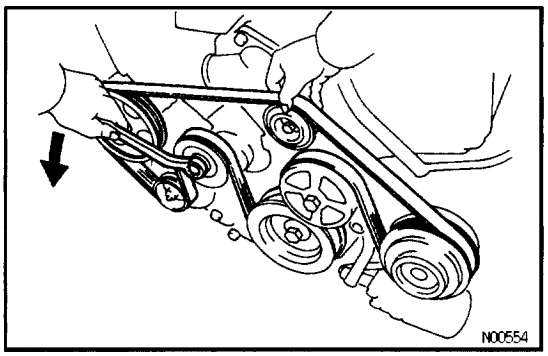

(b) Check the belt tensioner operation.

- Check that the belt tensioner moves downward when the drive belt is pressed down at the points indicated in the illustration with approx. 98 N (10 kgf, 22.0 lbf) of force.
- Check the alignment of the belt tensioner pulley to make sure the drive belt will not slip off the pulley.

If necessary, replace the belt tensioner.

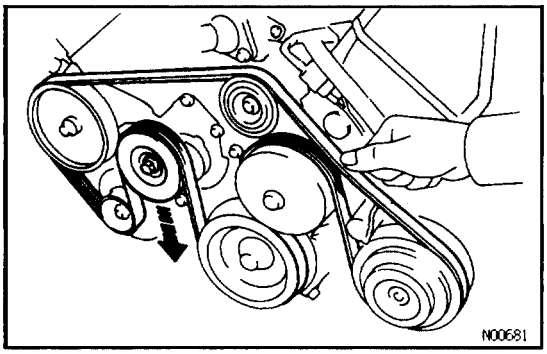

- Check that the arrow mark on the belt tensioner falls within area A of the scale.

If it is outside area A, replace the drive belt.

HINT:

- When a new belt is installed, it should lie within area B. If not, the drive belt is not correct.

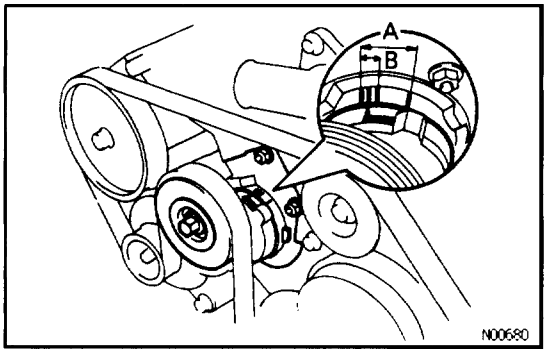

- After installing a belt, check that it fits properly in the ribbed grooves.
- Check by hand to confirm that the belt has not slipped out of the groove on the bottom of the pulley.

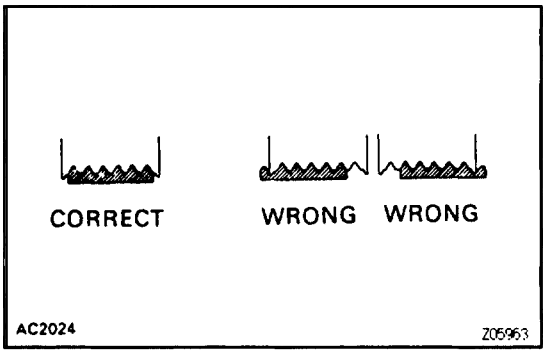

WhereEverybodyKnowsYourName

EG21S–02

VALVE CLEARANCE INSPECTION AND ADJUSTMENT

HINT: Inspect and adjust the valve clearance when the engine is cold.

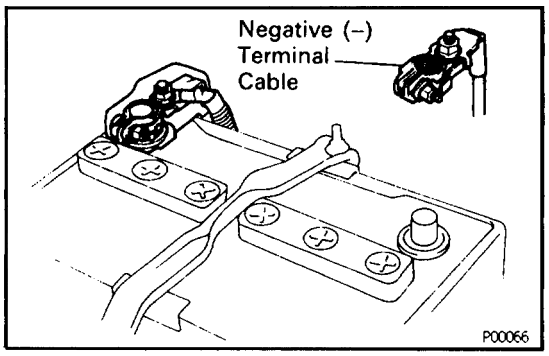

1. DISCONNECT NEGATIVE TERMINAL CABLE FROM BATTERY

CAUTION: Work must be started after 90 seconds from the time the ignition switch is turned to the "LOCK" position and the negative (–) terminal cable is disconnected from the battery.

2. DRAIN ENGINE COOLANT

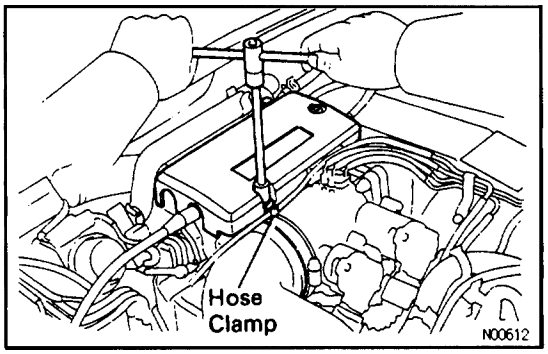

3. REMOVE THROTTLE BODY COVER

(a) Disconnect the EVAP hose from the hose clamp.
(b) Remove the cap nut.
(c) Loosen the 2 bolts, and remove the hose clamp and throttle body cover.

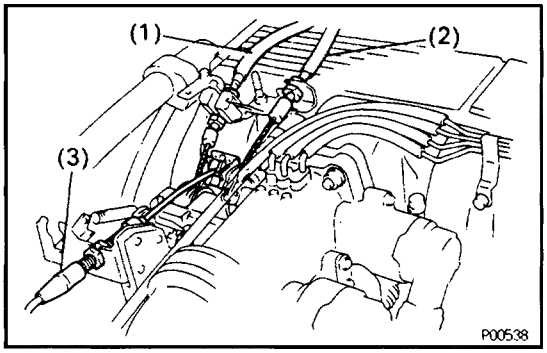

4. DISCONNECT CONTROL CABLES TO THROTTLE BODY

Disconnect the following cables:
(1) Accelerator cable
(2) Transmission throttle control cable
(3) Cruise control actuator cable

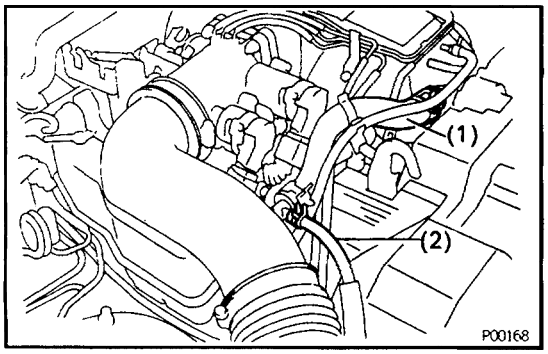

5. REMOVE INTAKE AIR CONNECTOR

(a) Disconnect the following hoses:
(1) Air hose from IAC valve
(2) Air hose (from air control valve on PS pump) from intake air connector

WhereEverybodyKnowsYourName

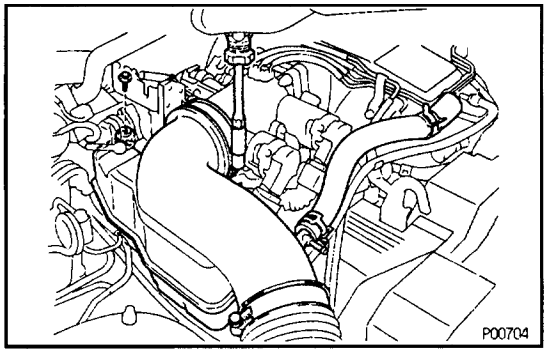

(b) Remove the bolt holding the intake air connector to the cylinder head cover.
(c) Remove the 2 hose clamps.
(d) Disconnect the intake air connector from the throttle body and air cleaner hose, and remove the intake air connector.

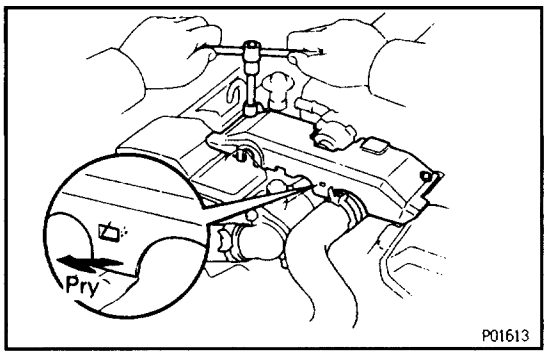

6. REMOVE UPPER HIGH–TENSION CORD COVER
(a) Remove the 2 bolts.
(b) Disconnect the front side claw groove of the upper cord cover from the claw of lower cord cover, and remove the upper cord cover.

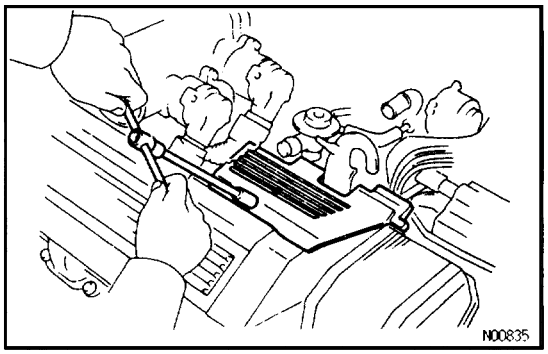

7. REMOVE RH ENGINE WIRE COVER
Remove the bolt and engine wire cover.

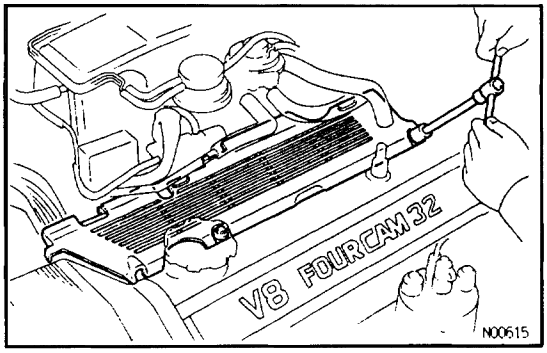

8. REMOVE LH ENGINE WIRE COVER
Remove the 2 bolts and engine wire cover.

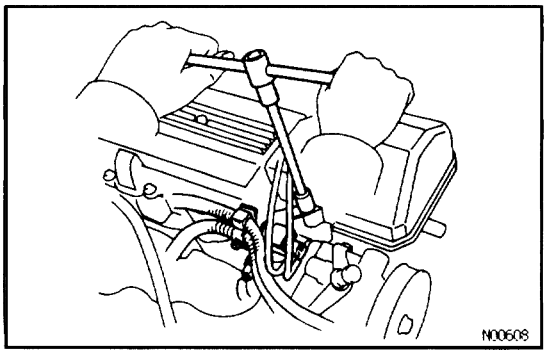

9. REMOVE VSV FOR EVAP SYSTEM
Remove the 2 bolts, and disconnect the VSV from the cylinder head cover and timing belt cover.

WhereEverybodyKnowsYourName

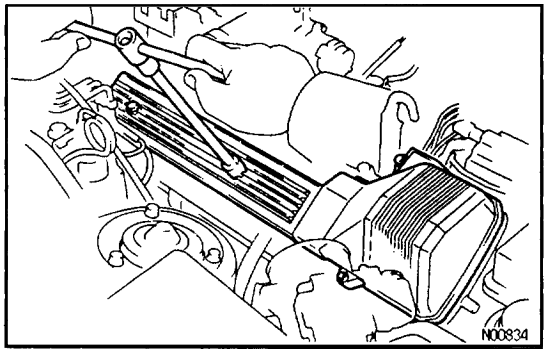

10. REMOVE RH NO.3 TIMING BELT COVER

Remove the 3 bolts, timing belt cover and 3 gaskets.

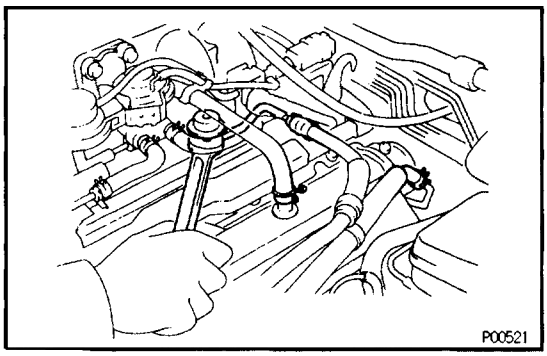

11. DISCONNECT FUEL INLET HOSE FROM LH DELIVERY PIPE

Remove the pulsation damper and 2 gaskets, and disconnect the fuel inlet hose from the delivery pipe.

CAUTION:

- **Put a shop towel under the delivery pipe.**
- **Slowly loosen the union bolt.**

12. DISCONNECT FUEL RETURN HOSE FROM FUEL RETURN PIPE

13. DISCONNECT PCV HOSE FROM LH CYLINDER HEAD

14. REMOVE LH NO.3 TIMING BELT COVER

(a) Remove the 4 bolts.

(b) Disconnect the cord grommet from the timing belt cover, and remove the timing belt cover and 3 gaskets.

(c) Remove the cord grommet from the high–tension cord.

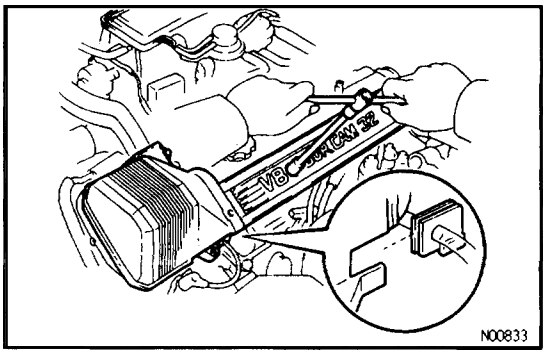

15. DISCONNECT HEATER WATER VALVE FROM BODY

(a) Disconnect the VSV connector.

(b) Remove the bolt holding the engine wire clamp to the water valve bracket.

(c) Remove the 2 bolts, and disconnect the water valve and bracket assembly.

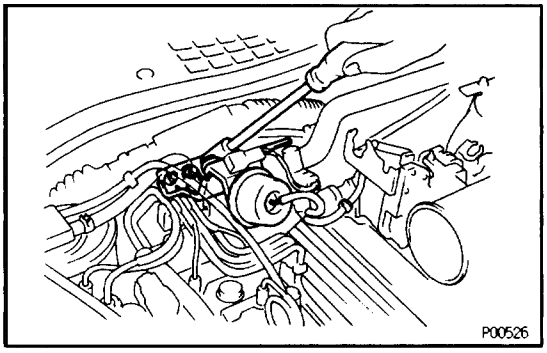

16. REMOVE THROTTLE BODY

(a) Disconnect the following connectors:

(1) Throttle position sensor connector

(2) w/ TRAC:
Sub–throttle position sensor connector

(3) w/ TRAC:
Sub–throttle actuator connector

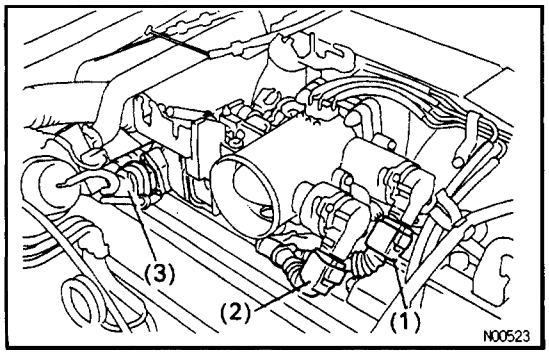

WhereEverybodyKnowsYourName

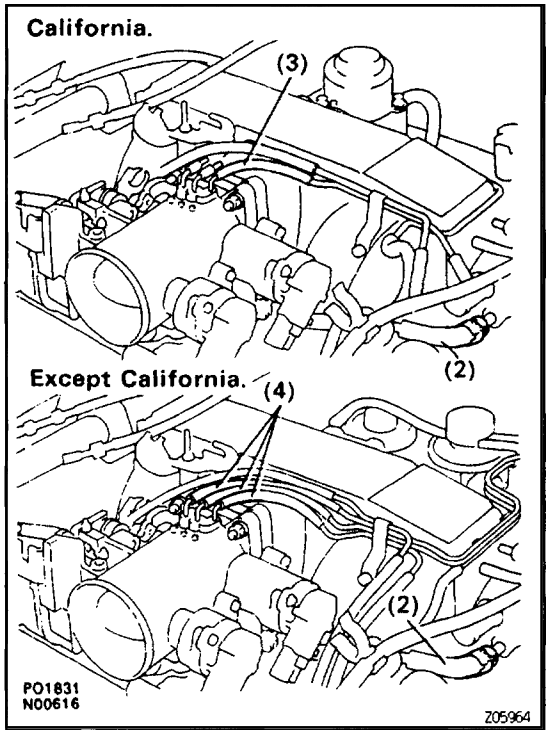

(b) Disconnect the following hoses:
  (1) Water bypass hose from IAC valve
  (2) California:
    Vacuum hose from throttle body
  (3) Except California:
    3 vacuum hoses from throttle body

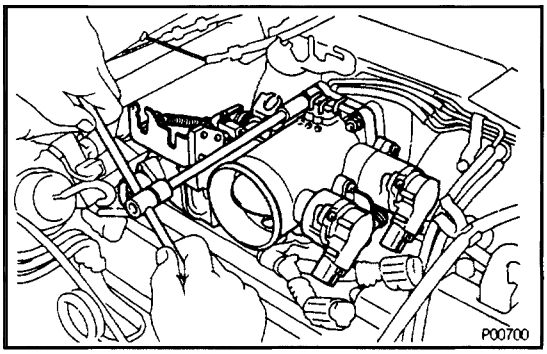

(c) Remove the 2 bolts and 2 nuts, and disconnect the throttle body from the air intake chamber.

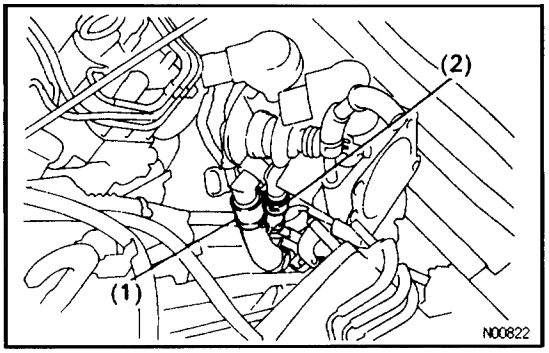

(d) Disconnect the following hoses, and remove the throttle body.
  (1) PCV hose from throttle body
  (2) Water bypass hose from throttle body
(e) Remove the throttle body gasket.

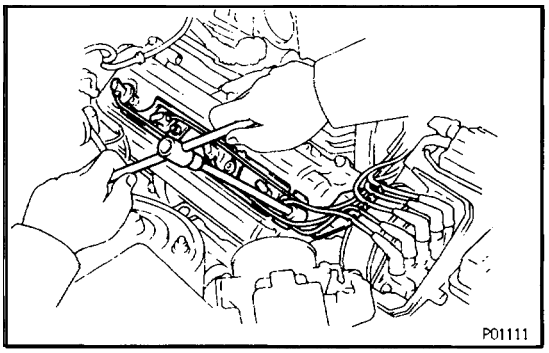

17. REMOVE RH CYLINDER HEAD COVER

(a) Disconnect the No.2 high–tension cord from the cord clamp on the front high–tension cord clamp.
(b) Remove the 2 bolts holding the high–tension cord clamps to the cylinder head cover.
(c) Disconnect the 5 high–tension cords from the front side of the front high–tension cord clamp.
(d) Disconnect the front high–tension cord clamp from the lower high–tension cord cover.

WhereEverybodyKnowsYourName

(e) Disconnect the 4 high–tension cords together with the front and rear high–tension cord clamps from the spark plugs.
NOTICE: Pulling on or bending the cords may damage the conductor inside.

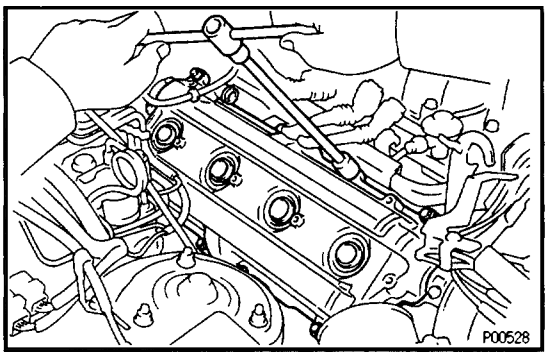

(f) Remove the 8 bolts, seal washers, cylinder head cover and gasket.

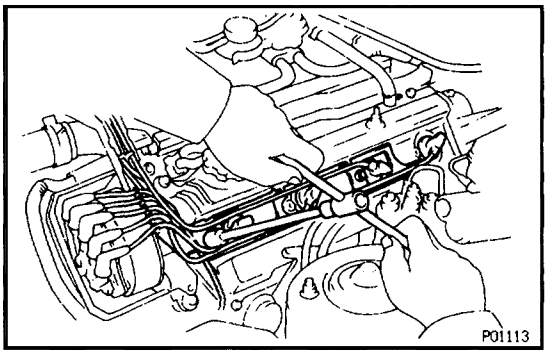

18. REMOVE LH CYLINDER HEAD COVER

(a) Disconnect the No.1 high–tension cord from the cord clamp on the front high–tension cord clamp.
(b) Remove the 2 bolts holding the high–tension cord clamps to the cylinder head cover.
(c) Disconnect the 5 high–tension cords from the front side of the front high–tension cord clamp.
(d) Disconnect the front high–tension cord clamp from the lower high–tension cord cover.
(e) Disconnect the 4 high–tension cords together with the front and rear high–tension cord clamps from the spark plugs.
NOTICE: Pulling on or bending the cords may damage the conductor inside.

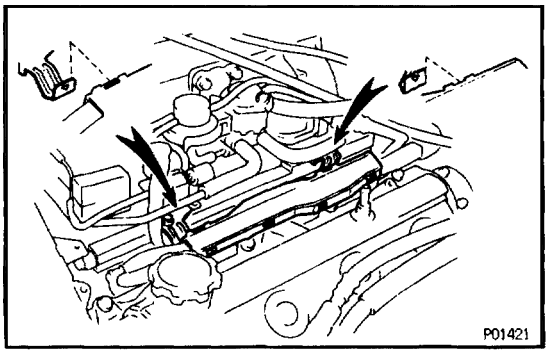

(f) Disconnect the engine wire protector from the 2 brackets on the delivery pipe.
(g) Disconnect the 4 injector connectors.

WhereEverybodyKnowsYourName

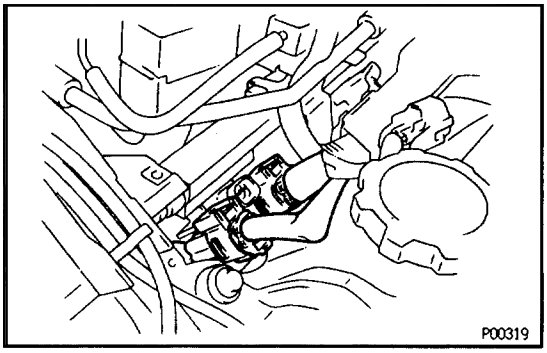

(h) Disconnect the 2 engine wire connectors.

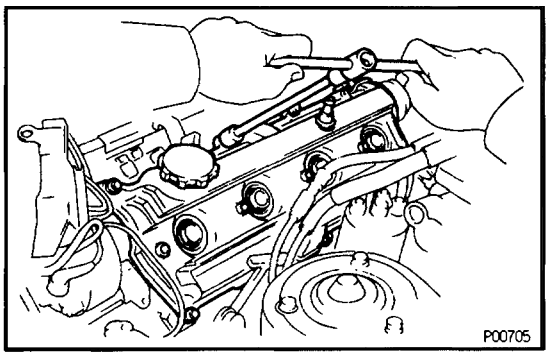

(i) Remove the 8 bolts, seal washers, cylinder head cover and gasket.

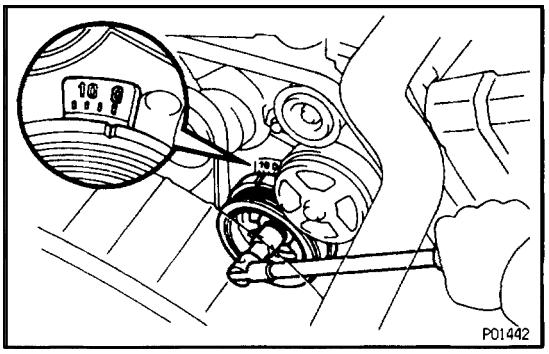

19. SET NO.1 CYLINDER TO TDC/COMPRESSION

(a) Turn the crankshaft pulley, and align its groove with timing mark “0” of the No.1 timing belt cover.

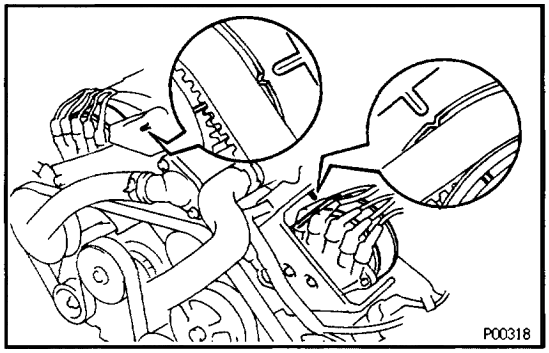

(b) Check that the timing marks of the camshaft timing pulleys and timing belt rear plates aligned.
If not, turn the crankshaft 1 revolution (360°) and align the mark as above.

WhereEverybodyKnowsYourName

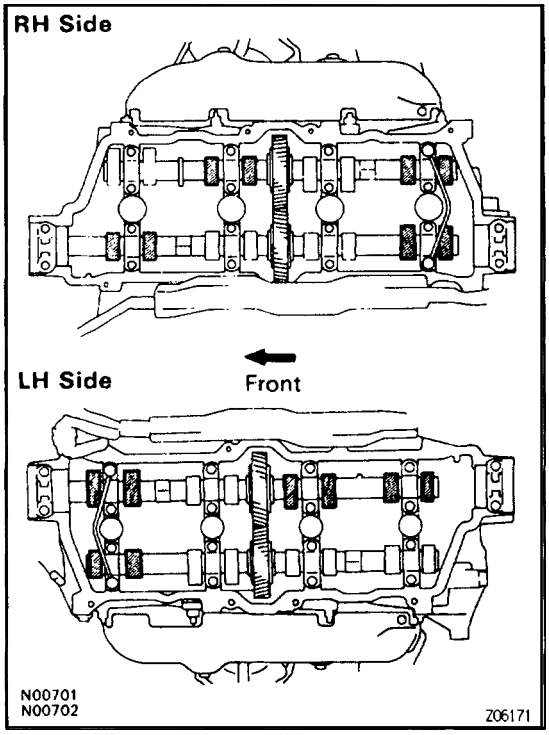

20. INSPECT VALVE CLEARANCE

(a) Check only the valves indicated.

- Using a feeler gauge, measure the clearance between the valve lifter and camshaft
- Record the out–of–specification valve clearance measurements. They will be used later to determine the required replacement adjusting shim.

Valve clearance (Cold):

Intake

0.15 – 0.25 mm (0.006 – 0.010 in.)

Exhaust

0.25 – 0.35 mm (0.010 – 0.014 in.)

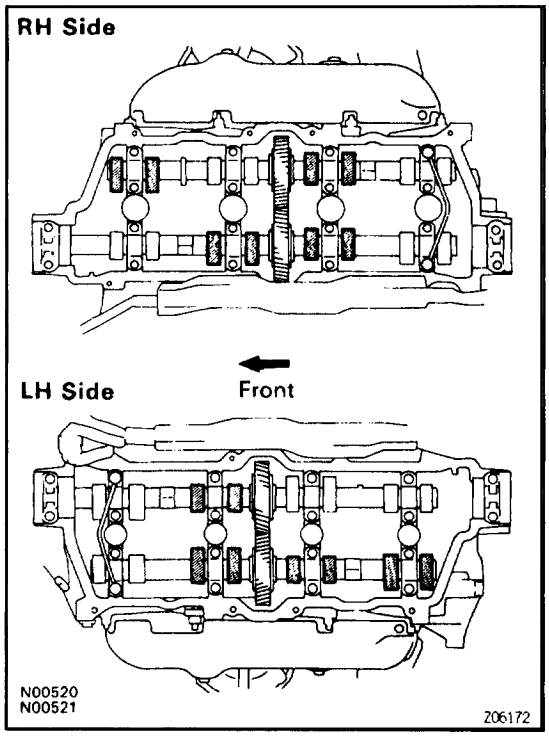

(b) Turn the crankshaft 1 revolution (360) and align the mark as above. (See procedure in step 8)

(c) Check only the valves indicated as shown. Measure the valve clearance. (See procedure in step (a))

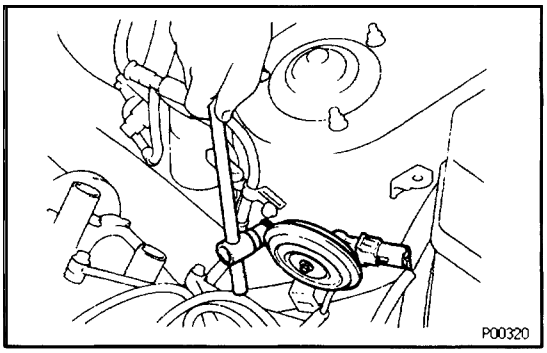

21. REMOVE THEFT DETERRENT HORN

(a) Disconnect the connector.

(b) Remove the bolt and theft deterrent horn.

HINT: Remove the deterrent horn when the valve clearance is adjusted for the front portion of the exhaust camshaft on the LH cylinder head.

WhereEverybodyKnowsYourName

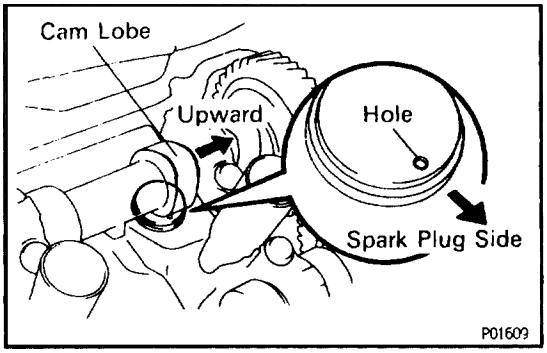

22. ADJUST VALVE CLEARANCE

(a) Remove the adjusting shim.

- Turn the crankshaft so that the cam lobe of the camshaft on the adjusting valve upward.
- Position the hole of the adjusting shim facing the spark plug side.

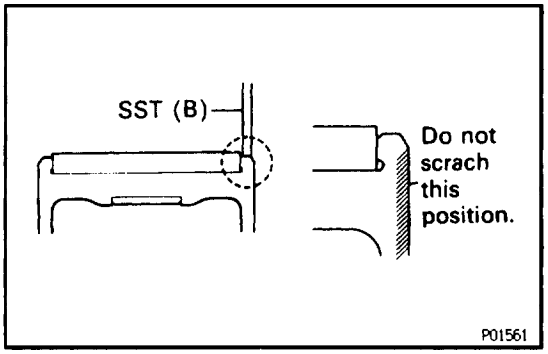

- Using SST (A), press down the valve lifter and place SST (B) between the camshaft and valve lifter flange. Remove SST (A).

SST 09248–05410, 09248–05021

NOTICE: The valve lifter is made of aluminum, which is easily scratched. So when setting SST (B), take care not to scratch the face of the valve lifter.

Setting Method for SST for Camshaft End Portions

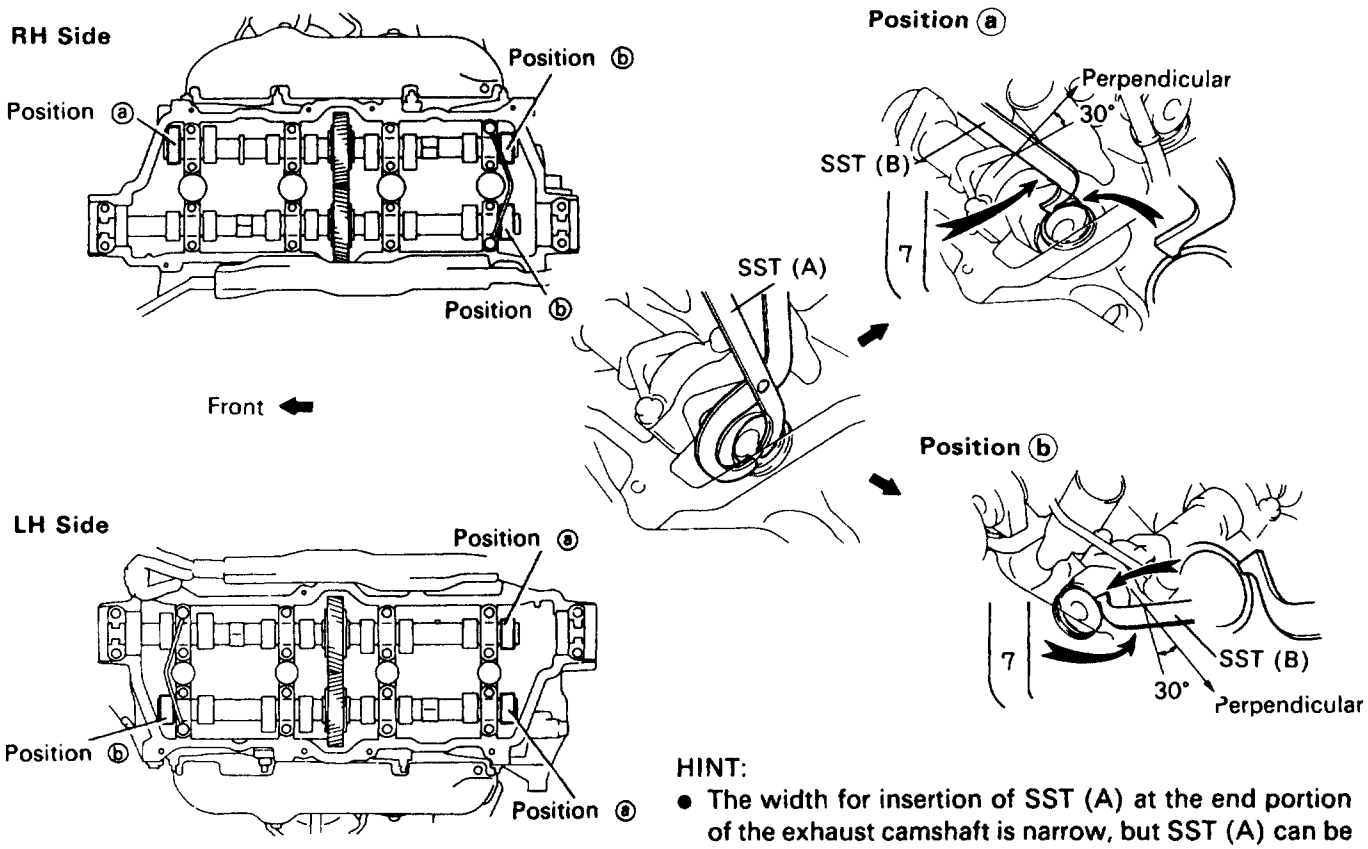

HINT:

- The width for insertion of SST (A) at the end portion of the exhaust camshaft is narrow, but SST (A) can be inserted easily by moving the cam lobe in the direction opposite to the side from which SST (B) is inserted.
- Apply SST (B) on the side marked with "7".
- It is easier to apply SST (B) when it is inserted at the angle shown in the illustration.

WhereEverybodyKnowsYourName

Setting Method for SST for Except Camshaft End Portions

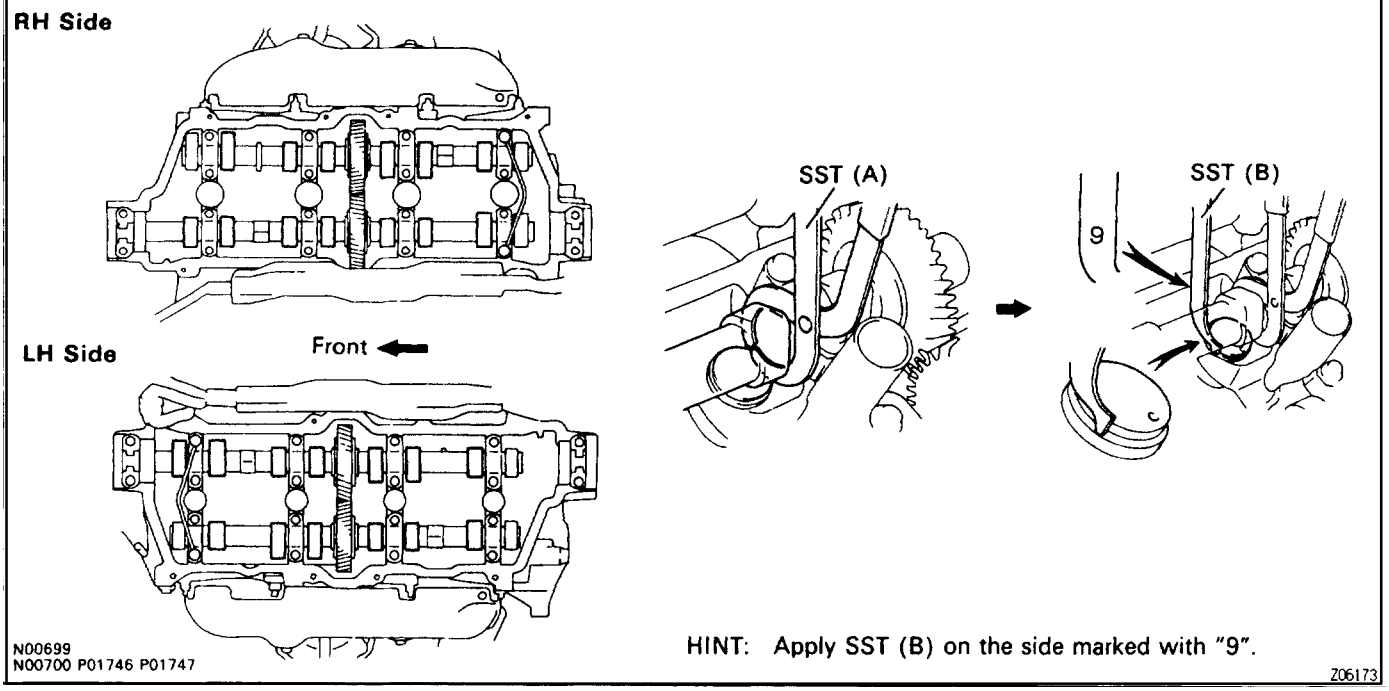

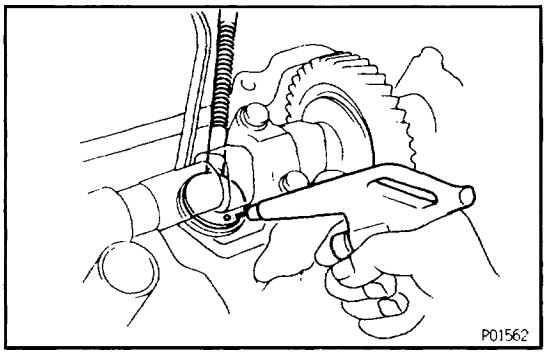

- Using compressed air and a magnetic finger, remove the adjusting shim by blowing air into the shim hole.

HINT: Remove the adjusting shim from the intake manifold side.

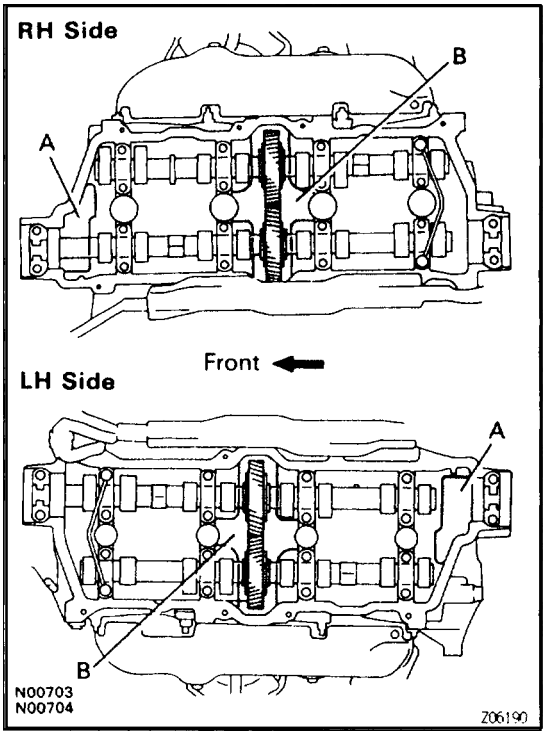

NOTICE: Do not drop the adjusting shim into portions A and B. If dropped into portion A, the adjusting shim will pass through the cylinder head and cylinder block into the oil pan. If dropped into portion B, the adjusting shim cannot be recovered without removing the exhaust camshaft.

WhereEverybodyKnowsYourName

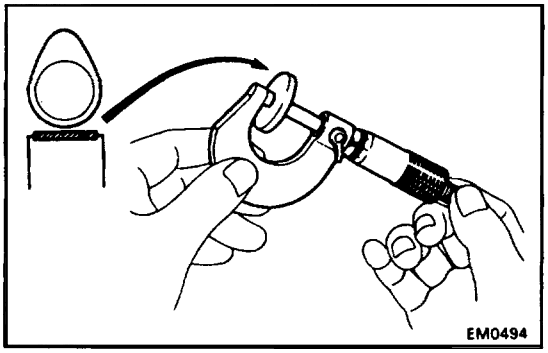

(b) Determine the replacement adjusting shim size by following the Formula or Charts:

- Using a micrometer, measure the thickness of the removed shim.
- Calculate the thickness of a new shim so that the valve clearance comes within specified value.

T …… Thickness of removed shim
A …… Measured valve clearance
N …… Thickness of new shim

Intake:

N = T + (A – 0.20 mm (0.008 in.))

Exhaust:

N = T + (A – 0.30 mm (0.012 in.))

- Select a new shim with a thickness as close as possible to the calculated value.

HINT: Shims are available in 33 sized in increments of 0.025 mm (0.0010 in.) from 2.50 mm (0.0984 in.) to 3.30 mm (0.1299 in.)

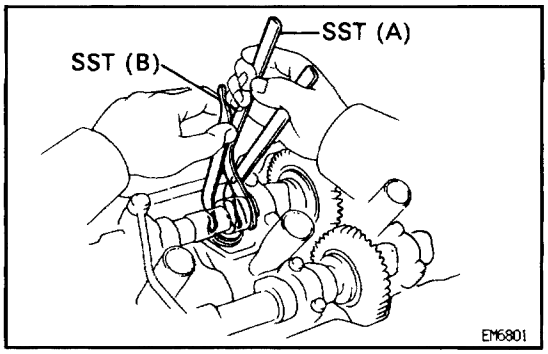

(c) Install a new adjusting shim.

- Place a new adjusting shim on the valve lifter.
- Using SST (A), press down the valve lifter and remove SST (B).

SST 09248–05410, 09248–05021

(d) Recheck the valve clearance.

WhereEverybodyKnowsYourName

Adjusting Shim Selection Chart (Intake)

P01331

| Measured clearance mm (in.) \ Installed shim thickness mm (in.) | 2.500 (0.0984) | 2.520 (0.0992) | 2.525 (0.0994) | 2.540 (0.1000) | 2.550 (0.1004) | 2.560 (0.1008) | 2.575 (0.1014) | 2.580 (0.1016) | 2.600 (0.1024) | 2.625 (0.1033) | 2.640 (0.1039) | 2.660 (0.1043) | 2.670 (0.1051) | 2.675 (0.1053) | 2.680 (0.1055) | 2.690 (0.1059) | 2.700 (0.1063) | 2.710 (0.1067) | 2.720 (0.1071) | 2.725 (0.1073) | 2.730 (0.1075) | 2.740 (0.1079) | 2.750 (0.1083) | 2.760 (0.1087) | 2.770 (0.1091) | 2.775 (0.1093) | 2.780 (0.1094) | 2.790 (0.1098) | 2.800 (0.1102) | 2.810 (0.1106) | 2.820 (0.1110) | 2.825 (0.1112) | 2.830 (0.1114) | 2.840 (0.1118) | 2.850 (0.1122) | 2.860 (0.1126) | 2.870 (0.1130) | 2.875 (0.1132) | 2.880 (0.1134) | 2.890 (0.1138) | 2.900 (0.1142) | 2.910 (0.1146) | 2.920 (0.1150) | 2.925 (0.1152) | 2.930 (0.1154) | 2.940 (0.1157) | 2.950 (0.1161) | 2.960 (0.1166) | 2.970 (0.1169) | 2.975 (0.1171) | 2.980 (0.1173) | 2.990 (0.1177) | 3.000 (0.1181) | 3.010 (0.1185) | 3.020 (0.1189) | 3.025 (0.1191) | 3.030 (0.1193) | 3.040 (0.1197) | 3.050 (0.1201) | 3.060 (0.1206) | 3.075 (0.1211) | 3.080 (0.1213) | 3.100 (0.1220) | 3.120 (0.1228) | 3.125 (0.1230) | 3.140 (0.1236) | 3.150 (0.1240) | 3.160 (0.1244) | 3.175 (0.1250) | 3.180 (0.1252) | 3.200 (0.1260) | 3.220 (0.1268) | 3.225 (0.1270) | 3.240 (0.1276) | 3.250 (0.1280) | 3.260 (0.1283) | 3.275 (0.1289) | 3.280 (0.1291) | 3.300 (0.1299) |
|---|---|---

Adjusting Shim Selection Chart (Exhaust)

P01332

| Measured clearance mm (in.) \ Installed shim thickness mm (in.) | 2.500 (0.0984) | 2.520 (0.0992) | 2.525 (0.0994) | 2.540 (0.1000) | 2.550 (0.1004) | 2.560 (0.1008) | 2.575 (0.1014) | 2.580 (0.1016) | 2.600 (0.1024) | 2.620 (0.1031) | 2.625 (0.1033) | 2.640 (0.1039) | 2.650 (0.1043) | 2.660 (0.1047) | 2.670 (0.1051) | 2.675 (0.1053) | 2.680 (0.1055) | 2.690 (0.1059) | 2.700 (0.1063) | 2.710 (0.1067) | 2.720 (0.1071) | 2.725 (0.1073) | 2.730 (0.1075) | 2.740 (0.1079) | 2.750 (0.1083) | 2.760 (0.1087) | 2.770 (0.1091) | 2.775 (0.1093) | 2.780 (0.1094) | 2.790 (0.1098) | 2.800 (0.1102) | 2.810 (0.1106) | 2.820 (0.1110) | 2.825 (0.1112) | 2.830 (0.1114) | 2.840 (0.1118) | 2.850 (0.1122) | 2.860 (0.1126) | 2.870 (0.1130) | 2.875 (0.1132) | 2.880 (0.1134) | 2.890 (0.1138) | 2.900 (0.1142) | 2.910 (0.1146) | 2.920 (0.1150) | 2.925 (0.1152) | 2.930 (0.1154) | 2.940 (0.1157) | 2.950 (0.1161) | 2.960 (0.1165) | 2.970 (0.1169) | 2.975 (0.1171) | 2.980 (0.1173) | 2.990 (0.1177) | 3.000 (0.1181) | 3.010 (0.1185) | 3.020 (0.1189) | 3.025 (0.1191) | 3.030 (0.1193) | 3.040 (0.1197) | 3.050 (0.1201) | 3.060 (0.1205) | 3.075 (0.1211) | 3.080 (0.1213) | 3.100 (0.1220) | 3.120 (0.1228) | 3.125 (0.1230) | 3.140 (0.1236) | 3.150 (0.1240) | 3.160 (0.1244) | 3.175 (0.1250) | 3.180 (0.1252) | 3.200 (0.1260) | 3.220 (0.1268) | 3.225 (0.1270) | 3.240 (0.1276) | 3.250 (0.1280) | 3.260 (0.1283) | 3.275 (0.1289) | 3.280 (0.1291) | 3.300 (0.1299) |
|---|---|---

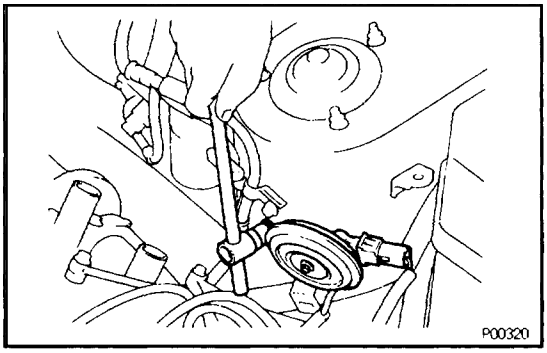

23. REINSTALL THEFT DETERRENT HORN

(a) Install the theft deterrent horn with the bolt.

(b) Connect the connector.

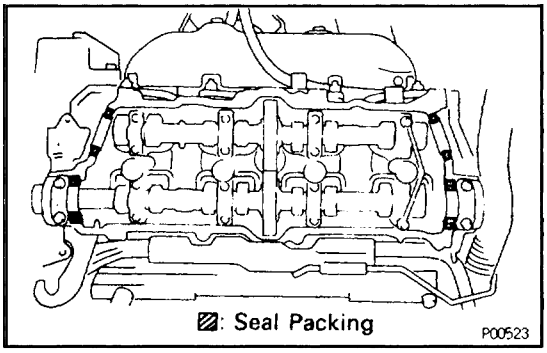

24. REINSTALL RH CYLINDER HEAD COVER

(a) Remove any old packing (FIPG) material.

(b) Apply seal packing to the cylinder head as shown in the illustration.

Seal packing:

Part No. 08826–00080 or equivalent

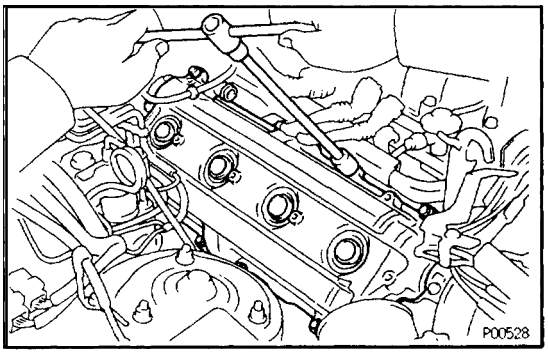

(c) Install the gasket to the cylinder head cover.

(d) Install the seal washer to the bolt.

(e) Install the cylinder head cover with the 8 bolts.

Torque: 5.9 N·m (60 kgf·cm, 52 in.·lbf)

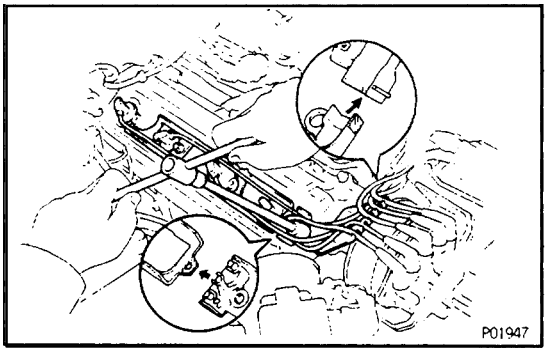

(f) Connect the 4 high–tension cords to the spark plugs.

(g) Connect the front high–tension cord clamp to the lower high–tension cord cover.

(h) Place the front high–tension cord clamp to the rear high–tension cord clamp.

(i) Install the 2 bolts holding the high–tension cord clamps to the cylinder head cover.

(j) Connect the 5 high–tension cords to the front side of the front high–tension cord clamp.

(k) Connect the No. 2 high–tension cord to the cord clamp on the front high–tension cord clamp.

WhereEverybodyKnowsYourName

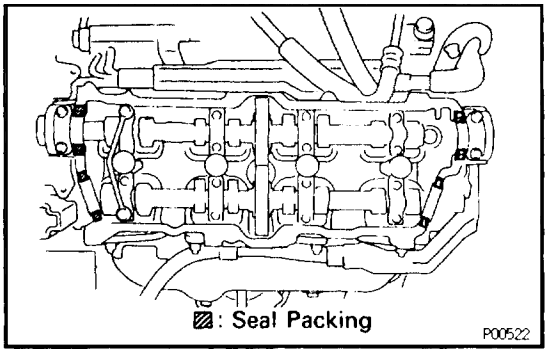

25. REINSTALL LH CYLINDER HEAD COVER

(a) Remove any old packing (FIPG) material.

(b) Apply seal packing to the cylinder head as shown in the illustration.

Seal packing:

Part No. 08826–00080 or equivalent

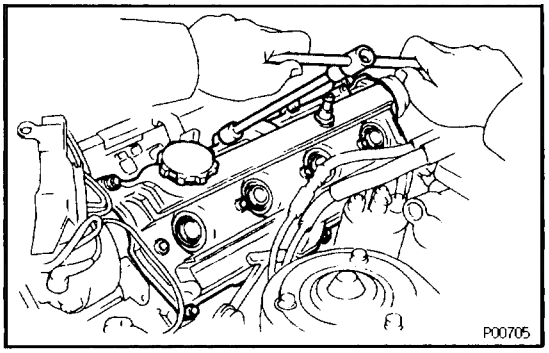

(c) Install the gasket to the cylinder head cover.

(d) Install the seal washer to the bolt.

(e) Install the cylinder head cover with the 8 bolts.

Torque: 5.9 N·m (60 kgf·cm, 52 in.·lbf)

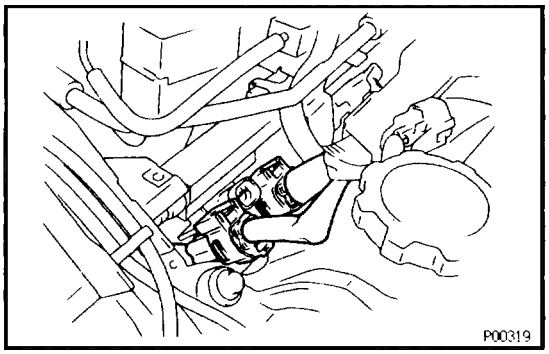

(f) Connect the 2 engine wire connectors.

(g) Connect the 4 injector connectors.

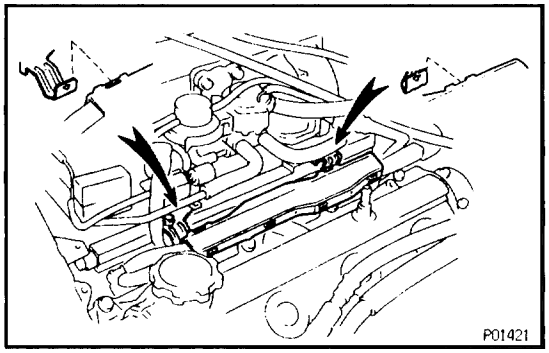

(h) Install the engine wire protector to the 2 brackets on the delivery pipe.

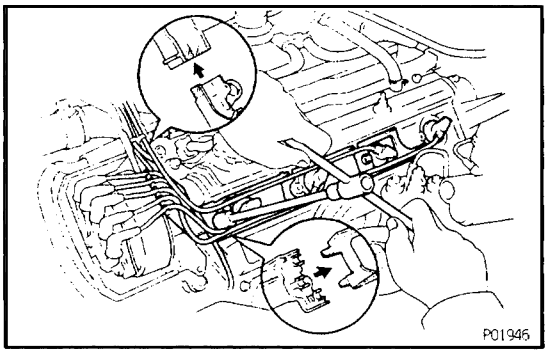

(i) Connect the 4 high–tension cords to the spark plugs.

(j) Connect the front high–tension cord clamp to the lower high–tension cord cover.

(k) Place the front high–tension cord clamp to the rear high–tension cord clamp.

(l) Install the 2 bolts holding the high–tension cord clamps to the cylinder head cover.

(m) Connect the 5 high–tension cords to the front side of the front high–tension cord clamp.

WhereEverybodyKnowsYourName

(n) Connect the No. 1 high–tension cord to the cord clamp on the front high–tension cord clamp.

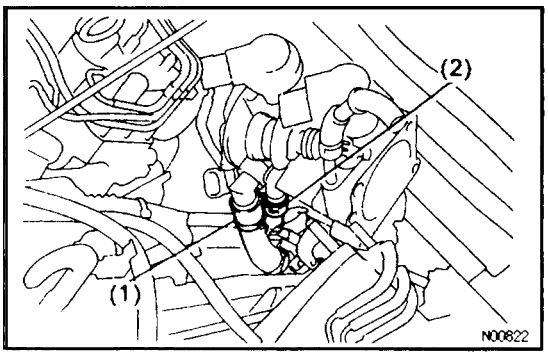

26. REINSTALL THROTTLE BODY

(a) Disconnect the following hoses:
  (1) PCV hose to throttle body
  (2) Water bypass hose to throttle body

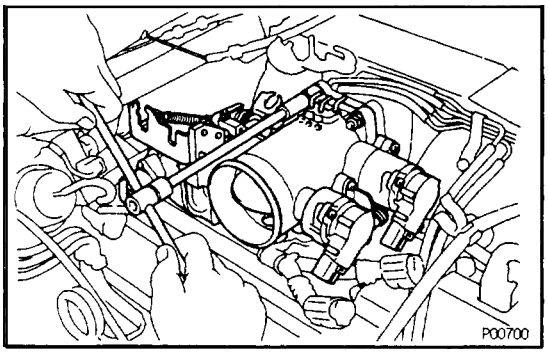

(b) Install a new gasket and throttle body with the 2 bolts and 2 nuts.
Torque: 18 N·m (185 kgf·cm, 13 ft·lbf)

(c) Install the water bypass pipe (from the rear bypass joint) to the clamp on the engine wire cover.

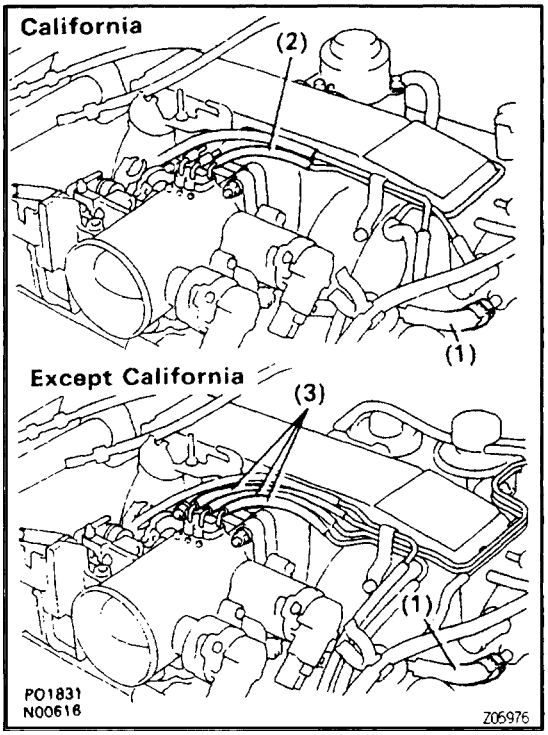

(d) Connect the following hoses:
  (1) Water bypass hose to IAC valve
  (2) California:
  Vacuum hose from throttle body
  (3) Except California:
  3 vacuum hoses from throttle body

WhereEverybodyKnowsYourName

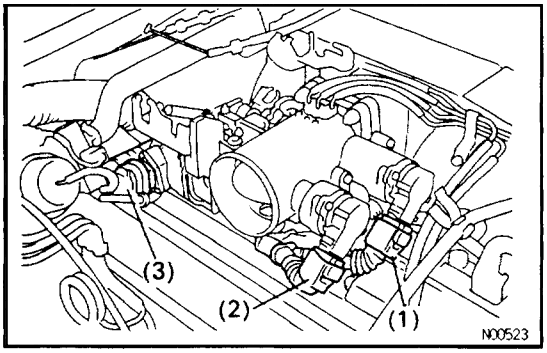

(e) Connect the following connectors:
  (1) Throttle position sensor connector
  (2) w/ TRAC:
      Sub–throttle position sensor connector
  (3) w/ TRAC:
      Sub–throttle actuator connector

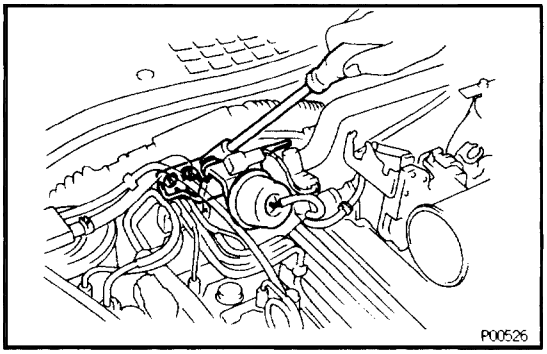

27. REINSTALL HEATER WATER VALVE

(a) Install the water valve and bracket assembly with the 2 bolts.
(b) Install the engine wire clamp with the bolt.
(c) Connect the VSV connector.

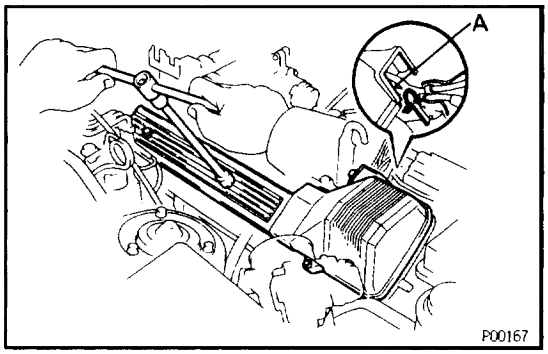

28. REINSTALL RH NO.3 TIMING BELT COVER

(a) Install the 3 gaskets to the timing belt cover.
(b) Fit the portion A of the timing belt cover, matching it with the lower high–tension cord cover.
(c) Install the timing belt cover with the 3 bolts.

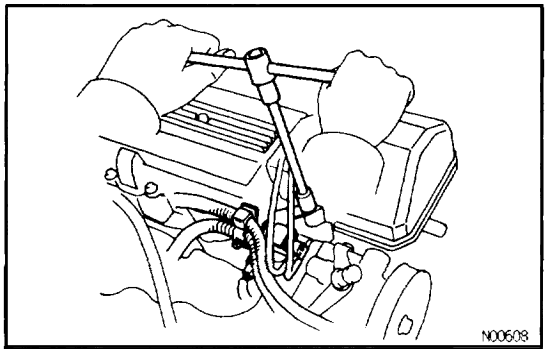

29. REINSTALL VSV FOR EVAP SYSTEM

Install the VSV with the 2 bolts.

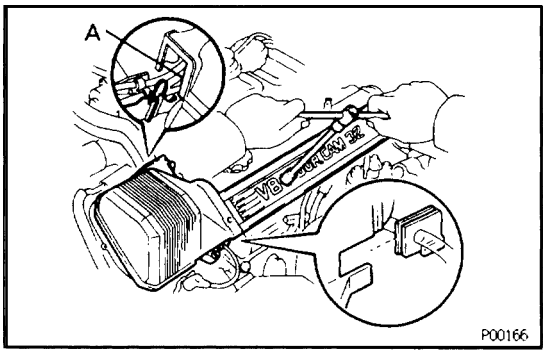

30. REINSTALL LH NO.3 TIMING BELT COVER

(a) Install the 3 gaskets to the timing belt cover.
(b) Install the cord grommet to the high–tension cord (from the LH ignition coil).
(c) Install the cord grommet to the timing belt cover.
(d) Fit the portion A of the timing belt cover, matching it with the lower high–tension cord cover.
(e) Install the timing belt cover with the 4 bolts.

WhereEverybodyKnowsYourName

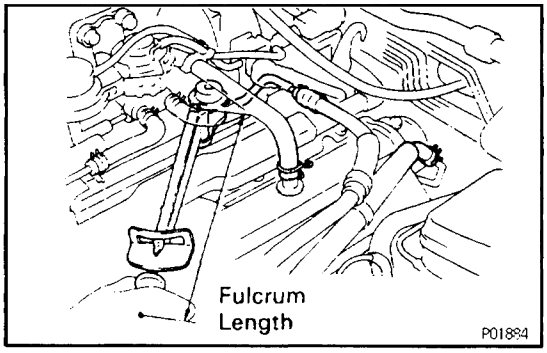

31. RECONNECT FUEL INLET HOSE TO LH DELIVERY PIPE

(a) Temporarily connect the fuel inlet hose to the delivery pipe with 2 new gaskets and pulsation damper.

(b) Using SST, tighten the pulsation damper.
SST 09631–22020
Torque:
39 N·m (400 kgf·cm, 29 ft·lbf)
33 N·m (340 kgf·cm, 24 ft·lbf) for SST
HINT: Use a torque wrench with a fulcrum length of 30 cm (11.81 in.).

32. RECONNECT FUEL RETURN HOSE TO FUEL RETURN PIPE

33. RECONNECT PCV HOSE TO LH CYLINDER HEAD

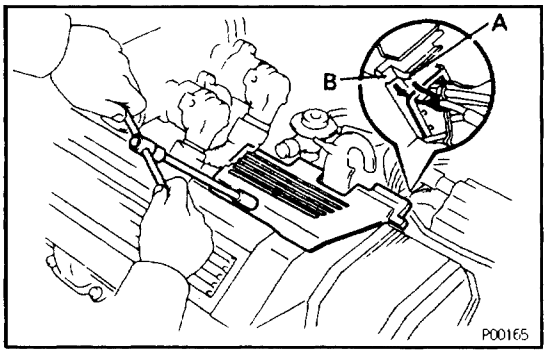

34. REINSTALL RH ENGINE WIRE COVER

(a) Fit portions A and B of the engine wire cover, matching them with the lower high–tension cord cover and No.3 timing belt cover.

(b) Install the timing belt cover with the bolt.

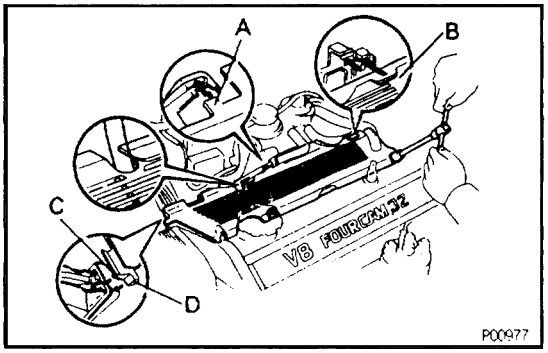

35. REINSTALL LH ENGINE WIRE COVER

(a) Connect portions A and B of the engine wire cover to the wire brackets.

(b) Set the VSV (for the fuel pressure) wire in original position.

(c) Fit portions C and D of the engine wire cover, matching them with the lower high–tension cord cover and No.3 timing belt cover.

(d) Install the timing belt cover with the 2 bolts.

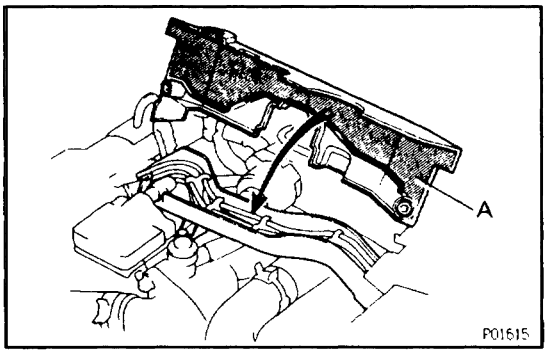

36. REINSTALL UPPER HIGH–TENSION CORD COVER

(a) Fit portion A of the upper high–tension cord cover matching the top of the lower high–tension cord cover.

WhereEverybodyKnowsYourName

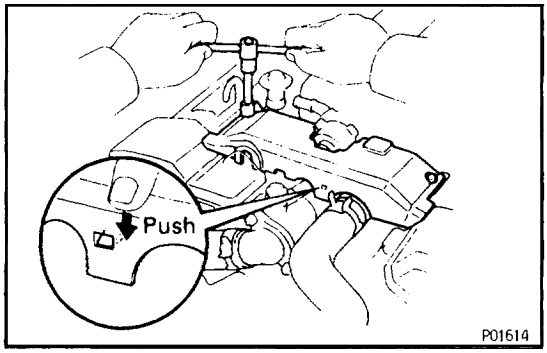

(b) Push the front side of the upper high–tension cord cover, and fit the front side claw groove of the upper high–tension cord cover to the claw of the lower high –tension cord cover.
(c) Install the upper high–tension cord cover with the 2 bolts.

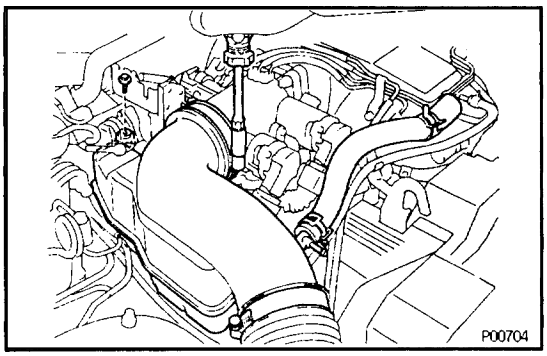

37. REINSTALL INTAKE AIR CONNECTOR

(a) Connect the end portions of the intake air connector to the throttle body and air cleaner hose.
(b) Tighten the 2 hose clamps
(c) Install the bolt holding the intake air connector to the cylinder head cover.

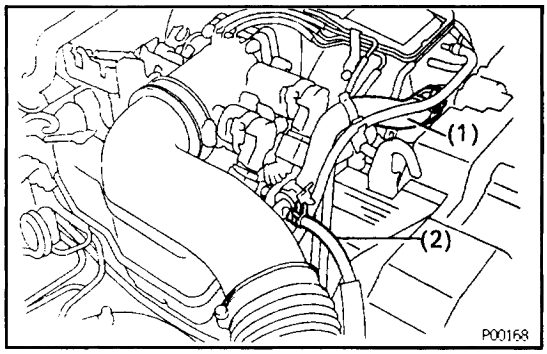

(d) Connect the following hoses:
  (1) Air hose to IAC valve
  (2) Air hose (from air control valve on PS pump) to intake air connector

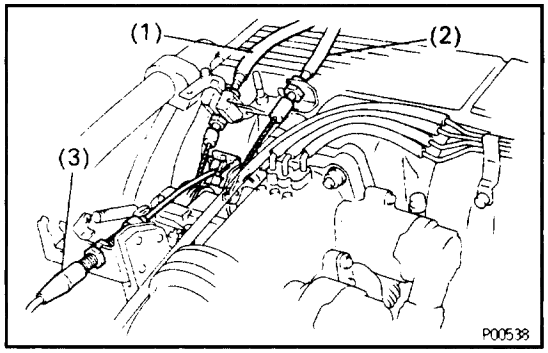

38. RECONNECT CONTROL CABLES TO THROTTLE BODY

Connect the following cables:
(1) Accelerator cable
(2) Transmission throttle control cable
(3) Cruise control actuator cable

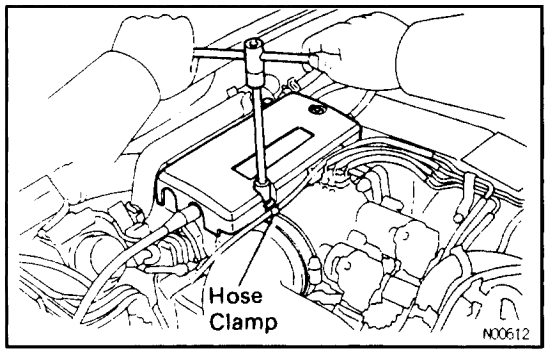

39. REINSTALL THROTTLE BODY COVER

(a) Install the throttle body cover and hose clamp with the cap nut and 2 bolts.
(b) Install the EVAP hose to the hose clamp.

WhereEverybodyKnowsYourName

40. RECONNECT NEGATIVE TERMINAL CABLE TO BATTERY

41. REFILL WITH ENGINE COOLANT

42. START ENGINE AND CHECK FOR LEAKS

EG21T–02

IGNITION TIMING INSPECTION

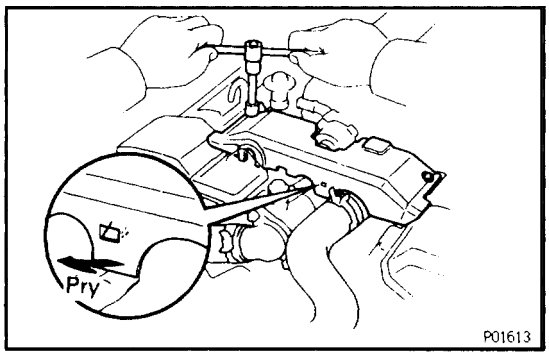

1. REMOVE UPPER HIGH–TENSION CORD COVER

(a) Remove the 2 bolts.

(b) Disconnect the front side claw groove of the upper cord cover from the claw of lower cord cover, and remove the upper cord cover.

2. WARM UP ENGINE

Allow the engine to warm up to normal operating temperature.

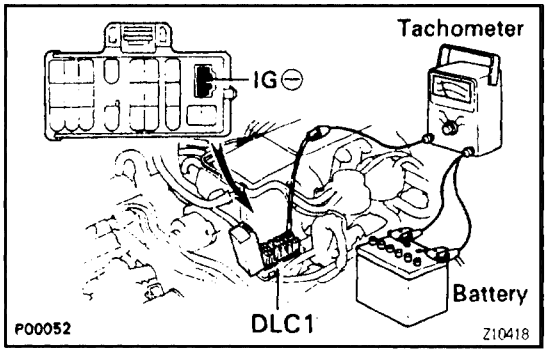

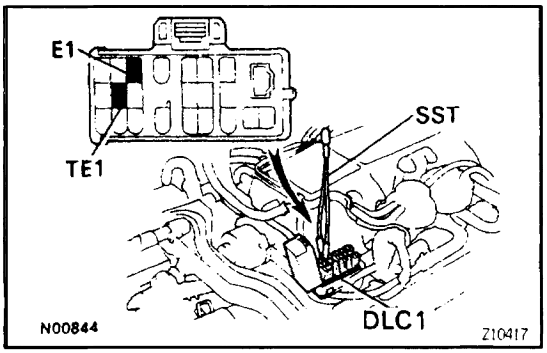

3. CONNECT TACHOMETER AND TIMING LIGHT TO ENGINE

Connect the tester probe of a tachometer to terminal IG≦ of the DLC1.

HINT: Set the tachometer to the 4–cylinder range.

NOTICE:

- **Never allow the tachometer terminal to touch ground as it could result in damage to the igniter and/or ignition coil.**
- **As some tachometers are not compatible with this ignition system, we recommend that you confirm the compatibility of your unit before use.**

4. INSPECT IGNITION TIMING

(a) Using SST, connect terminals TE1 and E1 of the DLC 1.
SST 09843–18020

WhereEverybodyKnowsYourName

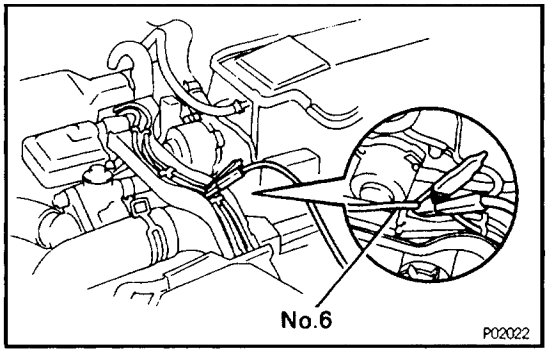

(b) Connect the tester probe of a timing light to the high –tension cord for No.6 cylinder.

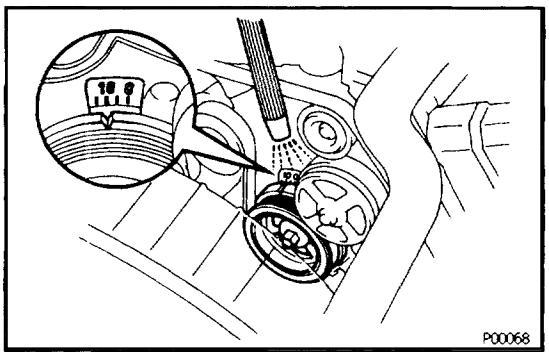

(c) Using a timing light, check the ignition timing.
Ignition timing:
8 – 12° BTDC @ idle
(Transmission in neutral position)
If the ignition timing is not as specified, check that following conditions are normal:
- Throttle valve fully closed
- Continuity between terminals IDL1 and E2 of the throttle position sensor
- Valve timing

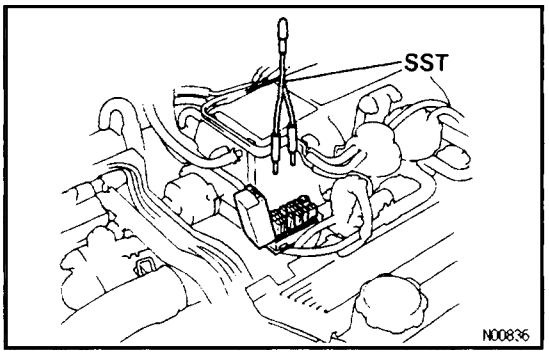

(d) Remove the SST from the DLC1.
SST 09843–18020

5. DISCONNECT TACHOMETER AND TIMING LIGHT FROM ENGINE

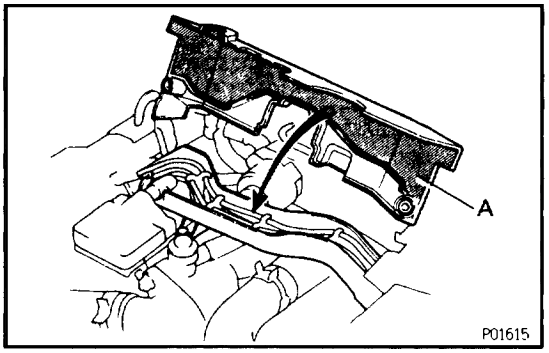

6. REINSTALL UPPER HIGH–TENSION CORD COVER

(a) Fit portion A of the upper high–tension cord cover matching the top of the lower high–tension cord cover.

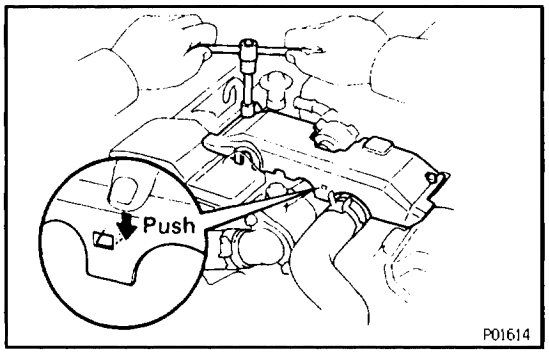

(b) Push the front side of the upper high–tension cord cover, and fit the front side claw groove of the upper high–tension cord cover to the claw of the lower high –tension cord cover.

(c) Install the upper high–tension cord cover with the 2 bolts.

WhereEverybodyKnowsYourName

EG115–06

IDLE SPEED INSPECTION

1. INITIAL CONDITIONS

(a) Engine at normal operating temperature
(b) Air cleaner installed
(c) All pipes and hoses of air induction system connected
(d) All accessories switched OFF
(e) All vacuum lines properly connected
HINT: All vacuum hoses for EGR system, etc. should be properly connected.
(f) MFI system wiring connectors fully plugged
(g) Ignition timing set correctly
(h) Transmission in neutral position

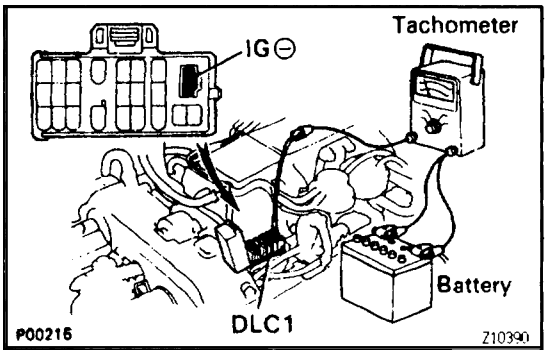

2. CONNECT TACHOMETER

Connect the tester probe of a tachometer to terminal IG⩽ of the DLC1.
HINT: Set the tachometer to the 4–cylinder range.
NOTICE:
- Never allow the tachometer terminal to touch ground as it could result in damage to the igniter and/or ignition coil.
- As some tachometers are not compatible with this ignition system, we recommend that you confirm the compatibility of your unit before use.

3. INSPECT IDLE SPEED

(a) Race the engine speed at 2,500 rpm for approx. 90 seconds.

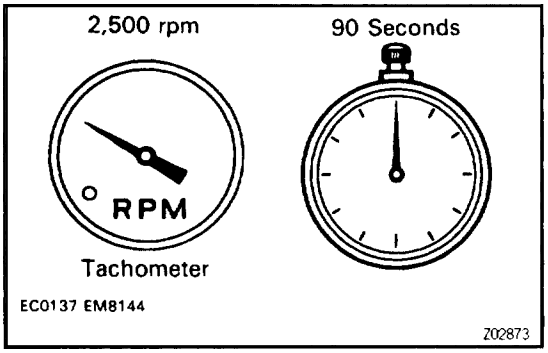

(b) Check the idle speed.
Idle speed:
700 ± 50 rpm
If the idle speed is not as specified, check the IAC valve.

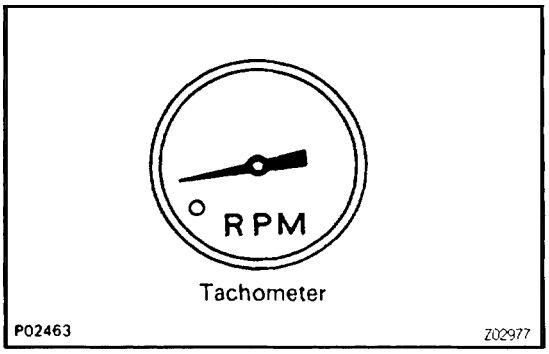

4. DISCONNECT TACHOMETER

WhereEverybodyKnowsYourName

IDLE AND/OR 2,500 RPM CO/HC CHECK

EG116–05

HINT: This check is used only to determine whether or not the idle CO/HC complies with regulations.

1. INITIAL CONDITIONS

(a) Engine at normal operating temperature
(b) Air cleaner installed
(c) All pipes and hoses of air induction system connected
(d) All accessories switched OFF
(e) All vacuum lines properly connected
HINT: All vacuum hoses for EGR system, etc. should be properly connected.
(f) MFI system wiring connectors fully plugged
(g) Ignition timing set correctly
(h) Transmission in neutral position
(i) Tachometer and CO/HC meter calibrated by hand

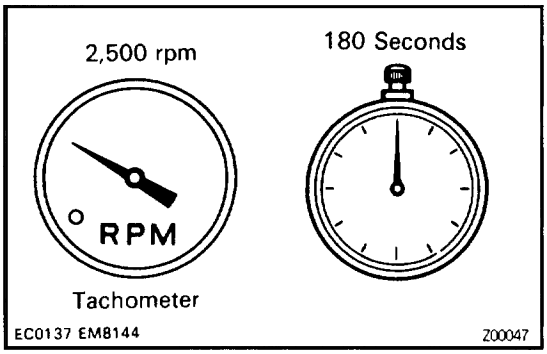

2. START ENGINE

3. RACE ENGINE AT 2,500 RPM FOR APPROX. 180 SECONDS

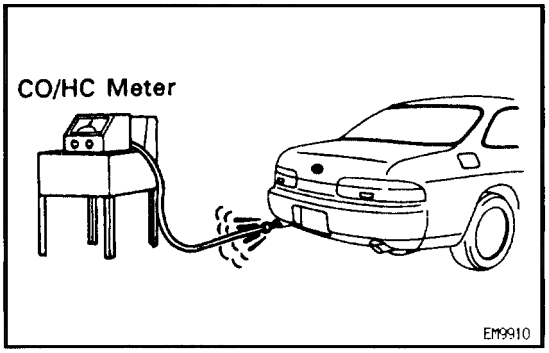

4. INSERT CO/HC METER TESTING PROBE INTO TAILPIPE AT LEAST 40 cm (1.3 ft) DURING IDLING

5. IMMEDIATTELY CHECK CO/HC CONCENTRATION AT IDLE AND/OR 2,500 RPM

HINT: When performing the 2 mode (2,500 rpm and idle) test, follow the measurement order prescribed by the applicable local regulations.

WhereEverybodyKnowsYourName

Troubleshooting

If the CO/HC concentration does not comply with regulations, perform troubleshooting in the order given below.

(a) Check main heated oxygen sensor operation.
(See MFI System on page EG–400)

(b) See the table below for possible causes, and then inspect and correct the applicable causes if necessary.

CO	HC	Problems	Causes
Normal	High	Rough idle	1. Faulty ignitions: ● Incorrect timing ● Fouled, shorted or improperly gapped plugs ● Open or crossed high–tension cords ● Cracked distributor cap 2. Incorrect valve clearance 3. Leaky EGR valve 4. Leaky intake and exhaust valves 5. Leaky cylinder
Low	High	Rough idle (Fluctuating HC reading)	1. Vacuum leaks: ● PCV hose ● EGR valve ● Intake manifold ● Throttle body ● IAC valve ● Brake booster line 2. Lean mixture causing misfire
High	High	Rough idle (Black smoke from exhaust)	1. Restricted air filter 2. Faulty MFI systems: ● Faulty pressure regulator ● Clogged fuel return line ● Defective ECT switch ● Faulty ECM ● Faulty injector ● Faulty throttle position sensor ● Faulty volume air flow meter

V02130

WhereEverybodyKnowsYourName

COMPRESSION CHECK

EG21U–02

HINT: If there is lack of power, excessive oil consumption or poor fuel economy, measure the compression pressure.

1. WARM UP AND STOP ENGINE

Allow the engine to warm up to normal operating temperature.

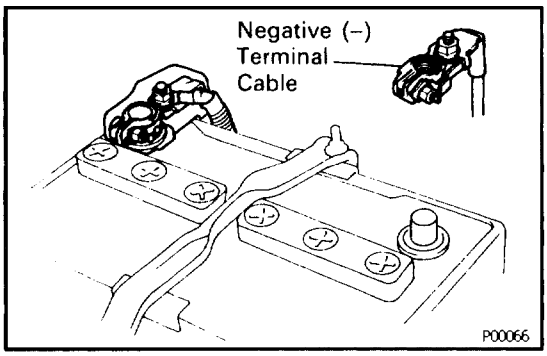

2. DISCONNECT NEGATIVE TERMINAL CABLE FROM BATTERY

CAUTION: Work must be started after 90 seconds from the time the ignition switch is turned to the "LOCK" position and the negative (–) terminal cable is disconnected from the battery.

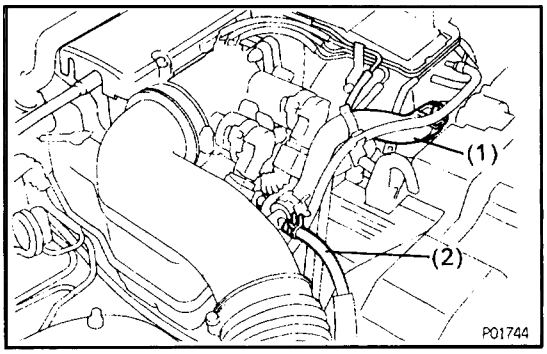

3. REMOVE INTAKE AIR CONNECTOR

(a) Disconnect the following hoses:
  (1) Air hose from IAC valve
  (2) Air hose (from air control valve on PS pump) from intake air connector

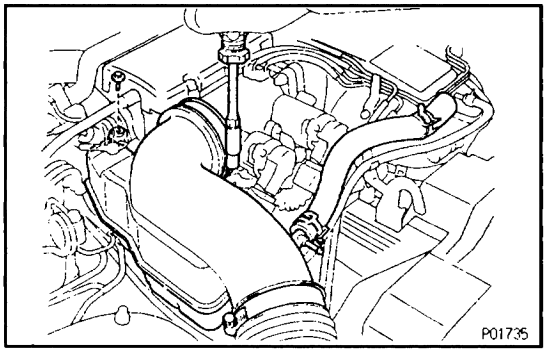

(b) Remove the bolt holding the intake air connector to the cylinder head cover.
(c) Remove the 2 hose clamps.
(d) Disconnect the intake air connector from the throttle body and air cleaner hose, and remove the intake air connector.

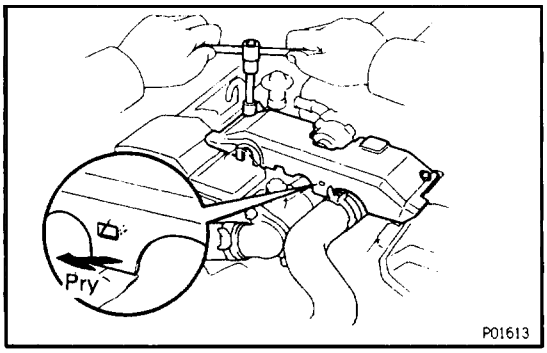

4. REMOVE UPPER HIGH–TENSION CORD COVER

(a) Remove the 2 bolts.
(b) Disconnect the front side claw groove of the upper cord cover from the claw of lower cord cover, and remove the upper cord cover.

WhereEverybodyKnowsYourName

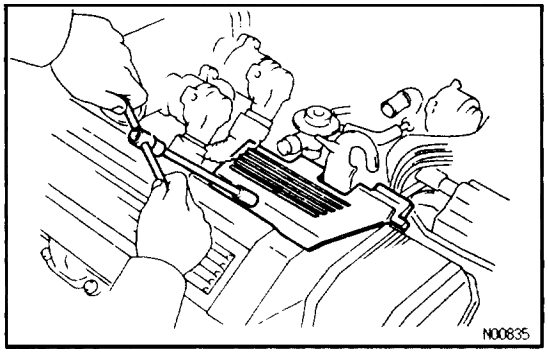

5. REMOVE RH ENGINE WIRE COVER

Remove the bolt and engine wire cover.

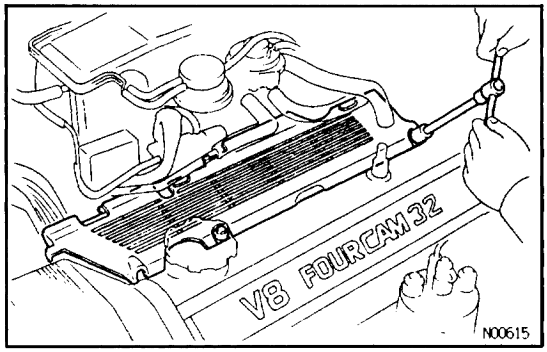

6. REMOVE LH ENGINE WIRE COVER

Remove the 2 bolts and engine wire cover.

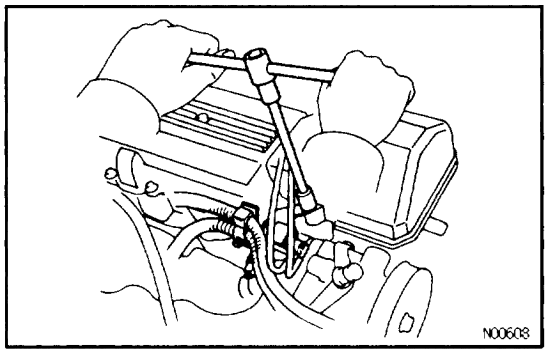

7. REMOVE VSV FOR EVAP SYSTEM

Remove the 2 bolts, and disconnect the VSV from the cylinder head cover and timing belt cover.

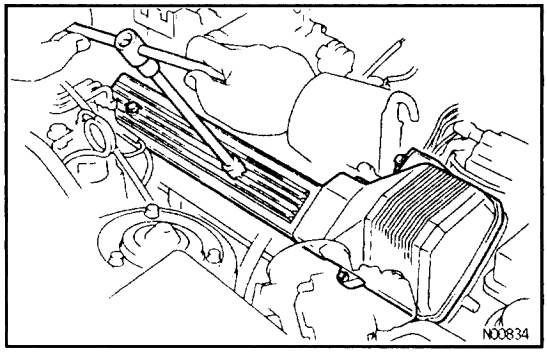

8. REMOVE RH NO.3 TIMING BELT COVER

Remove the 3 bolts, timing belt cover and 3 gaskets.

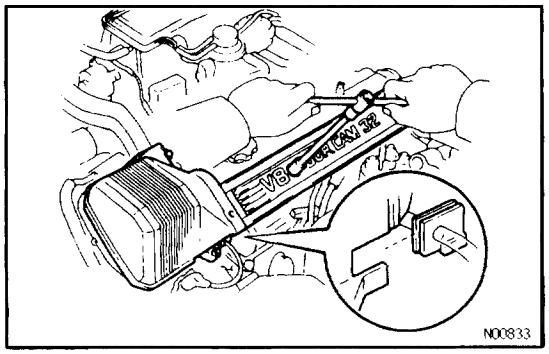

9. REMOVE LH NO.3 TIMING BELT COVER

(a) Remove the 4 bolts

(b) Disconnect the cord grommet from the timing belt cover, and remove the timing belt cover and 3 gaskets.

(c) Remove the cord grommet from the high–tension cord.

WhereEverybodyKnowsYourName

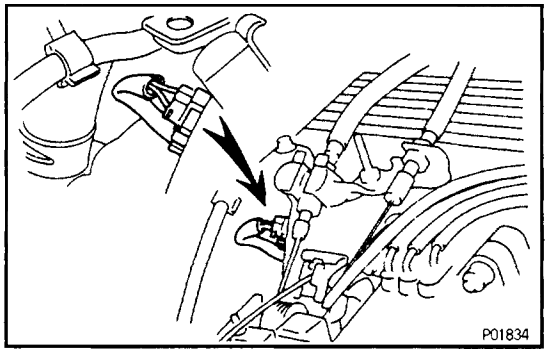

10. DISCONNECT COLD START INJECTOR CONNECTOR

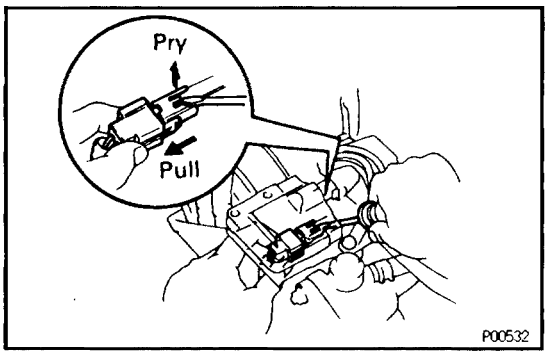

11. DISCONNECT RH CAMSHAFT POSITION SENSOR CONNECTOR

(a) Disconnect the connector from the ignition coil bracket.
(b) Disconnect the camshaft position sensor connector.

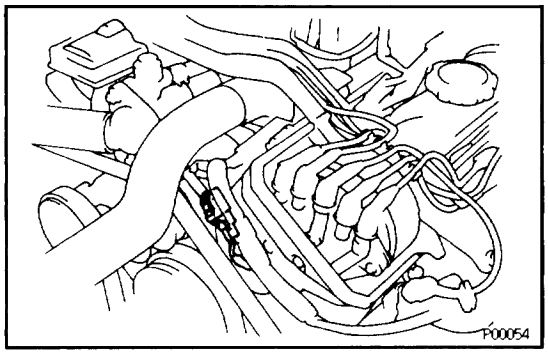

12. DISCONNECT LH CAMSHAFT POSITION SENSOR CONNECTOR

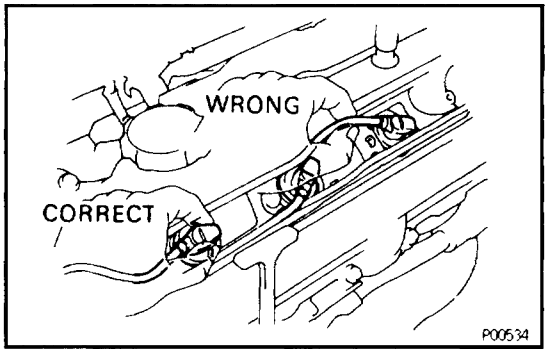

13. DISCONNECT HIGH–TENSION CORDS FROM SPARK PLUGS

Disconnect the high–tension cords at the rubber boot. Do not pull on the cords.

NOTICE: Pulling on or bending the cords may damage the conductor inside.

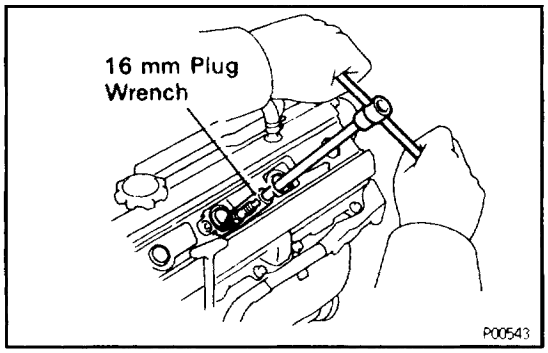

14. REMOVE SPARK PLUGS

Using a 16 mm plug wrench, remove the 8 spark plugs.

WhereEverybodyKnowsYourName

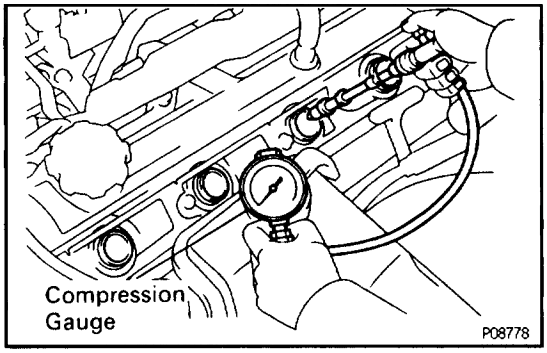

15. CHECK CYLINDER COMPRESSION PRESSURE

(a) Reconnect the battery negative (–) cable.

(b) Insert a compression gauge into the spark plug hole.

(c) Fully open the throttle.

(d) While cranking the engine, measure the compression pressure.
HINT: Always use a fully charged battery to obtain engine speed of 250 rpm or more.

(e) Repeat steps (b) through (d) for each cylinder.
NOTICE: This measurement must be done in as short a time as possible.
Compression pressure:
1,226 kPa (12.5 kgf/cm^2, 178 psi) or more
Minimum pressure:
981 kPa (10.0 kgf/cm^2, 142 psi)
Difference between each cylinder:
98 kPa (1.0 kgf/cm^2, 14 psi) or less

(f) If the cylinder compression in one or more cylinders is low, pour a small amount of engine oil into the cylinder through the spark plug hole and repeat steps (b) through (d) for cylinders with low compression.
- If adding oil helps the compression, it is likely that the piston rings and/or cylinder bore are worn or damage.
- If pressure stays low, a valve may be sticking or seating is improper, or there may be leakage past the gasket.

(g) Disconnect the battery negative (–) cable.

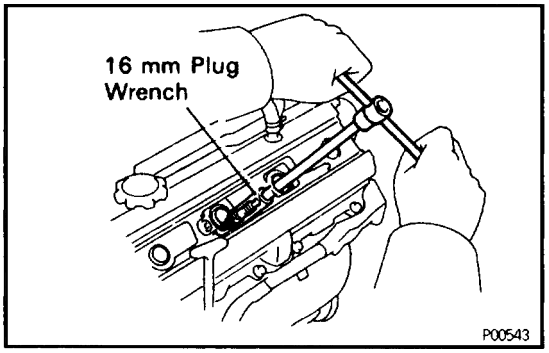

16. REINSTALL SPARK PLUGS

Using a 16 mm plug wrench, install the 8 spark plugs.
Torque: 18 N·m (180 kgf·cm, 13 ft·lbf)

17. RECONNECT HIGH–TENSION CORDS TO SPARK PLUGS

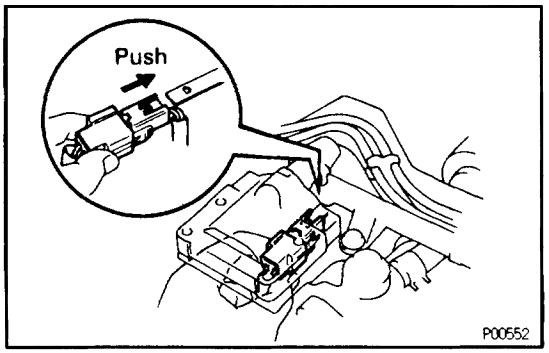

18. RECONNECT RH CAMSHAFT POSITION SENSOR CONNECTOR

(a) Connect the camshaft position sensor connector.

(b) Install the camshaft position sensor connector to the ignition coil bracket.

WhereEverybodyKnowsYourName

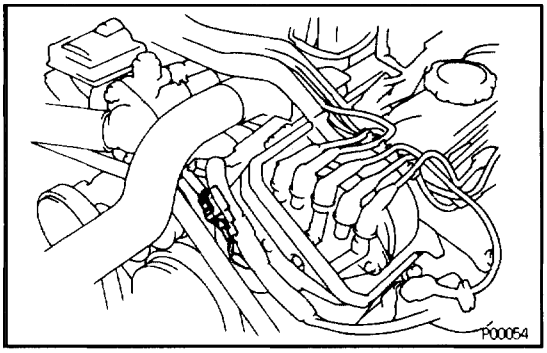

19. RECONNECT LH CAMSHAFT POSITION SENSOR CONNECTOR

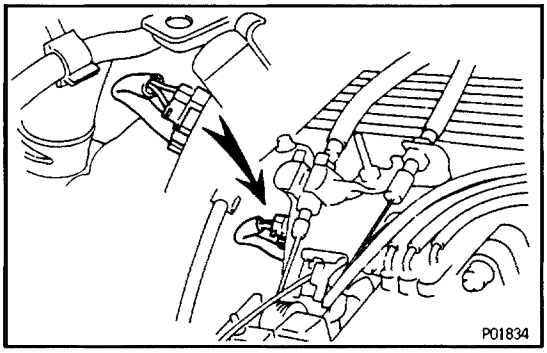

20. RECONNECT COLD START INJECTOR CONNECTOR

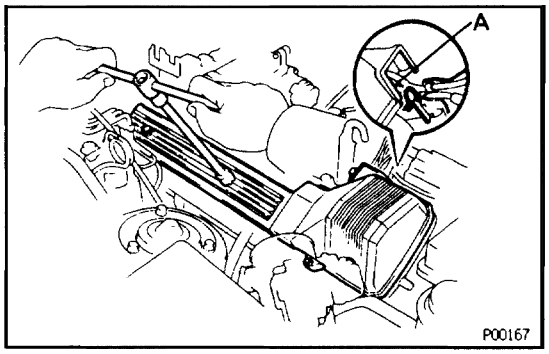

21. REINSTALL RH NO.3 TIMING BELT COVER

(a) Install the 3 gaskets to the timing belt cover.
(b) Fit the portion A of the timing belt cover, matching it with the lower high–tension cord cover.
(c) Install the timing belt cover with the 3 bolts.

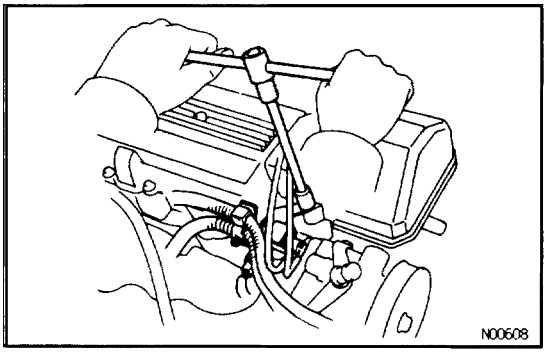

22. REINSTALL VSV FOR EVAP SYSTEM

Install the VSV with the 2 bolts.

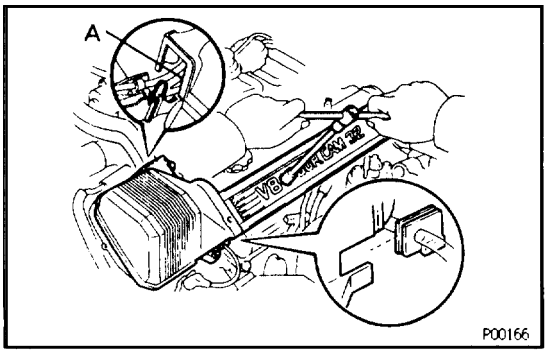

23. REINSTALL LH NO.3 TIMING BELT COVER

(a) Install the 3 gaskets to the timing belt cover.
(b) Install the cord grommet to the high–tension cord (from the LH ignition coil).
(c) Install the cord grommet to the timing belt cover.
(d) Fit the portion A of the timing belt cover, matching it with the lower high–tension cord cover.
(e) Install the timing belt cover with the 4 bolts.

WhereEverybodyKnowsYourName

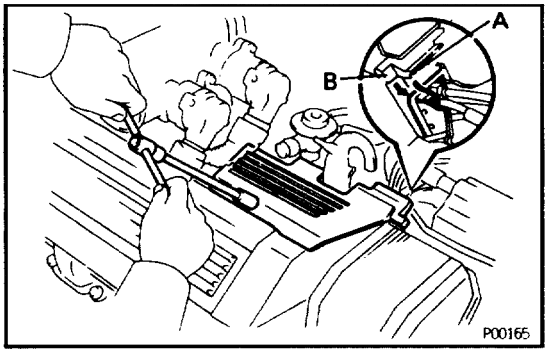

24. REINSTALL RH ENGINE WIRE COVER

(a) Fit portions A and B of the engine wire cover, matching them with the lower high–tension cord cover and No.3 timing belt cover.

(b) Install the timing belt cover with the bolt.

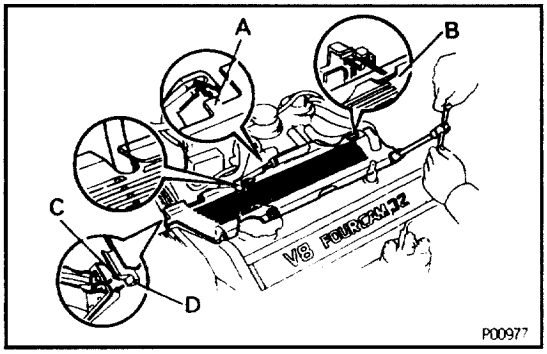

25. REINSTALL LH ENGINE WIRE COVER

(a) Connect portions A and B of the engine wire cover to the wire brackets.

(b) Set the VSV (for the fuel pressure) wire in original position.

(c) Fit portions C and D of the engine wire cover, matching them with the lower high–tension cord cover and No.3 timing belt cover.

(d) Install the timing belt cover with the 2 bolts.

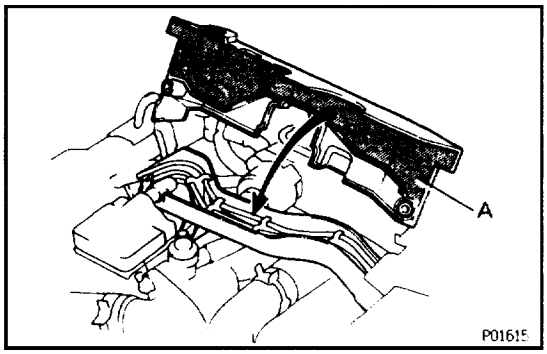

26. REINSTALL UPPER HIGH–TENSION CORD COVER

(a) Fit portion A of the upper high–tension cord cover matching the top of the lower high–tension cord cover.

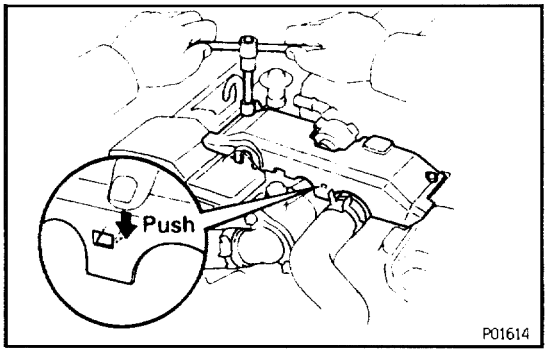

(b) Push the front side of the upper high–tension cord cover, and fit the front side claw groove of the upper high–tension cord cover to the claw of the lower high –tension cord cover.

(c) Install the upper high–tension cord cover with the 2 bolts.

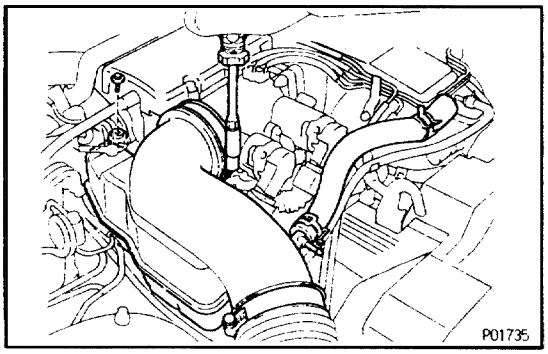

27. REINSTALL INTAKE AIR CONNECTOR

(a) Connect the end portions of the intake air connector to the throttle body and air cleaner hose.

(b) Tighten the 2 hose clamps.

(c) Install the bolt holding the intake air connector to the cylinder head cover.

WhereEverybodyKnowsYourName

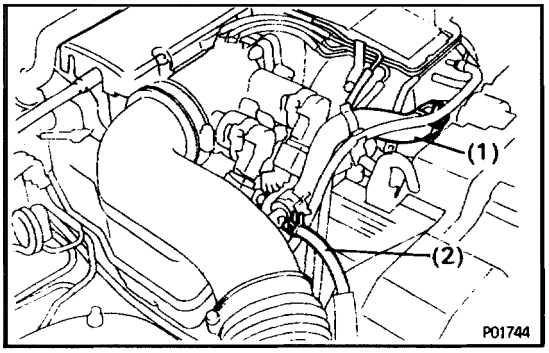

(d) Connect the following hoses:
   (1) Air hose to IAC valve
   (2) Air hose (from air control valve on PS pump) to intake air connector

28. RECONNECT NEGATIVE TERMINAL CABLE TO BATTERY

WhereEverybodyKnowsYourName

TIMING BELT

EG21Q–01

COMPONENTS FOR REMOVAL AND INSTALLATION

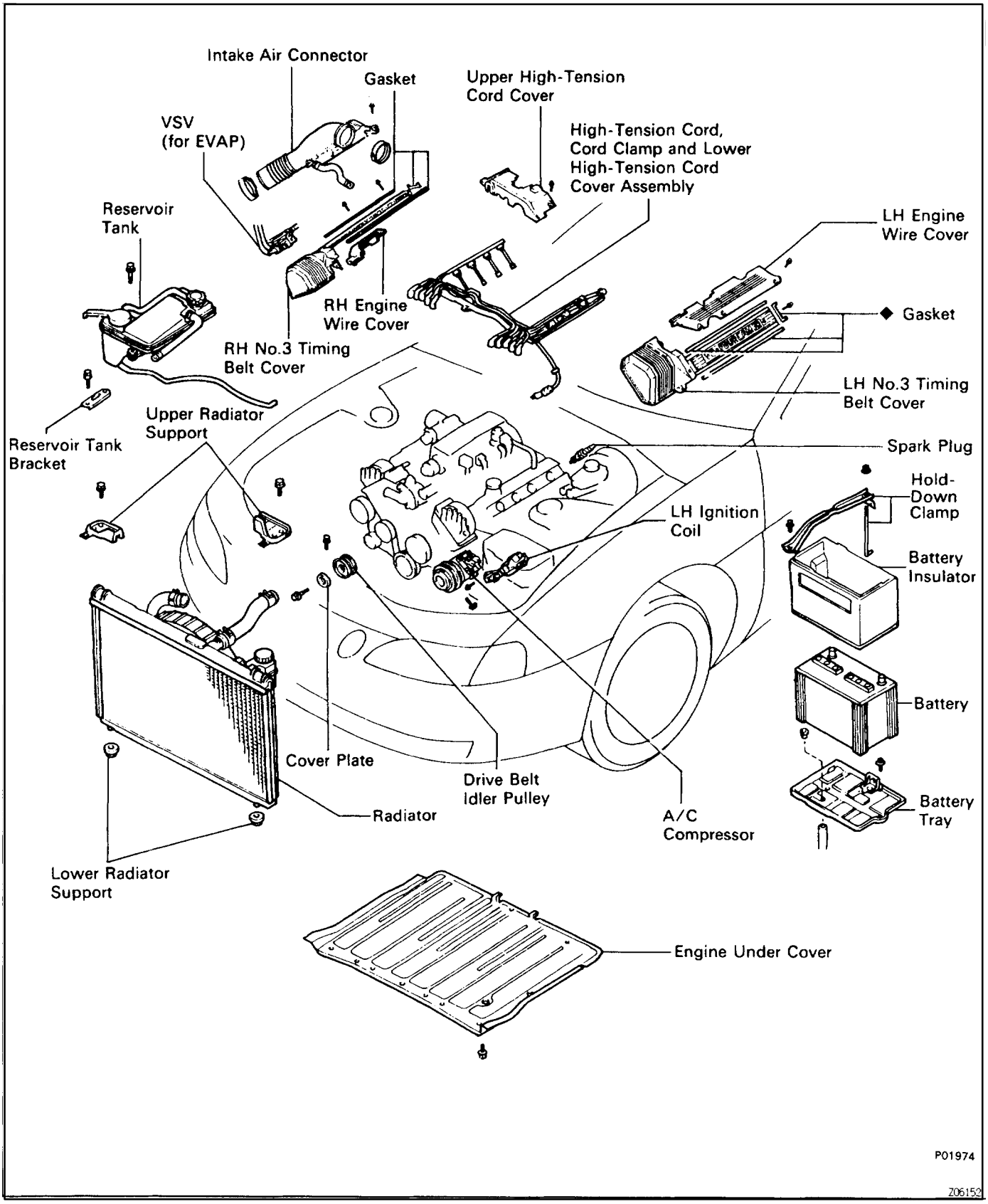

WhereEverybodyKnowsYourName

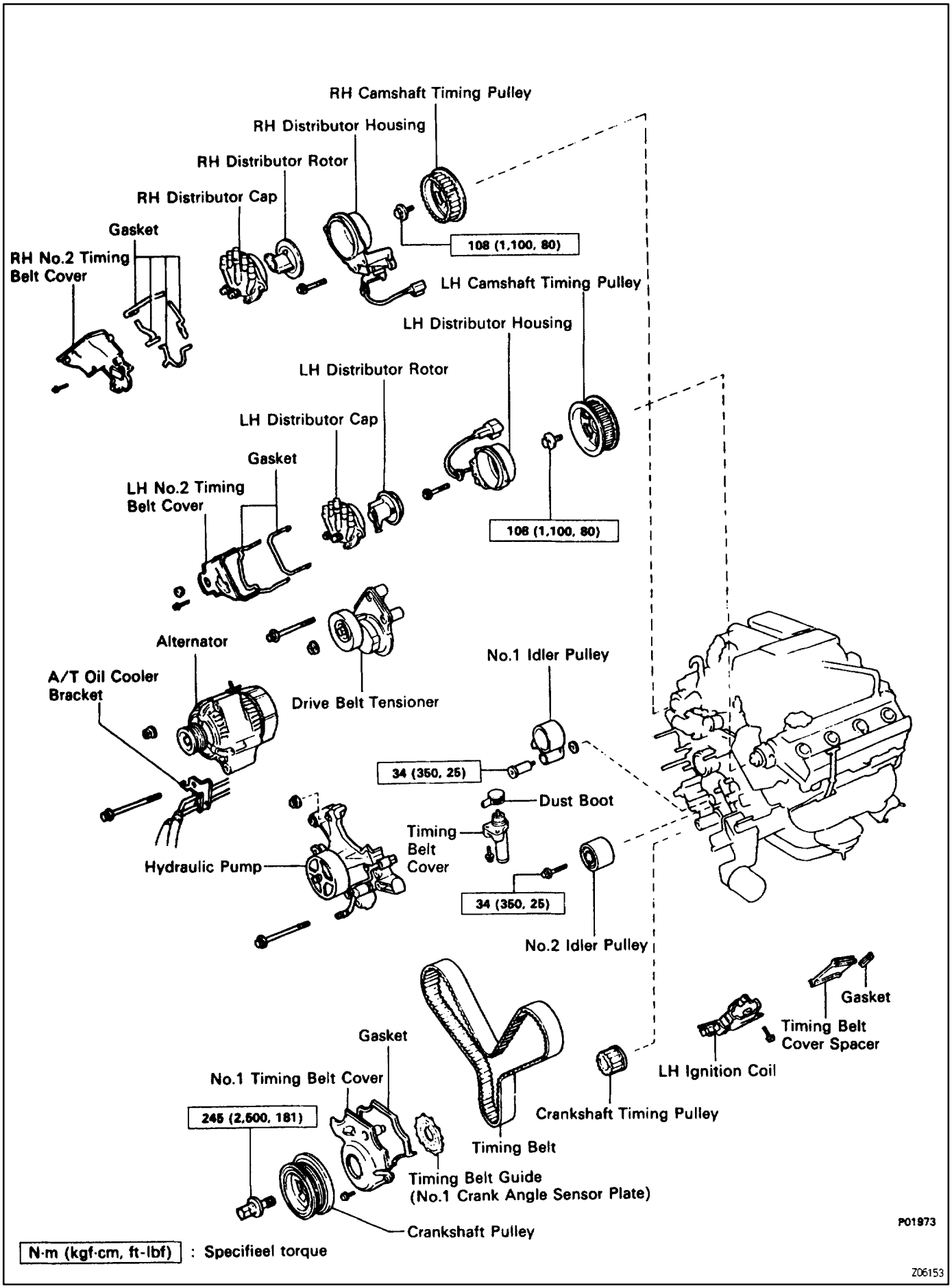

WhereEverybodyKnowsYourName

EG21P–02

TIMING BELT REMOVAL

(See Components for Removal and Installation)

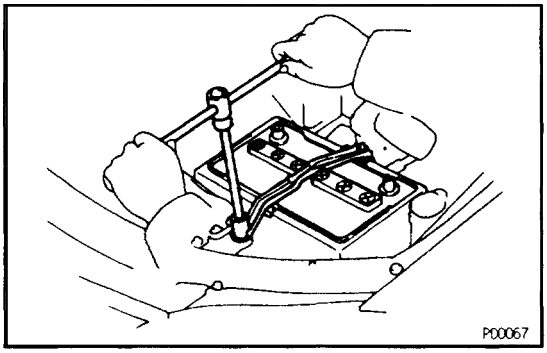

1. REMOVE BATTERY

CAUTION: Work must be started after 90 seconds from the time the ignition switch is turned to the "LOCK" position and the negative (–) terminal cable is disconnected from the battery.

2. REMOVE ENGINE UNDER COVER

3. DRAIN ENGINE COOLANT

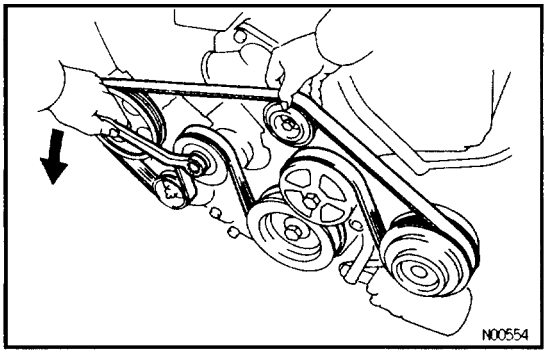

4. REMOVE DRIVE BELT

Loosen the drive belt tension by turning the drive belt tensioner counterclockwise, and remove the drive belt.

HINT: The pulley bolt for the drive belt tensioner has a left–hand thread.

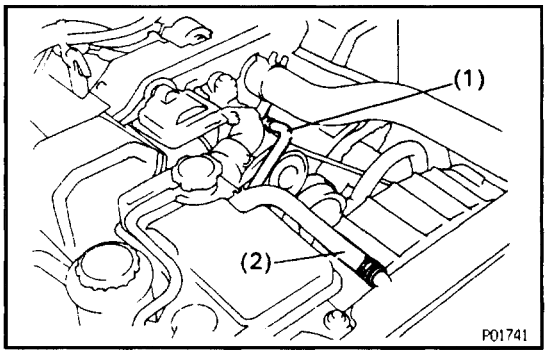

5. REMOVE RADIATOR RESERVOIR TANK

(a) Disconnect the coolant level sensor connector.

(b) Disconnect the following hoses:

(1) Reservoir hose from water inlet housing

(2) Reservoir hose from radiator

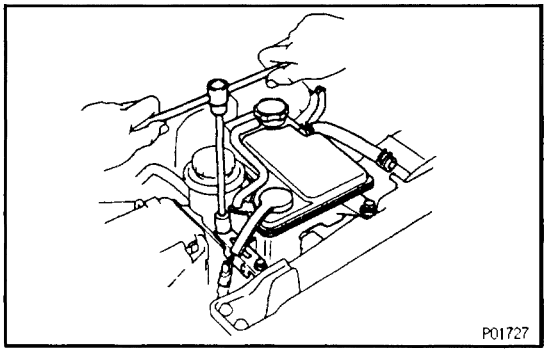

(c) Remove the 2 bolts and reservoir tank bracket.

(d) Remove the bolt holding the reservoir tank to the radiator.

(e) Disconnect the reservoir tank from the reservoir tank bracket, and remove the reservoir tank.

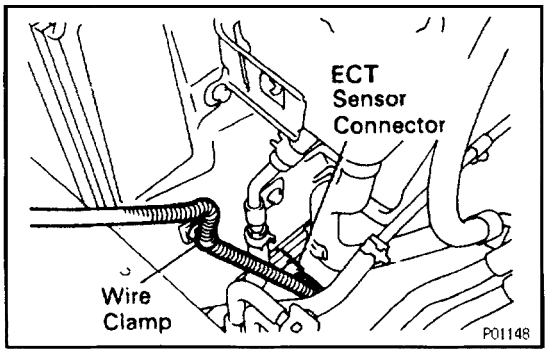

6. REMOVE RADIATOR ASSEMBLY

(a) Disconnect the ECT sensor connector (for cooling fan).

(b) Disconnect the ECT sensor wire clamp from the radiator fan shroud.

WhereEverybodyKnowsYourName

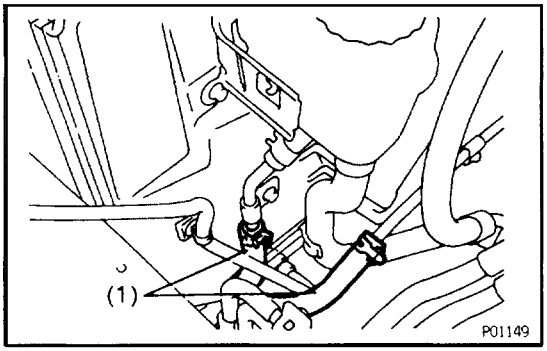

(c) Disconnect the following hoses:
(1) 2 oil cooler hoses (for cooling fan) from pipes

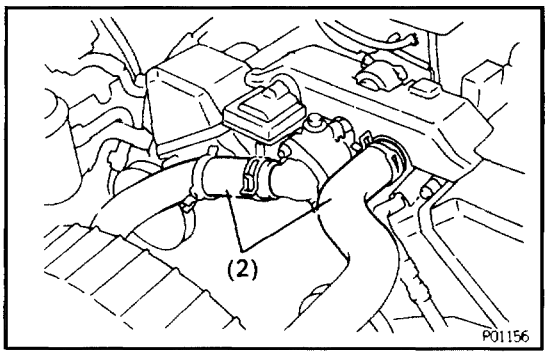

(2) 2 radiator hoses

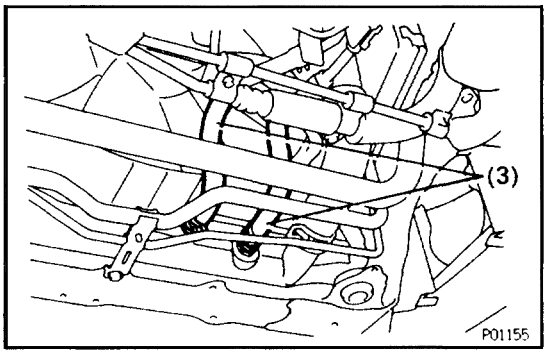

(3) 2 oil cooler hoses (for transmission) from radiator
HINT: Plug the hose ends.

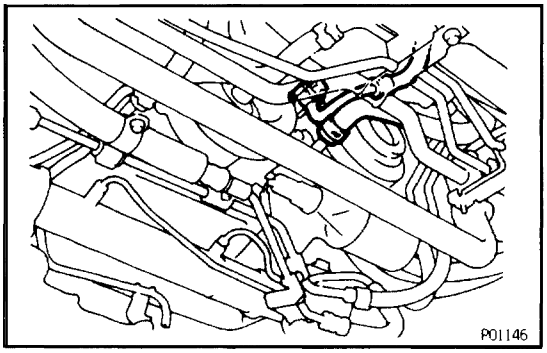

(4) Suction hose from hydraulic pump
(5) Pressure hose from hydraulic pump

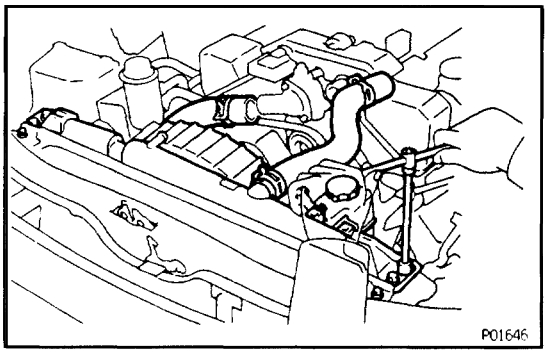

(d) Remove the 2 bolts, screw and upper radiator support.
Remove the 2 upper radiator supports.

WhereEverybodyKnowsYourName

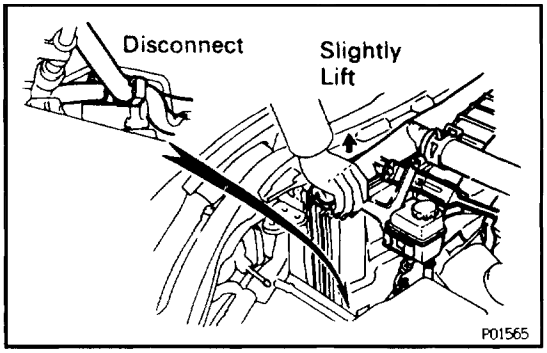

(e) Slightly lift the radiator, and disconnect the 2 oil cooler hoses (for cooling fan) from the hose clamp on the radiator fan shroud.
(f) Remove the radiator assembly.
(g) Remove the 2 lower radiator supports from the radiator.

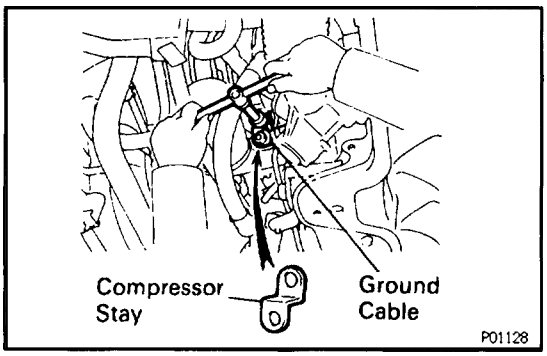

7. DISCONNECT AIR CONDITIONING (A/C) COMPRESSOR FROM ENGINE

(a) Disconnect the A/C compressor connector.
(b) Remove the nut, and disconnect the ground cable from the A/C compressor stay.
(c) Remove the bolt and A/C compressor stay.

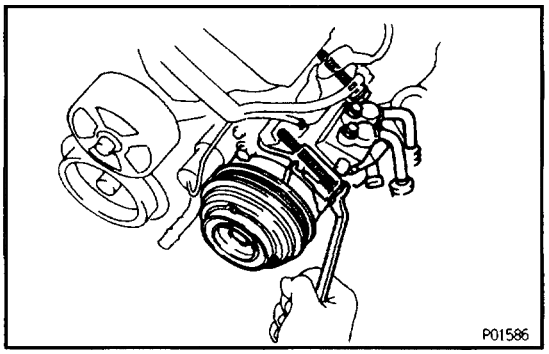

(d) Remove the 2 bolts, and disconnect the A/C compressor from the engine.
HINT: Put aside the A/C compressor, and suspend it.

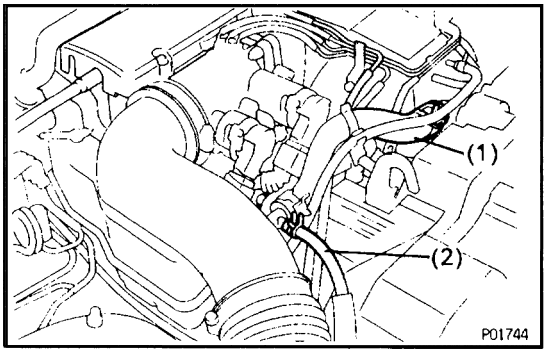

8. REMOVE INTAKE AIR CONNECTOR

(a) Disconnect the following hoses:
  (1) Air hose from IAC valve
  (2) Air hose (from air control valve on PS pump) from intake air connector

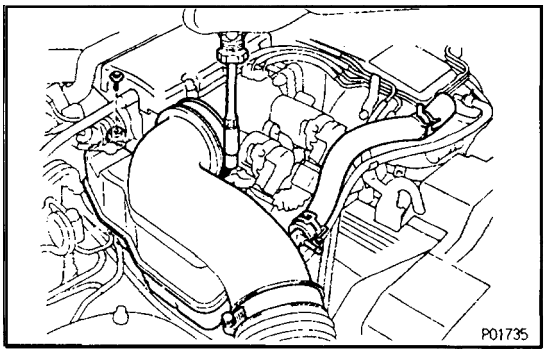

(b) Remove the bolt holding the intake air connector to the cylinder head cover.
(c) Loosen the 2 hose clamps.
(d) Disconnect the intake air connector from the throttle body and air cleaner hose, and remove the intake air connector.

WhereEverybodyKnowsYourName

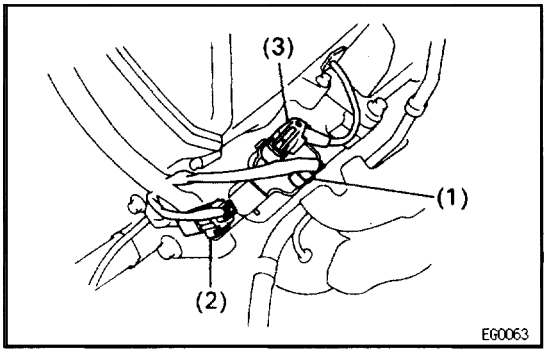

9. REMOVE LH IGNITION COIL

(a) Disconnect the following connectors and cord:
  (1) Ignition coil connector
  (2) Noise filter connector
  (3) High–tension cord

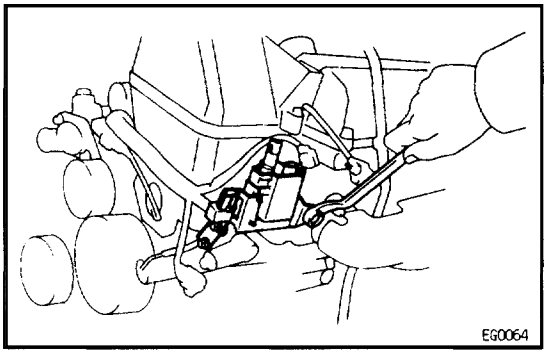

(b) Remove the 2 bolts and ignition coil.

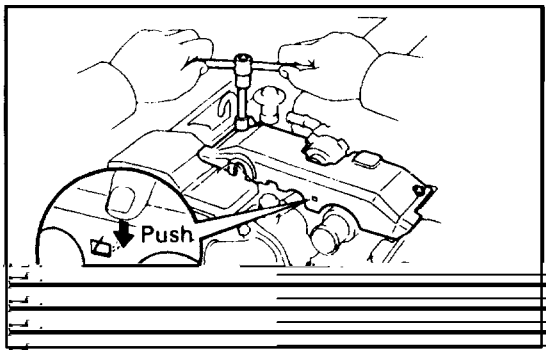

10. REMOVE UPPER HIGH–TENSION CORD COVER

(a) Remove the 2 bolts.
(b) Disconnect the front side claw groove of the upper cord cover from the claw of lower cord cover, and remove the upper cord cover.

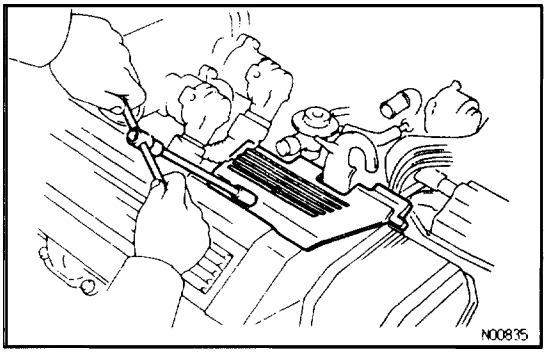

11. REMOVE RH ENGINE WIRE COVER

Remove the bolt and engine wire cover.

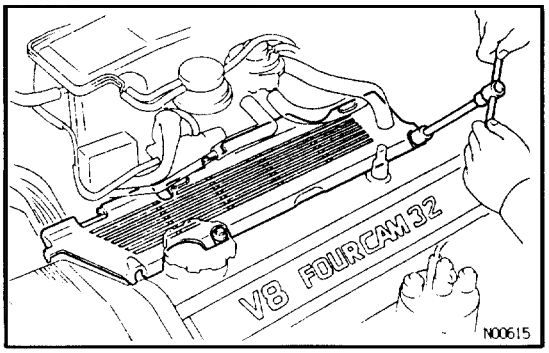

12. REMOVE LH ENGINE WIRE COVER

Remove the 2 bolts and engine wire cover.

WhereEverybodyKnowsYourName

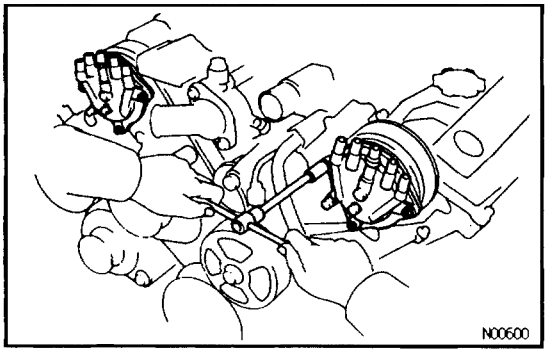

20. REMOVE DISTRIBUTOR CAPS

Loosen the 3 bolts, and remove the distributor cap.
Remove the 2 distributor caps.
HINT: Arrange the distributor caps (RH side and LH side).

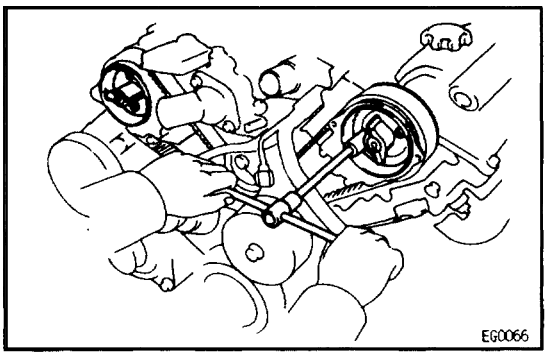

21. REMOVE DISTRIBUTOR ROTORS

Loosen the 2 bolts, and remove the distributor rotor.
Remove the 2 distributor rotors.
HINT: Arrange the distributor rotors (RH side and LH side).

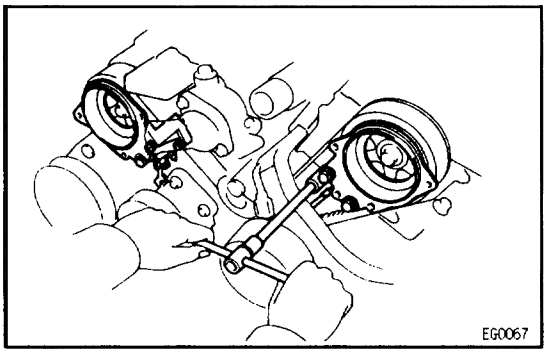

22. REMOVE DISTRIBUTOR HOUSINGS

(a) RH Distributor Housing:
Disconnect the camshaft position sensor connector.
(b) Remove the 3 bolts and distributor housing. Remove the 2 distributor housings.

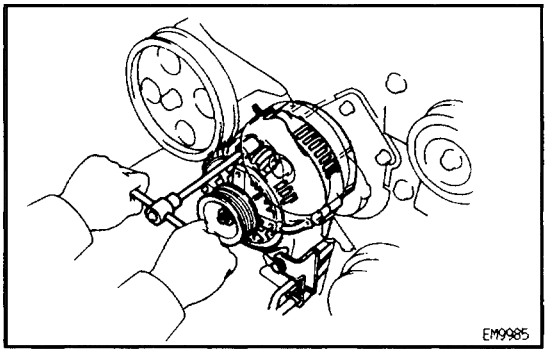

23. REMOVE GENERATOR

(a) Disconnect the generator connector.
(b) Remove the cap and nut, and disconnect the generator wire.
(c) Remove the bolt, and disconnect the transmission oil cooler pipe bracket from the generator.
(d) Remove the nut and generator.

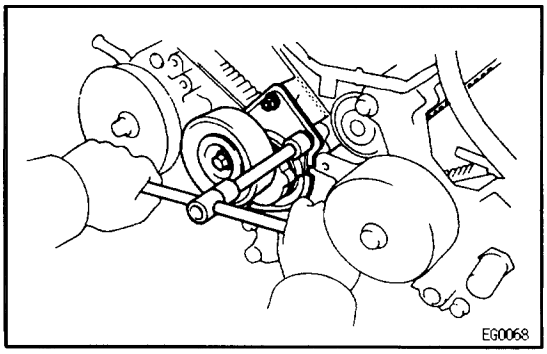

24. REMOVE DRIVE BELT TENSIONER

Remove the bolt, 2 nuts and belt tensioner.

WhereEverybodyKnowsYourName

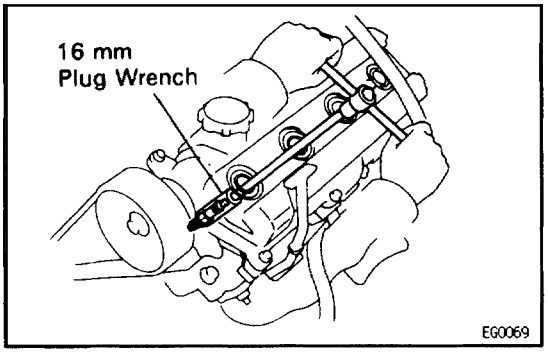

25. REMOVE SPARK PLUGS

Using a 16 mm plug wrench, remove the 8 spark plugs.

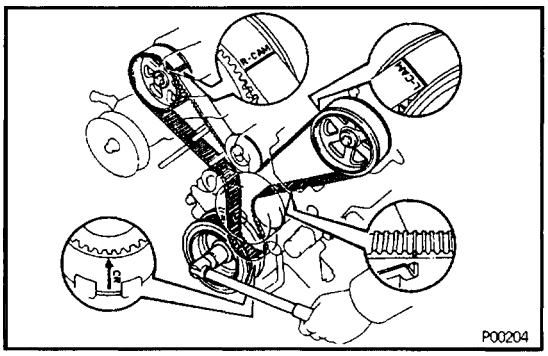

26. IF RE–USING TIMING BELT, CHECK INSTALLATION MARKS ON TIMING BELT

Check that there are 4 installation marks on the timing belt by turning the crankshaft pulley as shown in the illustration.

HINT: If the installation marks have disappeared, place a new installation mark on the timing belt before removing each part.

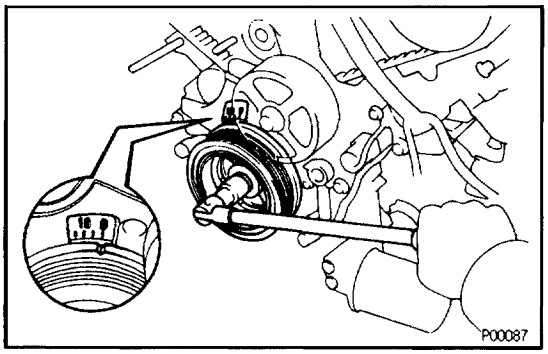

27. SET NO.1 CYLINDER TO TDC/COMPRESSION

(a) Turn the crankshaft pulley and align its groove with timing mark “0” of the No.1 timing belt cover.

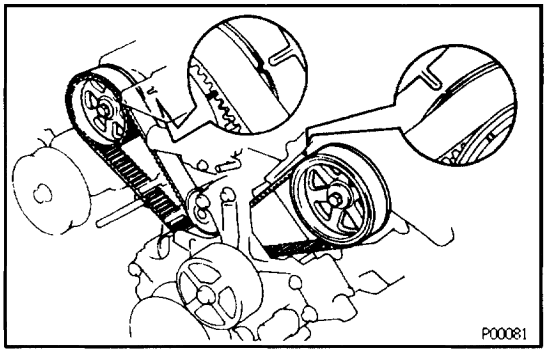

(b) Check that the timing marks of the camshaft timing pulleys and timing belt rear plates aligned.
If not, turn the crankshaft 1 revolution (360°).

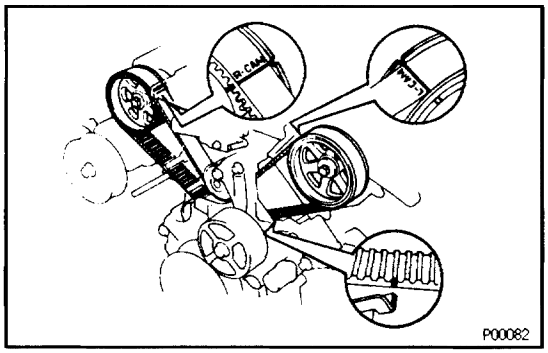

28. REMOVE TIMING BELT TENSIONER

HINT:

- When re–using timing belt:
  If the installation marks have disappeared, before remove the timing belt, place new installation marks on the timing belt to match the timing marks of the camshaft timing pulleys, and place the a new installation mark on the timing belt to match the end of the hydraulic pump.

WhereEverybodyKnowsYourName

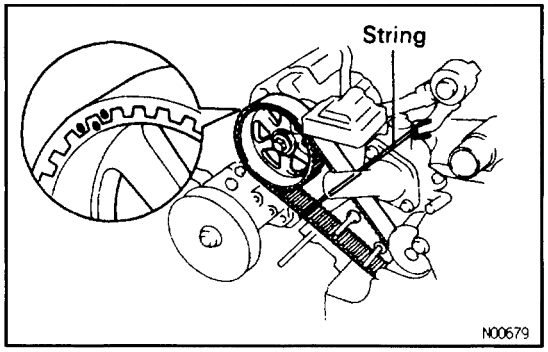

- When replacing timing belt tensioner only:
  To avoid meshing of the timing pulley and timing belt, secure one of them with string. And place matchmarks on the timing belt and RH camshaft timing pulley.

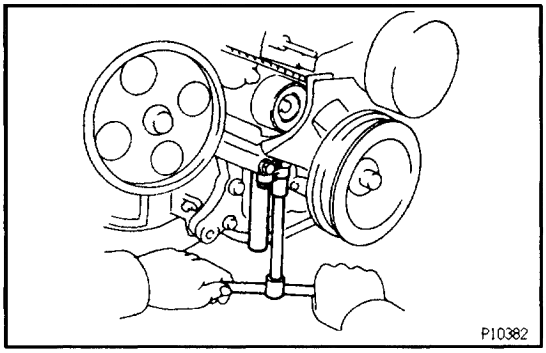

Alternately loosen the 2 bolts, and remove them, the belt tensioner and dust boot.

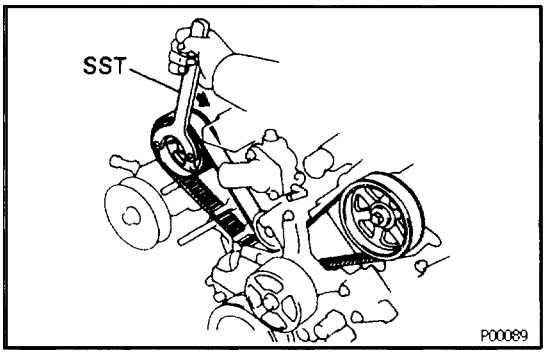

29. DISCONNECT TIMING BELT FROM CAMSHAFT TIMING PULLEYS

(a) Using SST, loosen the tension spring between the LH and RH camshaft timing pulleys by slightly turning the LH camshaft timing pulley clockwise.
SST 09278–54012

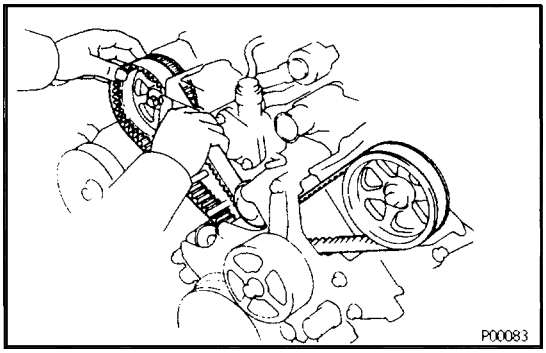

(b) Disconnect the timing belt from the camshaft timing pulleys.

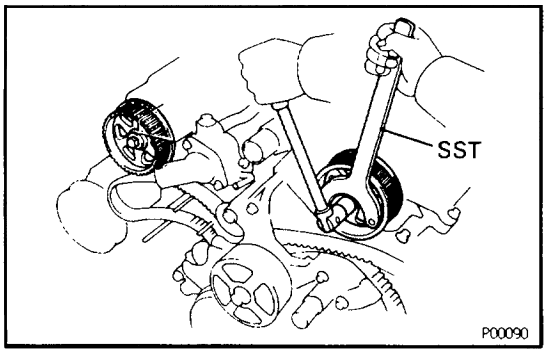

30. REMOVE CAMSHAFT TIMING PULLEYS

Using SST, remove the bolt and timing pulley. Remove the 2 timing pulleys.
SST 09278–54012

WhereEverybodyKnowsYourName

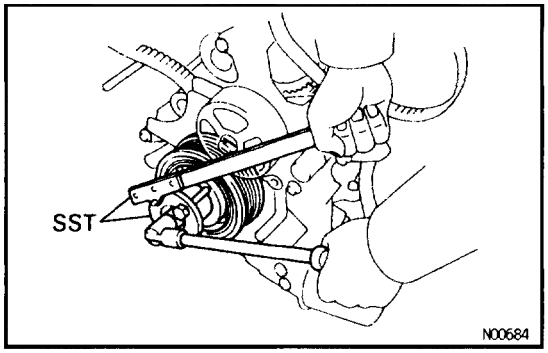

31. REMOVE CRANKSHAFT PULLEY

(a) Using SST, remove the pulley bolt.
SST 09213–70010, 09330–00021

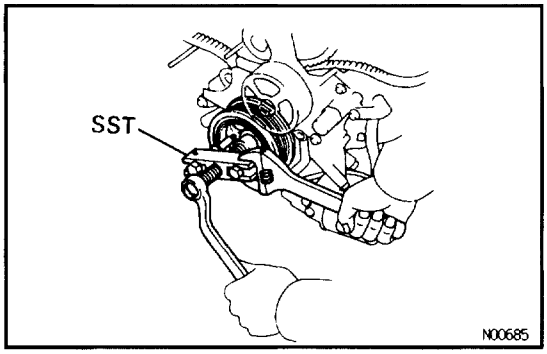

(b) Using SST, remove the crankshaft pulley.
SST 09213–31021

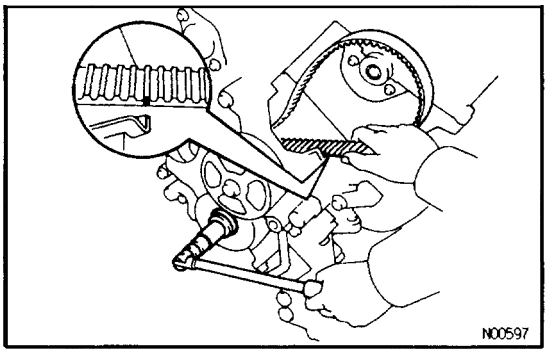

32. REMOVE HYDRAULIC PUMP

HINT (When re–using timing belt): Before removing the hydraulic pump, using the crankshaft pulley bolt, turn the crankshaft pulley and align the installation mark of the timing belt with the end of the hydraulic pump.

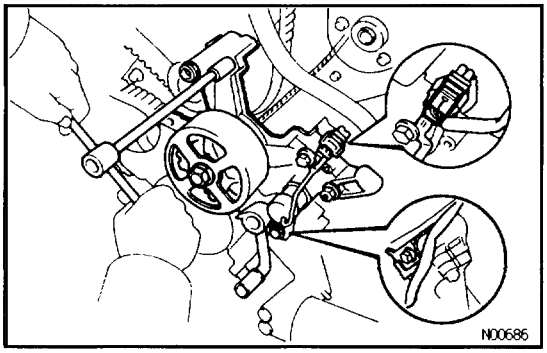

(a) Disconnect the solenoid valve connector.
(b) Remove the 2 bolts and 2 nuts.
(c) Disconnect the crankshaft position sensor wire clamp.
(d) Remove the hydraulic pump.

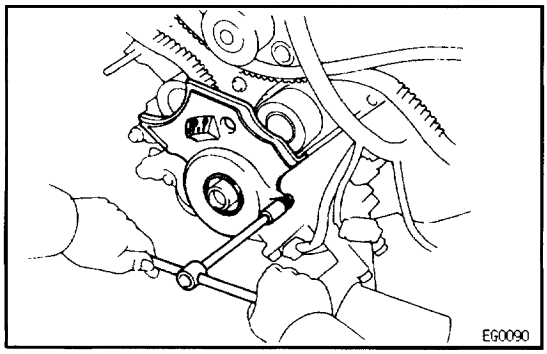

33. REMOVE NO.1 TIMING BELT COVER

Remove the 4 bolts, timing belt cover and gasket.

WhereEverybodyKnowsYourName

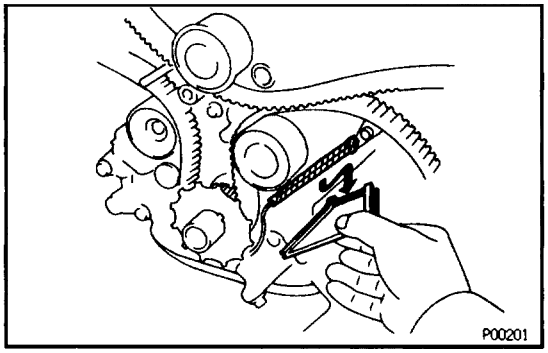

34. REMOVE TIMING BELT COVER SPACER

Remove the belt cover spacer and gasket.

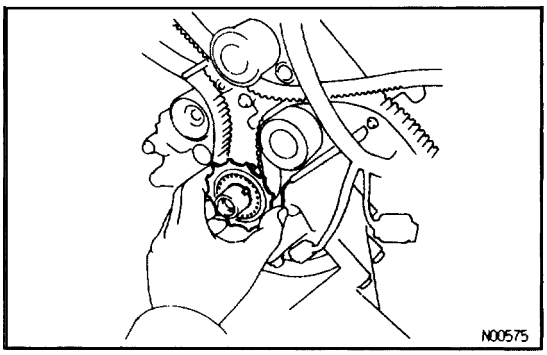

35. REMOVE TIMING BELT GUIDE (CRANKSHAFT ANGLE SENSOR PLATE)

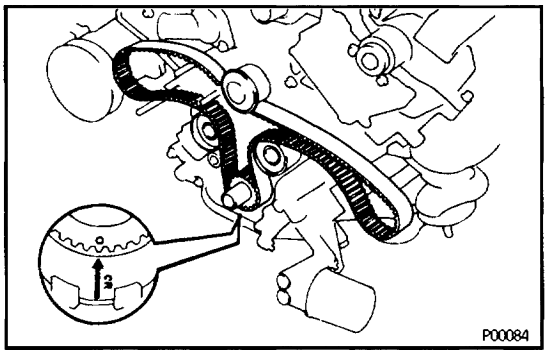

36. REMOVE TIMING BELT

HINT (When re–using timing belt): If the installation marks have disappeared, place a new installation mark on the timing belt to the match the dot mark of the crankshaft timing pulley.

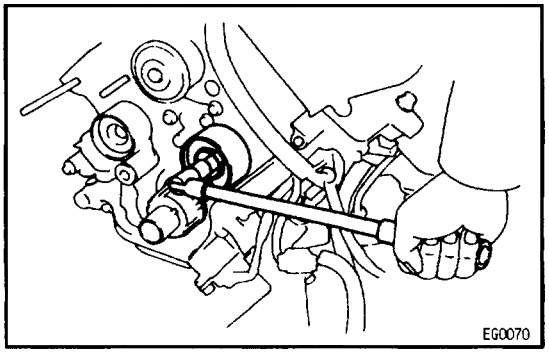

37. REMOVE NO.2 IDLER PULLEY

Remove the bolt and idler pulley.

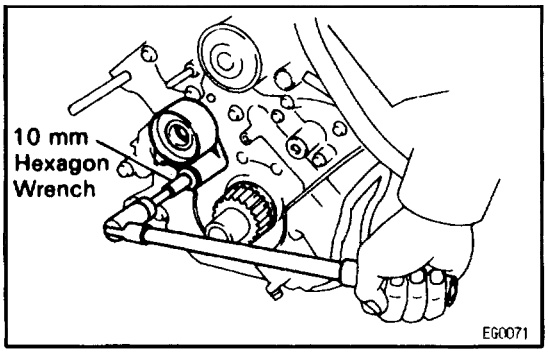

38. REMOVE NO.1 IDLER PULLEY

Using a 10 mm hexagon wrench, remove the bolt, idler pulley and plate washer.

WhereEverybodyKnowsYourName

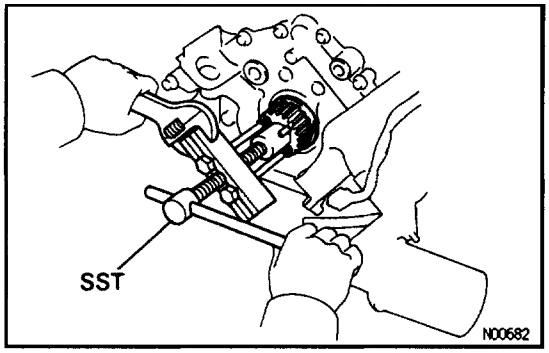

39. REMOVE CRANKSHAFT TIMING PULLEY

Using SST, remove the timing pulley.
SST 09213–60017 (09213–00050)

EG1KH–02

TIMING BELT COMPONENTS INSPECTION

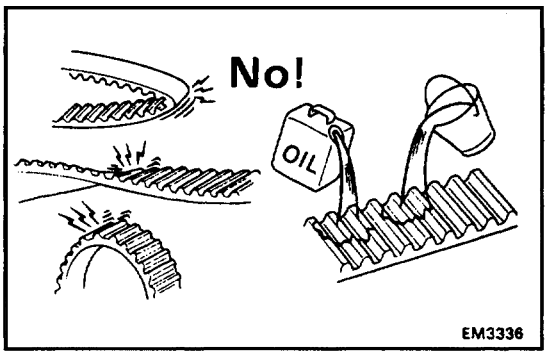

1. INSPECT TIMING BELT

NOTICE:

- **Do not bend, twist or turn the timing belt inside out.**
- **Do not allow the timing belt to come into contact with oil, water or steam.**
- **Do not utilize timing belt tension when installing or removing the mounting bolt of the camshaft timing pulley.**

If there are any defects as shown in the illustration, check the following points:

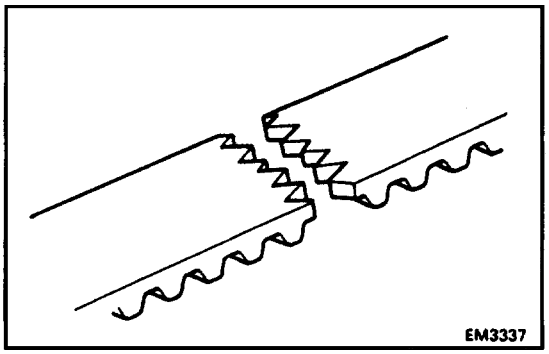

(a) Premature parting
- Check the proper installation.
- Check the timing cover gasket for damage and proper installation.

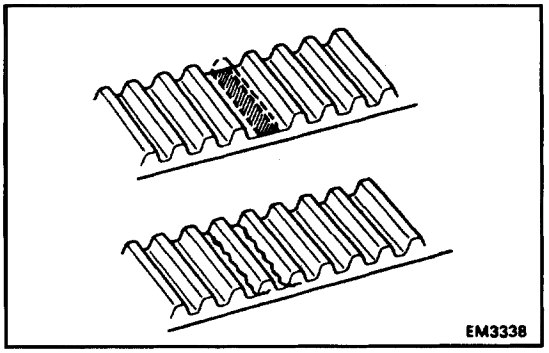

(b) If the belt teeth are cracked or damaged, check to see if either camshaft or water pump is locked.

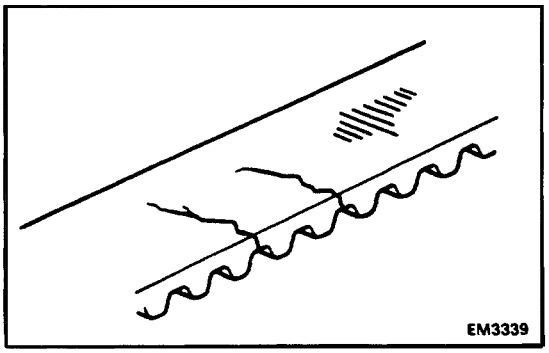

(c) If there is noticeable wear or cracks on the belt face, check to see if there are nicks on the side of the idler pulley lock.

WhereEverybodyKnowsYourName

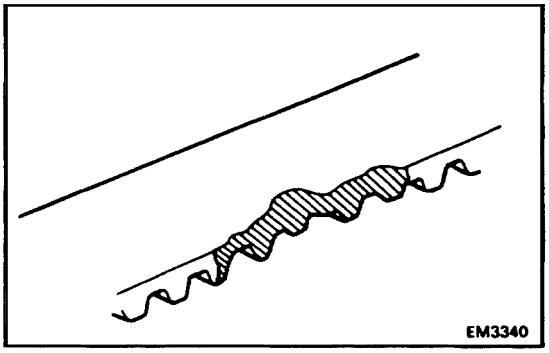

(d) If there is wear or damage on only one side of the belt, check the belt guide and the alignment of each pulley.

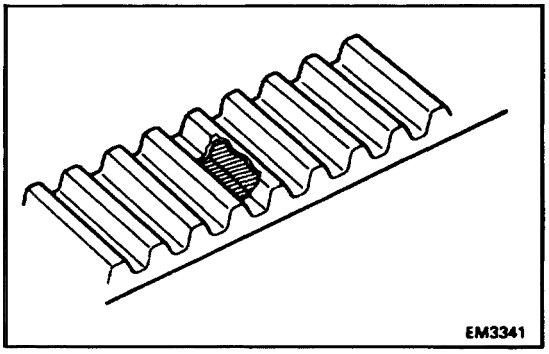

(e) If there is noticeable wear on the belt teeth, check the timing cover for damage, gasket has been installed correctly, and the foreign material on the pulley teeth. If necessary, replace the timing belt.

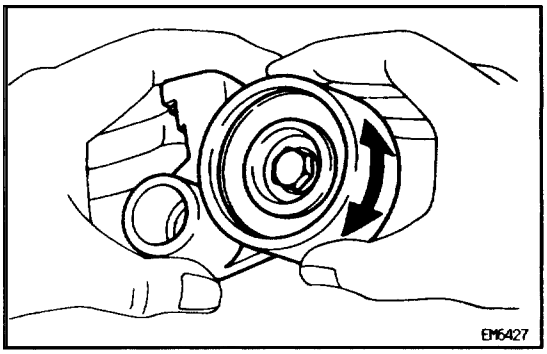

2. INSPECT IDLER PULLEYS

Check that the idler pulley turns smoothly.
If necessary, replace the idler pulley.

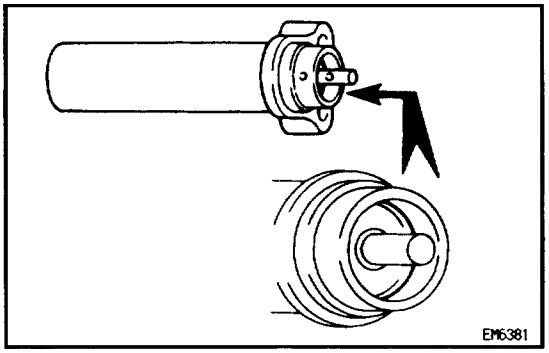

3. INSPECT TIMING BELT TENSIONER

(a) Visually check tensioner for leakage.
HINT: If there is only the faintest trace of oil on the seal on the push rod side, the tensioner is all right.
If leakage is found, replace the tensioner.

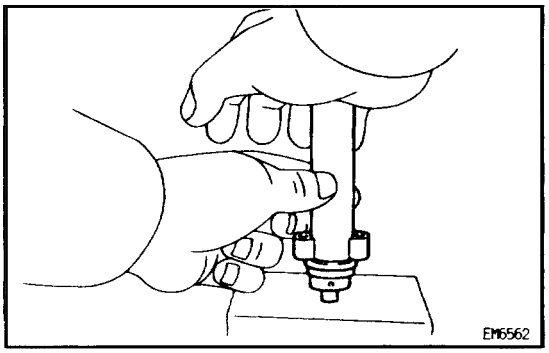

(b) Hold the tensioner with both hands, and push the push rod firmly against floor or wall to check that it doesn't move.
If push rod moves, replace the tensioner.

WhereEverybodyKnowsYourName

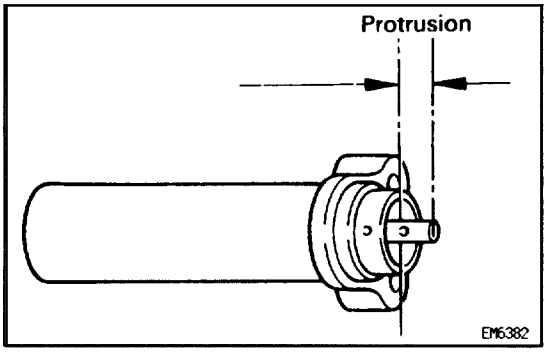

(c) Measure the protrusion of the push rod from the housing end.
Protrusion:
10.5 – 11.5 mm (0.413 – 0.453 in.)
If the protrusion is not as specified, replace the tensioner.

EG21R–02

TIMING BELT INSTALLATION

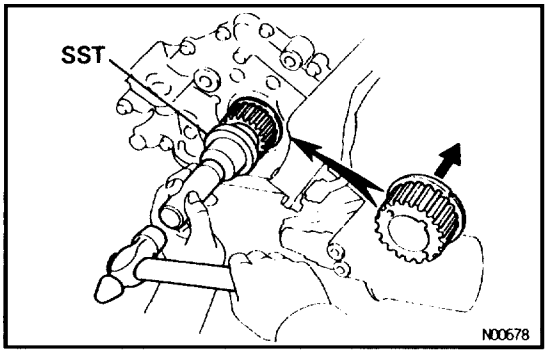

See Components for Removal and Installation:

1. INSTALL CRANKSHAFT TIMING PULLEY

(a) Align the timing pulley set key with the key groove of the pulley.

(b) Using SST and a hammer, tap in the timing pulley, facing the flange side inward.
SST 09223–46011

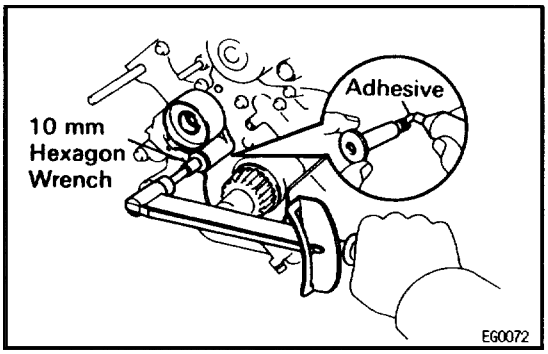

2. INSTALL NO.1 IDLER PULLEY

(a) Apply adhesive 2 or 3 threads of the pivot bolt.
Adhesive:
Part No. 08833–00080, THREE BOND 1344,
LOCTITE 242 or equivalent

(b) Using a 10 mm hexagon wrench, install the plate washer and idler pulley with the pivot bolt.
Torque: 34 N·m (350 kgf·cm, 25 ft·lbf)

(c) Check that the pulley bracket moves smoothly.

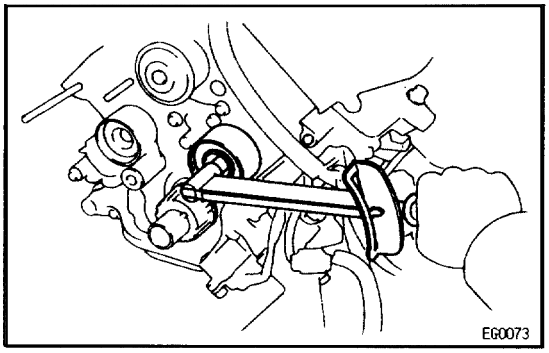

3. INSTALL NO.2 IDLER PULLEY

(a) Install the idler pulley with the bolt.
Torque: 34 N·m (350 kgf·cm, 25 ft·lbf)

(b) Check that the idler pulley moves smoothly.

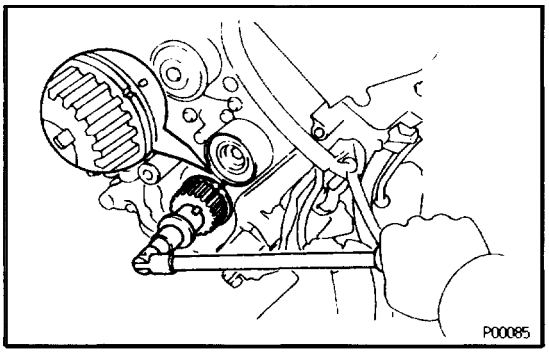

4. TEMPORARILY INSTALL TIMING BELT
NOTICE: The engine should be cold.

(a) Using the crankshaft pulley bolt, turn the crankshaft and align the timing marks of the crankshaft timing pulley and oil pump body.

WhereEverybodyKnowsYourName

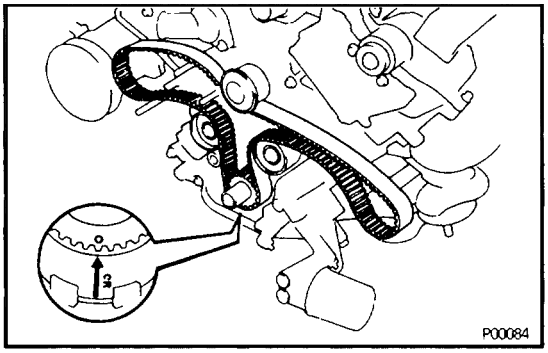

(b) Remove any oil or water on the crankshaft pulley, oil pump pulley, water pump pulley, No.1 idler pulley and No.2 idler pulley, and keep them clean.
(c) Align the installation mark on the timing belt with the dot mark of the crankshaft timing pulley.
(d) Install the timing belt on the crankshaft timing pulley.
No.1 idler pulley and No.2 idler pulley.

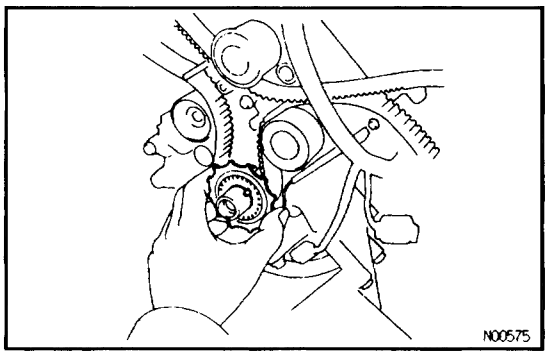

5. INSTALL TIMING BELT GUIDE (CRANKSHAFT ANGLE SENSOR PLATE)
Install the belt guide, facing the cup side outward.

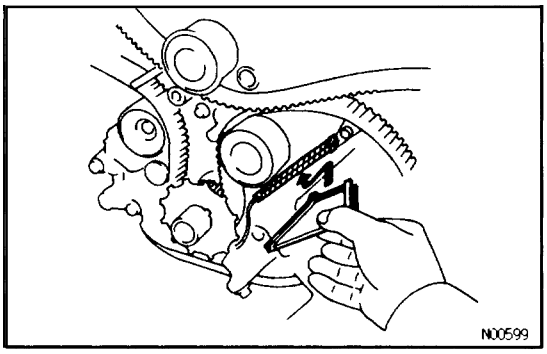

6. INSTALL TIMING BELT COVER SPACER
(a) Install the gasket to the cover spacer.
(b) Install the cover spacer.

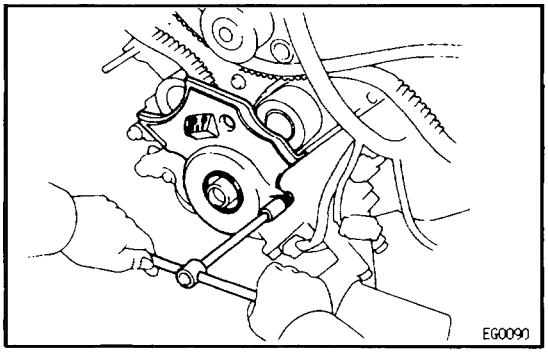

7. INSTALL NO.1 TIMING BELT COVER
(a) Install the gasket to the timing belt cover.
(b) Install the timing belt cover with the 4 bolts.

WhereEverybodyKnowsYourName

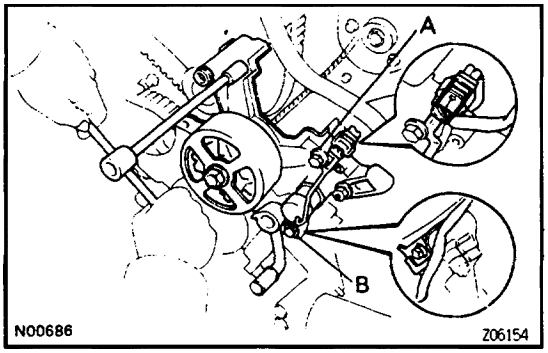

8. INSTALL HYDRAULIC PUMP

(a) Install the hydraulic pump, solenoid valve connector clamp and crankshaft position sensor wire clamp with the 2 bolts and 2 nuts.

Torque:

16 N·m (160 kgf·cm, 12 ft·lbf) for 12 mm head

30 N·m (310 kgf·cm, 22 ft·lbf) for 14 mm head

HINT: Each bolt length is indicated in the illustration.

Bolt length:

106 mm (4.17 in.) for A of 12 mm head

114 mm (4.49 in.) for B of 14 mm head

(b) Connect the solenoid valve connector.

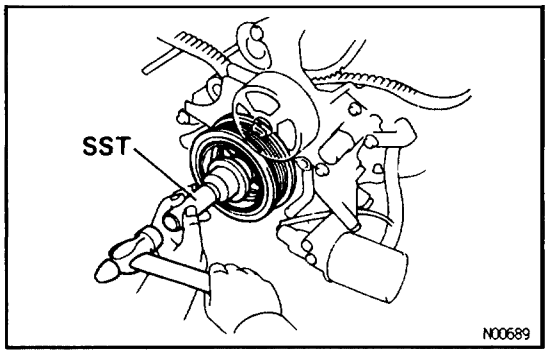

9. INSTALL CRANKSHAFT PULLEY

(a) Align the pulley set key with the key groove of the crankshaft pulley.

(b) Using SST and a hammer, tap in the crankshaft pulley.
SST 09223–46011

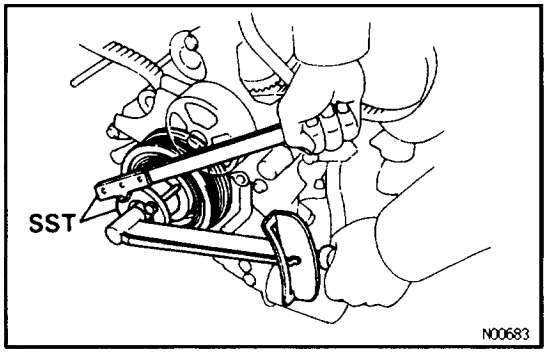

(c) Using SST, install the pulley bolt.
SST 09213–70010, 09330–00021
Torque: 245 N·m (2,500 kgf·cm, 181 ft·lbf)

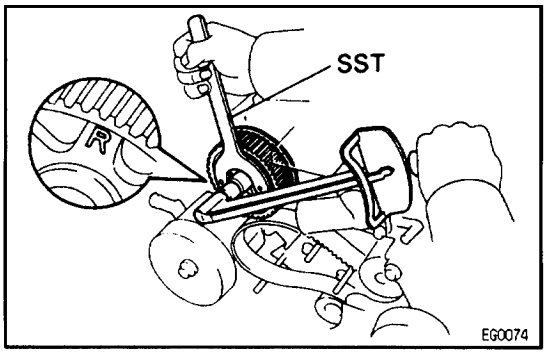

10. INSTALL RH CAMSHAFT TIMING PULLEY

(a) Align the camshaft knock pin with the knock pin groove of the timing pulley, and slide on the timing pulley.

(b) Slide the timing pulley on the camshaft, facing the “R” mark forward.

(c) Using SST, install the pulley bolt.
SST 09278–54012
Torque: 108 N·m (1,100 kgf·cm, 80 ft·lbf)

WhereEverybodyKnowsYourName

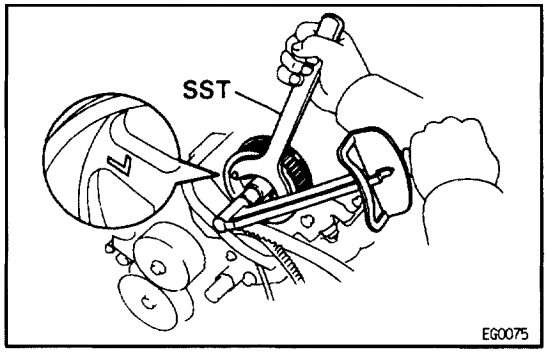

11. INSTALL LH CAMSHAFT TIMING PULLEY

(a) Align the camshaft knock pin with the knock pin groove of the timing pulley, and slide on the timing pulley.

(b) Slide the timing pulley on the camshaft, facing the “L” mark forward.

(c) Using SST, install the pulley bolt.
SST 09278–54012
Torque: 108 N·m (1,100 kgf·cm, 80 ft·lbf)

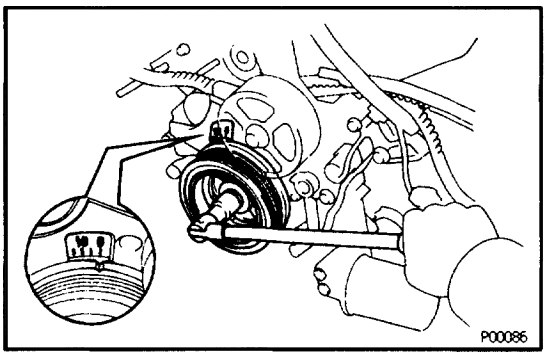

12. SET NO.1 CYLINDER TO TDC/COMPRESSION

(a) Crankshaft Pulley Position:
Turn the crankshaft pulley, and align its groove with timing mark “0” of the No. 1 timing belt cover.

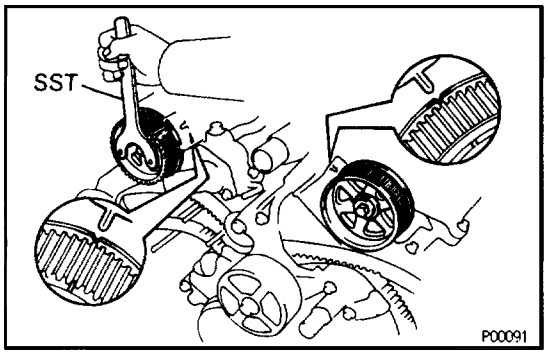

(b) (Camshaft Timing Pulley Position)
Using SST, turn the camshaft timing pulley, and align the timing marks of the camshaft timing pulley and timing belt rear plate.
SST 09278–54012

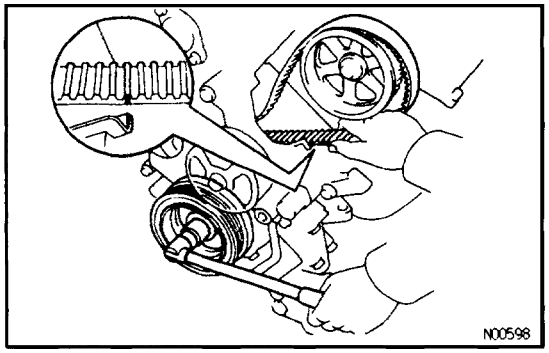

13. CONNECT TIMING BELT TO LH CAMSHAFT TIMING PULLEY

(a) Align the installation mark on the timing belt with the the end of the hydraulic pump.

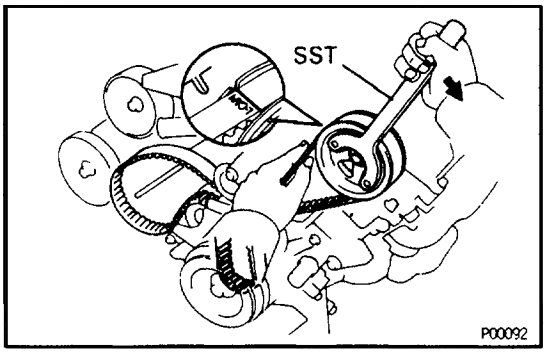

(b) Remove any oil or water on the LH camshaft timing pulley, and keep it clean.

(c) Using SST, slightly turn the LH camshaft timing pulley clockwise. Align the installation mark on the timing belt with the timing mark of the camshaft timing pulley, and hang the timing belt on the LH camshaft timing pulley.
SST 09278–54012

WhereEverybodyKnowsYourName

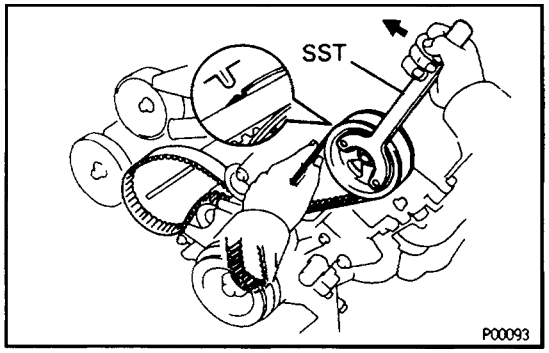

(d) Using SST, align the timing marks of the LH camshaft timing pulley and timing belt rear plate.
SST 09278–54012

(e) Check that the timing belt has tension between the crankshaft timing pulley and LH camshaft timing pulley.

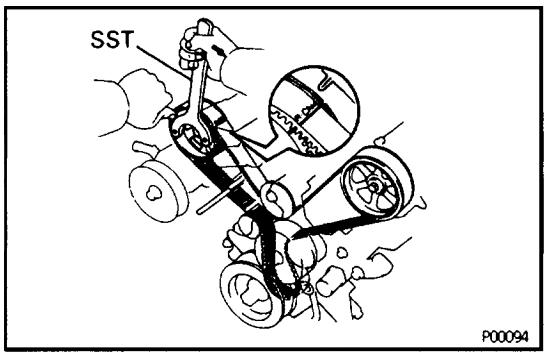

14. CONNECT TIMING BELT TO RH CAMSHAFT TIMING PULLEY

(a) Remove any oil or water on the RH camshaft timing pulley and water pump pulley, and keep them clean.

(b) Using SST, slightly turn the RH camshaft timing pulley clockwise. Align the installation mark on the timing belt with the timing mark of the camshaft timing pulley, and hang the timing belt on the RH camshaft timing pulley.
SST 09278–54012

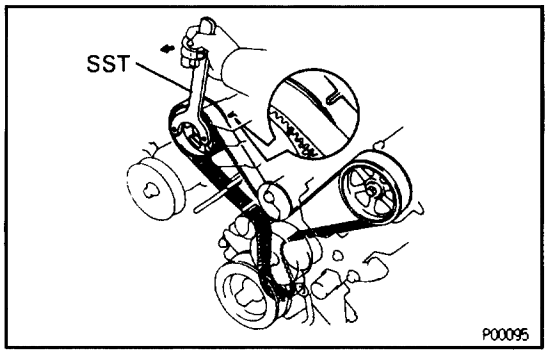

(c) Using SST, align the timing marks of the RH camshaft timing pulley and timing belt rear plate.
SST 09278–54012

(d) Check that the timing belt has tension between the RH camshaft timing pulley and LH camshaft timing pulley.

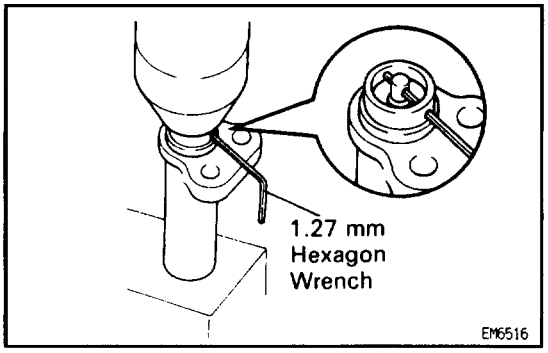

15. SET TIMING BELT TENSIONER

(a) Using a press, slowly press in the push rod using 981 – 9,807 N (100 – 1,000 kgf, 220 – 2,205 lbf) of force.

(b) Align the holes of the push rod and housing, pass a 1.27 mm hexagon wrench through the holes to keep the setting position of the push rod.

(c) Release the press.

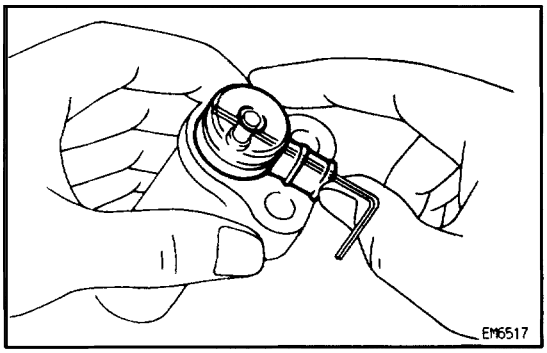

(d) Install the dust boot to the belt tensioner.

WhereEverybodyKnowsYourName

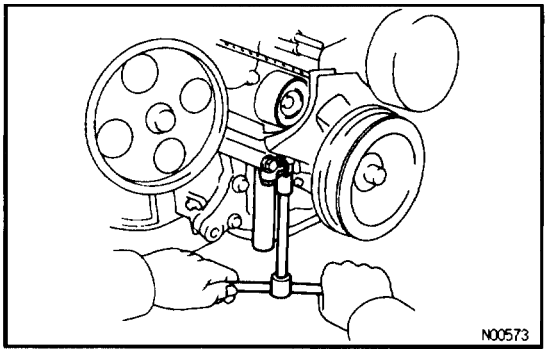

16. INSTALL TIMING BELT TENSIONER

(a) Temporarily install the belt tensioner with the 2 bolts.

(b) Alternately tighten the 2 bolts.
Torque: 26 N·m (270 kgf·cm, 20 ft·lbf)

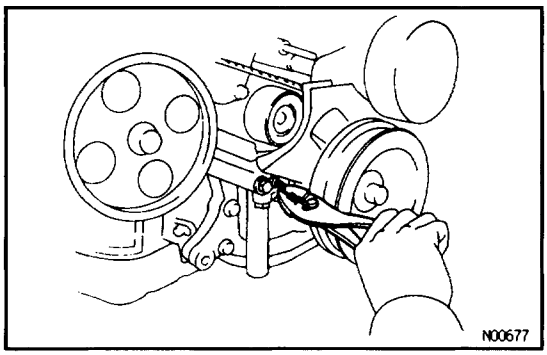

(c) Using pliers, remove the 1.27 mm hexagon wrench from the belt tensioner.

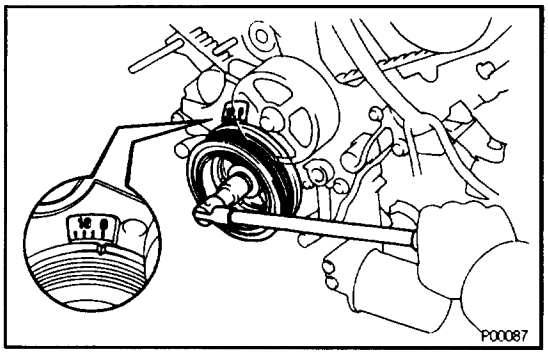

17. CHECK VALVE TIMING

(a) Slowly turn the crankshaft pulley 2 revolutions from TDC to TDC.
NOTICE: Always turn the crankshaft pulley clockwise.

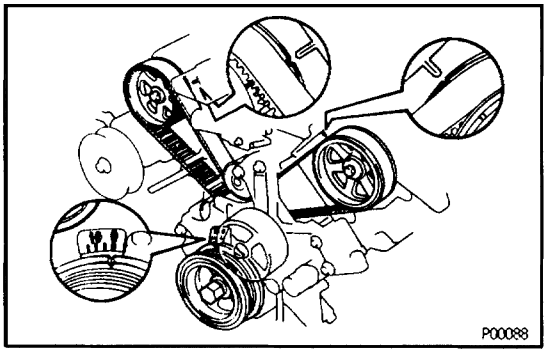

(b) Check that each pulley aligns with the timing marks as shown in the illustration.
If the timing marks do not align, remove the timing belt and reinstall it.

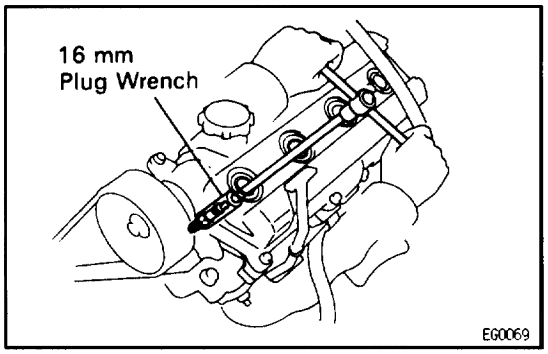

18. INSTALL SPARK PLUGS

Using a 16 mm plug wrench, install the 8 spark plugs.
Torque: 18 N·m (180 kgf·cm, 13 ft·lbf)

WhereEverybodyKnowsYourName

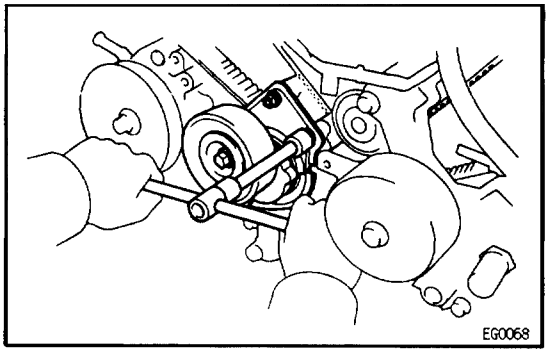

19. INSTALL DRIVE BELT TENSIONER

Install the belt tensioner with the bolt and 2 nuts.

Torque: 16 N·m (160 kgf·cm, 12 ft·lbf)

HINT: Use bolt 106 mm (4.18 in.) in length.

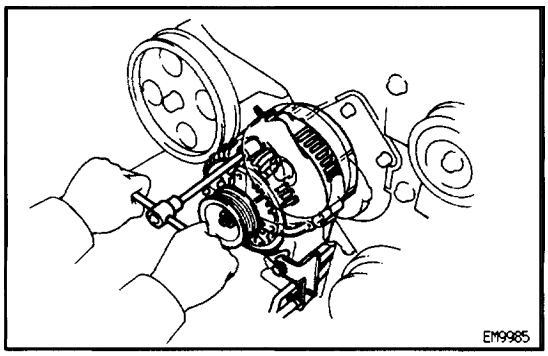

20. INSTALL GENERATOR

(a) Install the generator and transmission oil cooler pipe bracket with the bolt and nut.

Torque: 37 N·m (380 kgf·cm, 27 ft·lbf)

(b) Connect the generator connector.

(c) Connect the generator wire with the nut and cap.

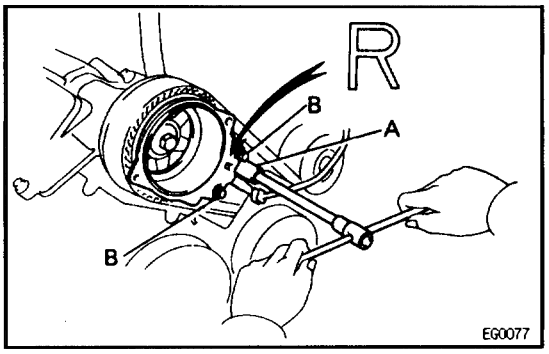

21. INSTALL RH DISTRIBUTOR HOUSING

Install the distributor housing with the 3 bolts.

Torque: 18 N·m (185 kgf·cm, 13 ft·lbf)

HINT:

- The RH distributor housing is marked with “R”.
- Each bolt length is indicated in the illustration.

Bolt length:

38 mm (1.50 in.) for A
96 mm (3.78 in.) for B

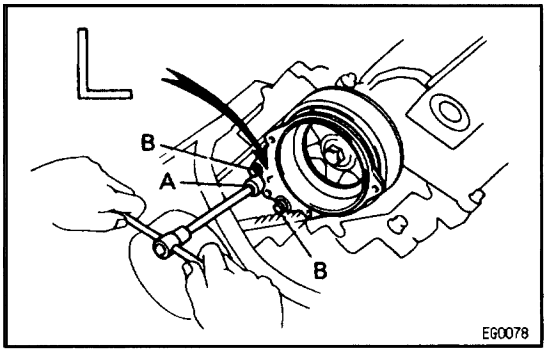

22. INSTALL LH DISTRIBUTOR HOUSING

Install the distributor housing with the 3 bolts.

Torque: 18 N·m (185 kgf·cm, 13 ft·lbf)

HINT:

- The LH distributor housing is marked with “L”.
- Each bolt length is indicated in the illustration.

Bolt length:

38 mm (1.50 in.) for A
80 mm (3.15 in.) for B

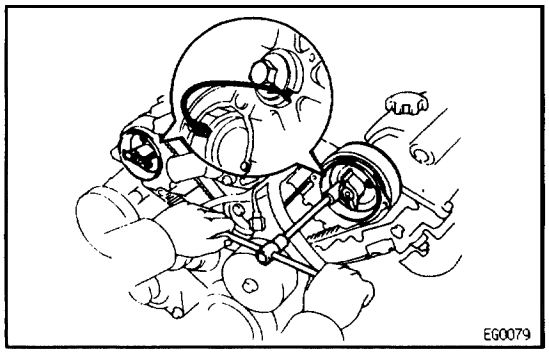

23. INSTALL DISTRIBUTOR ROTORS

(a) Align the protrusion of the distributor rotor with the groove the camshaft timing pulley.

(b) Install the distributor rotor with the 2 bolts. Install the 2 distributor rotors.

Torque: 3.8 N·m (39 kgf·cm, 34 in.·lbf)

WhereEverybodyKnowsYourName

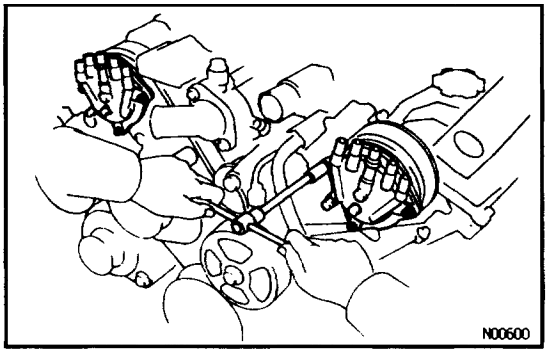

24. INSTALL DISTRIBUTOR CAPS

Install the distributor cap with the 3 bolts. Install the 2 distributor caps.

Torque: 3.8 N·m (39 kgf·cm, 34 in.·lbf)

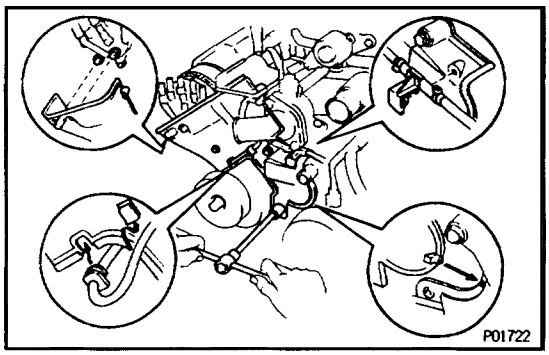

25. INSTALL RH NO.2 TIMING BELT COVER

(a) Install the 4 gaskets to the timing belt cover.
(b) Install the wire grommet to the timing belt cover.
(c) Fit the timing belt cover, matching it with the hydraulic pump.
(d) Fit the timing belt cover holes, matching them with the 2 grommets on the distributor cap.
(e) Install the timing belt cover with the 5 bolts.

Torque:

18 N·m (185 kgf·cm, 13 ft·lbf) for 12 mm head

HINT (for 12 mm head): Use bolts 106 mm (4.17 in.) in length.

(f) Install the wire clamp to the timing belt cover.
(g) Install the camshaft position sensor connector to the ignition coil bracket.

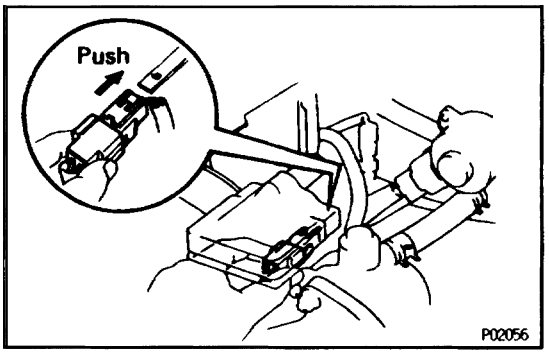

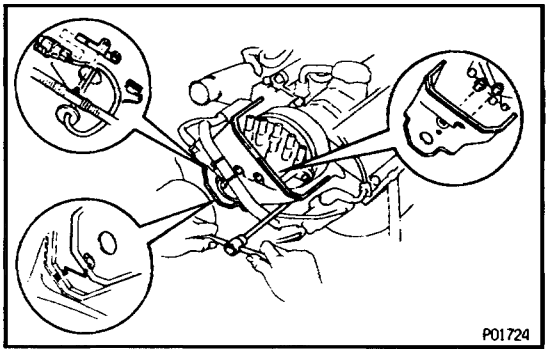

26. INSTALL LH NO.2 TIMING BELT COVER

(a) Install the 2 gaskets to the timing belt cover.
(b) Run the camshaft position sensor wire through the timing belt cover hole.
(c) Fit the timing belt cover, matching it with the hydraulic pump.
(d) Fit the timing belt cover holes, matching them with the 2 grommets on the distributor cap.
(e) Install the timing belt cover and connector bracket with the 3 bolts.
(f) Install the wire grommet to the timing belt cover.
(g) Install the camshaft position sensor connector to the connector bracket.

WhereEverybodyKnowsYourName

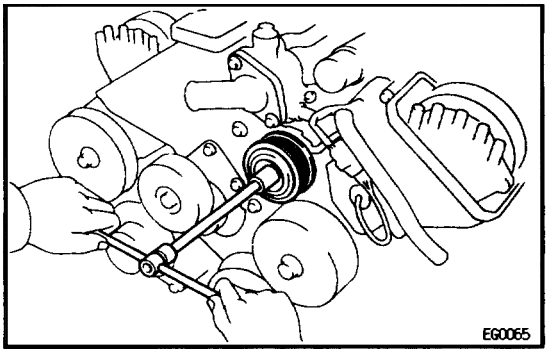

27. INSTALL DRIVE BELT IDLER PULLEY

Install the idler pulley and cover plate with the bolt.

Torque: 37 N·m (380 kgf·cm, 27 ft·lbf)

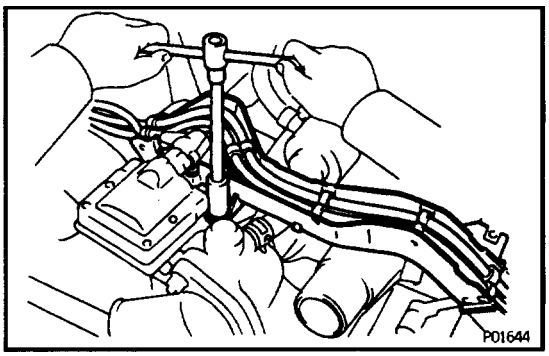

28. INSTALL HIGH–TENSION CORDS, CORD CLAMPS AND CORD COVER ASSEMBLY

(a) Connect the high–tension cords to the spark plugs, distributor caps and RH ignition coil.

(b) Install the lower high–tension cord cover with the bolt.

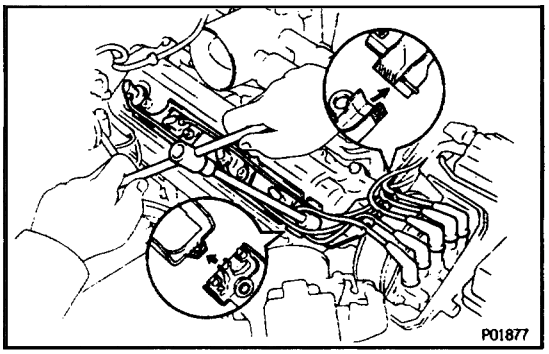

(c) Connect the RH front high–tension cord clamp to the lower high–tension cord cover.

(d) Place the RH front high–tension cord clamp to the RH rear high–tension cord clamp.

(e) Install the 2 bolts holding the RH high–tension cord clamps to the RH cylinder head cover.

(f) Connect the No.2 high–tension cord to the cord clamp on the RH front high–tension cord clamp.

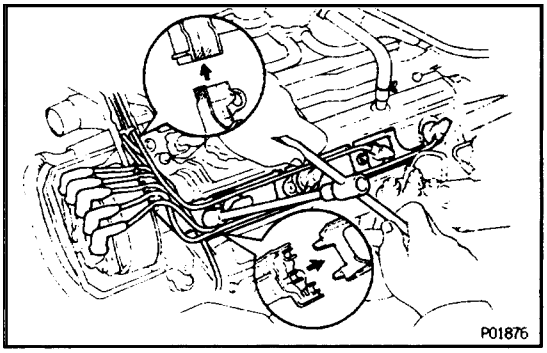

(g) Connect the LH front high–tension cord clamp to the lower high–tension cord cover.

(h) Place the LH front high–tension cord clamp to the LH rear high–tension cord clamp.

(i) Install the 2 bolts holding the LH high–tension cord clamps to the LH cylinder head cover.

(j) Connect the No.1 high–tension cord to the cord clamp on the LH front high–tension cord clamp.

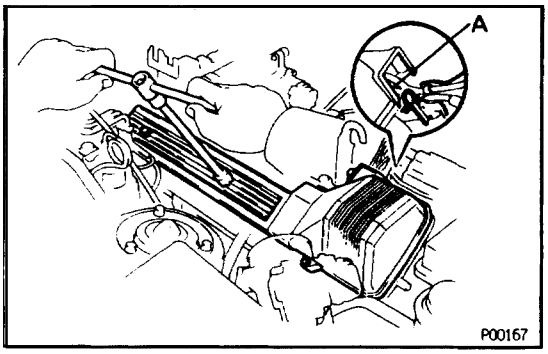

29. INSTALL RH NO.3 TIMING BELT COVER

(a) Install the 3 gaskets to the timing belt cover.

(b) Fit the portion A of the timing belt cover, matching it with the lower high–tension cord cover.

(c) Install the timing belt cover with the 4 bolts.

WhereEverybodyKnowsYourName

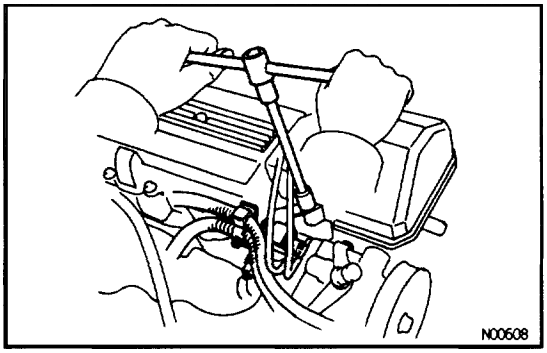

30. INSTALL VSV FOR EVAP SYSTEM

Install the VSV with the 2 bolts.

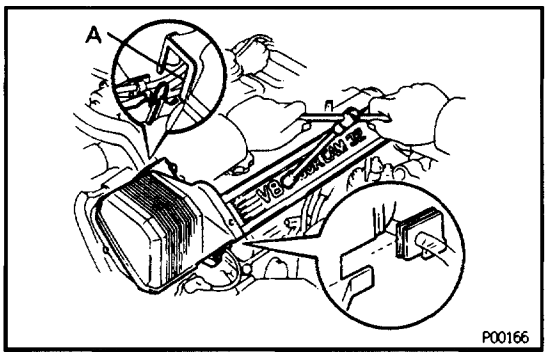

31. INSTALL LH NO.3 TIMING BELT COVER

(a) Install the 3 gaskets to the timing belt cover.
(b) Install the cord grommet to the high–tension cord (from the LH ignition coil).
(c) Install the cord grommet to the timing belt cover.
(d) Fit the portion A of the timing belt cover, matching it with the lower high–tension cord cover.
(e) Install the timing belt cover with the 4 bolts.

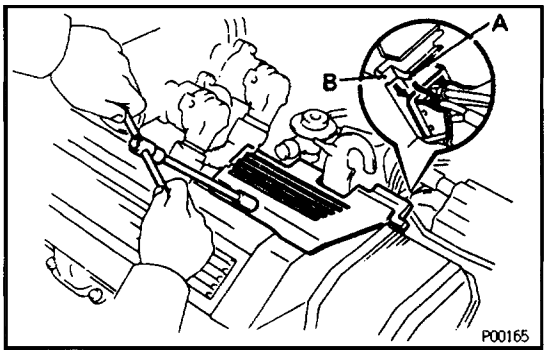

32. INSTALL RH ENGINE WIRE COVER

(a) Fit portions A and B of the engine wire cover, matching them with the lower high–tension cord cover and No.3 timing belt cover.
(b) Install the timing belt cover with the bolt.

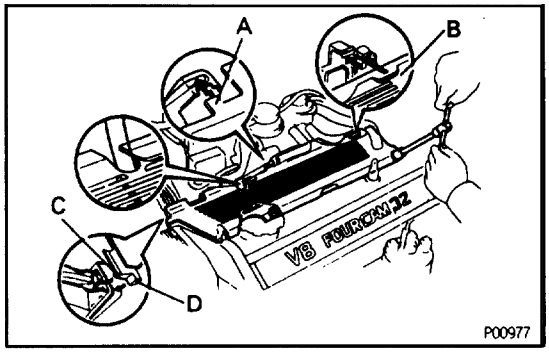

33. INSTALL LH ENGINE WIRE COVER

(a) Connect portions A and B of the engine wire cover to the wire brackets.
(b) Set the VSV (for the fuel pressure) wire in original position.
(c) Fit portions C and D of the engine wire cover, matching them with the lower high–tension cord cover and No.3 timing belt cover.
(d) Install the timing belt cover with the 2 bolts.

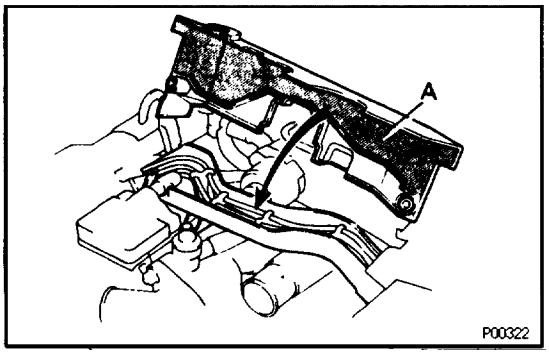

34. INSTALL UPPER HIGH–TENSION CORD COVER

(a) Fit portion A of the upper high–tension cord cover matching the top of the lower high–tension cord cover.

WhereEverybodyKnowsYourName

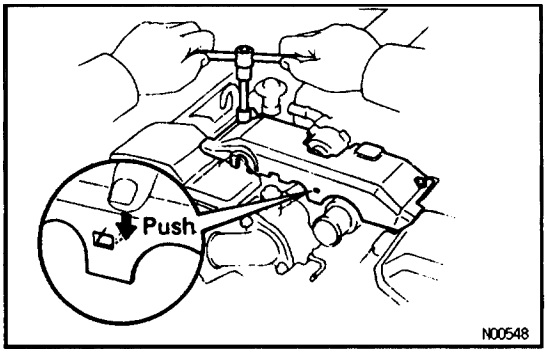

(b) Push the front side of the upper high–tension cord cover, and fit the front side claw groove of the upper high–tension cord cover to the claw of the lower high –tension cord cover.
(c) Install the upper high–tension cord cover with the 2 bolts.

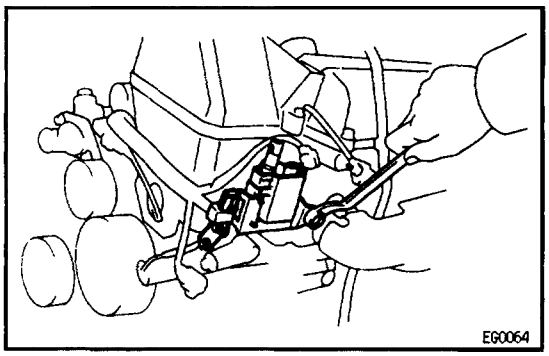

35. INSTALL LH IGNITION COIL

(a) Install the ignition coil with the 2 bolts.

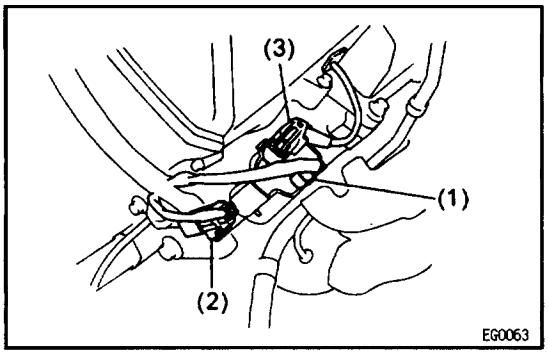

(b) Connect the following connectors and cord:
  (1) Ignition coil connector
  (2) Noise filter connector
  (3) High–tension cord

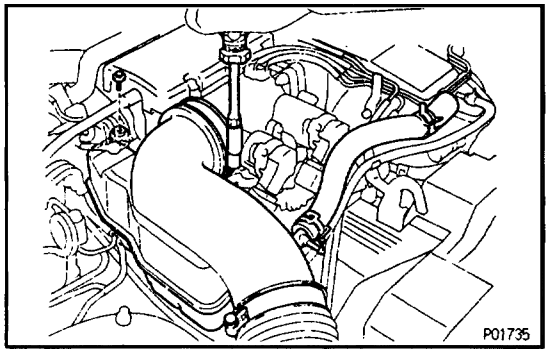

36. INSTALL INTAKE AIR CONNECTOR

(a) Connect the intake air connector to the throttle body.
(b) Install the hose clamp and bolt.

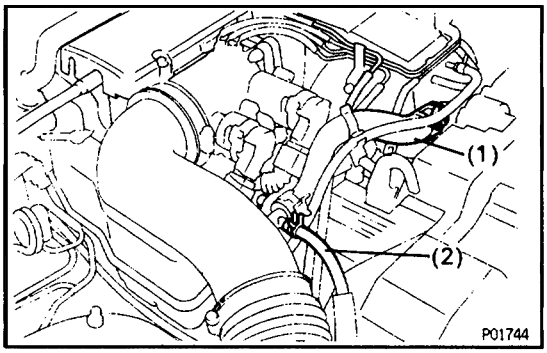

(c) Connect the following hoses:
  (1) Air hose to IAC valve
  (2) Air hose (from air control valve on PS pump) to intake air connector.

WhereEverybodyKnowsYourName

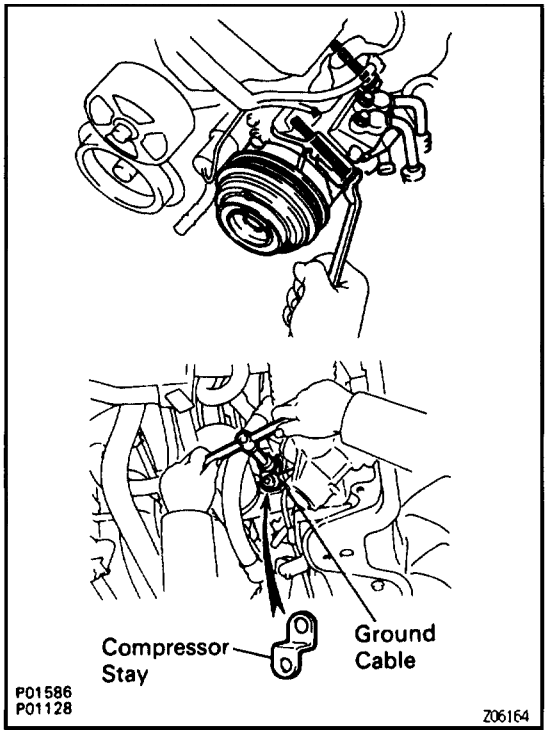

37. INSTALL AIR CONDITIONING (A/C) COMPRESSOR

(a) Install the A/C compressor, compressor stay and ground cable with the nut and 3 bolts.
Torque:
49 N·m (500 kgf·cm, 36 ft·lbf) for bolt
29 N·m (300 kgf·cm, 22 ft·lbf) for nut

(b) Connect the A/C compressor connector.

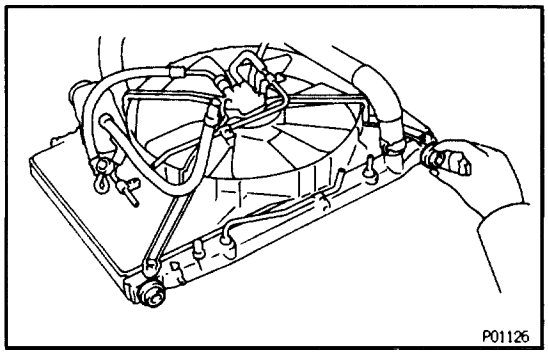

38. INSTALL RADIATOR ASSEMBLY

(a) Install the 2 lower radiator supports to the radiator.

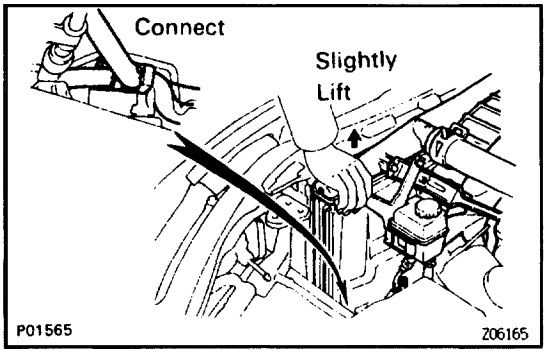

(b) Place the radiator assembly on the body bracket.

(c) Slightly lift the radiator, and connect the 2 oil cooler hoses (for cooling fan) to the hose clamp on the radiator fan shroud.

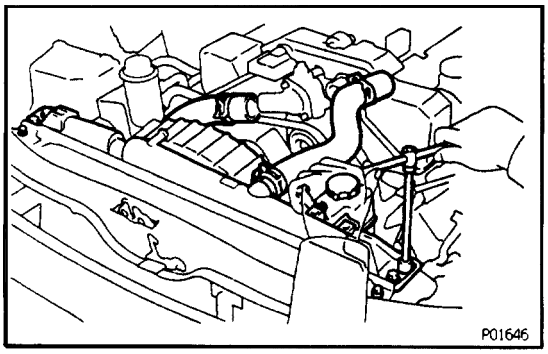

(d) Install the upper radiator support with the 2 bolts and screw. Install the 2 upper radiator supports.
Torque: 12 N·m (120 kgf·cm, 9 ft·lbf)

WhereEverybodyKnowsYourName

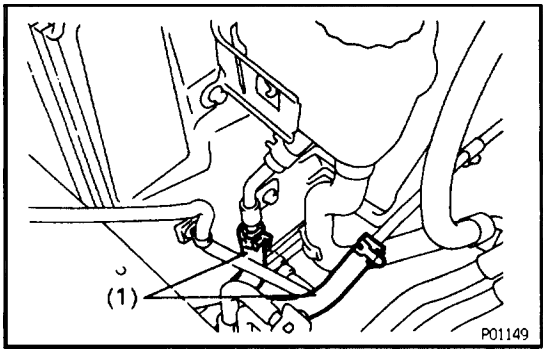

(e) Connect the following hoses:
(1) 2 oil cooler hoses (for cooling fan) to pipes

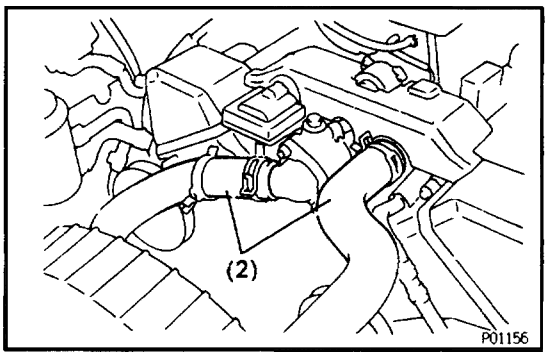

(2) 2 radiator hoses

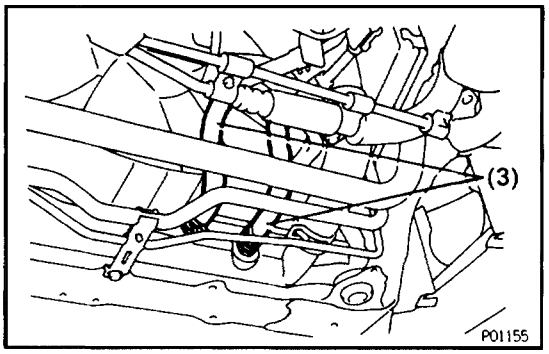

(3) 2 oil cooler hoses (for transmission) to radiator

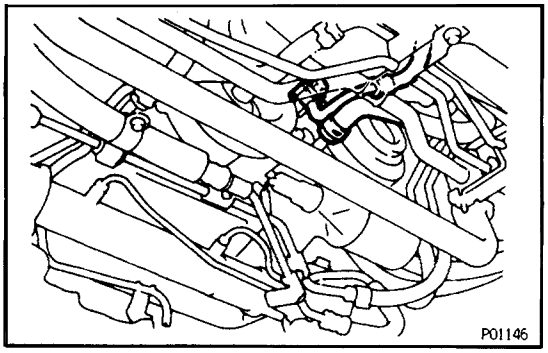

(4) Suction hose to hydraulic pump
(5) Pressure hose to hydraulic pump

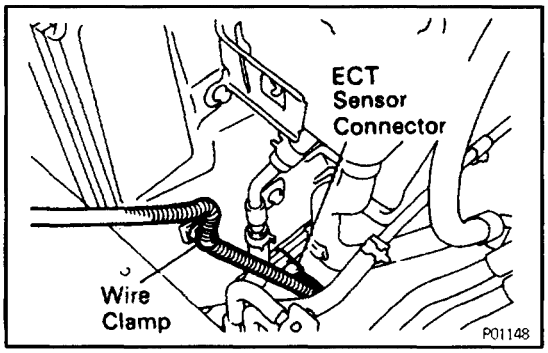

(f) Connect the ECT sensor connector (for cooling fan).
(g) Install the ECT sensor wire clamp to the radiator fan shroud.

WhereEverybodyKnowsYourName

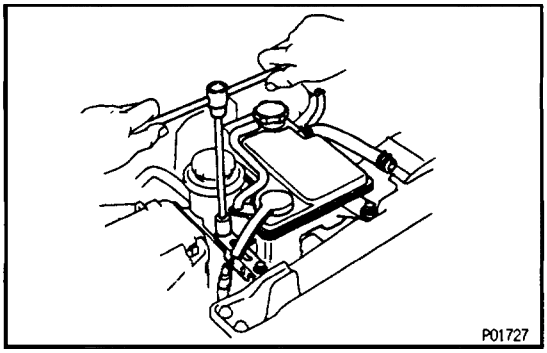

39. INSTALL RADIATOR RESERVOIR TANK

(a) Install the reservoir tank to the reservoir tank bracket.

(b) Install the reservoir tank with the bracket and 3 bolts.
Torque: 4.9 N·m (50 kgf·cm, 43 in.·lbf)

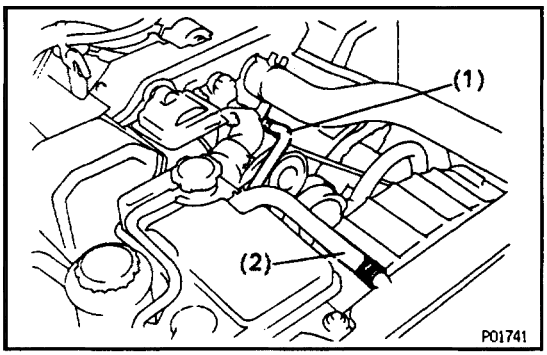

(c) Connect the following hoses:
(1) Reservoir hose to water inlet housing
(2) Reservoir hose to radiator

(d) Connect the coolant level sensor connector.

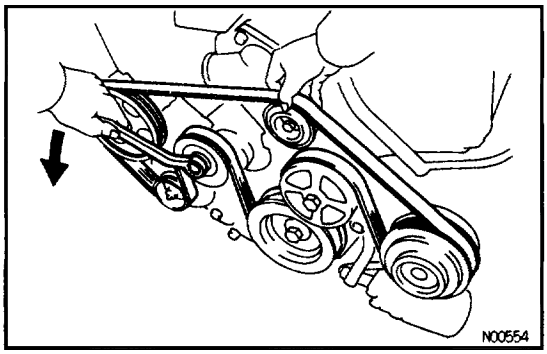

40. INSTALL DRIVE BELT

Install the drive belt by turning the drive belt tensioner counterclockwise.

HINT: The pulley bolt for the dive belt tensioner has a left hand thread.

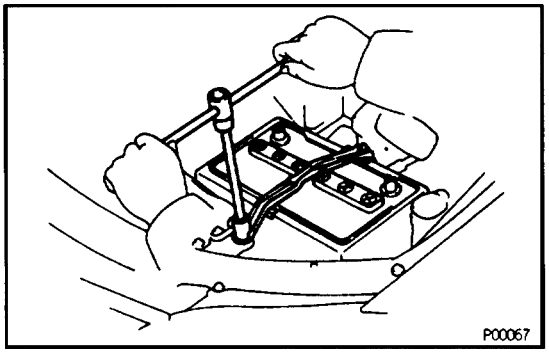

41. INSTALL BATTERY

42. FILL WITH ENGINE COOLANT

43. START ENGINE AND CHECK FOR LEAKS

44. CHECK TRANSMISSION FLUID LEVEL

45. INSTALL ENGINE UNDER COVER

WhereEverybodyKnowsYourName

CYLINDER HEAD

EG279–01

COMPONENTS FOR REMOVAL AND INSTALLATION

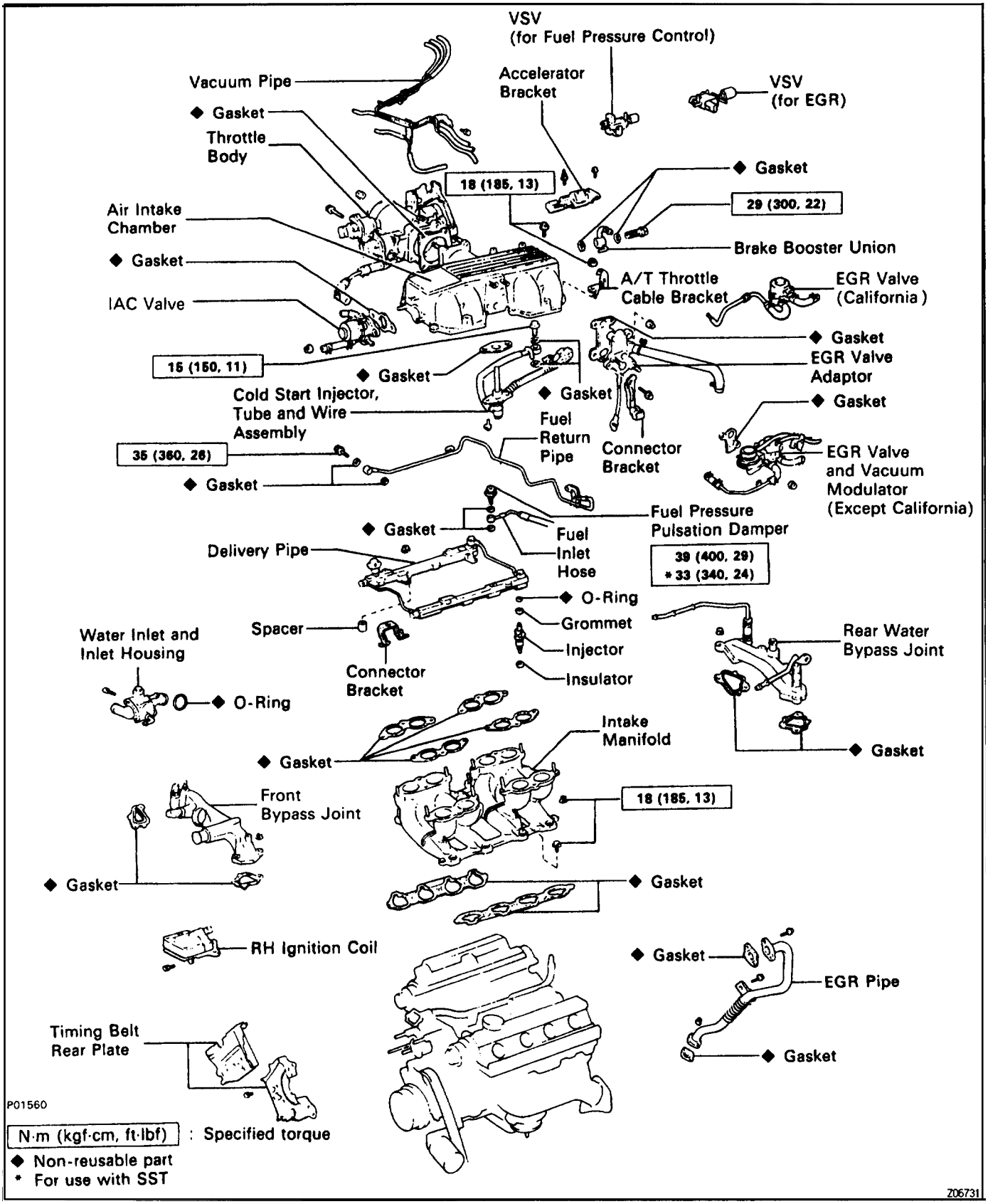

WhereEverybodyKnowsYourName

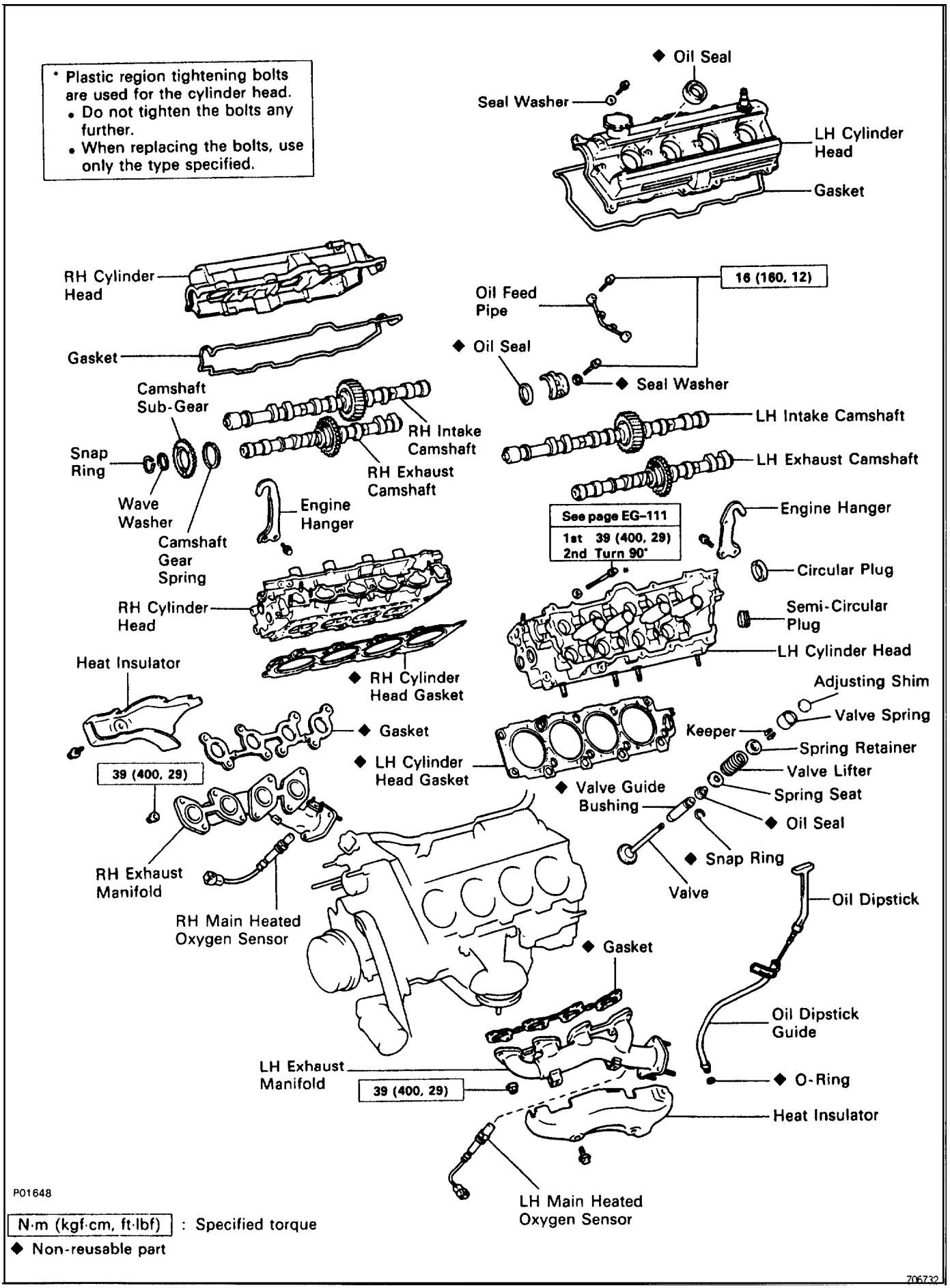

WhereEverybodyKnowsYourName

EG24R–02

CYLINDER HEADS REMOVAL

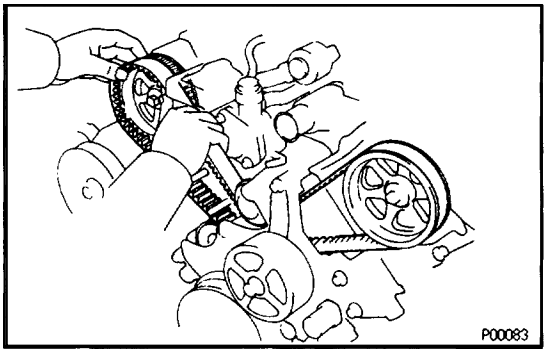

(See Components for Removal and Installation)

1. **DISCONNECT TIMING BELT FROM CAMSHAFT TIMING PULLEYS**
   (See steps 1 to 29 on pages EG–46 to 54)

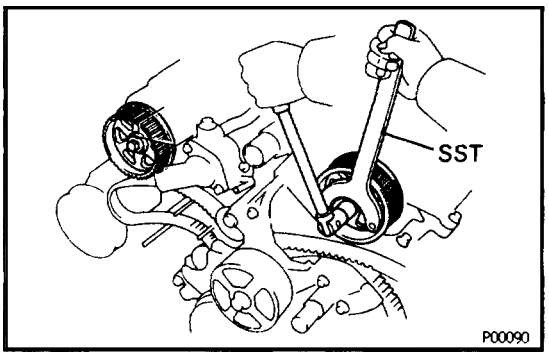

2. **REMOVE CAMSHAFT TIMING PULLEYS**
   Using SST, remove the bolt and timing pulley. Remove the 2 timing pulleys.
   SST 09278–54012

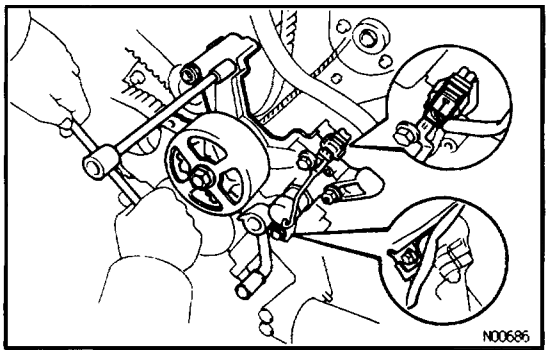

3. **REMOVE FAN BRACKET**
   Remove the 2 bolts, 2 nuts and fan bracket.

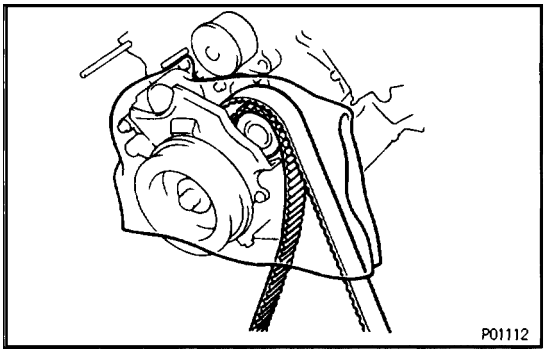

NOTICE:

- **Be careful not to drop anything inside the timing belt cover.**
- **Do not allow the belt to come into correct with oil, water or dust.**

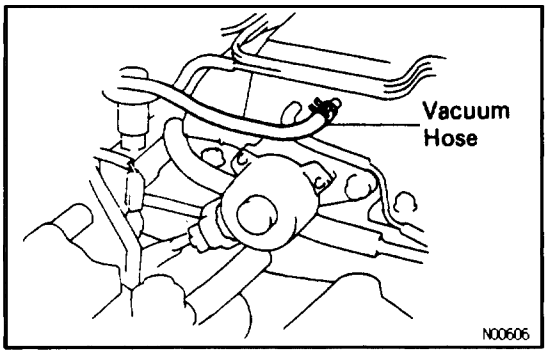

4. **DISCONNECT POWER STEERING (PS) PUMP FROM ENGINE**

(a) Disconnect the vacuum hose from the air intake chamber.

WhereEverybodyKnowsYourName

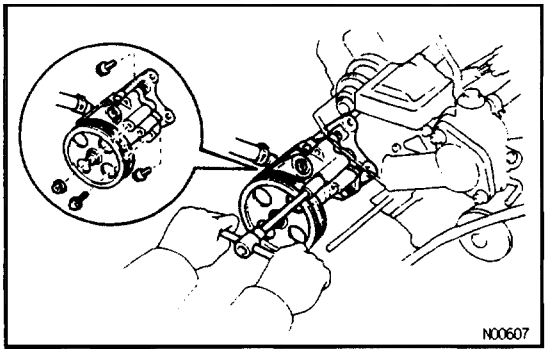

(b) Remove the nut and 3 bolts, and disconnect the PS pump from the engine.

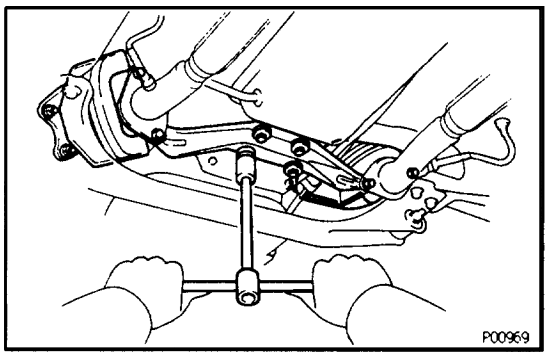

5. REMOVE TWC (FRONT)

(a) Remove the 4 bolts holding the pipe support bracket to the transmission.

(b) Remove the 4 bolts and nuts holding the front exhaust pipe to the TWC, and remove the pipe support bracket.

(c) Disconnect the front exhaust pipe from the TWC, and remove the 2 gaskets.

(d) Using a 14 mm deep socket wrench, remove the 3 nuts, TWC and gasket. Remove the 2 TWC.

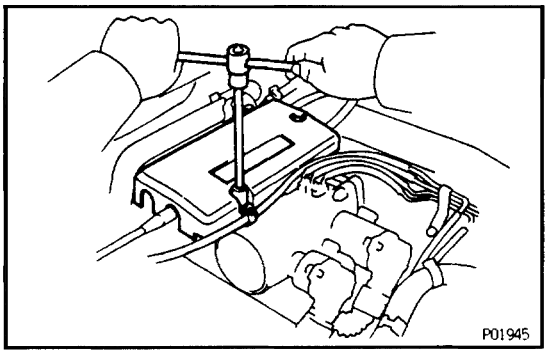

6. REMOVE THROTTLE BODY COVER

(a) Disconnect the EVAP hose from the hose clamp.

(b) Remove the cap nut.

(c) Loosen the 2 bolts, and remove the hose clamp and throttle body cover.

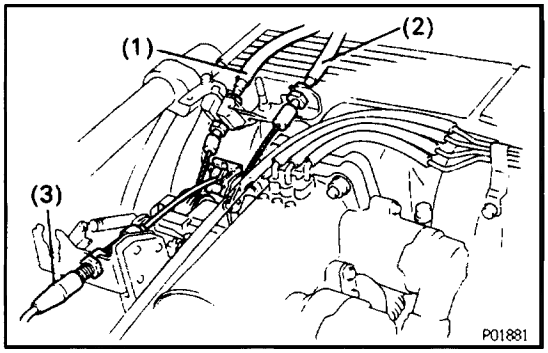

7. DISCONNECT CONTROL CABLES FROM THROTTLE BODY

Disconnect the following cables:

(1) Accelerator cable

(2) Transmission throttle control cable

(3) Cruise control actuator cable

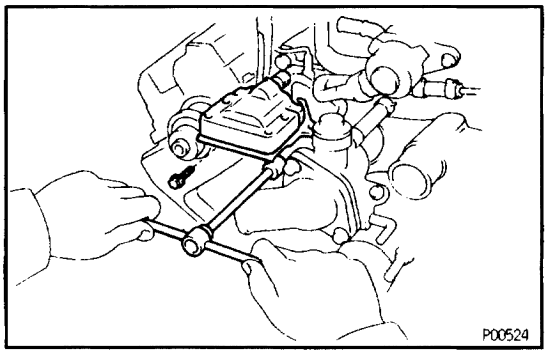

8. REMOVE RH IGNITION COIL

(a) Disconnect the ignition coil connector.

(b) Remove the 2 bolts and ignition coil.

WhereEverybodyKnowsYourName

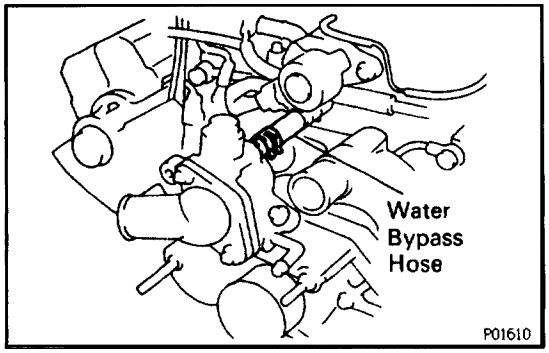

9. REMOVE WATER INLET AND INLET HOUSING

(a) Disconnect the water bypass hose from the IAC valve.

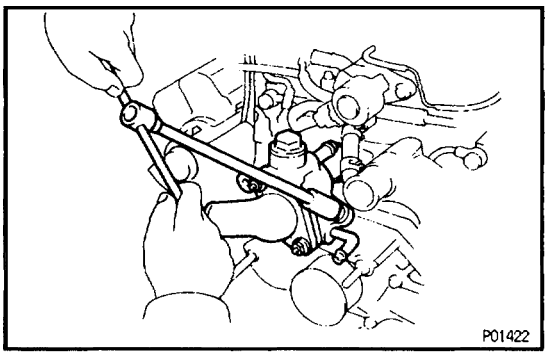

(b) Remove the 2 bolts holding the water inlet housing to water pump.
(c) Pull out the water inlet and inlet housing assembly.
(d) Remove the O–ring from the water inlet housing.

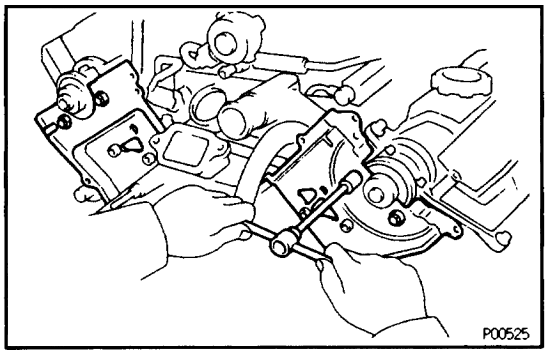

10. REMOVE TIMING BELT REAR PLATES

Remove the 2 bolts and rear plate. Remove the 2 rear plates.

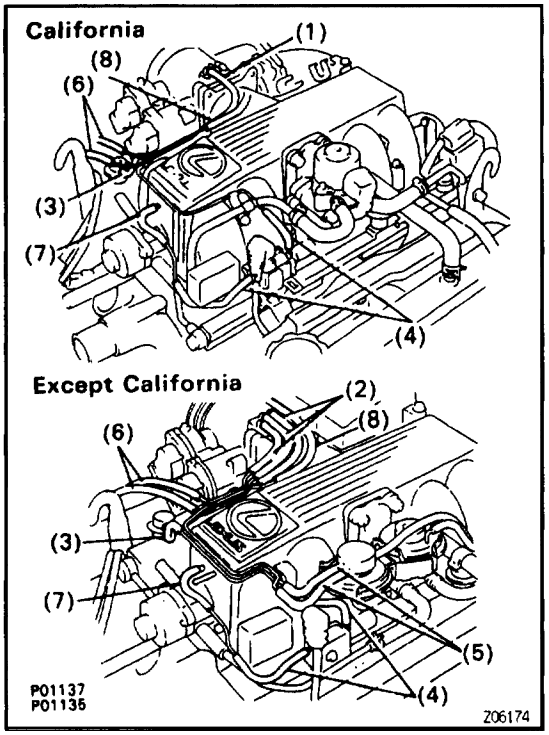

11. REMOVE VACUUM PIPE

(a) Disconnect the following hoses:
  (1) California:
  Vacuum hose from throttle body
  (2) Except California:
  3 vacuum hoses from throttle body
  (3) Vacuum hose from fuel pressure regulator
  (4) 2 vacuum hoses from VSV for fuel pressure control
  (5) Except California:
  2 vacuum hoses from EGR vacuum modulator
  (6) 2 vacuum hoses (from VSV for EVAP) from vacuum pipe
  (7) Vacuum hose (from VSV for fuel pressure) from air intake chamber
  (8) Vacuum hose (from charcoal canister) from vacuum pipe

WhereEverybodyKnowsYourName

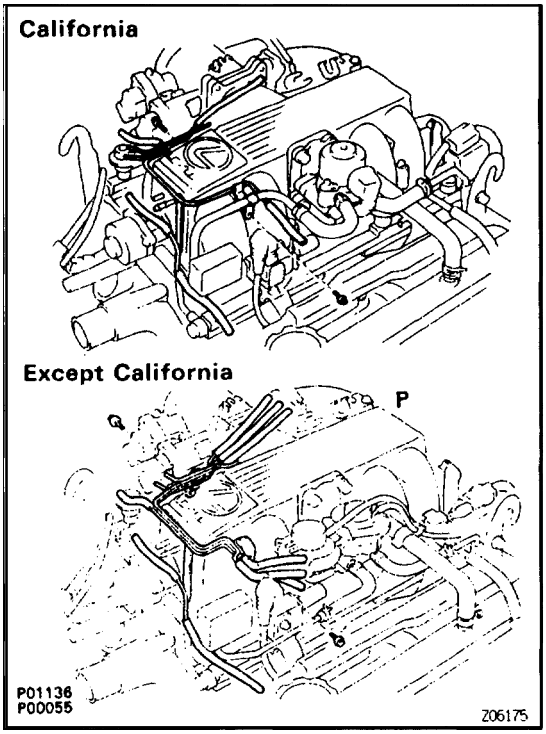

(b) Remove the 2 bolts, the vacuum pipe and hoses assembly.

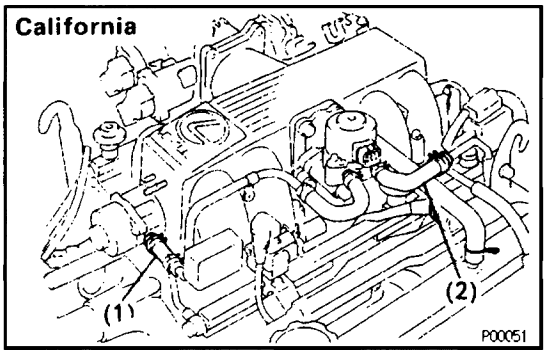

12. California:
REMOVE EGR VALVE

(a) Disconnect the EGR valve connector.

(b) Disconnect the following hoses:
  (1) Water bypass hose from IAC valve
  (2) Water bypass hose from water bypass pipe (from rear water by5pass joint)

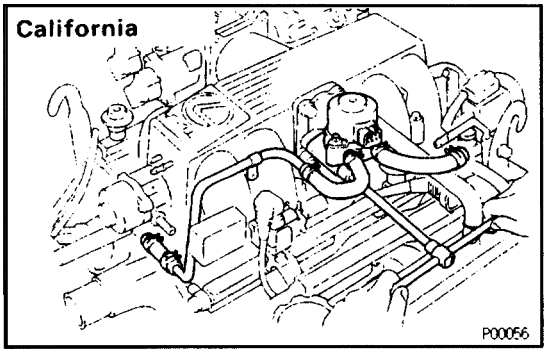

(c) Remove the 2 nuts, EGR valve and gasket.

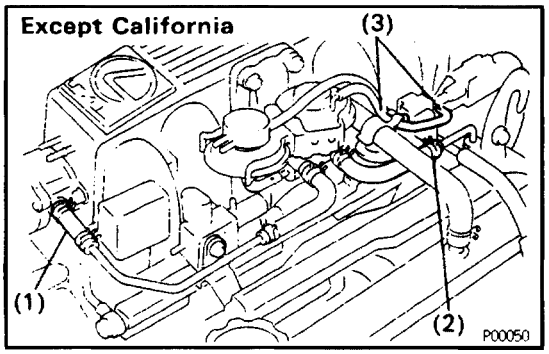

13. Except California:
REMOVE EGR VALVE AND VACUUM MODULATOR

(a) Disconnect the following hoses:
  (1) Water bypass hose from IAC valve
  (2) Water bypass hose from water bypass pipe (from rear water bypass joint)
  (3) 2 vacuum hoses from VSV for EGR

(b) Disconnect the hose clamp from the PCV hose.

WhereEverybodyKnowsYourName

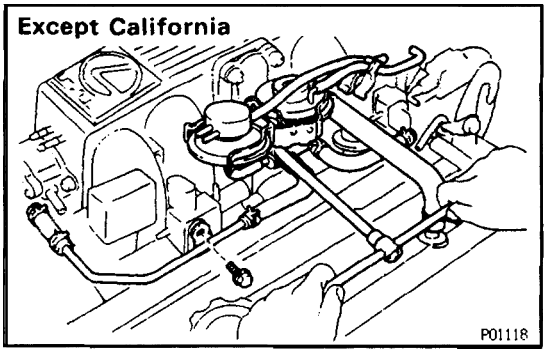

(c) Remove the bolt, 2 nuts, the EGR valve, vacuum modulator assembly and gasket.

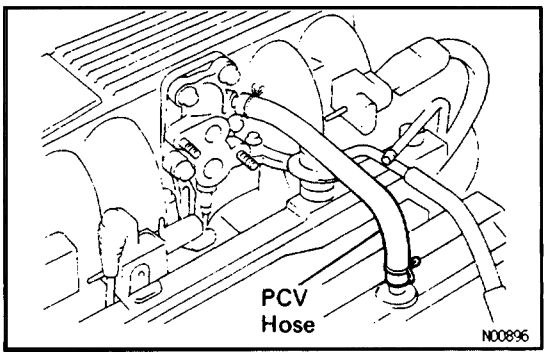

14. REMOVE EGR VALVE ADAPTOR

(a) Disconnect the EGR gas temperature sensor connector.

(b) Disconnect the PCV hose from the cylinder head.

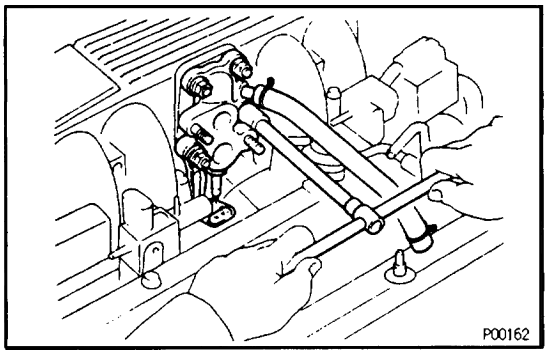

(c) Remove the 2 bolts, 2 nuts, EGR adaptor and gasket.

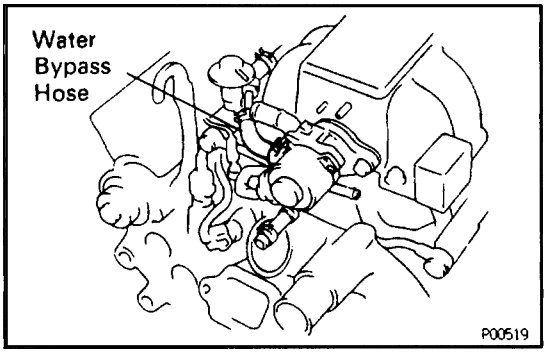

15. REMOVE IAC VALVE

(a) Disconnect the IAC valve connector.

(b) Disconnect the water bypass hose from the IAC valve.

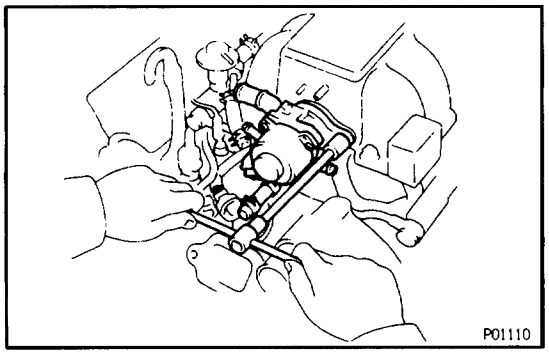

(c) Remove the 2 nuts, IAC valve and gasket.

WhereEverybodyKnowsYourName

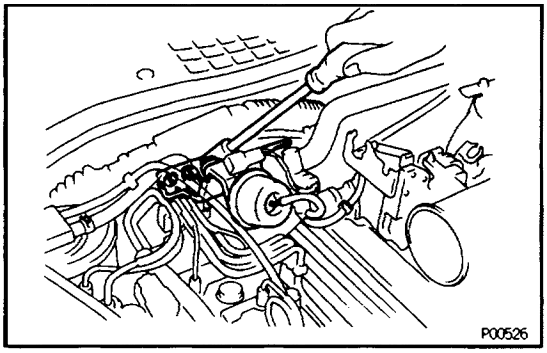

16. REMOVE HEATER WATER VALVE FROM BODY

(a) Disconnect the VSV connector.

(b) Disconnect the bolt holding the engine wire clamp to the water valve bracket.

(c) Remove the 2 bolts, and disconnect the water valve and bracket assembly.

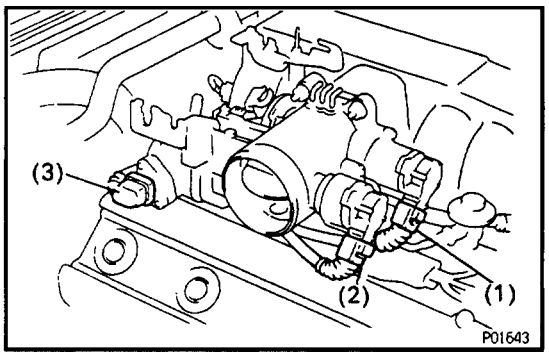

17. REMOVE THROTTLE BODY

(a) Disconnect the following connectors:
   (1) Throttle position sensor connector
   (2) w/ TRAC:
   Sub–throttle position sensor connector
   (3) w/ TRAC:
   Sub–throttle actuator connector

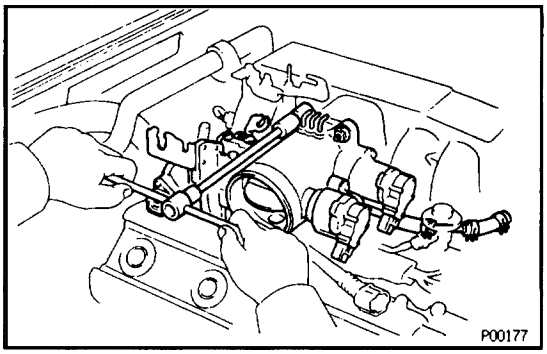

(b) Remove the 2 bolts and 2 nuts, and disconnect the throttle body from the air intake chamber.

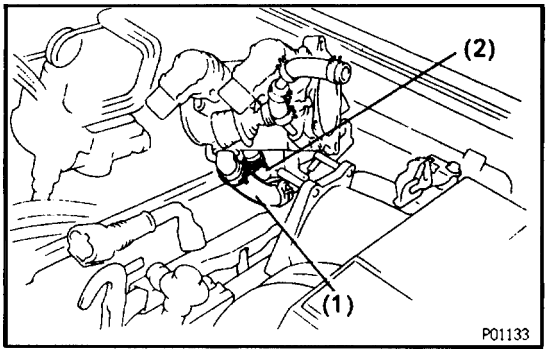

(c) Disconnect the following hoses, and remove the throttle body:
   (1) PCV hose from throttle body
   (2) Water bypass hose from throttle body

(d) Remove the throttle body gasket.

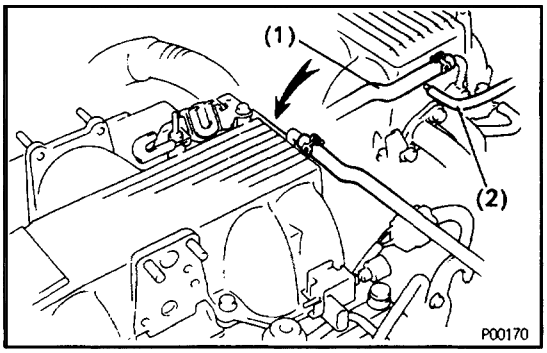

18. REMOVE AIR INTAKE CHAMBER

(a) Disconnect the following hoses:
   (1) Brake booster vacuum hose from union on air intake chamber
   (2) Vacuum hose (from VSV for heater water valve) from air intake chamber

WhereEverybodyKnowsYourName

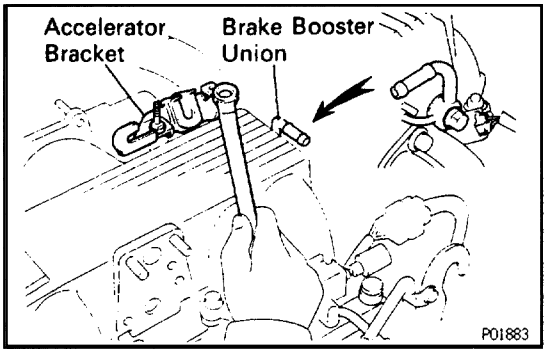

(b) Remove the bolt, stud bolt and accelerator bracket.
(c) Remove the union bolt, union and 2 gaskets.

(d) Disconnect the following connectors:
- Cold start injector connector
- VSV connector for fuel pressure control
- Except California:
  VSV connector for EGR

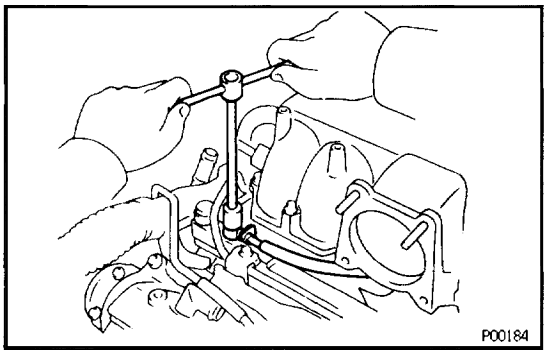

(e) Remove the union bolt and 2 gaskets, and disconnect the cold start injector tube from the RH delivery pipe.
CAUTION:
- **Put a shop towel under the delivery pipe.**
- **Slowly loosen the union bolt.**

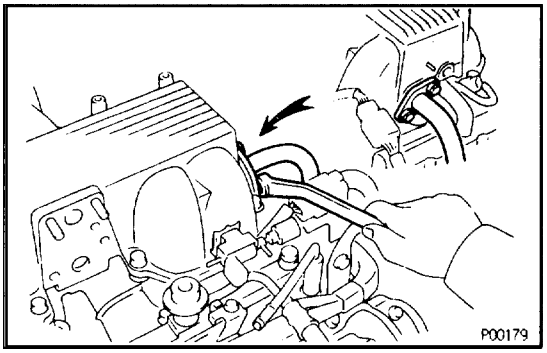

(f) Remove the 2 bolts and gasket, and disconnect the EGR pipe from the air intake chamber.

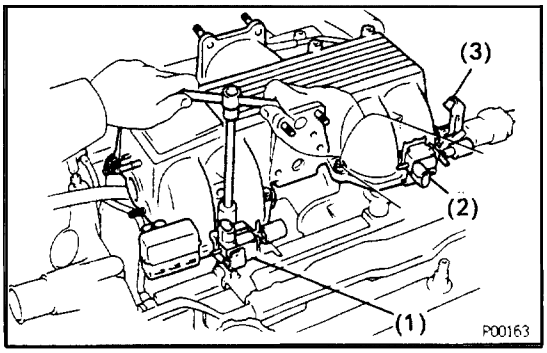

(g) Remove the 4 bolts, 8 nut and following parts:
  (1) VSV for fuel pressure
  (2) Except California:
      VSV for EGR
  (3) Transmission throttle cable bracket
(h) Disconnect the DLC1 from the air intake chamber.
(i) Remove the air intake chamber and 4 gaskets.

WhereEverybodyKnowsYourName

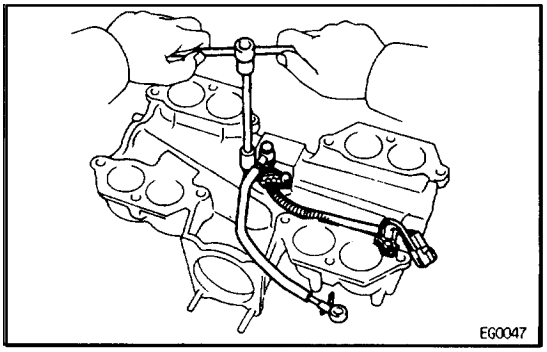

(j) Remove the 3 bolts, the cold start injector, tube, lead wire assembly and gasket.

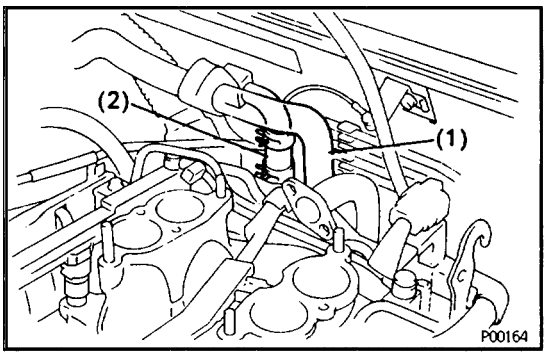

19. DISCONNECT HEATER WATER HOSES

Disconnect the following hoses:

(1) Water hose from water bypass pipe

(2) Water hose from rear water bypass joint

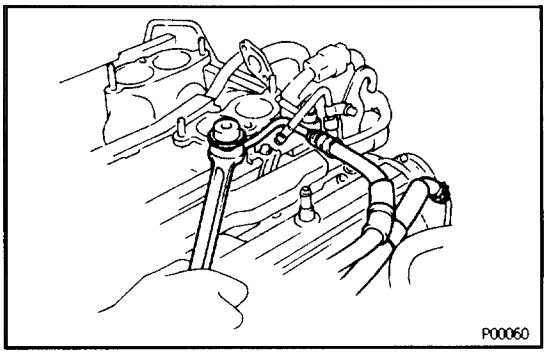

20. DISCONNECT FUEL INLET HOSE FROM DELIVERY PIPE

Remove the pulsation damper and 2 gaskets, and disconnect the fuel inlet hose from the delivery pipe.

CAUTION:

- **Put a shop towel under the delivery pipe.**
- **Slowly loosen the union bolts.**

21. DISCONNECT FUEL RETURN HOSE FROM FUEL RETURN PIPE

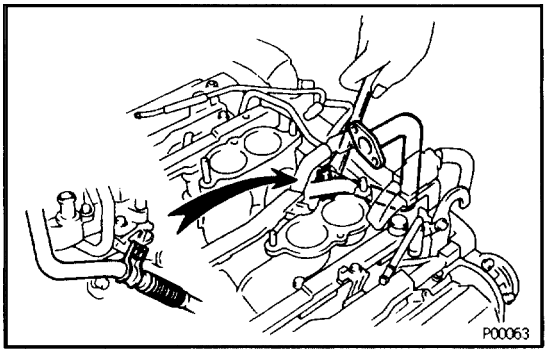

22. DISCONNECT EGR PIPE FROM RH CYLINDER HEAD

Remove the bolt holding the EGR pipe to the RH cylinder head, and disconnect the EGR pipe.

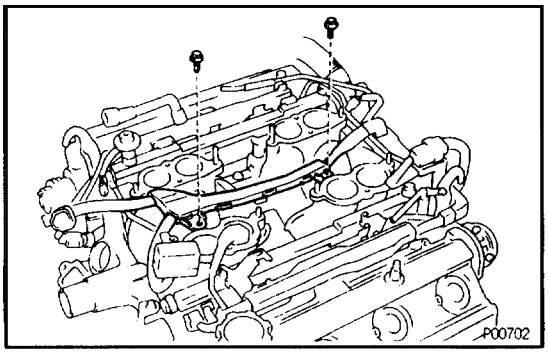

23. DISCONNECT ENGINE WIRE FROM INTAKE MANIFOLD

Remove the 2 bolts, and disconnect the engine wire protector from the intake manifold.

WhereEverybodyKnowsYourName

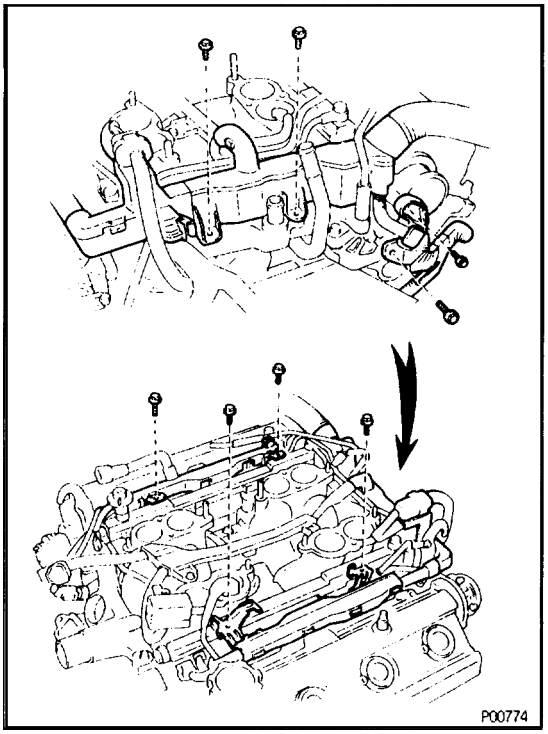

24. DISCONNECT ENGINE WIRE FROM DELIVERY PIPES, REAR WATER BYPASS JOINT AND RH CYLINDER HEAD

(a) Remove the 4 bolts, and disconnect the engine wire protectors from the delivery pipes.

(b) Remove the 2 bolts, and disconnect the engine wire protector from the water bypass joint.

(c) Remove the 2 bolts, and disconnect the engine wire protector from the rear side of the RH cylinder head.

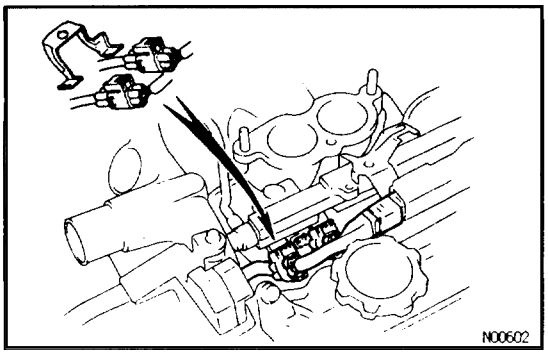

(d) Disconnect the 2 engine wire connectors from the connector bracket on the LH delivery pipe.

(e) Disconnect the 8 injector connectors.

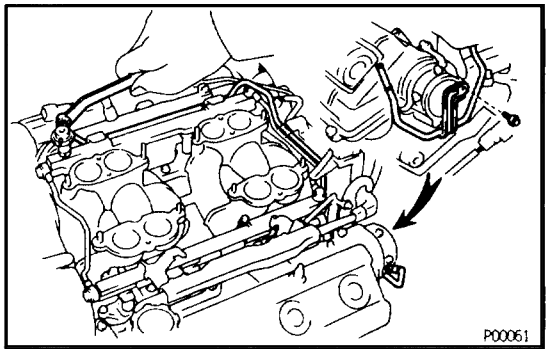

25. REMOVE FUEL RETURN PIPE

(a) Remove the bolt holding the fuel return pipe to the rear side of the LH cylinder head.

(b) Remove the union bolt, 2 gaskets and fuel return pipe.

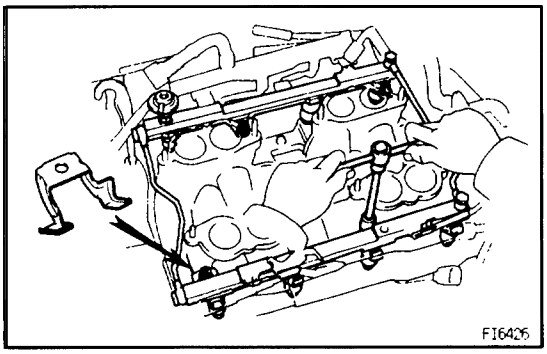

26. REMOVE DELIVERY PIPES AND INJECTORS

(a) Remove the 4 nuts holding the delivery pipes to intake manifold.

(b) Remove the connector bracket, the 2 delivery pipes and 8 injectors assembly.

NOTICE: Be careful not to drop the injectors when removing the delivery pipes.

(c) Remove the 8 insulators and 4 spacers from the cylinder head.

WhereEverybodyKnowsYourName

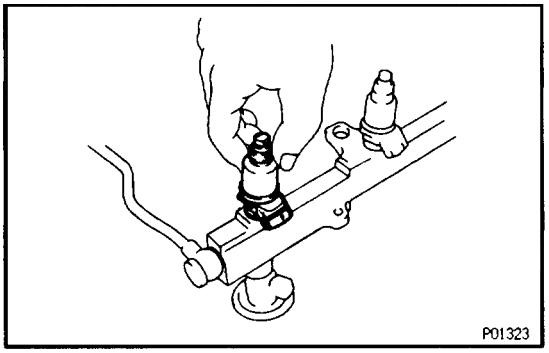

(d) Pull out the 8 injectors from the delivery pipes.
(e) Remove the O–ring and grommet from each injector.

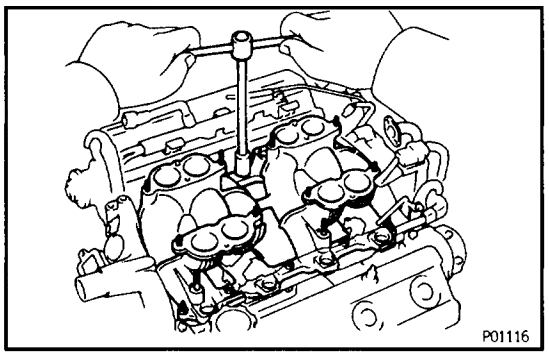

27. REMOVE INTAKE MANIFOLD

Remove the 6 bolts, 4 nuts, intake manifold and 2 gaskets.

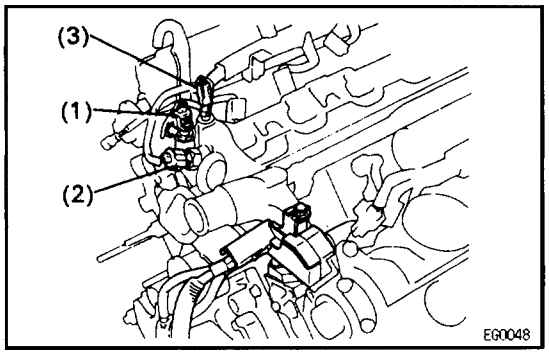

28. REMOVE FRONT WATER BYPASS JOINT

(a) Disconnect the following connectors:
  (1) ECT sensor connector
  (2) Cold start injector time switch connector
  (3) ECT sender gauge connector
(b) Remove the bolt, and disconnect the engine wire protector from the water bypass joint.

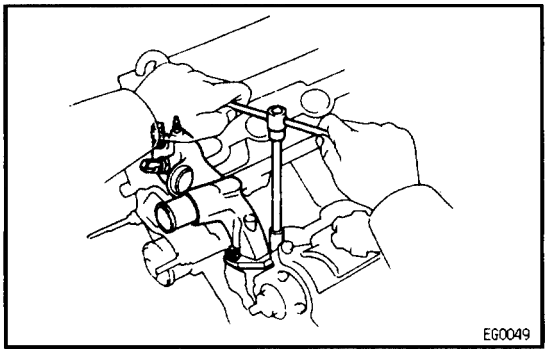

(c) Remove the 4 nuts, water bypass joint and 2 gaskets.

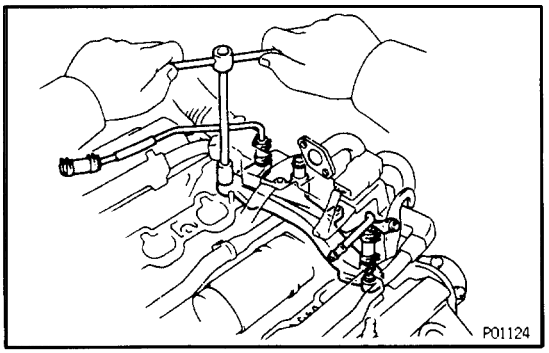

29. REMOVE REAR WATER BYPASS JOINT

(a) Remove the bolt holding the water bypass pipe to the LH rear engine hanger.
(b) Remove the 4 nuts, water bypass joint and 2 gasket.

WhereEverybodyKnowsYourName

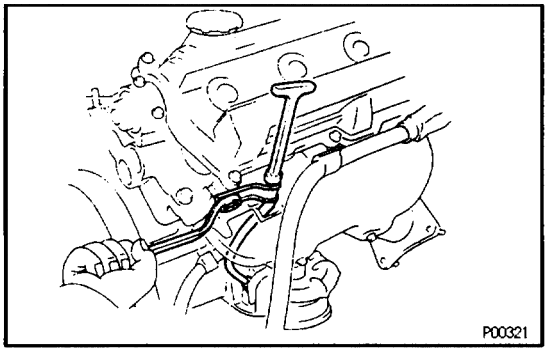

30. REMOVE OIL DIPSTICK AND GUIDE FOR TRANSMISSION

(a) Remove the bolt holding the oil dipstick to the LH cylinder head.

(b) Pull out the dipstick guide together with the dipstick from the oil pan.

(c) Remove the O–ring from the dipstick guide.

31. REMOVE OIL DIPSTICK AND GUIDE FOR ENGINE

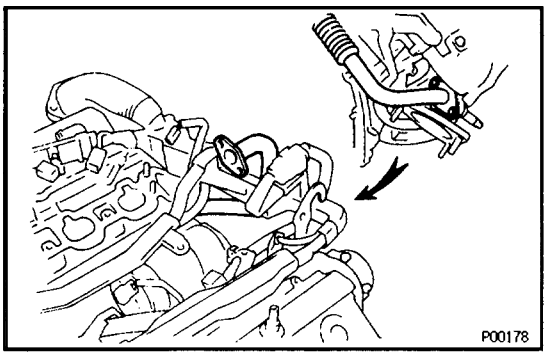

32. REMOVE EGR PIPE

(a) Remove the 2 bolts holding the EGR pipe to the RH exhaust pipe.

(b) Remove the EGR pipe and gasket.

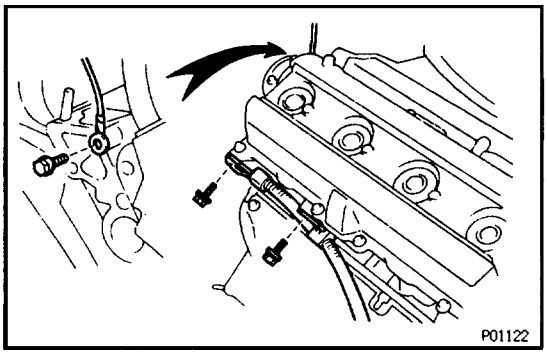

33. DISCONNECT ENGINE WIRE FROM CYLINDER HEADS

(a) Remove the 2 bolts, and disconnect the engine wire protector from the RH cylinder head.

(b) Remove the bolt, and disconnect the ground strap from the RH cylinder head.

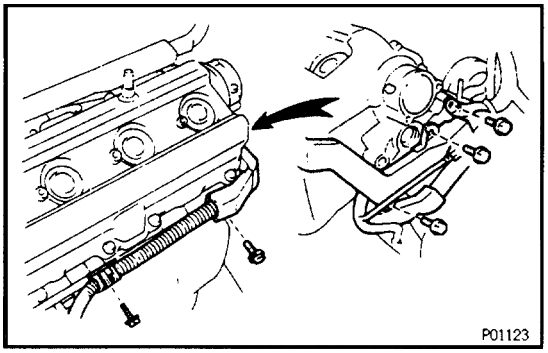

(c) Remove the 5 bolts, and disconnect the engine wire protector from the LH cylinder head.

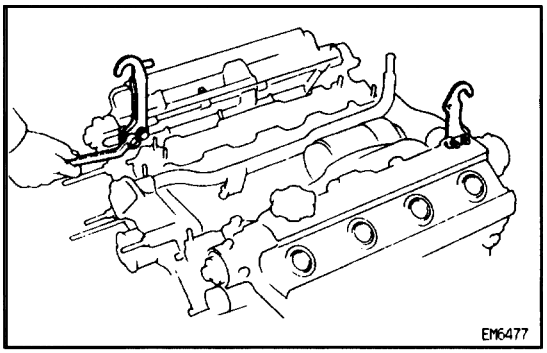

34. REMOVE ENGINE HANGERS

Remove the 2 bolts and engine hanger. Remove the 2 engine hangers.

WhereEverybodyKnowsYourName

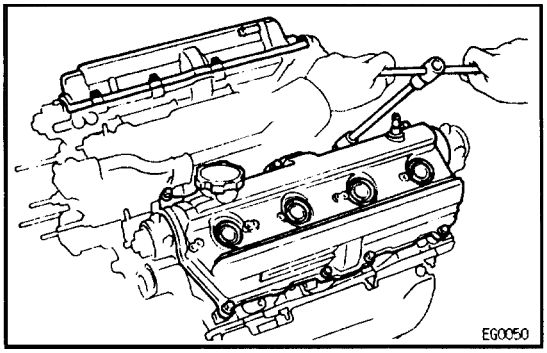

35. REMOVE CYLINDER HEAD COVERS

Remove the 8 bolts, seal washers, cylinder head cover and gasket. Remove the 2 cylinder head covers.

36. IF NECESSARY, REMOVE SEMI–CIRCULAR PLUGS

37. REMOVE CAMSHAFTS

NOTICE: Since the thrust clearance of the camshaft is small, the camshaft must be kept level while it is being removed. If the camshaft is not kept camshaft is not kept level, the portion of the cylinder head receiving the shaft thrust may crack or be damaged, causing the camshaft to seize or break. To avoid this, the following steps should be carried out.

A. Remove exhaust camshaft from RH cylinder head

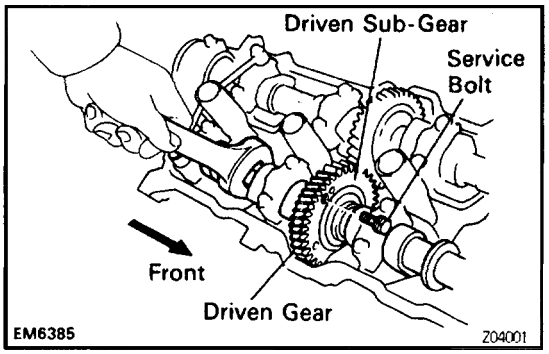

(a) Boring the service bolt hole of the driven sub–gear upward by turning the hexagon wrench head portion of the exhaust camshaft with a wrench.

(b) Secure the exhaust camshaft sub–gear to the drive gear with a service bolt.

Recommended service bolt:

6 mm for thread diameter
1.0 mm for thread pitch
16 – 20 mm (0.63 – 0.79 in.) for bolt length

HINT: When removing the camshaft, make sure that the torsional spring force of the sub–gear has been eliminated by the above operation.

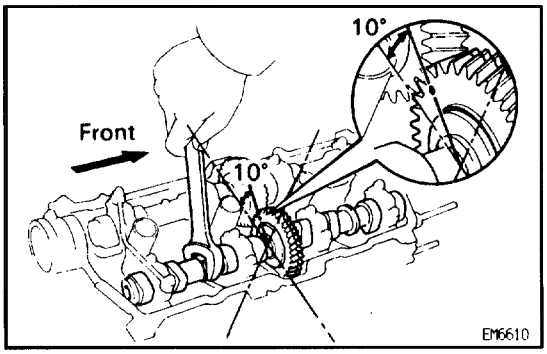

(c) Set the timing mark (1 dot mark) of the camshaft driven gear at approx. 10 angle by turning the hexagon wrench head portion of the exhaust camshaft with a wrench.

WhereEverybodyKnowsYourName

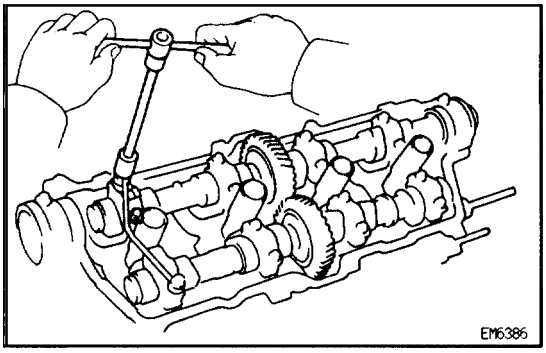

(d) Alternately loosen and remove the 2 bearing cap bolts holding the intake camshaft side of the oil feed pipe to the cylinder head.

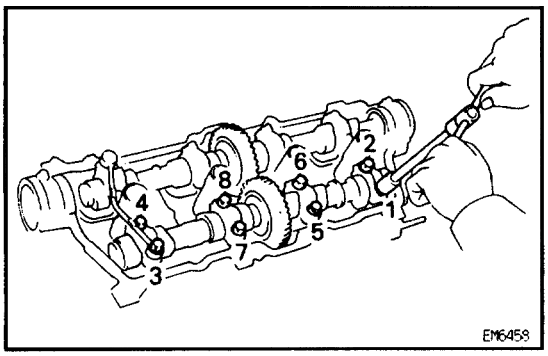

(e) Uniformly loosen and remove the 8 bearing cap bolts in several passes, in the sequence shown.

(f) Remove the oil feed pipe, 4 bearing caps and exhaust camshaft.

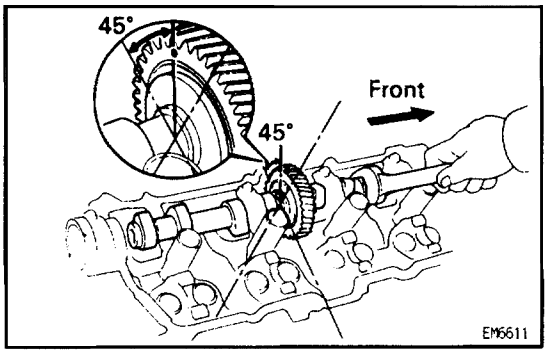

B. Remove intake camshaft from RH cylinder head

(a) Remove the rear bearing cap.

(b) Set the timing mark (1 dot mark) of the camshaft drive gear at approx. 45 angle by turning the hexagon wrench head portion of the intake camshaft with a wrench.

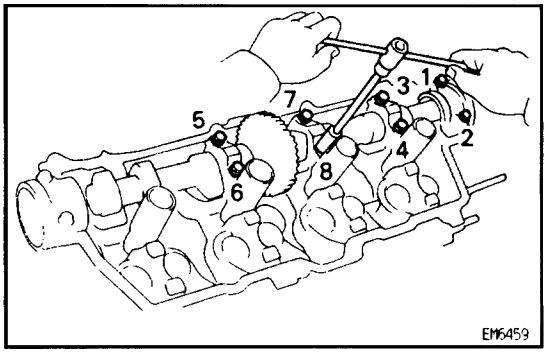

(c) Uniformly loosen and remove the 8 bearing cap bolts in several passes, in the sequence shown.

(d) Remove the 4 bearing caps, oil seal and intake camshaft.

WhereEverybodyKnowsYourName

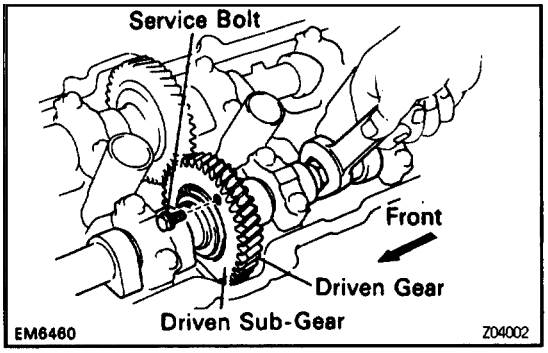

C. Remove exhaust camshaft from LH cylinder head

(a) Boring the service bolt hole of the driven sub–gear upward by turning the hexagon wrench head portion of the exhaust camshaft with a wrench.

(b) Secure the exhaust camshaft sub–gear to drive gear with a service bolt.

Recommended service bolt:

6 mm for thread diameter
1.0 mm for thread pitch
16 – 20 mm (0.63 – 0.79 in.) for bolt length

HINT: When removing the camshaft, make sure that the torsional spring force of the sub–gear has been eliminated by the above operation.

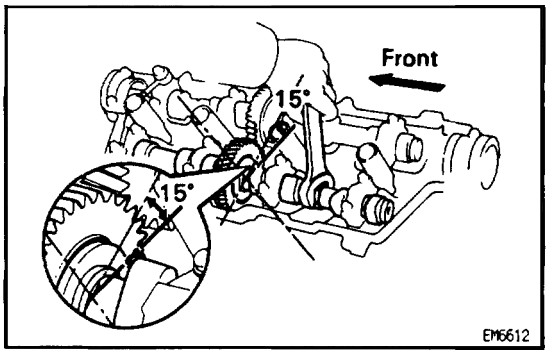

(c) Set the timing mark (2 dot marks) of the camshaft drive gear at approx. 15 angle by turning the hexagon wrench head portion of the exhaust camshaft with a wrench.

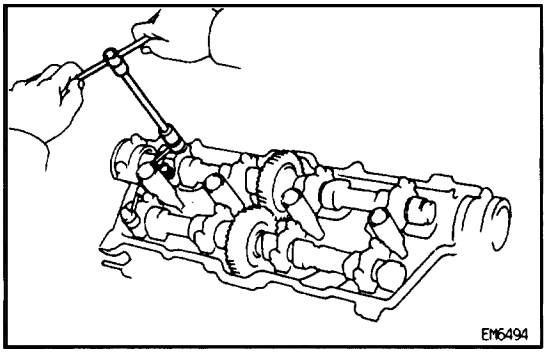

(d) Alternately loosen and remove the 2 bearing cap bolts holding the intake camshaft side of the oil feed pipe to the cylinder head.

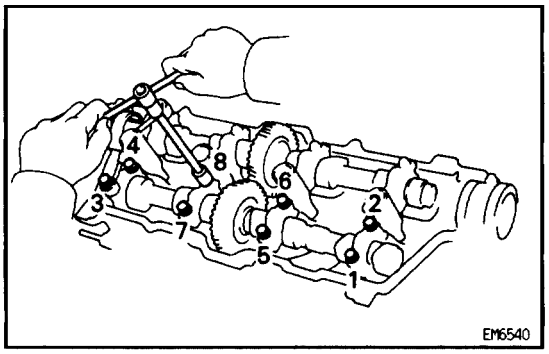

(e) Uniformly loosen and remove the 8 bearing cap bolts in several passes, in the sequence shown.

(f) Remove the oil feed pipe, 4 bearing caps and exhaust camshaft.

WhereEverybodyKnowsYourName

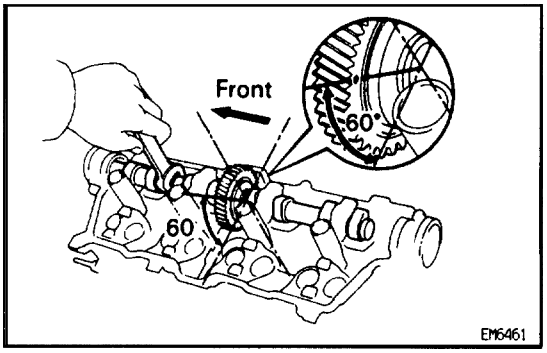

D. Remove intake camshaft from LH cylinder head

(a) Remove the bearing cap second from the front.

(b) Set the timing mark (1 dot mark) of the camshaft drive gear at approx. 60 angle by turning the hexagon wrench head portion of the intake camshaft with a wrench.

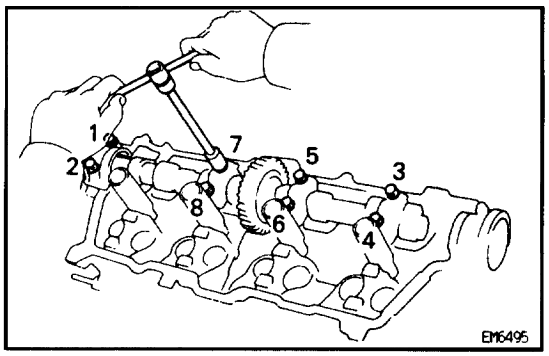

(c) Uniformly loosen and remove the 8 bearing cap bolts in several passes, in the sequence shown.

(d) Remove the 4 bearing caps, oil seal and intake camshaft.

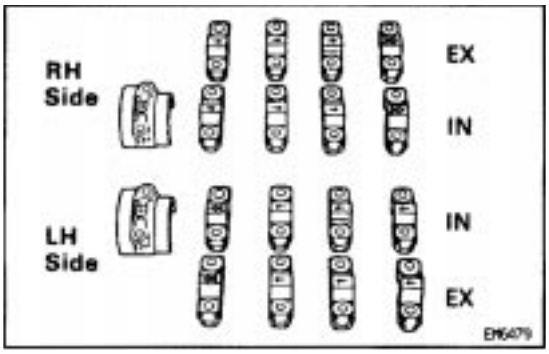

HINT: Arrange the bearing caps in correct order.

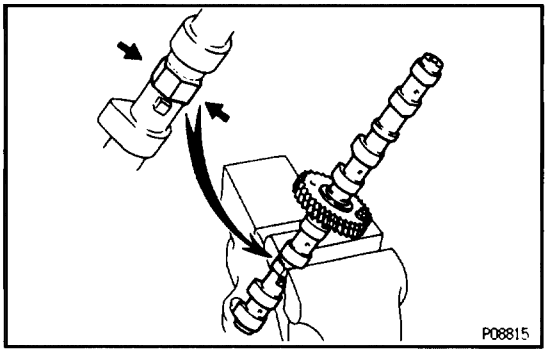

38. DISASSEMBLE EXHAUST CAMSHAFTS

(a) Mount the hexagon wrench head portion of the camshaft in a vise.

NOTICE: Be careful not to damage the camshaft.

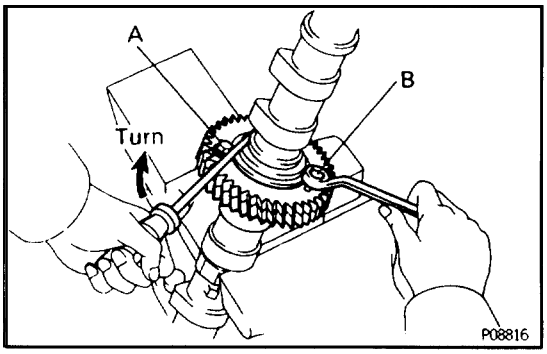

(b) Insert service bolt A into the service hole of the camshaft sub–gear.

(c) Using a screwdriver, turn the sub–gear clockwise, and remove service bolt B.

NOTICE: Be careful not to damage the camshaft.

WhereEverybodyKnowsYourName

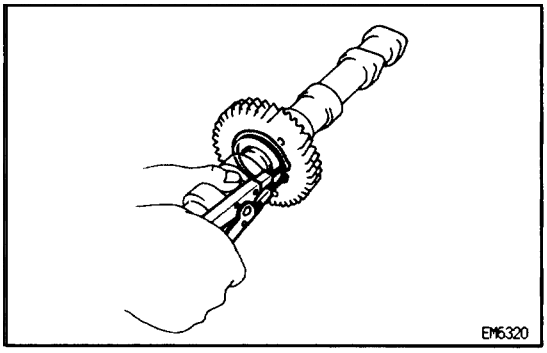

(d) Using snap ring pliers, remove the snap ring.

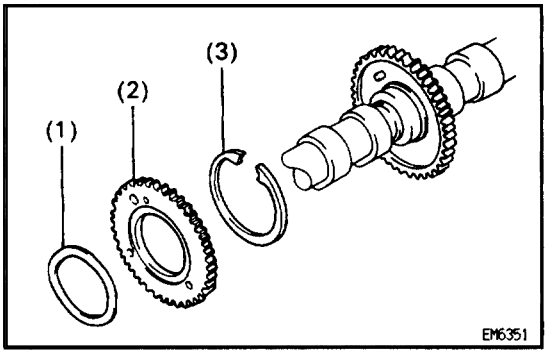

(e) Remove the following parts:
(1) Wave washer
(2) Camshaft sub–gear
(3) Camshaft gear spring

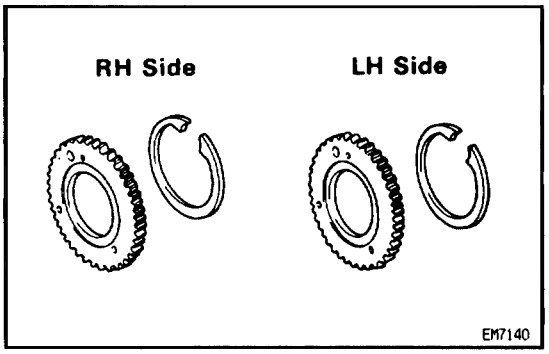

HINT: Arrange the camshaft sub–gears and gear spring (RH and LH sides).

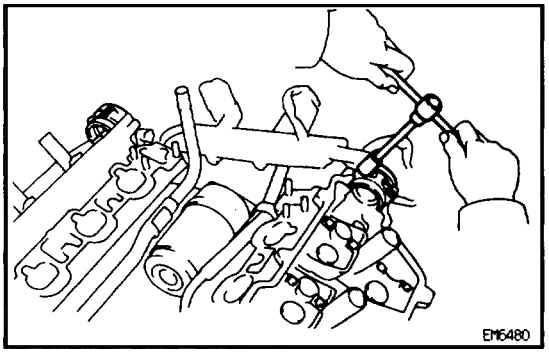

39. REMOVE CIRCULAR PLUGS

Remove the 2 bolts, seal washers, bearing cap and circular plug. Remove the 2 circular plugs.

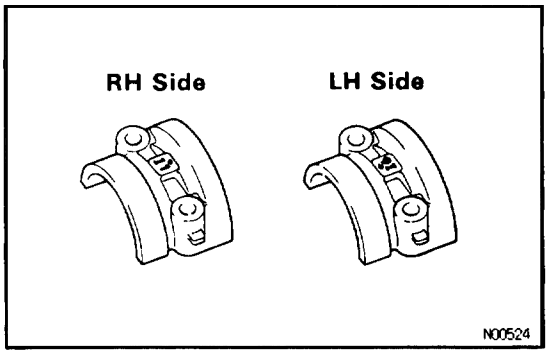

HINT: Arrange the bearing caps (RH and LH sides).

WhereEverybodyKnowsYourName

40. DISCONNECT MAIN HEATED OXYGEN SENSOR CONNECTORS

Disconnect the RH and LH oxygen sensor connectors.

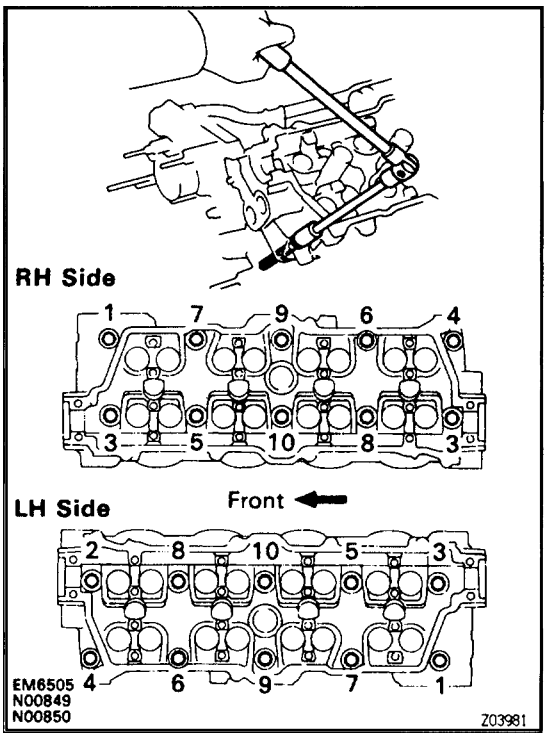

41. REMOVE CYLINDER HEADS

(a) Uniformly loosen the ten cylinder head bolts one side of each cylinder head in several passes, in the sequence shown, then do the other side as shown. Remove the 20 cylinder head bolts and plate washers.

NOTICE:

- **Cylinder head warpage or cracking could result from removing bolts in incorrect order.**

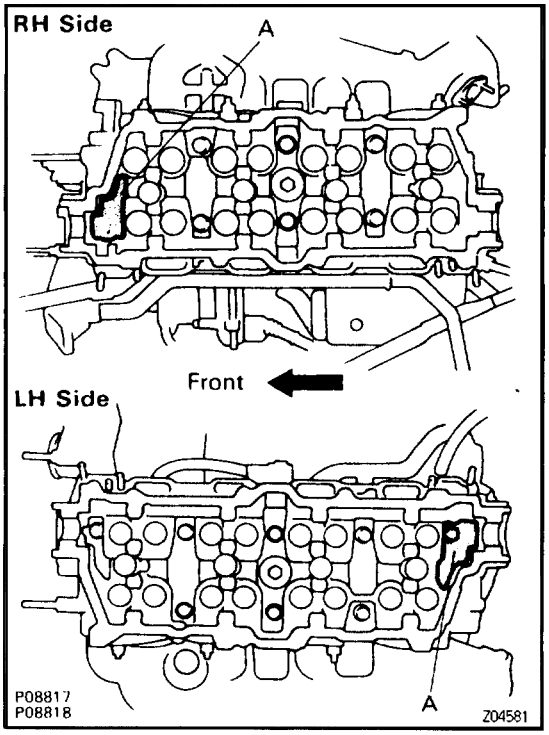

- **Do not drop the plate washer for cylinder head bolt into portion A of the cylinder head. If dropped into portion A, the plate washer will pass through the cylinder head and cylinder block into the oil pan.**

WhereEverybodyKnowsYourName

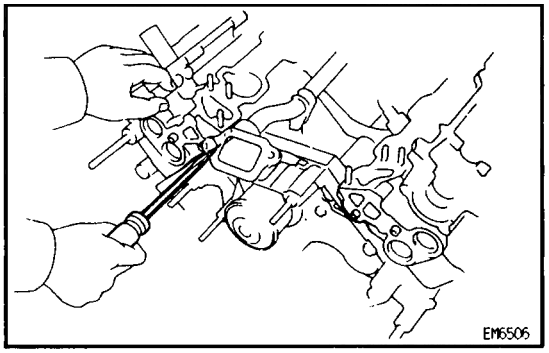

(b) Lift the cylinder head from the dowels on the cylinder block, and place the 2 cylinder heads on wooden blocks on a bench.
HINT: If the cylinder head is off, pry between the cylinder head and cylinder block with a screwdriver.
NOTICE: Be careful not to damage the contact surfaces of the cylinder head and cylinder block.

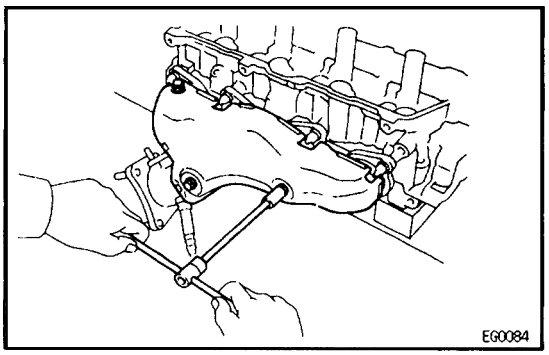

42. REMOVE EXHAUST MANIFOLD FROM RH CYLINDER HEAD

(a) Remove the 3 bolts and heat insulator.

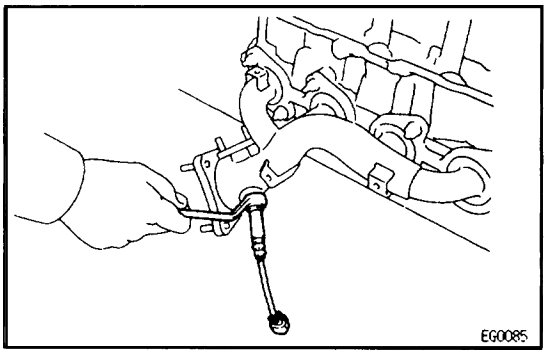

(b) Remove the main heated oxygen sensor.

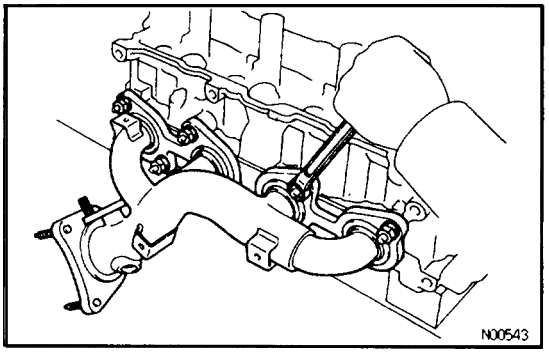

(c) Remove the 8 nuts, exhaust manifold and gasket.

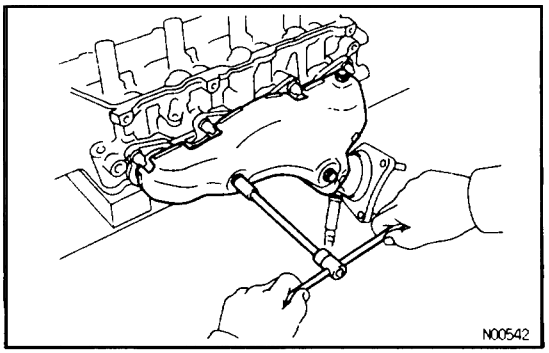

43. REMOVE EXHAUST MANIFOLD FROM LH CYLINDER HEAD

(a) Remove the 3 bolts and heat insulator.

WhereEverybodyKnowsYourName

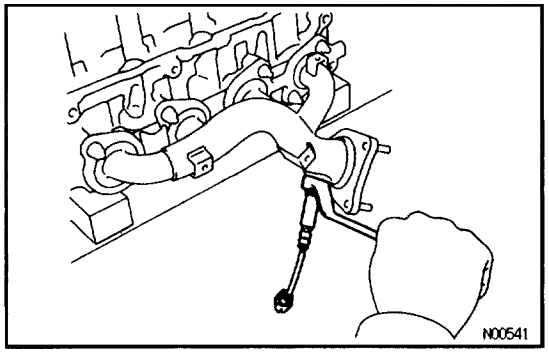

(b) Remove the main heated oxygen sensor.

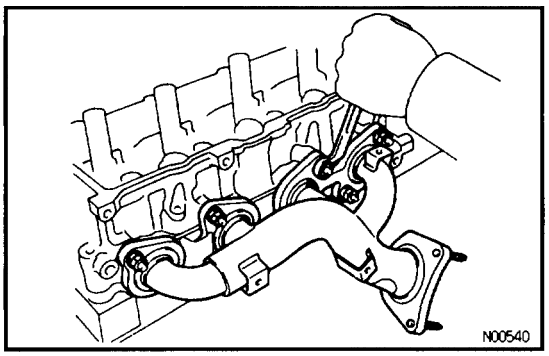

(c) Remove the 8 nuts, exhaust manifold and gasket.

EG11C–06

CYLINDER HEAD DISASSEMBLY

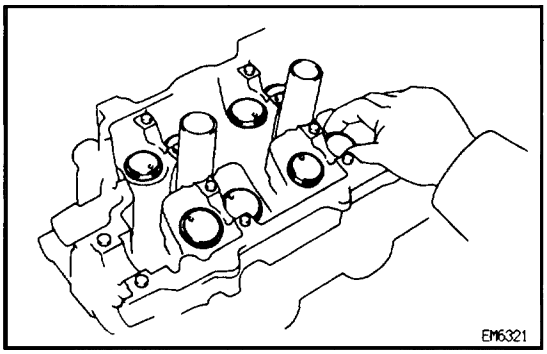

(See Components for Removal and Installation)

1. REMOVE VALVE LIFTERS AND SHIMS

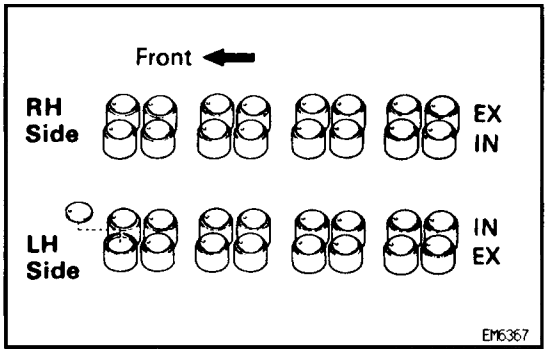

HINT: Arrange the valve lifters and shims in correct order.

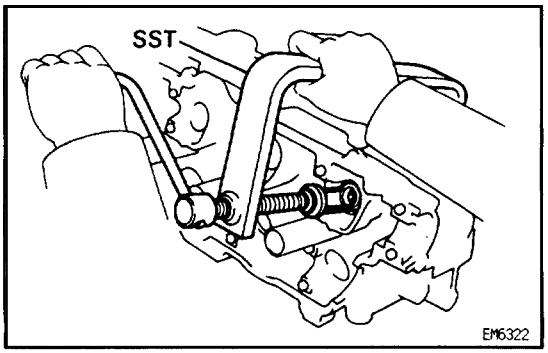

2. REMOVE VALVES

(a) Using SST, compress the valve spring and remove the 2 keepers.
SST 09202–70010

WhereEverybodyKnowsYourName

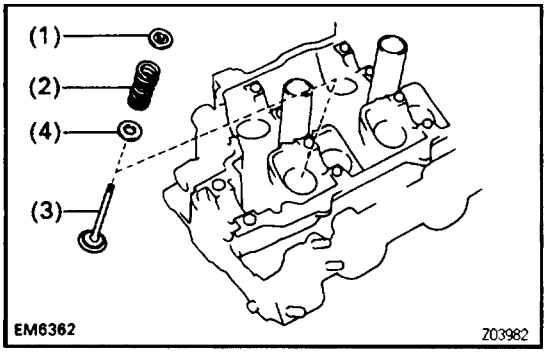

(b) Remove the following parts:
(1) Spring retainer
(2) Valve spring
(3) Valve
(4) Spring seat

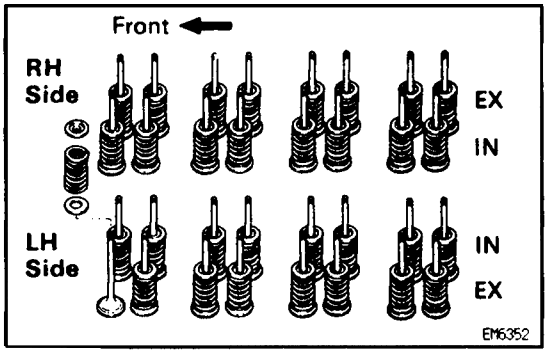

HINT: Arrange the valves, valve springs, spring seats and spring retainers incorrect order.

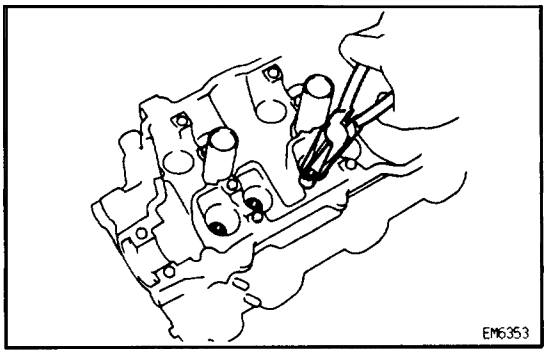

(c) Using needle–nose pliers, remove the oil seal.

WhereEverybodyKnowsYourName

EG1KM–02

CYLINDER HEAD COMPONENTS INSPECTION AND REPAIR

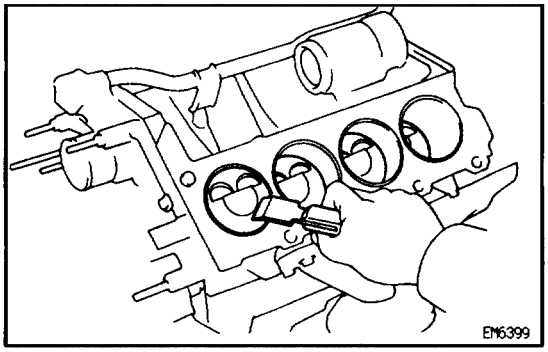

1. CLEAN TOP SURFACES OF PISTONS AND CYLINDER BLOCK

(a) Turn the crankshaft, and bring each piston to top dead center (TDC). Using a gasket scraper, remove all the carbon from the piston top surface.

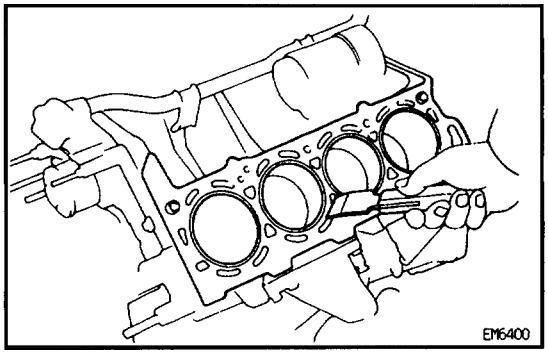

(b) Using a gasket scraper, remove all the gasket material from the cylinder block surface.

(c) Using compressed air, blow carbon and oil from the bolt holes.

CAUTION: Protect your eyes when using high–compressed air.

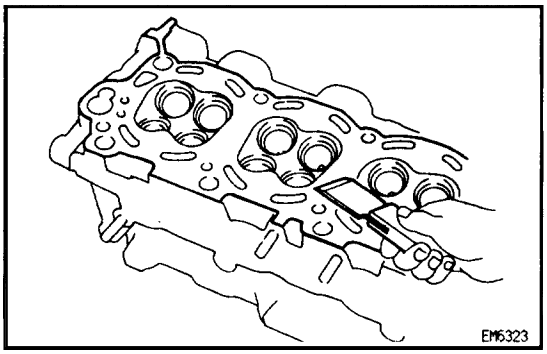

2. CLEAN CYLINDER HEAD

A. Remove gasket material

Using a gasket scraper, remove all the gasket material from the cylinder block contact surface.

NOTICE: Be careful not to scratch the cylinder block contact surface.

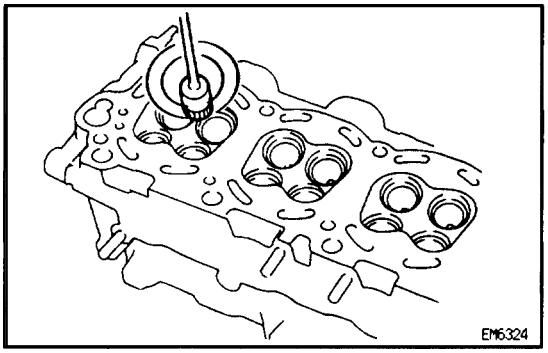

B. Clean combustion chambers

Using a wire brush, remove all the carbon from the combustion chambers.

NOTICE: Be careful not to scracth the cylinder block contact surface.

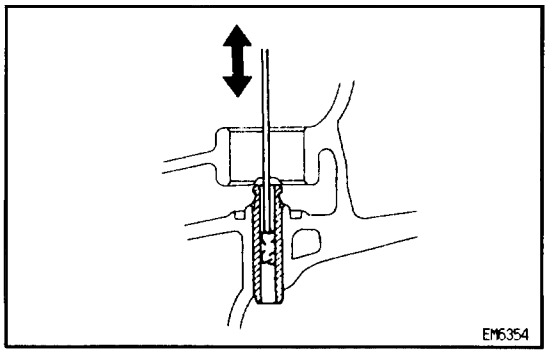

C. Clean valve guide bushings

Using a valve guide bushing brush and solvent, clean all the guide bushings.

WhereEverybodyKnowsYourName

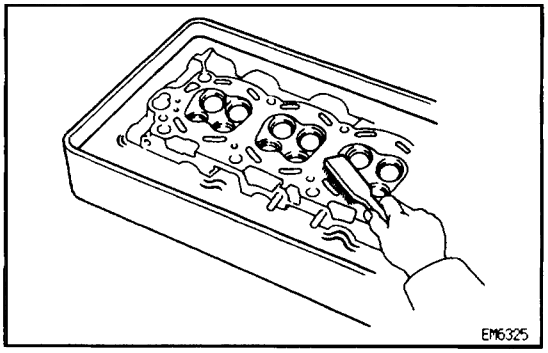

D. Clean cylinder head

Using a soft brush and solvent, thoroughly clean the cylinder head.

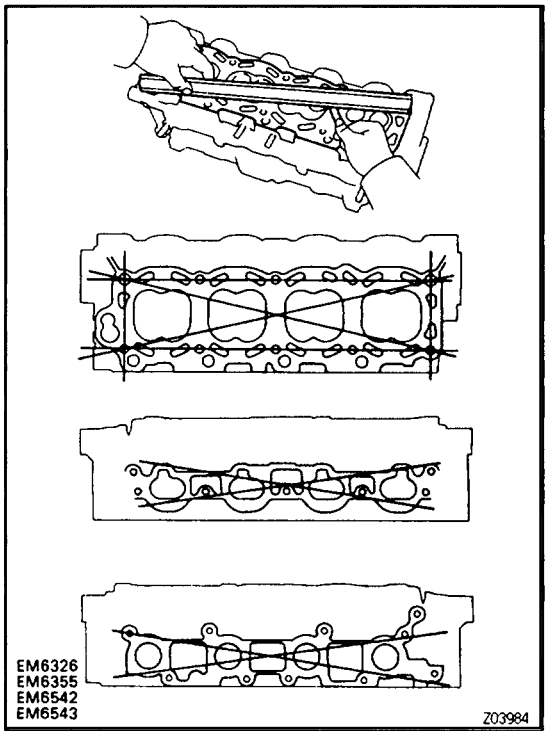

3. INSPECT CYLINDER HEAD

A. Inspect for flatness

Using a precision straight edge and feeler gauge, measure the surface contacting the cylinder block and the manifolds for warpage.

Maximum warpage:

0.10 mm (0.0039 in.)

If warpage is greater than maximum, replace the cylinder head.

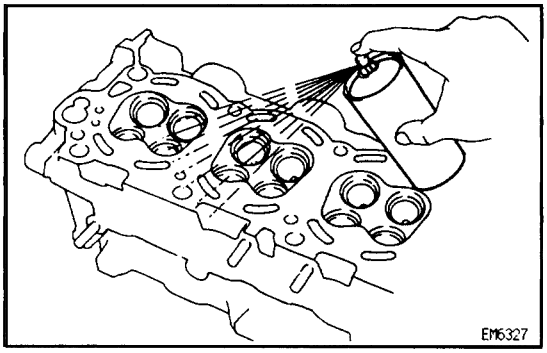

B. Inspect for cracks

Using a dye penetrant, check the combustion chamber, intake ports, exhaust ports and cylinder block surface for cracks.

If cracked, replace the cylinder head.

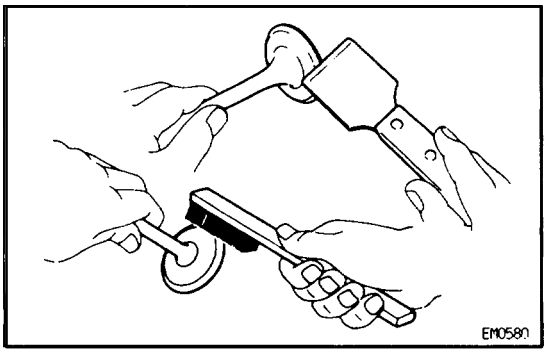

4. CLEAN VALVES

(a) Using a gasket scraper, chip off any carbon from the valve head.

(b) Using a wire brush, thoroughly clean the valve.

WhereEverybodyKnowsYourName

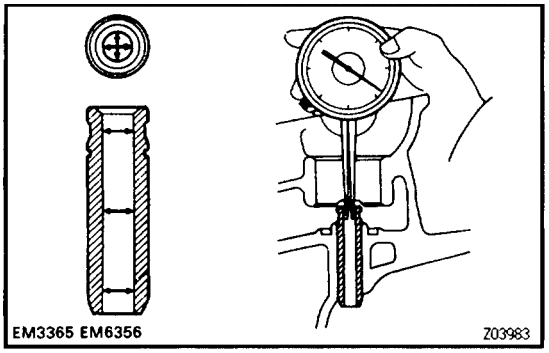

5. INSPECT VALVE STEMS AND GUIDE BUSHINGS

(a) Using a caliper gauge, measure the inside diameter of the guide bushing.

Bushing inside diameter:

6.010 – 6.030 mm (0.2366 – 0.2374 in.)

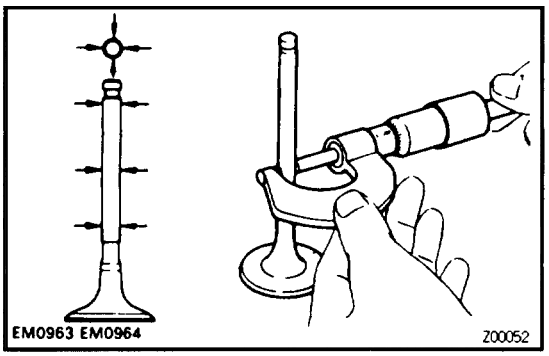

(b) Using a micrometer, measure the diameter of the valve stem.

Valve stem diameter:

Intake

5.970 – 5.985 mm (0.2350 – 0.2356 in.)

Exhaust

5.965 – 5.980 mm (0.2348 – 0.2354 in.)

(c) Subtract the valve stem diameter measurement from the guide bushing inside diameter measurement

Standard oil clearance:

Intake

0.025 – 0.060 mm (0.0010 – 0.0024 in.)

Exhaust

0.030 – 0.065 mm (0.0012 – 0.0026 in.)

Maximum oil clearance:

Intake

0.08 mm (0.0031 in.)

Exhaust

0.10 mm (0.0039 in.)

If the clearance is greater than maximum, replace the valve and guide bushing.

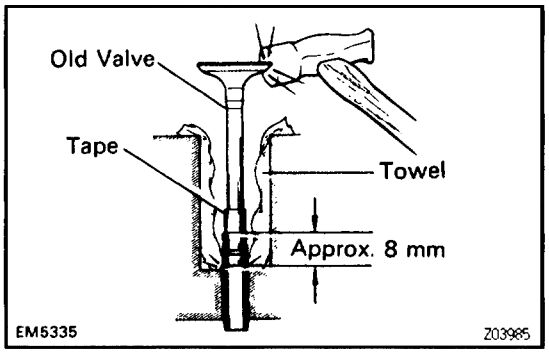

6. IF NECESSARY, REPLACE VALVE GUIDE BUSHINGS

(a) Insert an old valve wrapped with tape into the valve guide bushing, and break off the valve guide bushing by hitting it with a hammer. Remove the snap ring.

HINT: Wrap the tape approx. 8 mm (0.31 in.) from the valve stem ends.

NOTICE: Be careful not to damage the valve lifter hole.

WhereEverybodyKnowsYourName

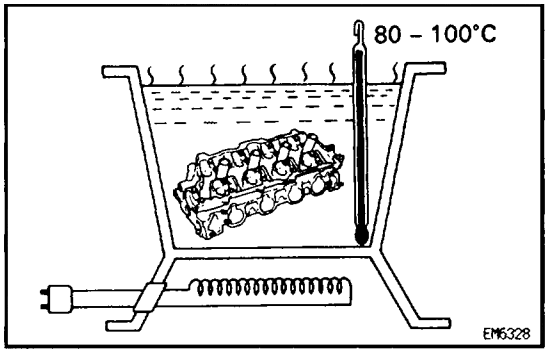

(b) Gradually heat the cylinder head to 80 – 100 C (176 – 212 F).

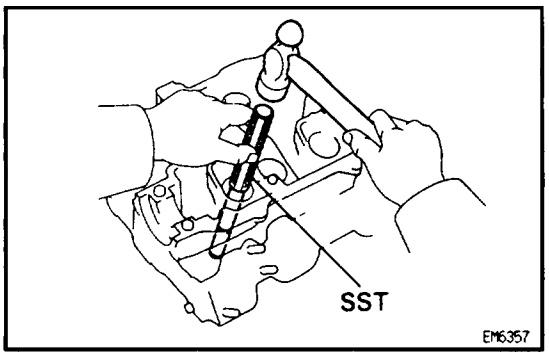

(c) Using SST and a hammer, tap out the guide bushing.
SST 09201–70010

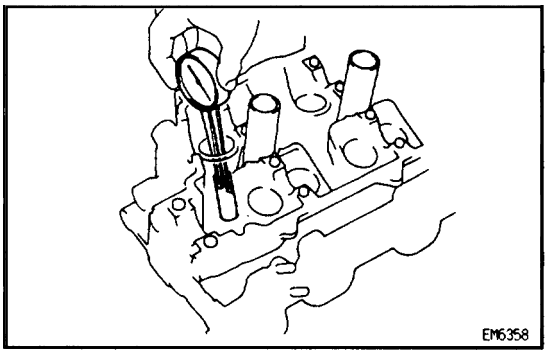

(d) Using a caliper gauge, measure the bushing bore diameter of the cylinder head.

(e) Select a new guide bushing (STD or O/S 0.05).

Both intake and exhaust

Bushing bore diameter mm (in.)	Bushing size
11.000 – 11.027 (0.4331 – 0.4341)	Use STD
11.050 – 11.077 (0.4350 – 0.4361)	Use O/S 0.05

V00228

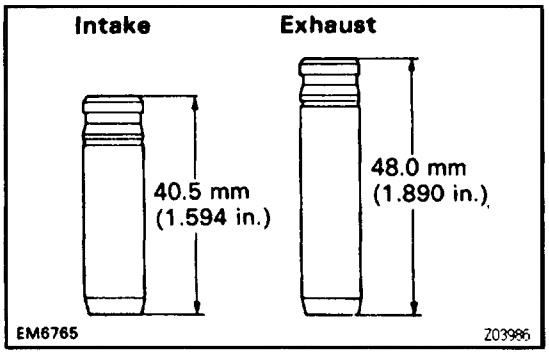

If the bushing bore diameter of the cylinder head is greater than 11.027 mm (0.4341 in.), machine the bushing bore to the following dimension:
11.050 – 11.077 mm (0.4350 – 0.4361 in.)
If the bushing bore diameter of the cylinder head is greater than 11.077 mm (0.4361 in.), replace the cylinder head.

HINT: Different bushings are used for the intake and exhaust.

WhereEverybodyKnowsYourName

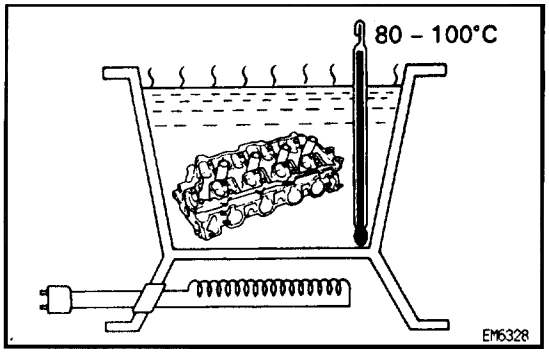

(f) Gradually heat the cylinder head to 80 – 100 C (176 – 212 F).

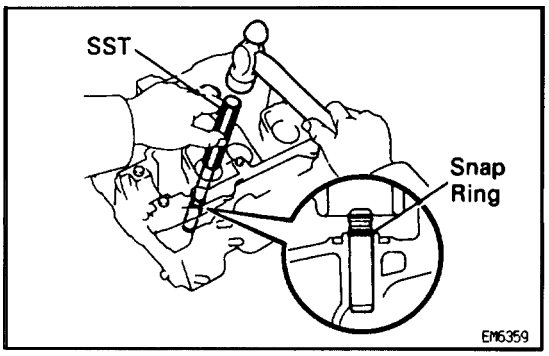

(g) Using SST and a hammer, tap in a new guide bushing until the snap ring makes contact with the cylinder head.
SST 09201–70010

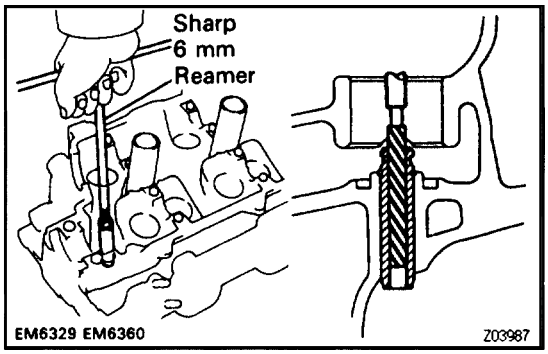

(h) Using a sharp 6 mm reamer, ream the guide bushing to obtain the standard specified clearance (See step 5 above) between the guide bushing and valve stem.

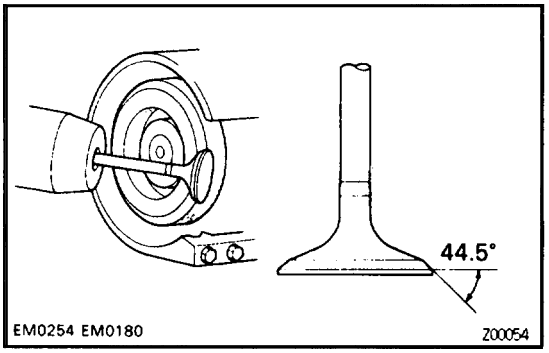

7. INSPECT AND GRIND VALVES

(a) Grind the valve enough to remove pits and carbon.

(b) Check that the valve is ground to the correct valve face angle.
Valve face angle:
44.5°

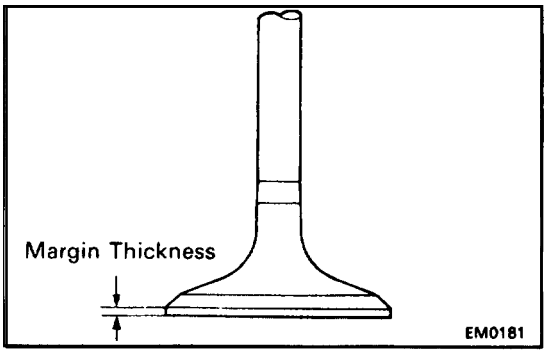

(c) Check the valve head margin thickness.
Standard margin thickness:
1.0 mm (0.039 in.)
Minimum margin thickness:
0.5 mm (0.020 in.)
If the margin thickness is less than minimum, replace the valve.

WhereEverybodyKnowsYourName

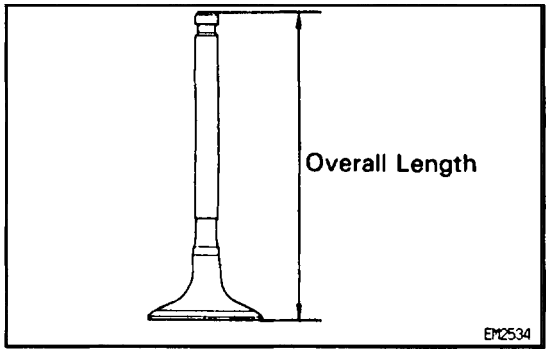

(d) Check the valve overall length.

Standard overall length:

Intake

94.95 mm (3.7382 in.)

Exhaust

96.90 mm (3.8150 in.)

Minimum overall length:

Intake

94.45 mm (3.7185 in.)

Exhaust

96.40 mm (3.7953 in.)

If the overall length is less than minimum, replace the valve.

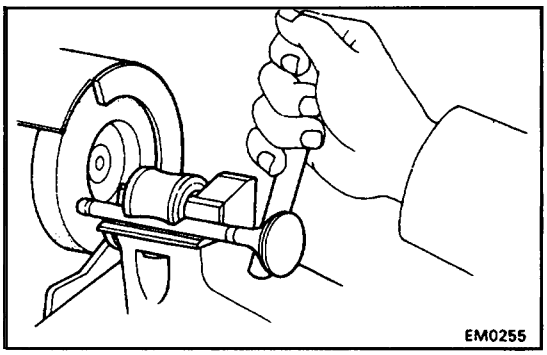

(e) Check the surface of the valve stem tip for wear.

If the valve stem tip is worn, resurface the tip with a grinder or replace the valve.

NOTICE: Do not grind off more than minimum.

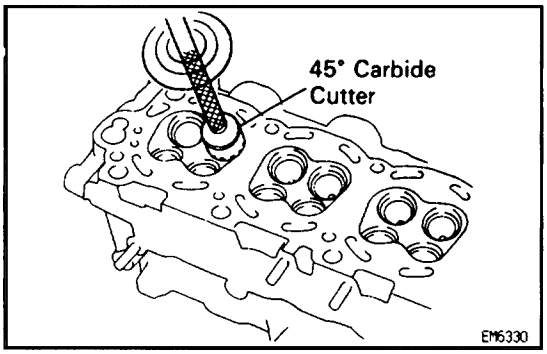

8. INSPECT AND CLEAN VALVE SEATS

(a) Using a 45 carbide cutter, resurface the valve seats. Remove only enough metal to clean the seats.

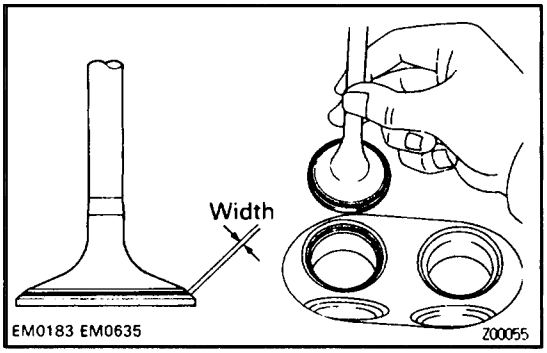

(b) Check the valve seating position.

Apply a light coat of prussian blue (or white lead) to the valve face. Lightly press the valve against the seat. Do not rotate valve.

(c) Check the valve face and seat for the following:

- If blue appears 360 around the face, the valve is concentric. If not, replace the valve.
- If blue appears 360 around the valve seat, the guide and face are concentric. If not, resurface the seat.

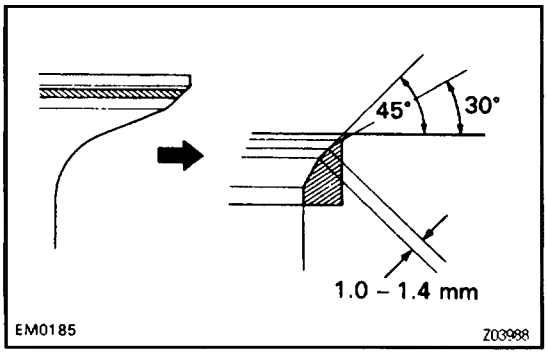

- Check that the seat contact is in the middle of the valve face with the following width:

  1.0 – 1.4 mm (0.039 – 0.055 in.)

If not, correct the valve seats as follows:

(1) If the seating is too high on the valve face, use 30° and 45° cutters to correct the seat.

WhereEverybodyKnowsYourName

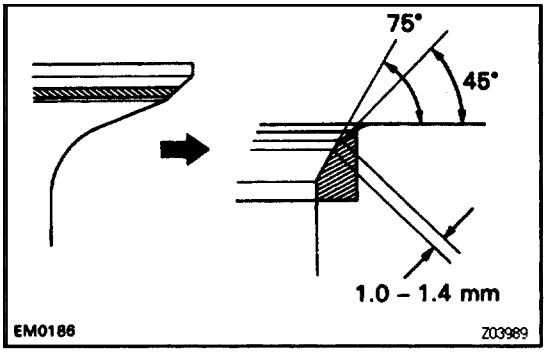

(2) If the seating is too low on the valve face, use 75° and 45° cutters to correct the seat.

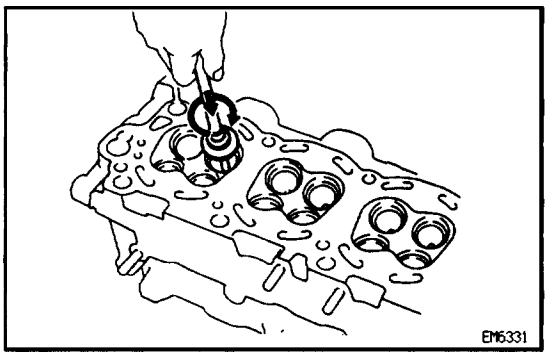

(d) Hand–lap the valve and valve seat with an abrasive compound.

(e) After hand–lapping, clean the valve and valve seat.

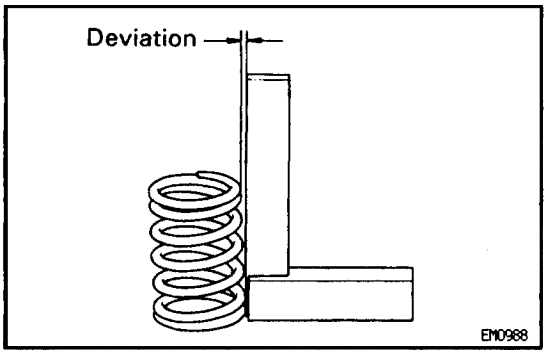

9. INSPECT VALVE SPRINGS

(a) Using a steel square, measure the deviation of the valve spring.

Maximum deviation:

2.0 mm (0.079 in.)

If the deviation is greater than maximum, replace the valve spring.

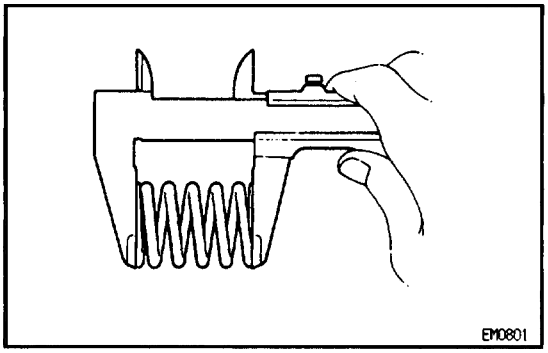

(b) Using a vernier caliper, measure the free length of the valve spring.

Free length:

43.6 mm (1.717 in.)

If the free length is not as specified, replace the valve spring.

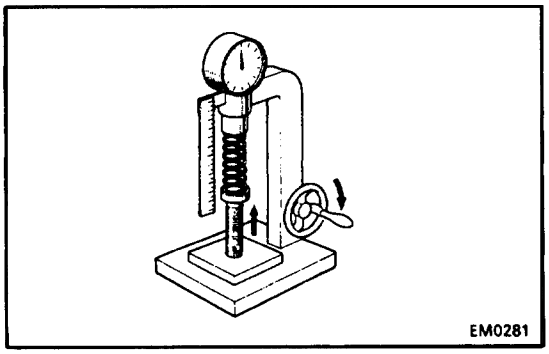

(c) Using a spring tester, measure the tension of the valve spring at the specified installed length.

Installed tension:

186 – 206 N (19.0 – 21.0 kgf, 41.9 – 46.3 lbf)

at 32.9 mm (1.295 in.)

If the installed tension is not as specified, replace the valve spring.

WhereEverybodyKnowsYourName

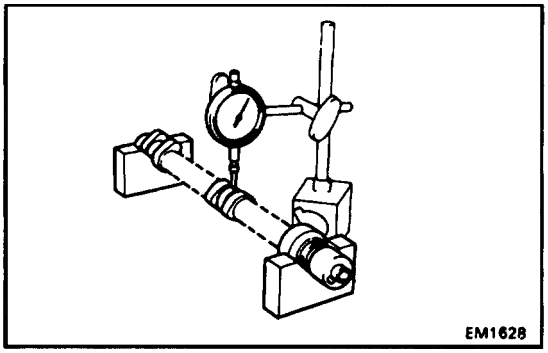

10. INSPECT CAMSHAFTS AND BEARINGS

A. Inspect camshaft for runout

(a) Place the camshaft on V–blocks.

(b) Using a dial indicator, measure the circle runout at the center journal.

Maximum circle runout:

0.08 mm (0.0031 in.)

If the circle runout is greater than maximum, replace the camshaft.

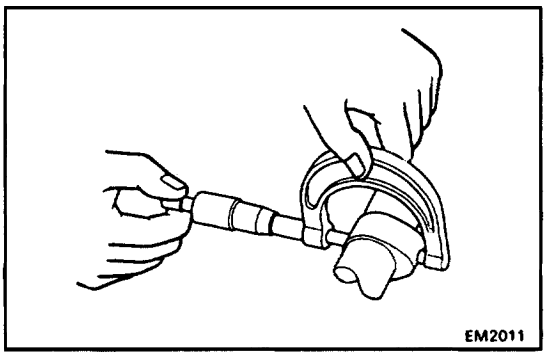

B. Inspect cam lobes

Using a micrometer, measure the cam lobe height.

Standard cam lobe height:

Intake

41.710 – 41.810 mm (1.6421 – 1.6461 in.)

Exhaust

41.910 – 42.010 mm (1.6500 – 1.6539 in.)

Minimum cam lobe height:

Intake

41.56 mm (1.6362 in.)

Exhaust

41.76 mm (1.6441 in.)

If the cam lobe height is less than minimum, replace the camshaft.

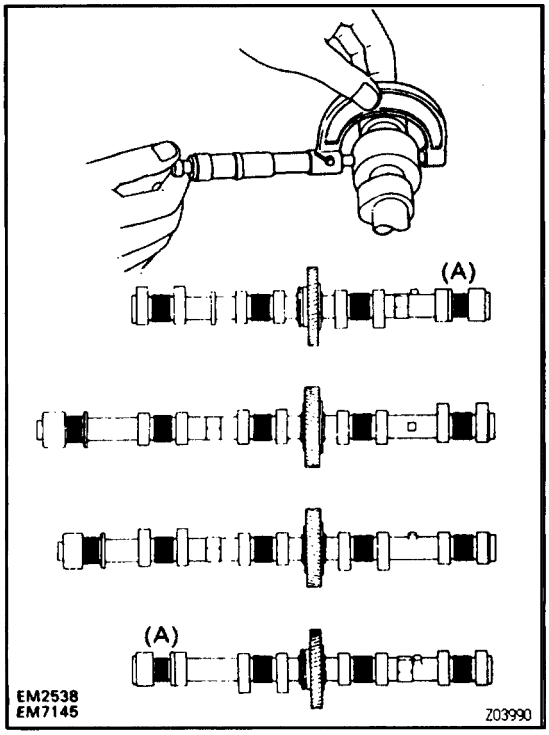

C. Inspect camshaft journals

Using a micrometer, measure the journal diameter.

Journal diameter:

Exhaust camshaft thrust portion (A)

23.959 – 23.975 mm (0.9433 – 0.9439 in.)

Others

26.954 – 26.970 mm (1.0612 – 1.0618 in.)

If the journal diameter is not as specified, check the oil clearance.

WhereEverybodyKnowsYourName

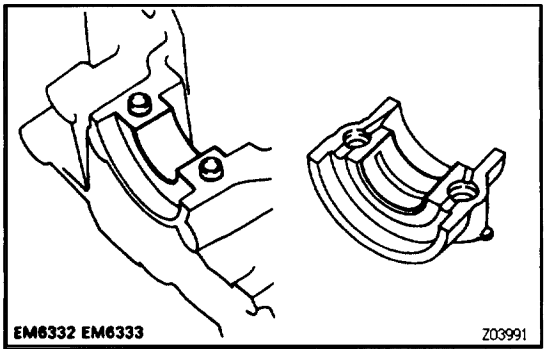

D. Inspect camshaft bearings

Check that bearings for flaking and scoring.

If the bearings are damaged, replace the bearing caps and cylinder head a set.

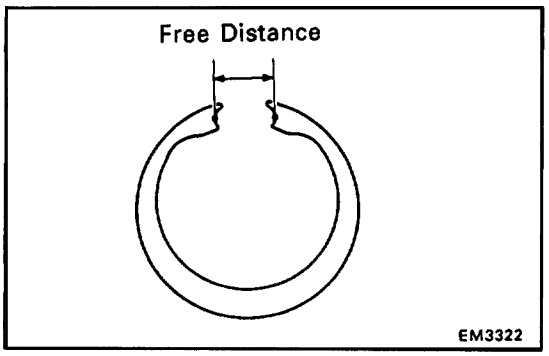

E. Inspect camshaft gear spring

Using a vernier caliper measure the free distance between the spring ends.

Free distance:

18.2 – 18.8 mm (0.712 – 0.740 in.)

If the free distance is not as specified, replace the gear spring.

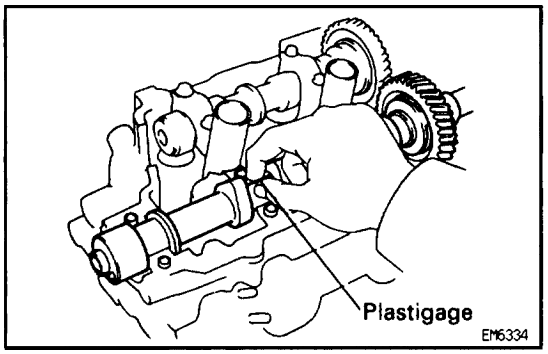

F. Inspect camshaft journal oil clearance

(a) Clean the bearing caps and camshaft journals.

(b) Place the camshafts on the cylinder head.

(c) Lay a strip of Plastigage across each of the camshaft journals.

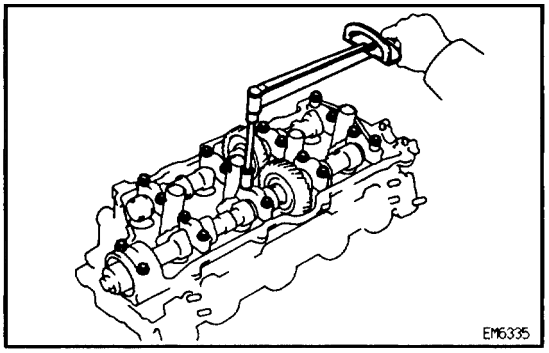

(d) Install the bearing caps.

(See step 7 on pages EG–114 to 120)

Torque: 16 N·m (160 kgf·cm, 12 ft·lbf)

NOTICE: Do not turn the camshaft.

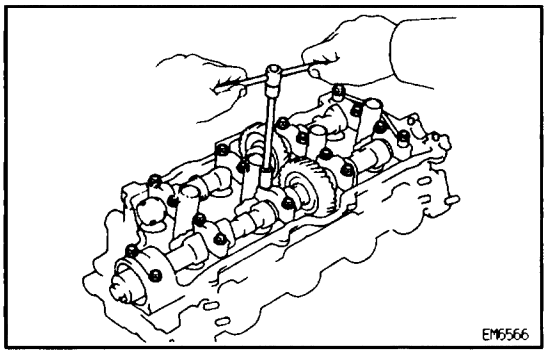

(e) Remove the bearing caps.

WhereEverybodyKnowsYourName

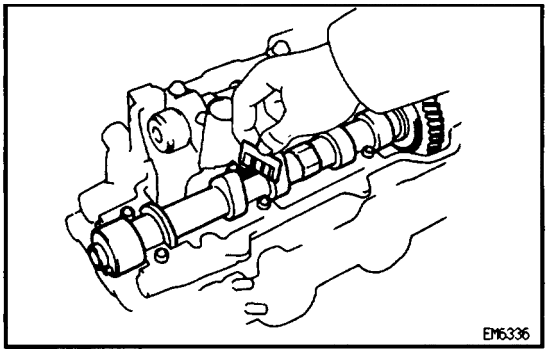

(f) Measure the Plastigage at its widest point.

Standard oil clearance:

Exhaust camshaft thrust portion

0.025 – 0.061 mm (0.0010 – 0.0024 in.)

Others

0.030 – 0.067 mm (0.0012 – 0.0026 in.)

Maximum oil clearance:

0.10 mm (0.0039 in.)

If the oil clearance is greater than maximum, replace the camshaft. If necessary, replace the bearing caps and cylinder head as a set.

(g) Completely remove the Plastigage.

(h) Remove the camshafts.

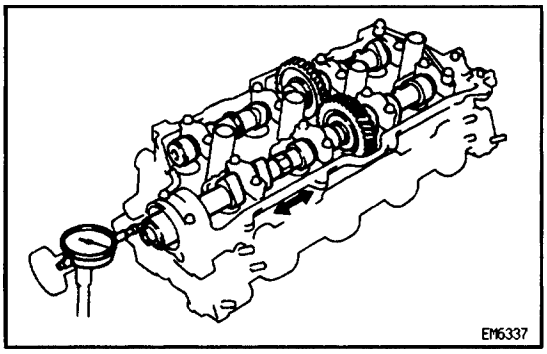

G. Inspect camshaft thrust clearance

(a) Install the camshaft.

(See step 7 on pages EG–114 to 120)

(b) Using a dial indicator, measure the thrust clearance while moving the camshaft back and forth.

Standard thrust clearance:

0.040 – 0.090 mm (0.0016 – 0.0035 in.)

Maximum thrust clearance:

0.12 mm (0.0047 in.)

If the thrust clearance is greater than maximum, replace the camshaft. If necessary, replace the bearing caps and cylinder head as a set.

(c) Remove the camshafts.

WhereEverybodyKnowsYourName

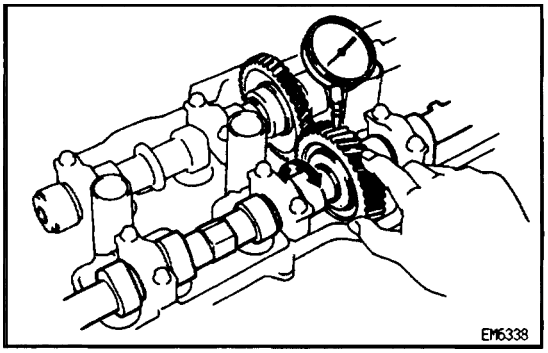

H. Inspect camshaft gear backlash

(a) Install the camshafts without installing the exhaust cam sub–gear.
(See step 7 on pages EG–114 to 120)

(b) Using a dial indicator, measure the backlash.
Standard backlash:
0.020 – 0.200 mm (0.0008 – 0.0079 in.)
Maximum backlash:
0.30 mm (0.0188 in.)
If the backlash is greater then maximum, replace the camshafts.

(c) Remove the camshafts.

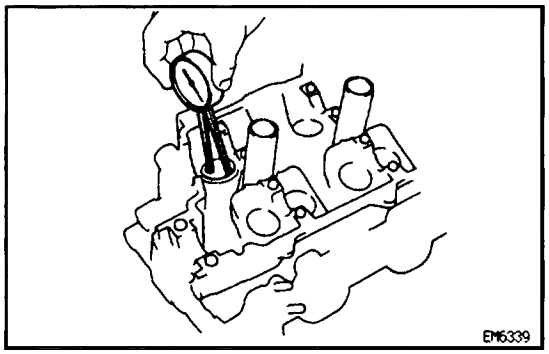

11. INSPECT VALVE LIFTERS AND LIFTER BORES

(a) Using a caliper gauge, measure the ufter bore diameter of the clinder head.
Lifter bore diameter:
31.000–31.016 mm (1.2205–1.2211 in.)

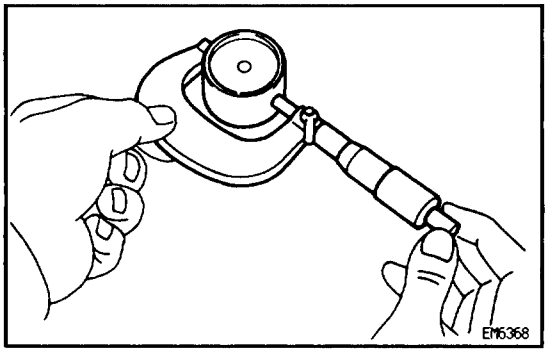

(b) Using a micrometer, measure the lifter diameter.
Lifter diameter:
30.966 – 30.976 mm (1.2191 – 1.2195 in.)

(c) Subtract the lifter diameter measurement from the lifter bore diameter measurement.
Standard oil clearance:
0.024 – 0.050 mm (0.0009 – 0.0020 in.)
Maximum oil clearance:
0.07 mm (0.0028 in.)
If the oil clearance is greater than maximum, replace the lifter.
If necessary, replace the cylinder head.

WhereEverybodyKnowsYourName

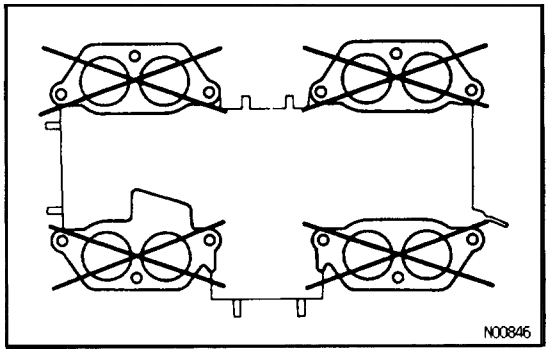

12. INSPECT AIR INTAKE CHAMBER

Using a precision straight edge and feeler gauge, measure the surface contacting the intake manifold for warpage.

Maximum warpage:

0.15 mm (0.0059 in.)

If warpage is greater than maximum, replace the chamber.

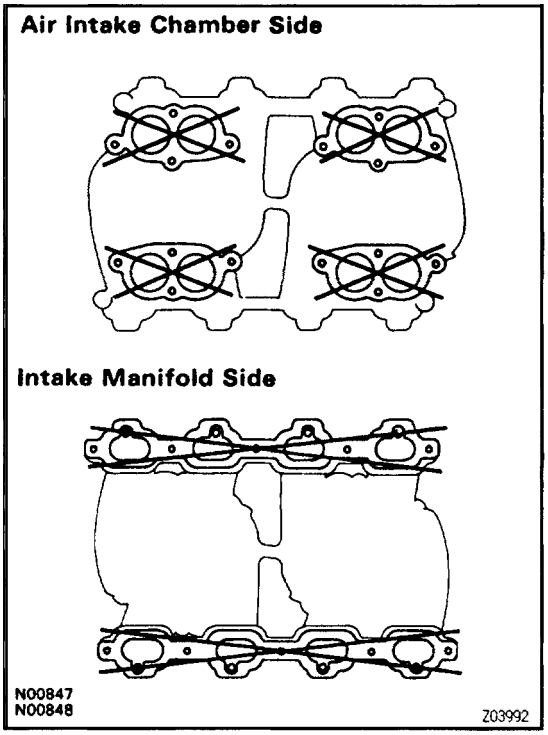

13. INSPECT INTAKE MANIFOLD

Using a precision straight edge and feeler gauge, measure the surface contacting the cylinder head and air intake chamber for warpage.

Maximum warpage:

0.15 mm (0.0059 in.)

If warpage is greater than maximum, replace the manifold.

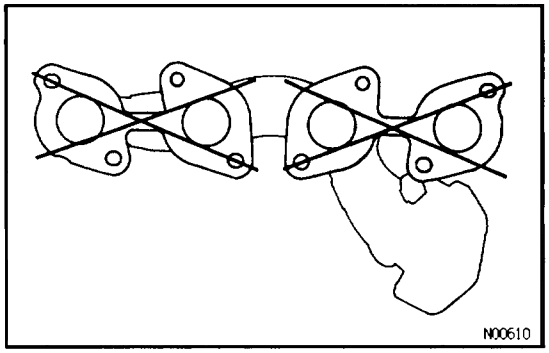

14. INSPECT EXHAUST MANIFOLD

Using a precision straight edge and feeler gauge, measure the surface contacting the cylinder head for warpage.

Maximum warpage:

1.00 mm (0.0394 in.)

If warpage is greater than maximum, replace the manifold.

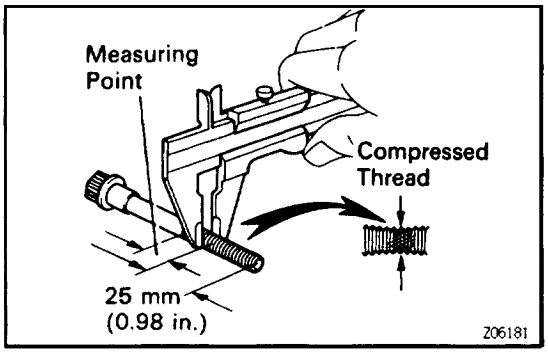

15. INSPECT CYLINDER HEAD BOLTS

Using a caliper gauge, measure the thread outside diameter of the bolt.

Standard outside diameter:

9.770 – 9.960 mm (0.3846 – 0.3921 in.)

Maximum outside diameter:

9.60 mm (0.3780 in.)

If the diameter is less than minimum, replace the bolt.

WhereEverybodyKnowsYourName

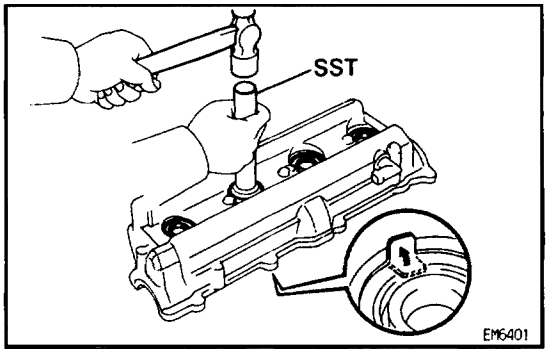

16. IF NECESSARY, REPLACE SPARK PLUG TUBE GASKETS

(a) Bend the ventilation case claw installed on the cylinder head cover to an angle of 90 or more.

(b) Using SST and a hammer, tap out the gasket.
SST 09550–10012 (09552–10010, 09560–10010)

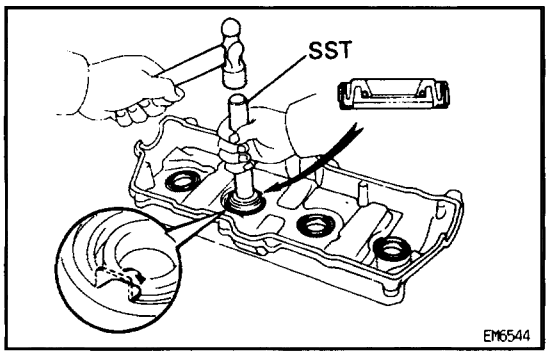

(c) Using SST and a hammer, tap in a new gasket until its surface is flush with the upper edge of the cylinder head cover.
SST 09550–10012 (09552–10010, 09560–10010)

(d) Apply a light coat of MP grease to the gasket lip.

(e) Return the ventilation case claw to its original position.

CYLINDER HEAD ASSEMBLY

EG1KN–02

(See Components for Removal and Installation)

HINT:

- Thoroughly clean all parts to be assembled.
- Before installing the parts, apply new engine oil to all sliding and rotating surfaces.
- Replace all gaskets and oil seals with new ones.

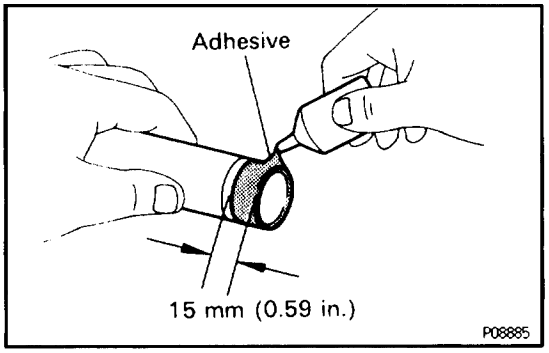

1. INSTALL SPARK PLUG TUBES

HINT: When using a new cylinder head, spark plug tubes must be installed.

(a) Apply adhesive to the end of the spark plug tube.
Adhesive:
Part No. 08833–00070, THREE BOND 1324 or equivalent

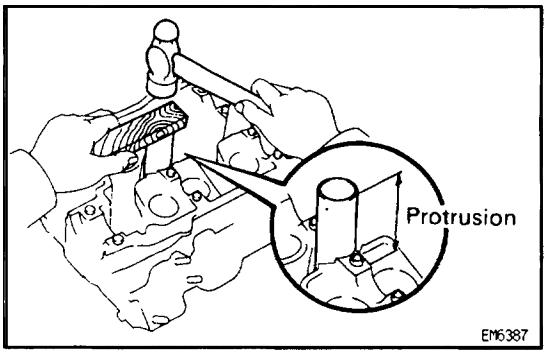

(b) Using a wooden block and hammer, tap in a new spark tube until there is 48.7 – 49.3 mm (1.917 – 1.941) protruding from the camshaft bearing cap installation surface of the cylinder head.
NOTICE: Avoid tapping a new spark plug tube in too far by measuring the amount of the protrusion while tapping.

WhereEverybodyKnowsYourName

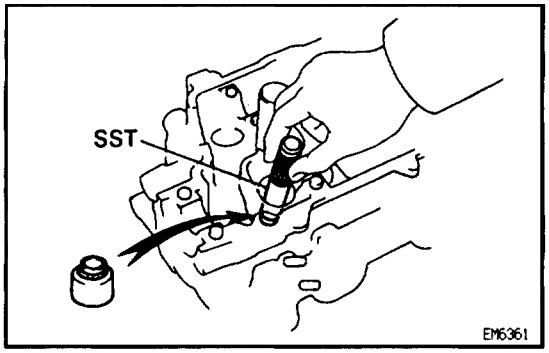

2. INSTALL VALVES

(a) Using SST, push in a new oil seal.
SST 09201–41020

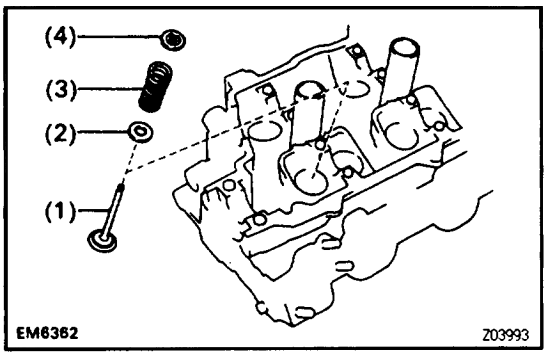

(b) Install the following parts:
(1) Valve
(2) Spring seat
(3) Valve spring
(4) Spring retainer

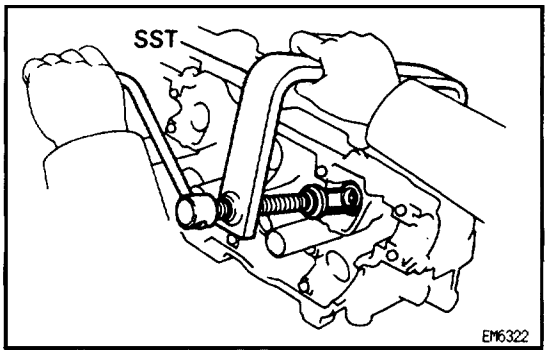

(c) Using SST, compress the valve spring and place the 2 keepers around the valve stem.
SST 09202–70010

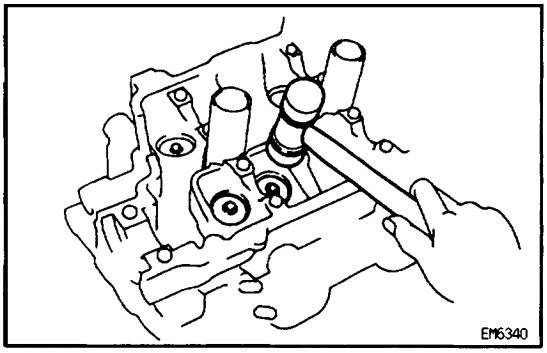

(d) Using a plastic–faced hammer, lightly tap the valve stem tip to assure proper fit.

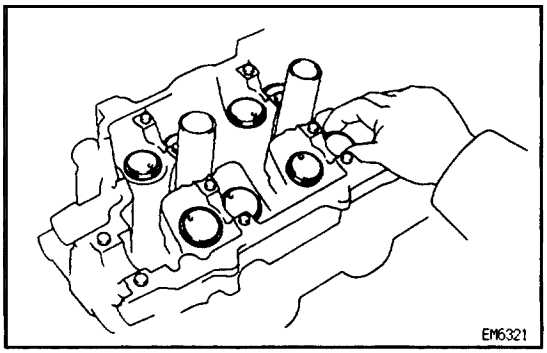

3. INSTALL VALVE LIFTERS AND SHIMS

(a) Install the valve lifter and shim.
(b) Check that the valve lifter rotates smoothly by hand.

WhereEverybodyKnowsYourName

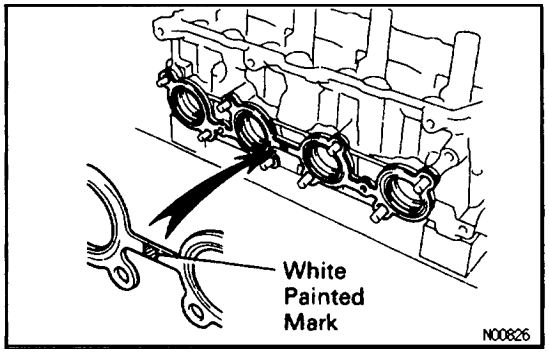

CYLINDER HEADS INSTALLATION

EG22V–02

(See Components for Removal and Installation)

1. INSTALL RH EXHAUST MANIFOLD TO RH CYLINDER HEAD

(a) Place a new gasket on the cylinder head with the white painted marks facing the manifold side.
NOTICE: Be careful of the Installation direction.

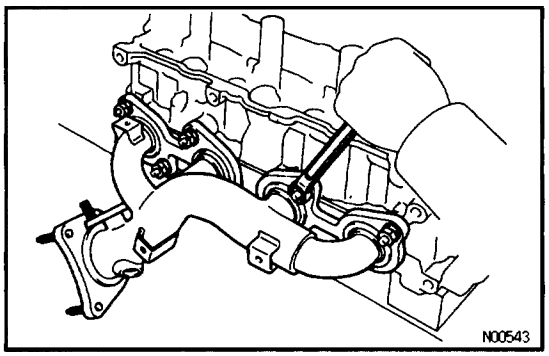

(b) Install the exhaust manifold with 8 new nuts. Uniformly tighten the nuts in several passes.
Torque: 44 N·m (450 kgf·cm, 33 ft·lbf)

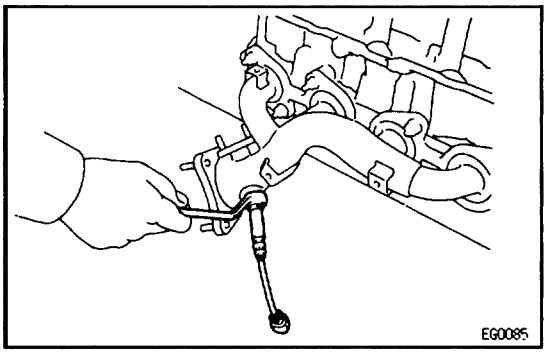

(c) Install the main heated oxygen sensor.
Torque: 44 N·m (450 kgf·cm, 33 ft·lbf)

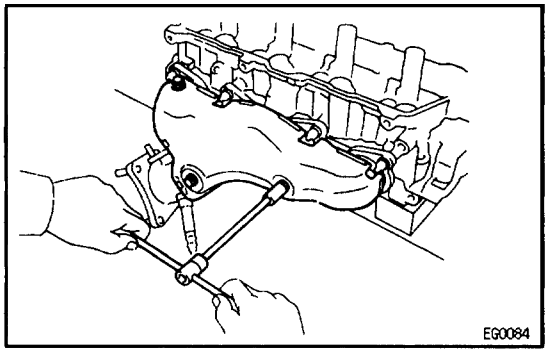

(d) Install the heat insulator with the 3 bolts.

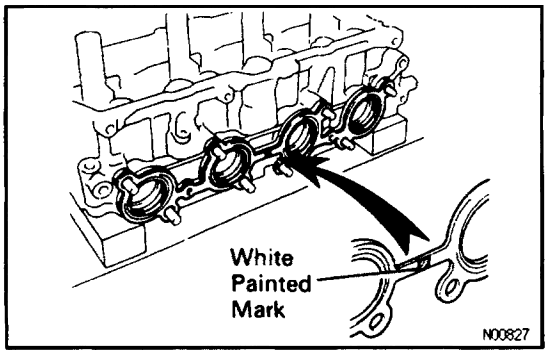

2. INSTALL LH EXHAUST MANIFOLD TO LH CYLINDER HEAD

(a) Place a new gasket on the cylinder head with the white painted marks facing the manifold side.
NOTICE: Be careful of the installation direction.

WhereEverybodyKnowsYourName

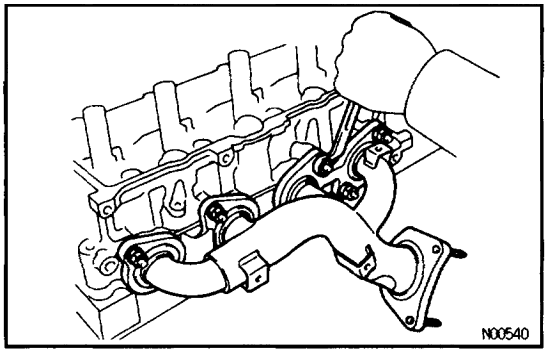

(b) Install the exhaust manifold with 8 new nuts. Uniformly tighten the nuts in several passes.
Torque: 44 N·m (450 kgf·cm, 33 ft·lbf)

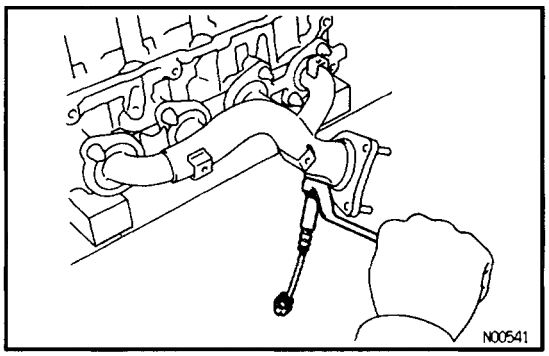

(c) Install the main heated oxygen sensor.
Torque: 44 N·m (450 kgf·cm, 33 ft·lbf)

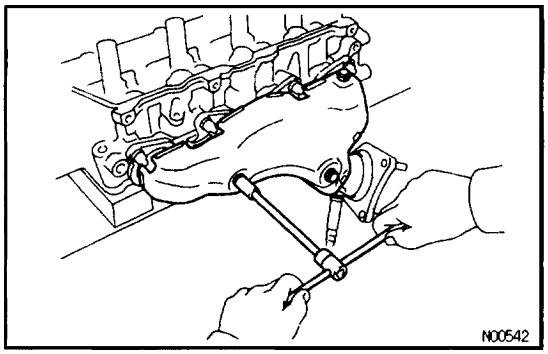

(d) Install the heat insulator with the 3 bolts.

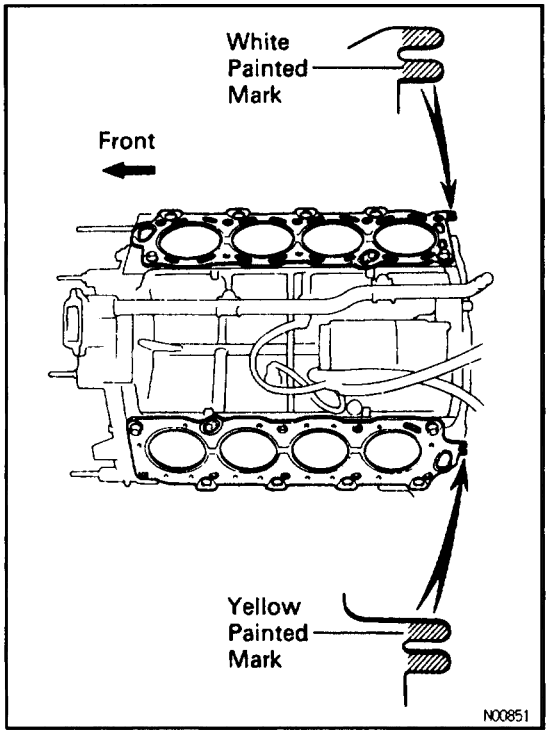

3. INSTALL CYLINDER HEADS

A. Place cylinder head on cylinder block

(a) Place 2 new cylinder head gaskets in position on the cylinder block.
HINT: On the rear side of the cylinder head gasket are painted marks to distinguish the LH and RH banks, a white painted mark for the RH bank and a yellow painted mark for the LH bank.
NOTICE: Be careful of the installation direction.

(b) Place the 2 cylinder heads in position on the cylinder head gaskets.

WhereEverybodyKnowsYourName

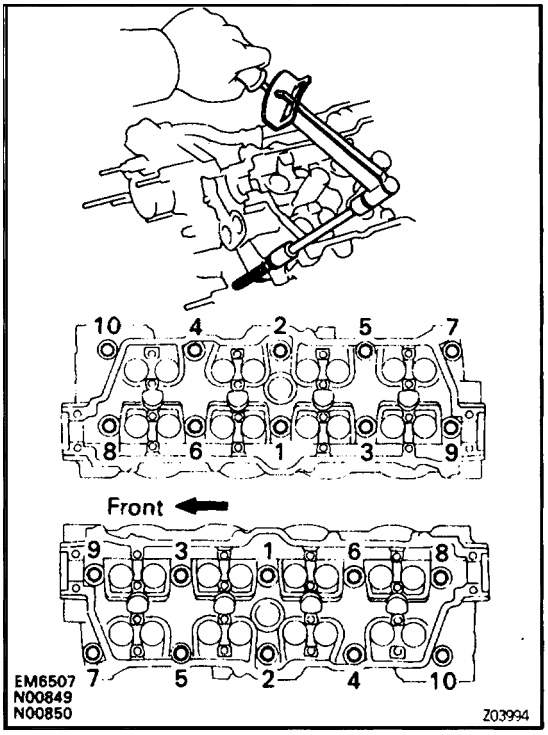

B. Install cylinder head bolts

HINT:

- The cylinder head bolts are tightened in 2 progressive steps (steps (c) and (e)).
- If any cylinder head bolt is broken or deformed, replace it.

(a) Apply a light coat of engine oil on the threads and under the heads of the cylinder head bolts.

(b) Install the plate washer to the cylinder head bolt.

(c) Install and uniformly tighten the 10 cylinder head bolts on one side of the cylinder head in several passes in the sequence shown, then do the other side as shown.

Torque: 39 N·m (400 kgf·cm, 29 ft·lbf)

If any one of the cylinder head bolts does not meet the torque specification, replace the cylinder head bolt.

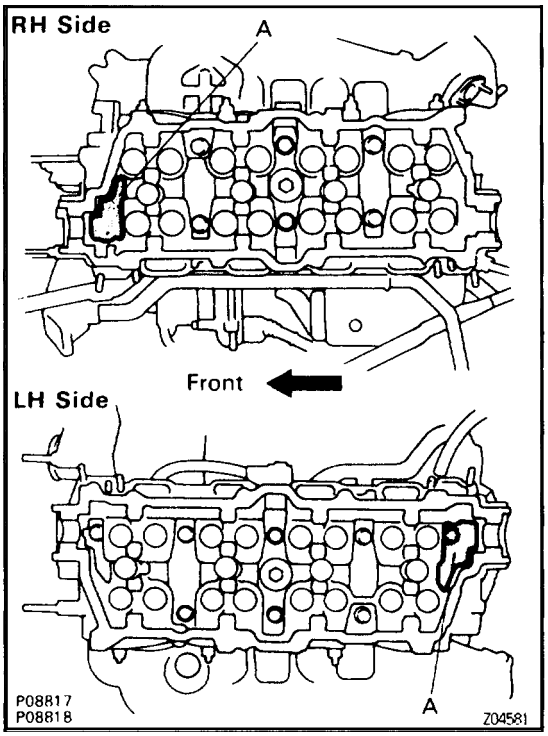

NOTICE: Do not drop the plate washer for cylinder head bolt into portion A of the cylinder head. If dropped into portion A, the plate washer will pass through the cylinder head and cylinder block into the oil pan.

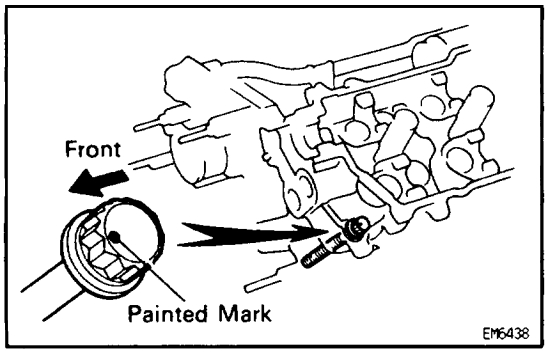

(d) Mark the front of the cylinder head bolt head with paint.

WhereEverybodyKnowsYourName

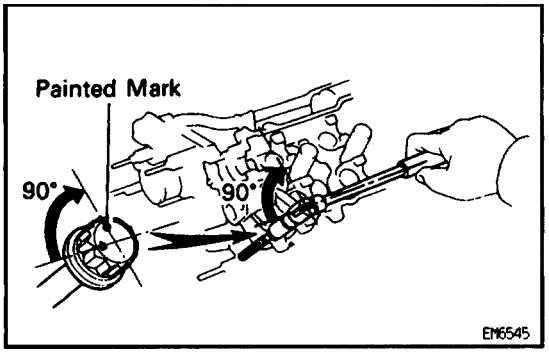

(e) Retighten the cylinder head bolts 90 in the numerical order shown.
(f) Check that the painted mark is now at a 90 angle to front.

4. CONNECT MAIN HEATED OXYGEN SENSOR CONNECTORS

Connect the RH and LH oxygen sensor connectors.

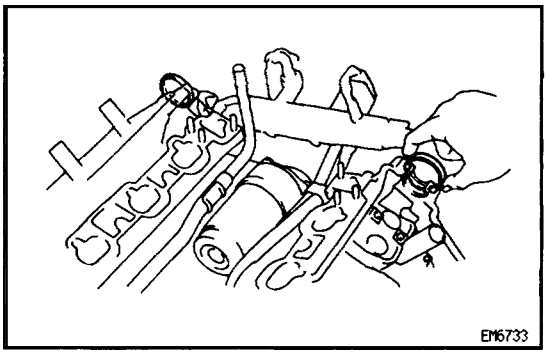

5. INSTALL CIRCULAR PLUGS

(a) Place 2 new circular plugs in position on the cylinder heads, facing the cup side forward.

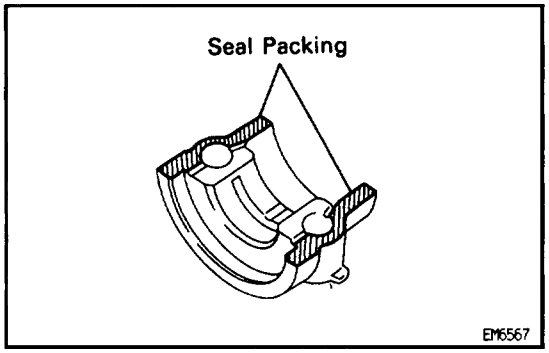

(b) Remove any old packing (FIPG) material.
(c) Apply seal packing to the bearing caps as shown.

Seal packing:

Part No. 08826–00080 or equivalent

WhereEverybodyKnowsYourName

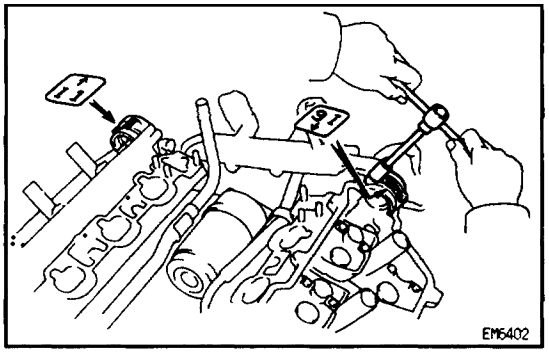

(d) RH Cylinder Head:
Install the bearing cap (mark “11”) in position with the arrow mark facing rearward.

(e) LH Cylinder Head:
Install the bearing cap (mark “16”) in position with the arrow mark facing forward.

(f) Install a new seal washer to the bearing cap bolt.

(g) Apply a light coat of engine oil on the threads of the bearing cap bolt.

(h) Install the 4 bearing cap bolts. Alternately tighten bearing cap bolts.
Torque: 16 N·m (160 kgf·cm, 12 ft·lbf)
HINT: Use silver colored bolts 38 mm (1.50 in.) in length.

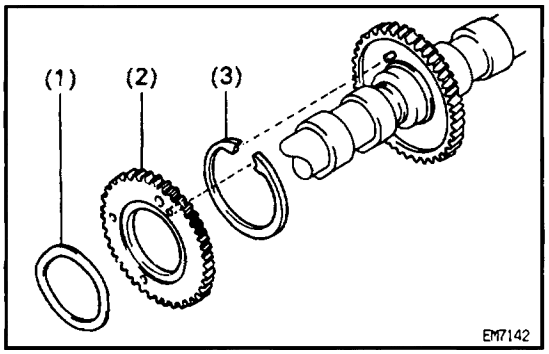

6. ASSEMBLE EXHAUST CAMSHAFT

(a) Install the following parts:
(1) Camshaft gear spring
(2) Camshaft sub–gear
(3) Wave washer
HINT: Align the pins on the gears with the spring ends.

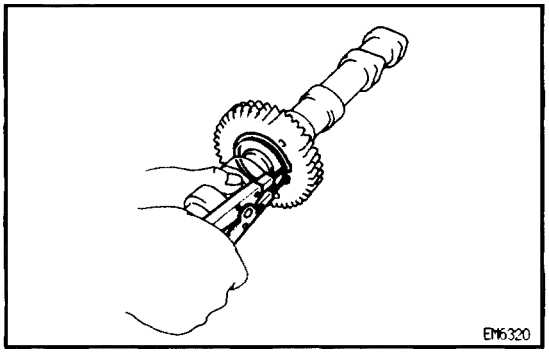

(b) Using snap ring pliers, install the snap ring.

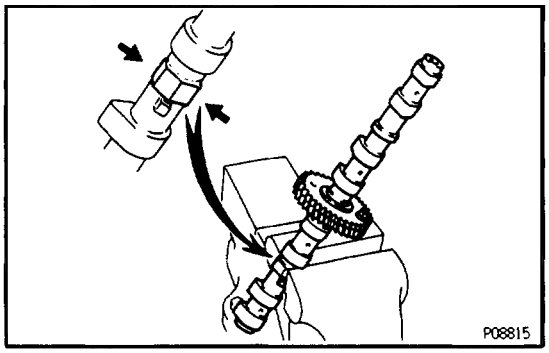

(c) Mount the hexagon wrench head portion of the camshaft in a vise.
NOTICE: Be careful not to damage the camshaft.

WhereEverybodyKnowsYourName

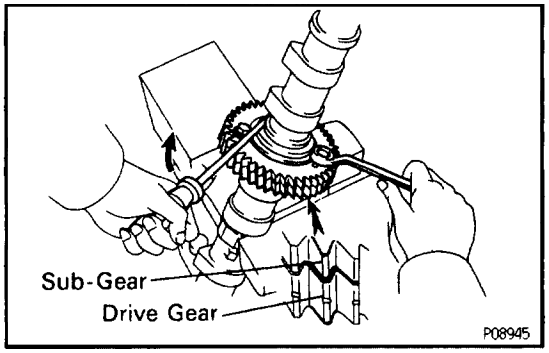

(d) Insert service bolt A into the service hole of the camshaft sub–gear.

(e) Using a screwdriver, align the holes of the camshaft drive gear and sub–gear by turning camshaft subgear clockwise, and temporarily install service bolt B.

NOTICE: Be careful not to damage the camshaft.

(f) Align the gear teeth of the drive gear and sub–gear, and tighten service bolt B.

7. INSTALL CAMSHAFTS

NOTICE: Since the thrust clearance of the camshaft is small, the camshaft must be kept level while it is being installed. If the camshaft is not kept level, the portion of the cylinder head receiving the shaft thrust may crack or be damaged, causing the camshaft to seize or break. To avoid this, the following steps should be carried out.

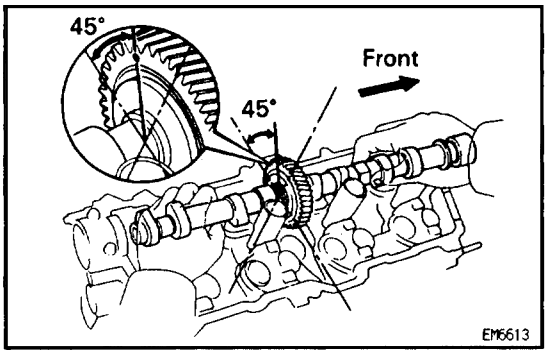

A. Install intake camshaft to RH cylinder head

(a) Apply MP grease to the thrust portion of the intake camshaft.

(b) Place the intake camshaft at 45 angle of the timing mark (1 dot mark) on the cylinder head.

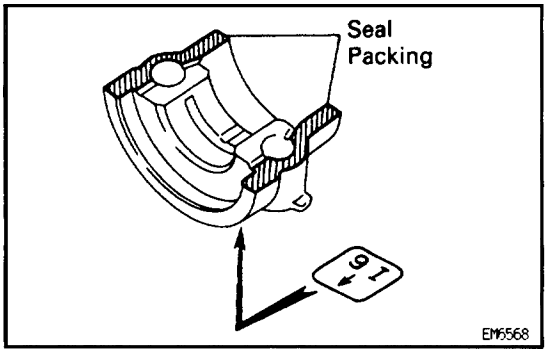

(c) Remove any old packing (FIPG) material.

(d) Apply seal packing to the bearing cap (mark “16”) as shown.

Seal packing:

Part No. 08826–00080 or equivalent

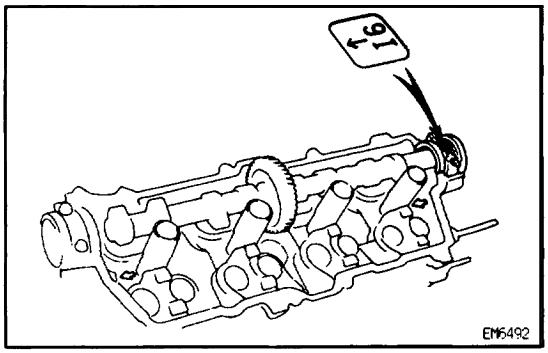

(e) Install the front bearing cap (mark “16”) with the arrow mark facing rearward.

HINT:

- Installing the front bearing cap will determine the thrust portion of the camshaft.
- Align the allow marks at the front and rear of the cylinder head with the mark on the bearing cap.

WhereEverybodyKnowsYourName

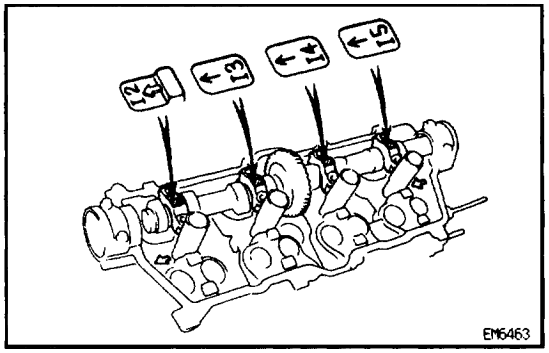

(f) Install the other 4 bearing caps in the sequence shown with the arrow marks facing rearward.
HINT: Align the arrow marks at the front and rear of the cylinder head with the mark on the bearing cap.

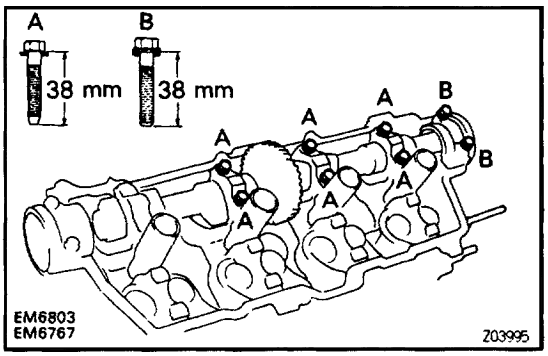

(g) Apply a light coat of engine oil on the threads and under the heads (A only) of the bearing cap bolts.
HINT: Do not apply engine oil under the heads of the bearing cap bolt (B).

(h) Install a new seal washer to the bearing cap bolt (B).
Install the 8 bearing cap bolts as shown.
HINT:
- Use bearing cap bolts 38 mm (1.50 in.) in length. The bolts are black (A) or silver (B) in color. Install the 2 silver bolts to the front bearing cap. Install the 6 black bolts to the other positions.
- After installing the oil feed pipe, install the 2 bolts to rear bearing cap as directed in step B (i).

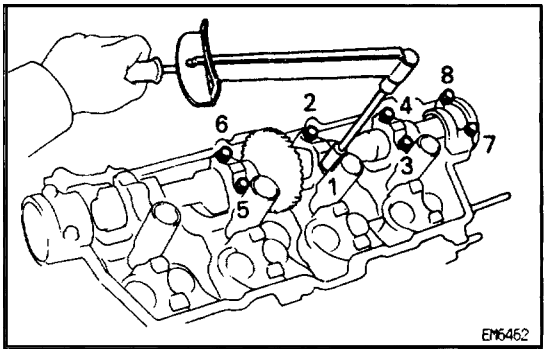

(i) Uniformly tighten the 8 bearing cap bolts in several passes, in the sequence shown.
Torque: 16 N·m (160 kgf·cm, 12 ft·lbf)

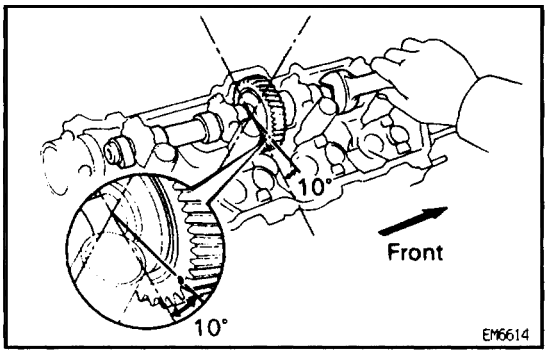

B. Install exhaust camshaft to RH cylinder head

(a) Set the timing mark (1 dot mark) of the camshaft drive gear at 10 angle by turning the hexagon wrench head portion of the intake camshaft with a wrench.

WhereEverybodyKnowsYourName

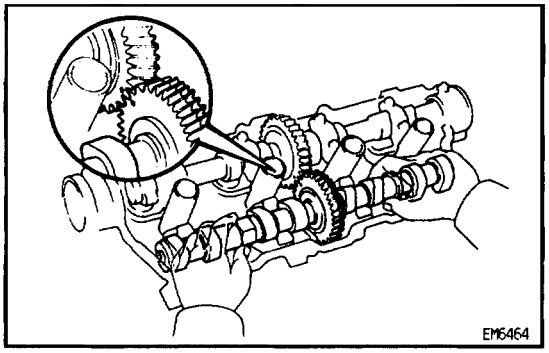

(b) Apply MP grease to the thrust portion of the exhaust camshaft.
(c) Align the timing marks (1 dot mark) of the camshaft drive and driven gears.
(d) Place the exhaust camshaft on the cylinder head.

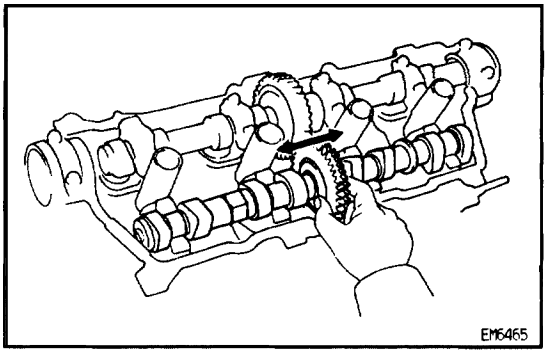

(e) Check that the exhaust camshaft moves smoothly in the thrust direction.

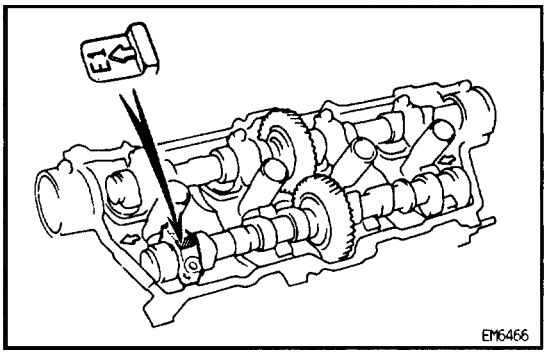

(f) Install the rear bearing cap (mark “E1”) with the arrow mark facing rearward.
HINT:
- Installing the rear bearing cap will determine the thrust portion of the camshaft.
- Align the allow marks at the front and rear of the cylinder head with the mark on the bearing cap.

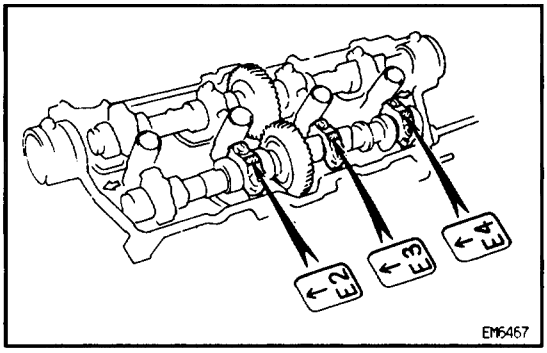

(g) Install the other 3 bearing caps in the sequence shown with the arrow marks facing rearward.
HINT: Align the arrow marks at the front and rear of the cylinder head with the mark on the bearing cap.

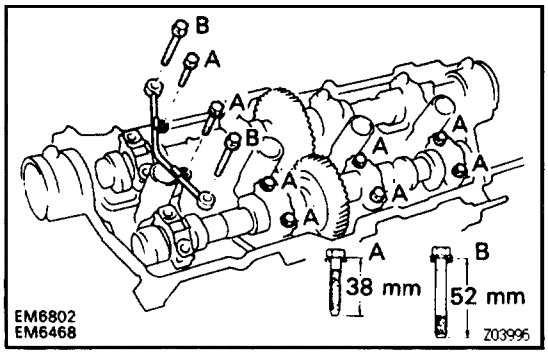

(h) Apply a light coat of engine oil on the threads and under the heads of the bearing cap bolts.
(i) Install the oil feed pipe and 10 bolts.
HINT: Use bearing cap bolts 38 mm (1.50 in.) and 52 mm (2.05 in.) in length. Use black colored 38 mm (1.50 in.) bolts. Install the two 52 mm (2.05 in.) bolts in outside positions of the oil feed pipe. Install the eight 38 mm (1.50 in.) bolts in the other positions.

WhereEverybodyKnowsYourName

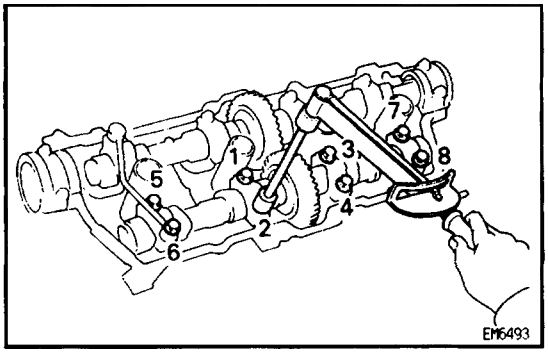

(j) Uniformly tighten the 8 bolts on the bearing caps of the exhaust camshaft in several passes, in the sequence shown.
Torque: 16 N·m (160 kgf·cm, 12 ft·lbf)

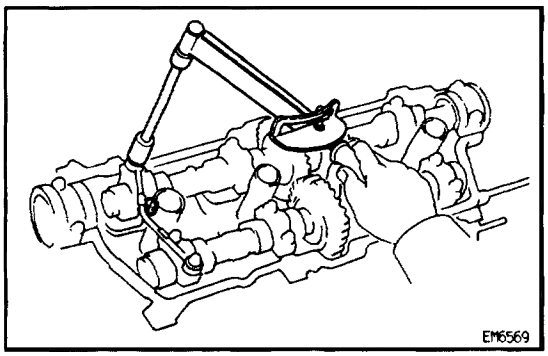

(k) Alternately tighten the 2 bolts on the rear bearing caps of the intake camshaft in several passes.
Torque: 16 N·m (160 kgf·cm, 12 ft·lbf)

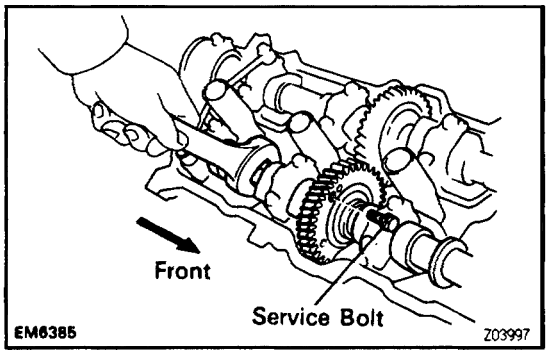

(l) Boring the service bolt installed in the driven subgear upward by turning the hexagon wrench head portion of the camshaft with a wrench.
(m) Remove the service bolt.

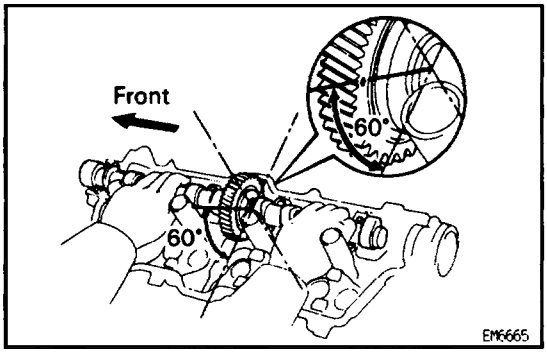

C. Install intake camshaft to LH cylinder head
(a) Apply MP grease to the thrust portion of the intake camshaft.
(b) Place the intake camshaft at 60 angle of the timing mark (1 dot mark) on the cylinder head.

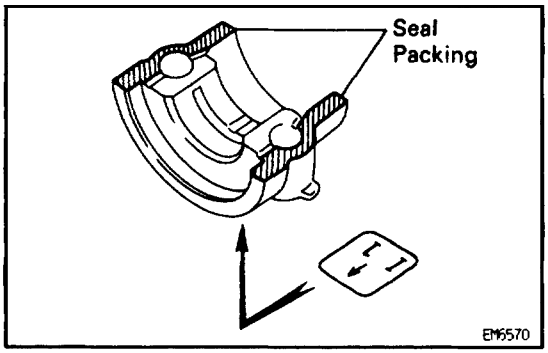

(c) Remove any old packing (FIPG) material.
(d) Apply seal packing to the bearing cap (mark “11”) as shown.
Seal packing:
Part No. 08826–00080 or equivalent

WhereEverybodyKnowsYourName

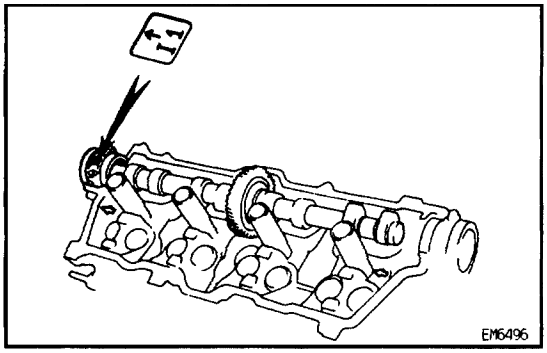

(e) Install the front bearing cap (mark “11”) with the arrow mark facing forward.
HINT:
- Installing the front bearing cap will determine the thrust portion of the camshaft.
- Align the allow marks at the front and rear of the cylinder head with the mark on the bearing cap.

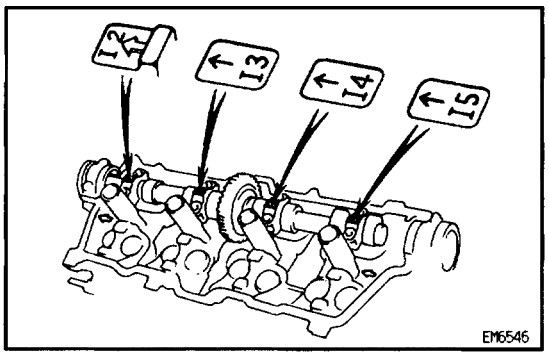

(f) Install the other 4 bearing caps in the sequence shown with the arrow marks facing rearward.
HINT: Align the arrow marks at the front and rear of the cylinder head with the mark on the bearing cap.

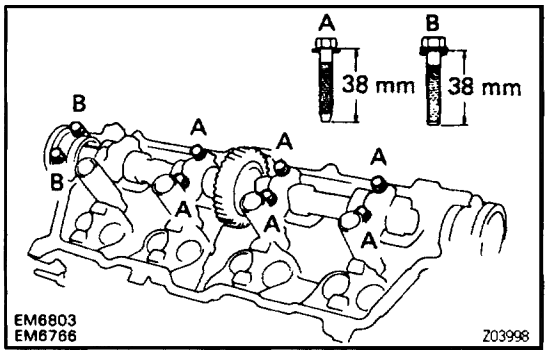

(g) Apply a light coat of engine oil on the threads and under the heads (A only) of the bearing cap bolts.
HINT: Do not apply engine oil under the heads of the bearing cap bolt (B).

(h) Install a new seal washer to the bearing cap bolt (B).
Install the 8 bearing cap bolts as shown.
HINT:
- Use bearing cap bolts 38 mm (1.50 in.) in length. The bolts are black (A) or silver (B) in color. Install the 2 silver bolts to the front bearing cap. Install the 6 black bolts to the other positions.
- After installing the oil feed pipe, install the 2 bolts to the bearing cap 2nd from the front as directed in step B (i).

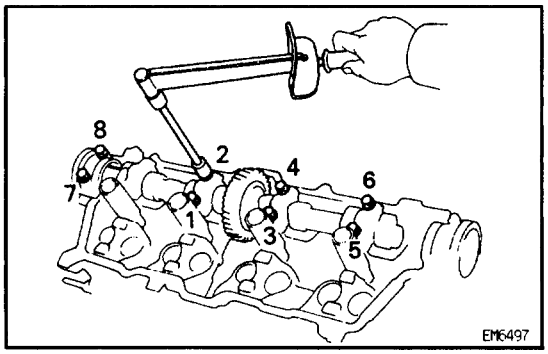

(i) Uniformly tighten the 8 bearing cap bolts in several passes, in the sequence shown.
Torque: 16 N·m (160 kgf·cm, 12 ft·lbf)

WhereEverybodyKnowsYourName

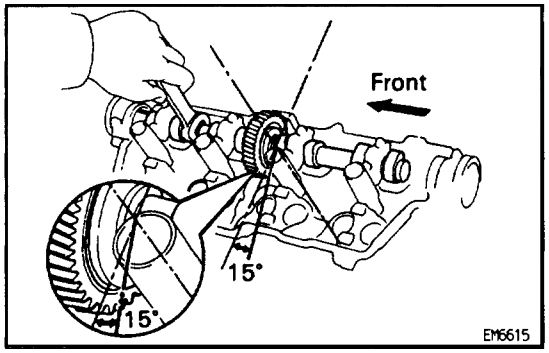

D. Install exhaust camshaft to LH cylinder head

(a) Set the timing mark (2 dot marks) of the camshaft drive gear at 15 angle by turning the hexagon wrench head portion of the intake camshaft with a wrench.

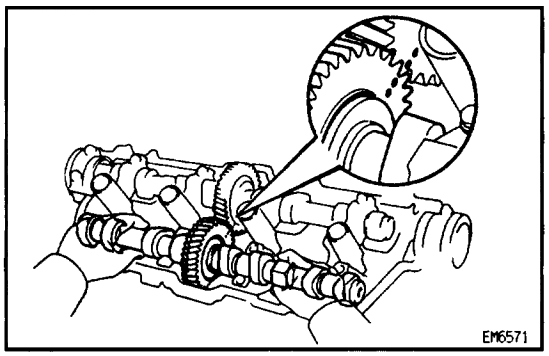

(b) Apply MP grease to the thrust portion of the exhaust camshaft.

(c) Align the timing marks (2 dot marks) of the camshaft drive and driven gears.

(d) Place the exhaust camshaft on the cylinder head.

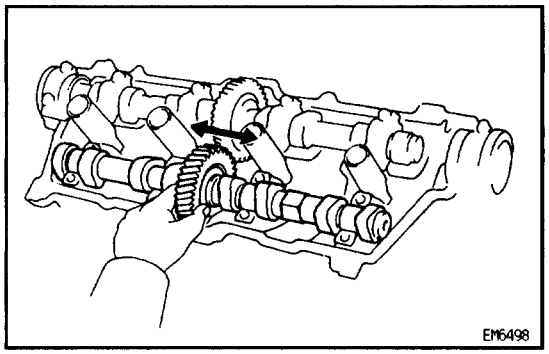

(e) Check that the exhaust camshaft moves smoothly in the thrust direction.

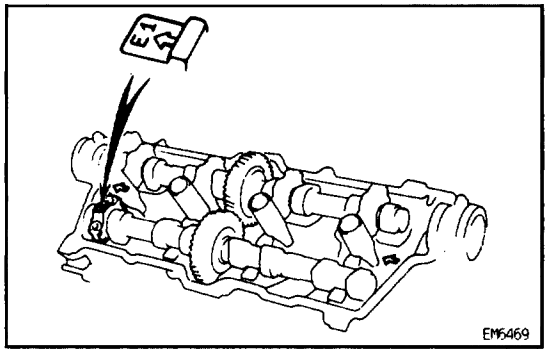

(f) Install the front bearing cap (mark “E1”) with the arrow mark facing forward.
HINT:
- Installing the front bearing cap will determine the thrust portion of the camshaft.
- Align the allow marks at the front and rear of the cylinder head with the mark on the bearing cap.

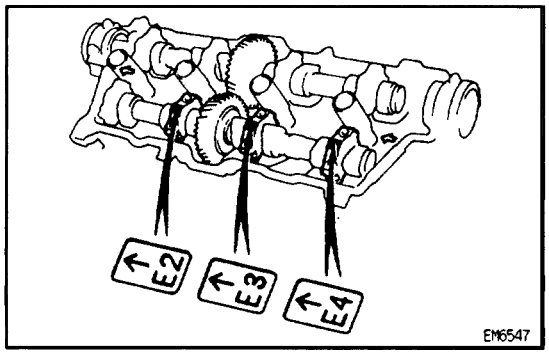

(g) Install the other 3 bearing caps in the sequence shown with the arrow marks facing forward.
HINT: Align the arrow marks at the front and rear of the cylinder head with the mark on the bearing cap.

WhereEverybodyKnowsYourName

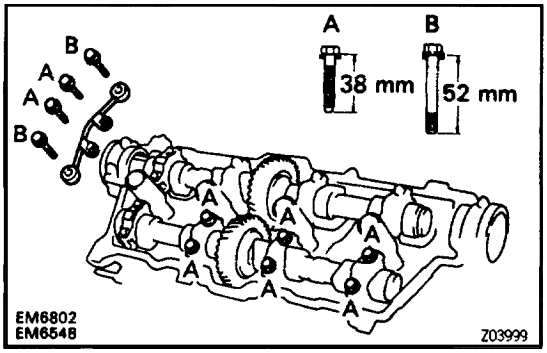

(h) Apply a light coat of engine oil on the threads and under the heads of the bearing cap bolts.

(i) Install the oil feed pipe and 10 bolts.
HINT: Use bearing cap bolts 38 mm (1.50 in.) and 52 mm (2.05 in.) in length. Use black colored 38 mm (1.50 in.) bolts. Install the two 52 mm (2.05 in.) bolts in outside positions of the oil feed pipe. Install the eight 38 mm (1.50 in.) bolts in the other positions.

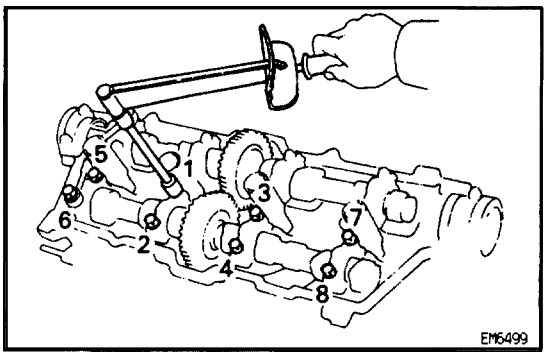

(j) Uniformly tighten the 8 bolts on the bearing caps of the exhaust camshaft in several passes, in the sequence shown.
Torque: 16 N·m (160 kgf·cm, 12 ft·lbf)

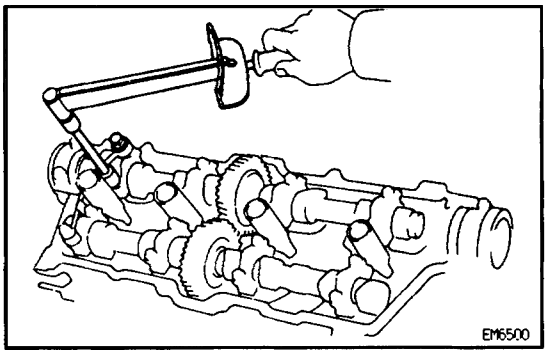

(k) Alternately tighten the 2 bolts on the bearing cap of the intake camshaft 2nd from the front in several passes.
Torque: 16 N·m (160 kgf·cm, 12 ft·lbf)

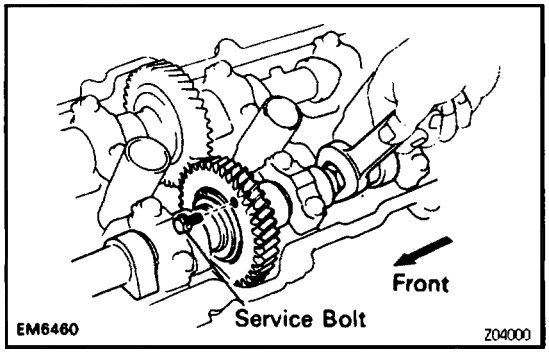

(l) Boring the service bolt installed in the driven subgear upward by turning the hexagon wrench head portion of the camshaft with a wrench.

(m) Remove the service bolt.

8. CHECK AND ADJUST VALVE CLEARANCE
(See steps 19 to 22 on pages EG–19 to 21)

Turn the camshaft and position the cam lobe upward, and check and adjust the valve clearance.

Valve clearance (Cold):

Intake
0.15 – 0.25 mm (0.006 – 0.010 in.)

Exhaust
0.25 – 0.35 mm (0.010 – 0.014 in.)

WhereEverybodyKnowsYourName

EG22W–02

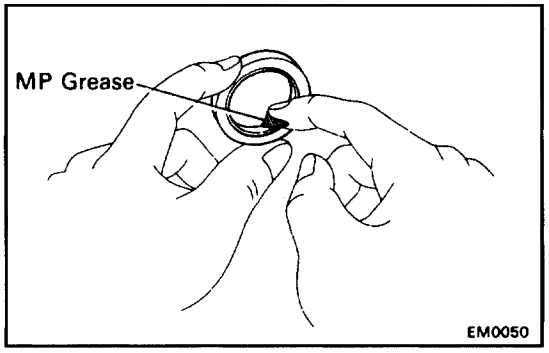

9. INSTALL CAMSHAFT OIL SEALS

(a) Apply MP grease to a new oil seal lip.

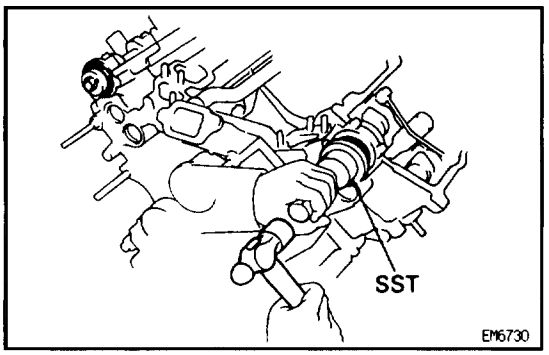

(b) Using SST and a hammer, tap in the 2 oil seals
SST 09223–46011

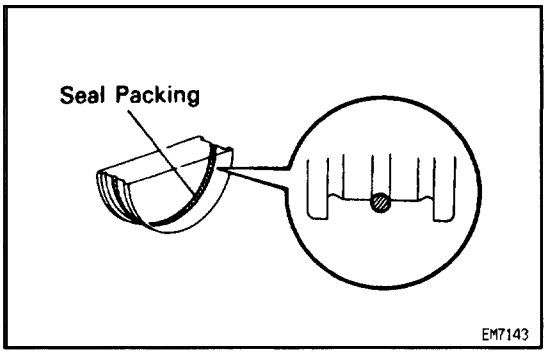

10. INSTALL SEMI–CIRCULAR PLUGS

(a) Remove any old packing (FIPG) material.

(b) Apply seal packing to the semi–circular plug grooves.
Seal packing:
Part No. 08826–00080 or equivalent

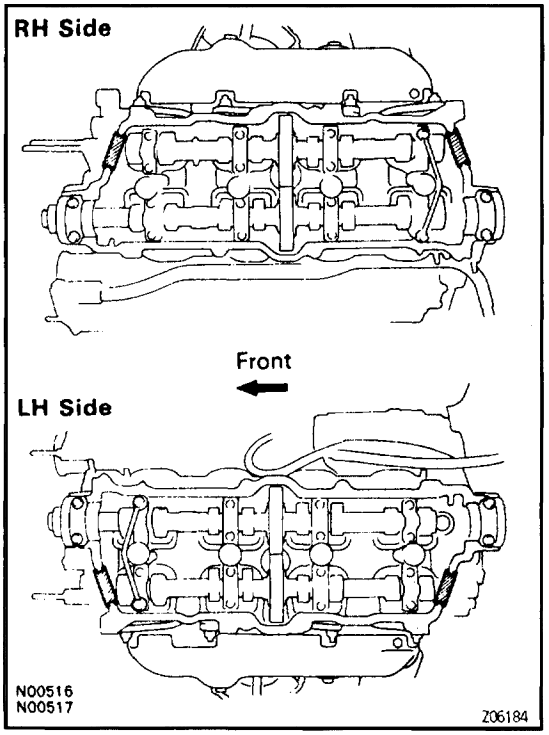

(c) Install the 4 semi–circular plugs to the cylinder heads.

WhereEverybodyKnowsYourName

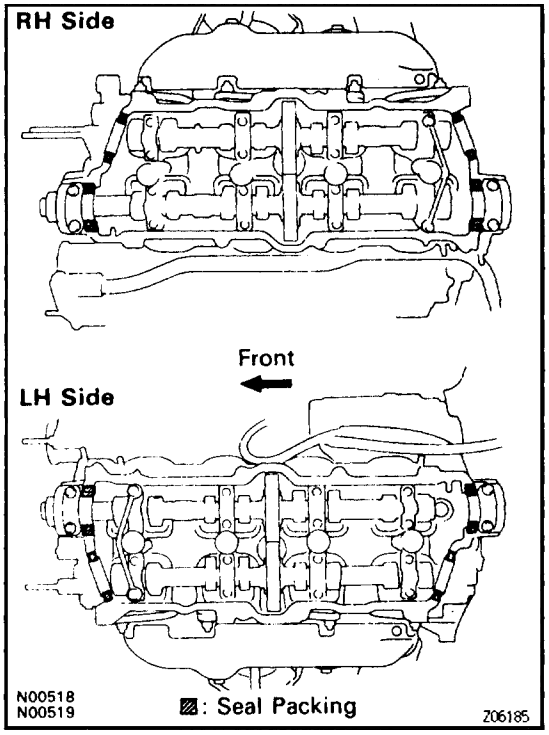

11. INSTALL CYLINDER HEAD COVER

(a) Remove any old packing (FIPG) material.

(b) Apply seal packing to the cylinder heads as shown in the illustration.

Seal packing:

Part No. 08826–00080 or equivalent

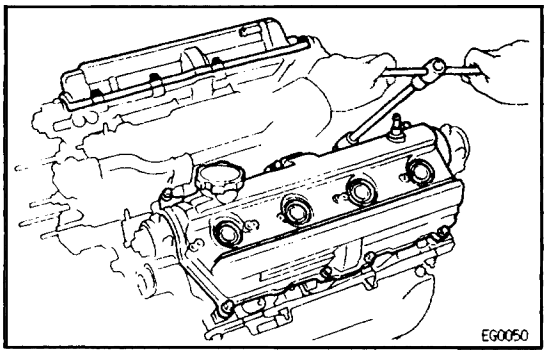

(c) Install the gasket to the cylinder head cover.

(d) Install the seal washer to the bolt.

(e) Install the cylinder head cover with the 8 bolts. Uniformly tighten the bolts in several passes. Install the 2 cylinder head covers.

Torque: 5.9 N·m (60 kgf·cm, 52 in.·lbf)

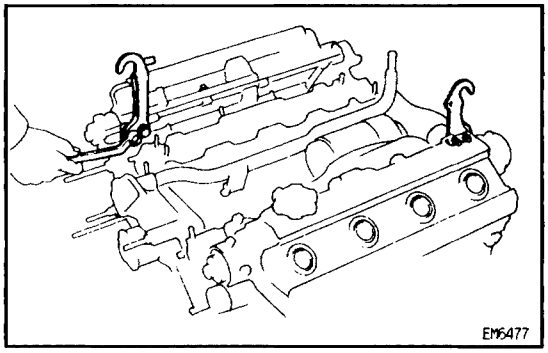

12. INSTALL ENGINE HANGERS

Install the engine hanger with the 2 bolts. Install the 2 engine hangers.

Torque: 37 N·m (380 kgf·cm, 27 ft·lbf)

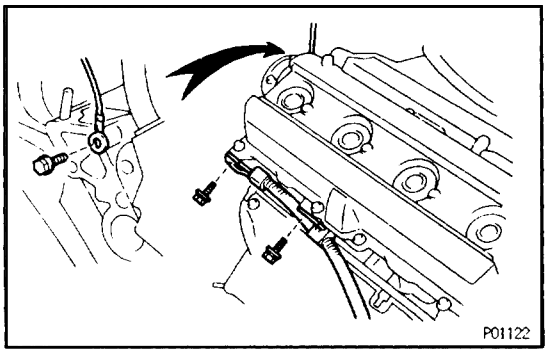

13. INSTALL ENGINE WIRE TO CYLINDER HEADS

(a) Install the engine wire protector to the RH cylinder head with the 2 bolts.

(b) Install the ground strap to RH cylinder head with the bolt.

WhereEverybodyKnowsYourName

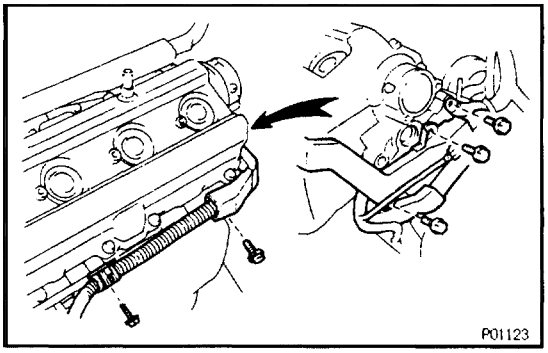

(c) Install the engine wire protector to the LH cylinder head with the 5 bolts.

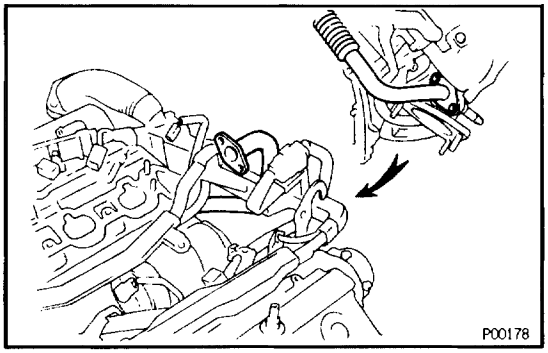

14. INSTALL EGR PIPE

Install a new gasket and EGR pipe to the RH exhaust manifold with 2 new nuts.

Torque: 18 N·m (185 kgf·cm, 13 ft·lbf)

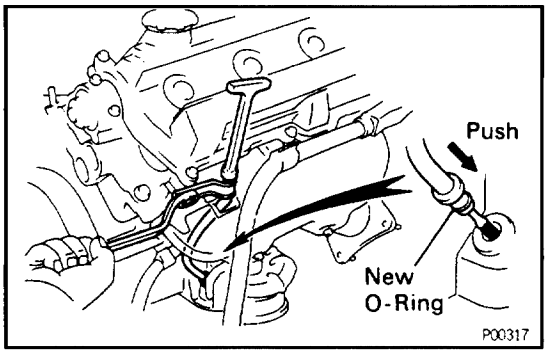

15. INSTALL OIL DIPSTICK AND GUIDE FOR ENGINE

(a) Install a new O–ring to the dipstick guide.
(b) Apply soapy water to the O–ring.
(c) Push in the dipstick guide end into the guide hole of the No.1 oil pan.
(d) Install the dipstick guide with the bolt.
(e) Install the dipstick.

16. INSTALL OIL DIPSTICK AND GUIDE FOR TRANSMISSION

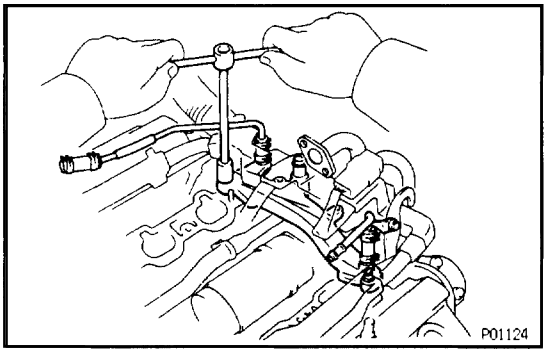

17. INSTALL REAR WATER BYPASS JOINT

(a) Install 2 new gaskets and the water bypass joint with the 4 nuts. Alternately tighten the nuts.
Torque: 18 N·m (185 kgf·cm, 13 ft·lbf)
(b) Install the water bypass pipe to the LH rear engine hanger with the bolt.

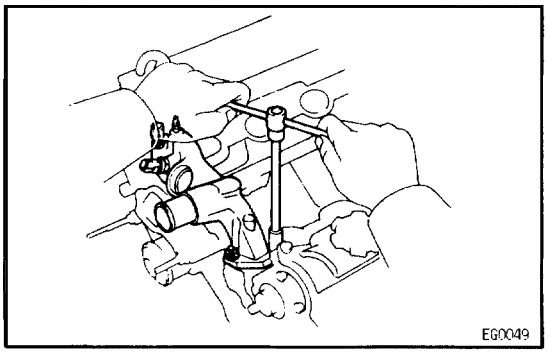

18. INSTALL FRONT WATER BYPASS JOINT

(a) Install 2 new gaskets and the water bypass joint with the 4 nuts. Alternately tighten the nuts.
Torque: 18 N·m (185 kgf·cm, 13 ft·lbf)

WhereEverybodyKnowsYourName

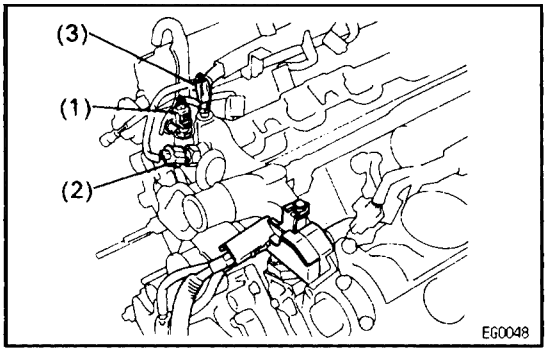

(b) Install the engine wire protector with the bolt.
(c) Connect the following connectors:
(1) ECT sensor connector
(2) ECT sender gauge connector

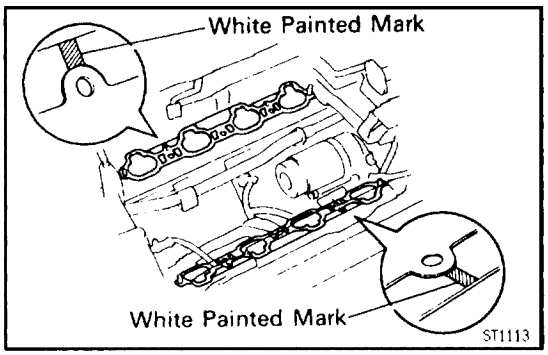

19. INSTALL INTAKE MANIFOLD

(a) Place 2 new gaskets on the cylinder heads with white painted mark facing upward.
NOTICE: Align the port holes of the gasket and cylinder head. Be careful of the installation direction.

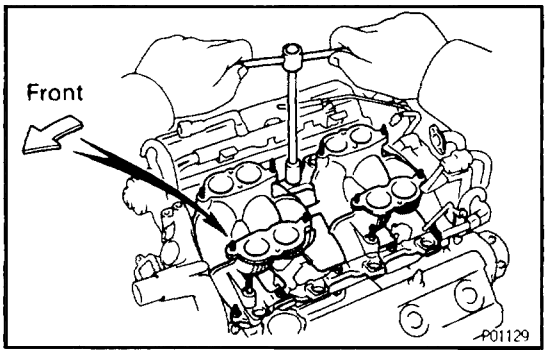

(b) Place the intake manifold on the cylinder heads with the arrow mark facing forward.
NOTICE: Be careful of the installation direction.
(c) Install and uniformly tighten the 6 bolts and 4 nuts in several passes.
Torque: 18 N·m (185 kgf·cm, 13 ft·lbf)
HINT: Use bolt 30 mm (1.18 in.) in length.

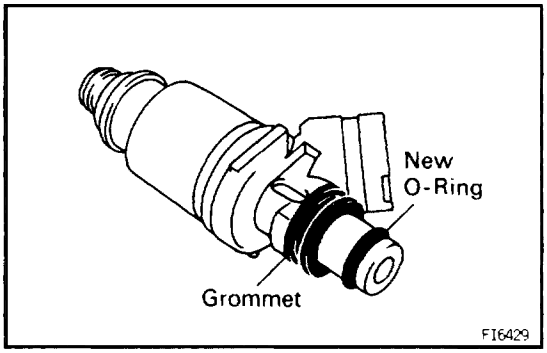

20. INSTALL INJECTORS AND DELIVERY PIPE

(a) Install a new grommet to the injector.
(b) Apply a light coat of gasoline to a new O–ring, and install it to the injector.

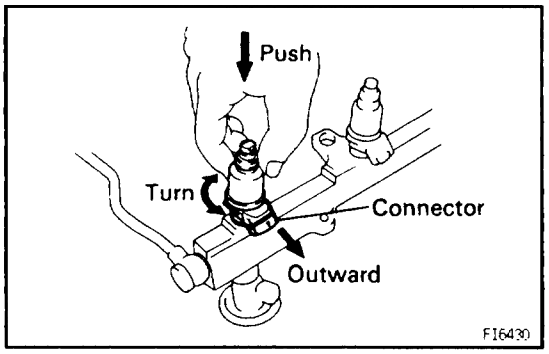

(c) While turning the injector clockwise and counterclockwise, push it to the delivery pipe. Install the 8 injectors.
(d) Position the injector connector outward.

WhereEverybodyKnowsYourName

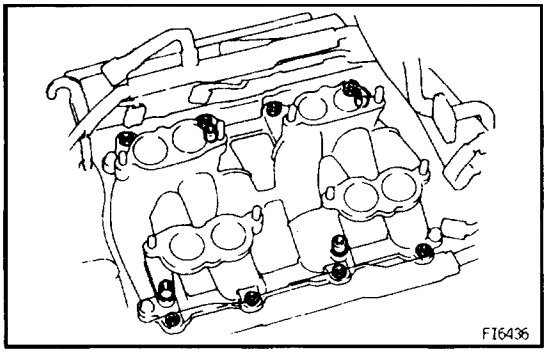

(e) Place 8 new insulators and the 4 spacers in position on the intake manifold.

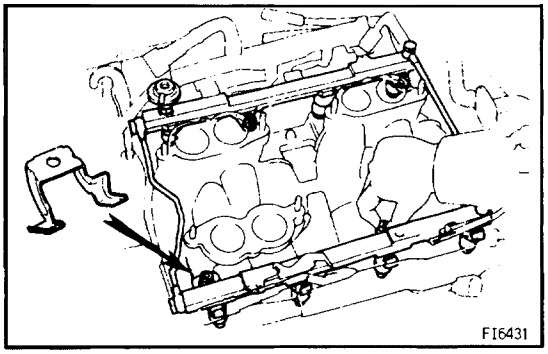

(f) Place the 8 injectors and 2 delivery pipes assembly in position on the intake manifold.

(g) Temporarily install the connector bracket and 4 nuts.

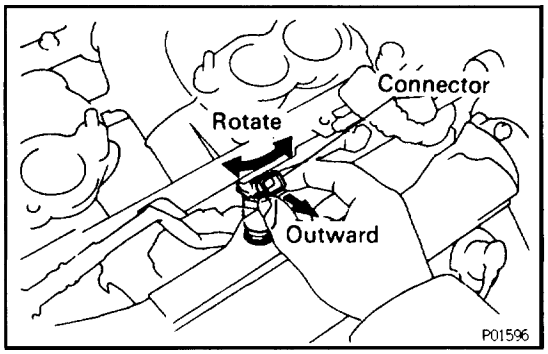

(h) Check that the injectors rotate smoothly.
HINT: If injectors do not rotate smoothly, the probable cause is incorrect installation of O–rings. Replace the O–rings.

(i) Position the injector connector upward.

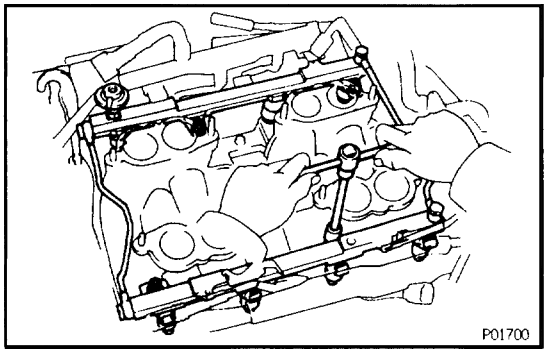

(j) Tighten the 4 nuts holding the delivery pipes to the intake manifold.
Torque: 18 N·m (185 kgf·cm, 13 ft·lbf)

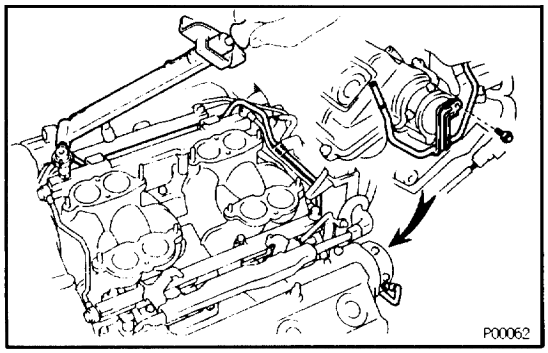

21. INSTALL FUEL RETURN PIPE

(a) Temporarily install the fuel return pipe with the bolt, 2 new gaskets and union bolt.

(b) Tighten the union bolt holding the return pipe to the fuel pressure regulator.
Torque: 35 N·m (360 kgf·cm, 26 ft·lbf)

(c) Tighten the bolt holding the return pipe to the LH cylinder head.

WhereEverybodyKnowsYourName

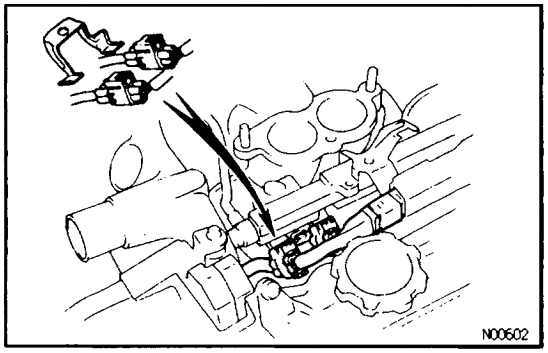

22. INSTALL ENGINE WIRE TO DELIVERY PIPES, REAR WATER BYPASS JOINT AND RH CYLINDER HEAD

(a) Connect the 8 injector connector.

(b) Install the 2 engine wire connectors to the connector on the LH delivery pipe.

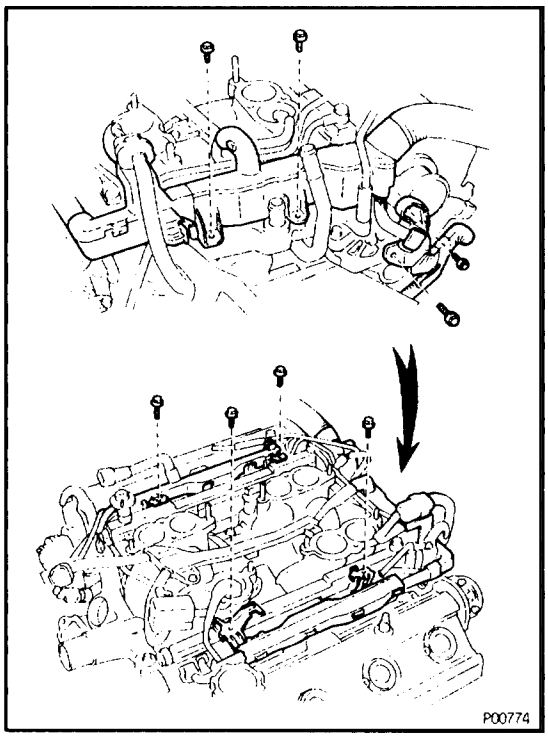

(c) Install the engine wire protector to the RH cylinder head with the 2 bolts.

(d) Install the engine wire protector to the rear water bypass joint with the 2 bolts.

(e) Install the engine wire protector to the delivery pipes with the 4 bolts.

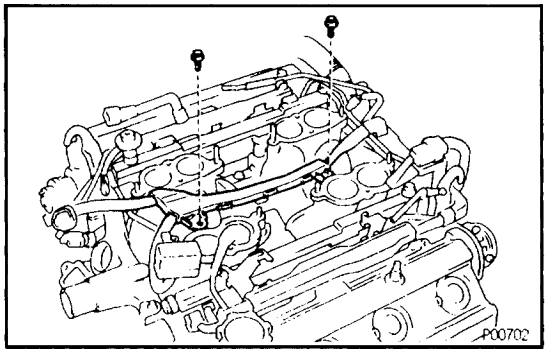

23. INSTALL ENGINE WIRE TO INTAKE MANIFOLD

Install the engine wire protector with the 2 bolts.

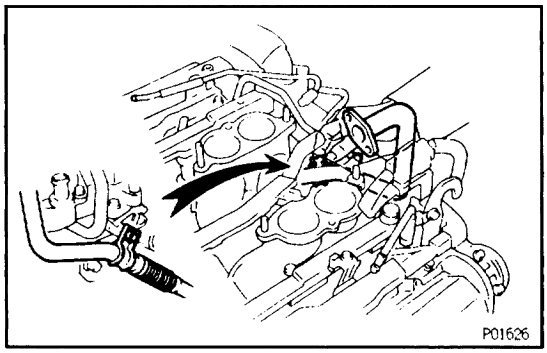

24. TEMPORARILY INSTALL EGR PIPE TO RH CYLINDER HEAD

Temporarily install the EGR pipe with the bolt.

HINT: Use bolt 25 mm (0.98 in.) in length.

WhereEverybodyKnowsYourName

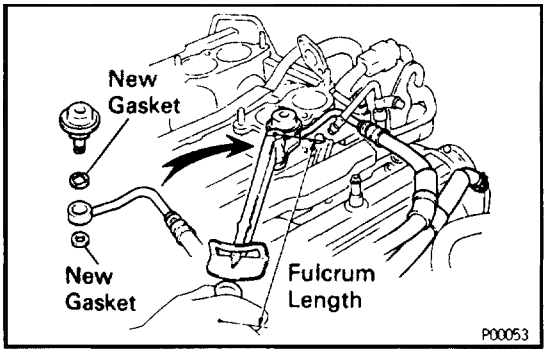

25. CONNECT FUEL RETURN HOSE TO FUEL RETURN PIPE

26. CONNECT FUEL INLET HOSE TO LH DELIVERY PIPE

(a) Temporarily connect the fuel inlet hose to the delivery pipe with 2 new gaskets and pulsation damper.

(b) Install the bolt holding the fuel inlet hose to the delivery pipe.

(c) Using SST tighten the pulsation damper.
SST 09631–22020
Torque:
39 N·m (400 kgf·cm, 29 ft·lbf)
33 N·m (340 kgf·cm, 24 ft·lbf) for SST
HINT: Use a torque wrench with a fulcrum length of 30 cm (11.81 in.).

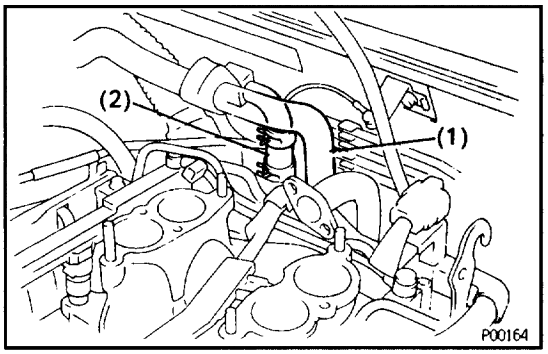

27. INSTALL HEATER WATER HOSES

Connect the following noses:
(1) Water hose to water bypass pipe
(2) Water hose to rear water bypass joint

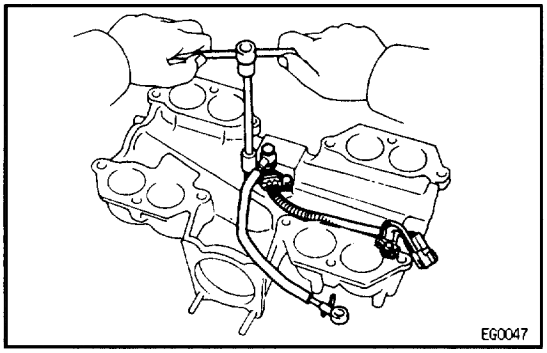

28. INSTALL AIR INTAKE CHAMBER

(a) Install the cold start injector, tube and lead wire assembly with the 3 bolts.
Torque: 7.8 N·m (80 kgf·cm, 69 in.·lbf)

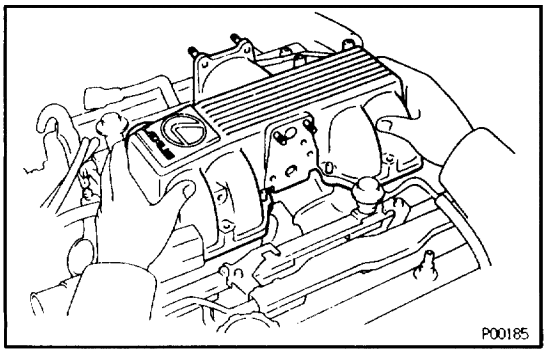

(b) Place 4 new gaskets on the intake manifold.
HINT: Gaskets can only be used twice before being replaced.

(c) Place the air intake chamber on the intake manifold.

WhereEverybodyKnowsYourName

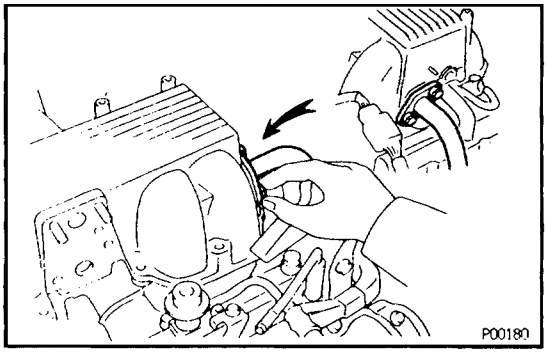

(d) Install a new gasket to the EGR pipe.

(e) Temporarily connect the EGR pipe to the air intake chamber with the 2 bolts.
HINT: Use bolt 20 mm (0.79 in.) in length.

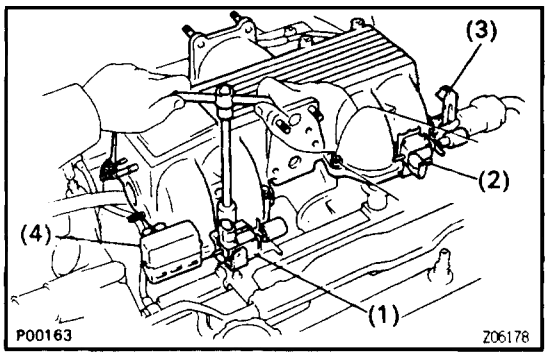

(f) Temporarily install the air intake and and following parts with the 4 bolts and 8 nuts:
(1) VSV for fuel pressure control
(2) Except California:
VSV for EGR
(3) Transmission throttle cable bracket
(4) DLC1

(g) Uniformly tighten the bolts and nuts several passes.
Torque: 18 N·m (185 kgf·cm, 13 ft·lbf)
HINT: Use bolt 40 mm (1.57 in.) in length.

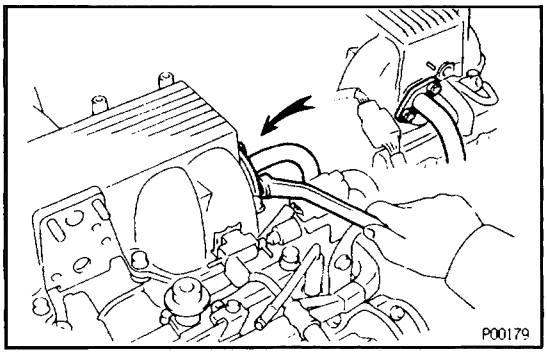

(h) Tighten the 2 bolts holding the EGR pipe to the air intake chamber.
Torque: 18 N·m (185 kgf·cm, 13 ft·lbf)

(i) Tighten the bolt holding the EGR pipe to the RH cylinder head.
Torque: 18 N·m (185 kgf·cm, 13 ft·lbf)

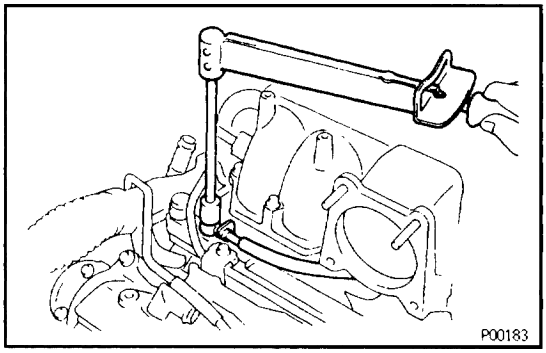

(j) Connect the cold start injector tube to the RH delivery pipe with 2 new gaskets and the union bolt.
Torque: 15 N·m (150 kgf·cm, 11 ft·lbf)

(k) Connect the following connectors:
- Cold start injector connector
- VSV connector for fuel pressure control
- Except California:
  VSV connector for EGR

WhereEverybodyKnowsYourName

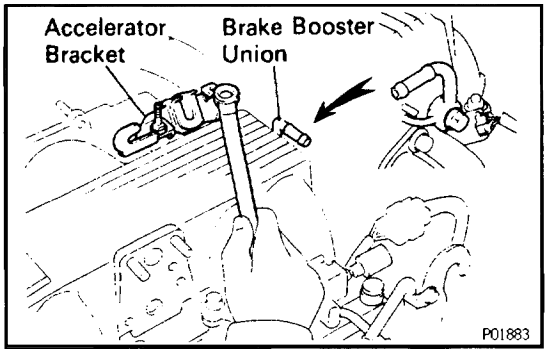

(l) Install the accelerator bracket with the bolt and stud bolt.
(m) Install 2 new gaskets and union with the union bolt.
Torque: 29 N·m (300 kgf·cm, 22 ft·lbf)

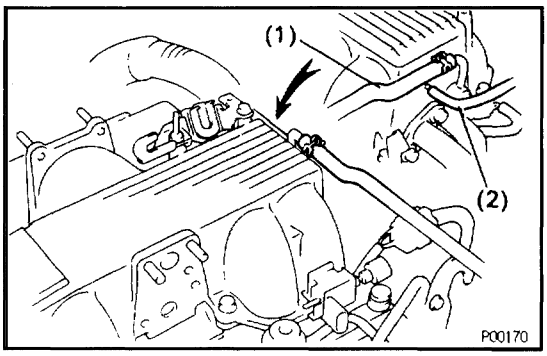

(n) Connect the following hoses:
(1) Brake booster vacuum hose to union on air intake chamber
(2) Vacuum hose (from VSV for heater water valve to air intake chamber

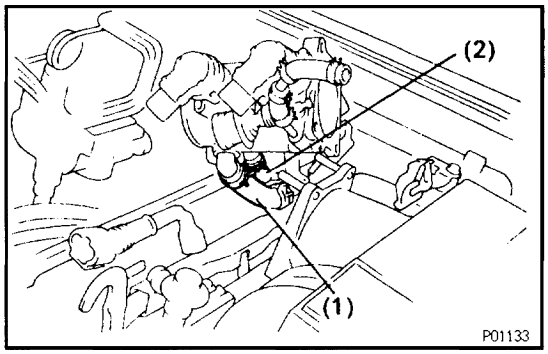

29. INSTALL THROTTLE BODY

(a) Disconnect the following hoses:
(1) PCV hose to throttle body
(2) Water bypass hose to throttle body

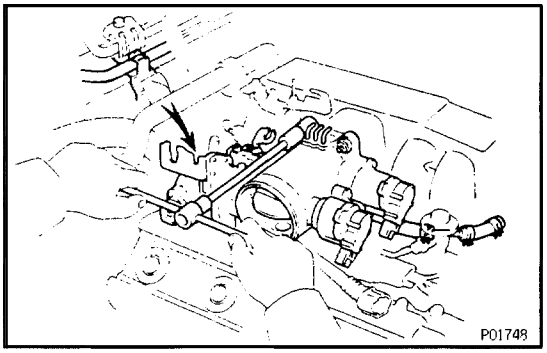

(b) Install a new gasket and throttle body with the 2 bolts and 2 nuts.
Torque: 18 N·m (185 kgf·cm, 13 ft·lbf)
HINT: Use bolt 40 mm (1.57 in.) in length.
(c) Install the water bypass pipe (from the rear bypass joint) to the clamp on the engine wire cover.

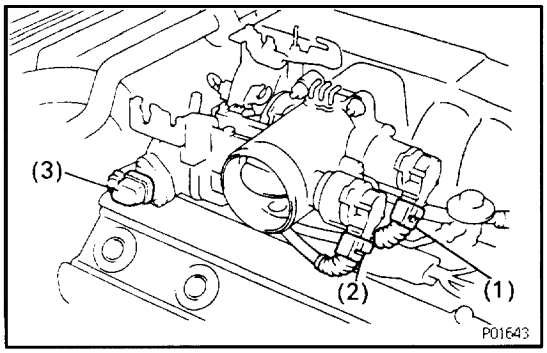

(d) Connect the following connectors:
(1) Throttle position sensor connector
(2) w/ TRAC:
Sub–throttle position sensor connector
(3) w/ TRAC:
Sub–throttle actuator connector

WhereEverybodyKnowsYourName

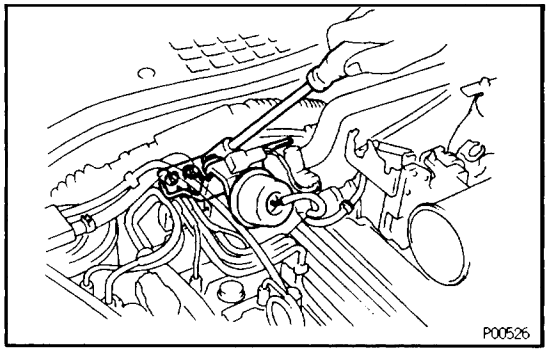

30. INSTALL HEATER WATER VALVE

(a) Install the water valve and bracket assembly with the 2 bolts.
(b) Install the engine wire with the bolt.
(c) Connect the VSV connector.

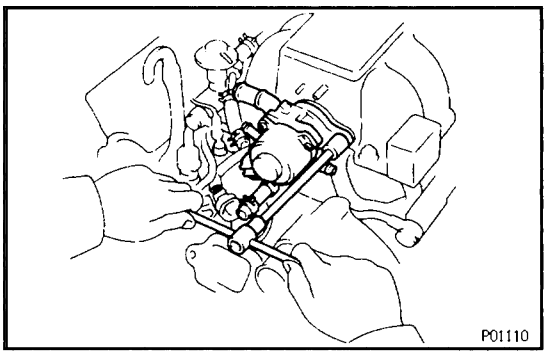

31. INSTALL IAC VALVE

(a) Install a new gasket and IAC valve with the 2 nuts.
Torque: 18 N·m (185 kgf·cm, 13 ft·lbf)

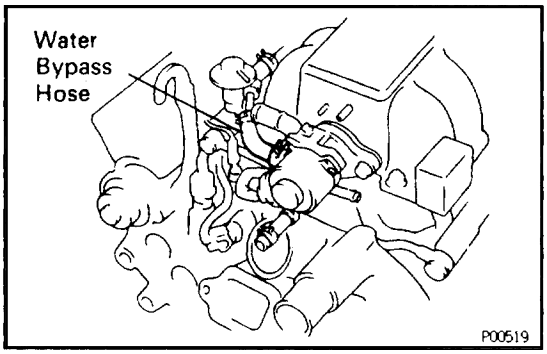

(b) Connect the water bypass hose (from the throttle body) to the IAC valve.
(c) Connect the IAC valve connector.

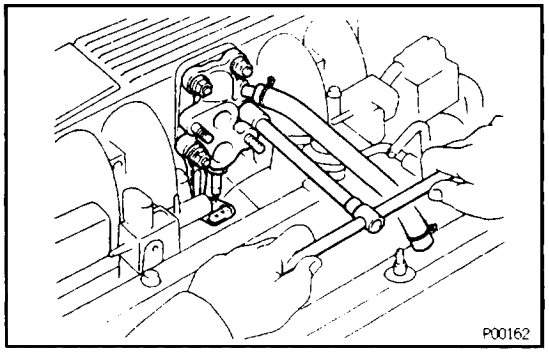

32. INSTALL EGR VALVE ADAPTOR

(a) Install a new gasket, the EGR valve adaptor and EGR gas temperature sensor connector bracket with the 2 bolts and 2 nuts.
Torque: 18 N·m (185 kgf·cm, 13 ft·lbf)
HINT: Use bolt 20 mm (0.78 in.) in length.
NOTICE: Do not touch the air intake chamber and adaptor surfaces of the gasket with your hand.

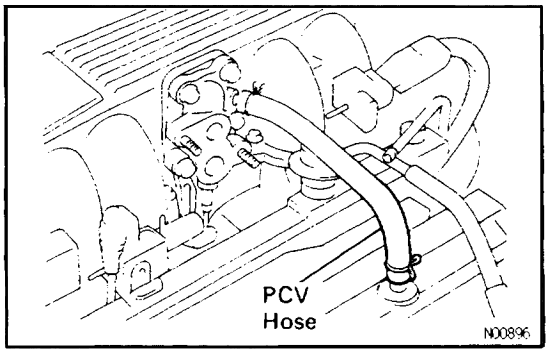

(b) Connect the PCV hose to the cylinder head.
(c) Connect the EGR gas temperature sensor connector.

WhereEverybodyKnowsYourName

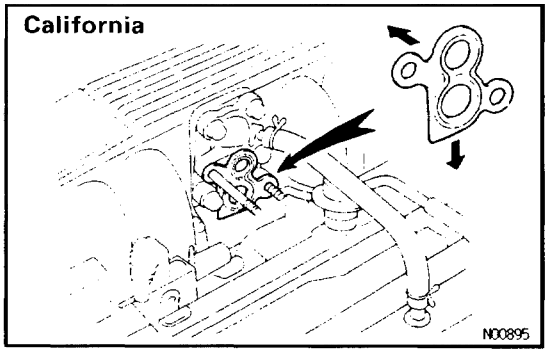

33. California:
INSTALL EGR VALVE

(a) Place a new gasket on the EGR valve apaptor.
NOTICE:
- **Do not touch the adaptor and EGR valve surfaces of the gasket with your hand.**
- **Align the port holes of the gasket and adaptor. Be careful of the installation direction.**

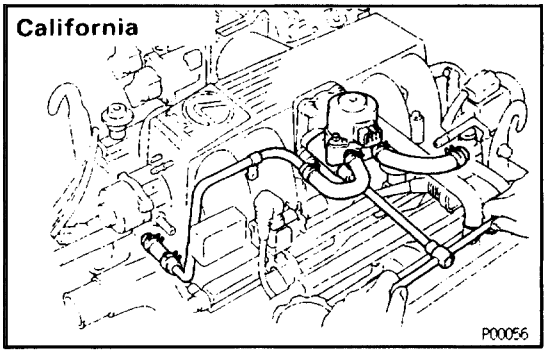

(b) Install the EGR valve with the 2 nuts.
Torque: 18 N·m (185 kgf·cm, 13 ft·lbf)

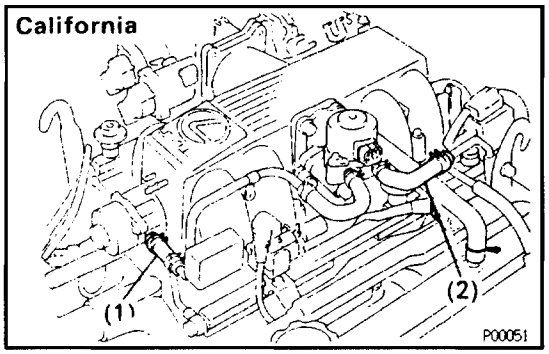

(c) Connect the following hoses:
(1) Water bypass hose to IAC valve
(2) Water bypass hose to water bypass pipe (from rear water bypass joint)

(d) Connect the EGR valve connector.

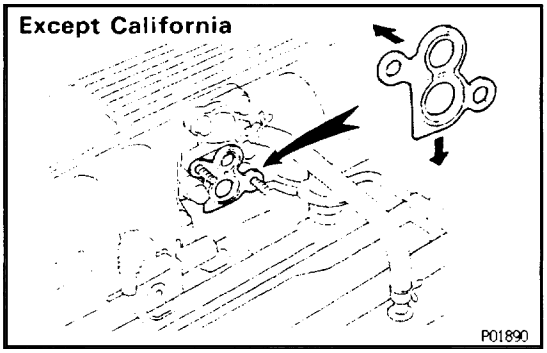

34. Except California:
INSTALL EGR VALVE AND VACUUM MODULATOR

(a) Place a new gasket on the EGR valve adaptor.
NOTICE:
- **Do not touch the adaptor and EGR valve surfaces of the gasket with your hand.**
- **Align the port holes of the gasket and adaptor. Be careful of the installation direction.**

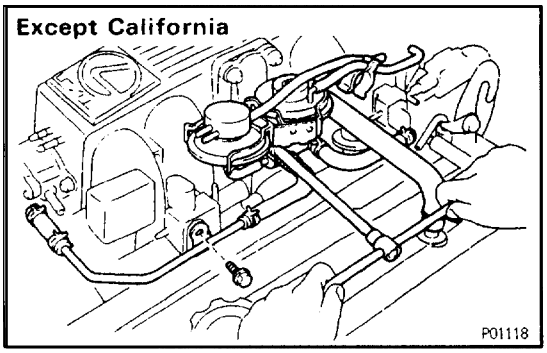

(b) Install the EGR valve and vacuum modulator assembly with the bolt and 2 nuts.
Torque: 18 N·m (185 kgf·cm, 13 ft·lbf)

WhereEverybodyKnowsYourName

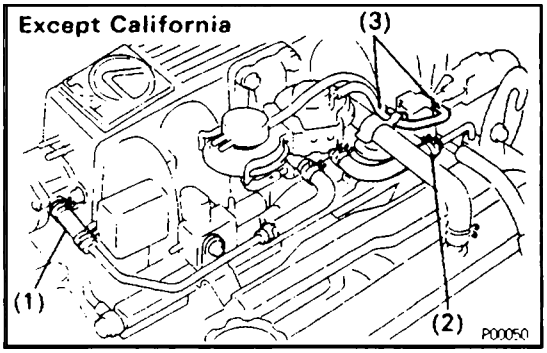

(c) Connect the following hoses:
  (1) Water bypass hose to IAC valve
  (2) Water bypass hose to water bypass pipe (from rear water bypass joint)
  (3) 2 vacuum hoses to VSV for EGR
(d) Install the hose clamp to the PCV hose.

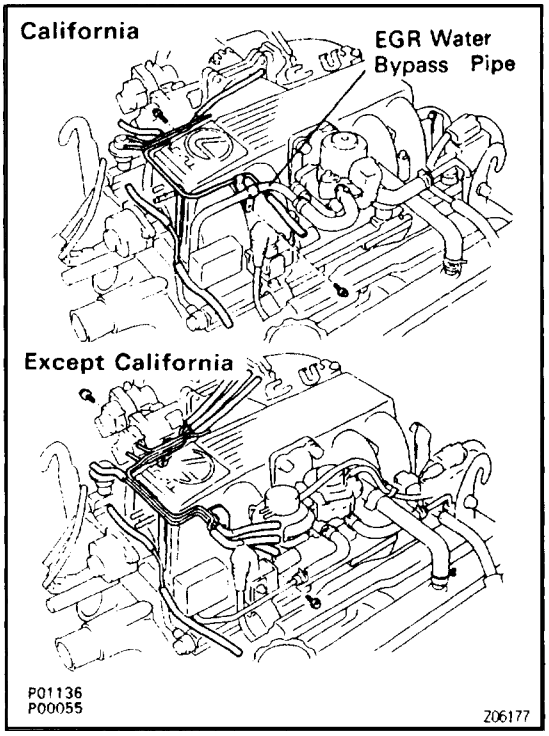

35. INSTALL VACUUM PIPE

(a) Install the vacuum pipe, vacuum hose assembly and EGR water bypass pipe (California) with the 2 bolts.

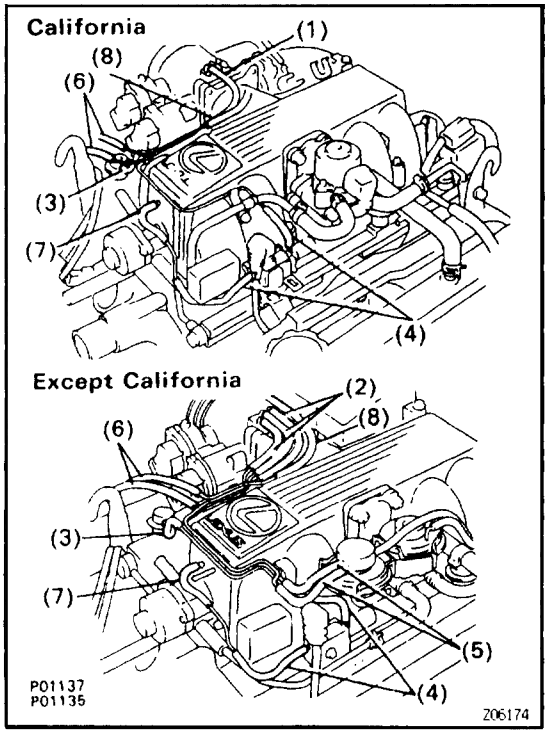

(b) Connect the following hoses:
  (1) California:
    Vacuum hose to throttle body
  (2) Except California:
    3 vacuum hoses to throttle body
  (3) Vacuum hose to fuel pressure regulator
  (4) 2 vacuum hoses to VSV for fuel pressure control
  (5) Except California:
    2 vacuum hoses to EGR vacuum modulator
  (6) 2 vacuum hoses (from VSV for EVAP) to vacuum pipe
  (7) Vacuum hose (from VSV for fuel pressure) to air intake chamber
  (8) Vacuum hose (from charcoal canister) to vacuum pipe

WhereEverybodyKnowsYourName

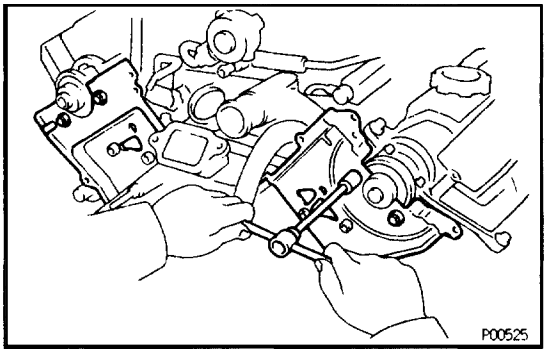

36. INSTALL TIMING BELT REAR PLATES

Install the rear plate with the 2 bolts. Install the 2 rear plates.

Torque: 7.8 N·m (80 kgf·cm, 69 in.·lbf)

37. INSTALL WATER INLET AND INLET HOUSING

(a) Remove any old packing (FIPG) material and be careful not to drop any oil on the contact surfaces of the water inlet housing and water pump.

- Using a razor blade and gasket scraper, remove all the old packing (FIPG) material from the gasket surfaces and sealing groove.
- Thoroughly clean all components to remove all the loose material.

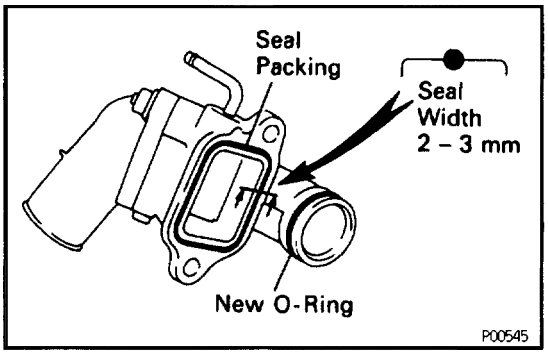

- Using a non–residue solvent, clean both sealing surfaces.

(b) Apply seal packing to the sealing groove of water inlet housing as shown in the illustration.

Seal packing:

Part No. 08826–00100 or equivalent

- Install a nozzle that has been cut to a 2–3 mm (0.08–0 12 in.) opening.
- Parts must be assembled within 5 minutes of application. Otherwise the material must be removed and reapplied.
- Immediately remove nozzle from the tube and reinstall cap.

(c) Install a new O–ring to the water inlet housing.

(d) Apply soapy water on the O–ring.

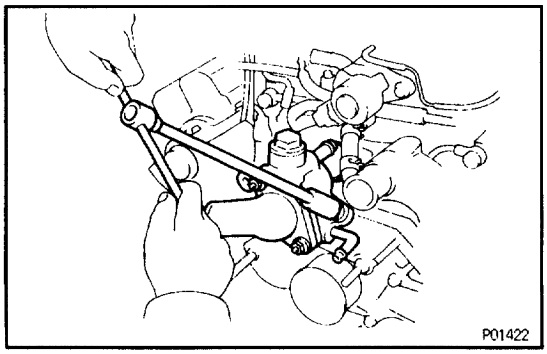

(e) Push the water inlet housing end into the water pump hole.

(f) Install the water inlet and housing assembly with the 2 bolts. Alternately tighten the bolts.

Torque: 18 N·m (185 kgf·cm, 13 ft·lbf)

HINT: Use bolts 25 mm (0.98 in.) in length.

WhereEverybodyKnowsYourName

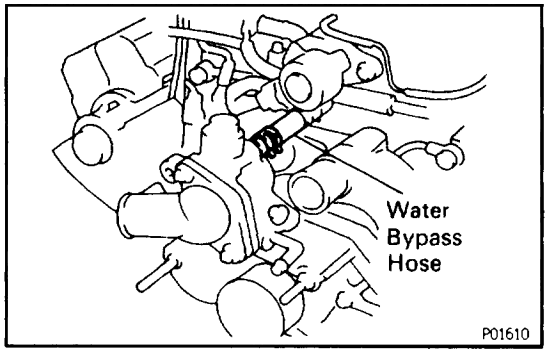

(g) Connect the water bypass hose to the IAC valve.

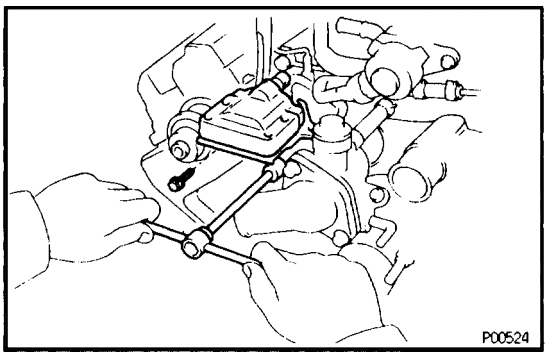

38. INSTALL RH IGNITION COIL

(a) Install the ignition coil with the 2 bolts.

(b) Connect the ignition coil connector.

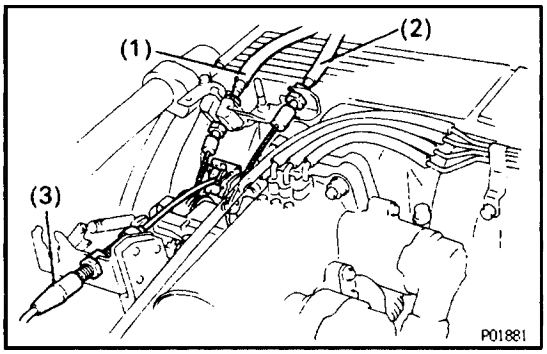

39. CONNECT CONTROL CABLES TO THROTTLE BODY

Connect the following cables:

(1) Accelerator cable

(2) Transmission throttle control cable

(3) Cruise control actuator cable

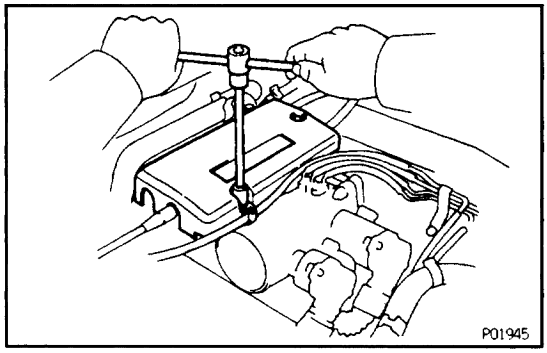

40. INSTALL THROTTLE BODY COVER

(a) Install the throttle body cover and hose clamp with the cap nut and 2 bolts.

(b) Install the EVAP hose to the hose clamp.

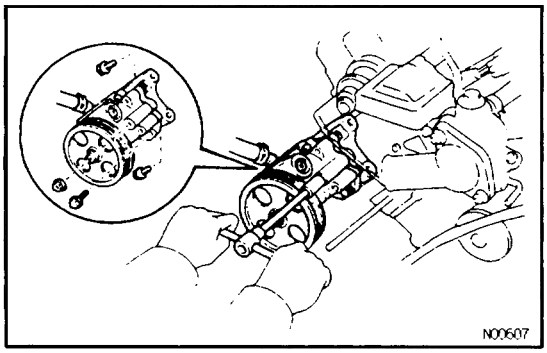

41. INSTALL POWER STEERING (PS) PUMP

(a) Install the PS pump with the nut and 3 bolts. Alternately tighten the bolts and nut.

Torque:

39 N·m (400 kgf·cm, 29 ft·lbf) for bolt

43 N·m (440 kgf·cm, 32 ft·lbf) for nut

WhereEverybodyKnowsYourName

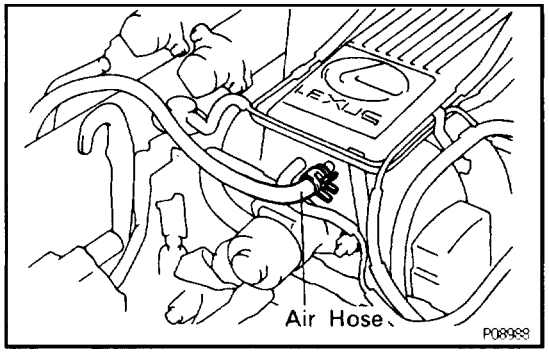

(b) Connect the vacuum hose to the air intake chamber.

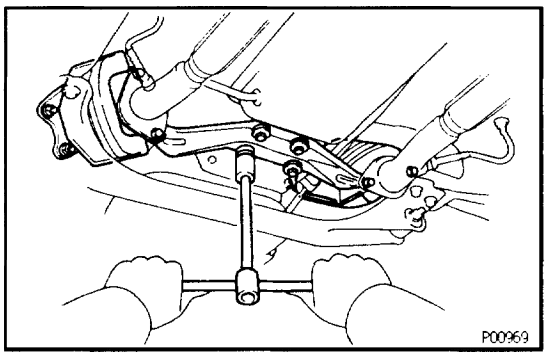

42. INSTALL TWC (FRONT)

(a) Using a 14 deep socket wrench, install a new gasket and the TWC with 3 new nuts. Install the 2 TWC.
Torque: 62 N·m (630 kgf·cm, 46 ft·lbf)

(b) Temporarily install the pipe support bracket to the transmission with the 4 bolts.

(c) Install a new gasket to each front end of the front exhaust pipe.

(d) Connect the front exhaust pipe to the 2 TWC with the 4 bolts and 4 new nuts.
Torque: 43 N·m (440 kgf·cm, 32 ft·lbf)

(e) Tighten the 4 bolts holding the pipe support bracket to the transmission.
Torque: 43 N·m (440 kgf·cm, 32 ft·lbf)

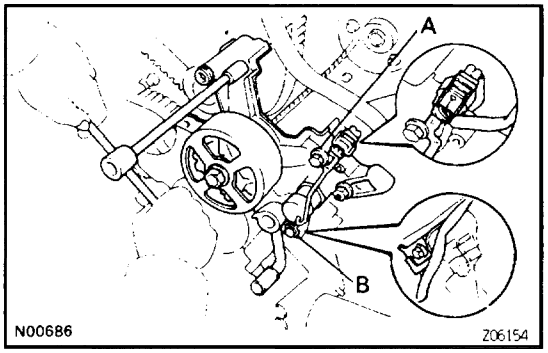

43. INSTALL HYDRAULIC PUMP

Install the hydraulic pump with the 2 bolts and 2 nuts.
Torque:
16 N·m (160 kgf·cm, 12 ft·lbf) for 12 mm head
30 N·m (310 kgf·cm, 22 ft·lbf) for 14 mm head
HINT: Each bolt length is indicated in the illustration.
Bolt length:
106 mm (4.17 in.) for A of 12 mm head
114 mm (4.49 in.) for B of 14 mm head

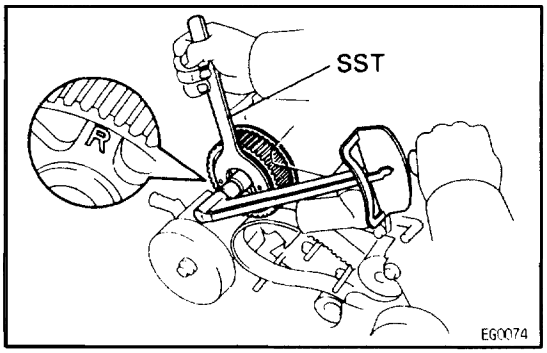

44. INSTALL RH CAMSHAFT TIMING PULLEY

(a) Align the camshaft knock pin with the knock pin groove of the timing pulley, and slide on the timing pulley.

(b) Slide the timing pulley on the camshaft, facing the “R” mark forward.

(c) Using SST, install the pulley bolt.
SST 09278–54012
Torque: 108 N·m (1,100 kgf·cm, 80 ft·lbf)

WhereEverybodyKnowsYourName

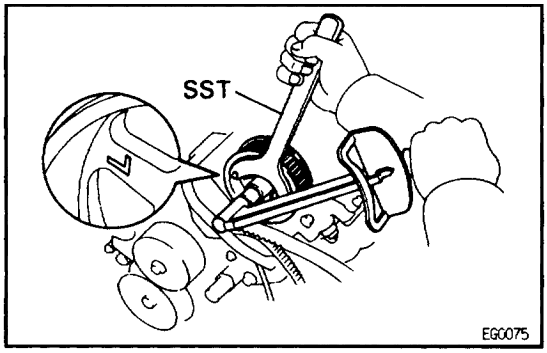

45. INSTALL LH CAMSHAFT TIMING PULLEY

(a) Align the camshaft knock pin with the knock pin groove of the timing pulley, and slide on the timing pulley.

(b) Slide the timing pulley on the camshaft, facing the “L” mark forward.

(c) Using SST, install the pulley bolt.
SST 09278–54012
Torque: 108 N·m (1,100 kgf·cm, 80 ft·lbf)

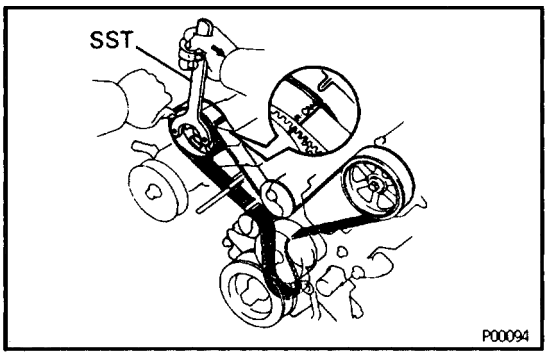

46. CONNECT TIMING BELT TO CAMSHAFT TIMING PULLEYS
(See steps 10 to 40 on pages EG–61 to 72)

47. CONNECT NEGATIVE TERMINAL CABLE TO BATTERY

48. FILL WITH ENGINE COOLANT

49. START ENGINE AND CHECK FOR LEAKS

50. CHECK TRANSMISSION FLUID LEVEL

51. PERFORM ENGINE ADJUSTMENT
(See Tune–Up on pages EG–9 to 34)

52. PERFORM ROAD TEST
Check for abnormal noise, shock, slipage, correct shift points and smooth operation.

53. INSTALL ENGINE UNDER COVER

WhereEverybodyKnowsYourName

CYLINDER BLOCK

COMPONENTS FOR ENGINE REMOVAL AND INSTALLATION

EG251–01

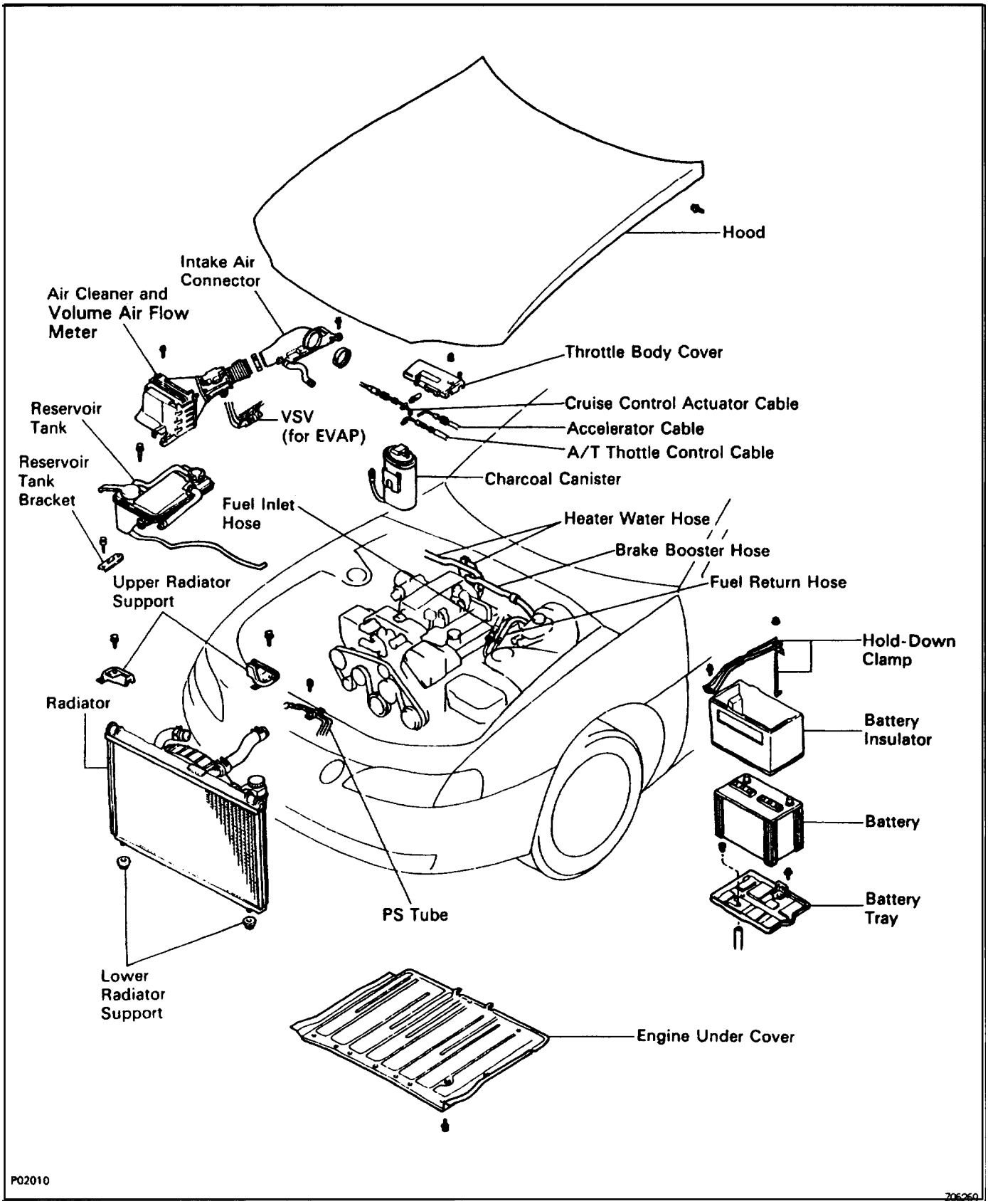

WhereEverybodyKnowsYourName

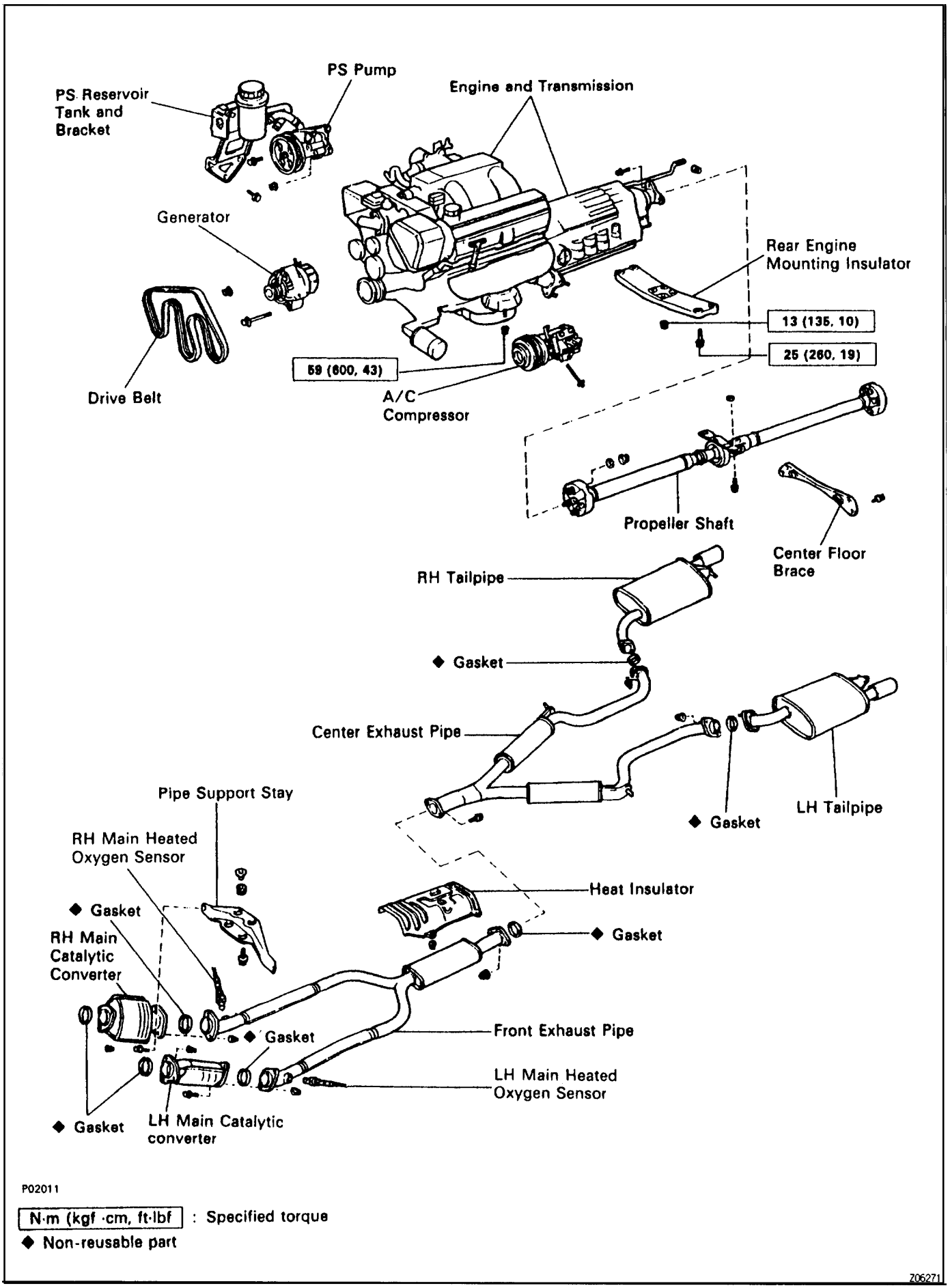

WhereEverybodyKnowsYourName

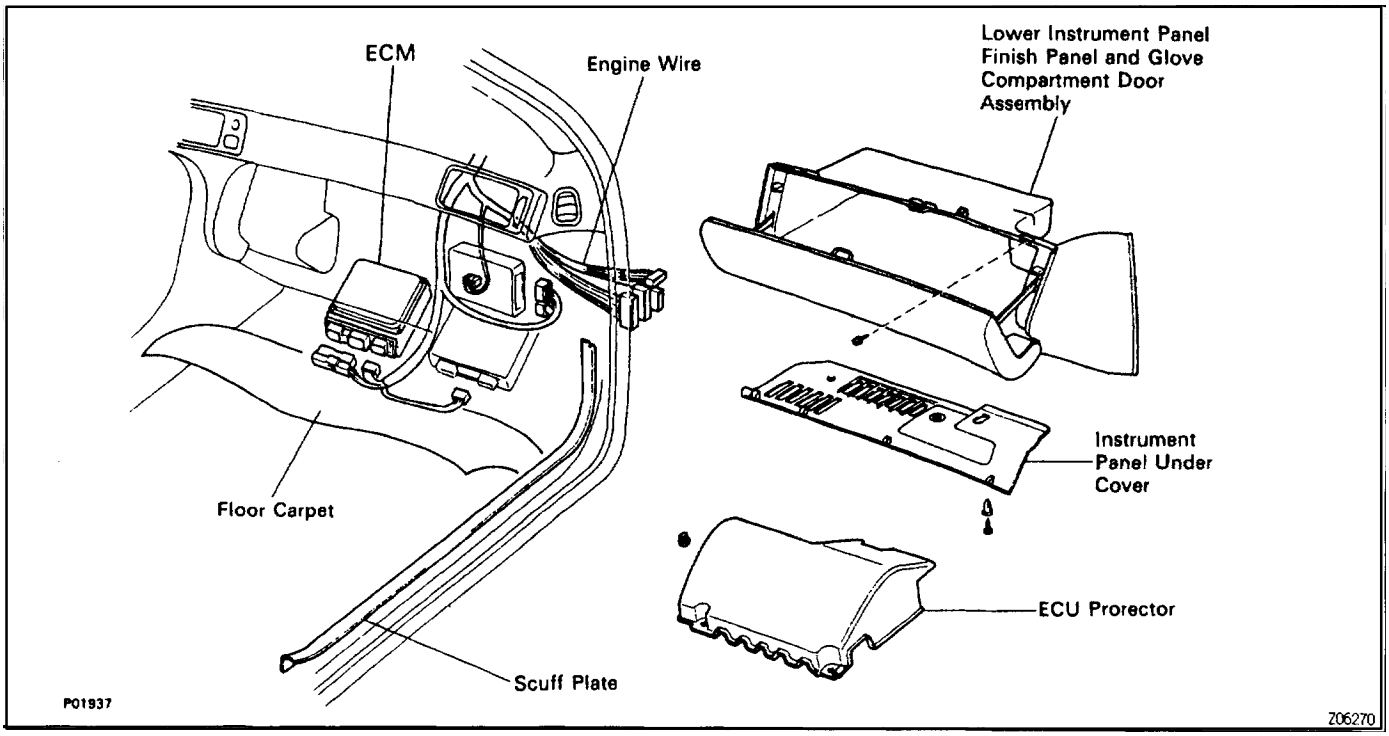

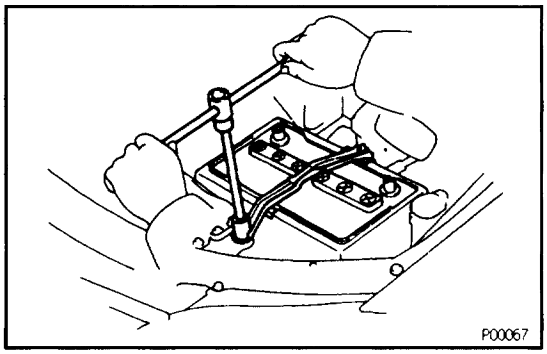

ENGINE REMOVAL

EG24W–02

(See Components for Engine Removal and Installation)

1. **REMOVE BATTERY**
   CAUTION: Work must be started after 90 seconds from the time the ignition switch is turned to the "LOCK" position and the negative (–) terminal cable is disconnected from the battery.

2. **REMOVE HOOD**
3. **REMOVE ENGINE UNDER COVER**
4. **DRAIN ENGINE COOLANT**
5. **DRAIN ENGINE OIL**

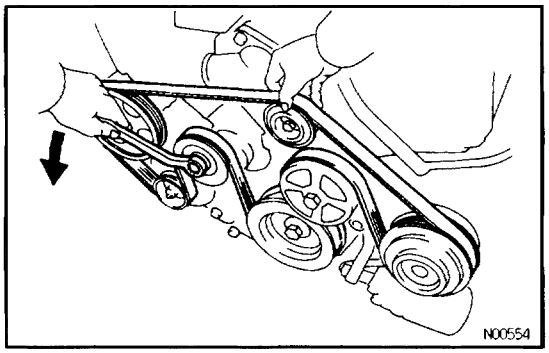

6. **REMOVE DRIVE BELT**
   Loosen the drive belt tension by turning the drive belt tensioner counterclockwise, and remove the drive belt.
   HINT: The pulley bolt for the drive belt tensioner has a left–hand thread.

WhereEverybodyKnowsYourName

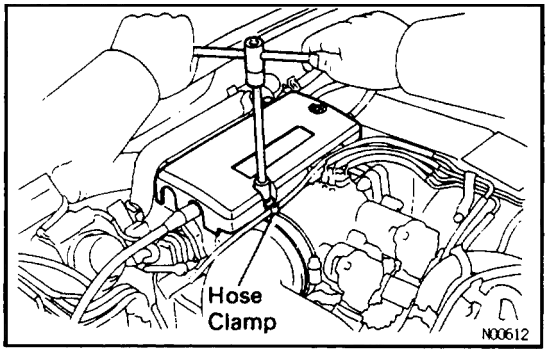

7. REMOVE THROTTLE BODY COVER

(a) Disconnect the EVAP hose from the hose clamp.
(b) Remove the cap nut.
(c) Loosen the 2 bolts, and remove the hose clamp and throttle body cover.

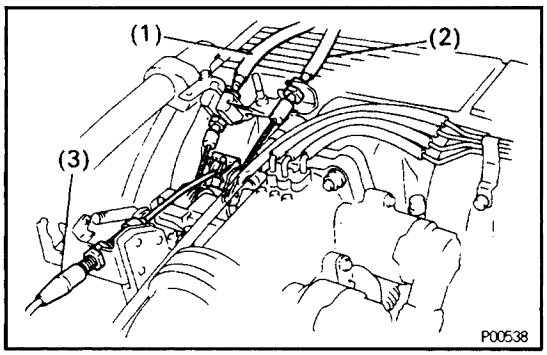

8. DISCONNECT CONTROL CABLES TO THROTTLE BODY

Disconnect the following cables:
(1) Accelerator cable
(2) Transmission throttle control cable
(3) Cruise control actuator cable

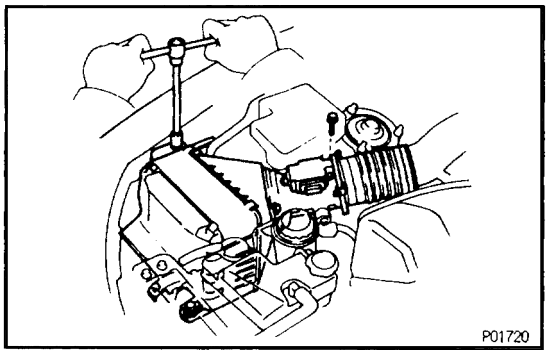

9. REMOVE AIR CLEANER

(a) Disconnect the VAF meter connector.
(b) Remove the hose clamp bolt holding the air cleaner hose to the intake air connector.
(c) Remove the 4 bolts.
(d) Disconnect the air cleaner hose from the intake air connector.
(e) Disconnect the air duct from the air cleaner case, and remove the air cleaner.

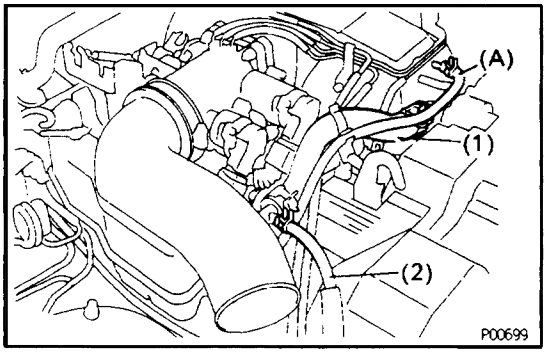

10. DISCONNECT VACUUM HOSE (A) (FROM PS AIR CONTROL VALVE) FROM AIR INTAKE CHAMBER

11. REMOVE INTAKE AIR CONNECTOR

(a) Disconnect the following hoses from the intake air connector:
(1) Air hose (from IAC valve)
(2) Air hose (from air control valve on PS pump)

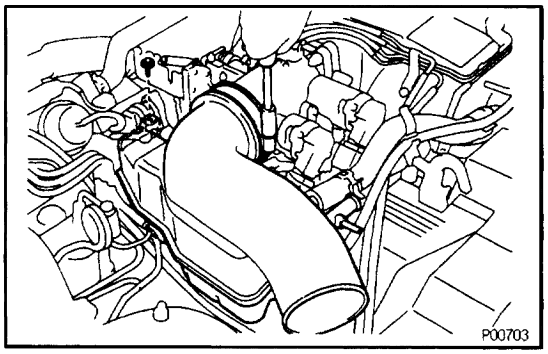

(b) Remove the hose clamp bolt holding the intake air connector to the throttle body.
(c) Remove the bolt and intake air connector.

WhereEverybodyKnowsYourName

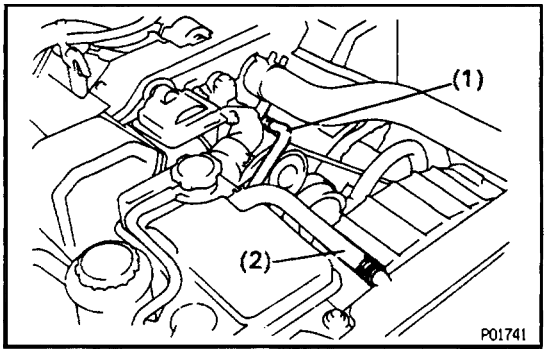

12. REMOVE RADIATOR RESERVOIR TANK

(a) Disconnect the coolant level sensor connector.

(b) Disconnect the following hoses:

(1) Reservoir hose from water inlet housing

(2) Reservoir hose from radiator

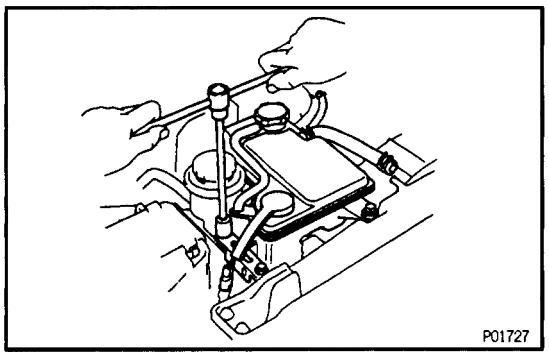

(c) Remove the 2 bolts and reservoir tank bracket.

(d) Remove the bolt holding the reservoir tank to the radiator.

(e) Disconnect the reservoir tank from the reservoir tank bracket, and remove the reservoir tank.

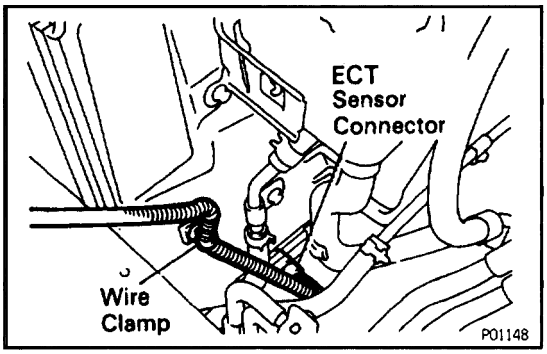

13. REMOVE RADIATOR ASSEMBLY

(a) Disconnect the ECT sensor connector (for cooling fan).

(b) Disconnect the ECT sensor wire clamp from the radiator fan shroud.

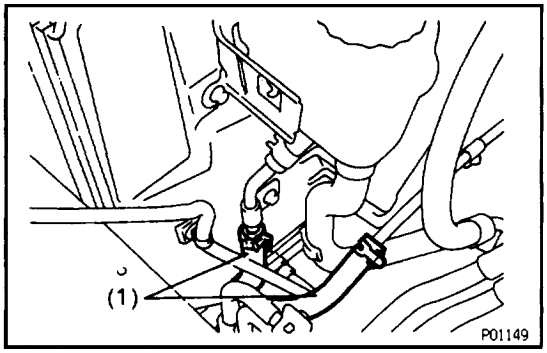

(c) Disconnect the following hoses:

(1) 2 oil cooler hoses (for cooling fan) from pipes

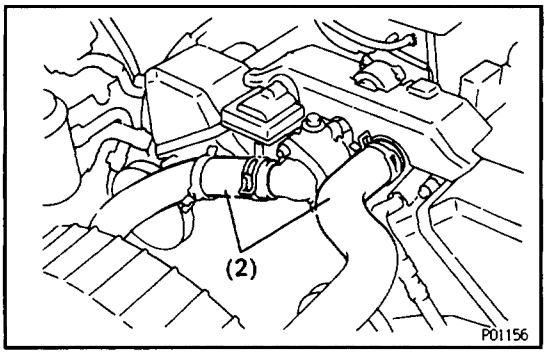

(2) 2 radiator hoses

WhereEverybodyKnowsYourName

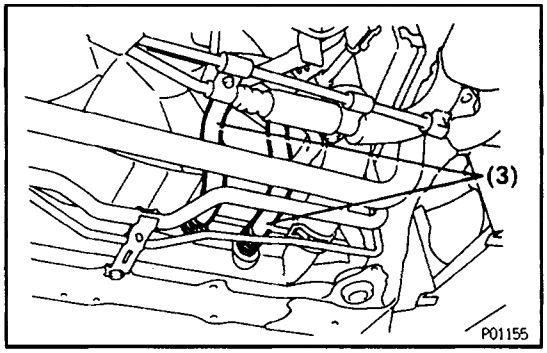

(3) 2 oil cooler hoses (for transmission) from radiator
HINT: Plug the hose ends.

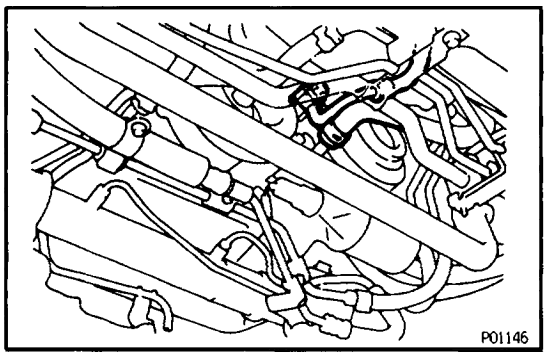

(4) Suction hose from hydraulic pump
(5) Pressure hose from hydraulic pump

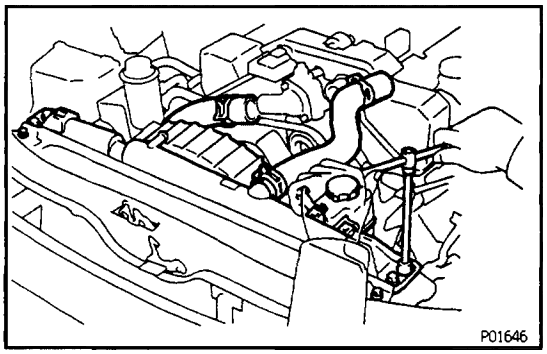

(d) Remove the 2 bolts, screw and upper radiator support. Remove the 2 upper radiator supports.

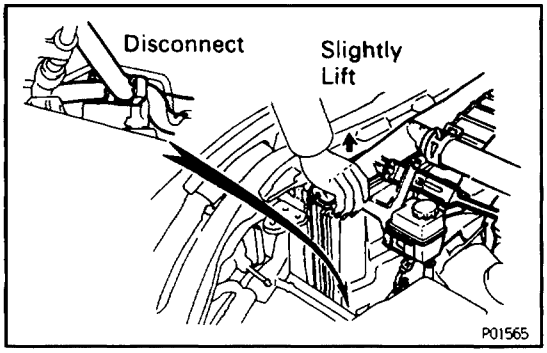

(e) Slightly lift the radiator, and disconnect the 2 oil cooler hoses (for cooling fan) from the hose clamp on the radiator fan shroud.
(f) Remove the radiator assembly.
(g) Remove the 2 lower radiator supports from the radiator.

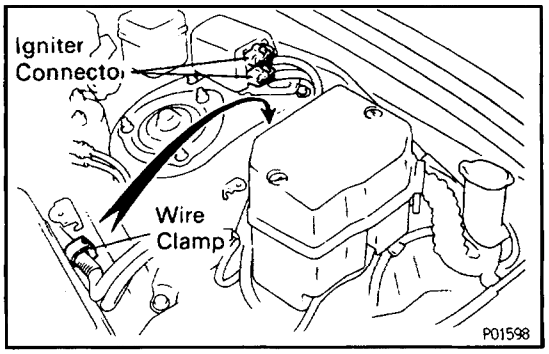

14. DISCONNECT IGNITER CONNECTORS
(a) Disconnect the 2 igniter connectors.
(b) Disconnect the wire clamp from the body.

WhereEverybodyKnowsYourName

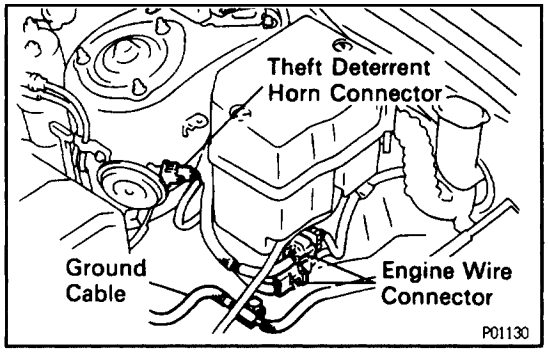

15. DISCONNECT ENGINE WIRE CONNECTORS

16. DISCONNECT THEFT DETERRENT HORN CONNECTOR

17. DISCONNECT GROUND CABLE FROM BODY

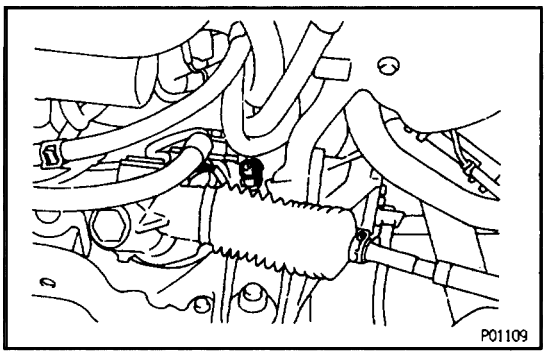

18. DISCONNECT POWER STEERING (PS) SOLENOID VALVE CONNECTOR

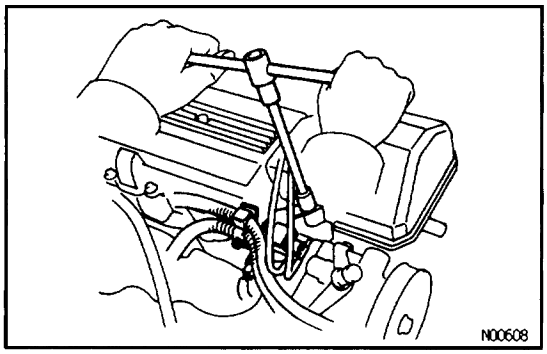

19. DISCONNECT WIRE CLAMP (FOR GENERATOR) FROM VSV (FOR EVAP)

(a) Remove the 2 bolts, and disconnect the VSV from the RH cylinder head.

(b) Disconnect the wire clamp from the VSV bracket.

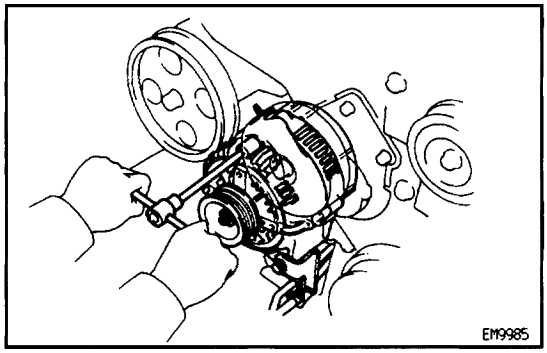

20. REMOVE GENERATOR

(a) Disconnect the generator connector.

(b) Remove the cap and nut, and disconnect the generator wire.

(c) Remove the bolt, and disconnect the transmission oil cooler pipe bracket from the generator.

(d) Remove the nut and generator.

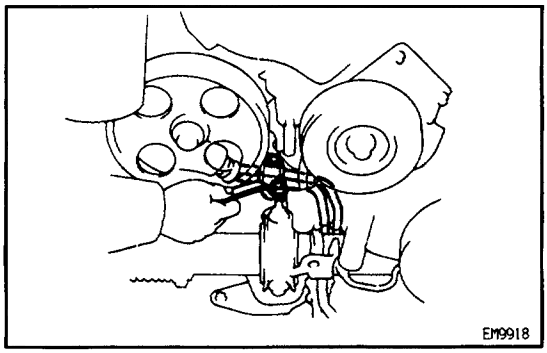

21. DISCONNECT POWER STEERING (PS) TUBES FROM SUSPENSION CROSSMEMBER

Remove the clamp bolt, and disconnect the PS tubes.

WhereEverybodyKnowsYourName

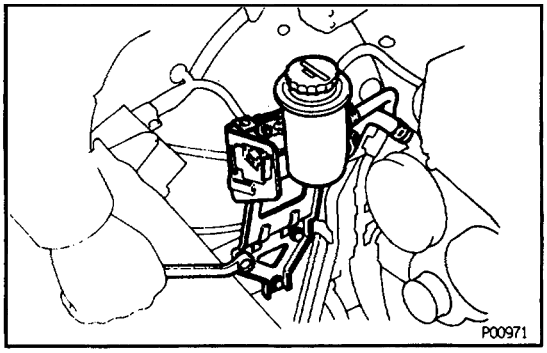

22. DISCONNECT POWER STEERING (PS) RESERVOIR TANK AND BRACKET FROM BODY

Remove the 3 bolts, and disconnect the reservoir tank and bracket assembly.

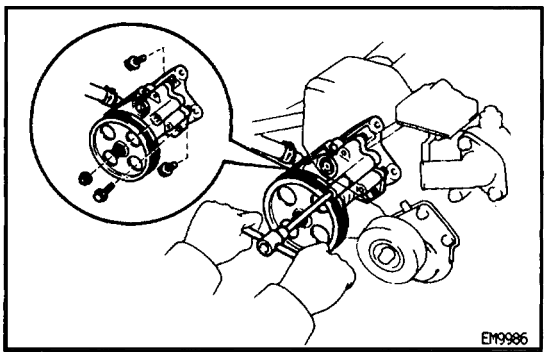

23. DISCONNECT POWER STEERING (PS) PUMP FROM ENGINE

Remove the nut and 3 bolts, and disconnect the PS pump from the engine.

HINT: Put aside the PS pump, and suspend it.

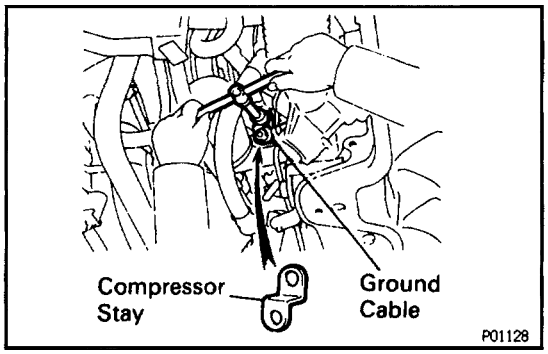

24. DISCONNECT AIR CONDITIONING (A/C) COMPRESSOR FROM ENGINE

(a) Disconnect the A/C compressor connector.

(b) Remove the nut, and disconnect the ground cable from the A/C compressor stay.

(c) Remove the bolt and A/C compressor stay.

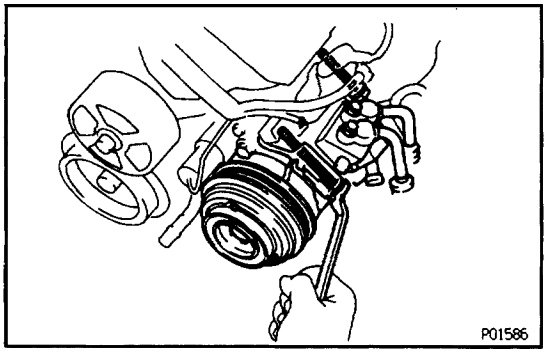

(d) Remove the 2 bolts, and disconnect the A/C compressor from the engine.

HINT: Put aside the A/C compressor, and suspend it.

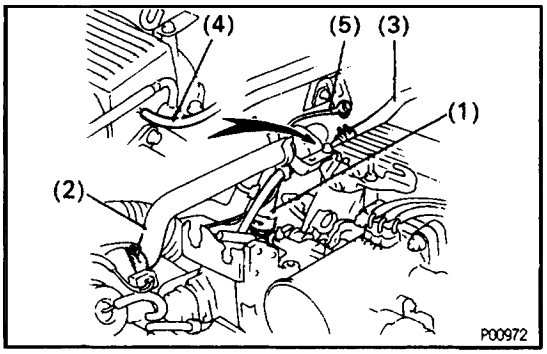

25. DISCONNECT HOSES

Disconnect the following hoses and ground strap:

(1) Heater water hose from water bypass hose

(2) Heater water hose from heater water valve

(3) Brake booster hose from union on air intake chamber

(4) Vacuum hose (from VSV for heater water valve) from air intake chamber

(5) Ground strap from bracket on body.

WhereEverybodyKnowsYourName

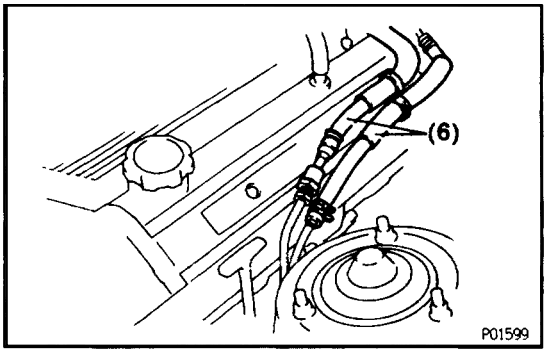

(6) Fuel inlet hose from fuel tube
(7) Fuel return hose from return pipe
HINT: Plug the hose ends.

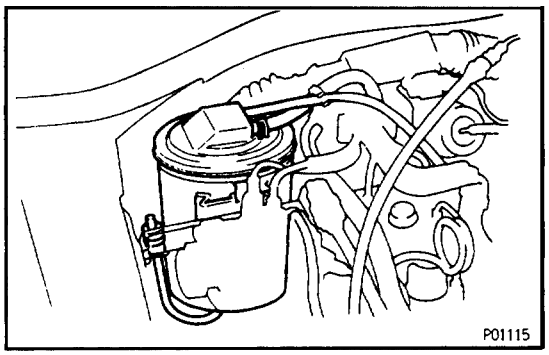

26. REMOVE CHARCOAL CANISTER

(a) Disconnect the vacuum hose and air hose from from the charcoal canister.
(b) Remove the charcoal canister.

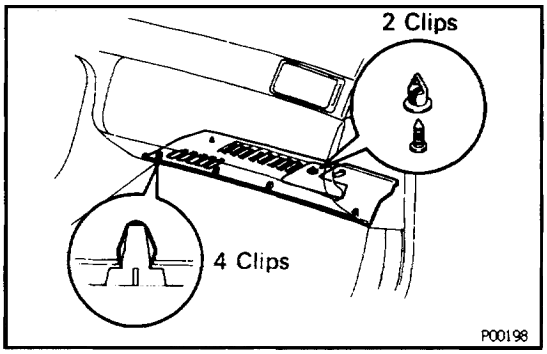

27. DISCONNECT ENGINE WIRE FROM CABIN

(a) Remove the 2 clips, and pull out the instrument panel under cover.

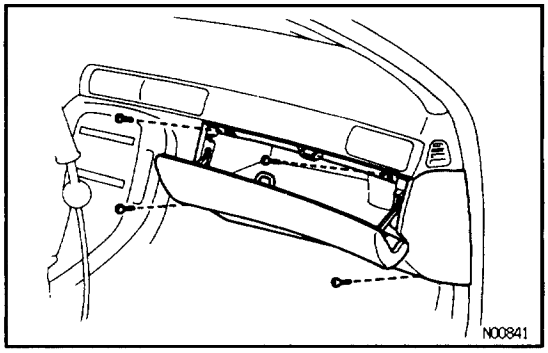

(b) Remove the 4 screws.
(c) Disconnect the connectors, and remove the lower instrument panel finish panel and glove compartment door assembly.

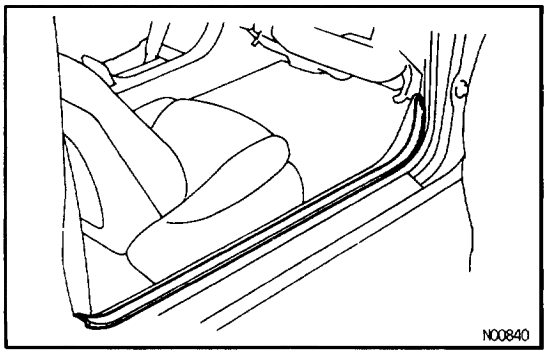

(d) Pull out the scuff plate.

WhereEverybodyKnowsYourName

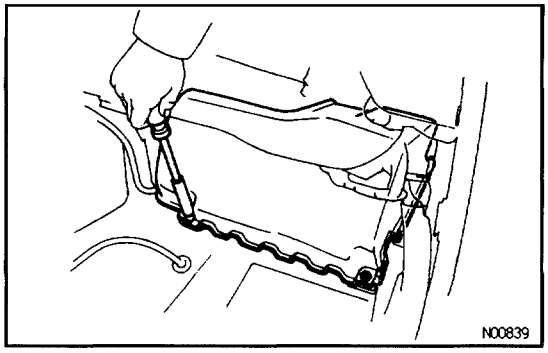

(e) Take out the front side of the floor carpet.
(f) Remove the 2 nuts and ECM protector.

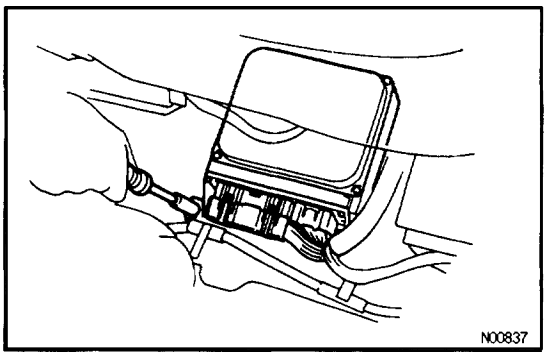

(g) Remove the nut, and disconnect the ECM from the floor panel.

(h) Disconnect the following connectors:
  (1) 2 connectors from ECM
  (2) Connector from ABS & TRAC ECU
  (3) 2 connectors from TRAC ECU
  (4) 4 connectors from connector cassette
  (5) Connector from A/C control assembly

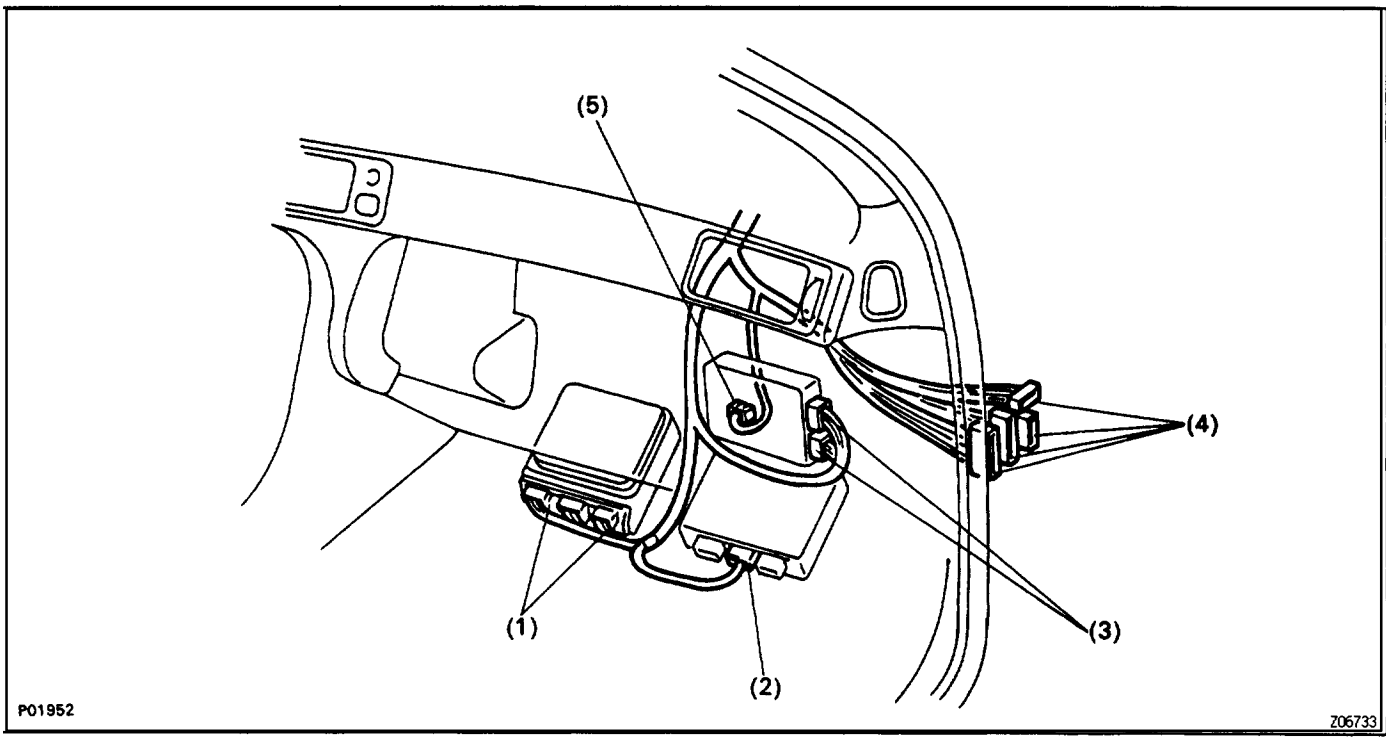

WhereEverybodyKnowsYourName

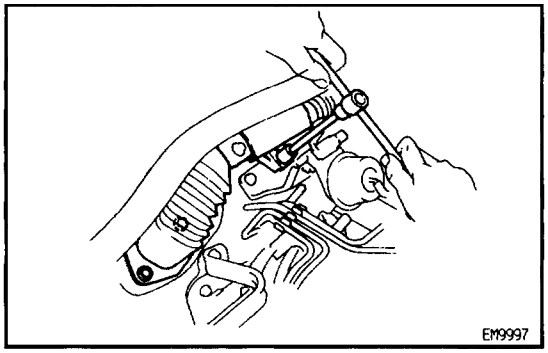

(i) Remove the bolt holding the engine wire clamp to the heater water valve bracket.
(j) Remove the 2 bolts holding the engine wire clamp to the body.

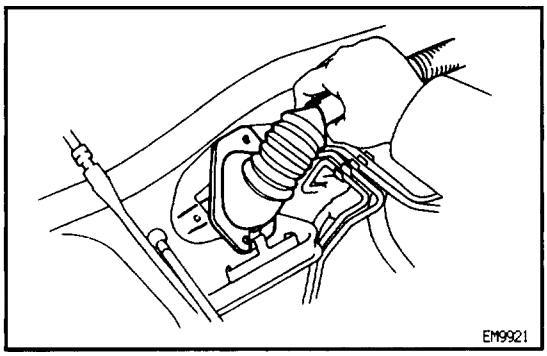

(k) Pull out the engine wire from the cabin.
NOTICE: Be careful not to damage the engine wire.

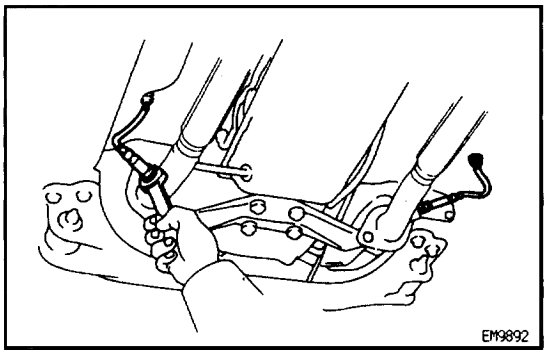

28. DISCONNECT SUB HEATED OXYGEN SENSORS FROM FRONT EXHAUST PIPE
(a) Disconnect the 2 wire grommets from the floor panel.
(b) Disconnect the 2 oxygen sensors from the exhaust pipe.

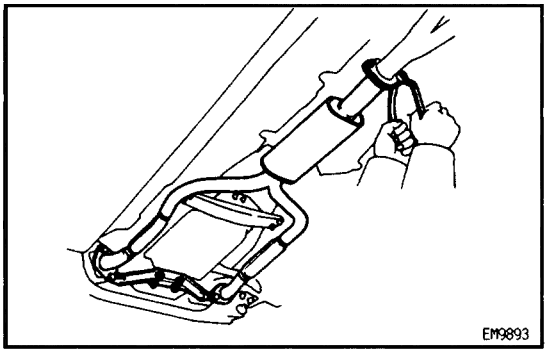

29. REMOVE FRONT EXHAUST PIPE
(a) Remove the 4 bolts holding the pipe support bracket to the transmission.
(b) Remove the 2 bolts and nuts holding the front exhaust pipe to the center exhaust pipe.
(c) Remove the 4 bolts and nuts holding the front exhaust pipe to the TWC.
(d) Remove the pipe support bracket, front exhaust pipe and 3 gaskets.

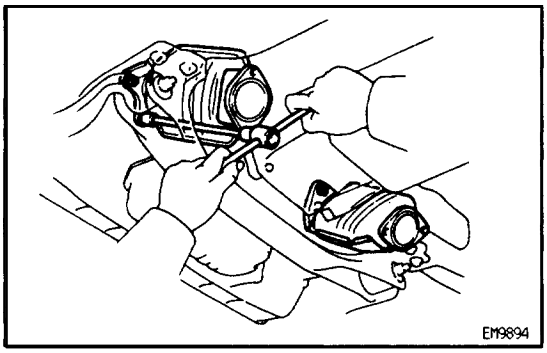

30. REMOVE TWC (FRONT)
Using a 14 mm deep socket wrench, remove the 3 nuts, TWC and gasket. Remove the 2 TWC.

WhereEverybodyKnowsYourName

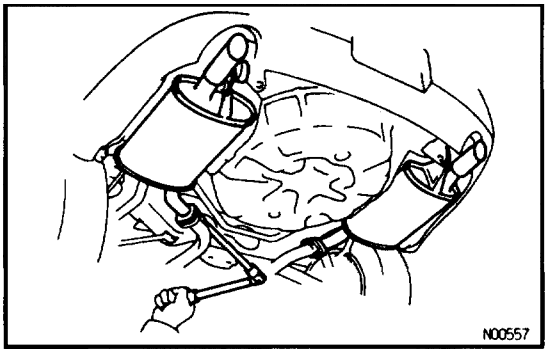

31. REMOVE TAILPIPE

(a) Remove the 4 nuts holding the tailpipes to the center exhaust pipe.

(b) Disconnect the hook from the ring on tailpipe bracket, and remove the tailpipe and gasket. Remove the 2 tailpipes.

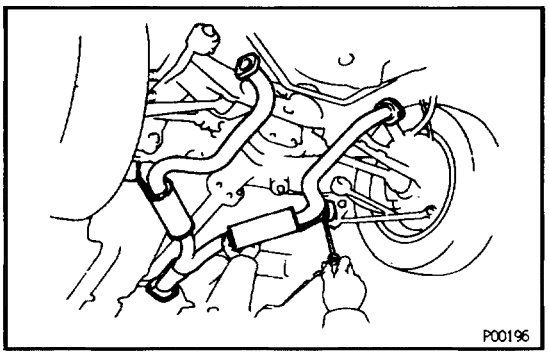

32. REMOVE CENTER EXHAUST PIPE

Disconnect the 2 hooks of the exhaust pipe from the rings on exhaust pipe brackets, and remove the exhaust pipe.

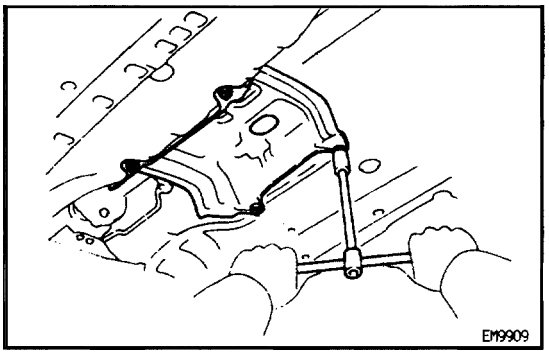

33. REMOVE HEAT INSULATOR FOR FRONT EXHAUST PIPE

Remove the 4 nuts and heat insulator.

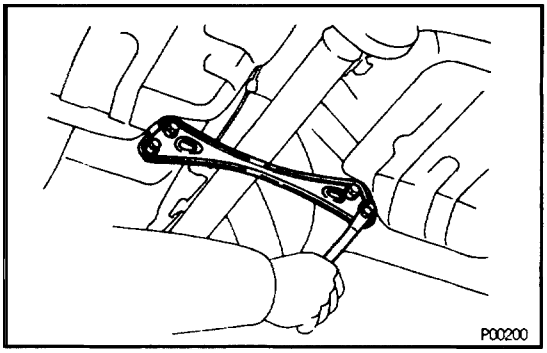

34. REMOVE CENTER FLOOR CROSSMEMBER BRACE

Remove the 4 bolts and crossmember brace.

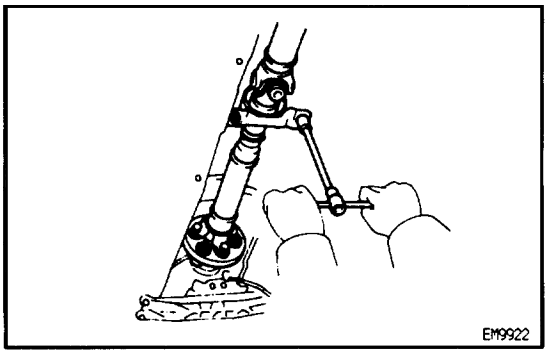

35. REMOVE PROPELLER SHAFT (See page PR–6)

WhereEverybodyKnowsYourName

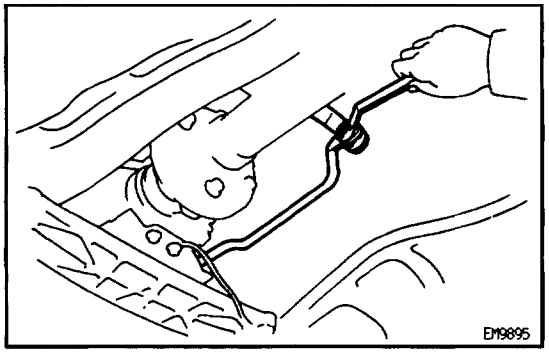

36. DISCONNECT TRANSMISSION CONTROL ROD FROM SHIFT LEVER

Remove the nut, and disconnect the control rod from the shift lever.

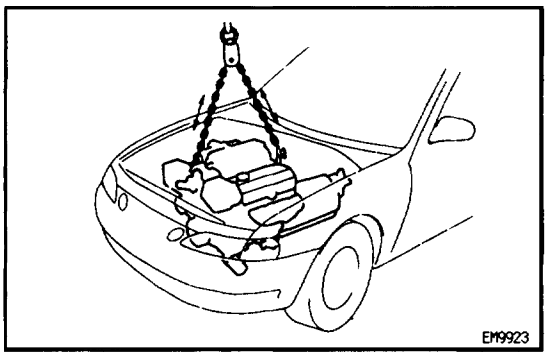

37. REMOVE ENGINE AND TRANSMISSION ASSEMBLY FROM VEHICLE

(a) Attach the engine chain hoist to the engine hangers.

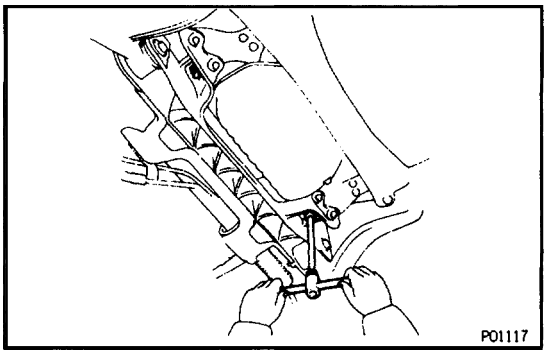

(b) Remove the 2 nuts holding the engine mounting insulators to the front suspension crossmember.

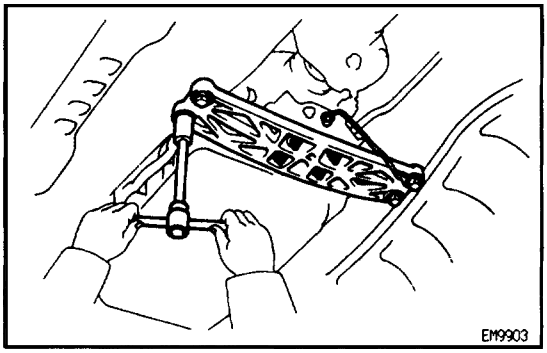

(c) Remove the 4 bolts, 4 nuts and rear engine mounting member. Disconnect the ground strap.

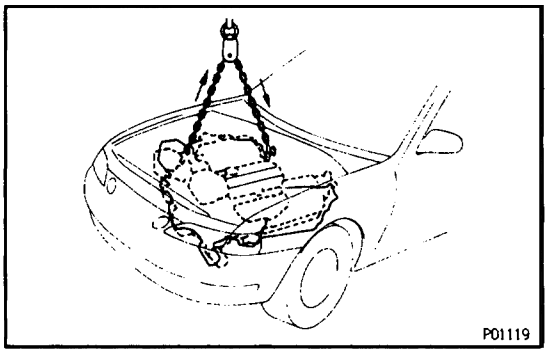

(d) Lift the engine out of the vehicle slowly and carefully.
HINT: Make sure the engine is clear of all wirings, hoses and cables.
NOTICE: Be careful not hit the PS gear housing, PNP switch and ABS actuator.

(e) Place the engine and transmission assembly onto the stand.

WhereEverybodyKnowsYourName

COMPONENTS FOR ENGINE & TRANSMISSION SEPERATION AND ASSEMBLY

EG0BS–0F

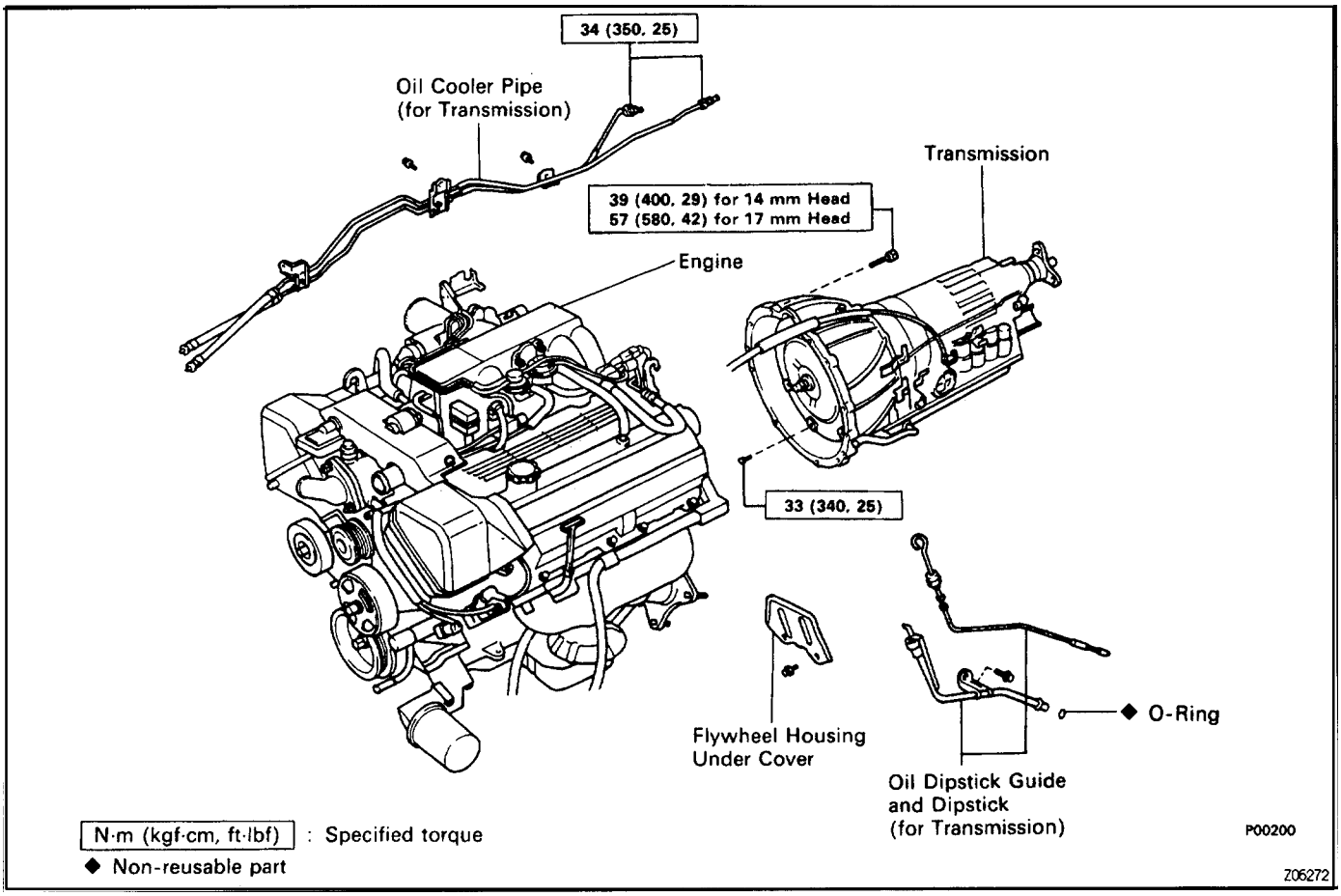

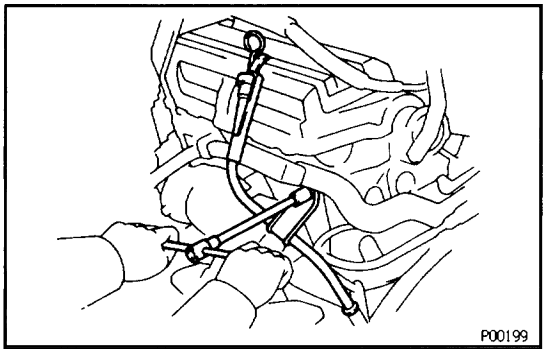

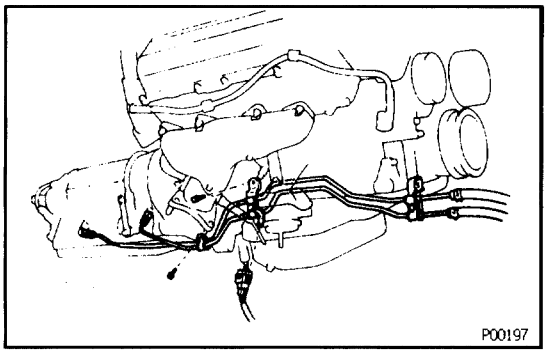

ENGINE & TRANSMISSION SEPARATION

EG24X–01

(See Components for Engine & Transmission Separation and Assembly)

1. REMOVE OIL DIPSTICK GUIDE AND DIPSTICK FOR TRANSMISSION

(a) Remove the bolt.

(b) Pull out the dipstick guide and dipstick from the port of transmission.

(c) Remove the O–ring from the dipstick guide.

2. REMOVE OIL COOLER PIPES FOR TRANSMISSION

(a) Remove the 2 bolts.

(b) Loosen the 2 union nuts, and remove the oil cooler pipes.

WhereEverybodyKnowsYourName

3. DISCONNECT ENGINE WIRE

(a) Disconnect the following connector:
  (1) O/D direct clutch speed sensor connector
  (2) No.1 VSS connector for Speedometer
  (3) No.2 VSS connector for ECM
  (4) PNP switch connector
  (5) Solenoid connector

(b) Disconnect the 5 wire clamps from the brackets on transmission.

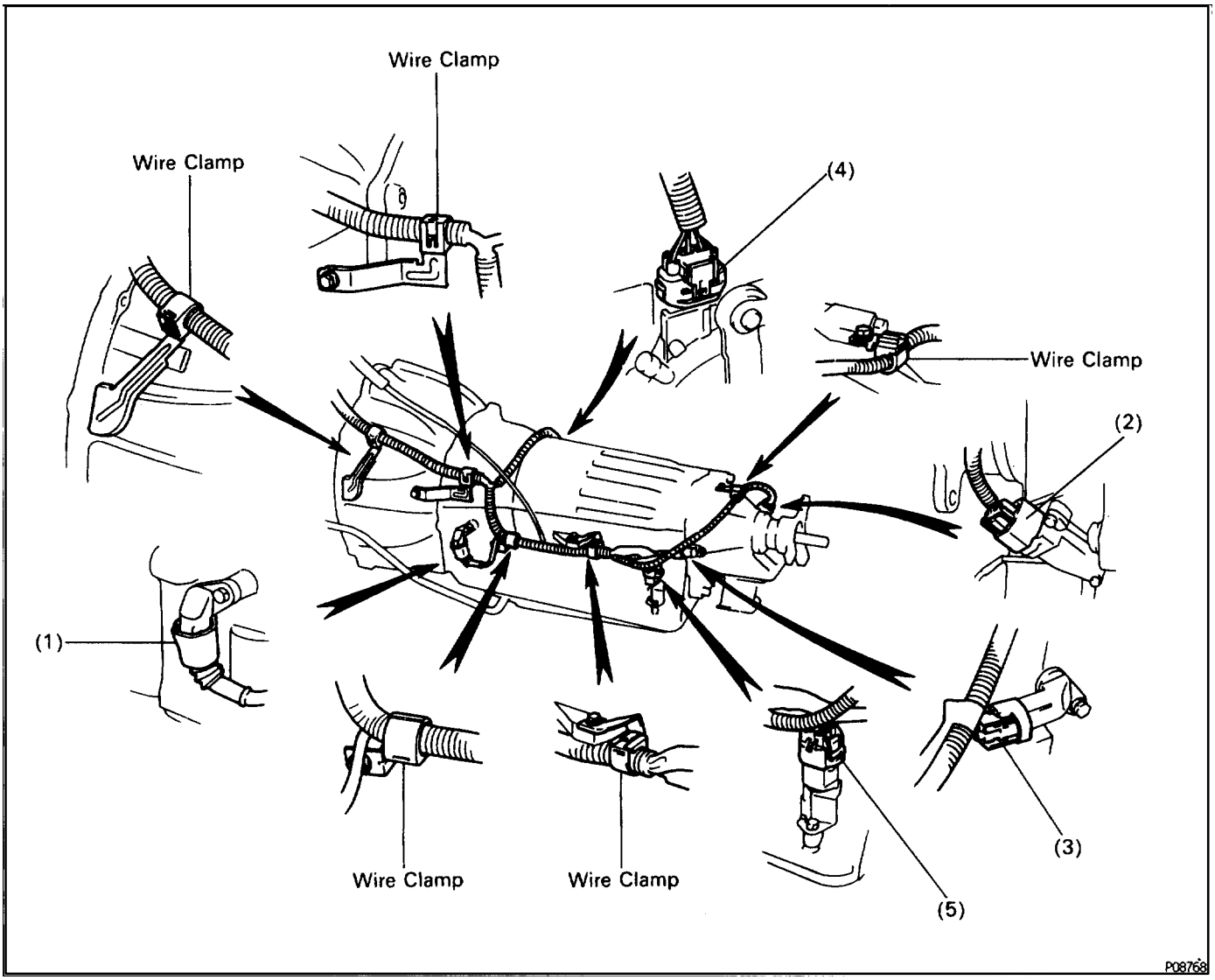

4. REMOVE TRANSMISSION (See page AT–23)

WhereEverybodyKnowsYourName

COMPONENTS FOR CYLINDER BLOCK DISASSEMBLY AND ASSEMBLY

EG0BS–0E

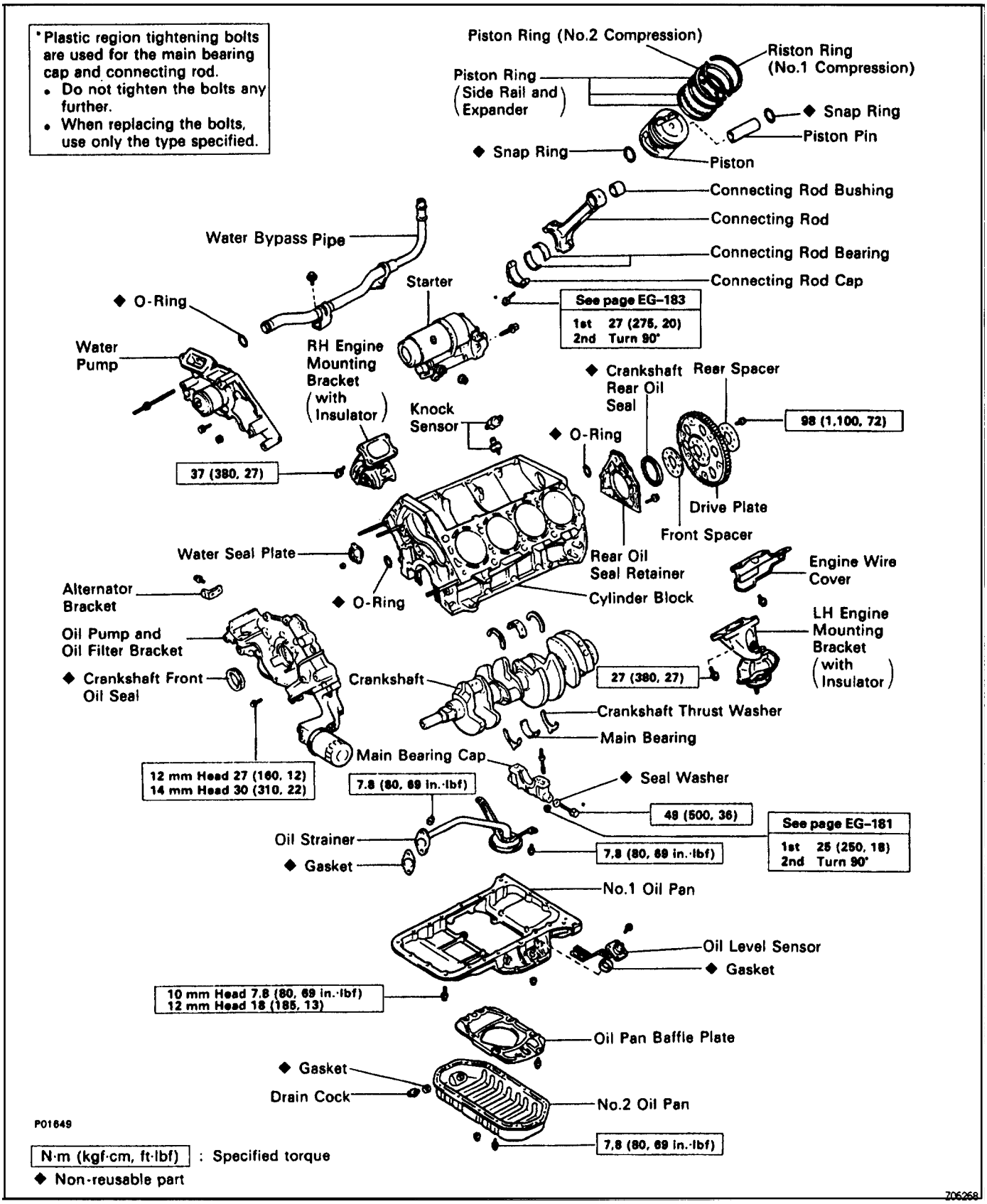

WhereEverybodyKnowsYourName

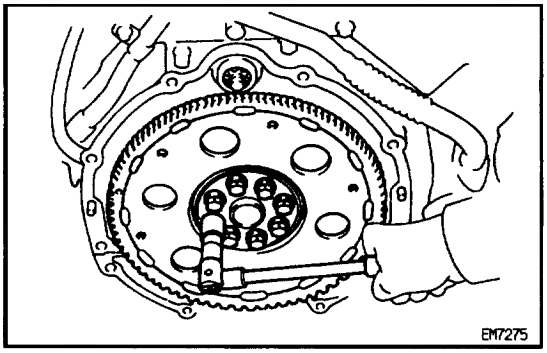

PREPARATION FOR DISASSEMBLY

EG34Y–01

(See Components for Cylinder Block Disassembly and Assembly)

1. REMOVE DRIVE PLATE

Remove the 8 bolts, front spacer drive plate and rear spacer.

2. INSTALL ENGINE TO ENGINE STAND FOR DISASSEMBLY

3. REMOVE TIMING BELT AND PULLEYS

(See pages EG–49 to 57)

4. REMOVE CYLINDER HEAD

(See pages EG–75 to 93)

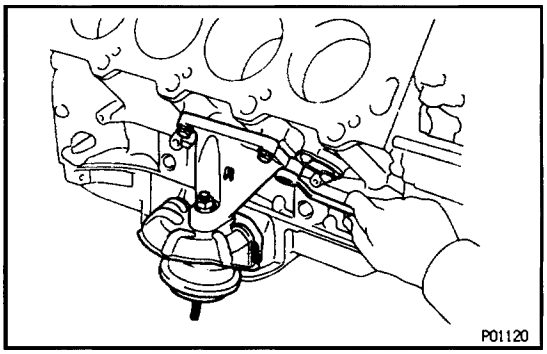

5. REMOVE RH ENGINE MOUNTING BRACKET

Remove the 4 bolts and mounting bracket.

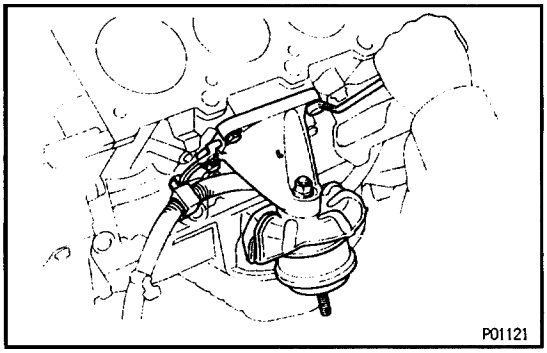

6. REMOVE LH ENGINE MOUNTING BRACKET

(a) Remove the 4 bolts and mounting bracket.

(b) Remove the bolt, and disconnect the engine wire from the mounting bracket.

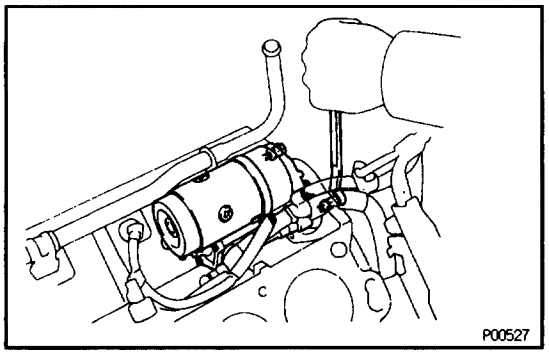

7. REMOVE STARTER

(a) Remove the 2 bolts, and disconnect the starter from the cylinder block.

WhereEverybodyKnowsYourName

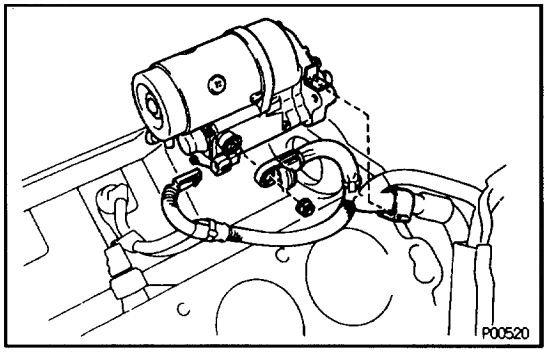

(b) Disconnect the engine wire clamp from the bracket on the starter.
(c) Remove the nut, and disconnect the starter wire.
(d) Disconnect the starter connector, and remove the starter.

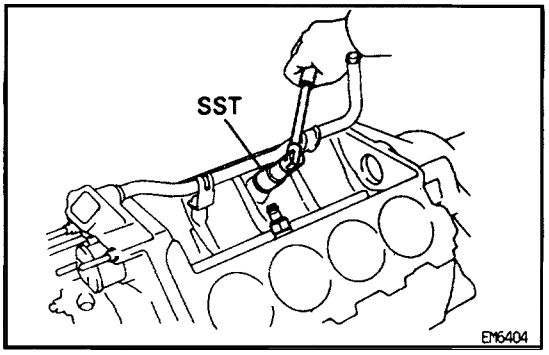

8. REMOVE KNOCK SENSORS
(a) Disconnect the 2 knock sensor connectors.
(b) Using SST, remove the 2 knock sensors.
SST 09816–30010

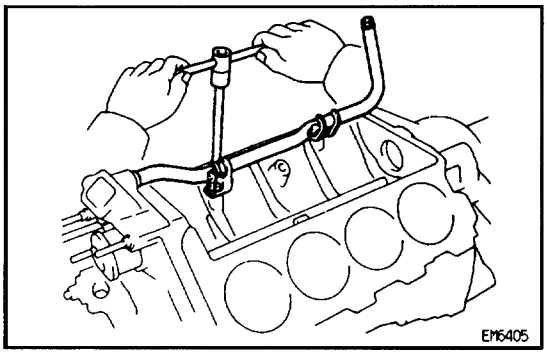

9. REMOVE WATER BYPASS PIPE
(a) Remove the 2 bolts.
(b) Pull out the water bypass pipe from the water pump.
(c) Remove the O–ring from the water bypass pipe.

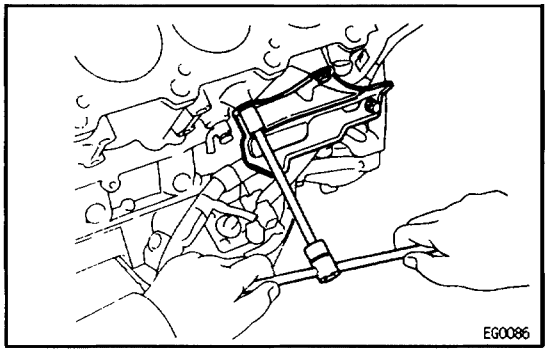

10. REMOVE ENGINE WIRE
(a) Disconnect the following connector:
- Crankshaft position sensor connector
- Oil pressure switch connector
- Oil level sensor connector

(b) Remove the 3 bolts and engine wire cover from the LH side of the cylinder block.

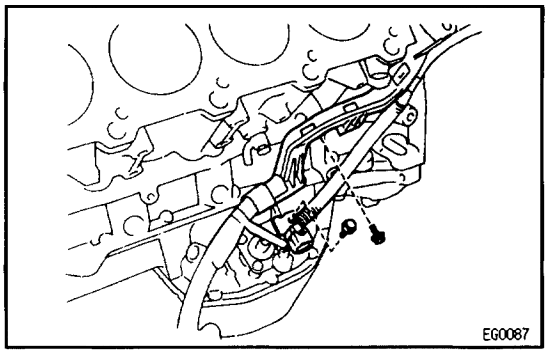

(c) Remove the 2 bolts and engine wire.

WhereEverybodyKnowsYourName

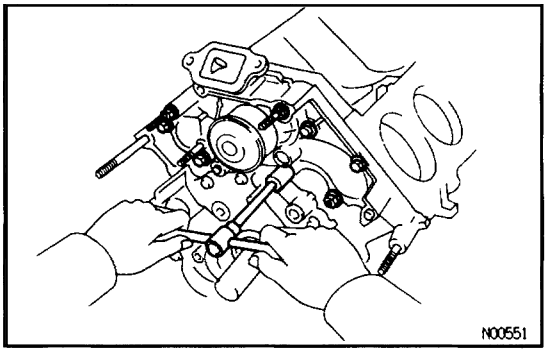

11. REMOVE WATER PUMP

(a) Remove the 5 bolts, 2 stud bolts and nut.

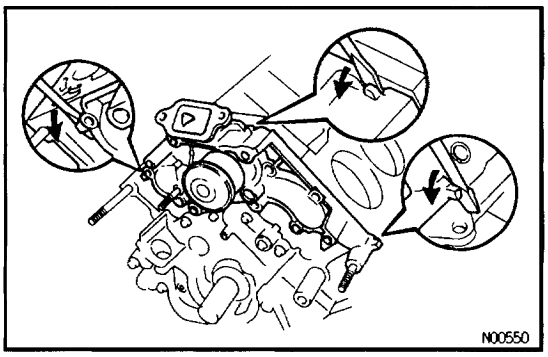

(b) Using a screwdriver remove the water pump by prying the portions between the water pump and cylinder block.

12. REMOVE NO.2 AND NO.1 OIL PANS
(See steps 9 to 14 on pages EG–501 and 502)

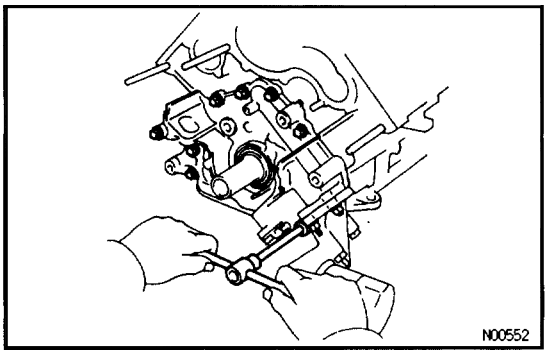

13. REMOVE OIL PUMP

(a) Remove the 8 bolts.

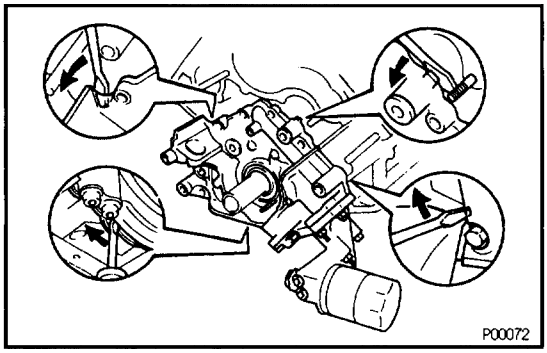

(b) Using a screwdriver, remove the oil pump by prying the portions between the oil pump and cylinder block.

(c) Remove the O–ring from the cylinder block.

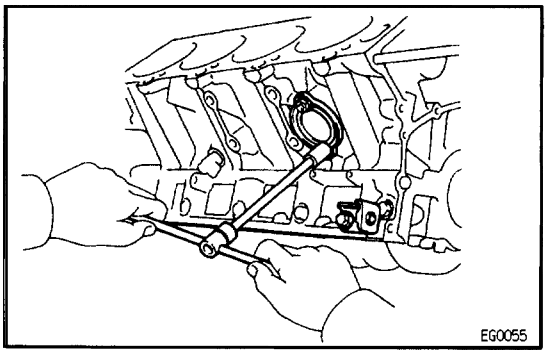

14. REMOVE GENERATOR BRACKET

Remove the bolt and generator bracket.

15. REMOVE WATER SEAL PLATE

Remove the 2 bolts and seal plate.

WhereEverybodyKnowsYourName

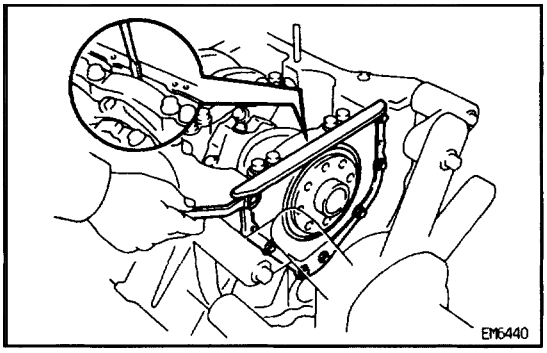

CYLINDER BLOCK DISASSEMBLY

EG1KT–04

(See Components for Cylinder Block Disassembly and Assembly)

1. REMOVE REAR OIL SEAL RETAINER

(a) Remove the 7 bolts.

(b) Using a screwdriver, remove the oil sel retainer by prying the portions between the oil seal retainer and main bearing cap.

(c) Remove the O–ring.

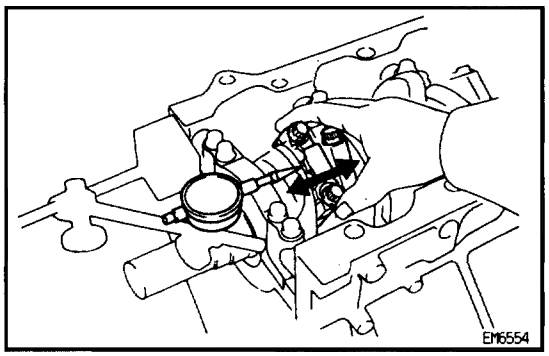

2. CHECK CONNECTING ROD OIL CLEARANCE

Using a dial indicator, measure the thrust clearance while moving the connecting rod back an forth.

Standard thrust clearance:

0.160 – 0.290 mm (0.0063 – 0.0138 in.)

Maximum thrust clearance:

0.35 mm (0.0138 in.)

If the thrust clearance is greater than maximum, replace the connecting rod assembly(s). If necessary, replace the crankshaft.

Connecting rod thickness:

22.880 – 22.920 mm (0.9008 – 0.9024 in.)

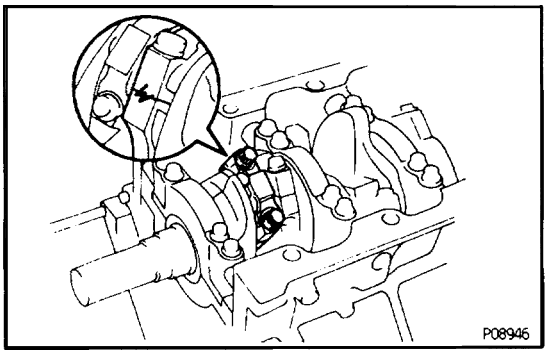

3. REMOVE CONNECTING ROD CAPS AND CHECK OIL CLEARANCE

(a) Check the matchmarks on the connecting rod and cap to ensure correct reassembly.

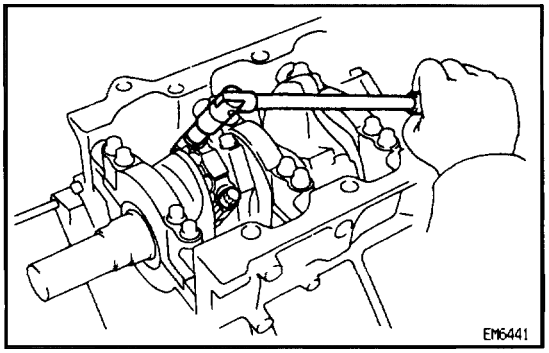

(b) Remove the 2 connecting rod cap bolts.

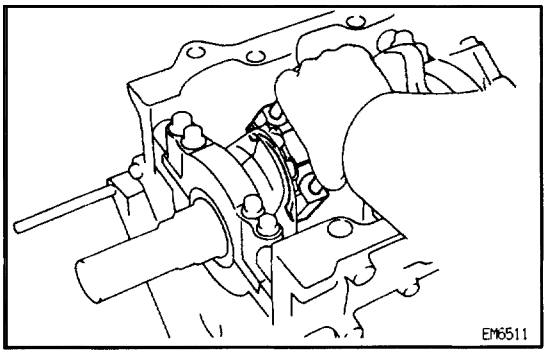

(c) Using the 2 removed connecting rod cap bolts, remove the connecting rod cap and lower bearing by wiggling the connecting rod cap right and left.

HINT: Keep the lower bearing inserted with the connecting rod cap.

WhereEverybodyKnowsYourName

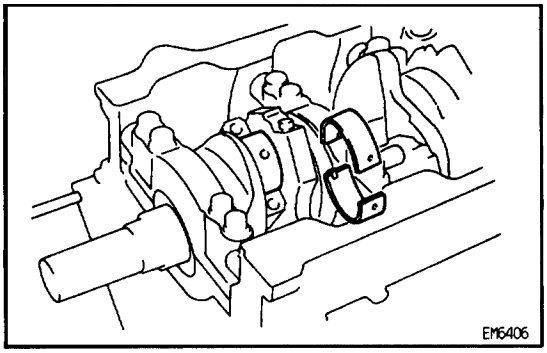

(d) Clean the crank pin and bearing.

(e) Check the crank pin and bearing for pitting and scratches. If the crank pin or bearing is damaged, replace the bearings. If necessary, replace the crankshaft.

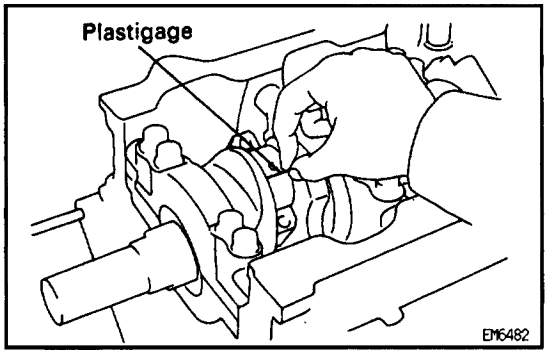

(f) Lay a strip of Plastigage across the crank pin.

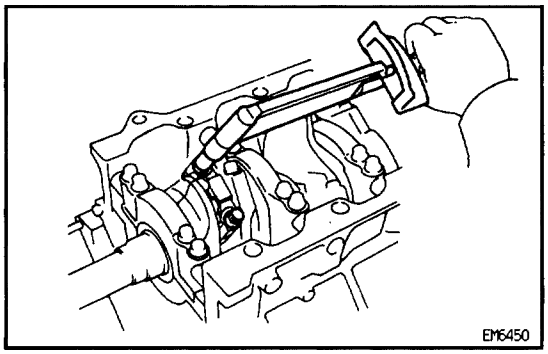

(g) Install the connecting rod cap with the 2 bolts.
(See step 7 on page EG–183)

Torque:

1st 25 N·m (250 kgf·cm, 18 ft·lbf)

2nd Turn 90°

NOTICE: Do not turn the crankshaft.

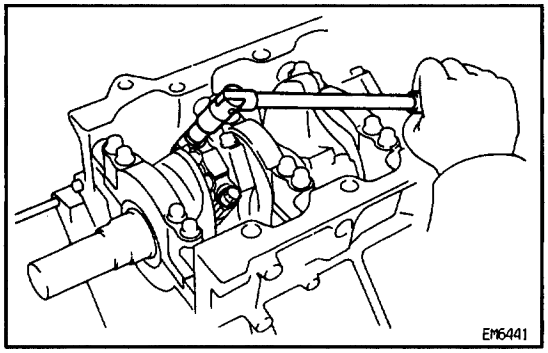

(h) Remove the 2 bolts, connecting rod cap and lower bearing.
(See procedure (b) and (c) above)

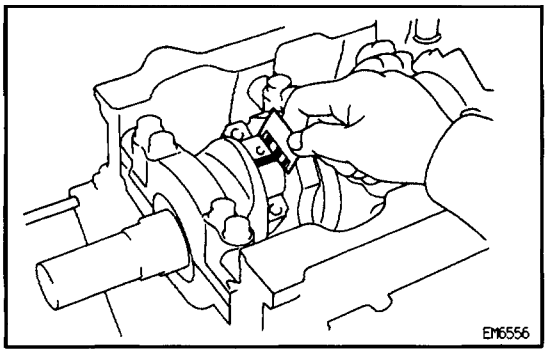

(i) Measure the Plastigage at its widest point.

Standard oil clearance:

0.027 – 0.053 mm (0.0011 – 0.0021 in.)

Maximum oil clearance:

0.065 mm (0.0026 in.)

If the oil clearance is greater than maximum, replace the bearings. If necessary, replace the crankshaft.

WhereEverybodyKnowsYourName

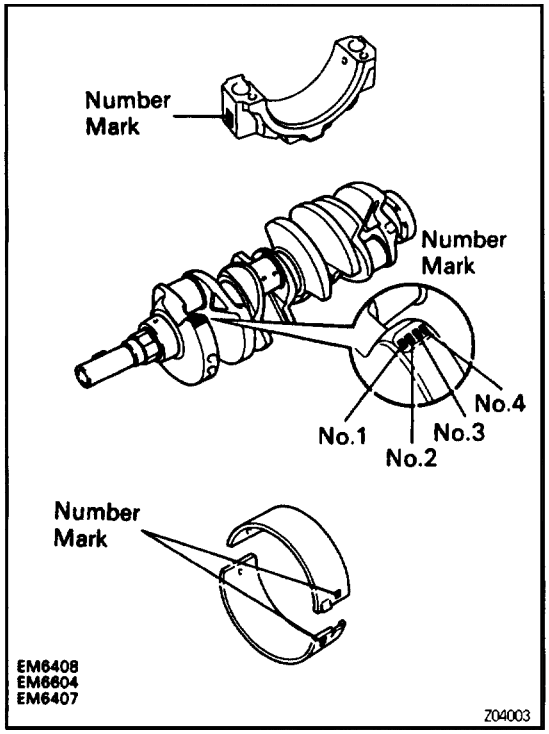

HINT: If using a standard bearing, replace it with one having the same number. If the number of the bearing cannot be determined, select the correct bearing by adding together the numbers imprinted on the connecting rod cap and crankshaft, then selecting the bearing with the same number as the total. There are 6 sizes of standard bearings, marked “2”, “3”, “4”, “5”, “6” and “7” accordingly.

	Number mark											
Connecting rod cap	1	1	2	1	2	3	2	3	4	3	4	4
Crakshaft	1	2	1	3	2	1	3	2	1	3	2	3
Use bearing	2	3		4			5			6		7

EXAMPLE: Connecting rod cap “3” + Crankshaft “1” = Total number 4 (Use bearing “4”)

V01595

Reference:

Connecting rod big end inside diameter:

Mark “1”

55.000 – 55.006 mm (2.1654 – 2.1656 in.)

Mark “2”

55.006 – 55.012 mm (2.1656 – 2.1658 in.)

Mark “3”

55.012 – 55.018 mm (2.1658 – 2.1661 in.)

Mark “4”

55.018 – 55.024 mm (2.1661 – 2.1663 in.)

Crankshaft crank pin diameter:

Mark “1”

51.994 – 52.000 mm (2.0470 – 2.0472 in.)

Mark “2”

51.988 – 51.994 mm (2.0468 – 2.0470 in.)

Mark “3”

51.982 – 51.988 mm (2.0465 – 2.0468 in.)

Standard sized bearing center wall thickness:

Mark “2”

1.484 – 1.487 mm (0.0584 – 0.0585 in.)

Mark “3”

1.487 – 1.490 mm (0.0585 – 0.0587 in.)

Mark “4”

1.490 – 1.493 mm (0.0587 – 0.0588 in.)

Mark “5”

1.493 – 1.496 mm (0.0588 – 0.0589 in.)

Mark “6”

1.496 – 1.499 mm (0.0589 – 0.0590 in.)

Mark “7”

1.499 – 1.502 mm (0.0590 – 0.0591 in.)

(j) Completely remove the Plastigage.

WhereEverybodyKnowsYourName

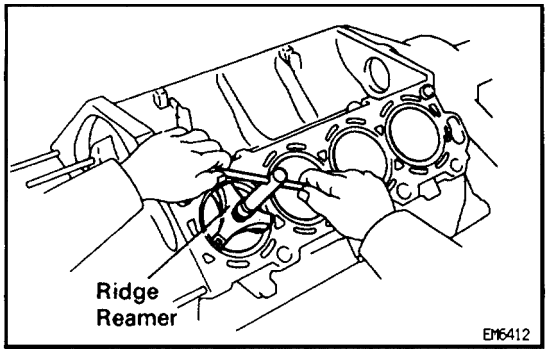

4. REMOVE PISTON AND CONNECTING ROD ASSEMBLIES

(a) Using a ridge reamer, remove all the carbon from the top of the cylinder.

(b) Push the piston, connecting rod assembly and upper bearing through the top of the cylinder block.

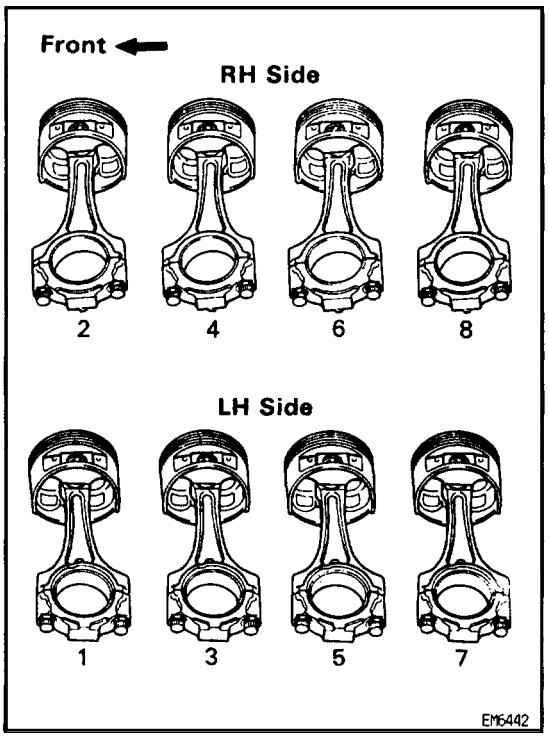

HINT:

- Keep the bearings, connecting rod and cap together.
- Arrange the piston and connecting rod assemblies in correct order.

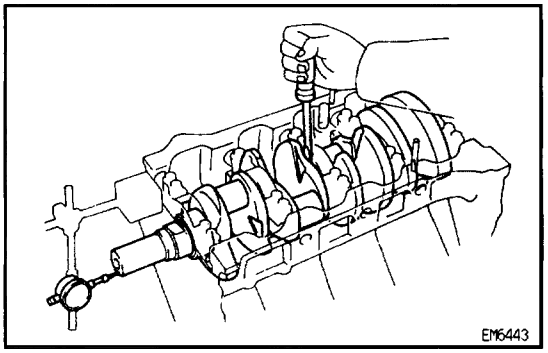

5. CHECK CRANKSHAFT THRUST CLEARANCE

Using a dial indicator, measure the thrust clearance while prying the crankshaft back and forth with a screwdriver.

Standard thrust clearance:

0.020 – 0.220 mm (0.0008 – 0.0087 in.)

Maximum thrust clearance:

0.30 mm (0.0118 in.)

If the thrust clearance is greater than maximum, replace the thrust washers as a set.

Thrust washer thickness:

2.440 – 2.490 mm (0.0961 – 0.0980 in.)

WhereEverybodyKnowsYourName

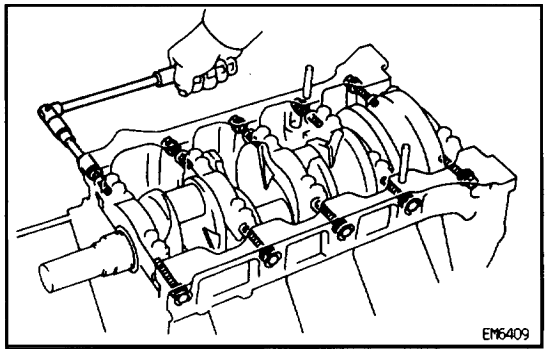

6. REMOVE MAIN BEARING CAPS AND CHECK OIL CLEARANCE

(a) Remove the 10 main bearing cap bolts.

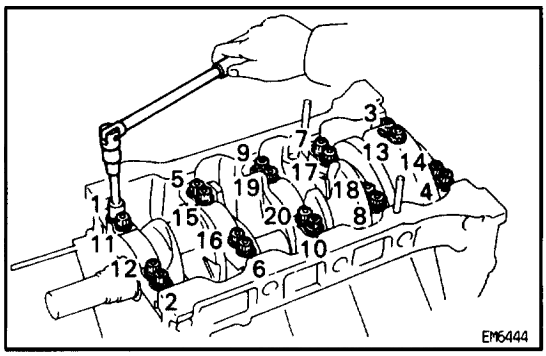

(b) Uniformly loosen and remove the 20 main bearing cap nuts in several passes, in the sequence shown.

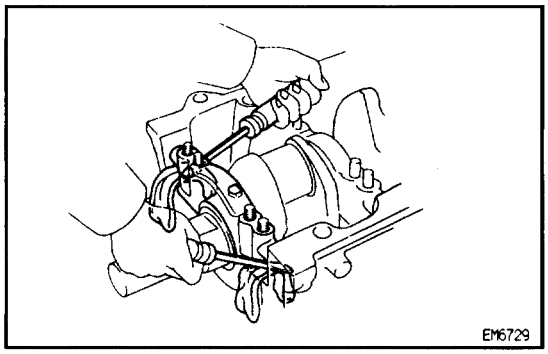

(c) Using 2 screwdrivers, pry out the main bearing cap, and remove the 5 main bearing caps, lower bearings and lower thrust washers (No.3 main bearing cap only).

NOTICE: Be careful not to damage the cylinder block.

HINT:

- Keep the lower bearing and main bearing cap together.
- Arrange the main bearing caps and lower thrust washers in correct order.

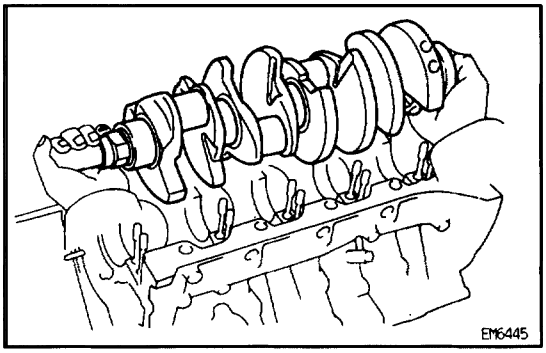

(d) Lift out the crankshaft.

(e) Remove the 2 upper thrust washers.

HINT:

- Arrange the upper thrust washers in correct order.
- Keep the upper bearings together with the cylinder block.

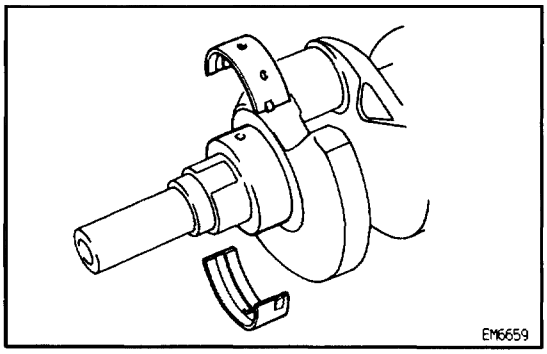

(f) Clean each main journal and bearing.

(g) Check each main journal and bearing for pitting and scratches.

If the journal or bearing is damaged, replace the bearings. If necessary, replace the crankshaft.

WhereEverybodyKnowsYourName

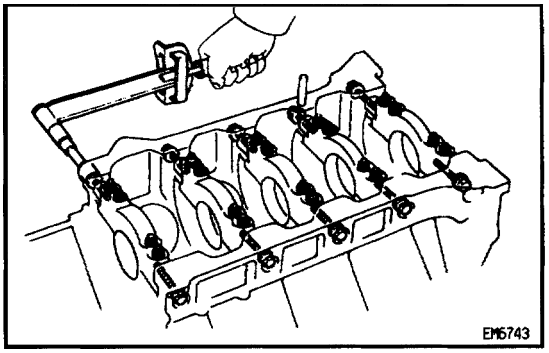

(h) Install the 5 main bearing caps with the 20 nuts and ten bolts. Do not install the crankshaft.
(See step 4 on page EG–180)
Torque:
Nut
1st 27 N·m (275 kgf·cm, 20 ft·lbf)
2nd Turn 90°
Bolt
49 N·m (500 kgf·cm, 36 ft·lbf)

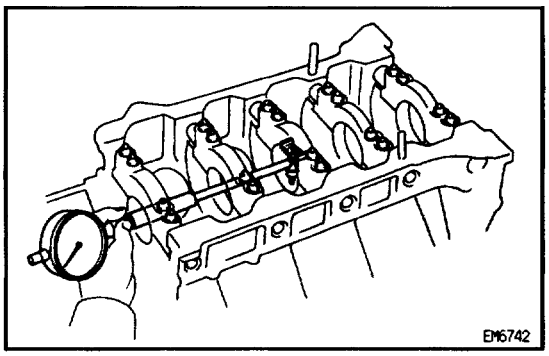

(i) Using a cylinder gauge, measure the inside diameter of the the main bearing.
Bearing inside diameter:
67.026 – 67.033 mm (2.6388 – 2.6391 in.)

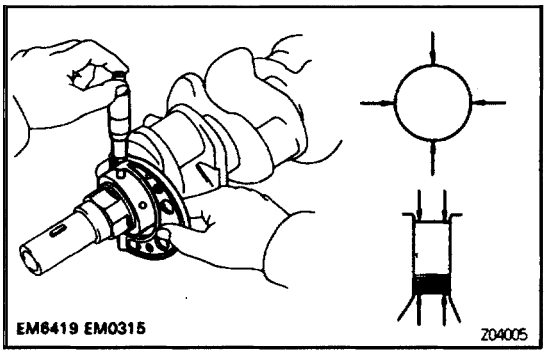

(j) Using a, micrometer measure the diameter of the main journal
Main journal diameter:
66.988 – 67.000 mm (2.6373 – 2.6378 in.)

(k) Subtract the main journal diameter measurement from the main bearing inside diameter measurement.
Standard clearance:
0.026 – 0.045 mm (0.0010 – 0.0018 in.)
Maximum clearance:
0.055 mm (0.0022 in.)
If the oil clearance is greater than maximum, replace the bearings. If necessary, replace the crankshaft.

WhereEverybodyKnowsYourName

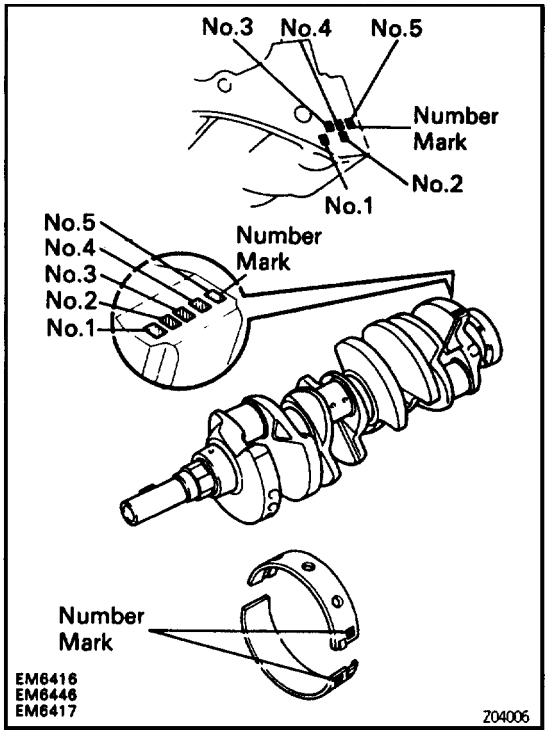

HINT: If using a standard bearing, replace it with one having the same number. If the number of the bearing cannot be determined, select the correct bearing by adding together the numbers imprinted on the cylinder block and crankshaft, then refer to the table below for the appropriate bearing number. There are 5 sizes of the standard bearings, marked “1”, “2”, “3”, “4” and “5” accordingly.

	Total number		" ": Number mark		
Cylinder block (A) + Crankshaft (B) =	0 – 5	6 – 11	12 – 17	18 – 23	24 – 28
Use bearing	"1"	"2"	"3"	"4"	"5"

EXAMPLE: Cylinder block “06” (A)
+ Crankshaft “08” (B)
= Total number 14 (Use bearing “3”)

V01565

Reference:

Cylinder block main journal bore diameter (A):

Mark “00”
72.000 mm (2.8346 in.)
Mark “01”
72.001 mm (2.8347 in.)
Mark “02”
72.002 mm (2.8347 in.)
Mark “03”
72.003 mm (2.8348 in.)
Mark “04”
72.004 mm (2.8348 in.)
Mark “05”
72.005 mm (2.8348 in.)
Mark “06”
72.006 mm (2.8349 in.)
Mark “07”
72.007 mm (2.8349 in.)
Mark “08”
72.008 mm (2.8350 in.)
Mark “09”
72.009 mm (2.8350 in.)
Mark “10”
72.010 mm (2.8350 in.)
Mark “11”
72.011 mm (2.8351 in.)
Mark “12”
72.012 mm (2.8351 in.)
Mark “13”
72.013 mm (2.8352 in.)

WhereEverybodyKnowsYourName

Mark “14”
72.014 mm (2.8352 in.)
Mark “15”
72.015 mm (2.8352 in.)
Mark “16”
72.016 mm (2.8353 in.)
Crankshaft main journal diameter (B):
Mark “00”
67.000 mm (2.8378 in.)
Mark “01”
66.999 mm (2.6378 in.)
Mark “02”
66.998 mm (2.6377 in.)
Mark “03”
66.997 mm (2.5377 in.)
Mark “04”
66.996 mm (2.6376 in.)
Mark “05”
66.995 mm (2.6376 in.)
Mark “06”
66.994 mm (2.6376 in.)
Mark “07”
66.993 mm (2.6375 in.)
Mark “08”
66.992 mm (2.6375 in.)
Mark “09”
66.991 mm (2.6374 in.)
Mark “10”
66.990 mm (2.6374 in.)
Mark “11”
66.989 mm (2.6374 in.)
Mark “12”
66.988 mm (2.6373 in.)
Standard sized bearing center wall thickness:
Mark “1”
2.486 – 2.489 mm (0.0979 – 0.0980 in.)
Mark “2”
2.489 – 2.492 mm (0.0980 – 0.0981 in.)
Mark “3”
2.492 – 2.495 mm (0.0981 – 0.0982 in.)
Mark “4”
2.495 – 2.498 mm (0.0982 – 0.0983 in.)
Mark “5”
2.498 – 2.501 mm (0.0983 – 0.0985 in.)

WhereEverybodyKnowsYourName

Standard sized Bearing Selection Chart

Crankshaft number mark	Cylinder block number mark																
	00	01	02	03	04	05	06	07	08	09	10	11	12	13	14	15	16
00	1	1	1	1	1	1	2	2	2	2	2	2	3	3	3	3	3
01	1	1	1	1	1	2	2	2	2	2	2	3	3	3	3	3	3
02	1	1	1	1	2	2	2	2	2	2	3	3	3	3	3	3	4
03	1	1	1	2	2	2	2	2	2	3	3	3	3	3	3	4	4
04	1	1	2	2	2	2	2	2	3	3	3	3	3	3	4	4	4
05	1	2	2	2	2	2	2	3	3	3	3	3	3	4	4	4	4
06	2	2	2	2	2	2	3	3	3	3	3	3	4	4	4	4	4
07	2	2	2	2	2	3	3	3	3	3	3	4	4	4	4	4	4
08	2	2	2	2	3	3	3	3	3	3	4	4	4	4	4	4	5
09	2	2	2	3	3	3	3	3	3	4	4	4	4	4	4	5	5
10	2	2	3	3	3	3	3	3	4	4	4	4	4	4	5	5	5
11	2	3	3	3	3	3	3	4	4	4	4	4	4	5	5	5	5
12	3	3	3	3	3	3	4	4	4	4	4	4	5	5	5	5	5

EXAMPLE: Cylinder block “06”, Crankshaft “08”
= Use bearing “3”

V01566

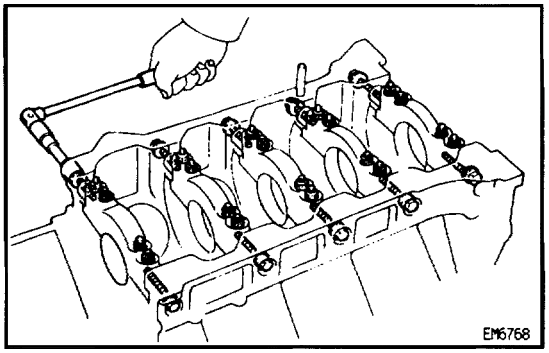

(l) Remove the 10 bolts, 20 nuts and 5 main bearing caps. (See procedure (a) to (c) above)

(m) Remove the 5 upper main bearings from the cylinder block.

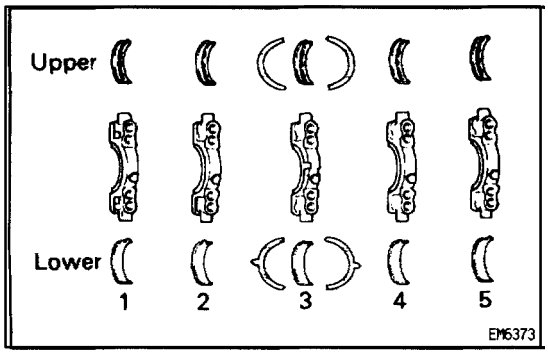

HINT: Arrange the main bearing caps, bearings and thrust washers in correct order.

WhereEverybodyKnowsYourName

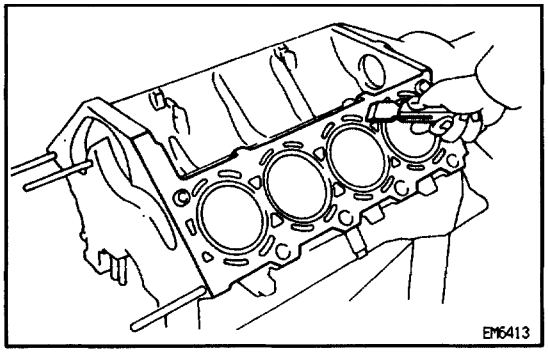

CYLINDER BLOCK INSPECTION AND REPAIR

EG1KU–01

1. CLEAN CYLINDER BLOCK

A. Remove gasket material

Using a gasket scraper, remove all the gasket material from the top surface of the cylinder block.

B. Clean cylinder block

Using a soft brush and solvent, thoroughly clean the cylinder block.

NOTICE: If the cylinder is washed at high temperatures, the cylinder liner sticks out beyond the cylinder block, so always wash the cylinder block at temperature of 45 or less.

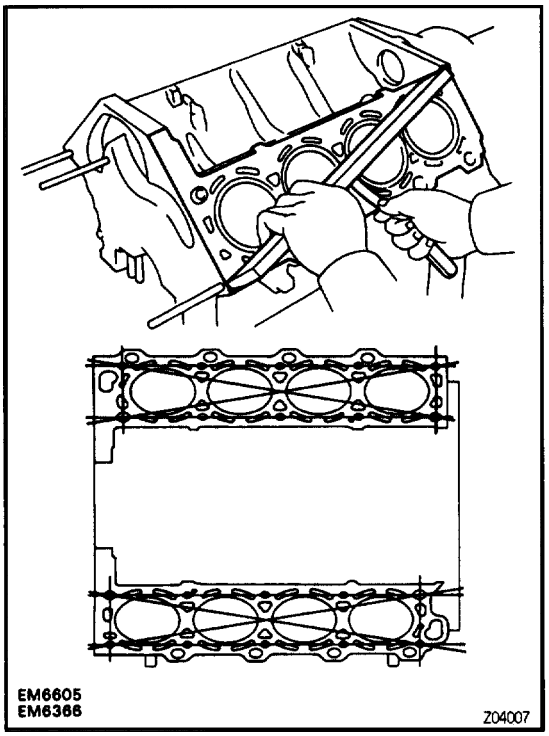

2. INSPECT TOP SURFACE OF CYLINDER BLOCK FOR FLATNESS

Using a precision straight edge and feeler gauge, measure the surface contacting the cylinder head gasket for warpage.

Maximum warpage:

0.07 mm (0.0028 in.)

If warpage is greater than maximum, replace the cylinder block.

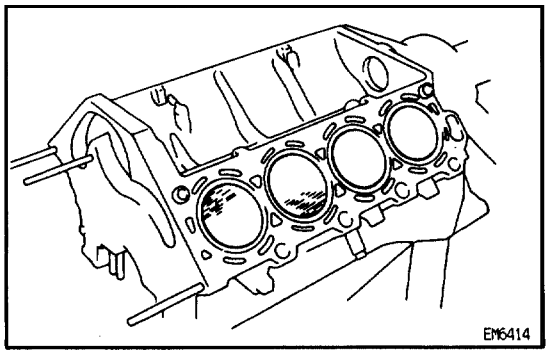

3. INSPECT CYLINDER FOR VERTICAL SCRATCHES

Visually check the cylinder for vertical scratches.

If deep scratches are present, replace the cylinder block.

WhereEverybodyKnowsYourName

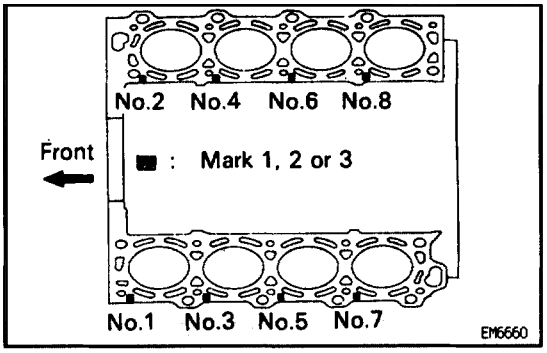

4. INSPECT CYLINDER BORE DIAMETER

HINT: There are 3 sizes of the standard cylinder bore diameter, marked “1”, “2” and “3” accordingly. The mark is stamped on the top of the cylinder block.

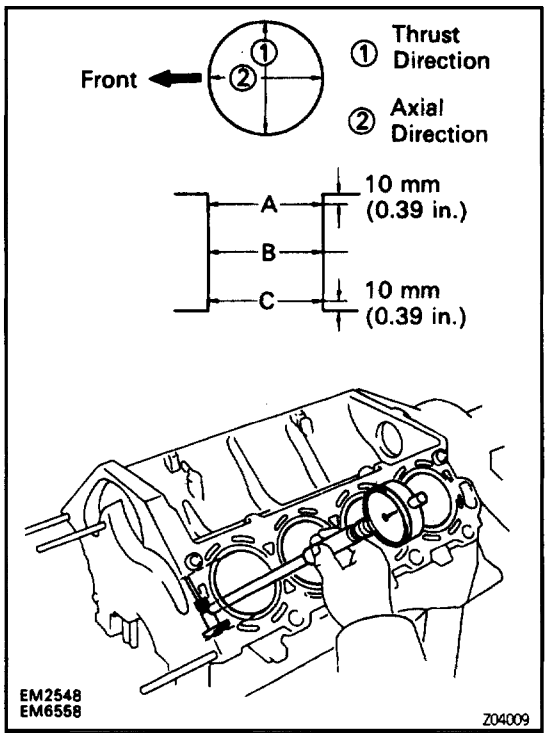

Using a cylinder gauge, measure the cylinder bore diameter at positions A, B and C in the thrust and axial directions.

Standard diameter:

Mark “1”

87.500 – 87.510 mm (3.4449 – 3.4453 in.)

Mark “2”

87.510 – 87.520 mm (3.4453 – 3.4457 in.)

Mark “3”

87.520 – 87.530 mm (3.4457 – 3.4461 in.)

Maximum diameter:

87.73 mm (3.4539 in.)

If the diameter is greater than maximum, replace the cylinder block.

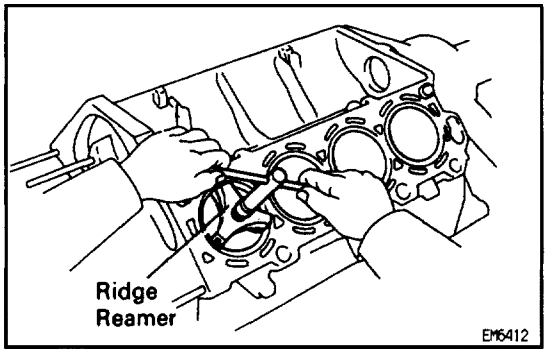

5. REMOVE CYLINDER RIDGE

If the wear is less than 0.2 mm (0.008 in.), using a ridge reamer, grind the top of the cylinder.

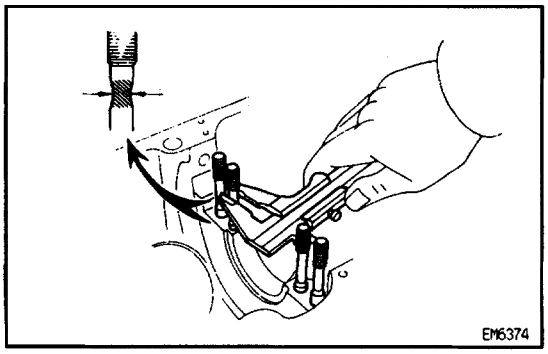

6. INSPECT MAIN BEARING CAP STUD BOLTS

Using a vernier caliper, measure the tension portion diameter of the stud bolt.

Standard diameter:

7.500 – 7.600 mm (0.2953 – 0.2992 in.)

Minimum diameter:

7.40 mm (0.2913 in.)

If the diameter is less than minimum, replace the stud bolt.

WhereEverybodyKnowsYourName

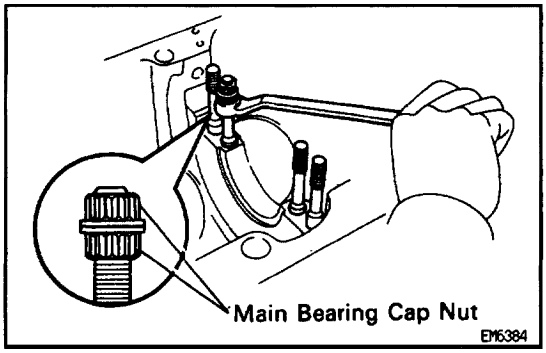

7. IF NECESSARY, REPLACE MAIN BEARING CAP STUD BOLTS

(a) Using the 2 main bearing cap nuts, remove the stud bolt.

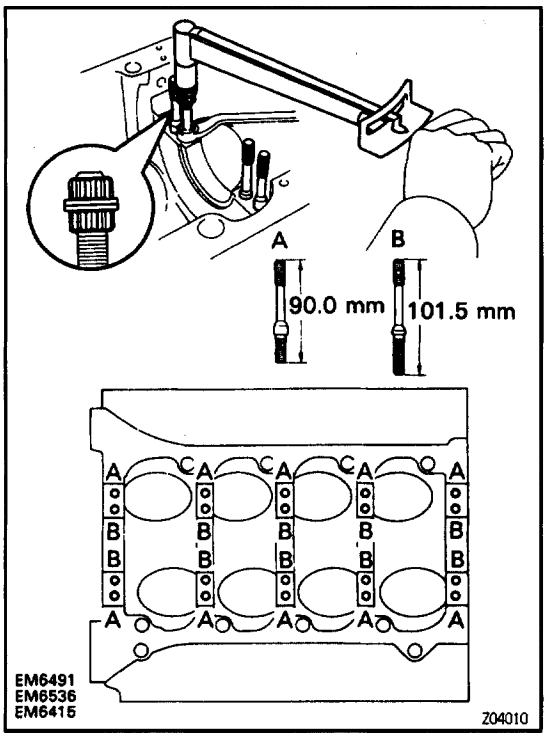

(b) Apply a light coat of engine oil on the threads and under flange of new stud bolts.

(c) Using the 2 main bearing cap nuts, install the stud bolt.
Torque: 15 N·m (150 kgf·cm, 11 ft·lbf)
HINT: Stud bolts come in lengths of 90.0 mm (3.543 in.) and 101.5 mm (3.996 in.). Install the 101.5 mm (3.996 in.) bolts in inside positions. Install the 90.0 mm (3.543 in.) bolts in outside positions.

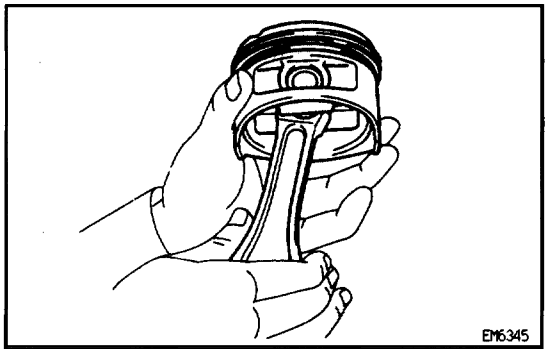

PISTON AND CONNECTING ROD DISASSEMBLY

EG0BV–06

1. CHECK FIT BETWEEN PISTON AND PISTON PIN
Try to move the piston back and forth on the piston pin.
If any movement is felt, replace the piston and pin as a set.

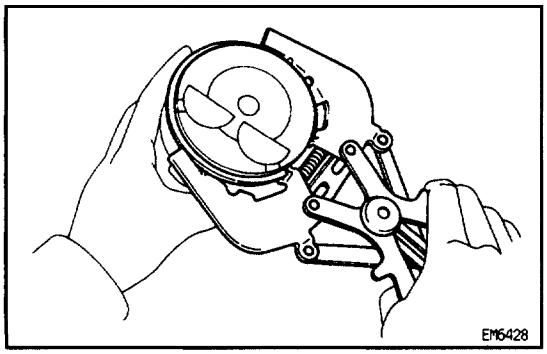

2. REMOVE PISTON RINGS

(a) Using a piston ring expander, remove the 2 compression rings.

WhereEverybodyKnowsYourName

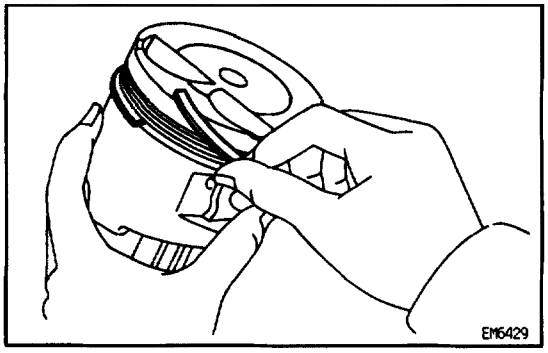

(b) Remove the 2 side rails and oil ring by hand.
HINT: Arrange the piston rings in correct order only.

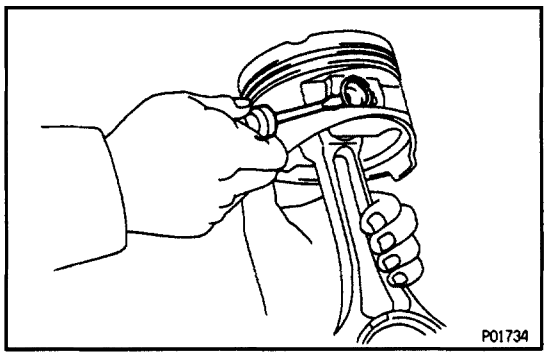

3. DISCONNECT CONNECTING ROD FROM PISTON

(a) Using a small screwdriver, pry out the 2 snap rings.

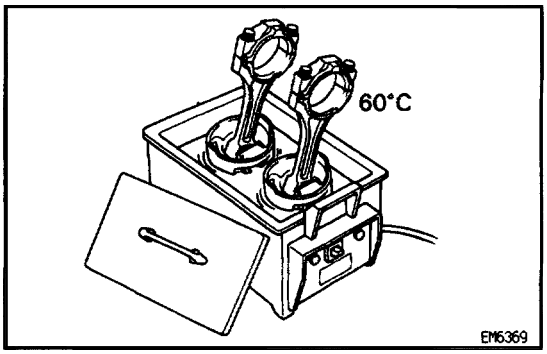

(b) Gradually heat the piston to approx. 60 C (140 F).

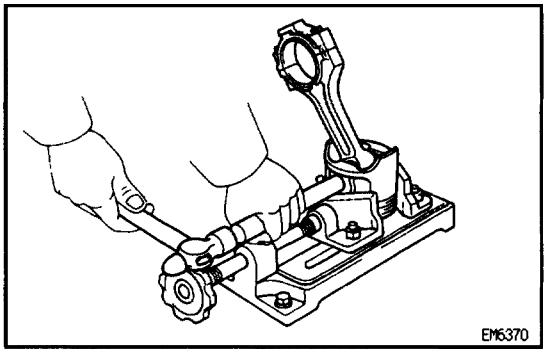

(c) Using a plastic–faced hammer and brass bar, lightly tap out the piston pin and pin and remove the connecting rod.

WhereEverybodyKnowsYourName

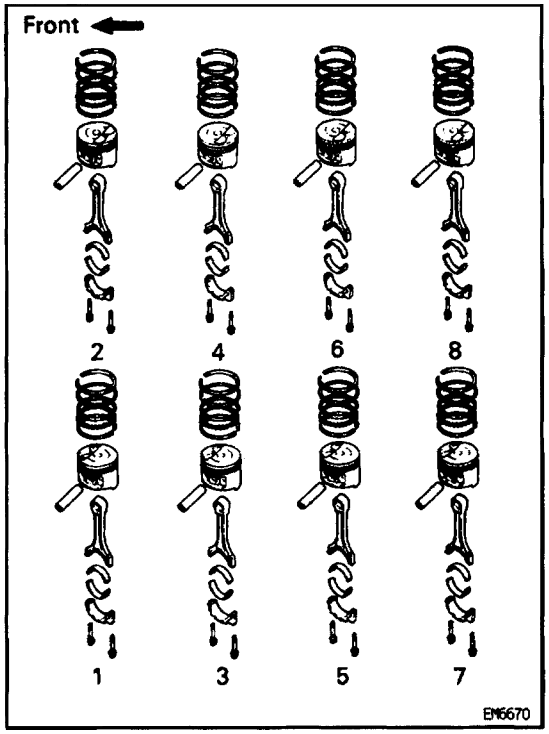

HINT:
- The piston and pin are a matched set.
- Arrange the pistons, pins, rings, connecting rods and bearings in correct order.

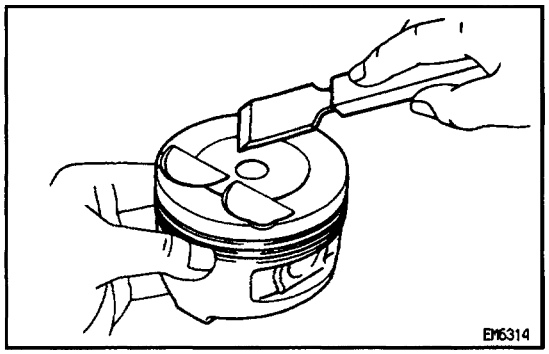

PISTON AND CONNECTING ROD INSPECTION

EG1KY–02

1. CLEAN PISTON

(a) Using a gasket scraper, remove the carbon from the piston top.

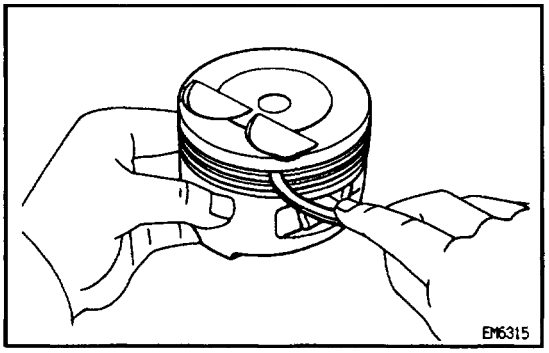

(b) Using a groove cleaning tool or broken ring, clean the piston ring grooves.

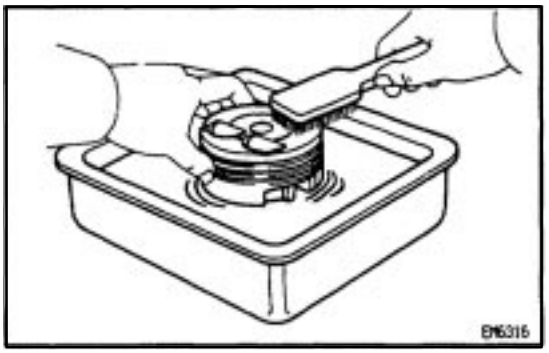

(c) Using solvent and a brush, thoroughly clean the piston.
NOTICE: Do not use a wire brush.

WhereEverybodyKnowsYourName

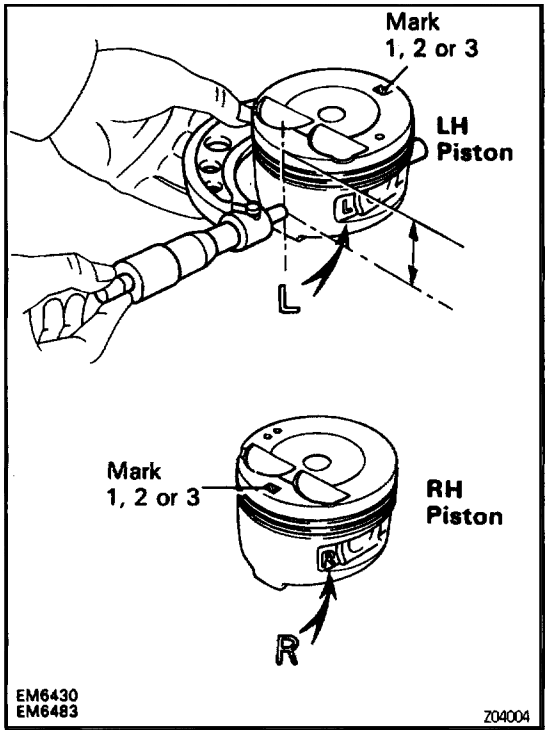

2. INSPECT PISTON

A. Inspect piston oil clearance

HINT: There are 3 sizes of the standard piston diameter, marked “1”, “2” and “3” accordingly. The mark is stamped on the piston top.

(a) Using a micrometer, measure the piston diameter at ring angles to the piston pin center line, 49 mm (1.93 in.) from the piston head.

Piston diameter:

Mark “1”

87.470 – 87.480 mm (3.4437 – 3.4441 in.)

Mark “2”

87.480 – 86.490 mm (3.4441 – 3.4445 in.)

Mark “3”

87.490 – 87.500 mm (3.4445 – 3.4449 in.)

(b) Measure the cylinder bore diameter in the thrust directions. (See step 4 on page EG–xxx)

(c) Subtract the piston diameter measurement from the cylinder bore diameter measurement.

Standard oil clearance:

0.020 – 0.040 mm (0.0008 – 0.0016 in.)

Maximum oil clearance:

0.06 mm (0.0024 in.)

If the oil clearance is greater than maximum, replace all the 8 pistons. If necessary, replace the cylinder block.

HINT (Use new cylinder block):

- Use a piston with the same number mark as the cylinder diameter marked on the cylinder block.
- The shape of the piston varies for the RH and LH banks. The RH piston is marked with “R”, the LH piston with “L”.

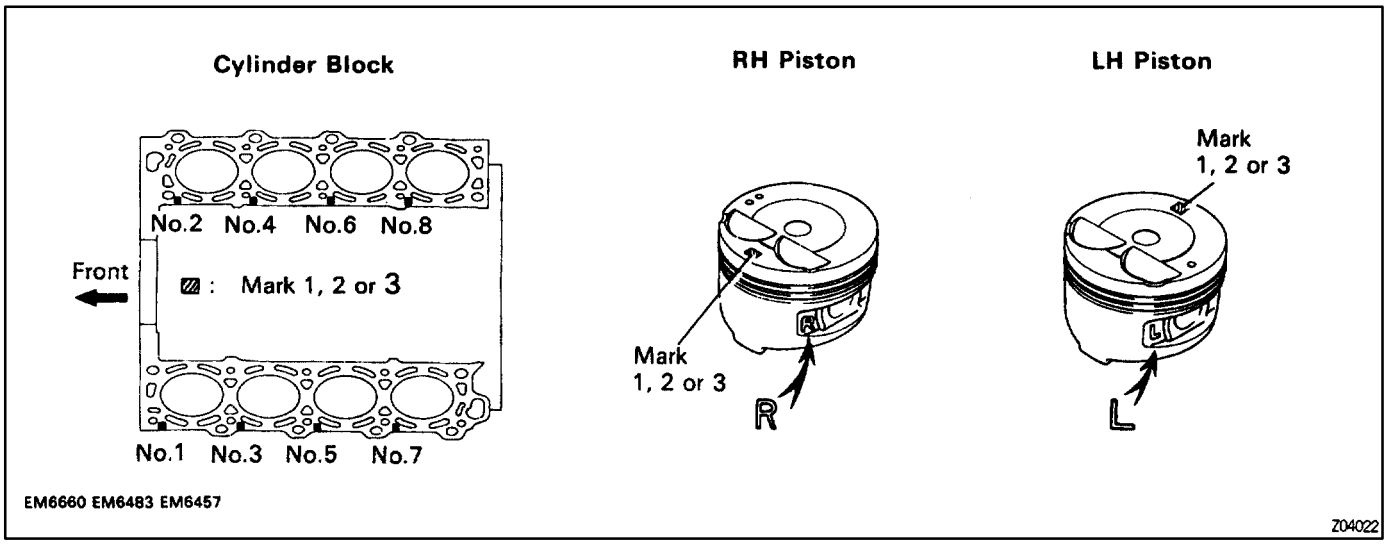

WhereEverybodyKnowsYourName

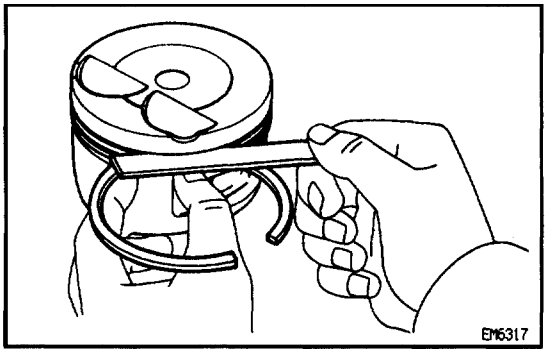

B. Inspect piston ring groove clearance

Using a feeler gauge, measure the clearance between new piston ring and the wall of the ring groove

Ring groove clearance:

No.1

0.020 – 0.060 mm (0.0008 – 0.0024 in.)

No.2

0.015 – 0.055 mm (0.0006 – 0.0022 in.)

If the clearance is not as specified, replace the piston.

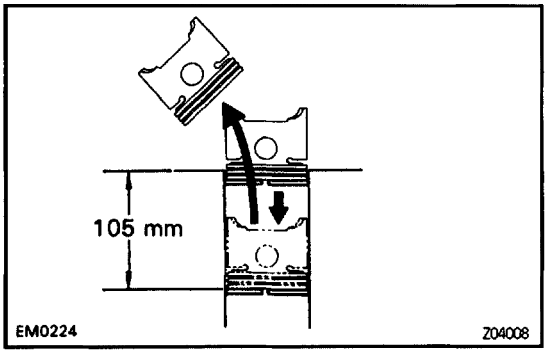

C. Inspect piston ring and gap

(a) Insert the piston ring into the cylinder bore.

(b) Using a piston, push the piston ring a little beyond the bottom of the ring travel, 105 mm (4.13 in.) from the top of the cylinder block.

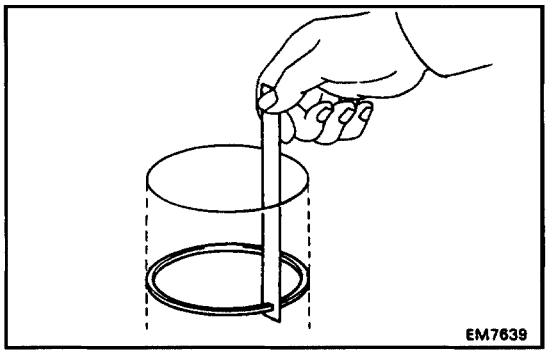

(c) Using a feeler gauge, measure the end gap.

Standard end gap:

No.1

0.250 – 0.450 mm (0.0098 – 0.0177 in.)

No.2

0.350 – 0.600 mm (0.0138 – 0.0236 in.)

Oil (Side rail)

0.160 – 0.500 mm (0.0059 – 0.0197 in.)

Maximum end gap:

No.1

1.05 mm (0.0413 in.)

No.2

1.20 mm (0.0472 in.)

Oil (Side rail)

1.10 mm (0.0433 in.)

If the end gap is greater than maximum, replace the piston ring. If the end gap is greater than maximum, even with a new piston ring, replace the cylinder block.

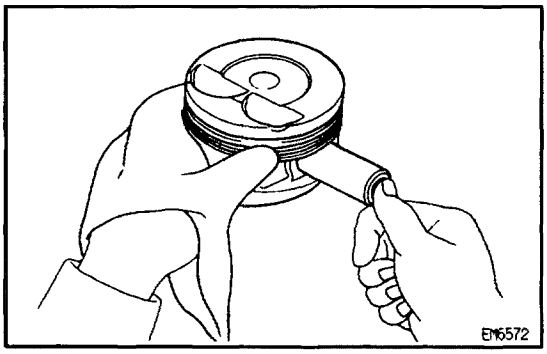

D. Inspect piston pin fit

At 60°C (140°F), you should be able to push the piston pin into the piston pin hole with your thumb.

WhereEverybodyKnowsYourName

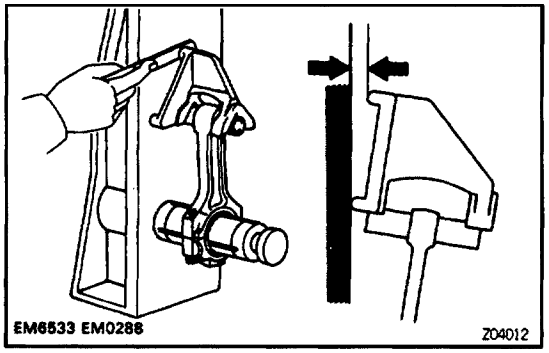

3. INSPECT CONNECTING ROD

A. Inspect connecting rod alignment

Using a rod aligner and feeler gauge, check the connecting rod alignment.

- Check for bend.

Maximum bend:

0.05 mm (0.0020 in.) per 100 mm (3.94 in.)

If bend is greater than maximum, replace the connecting rod assembly.

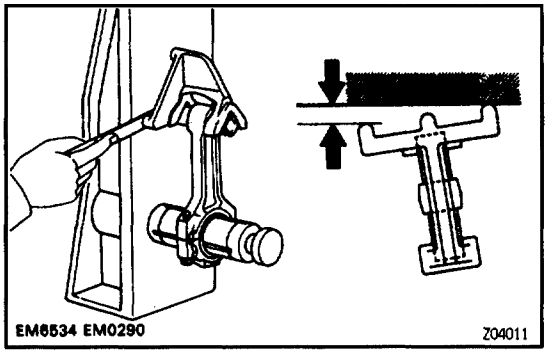

- Check for twist

Maximum twist:

0.15 mm (0.0059 in.) per 100 mm (3.94 in.)

If twist is greater than maximum, replace the connecting rod assembly.

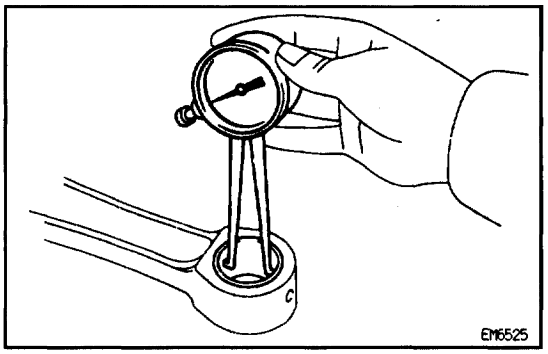

B. Inspect piston pin oil clearance

(a) Using a caliper gauge, measure the inside diameter of the connecting rod bushing.

Bushing inside diameter:

22.005 – 22.017 mm (0.8663 – 0.8668 in.)

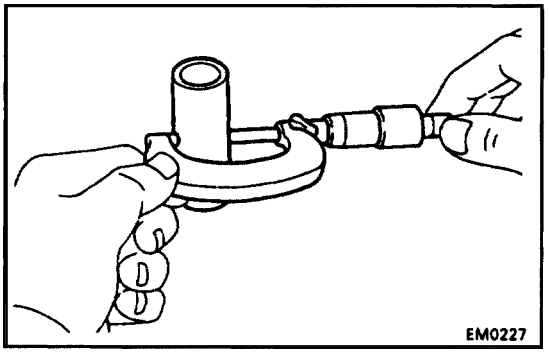

(b) Using a micrometer, measure the piston pin diameter.

Piston pin diameter:

21.997 – 22.009 mm (0.8660 – 0.8665 in.)

(c) Subtract the piston pin diameter measurement from the bushing inside diameter measurement.

Standard oil clearance:

0.005 – 0.011 mm (0.0002 – 0.0004 in.)

Maximum oil clearance:

0.05 mm (0.0020 in.)

If the oil clearance is greater than maximum, replace the bushing. If necessary, replace the piston and piston pin as a set.

WhereEverybodyKnowsYourName

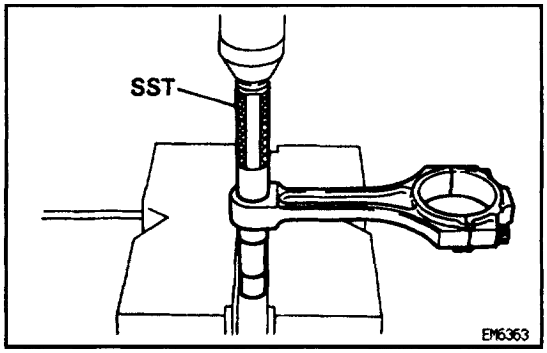

C. If necessary, replace connecting rod bushing

(a) Using SST and a press, press out the bushing.
SST 09222–30010

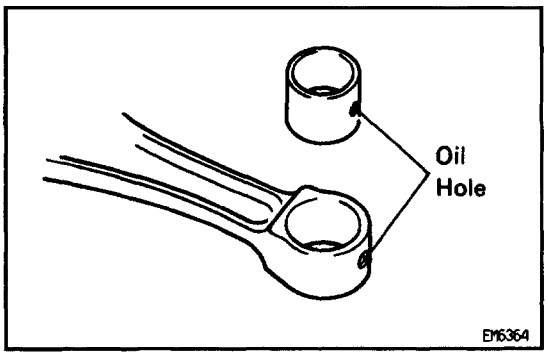

(b) Align the oil holes of a new bushing and the connecting rod.

(c) Using SST and a press, press out the bushing
SST 09222–30010

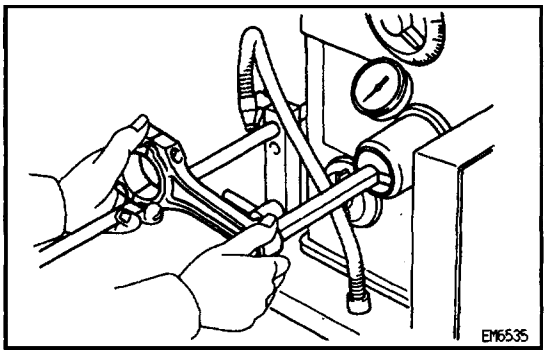

(d) Using a pin hole grinder, hone the bushing to obtain the standard specified clearance (see step B above) between the bushing and piston pin.

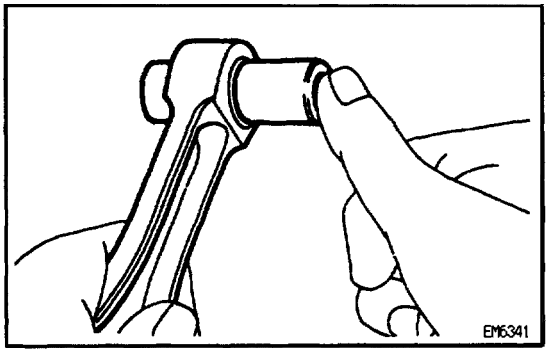

(e) Check the piston pin fit at normal room temperature.
Coat the piston pin with engine oil, and push it into the connecting rod with your thumb.

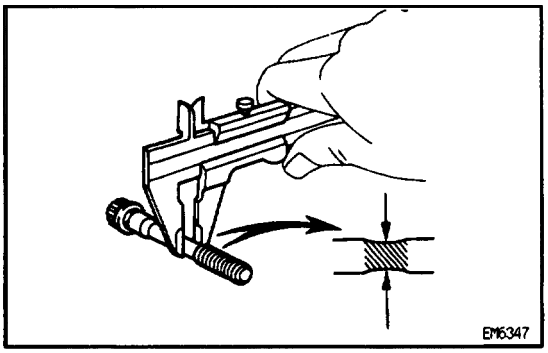

D. Inspect connecting rod bolts

Using a vernier caliper, measure the tension portion of of the connecting rod bolt.

Standard diameter:

7.200 – 7.300 mm (0.2835 – 0.2874 in.)

Maximum diameter:

7.00 mm (0.2756 in.)

HINT: If the tension portion diameter is less than minimum, replace the connecting rod bolt.

WhereEverybodyKnowsYourName

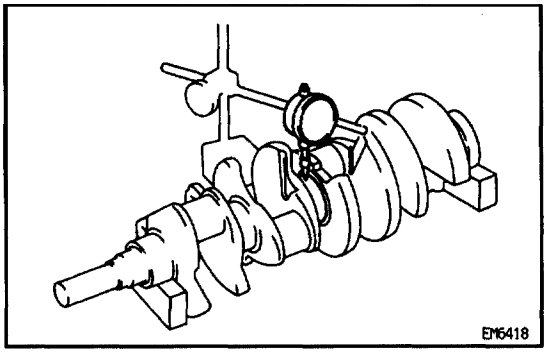

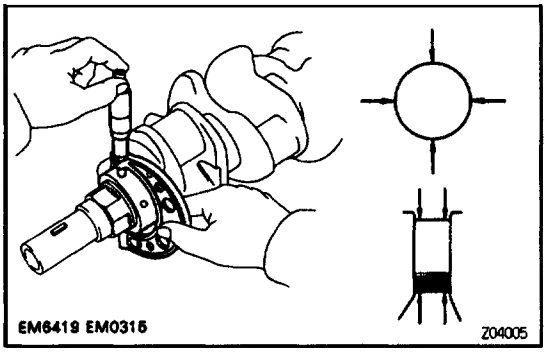

CRANKSHAFT INSPECTION

EG0BY–0D

1. INSPECT CRANKSHAFT FOR CIRCLE RUNOUT

(a) Place the crankshaft on V–blocks.

(b) Using a dial indicator, measure the circle runout at the center journal.

Maximum circle runout:

0.08 mm (0.0031 in.)

If the circle runout is greater than maximum, replace the crankshaft.

2. INSPECT MAIN JOURNALS AND CRANK PINS

(a) Using a micrometer, measure the diameter of each main journal and crank pin.

Main journal diameter:

66.988 – 67.000 mm (2.6373 – 2.6378 in.)

Crank pin diameter:

51.982 – 52.000 mm (2.0465 – 2.0472 in.)

If the diameter is not as specified, check the oil clearance (See steps 3 or 6 on page EG–156 or 160). If necessary, replace the crankshaft.

(b) Check each main journal and crank pin for taper and out–of–round as shown.

Maximum taper and out–of–round:

0.02 mm (0.0008 in.)

If the taper and out–of–round is greater than maximum, replace the crankshaft.

WhereEverybodyKnowsYourName

CRANKSHAFT OIL SEALS REPLACEMENT

EG0C0–0M

HINT: There are 2 methods (A and B) to replace the oil seal which are as follows:

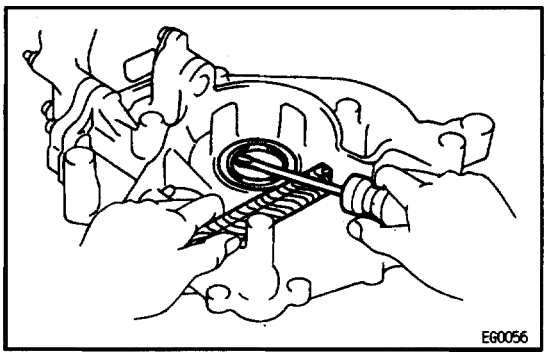

1. REPLACE CRANKSHAFT FRONT OIL SEAL

A. If oil pump is removed from cylinder block:

(a) Using a screwdriver, pry out the oil seal.

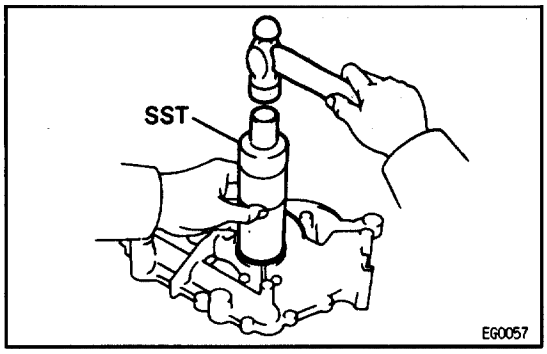

(b) Using SST and a hammer, tap in a new oil seal until its surface is flush with the oil pump body edge.
SST 09316–60010 (09316–00010)

(c) Apply MP grease to the oil seal lip.

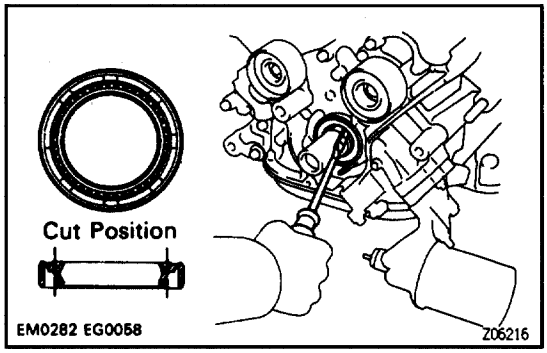

B. If oil pump is installed to the cylinder block:

(a) Using a knife, cut off the oil seal lip.

(b) Using a screwdriver, pry out the oil seal.
NOTICE: Be careful not to damage the crankshaft. Tape the screwdriver tip.

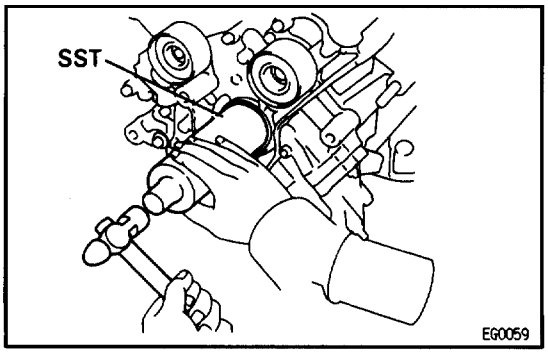

(c) Apply MP grease to a new oil seal lip.

(d) Using SST and a hammer, tap in the oil seal until its surface is flush with the oil pump body edge.
SST 09316–60010 (09316–00010)

WhereEverybodyKnowsYourName

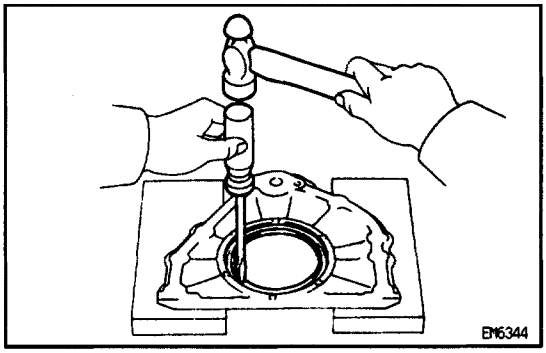

2. REPLACE CRANKSHAFT REAR OIL SEAL

A. If rear oil seal retainer is removed from cylinder block:

(a) Using a screwdriver and hammer, tap out the oil seal.

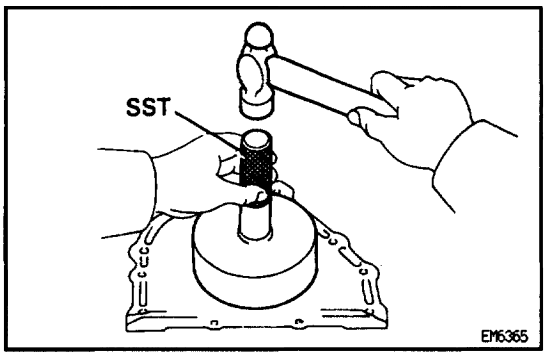

(b) Using SST and a hammer, tap in a new oil seal until its surface is flush with the rear oil seal retainer edge.
SST 09223–56010

(c) Apply MP grease to the oil seal lip.

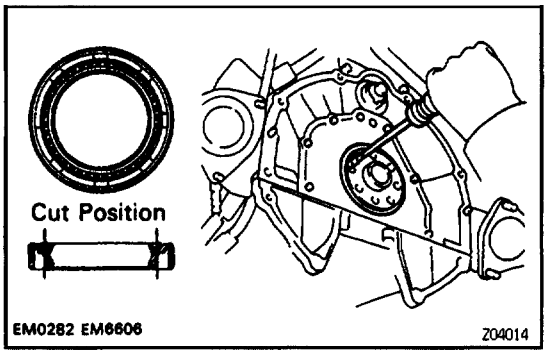

B. If rear oil seal retainer is installed to cylinder block:

(a) Using a knife, cut off the oil seal lip.

(b) Using a screwdriver, pry out the oil seal.
NOTICE: Be careful not to damage the crankshaft. Tape the screwdriver tip.

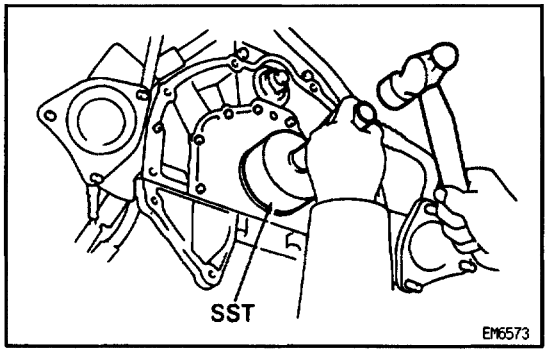

(c) Apply MP grease to a new oil seal lip.

(d) Using SST and a hammer, tap in the oil seal until its surface is flush with the rear oil seal retainer edge.
SST 09223–56010

WhereEverybodyKnowsYourName

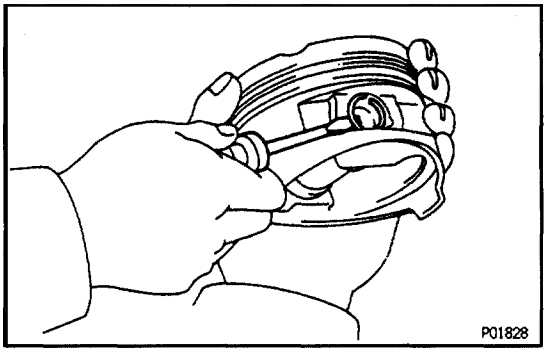

PISTON AND CONNECTING ROD ASSEMBLY

EG0C1–07

1. ASSEMBLE PISTON AND CONNECTING ROD

(a) Using a small screwdriver, install a new snap ring on one side of the piston pin hole.

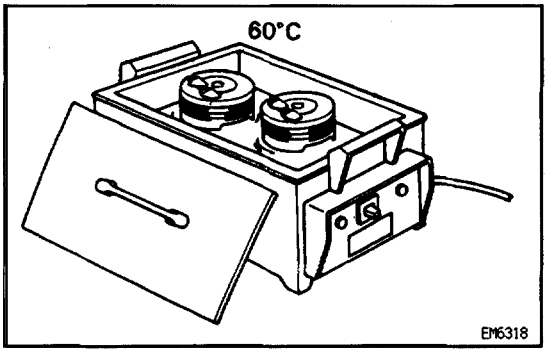

(b) Gradually heat the piston to about 60 C (140 F).

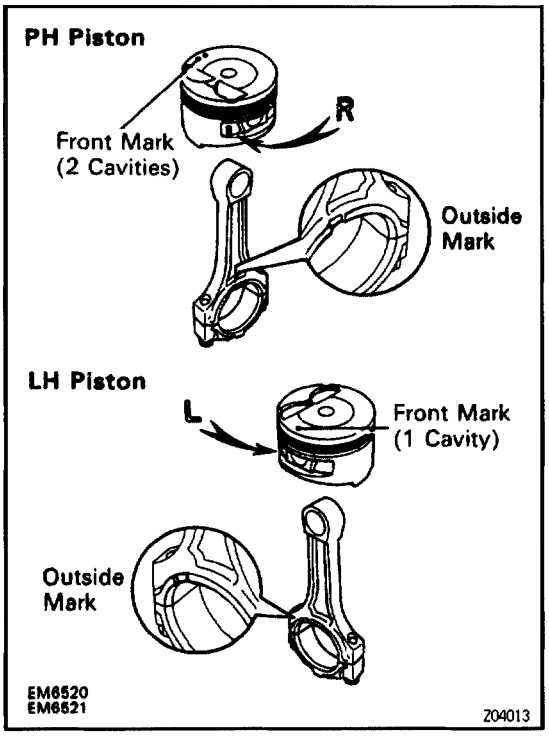

(c) Coat the piston pin with engine oil.

(d) Position the piston front mark with respect to the outside mark on the connecting rod as shown in the diagram.

NOTICE: The installation direction of the piston and connecting rod are different for the RH and LH banks. The RH piston is marked with “R”, the LH piston with “L”.

(e) Align the piston pin holes of the piston and connecting rod, and push in the piston pin with your thumb.

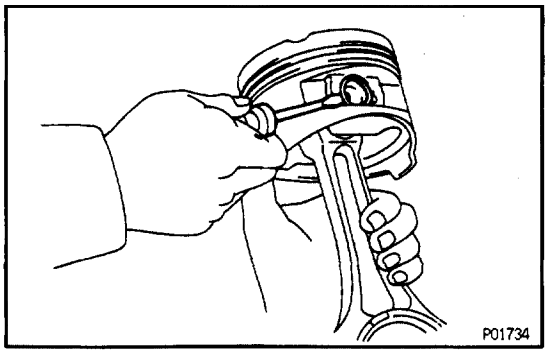

(f) Using a small screwdriver, install a new snap ring on the other side of the piston pin hole.

WhereEverybodyKnowsYourName

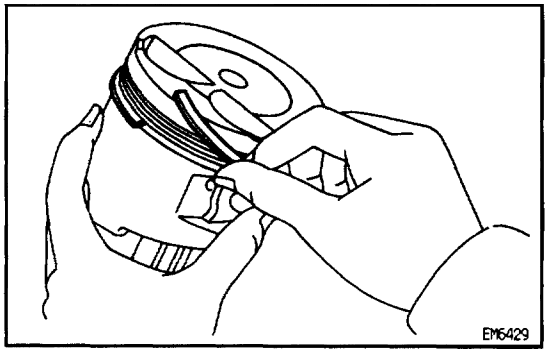

2. INSTALL PISTON RINGS

(a) Install the oil ring expander and 2 side rails by hand.

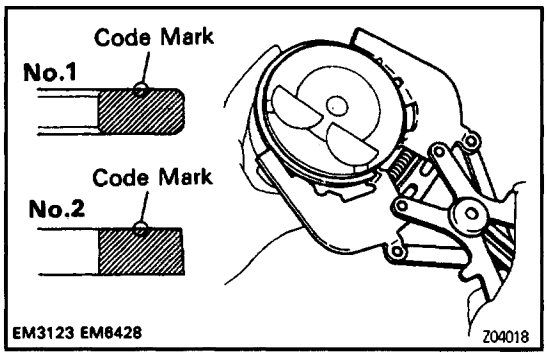

(b) Using a piston ring expander, install the 2 compression rings with the code mark facing upward.

Code mark:

No.1

1R or T

No.2

2R or 2T

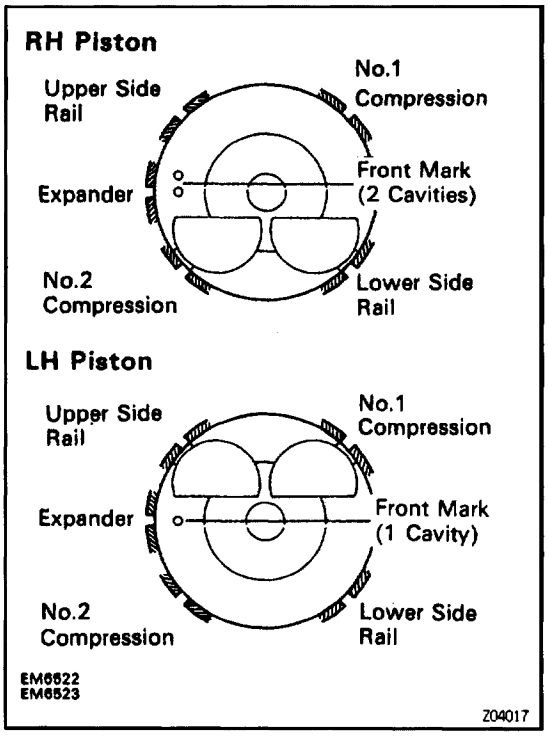

(c) Position the piston rings so that the ring ends are as shown.

NOTICE: Do not align the ring ends.

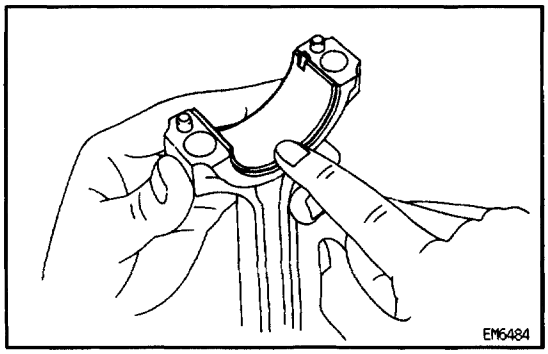

3. INSTALL BEARINGS

(a) Align the bearing claw with the groove of the connecting rod or connecting cap.

(b) Install the bearings in the connecting rod and connecting rod cap.

WhereEverybodyKnowsYourName

CYLINDER BLOCK ASSEMBLY

EG1KW–01

(See Components for Cylinder block Disassembly and Assembly)

HINT:

- Thoroughly clean all parts to be assembled.
- Before installing the parts, apply new engine oil to all sliding and and rotating surfaces.
- Replace all gaskets. O–rings and oil seals with new parts.

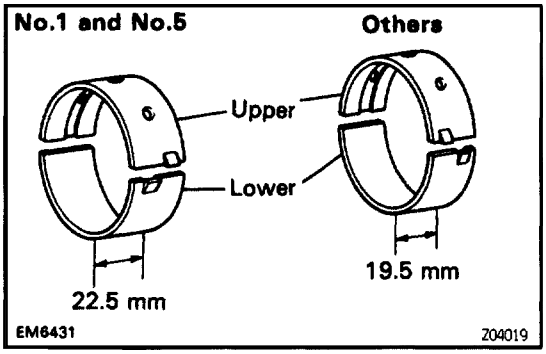

1. INSTALL MAIN BEARINGS

HINT:

- Main bearings come in widths of 19.5 mm (0.768 in.) and 22.5 mm (0.886 in.). Install the 22.5 mm (0.886 in.) bearings in the No.1 and No.5 cylinder block journal positions with the main bearing cap. Install the 19.5 mm (0.768 in.) bearings in the other positions.
- Upper bearings have an oil groove and oil holes lower bearings do not.

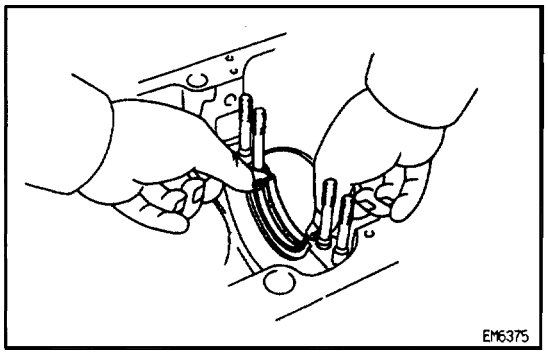

(a) Align the bearing law with the claw groove of the cylinder block, and push in the 5 upper bearings.

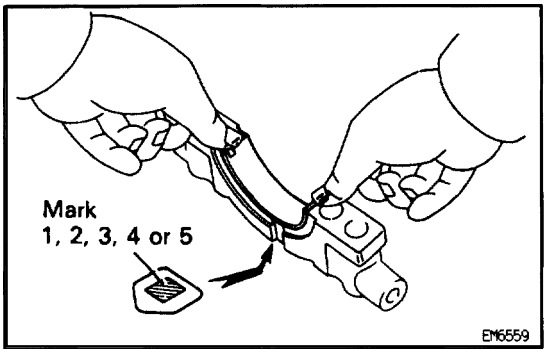

(b) Align the bearing claw with the claw groove of the main bearing cap, and push in the 5 lower bearings.
HINT: A number is marked on each main bearing cap to indicate the installation position.

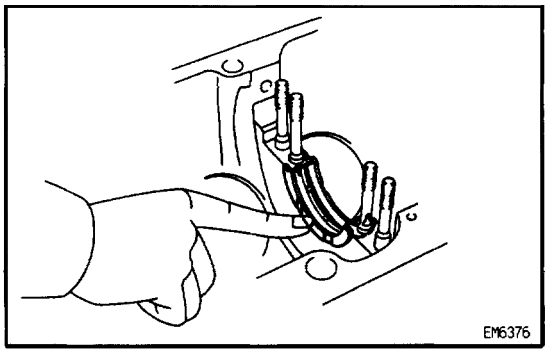

2. INSTALL UPPER THRUST WASHERS

Install the 2 thrust washers under the No.3 journal position of the cylinder block with the oil grooves facing outward.

WhereEverybodyKnowsYourName

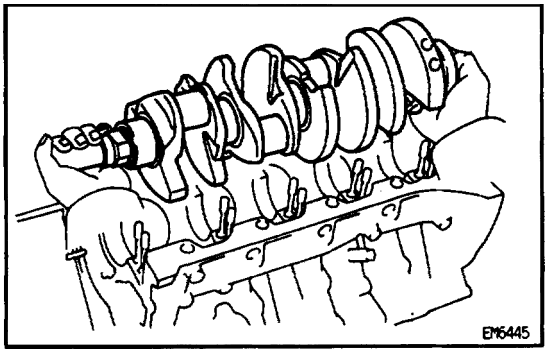

3. PLACE CRANKSHAFT ON CYLINDER BLOCK

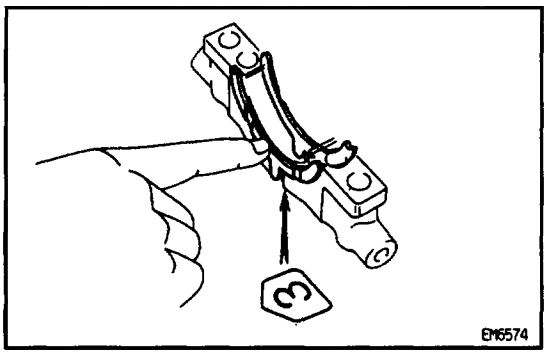

4. INSTALL MAIN BEARING CAPS AND LOWER THRUST WASHERS

A. Place main bearing caps and lower thrust washers on cylinder block

(a) Install the 2 thrust washers on the No.3 bearing cap with the grooves facing outward.

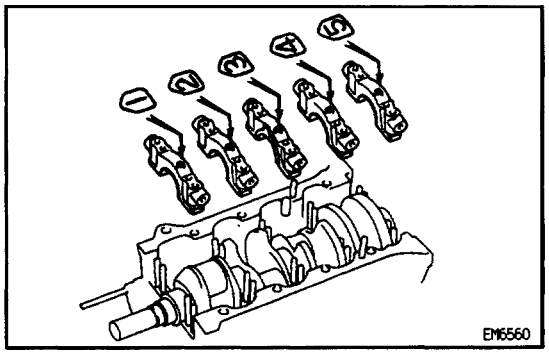

(b) Install the 5 main bearing caps in their proper locations.

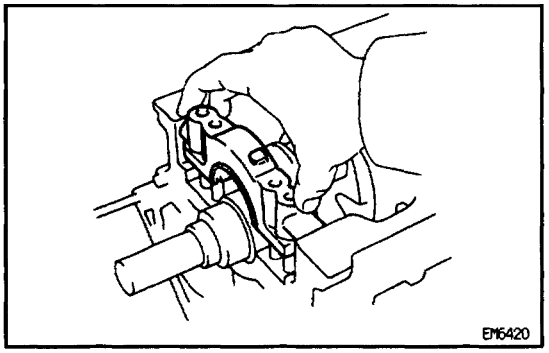

HINT: Place the bearing caps level and let them return to their original position by their own weight.

NOTICE: Do not install the main bearing cap by tapping it.

B. Install main bearing cap nuts

HINT:

- The main bearing cap nuts are tightened in 2 progressive steps (steps (b) and (d)).
- If any one of the main bearing cap stud nuts is broken or deformed, replace it.

WhereEverybodyKnowsYourName

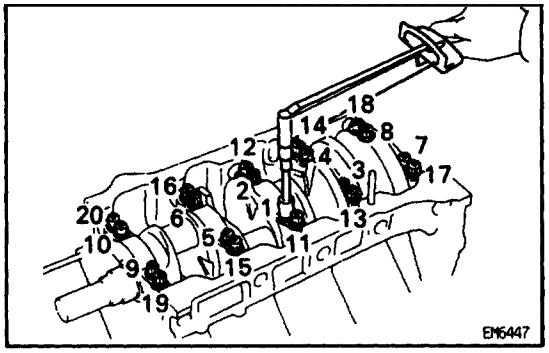

(a) Apply a light coat of engine oil on the threads and under the main bearing cap nuts.

(b) Install and uniformly tighten the 20 main bearing cap nuts in several passes, in the sequence shown.

Torque: 27 N·m (275 kgf·cm, 20 ft·lbf)

If any one of the main bearing cap nuts does not meet the torque specification, replace the main bearing cap stud bolt.

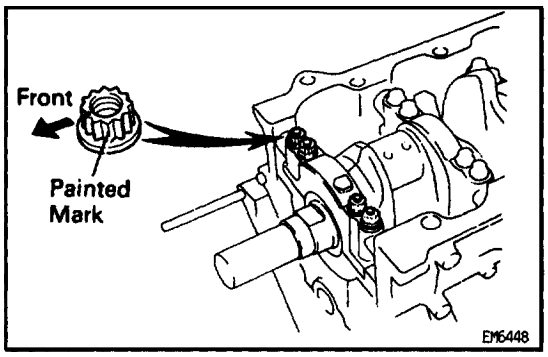

(c) Mark the front of the main bearing cap nut with paint.

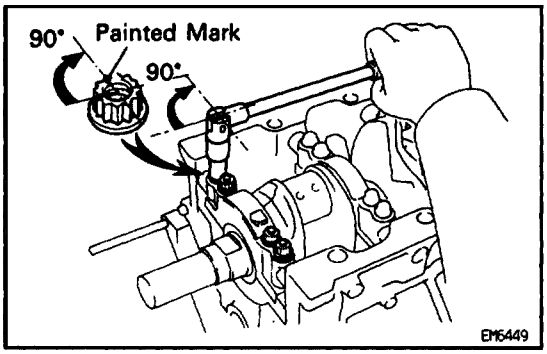

(d) Retighten the main bearing cap bolts 90 in the numerical order shown.

(e) Check that the painted mark is now at a 90 angle to the front.

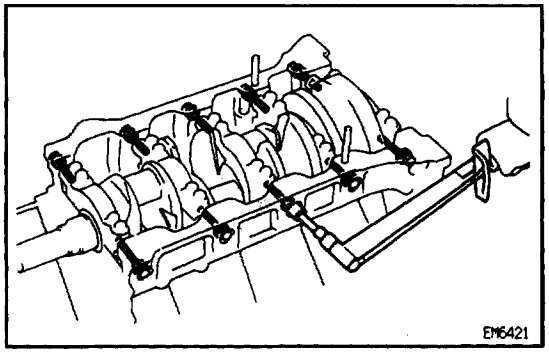

C. Install main bearing cap bolts

(a) Install a new seal washer to the main bearing cap bolt.

(b) Install and uniformly tighten the 10 main bearing cap bolts.

Torque: 49 N·m (500 kgf·cm, 36 ft·lbf)

(c) Check that the crankshaft turns smoothly.

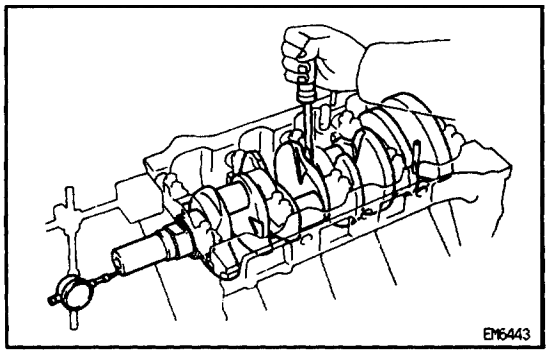

5. CHECK CRANKSHAFT THRUST CLEARANCE

Using a dial indicator, measure the thrust clearance while prying the crankshaft back and forth with a screwdriver.

Standard thrust clearance:

0.020 – 0.220 mm (0.0008 – 0.0087 in.)

Maximum thrust clearance:

0.30 mm (0.0118 in.)

If the thrust clearance is greater than maximum, replace the thrust washers as a set.

Thrust washer thickness:

2.440 – 2.490 mm (0.0961 – 0.0980 in.)

WhereEverybodyKnowsYourName

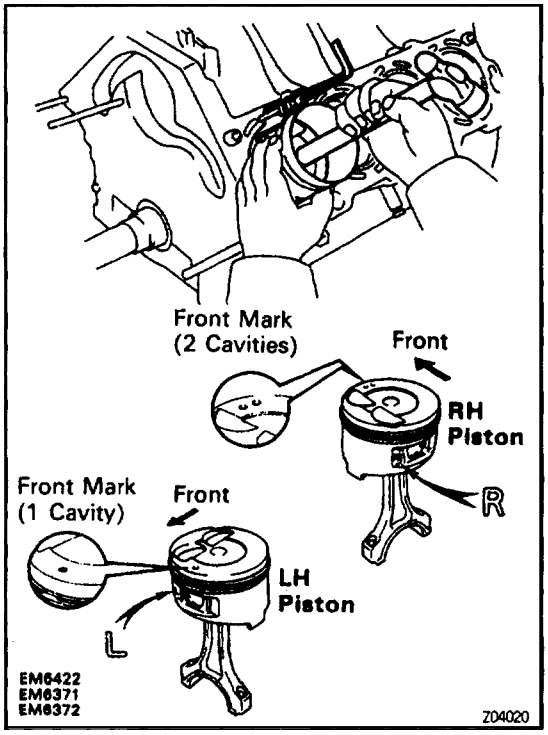

6. INSTALL PISTON AND CONNECTING ROD ASSEMBLES

Using a piston ring compressor, push the correctly numbered piston and connecting rod assemblies into each cylinder with the front mark of the piston facing forward.

NOTICE: The shape of the piston varies for the RH and LH banks. The RH piston is marked with "R", the LH piston with "L".

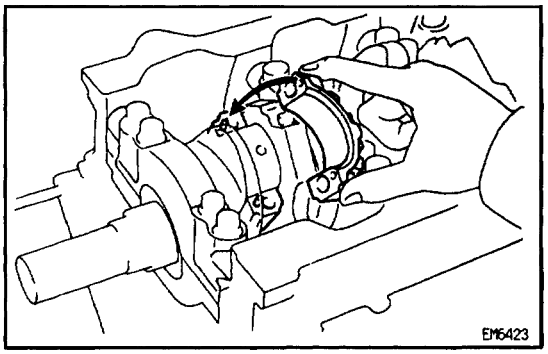

7. INSTALL CONNECTING ROD CAPS

A. Place connecting rod cap on connecting rod

(a) Match the numbered connecting rod cap with the connecting rod.

(b) Align the pin groove of the connecting rod cap with the pins of the connecting rod, and install the connecting rod.

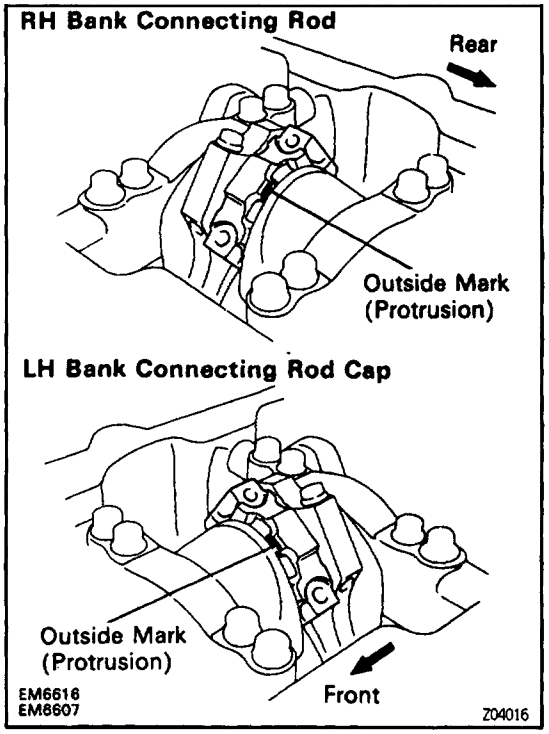

(c) Check that the outside mark of the connecting rod cap is facing in correct direction.

WhereEverybodyKnowsYourName

B. Install connecting rod cap bolts

HINT:

- The connecting rod cap bolts are tightened in 2 progressive steps (steps (b) and (d)).
- If any one of the connecting rod cap bolts is broken or deformed, replace it.

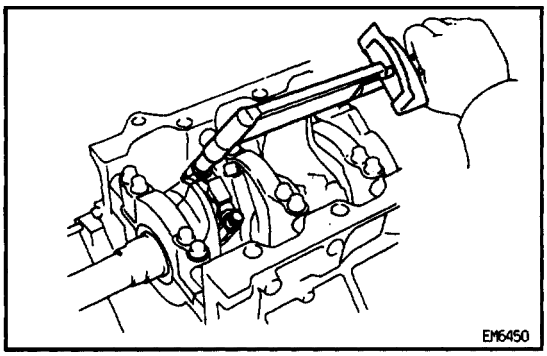

(a) Apply a light coat of engine oil on the threads and under the heads of the connecting rod cap bolts.

(b) Install and alternately tighten the 2 connecting rod cap bolts in several passes.

Torque: 25 N·m (250 kgf·cm, 18 ft·lbf)

If any one of the connecting rod cap bolts does not meet the torque specification, replace the connecting rod cap bolts.

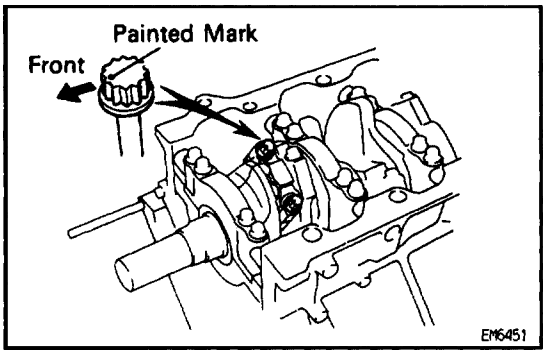

(c) Mark the front of the connecting cap bolt with paint.

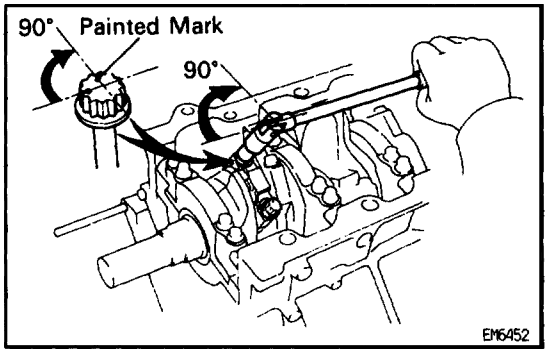

(d) Retighten the cap nuts 90 as shown.

(e) Check that the painted mark is now at a 90 angle to the front.

(f) Check that the crankshaft turns smoothly.

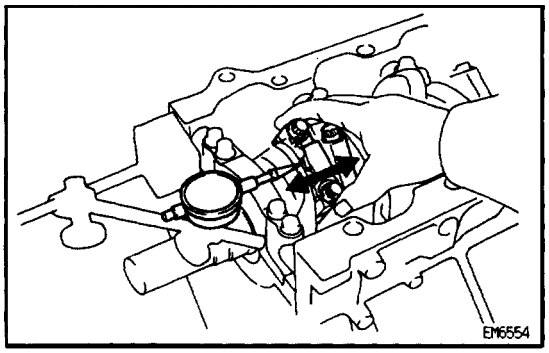

8. CHECK CONNECTING ROD OIL CLEARANCE

Using a dial indicator, measure the thrust clearance while moving the connecting rod back and forth.

Standard thrust clearance:

0.160 – 0.290 mm (0.0063 – 0.0138 in.)

Maximum thrust clearance:

0.35 mm (0.0138 in.)

If the thrust clearance is greater than maximum, replace the connecting rod assembly(s). If necessary, replace the crankshaft.

Connecting rod thickness:

22.880 – 22.920 mm (0.9008 – 0.9024 in.)

WhereEverybodyKnowsYourName

9. INSTALL REAR OIL SEAL RETAINER

(a) Remove any old packing (FIPG) material and be careful not to drop any oil on the contact surfaces of the oil seal retainer and cylinder block.

- Using a razor blade and gasket scraper, remove all the oil packing (FIPG) material from the gasket surfaces and sealing grooves.
- Thoroughly clean all components to remove all the loose material.
- Using a non–residue solvent, clean both sealing surfaces.

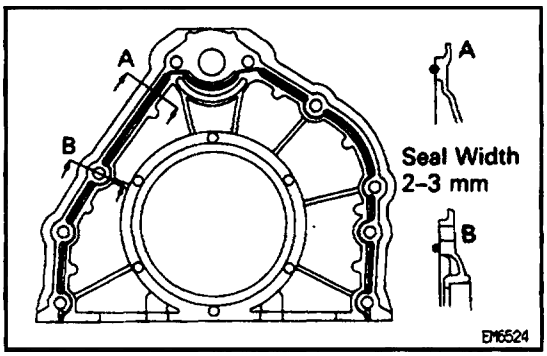

(b) Apply seal packing to the oil seal retainer as shown in the illustration.

Seal packing:

Part No. 08826–00080 or equivalent

- Install a nozzle that has been cut to a 2 – 3 mm (0.08–0.12) opening.
- Parts must be assembled within 5 minutes of application. Otherwise the material must be removed and reapplied.
- Immediately remove nozzle from the tube and reinstall cap.

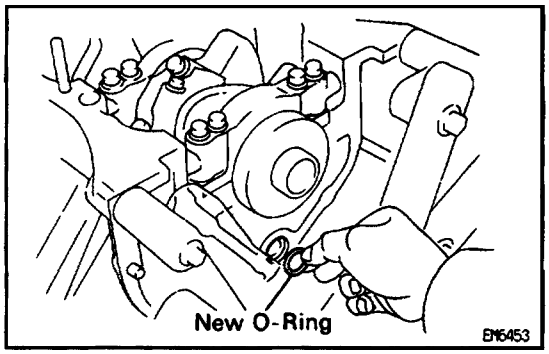

(c) Install a new O–ring to the cylinder block.

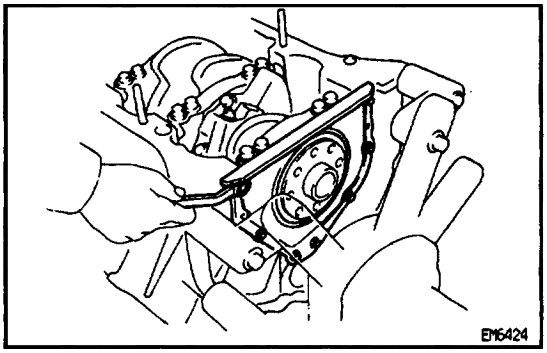

(d) Install the oil seal retainer with the 7 bolts.

Torque: 7.8 N·m (80 kgf·cm, 69 in.·lbf)

WhereEverybodyKnowsYourName

POST ASSEMBLY

EG24Z–01

(See Components for Cylinder Block Prepation of Disassembly and Post Assembly)

1. INSTALL WATER SEAL PLATE

(a) Remove any old packing (FIPG) material and be careful not to drop any oil on the contact surfaces of the seal plate and cylinder block.

- Using a razor blade and gasket scraper remove all the old packing (FIPG) material from the gasket surfaces and sealing groove.
- Thoroughly clean all components to remove all the loose material.
- Using a non–residue solvent, clean both sealing surfaces.

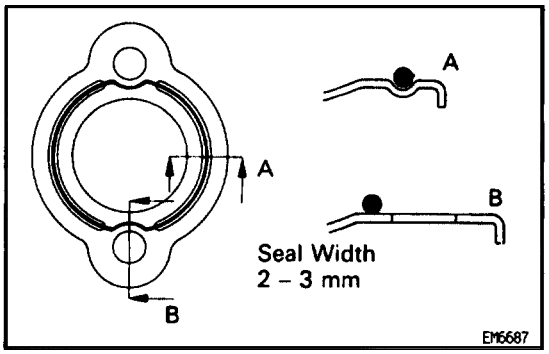

(b) Apply seal packing to the seal plate as shown in the illustration.

Seal packing:

Part No. 08826–00080 or equivalent

- Install a nozzle that has been cut to 2 – 3 mm (0.08–0.12 in.) opening.
- Parts must be assembled within 5 minutes of application. Otherwise the material must be removed and reapplied.
- Immediately remove nozzle from the tube and reinstall cap.

(c) Install the seal plate with the 2 nuts. Alternately tighten the nuts in several passes.

Torque: 14 N·m (145 kgf·cm, 10 ft·lbf)

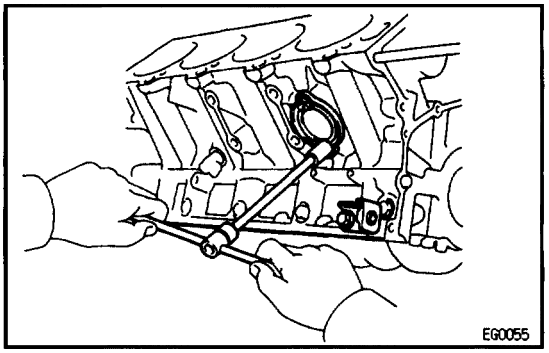

2. INSTALL GENERATOR BRACKET

Install the generater bracket with the bolt.

Torque: 18 N·m (185 kgf·cm, 13 ft·lbf)

3. INSTALL OIL PUMP

(a) Remove any old packing (FIPG) material and be careful not to drop any oil on the contact surfaces of the oil pump and cylinder block.

- Using a razor blade and gasket scraper, remove all the old packing (FIPG) material from the gasket surfaces and sealing groove.
- Thoroughly clean all components to remove all the loose material.
- Using a non–residue solvent, clean both sealing surfaces.

WhereEverybodyKnowsYourName

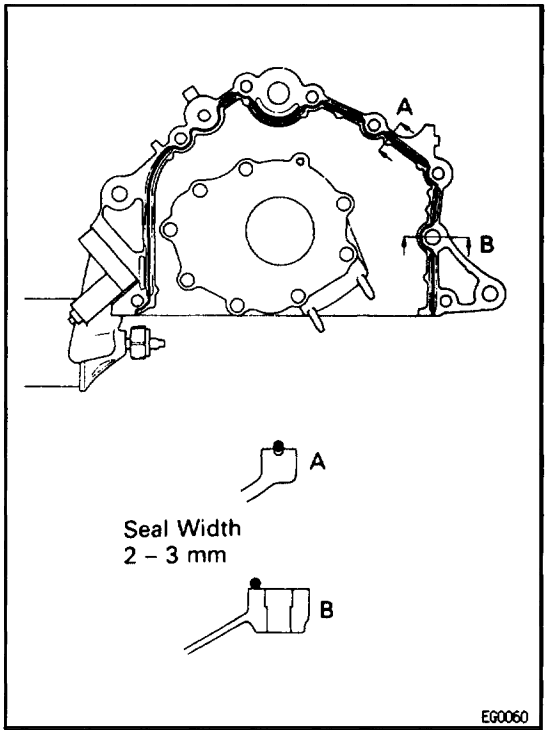

(b) Apply seal packing to the oil pump as shown in the illustration.
Seal packing:
Part No. 08826–00080 or equivalent
NOTICE: Avoid applying an excessive amount to the surface. Be particularly careful near oil passage.
- Install a nozzle that has been cut to a 2 – 3 mm (0.08–0.12 in.) opening.
- Parts must be assembled within 5 minutes of application. Otherwise the material must be removed and reapplied.
- Immediately remove nozzle from the tube and reinstall cap.

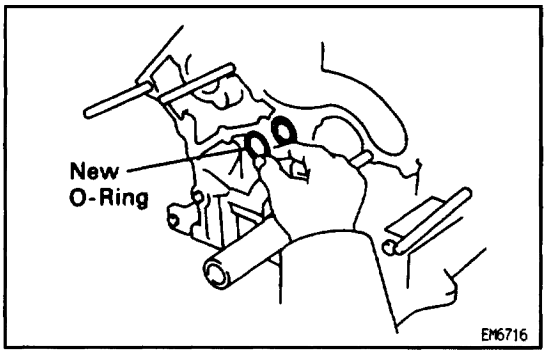

(c) Install a new O–ring to the cylinder block.

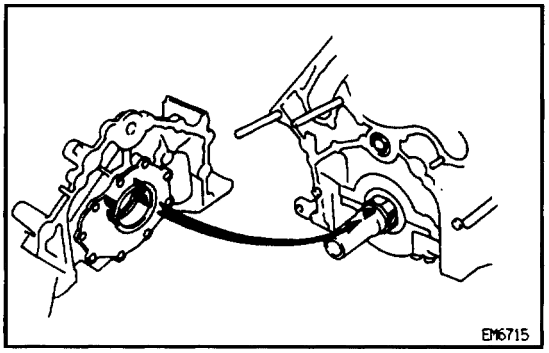

(d) Engage the spline teeth of the oil pump drive gear with the large teeth of the crankshaft, and slide the oil pump on the crankshaft.

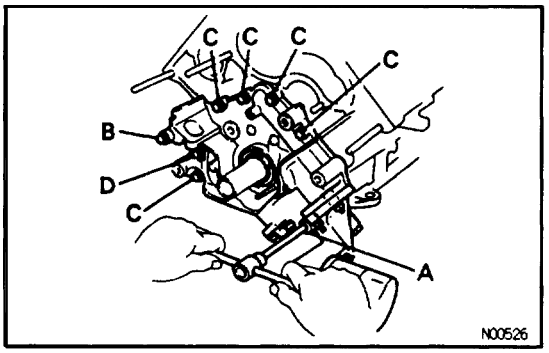

(e) Install the oil pump with the 8 bolts. Uniformly tighten the bolts in several passes.

Torque:
16 N·m (160 kgf·cm, 12 ft·lbf) for 12 mm head
30 N·m (310 kgf·cm, 22 ft·lbf) for 14 mm head
HINT: Each bolt length is indicated in the illustration.
Bolt length:
50 mm (1.97 in.) for A of 12 mm head
106 mm (4.17 in.) for B of 12 mm head
30 mm (1.18 in.) for C of 12 mm head
40 mm (1.57 in.) for D of 14 mm head

WhereEverybodyKnowsYourName

4. INSTALL NO.1 AND NO.2 OIL PANS
(See steps 1 to 7 on pages EG–509 to 511)

5. INSTALL WATER PUMP

(a) Remove any old packing (FIPG) material and be careful not to drop any oil on the contact surfaces of the water pump and cylinder block.

- Using a razor blade and gasket scraper, remove all the old packing (FIPG) material from the gasket surfaces and sealing groove.
- Thoroughly clean all components to remove all the loose material.
- Using a non–residue solvent, clean both sealing surfaces.

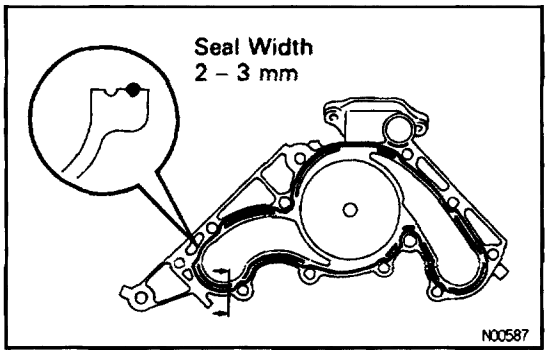

(b) Apply seal packing to the water pump as shown in the illustration.

Seal packing:
Part No. 08826–00100 or equivalent

- Install a nozzle that has been cut to a 2 – 3 mm (0.08–0.12 in.) opening.
- Parts must be assembled within 5 minutes of application. Otherwise the material must be removed and reapplied.
- Immediately remove nozzle from the tube and reinstall cap.

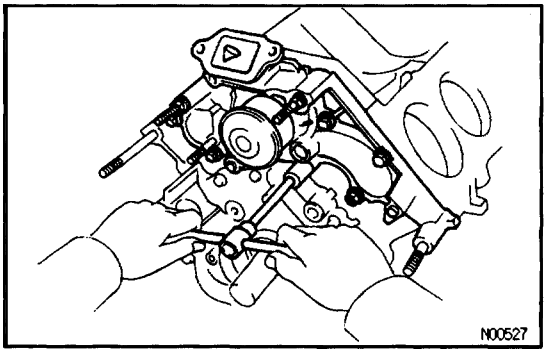

(c) Install the water pump with the nut, 5 bolts and 2 stud bolts. Uniformly tighten the nut, bolts and stud bolts in several passes.

Torque: 18 N·m (185 kgf·cm, 13 ft·lbf)

HINT: Use bolts 30 mm (1.18 in.) in length.

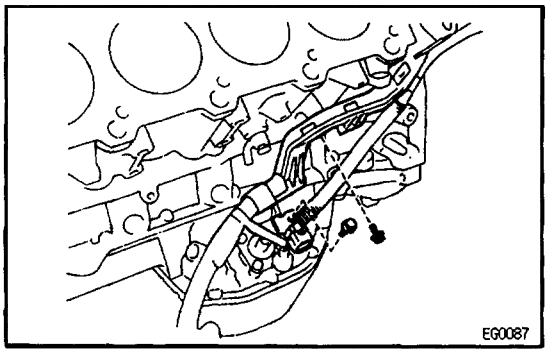

6. INSTALL ENGINE WIRE

(a) Install the engine wire to the LH side of the cylinder block with the 2 bolts.

WhereEverybodyKnowsYourName

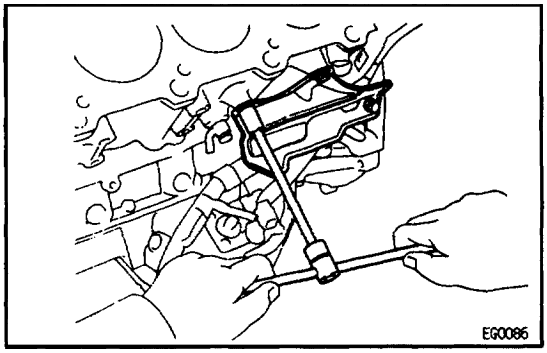

(b) Install the engine wire cover with the 3 bolts.
(c) Connect the following connector:
- Crankshaft position sensor connector
- Oil pressure switch connector
- Oil level sensor connector

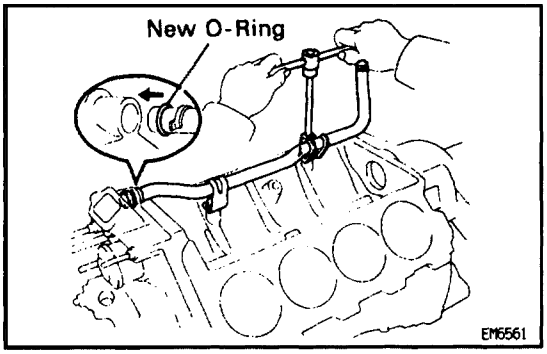

7. INSTALL WATER BYPASS PIPE
(a) Install a new O–ring to the water bypass pipe.
(b) Apply soapy water to the O–ring.
(c) Push the water bypass pipe end into the pipe hole of the water pump.
(d) Install the water bypass pipe with the 2 bolts.
Torque: 18 N·m (185 kgf·cm, 13 ft·lbf)

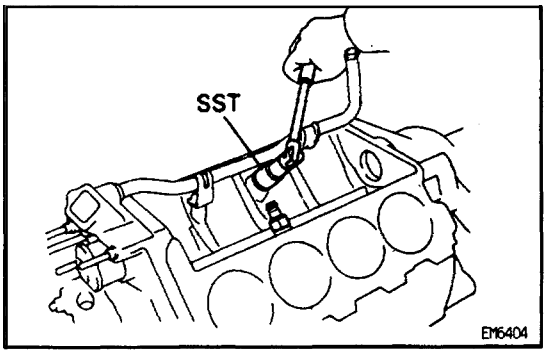

8. INSTALL KNOCK SENSORS
(a) Using SST, install the 2 knock sensors.
SST 09816–30010
Torque: 44 N·m (450 kgf·cm, 33 ft·lbf)
(b) Connect the 2 knock sensor connectors.

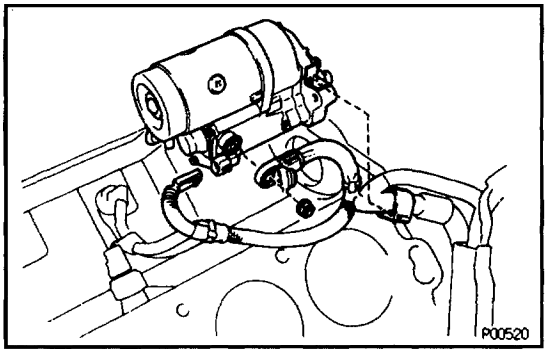

9. INSTALL STARTER
(a) Install the engine wire clamp to the bracket on the starter.
(b) Connect the starter wire with the nut.
(c) Connect the starter connector.

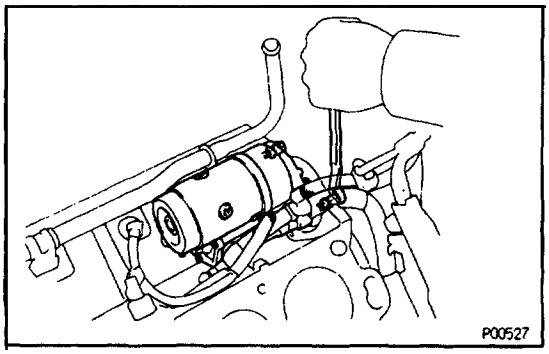

(d) Install the starter with the 2 bolts.
Torque: 39 N·m (400 kgf·cm, 29 ft·lbf)

WhereEverybodyKnowsYourName

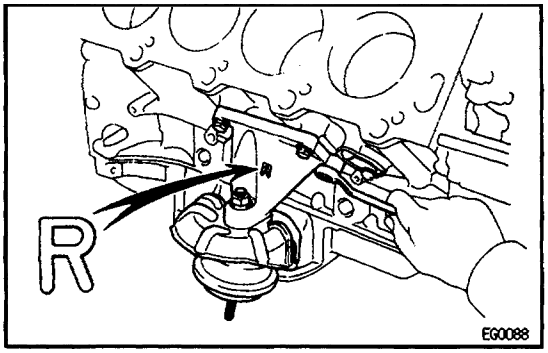

10. INSTALL RH ENGINE MOUNTING BRACKET

Install the mounting bracket with the 4 bolts.

Torque: 37 N·m (380 kgf·cm, 27 ft·lbf)

HINT: The RH mounting bracket is marked with “R”.

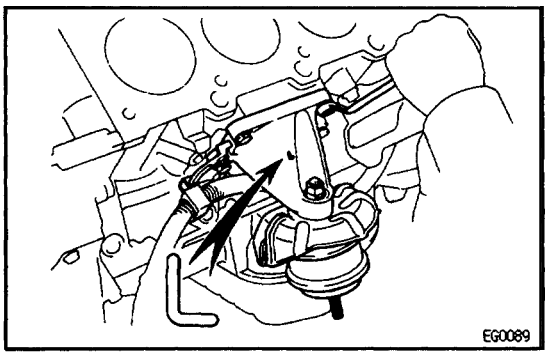

11. INSTALL LH ENGINE MOUNTING BRACKET

(a) Install the mounting bracket with the 4 bolts.
HINT: The LH mounting bracket is marked with “L”
Torque: 37 N·m, (380 kgf·cm, 27 ft·lbf)

(b) Install the engine with to the mounting bracket with the bolt.

12. INSTALL CYLINDER HEADS
(See pages EG–109 to 136)

13. INSTALL TIMING BELT AND PULLEYS
(See pages EG–60 to 72)

14. DISCONNECT ENGINE FROM ENGINE STAND

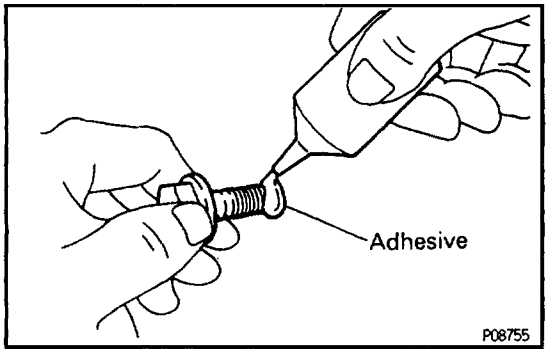

15. INSTALL DRIVE PLATE

(a) Apply adhesive to 2 or 3 threads of the bolt end.
Adhesive:
Part No. 08833–00070, THREE BOND 1324 or equivalent

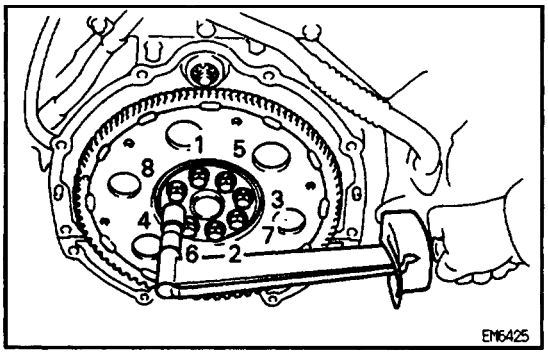

(b) Install the front spacer, drive plate and rear plate on the crankshaft.

(c) Install and uniformly tighten the 8 bolts in several passes, in the sequence shown.
Torque: 98 N·m (1,000 kgf·cm, 72 ft·lbf)

WhereEverybodyKnowsYourName

ENGINE & TRANSMISSION ASSEMBLY

EG34U–01

(See Components for Engine & Transmission Separation and Assembly)

1. INSTALL TRANSMISSION TO ENGINE
(See page AT–23)

2. CONNECT ENGINE WIRE

(a) Connect the following parts:
  (1) O/D direct clutch speed sensor connector
  (2) No.1 VSS connector for speedometer
  (3) No.2 VSS connector for ECM
  (4) PNP switch connector
  (5) Solenoid connector

(b) Install the 5 wire clamps to the brackets on the transmission.

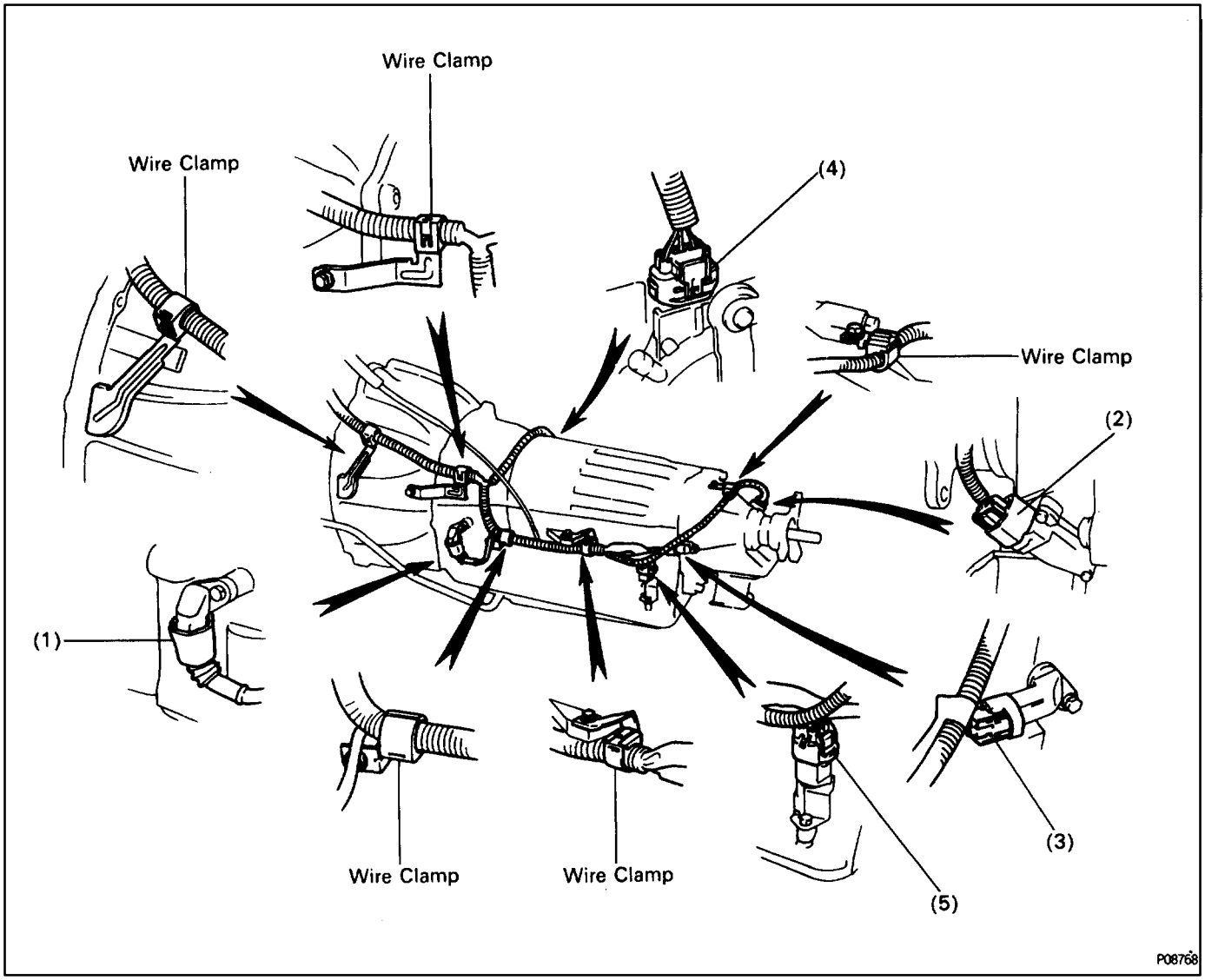

WhereEverybodyKnowsYourName

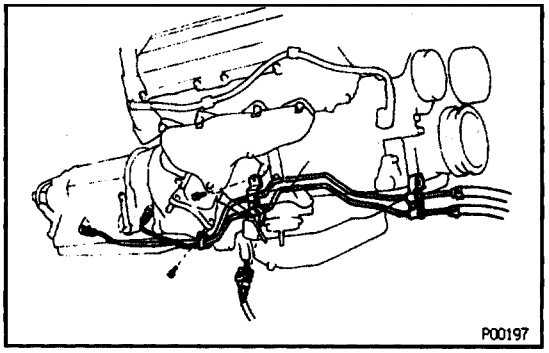

3. INSTALL OIL COOLER PIPE FOR TRANSMISSION

(a) Temporarily install the oil cooler pipe with the 2 pipe brackets and 2 bolts.

(b) Connect the 2 oil cooler pipes to the unions on the transmission.
Torque: 34 N·m (350 kgf·cm, 26 ft·lbf)

(c) Tighten the 2 pipe clamp bolts.

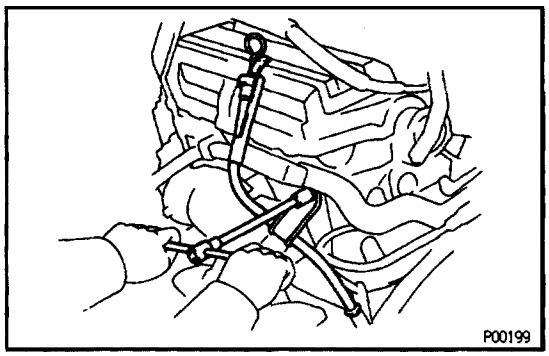

4. INSTALL OIL DIPSTICK GUIDE AND DIPSTICK FOR TRANSMISSION

(a) Install a new O–ring to the dipstick guide

(b) Apply soapy water to the O–ring

(c) Connect the dipstick guide end to the dipstick tube of the oil pan.

(d) Install the dipstick guide with the bolt.

(e) Install the dipstick.

WhereEverybodyKnowsYourName

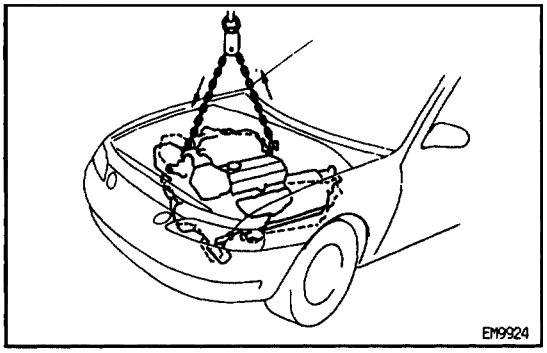

ENGINE INSTALLATION

EG2HW–02

(See Components for Engine Removal and Installation)

1. INSTALL ENGINE AND TRANSMISSION ASSEMBLY IN VEHICLE

(a) Attach the engine chain hoist to the engine hangers.

(b) Slowly lower the engine and transmission assembly into the engine compartment.
NOTICE: Be careful not to hit the PS gear housing and PNP switch.

(c) Insert the stud bolts of the front engine mounting brackets into the stud bolt holes of the front suspension crossmember.

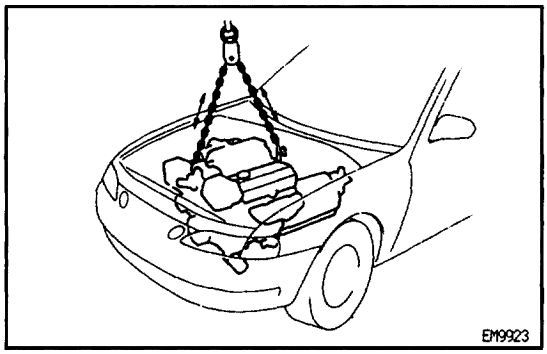

(d) Keep the engine level.

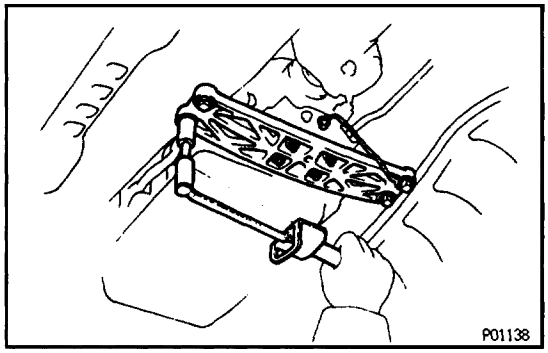

(e) Install the rear engine mounting member with the 4 bolts and 4 nuts.
Torque:
25 N·m (250 kgf·cm, 19 ft·lbf) for bolt
13 N·m (135 kgf·cm, 10 ft·lbf) for nut

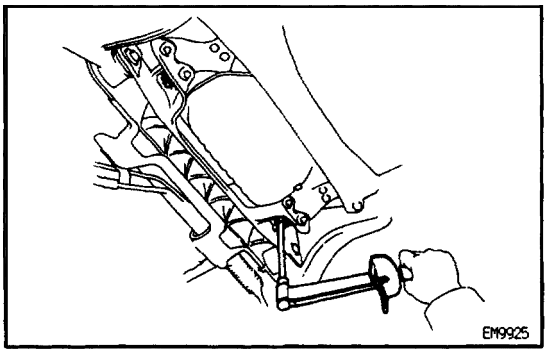

(f) Install the 2 nuts holding the engine mounting brackets to the front suspension crossmember.
Torque: 59 N·m (600 kgf·cm, 43 ft·lbf)

WhereEverybodyKnowsYourName

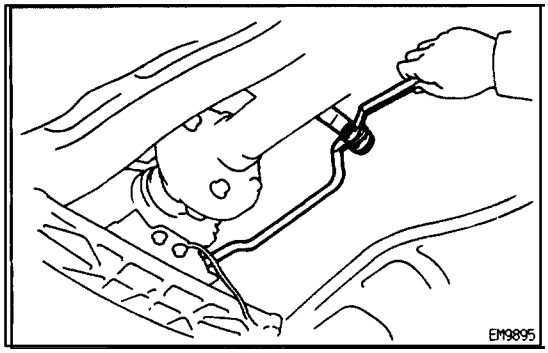

2. CONNECT TRANSMISSION CONTROL ROD FROM SHIFT LEVER

Connect the control rod to the shift lever with the nut.

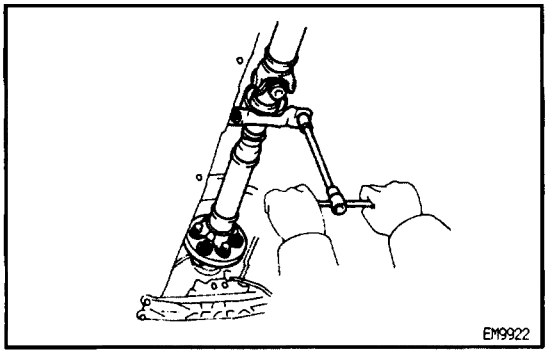

3. INSTALL PROPELLER SHAFT (See page PR–12)

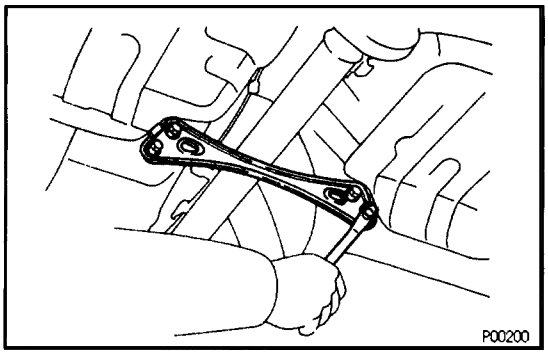

4. INSTALL CENTER FLOOR CROSSMEMBER BRACE

Install the crossmember brace with the 4 nuts.

Torque: 13 N·m (130 kgf·cm, 9 ft·lbf)

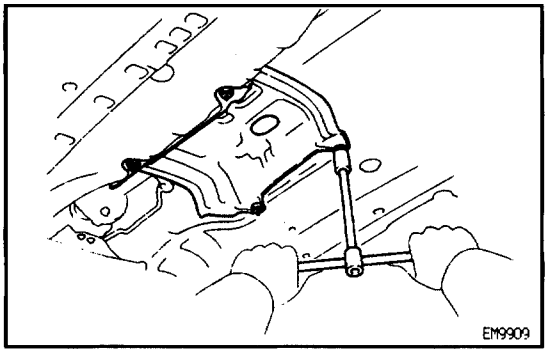

5. INSTALL HEAT INSULATOR FOR FRONT EXHAUST PIPE

Install the heat insulator with the 4 bolts.

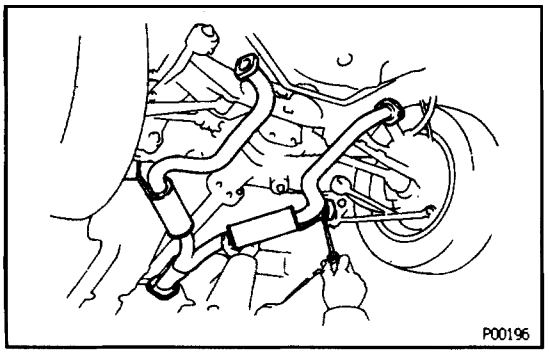

6. INSTALL CENTER EXHAUST PIPE

Install the 2 hooks of the exhaust pipe to the rings on the exhaust pipe brackets.

WhereEverybodyKnowsYourName

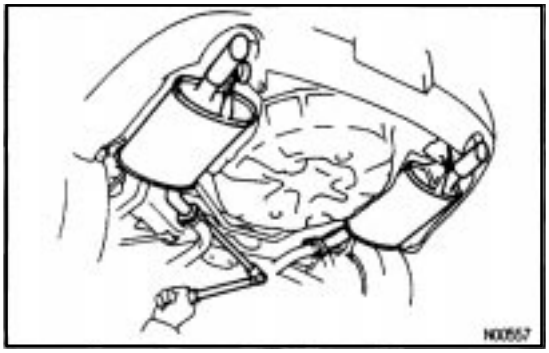

7. INSTALL TAILPIPE

(a) Install the hook of the tailpipe to the ring on the tailpipe bracket.

(b) Install a new gasket and tailpipe to the center exhaust pipe with 2 bolts. Install the 2 tailpipes.
Torque: 19 N·m (195 kgf·cm, 14 ft·lbf)

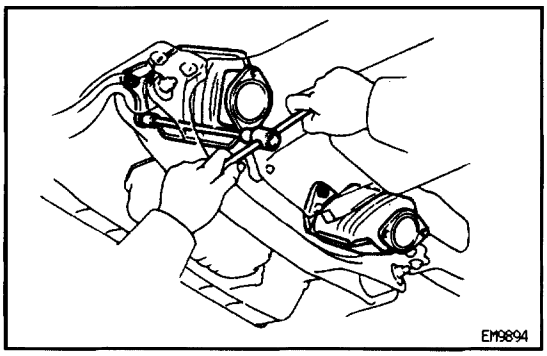

8. INSTALL TWC (FRONT)

Using a 14 mm deep socket wrench, install a new gasket and the TWC with 3 new nuts. Install the 2 TWC.
Torque: 62 N·m (630 kgf·cm, 46 ft·lbf)

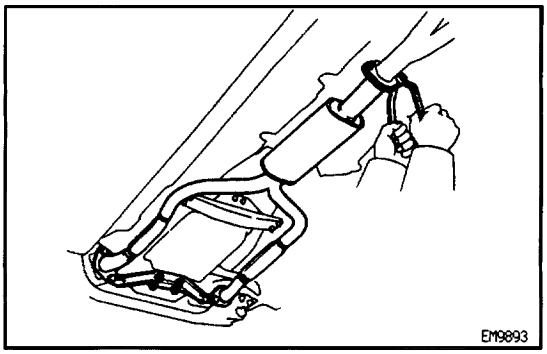

9. INSTALL FRONT EXHAUST PIPE

(a) Temporarily install the pipe support bracket with the 4 bolts.

(b) Temporarily install 3 new gaskets and the exhaust pipe with the 6 bolts and nuts.

(c) Tighten the 4 bolts and nuts holding the TWC to the front exhaust pipe.
Torque: 43 N·m (440 kgf·cm, 32 ft·lbf)

(d) Tighten the 2 bolts and nuts holding the front exhaust pipe to the center exhaust pipe.
Torque: 43 N·m (440 kgf·cm, 32 ft·lbf)

(e) Tighten the 4 bolts holding the pipe support bracket to the transmission.
Torque: 43 N·m (440 kgf·cm, 32 ft·lbf)

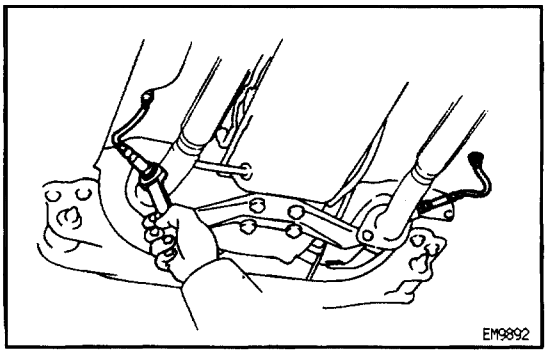

10. INSTALL SUB HEATED OXYGEN SENSORS

Install the 2 oxygen sensors to the front exhaust pipe.
Torque: 44 N·m (450 kgf·cm, 33 ft·lbf)

HINT:

- Before installing the oxygen sensor, twist the sensor wire counterclockwise 3 1/2 turns.
- After installing the oxygen sensor, check that the sensor wire is not twisted. If it is twisted, remove the oxygen sensor and reinstall it.

WhereEverybodyKnowsYourName

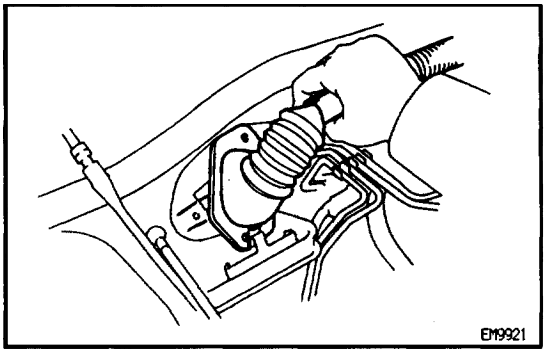

11. CONNECT ENGINE WIRE TO CABIN

(a) Push in the engine wire through the cowl panel.
NOTICE: Be careful not to damage the engine wire. Tape the engine wire.

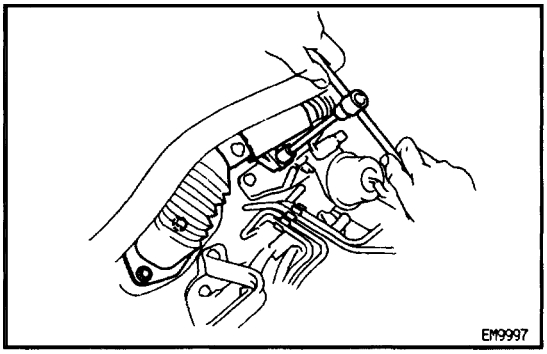

(b) Install the engine wire retainer with the 3 bolts.

(c) Connect the following connectors:
(1) 2 connectors to ECM
(2) Connector to ABS & TRAC ECU
(3) 2 connectors to TRAC ECU
(4) 4 connectors to connector cassette
(5) Connector to A/C control assembly

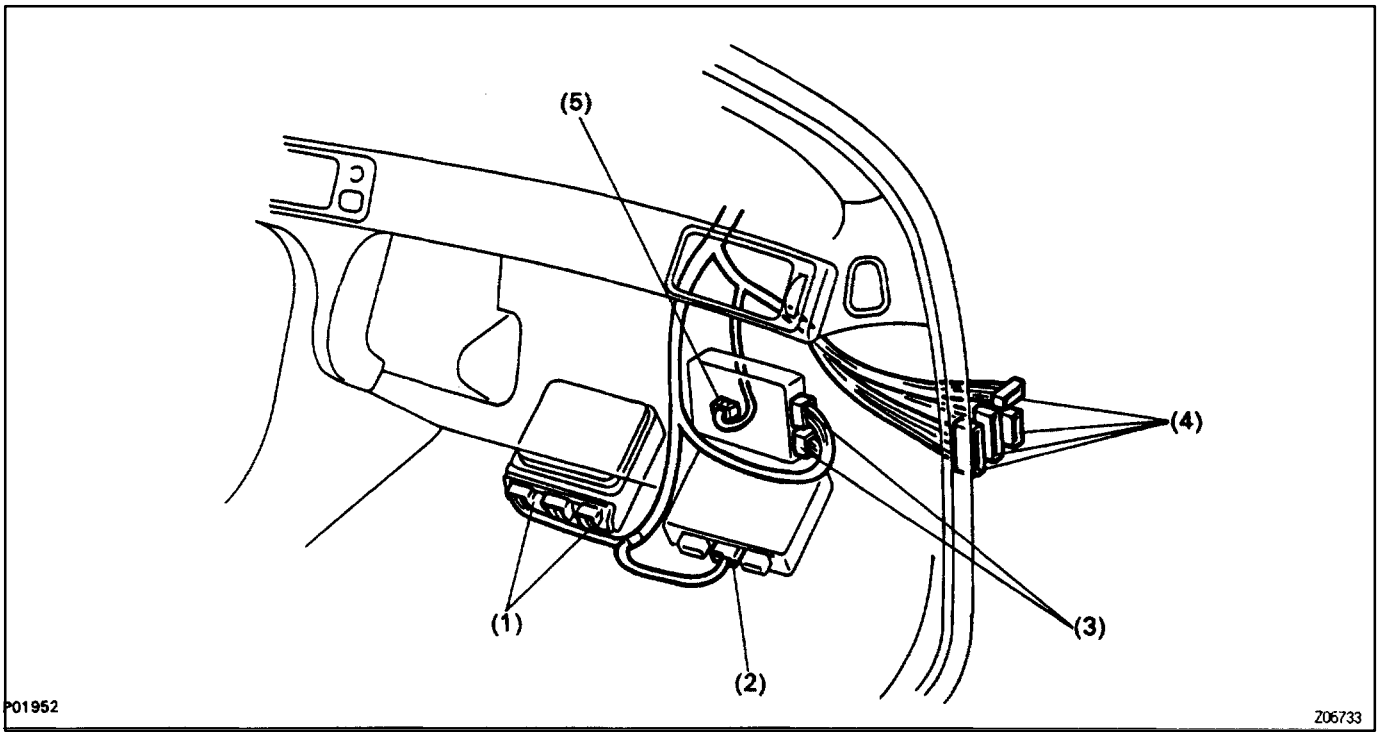

WhereEverybodyKnowsYourName

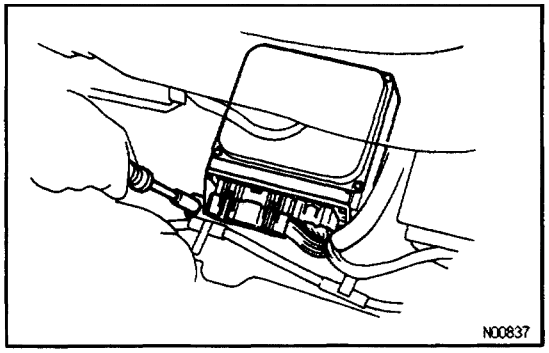

(d) Install the ECM with the nut.

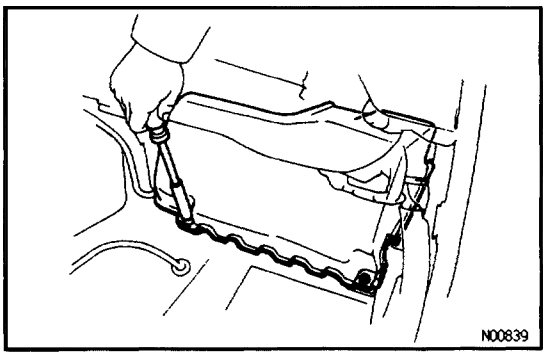

(e) Install the ECM protector with the 2 nuts.
(f) Install the floor carpet.

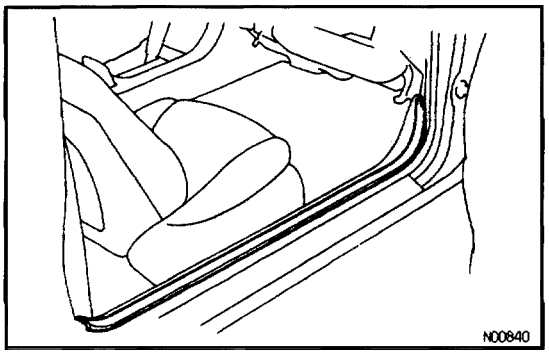

(g) Install the scuff plate.

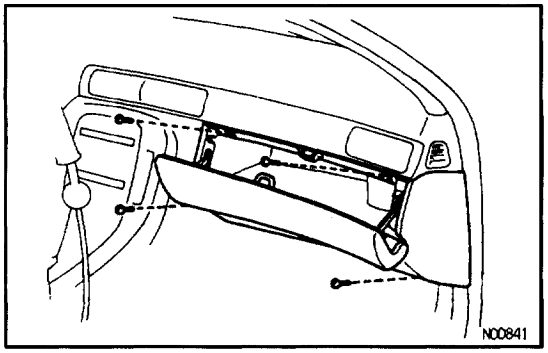

(h) Connect the connectors.
(i) Install the lower instrument panel finish panel and glove compartment door assembly with the 4 screws.

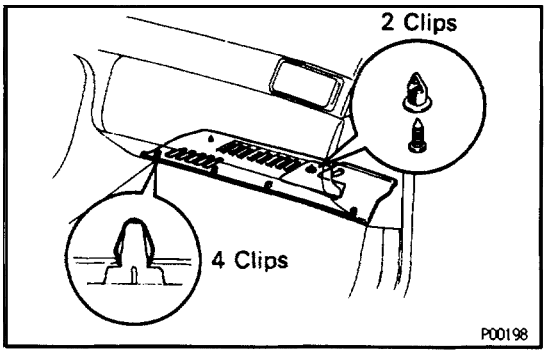

(j) Install the instrument panel under cover with the 2 clips.

WhereEverybodyKnowsYourName

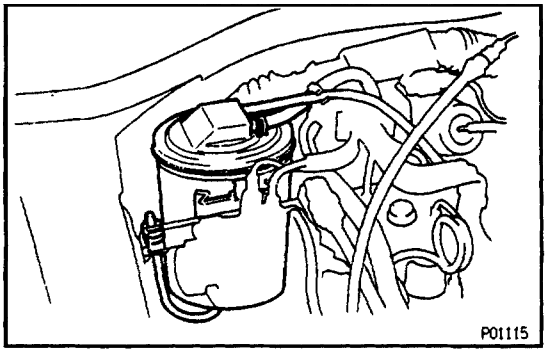

12. INSTALL CHARCOAL CANISTER

(a) Install the charcoal canister.

(b) Connect the vacuum hose and air hose to the charcoal canister.

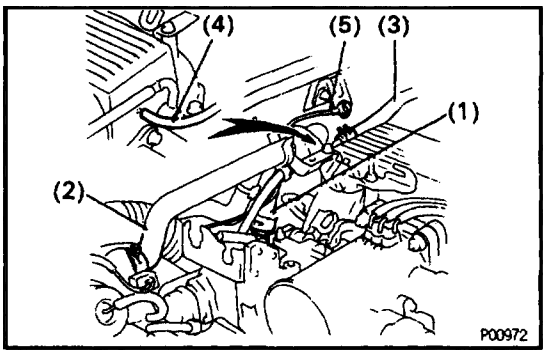

13. CONNECT HOSES

Connect the following hoses and ground strap:

(1) Heater water hose to water bypass hose

(2) Heater water hose to heater water valve

(3) Brake booster hose to union on air intake chamber

(4) Vacuum hose (from VSV for heater water valve) to air intake chamber

(5) Ground strap to bracket on body

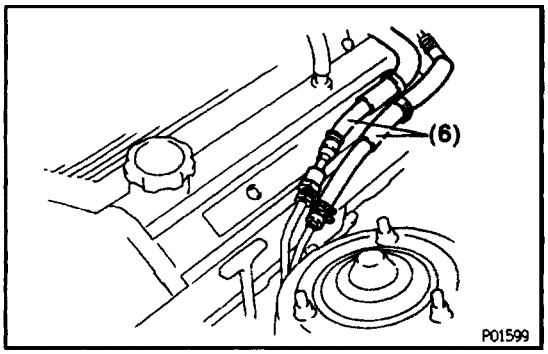

(6) Fuel inlet hose to fuel tube

SST 09278–54012

Torque: 30 N·m (310 kgf·cm, 22 ft·lbf)

HINT: Use a torque wrench with a fulcrum length of 30 cm (11.81 in.).

(7) Fuel return hose to return pipe

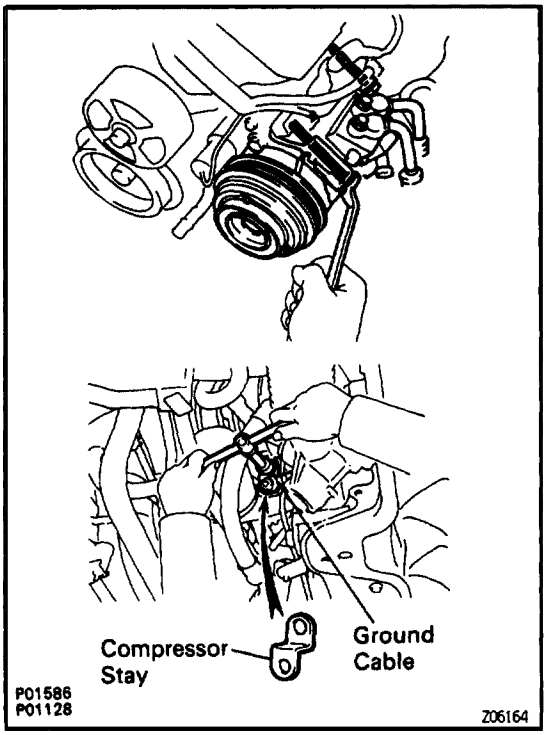

14. INSTALL AIR CONDITIONING (A/C) COMPRESSOR

(a) Install the A/C compressor, compressor stay and ground cable with the nut and 3 bolts.

Torque:

49 N·m (500 kgf·cm, 36 ft·lbf) for bolt

29 N·m (300 kgf·cm, 22 ft·lbf) for nut

(b) Connect the A/C compressor connector.

WhereEverybodyKnowsYourName

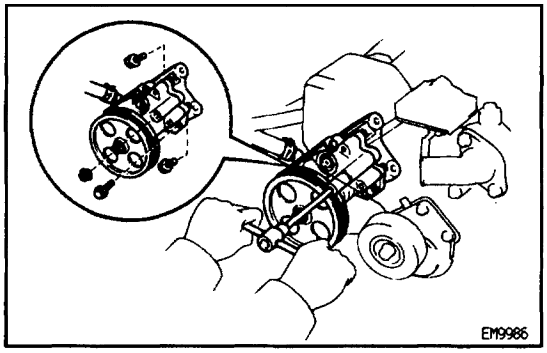

15. INSTALL POWER STEERING (PS) PUMP

(a) Install the PS pump with the nut and 3 bolts. Alternately tighten the bolts and nut.

Torque:

39 N·m (400 kgf·cm, 29 ft·lbf) for bolt

43 N·m (440 kgf·cm, 32 ft·lbf) for nut

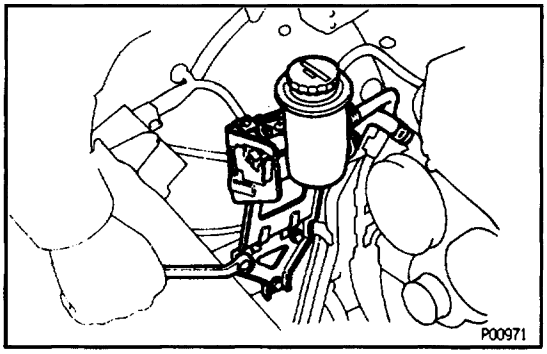

16. INSTALL POWER STEERING (PS) RESERVOIR TANK AND BRACKET

Install the reservoir tank and bracket assembly with the 3 bolts.

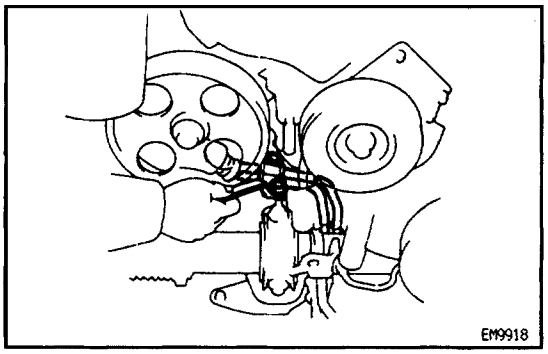

17. INSTALL POWER STEERING (PS) TUBES

Install the PS tube clamp with the bolt.

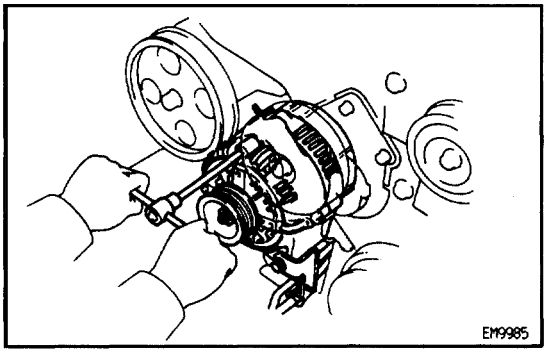

18. INSTALL GENERATOR

(a) Install the generator and transmission oil cooler pipe bracket with the bolt and nut.

Torque: 37 N·m (380 kgf·cm, 27 ft·lbf)

(b) Connect the generator connector.

(c) Connect the generator wire with the nut and cap.

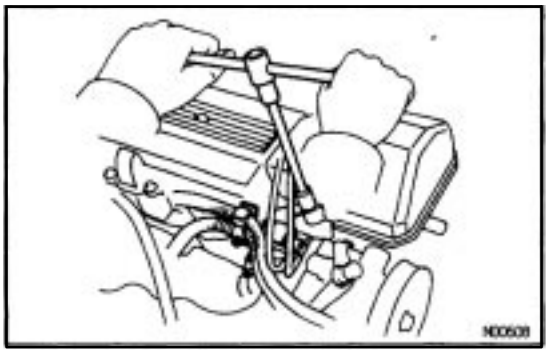

19. INSTALL WIRE CLAMP (FOR GENERATOR) AND VSV (FOR EVAP)

(a) Install the wire clamp to the VSV bracket.

(b) Install the VSV with the 2 bolts.

WhereEverybodyKnowsYourName

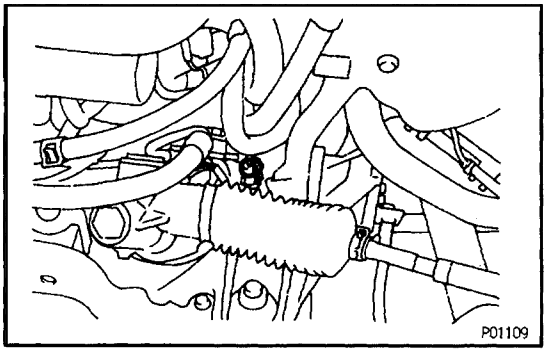

20. INSTALL POWER STEERING (PS) SOLENOID VALVE CONNECTOR

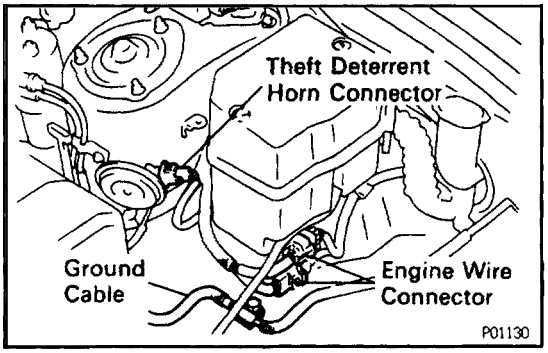

21. CONNECT ENGINE WIRE CONNECTORS
22. CONNECT THEFT DETERRENT HORN CONNECTOR
23. INSTALL GROUND CABLE TO BODY

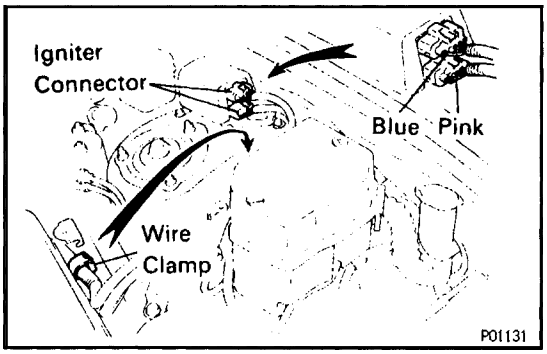

24. CONNECT IGNITER CONNECTORS

(a) Connect the 2 igniter connectors
HINT: Connect the yellow taped connector to the igniter on the rear side.

(b) Install the wire clamp.

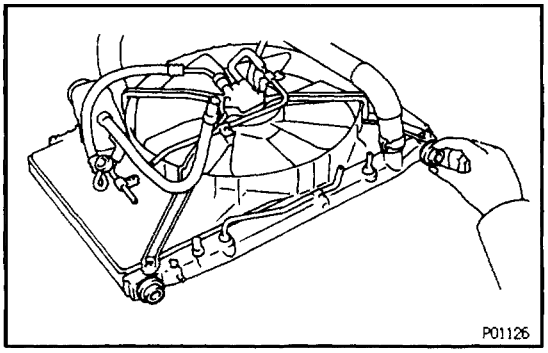

25. INSTALL RADIATOR ASSEMBLY

(a) Install the 2 lower radiator supports to the radiator.

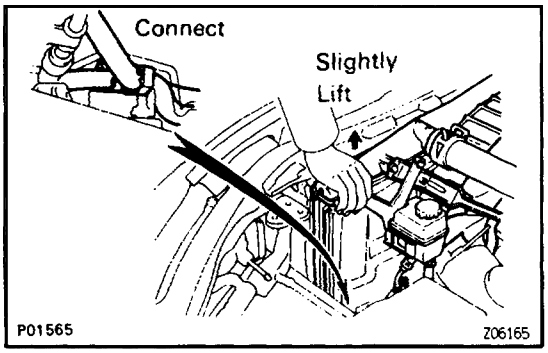

(b) Place the radiator assembly on the body bracket.

(c) Slightly lift the radiator, and connect the 2 oil cooler hoses (for cooling fan) to the hose clamp on the radiator fan shroud.

WhereEverybodyKnowsYourName

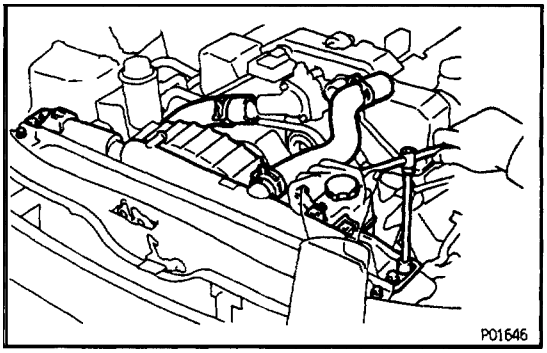

(d) Install the upper radiator support with the 2 bolts and screw. Install the 2 upper radiator supports.
Torque: 12 N·m (120 kgf·cm, 9 ft·lbf)

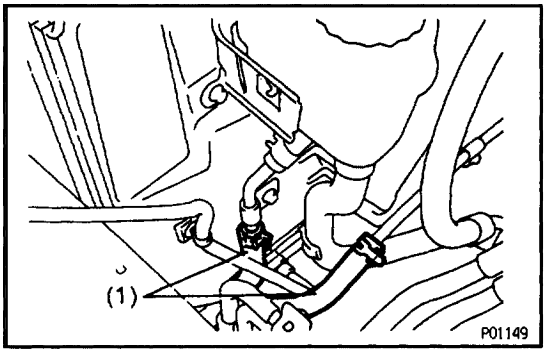

(e) Connect the following hoses:
(1) 2 oil cooler hoses (for cooling fan) to pipes

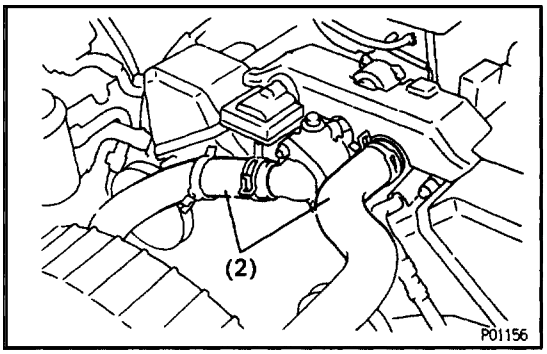

(2) 2 radiator hoses

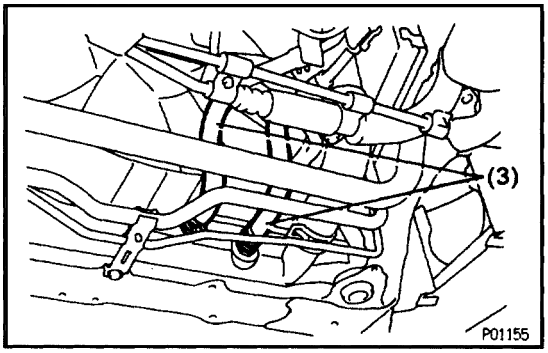

(3) 2 oil cooler hoses (for transmission) to radiator

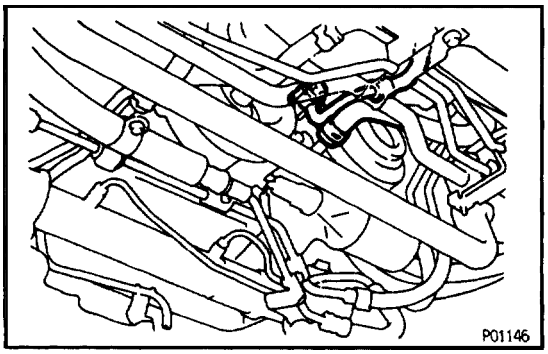

(4) Suction hose to hydraulic pump
(5) Pressure hose to hydraulic pump

WhereEverybodyKnowsYourName

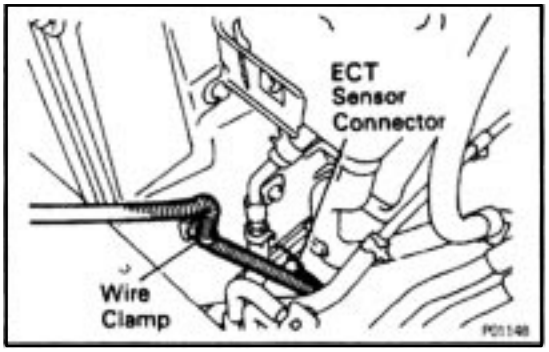

(f) Connect the ECT sensor connector (for cooling fan).
(g) Install the ECT sensor wire clamp to the radiator fan shroud.

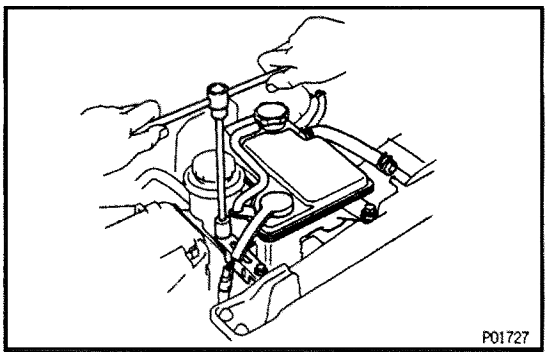

26. INSTALL RADIATOR RESERVOIR TANK
(a) Install the reservoir tank to the reservoir tank bracket.
(b) Install the reservoir tank with the bracket and 3 bolts.
Torque: 4.9 N.m (50 kgf·cm, 43 in.·lbf)

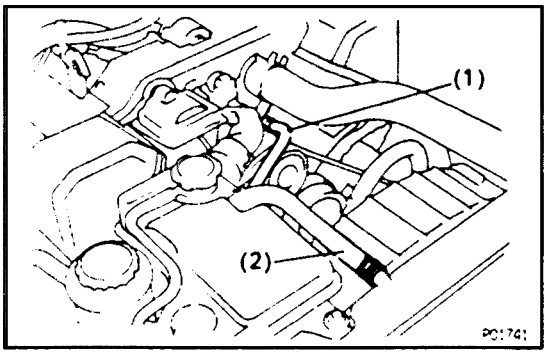

(c) Connect the following hoses:
(1) Reservoir hose to water inlet housing
(2) Reservoir hose to radiator
(d) Connect the coolant level sensor connector.

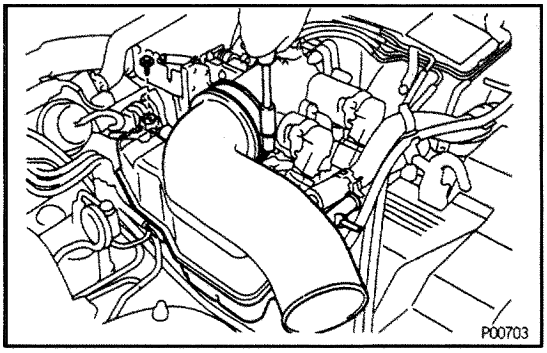

27. INSTALL INTAKE AIR CONNECTOR
(a) Connect the intake air connector to the throttle body.
(b) Install the hose clamp and bolt.

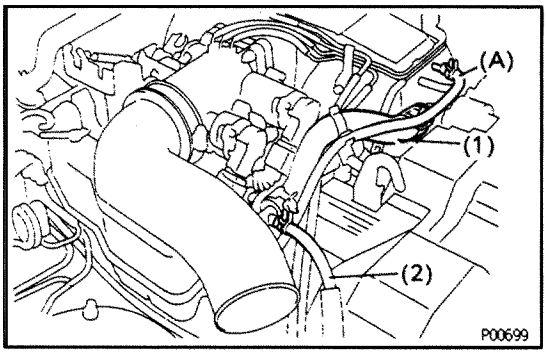

(c) Connect the following hoses to the intake air connector:
(1) Air hose (from IAC valve)
(2) Air hose (from air control valve on PS pump)

28. CONNECT VACUUM HOSE (A) (FROM PS AIR CONTROL VALVE) TO AIR INTAKE CHAMBER

WhereEverybodyKnowsYourName

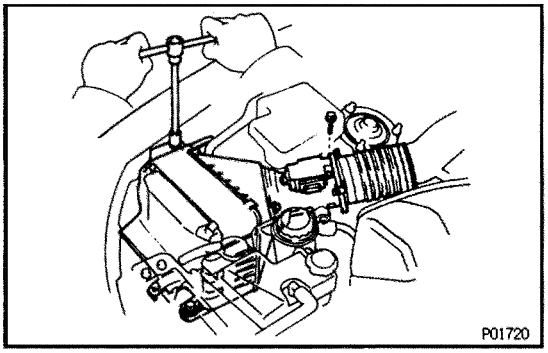

29. INSTALL AIR CLEANER

(a) Connect the air cleaner case to the air duct.
(b) Connect the air cleaner hose to the intake air connector.
(c) Install the air cleaner with the 3 bolts.
(d) Tighten the hose clamp bolt holding the air cleaner hose to the intake air connector.
(e) Connect the VAF meter connector.

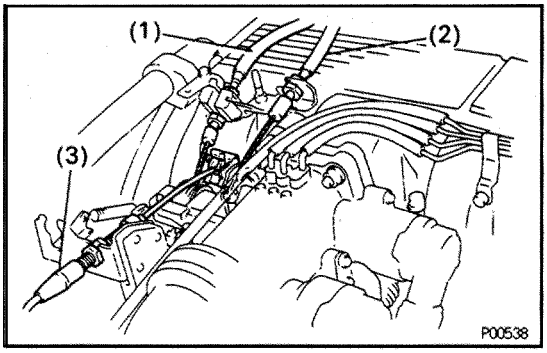

30. CONNECT CONTROL CABLES TO THROTTLE BODY

Connect the following cables:
(1) Accelerator cable
(2) Transmission throttle control cable
(3) Cruise control actuator cable

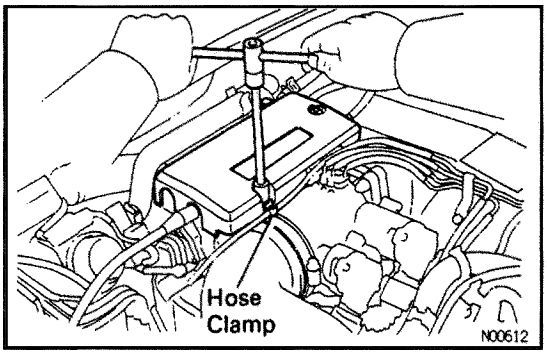

31. INSTALL THROTTLE BODY COVER

(a) Install the throttle body cover and hose clamp with the cap nut and 2 bolts.
(b) Install the EVAP hose to the hose clamp.

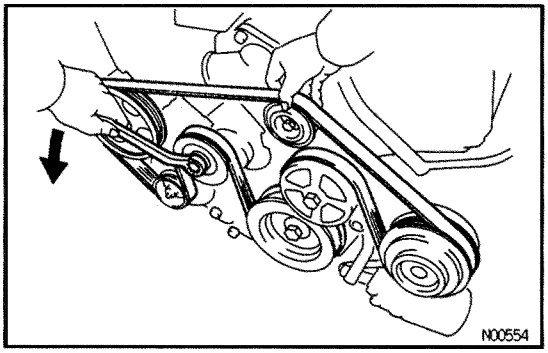

32. INSTALL DRIVE BELT

Install the drive belt by turning the drive belt tensioner counterclockwise.
HINT: The pulley bolt for the dive belt tensioner has a left–hand thread.

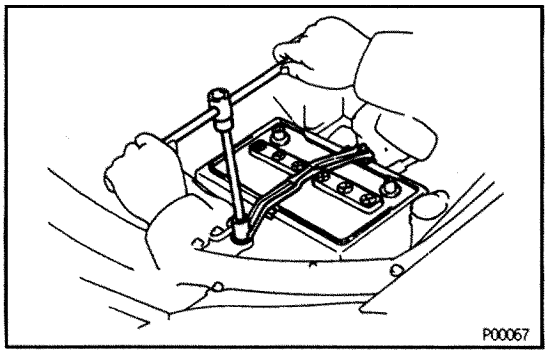

33. INSTALL BATTERY

WhereEverybodyKnowsYourName

34. **FILL WITH ENGINE COOLANT**
35. **FILL WITH ENGINE OIL**
36. **START ENGINE AND CHECK FOR LEAKS**
37. **CHECK TRANSMISSION FLUID LEVEL**
38. **PERFORM ENGINE ADJUSTMENT**
    (See Tune–Up on pages EG–9 to 34)
39. **INSTALL ENGINE UNDER COVER**
40. **INSTALL HOOD**
41. **PERFORM ROAD TEST**
    Check for abnormal noise, shock slippage, correct shift points and smooth operation.
42. **RECHECK ENGINE COOLANT AND OIL LEVELS**

WhereEverybodyKnowsYourName

EXHAUST SYSTEM
COMPONENTS

EG24S–01

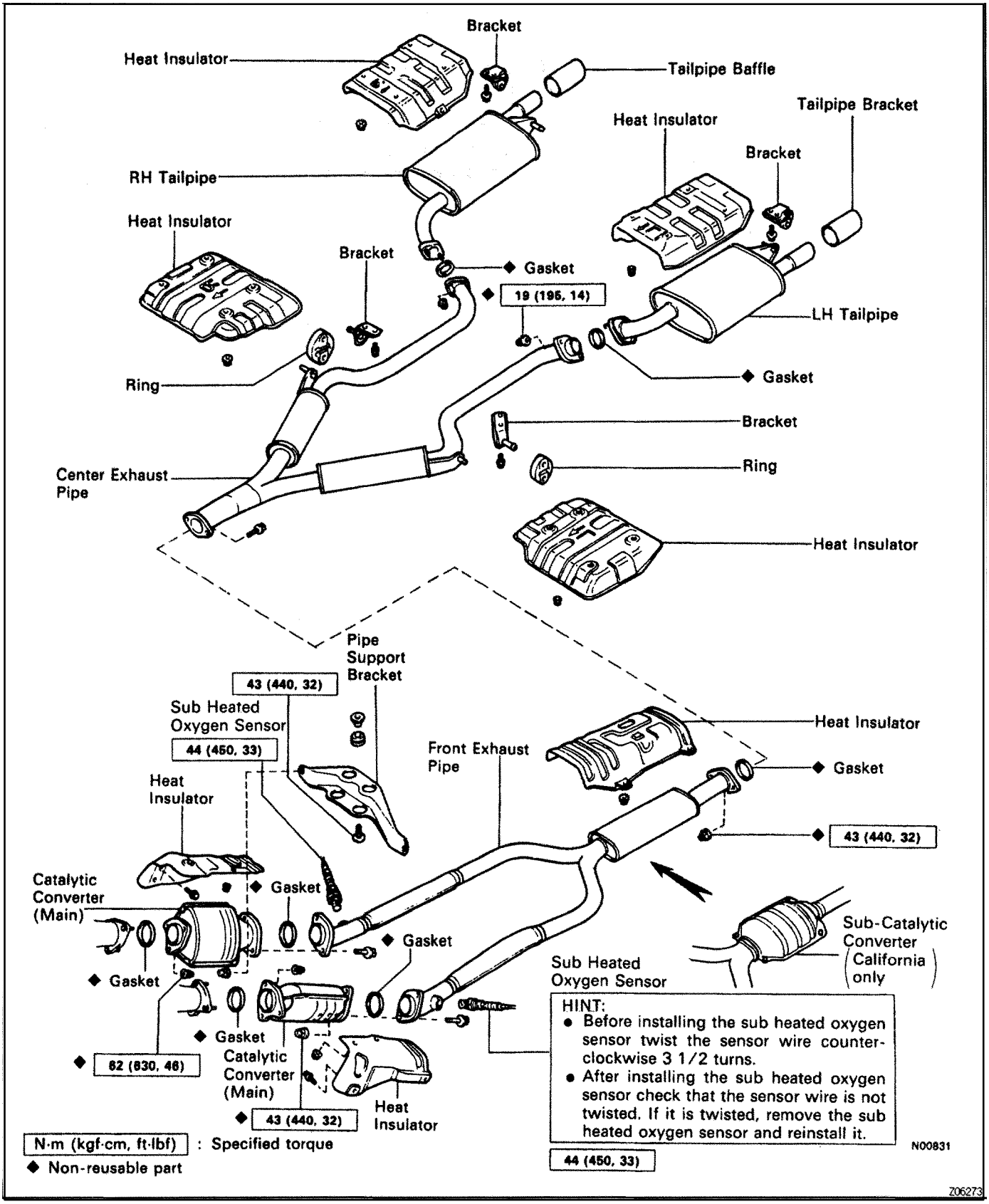

WhereEverybodyKnowsYourName

CYLINDER BLOCK

COMPONENTS FOR REMOVAL AND INSTALLATION OF ENGINE WITH TRANSMISSION

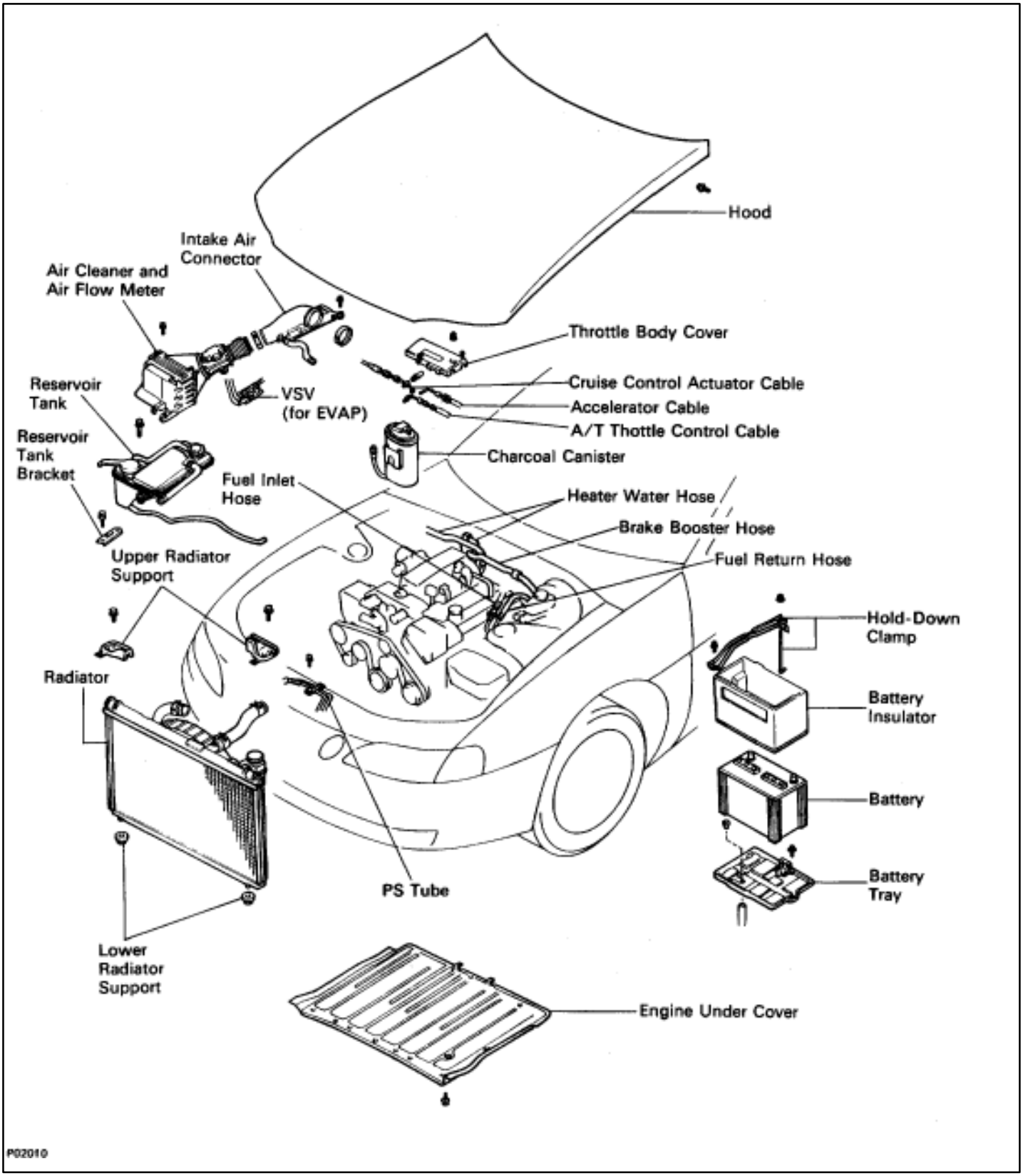

WhereEverybodyKnowsYourName

COMPONENTS FOR REMOVAL AND INSTALLATION OF ENGINE WITH TRANSMISSION (Cont'd)

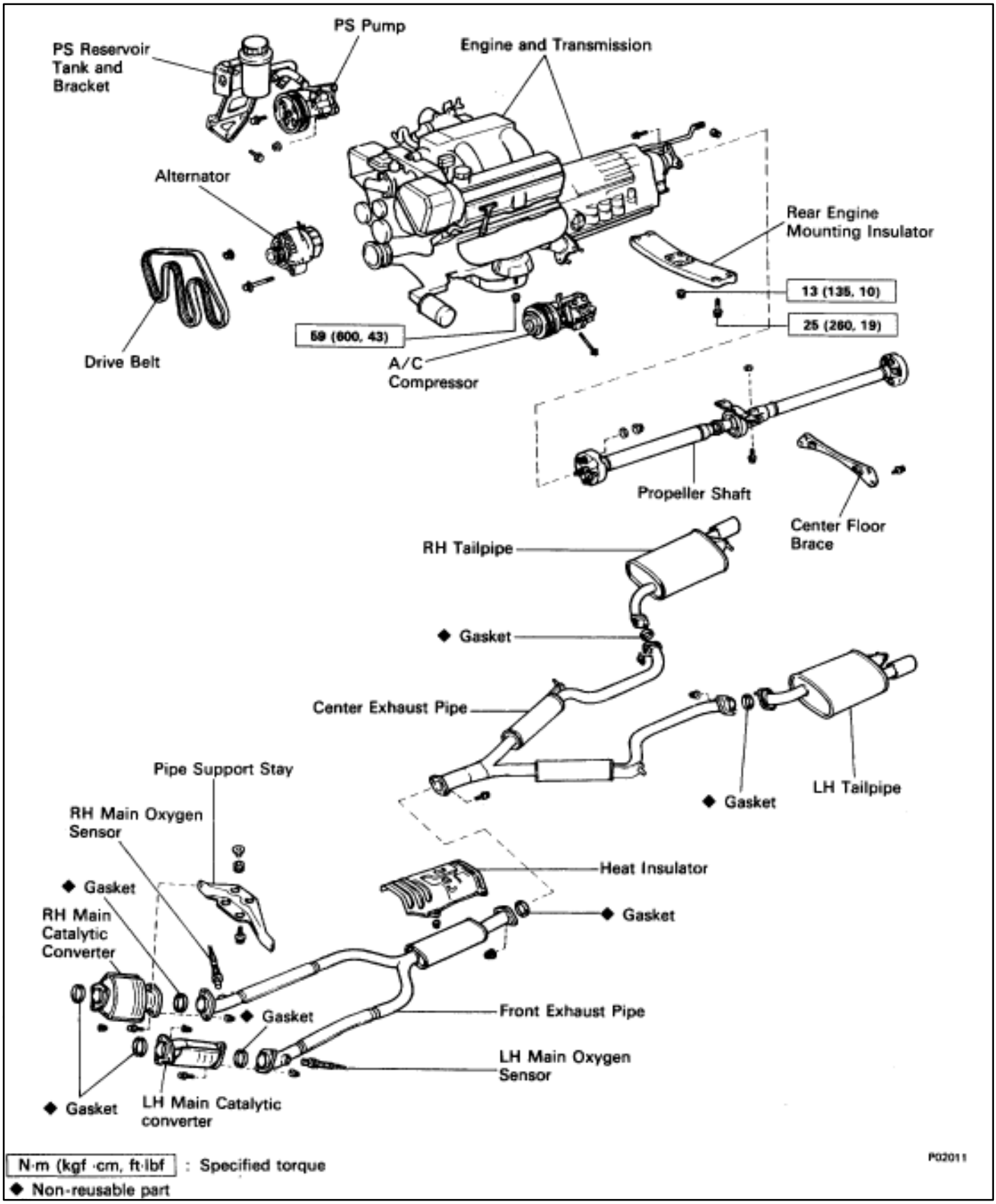

WhereEverybodyKnowsYourName

COMPONENTS FOR REMOVAL AND INSTALLATION OF ENGINE WITH TRANSMISSION (Cont'd)

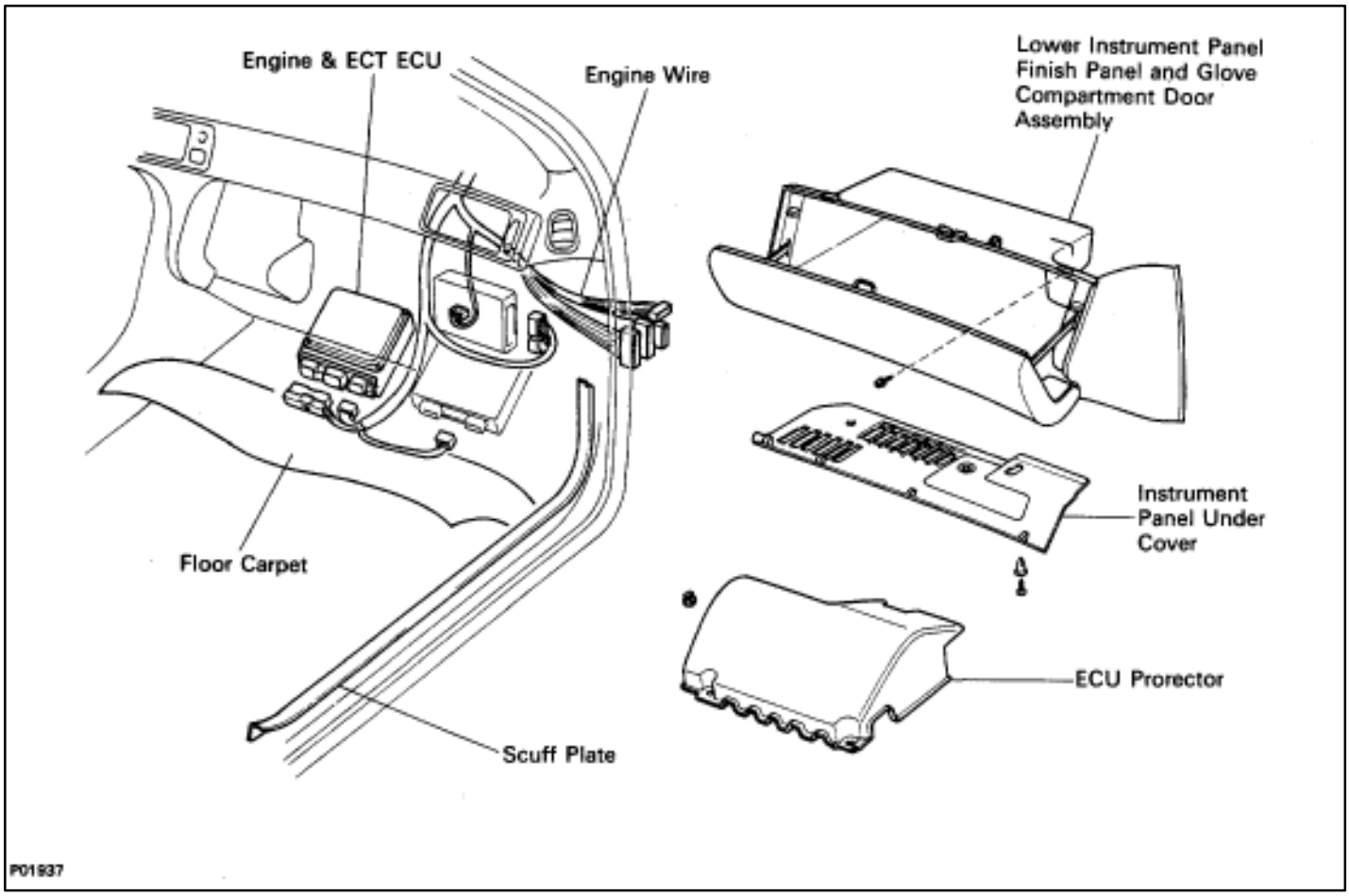

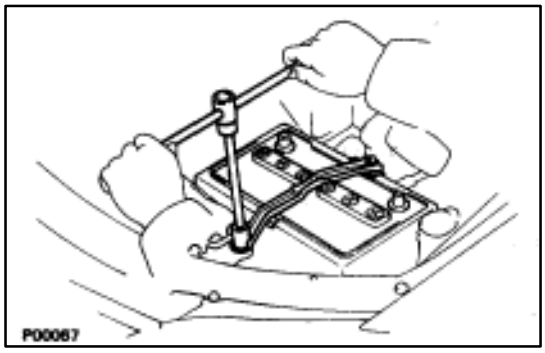

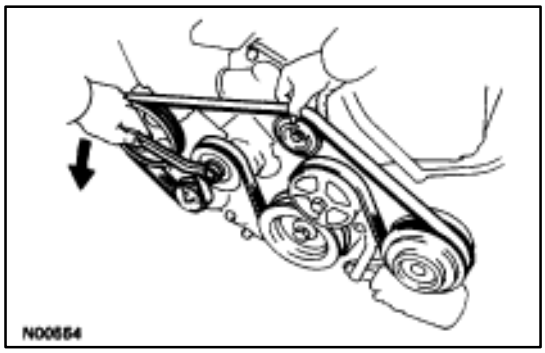

REMOVAL OF ENGINE WITH TRANSMISSION

1. **REMOVE BATTERY**
   CAUTION: Work must be started after approx. 20 seconds or longer from the time the ignition switch is turned to the "LOCK" position and the negative (–) terminal cable is disconnected from the battery.
2. **REMOVE ENGINE UNDER COVER**
3. **DRAIN ENGINE COOLANT (See page CO–6)**
4. **DRAIN ENGINE OIL**
5. **REMOVE HOOD**
6. **REMOVE DRIVE BELT**
   Loosen the drive belt tension by turning the drive belt tensioner counterclockwise, and remove the drive belt.
   HINT: The pulley bolt for the belt tensioner has a left–hand thread.

WhereEverybodyKnowsYourName

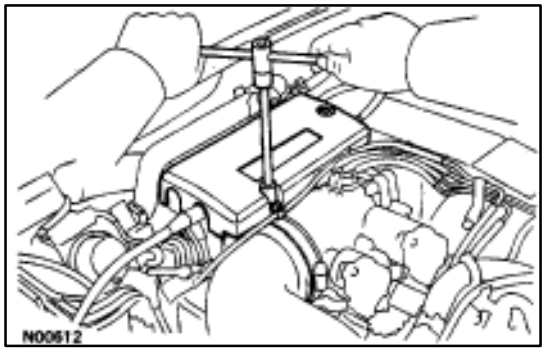

7. REMOVE THROTTLE BODY COVER

(a) Remove the mounting cap nut.

(b) Loosen the two bolts, and remove the throttle body cover.

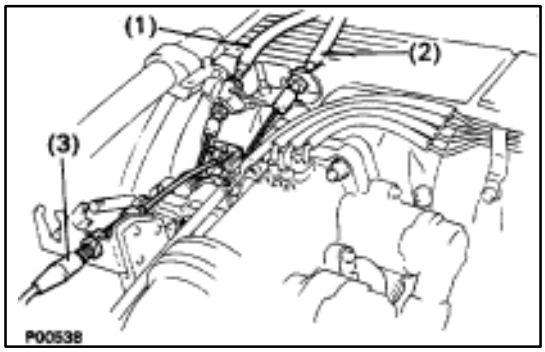

8. DISCONNECT CONTROL CABLES FROM THROTTLE BODY

Disconnect the following cables:

(1) Accelerator cable

(2) A/T throttle cable

(3) (w/ Cruise Control System)
Cruise control actuator cable

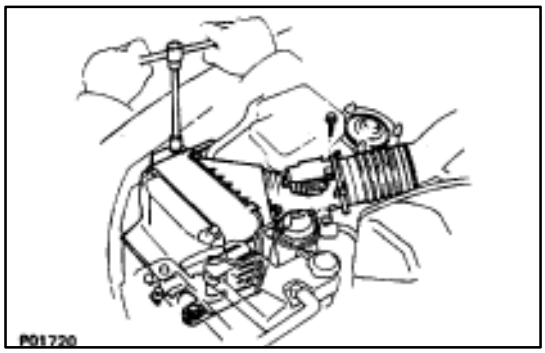

9. REMOVE AIR CLEANER AND AIR FLOW METER

(a) Disconnect the air flow meter connector.

(b) Loosen the hose clamp holding the air cleaner hose to the intake air connector.

(c) Remove the four mounting bolts.

(d) Disconnect the air cleaner hose from the intake air connector.

(e) Disconnect the air duct from the air cleaner case, and remove the air cleaner and air flow meter assembly.

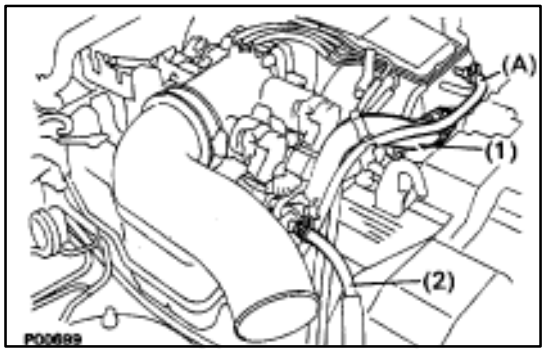

10. DISCONNECT VACUUM HOSE (A) (FROM PS AIR CONTROL VALVE) FROM AIR INTAKE CHAMBER

11. REMOVE INTAKE AIR CONNECTOR

(a) Disconnect the following hose:

(1) Air hose from ISC valve

(2) Air hose (from PS air control valve) from intake air connector

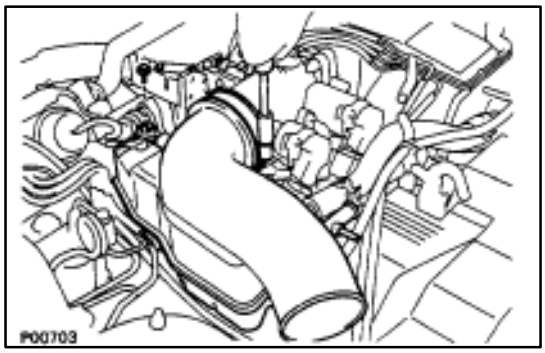

(b) Remove the bolt holding the intake air connector to the cylinder head cover.

(c) Loosen the hose clamp.

(d) Disconnect the intake air connector from the throttle body, and remove the intake air connector.

WhereEverybodyKnowsYourName

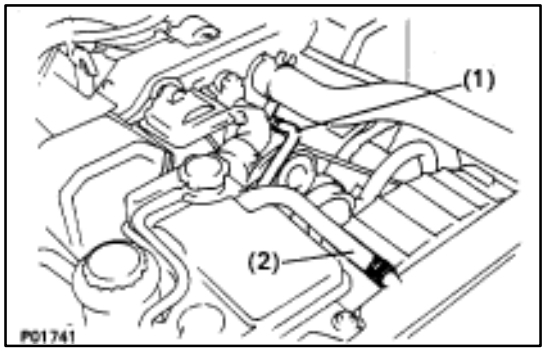

12. REMOVE RADIATOR RESERVOIR TANK

(a) Disconnect the coolant level sensor connector.

(b) Disconnect the following hoses:

(1) Reservoir hose to water inlet housing

(2) Reservoir hose to radiator

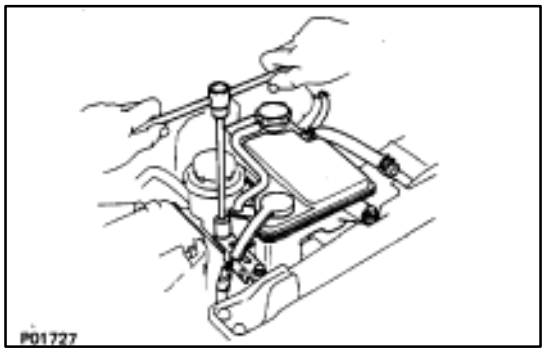

(c) Remove the two bolts and reservoir tank bracket.

(d) Disconnect the reservoir tank from the reservoir tank bracket, and remove the reservoir tank.

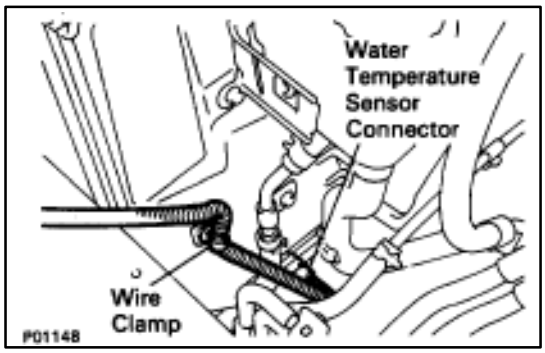

13. REMOVE RADIATOR

(a) Disconnect the water temperature sensor connector.

(b) Disconnect the wire clamp (for water temperature sensor) from the radiator fan shrould.

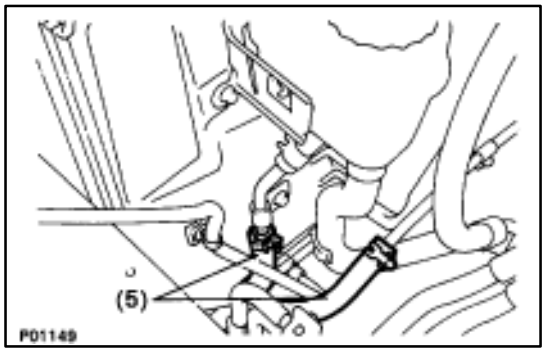

(c) Disconnect the following hoses:

(1) Two oil cooler hoses (for cooling fan) from pipes

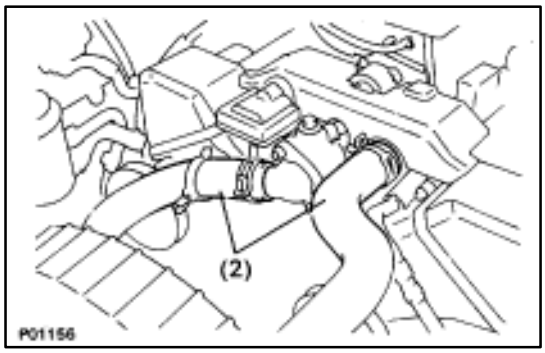

(2) Two radiator hoses

WhereEverybodyKnowsYourName

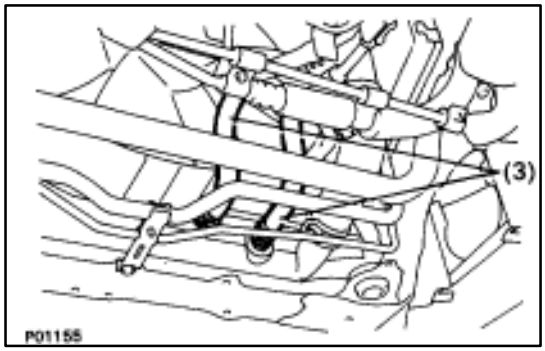

(3) Two oil cooler hoses (for A/T) from radiator Plug the hose ends.

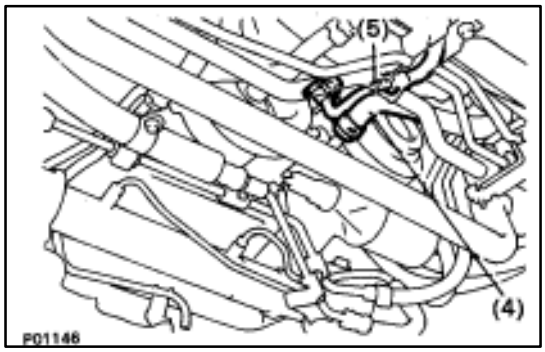

(4) Suction hose from hydraulic pump
(5) Pressure hose from hydraulic pump

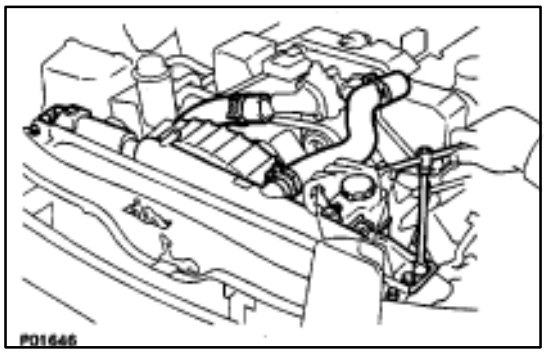

(c) Remove the two bolts, screw and upper radiator support. Remove the two upper radiator supports.

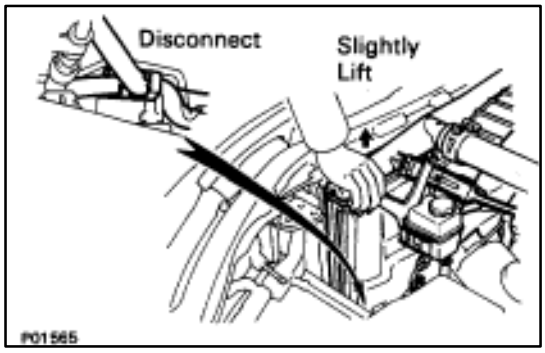

(d) Slightly lift the radiator, and disconnect the two oil cooler hoses (for cooling fan) from the hose clamp on the radiator fan shrould.
(e) Remove the radiator.

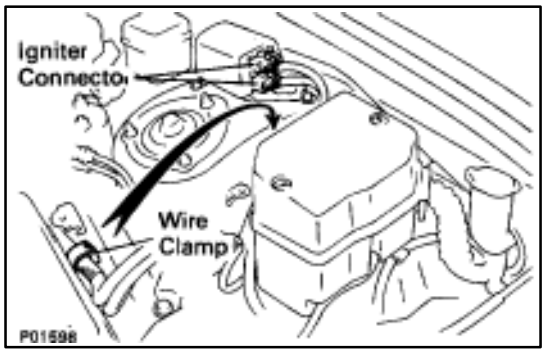

14. DISCONNECT IGNITER CONNECTORS

(a) Disconnect the two igniter connectors.
(b) Disconnect the wire clamp from the body.

WhereEverybodyKnowsYourName

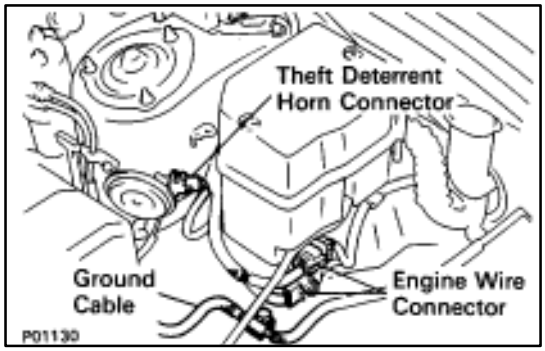

15. DISCONNECT ENGINE WIRE CONNECTORS

16. DISCONNECT THEFT DETERRENT HORN CONNECTOR

17. DISCONNECT GROUND CABLE FROM BODY

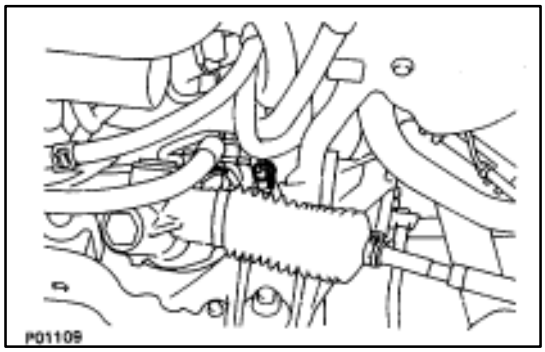

18. DISCONNECT PS SOLENOID VALVE CONNECTOR

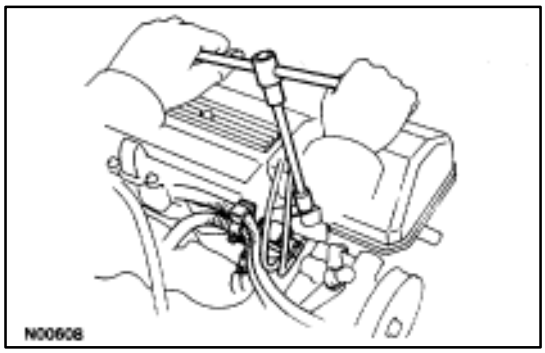

19. DISCONNECT WIRE CLAMP (FOR ALTERNATOR) FROM VSV (FOR EVAP SYSTEM)

(a) Remove the two bolts, and disconnect the VSV from the RH cylinder head.
(b) Disconnect the wire clamp from the VSV bracket.

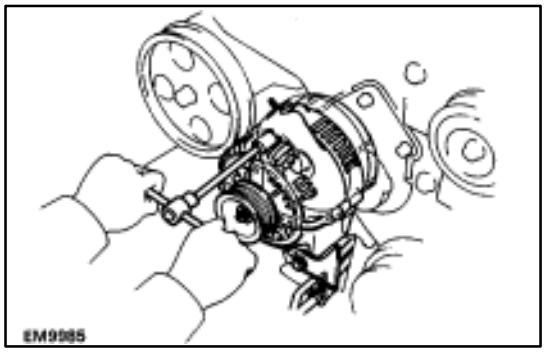

20. REMOVE ALTERNATOR

(a) Disconnect the alternator connector.
(b) Remove the cap and nut, and disconnect the alternator wire.
(c) Remove the mounting bolt and nut.
(d) Disconnect the A/T oil cooler pipe bracket.
(e) Remove the alternator.

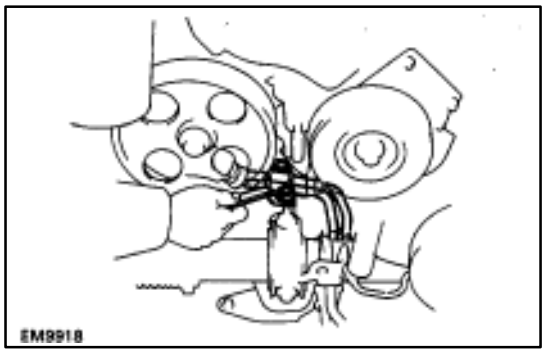

21. DISCONNECT PS TUBES FROM SUSPENSION CROSSMEMBER

Remove the clamp bolt, and disconnect the PS tubes.

WhereEverybodyKnowsYourName

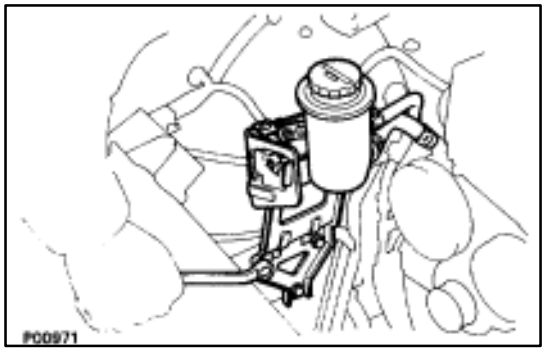

22. DISCONNECT PS RESERVOIR TANK AND BRACKET FROM BODY

Remove the three bolts, and disconnect the reservoir tank and bracket assembly.

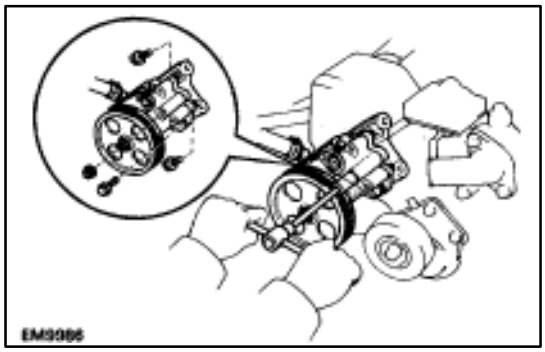

23. DISCONNECT PS PUMP FROM ENGINE

Remove the three pump bolts and nut, and disconnect the PS pump.

HINT: Put aside the PS pump, and suspend it.

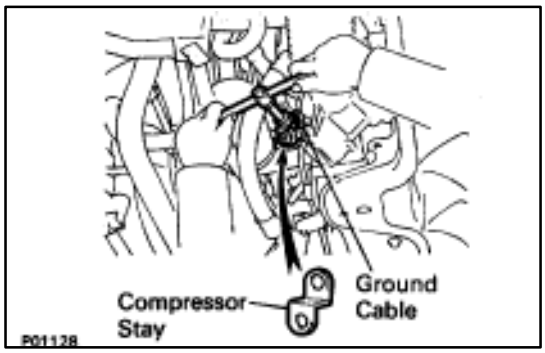

24. DISCONNECT A/C COMPRESSOR

(a) Disconnect the compressor connector.

(b) Remove the mounting nut, and disconnect the ground cable.

(c) Remove the mounting bolt and compressor stay.

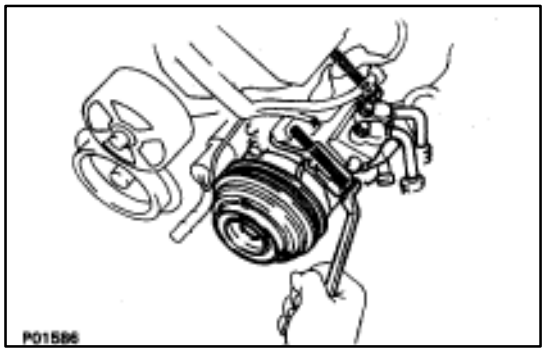

(d) Remove the two mounting bolts, and disconnect the compressor from the engine.

HINT: Put aside the compressor, and suspend it.

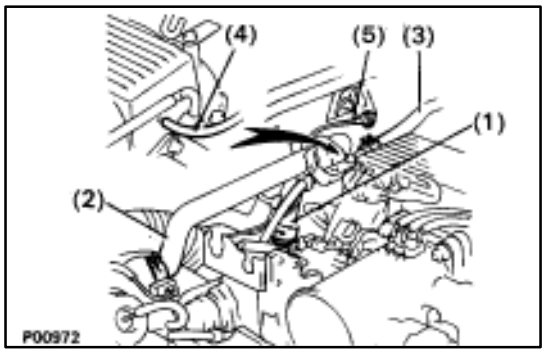

25. DISCONNECT HOSES AND GROUND STRAP

Disconnect the following hose and ground strap:

(1) Heater water hose from water by–pass pipe

(2) Heater water hose from heater water valve

(3) Vacuum hose from brake booster union on air intake chamber

(4) Vacuum hose (from VSV for heater water valve) from air intake chamber

(5) Ground strap from bracket on body

WhereEverybodyKnowsYourName

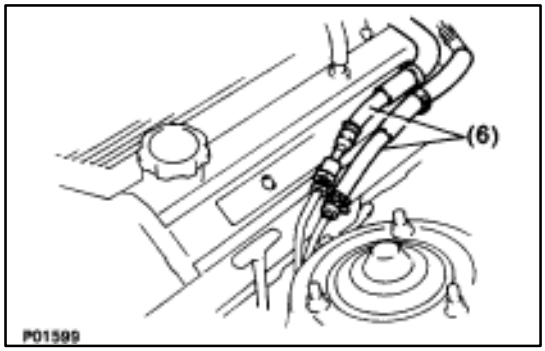

(6) Two fuel hoses from fuel tubes.
Plug the hose end.

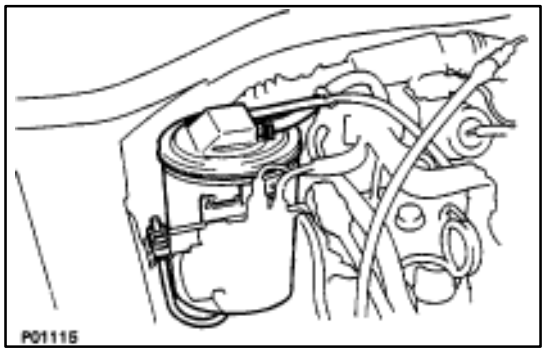

26. REMOVE CHARCOAL CANISTER

(a) Disconnect the vacuum hose and air hose from the charcoal canister.
(b) Remove the charcoal canister.

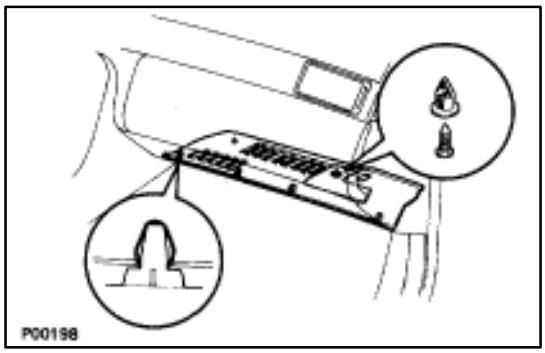

27. DISCONNECT ENGINE WIRE FROM CABIN

(a) Remove the two clips, and pull out the instrument panel under cover.

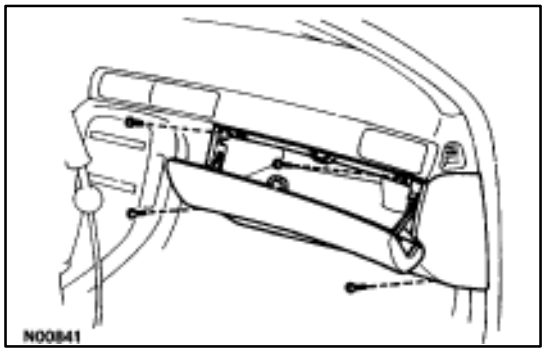

(b) Remove the four mounting screws.
(c) Disconnect the connectors, and remove the lower instrument panel finish panel and glove compartment door assembly.

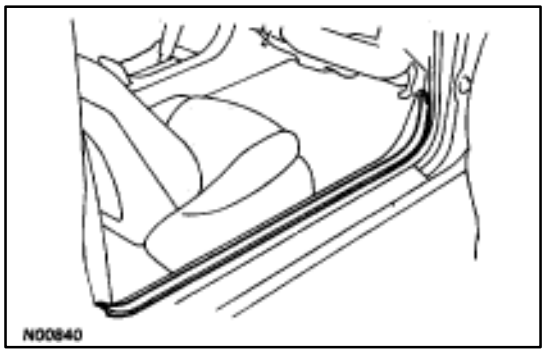

(d) Pull out the scuff plate.

WhereEverybodyKnowsYourName

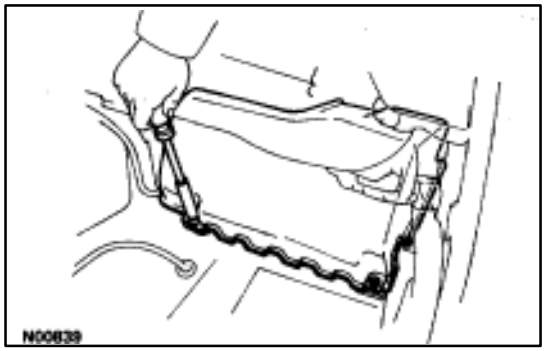

(e) Take out the front side of the floor carpet.
(f) Remove the two nuts and ECU protector.

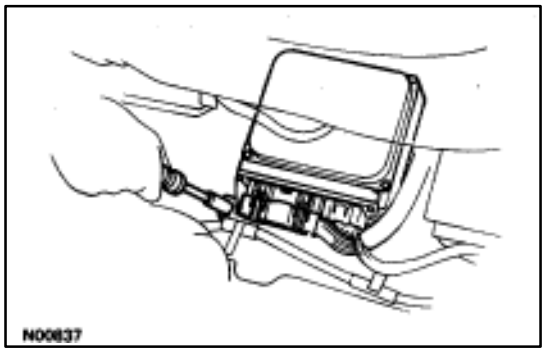

(g) Remove the nut, and disconnect the engine & ECT ECU from the floor panel.

(h) Disconnect the following connectors:
  (1) Two connectors from engine & ECT ECU
  (2) Connector from ABS & TRAC ECU
  (3) Two connectors from TRAC ECU
  (4) Four connectors from connector cassette
  (5) Connector from A/C control assembly

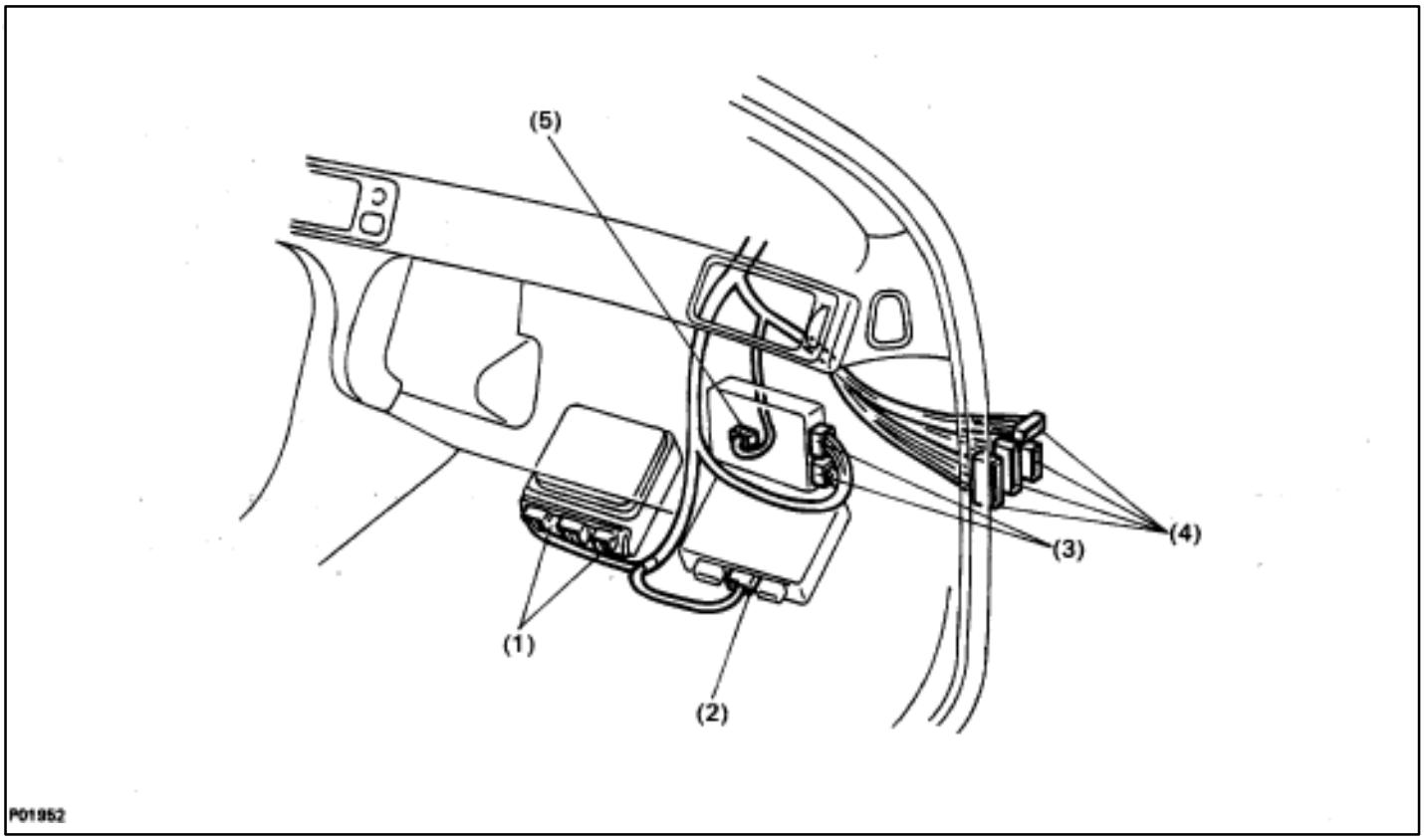

WhereEverybodyKnowsYourName

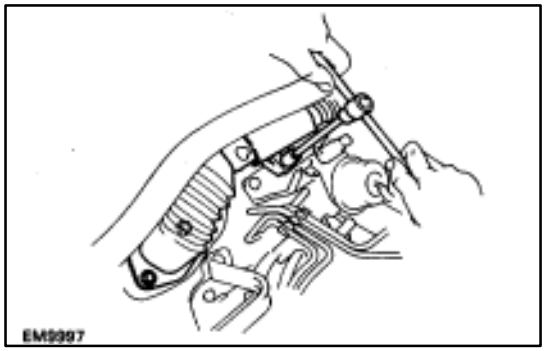

(i) Remove the bolt holding the engine wire clamp to the heater water valve bracket.
(j) Remove the two bolts holding the engine wire clamp to the body.

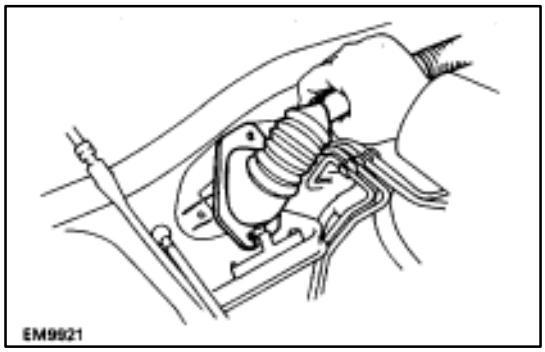

(k) Pull out the engine wire from the cabin.

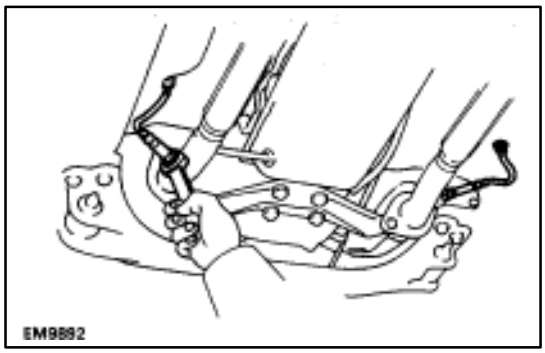

28. REMOVE FRONT EXHAUST PIPE

(a) Disconnect the grommet from the floor, and disconnect the sub–oxygen sensor from the exhaust pipe. Disconnect the two sub–oxygen sensors.
(b) Remove the four bolts holding the front exhaust pipe to the transmission.

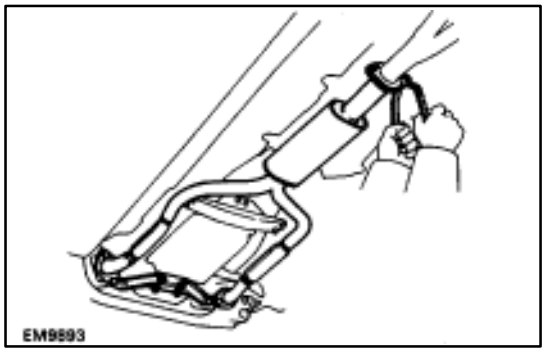

(c) Remove the two bolts and nuts holding the front exhaust pipe to the center exhaust pipe.
(d) Remove the four bolts and nuts holding the front exhaust pipe to the catalytic converter. Remove the pipe support stay, front exhaust pipe and three gaskets.

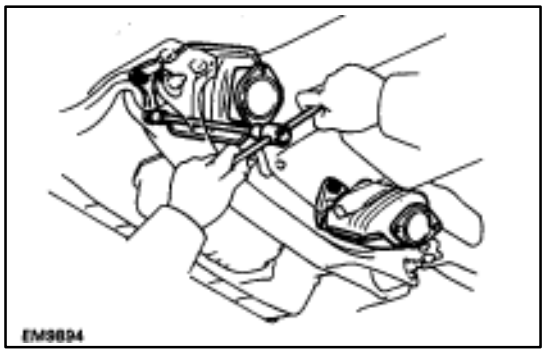

29. REMOVE CATALYTIC CONVERTERS (MAIN)

Remove the three nuts, catalytic converter and gasket. Remove the two catalytic converters.

WhereEverybodyKnowsYourName

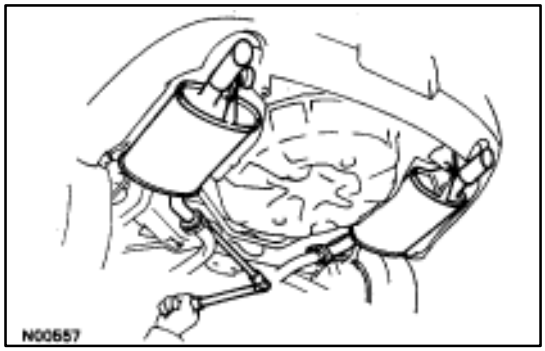

30. REMOVE TAILPIPES

(a) Remove the four bolts holding the tailpipes to the center exhaust pipe.

(b) Disconnect the tailpipe hook from the ring on tailpipe bracket, and remove the tailpipe and gasket. Remove the two tailpipes.

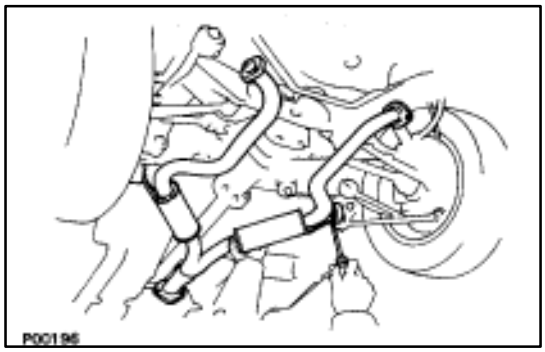

31. REMOVE CENTER EXHAUST PIPE

Disconnect the two hooks of the exhaust pipe from the rings on exhaust pipe brackets, and remove the center exhaust pipe.

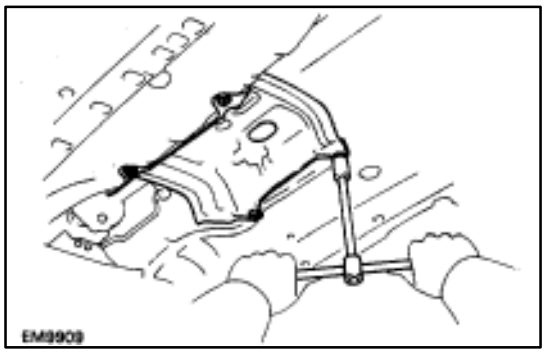

32. REMOVE EXHAUST PIPE HEAT INSULATOR

Remove the four nuts and heat insulator.

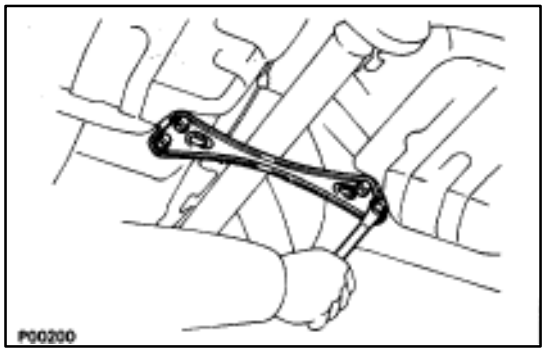

33. REMOVE CENTER FLOOR BRACE

Remove the four bolts and brace.

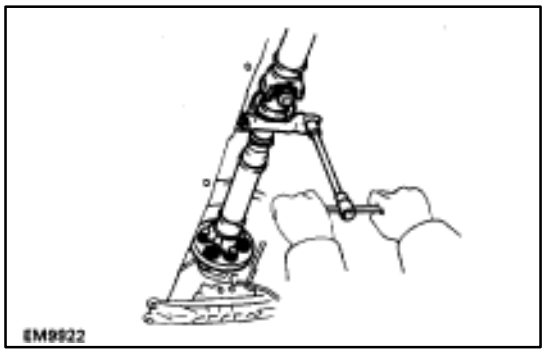

34. REMOVE PROPELLER SHAFT (See PR section)

WhereEverybodyKnowsYourName

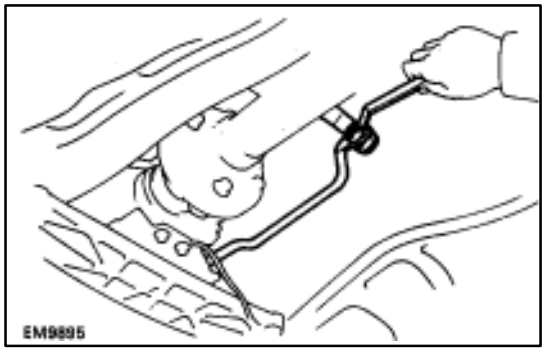

35. DISCONNECT TRANSMISSION CONTROL ROD

Remove the nut, and disconnect the control rod from the shift lever.

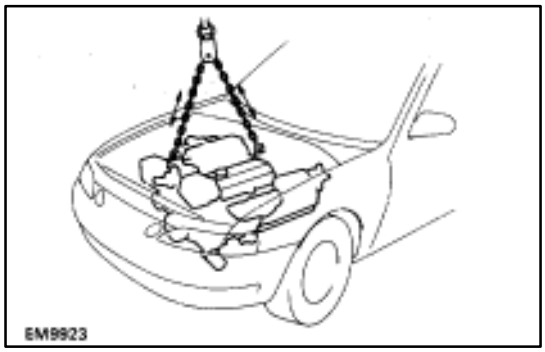

36. REMOVE ENGINE AND TRANSMISSION ASSEMBLY FROM VEHICLE

(a) Attach the engine hoist chain to the engine hangers.

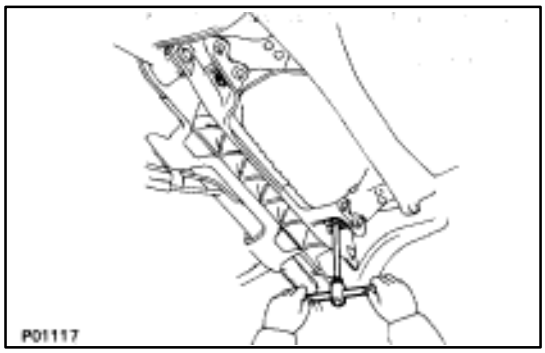

(b) Remove the two nuts holding the engine mounting insulators to the front suspension crossmember.

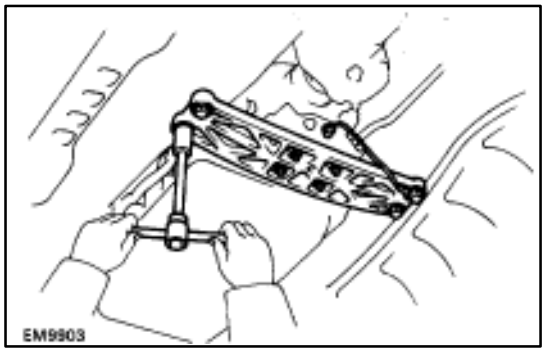

(c) Remove the four bolts, four nuts and rear engine mounting member. Disconnect the ground strap.

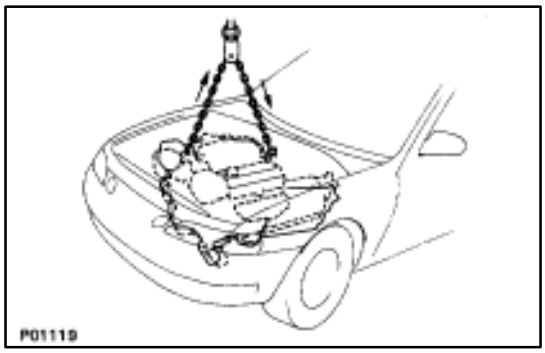

(d) Lift the engine out of the vehicle slowly and carefully.

NOTICE: Be careful not to hit the PS gear housing, neutral start switch and ABS actuator.

(e) Make sure the engine is clear of all wiring, hoses and cables.

(f) Place the engine and transmission assembly onto the stand.

WhereEverybodyKnowsYourName

COMPONENTS FOR SEPARATION AND ASSEMBLY OF ENGINE AND TRANSMISSION

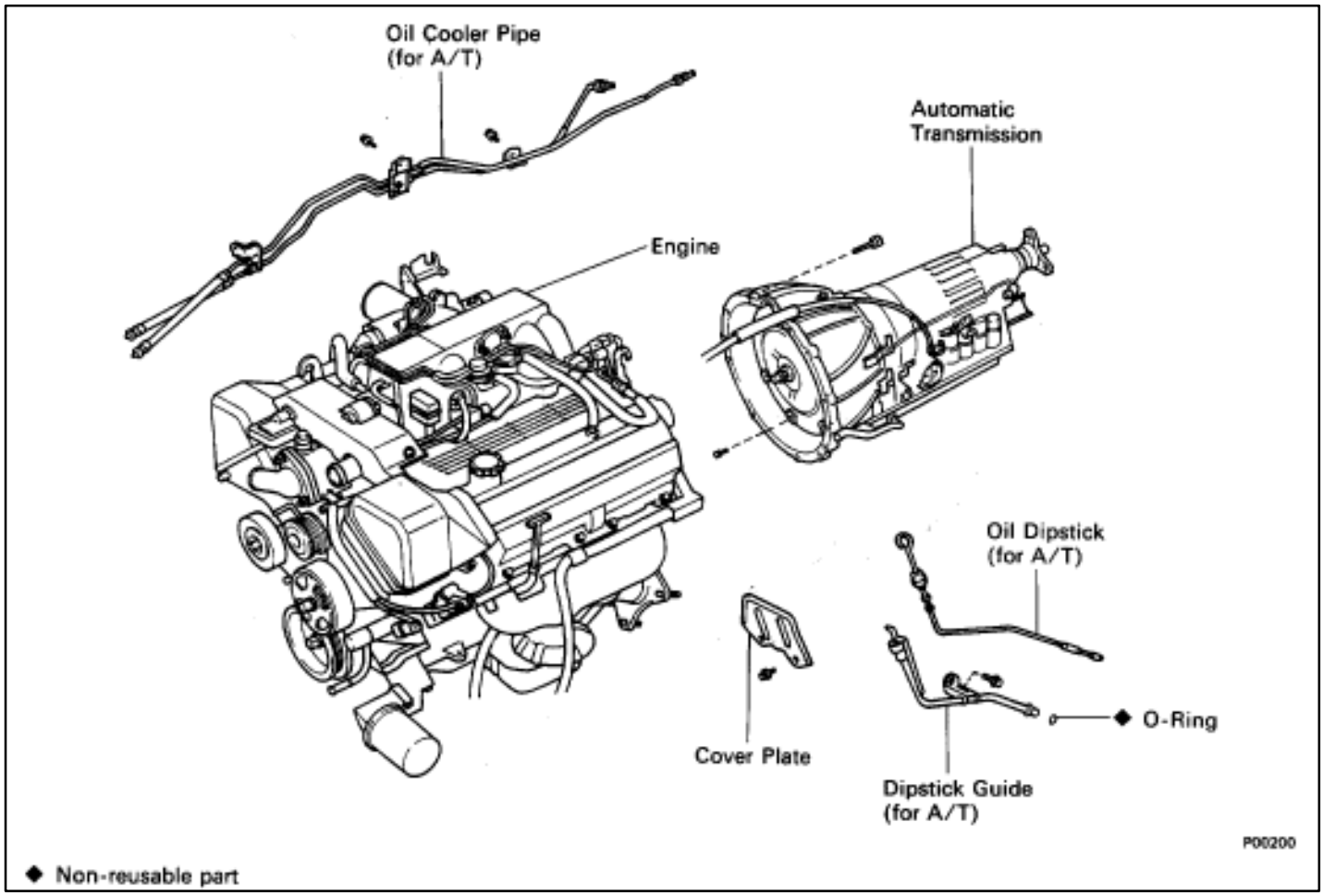

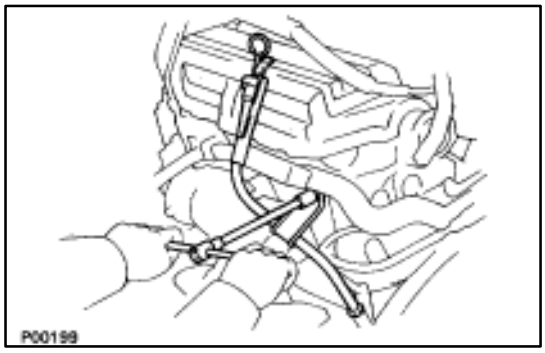

SEPARATION OF ENGINE AND TRANSMISSION

1. REMOVE OIL DIPSTICK GUIDE FOR TRANSMISSION

(a) Remove the mounting bolt.

(b) Pull out the dipstick guide and dipstick from the transmission.

(c) Remove the O–ring from the dipstick guide.

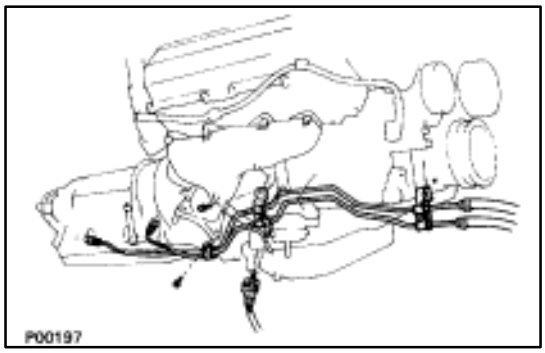

2. REMOVE OIL COOLER PIPES FOR TRANSMISSION

(a) Remove the two mounting bolts.

(b) Loosen the two union nuts, and remove the oil cooler pipes.

WhereEverybodyKnowsYourName

3. DISCONNECT ENGINE WIRE FROM TRANSMISSION

(a) Disconnect the following connectors:

(1) O/D direct clutch speed sensor connector

(2) No.1 speed sensor connector

(3) No.2 speed sensor connector

(4) Neutral start switch connector

(b) Disconnect the five wire clamps from the brackets on the transmission.

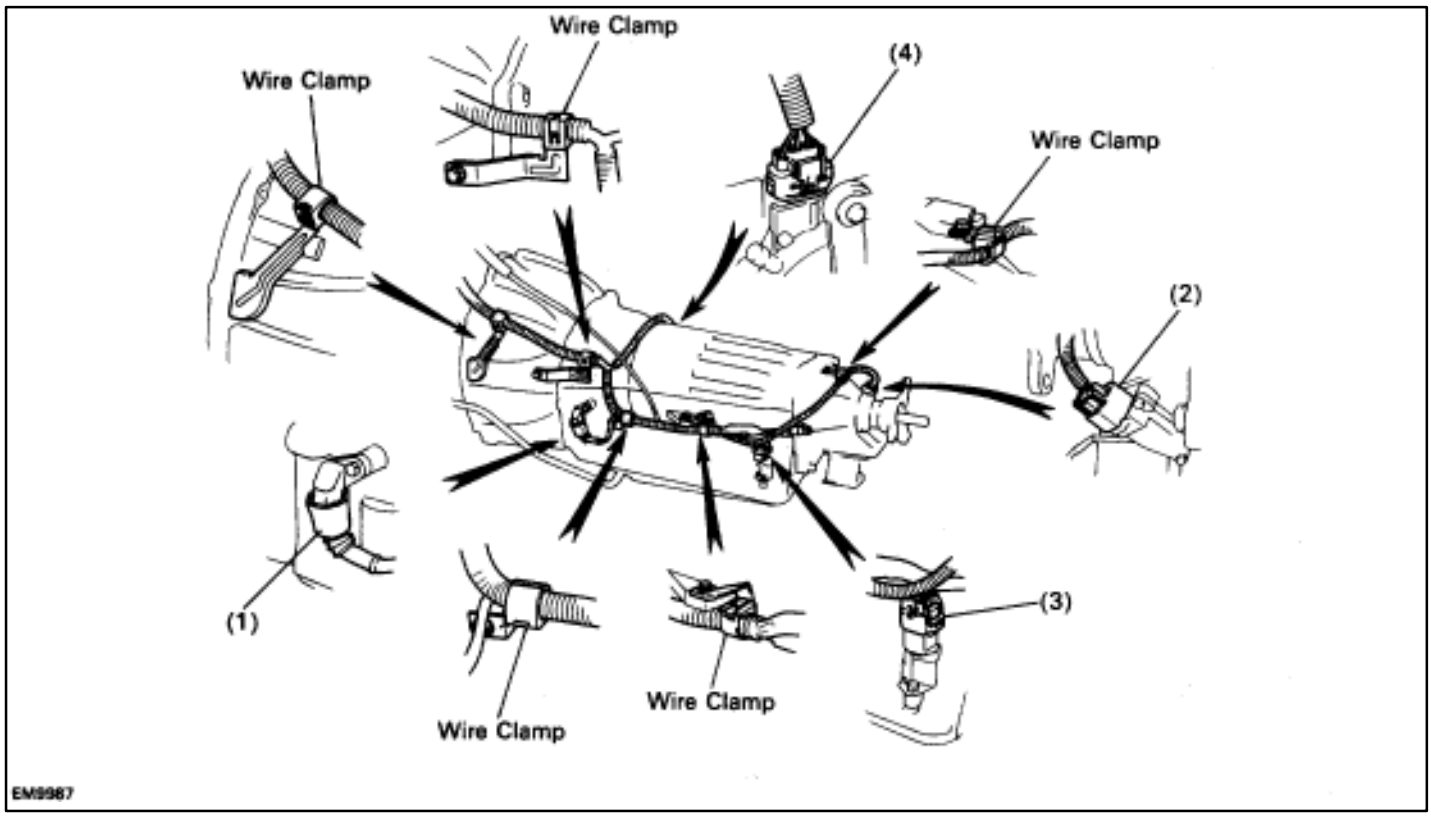

4. SEPARATE ENGINE AND TRANSMISSION (See AT section)

WhereEverybodyKnowsYourName

COMPONENTS FOR DISASSEMBLY AND ASSEMBLY OF CYLINDER BLOCK

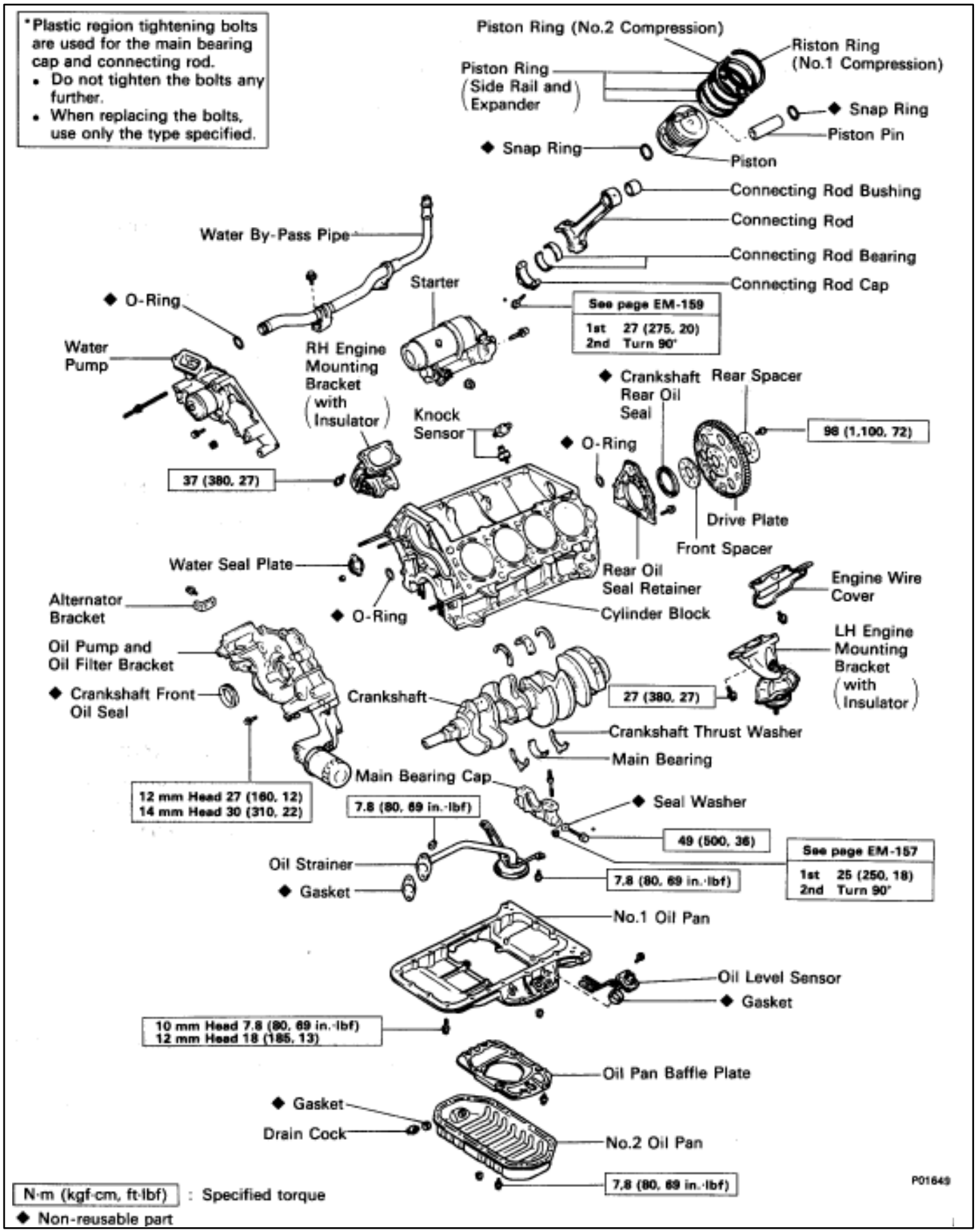

WhereEverybodyKnowsYourName

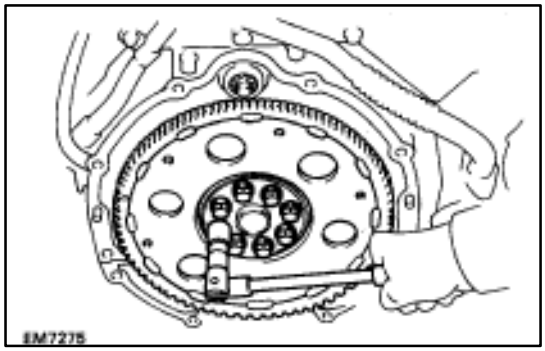

PREPARATION FOR DISASSEMBLY

(See Components on page EM–131)

1. **REMOVE DRIVE PLATE**
   Remove the eight bolts, two spacers and drive plate.

2. **INSTALL ENGINE TO ENGINE STAND FOR DISASSEMBLY**
3. **REMOVE TIMING BELT AND PULLEYS**
   (See pages EM–36 to 44)
4. **REMOVE Cylinder Block**
   (See pages EM–61 to 75)

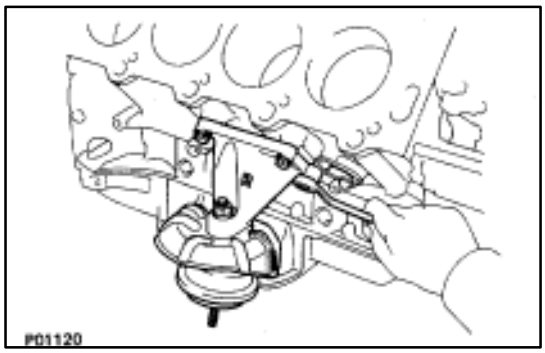

5. **REMOVE RH ENGINE MOUNTING BRACKET**
   Remove the four bolts and mounting bracket.

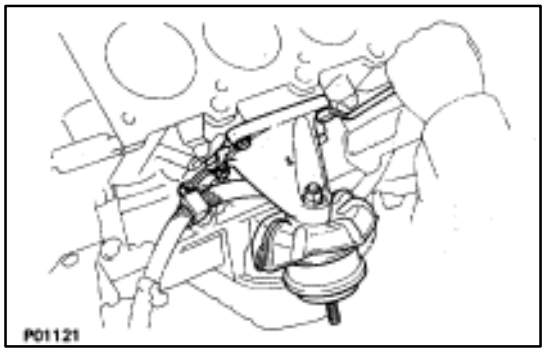

6. **REMOVE LH ENGINE MOUNTING BRACKET**
   (a) Remove the clamp bolt, and disconnect the engine wire from the engine mounting bracket.
   (b) Remove the four bolts and mounting bracket.

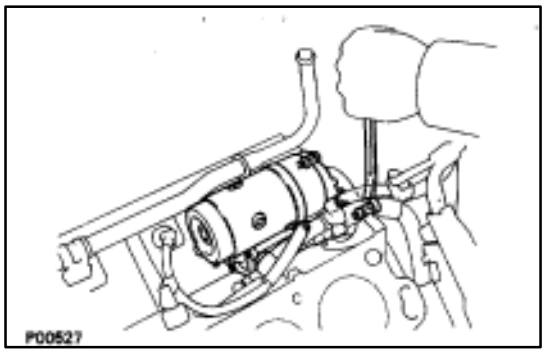

7. **REMOVE STARTER**
   (a) Remove the two bolts, and disconnect the starter from the cylinder block.

WhereEverybodyKnowsYourName

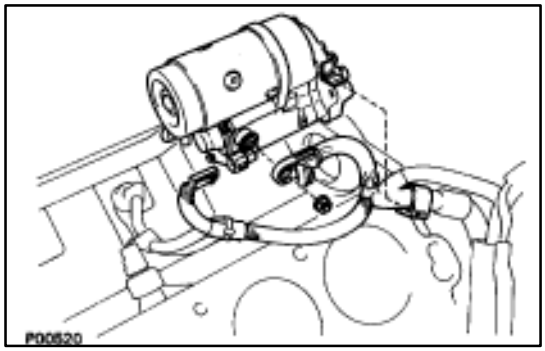

(b) Disconnect the wire clamp from the bracket on the starter.
(c) Remove the nut, and disconnect the wire.
(d) Disconnect the connector, and remove the starter.

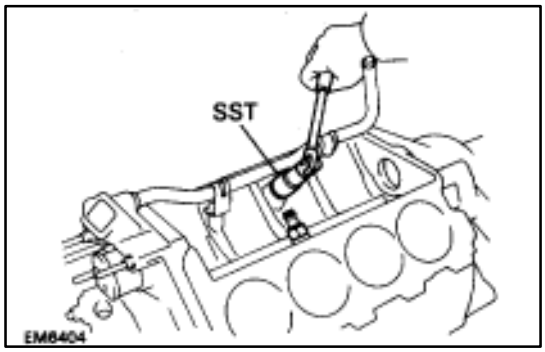

8. REMOVE KNOCK SENSORS

(a) Disconnect the two knock sensor connectors.
(b) Using SST, remove the two knock sensors.

SST 09816–30010

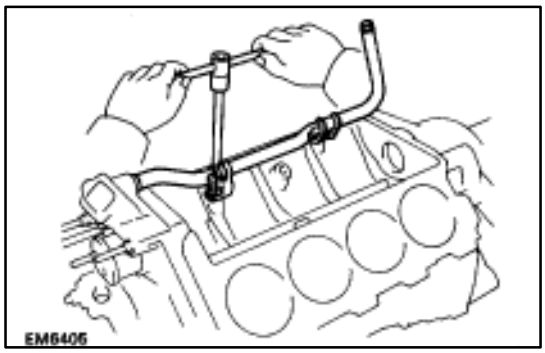

9. REMOVE WATER BY–PASS PIPE

(a) Remove the two bolts.
(b) Pull out the by–pass pipe from the water pump.
(c) Remove the O–ring from the by–pass pipe.

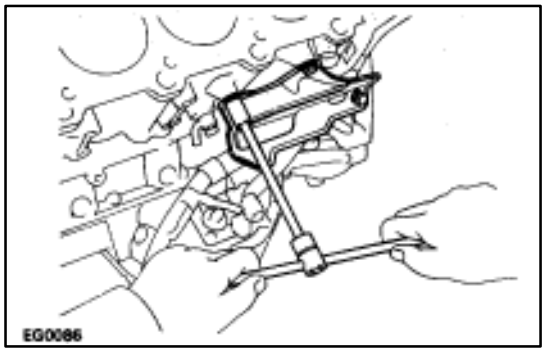

10. REMOVE ENGINE WIRE

(a) Disconnect the following connectors:
  (1) Oil level sensor connector
  (2) Oil pressure switch connector
(b) Remove the three bolts and wire cover from the LH side of the cylinder block.

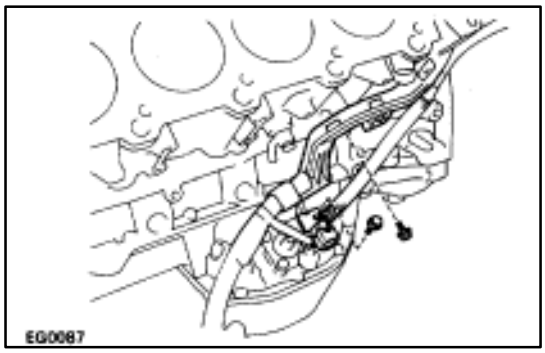

(c) Remove the two bolts and engine wire.

WhereEverybodyKnowsYourName

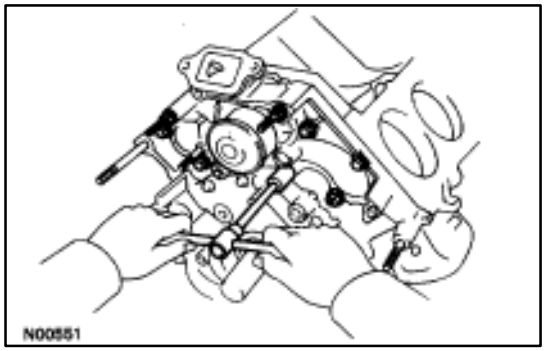

11. REMOVE WATER PUMP

(a) Remove the five mounting bolt, two mounting stud bolts and mounting nut.

(b) Remove the water pump by prying the portions between the water pump and cylinder block with a screwdriver.

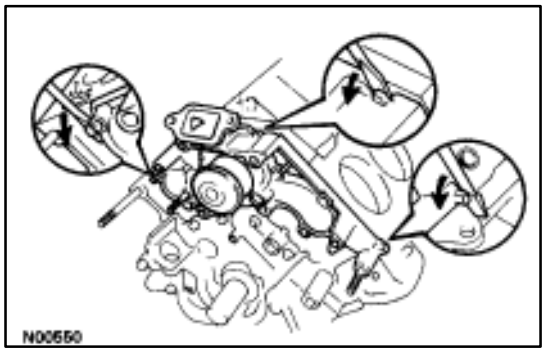

12. REMOVE NO.2 AND NO.1 OIL PANS
(See steps 7 to 12 on pages LU–9 to 11)

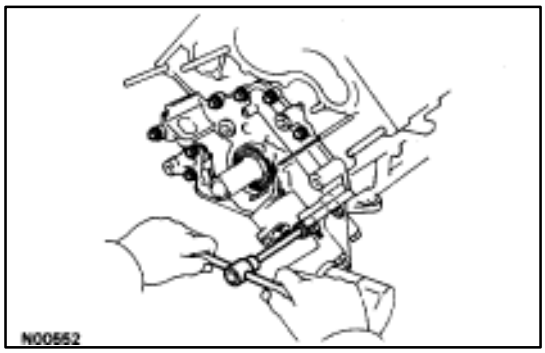

13. REMOVE OIL PUMP

(a) Remove the eight mounting bolts.

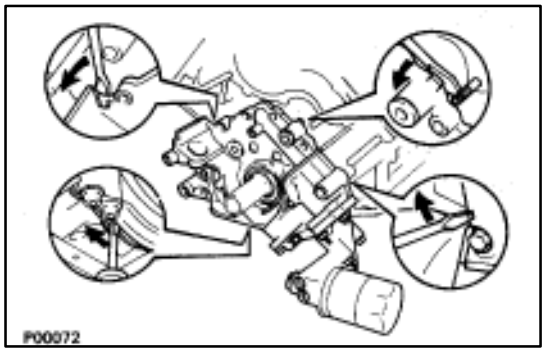

(b) Remove the oil pump by prying the portions between the oil pump and cylinder block with a screwdriver.

(c) Remove the O–ring from the cylinder block.

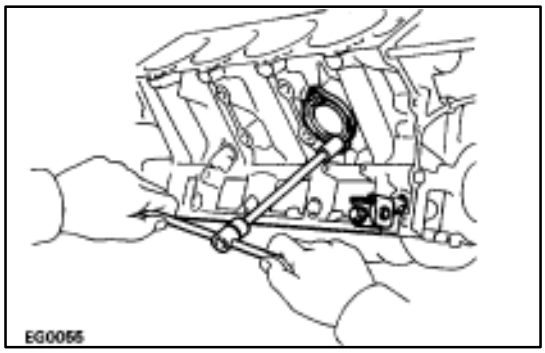

14. REMOVE ALTERNATOR BRACKET

Remove the bolt and bracket.

15. REMOVE WATER SEAL PLATE

Remove the two nuts and seal plate.

WhereEverybodyKnowsYourName

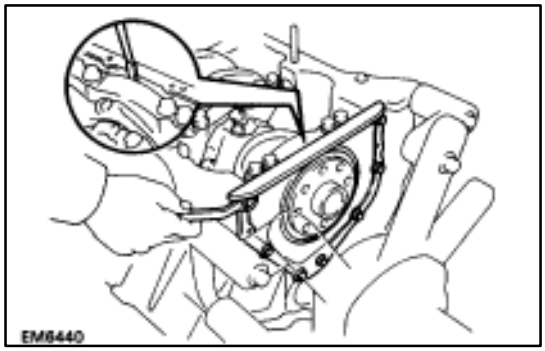

DISASSEMBLY OF CYLINDER BLOCK

(See Components on page EM–131)

1. REMOVE REAR OIL SEAL RETAINER

(a) Remove the seven bolts.

(b) Remove the oil seal retainer by prying the portions between the oil seal retainer and main bearing cap with a screwdriver.

(c) Remove the O–ring.

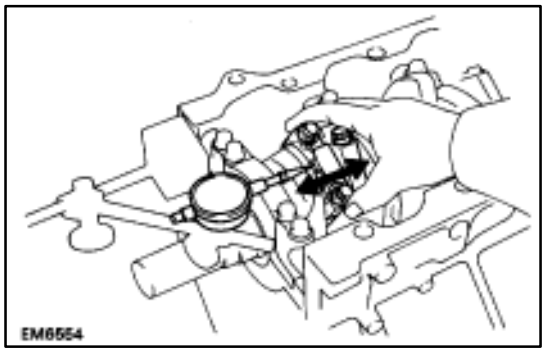

2. CHECK CONNECTING ROD THRUST CLEARANCE

Using a dial indicator, measure the thrust clearance while moving the two connecting rods back and forth.

Standard thrust clearance: 0.160–0.290 mm (0.0063–0.0114 in.)

Maximum thrust clearance: 0.35 mm (0.0138 in.)

If the thrust clearance is greater than maximum, replace the connecting rod assembly(s). If necessary, replace the crankshaft.

Connecting rod thickness: 22.880–22.920 mm (0.9008–0.9024 in.)

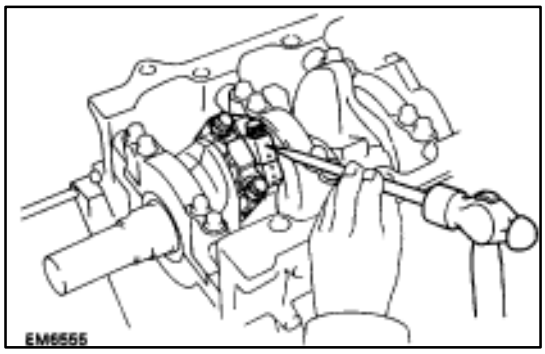

3. REMOVE CONNECTING ROD CAPS AND CHECK OIL CLEARANCE

(a) Using a punch or numbering stamp, place the matchmarks on the connecting rod and cap to ensure correct reassembly.

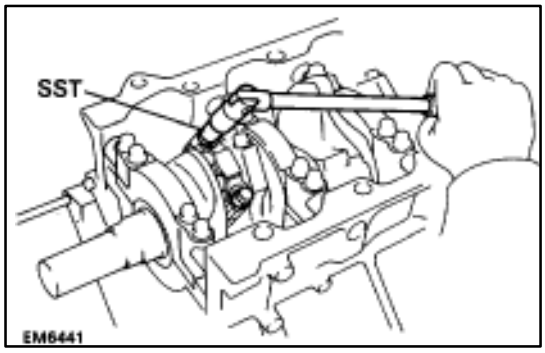

(b) Using SST, remove the two connecting rod bolts.

SST 09011–38121

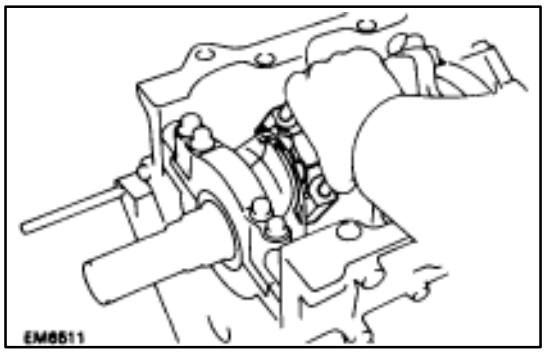

(c) Using the two removed connecting rod bolts, remove the connecting rod cap and lower bearing by wiggling the connecting rod cap right and left.

HINT: Keep the lower bearing inserted with the connecting rod cap.

WhereEverybodyKnowsYourName

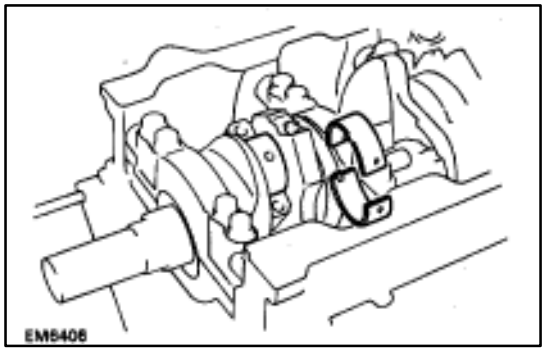

(d) Clean the crank pin and bearings.
(e) Check the crank pin and bearing for pitting and scratches.

If the crank pin or bearing are damaged, replace the bearings. If necessary, replace the crankshaft.

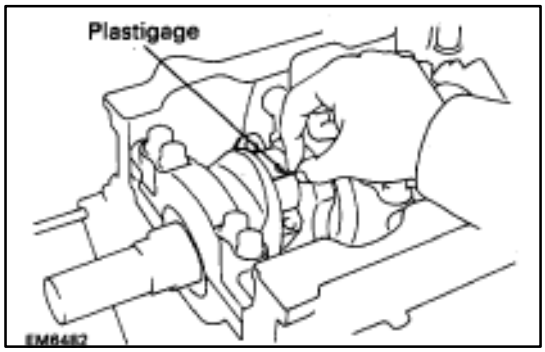

(f) Lay a strip of Plastigage across the crank pin.

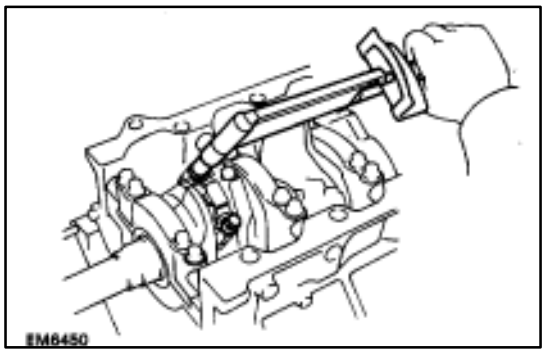

(g) Install the connecting rod cap with the two bolts. (See step 6 on pages EM–159 and 160)

Torque: 1st 25 N·m (250 kgf·cm, 18 ft·lbf)
2nd Turn 90°

NOTICE: Do not turn the crankshaft.

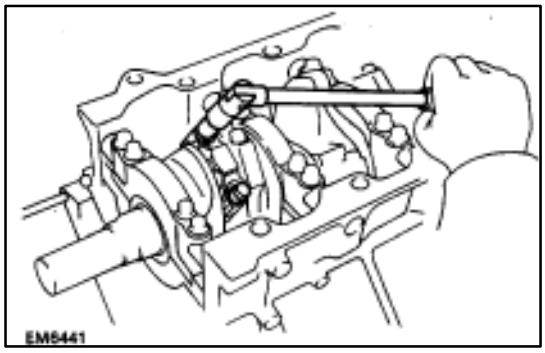

(h) Remove the two bolts, connecting rod cap and lower bearing. (See procedure (b) and (c) above)

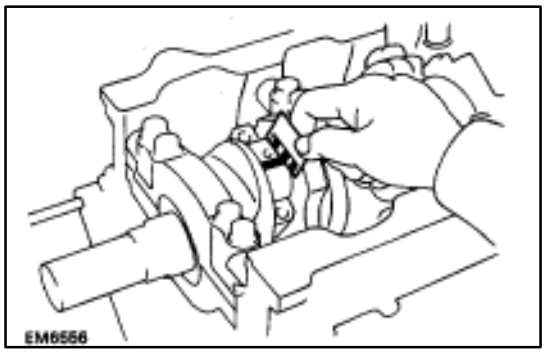

(i) Measure the Plastigage at widest point.

Standard oil clearance: 0.027–0.053 mm (0.0011–0.0021 in.)
Maximum oil clearance: 0.065 mm (0.0026 in.)

If the oil clearance is greater than maximum, replace the bearings. If necessary, replace the crankshaft.

WhereEverybodyKnowsYourName

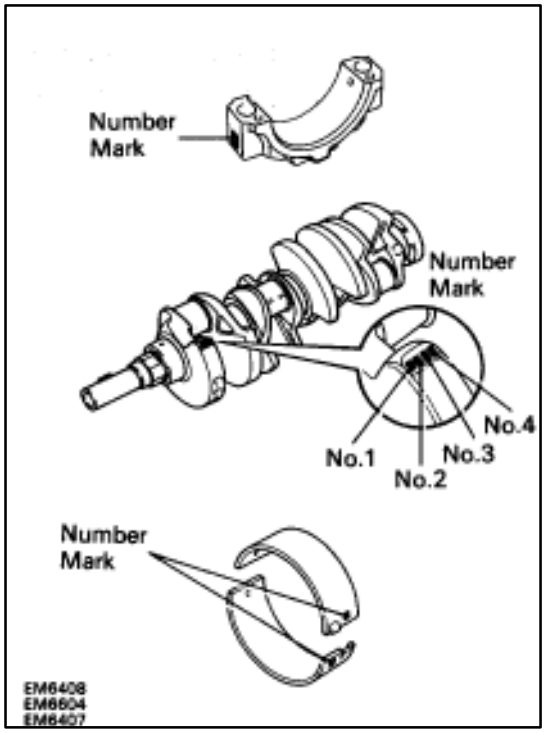

HINT: If using a standard bearing, replace with one having the same number. If the number of the bearing cannot be determined, select the correct bearing by adding together the numbers imprinted on the connecting rod cap and crankshaft, then selecting the bearing with the same number as the total. There are six sizes of standard bearings, marked ”2”, ”3”, ”4”, ”5”, ”6” and ”7” accordingly.

	Number mark											
Connecting rod cap	1	1	2	1	2	3	2	3	4	3	4	4
Crakshaft	1	2	1	3	2	1	3	2	1	3	2	3
Use bearing	2	3		4			5			6		7

EXAMPLE: Connecting rod cap ”3” + Crankshaft ”1”
= Total number 4 (Use bearing ”4”)

(Reference)

Connecting rod big end inside diameter:

Mark ”1” 55.000–55.006 mm (2.1654–2.1656 in.)
Mark ”2” 55.006–55.012 mm (2.1656–2.1658 in.)
Mark ”3” 55.012–55.018 mm (2.1658–2.1661 in.)
Mark ”4” 55.018–55.024 mm (2.1661–2.1663 in.)

Crankshaft crank pin diameter:

Mark ”1” 51.994–52.000 mm (2.0470–2.0472 in.)
Mark ”2” 51.988–51.994 mm (2.0468–2.0470 in.)
Mark ”3” 51.982–51.988 mm (2.0465–2.0468 in.)

Standard sized bearing center wall thickness:

Mark ”2” 1.484–1.487 mm (0.0584–0.0585 in.)
Mark ”3” 1.487–1.490 mm (0.0585–0.0587 in.)
Mark ”4” 1.490–1.493 mm (0.0587–0.0588 in.)
Mark ”5” 1.493–1.496 mm (0.0588–0.0589 in.)
Mark ”6” 1.496–1.499 mm (0.0589–0.0590 in.)
Mark ”7” 1.499–1.502 mm (0.0590–0.0591 in.)

(j) Completely remove the Plastigage.

4. REMOVE PISTON AND CONNECTING ROD ASSEMBLIES

(a) Using a ridge reamer, remove all the carbon from the top of the cylinder.

(b) Push the piston, connecting rod assembly and upper bearing through the top of the cylinder block.

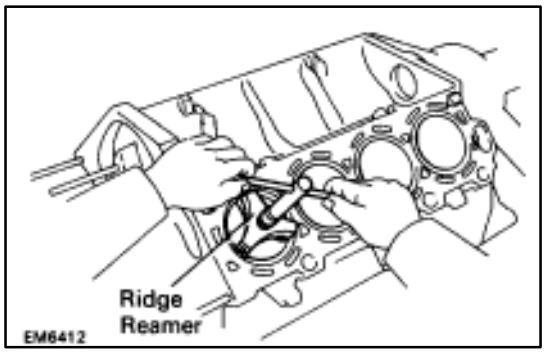

WhereEverybodyKnowsYourName

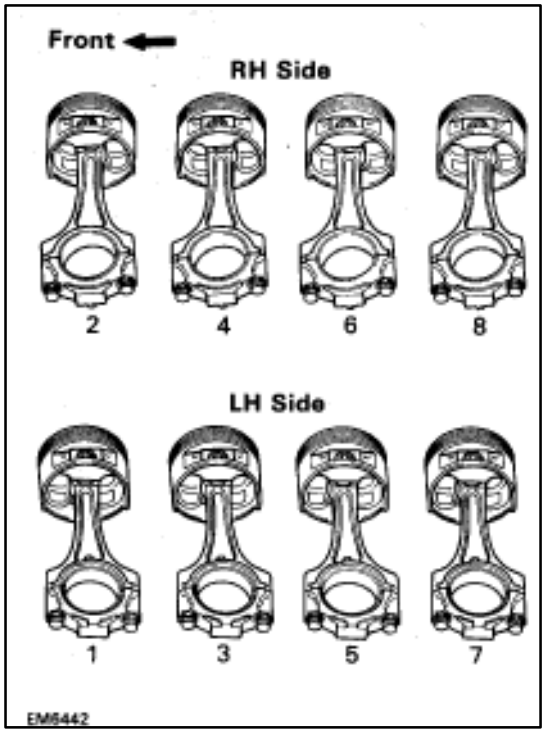

HINT:

- Keep the bearings, connecting rod and cap together.
- Arrange the piston and connecting rod assemblies in correct order.

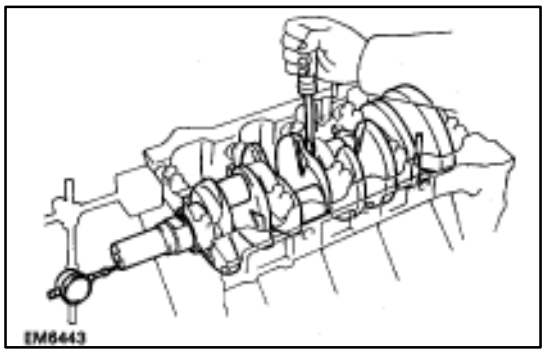

5. CHECK CRANKSHAFT THRUST CLEARANCE

Using a dial indicator, measure the thrust clearance while prying the crankshaft back and forth with a screwdriver.

Standard thrust clearance: 0.020–0.220 mm (0.0008–0.0087 in.)

Maximum thrust clearance: 0.30 mm (0.0118 in.)

If the thrust clearance is greater than maximum, replace the thrust washers as a set.

Thrust washer thickness: 2.440–2.490 mm (0.0961–0.0980 in.)

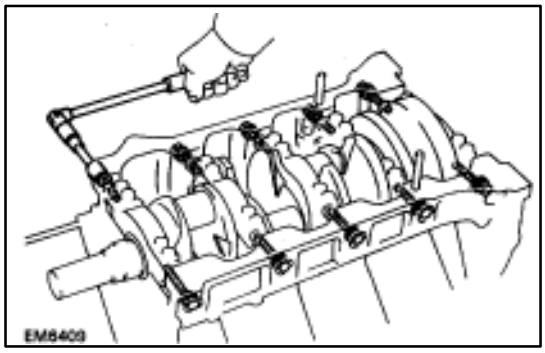

6. REMOVE MAIN BEARING CAP AND CHECK OIL CLEARANCE

(a) Remove the ten main bearing cap bolts.

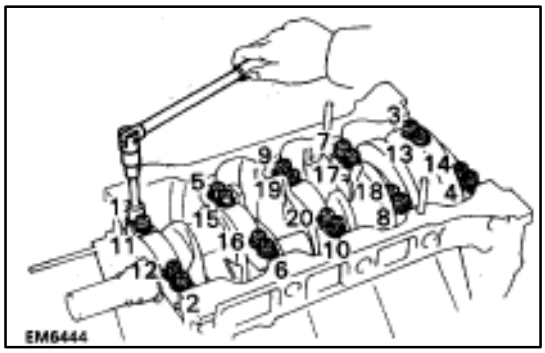

(b) Uniformly loosen and remove the twenty main bearing cap nuts in several passes in the sequence shown.

WhereEverybodyKnowsYourName

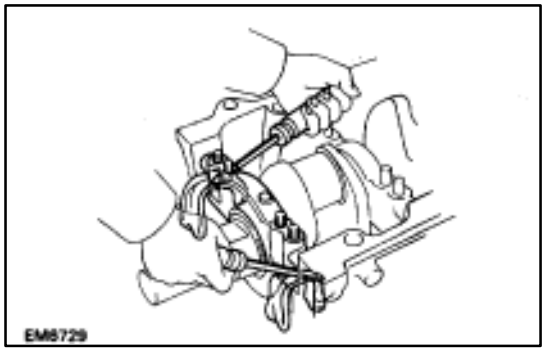

(c) Using two screwdrivers, pry out the main bearing cap, and remove the five main bearing cap, lower main bearings and two lower thrust washers (No.3 main bearing cap only).

NOTICE: Be careful not to damage the cylinder block.

HINT:

- Keep the lower main bearing and main bearing cap together.
- Arrange the main bearing caps and lower thrust washers in correct order.

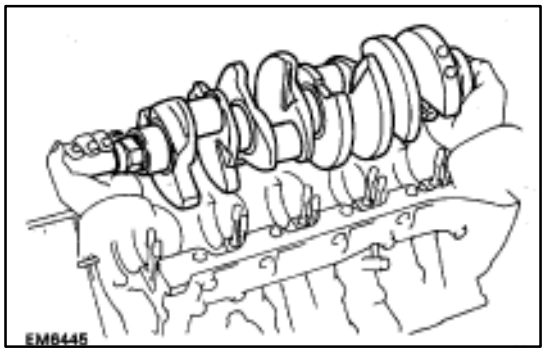

(d) Lift out the crankshaft.

(e) Remove the two upper thrust washers.

HINT:

- Arrange the upper thrust washers in correct order.
- Keep the upper main bearings together with the cylinder block.

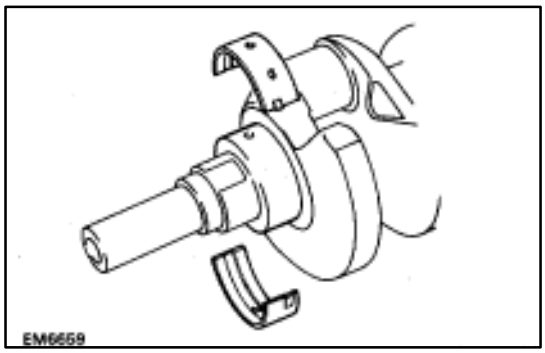

(f) Clean each main journal and bearing.

(g) Check each main journal and bearing for pitting and scratches.

If the journal or bearing are damaged, replace the bearings. If necessary, replace the crankshaft.

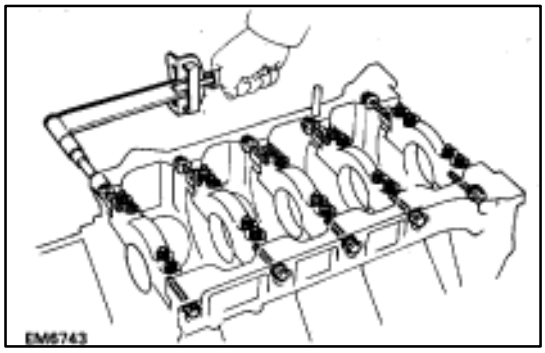

(h) Install the five main bearing caps with the twenty nuts and ten bolts. Do not install the crankshaft.
(See step 4 on pages EM–157 and 158)

Torque:

Nut 1st 27 N·m (275 kgf·cm, 20 ft·lbf)
2nd Turn 90°
Bolt 49 N·m (500 kgf·cm, 36 ft·lbf)

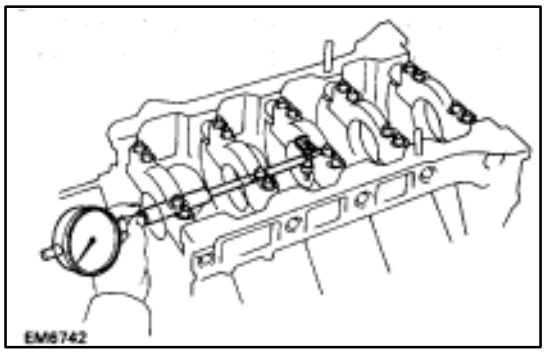

(i) Using a cylinder gauge, measure the inside diameter of the main bearing.

Bearing inside diameter: 67.026–67.033 mm
(2.6388–2.6391 in.)

WhereEverybodyKnowsYourName

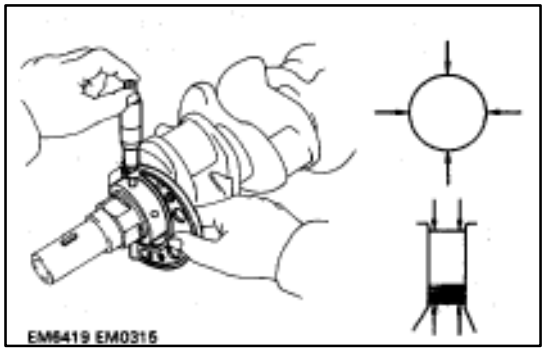

(j) Using a micrometer, measure the diameter of the main journal.

Main journal diameter: 66.988–67.000 mm (2.6373–2.6378 in.)

(k) Subtract the main journal diameter measurement from the main bearing inside diameter measurement.

Standard oil clearance: 0.026–0.045 mm (0.0010–0.0018 in.)

Maximum clearance: 0.055 mm (0.0022 in.)

If the oil clearance is greater than maximum, replace the bearings. If necessary, replace the crankshaft.

HINT: If using a standard bearing, replace with one having the same number. If the number of the bearing cannot be determined, select the correct bearing by adding together the numbers imprinted on the cylinder block and crankshaft, then refer to the table below for the appropriate bearing number. There are five sizes of standard bearings, marked ”1”, ”2”, ”3”, ”4” and ”5” accordingly.

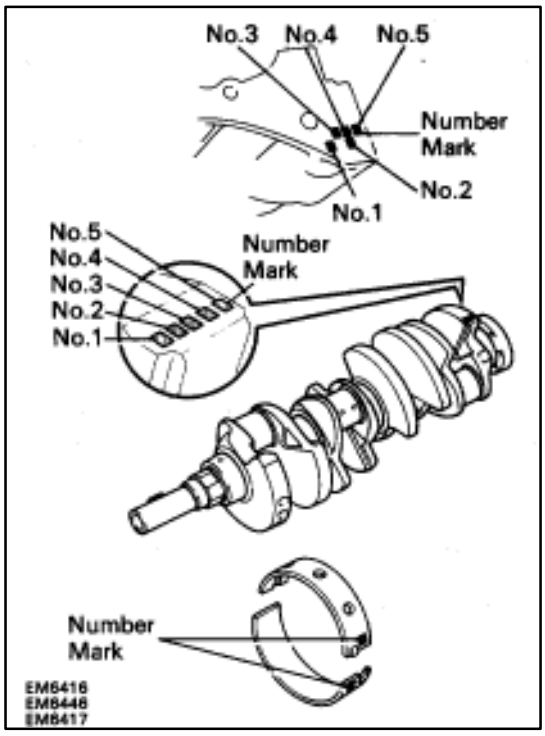

	Total number		” ”: Number mark		
Cylinder block (A) + Crankshaft (B) =	0–5	6–11	12–17	18–23	24–28
Use bearing	”1”	”2”	”3”	”4”	”5”

EXAMPLE: Cylinder block ”06” (A)
+ Crankshaft ”08” (B)
= Total number 14 (Use bearing ”3”)

(Reference)

Cylinder block main journal bore diameter (A):

Mark ”00” 72.000 mm (2.8346 in.)
Mark ”01” 72.001 mm (2.8347 in.)
Mark ”02” 72.002 mm (2.8347 in.)
Mark ”03” 72.003 mm (2.8348 in.)
Mark ”04” 72.004 mm (2.8348 in.)
Mark ”05” 72.005 mm (2.8348 in.)
Mark ”06” 72.006 mm (2.8349 in.)
Mark ”07” 72.007 mm (2.8349 in.)
Mark ”08” 72.008 mm (2.8350 in.)
Mark ”09” 72.009 mm (2.8350 in.)
Mark ”10” 72.010 mm (2.8350 in.)
Mark ”11” 72.011 mm (2.8351 in.)
Mark ”12” 72.012 mm (2.8351 in.)
Mark ”13” 72.013 mm (2.8352 in.)
Mark ”14” 72.014 mm (2.8352 in.)
Mark ”15” 72.015 mm (2.8352 in.)
Mark ”16” 72.016 mm (2.8353 in.)

WhereEverybodyKnowsYourName

Crankshaft main journal diameter (B):

Mark ”00” 67.000 mm (2.6378 in.)
Mark ”01” 66.999 mm (2.6378 in.)
Mark ”02” 66.998 mm (2.6377 in.)
Mark ”03” 66.997 mm (2.6377 in.)
Mark ”04” 66.996 mm (2.6376 in.)
Mark ”05” 66.995 mm (2.6376 in.)
Mark ”06” 66.994 mm (2.6376 in.)
Mark ”07” 66.993 mm (2.6375 in.)
Mark ”08” 66.992 mm (2.6375 in.)
Mark ”09” 66.991 mm (2.6374 in.)
Mark ”10” 66.990 mm (2.6374 in.)
Mark ”11” 66.989 mm (2.6374 in.)
Mark ”12” 66.988 mm (2.6373 in.)

Standard sized bearing center wall thickness:

Mark ”1” 2.486–2.489 mm (0.0979–0.0980 in.)
Mark ”2” 2.489–2.492 mm (0.0980–0.0981 in.)
Mark ”3” 2.492–2.495 mm (0.0981–0.0982 in.)
Mark ”4” 2.495–2.498 mm (0.0982–0.0983 in.)
Mark ”5” 2.498–2.501 mm (0.0983–0.0985 in.)

Standard sized Bearing Selection Chart

Crankshaft number mark	Cylinder block number mark																
	00	01	02	03	04	05	06	07	08	09	10	11	12	13	14	15	16
00	1	1	1	1	1	1	2	2	2	2	2	2	3	3	3	3	3
01	1	1	1	1	1	2	2	2	2	2	2	3	3	3	3	3	3
02	1	1	1	1	2	2	2	2	2	2	3	3	3	3	3	3	4
03	1	1	1	2	2	2	2	2	2	3	3	3	3	3	3	4	4
04	1	1	2	2	2	2	2	2	3	3	3	3	3	3	4	4	4
05	1	2	2	2	2	2	2	3	3	3	3	3	3	4	4	4	4
06	2	2	2	2	2	2	3	3	3	3	3	3	4	4	4	4	4
07	2	2	2	2	2	3	3	3	3	3	3	4	4	4	4	4	4
08	2	2	2	2	3	3	3	3	3	3	4	4	4	4	4	4	5
09	2	2	2	3	3	3	3	3	3	4	4	4	4	4	4	5	5
10	2	2	3	3	3	3	3	3	4	4	4	4	4	4	5	5	5
11	2	3	3	3	3	3	3	4	4	4	4	4	4	5	5	5	5
12	3	3	3	3	3	3	4	4	4	4	4	4	5	5	5	5	5

EXAMPLE: Cylinder block ”06”, Crankshaft ”08” = Use bearing ”3”

WhereEverybodyKnowsYourName

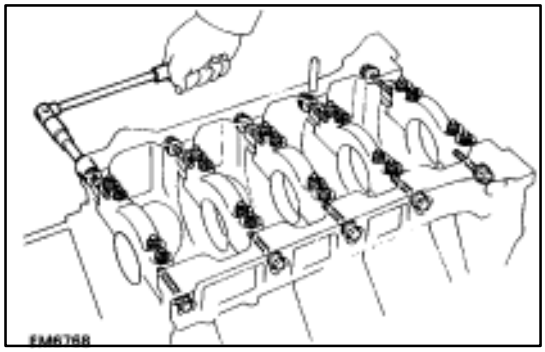

(k) Remove the ten bolts, twenty nuts and five main bearing caps. (See procedure (a) to (c) above)

(l) Remove the five upper main bearings from the cylinder block.

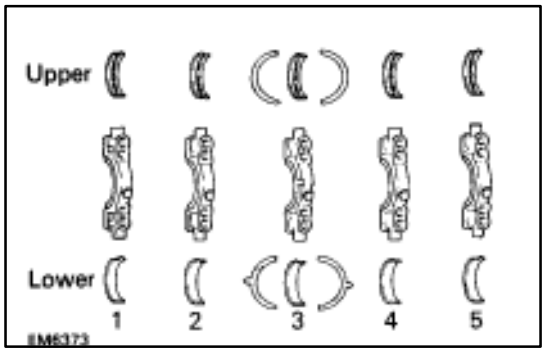

HINT: Arrange the main bearing caps, bearings and thrust washers in correct order.

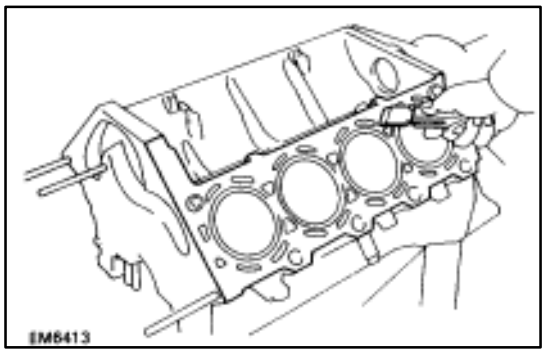

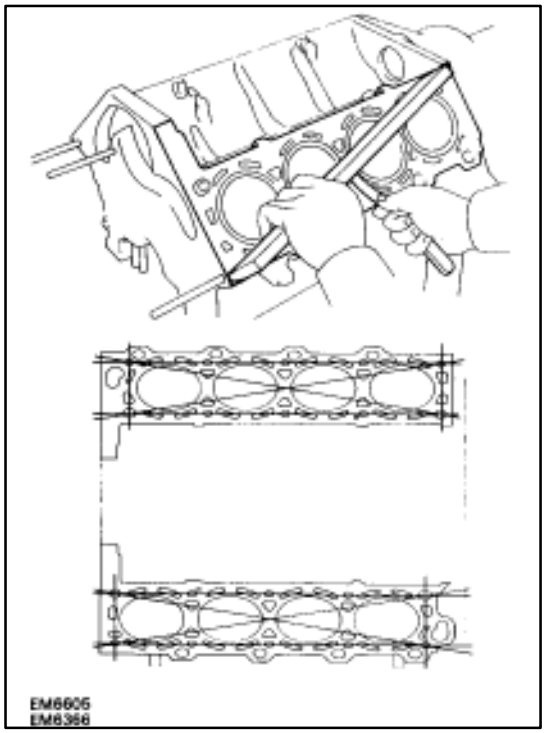

INSPECTION AND REPAIR OF CYLINDER BLOCK

1. CLEAN CYLINDER BLOCK

A. Remove gasket material

Using a gasket scraper, remove all the gasket material from the top surfaces of the cylinder block.

B. Clean cylinder block

Using a soft brush and solvent, thoroughly clean the cylinder block.

NOTICE: If the cylinder is washed at high temperatures, the cylinder liner sticks out beyond the cylinder block, so always wash the cylinder block at temperature of 45° or less.

2. INSPECT TOP SURFACES OF CYLINDER BLOCK FOR FLATNESS

Using precision straight edge and feeler gauge, measure the top surfaces of the cylinder block for warpage.

Maximum warpage: 0.07 mm (0.0028 in.)

If warpage is greater than maximum, replace the cylinder block.

WhereEverybodyKnowsYourName

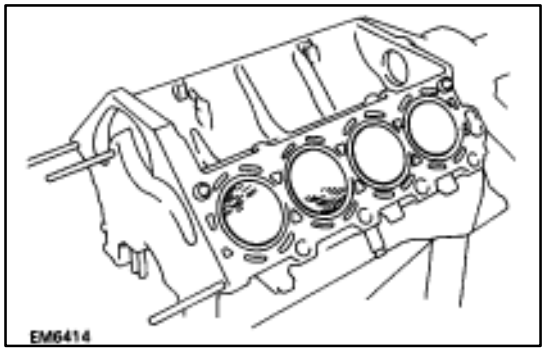

3. INSPECT CYLINDER FOR VERTICAL SCRATCHES

Visually check the cylinder for vertical scratches.
If deep scratches are present, replace the cylinder block.

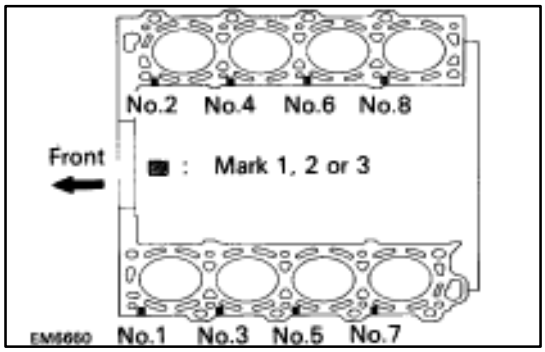

4. INSPECT CYLINDER BORE DIAMETER

HINT: There are three sizes of the standard cylinder bore diameter, marked ”1”, ”2” and ”3” accordingly. The marked is stamped on the top of the cylinder block.

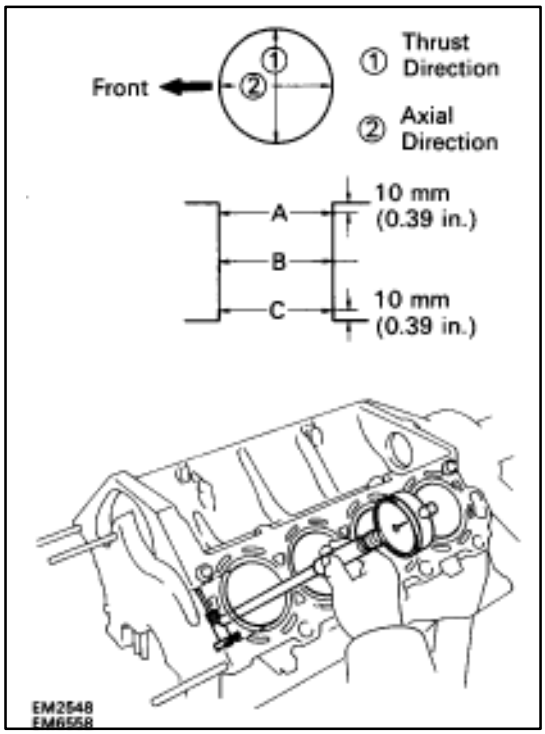

Using a cylinder gauge, measure the cylinder bore diameter at positions A, B and C in the thrust and axial directions.

Standard diameter:

Mark ”1” 87.500–87.510 mm (3.4449–3.4453 in.)
Mark ”2” 87.510–87.520 mm (3.4453–3.4457 in.)
Mark ”3” 87.520–87.530 mm (3.4457–3.4461 in.)

Maximum diameter: 87.73 mm (3.4539 in.)

If the diameter is greater than maximum, replace the cylinder block.

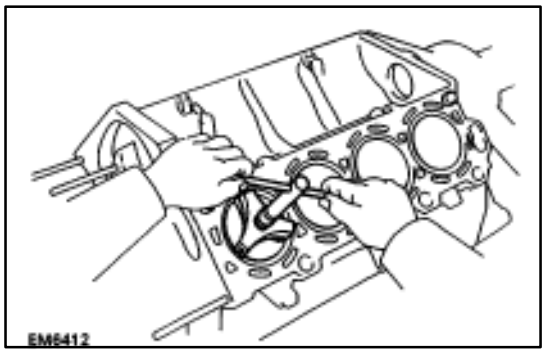

5. REMOVE CYLINDER RIDGE

If the wear is less than 0.2 mm (0.008 in.), using a ridge reamer, grind the top of the cylinder.

WhereEverybodyKnowsYourName

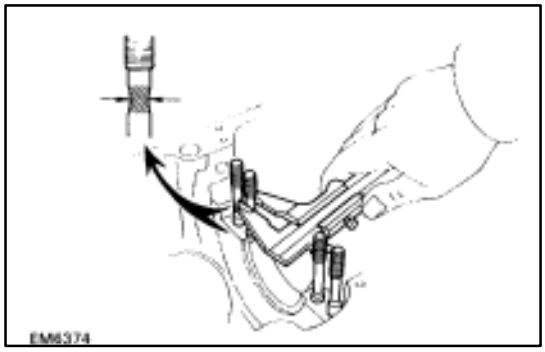

6. INSPECT MAIN BEARING CAP STUD BOLTS

Using a vernier caliper, measure the tension portion diameter of the stud bolt.

Standard diameter: 7.500–7.600 mm (0.2953–0.2992 in.)

Minimum diameter: 7.40 mm (0.2913 in.)

If the diameter is less than minimum, replace the stud bolt.

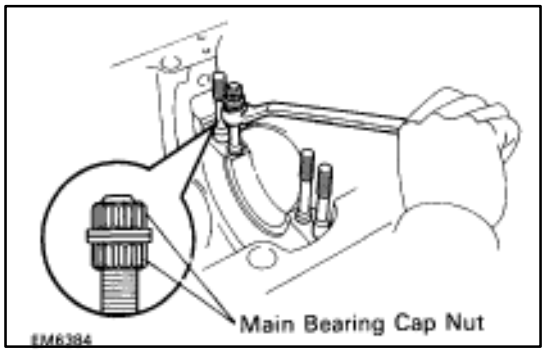

7. IF NECESSARY, REPLACE MAIN BEARING CAP STUD BOLTS

(a) Using the two main bearing cap nuts, remove the stud bolt.

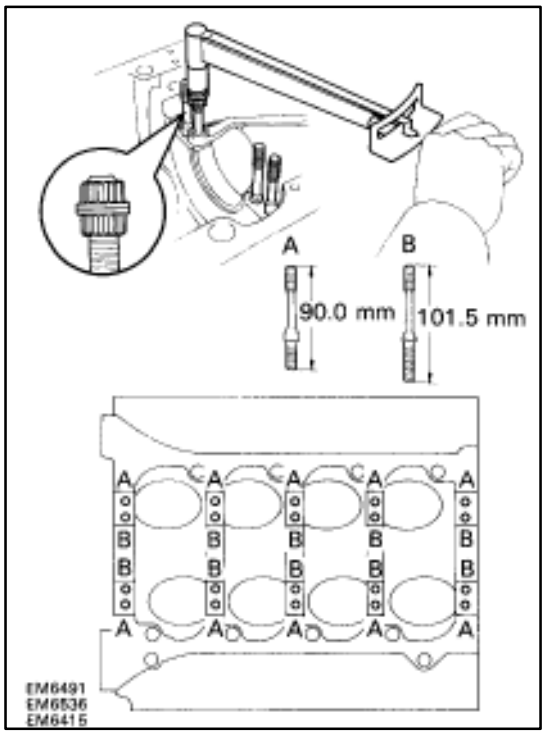

(b) Apply a light coat of engine oil on the threads and under the flange of the stud bolt.

(c) Using the two main bearing cap nuts, install and torque the stud bolt.

Torque: 10 N·m (100 kgf·cm, 7 ft·lbf)

HINT: Stud bolts come in lengths of 90.0 mm (3.543 in.) and 101.5 mm (3.996 in.). Install the 101.5 mm (3.996 in.) bolts in inside positions. Install the 90.0 mm (3.543 in.) bolts in outside positions.

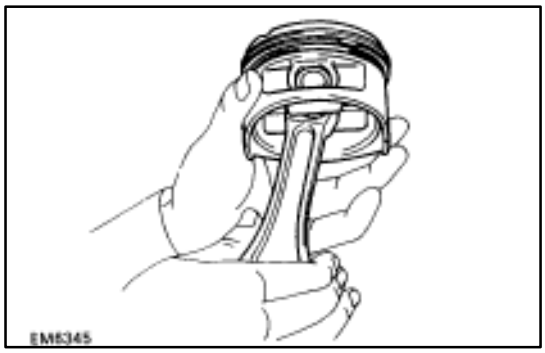

DISASSEMBLY OF PISTON AND CONNECTING ROD ASSEMBLIES

1. CHECK FIT BETWEEN PISTON AND PISTON PIN

Try to move the piston back and forth on the piston pin.

If any movement is felt, replace the piston and pin as a set.

WhereEverybodyKnowsYourName

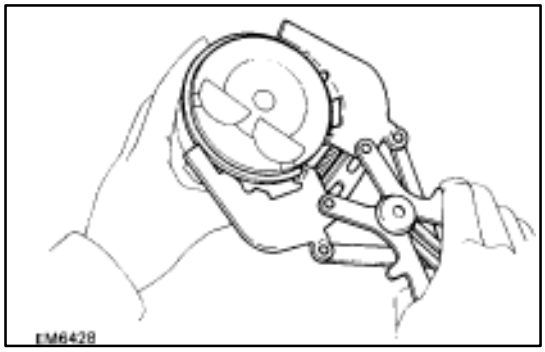

2. REMOVE PISTON RINGS

(a) Using a piston ring expander, remove the two compression rings.

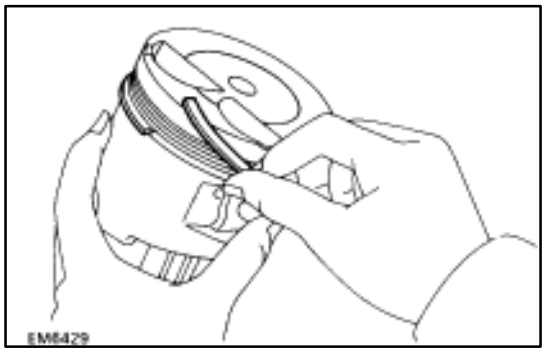

(b) Remove the two side rails and oil ring expander by hand.

HINT: Arrange the piston rings in correct order only.

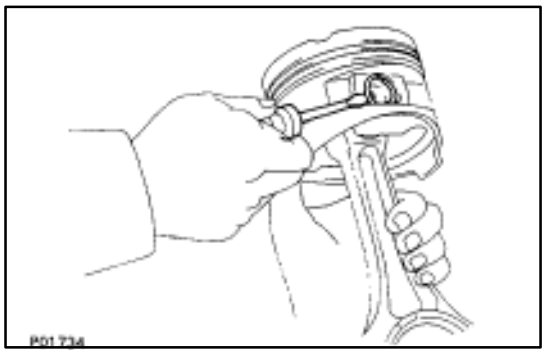

3. DISCONNECT CONNECTING ROD FROM PISTON

(a) Using a small screwdriver, pry out the two snap rings.

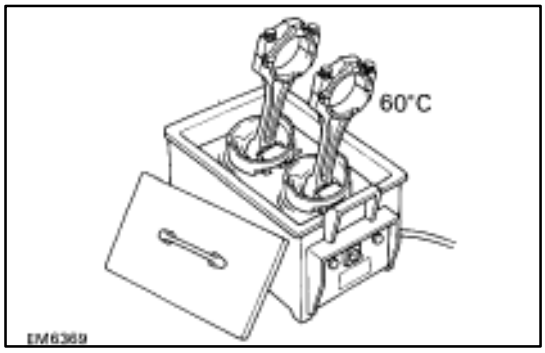

(b) Gradually heat the piston to approx. 60˚C (140˚F).

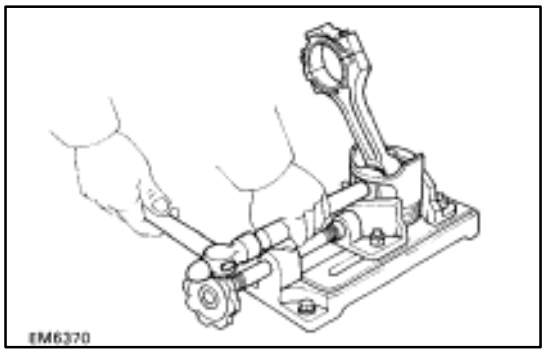

(c) Using a plastic–face hammer and brass bar, lightly tap out the piston pin and remove the connecting rod.

WhereEverybodyKnowsYourName

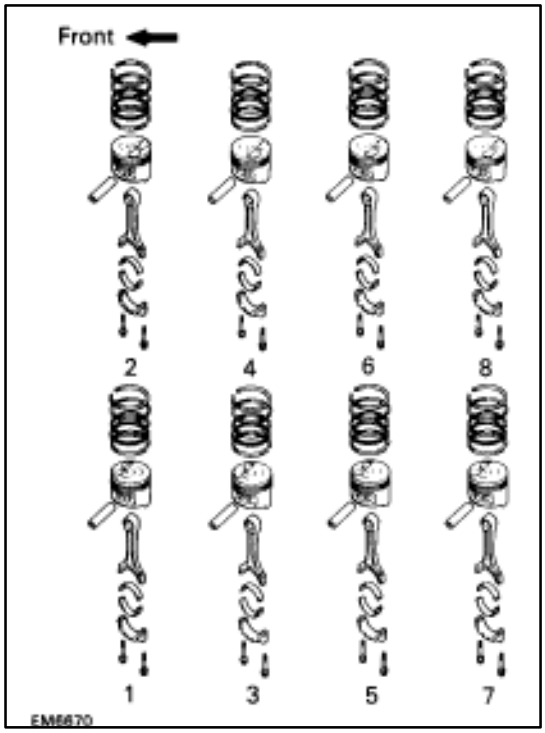

HINT:

- The piston and pin are a matched set.
- Arrange the pistons, pins, rings, connecting rods and bearings in correct order.

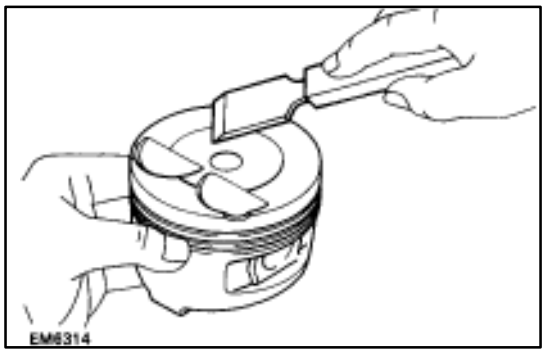

INSPECTION OF PISTON AND CONNECTING ROD ASSEMBLIES

1. CLEAN PISTON

(a) Using a gasket scraper, remove the carbon from the piston top.

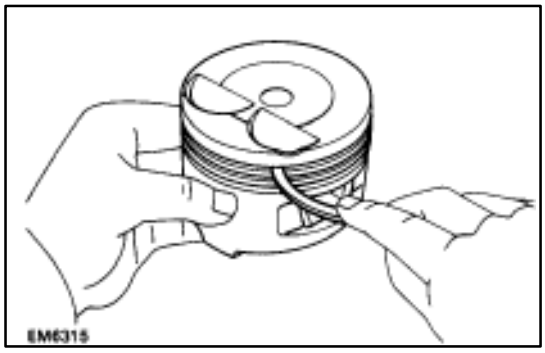

(b) Using a groove cleaning tool or broken ring, clean the piston ring grooves.

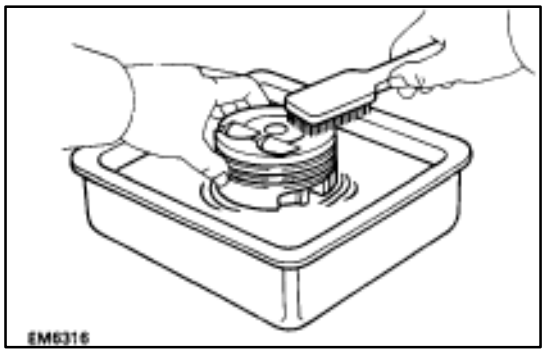

(c) Using solvent and a brush, thoroughly clean the piston.

NOTICE: Do not use a wire brush.

WhereEverybodyKnowsYourName

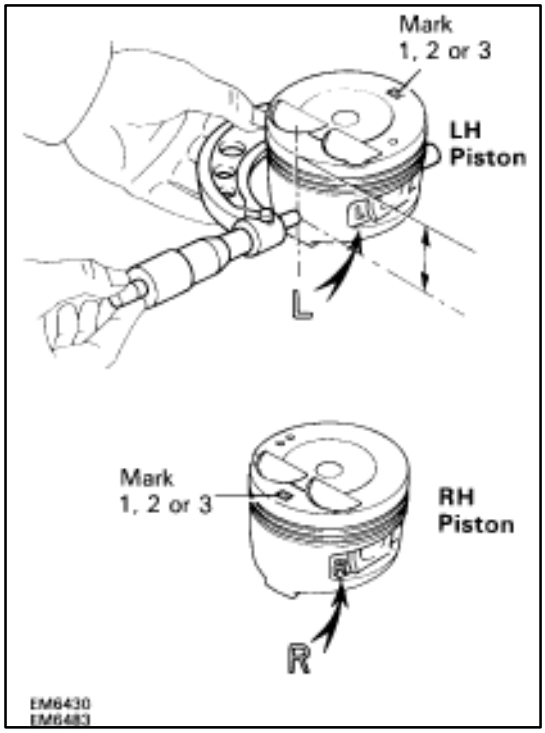

2. INSPECT PISTON

A. Inspect piston oil clearance

HINT: There are three sizes of the standard piston, marked ”1”, ”2” and ”3” accordingly. The mark is stamped on the top of the piston.

(a) Using a micrometer, measure the piston diameter at right angles to the piston pin center line, 49 mm (1.93 in.) from the piston head.

Piston diameter:

Mark ”1” 87.470–87.480 mm (3.4437–3.4441 in.)
Mark ”2” 87.480–87.490 mm (3.4441–3.4445 in.)
Mark ”3” 87.490–87.500 mm (3.4445–3.4449 in.)

(b) Measure the cylinder bore diameter in the thrust directions. (See step 4 on page EM–143)

(c) Subtract the piston diameter measurement from the cylinder bore diameter measurement.

Standard oil clearance: 0.020–0.040 mm (0.0008–0.0016 in.)

Maximum oil clearance: 0.06 mm (0.0024 in.)

If the oil clearance is greater than maximum, replace all the eight pistons. If necessary, replace the cylinder block.

HINT (Use new cylinder block):

- Use a piston with the same size mark as the cylinder bore diameter size mark on the cylinder block.
- The shape of the piston varies for the RH and LH banks. The RH piston is marked with ”R”, the LH piston with ”L”.

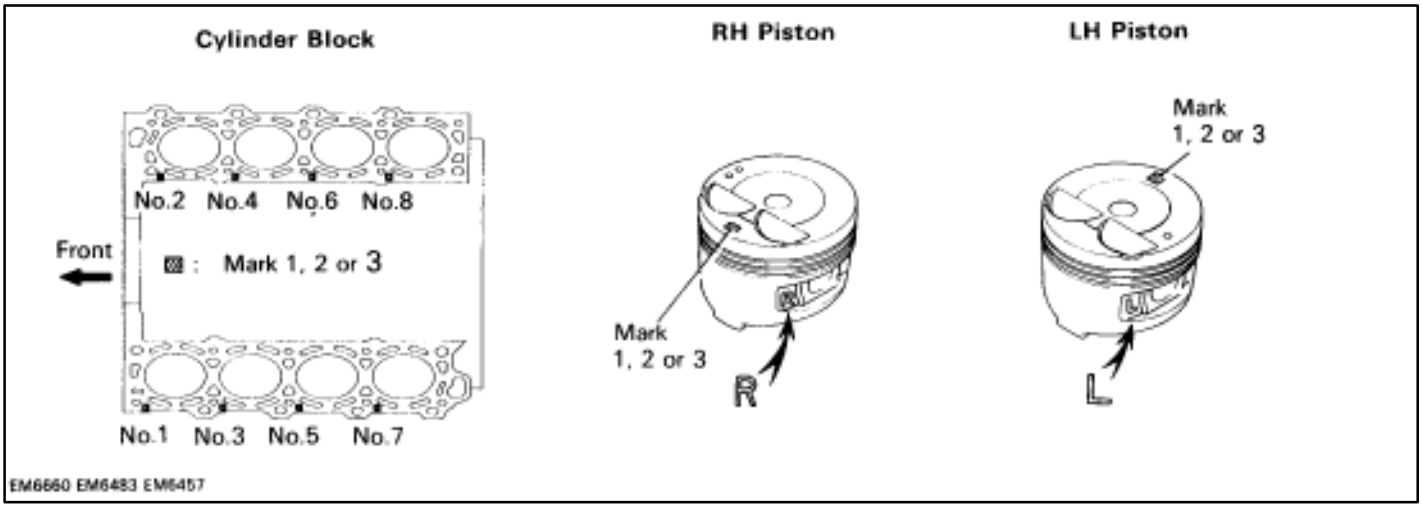

WhereEverybodyKnowsYourName

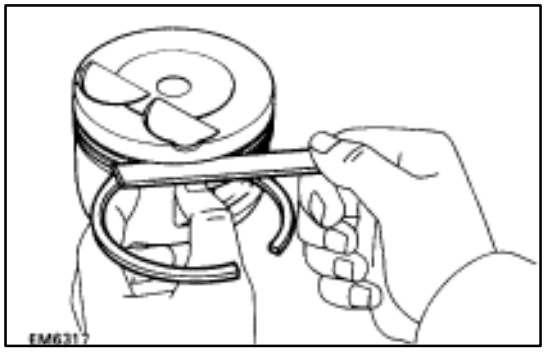

B. Inspect piston ring groove clearance

Using a feeler gauge, measure the clearance between new piston ring and the wall of the piston ring groove.

Ring groove clearance:

No.1 0.020–0.060 mm (0.0008–0.0024 in.)

No.2 0.015–0.055 mm (0.0006–0.0022 in.)

If the clearance is greater than maximum, replace the piston.

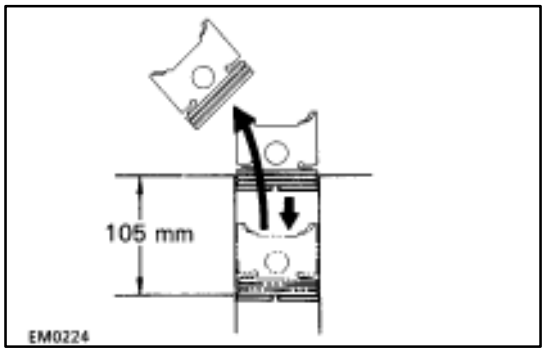

C. Inspect piston ring end gap

(a) Insert the piston ring into the cylinder bore.

(b) Using a piston, push the piston ring a little beyond the bottom of the ring travel, 105 mm (4.13 in.) from the top of the cylinder block.

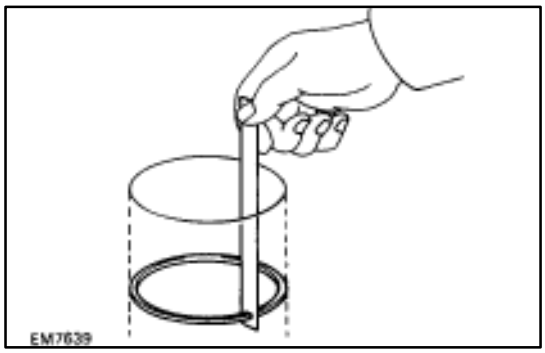

(c) Using a feeler gauge, measure the ring end gap.

Standard ring end gap:

No.1 0.250–0.450 mm (0.0098–0.0177 in.)

No.2 0.350–0.600 mm (0.0138–0.0236 in.)

Oil (Side rail) 0.150–0.500 mm (0.0059–0.0197 in.)

Maximum ring end gap:

No.1 1.05 mm (0.0413 in.)

No.2 1.20 mm (0.0472 in.)

Oil (Side rail) 1.10 mm (0.0433 in.)

If the end gap is greater than maximum, replace the piston ring. If the end gap is greater than maximum, even with a new piston ring, replace the cylinder block.

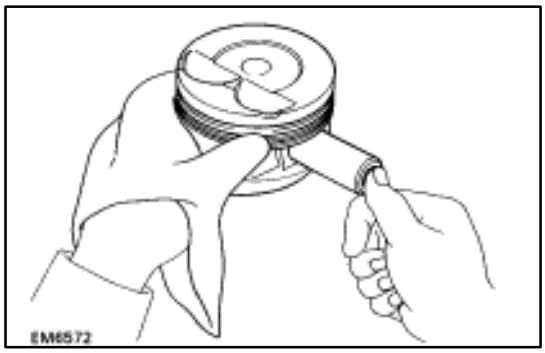

D. Inspect piston pin fit

At 60°C (140°F), you should be able to push the piston pin into the piston pin hole with your thumb.

WhereEverybodyKnowsYourName

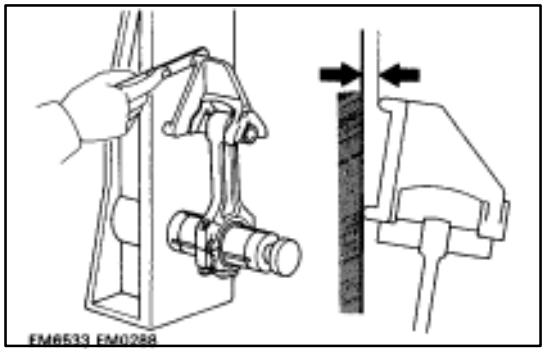

3. INSPECT CONNECTING ROD

A. Inspect connecting rod alignment

Using a feeler gauge and rod aligner, check the connecting rod alignment.

- Check for bending.

Maximum bending:

0.05 mm (0.0020 in.) per 100 mm (3.94 in.)

If bent is greater than maximum, replace the connecting rod assembly.

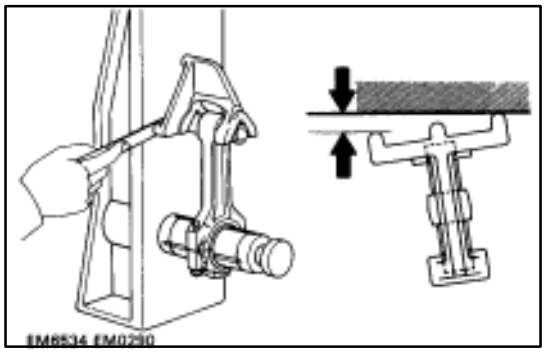

- Check for twist.

Maximum twist:

0.15 mm (0.0059 in.) per 100 mm (3.94 in.)

If twist is greater than maximum, replace the connecting rod assembly.

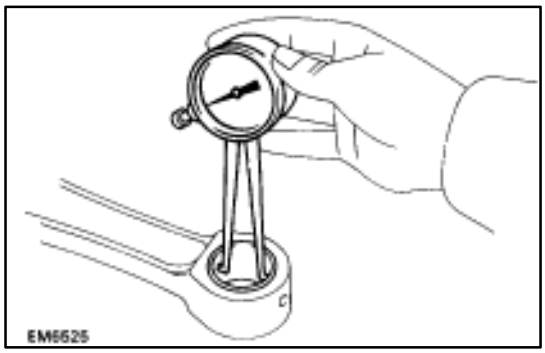

B. Inspect connecting rod bushings

(a) Using a caliper gauge, measure the inside diameter of the connecting rod bushing.

Bushing inside diameter: 22.005–22.017 mm (0.8663–0.8668 in.)

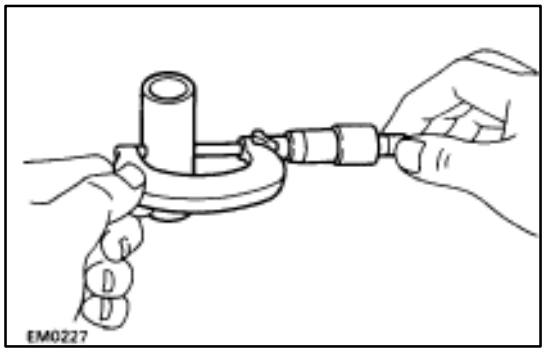

(b) Using a micrometer, measure the piston pin diameter.

Piston pin diameter: 21.997–22.009 mm (0.8660–0.8665 in.)

(c) Subtract the piston pin diameter measurement from the bushing inside diameter measurement.

Standard oil clearance: 0.005–0.011 mm (0.0002–0.0004 in.)

Maximum oil clearance: 0.05 mm (0.0020 in.)

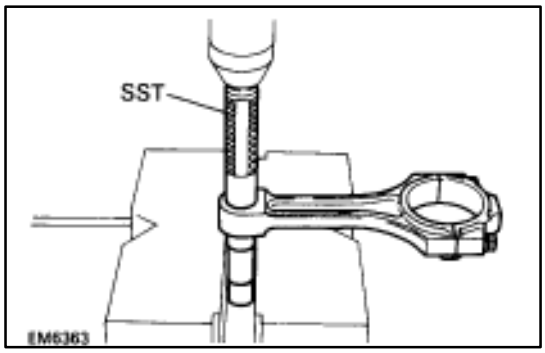

C. If necessary, replace connecting rod bushings

(a) Using SST and a press, press out the bushing.

SST 09222–30010

WhereEverybodyKnowsYourName

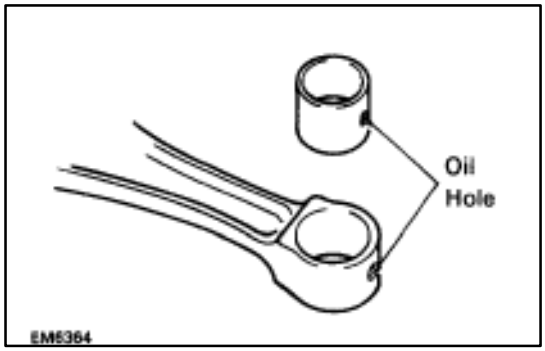

(b) Align the oil holes of the connecting rod and a new bushing.

(c) Using SST and a press, press in the bushing.

SST 09222–30010

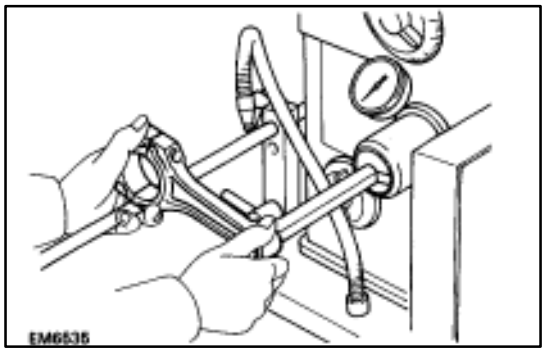

(d) Using a pin hole grinder, hole the bushing to obtain the standard specified clearance (see step B above) between the bushing and piston pin.

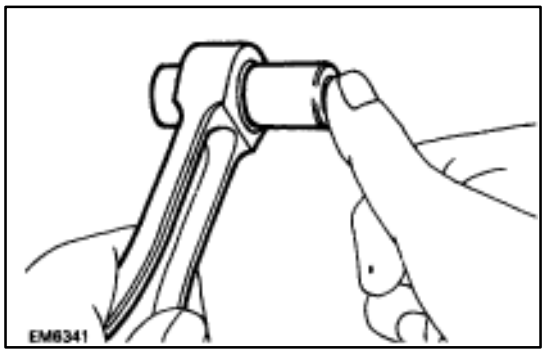

(e) Check the piston pin fit at normal room temperature.

Coat the piston pin with engine oil, and push it into the connecting rod with your thumb.

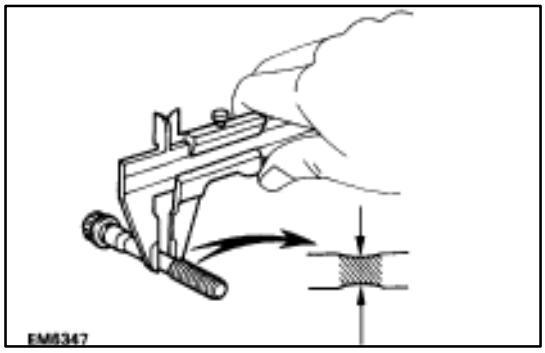

D. Inspect connecting rod bolts

Using a vernier caliper, measure the tension portion diameter of the bolt.

Standard diameter: 7.200–7.300 mm (0.2835–0.2874 in.)

Minimum diameter: 7.00 mm (0.2756 in.)

If the outside diameter is less than minimum, replace the bolt.

WhereEverybodyKnowsYourName

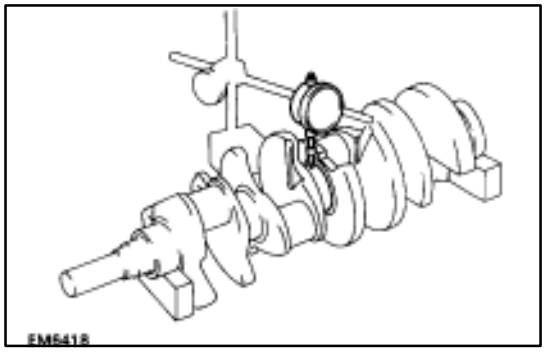

INSPECTION OF CRANKSHAFT

1. INSPECT CRANKSHAFT FOR RUNOUT

(a) Place the crankshaft on V–blocks.

(b) Using a dial indicator, measure the circle runout at the center journal.

Maximum circle runout: 0.08 mm (0.0031 in.)

If the circle runout is greater than maximum, replace the crankshaft.

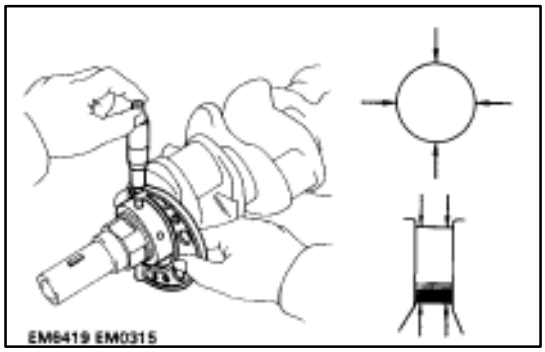

2. INSPECT MAIN JOURNALS AND CRANK PINS

(a) Using a micrometer, measure the diameter of each main journal and crank pin.

Main journal diameter: 66.988–67.000 mm (2.6373–2.6378 in.)

Crank pin diameter: 51.982–52.000 mm (2.0465–2.0472 in.)

If the diameter is not as specified, check the oil clearance (See page EM–136 or 139).

(b) Check each main journal and crank pin for taper and out–of–round as shown.

Maximum taper and out–of–round: 0.02 mm (0.0008 in.)

If the taper or out–of–round is greater than maximum, replace the crankshaft.

WhereEverybodyKnowsYourName

REPLACEMENT OF CRANKSHAFT OIL SEALS

HINT: There are two methods (A and B) to replace the oil seal which are as follows:

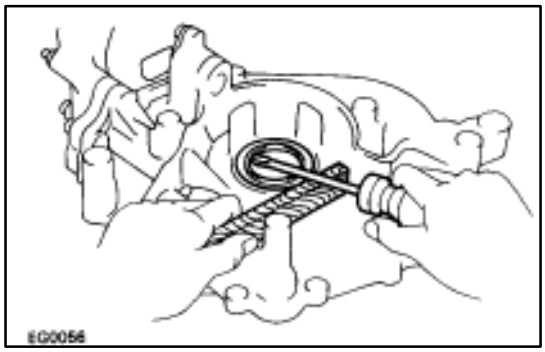

1. REPLACE CRANKSHAFT FRONT OIL SEAL

A. If oil pump is removed from cylinder block:

(a) Using a screwdriver, pry out the oil seal.

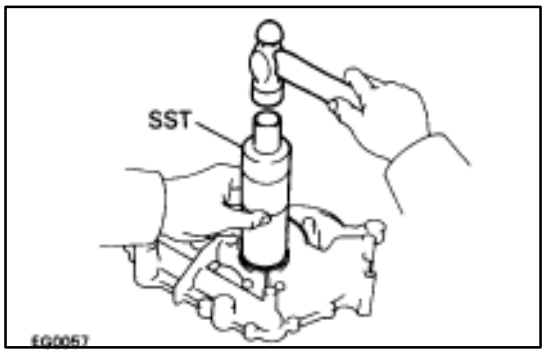

(b) Using SST and a hammer, tap in a new oil seal until its surface is flush with the oil pump body edge.

SST 09316–60010 (09316–00010)

(c) Apply MP grease to the oil seal lip.

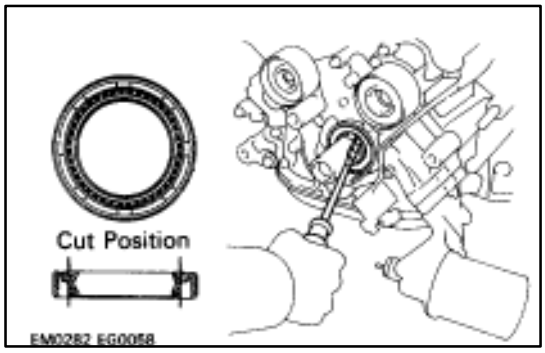

B. If oil pump is installed to the cylinder block:

(a) Using a knife, cut off the oil seal lip.

(b) Using a screwdriver, pry out the oil seal.

NOTICE: Be careful not to damage the crankshaft. Tape the screwdriver tip.

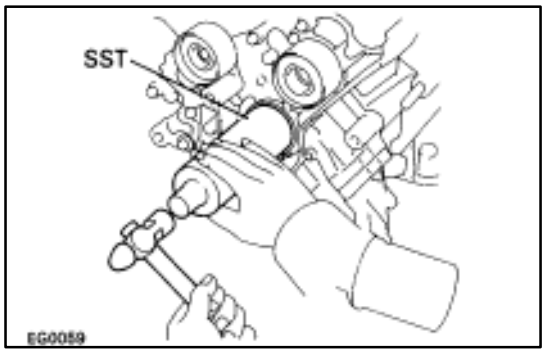

(c) Apply MP grease to a new oil seal lip.

(d) Using SST and a hammer, tap in the oil seal until its surface is flush with the oil pump body edge.

SST 09316–60010 (09316–00010)

WhereEverybodyKnowsYourName

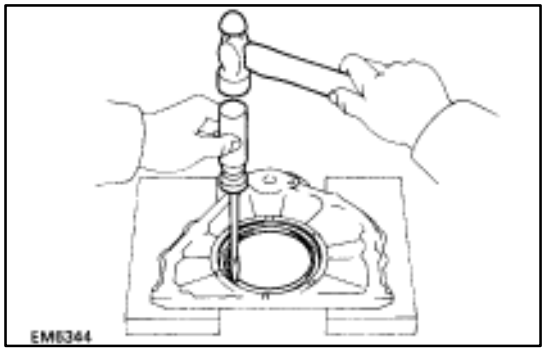

2. REPLACE CRANKSHAFT REAR OIL SEAL

A. If rear oil seal retainer is removed from cylinder block:

(a) Using a screwdriver and hammer, tap out the oil seal.

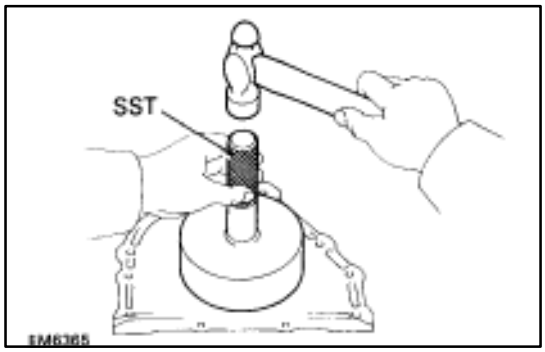

(b) Using SST and a hammer, tap in a new oil seal until its surface is flush with the rear oil seal retainer edge.

SST 09223–56010

(c) Apply MP grease to the oil seal lip.

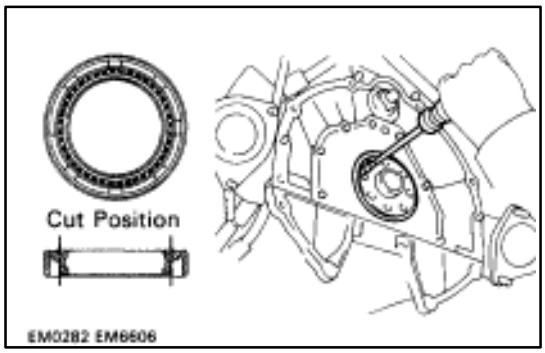

B. If rear oil seal retainer is installed to cylinder block:

(a) Using a knife, cut off the oil seal lip.

(b) Using a screwdriver, pry out the oil seal.

NOTICE: Be careful not to damage the crankshaft.

Tape the screwdriver tip.

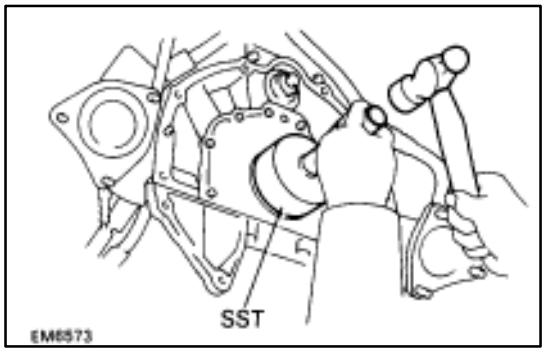

(c) Apply MP grease to a new oil seal lip.

(d) Using SST and a hammer, tap in the oil seal until its surface is flush with the rear oil seal retainer edge.

SST 09223–56010

WhereEverybodyKnowsYourName

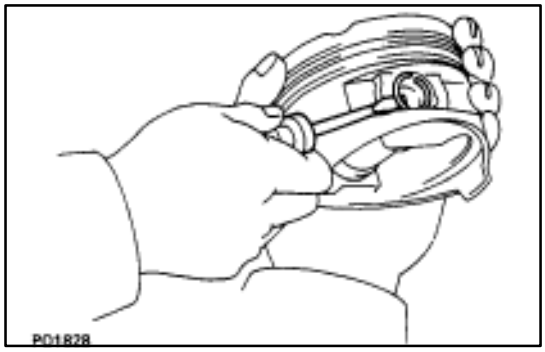

ASSEMBLY OF PISTON AND CONNECTING ROD ASSEMBLIES

1. ASSEMBLE PISTON AND CONNECTING ROD

(a) Using a small screwdriver, install a new snap ring on one side of the piston pin hole.

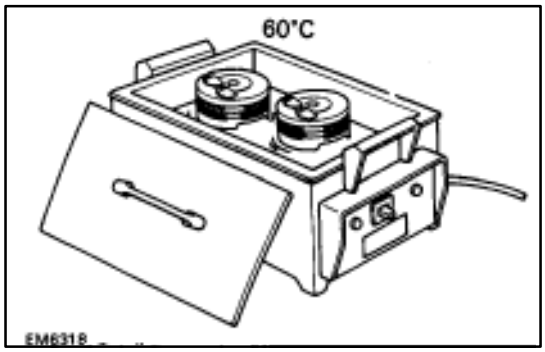

(b) Gradually heat the piston to about 60˚C (140˚F).

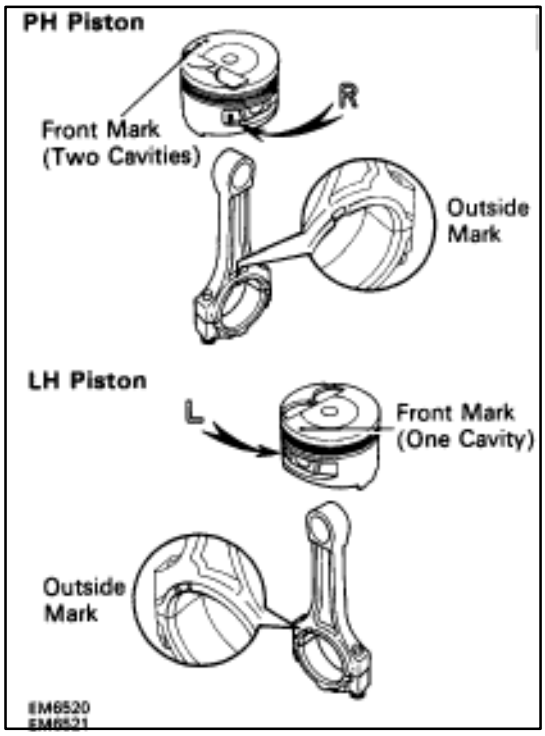

(c) Position the piston front mark with respect to the outside mark on the connecting rod as shown in the diagram.

NOTICE: The installation direction of the piston and connecting rod are different for the RH and LH banks. The RH piston is marked with ”R”, the LH piston with ”L”.

(d) Align the piston pin holes of the piston and connecting rod, and push in the piston pin with your thumb.

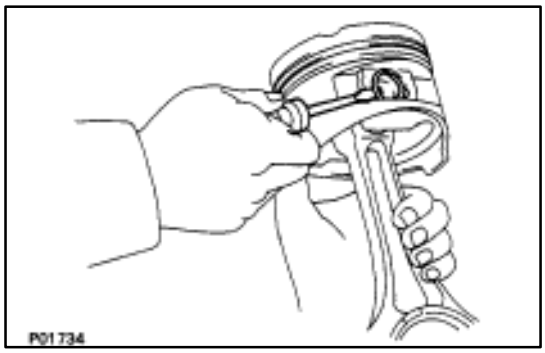

(e) Using a small screwdriver, install a new snap ring on the other side of the piston pin hole.

WhereEverybodyKnowsYourName

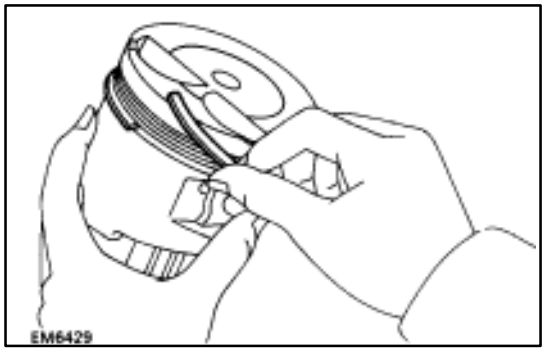

2. INSTALL PISTON RINGS

(a) Install the oil ring expander and two side rails by hand.

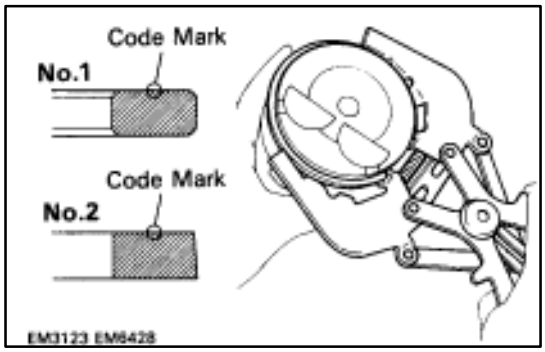

(b) Using a piston ring expander, install the two compression rings with the code mark facing upward.

Code mark: No.1 1R or T
No.2 2R or 2T

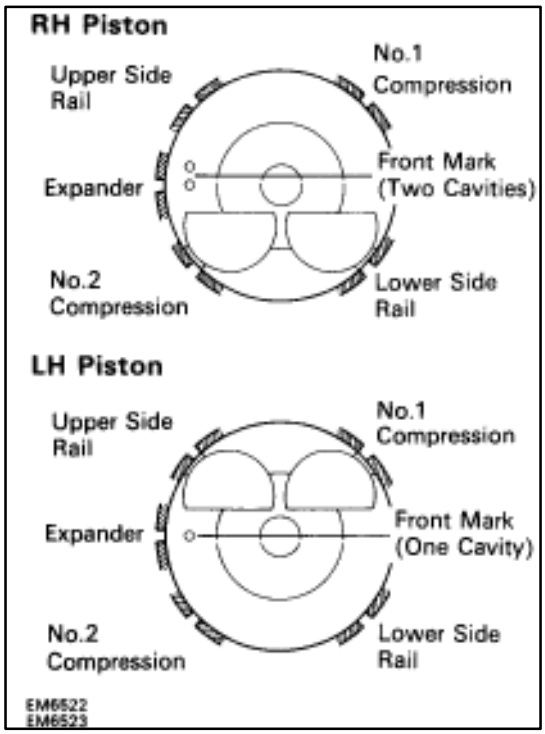

(c) Position the piston rings so that the ring ends are as shown.

NOTICE: Do not align the piston ring ends.

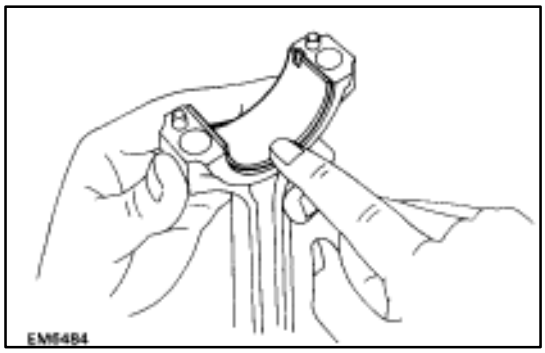

3. INSTALL BEARINGS

(a) Align the bearing claw with the groove of the connecting rod or connecting cap.

(b) Install the bearings in the connecting rod and connecting rod cap.

WhereEverybodyKnowsYourName

ASSEMBLY OF CYLINDER BLOCK

(See Components on page EM–131)

HINT:

- Thoroughly clean all parts to be assembled.
- Before installing the parts, apply new engine oil to all sliding and rotating surfaces.
- Replace all gaskets, O–rings and oil seals with new parts.

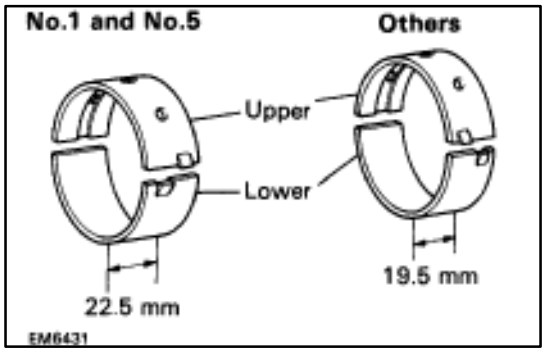

1. INSTALL MAIN BEARINGS

HINT:

- Main bearings come in widths of 19.5 mm (0.768 in.) and 22.5 mm (0.886 in.). Install the 22.5 mm (0.886 in.) bearings in the No.1 and No.5 cylinder block journal positions with the main bearing caps. Install the 19.5 mm (0.768 in.) bearings in the other positions.
- Upper bearings have an oil groove and oil holes; lower bearings do not.

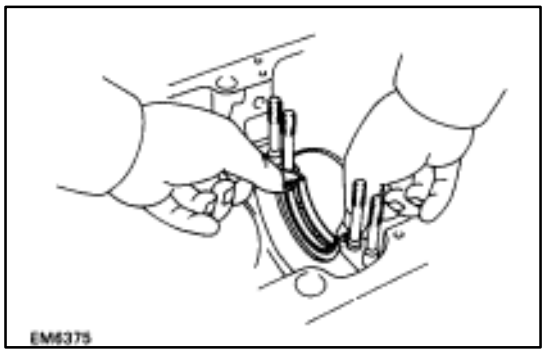

(a) Align the bearing claw with the claw groove of the cylinder block, and push in the five upper bearings.

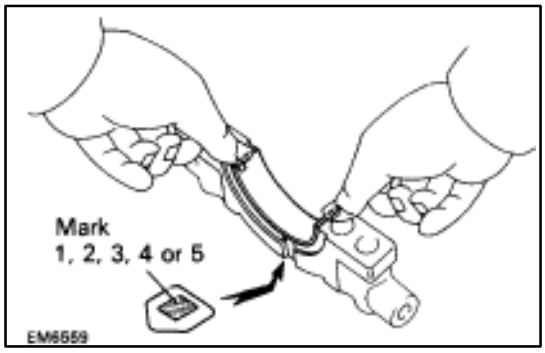

(b) Align the bearing claw with the claw groove of the main bearing cap, and push in the five lower bearings.

HINT: A number is marked on each main bearing cap indicating the installation position.

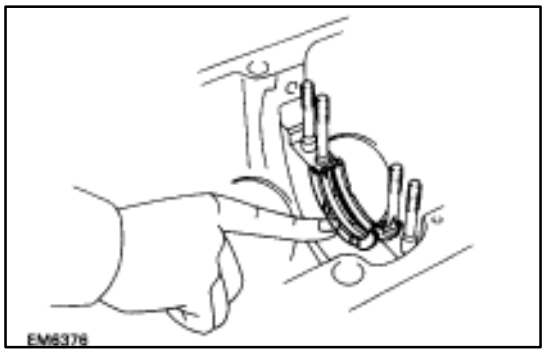

2. INSTALL UPPER THRUST WASHERS

Install the two thrust washers under the No.3 journal position of the block with the oil grooves facing outward.

WhereEverybodyKnowsYourName

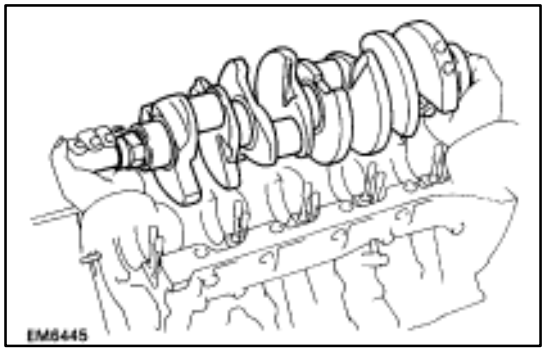

3. PLACE CRANKSHAFT ON CYLINDER BLOCK

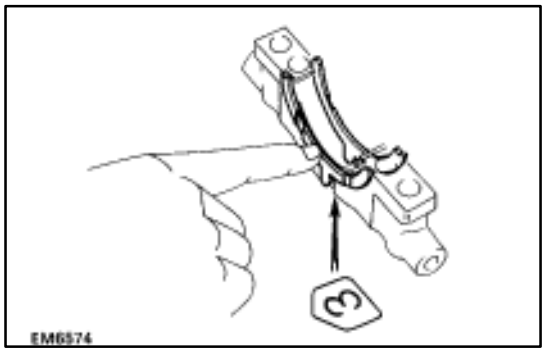

4. INSTALL MAIN BEARING CAP AND LOWER THRUST WASHERS

A. Place main bearing cap and lower thrust washers on cylinder block

(a) Install the two thrust washers on the No.3 main bearing cap with the grooves facing outward.

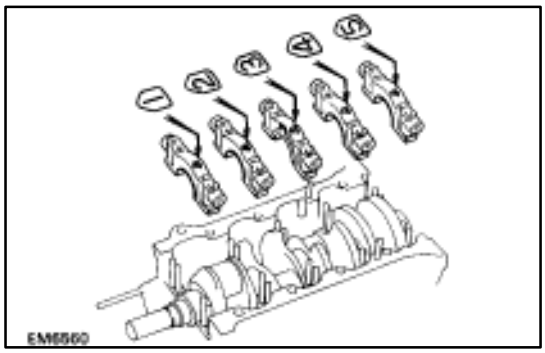

(b) Install the main bearing caps in their proper location.

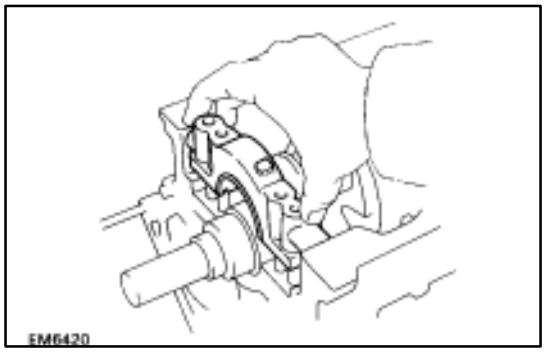

(c) Place the five bearing caps in position on cylinder block.

HINT: Place the bearing caps level and let them return to their original position by their own weight.

NOTICE: Do not install the main bearing cap by tapping it.

B. Install main bearing cap nuts

HINT:

- The main bearing cap nuts are tightened in two progressive steps (steps (b) and (d)).
- If any one of the main bearing cap stud bolts is broken or deformed, replace it.

(a) Apply a light coat of engine oil on the threads and under the nuts of the main bearing caps.

(b) Install and uniformly tighten the twenty main bearing cap nuts in several passes in the sequence shown.

Torque: 27 N·m (275 kgf·cm, 20 ft·lbf)

If any one of the main bearing cap nuts does not meet the torque specification, replace the main bearing cap stud bolt.

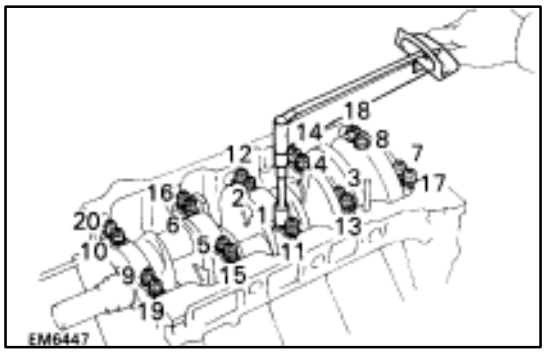

WhereEverybodyKnowsYourName

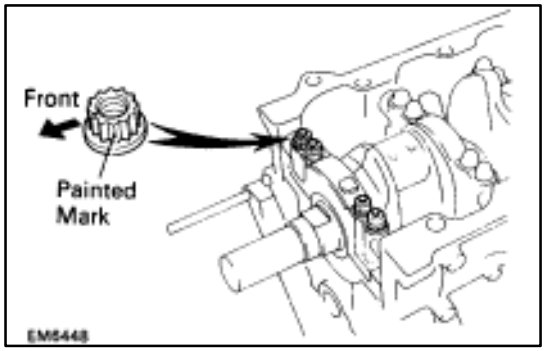

(c) Mark the front of the main bearing cap nut with paint.

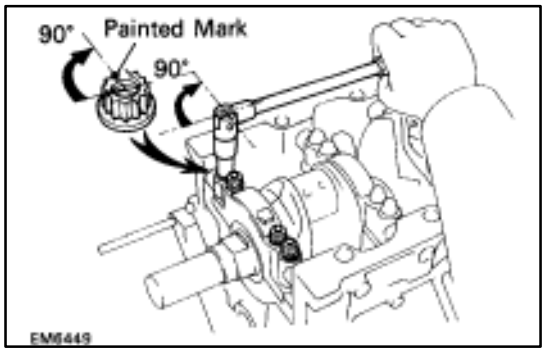

(d) Retighten the main bearing cap nuts 905 in the numerical order shown.
(e) Check that the painted mark is now at a 905 angle to the front.
(f) Check that the crankshaft turns smoothly.
(g) Check the crankshaft thrust clearance.
(See step 5 on page EM–138)

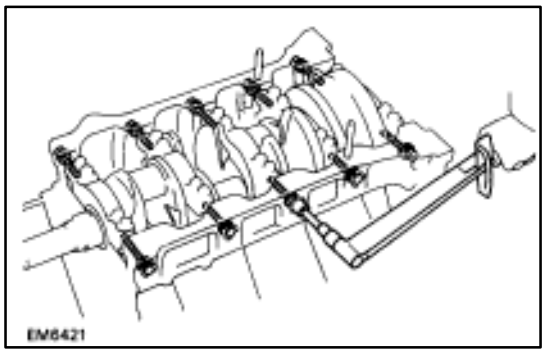

C. Install main bearing cap bolts
(a) Install a new seal washer to the main bearing cap bolt.
(b) Install the ten main bearing cap bolts.
Torque: 49 N·m (500 kgf·cm, 36 ft·lbf)

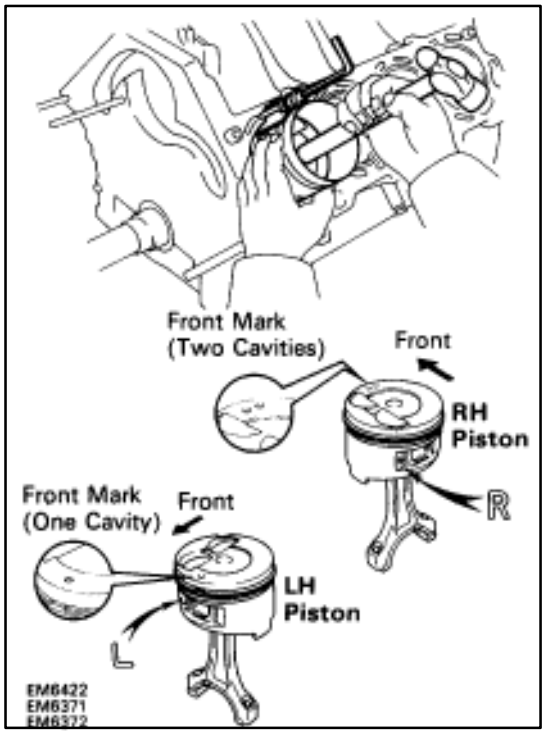

5. INSTALL PISTON AND CONNECTING ROD ASSEMBLIES
Using a piston ring compressor, push the correctly numbered piston and connecting rod assemblies into each cylinder with the front mark of the piston facing forward.
NOTICE: The shape of the piston varies for the RH and LH banks. The RH piston is marked with ”R”, the LH piston with ”L”.

WhereEverybodyKnowsYourName

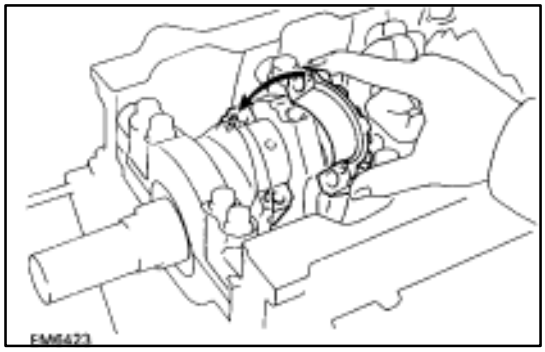

6. INSTALL CONNECTING ROD CAPS

A. Place connecting rod cap on connecting rod

(a) Match the numbered connecting rod cap with the connecting rod.

(b) Align the pin groove of the connecting rod cap with the pins of the connecting rod, and install the connecting rod cap.

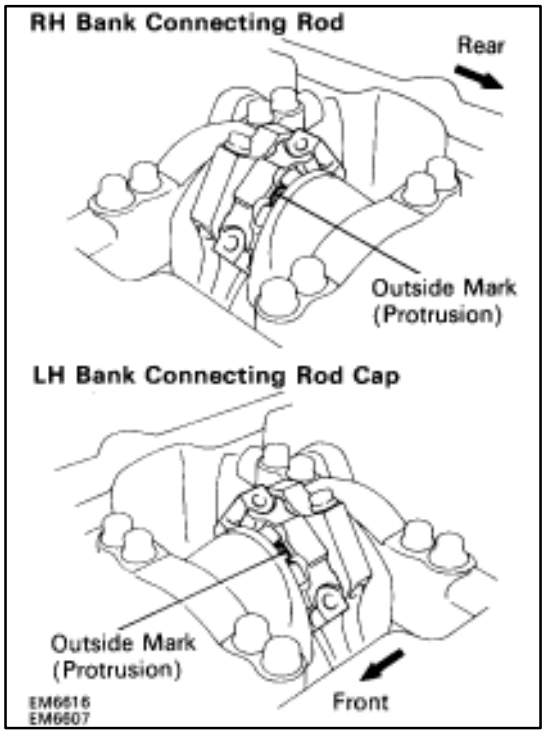

(c) Check that the outside mark on the connecting rod cap is facing in correct direction.

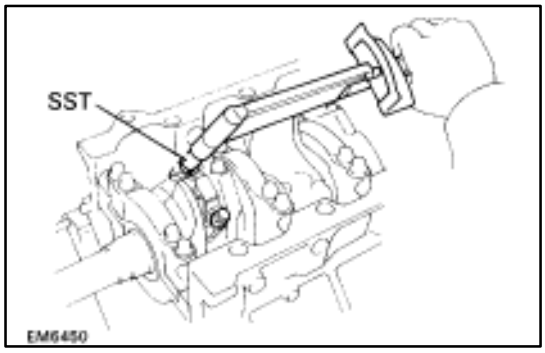

B. Install connecting rod cap bolts

HINT:

- The connecting rod cap bolts are tightened in two progressive steps (steps (b) and (d)).
- If any one of the connecting rod bolts is broken or deformed, replace it.

(a) Apply a light of engine oil on the threads and under the heads of the connecting rod cap bolts.

(b) Using SST, install and alternately tighten the two connecting rod cap bolts in several passes.

SST 09011–38121

Torque: 25 N·m (250 kgf·cm, 18 ft·lbf)

If any one of the connecting rod cap bolts does not meet the torque specification, replace the connecting rod cap bolt.

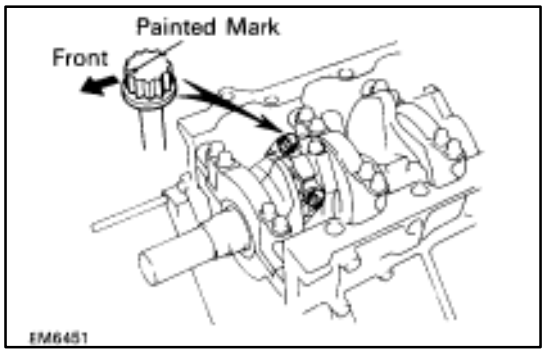

(c) Mark the front of the connecting rod cap bolt with paint.

WhereEverybodyKnowsYourName

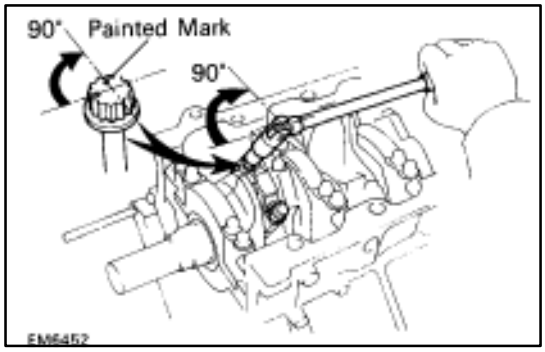

(d) Retighten the connecting rod cap bolts 905 in the numerical order shown.
(e) Check that the painted mark is now at a 905 angle to the front.
(f) Check that the crankshaft turns smoothly.
(g) Check the connecting rod thrust clearance.
(See step 2 on page EM–135)

7. INSTALL REAR OIL SEAL RETAINER

(a) Remove any old packing (FIPG) material and be careful not to drop any oil on the contact surfaces of the retainer and cylinder block.

- Using a razor blade and gasket scraper, remove all the old packing (FIPG) material from the gasket surfaces and sealing groove.
- Thoroughly clean all components to remove all the loose material.
- Using a non–residue solvent, clean both sealing surfaces.

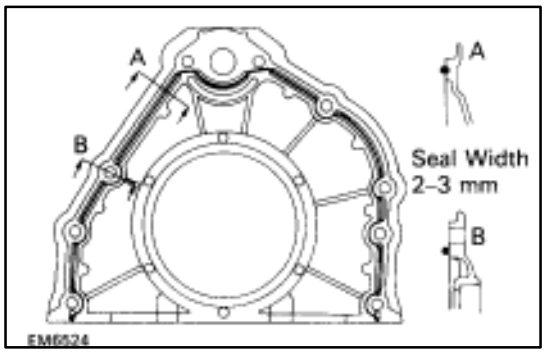

(b) Apply seal packing to the retainer as shown in the illustration.

Seal packing: Part No.08826–00080 or equivalent

- Install a nozzle that has been cut to a 2–3 mm (0.08–0.12 in.) opening.
- Parts must be assembled within 3 minutes of application. Otherwise the material must be removed and reapplied.
- Immediately remove nozzle from the tube and reinstall cap.

(c) Place a new O–ring in position on the cylinder block.

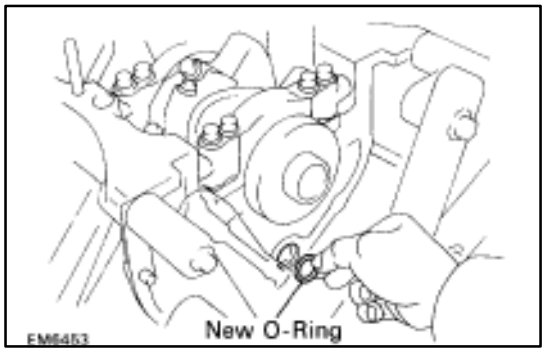

(d) Install the retainer with the seven bolts.

Torque: 7.8 N·m (80 kgf·cm, 69 in.·lbf)

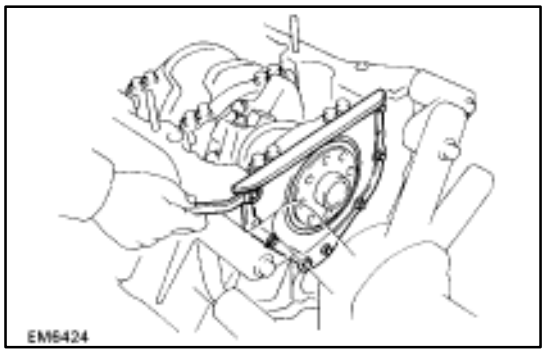

WhereEverybodyKnowsYourName

POST ASSEMBLY

(See Components on page EM–131)

1. INSTALL WATER SEAL PLATE

(a) Remove any old packing (FIPG) material and be careful not to drop any oil on the contact surfaces of the seal plate and cylinder block.

- Using a razor blade and gasket scraper, remove all the old packing (FIPG) material from the gasket surfaces and sealing groove.
- Thoroughly clean all components to remove all the loose material.
- Using a non–residue solvent, clean both sealing surfaces.

(b) Apply seal packing to the seal plate as shown in the illustration.

Seal packing: Part No.08826–00100 or equivalent

- Install a nozzle that has been cut to a 2–3 mm (0.08–0.12 in.) opening.
- Parts must be assembled within 5 minutes of application. Otherwise the material must be removed and reapplied.
- Immediately remove nozzle from the tube and reinstall cap.

(c) Install the seal plate with the two nuts.

Torque: 14 N·m (145 kgf·cm, 10 ft·lbf)

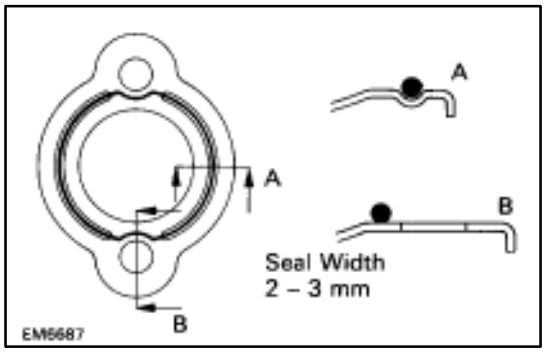

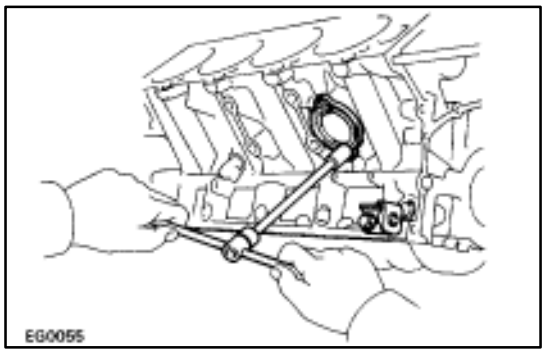

2. INSTALL ALTERNATOR BRACKET

Install the bracket with the bolt.

Torque: 18 N·m (185 kgf·cm, 13 ft·lbf)

3. INSTALL OIL PUMP

(a) Remove any old packing (FIPG) material and be careful not to drop any oil on the contact surfaces of the oil pump and cylinder block.

- Using a razor blade and gasket scraper, remove all the old packing (FIPG) material from the gasket surfaces and sealing groove.
- Thoroughly clean all components to remove all the loose material.
- Using a non–residue solvent, clean both sealing surfaces.

(b) Apply seal packing to the oil pump as shown in the illustration.

Seal packing: Part No.08826–00080 or equivalent

- Install a nozzle that has been cut to a 2–3 mm (0.08–0.12 in.) opening.
- Parts must be assembled within 3 minutes of application. Otherwise the material must be removed and reapplied.
- Immediately remove nozzle from the tube and reinstall cap.

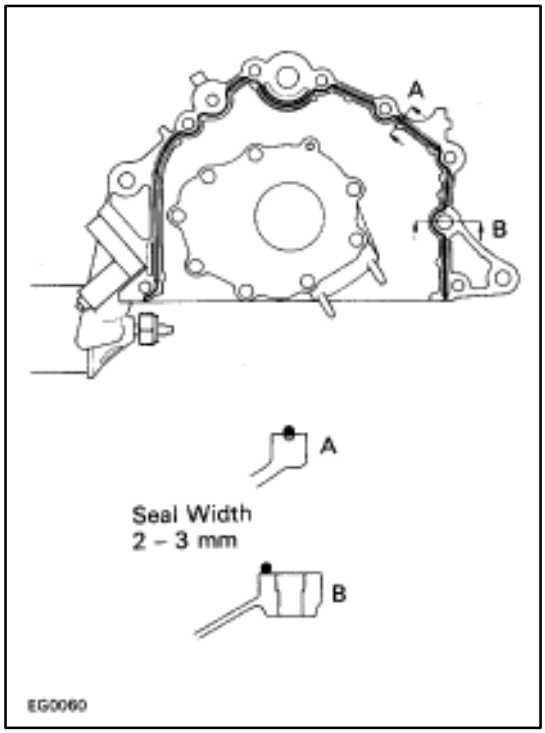

WhereEverybodyKnowsYourName

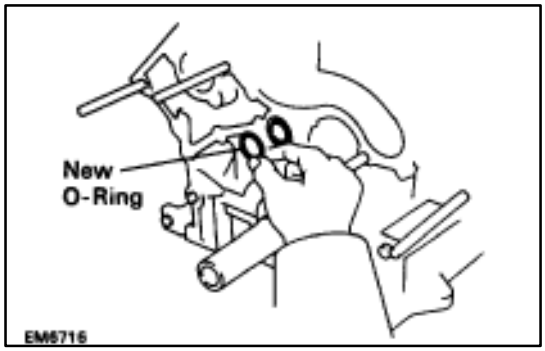

(c) Place a new O–ring in position on the cylinder block.

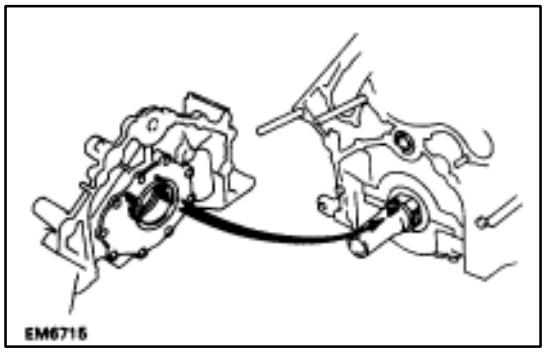

(d) Engage the spline teeth of the oil pump drive gear with the large teeth of the crankshaft, and slide the oil pump.

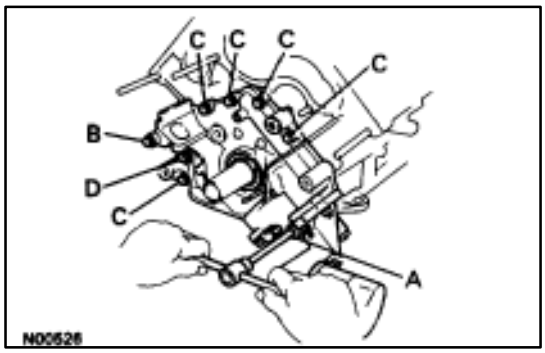

(e) Install the oil pump with the eight bolts.

Torque:

12 mm head 16 N·m (160 kgf·cm, 12 ft·lbf)

14 mm head 30 N·m (310 kgf·cm, 22 ft·lbf)

HINT: Each bolt length is indicated in the illustration.

Bolt length:

A 50 mm (1.97 in.) for 12 mm head

B 106 mm (4.17 in.) for 12 mm head

C 30 mm (1.18 in.) for 12 mm head

D 40 mm (1.57 in.) for 14 mm head

4. INSTALL NO. 1 OIL PAN AND NO. 2 OIL PANS

(See steps 4 to 9 on pages LU–16 to 19)

5. INSTALL WATER PUMP

(a) Remove any old packing (FIPG) material and be careful not to drop any oil on the contact surfaces of the water pump and cylinder block.

- Using a razor blade and gasket scraper, remove all the old packing (FIPG) material from the gasket surfaces and sealing groove.
- Thoroughly clean all components to remove all the loose material.
- Using a non–residue solvent, clean both sealing surfaces.

WhereEverybodyKnowsYourName

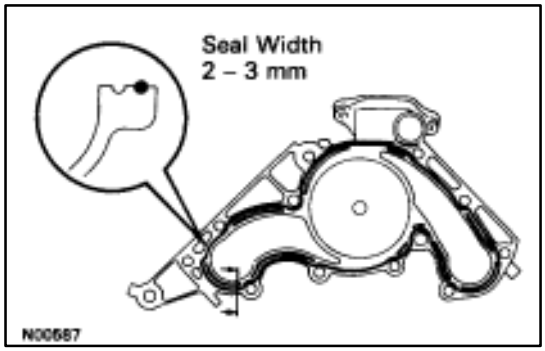

(b) Apply seal packing to the sealing groove of the water pump as shown in the illustration.

Seal packing: Part No.08826–00100 or equivalent

- Install a nozzle that has been cut to a 2–3 mm (0.08–0.12 in.) opening.
- Parts must be assembled within 5 minutes of application. Otherwise the material must be removed and reapplied.
- Immediately remove nozzle from the tube and reinstall cap.

(c) Install the water pump with the five bolts, two stud bolts and nut.

Torque: 18 N·m (185 kgf·cm, 13 ft·lbf)

HINT: Use bolts 30 mm (1.18 in.) in length.

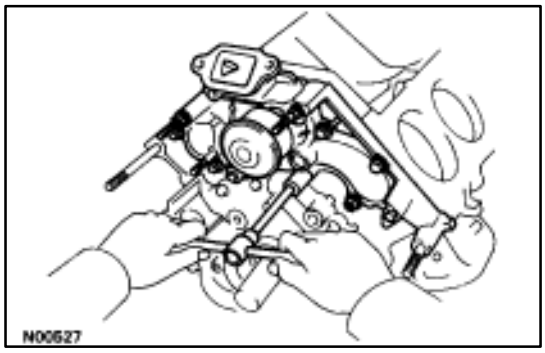

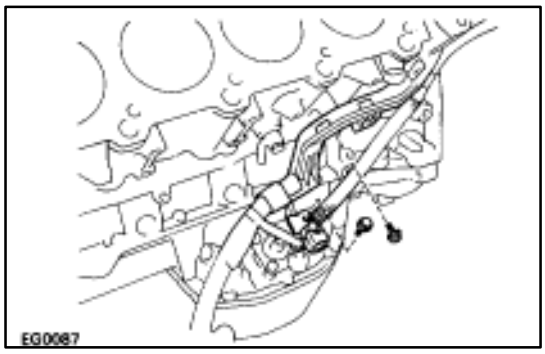

6. INSTALL ENGINE WIRE

(a) Install the engine wire to the LH side of the cylinder block with the two bolts.

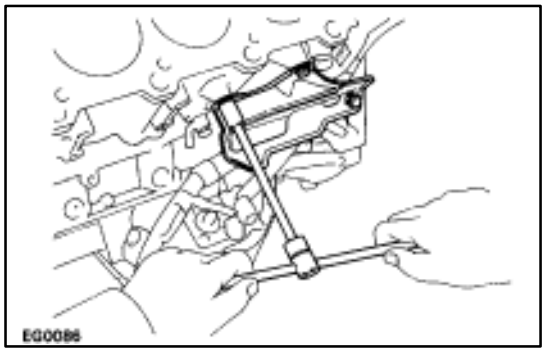

(b) Install the wire cover with the three bolts.

(c) Connect the following connectors:

(1) Oil level sensor connector

(2) Oil pressure switch connector

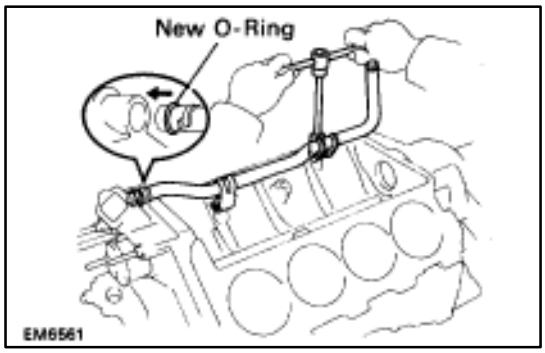

7. INSTALL WATER BY–PASS PIPE

(a) Install a new O–ring to the by–pass pipe.

(b) Apply soapy water to the O–ring.

(c) Pull in the by–pass pipe end into the pipe hole of the water pump.

(d) Install the water by–pass pipe with the two bolts.

Torque: 18 N·m (185 kgf·cm, 13 ft·lbf)

WhereEverybodyKnowsYourName

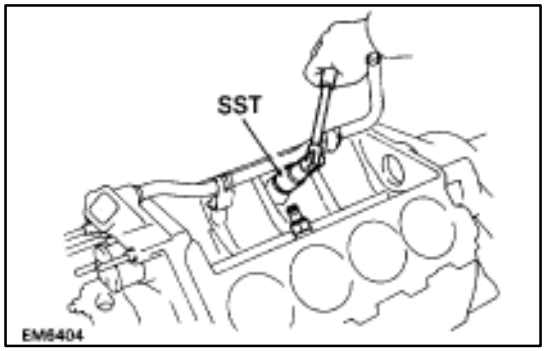

8. INSTALL KNOCK SENSORS

(a) Using SST, install the two knock sensors.

SST 09816–30010

Torque: 44 N·m (450 kgf·cm, 33 ft·lbf)

(b) Connect the two knock sensor connectors.

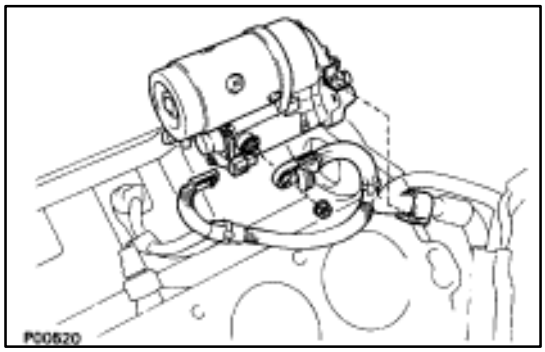

9. INSTALL STARTER

(a) Install the wire clamp to the bracket on the starter.

(b) Connect the wire to the starter with the nut.

(c) Connect the connector to the starter.

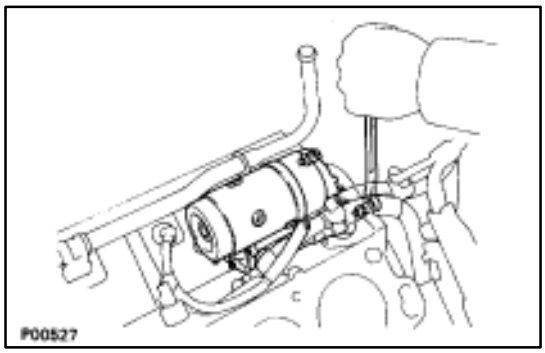

(d) Install the starter with the two bolts.

Torque: 39 N·m (400 kgf·cm, 29 ft·lbf)

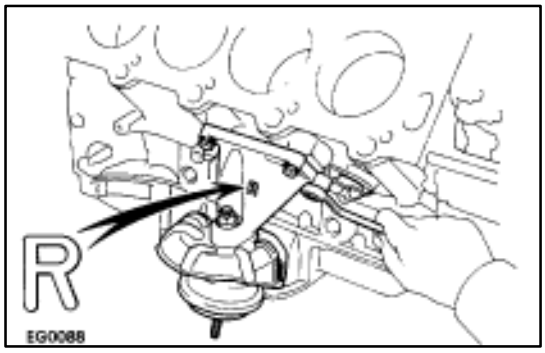

10. INSTALL RH ENGINE MOUNTING BRACKET

Install the mounting bracket with the four bolts.

Torque: 37 N·m (380 kgf·cm, 27 ft·lbf)

HINT: The RH mounting bracket is marked with ”R”.

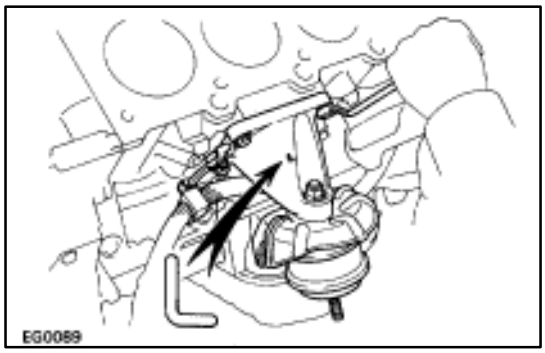

11. INSTALL LH ENGINE MOUNTING BRACKET

(a) Install the mounting bracket with the four bolts.

Torque: 37 N·m (380 kgf·cm, 27 ft·lbf)

HINT: The LH mounting bracket is marked with ”L”.

(b) Install the engine wire to the mounting bracket with the bolt.

WhereEverybodyKnowsYourName

12. INSTALL CYLINDER HEADS
(See pages EM–92 to 115)

13. INSTALL TIMING PULLEYS AND BELT
(See pages EM–48 to 57)

14. REMOVE ENGINE STAND FROM ENGINE

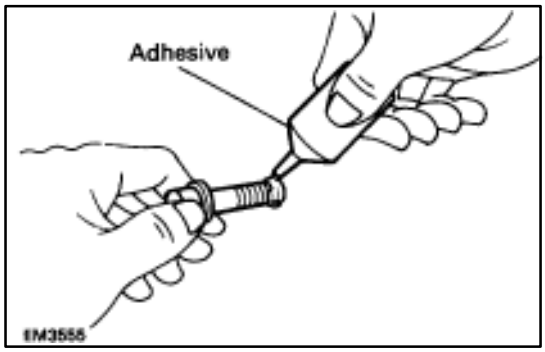

15. INSTALL DRIVE PLATE

(a) Apply adhesive to two or three threads of the mounting bolt end.

Adhesive: Part No.08833–00070, THREE BOND 1324 or equivalent

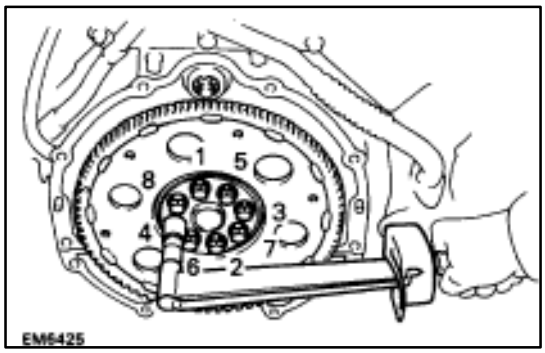

(b) Install the front spacer, drive plate and rear spacer on the crankshaft.

(c) Install and uniformly tighten the eight mounting bolts in several passes in the sequence shown.

Torque: 98 N·m (1,000 kgf·cm, 72 ft·lbf)

ASSEMBLY OF ENGINE AND TRANSMISSION

(See Components on page EM–129)

1. ASSEMBLE ENGINE AND TRANSMISSION
(See AT section)

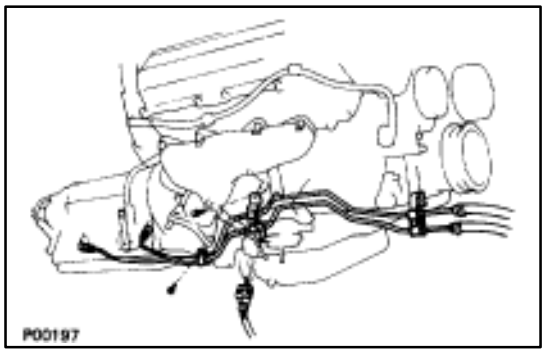

2. INSTALL OIL COOLER PIPE

(a) Temporarily install the two mounting bolts.

(b) Connect the two oil cooler pipes to the unions on the transmission. Tighten the union nuts.

Torque: 34 N·m (350 kgf·cm, 25 ft·lbf)

WhereEverybodyKnowsYourName

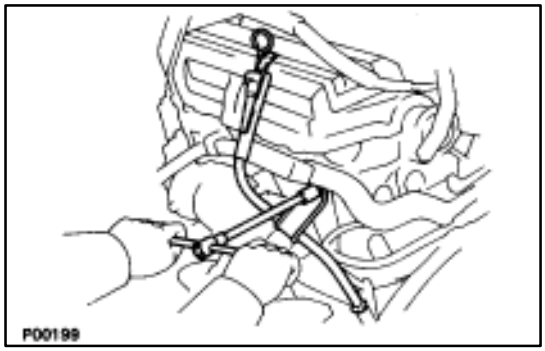

3. INSTALL DIPSTICK GUIDE FOR TRANSMISSION

(a) Install a new O–ring to the dipstick guide.
(b) Apply soapy water to the O–ring.
(c) Connect the dipstick guide end to the tube of the oil pan, and install the dipstick guide with the bolt.
(d) Install the dipstick.

4. CONNECT ENGINE WIRE TO TRANSMISSION

(a) Connect the following connectors:
  (1) O/D direct clutch speed sensor connector
  (2) No.1 speed sensor connector
  (3) No.2 speed sensor connector
  (4) Neutral start switch connector
(b) Install the five wire clamps to the brackets on the transmission.

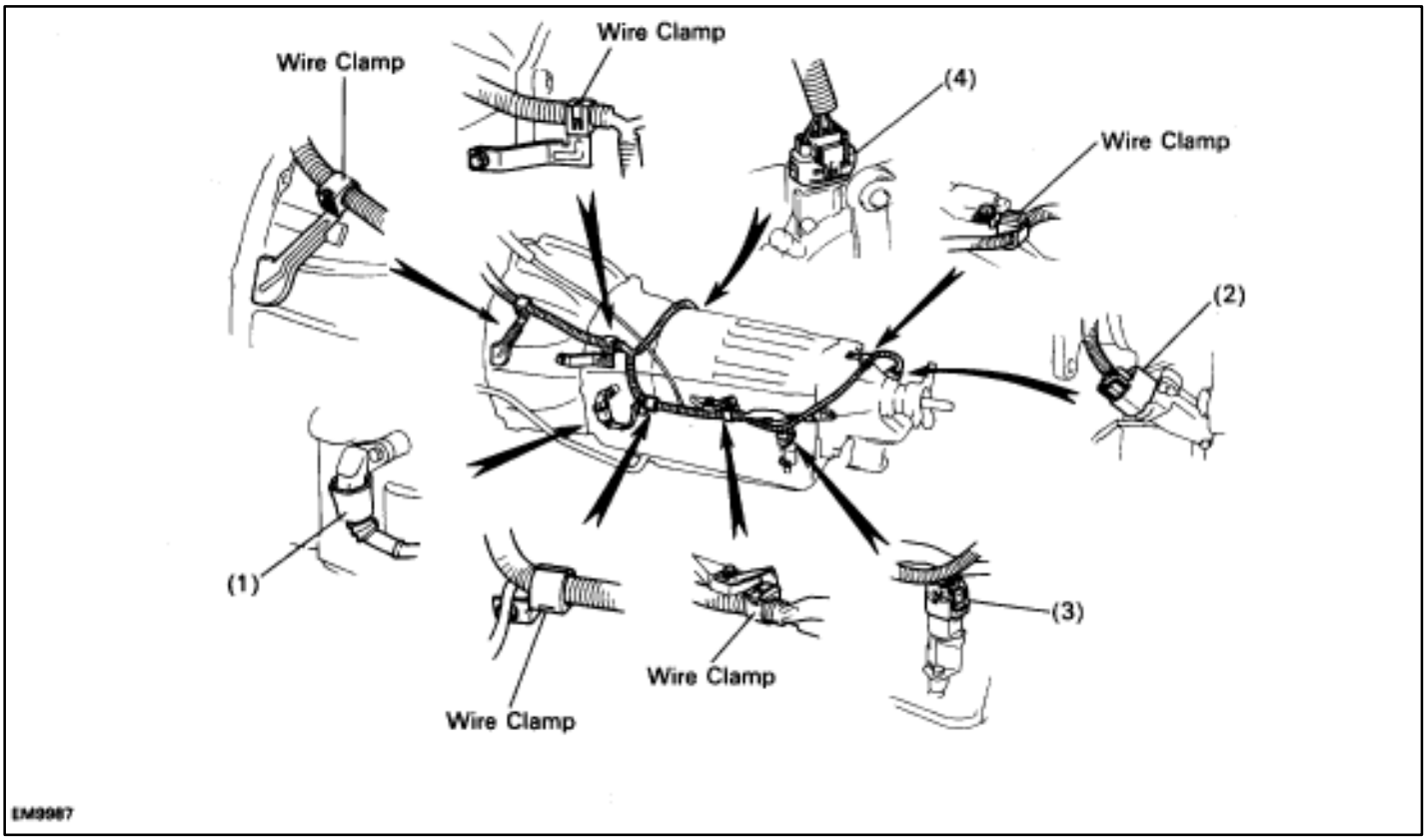

WhereEverybodyKnowsYourName

INSTALLATION OF ENGINE

(See Components on pages EM–116 to 118)

1. INSTALL ENGINE AND TRANSMISSION ASSEMBLY IN VEHICLE

(a) Attach the engine hoist chain to the engine hangers.

(b) Lower the engine and transmission assembly into the engine compartment.

CAUTION: Be careful not to hit the PS gear housing or neutral start switch.

(c) Insert the stud bolts of the front engine mounting brackets into the stud bolt holes of the front suspension crossmember.

(d) Keep the engine level.

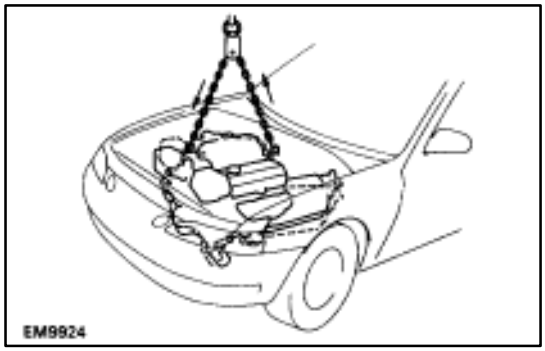

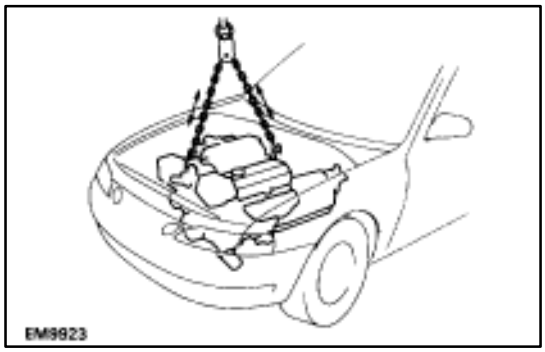

(e) Install the rear engine mounting member with the four bolts and four nuts with the front mark facing forward. Install the ground strap.

Torque: Nut 13 N·m (135 kgf·cm, 10 ft·lbf)
Bolt 25 N·m (260 kgf·cm, 19 ft·lbf)

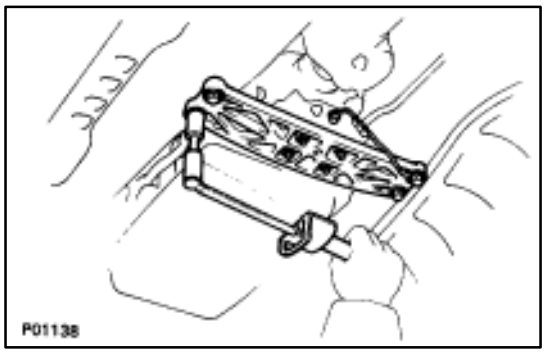

(f) Install the two nuts holding the engine mounting brackets to the front suspension crossmember.

Torque: 59 N·m (600 kgf·cm, 43 ft·lbf)

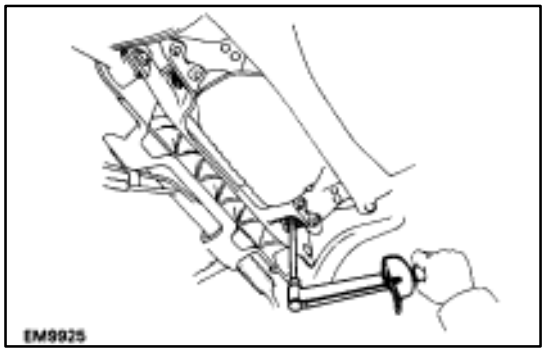

3. CONNECT TRANSMISSION CONTROL ROD

Connect the control rod to the shift lever with the nut.

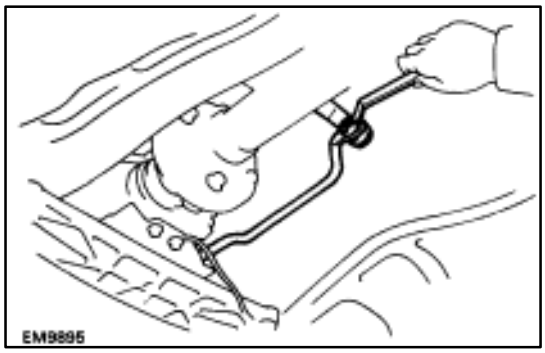

WhereEverybodyKnowsYourName

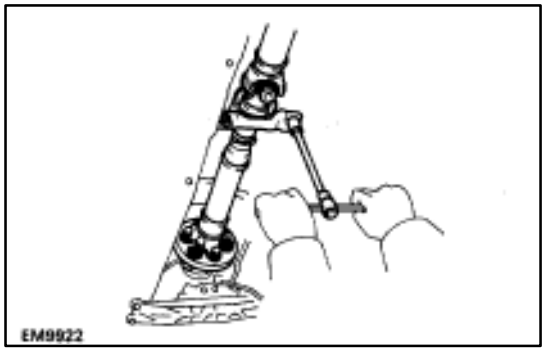

4. INSTALL PROPELLER SHAFT
(See PR section)

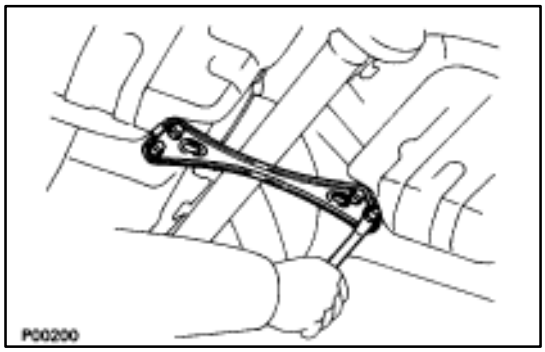

5. INSTALL CENTER FLOOR BRACE
Install the brace with the four nuts.
Torque: 13 N·m (130 kgf·cm, 9 ft·lbf)

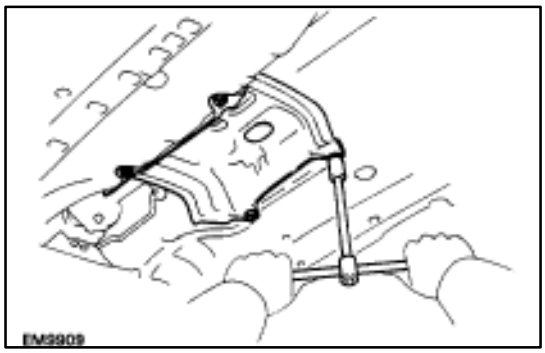

6. INSTALL EXHAUST PIPE HEAT INSULATOR
Install the heat insulator with the four nuts.

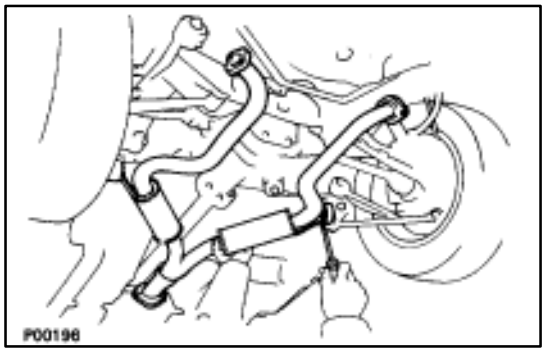

7. INSTALL CENTER EXHAUST PIPE
Install the two hooks of the exhaust pipe to the rings on the exhaust pipe brackets.

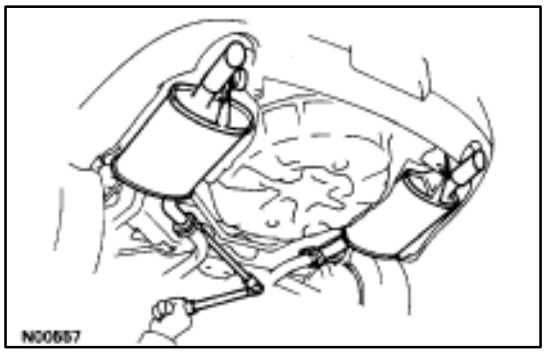

8. INSTALL TAILPIPE
(a) Install the tailpipe hook to the ring on the tailpipe brackets.
(b) Install a new gasket and the tailpipe to the center exhaust pipe with the two bolts. Install the two tailpipe.
Torque: 19 N·m (195 kgf·cm, 14 ft·lbf)

WhereEverybodyKnowsYourName

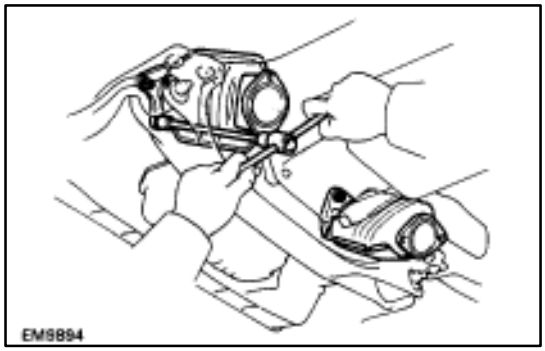

9. INSTALL CATALYTIC CONVERTERS (MAIN)

Install a new gasket and the catalytic converter with three new nuts. Install the two catalytic converters.

Torque: 62 N·m (630 kgf·cm, 46 ft·lbf)

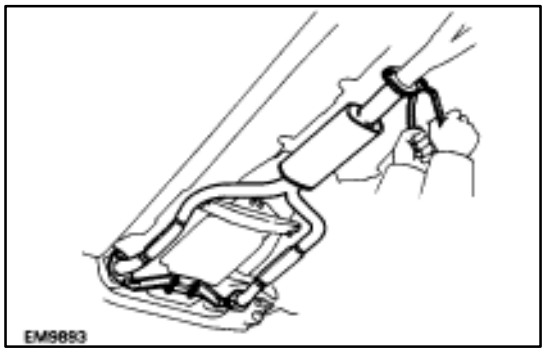

10. INSTALL FRONT EXHAUST PIPE

(a) Temporarily install the pipe support stay with the four bolts.

(b) Install three new gaskets, the exhaust pipe and pipe support stay with the six bolts and nuts.

Torque: 43 N·m (440 kgf·cm, 32 ft·lbf)

(c) Tighten the four bolts holding the pipe support bracket to the transmission.

Torque: 43 N·m (440 kgf·cm, 32 ft·lbf)

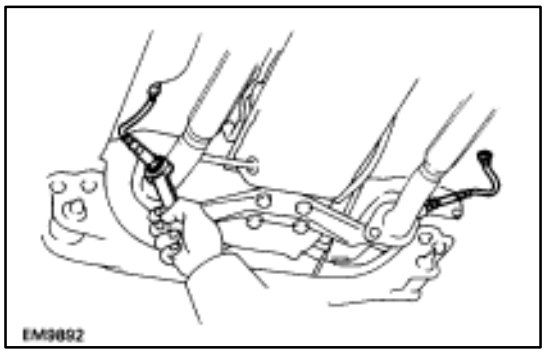

(d) Install the two sub–oxygen sensors to the exhaust pipe.

Torque: 44 N·m (450 kgf·cm, 33 ft·lbf)

HINT:

- Before installing the sub–oxygen sensor, twist the sensor wire counterclockwise 3 1/2 turns.
- After installing the sub–oxygen sensor, check that the sensor wire is not twisted. If it is twisted, remove the sub–oxygen sensor and reinstall it.

(e) Install the wire grommets to the floor.

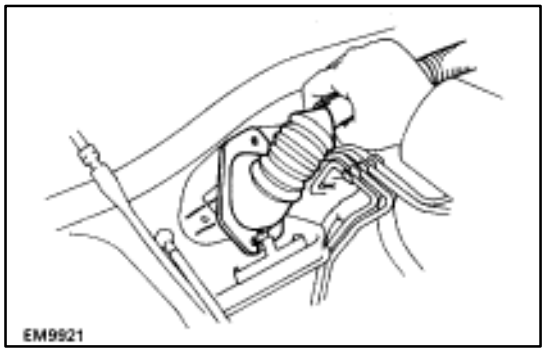

11. CONNECT ENGINE WIRE TO CABIN

(a) Push in the engine wire through the cowl panel.

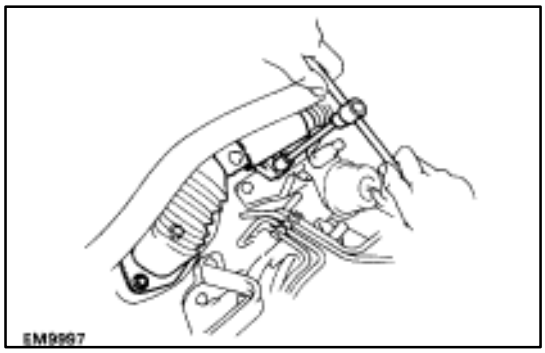

(b) Install the engine wire clamp with the three bolts.

WhereEverybodyKnowsYourName

(c) Connect the following connectors:
  (1) Two connectors to engine & ECT ECU
  (2) Connectors to ABS & TRAC ECU
  (3) Two connectors to TRAC ECU
  (4) Four connectors to connector cassette
  (5) Connector to A/C control assembly

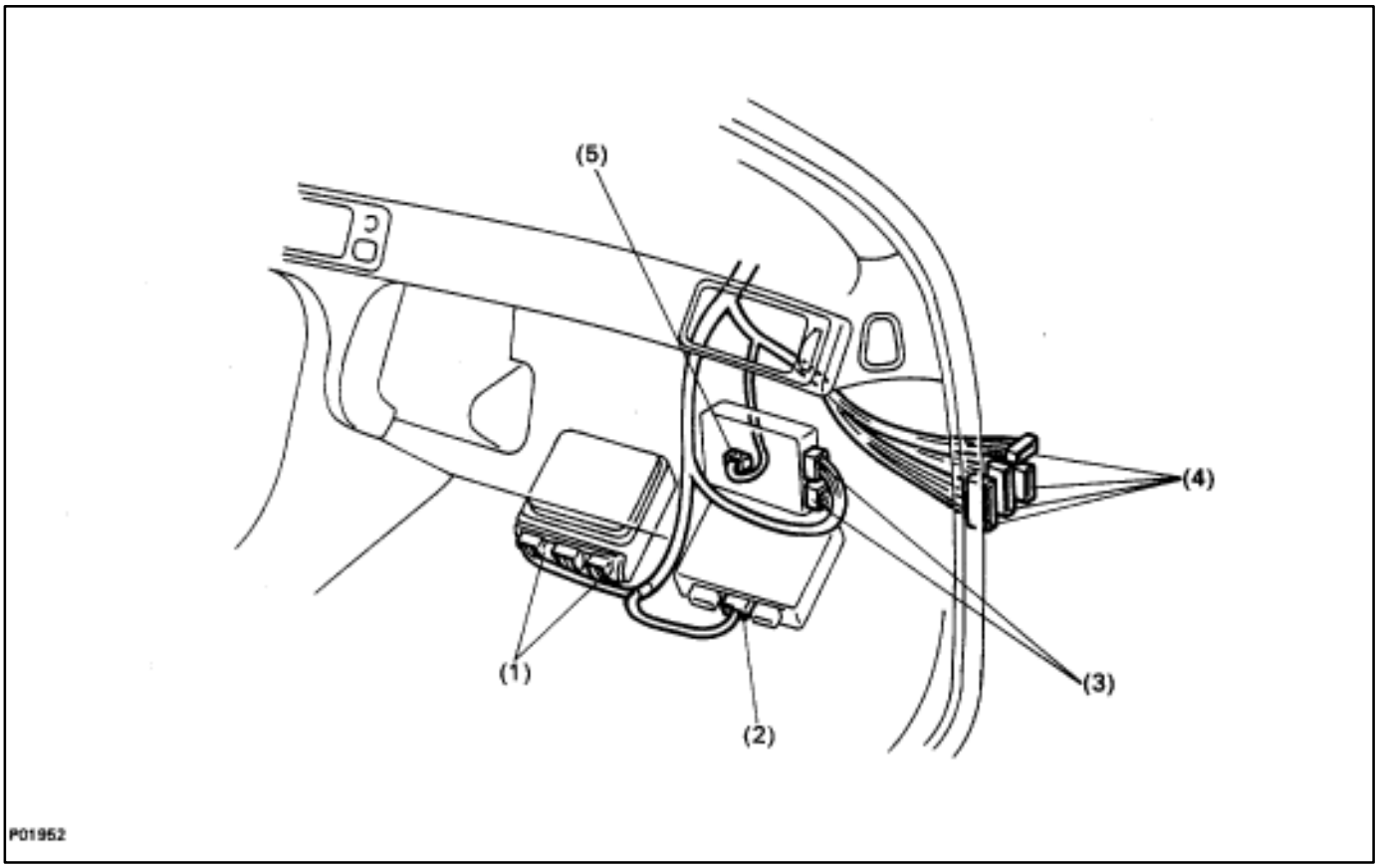

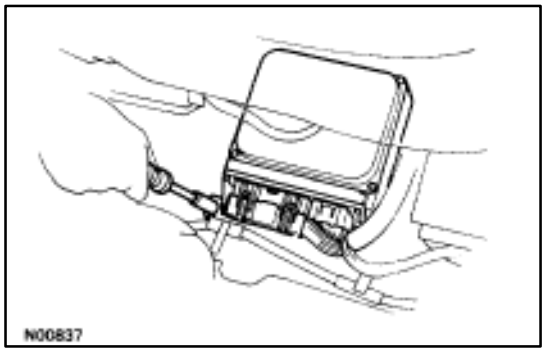

(d) Install the engine & ECT ECU with the nut.

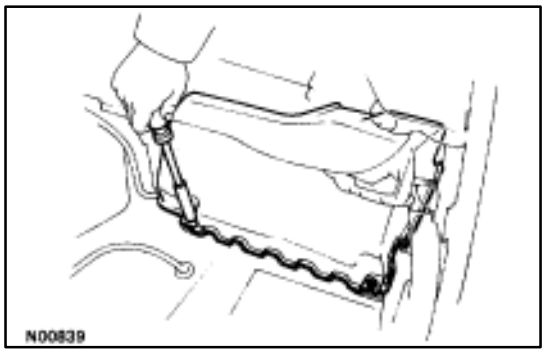

(e) Install the ECU protector with the two nuts.
(f) Install the floor carpet.

WhereEverybodyKnowsYourName

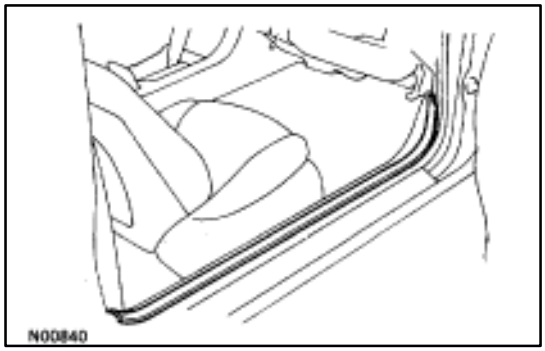

(g) Install the scuff plate.

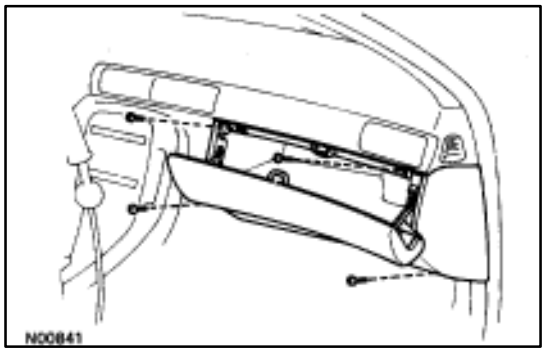

(h) Connect the connectors.
(i) Install the lower instrument panel finish panel and glove compartment door assembly with the four screws.

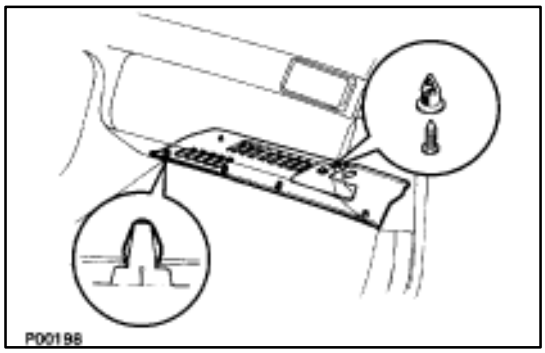

(j) Install the instrument panel under cover with the two clips.

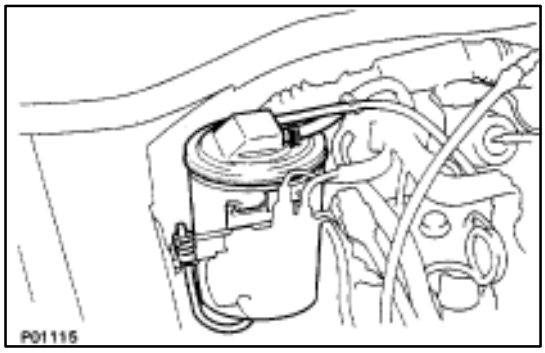

12. INSTALL CHARCOAL CANISTER

(a) Install the charcoal canister.
(b) Connect the vacuum hose and air hose to the charcoal canister.

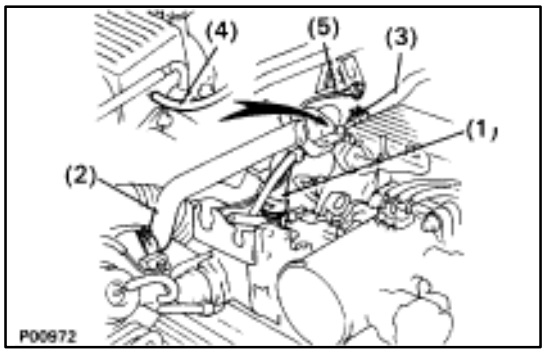

13. CONNECT HOSES

Connect the following hose and ground strap:

(1) Heater water hose to water by–pass pipe
(2) Heater water hose to heater water valve
(3) Vacuum hose to brake booster union on air intake chamber
(4) Vacuum hose (from VSV for heater water valve) to air intake chamber
(5) Ground strap to bracket on body

WhereEverybodyKnowsYourName

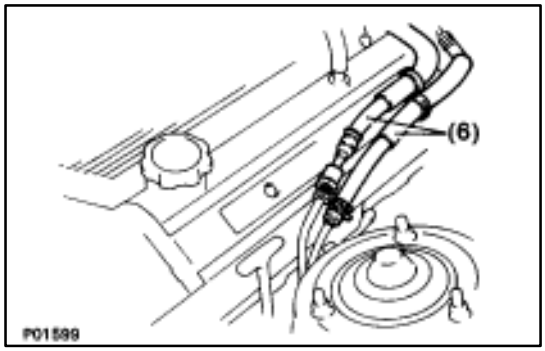

(6) Two fuel hoses to fuel tubes

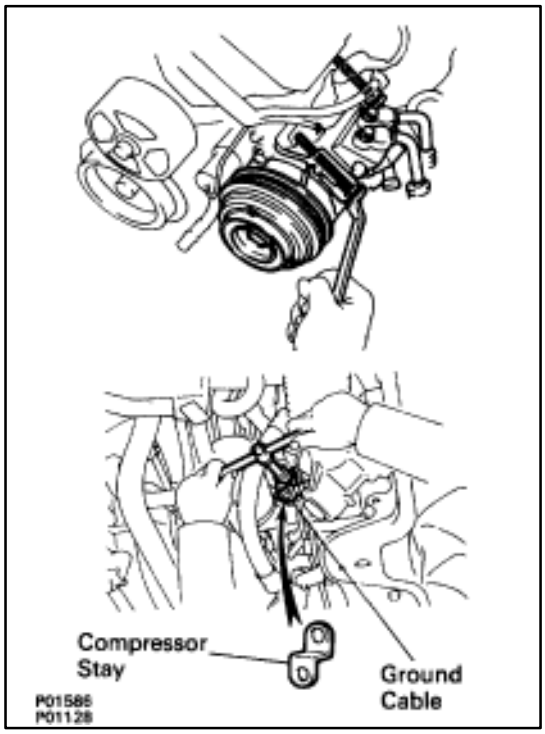

14. INSTALL A/C COMPRESSOR

(a) Install the A/C compressor, compressor stay and ground cable with the nut and three bolts.

Torque: Bolt 49 N·m (500 kgf·cm, 36 ft·lbf)
Nut 29 N·m (300 kgf·cm, 22 ft·lbf)

(b) Connect the A/C compressor connector.

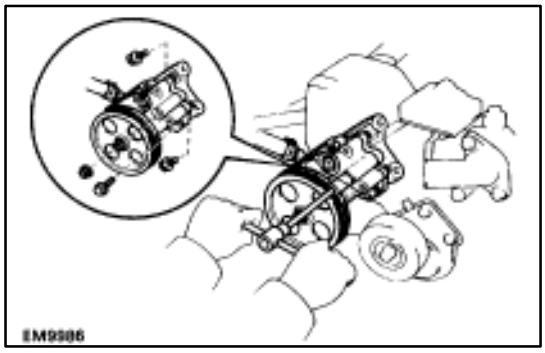

15. INSTALL PS PUMP

Install the PS pump with the three bolts and nut. Alternately tighten the bolts and nut.

Torque: Bolt 39 N·m (400 kgf·cm, 29 ft·lbf)
Nut 43 N·m (440 kgf·cm, 32 ft·lbf)

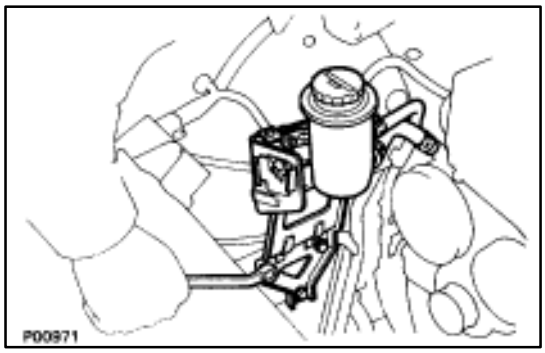

16. INSTALL PS RESERVOIR TANK AND BRACKET

Install the reservoir tank and bracket assembly with the three bolts.

WhereEverybodyKnowsYourName

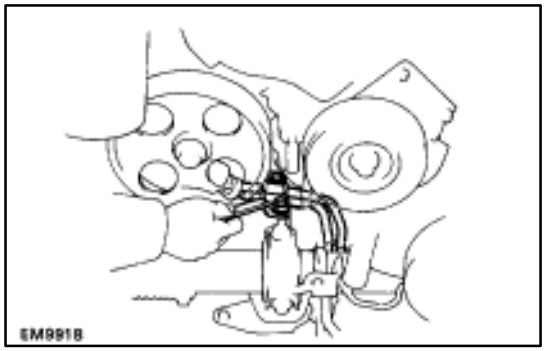

17. INSTALL PS TUBES

Install the PS tube clamp with the bolt.

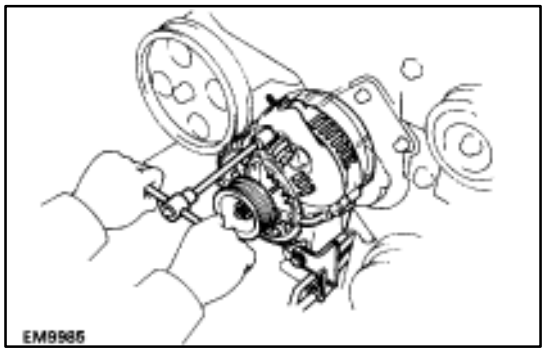

18. INSTALL ALTERNATOR

(a) Install the alternator and A/T oil cooler pipe bracket with the bolt and nut.

Torque: 37 N·m (380 kgf·cm, 27 ft·lbf)

(b) Connect the alternator connector.

(c) Connect the alternator wire with the nut and cap.

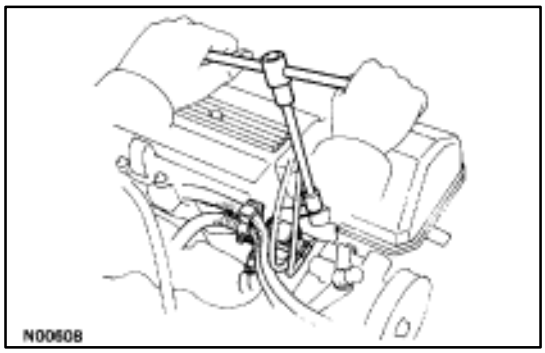

19. INSTALL WIRE CLAMP (FOR ALTERNATOR) AND VSV (FOR EVAP SYSTEM)

(a) Install the wire clamp to the VSV bracket.

(b) Install the VSV with the two bolts.

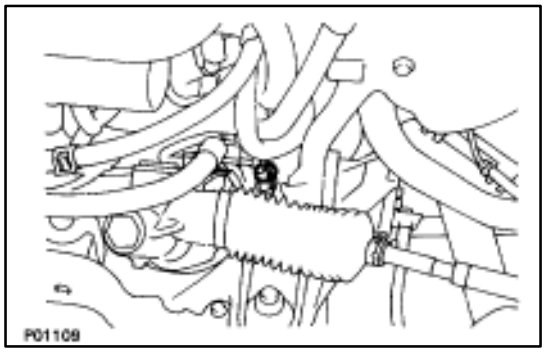

20. CONNECT PS SOLENOID VALVE CONNECTOR

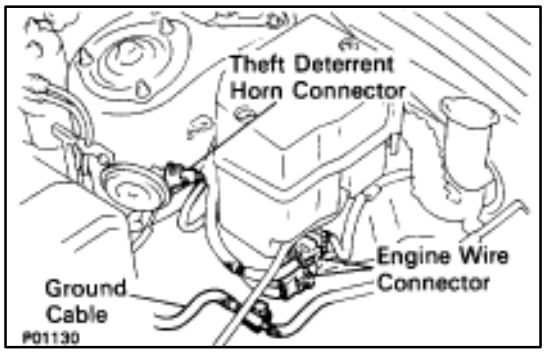

21. CONNECT ENGINE WIRE CONNECTORS

22. CONNECT THEFT DETERRENT HORN CONNECTOR

23. INSTALL GROUND CABLE TO BODY

WhereEverybodyKnowsYourName

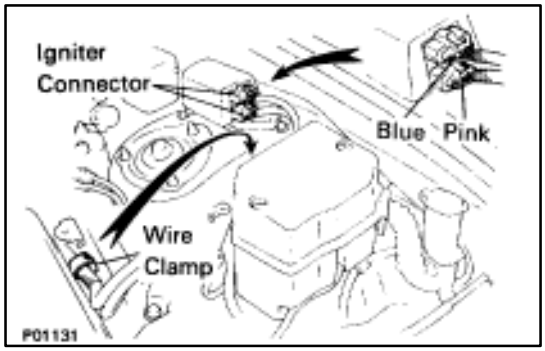

24. CONNECT IGNITER CONNECTOR

(a) Connect the two igniter connectors.

(b) Install the wire clamp.

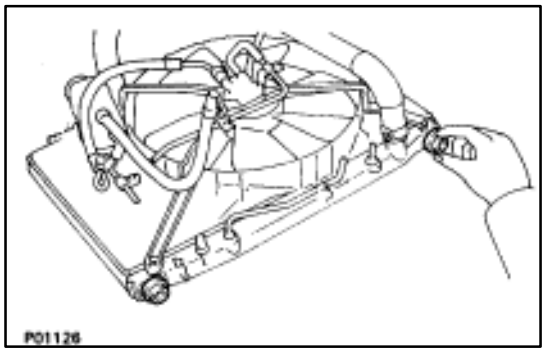

25. INSTALL RADIATOR

(a) Install the two lower radiator supports to the radiator.

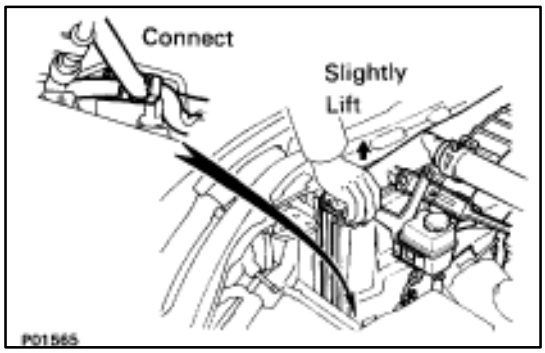

(b) Place the radiator on the body bracket.

(c) Slightly lift the radiator, and connect the two cooler hose (for cooling fan) to the hose clamp on the radiator fan shrould.

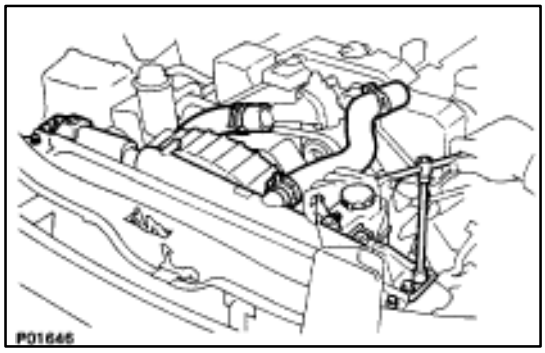

(d) Install the upper radiator support with the two bolts and screw. Install the two upper radiator supports.

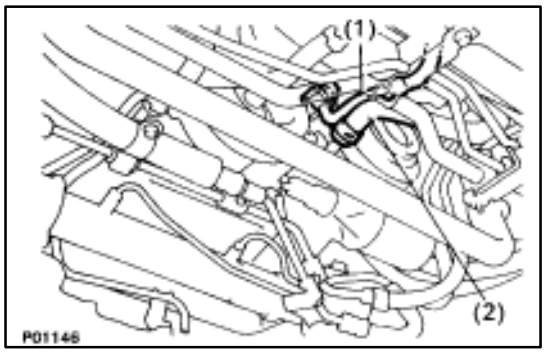

(e) Connect the following hoses:

(1) Pressure hose to hydraulic pump

(2) Suction hose to hydraulic pump

WhereEverybodyKnowsYourName

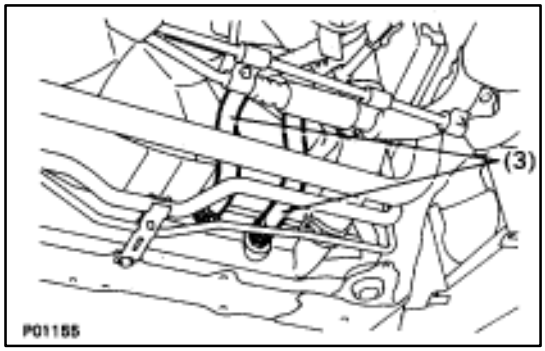

(3) Two oil cooler hoses (for A/T) to radiator

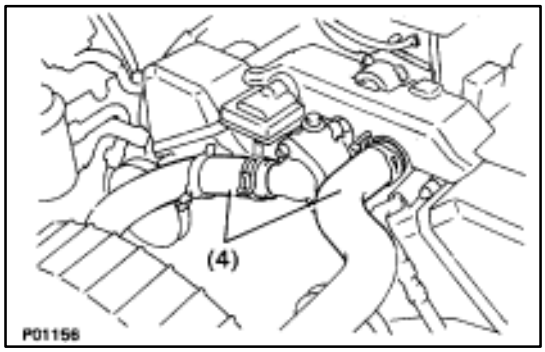

(4) Two radiator hoses

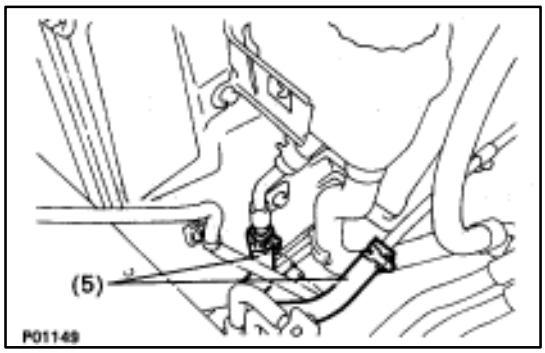

(5) Two oil cooler hoses (for cooling fan) to pipes

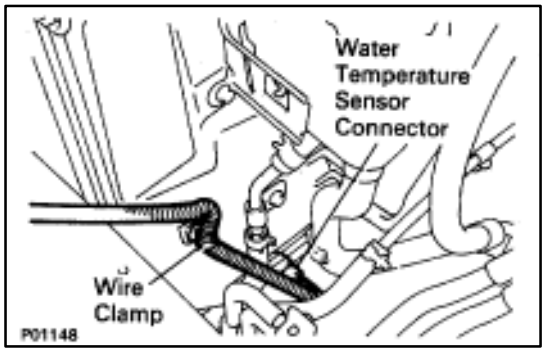

(f) Connect the water temperature sensor connector.
(g) Install the wire clamp (for water temperature sensor) to the radiator fan shrould.

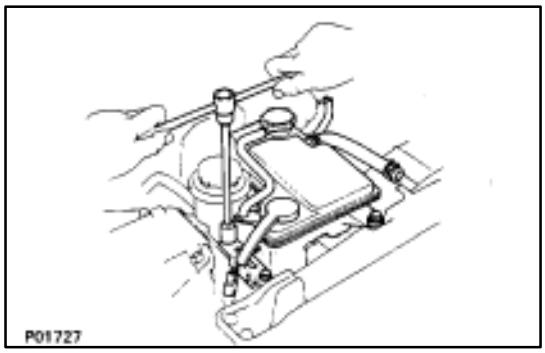

26. INSTALL RADIATOR RESERVOIR TANK

(a) Install the reservoir tank to the reservoir tank bracket.
(b) Install the reservoir tank bracket with the two bolts.

WhereEverybodyKnowsYourName

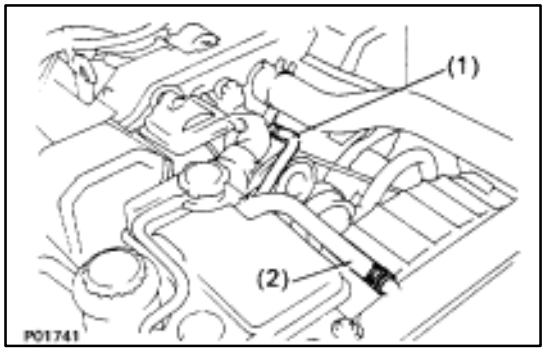

(c) Connect the following hoses:
  (1) Reservoir hose to water inlet housing
  (2) Reservoir hose to radiator
(d) Connect the coolant level sensor connector.

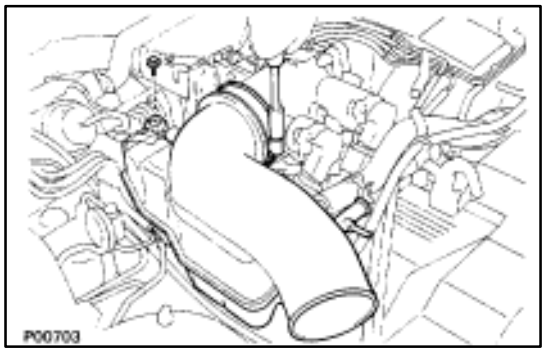

27. INSTALL INTAKE AIR CONNECTOR
(a) Connect the intake air connector to the throttle body.
(b) Install the hose clamp and mounting bolt.

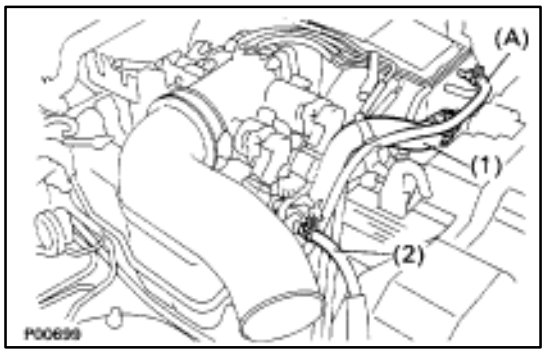

(c) Connect the following hoses:
  (1) Air hose to ISC valve
  (2) Air hose (from PS air control valve) to air intake chamber

28. CONNECT VACUUM HOSE (A) (FROM PS AIR CONTROL VALVE) TO AIR INTAKE CHAMBER

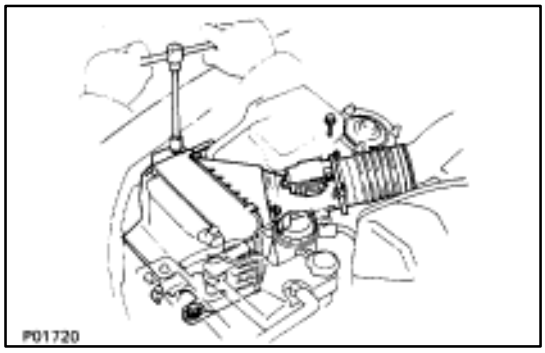

29. INSTALL AIR CLEANER AND AIR FLOW METER
(a) Connect the air cleaner case to the air duct.
(b) Connect the air cleaner hose to the intake air connector.
(c) Install the four mounting bolts and hose clamp.
(d) Connect the air flow meter connector.

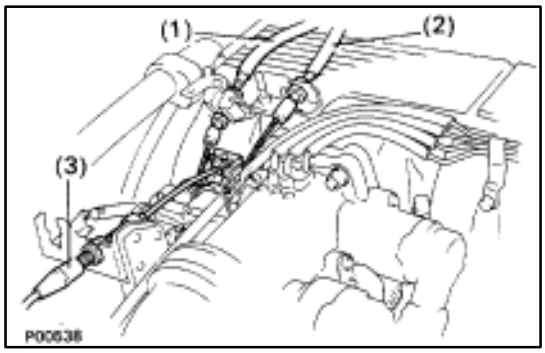

30. CONNECT CONTROL CABLES TO THROTTLE BODY
Connect the following cables:
  (1) Accelerator cable
  (2) A/T throttle cable
  (3) (w/ Cruise Control System)
  Cruise control actuator cable

WhereEverybodyKnowsYourName

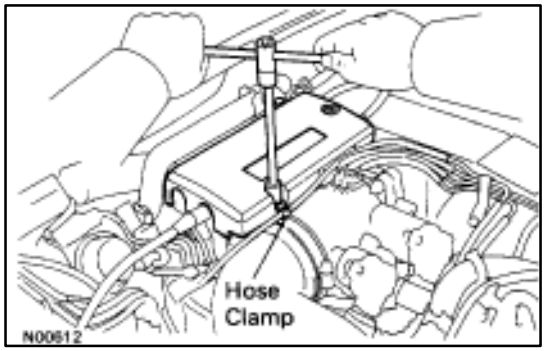

31. INSTALL THROTTLE BODY COVER

Install the throttle body cover and hose clamp with the two bolts and cap nut.

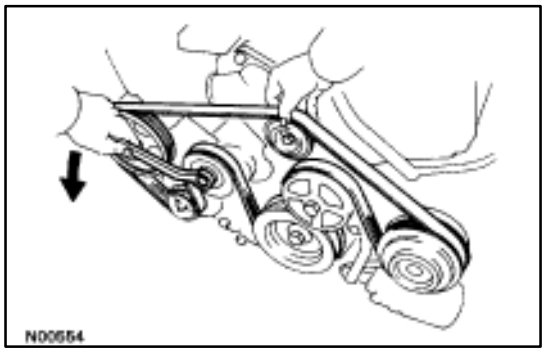

32. INSTALL DRIVE BELT

Install the drive belt by turning the drive belt tensioner counterclockwise.

HINT: The pulley bolt for the belt tensioner has a left–hand thread.

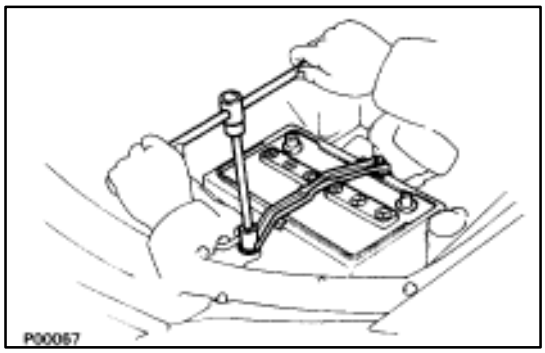

33. INSTALL BATTERY

34. FILL WITH ENGINE COOLANT (See page CO–7)

35. FILL COOLING FAN RESERVOIR TANK WITH FLUID (See page CO–23)

36. FILL WITH ENGINE OIL (See page LU–7)

Capacity:

Drain and refill

w/Oil filter change

4.8 liters (5.1 US qts, 4.2 Imp. qts)

w/o Oil filter change

4.5 liters (4.8 US qts, 4.0 Imp. qts)

Dry fill 6.0 liters (6.3 US qts, 5.3 Imp. qts)

37. START ENGINE AND CHECK FOR LEAKS

38. CHECK AUTOMATIC TRANSMISSION FLUID LEVEL

39. CHECK IGNITION TIMING (See page IG–28)

Ignition timing:

8–12° BTDC @ idle

(w/ Terminals TE1 and E1 connected)

40. INSTALL ENGINE UNDER COVER

41. INSTALL HOOD

42. PERFORM ROAD TEST

Check for abnormal noise, shock, slippage, correct shift points and smooth operation.

32. RECHECK ENGINE COOLANT AND ENGINE OIL LEVELS

WhereEverybodyKnowsYourName

ENGINE MECHANICAL

NOTE: The specification descriptions ”**USA Spec.**” and ”**Exc. USA Spec.**” used in this section indicate the following specifications.
USA Spec.: USA (50 States) Specifications.
Exc. USA Spec.: USA (except California) and Canadian Specifications.

WhereEverybodyKnowsYourName

DESCRIPTION

The 1 UZ–FE engine is an V–8 4.0 liter DOHC 32 valve engine.

OPERATION

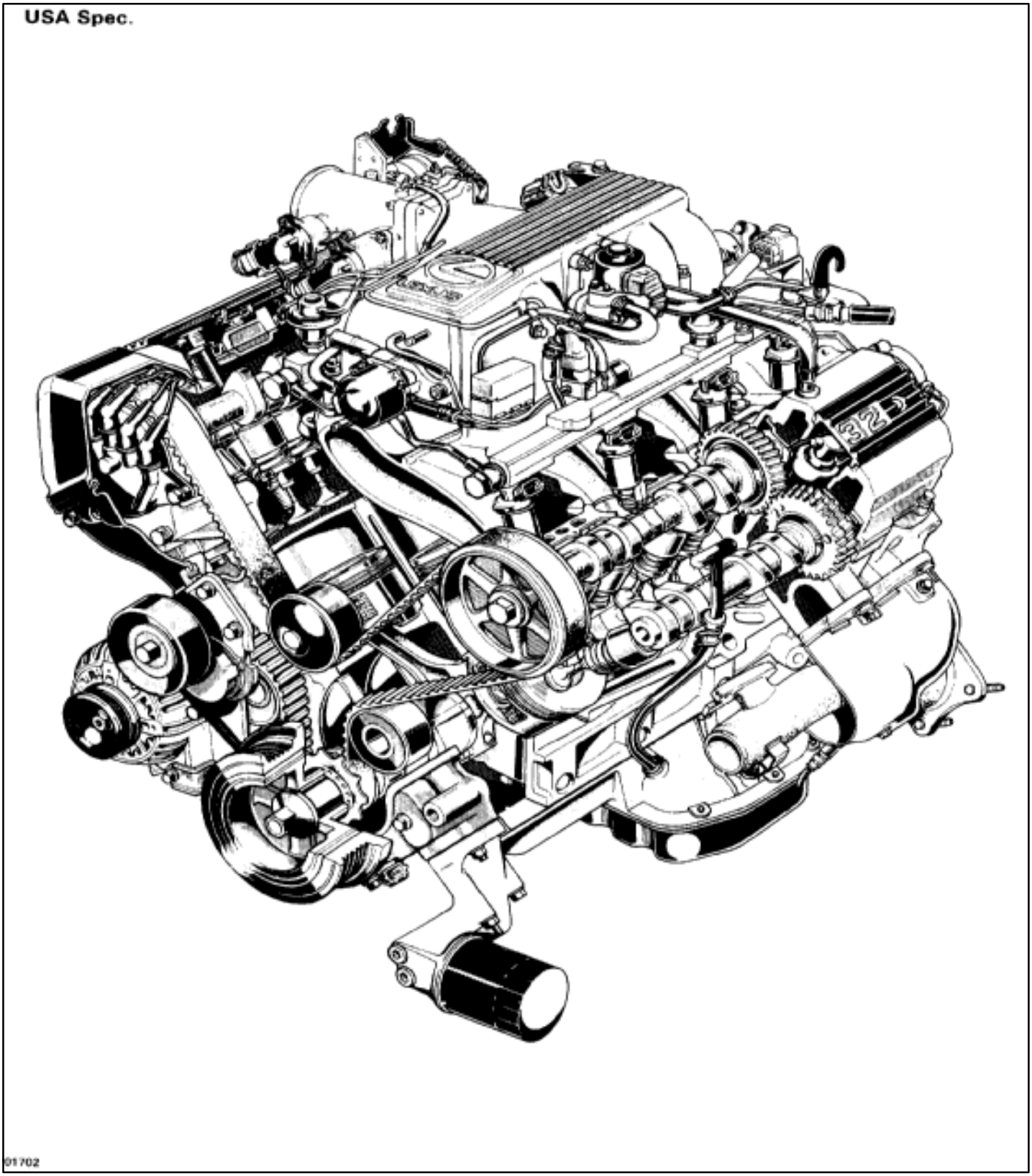

WhereEverybodyKnowsYourName

DESCRIPTION

The 1 UZ–FE engine is an V–8 4.0 liter DOHC 32 valve engine.

OPERATION

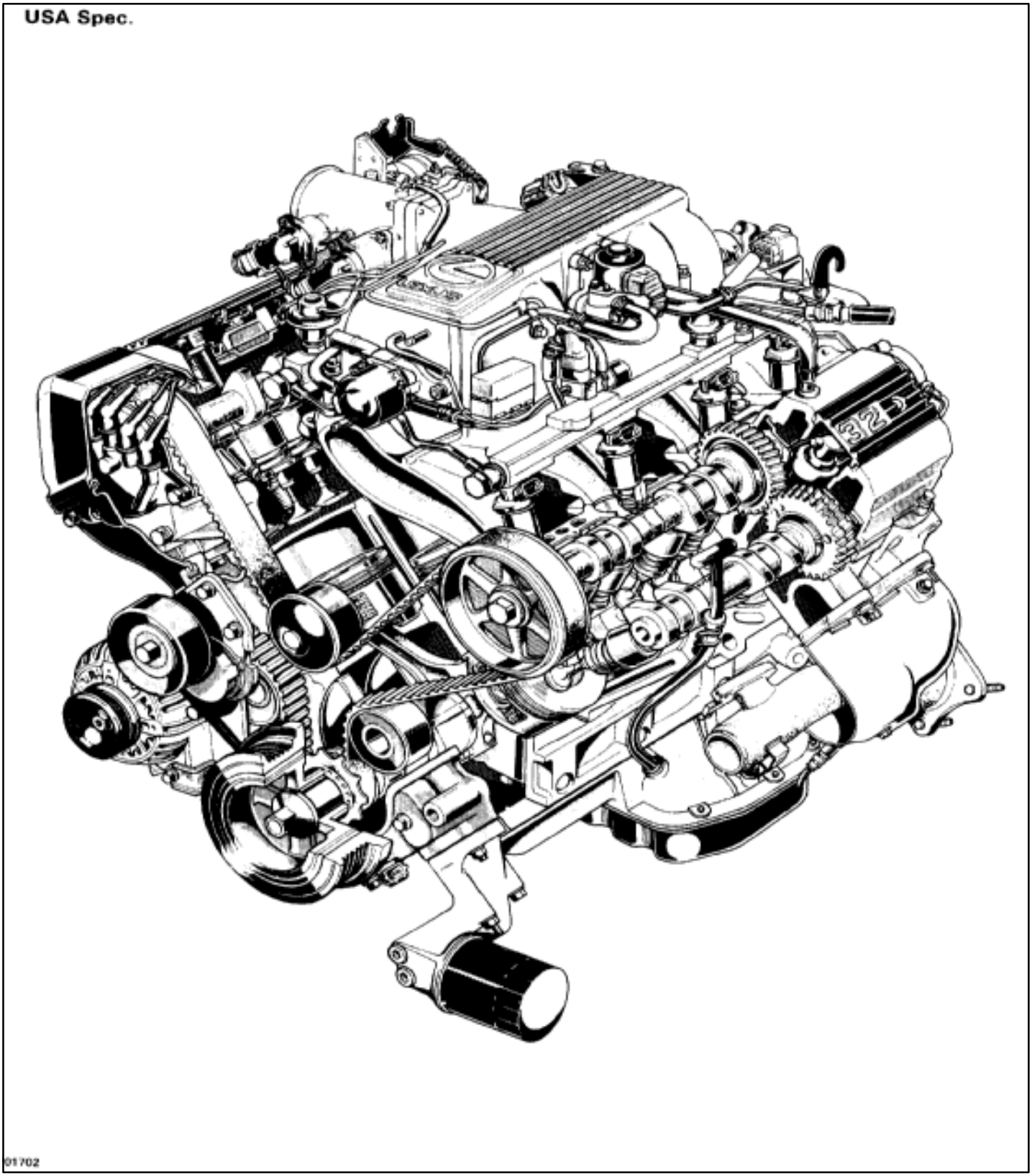

WhereEverybodyKnowsYourName

Exc. USA Spec.

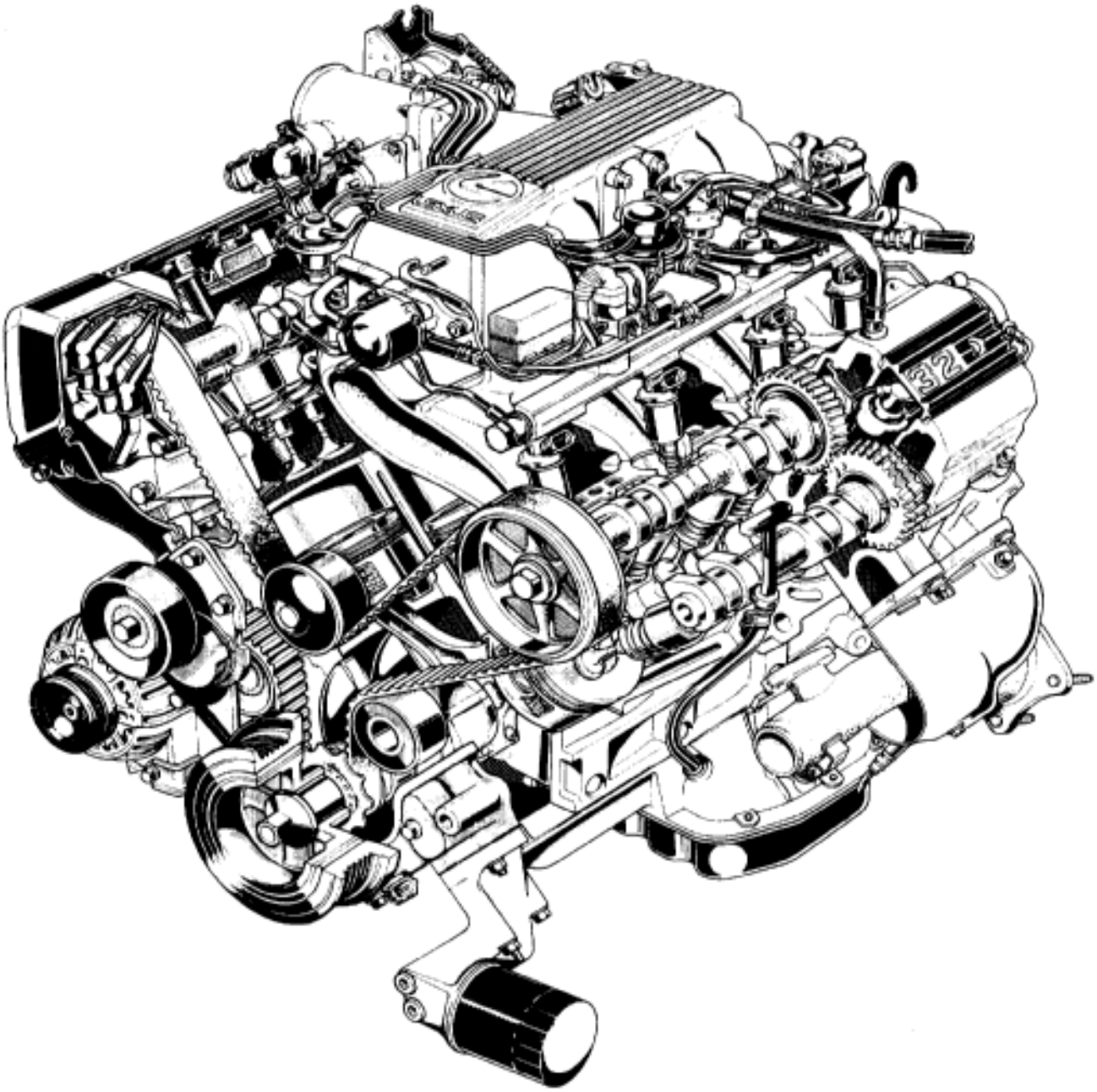

01703

WhereEverybodyKnowsYourName

The 1 UZ–FE engine has 8–cylinders in a V–arrangement at a bank angle of 90°. From the front of the RH bank cylinders are numbered 2–4–6–8, and from the front of the LH bank cylinders are numbered 1 –3–5–7. The crankshaft is supported by 5 bearings specified by the inside of the crankcase. These bearings are made of a copper and lead alloy.

The crankshaft is integrated with 8 weights which are cast along with it for balancing. Oil holes are built into the center of the crankshaft for supplying oil to the connecting rods, pistons and other components.

The ignition order is 1–8–4–3–6–5–7–2. The cylinder head is made of aluminum alloy, with a cross flow type intake and exhaust layout and with pent–roof type combustion chambers. The spark plugs are located in the center of the combustion chambers.

At the front and rear of the intake manifold, a water passage has been provided which connects the RH and LH cylinder heads.

Exhaust and intake valves are equipped with irregular pitch springs made of special valve spring carbon steel which are capable of following no matter what the engine speed.

The RH and LH intake camshafts are driven by a single timing belt, and a gear on the intake camshaft engages with a gear on the exhaust camshaft to drive it. The camshaft journal is supported at 5 (intake) or 4 (exhaust) places between the valve lifters of each cylinder and on the front end of the cylinder head. Lubrication of the cam journal gear is accomplished by oil being supplied through the oiler port in the center of the camshaft.

Adjustment of the valve clearance is done by means of an outer shim type system, in which valve adjusting shims are located above the valve lifters. This permits replacement of the shims without removal of the camshafts.

Pistons are made of high temperature–resistant aluminum alloy, and a depression is built into the piston head to prevent interference with valves.

Piston pins are the full–floating type, with the pins fastened to neither the piston boss nor the connecting rods. Instead, snap rings are fitted on both ends of the pins, preventing the pins from falling out.

The No.1 compression ring is made of steel and the No.2 compression ring is made of cast iron. The oil ring is made of a combination of steel and stainless steel. The outer diameter of each piston ring is slightly larger than the diameter of the piston and the flexibility of the rings allows them to hug the cylinder walls when they are mounted on the piston. Compression rings No.1 and No.2 work to prevent the leakage of gas from the cylinder and the oil ring works to scrape oil off the cylinder walls to prevent it from entering the combustion chamber.

The cylinder block is made of aluminum alloy with a bank angle of 90°. Cast iron cylinders are installed inside the cylinder block. It has 8 cylinders which are approximately twice the length of the piston stroke. The top of each cylinder is closed off by the cylinder heads and the lower end of the cylinders becomes the crankcase, in which the crankshaft is installed. In addition, the cylinder block contains a water jacket, through which coolant is pumped to cool the cylinders.

The No.1 and No.2 oil pans are bolted onto the bottom of the cylinder block. The No.1 oil pan is made of aluminum alloy. The No.2 oil pan is an oil reservoir made of pressed steel sheet. An oil level sensor is installed in the No.1 oil pan (If the oil level drops below a set level, a warning light lights up.). A oil pan baffle plate keeps sufficient oil in the bottom of the No.2 oil pan even when the vehicle is tilted. This dividing plate also prevents the oil from making waves when the vehicle is stopped suddenly and the oil shifts away from the oil pump suction pipe.

Plastic region tightening bolts are used for the cylinder head, main bearing cap and connecting rod.

WhereEverybodyKnowsYourName

PREPARATION

SST (SPECIAL SERVICE TOOLS)

Illustration	Part No.	Part Name	Note
	09201–70010	Valve Guide Bushing Remover & Replacer	
	09202–70010	Valve Spring Compressor	
	09213–31021	Crankshaft Pulley Puller	
	09213–54015	Crankshaft Pulley Holding Toll	
	(91651–60855)	(Bolt)	
	09213–60017	Crankshaft Pulley & Gear Puller Set	
	(09213–00020)	(Body with Bolt)	
	(09213–00030)	(Handle)	
	(09213–00040)	(Attachment Set)	
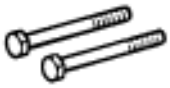	(09213–00050)	(Bolt Set)	
	09222–30010	Connecting Rod Bushing Remover & Replacer	
	09223–15030	Oil Seal and Bearing Replacer	Crankshaft rear oil seal
	09248–55020	Valve Clearance Adjust Tool Set	
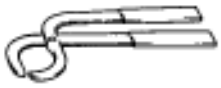	(09248–05011)	(Valve Lifter Press)	

WhereEverybodyKnowsYourName

SST (SPECIAL SERVICE TOOLS) (Cont'd)

Illustration	Part No.	Part Name	Note
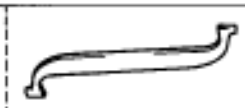	(09248–05021)	(Valve Lifter Stopper)	
	09278–54012	Drive Shaft Holding Tool	Crankshaft timing pulley
	09316–60010	Transmission & Transfer Bearing Replacer	
	(09316–00010)	(Replacer Pipe)	Crankshaft front oil seal and camshaft oil seal
	(09316–00050)	(Replacer "D")	Camshaft oil seal
	09325–20010	Transmission Oil Plug	M/T (W58) only
	09325–40010	Transmission Oil Plug	A/T (A340E) only
	09330–00021	Companion Flange Holding Tool	Crankshaft pulley
	09608–30022	Front Hub Bearing Replacer Set	
	(09608–05010)	(Handle)	Crankshaft rear oiil seal
	09816–30010	Oil Pressure Switch Socket	Knock sensor and oil pressure switch

RECOMMENDED TOOLS

	09043–50100	10 mm Bi–Hexagon wrench	Cylinder head bolt
	09044–00020	Torx Socket E10	A/C compressor mounting through bolt

WhereEverybodyKnowsYourName

RECOMMENDED TOOLS (Cont'd)

Illustration	Part No.	Part Name	Note
	09090–04010	Engine Sling Device	For suspending engine
	09200–00010	Engine Adjust Kit	
	09258–00030	Hose Plug Set	Plug for the vacuum hose. fuel hose etc.

EQUIPMENT

Part Name	Note
Caliper gauge	
CO/HC analyzer	
Compression gauge	Cylinder compression pressure
Connecting rod aligner	
Cylinder gauge	
Dial indicator	
Engine tune–up tester	
Feeler gauge	
Micrometer	
Straight edge	
Spring tester	Valve spring
Steel square	Valve spring
Torque wrench	
Vernier caliper	

SSM (SPECIAL SERVICE MATERIALS)

Part Name	Part No.	Use etc.
Seal packing or equivalent	08826–00080	Camshaft bearing cap, Cylinder head cover, Rear oil seal retainer and Oil pump
Adhesive 1324, THREE BOND 1324 or equivalent	08833–00070	Drive plate mounting bolt
Adhesive 1344, THREE BOND 1344, LOCTITE 242 or equivalent	08833–00080	Idler pulley mounting bolt

WhereEverybodyKnowsYourName

PREPARATION

SST (SPECIAL SERVICE TOOLS)

Illustration	Part No.	Part Name	Note
	09011-38121	12 mm Socket Wrench for 12 Pointed Head	Connecting rod bolt
	09201-41020	Valve Stem Oil Seal Replacer	
	09201-70010	Valve Guide Bushing Remover & Replacer	
	09202-70010	Valve Spring Compressor	
	09213-31021	Crankshaft Pulley Puller	
	09213-60017	Crankshaft Pulley & Gear Puller Set	
	(09213-00050)	(Bolt Set)	
	09213-70010	Crankshaft Pulley Holding Tool	
	09222-30010	Connecting Rod Bushing Remover & Replacer	
	09223-46011	Crankshaft Front Oil Seal Replacer	Crankshaft timing pulley Crankshaft pulley Camshaft oil seal
	09223-56010	Crankshaft Rear Oil Seal Replacer	
	09248-55011	Valve Clearance Adjust Tool Set	
	(09248-05011)	(Valve Lifter Press)	
	(09248-05021)	(Valve Lifter Stopper)	
	09278-54012	Drive Shaft Holding Tool	Camshaft timing pulley

WhereEverybodyKnowsYourName

SST (SPECIAL SERVICE TOOLS) (Cont'd)

Illustration	Part No.	Part Name	Note
	09316-60010	Transmission & Transfer Bearing Replacer	
	(09316-00010)	(Replacer Pipe)	Crankshaft front oil seal
	09330-00021	Companion Flange Holding Tool	Crankshaft pulley
	09550-10012	Replacer Set "B"	
	(09552-10010)	(No. 2 Replacer Handle)	Spark plug tube gasket
	(09560-10010)	(Knuckle Outer Bearing Replacer)	Spark plug tube gasket
	09612-24014	Steering Gear Housing Overhaul Tool Set	
	(09617-24011)	(Steering Rack Wrench)	Fuel inlet hose
	09816-30010	Oil Pressure Switch Socket	Knock sensor

RECOMMENDED TOOLS

Illustration	Part No.	Part Name	Note
	09090-04010	Engine Sling Device	For suspending engine
	09200-00010	Engine Adjust Kit	
	09258-00030	Hose Plug Set	Plug for vacuum hose, fuel hose etc.
	09904-00010	Expander Set	

WhereEverybodyKnowsYourName

EQUIPMENT

Part Name	Note
Caliper gauge	
HC/CO meter	
Compression gauge	Cylinder compression pressure
Connecting rod aligner	
Cylinder gauge	
Dial indicator	
Engine turn–up tester	
Feeler gauge	
Micrometer	
Precision straight edge	
Spring tester	Valve spring
Steel square	Valve spring
Torque wrench	
Vernier caliper	

SSM (SPECIAL SERVICE MATERIALS)

Part Name	Part No.	Use etc.
Seal packing or equivalent	08826–00080	Camshaft bearing cap Cylinder head semi–circular plug Cylinder head cover Rear oil seal retainer Oil pump
Seal packing 1282B, Three bond 1282B or equivalent	08826–00100	Water inlet housing Water seal plate Water pump
Adhesive 1324, Three bond 1324 or equivalent	08833–00070	Drive plate mounting bolt
Adhesive 1344, Three bond 1344, Loctite 242 or equivalent	08833–00080	No.1 idler pulley mounting bolt

WhereEverybodyKnowsYourName

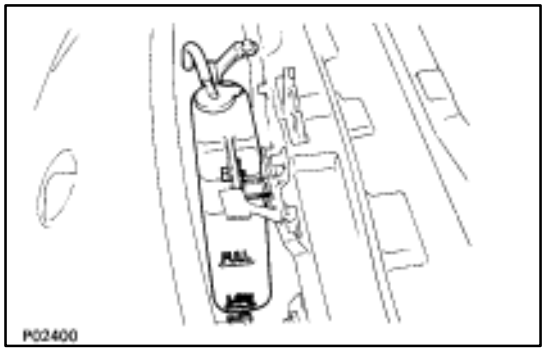

ENGINE TUNE–UP

INSPECTION OF ENGINE COOLANT

1. INSPECT ENGINE COOLANT LEVEL AT RESERVOIR TANK

The engine coolant level should be between the LOW and FULL lines.

If low, check for leaks and add engine coolant up to the FULL line.

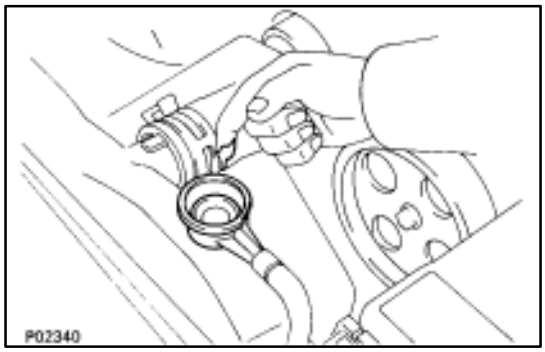

2. INSPECT ENGINE COOLANT QUALITY

There should not be any excessive deposits of rust or scales around the radiator cap or reservoir tank filler hole, and the engine coolant should be free from oil.

If excessively dirty, clean the engine coolant passages and flush the cooling system.

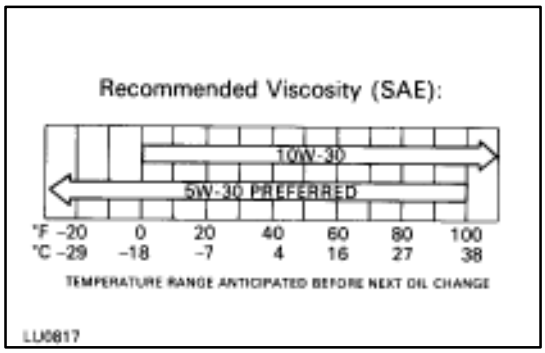

INSPECTION OF ENGINE OIL

1. INSPECT ENGINE OIL QUALITY

Check the oil for deterioration, presence of water, discoloring or thinning.

If the quality is poor, replace the oil.

Oil grade: API grade SG, Energy–Conserving II multi-grade. Recommended viscosity is as shown, with SAE 5W–30 being the preferred engine oil.

Drain and refill oil capacity:

w/ Oil filter change

4.8 liter (5.1 US qts, 4.2 Imp. qts)

w/o Oil filter change

4.5 liter (4.8 US qts, 4.0 Imp. qts)

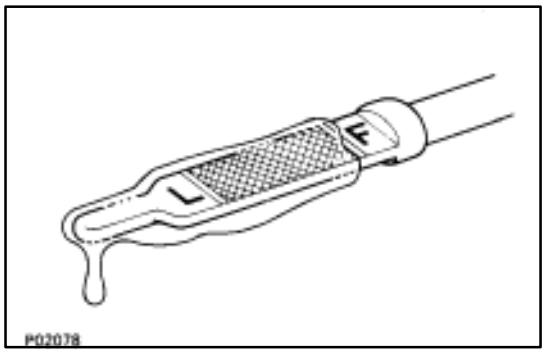

2. INSPECT ENGINE OIL LEVEL

The oil level should be between the ”L” and ”F” marks on the dipstick.

If low, check for leakage and add oil up to ”F” mark.

WhereEverybodyKnowsYourName

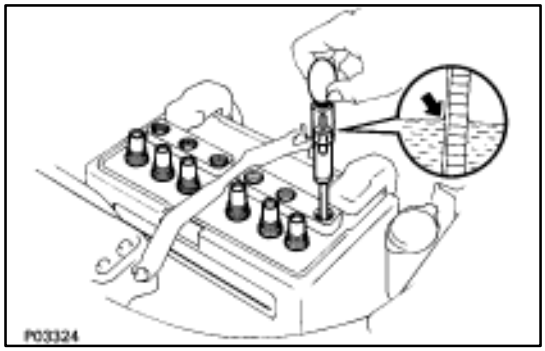

INSPECTION OF BATTERY

1. INSPECT BATTERY SPECIFIC GRAVITY AND ELECTROLYTE LEVEL

(a) Check the specific gravity of each cell.

Standard specific gravity:

1.250–1.270 when fully charged at 20°C (68°F)

If not within specification, charge the battery.

(b) Check the electrolyte level of each cell.

If insufficient, refill with distilled (or purified) water.

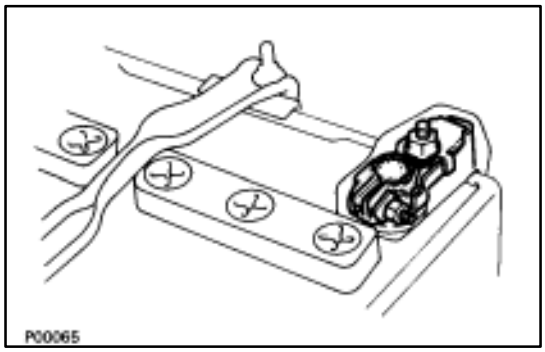

2. CHECK BATTERY TERMINALS

Check the battery terminals for looseness or corrosion.

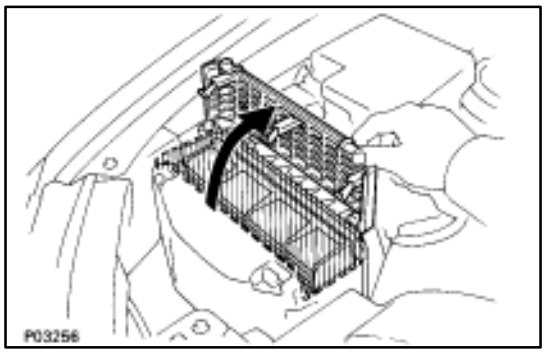

INSPECTION AND CLEANING OF AIR FILTER

1. REMOVE AIR FILTER

(a) Open the air cleaner cap.

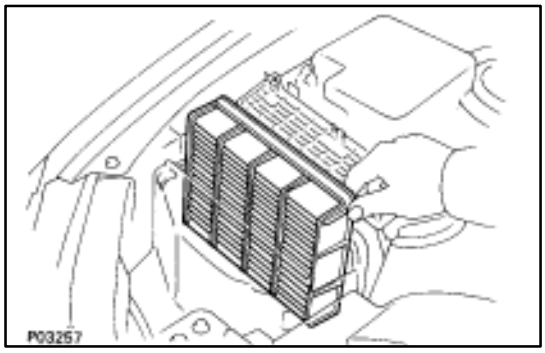

(b) Remove the air filter.

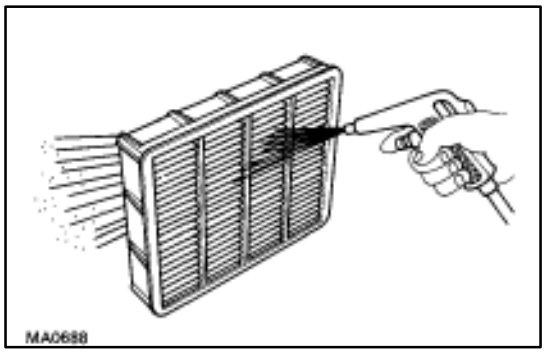

2. INSPECT AIR FILTER

(a) Visually check that the air filter is not excessively damaged or oily.

(b) Clean the air filter with compressed air. First blow from the inside thoroughly, then blow off the outside of the air filter.

3. REINSTALL AIR FILTER

WhereEverybodyKnowsYourName

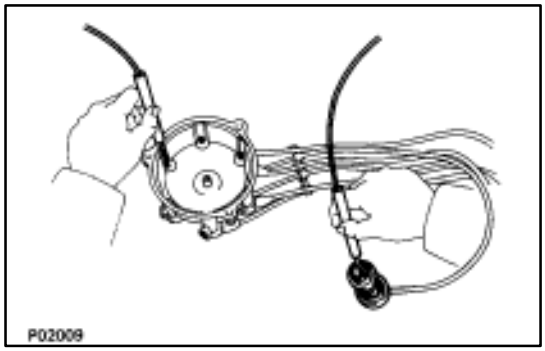

INSPECTION OF HIGH–TENSION CORDS

INSPECT HIGH–TENSION CORD RESISTANCE

(See page IG–7)

Maximum resistance: 25 K? per cord

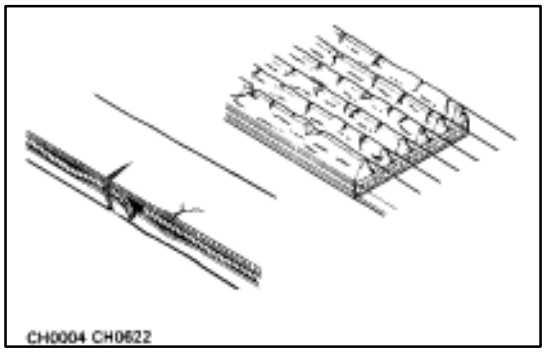

INSPECTION OF DRIVE BELT

INSPECT DRIVE BELT

HINT: A belt tensioner is used, so checking the belt tension is not necessary.

(a) Visually check the drive belt for excessive wear, frayed cords etc.

If necessary, replace the drive belt.

HINT: Cracks on rib side of a drive belt are considered acceptable. If the drive belt has chunks missing from the ribs, it should be replaced.

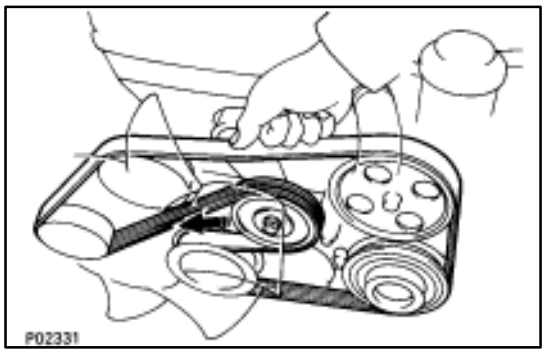

(b) Check the belt tensioner operation.

- Check that the belt tensioner moves downward when the drive belt is pressed down at the points indicated in the illustration with approx. 98 N (10 kgf, 22.0 lbf) of force.
- Check the alignment of the belt tensioner pulley to make sure the drive belt has not slipped off the pulley.

If necessary, replace the belt tensioner.

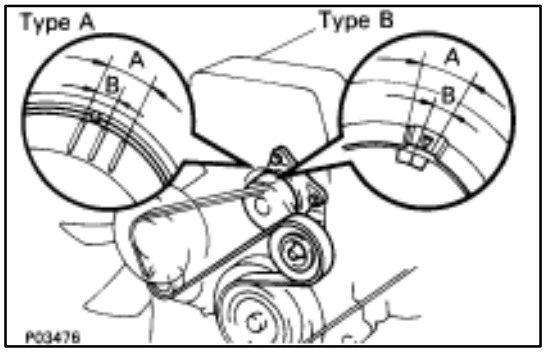

- Check that the arrow mark on the belt tensioner falls within area A of the scale.

If it is outside area A, replace the drive belt.

HINT:

- When a new belt is installed, it should lie within area B. If not, the drive is not correct.

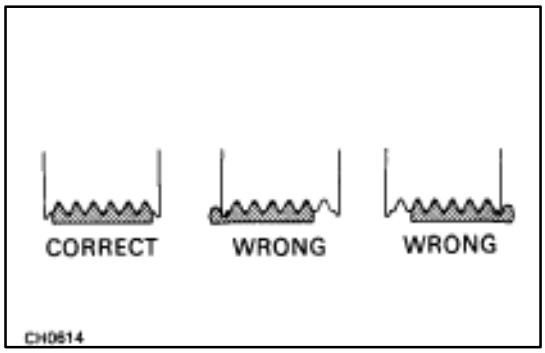

- After installing a belt, check that it fits properly in the ribbed grooves.
- Check by hand to confirm that the belt has not slipped out of the groove on the bottom of the pulley.

WhereEverybodyKnowsYourName

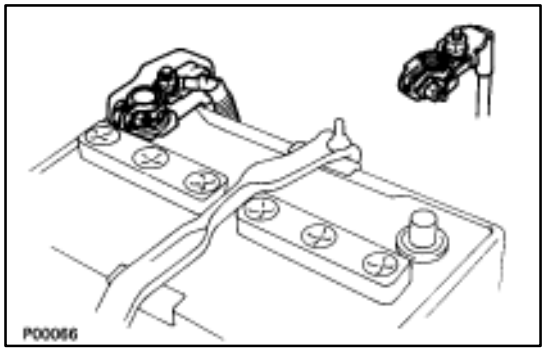

INSPECTION AND ADJUSTMENT OF VALVE CLEARANCE

HINT: Inspect and adjust the valve clearance when the engine is cold.

1. DISCONNECT CABLE FROM NEGATIVE TERMINAL OF BATTERY

CAUTION: Turn the ignition switch to ”LOCK”. Disconnect the cable from the negative (–) terminal of the battery. Wait at least 20 seconds before procceding with work.

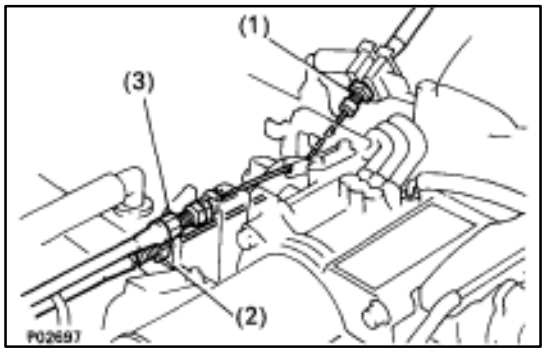

2. DISCONNECT CONTROL CABLES FROM THROTTLE BODY

Disconnect the following cables:

(1) Accelerator cable
(2) (A/T) Throttle control cable
(3) Cruise control actuator cable

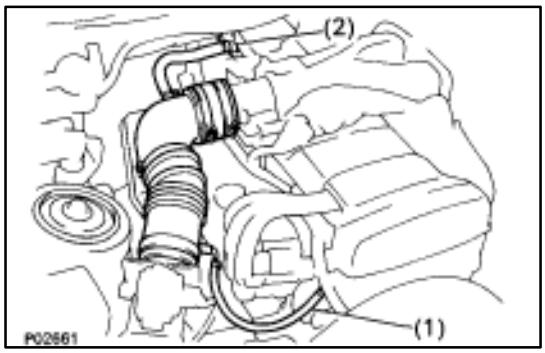

3. REMOVE AIR CLEANER HOSE

(a) Disconnect the following hoses:
(1) PS air hose from No. 4 timing belt cover
(2) PCV hose from No. 2 cylinder head cover

(b) Loosen the two hose clamps and remove the air cleaner hose.

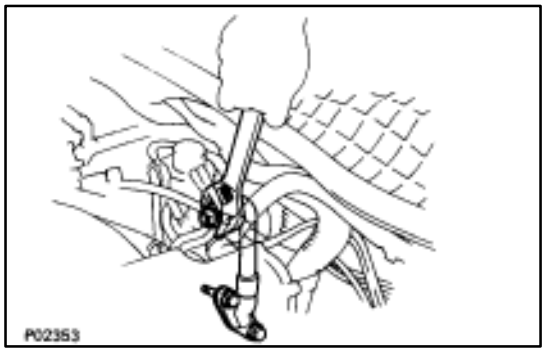

4. REMOVE EGR PIPE

(a) Loosen the union nut.
(b) Remove the two bolts, EGR pipe and gasket.

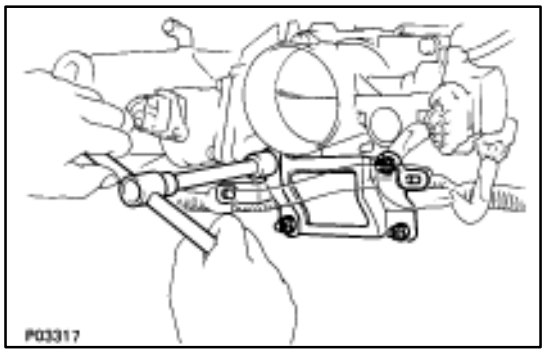

5. REMOVE THROTTLE BODY BRACKET

Remove the four nuts and throttle body bracket.

WhereEverybodyKnowsYourName

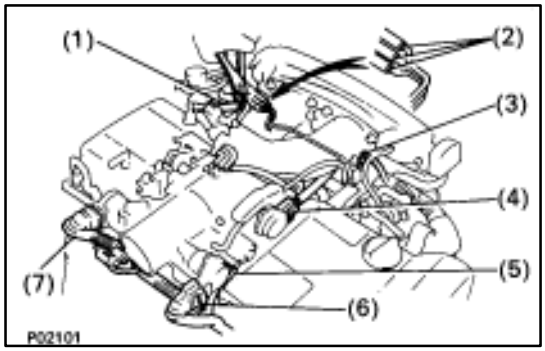

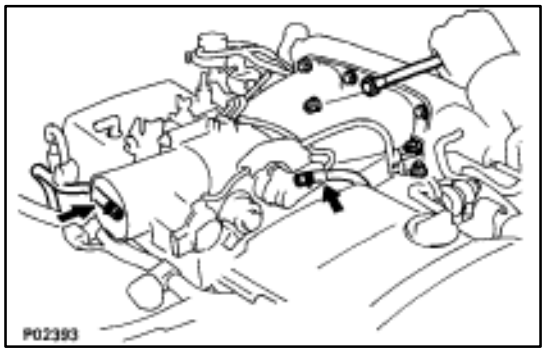

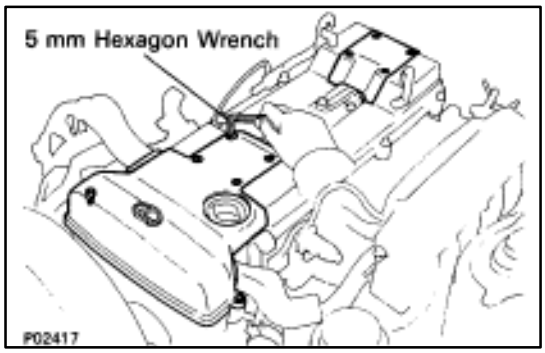

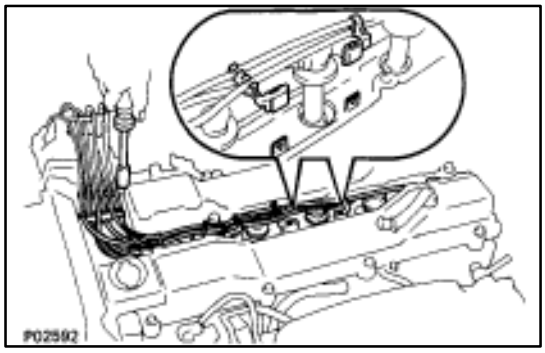

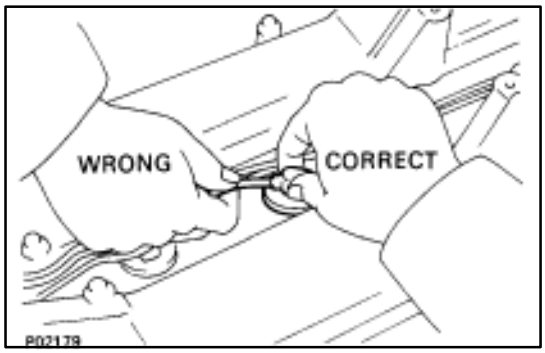

6. REMOVE THROTTLE BODY WITH INTAKE AIR CONNECTOR

(a) Disconnect the following hoses and connectors:
- (1) PCV hose
- (2) Three vacuum hoses
- (3) VSV (for EGR) connector
- (4) Throttle position sensor connector
- (5) IAC valve connector
- (6) (w/ TRAC)
  Sub–throttle position sensor connector
- (7) (w/ TRAC)
  Sub–throttle actuator connector
- (8) (USA spec. only)
  EGR gas temperature sensor connector

(b) Remove the four bolts and two nuts holding the intake air connector to the intake chamber.

(c) Remove the VSV nut.

(d) Disconnect the two water by–pass hoses from the throttle body. Plug the hose ends.

(e) Remove the throttle body with the intake air connector and gasket.

7. REMOVE NO. 3 TIMING BELT COVER AND CYLINDER HEAD REAR COVER

(a) Remove the oil filler cap.

(b) Using a 5 mm hexagon wrench, remove the ten bolts, No. 3 timing belt cover and cylinder head rear cover.

8. DISCONNECT HIGH–TENSION CORDS FROM SPARK PLUGS

(a) Remove the bolt holding the cord clamp from the cylinder head.

(b) Disconnect the two high–tension cord clamps from the No. 3 cylinder head cover.

(c) Disconnect the high–tension cords at the rubber boot. Do not pull on the cords.

NOTICE: Pulling on or bending the cords may damage the conductor inside.

WhereEverybodyKnowsYourName

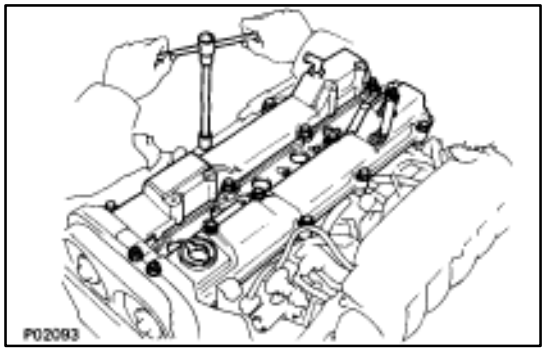

9. REMOVE NO. 3, NO. 1 AND NO. 2 CYLINDER HEAD COVERS

(a) Remove the 12 bolts and four nuts.

(b) Remove the cylinder head covers and gaskets.

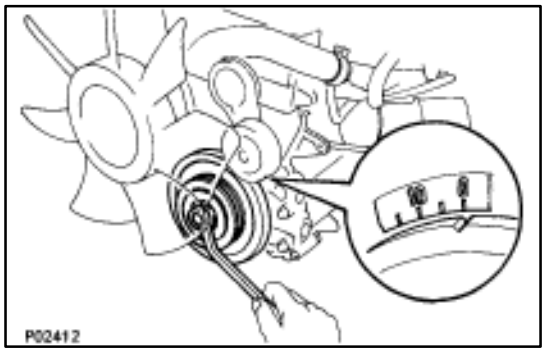

10. SET NO. 1 CYLINDER TO TDC/COMPRESSION

(a) Turn the crankshaft pulley and align its groove with timing mark ”0” of the No. 1 timing belt cover.

NOTICE: Always turn the crankshaft clockwise.

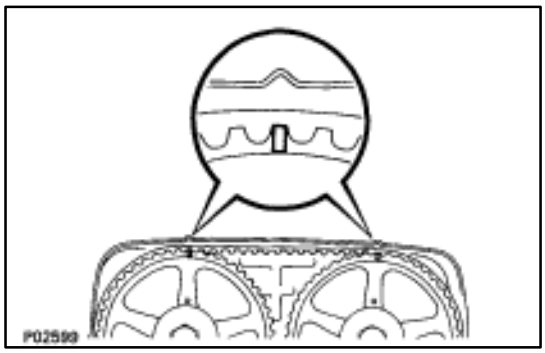

(b) Check that the timing marks of the camshaft timing pulleys are aligned with the timing marks of the No. 4 timing belt cover.

If not, turn the crankshaft one revolution (360°).

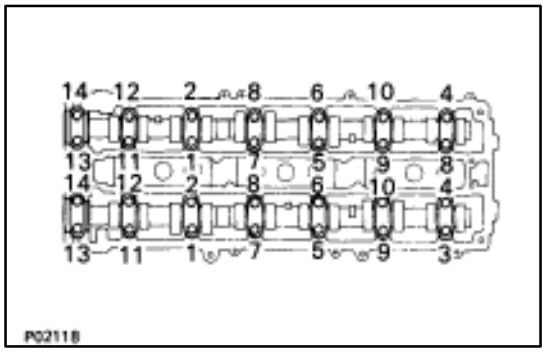

11. INSPECT VALVE CLEARANCE

(a) Uniformly tighten the bearing cap bolts in several passes.

Torque: 20 N·m (200 kgf·cm, 14 ft·lbf)

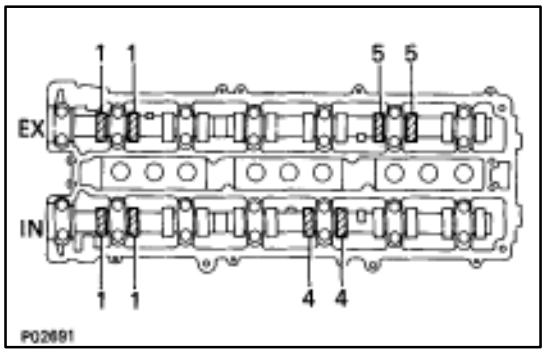

(b) Check only those valves indicated in the illustration.

- Using a feeler gauge, measure the clearance between the valve lifter and camshaft.
- Record the valve clearance measurements of those that are out of specification. They will be used later to determine the required replacement adjusting shim.

Valve clearance (Cold):

Intake 0.15–0.25 mm (0.006–0.010 in.)

Exhaust 0.25–0.35 mm (0.010–0.014 in.)

WhereEverybodyKnowsYourName

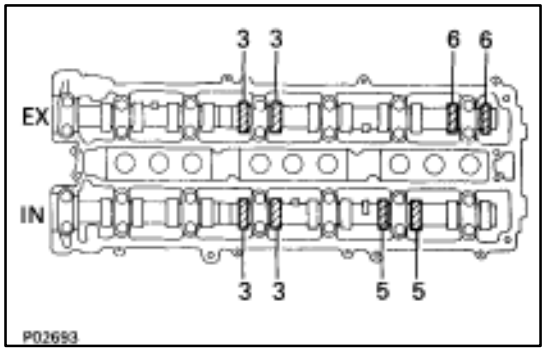

(c) Turn the crankshaft 2/3 of a revolution (240▼, check only the valves indicated in the illustration.
Measure the valve clearance.
[See procedure in step (b)]

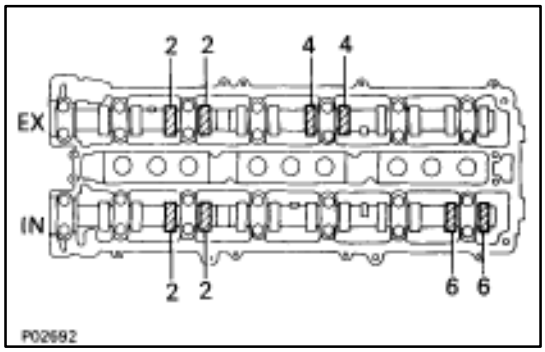

(d) Turn the crankshaft a further 2/3 of a revolution (240▼, check only the valves indicated in the illustration.
Measure the valve clearance.
[See procedure in step (b)]

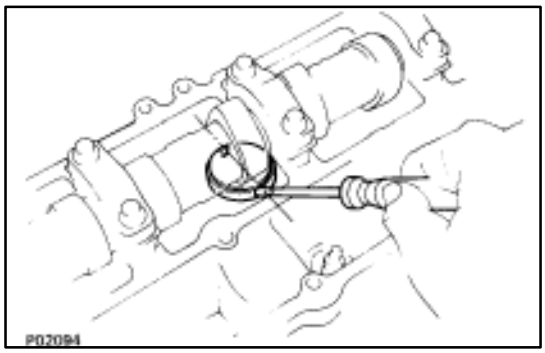

12. ADJUST VALVE CLEARANCE

(a) Remove the adjusting shim.
- Turn the camshaft so that the cam lobe for the valve to be adjusted faces up.
- Turn the valve lifter with a screwdriver so that the notches would be per pendicular to the camshaft.

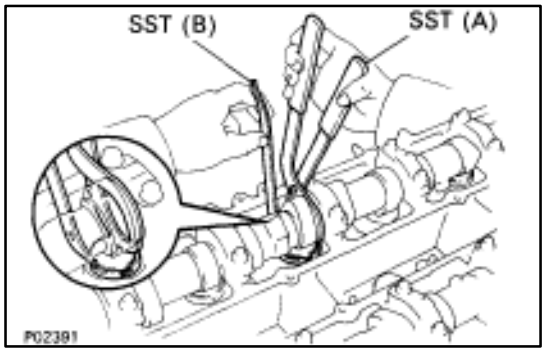

- Using SST (A), press down the valve lifter and place SST (B) between the camshaft and valve lifter. Remove SST (A).

SST 09248–55020
(09248–05011 (A), 09248–05021 (B))

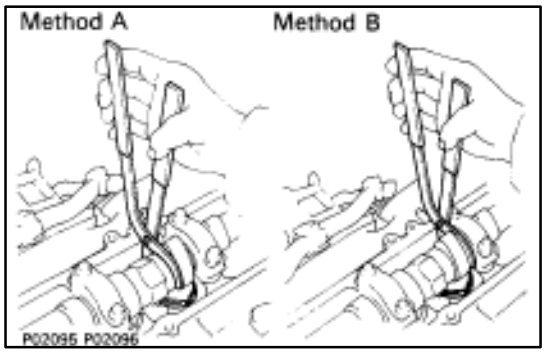

HINT:
- Choose either method A or B in using SST on either side of the cam lobe.

WhereEverybodyKnowsYourName

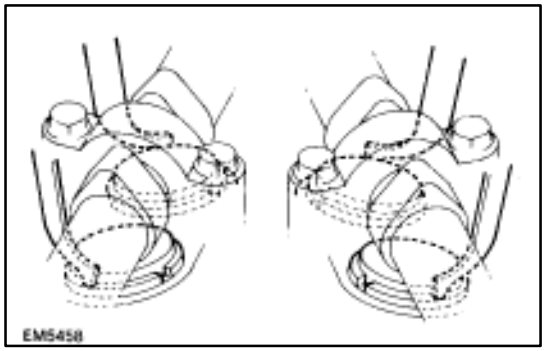

- Position SST on the edge of the lifter for easy removal of the shim.

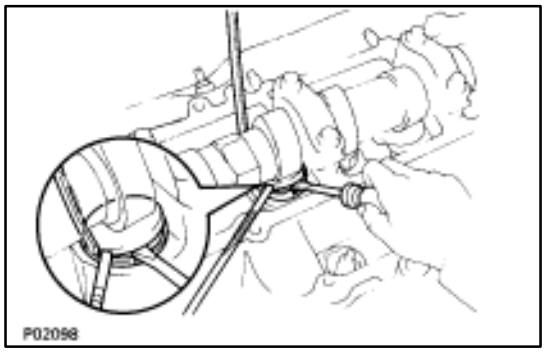

- Remove the adjusting shim with a small screwdriver and a magnetic finger.

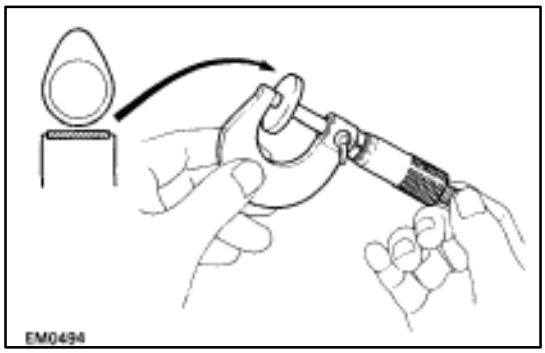

(b) Determine the replacement adjusting shim size according to the following formula or Charts:
- Using a micrometer, measure the thickness of the removed shim.
- Calculate the thickness of a new shim so the valve clearance comes within specified value.

T	Thickness of used shim
A	Measured valve clearance
N	Thickness of new shim

Intake N = T + (A–0.20 mm)
Exhaust N = T + (A–0.30 mm)

- Select a new shim with a thickness as close as possible to the calculated values.

HINT: Shims are available in seventeen sizes in increments of 0.05 mm, from 2.50 mm to 3.30 mm.

(c) Install a new adjusting shim.
- Place a new adjusting shim on the valve lifter, with imprinted numbers facing down.

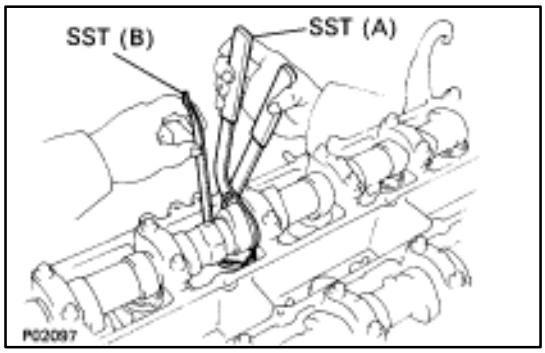

- Press down the valve lifter with SST (A), and remove SST (B).

SST 09248–55020

(d) Recheck the valve clearance.

WhereEverybodyKnowsYourName

Adjusting Shim Selection Chart (Intake)

Measured clearance (mm) \ Installed shim thickness (mm)	2.50	2.52	2.54	2.55	2.56	2.58	2.60	2.62	2.64	2.65	2.66	2.67	2.68	2.69	2.70	2.71	2.72	2.73	2.74	2.75	2.76	2.77	2.78	2.79	2.80	2.81	2.82	2.83	2.84	2.85	2.86	2.87	2.88	2.89	2.90	2.91	2.92	2.93	2.94	2.95	2.96	2.97	2.98	2.99	3.00	3.01	3.02	3.03	3.04	3.05	3.06	3.08	3.10	3.12	3.14	3.15	3.16	3.18	3.20	3.22	3.24	3.25	3.26	3.28	3.30
0.000 – 0.020								01	01	01	01	01	01	01	01	63	63	63	63	63	06	06	06	06	06	06	66	66	66	66	66	13	13	13	13	13	18	18	18	18	18	23	23	23	23	23	28	28	28	28	28	33	33	33	38	38	38	38	43	43	48	48	48	48	51	51
0.021 – 0.040								01	01	01	01	01	01	63	63	63	63	63	06	06	06	06	06	06	66	66	66	66	66	13	13	13	13	13	18	18	18	18	18	23	23	23	23	23	28	28	28	28	28	33	33	33	33	38	38	38	43	43	43	48	48	48	51	51	51	77
0.041 – 0.060							01	01	01	01	01	01	63	63	63	63	63	06	06	06	06	06	66	66	66	66	66	13	13	13	13	13	18	18	18	18	18	23	23	23	23	23	28	28	28	28	28	33	33	33	33	33	38	38	38	43	43	43	48	48	48	51	51	51	77	77
0.061 – 0.080							01	01	01	01	01	63	63	63	63	63	06	06	06	06	06	66	66	66	66	66	13	13	13	13	13	18	18	18	18	18	23	23	23	23	23	28	28	28	28	28	33	33	33	33	33	38	38	38	43	43	43	48	48	48	51	51	51	77	77	77
0.081 – 0.100				01	01	01	01	01	63	63	63	63	63	06	06	06	06	06	66	66	66	66	66	66	13	13	13	13	13	18	18	18	18	18	23	23	23	23	23	28	28	28	28	28	33	33	33	33	33	38	38	38	38	43	43	48	48	48	48	51	51	77	77	77	77	56
0.101 – 0.120			01	01	01	01	01	63	63	63	63	06	06	06	06	06	66	66	66	66	66	13	13	13	13	13	18	18	18	18	18	23	23	23	23	23	28	28	28	28	28	33	33	33	33	33	38	38	38	38	38	43	43	43	48	48	48	48	51	51	77	77	77	77	56	56
0.121 – 0.140		01	01	01	01	01	63	63	63	06	06	06	06	06	66	66	66	66	66	13	13	13	13	13	18	18	18	18	18	23	23	23	23	23	28	28	28	28	28	33	33	33	33	33	38	38	38	38	38	43	43	43	43	48	48	48	51	51	51	77	77	77	56	56	56	80
0.141 – 0.149		01	01	01	01	63	63	63	06	06	06	06	06	66	66	66	66	66	13	13	13	13	13	18	18	18	18	18	23	23	23	23	23	28	28	28	28	28	33	33	33	33	33	38	38	38	38	38	43	43	43	43	48	48	48	51	51	51	77	77	77	56	56	56	80	80
0.150 – 0.250																																																																				
0.251 – 0.260	63	06	06	06	06	06	66	13	13	13	13	18	18	18	18	18	23	23	23	23	23	28	28	28	28	28	33	33	33	33	33	38	38	38	38	38	43	43	43	43	43	48	48	48	48	48	51	51	51	51	51	77	77	56	56	56	56	80	80	61	61	61	61	61
0.261 – 0.281	63	06	06	06	66	66	66	13	13	13	18	18	18	18	18	23	23	23	23	23	28	28	28	28	28	33	33	33	33	33	38	38	38	38	38	43	43	43	43	43	48	48	48	48	48	51	51	51	51	51	77	77	77	56	56	56	80	80	80	61	61	61	61	61
0.281 – 0.300	06	06	66	66	66	66	66	13	13	18	18	18	18	18	23	23	23	23	23	28	28	28	28	28	33	33	33	33	33	38	38	38	38	38	43	43	43	43	43	48	48	48	48	48	51	51	51	51	51	77	77	77	77	56	56	80	80	80	80	61	61	61	61	61
0.301 – 0.320	06	66	66	66	66	13	13	18	18	18	18	23	23	23	23	23	28	28	28	28	28	33	33	33	33	33	38	38	38	38	38	43	43	43	43	43	48	48	48	48	48	51	51	51	51	51	77	77	77	77	77	56	56	80	80	80	80	61	61	61	61	61
0.321 – 0.340	66	66	66	13	13	13	18	18	18	23	23	23	23	23	28	28	28	28	28	33	33	33	33	33	38	38	38	38	38	43	43	43	43	43	48	48	48	48	48	51	51	51	51	51	77	77	77	77	77	56	56	56	80	80	80	61	61	61	61	61	61
0.341 – 0.360	66	66	13	13	13	18	18	18	23	23	23	23	28	28	28	28	28	33	33	33	33	33	38	38	38	38	38	43	43	43	43	43	48	48	48	48	48	51	51	51	51	51	77	77	77	77	77	56	56	56	56	80	80	80	61	61	61	61	61	61
0.361 – 0.380	66	13	13	13	18	18	18	23	23	23	28	28	28	28	28	33	33	33	33	33	38	38	38	38	38	43	43	43	43	43	48	48	48	48	48	51	51	51	51	51	77	77	77	77	77	56	56	56	56	56	80	80	80	61	61	61	61	61	61
0.381 – 0.400	13	13	18	18	18	18	23	23	28	28	28	28	28	33	33	33	33	33	38	38	38	38	38	43	43	43	43	43	48	48	48	48	48	51	51	51	51	51	77	77	77	77	77	56	56	56	56	56	56	80	80	80	61	61	61	61	61	61
0.401 – 0.420	13	18	18	18	23	23	28	28	28	28	33	33	33	33	33	38	38	38	38	38	43	43	43	43	43	48	48	48	48	48	51	51	51	51	51	77	77	77	77	77	56	56	56	56	56	56	80	80	80	80	61	61	61	61	61	61						
0.421 – 0.440	18	18	18	23	23	23	28	28	28	33	33	33	33	33	38	38	38	38	38	43	43	43	43	43	48	48	48	48	48	51	51	51	51	51	77	77	77	77	77	56	56	56	56	56	80	80	80	80	80	61	61	61	61	61							
0.441 – 0.460	18	18	23	23	23	28	28	28	33	33	33	33	38	38	38	38	38	43	43	43	43	43	48	48	48	48	48	51	51	51	51	51	77	77	77	77	77	56	56	56	56	56	80	80	80	80	80	61	61	61	61	61	61							
0.461 – 0.480	18	23	23	23	28	28	28	33	33	33	38	38	38	38	38	43	43	43	43	43	48	48	48	48	48	51	51	51	51	51	77	77	77	77	77	56	56	56	56	56	80	80	80	80	80	61	61	61	61	61	61	61								
0.481 – 0.500	23	23	28	28	28	28	33	33	38	38	38	38	43	43	43	43	43	48	48	48	48	48	51	51	51	51	51	77	77	77	77	77	56	56	56	56	56	80	80	80	80	80	61	61	61	61	61	61	61	61	61									
0.501 – 0.520	23	28	28	28	28	33	33	38	38	38	38	43	43	43	43	43	48	48	48	48	48	51	51	51	51	51	77	77	77	77	77	56	56	56	56	56	80	80	80	80	80	61	61	61	61	61	61	61	61											
0.521 – 0.540	28	28	28	33	33	33	38	38	38	43	43	43	43	43	48	48	48	48	48	51	51	51	51	51	77	77	77	77	77	56	56	56	56	56	80	80	80	80	80	61	61	61	61	61	61	61	61													
0.541 – 0.560	28	28	33	33	33	38	38	38	43	43	43	43	48	48	48	48	48	51	51	51	51	51	77	77	77	77	77	56	56	56	56	56	80	80	80	80	80	61	61	61	61	61	61	61	61															
0.561 – 0.580	28	33	33	33	38	38	38	43	43	43	48	48	48	48	48	51	51	51	51	51	77	77	77	77	77	56	56	56	56	56	80	80	80	80	80	61	61	61	61	61	61	61	61																	
0.581 – 0.600	33	33	38	38	38	38	43	43	48	48	48	48	48	51	51	51	51	51	77	77	77	77	77	56	56	56	56	56	80	80	80	80	80	61	61	61	61	61	61	61	61																			
0.601 – 0.620	33	38	38	38	38	43	43	48	48	48	48	51	51	51	51	51	77	77	77	77	77	56	56	56	56	56	80	80	80	80	80	61	61	61	61	61	61	61	61																					
0.621 – 0.640	38	38	38	43	43	43	48	48	48	51	51	51	51	51	77	77	77	77	77	56	56	56	56	56	80	80	80	80	80	61	61	61	61	61	61	61	61																							
0.641 – 0.660	38	38	43	43	43	48	48	48	51	51	51	51	77	77	77	77	77	56	56	56	56	56	80	80	80	80	80	61	61	61	61	61	61	61	61																									
0.661 – 0.680	38	43	43	43	48	48	48	51	51	51	77	77	77	77	77	56	56	56	56	56	80	80	80	80	80	61	61	61	61	61	61	61	61																									
0.681 – 0.700	43	43	48	48	48	48	51	51	77	77	77	77	77	56	56	56	56	56	80	80	80	80	80	61	61	61	61	61	61	61	61																													
0.701 – 0.720	43	48	48	48	48	51	51	77	77	77	77	77	56	56	56	56	56	80	80	80	80	80	61	61	61	61	61	61	61	61																													
0.721 – 0.740	48	48	48	51	51	51	77	77	77	56	56	56	56	56	80	80	80	80	80	61	61	61	61	61	61	61	61																															
0.741 – 0.760	48	48	51	51	51	77	77	77	56	56	56	56	80	80	80	80	80	61	61	61	61	61	61	61	61																															
0.761 – 0.780	48	51	51	51	77	77	77	56	56	56	80	80	80	80	80	61	61	61	61	61	61	61	61																															
0.781 – 0.800	51	51	77	77	77	77	56	56	80	80	80	80	80	61	61	61	61	61	61	61	61	61																															
0.801 – 0.820	51	77	77	77	77	56	56	80	80	80	80	61	61	61	61	61	61	61	61																																			
0.821 – 0.840	77	77	77	56	56	56	80	80	80	61	61	61	61	61	61	61	61																																					
0.841 – 0.860	77	77	56	56	56	80	80	80	61	61	61	61	61	61	61																																							
0.861 – 0.880	77	56	56	56	80	80	80	61	61	61	61	61	61																																									
0.881 – 0.900	56	56	80	80	80	80	61	61	61	61	61																																											
0.901 – 0.920	56	80	80	80	80	61	61	61	61																																													
0.921 – 9.940	80	80	80	61	61	61	61	61																																														
0.941 – 0.960	80	80	61	61	61	61	61																																															
0.961 – 0.980	80	61	61	61	61	61																																																
0.981 – 1.000	61	61	61	61	61																																																	
1.001 – 1.020	61	61	61																																																			
1.021 – 1.040	61	61																																																				
1.041 – 1.050	61																																																					

Intake valve clearance (Cold):
0.15 – 0.25 mm

EXAMPLE: The 2.80 mm shim is installed, and the measured clearance is 0.450 mm. Replace the 2.80 mm shim with a No. 48 shim.

New shim thickness mm

Shim No.	Thickness	Shim No.	Thickness
01	2.50	38	2.95
63	2.55	43	3.00
06	2.60	48	3.05
66	2.65	51	3.10
13	2.70	77	3.15
18	2.75	56	3.20
23	2.80	80	3.25
28	2.85	61	3.30
33	2.90		

WhereEverybodyKnowsYourName

Adjusting Shim Selection Chart (Exhaust)

Measured clearance (mm) \ Installed shim thickness (mm)	2.50	2.52	2.54	2.55	2.56	2.58	2.60	2.62	2.64	2.65	2.66	2.67	2.68	2.69	2.70	2.71	2.72	2.73	2.74	2.75	2.76	2.77	2.78	2.79	2.80	2.81	2.82	2.83	2.84	2.85	2.86	2.87	2.88	2.89	2.90	2.91	2.92	2.93	2.94	2.95	2.96	2.97	2.98	2.99	3.00	3.01	3.02	3.03	3.04	3.05	3.06	3.08	3.10	3.12	3.14	3.15	3.16	3.18	3.20	3.22	3.24	3.25	3.26	3.28	3.30
0.000 – 0.020																		01	01	01	01	01	01	01	01	63	63	63	63	63	06	06	06	06	06	66	66	66	66	66	13	13	13	13	13	18	18	18	18	18	23	23	28	28	28	28	33	33	38	38	38	38	43	43
0.021 – 0.040																01	01	01	01	01	01	01	01	01	63	63	63	63	63	06	06	06	06	06	66	66	66	66	66	13	13	13	13	13	18	18	18	18	18	23	23	23	28	28	28	33	33	33	38	38	38	43	43	48
0.041 – 0.060														01	01	01	01	01	01	01	01	01	01	01	63	63	63	63	63	06	06	06	06	06	66	66	66	66	66	13	13	13	13	13	18	18	18	18	18	23	23	23	28	28	28	33	33	33	38	38	38	43	43	48	48
0.061 – 0.080												01	01	01	01	01	01	01	01	01	63	63	63	63	63	06	06	06	06	06	66	66	66	66	66	13	13	13	13	13	18	18	18	18	18	23	23	23	23	23	28	28	28	33	33	33	38	38	38	43	43	43	48	48
0.081 – 0.100											01	01	01	01	01	01	01	01	63	63	63	63	63	06	06	06	06	06	66	66	66	66	66	13	13	13	13	13	18	18	18	18	18	23	23	23	23	23	28	28	28	28	33	33	38	38	38	38	43	43	48	48	48	51
0.101 – 0.120									01	01	01	01	01	01	01	01	63	63	63	63	63	06	06	06	06	06	66	66	66	66	66	13	13	13	13	13	18	18	18	18	18	23	23	23	23	23	28	28	28	28	28	33	33	38	38	38	38	43	43	48	48	48	51	51
0.121 – 0.140								01	01	01	01	01	01	63	63	63	63	63	63	06	06	06	06	06	66	66	66	66	66	13	13	13	13	13	18	18	18	18	18	23	23	23	23	23	28	28	28	28	28	33	33	33	38	38	38	43	43	43	48	48	51	51	51	77
0.141 – 0.160								01	01	01	01	01	01	63	63	63	63	63	06	06	06	06	06	66	66	66	66	66	13	13	13	13	13	18	18	18	18	18	23	23	23	23	23	28	28	28	28	28	33	33	33	33	38	38	38	43	43	43	48	48	48	51	51	51	77	77
0.161 – 0.180								01	01	01	01	01	63	63	63	63	63	06	06	06	06	06	66	66	66	66	66	13	13	13	13	13	18	18	18	18	18	23	23	23	23	23	28	28	28	28	28	33	33	33	33	33	38	38	38	43	43	43	48	48	48	51	51	51	77	77
0.181 – 0.200				01	01	01	01	01	63	63	63	63	63	06	06	06	06	06	66	66	66	66	66	66	13	13	13	13	13	18	18	18	18	18	23	23	23	23	23	28	28	28	28	28	33	33	33	33	33	38	38	38	38	43	43	48	48	48	48	51	51	77	77	77	77	56
0.201 – 0.220			01	01	01	01	01	63	63	63	63	06	06	06	06	06	66	66	66	66	66	66	13	13	13	13	13	18	18	18	18	18	23	23	23	23	23	28	28	28	28	28	33	33	33	33	33	38	38	38	38	38	43	43	48	48	48	51	51	77	77	77	56	56
0.221 – 0.240		01	01	01	01	01	63	63	63	06	06	06	06	06	66	66	66	66	66	13	13	13	13	13	18	18	18	18	18	23	23	23	23	23	28	28	28	28	28	33	33	33	33	33	38	38	38	38	38	43	43	43	48	48	48	51	51	51	77	77	77	56	56	80
0.241 – 0.249		01	01	01	01	01	63	63	06	06	06	06	06	66	66	66	66	66	13	13	13	13	13	18	18	18	18	18	23	23	23	23	23	28	28	28	28	28	33	33	33	33	33	38	38	38	38	38	43	43	43	43	48	48	48	51	51	51	77	77	77	56	56	80	80
0.250 – 0.350																																																																			
0.351 – 0.360	63	06	06	06	06	66	66	13	13	13	13	18	18	18	18	18	23	23	23	23	23	28	28	28	28	28	33	33	33	33	33	38	38	38	38	38	43	43	43	43	43	48	48	48	48	48	51	51	51	51	51	77	77	56	56	56	56	80	80	61	61	61	61	61
0.361 – 0.380	63	06	06	06	66	66	66	13	13	13	18	18	18	18	18	23	23	23	23	23	28	28	28	28	33	33	33	33	33	38	38	38	38	38	43	43	43	43	43	48	48	48	48	48	51	51	51	51	51	77	77	77	56	56	56	80	80	80	61	61	61	61	61
0.381 – 0.400	06	06	66	66	66	66	13	13	18	18	18	18	18	23	23	23	23	23	28	28	28	28	28	33	33	33	33	33	38	38	38	38	38	43	43	43	43	43	48	48	48	48	48	51	51	51	51	51	77	77	77	77	56	56	80	80	80	80	61	61	61	61	61
0.401 – 0.420	06	66	66	66	66	13	13	18	18	18	18	23	23	23	23	23	28	28	28	28	33	33	33	33	33	38	38	38	38	43	43	43	43	43	48	48	48	48	48	51	51	51	51	51	77	77	77	77	77	56	56	80	80	80	80	61	61	61	61	61		
0.421 – 0.440	66	66	66	13	13	13	18	18	18	23	23	23	23	28	28	28	28	33	33	33	33	33	38	38	38	38	43	43	43	43	43	48	48	48	48	48	51	51	51	51	51	77	77	77	77	77	77	56	56	56	56	80	80	80	61	61	61	61	61		
0.441 – 0.460	66	66	13	13	13	18	18	18	23	23	23	23	28	28	28	28	28	33	33	33	33	33	38	38	38	38	43	43	43	43	43	48	48	48	48	48	51	51	51	51	51	77	77	77	77	77	77	56	56	56	56	80	80	80	61	61	61	61			
0.461 – 0.480	66	13	13	13	18	18	18	23	23	23	28	28	28	28	28	33	33	33	33	33	38	38	38	38	38	43	43	43	43	43	48	48	48	48	48	51	51	51	51	51	77	77	77	77	77	77	56	56	56	56	56	80	80	80	61	61	61	61			
0.481 – 0.500	13	13	18	18	18	18	23	23	28	28	28	28	28	33	33	33	33	33	38	38	38	38	38	43	43	43	43	43	48	48	48	48	48	51	51	51	51	51	77	77	77	77	77	56	56	56	56	56	80	80	80	80	61	61	61	61				
0.501 – 0.520	13	18	18	18	18	23	23	28	28	28	33	33	33	33	33	38	38	38	38	38	43	43	43	43	43	48	48	48	48	48	51	51	51	51	51	77	77	77	77	77	56	56	56	56	56	80	80	80	80	80	61	61	61	61						
0.521 – 0.540	18	18	18	23	23	23	28	28	28	33	33	33	33	33	38	38	38	38	38	43	43	43	43	43	48	48	48	48	48	51	51	51	51	51	77	77	77	77	77	56	56	56	56	56	80	80	80	80	80	61	61	61	61							
0.541 – 0.560	18	18	23	23	23	28	28	28	33	33	33	33	38	38	38	38	38	43	43	43	43	43	48	48	48	48	48	51	51	51	51	51	77	77	77	77	77	56	56	56	56	56	80	80	80	80	80	61	61	61	61	61	61							
0.561 – 0.580	18	23	23	23	28	28	28	33	33	33	38	38	38	38	38	43	43	43	43	43	48	48	48	48	48	51	51	51	51	51	77	77	77	77	77	56	56	56	56	56	80	80	80	80	80	61	61	61	61	61	61	61								
0.581 – 0.600	23	23	28	28	28	28	33	33	38	38	38	38	38	43	43	43	43	43	48	48	48	48	48	51	51	51	51	51	77	77	77	77	77	56	56	56	56	56	80	80	80	80	80	61	61	61	61	61	61	61	61								
0.601 – 0.620	23	28	28	28	28	33	33	38	38	38	38	43	43	43	43	43	48	48	48	48	48	51	51	51	51	51	77	77	77	77	77	56	56	56	56	56	80	80	80	80	80	61	61	61	61	61	61	61	61										
0.621 – 0.640	28	28	28	33	33	33	38	38	38	43	43	43	43	43	48	48	48	48	48	51	51	51	51	51	77	77	77	77	77	56	56	56	56	56	80	80	80	80	80	61	61	61	61	61	61	61	61	61											
0.641 – 0.660	28	28	33	33	33	38	38	38	43	43	43	48	48	48	48	48	51	51	51	51	51	77	77	77	77	77	56	56	56	56	56	80	80	80	80	80	61	61	61	61	61	61	61	61	61															
0.661 – 0.680	28	33	33	33	38	38	38	43	43	43	48	48	48	48	48	51	51	51	51	51	77	77	77	77	77	56	56	56	56	56	80	80	80	80	80	61	61	61	61	61	61	61	61																	
0.681 – 0.700	33	33	38	38	38	43	43	43	48	48	48	48	51	51	51	51	51	77	77	77	77	77	56	56	56	56	56	80	80	80	80	80	61	61	61	61	61	61	61	61	61																			
0.701 – 0.720	33	38	38	38	38	43	43	43	48	48	48	48	51	51	51	51	51	77	77	77	77	77	56	56	56	56	56	80	80	80	80	80	61	61	61	61	61	61	61	61																					
0.721 – 0.740	38	38	38	43	43	43	48	48	48	51	51	51	51	51	77	77	77	77	77	56	56	56	56	56	80	80	80	80	80	61	61	61	61	61	61	61	61																							
0.741 – 0.760	38	38	43	43	43	48	48	48	51	51	51	51	77	77	77	77	77	56	56	56	56	56	80	80	80	80	80	61	61	61	61	61	61	61																									
0.761 – 0.780	38	43	43	43	48	48	48	51	51	51	77	77	77	77	77	56	56	56	56	56	80	80	80	80	80	80	61	61	61	61	61	61	61																									
0.781 – 0.800	43	43	48	48	48	48	51	51	77	77	77	77	77	56	56	56	56	56	80	80	80	80	80	61	61	61	61	61	61	61	61																													
0.801 – 0.820	43	48	48	48	48	51	51	77	77	77	77	56	56	56	56	56	80	80	80	80	80	61	61	61	61	61	61	61	61	61																													
0.821 – 0.840	48	48	48	51	51	51	77	77	77	77	56	56	56	56	56	80	80	80	80	80	61	61	61	61	61	61	61	61	61																													
0.841 – 0.860	48	48	51	51	51	77	77	77	77	56	56	56	56	80	80	80	80	80	61	61	61	61	61	61	61	61	61	61																													
0.861 – 0.880	48	51	51	51	77	77	77	77	56	56	56	80	80	80	80	80	61	61	61	61	61	61	61	61	61	61																													
0.881 – 0.900	51	51	77	77	77	77	77	56	56	80	80	80	80	80	61	61	61	61	61	61	61	61	61	61																													
0.901 – 0.920	51	77	77	77	77	56	56	56	80	80	80	80	61	61	61	61	61	61	61	61	61	61																													
0.921 – 0.940	77	77	77	56	56	56	80	80	80	80	61	61	61	61	61	61	61	61																																			
0.941 – 0.960	77	77	56	56	56	80	80	80	61	61	61	61	61	61	61																																						
0.961 – 0.980	77	56	56	56	80	80	80	61	61	61	61	61	61																																								
0.981 – 1.000	56	56	80	80	80	80	61	61	61	61	61	61																																									
1.001 – 1.020	56	80	80	80	80	61	61	61	61	61																																											
1.021 – 1.040	80	80	80	61	61	61	61	61																																													
1.041 – 1.060	80	80	61	61	61	61	61																																														
1.061 – 1.080	80	61	61	61	61	61																																															
1.081 – 1.100	61	61	61	61	61																																																
1.101 – 1.120	61	61	61																																																		
1.121 – 1.140	61	61																																																			
1.141 – 1.150	61																																																				

Exhaust valve clearance (Cold):
0.25 – 0.35 mm

EXAMPLE: The 2.80 mm shim is installed, and the measured clearance is 0.450 mm. Replace the 2.80 mm shim with a No. 38 shim.

New shim thickness mm

Shim No.	Thickness	Shim No.	Thickness
01	2.50	38	2.95
63	2.55	43	3.00
06	2.60	48	3.05
66	2.65	51	3.10
13	2.70	77	3.15
18	2.75	56	3.20
23	2.80	80	3.25
28	2.85	61	3.30
33	2.90		

WhereEverybodyKnowsYourName

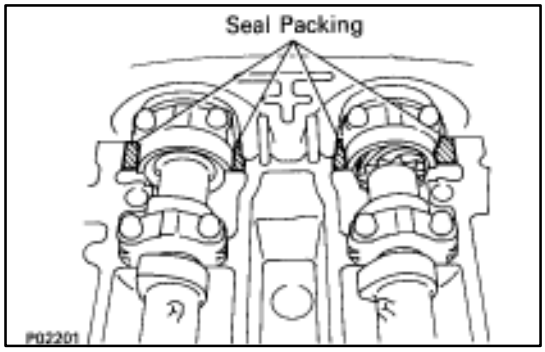

13. REINSTALL NO. 3, NO. 1 AND NO. 2 CYLINDER HEAD COVERS

(a) Remove any oil packing (FIPG) material.

(b) Apply seal packing to the cylinder head as shown in the illustration.

Seal packing: Part No. 08826–00080 or equivalent

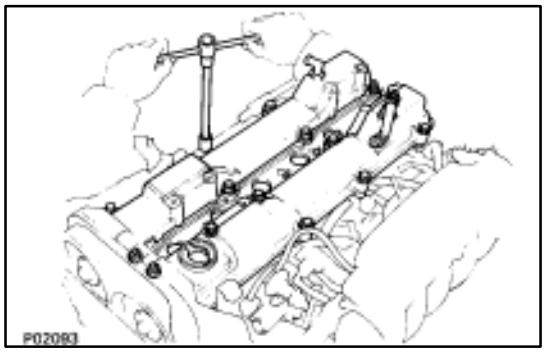

(c) Install the gaskets to the No. 1 and No. 2 cylinder head covers.

(d) Install the cylinder head cover with the 12 bolts and four nuts.

Torque: 5.4 N·m (55 kgf·cm, 48 in.·lbf)

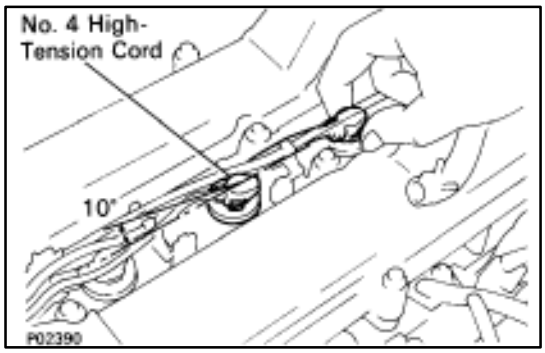

14. RECONNECT HIGH–TENSION CORDS TO SPARK PLUGS

(a) Connect the high–tension cord to the spark plug.

HINT: The No. 4 high–tension cord must be raised 10° from the perpendicular line.

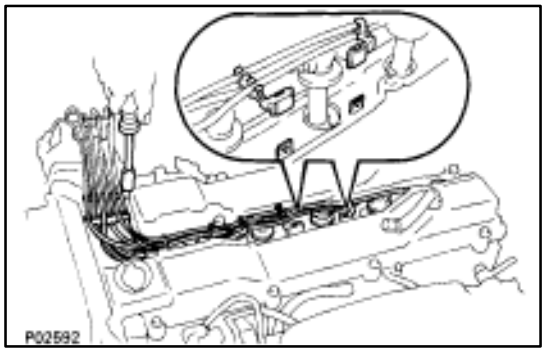

(b) Connect the two high–tension cord clamps to the No. 3 cylinder head cover.

(c) Install the high–tension cord clamp with the bolt.

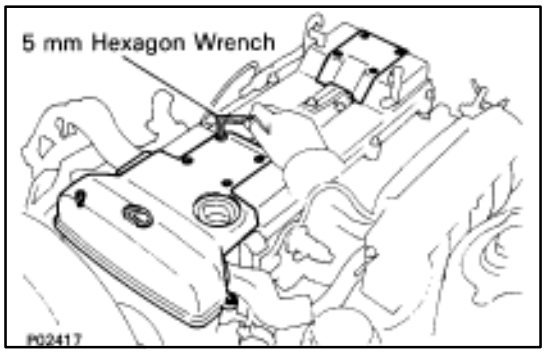

15. REINSTALL CYLINDER HEAD REAR COVER AND NO. 3 TIMING BELT COVER

(a) Using a 5 mm hexagon wrench, install the cylinder head rear cover and No. 3 timing belt cover with the ten bolts.

(b) Install the oil filler cap.

WhereEverybodyKnowsYourName

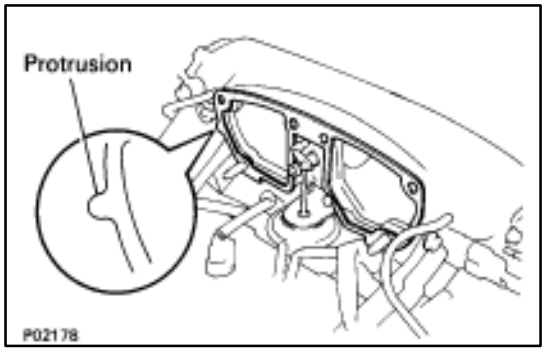

16. REINSTALL THROTTLE BODY WITH INTAKE AIR CONNECTOR

(a) Place a new gasket so the protrusion face the intake chamber, and set the throttle body with intake air connector.

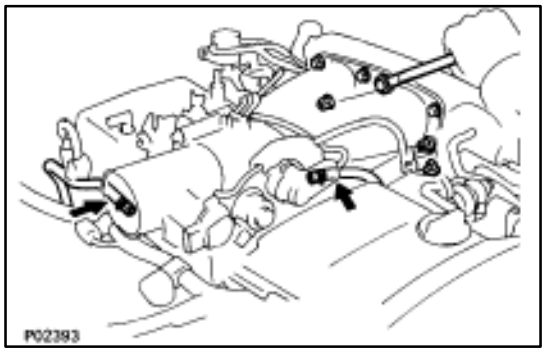

(b) Connect the two water by–pass hoses to the throttle body.

(c) Install the VSV nut.

(d) Install the air intake connector with the four bolts and two nuts.

Torque: 21 N·m (210 kgf·cm, 15 ft·lbf)

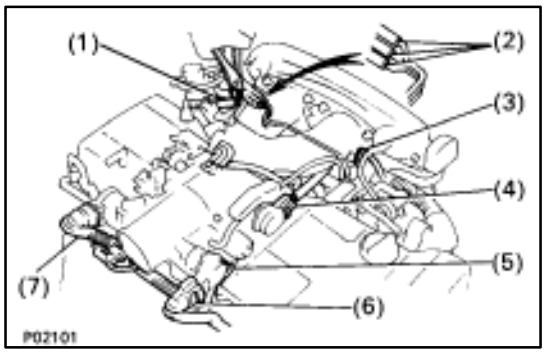

(e) Connect the following hoses and connectors:
(1) PCV hose
(2) Three vacuum hoses
(3) VSV (for EGR) connector
(4) Throttle position sensor connector
(5) IAC valve connector
(6) (w/ TRAC)
Sub–throttle position sensor connector
(7) (w/ TRAC)
Sub–throttle actuator connector
(8) (USA spec. only)
EGR gas temperature sensor connector

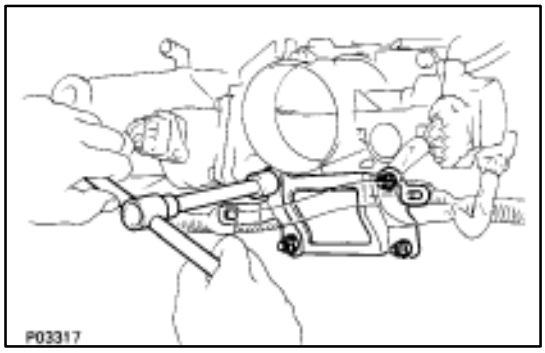

17. REINSTALL THROTTLE BODY BRACKET

Install the throttle body bracket with the four nuts.

Torque: 21 N·m (210 kgf·cm, 15 ft·lbf)

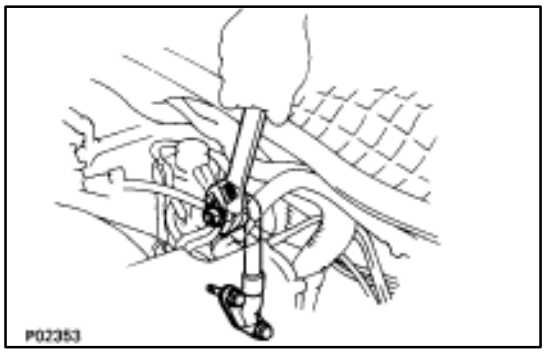

18. REINSTALL EGR PIPE

(a) Install a new gasket and the EGR pipe with the two bolts.

Torque: 21 N·m (210 kgf·cm, 15 ft·lbf)

(b) Tighten the union nut.

Torque: 64 N·m (650 kgf·cm, 47 ft·lbf)

WhereEverybodyKnowsYourName

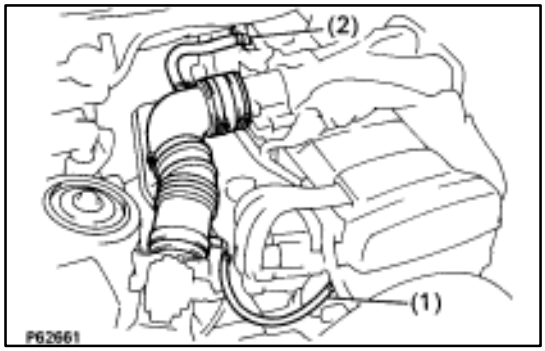

19. REINSTALL AIR CLEANER HOSE

(a) Install the air cleaner hose with two hose clamps.

(b) Connect the following hoses:

(1) PS air hose to No. 4 timing belt cover

(2) PCV hose to No. 2 cylinder head cover

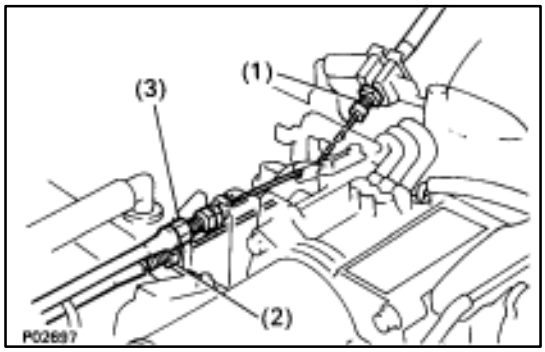

20. RECONNECT CONTROL CABLES TO THROTTLE BODY

Connect the following hoses:

(1) Accelerator cable

(2) (A/T)
Throttle control cable

(3) Cruise control actuator cable

21. RECONNECT CABLE TO NEGATIVE TERMINAL OF BATTERY

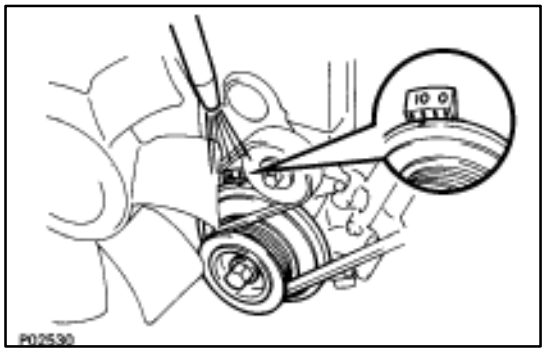

INSPECTION OF IGNITION TIMING

(See page IG–14)

Ignition timing:

10° BTDC @ idle

(w/ Terminals TE1 and E1 connected)

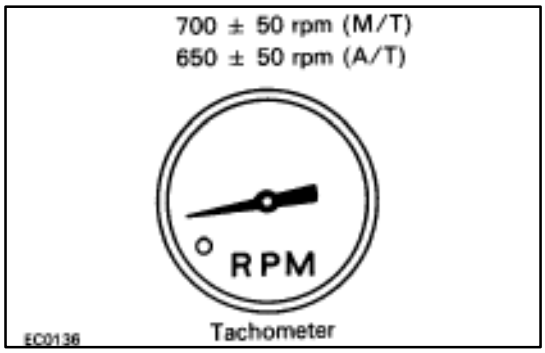

INSPECTION OF IDLE SPEED

HINT: Initial conditions (See step 1 on page EM–20)

Idle speed:

M/T 700 ± 50 rpm

A/T 650 ± 50 rpm (N range)

WhereEverybodyKnowsYourName

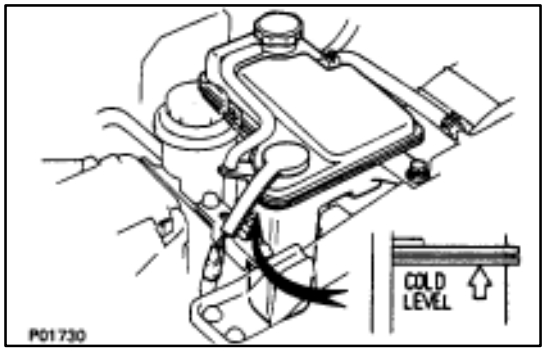

ENGINE TUNE–UP

INSPECTION OF ENGINE COOLANT

1. INSPECT ENGINE COOLANT LEVEL AT RESERVOIR TANK

The coolant level should be above the ”COLD LEVEL” at normal temperature (20°C (68°F)).
If low, check for leaks and add coolant up to the ”COLD LEVEL”.

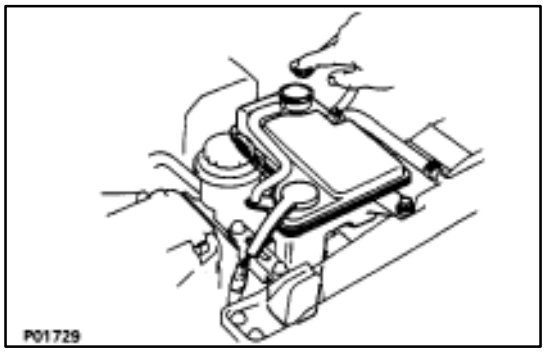

2. INSPECT ENGINE COOLANT QUALITY

There should be any excessive deposits of rust or scales around the radiator cap or reservoir tank filler hole, and the coolant should be free from oil.
If excessively dirty, clean the coolant passages and replace the coolant.

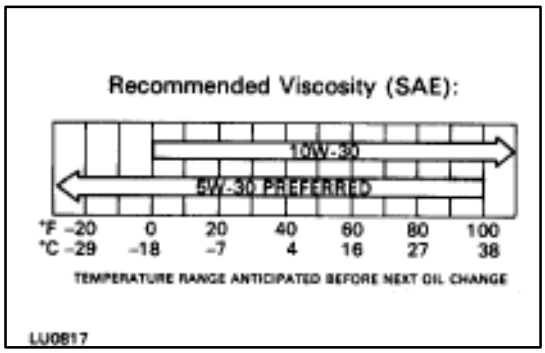

INSPECTION OF ENGINE OIL

1. INSPECT ENGINE OIL QUALITY

Check the oil for deterioration, entry of water, discoloring or thinning.
If the quality is poor, replace the oil.

Oil grade: API grade SG, Energy–Conserving II multigrade. Recommended viscosity is as shown, with SAE 5W–30 being the preferred engine oil.

Drain and refill oil capacity:

w/ oil filter change
4.8 liter (5.1 US qts, 4.2 Imp. qts)

w/o oil filter change
4.5 liter (4.8 US qts, 4.0 Imp. qts)

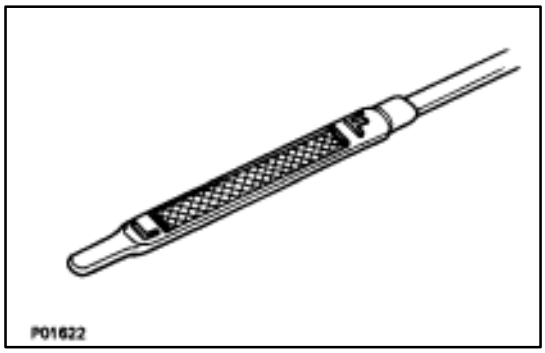

2. INSPECT ENGINE OIL LEVEL

The oil level should be between the ”L” and ”F” marks on the dipstick.
If low, check for leakage and add oil up to ”F” mark.

WhereEverybodyKnowsYourName

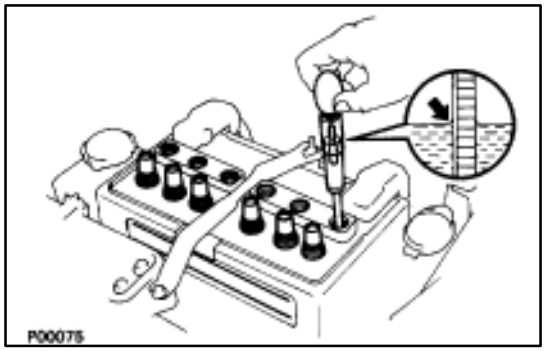

INSPECTION OF BATTERY

1. INSPECT BATTERY SPECIFIC GRAVITY AND ELECTROLYTE LEVEL

(a) Check the specific gravity of each cell.

Standard specific gravity:

1.27–1.29 when fully charged at 20°C(68°F)

If not within specification, charge the battery.

(b) Check the electrolyte quantity of each cell.

If insufficient, refill with distilled (or purified) water.

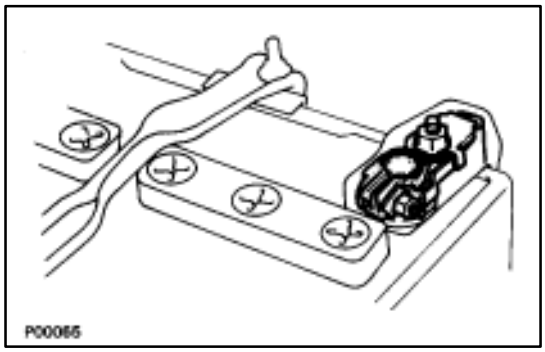

2. CHECK BATTERY TERMINALS

Check that the battery terminals are not loose or corroded.

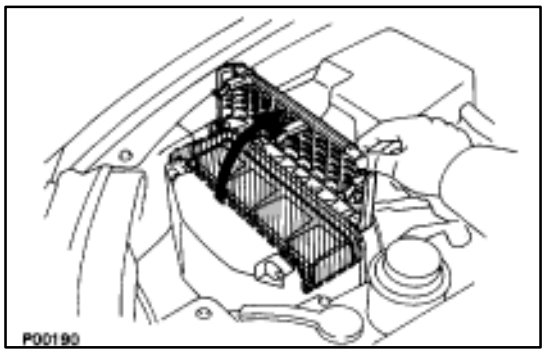

INSPECTION AND CLEANING OF AIR FILTER

1. REMOVE AIR FILTER

(a) Open the air cleaner cap.

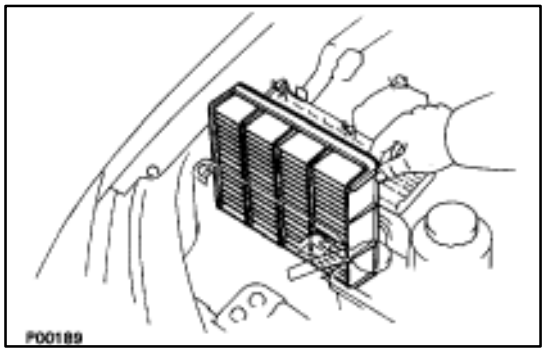

(b) Remove the air filter.

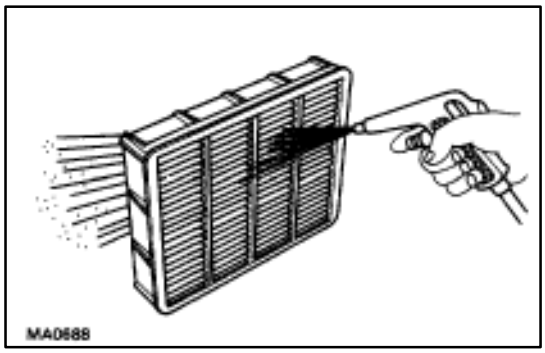

2. INSPECT AIR FILTER

(a) Visually check that the air filter is not excessively damaged or oily.

(b) Clean the air filter with compressed air.

First blow from the inside thoroughly, then blow off the outside of the air filter.

3. REINSTALL AIR FILTER

WhereEverybodyKnowsYourName

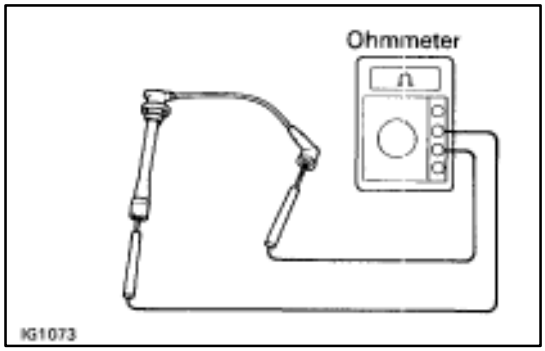

INSPECTION OF HIGH–TENSION CORDS

1. **REMOVE HIGH–TENSION CORDS (See page IG–11)**
2. **INSPECT HIGH–TENSION CORDS**
   (b) Using an ohmmeter, measure the resistance.
   Maximum resistance: 25 k? per cord
   If the resistance is greater than maximum, replace the cord.
3. **REINSTALL HIGH–TENSION CORDS (See page IG–16)**

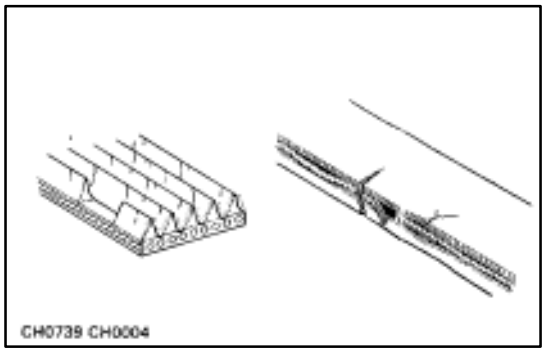

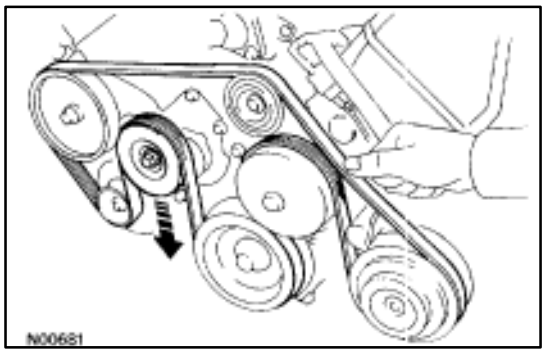

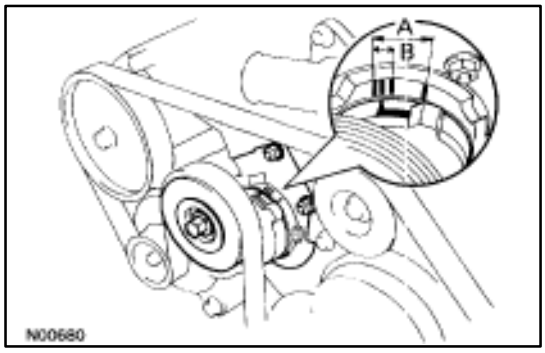

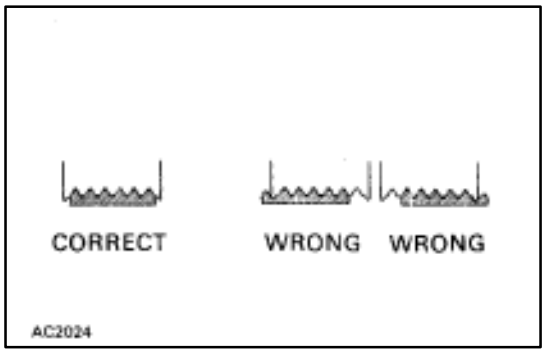

INSPECTION OF DRIVE BELT

INSPECT DRIVE BELT

HINT: A belt tensioner is used, so checking the belt tension is not necessary.

(a) Visually check the drive belt for excessive wear, frayed cords etc.

If necessary, replace the drive belt.

HINT:

- Cracks on rib side of a drive belt are considered acceptable. If the drive belt has chunks missing from the ribs, it should be replaced.
- The drive belt tension can be released by turning the belt tensioner counterclockwise. The pulley bolt for the belt tensioner has a left–hand thread.

(b) Check the belt tensioner operation.
   - Check that the belt tensioner moves downward when the drive belt is pressed down at the points indicated in the illustration with approx. 98 N (10 kgf, 22.0 lbf) of force.
   - Check the alignment of the belt tensioner pulley to make sure the drive belt has not slipped off the pulley.

If necessary, replace the belt tensioner.

- Check that the arrow mark on the belt tensioner falls within area A of the scale.

If it is outside area A, replace the drive belt.

HINT:

- When a new belt is installed, it should lie within area B. If not, the drive belt is not correct.

- After installing a belt, check that it fits properly in the ribbed grooves.
- Check by hand to confirm that the belt has not slipped out of the groove on the bottom of the pulley.

WhereEverybodyKnowsYourName

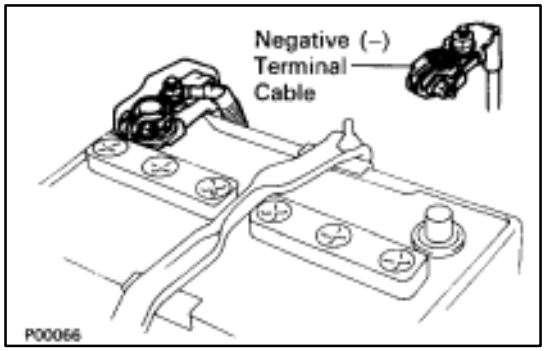

INSPECTION AND ADJUSTMENT OF VALVE CLEARANCE

HINT: Inspect and adjust the valve clearance when the engine is cold.

1. **DISCONNECT CABLE FROM NEGATIVE TERMINAL OF BATTERY**

   CAUTION: Work must be started after approx. 20 seconds or longer from the time the ignition switch is turned to the "LOCK" position and the negative (–) terminal cable is disconnected from the battery.

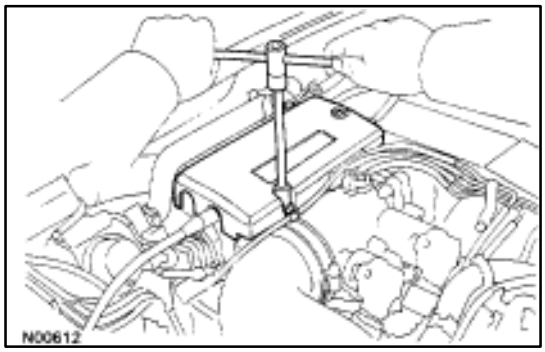

2. **DRAIN ENGINE COOLANT (See page CO–6)**
3. **REMOVE THROTTLE BODY COVER**
   (a) Remove the mounting cap nut.
   (b) Loosen the two bolts, and remove the throttle body cover.

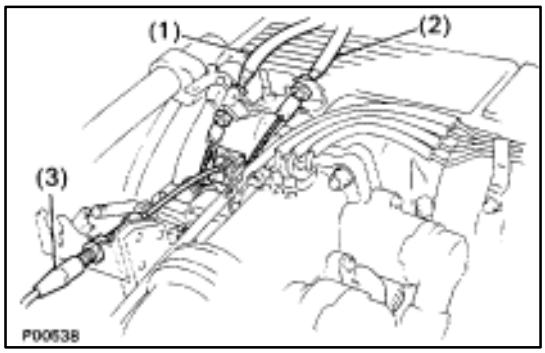

4. **DISCONNECT CONTROL CABLES FROM THROTTLE BODY**

   Disconnect the following cables:
   (1) Accelerator cable
   (2) A/T throttle control cable
   (3) (w/ Cruise Control System)
   Cruise control actuator cable

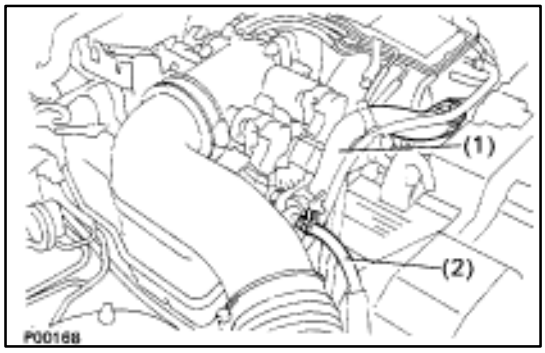

5. **REMOVE INTAKE AIR CONNECTOR**
   (a) Disconnect the following hoses:
   (1) Air hose from ISC valve
   (2) Air hose (from PS air control valve) from intake air connector

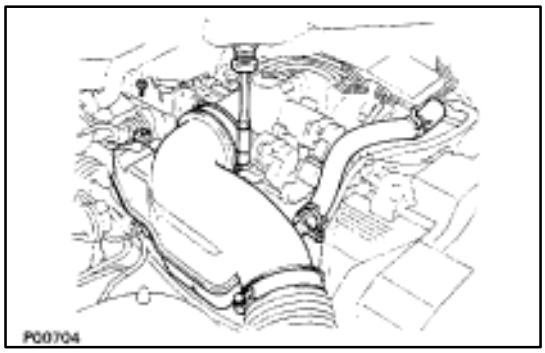

   (b) Remove the bolt holding the intake air connector to the cylinder head cover.
   (c) Loosen the two hose clamps.
   (d) Disconnect the intake air connector from the throttle body and air cleaner hose, and remove the throttle body.

WhereEverybodyKnowsYourName

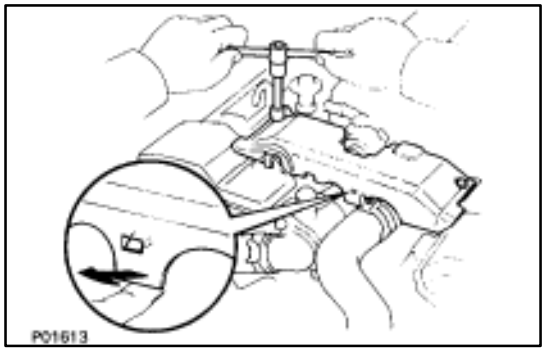

6. REMOVE UPPER HIGH–TENSION CORD COVER

(a) Remove the two mounting bolts.

(b) Disconnect the front side claw groove of the cord cover from the claw of the lower cover, and remove the cord cover.

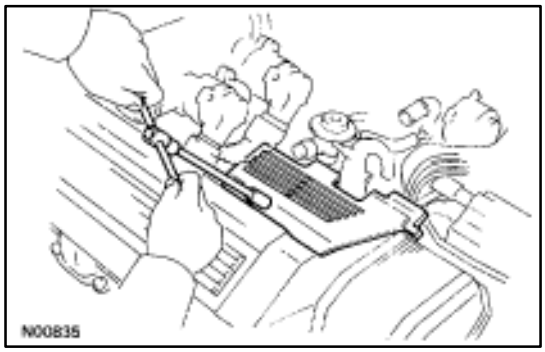

7. REMOVE RH ENGINE WIRE COVER

Remove the bolt and engine wire cover.

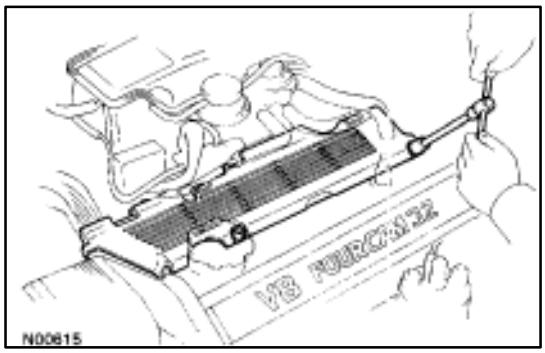

8. REMOVE LH ENGINE WIRE COVER

Remove the two bolts and engine wire cover.

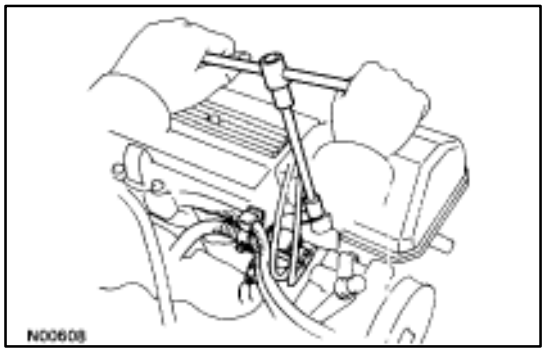

9. REMOVE VSV FOR EVAP SYSTEM

Remove the two bolts, and disconnect the VSV from cylinder head and timing belt cover.

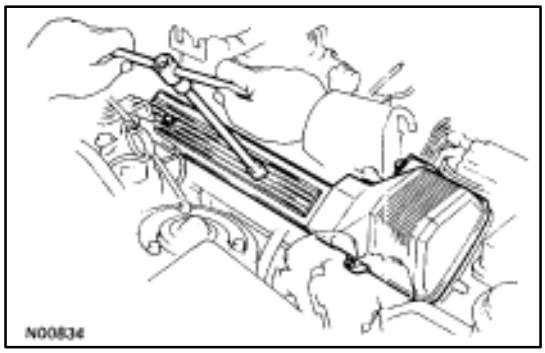

10. REMOVE RH NO.3 TIMING BELT COVER

Remove the three bolts and timing belt cover.

WhereEverybodyKnowsYourName

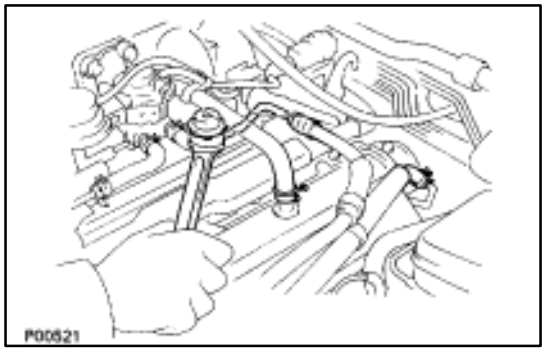

11. DISCONNECT FUEL INLET HOSE FROM LH DELIVERY PIPE

Remove the pulsation damper and two gaskets, and disconnect the inlet hose.

12. DISCONNECT FUEL RETURN HOSE FROM FUEL RETURN PIPE

13. DISCONNECT PCV HOSE FROM LH CYLINDER HEAD

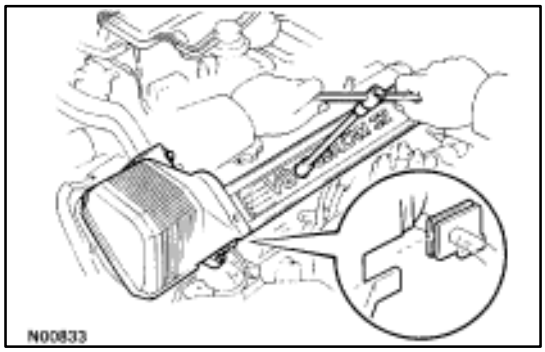

14. REMOVE LH NO.3 TIMING BELT COVER

(a) Remove the four mounting bolts.
(b) Disconnect the cord grommet from the timing belt cover, and remove the timing belt cover.
(c) Remove the cord grommet from the high–tension cord.

15. DISCONNECT HEATER WATER VALVE FROM BODY

(a) Disconnect the VSV connector.
(b) Remove the bolt holding the engine wire clamp to the water valve bracket.
(c) Remove the two bolts, and disconnect the water valve and bracket assembly.

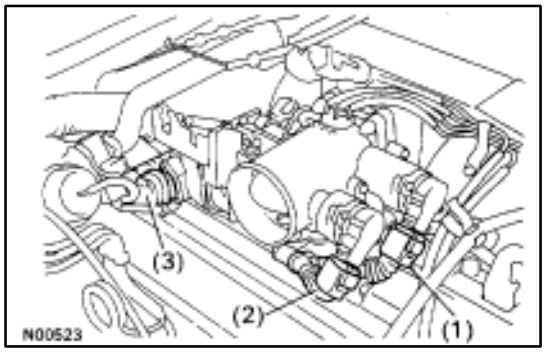

16. REMOVE THROTTLE BODY

(a) Disconnect the following connectors:
  (1) Throttle position sensor connector
  (2) (w/ TRAC)
  Sub–throttle position sensor connector
  (3) (w/ TRAC)
  Sub–throttle actuator connector

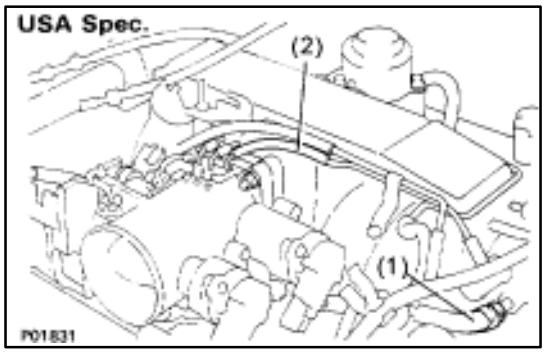

(b) Disconnect the following hoses:
  (1) Water by–pass hose from ISC valve
  (2) (USA Spec.)
  Vacuum hose from throttle body
  (3) (Exc. USA Spec.)
  Three vacuum hoses from throttle body

WhereEverybodyKnowsYourName

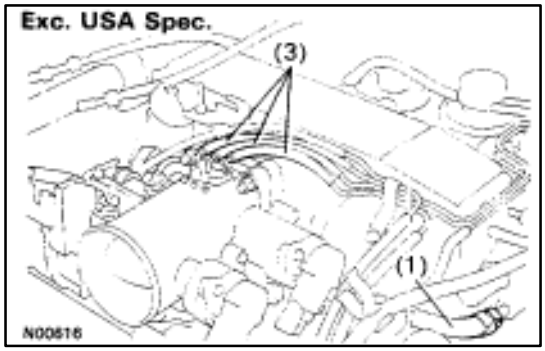

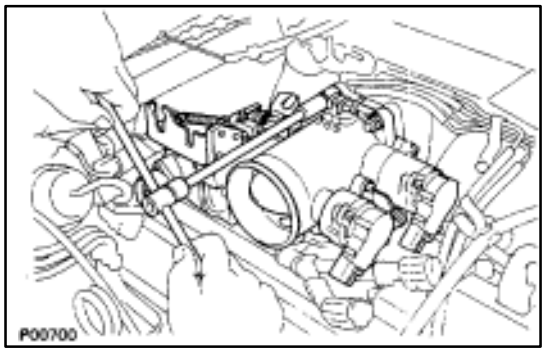

(c) Remove the two bolts and two nuts, disconnect the throttle body from the air intake chamber.

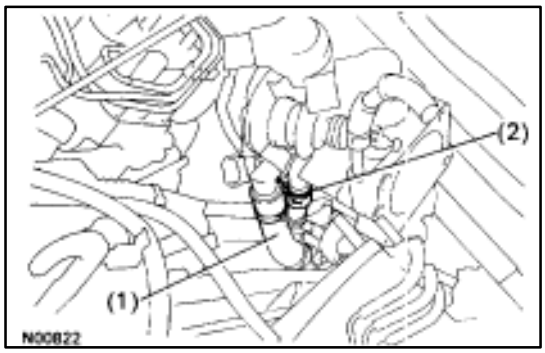

(d) Disconnect the following hoses, and remove the throttle body:
   (1) PCV hose from throttle body
   (2) Water by–pass hose from throttle body
(e) Remove the throttle body gasket.

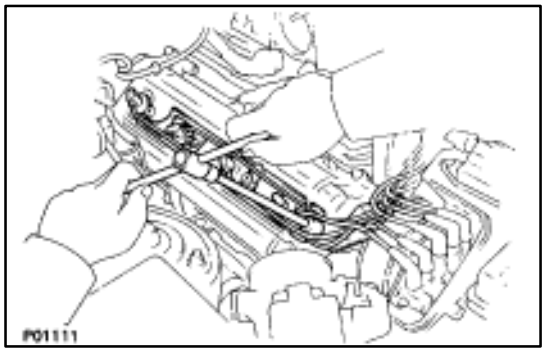

17. REMOVE RH CYLINDER HEAD COVER

(a) Remove the two bolts holding the cord clamp to the cylinder head.
(b) Disconnect the high–tension cords from the spark plugs.
(c) Disconnect the high–tension cords from the front high–tension cord clamp.

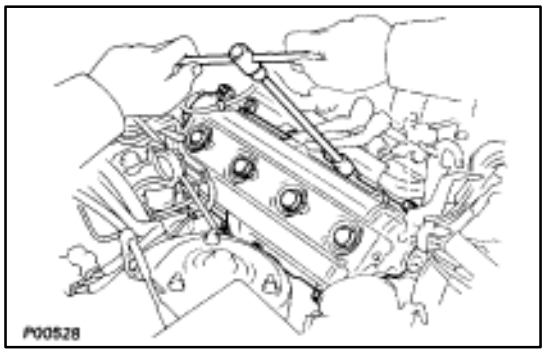

(d) Remove the eight bolts, seal washers, cylinder head cover and gasket.

WhereEverybodyKnowsYourName

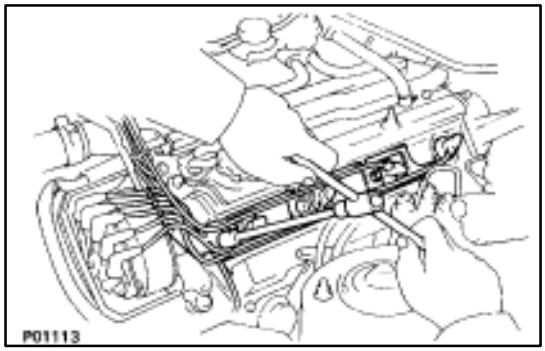

16. REMOVE LH CYLINDER HEAD COVER

(a) Remove the two bolts holding the high–tension cord clamp to the cylinder head.

(b) Disconnect the high–tension cords from the spark plugs.

(c) Disconnect the high–tension cords from the front high–tension cord clamp.

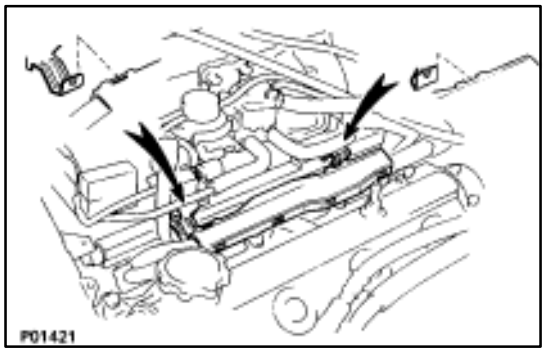

(d) Disconnect the engine wire from the two wire clamps on the LH delivery pipe.

(e) Disconnect the four injector connectors.

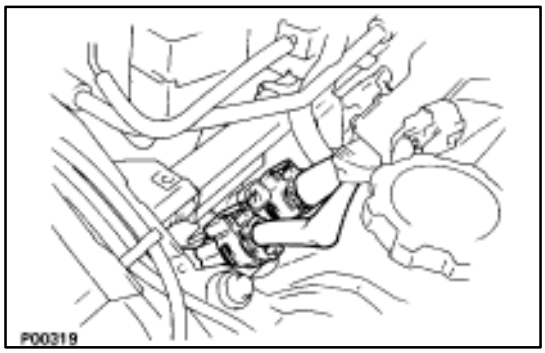

(f) Disconnect the two engine wire connectors.

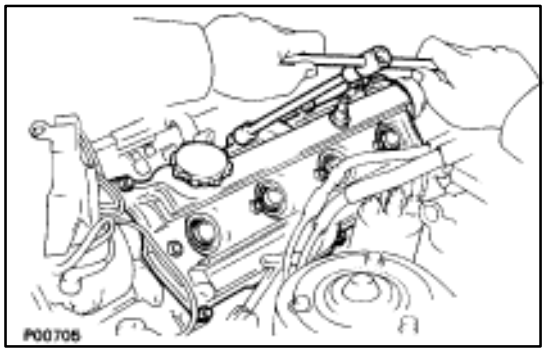

(g) Remove the eight bolts, seal washers, cylinder head cover and gasket.

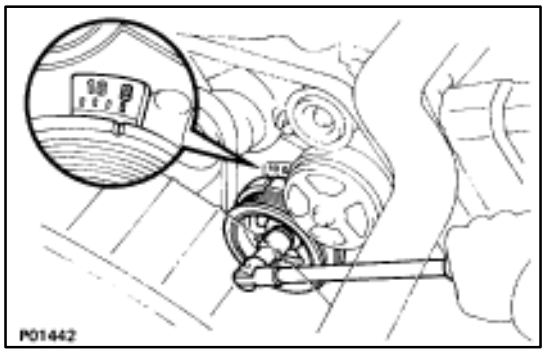

19. SET NO.1 CYLINDER TO TDC/COMPRESSION

(a) Turn the crankshaft pulley, and align its groove with the timing mark ”0” of the No.1 timing belt cover.

WhereEverybodyKnowsYourName

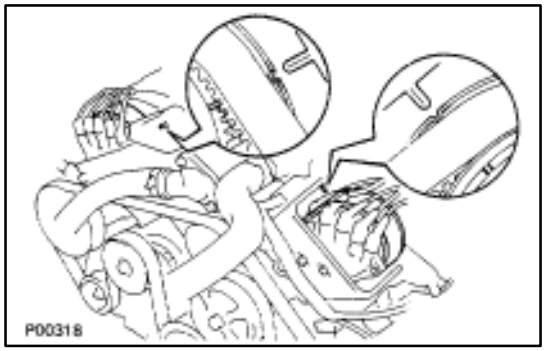

(b) Check that the timing marks of the camshaft timing pulleys and timing belt rear plates aligned.

If not, turn the crankshaft one revolution (360°) and align the mark as above.

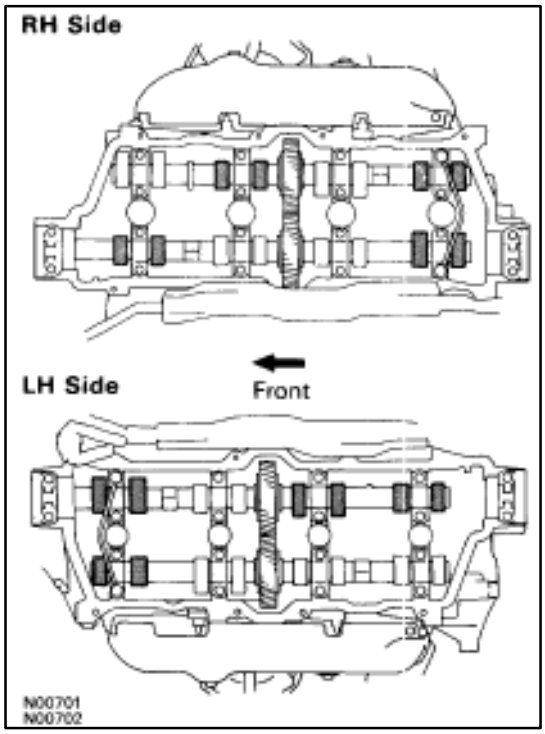

20. INSPECT VALVE CLEARANCE

(a) Check only those valves indicated.

- Using a feeler gauge, measure the clearance between the valve lifter and camshaft.
- Record the out–of–specification valve clearance measurements. They will be used later to determine the required replacement adjusting shim.

Valve clearance (Cold):

Intake 0.15–0.25 mm (0.006–0.010 in.)

Exhaust 0.25–0.35 mm (0.010–0.014 in.)

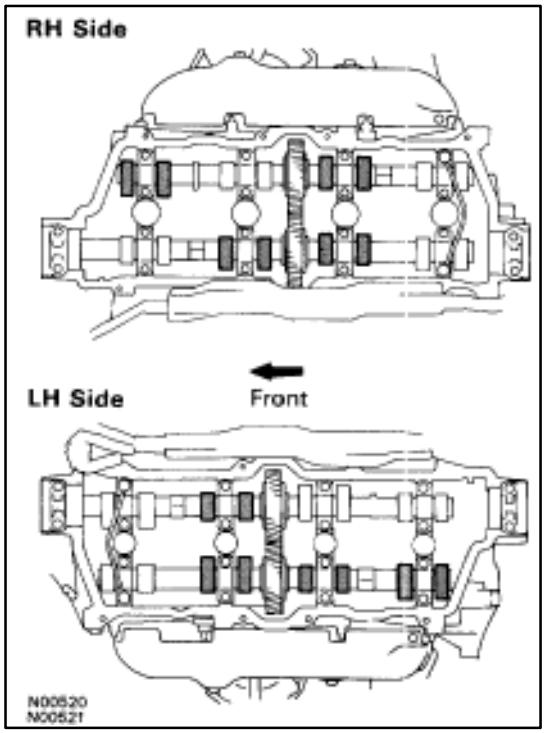

(b) Turn the crankshaft one revolution (360˚), and align the mark as above. (See procedure step in 19 (a))

(c) Check only the valves indicated as shown. Measure the valve clearance.
(See procedure in step (a))

WhereEverybodyKnowsYourName

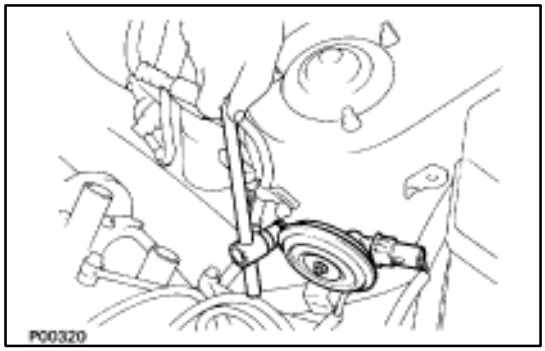

21. REMOVE THEFT DETERRENT HORN

(a) Disconnect the connector.

(b) Remove the bolt and theft deterrent horn.

HINT: Remove the deterrent horn when the valve clearance is adjusted for the front portion of the exhaust camshaft on the LH cylinder head.

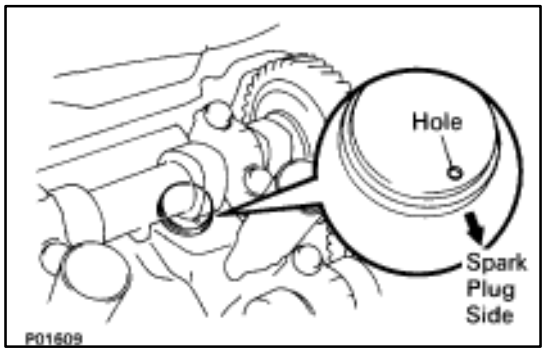

22. ADJUST VALVE CLEARANCE

(a) Remove the adjusting shim.

- Turn the crankshaft, and position the cam lobe of the camshaft on the adjusting valve upward.
- Position the hole of the adjusting shim toward the spark plug side.

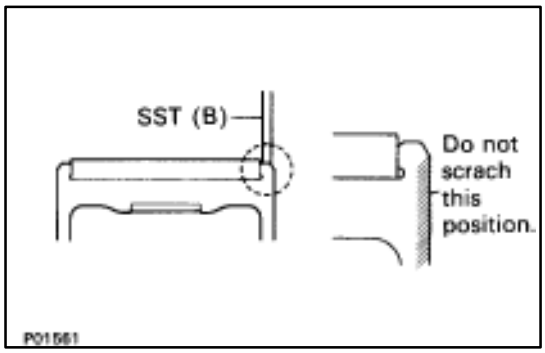

- Press down the valve lifter with SST (A), and place SST (B) between the camshaft and valve lifter flange. Remove SST (A).

SST 09248–55011

(09248–05011 (A), 09248–05021 (B))

NOTICE: The valve lifter is made of aluminum, which is easily scratched. So when setting SST (B), take care not to scratch the face of the valve lifter.

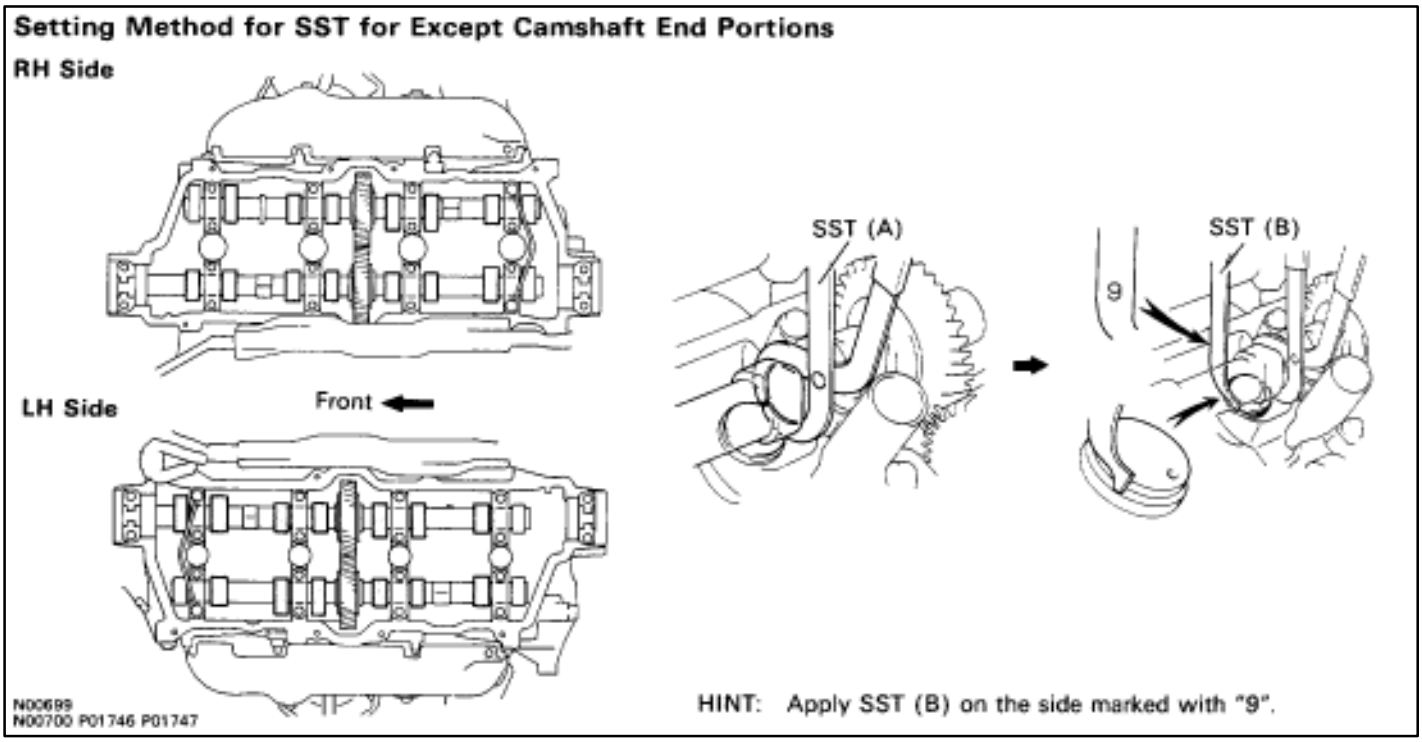

WhereEverybodyKnowsYourName

Setting Method for SST for Camshaft End Portions

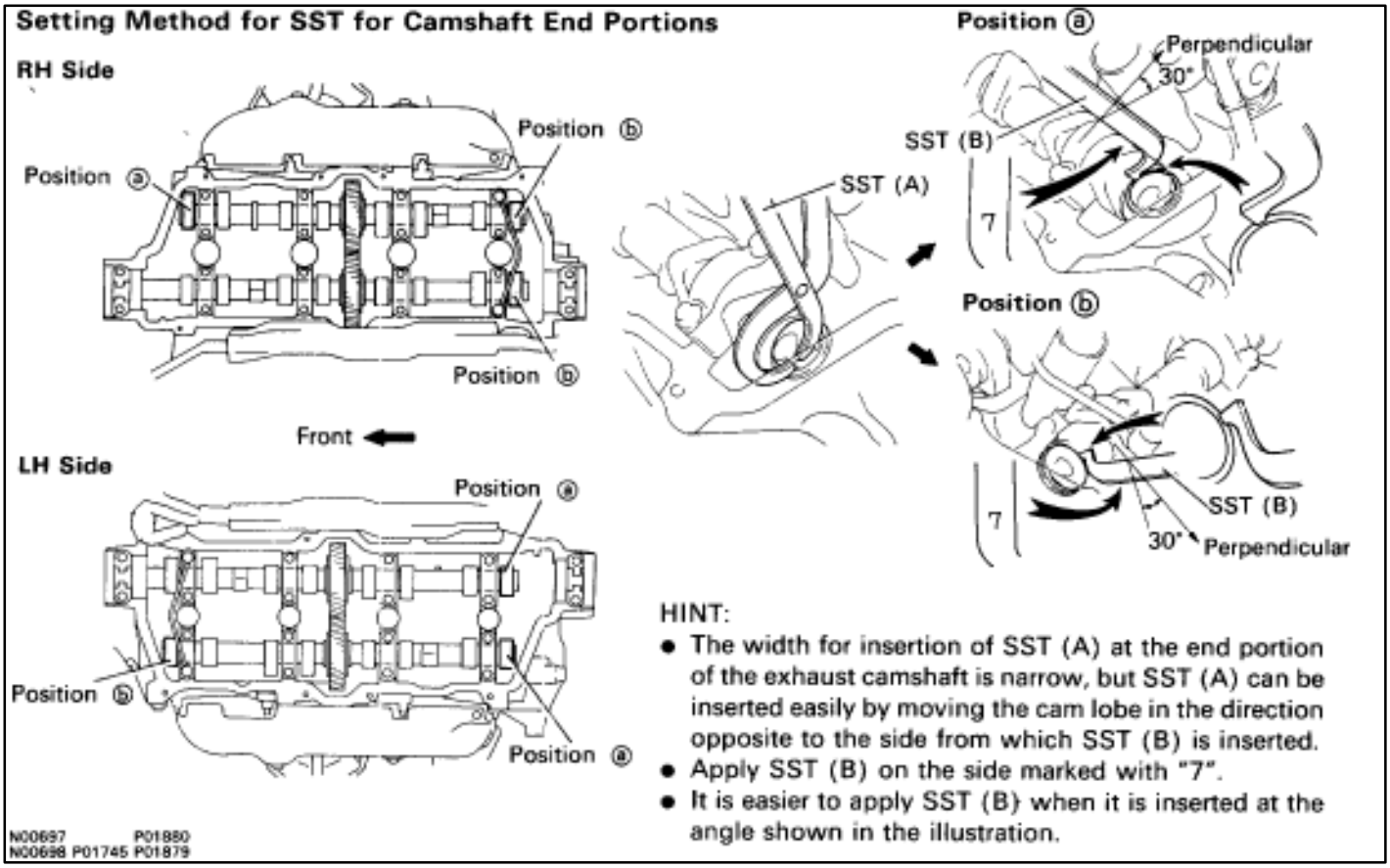

HINT:

- The width for insertion of SST (A) at the end portion of the exhaust camshaft is narrow, but SST (A) can be inserted easily by moving the cam lobe in the direction opposite to the side from which SST (B) is inserted.
- Apply SST (B) on the side marked with "7".
- It is easier to apply SST (B) when it is inserted at the angle shown in the illustration.

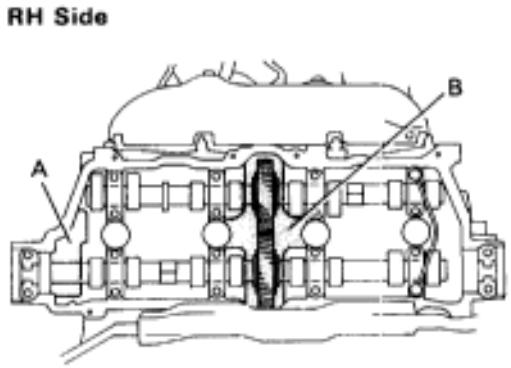

▼Using compressed air and magnetic finger, remove the adjusting shim by blowing air into the shim hole.

HINT: Remove the adjusting shim from the intake manifold side.

NOTICE: Do not drop the adjusting shim into portions A and B. If dropped into portion A, the adjusting shim will pass through the cylinder head and cylinder block into the oil pan. If dropped into portion B, the adjusting shim cannot be recovered without removing the exhaust camshaft.

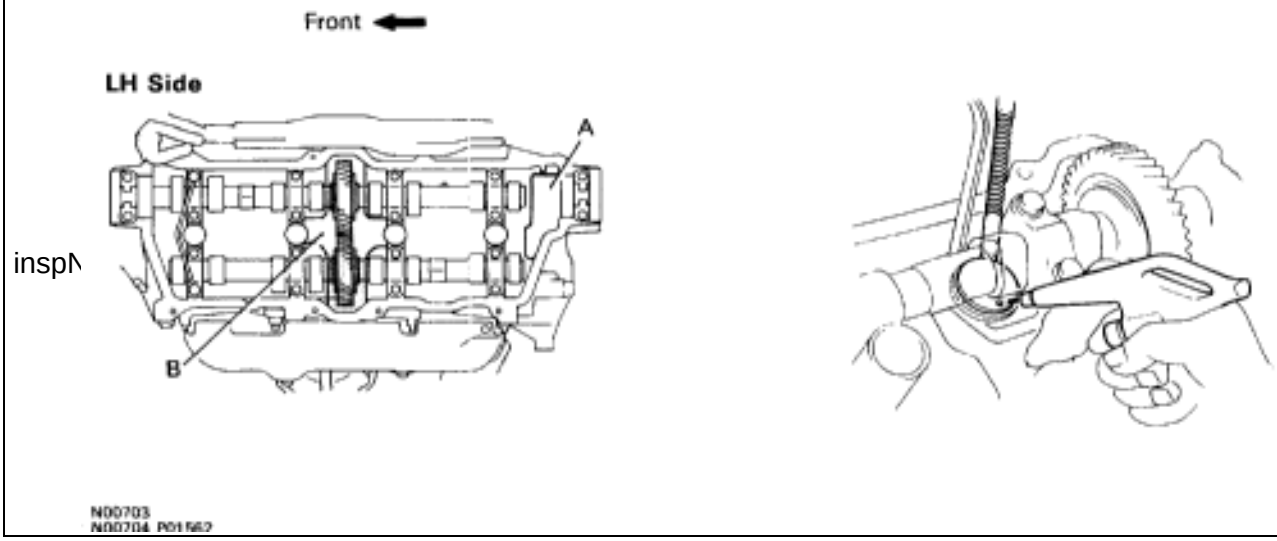

inspN

WhereEverybodyKnowsYourName

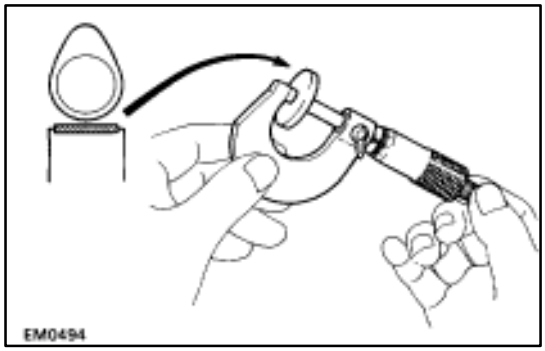

(b) Determine the replacement adjusting shim size following Formula or Charts:

- Using a micrometer, measure the thickness of the removed shim.
- Calculate the thickness of a new shim so the valve clearance comes within specified value.

T _____ Thickness of used shim
A _____ Measured valve clearance
N _____ Thickness of new shim

Intake N = T + (A–0.20 mm (0.008 in.))
Exhaust N = T + (A–0.30 mm (0.012 in.))

- Select a new shim with a thickness as close as possible to the calculated values.

HINT: Shims are available in thirty–three sizes in increments of 0.025 mm (0.0010 in.), from 2.50 mm (0.0984 in.) to 3.30 mm (0.1299 in.).

(c) Install a new adjusting shim.

- Place a new adjusting shim on the valve lifter.

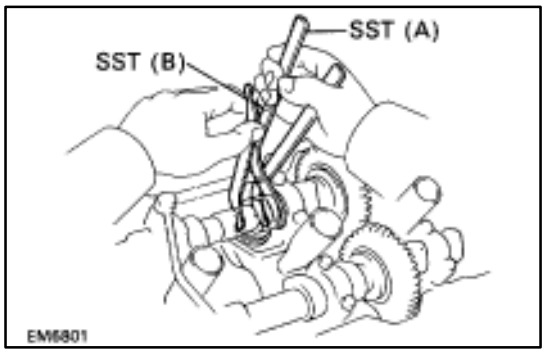

- Press down the valve lifter with SST (A), and remove SST (B).

SST 09248–55011

(d) Recheck the valve clearance.

WhereEverybodyKnowsYourName

Adjusting Shim Selection Chart (Intake)

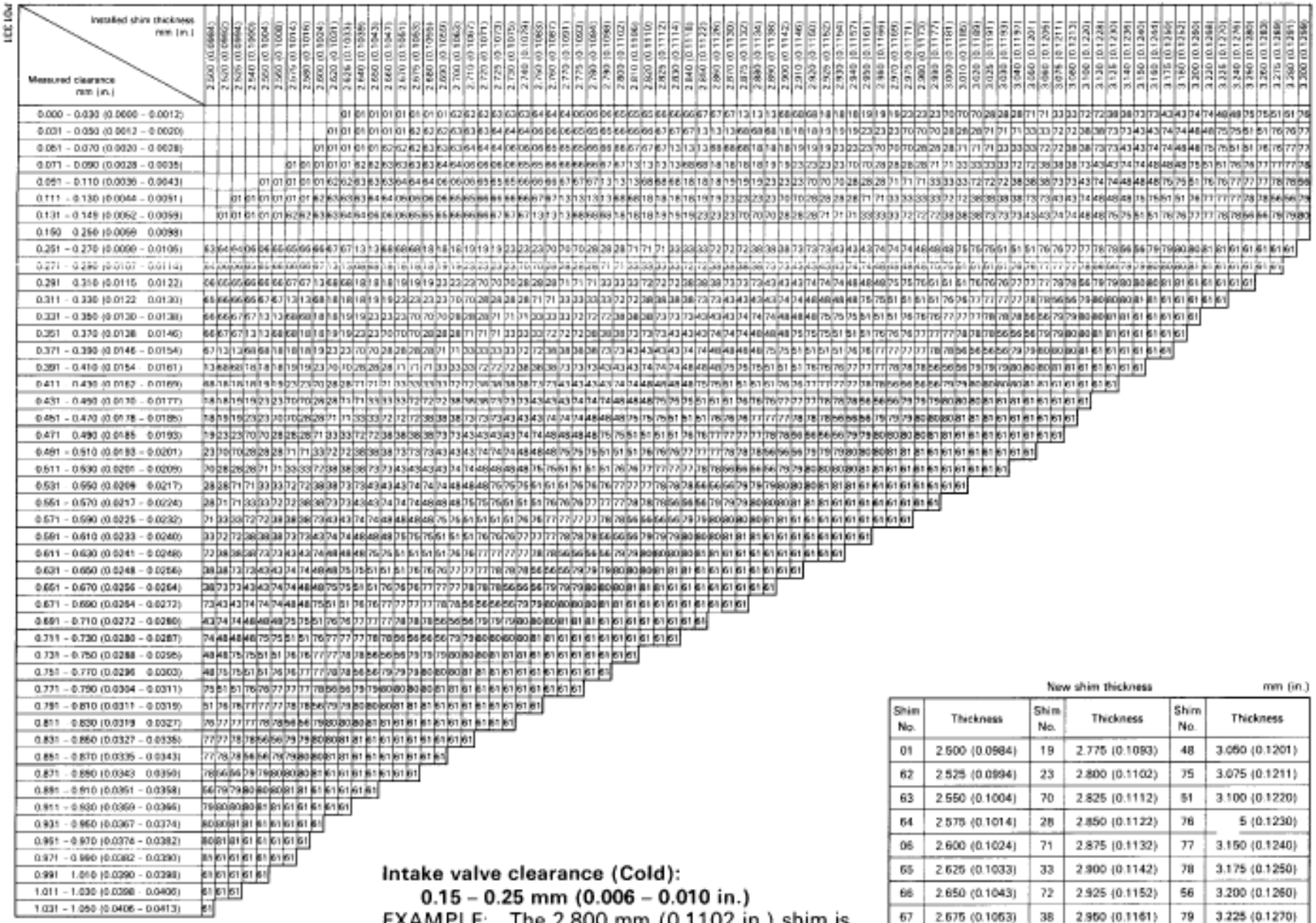

Intake valve clearance (Cold):
0.15 – 0.25 mm (0.006 – 0.010 in.)

EXAMPLE: The 2.800 mm (0.1102 in.) shim is installed, and the measured clearance is 0.440 mm (0.0173 in.). Replace the 2.800 mm (0.1102 in.) shim with a No.48 shim.

New shim thickness — mm (in.)

Shim No.	Thickness	Shim No.	Thickness	Shim No.	Thickness
01	2.500 (0.0984)	19	2.775 (0.1093)	48	3.050 (0.1201)
62	2.525 (0.0994)	23	2.800 (0.1102)	75	3.075 (0.1211)
63	2.550 (0.1004)	70	2.825 (0.1112)	51	3.100 (0.1220)
64	2.575 (0.1014)	28	2.850 (0.1122)	76	5 (0.1230)
06	2.600 (0.1024)	71	2.875 (0.1132)	77	3.150 (0.1240)
65	2.625 (0.1033)	33	2.900 (0.1142)	78	3.175 (0.1250)
66	2.650 (0.1043)	72	2.925 (0.1152)	56	3.200 (0.1260)
67	2.675 (0.1053)	38	2.950 (0.1161)	79	3.225 (0.1270)
13	2.700 (0.1063)	73	2.975 (0.1171)	80	3.250 (0.1280)
68	2.725 (0.1073)	43	3.000 (0.1181)	81	3.275 (0.1289)
18	2.750 (0.1083)	74	3.025 (0.1191)	61	3.300 (0.1299)

WhereEverybodyKnowsYourName

Adjusting Shim Selection Chart (Exhaust)

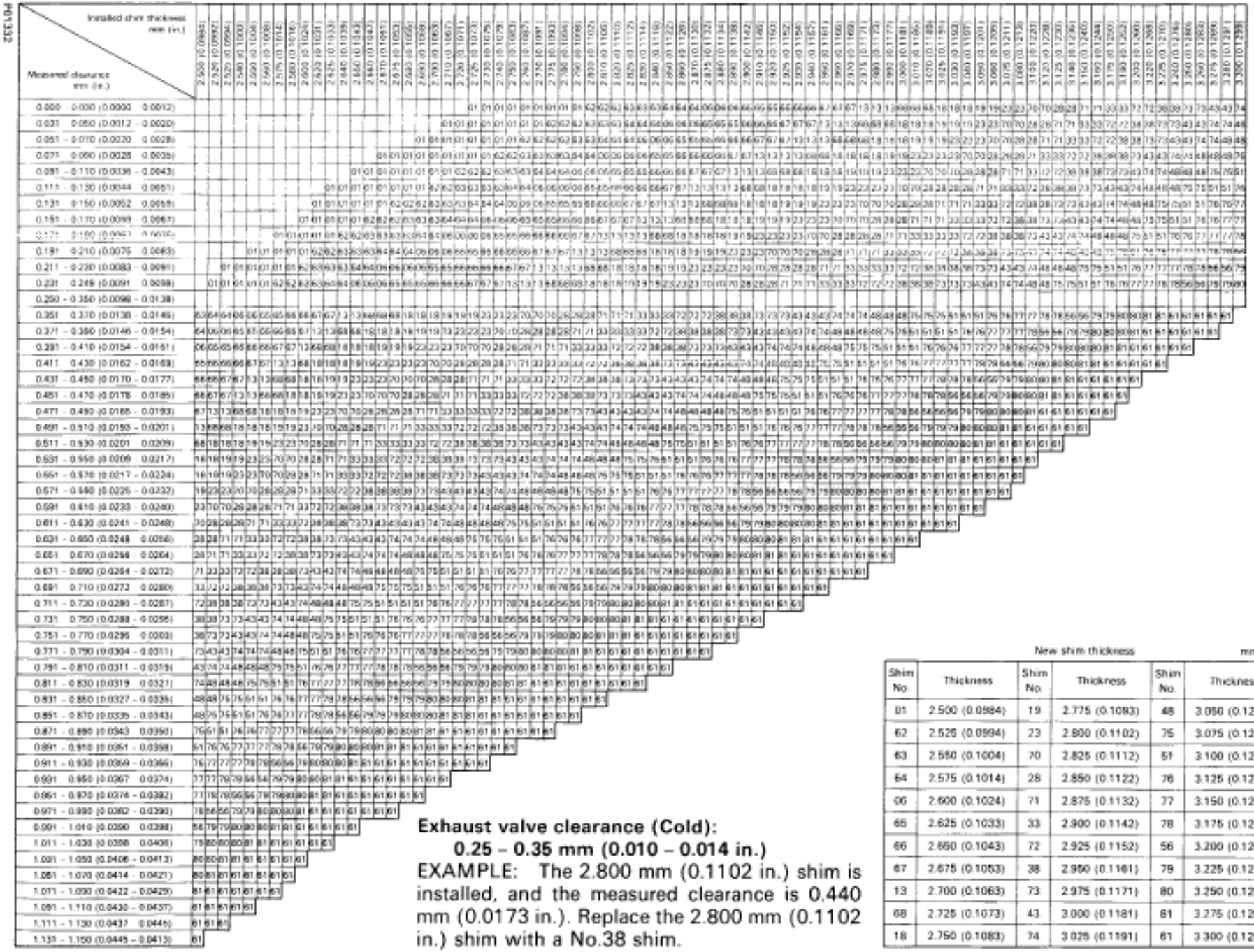

Exhaust valve clearance (Cold):
0.25 – 0.35 mm (0.010 – 0.014 in.)

EXAMPLE: The 2.800 mm (0.1102 in.) shim is installed, and the measured clearance is 0.440 mm (0.0173 in.). Replace the 2.800 mm (0.1102 in.) shim with a No.38 shim.

New shim thickness — mm (in.)

Shim No.	Thickness	Shim No.	Thickness	Shim No.	Thickness
01	2.500 (0.0984)	19	2.775 (0.1093)	48	3.050 (0.1201)
62	2.525 (0.0994)	23	2.800 (0.1102)	75	3.075 (0.1211)
63	2.550 (0.1004)	70	2.825 (0.1112)	51	3.100 (0.1220)
64	2.575 (0.1014)	28	2.850 (0.1122)	76	3.125 (0.1230)
06	2.600 (0.1024)	71	2.875 (0.1132)	77	3.150 (0.1240)
65	2.625 (0.1033)	33	2.900 (0.1142)	78	3.175 (0.1250)
66	2.650 (0.1043)	72	2.925 (0.1152)	56	3.200 (0.1260)
67	2.675 (0.1053)	38	2.950 (0.1161)	79	3.225 (0.1270)
13	2.700 (0.1063)	73	2.975 (0.1171)	80	3.250 (0.1280)
68	2.725 (0.1073)	43	3.000 (0.1181)	81	3.275 (0.1289)
18	2.750 (0.1083)	74	3.025 (0.1191)	61	3.300 (0.1299)

WhereEverybodyKnowsYourName

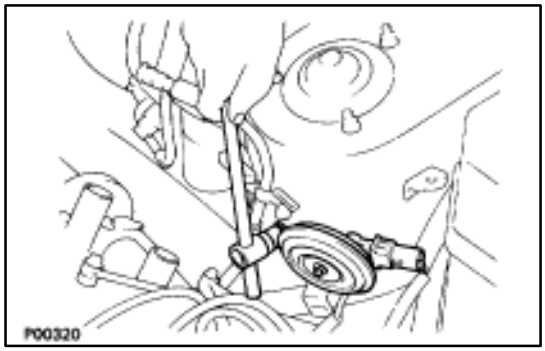

23. REINSTALL THEFT DETERRENT HORN

(a) Install the theft deterrent horn with the bolt.
(b) Connect the connector.

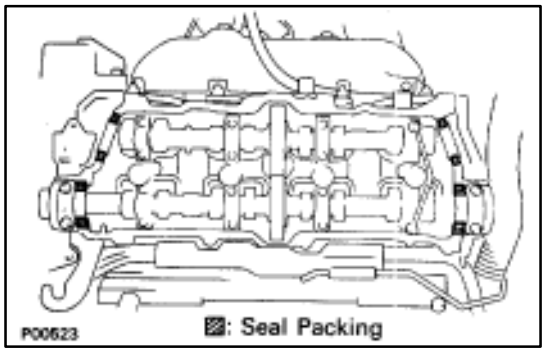

24. REINSTALL RH CYLINDER HEAD COVER

(a) Remove any oil packing (FIPG) material.
(b) Apply seal packing to the cylinder head as shown in the illustration.

Seal packing: Part No. 08826–00080 or equivalent

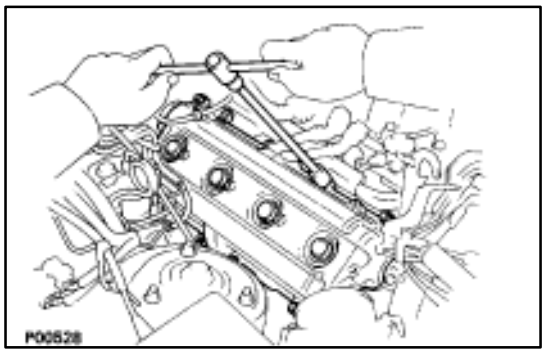

(c) Install the gasket to the cylinder head cover.
(d) Install the seal washer to the mounting bolt.
(e) Install the cylinder head cover with the eight bolts.

Torque: 5.9 N·m (60 kgf·cm, 52 in.·lbf)

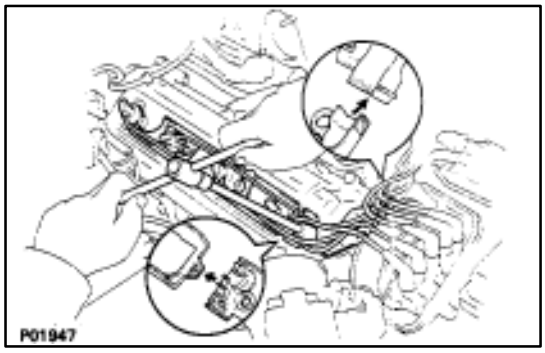

(g) Connect the four high–tension cords to the spark plugs.
(h) Install the rear and front high–tension cord clamps with the two bolts.

HINT: Place the front and rear ends of the front high–tension cord clamp on the rear high–tension cord clamp and lower high–tension cord cover.

(i) Fit the high–tension cords to the high–tension cord clamps. (See page IG–16)

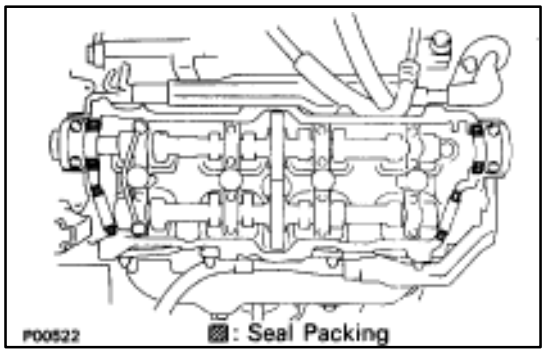

25. REINSTALL LH CYLINDER HEAD COVER

(a) Remove any oil packing (FIPG) material.
(b) Apply seal packing to the cylinder head as shown in the illustration.

Seal packing: Part No. 08826–00080 or equivalent

WhereEverybodyKnowsYourName

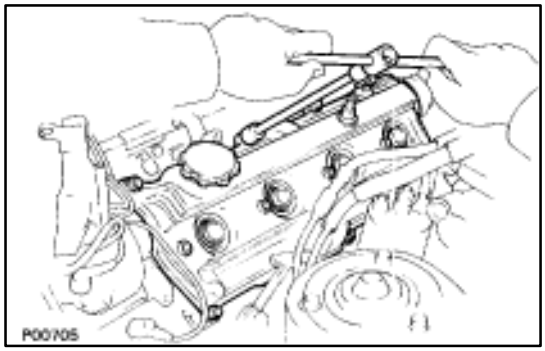

(c) Install the gasket to the cylinder head cover.
(d) Install the seal washer to the mounting bolt.
(e) Install the cylinder head cover with the eight bolts.
Torque: 5.9 N·m (60 kgf·cm, 52 in.·lbf)

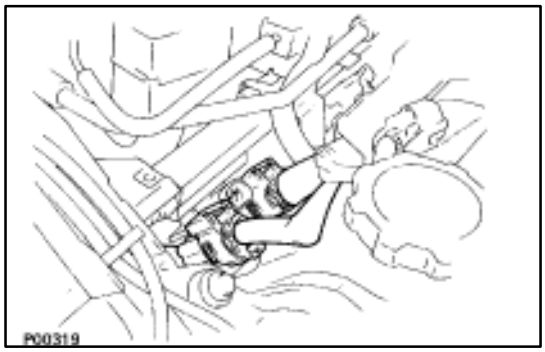

(f) Connect the two engine wire connectors.
(g) Connect the four injector connectors.

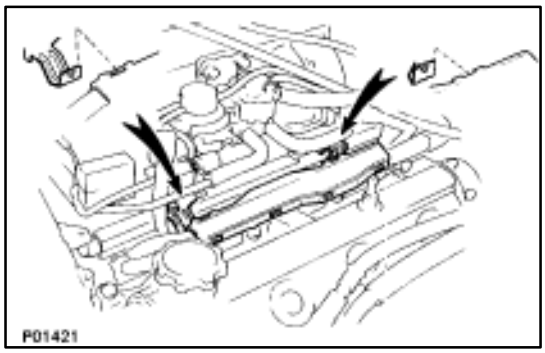

(h) Install the engine wire to the two wire clamps on the delivery pipe.

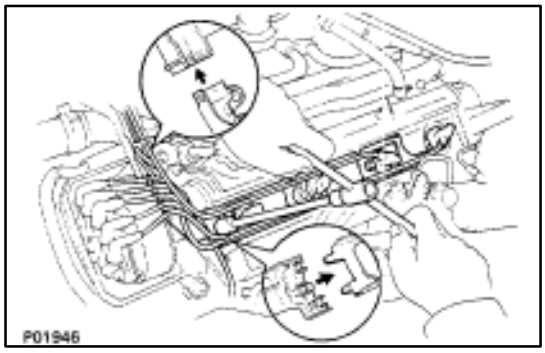

(i) Connect the four high–tension cords to the spark plugs.
(j) Install the rear and front high–tension cord clamps with the two bolts.

HINT: Place the front and rear ends of the front high–tension cord clamp on the rear high–tension cord clamp and lower high–tension cord cover.

(k) Fit the high–tension cords to the high–tension cord clamps. (See page IG–16)

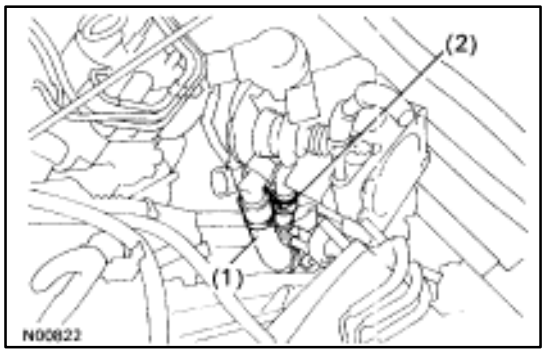

26. REINSTALL THROTTLE BODY

(a) Connect the following hoses:
  (1) PCV hose from throttle body
  (2) Water by–pass hose from throttle body

WhereEverybodyKnowsYourName

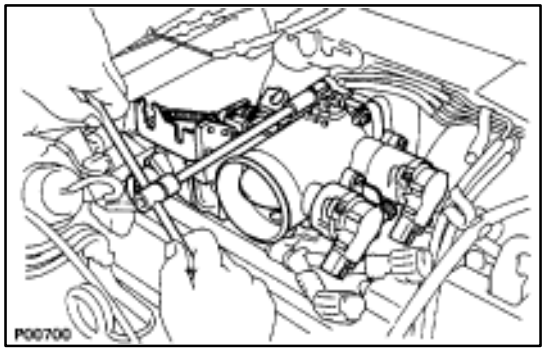

(b) Install a new gasket and throttle body with the two bolts and two nuts.

Torque: 18 N·m (185 kgf·cm, 13 ft·lbf)

HINT: Use bolts 40 mm (1.57 in.) in length.

(c) Install the water by–pass pipe (from rear water by–pass joint) to the clamp on the engine wire cover.

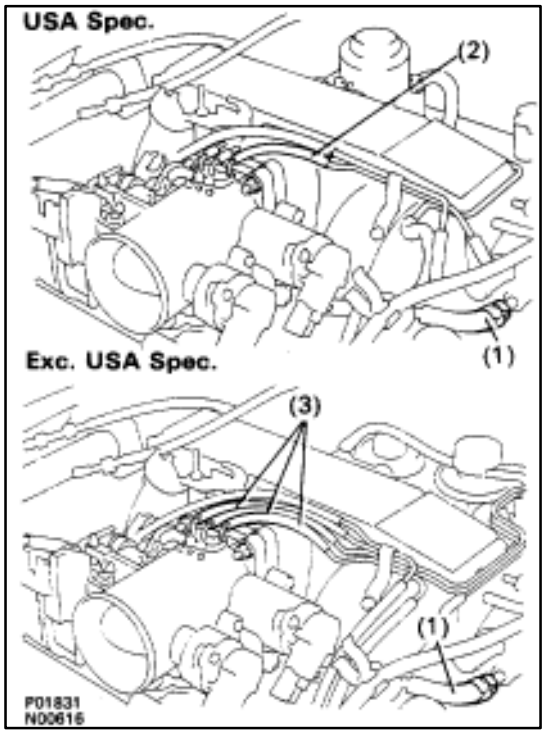

(d) Connect the following hoses:
  (1) Water by–pass hose to the ISC valve
  (2) (USA Spec.)
  Vacuum hose to throttle body
  (3) (Exc. USA Spec.)
  Three vacuum hoses to throttle body

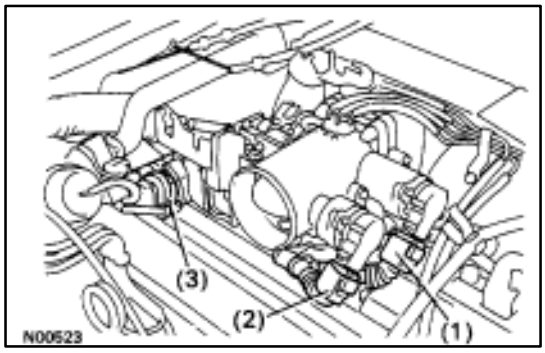

(e) Connect the following connectors:
  (1) Throttle position sensor connector
  (2) (w/ TRAC)
  Sub–throttle position sensor connector
  (3) (w/ TRAC)
  Sub–throttle actuator

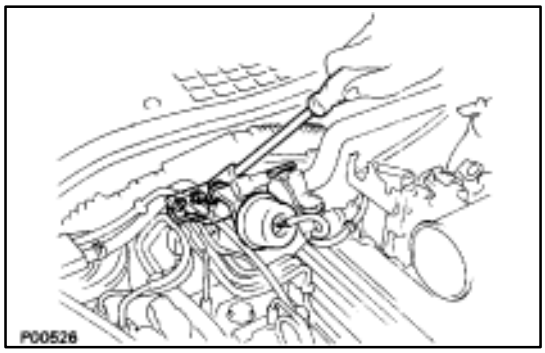

27. REINSTALL HEATER WATER VALVE

(a) Install the water valve and bracket assembly with the two bolts.

(b) Install the engine wire clamp with the bolt.

(c) Connect the VSV connector.

WhereEverybodyKnowsYourName

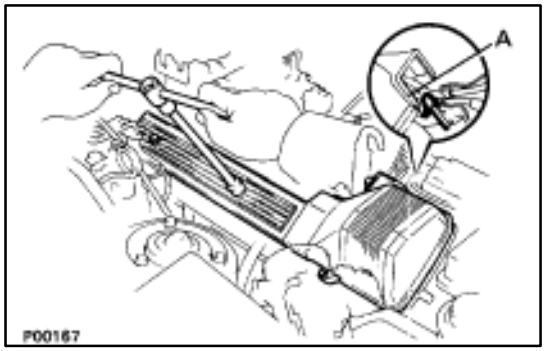

28. REINSTALL RH NO.3 TIMING BELT COVER

(a) Install the three gaskets to the timing belt cover.
(b) Fit portion A of the timing belt cover, matching it with the lower high–tension cord cover.
(c) Install the timing belt cover with the three bolts.

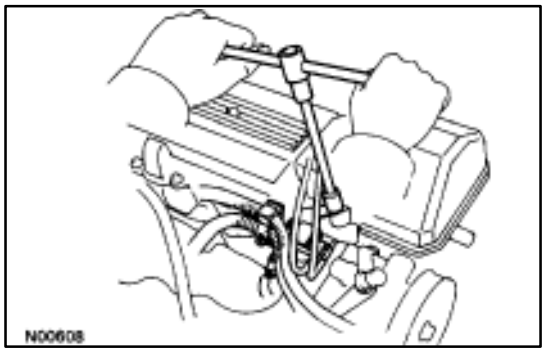

29. REINSTALL VSV FOR EVAP SYSTEM

Install the VSV with the two bolts.

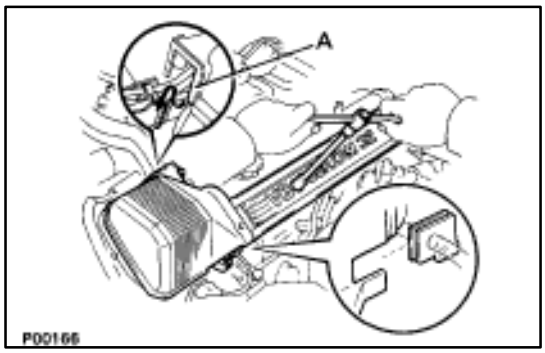

30. REINSTALL LH NO.3 TIMING BELT COVER

(a) Install the three gaskets to the timing belt cover.
(b) Install the cord grommet to the high–tension cord.
(c) Install the cord grommet to the timing belt cover.
(d) Fit portion A of the timing belt cover, matching it with the lower high–tension cord cover.
(e) Install the timing belt cover with the three bolts.

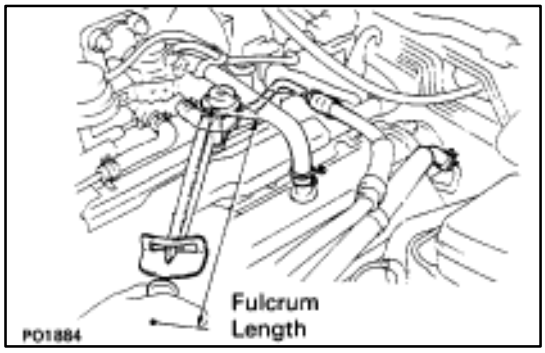

31. RECONNECT PCV HOSE TO LH CYLINDER HEAD

32. RECONNECT FUEL RETURN HOSE TO FUEL RETURN PIPE

33. RECONNECT FUEL INLET HOSE TO LH DELIVERY PIPE

Connect the inlet hose with two new gaskets and the pulsation damper.

SST 09612–24014 (09617–24011)

Torque: 39 N·m (400 kgf·cm, 29 ft·lbf)

33 N·m (340 kgf·cm, 24 ft·lbf) for SST

HINT: Use a torque wrench with a fulcrum length of 30 cm (11.81 in.)

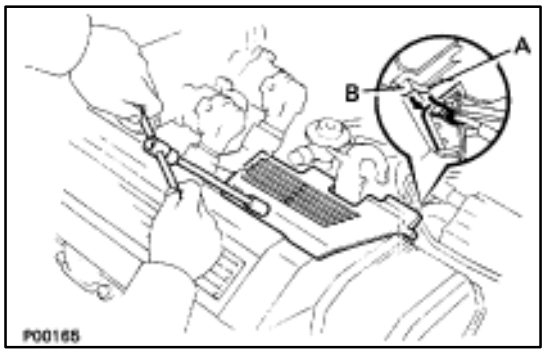

34. REINSTALL RH ENGINE WIRE COVER

(a) Fit portions A and B of the engine wire cover, matching them with the lower high–tension cord cover and No.3 timing belt cover.
(b) Install the engine wire cover with the bolt.

WhereEverybodyKnowsYourName

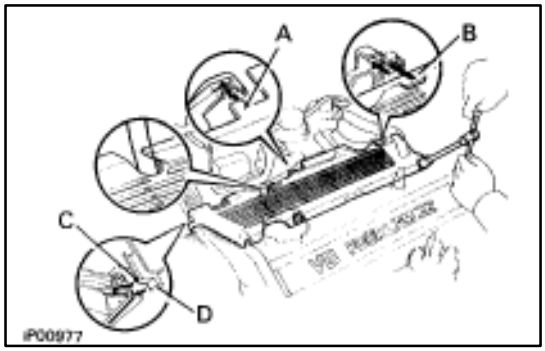

35. REINSTALL LH ENGINE WIRE COVER

(a) Connect portions A and B engine wire cover to the wire brackets.
(b) Set the VSV (for fuel pressure control system) wire in original position.
(c) Fit portions C and D of the engine wire cover, matching them with the lower high–tension cord cover and No.3 timing belt cover.
(d) Install the engine wire cover with the two bolts.

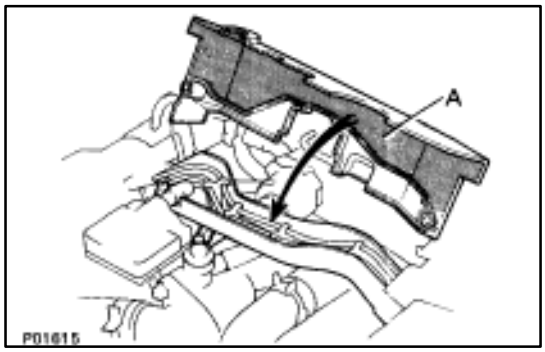

36. REINSTALL UPPER HIGH–TENSION CORD COVER

(a) Fit portion A of the upper high–tension cover, matching the top of the lower high–tension cord cover.

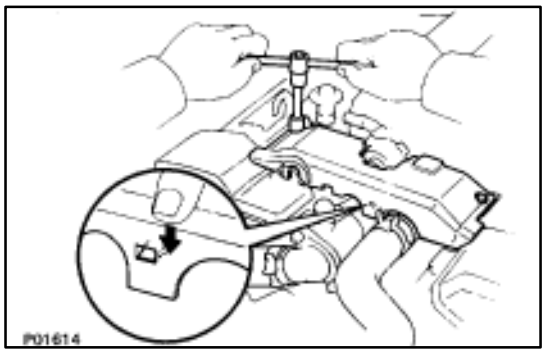

(b) Push the front side of the upper high–tension cord cover, and connect the front side claw groove of the upper high–tension cord cover to the claw of the lower high–tension cord cover.
(c) Install the upper high–tension cord cover with the two bolts.

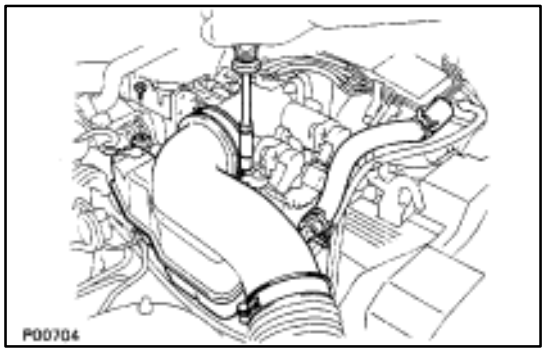

37. REINSTALL INTAKE AIR CONNECTOR

(a) Connect the end portions of the intake air connector to the throttle body and air cleaner hose.
(b) Tighten the two hose clamps.
(c) Install the bolt holding the intake air connector to the cylinder head cover.

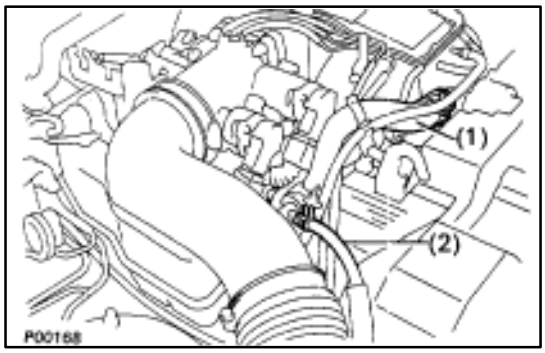

(d) Connect the following hoses:
  (1) Air hose to ISC to ISC valve
  (2) Air hose (from PS air control valve) to intake air connector

WhereEverybodyKnowsYourName

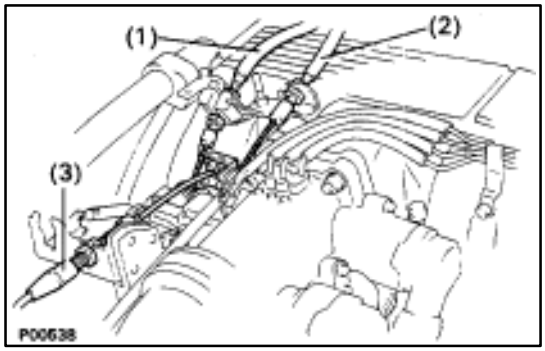

38. RECONNECT CONTROL CABLES TO THROTTLE BODY

Connect the following hoses:

(1) Accelerator cable
(2) A/T throttle control cable
(3) (w/ Cruise Control System)
Cruise control actuator cable

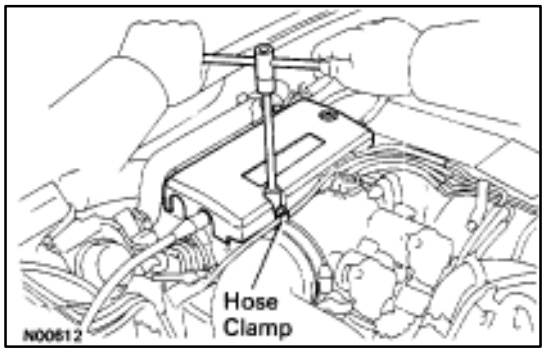

39. REINSTALL THROTTLE BODY COVER

Install the throttle body cover and hose clamp with the two bolts and cap nut.

40. RECONNECT CABLE TO NEGATIVE TERMINAL OF BATTERY

41. FILL WITH ENGINE COOLANT (See page CO–7)

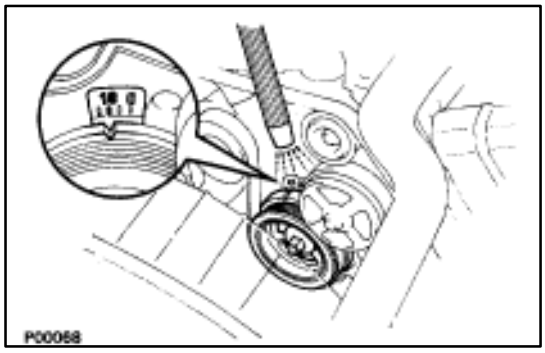

INSPECTION OF IGNITION TIMING

(See page IG–28)

Ignition timing:

8–12° BTDC @ idle

(w/ Terminals TE1 and E1 connected)

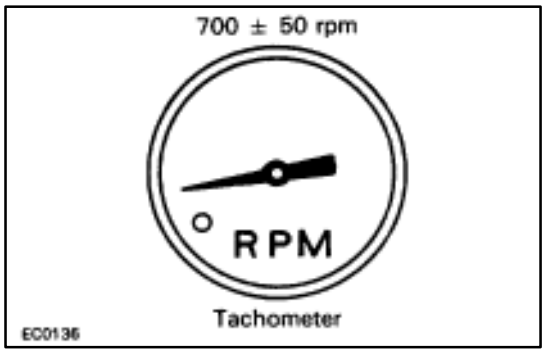

INSPECTION OF IDLE SPEED

HINT:

- Initial conditions (See step 1 on page EM–28)
- Set the tachometer to the 4–cylinder range.

Idle speed: 700 ± 50 rpm

WhereEverybodyKnowsYourName

IDLE AND/OR 2,500 RPM CO/HC CHECK

HINT: This check is used only to determine whether or not the idle CO/HC complies with regulations.

1. **INITIAL CONDITIONS**
   (a) Engine at normal operating temperature.
   (b) Air cleaner installed.
   (c) All pipes and hoses of air induction system connected.
   (d) All accessories switched OFF.
   (e) All vacuum lines properly connected.
   HINT: All vacuum hoses for EGR systems, etc. should be properly connected.
   (f) SFI system wiring connectors fully plugged.
   (g) Transmission in neutral.
   (h) Tachometer and CO/HC analyzer calibrated and at hand.

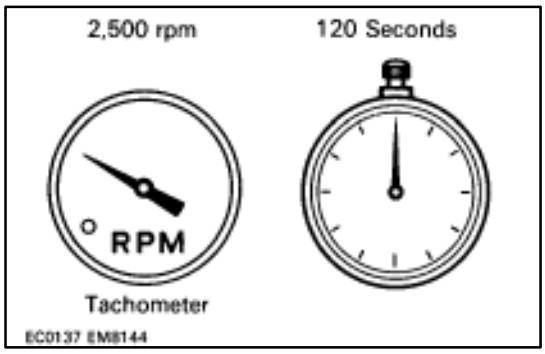

2. **START ENGINE**
3. **RACE ENGINE AT 2,500 RPM FOR APPROX. 120 SECONDS**

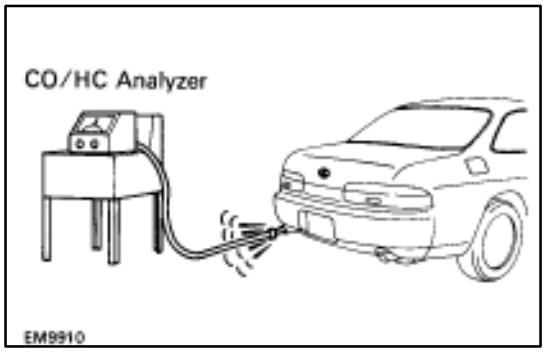

4. **INSERT CO/HC ANALYZER TESTING PROBE INTO TAILPIPE AT LEAST 40 cm (1.3 ft)**
5. **CHECK CO/HC CONCENTRATION AT IDLE AND/OR 2,500 RPM**
   Complete the measuring within three minutes.
   HINT: When performing the two mode (2,500 rpm and idle) test, follow the measurement order prescribed by the regulations.
   If the CO/HC concentration at 2,500 rpm does not comply with regulations, try the following procedure.
   Race the engine again at 2,500 rpm for approx. 1 minute and quickly repeat steps 4 and 5 above.
   This may correct the problem.

WhereEverybodyKnowsYourName

Troubleshooting

If the CO/HC readings do not comply with regulations, pre-form troubleshooting in the order given below.

(a) Check oxygen sensor operation.
(See page FI–73)

(b) See the table below for possible cause, and then inspect and correct the applicable causes if necessary.

CO	HC	Symptoms	Cause
Normal	High	Rough idle	1. Faulty ignition: 2 Incorrect timing 2 Fouled, shorted or improperly gapped plugs 2 Open or crossed high–tension cords 2 Cracked distributor cap 2. Incorrect valve clearance 3. Leaky EGR valve 4. Leaky intake and exhaust valves 5. Leaky cylinder
Low	High	Rough idle (Fluctuating HC reading)	1. Vacuum leak: 2 PCV hose 2 EGR valve 2 Intake manifold 2 Air intake chamber 2 Throttle body 2 ISC valve 2 Brake booster line 2 Lean mixture causing misfire
High	High	Rough idle (Black smoke from exhaust)	1. Clogged air filter 2. Faulty EFI system 2 Faulty pressure regulator 2 Clogged fuel return line 2 Defective engine coolant temp. sensor 2 Defective intake air temp. sensor 2 Faulty ECU 2 Fault injectors 2 Faulty throttle position sensor 2 Faulty volume air flow meter

WhereEverybodyKnowsYourName

COMPRESSION CHECK

HINT: If there is lack of power, excessive oil consumption or poor fuel economy, measure the compression pressure.

1. **WARM UP AND STOP ENGINE**
   Allow the engine to warm up to normal operating temperature.
2. **DISCONNECT DISTRIBUTOR CONNECTOR**
3. **DISCONNECT HIGH–TENSION CORDS FROM SPARK PLUGS (See steps 2 to 8 on pages EM–10 and 11)**
4. **DISCONNECT INJECTOR CONNECTORS**
5. **REMOVE SPARK PLUGS (See page IG–8)**

6. **CHECK CYLINDER COMPRESSION**
   (a) Insert a compression tester into the spark plug hole.
   (b) Fully open the throttle.
   (c) While cranking the engine, measure the compression pressure.
   HINT: Always use a fully charged battery to obtain engine revolution of 250 rpm or more.
   (d) Repeat steps (a) through (c) for each cylinder.
   NOTICE: This measurement must be done in as short time as possible.
   Compression:
   1,226 kPa (12.5 kgf/cm^2, 178 psi) or more
   Minimum pressure:
   981 kPa (10.0 kgf/cm^2, 142 psi)
   Difference between each cylinder:
   98 kPa (1.0 kgf/cm^2, 14 psi) or less
   (e) If the cylinder compression in one or more cylinders is low, pour a small amount of engine oil into the cylinder through the spark plug hole and repeat steps (a) through (c) for the cylinder with low compression.
   - If adding oil helps the compression, the piston rings and/or cylinder bore are probably worn or damaged.
   - If pressure stays low, a valve may be sticking or seating improper, or there may be leakage past the gasket.

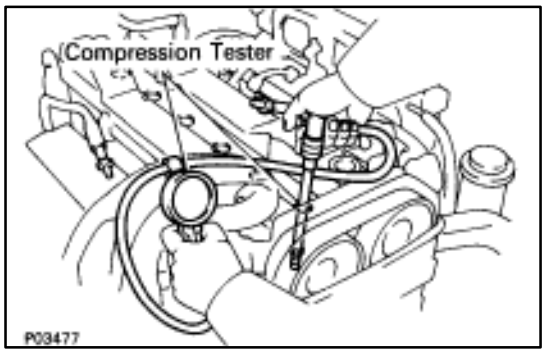

7. **REINSTALL SPARK PLUGS (See page IG–9)**
   Torque: 18 N·m (180 kgf·cm, 13 ft·lbf)
8. **RECONNECT INJECTOR CONNECTORS**
9. **RECONNECT HIGH–TENSION CORDS TO SPARK PLUGS (See steps 14 to 20 on pages EM–17 to 19)**
10. **RECONNECT DISTRIBUTOR CONNECTOR**

WhereEverybodyKnowsYourName

TIMING BELT
COMPONENTS

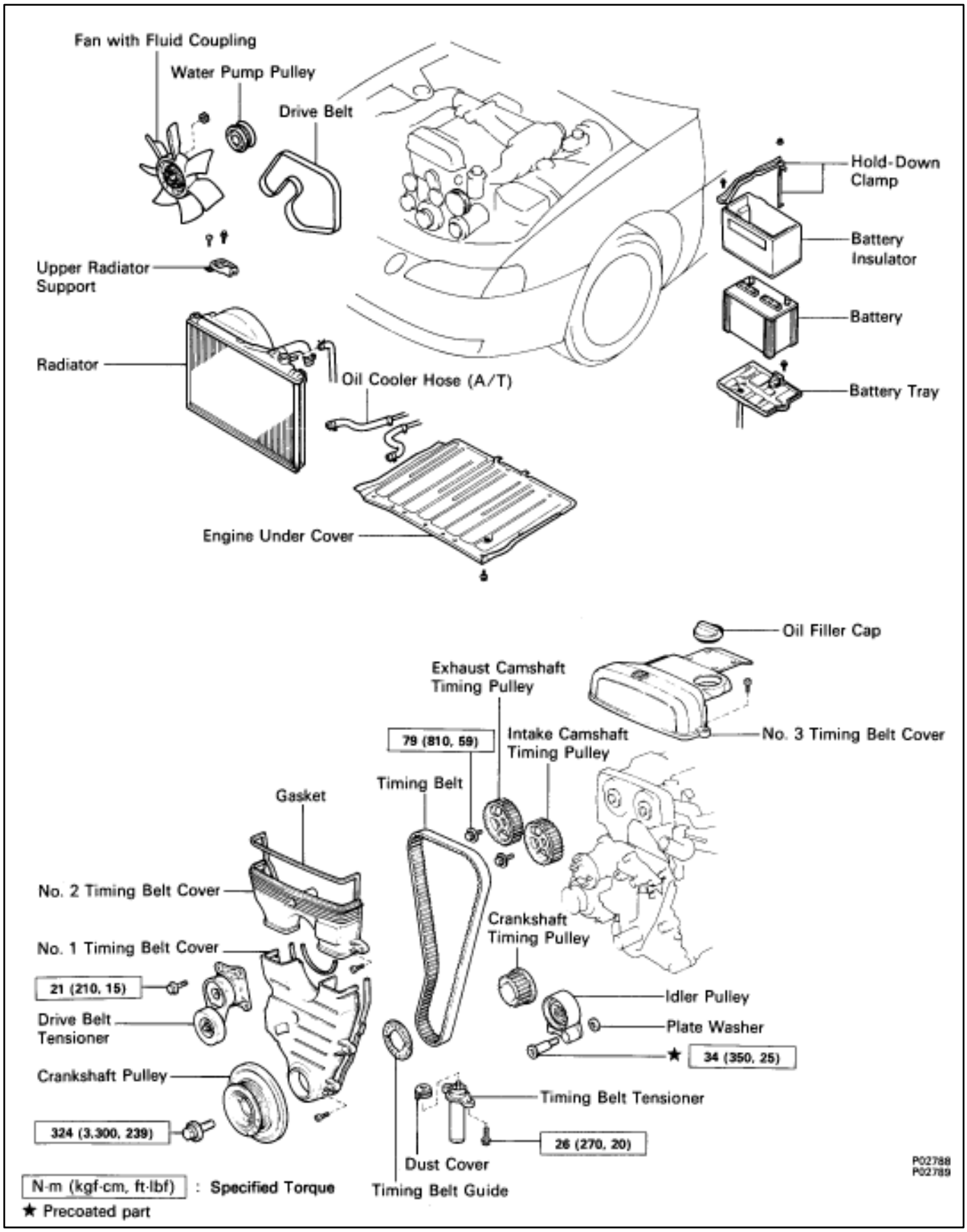

WhereEverybodyKnowsYourName

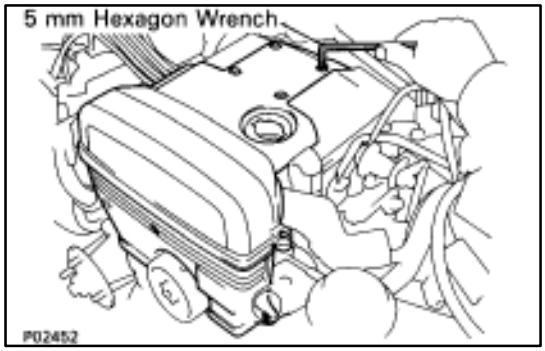

REMOVAL OF TIMING BELT

(See Components on page EM–23)

1. **REMOVE WATER PUMP PULLEY AND RADIATOR (See steps 1 to 3, 6 and 7 on pages EM–64 and 66)**
2. **REMOVE NO. 3 AND NO. 2 TIMING BELT COVERS**
   (a) Remove the oil filler cap.
   (b) Using a 5 mm hexagon wrench, remove the nine bolts, No. 3, No. 2 timing belt covers and gasket.

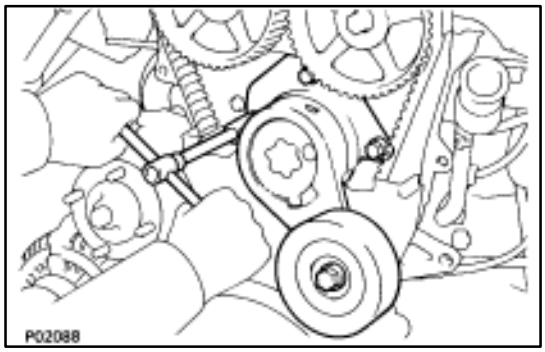

3. **REMOVE DRIVE BELT TENSIONER**
   Remove the three bolts and tensioner.

4. **SET NO. 1 CYLINDER TO TDC/COMPRESSION**
   (a) Turn the crankshaft pulley and align its groove with timing mark ”0” of the No. 1 timing belt cover.
   NOTICE: Always turn the crankshaft clockwise.

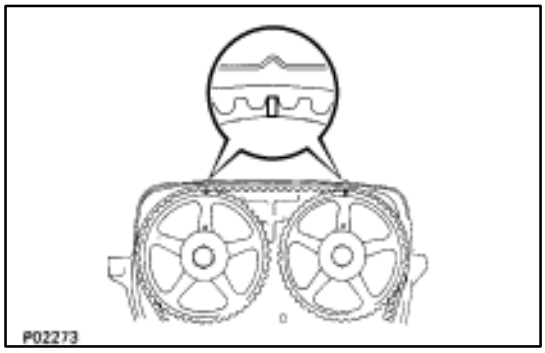

   (b) Check that the timing marks of the camshaft timing pulleys are aligned with the timing marks of the No. 4 timing belt cover.
   If not, turn the crankshaft one revolution (360°).

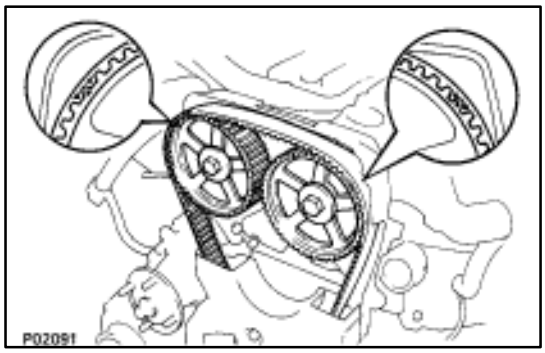

5. **REMOVE TIMING BELT FROM CAMSHAFT TIMING PULLEYS**
   HINT: (Re–using timing belt)
   Place matchmarks on the timing belt and camshaft timing pulleys as shown in the illustration.

WhereEverybodyKnowsYourName

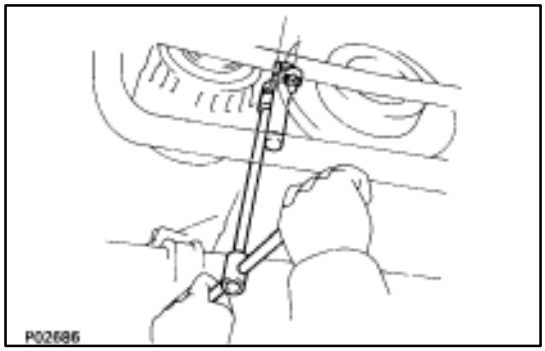

(a) Alternately loosen the two bolts, and remove them, the tensioner and dust boot.

(b) Disconnect the timing belt from the camshaft timing pulleys.

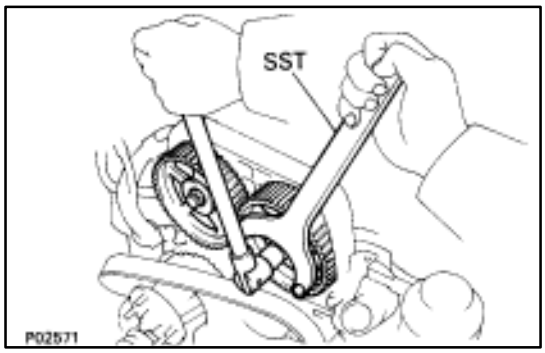

6. REMOVE CAMSHAFT TIMING PULLEYS

Using SST, remove the bolt for the timing pulley. Remove both timing pulleys.

SST 09278–54012

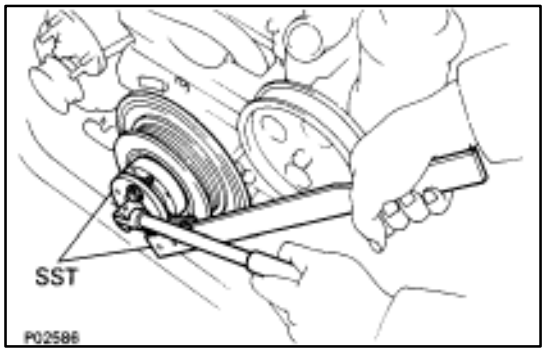

7. REMOVE CRANKSHAFT PULLEY

(a) Using SST to hold the crankshaft pulley, loosen the pulley mounting bolt.

SST 09213–54015 (91651–60855) and 09330–00021

(b) Remove SST and pulley bolt.

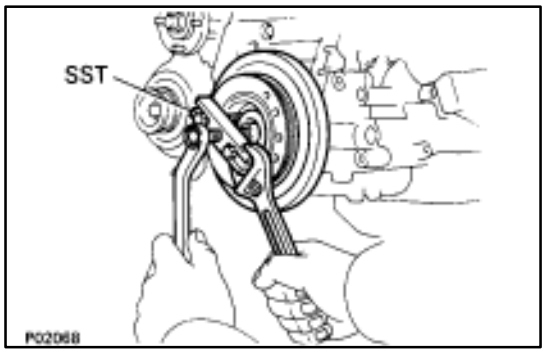

(c) Using SST, remove the pulley.

SST 09213–31021

WhereEverybodyKnowsYourName

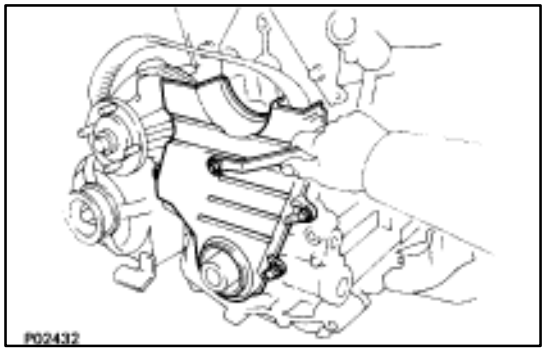

8. REMOVE NO. 1 TIMING BELT COVER

Remove the five bolts, timing belt cover and two gaskets.

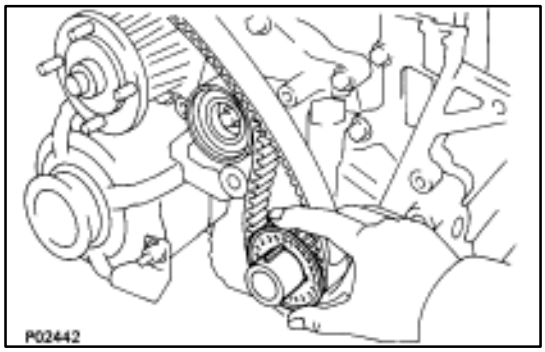

9. REMOVE TIMING BELT GUIDE

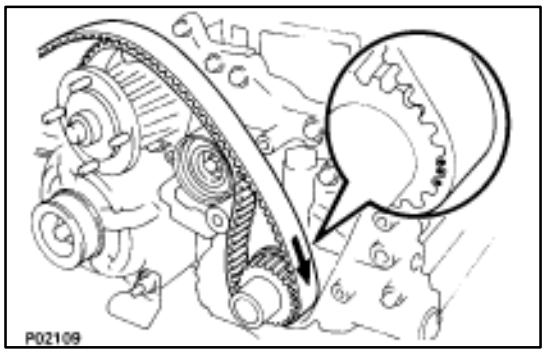

10. REMOVE TIMING BELT

HINT (When re–using timing belt): Draw an arrow on the timing belt in the direction of engine revolution, and place matchmarks on the timing belt and crankshaft timing pulley.

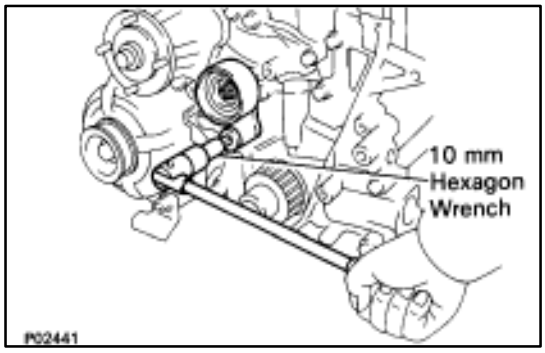

11. REMOVE IDLER PULLEY

Using a 10 mm hexagon wrench, remove the pivot bolt, plate washer and idler pulley.

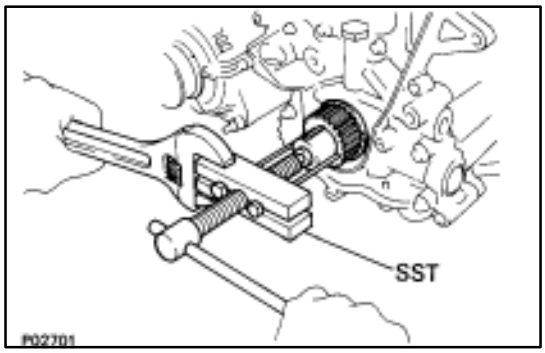

12. REMOVE CRANKSHAFT TIMING PULLEY

If the pulley cannot be removed by hand, use SST to remove the crankshaft timing pulley.

SST 09213–60017 (09213–00020, 09213–00030, 09213–00040, 09213–00050)

WhereEverybodyKnowsYourName

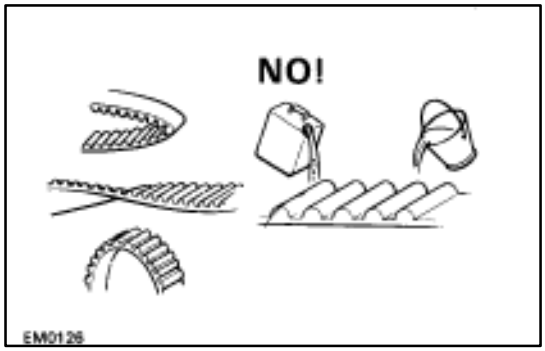

INSPECTION OF TIMING BELT COMPONENTS

1. INSPECT TIMING BELT

NOTICE:

- **Do not bend, twist or turn the timing belt inside out.**
- **Do not allow the timing belt to come into contact with oil, water or steam.**
- **Do not make use of timing belt tension when installing or removing the mount bolt of the camshaft timing pulley.**

If there are any defects as shown in the illustrations, check the following points:

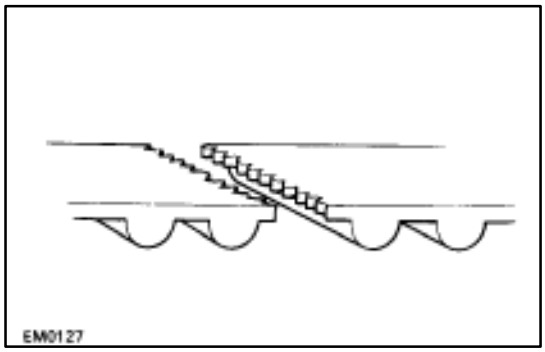

(a) Premature parting
- Check for proper installation.
- Check the timing cover gasket for damage and proper installation.

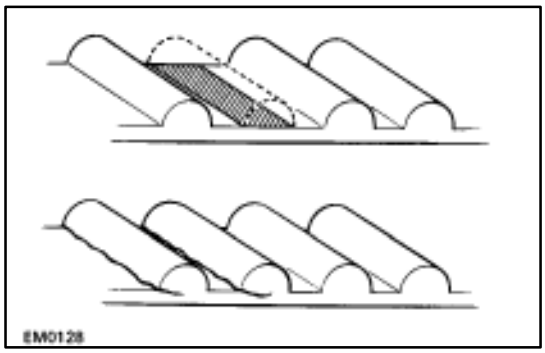

(b) If the belt teeth are cracked or damaged, check to see if either the camshaft or water pump is locked.

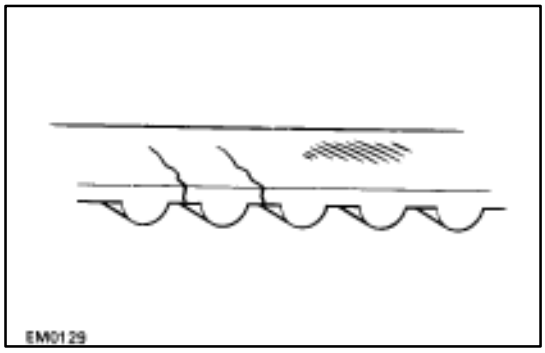

(c) If there is noticeable wear or cracks on the belt face, check to see if there are nicks on the side of the idler pulley lock.

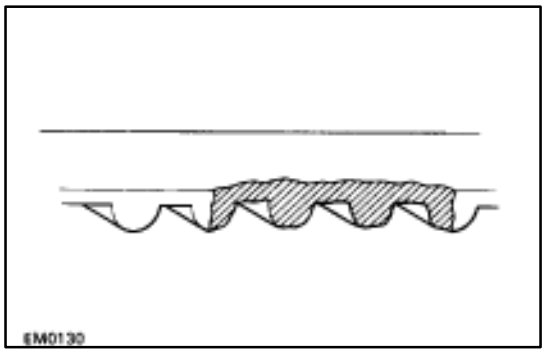

(d) If there is wear or damage on only one side of the belt, check the belt guide and the alignment of each pulley.

WhereEverybodyKnowsYourName

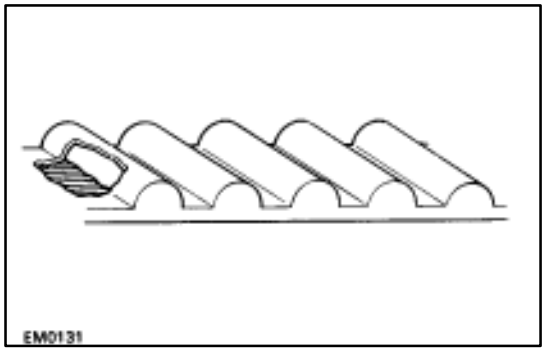

(e) If there is noticeable wear on the belt teeth, check the timing cover for damage, correct gasket installation and foreign material on the pulley teeth.

If necessary, replace the timing belt.

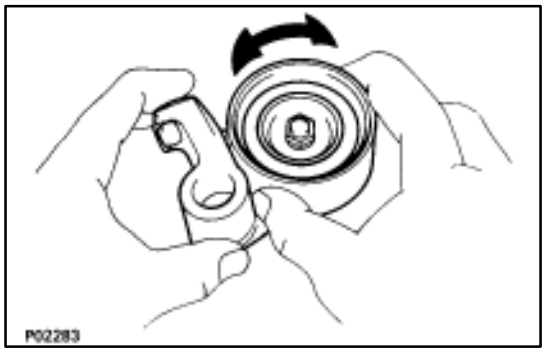

2. INSPECT IDLER PULLEY

Check the turning smoothness of the idler pulley.

If necessary, replace the idler pulley.

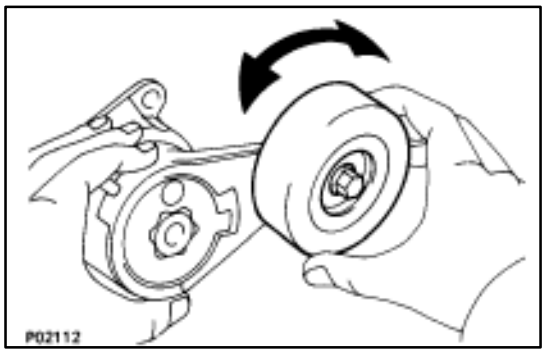

3. INSPECT DRIVE BELT TENSIONER

Check the turning smoothness of the tensioner.

If necessary, replace the tensioner.

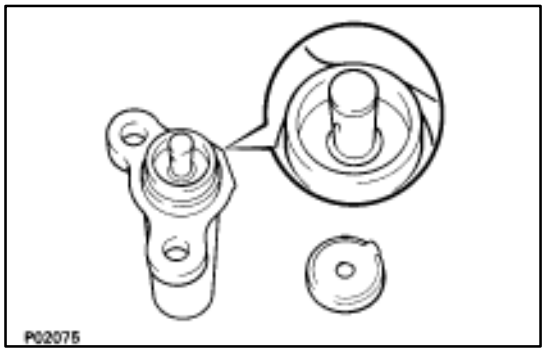

4. INSPECT TIMING BELT TENSIONER

(a) Visually check tensioner for oil leakage.

HINT: It is normal for a tensioner to show a small trance of oil on the pushrod seal.

However, if there is an outright oil leak, the tensioner must be replaced.

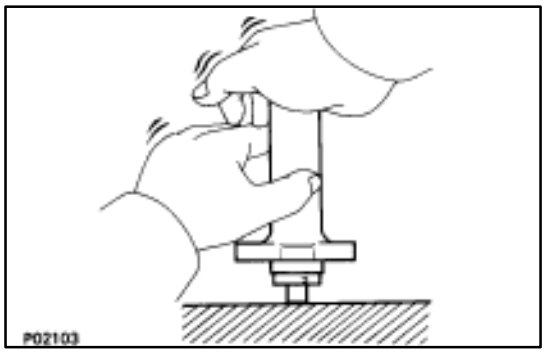

(b) Hold the tensioner with both hands, and push the push rod firmly against the floor or wall to check that it doesn’t move.

If the push rod moves, replace the tensioner.

WhereEverybodyKnowsYourName

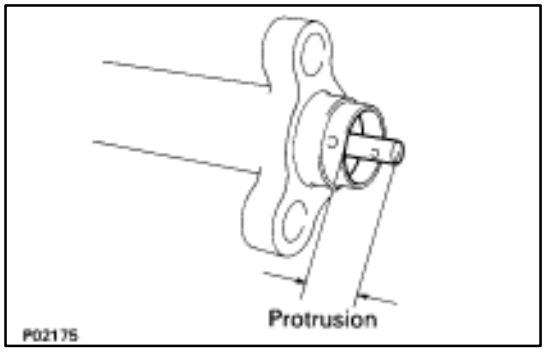

(c) Measure the protrusion of the push rod from housing end.

Protrusion: 7.7–10.5 mm (0.303–0.413 in.)

If the protrusion is not as specified, replace the tensioner.

INSTALLATION OF TIMING BELT

(See Components page EM–23)

1. INSTALL CRANKSHAFT TIMING PULLEY

(a) Align the pulley set key with the key groove of the pulley.

(b) Slide on the timing pulley facing the flange side inward.

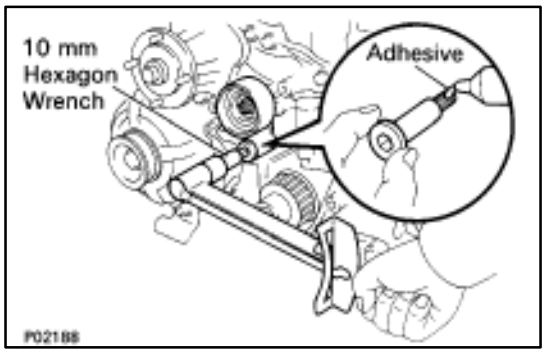

2. INSTALL IDLER PULLEY

(a) Apply adhesive to two or three threads of the pivot bolt.

Adhesive: Part No. 08833–00080, THREE BOND 1344, LOCTITE 242 or equivalent

(b) Using a 10 mm hexagon wrench, install the plate washer and pulley with the pivot bolt.

Torque: 34 N·m (350 kgf·cm, 25 ft·lbf)

(c) Check that the pulley bracket moves smoothly.

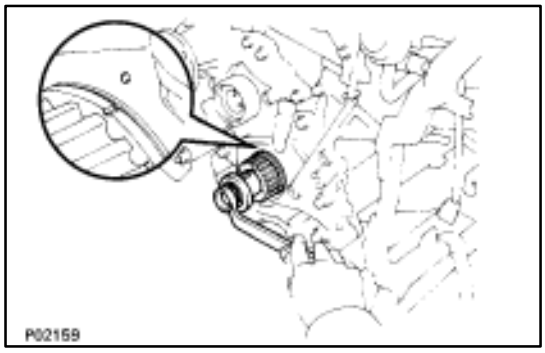

3. TEMPORARILY INSTALL TIMING BELT

NOTICE: The engine should be cold.

(a) Use the crankshaft pulley bolt to turn the crankshaft and align the timing marks on the crankshaft timing pulley and on the oil pump body.

(b) Remove any oil or water on the crankshaft timing pulley and idler pulley, and keep them clean.

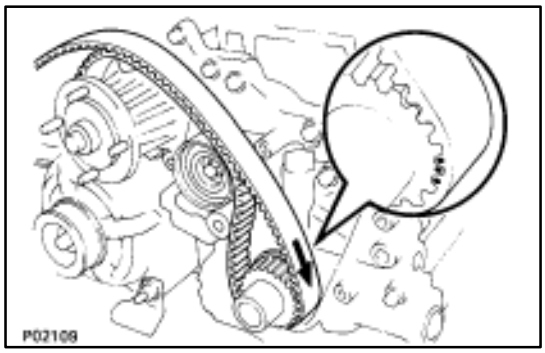

(c) Install the timing belt on the crankshaft timing pulley and idler pulley.

HINT (When re–using timing belt): Align the matchmarks of the crankshaft timing pulley and timing belt, and install the belt with the arrow pointing in the direction of engine revolution.

WhereEverybodyKnowsYourName

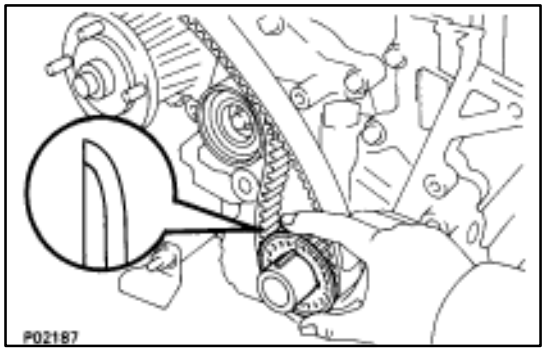

4. INSTALL TIMING BELT GUIDE

Install the guide, facing the cup side outward.

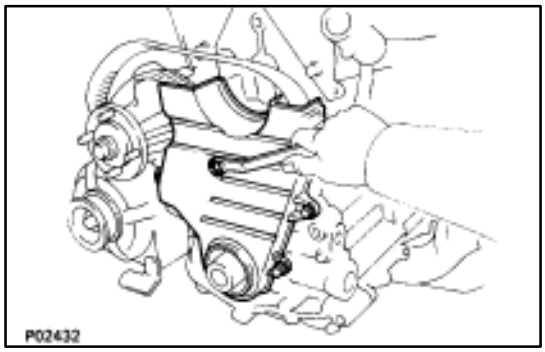

5. INSTALL NO. 1 TIMING BELT COVER

(a) Install the two gaskets to the timing belt cover.
(b) Install the timing belt cover with the five bolts.

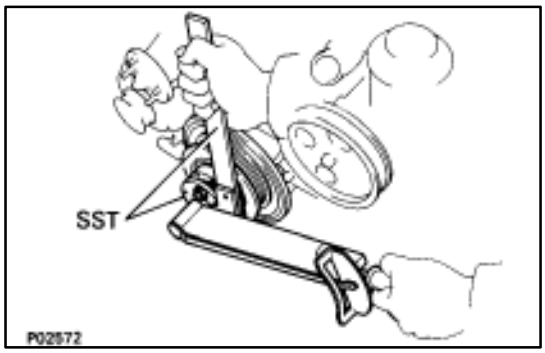

6. INSTALL CRANKSHAFT PULLEY

(a) Align the pulley set key with the key groove of the pulley, and slide on the pulley.
(b) Using SST, install and torque the bolt.

SST 09213–54015 (09651–60855) and 09330–00021

Torque: 324 N·m (3,300 kgf·cm, 239 ft·lbf)

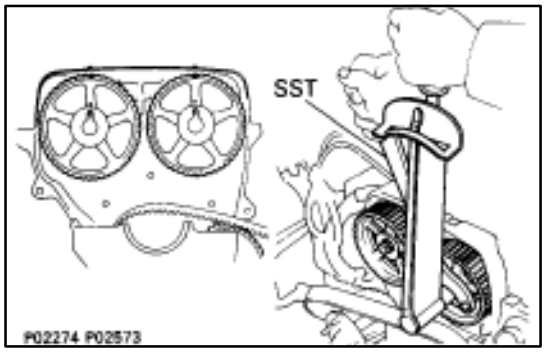

7. INSTALL CAMSHAFT TIMING PULLEYS

(a) Align the camshaft knock pin with the groove on the pulley, and slide on the timing pulley.
(b) Using SST to hold the pulley, torque the pulley bolt.

SST 09278–54012

Torque: 79 N·m (810 kgf·cm, 59 ft·lbf)

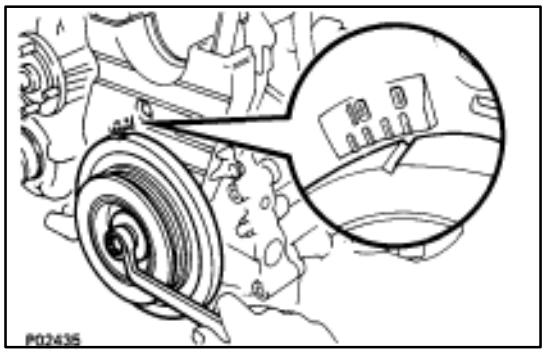

8. SET NO. 1 CYLINDER TO TDC/COMPRESSION

(a) Turn the crankshaft pulley, and align its groove with timing mark ”0” of the No. 1 timing belt cover.

WhereEverybodyKnowsYourName

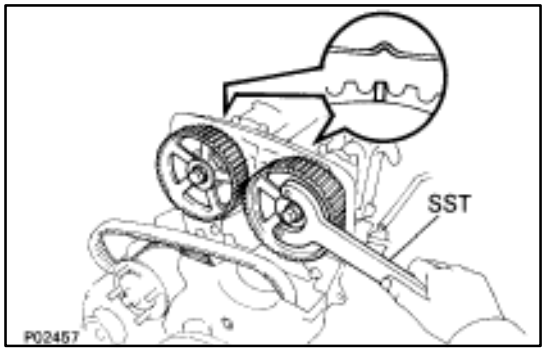

(b) Turn the camshaft, and align the timing marks of the camshaft timing pulleys and No. 4 timing belt cover.

SST 09278–54012

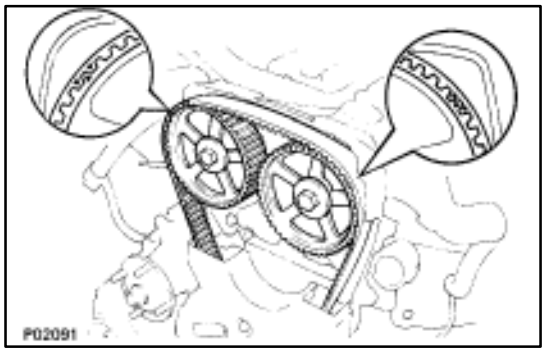

9. INSTALL TIMING BELT

HINT (When re–using timing belt): Align the matchmarks of the timing belt and camshaft timing pulleys.

(a) Remove any oil or water on the camshaft timing pulley, and keep it clean.

(b) Install the timing belt, checking the tension between the crankshaft timing pulley and exhaust camshaft timing pulley.

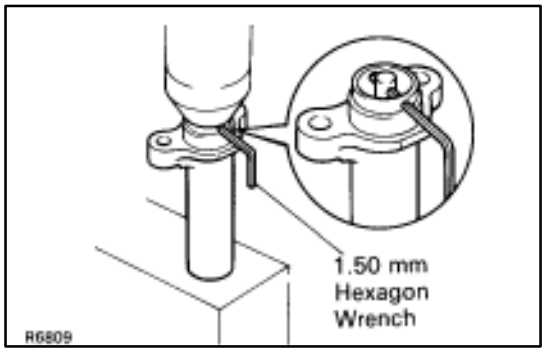

10. SET TIMING BELT TENSIONER

(a) Using a press, slowly press in the push rod using 981–9,807N (100–1,000 kgf, 220–2,205 lbf) of pressure.

(b) Align the holes of the push rod and housing, pass a 1.50 mm hexagon wrench through the holes to keep the push rod retracted.

(c) Release the press.

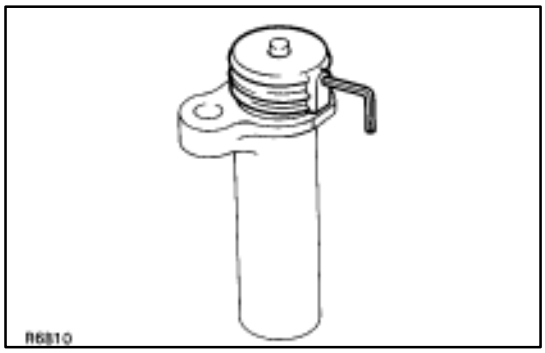

(d) Install the dust boot onto the tensioner.

WhereEverybodyKnowsYourName

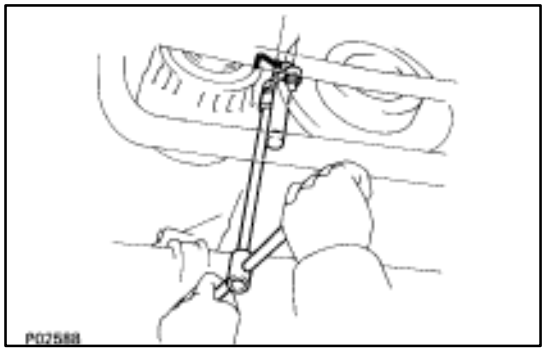

11. INSTALL TIMING BELT TENSIONER

(a) Temporarily install the tensioner with the two bolts.

(b) Alternately tighten the two bolts.

Torque: 26 N·m (270 kgf·cm, 20 ft·lbf)

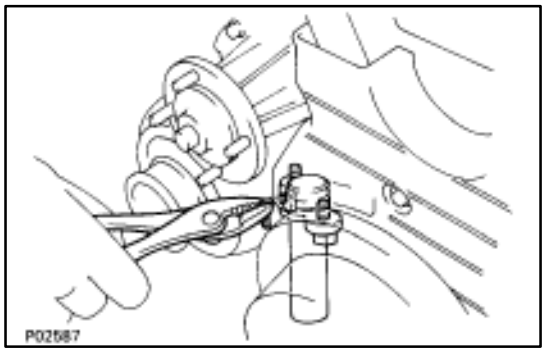

(c) Remove the 1.50 mm hexagon wrench from the tensioner with pliers.

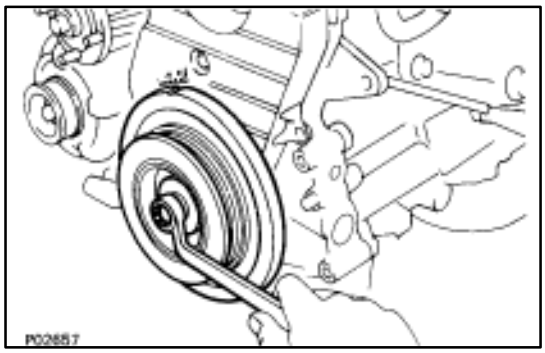

12. CHECK VALVE TIMING

(a) Turn the crankshaft pulley two revolutions from TDC to TDC.

NOTICE: Always turn the crankshaft clockwise.

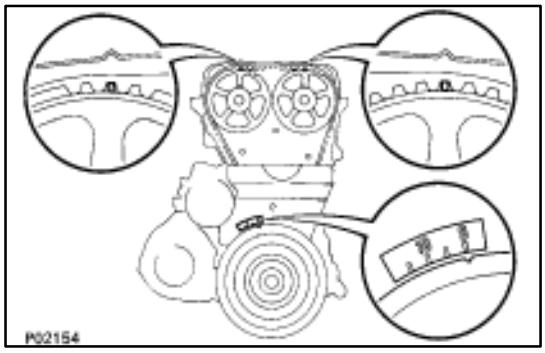

(b) Check that each pulley aligns with the timing marks as shown in the figure.

If the marks do not align, remove the timing belt and reinstall it.

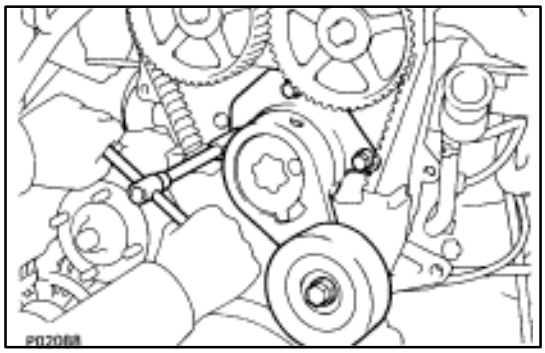

13. INSTALL DRIVE BELT TENSIONER

Install the tensioner with the three bolts.

Torque: 21 N·m (210 kgf·cm, 15 ft·lbf)

NOTICE: Be careful not to drop the bolts inside the timing belt cover.

WhereEverybodyKnowsYourName

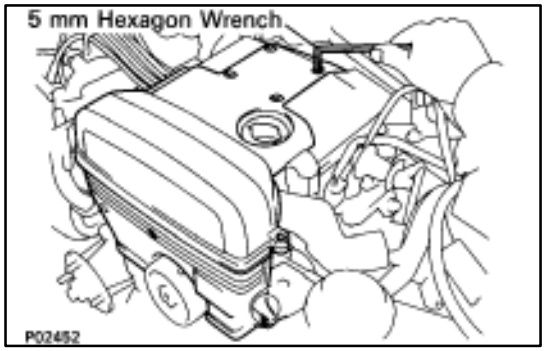

14. INSTALL NO. 2 AND NO. 3 TIMING BELT COVERS

(a) Install the gasket on the timing belt cover.

(b) Using a 5 mm hexagon wrench, install the belt covers with the nine bolts.

(c) Install the oil filler cap.

15. INSTALL RADIATOR AND WATER PUMP PULLEY (See steps 15, 16, 19 and 24 on pages EM–110 to 112)

16. FILL ENGINE WITH COOLANT (See page CO–5)

Capacity (w/ Heater):

M/T 8.5 liters (9.0 US qts, 7.5 Imp. qts)

A/T 8.4 liters (8.9 US qts, 7.4 Imp. qts)

17. (A/T)

CHECK AUTOMATIC TRANSMISSION FLUID LEVEL (See page MA–11)

NOTICE: Do not overfill.

18. START ENGINE AND CHECK FOR LEAKS

19. CHECK IGNITION TIMING (See page IG–14)

Ignition timing:

10° BTDC @ idle

(w/ Terminals TE1 and E1 connected)

20. PERFORM ROAD TEST

Check for abnormal noise, shock, slippage, correct shift points and smooth operation.

21. RECHECK ENGINE COOLANT LEVEL

WhereEverybodyKnowsYourName

IDLE AND/OR 2,500 RPM HC/CO CONCENTRATION CHECK METHOD

HINT: This check is used only to determine whether or not the idle HC/CO complies with regulations.

1. INTIAL CONDITIONS

(a) Engine at normal operating temperature.
(b) Air cleaner installed.
(c) All pipes and hoses of air induction system connected.
(d) All accessories switched OFF.
(e) All vacuum lines properly connected.

HINT: All vacuum hoses for EGR systems, etc. should be properly connected.

(f) EFI system wiring connectors fully plugged.
(g) Transmission in neutral range.
(h) Tachometer and HC/CO meter calibrated at hand.

2. START ENGINE

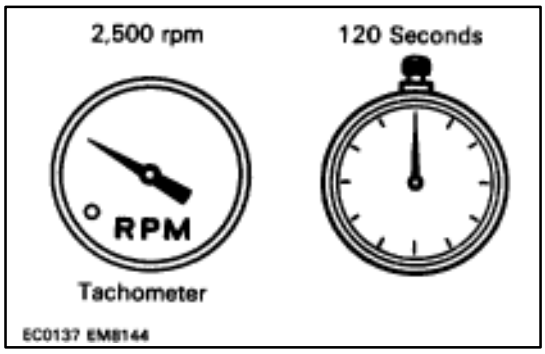

3. RACE ENGINE AT 2,500 PRM FOR APPROX. 120 SECONDS

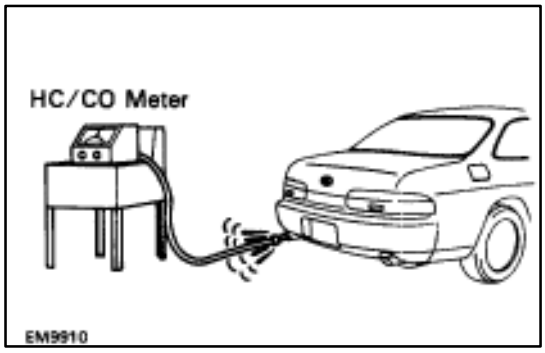

4. INSERT HC/CO METER TESTING PROBE INTO TAILPIPE AT LEAST 40 cm (1.3 ft)

5. CHECK HC/CO CONCENTRATION AT IDLE AND/OR 2,500 PRM

Complete the measuring within three times.

HINT: When performing the 2 mode (2,500 rpm and idle) test, follow the measurement order prescribed by the regulations.

If the HC/CO concentration at 2,500 rpm does not comply with regulations, try the following procedure.

Race the engine again at 2,500 rpm for approx. 1 minute and quickly repeat steps 4 and 5 above.

This may correct the problem.

WhereEverybodyKnowsYourName

Troubleshooting

If the HC/CO concentration does not comply with regulations, perform troubleshooting in the order given below.

(a) Check oxygen sensor operation.
(See page FI–113)

(b) See the table below for possible cause, and then inspect and correct the applicable causes if necessary.

HC	CO	Symptoms	Cause
High	Normal	Rough idle	1. Faulty ignitions: ▼ Incorrect timing ▼ Fouled, shorted or improperly gapped plugs ▼ Open or crossed high–tension cords ▼ Cracked distributor cap 2. Incorrect valve clearance 3. Leaky EGR valve 4. Leaky intake and exhaust valves 5. Leaky cylinders
High	Low	Rough idle (Fluctuating HC reading)	1. Vacuum leaks: ▼ PCV hoses ▼ EGR valve ▼ Intake manifold ▼ Air intake chamber ▼ Throttle body ▼ ISC valve ▼ Brake booster line 2. Lean mixture causing misfire
High	High	Rough idle (Black smoke from exhaust)	1. Clogged air filter 2. Faulty EFI systems: ▼ Faulty pressure regulator ▼ Clogged fuel return line ▼ Defective water temp. sensor ▼ Defective air temp. sensor ▼ Faulty ECU ▼ Faulty injectors ▼ Faulty cold start injector ▼ Faulty throttle position sensor ▼ Faulty air flow meter

WhereEverybodyKnowsYourName

COMPRESSION CHECK

HINT: If there is lack of power, excessive oil consumption or poor fuel economy, measure the compression pressure.

1. **WARM UP AND STOP ENGINE**
   Allow the engine to warm up to normal operating temperature.
2. **REMOVE NO.3 TIMING BELT COVERS**
   (See steps 1, 5 to 10 and 14 on pages EM–11 to 13)

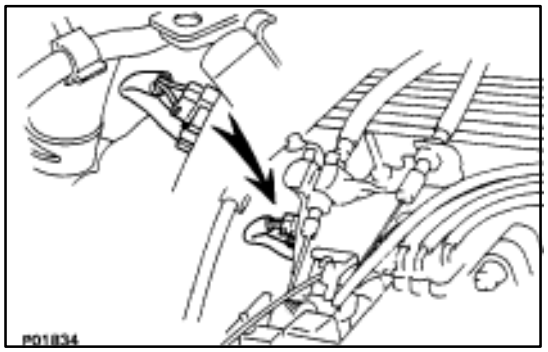

3. **DISCONNECT COLD START INJECTOR CONNECTOR**

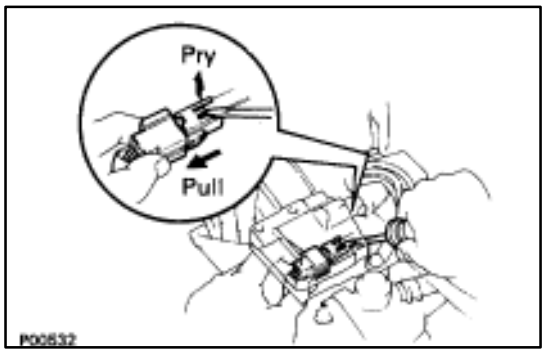

4. **DISCONNECT RH CAM POSITION SENSOR CONNECTOR**
   (a) Disconnect the connector from the ignition coil bracket.
   (b) Disconnect the sensor connector.

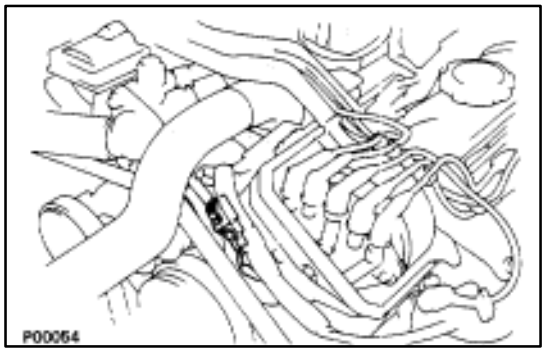

5. **DISCONNECT LH CAM POSITION SENSOR CONNECTOR**

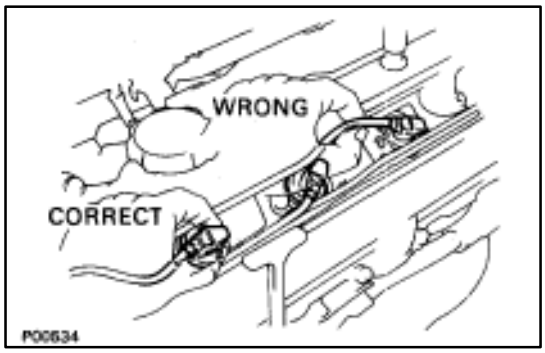

6. **REMOVE SPARK PLUGS**
   (a) Disconnect the eight high–tension cords from the spark plugs.
   Disconnect the high–tension cords at rubber boot. Do not pull on the cords.
   NOTICE: Pulling on or bending the cords may damage the conductor inside.

WhereEverybodyKnowsYourName

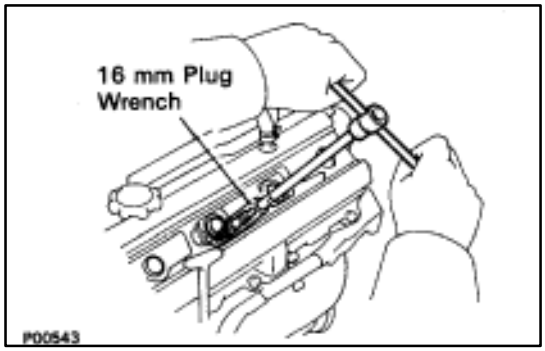

(b) Using a 16 mm spark plug wrench, remove the eight spark plugs.

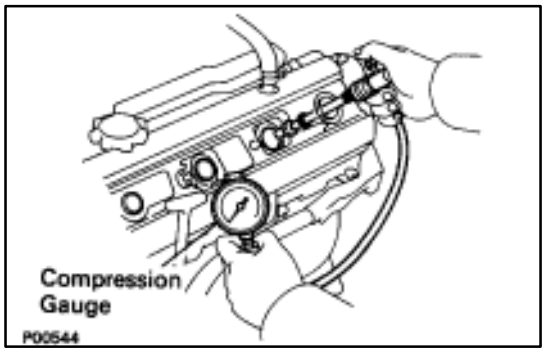

7. CHECK CYLINDER COMPRESSION PRESSURE

(a) Insert a compression tester into the spark plug hole.

(b) Fully open the throttle.

(c) While cranking the engine, measure the compression pressure.

HINT: Always use a fully charged battery to obtain engine revolution of 250 rpm or more.

(d) Repeat steps (a) through (c) for each cylinder.

NOTICE: This measurement must be done in as short time as possible.

Compression pressure:

1,226 kPa (12.5 kgf/cm, 178 psi) or more

Minimum pressure:

981 kPa (10.0 kgf/cm, 142 psi)

Difference between each cylinder:

98 kPa (1.0 kgf/cm, 14 psi) or less

(e) If the cylinder compression in one or more cylinders is low, pour a small amount of engine oil into the cylinder through the spark plug hole and repeat steps (a) through (c) for the cylinder with low compression.

- If adding oil helps the compression the piston rings and/or cylinder bore are probably worn or damaged.
- If pressure stays low, a valve may be sticking or seating improper, or there may be leakage past the gasket.

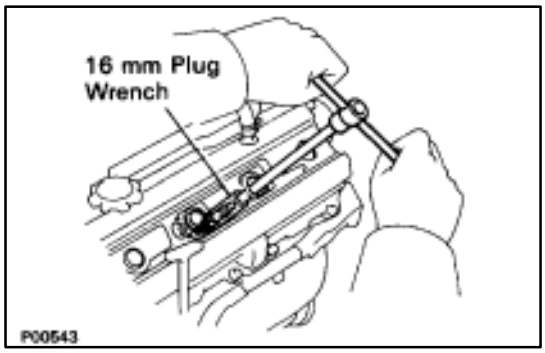

8. REINSTALL SPARK PLUGS

(a) Using a 16 mm plug wrench, install the eight spark plugs.

Torque: 18 N·m (180 kgf·cm, 13 ft·lbf)

(b) Connect the eight high–tension cords to the spark plugs.

(c) Fit the high–tension cords to the cord clamps.
(See page IG–16)

WhereEverybodyKnowsYourName

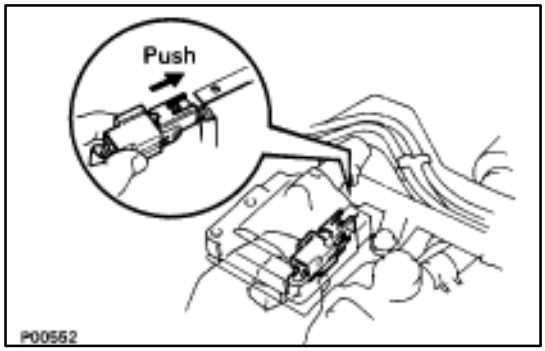

9. RECONNECT RH CAM POSITION SENSOR CONNECTOR

(a) Connect the sensor connector.

(b) Connect the connector to the ignition coil bracket.

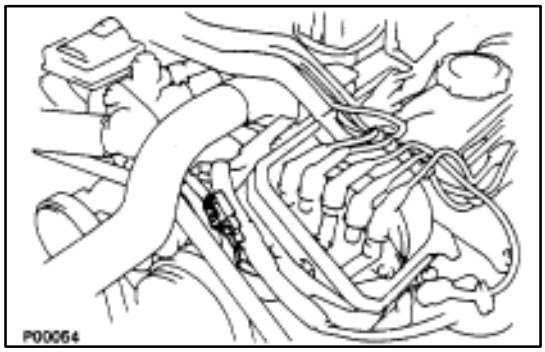

10. RECONNECT LH CAM POSITION SENSOR CONNECTOR

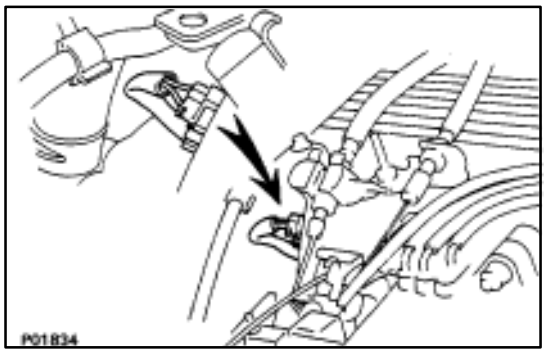

11. RECONNECT COLD START INJECTOR CONNECTOR

12. REINSTALL NO.3 TIMING BELT COVERS
(See steps 28 to 30, 34 to 37, 40 and 41 on pages EM–25 to 27)

WhereEverybodyKnowsYourName

TIMING BELT

COMPONENTS FOR REMOVAL AND INSTALLATION

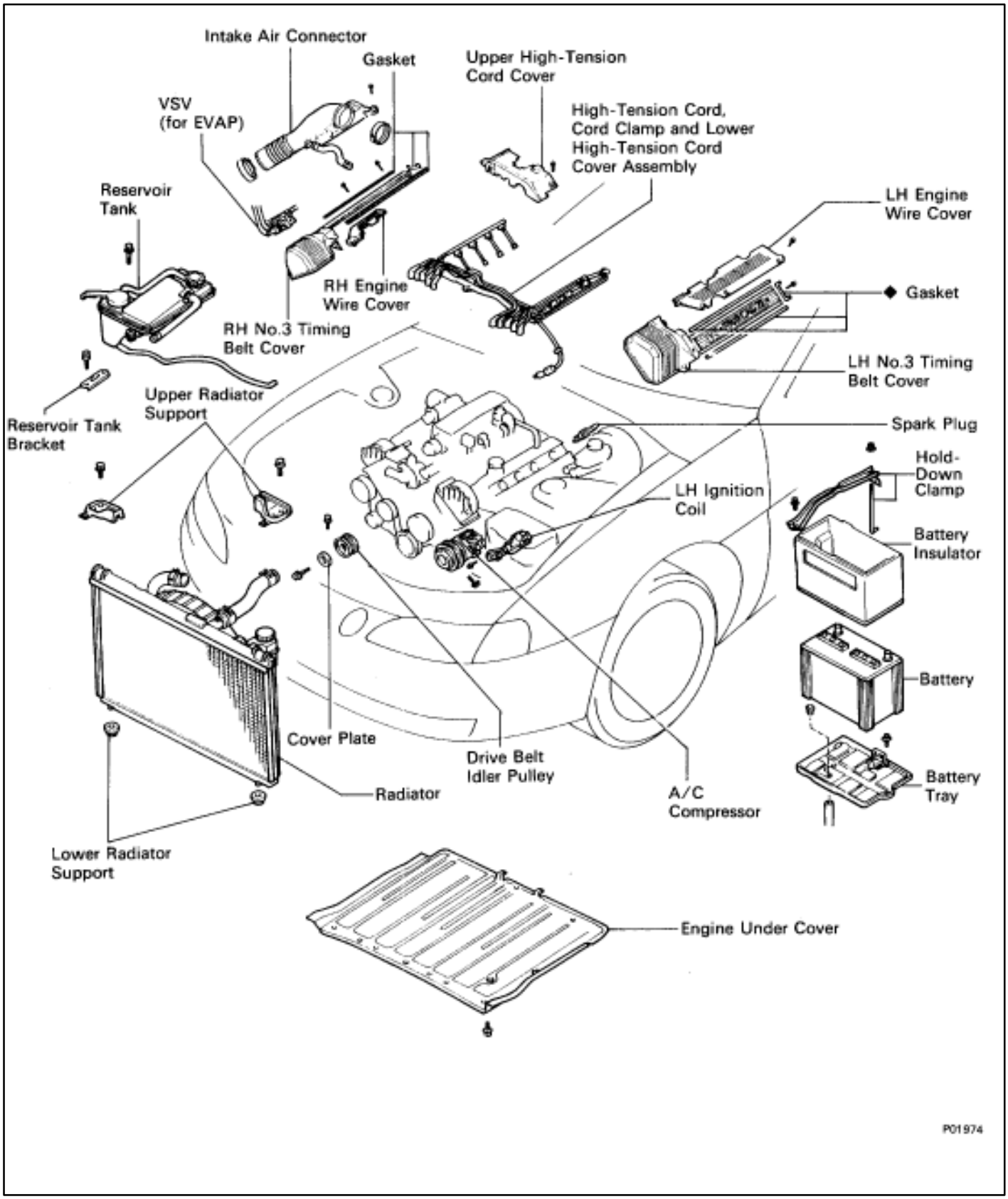

WhereEverybodyKnowsYourName

COMPONENTS FOR REMOVAL AND INSTALLATION (Cont'd)

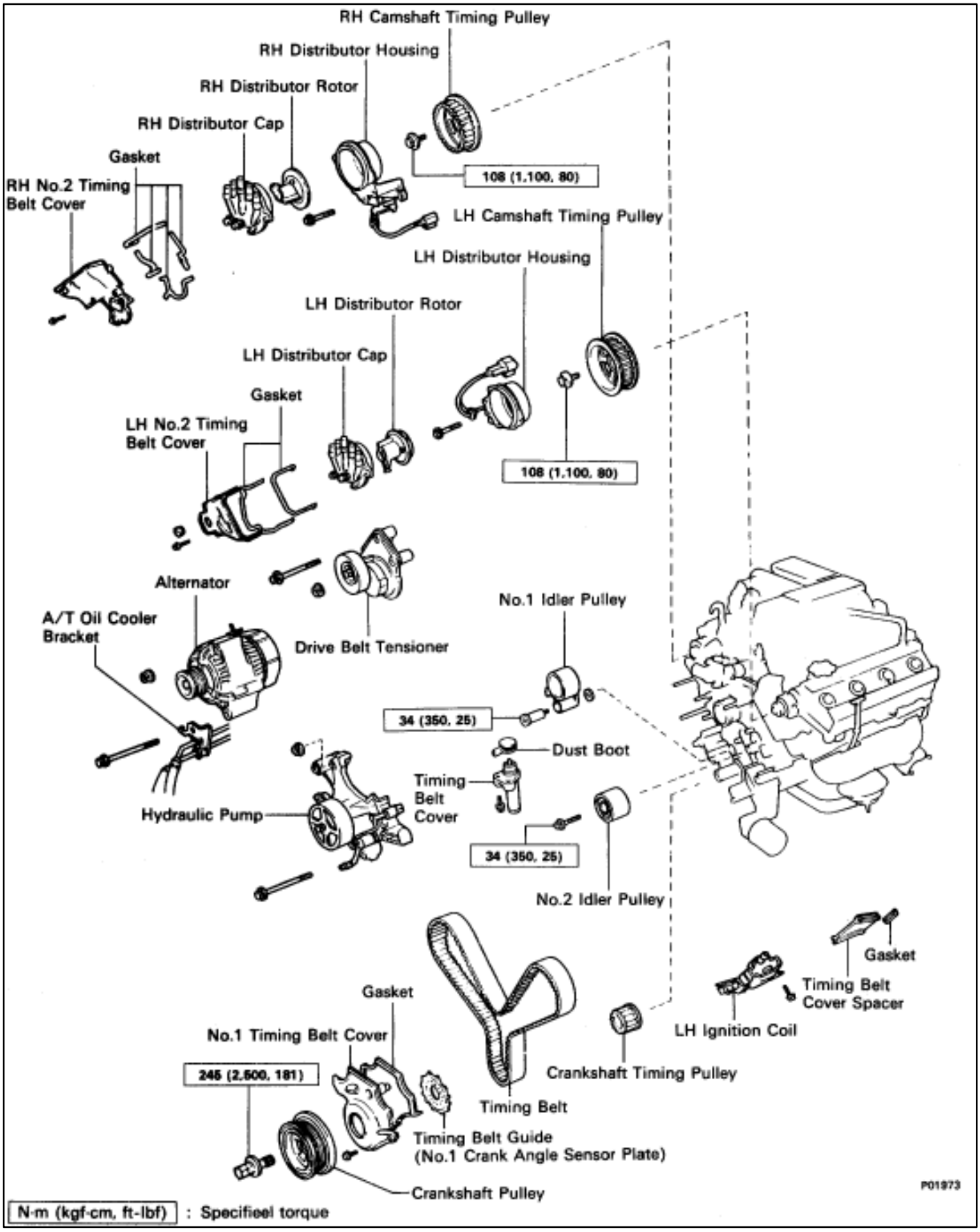

WhereEverybodyKnowsYourName

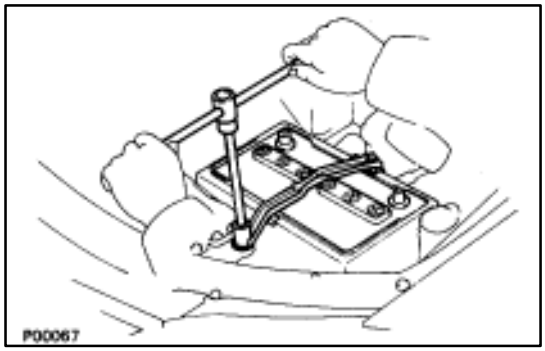

REMOVAL OF TIMING BELT

(See Components on pages EM–33 and 34)

1. **REMOVE BATTERY**
   CAUTION: Work must be started after approx. 20 seconds or longer from the time the ignition switch is turned to the "LOCK" position and the negative (–) terminal cable is disconnected from the battery.
2. **REMOVE ENGINE UNDER COVER**
3. **DRAIN ENGINE COOLANT (See page CO–6)**

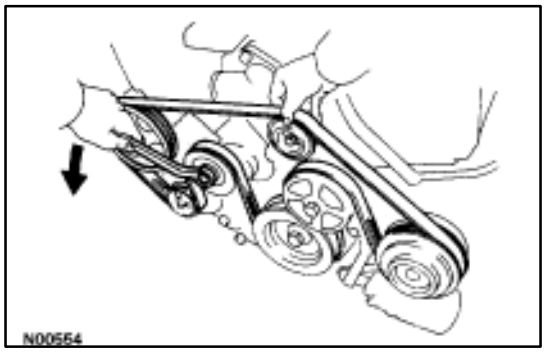

4. **REMOVE DRIVE BELT**
   Loosen the drive belt tension by turning the drive belt tensioner counterclockwise, and remove the drive belt.
   HINT: The pulley bolt for the belt tensioner has a left–hand thread.

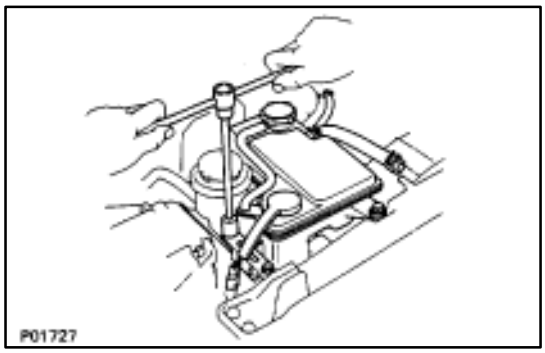

5. **REMOVE RESERVOIR TANK RADIATOR**
   (See steps 12 and 13 on pages EM–120 and 121)

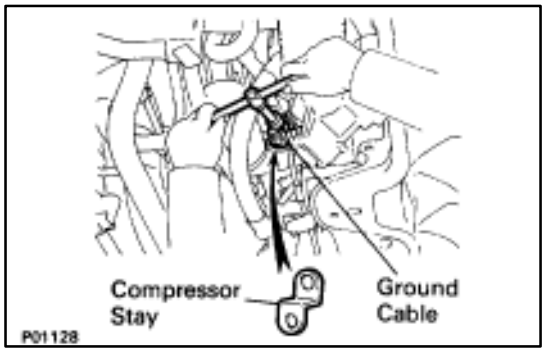

6. **REMOVE A/C COMPRESSOR WITHOUT DISCONNECTING HOSES**
   (a) Disconnect the compressor connector.
   (b) Remove the mounting nut, and disconnect the ground cable.
   (c) Remove the mounting bolt and compressor stay.

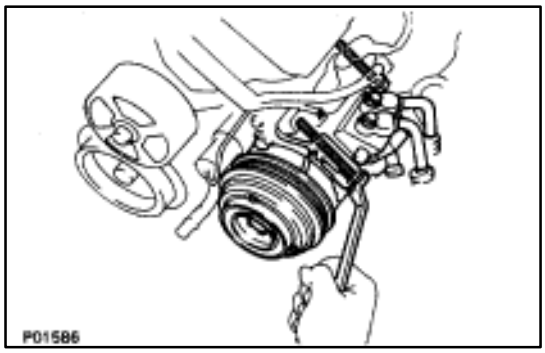

   (d) Remove the two bolts, and disconnect the A/C compressor from the engine.
   HINT: Put aside the compressor, and suspend it.

WhereEverybodyKnowsYourName

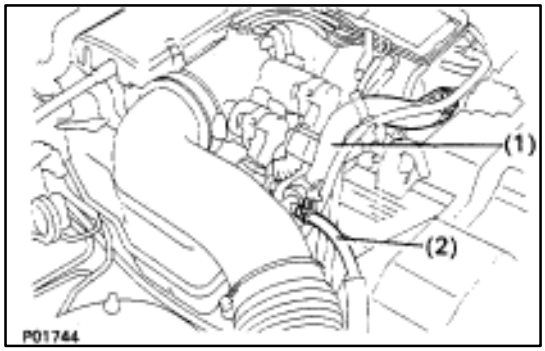

7. REMOVE INTAKE AIR CONNECTOR

(a) Disconnect the following hoses:
  (1) Air hose from ISC valve
  (2) Air hose (from PS air control valve) from intake air connector

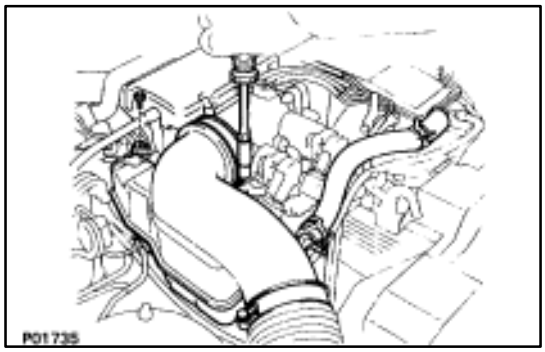

(b) Remove the bolt holding the intake air connector to the cylinder head cover.
(c) Loosen the two hose clamps.
(d) Disconnect the intake air connector from the throttle body and air cleaner hose, and remove the throttle body.

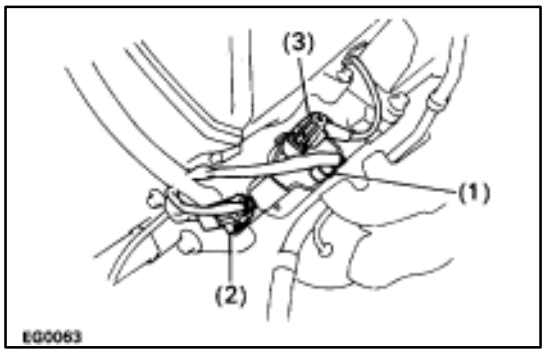

8. REMOVE LH IGNITION COIL

(a) Disconnect the following connectors and cord:
  (1) Ignition coil connector
  (2) Noise filter connector
  (3) High–tension cord

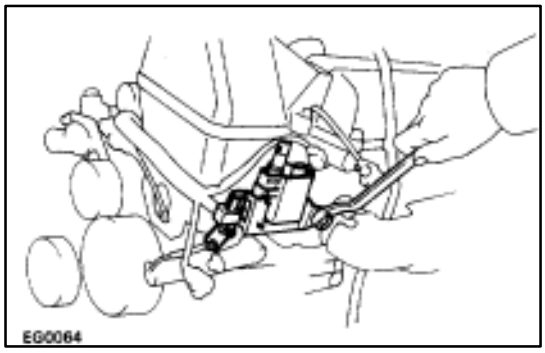

(b) Remove the two bolts and ignition coil.

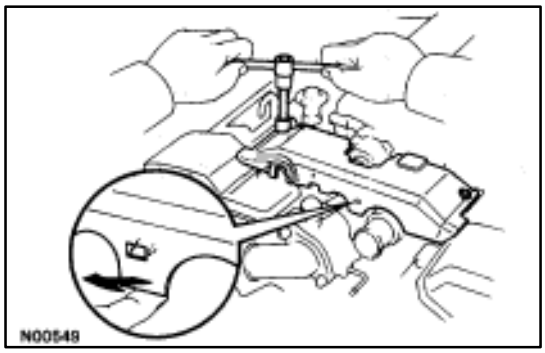

9. REMOVE UPPER HIGH–TENSION CORD COVER

(a) Remove the two mounting bolts.
(b) Disconnect the front side claw groove of the cord cover from the claw of the lower cover, and remove the cord cover.

WhereEverybodyKnowsYourName

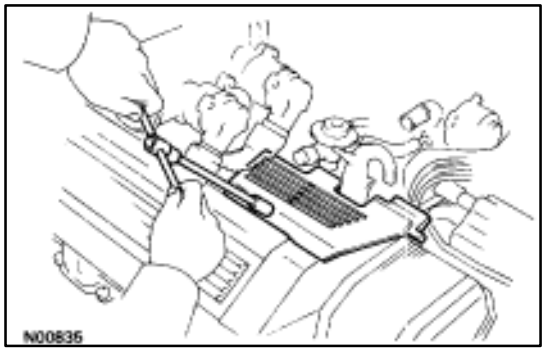

10. REMOVE RH ENGINE WIRE COVER

Remove the bolt and engine wire cover.

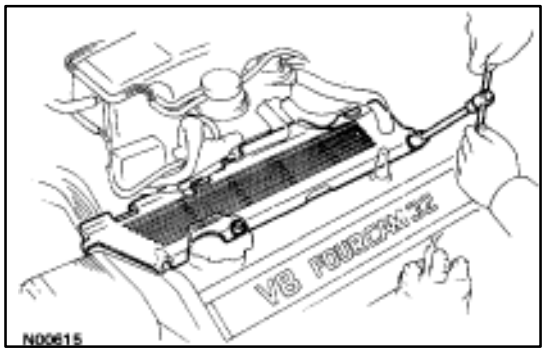

11. REMOVE LH ENGINE WIRE COVER

Remove the two bolts and engine wire cover.

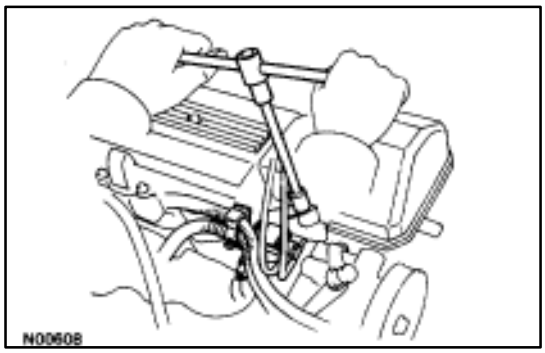

12. REMOVE VSV FOR EVAP SYSTEM

Remove the two bolts, and disconnect the VSV from cylinder head and timing belt cover.

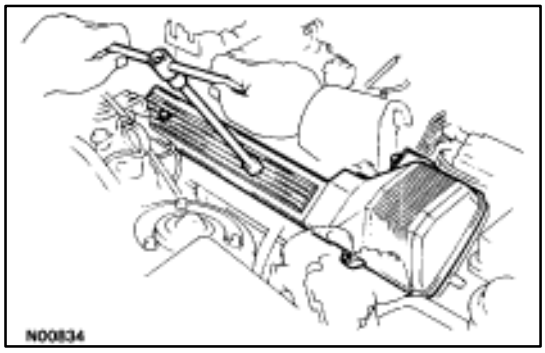

13. REMOVE NO.3 TIMING BELT COVER

Remove the three bolts and timing belt cover.

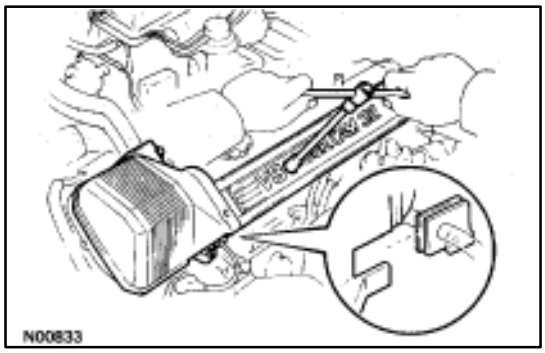

14. REMOVE LH NO.3 TIMING BELT COVER

(a) Remove the four mounting bolts.
(b) Disconnect the cord grommet from the timing belt cover, and remove the timing belt cover.
(c) Remove the cord grommet from the high–tension cord.

WhereEverybodyKnowsYourName

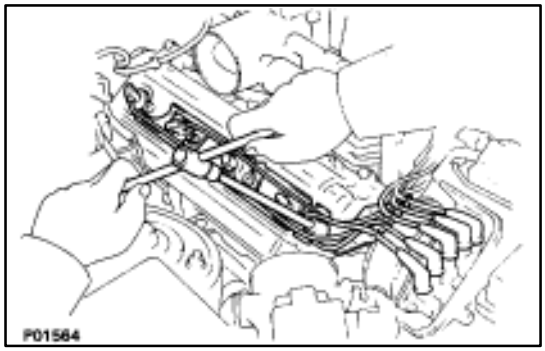

15. REMOVE HIGH–TENSION CORDS, HIGH–TENSION CORD CLAMPS AND LOWER HIGH–TENSION CORD COVER ASSEMBLY

(a) Remove the two bolts holding the RH rear high–tension cord clamp to the cylinder head.

(b) Disconnect the high–tension cords from the RH spark plugs and distributor cap.

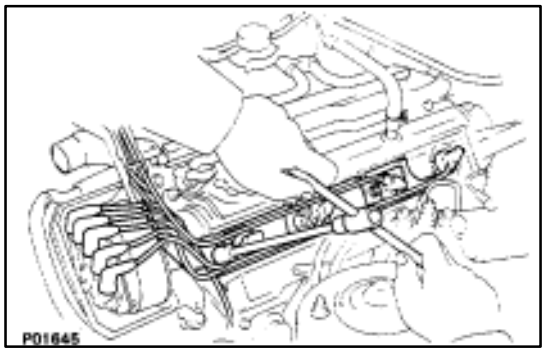

(c) Remove the two bolts holding the LH rear high–tension cord clamp to the cylinder head.

(d) Disconnect the high–tension cords from the LH spark plugs, distributor cap and LH ignition coil.

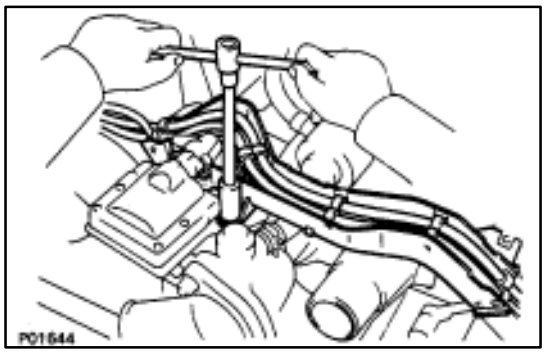

(e) Remove the bolt holding the lower high–tension cord cover to the water inlet housing.

(f) Disconnect the high–tension cord from the RH ignition coil, and remove the high–tension cords, clamps and cover assembly.

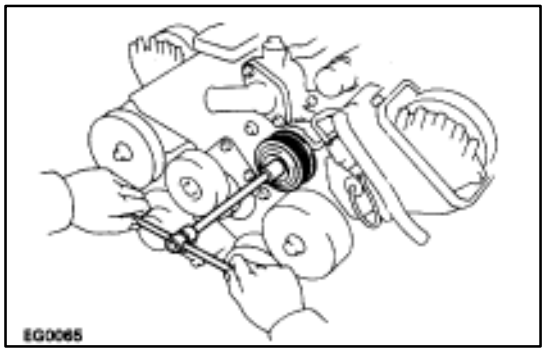

16. REMOVE DRIVE BELT IDLER PULLEY

Remove the pulley bolt, cover plate and idler pulley.

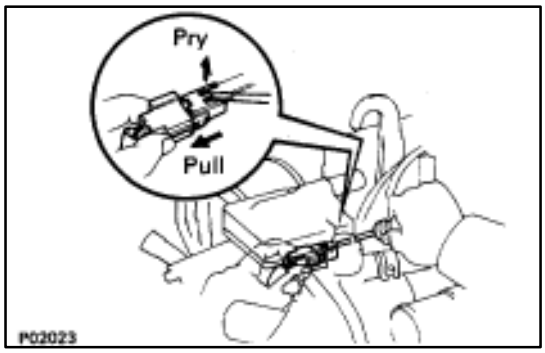

17. REMOVE RH NO.2 TIMING BELT COVER

(a) Disconnect the cam position sensor connector from the ignition coil bracket.

WhereEverybodyKnowsYourName

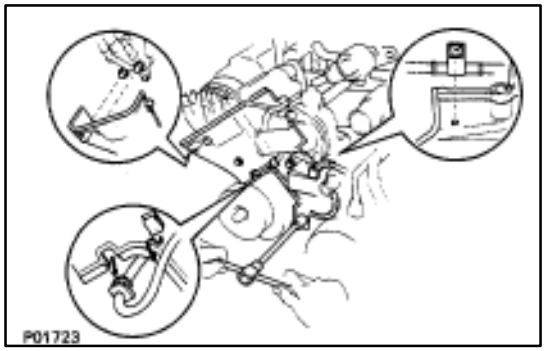

(b) Disconnect the cam position sensor wire from the clamp on the timing belt cover.
(c) Remove the five mounting bolts.
(d) Disconnect the connector grommet from the timing belt cover.
(e) Disconnect the wire clamp from the timing belt cover, and remove the timing belt cover and four gaskets.

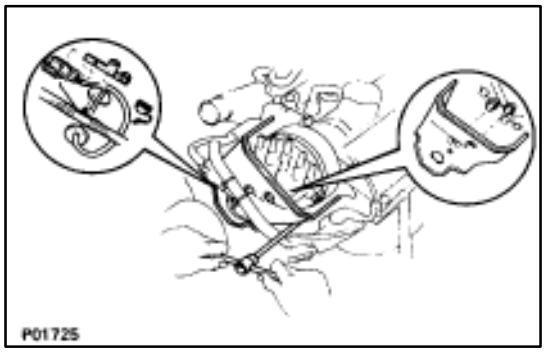

18. REMOVE LH NO.2 TIMING BELT COVER

(a) Disconnect the cam position sensor wire from the clamp on the timing belt cover.
(b) Disconnect the cam position sensor connector.
(c) Remove the three mounting bolts.
(d) Disconnect the connector grommet from the timing belt cover, and remove the timing belt cover and two gaskets.

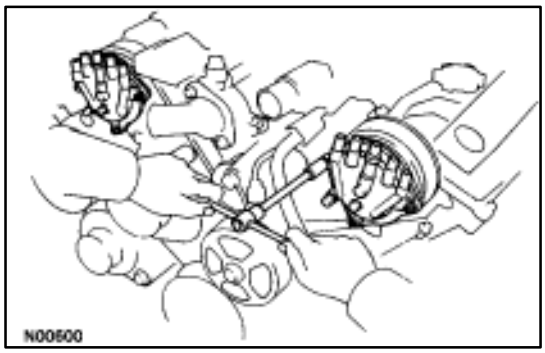

19. REMOVE DISTRIBUTOR CAPS

Loosen the three bolts, and remove the distributor cap. Remove the two distributor caps.
HINT: Arrange the distributor caps (RH side and LH side).

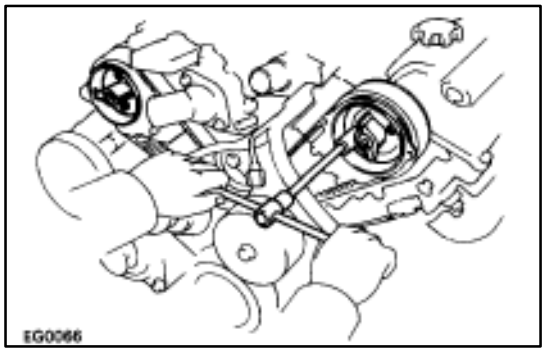

20. REMOVE DISTRIBUTOR ROTORS

Loosen the two bolts, and remove the distributor rotor. Remove the two distributor rotors.
HINT: Arrange the distributor rotors (RH side and LH side).

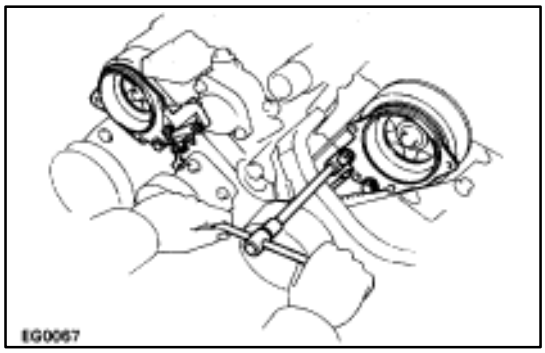

21. REMOVE DISTRIBUTOR HOUSINGS

(a) (RH Distributor Housing)
Disconnect the cam position sensor connector.
(b) Remove the three bolts and distributor housing. Remove the two distributor housings.

WhereEverybodyKnowsYourName

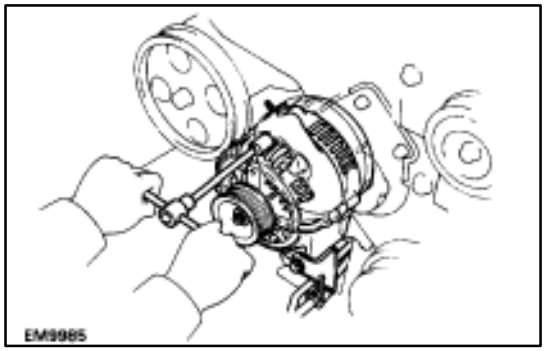

22. REMOVE ALTERNATOR

(a) Disconnect the alternator connector.

(b) Remove the cap and nut, and disconnect the alternator wire.

(c) Remove the bolt, and disconnect the A/T oil cooler pipe bracket.

(d) Remove the nut and alternator.

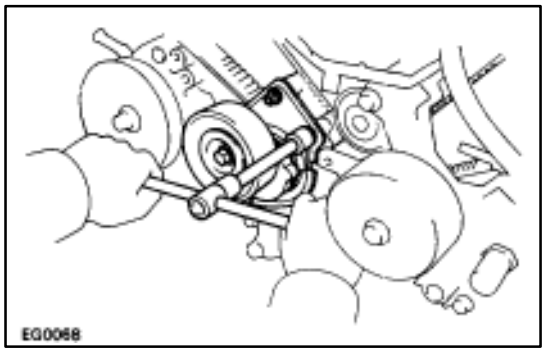

23. REMOVE DRIVE BELT TENSIONER

Remove the bolt, two nuts and tensioner.

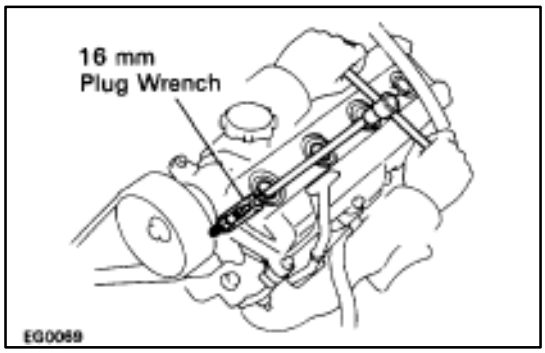

24. REMOVE SPARK PLUGS

Using a 16 mm plug wrench, remove the eight spark plugs.

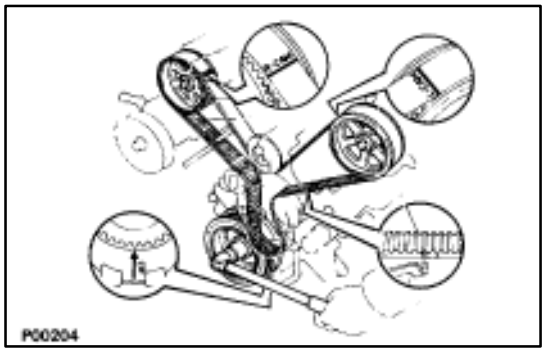

25. IF RE–USING TIMING BELT, CHECK INSTALLATION MARKS ON TIMING BELT

Check that there are four installation marks on the timing belt by turning the crankshaft pulley as shown in the illustration. If the installation marks have disappeared, place a new installation mark on the timing belt before removing each part.

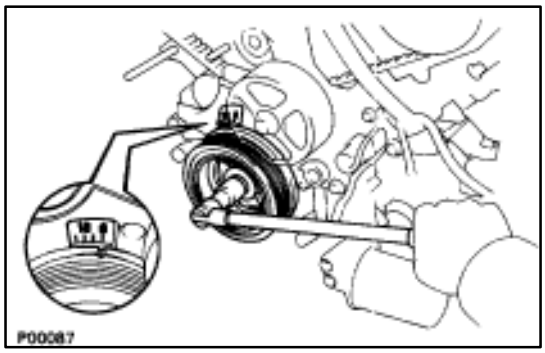

26. SET NO.1 CYLINDER TO TDC/COMPRESSION

(a) Turn the crankshaft pulley and align its groove with the timing mark ”O” of the No.1 timing belt cover.

WhereEverybodyKnowsYourName

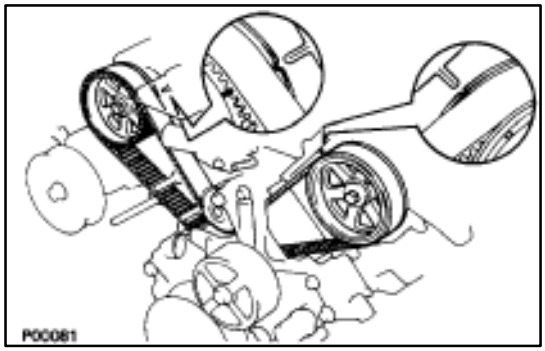

(b) Check that the timing marks of the camshaft timing pulleys and timing belt rear plates aligned.

If not, turn the crankshaft one revolution (360°).

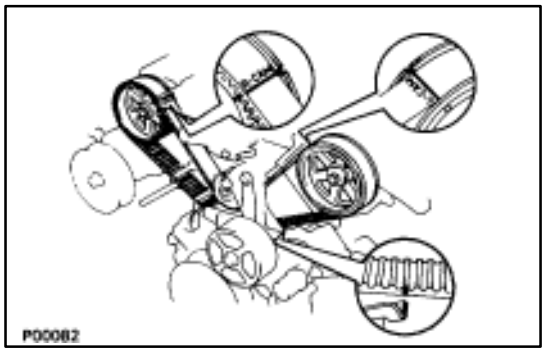

27. REMOVE TIMING BELT TENSIONER

HINT:

- (Re–using timing belt)
  If the installation marks have disappeared, before removing the timing belt, place new installation marks on the timing belt to match the timing marks of the camshaft timing pulleys, and place a new installation mark on the timing belt to match the end of the hydraulic pump.

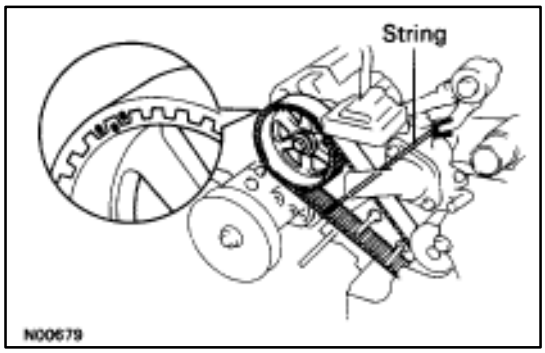

- (When replacing timing belt tensioner only)
  To avoid meshing of the timing pulley and timing belt, secure one of them with string. And place matchmarks on the timing belt and RH camshaft timing pulley.

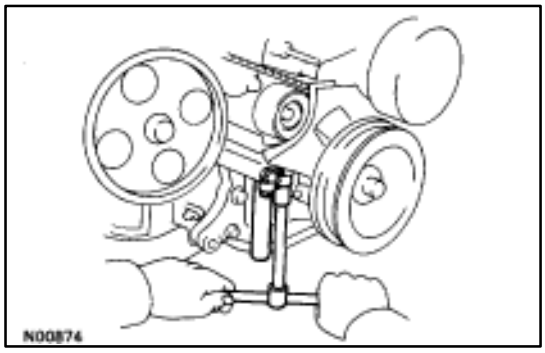

Alternately loosen the two bolts, and remove them, the tensioner and dust boot.

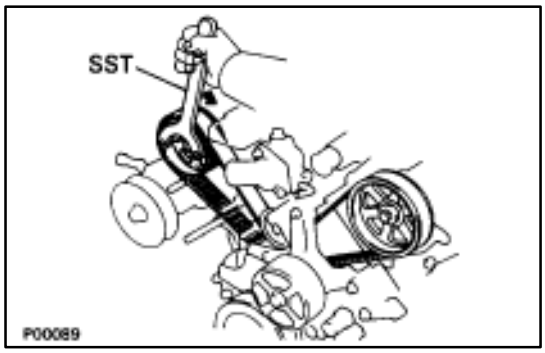

28. DISCONNECT TIMING BELT FROM CAMSHAFT TIMING PULLEYS

(a) Using SST, loosen the tension between the LH and RH camshaft timing pulleys by slightly turning the LH camshaft timing pulley clockwise.

SST 09278–54012

WhereEverybodyKnowsYourName

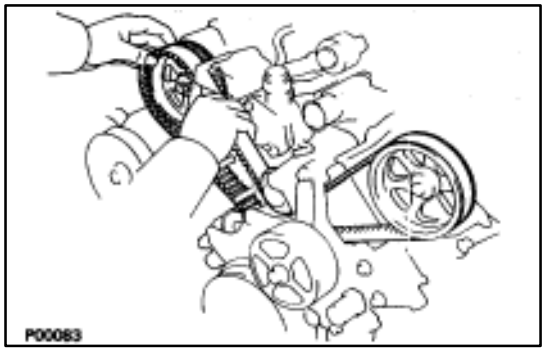

(b) Disconnect the timing belt from the camshaft timing pulleys.

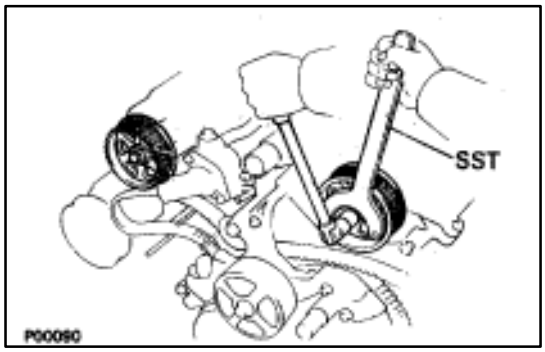

29. REMOVE CAMSHAFT TIMING PULLEYS

Using SST, remove the bolt, timing pulley. Remove the two timing pulleys.
SST 09278–54012

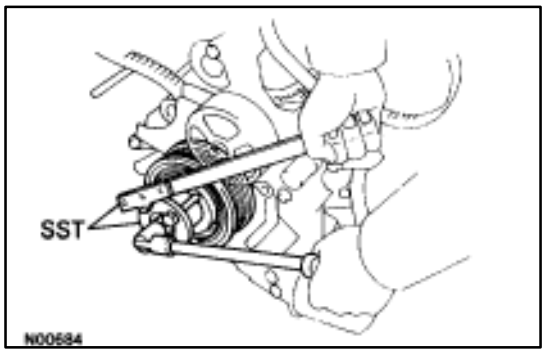

30. REMOVE CRANKSHAFT PULLEY

(a) Using SST, remove the pulley bolt.
SST 90213–70010 and 09330–00021

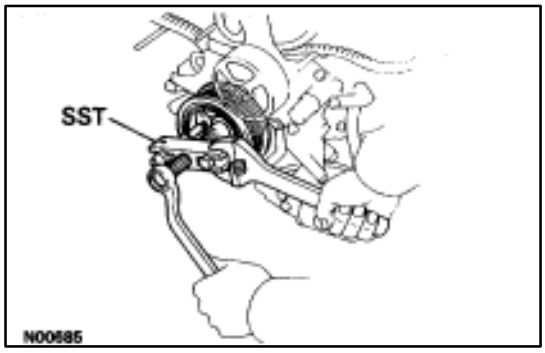

(b) Using SST, remove the pulley.
SST 09213–31021

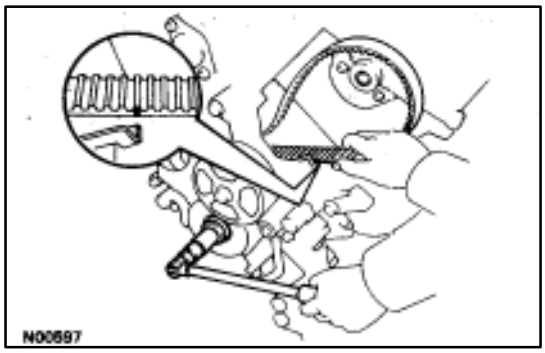

31. REMOVE HYDRAULIC PUMP

HINT (Re–using timing belt): Before removing the hydraulic pump, using the crankshaft pulley bolt, turn the crankshaft pulley and align the installation mark of the timing belt with the end of the hydraulic pump.

WhereEverybodyKnowsYourName

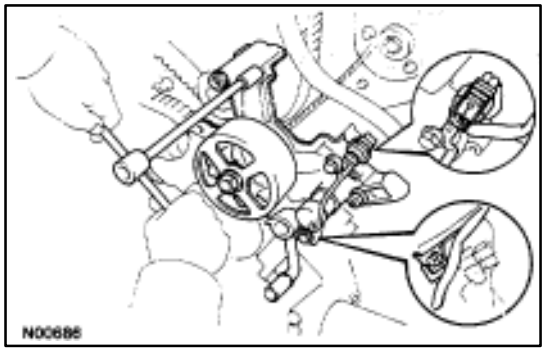

(a) Disconnect the solenoid valve connector.
(b) Remove the two mounting bolts and two mounting nuts.
(c) Disconnect the engine speed sensor wire clamp.
(d) Remove the hydraulic pump.

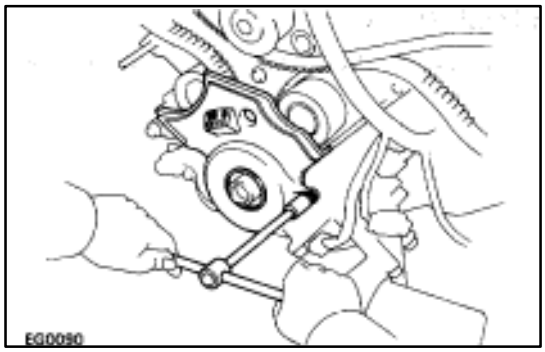

32. REMOVE NO.1 TIMING BELT COVER
Remove the four bolts, timing belt cover and gasket.

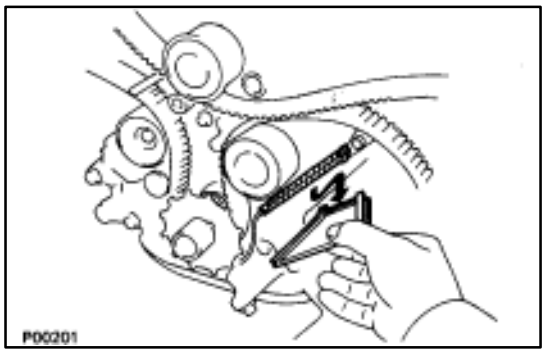

33. REMOVE TIMING BELT COVER SPACER
Remove the cover spacer and gasket.

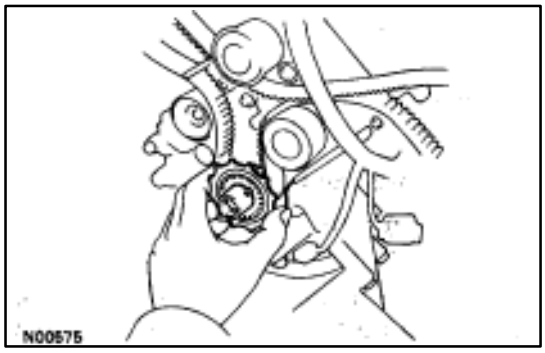

34. REMOVE TIMING BELT GUIDE (NO.1 CRANK ANGLE SENSOR PLATE)

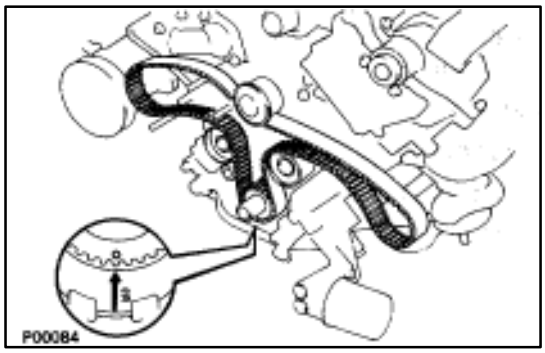

35. REMOVE TIMING BELT
HINT (Re–using timing belt): If the installation marks have disappeared, place a new installation mark on the timing belt to match the dot mark of the crankshaft timing pulley.

WhereEverybodyKnowsYourName

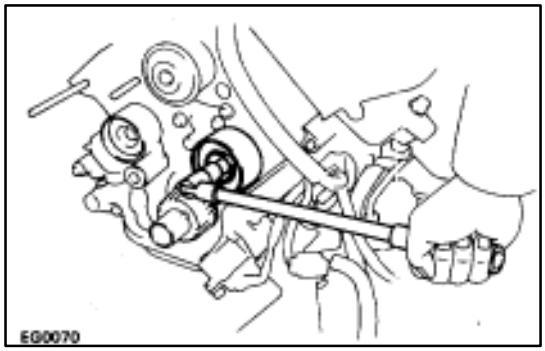

36. REMOVE NO.2 IDLER PULLEY

Remove the pulley bolt and idler pulley.

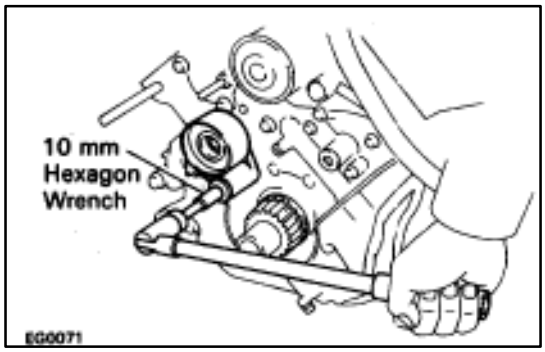

37. REMOVE NO.1 IDLER PULLEY

Using a 10 mm hexagon wrench, remove the bolt, idler pulley and plate washer.

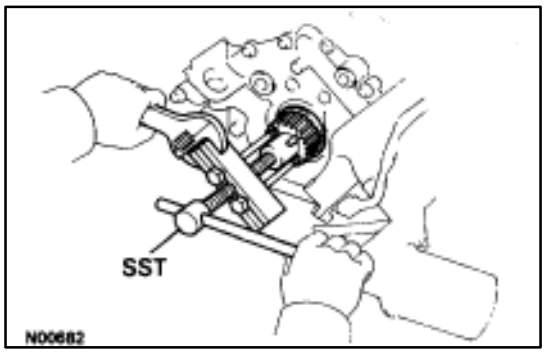

38. REMOVE CRANKSHAFT TIMING PULLEY

Using SST, remove the timing pulley.
SST 09213–60017 (09213–00050)

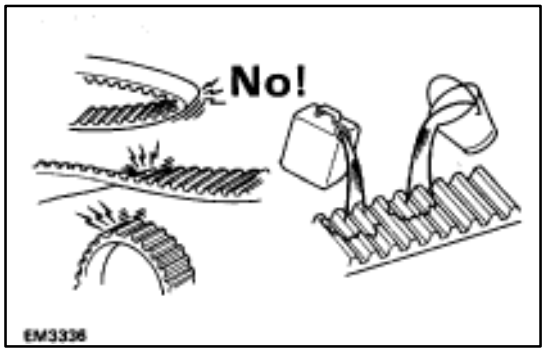

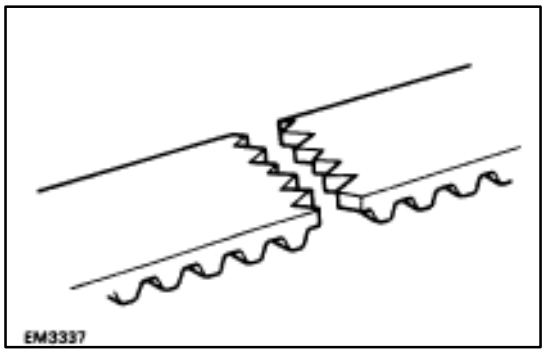

INSPECTION OF TIMING BELT COMPONENTS

1. INSPECT TIMING BELT

NOTICE:

- **Do not bend, twist or turn the timing belt inside out.**
- **Do not allow the timing belt to come into contact with oil, water or steam.**
- **Do not utilize timing belt tension when installing or removing the mounting bolt of the camshaft timing pulley.**

If there are any defects as shown in the illustrations, check the following points:

(a) Premature parting
- Check for proper installation.
- Check the timing cover gasket for damage and proper installation.

WhereEverybodyKnowsYourName

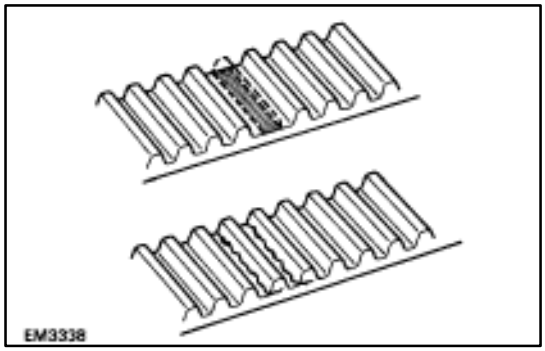

(b) If the belt teeth are cracked or damaged, check to see if either the camshaft is locked.

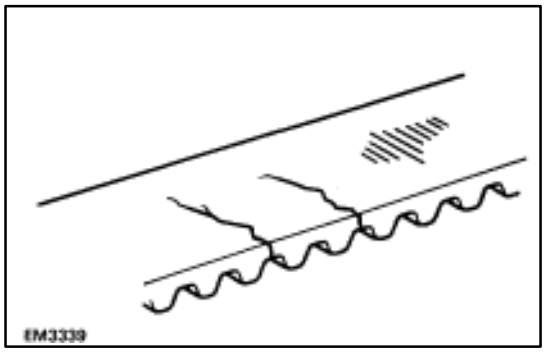

(c) If there is noticeable wear or cracks on the belt face, check to see if there are nicks on the side of the idler pulley lock and water pump.

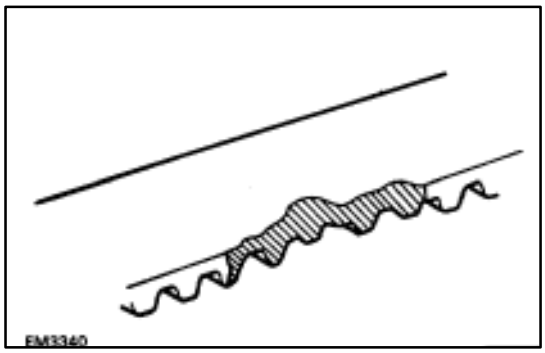

(d) If there is wear or damage on only one side of the belt, check the belt guide and the alignment of the each pulley.

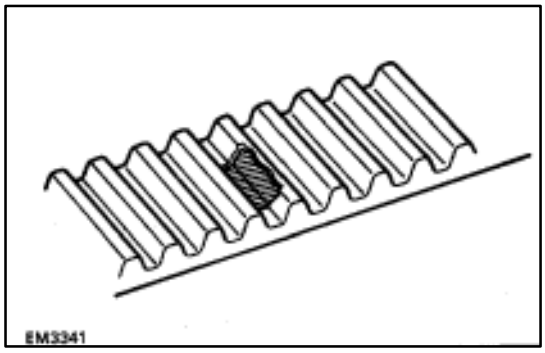

(e) If there is noticeable wear on the belt teeth, check timing belt cover for damage, correct gasket installation. and the foreign material on the pulley teeth.

If necessary, replace the timing belt.

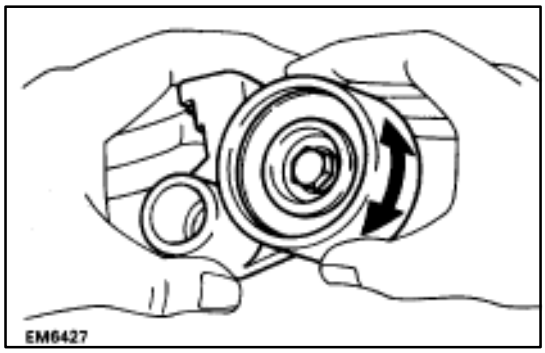

2. INSPECT IDLER PULLEYS

Check the turning smoothness of the idler pulley.

If necessary, replace the idler pulley.

WhereEverybodyKnowsYourName

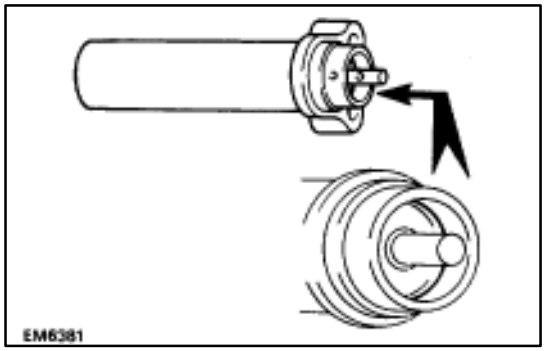

3. INSPECT TIMING BELT TENSIONER

(a) Visually check tensioner for oil leakage.

HINT: If there is only the faintest trace of oil on the seal on the push rod side, the tensioner is all right.

If leakage is found, replace the tensioner.

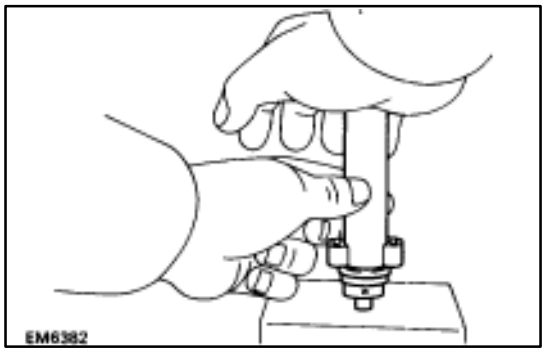

(b) Hold the tensioner in both hands and push the push rod strongly against the floor or wall to check that it doesn't move.

If the push rod moves, replace the tensioner.

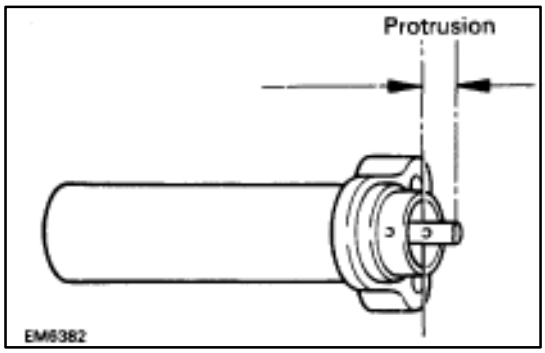

(c) Measure the protrusion of the push rod from the housing end.

Protrusion: 10.5–11.5 mm (0.413–0.453 in.)

If the protrusion is not as specified, replace the tensioner.

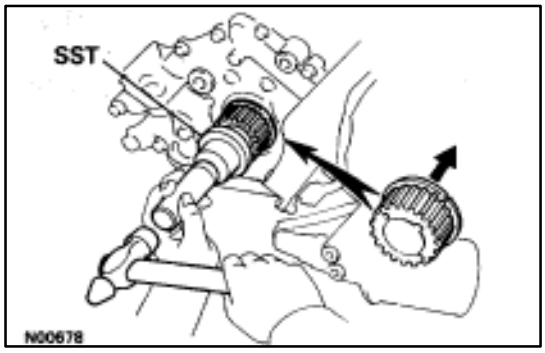

INSTALLATION OF TIMING BELT

(See Components pages EM–33 and 34)

1. INSTALL CRANKSHAFT TIMING PULLEY

(a) Align the pulley set key on the crankshaft with the key groove of the timing pulley.

(b) Using SST and a hammer, tap in the timing pulley, facing the flange side rearward.

SST 09223–46011

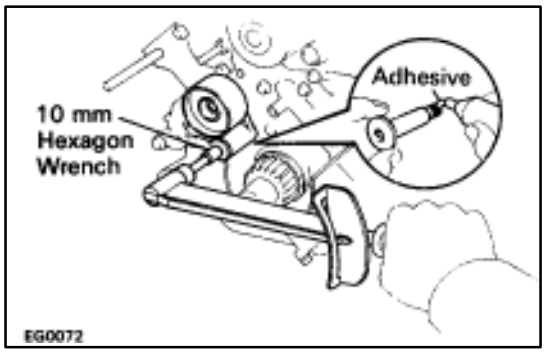

2. INSTALL NO. 1 IDLER PULLEY

(a) Apply adhesive to two or three threads of the pulley bolt end.

Adhesive: Part No. 08833–00080, THREE BOND 1344, LOCTITE 242 OR equivalent

(b) Using a 10 mm hexagon wrench, install the plate washer and idler pulley with the pulley bolt. Torque the pulley bolt.

Torque: 34 N·m (350 kgf·cm, 25 ft·lbf)

(c) Check that the pulley bracket moves smoothly.

WhereEverybodyKnowsYourName

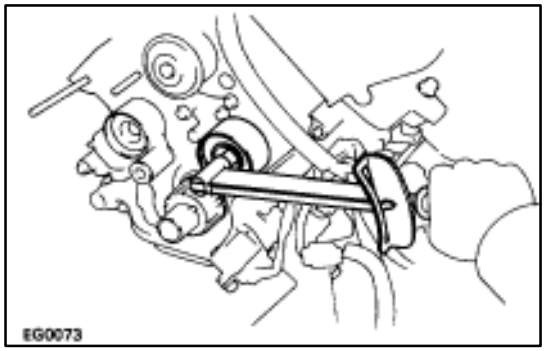

3. INSTALL NO. 2 IDLER PULLEY

(a) Install the idler pulley with the pulley bolt. Torque the pulley bolt.

Torque: 34 N·m (350 kgf·cm, 25 ft·lbf)

(b) Check that the idler pulley moves smoothly.

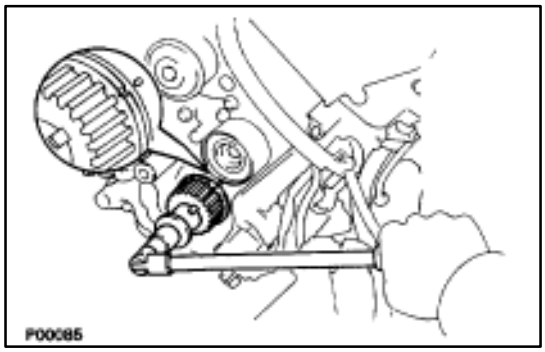

4. TEMPORARILY INSTALL TIMING BELT

NOTICE: The engine should be cold.

(a) Using the crankshaft pulley bolt, turn the crankshaft and align the timing marks of the crankshaft timing pulley and oil pump body.

(b) Remove any oil or water on the crankshaft timing pulley, No. 1 idler pulley and No. 2 idler pulley, and keep them clean.

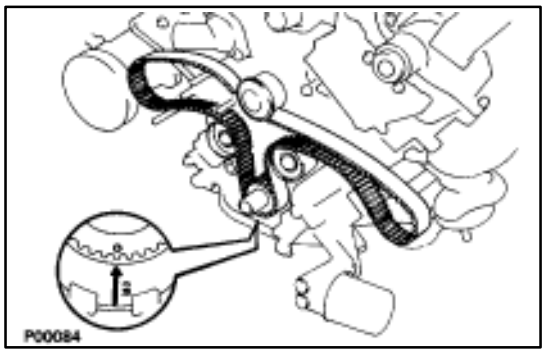

(c) Align the installation mark on the timing belt with the dot mark of the crankshaft timing pulley.

(d) Install the timing belt on the crankshaft timing pulley, No. 1 idler pulley and No. 2 idler pulley.

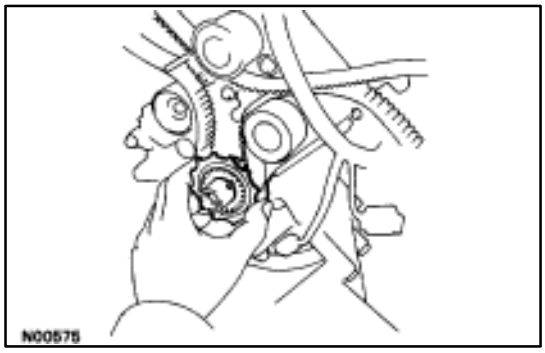

5. INSTALL TIMING BELT GUIDE (NO. 1 CRANK ANGLE SENSOR PLATE)

Install the belt guide, facing the cup side forward.

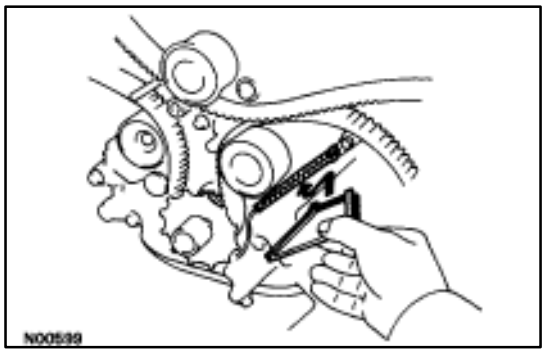

6. INSTALL TIMING BELT COVER SPACER

(a) Install the gasket to the spacer.

(b) Install the spacer.

WhereEverybodyKnowsYourName

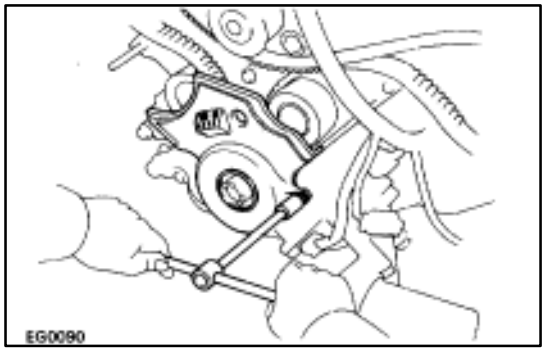

7. INSTALL NO.1 TIMING BELT COVER

(a) Install the gasket to the timing belt cover.

(b) Install the timing belt cover with the four bolts.

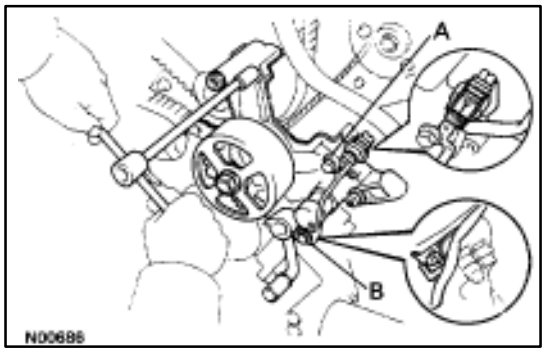

8. INSTALL HYDRAULIC PUMP

(a) Install the hydraulic pump and solenoid valve connector clamp and engine speed sensor wire clamp with the two bolts and two nuts.

Torque:

12 mm heads 16 N·m (160 kgf·cm, 12 ft·lbf)

Others 30 N·m (310 kgf·cm, 22 ft·lbf)

HINT: Each bolt length is indicated in the illustration.

Bolt length:

A 106 mm (4.17 in.) for 12 mm head

B 114 mm (4.49 in.) for 14 mm head

(b) Connect the solenoid valve connector.

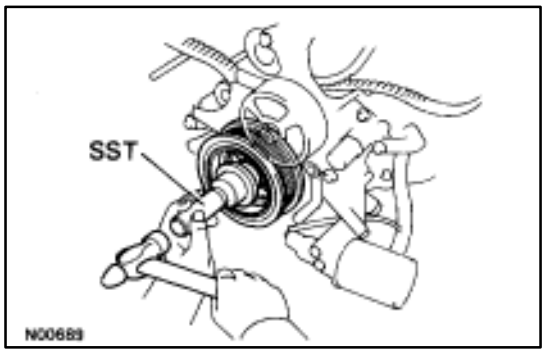

9. INSTALL CRANKSHAFT PULLEY

(a) Align the pulley set key on the crankshaft with the key groove of the pulley.

(b) Using SST and a hammer, tap in the pulley.

SST 09223–46011

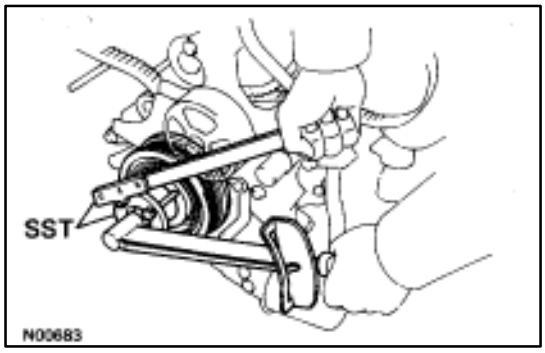

(c) Using SST, install and torque the pulley bolt.

SST 09213–70010 and 09330–00021

Torque: 245 N·m (2,500 kgf·cm, 181 ft·lbf)

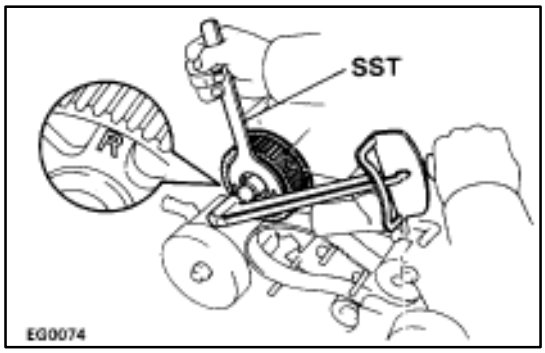

10. INSTALL RH CAMSHAFT TIMING PULLEY

(a) Align the knock pin on the camshaft with the knock pin groove of the timing pulley.

(b) Slide the timing pulley, facing the ”R” mark forward.

(c) Using SST, install and torque the pulley bolt.

SST 09278–54012

Torque: 108 N·m (1,100 kgf·cm, 80 ft·lbf)

WhereEverybodyKnowsYourName

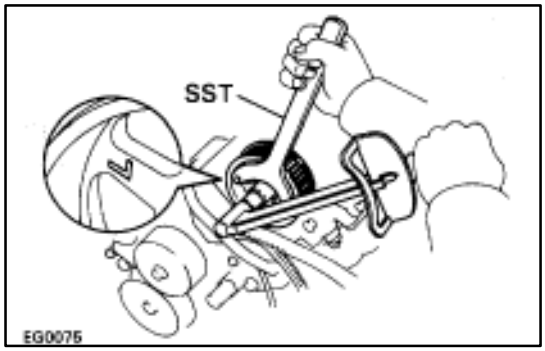

11. INSTALL LH CAMSHAFT TIMING PULLEY

(a) Align the knock pin on the camshaft with the knock pin groove of the timing pulley.

(b) Slide the timing pulley, facing the ”L” mark forward.

(c) Using SST, install and torque the pulley bolt.

SST 09278–54012

Torque: 108 N·m (1,100 kgf·cm, 80 ft·lbf)

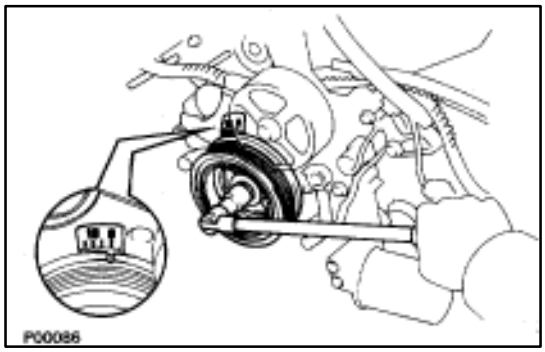

12. SET NO.1 CYLINDER TO TDC/COMPRESSION

(a) (Crankshaft Pulley Position)
Turn the crankshaft pulley, and align its groove with the ”O” timing mark of the No.1 timing belt cover.

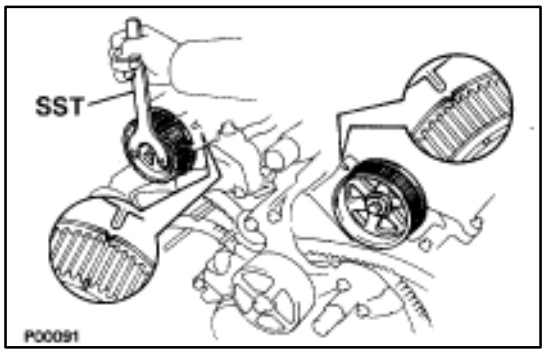

(b) (Camshaft Timing Pulley Position)
Using SST, turn the camshaft timing pulley, and align the timing marks of the camshaft timing pulley and timing belt rear plate.

SST 09278–54012

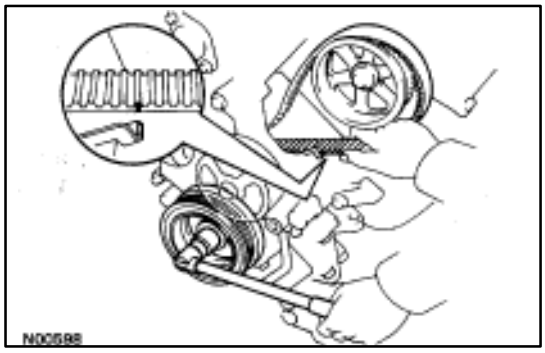

13. INSTALL TIMING BELT TO LH CAMSHAFT TIMING PULLEY

(a) Align the installation mark on the timing belt with the end of the hydraulic pump.

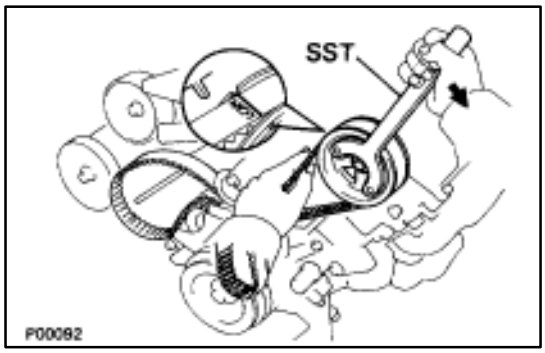

(b) Remove any oil or water on the LH camshaft timing pulley, and keep it clean.

(c) Using SST, slightly turn the LH camshaft timing pulley clockwise. Align the installation mark on the timing belt with the timing mark of the camshaft timing pulley, and hang the timing belt on the LH camshaft timing pulley.

SST 09278–54012

WhereEverybodyKnowsYourName

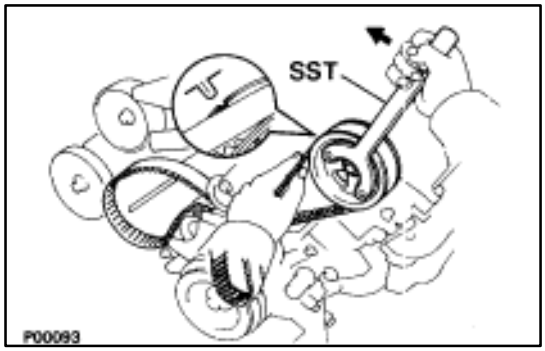

(d) Using SST, align the timing marks of the LH camshaft pulley and timing belt rear plate.
SST 09278–54012
(e) Check that the timing belt has tension between the crankshaft timing pulley and LH camshaft timing pulley.

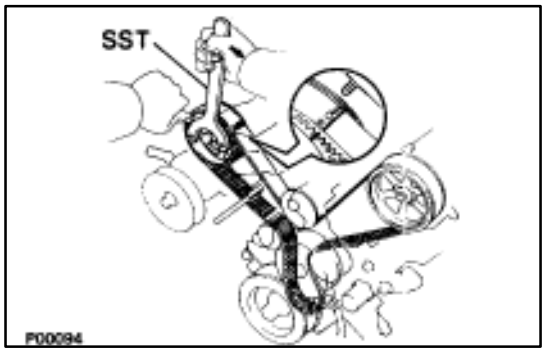

14. INSTALL TIMING BELT TO RH CAMSHAFT TIMING PULLEY

(a) Remove any oil or water on the RH camshaft timing and water pump pulley, and keep them clean.
(b) Using SST, slightly turn the RH camshaft timing pulley clockwise. Align the installation mark on the timing belt with the timing mark of the camshaft timing pulley, and hang the timing belt on the RH camshaft timing pulley.
SST 09278–54012

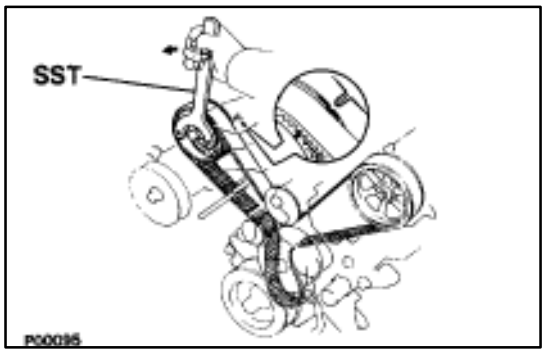

(c) Using SST, align the timing marks of the RH camshaft pulley and timing belt rear plate.
SST 09278–54012
(d) Check that the timing belt has tension between the RH camshaft timing pulley and LH camshaft pulley.

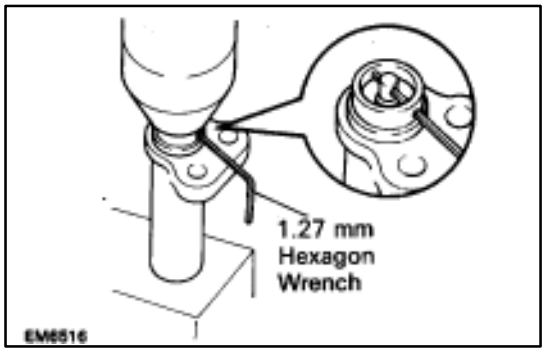

15. SET TIMING BELT TENSIONER

(a) Using a press, slowly press in the push rod using 981–9,807 N (100–1,000 kgf, 220–2,205 lbf) of pressure.
(b) Align the holes of the push rod and housing, pass a 1.27 mm hexagon wrench through the holes to keep the setting position of the push rod.
(c) Release the press.

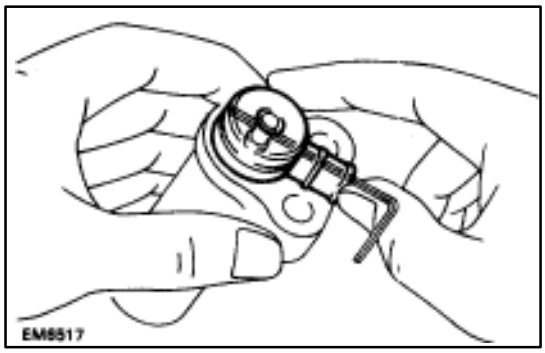

(d) Install the dust boot to the tensioner.

WhereEverybodyKnowsYourName

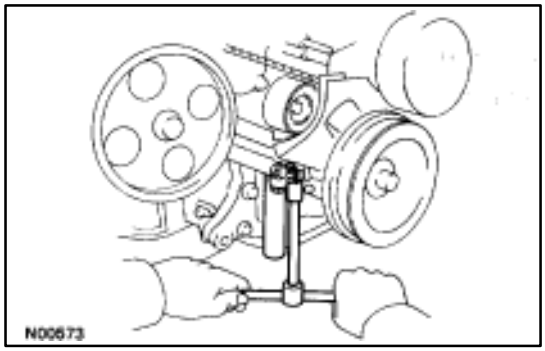

16. INSTALL TIMING BELT TENSIONER

(a) Temporarily install the tensioner with the two bolts.

(b) Alternately tighten the two bolts.

Torque: 26 N·m (270 kgf·cm, 20 ft·lbf)

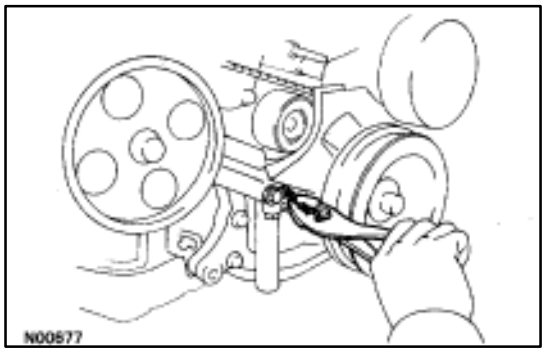

(c) Using pliers, remove the 1.27 mm hexagon wrench from the tensioner.

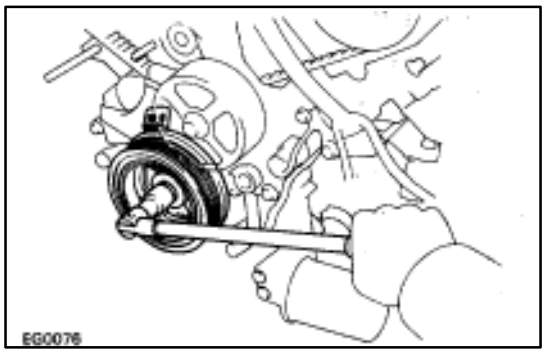

17. CHECK VALVE TIMING

(a) Turn the crankshaft pulley two revolutions from TDC to TDC.

NOTICE: Always turn the crankshaft clockwise.

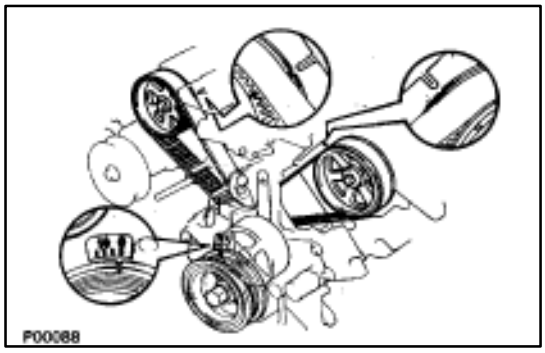

(b) Check that each pulley aligns with the timing marks as shown in the figure.

If the marks do not align, remove the timing belt and reinstall it.

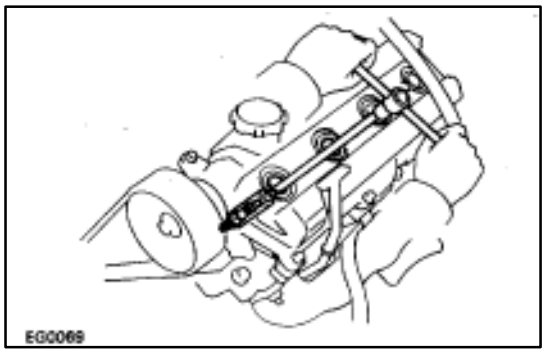

18. INSTALL SPARK PLUGS

Using a 16 mm plug wrench, install the eight spark plugs.

Torque: 18 N·m (180 kgf·cm, 13 ft·lbf)

WhereEverybodyKnowsYourName

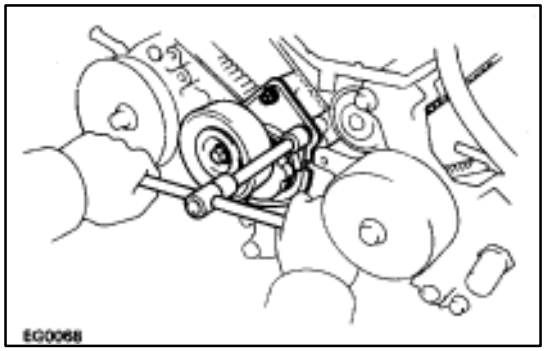

19. INSTALL DRIVE BELT TENSIONER

Install the tensioner with the bolt and two nuts.

Torque: 16 N·m (160 kgf·cm, 12 ft·lbf)

HINT: Use bolt 106 mm (4.17 in.) in length.

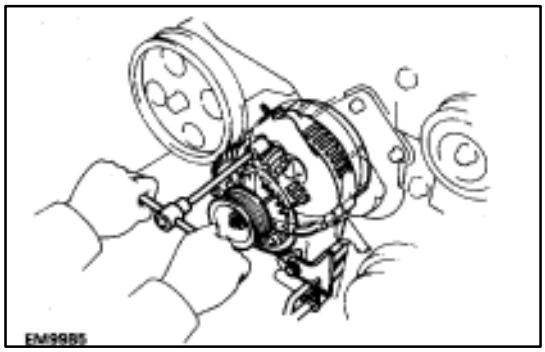

20. INSTALL ALTERNATOR

(a) Install the alternator and A/T oil cooler pipe bracket with the bolt and nut.

Torque: 37 N·m (380 kgf·cm, 27 ft·lbf)

(b) Connect the alternator connector.

(c) Connect the alternator wire with the nut and cap.

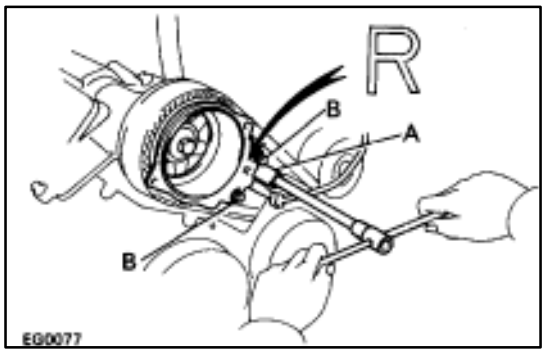

21. INSTALL RH DISTRIBUTOR HOUSING

(a) Install the distributor housing with the three bolts.

Torque: 18 N·m (185 kgf·cm, 13 ft·lbf)

HINT:

- The RH distributor housing is marked with ”R”.
- Each bolt length is indicated in the illustration.

Bolt length: A 38 mm (1.50 in.)
B 96 mm (3.78 in.)

(b) Connect the cam position sensor connector.

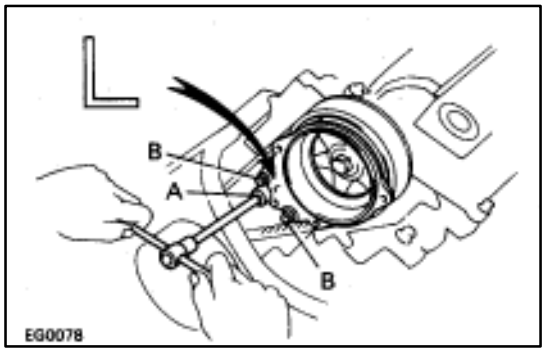

22. INSTALL LH DISTRIBUTOR HOUSING

(a) Install the distributor housing with the three bolts.

Torque: 18 N·m (185 kgf·cm, 13 ft·lbf)

HINT:

- The LH distributor housing is marked with ”L”.
- Each bolt length is indicated in the illustration.

Bolt length: A 38 mm (1.50 in.)
B 80 mm (3.15 in.)

23. INSTALL DISTRIBUTOR ROTORS

(a) Align the protrusion of the distributor rotor with the groove of the camshaft timing pulley.

(b) Install the distributor rotor with the two bolts. Install the two distributor rotors.

Torque: 3.8 N·m (39 kgf·cm, 34 in.·lbf)

WhereEverybodyKnowsYourName

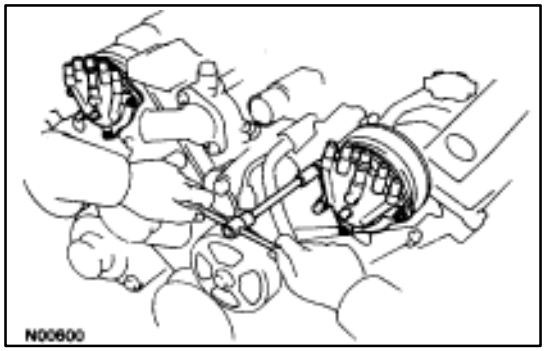

24. INSTALL DISTRIBUTOR CAPS

Install the distributor cap with the three bolts. Install the two distributor caps.

Torque: 3.8 N·m (39 kgf·cm, 34 in.·lbf)

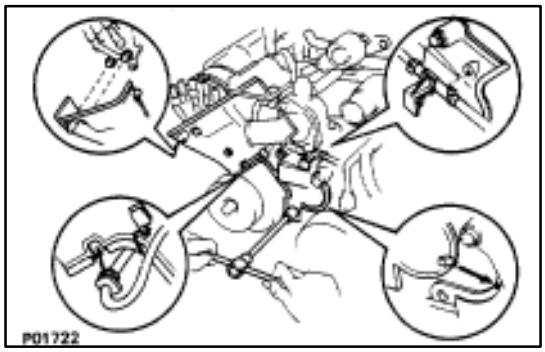

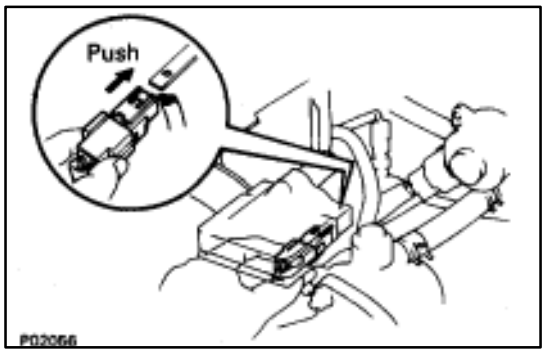

25. INSTALL RH NO.2 TIMING BELT COVER

(a) Install the four gaskets to the timing belt cover.
(b) Install the connector grommet to the timing belt cover.
(c) Install the timing belt cover with the five bolts.

Torque (12 mm head bolt):

16 N·m (160 kgf·cm, 12 ft·lbf)

HINT (12 mm head bolt): Use bolts 106 mm (4.17 in.) in length.

(d) Install the wire clamp to the timing belt cover.
(e) Install the cam position sensor connector to the ignition coil bracket.

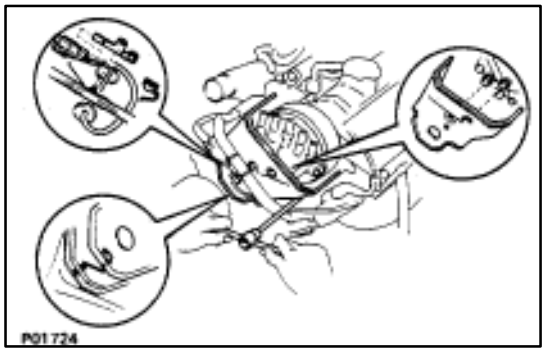

26. INSTALL LH NO.2 TIMING BELT COVER

(a) Install the two gaskets to the timing belt cover.
(b) Run the cam position sensor wire through the timing belt cover hole.
(c) Install the timing belt cover and connector bracket with the three bolts.
(d) Connect the cam position sensor connector.
(e) Install cam position sensor connector to connector bracket.
(f) Install the connector grommet to the timing belt cover hole.

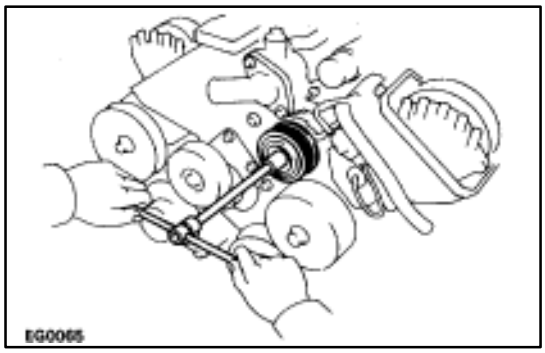

27. INSTALL DRIVE BELT IDLER PULLEY

Install the idler pulley and cover plate with the pulley bolt.

Torque: 37 N·m (380 kgf·cm, 27 ft·lbf)

WhereEverybodyKnowsYourName

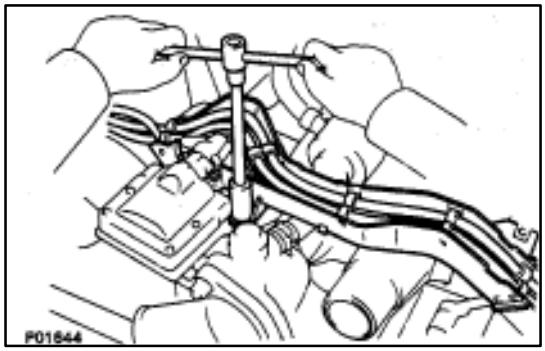

28. INSTALL HIGH–TENSION CORDS, HIGH–TENSION CORD CLAMP AND LOWER HIGH–TENSION CORD COVER ASSEMBLY

(a) Install the lower high–tension cord cover with the bolt.
(b) Connect the high–tension cord to RH ignition coil.

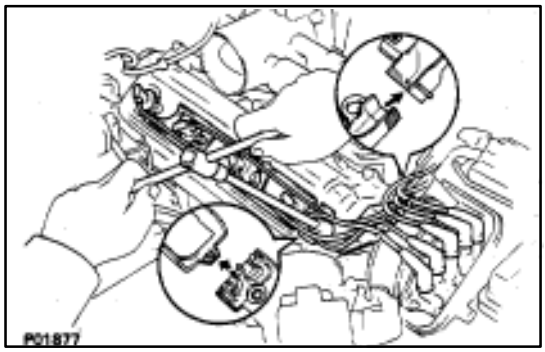

(c) Connect the four high–tension cord to the RH spark plugs.
(d) Install the RH rear and front high–tension cord clamps with the two bolts.

HINT: Place the front and rear ends of the front hightension cord clamp on the rear high–tension cord clamp and lower high–tension cord cover.

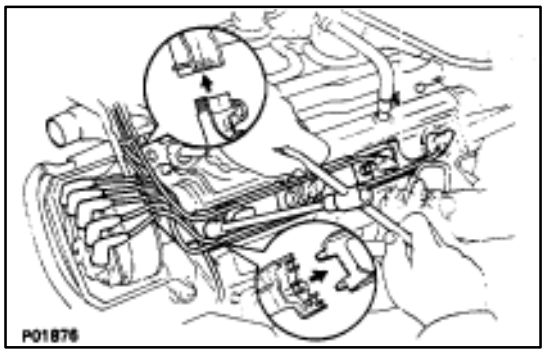

(e) Connect the four high–tension cord to the LH spark plugs.
(f) Install the LH rear and front high–tension cord clamps with the two bolts.

HINT: Place the front and rear ends of the front hightension cord clamp on the rear high–tension cord clamp and lower high–tension cord cover.

(g) Fit the high–tension cords to the high–tension cord clamp. (See page IG–16)

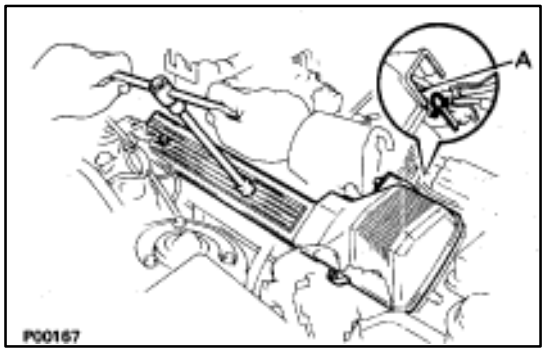

29. INSTALL RH NO.3 TIMING BELT COVER

(a) Install the three gaskets to the timing belt cover.
(b) Fit portion A of the timing belt cover, matching it with the lower high–tension cord cover.
(c) Install the timing belt cover with the three bolts.

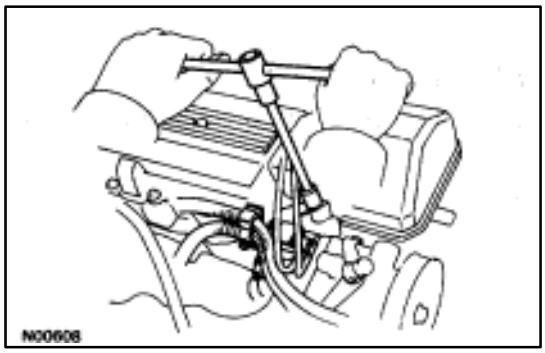

30. INSTALL VSV FOR EVAP SYSTEM

Install the VSV with the two bolts.

WhereEverybodyKnowsYourName

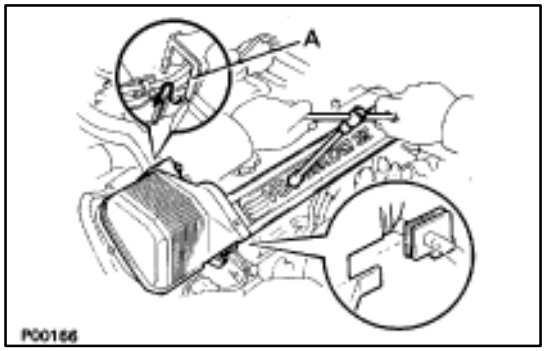

31. INSTALL LH NO.3 TIMING BELT COVER

(a) Install the three gaskets to the timing belt cover.
(b) Install the cord grommet to the high–tension cord.
(c) Install the cord grommet to the timing belt cover.
(d) Fit portion A of the timing belt cover, matching it with the lower high–tension cord cover.
(e) Install the timing belt cover with the four bolts.

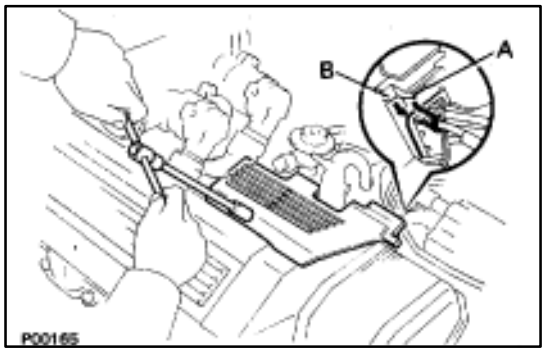

32. INSTALL RH ENGINE WIRE COVER

(a) Fit portions A and B of the engine wire cover, matching them with the lower high–tension cord cover and No. 3 timing belt cover.
(b) Install the engine wire cover with the bolt.

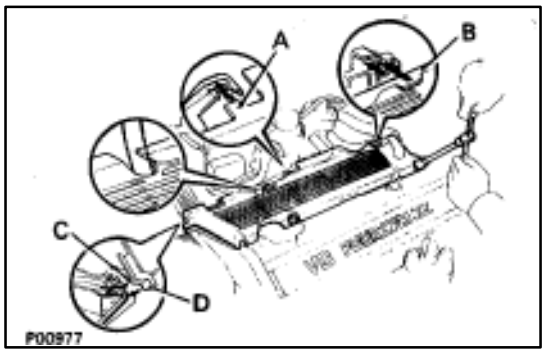

33. INSTALL LH ENGINE WIRE COVER

(a) Connect portions A and B of the engine wire cover to the wire cover brackets.
(b) Set the VSV (for Fuel pressure control system) wire in original position.
(c) Fit portions C and D of the engine wire cover, matching them with the lower high–tension cord cover and No.3 timing belt cover.
(b) Install the engine wire cover with the two bolts.

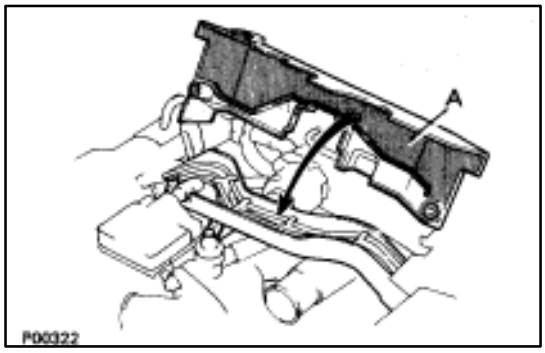

34. INSTALL UPPER HIGH–TENSION CORD COVER

(a) Fit portion A of the upper high–tension cover, matching it with the top of the lower high–tension cord cover.

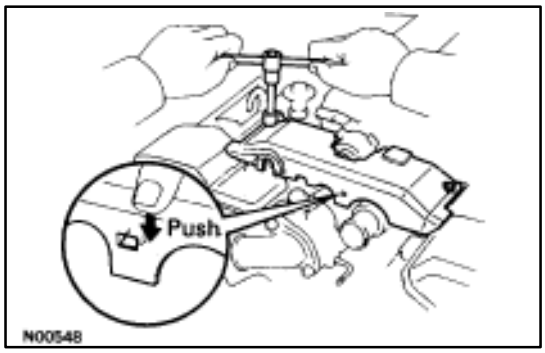

(b) Push the front side of the high–tension cord cover, and connect the front side claw groove of the upper high–tension cord cover to the claw of the lower high–tension cord cover.
(c) Install the upper high–tension cord cover with the two bolts.

WhereEverybodyKnowsYourName

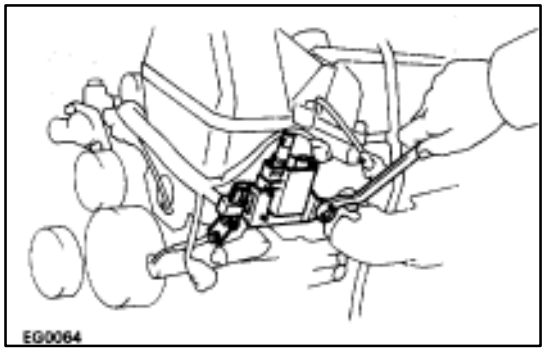

35. INSTALL LH IGNITION COIL

(a) Install the ignition coil with the two bolts.

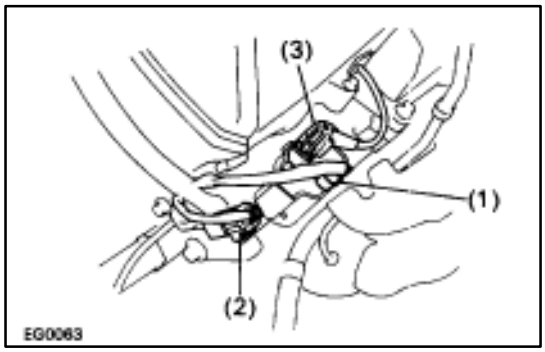

(b) Connect the following connectors and cord:
  (1) Ignition coil connector
  (2) Noise filter connector
  (3) High–tension cord

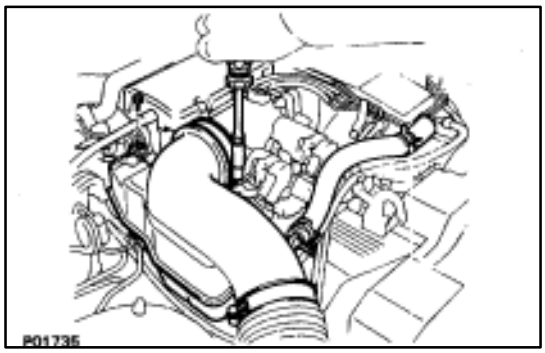

36. INSTALL INTAKE AIR CONNECTOR

(a) Connect the end portions of the intake air connector to the throttle body and air cleaner hose.
(b) Tighten the two hose clamps.
(c) Install the bolt holding the intake air connector to the cylinder head cover.

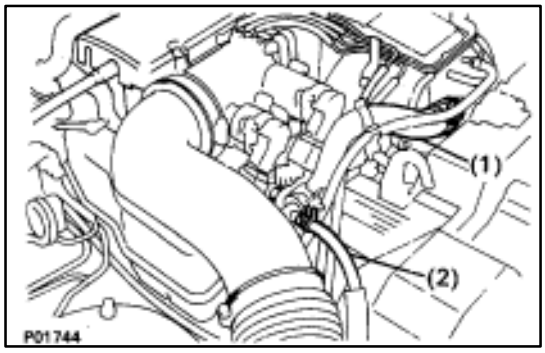

(d) Connect the following hoses:
  (1) Air hose to ISC valve
  (2) Air hose (from PS air control valve) to intake air connector

WhereEverybodyKnowsYourName

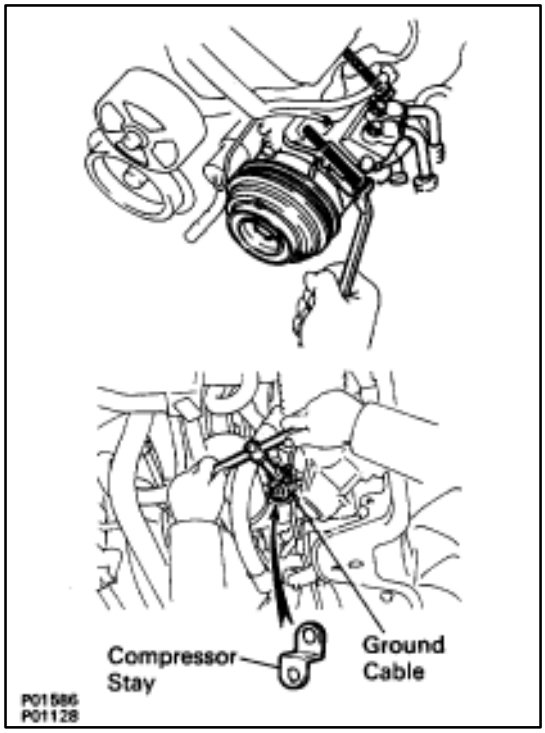

37. INSTALL A/C COMPRESSOR

(a) Install the A/C compressor, compressor stay and ground cable with the three bolts and nut.

Torque: Bolt 49 N·m (500 kgf·cm, 36 ft·lbf)
Nut 29 N·m (300 kgf·cm, 22 ft·lbf)

(b) Connect the A/C compressor connector.

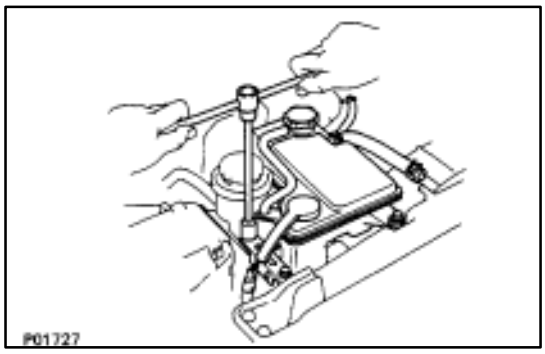

38. INSTALL RADIATOR AND RESERVOIR TANK
(See steps 25 and 26 on pages EM–174 to 175)

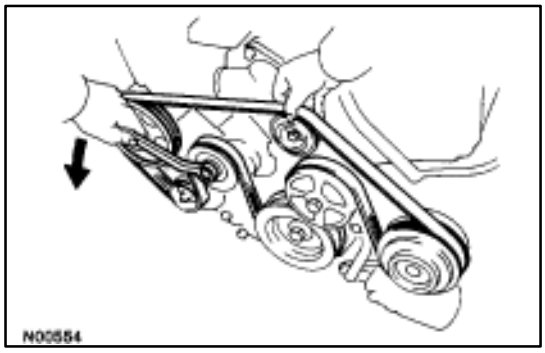

39. INSTALL DRIVE BELT

Install the drive belt by turning the drive belt tensioner counterclockwise.

HINT: The pully bolt for the belt tensioner has a lefthand thread.

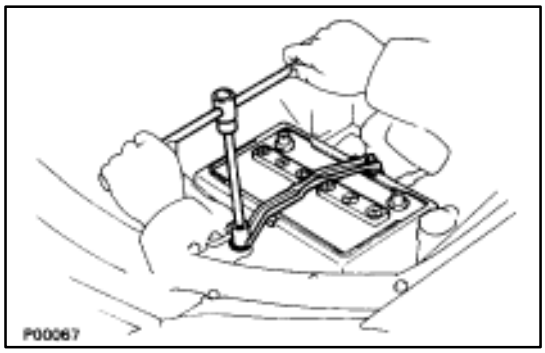

40. INSTALL BATTERY

41. FILL WITH ENGINE COOLANT (See page CO–7)

42. CHECK IGNITION TIMING (See page IG–28)

Ignition timing:
8–12° BTDC @ idle
(w/ Terminals TE1 and E1 connected)

43. INSTALL ENGINE UNDER COVER

WhereEverybodyKnowsYourName

CYLINDER HEAD

COMPONENTS FOR REMOVAL AND INSPECTION

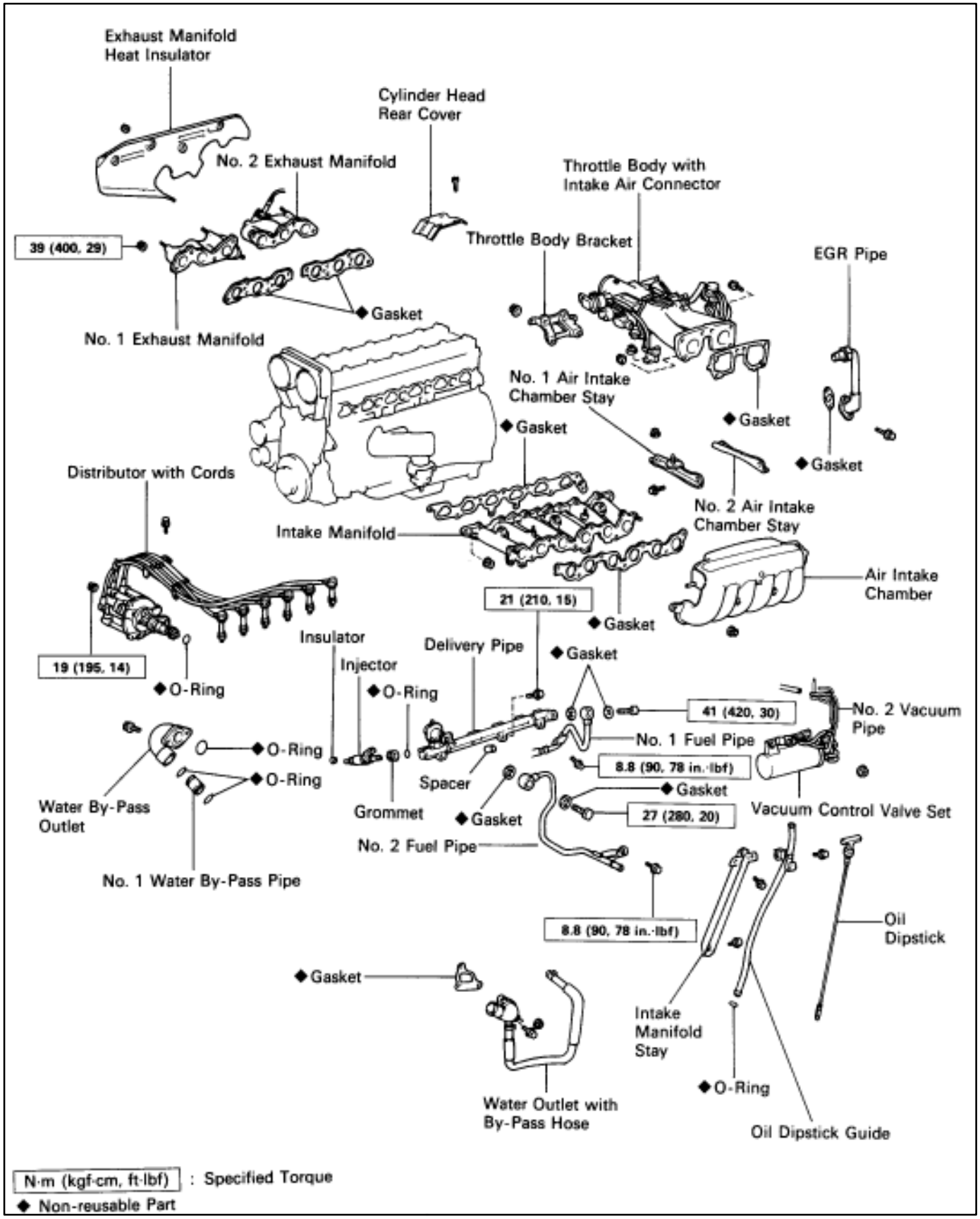

WhereEverybodyKnowsYourName

COMPONENTS FOR REMOVAL AND INSTALLATION (Cont'd)

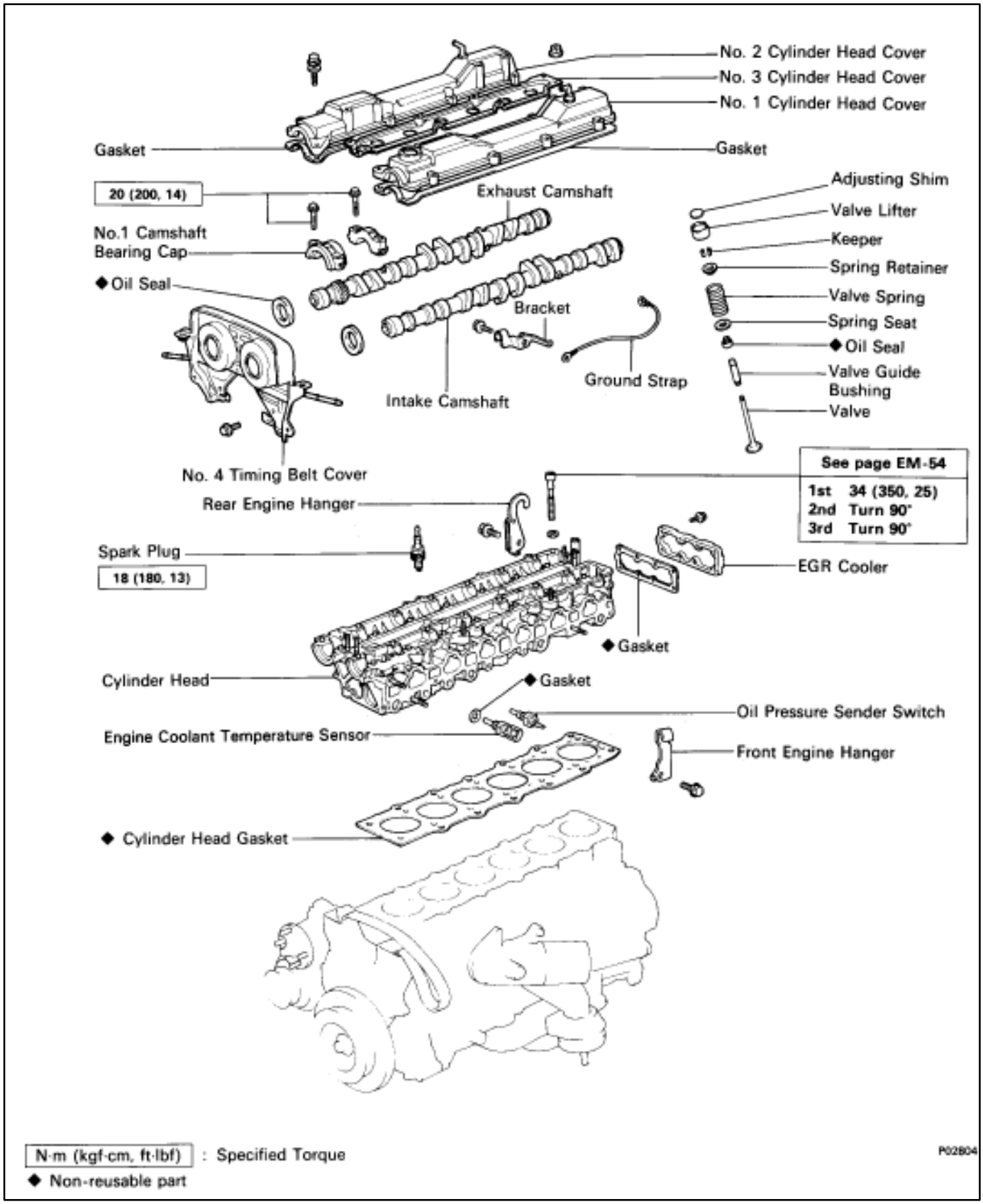

WhereEverybodyKnowsYourName

REMOVAL OF CYLINDER HEAD

(See Components on pages EM–34 and 35)

1. **DISCONNECT HIGH–TENSION CORDS FROM SPARK PLUGS**
   (See steps 1 to 8 on pages EM–10 and 11)
2. **REMOVE SPARK PLUGS**
   (See step 2 on page IG–8)
3. **REMOVE DISTRIBUTOR AND CORDS**
   (See pages IG–11 and 12)
4. **REMOVE WATER PUMP PULLEY AND RADIATOR**
   (See steps 1 to 3, 6 and 7 on pages EM–64 to 66)
5. **DISCONNECT TIMING BELT FROM CAMSHAFT TIMING PULLEYS**
   (See steps 2 to 5 on pages EM–24 and 25)
   NOTICE:
   - Support the timing belt, so that the meshing of the crankshaft timing pulley and timing belt does not shift.
   - Be careful not to drop anything inside the timing belt cover.
   - Do not allow the timing belt to come into contact with oil, water or dust.

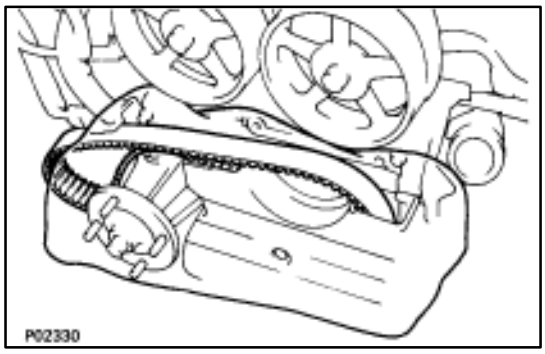

6. **REMOVE NO. 2 FRONT EXHAUST PIPE**
   (See step 2 on page EM–71)

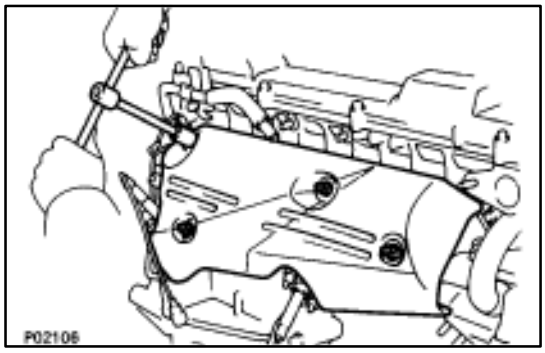

7. **REMOVE EXHAUST MANIFOLDS**
   (a) Disconnect the two oxygen sensor connectors.
   (b) Remove the four nuts and manifold heat insulator.

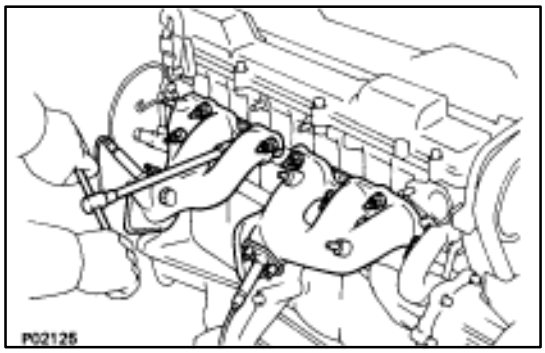

   (c) Remove the four nuts, exhaust manifold and gasket. Remove the No. 1 and No. 2 exhaust manifolds.

WhereEverybodyKnowsYourName

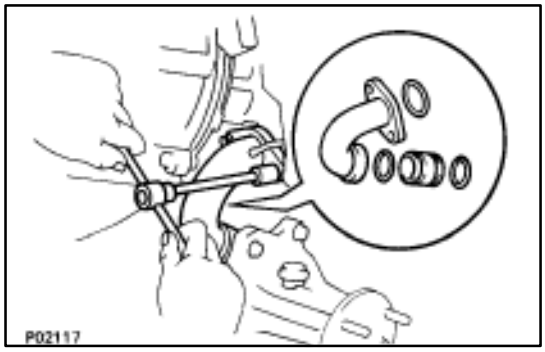

8. REMOVE WATER BY–PASS OUTLET AND NO. 1 WATER BY–PASS PIPE

(a) Remove the two bolts, water by–pass outlet and No. 1 water by–pass pipe.

(b) Remove the three O–rings from the water by–pass outlet and No. 1 water by–pass pipe.

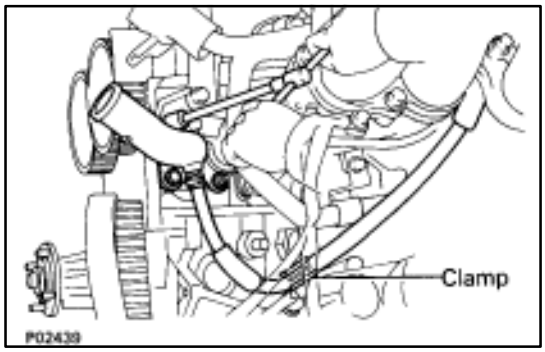

9. REMOVE WATER OUTLET AND NO. 1 BY–PASS HOSE

(a) Remove the two nuts, bolt and water outlet.

(b) Disconnect the No. 1 by–pass hose from the hose clamp.

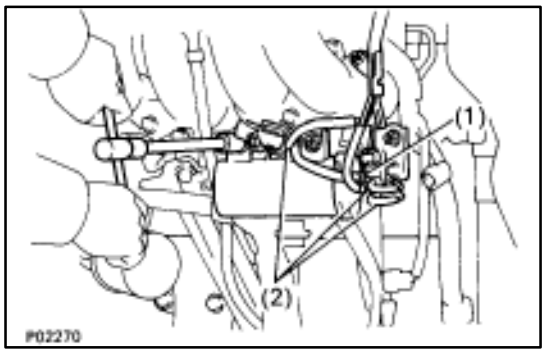

10. REMOVE VACUUM CONTROL VALVE SET AND NO. 2 VACUUM PIPE

(a) Disconnect the two connectors from the VSV.

(b) Disconnect the following hoses:

(1) Vacuum hose from ACIS vacuum tank

(2) Three vacuum hoses from VSV

(c) Remove the four nuts, vacuum control valve set and vacuum pipe.

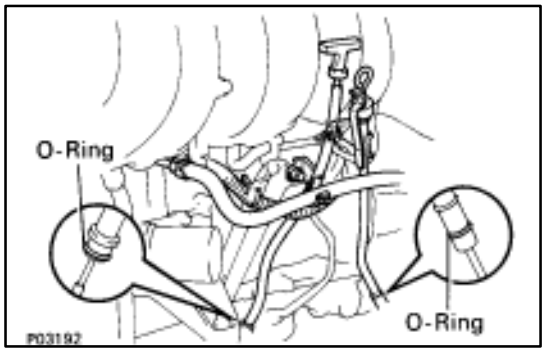

11. REMOVA OIL DIPSTICK GUIDES FOR ENGINE AND TRANSMISSION (A/T)

(a) Disconnect the fuel return hose from the engine oil dipstick guide.

(b) Remove the mounting bolt.

(c) Pull out the dipstick guide together with dipstick. Plug the oil pan.

(d) Remove the O–ring from the dipstick guide.

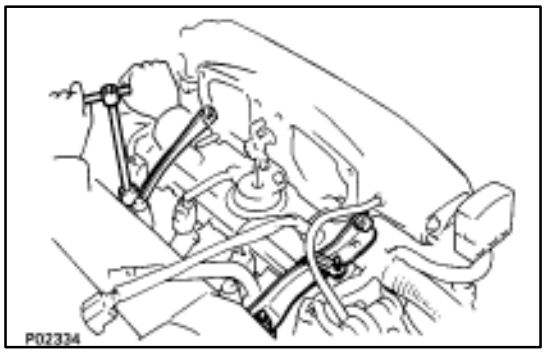

12. REMOVE AIR INTAKE CHAMBER

(a) Remove the bolt, nut and intake chamber stay. Remove the No. 1 and No. 2 stays.

WhereEverybodyKnowsYourName

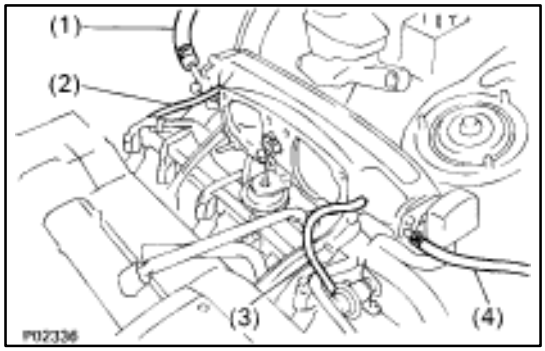

(b) Disconnect the following hoses:
(1) Vacuum hose from brake booster union
(2) Vacuum hose (from ACIS vacuum tank)
(3) Vacuum sensing hose
(4) Air hose (from PS air control valve)

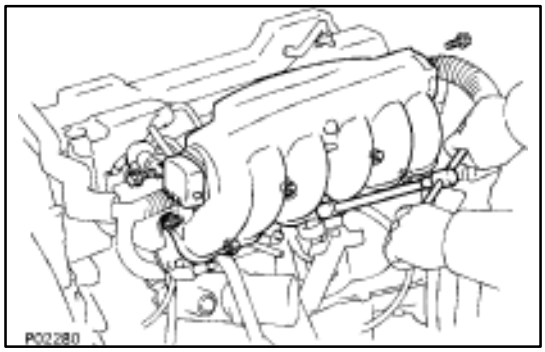

(c) Remove the two bolts, and disconnect the data link connector 1 and harness protector from the air intake chamber.
(d) Remove the five bolts, two nuts and air intake chamber and gasket.

13. REMOVE DELIVERY PIPE AND INJECTORS
(See steps 4, 5, 8 and 10 on pages FI–28 and 29)

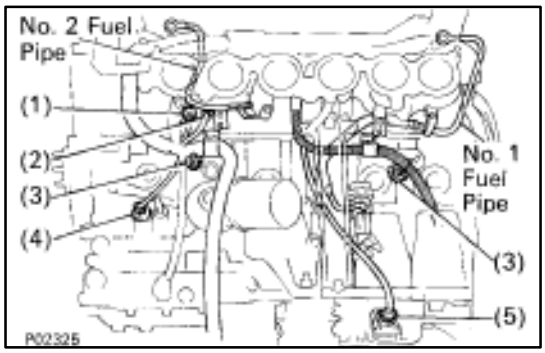

14. REMOVE NO. 1 AND NO. 2 FUEL PIPES

15. DISCONNECT ENGINE WIRE FROM INTAKE MANIFOLD
(a) Disconnect the following connectors:
(1) Engine coolant temperature sensor connector
(2) Engine coolant temperature sender gauge connector
(3) Two knock sensor connectors
(4) Oil pressure switch connector

(5) Oil level sensor connector
(6) A/C compressor connector
(b) Remove the three nuts and two clamp bolts.
(c) Remove the two bolts, and disconnect the harness protector from the intake manifold.

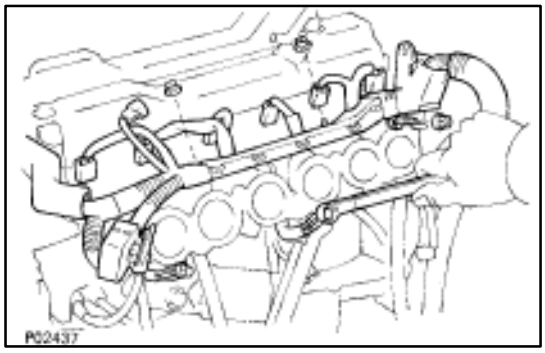

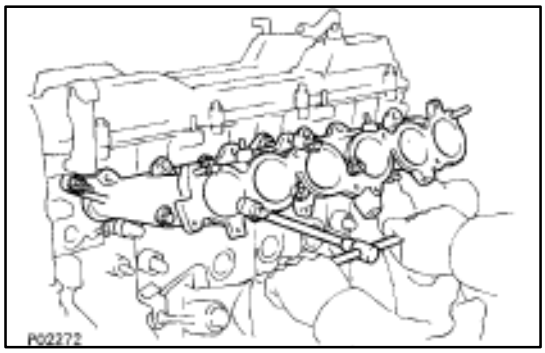

16. REMOVE INTAKE MANIFOLD
(a) Remove the two bolts and intake manifold stay.
(b) Remove the six bolts, two nuts, intake manifold and gasket.

WhereEverybodyKnowsYourName

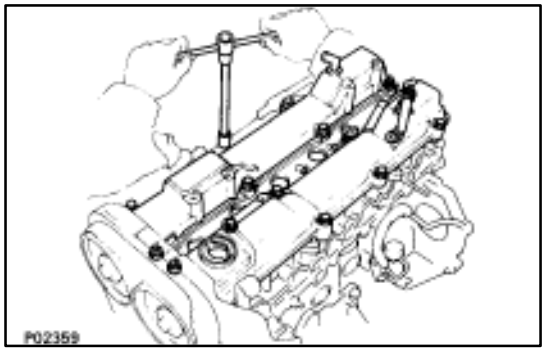

17. REMOVE NO. 3, No. 1 AND NO. 2 CYLINDER HEAD COVERS

(a) Remove the 12 bolts and four nuts.

(b) Remove the cylinder head covers and gaskets.

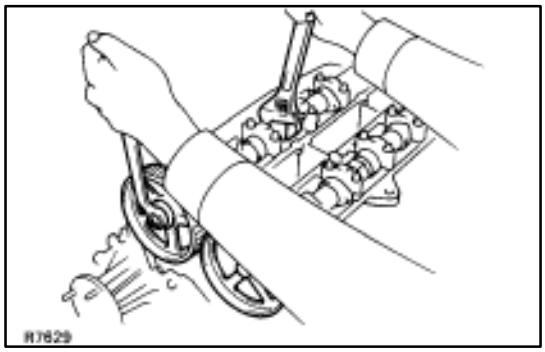

18. REMOVE CAMSHAFT TIMING PULLEYS

Hold the hexagon portion of the camshaft with a wrench, and remove the pulley mount bolt and camshaft pulley.

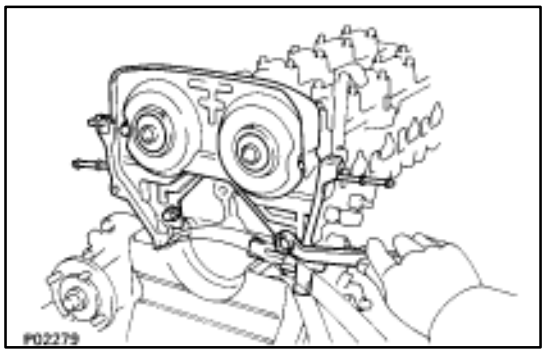

19. REMOVE NO. 4 TIMING BELT COVER

Remove the four bolts and timing belt cover.

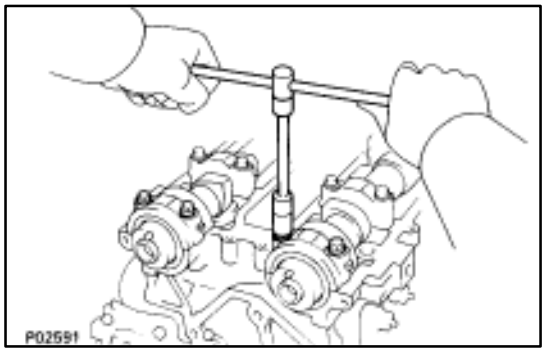

20. REMOVE CAMSHAFTS

(a) Uniformly loosen and remove the four bearing cap bolts.

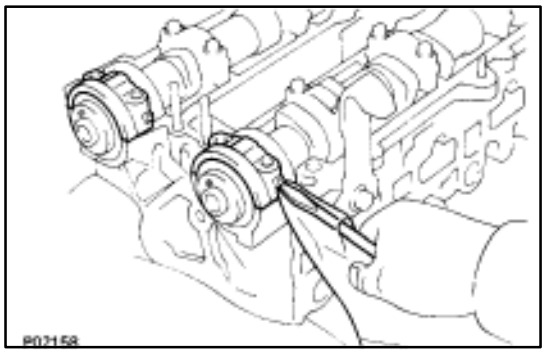

(b) Using a screwdriver, pry out the two No. 1 camshaft bearing caps and oil seals.

NOTICE: Be careful not to damage the cap. Tape the screwdriver tip.

WhereEverybodyKnowsYourName

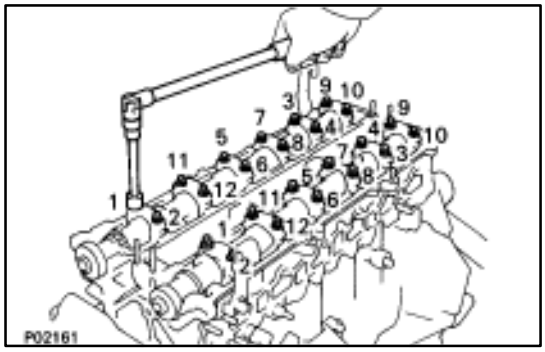

(c) Uniformly loosen and remove the 12 bearing cap bolts in several passes in the sequence shown, and remove the six bearing caps and camshaft. Remove the intake and exhaust camshafts.

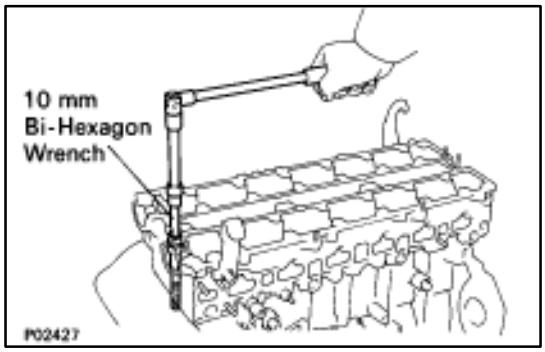

21. REMOVE CYLINDER HEAD

(a) Using a 10 mm bi–hexagon wrench, uniformly loosen and remove the ten cylinder head bolts in several passes in the sequence shown.

NOTICE: Cylinder head warpage or cranking could result from removing in incorrect order.

(b) Remove the 14 plate washers.

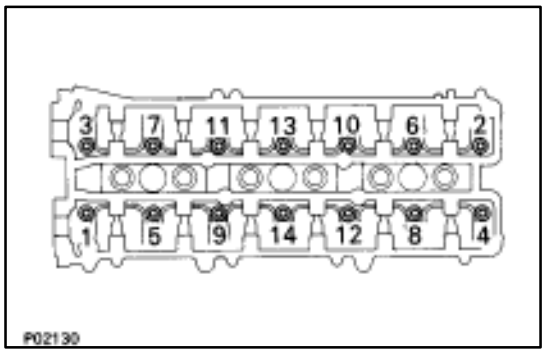

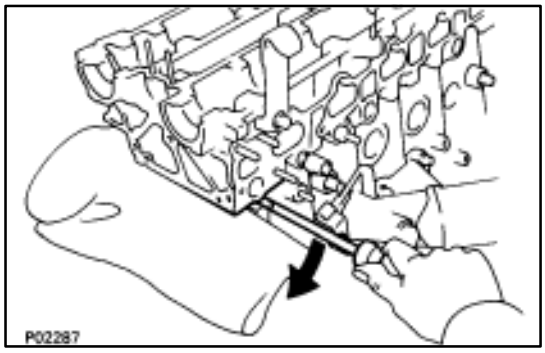

(c) Lift the cylinder head from the dowels on the cylinder block. As the cylinder head is lifted, separate the heater water hose from the union.

(d) Place the head on wooden blocks on a bench.

If the cylinder head is difficult to lift off, pry with a screwdriver between the cylinder head and block projection.

NOTICE: Be careful not to damage the contact surfaces of the cylinder head and cylinder block.

WhereEverybodyKnowsYourName

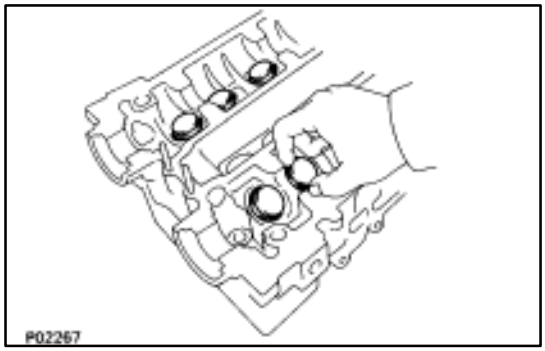

DISASSEMBLY OF CYLINDER HEAD

(See Components on page EM–35)

1. REMOVE VALVE LIFTERS AND SHIMS

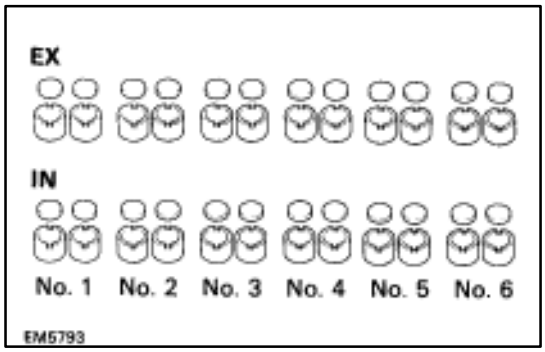

HINT: Store the valve lifters and shims in correct order.

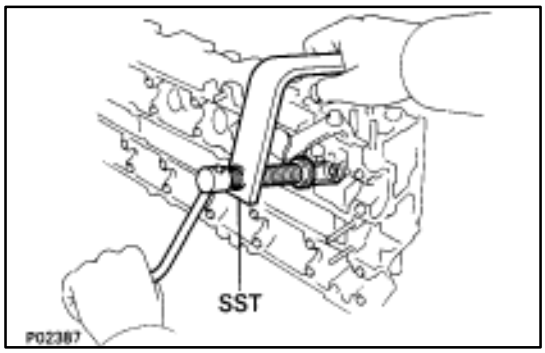

2. REMOVE VALVES

(a) Using SST, compress the valve spring and remove the two keepers.

SST 09202–70010

(b) Remove the spring retainer, valve spring, valve and spring seat.

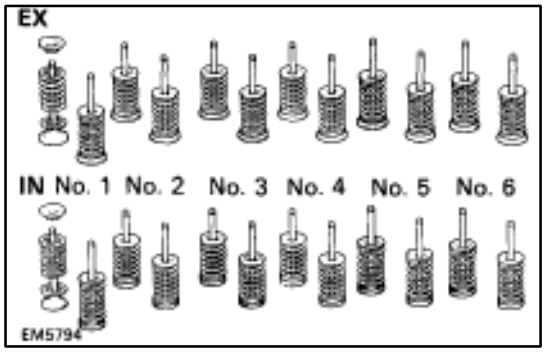

HINT: Store the valves, valve springs, spring seats and spring retainers in correct order.

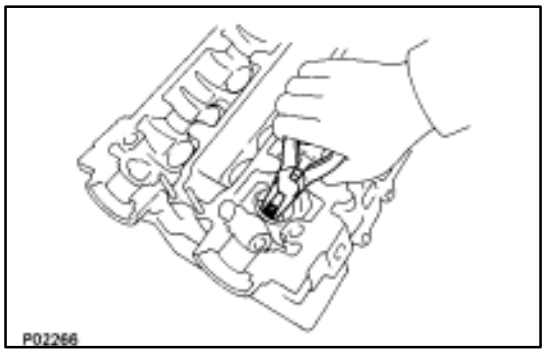

(c) Using needle–nose pliers, remove the oil seal.

WhereEverybodyKnowsYourName

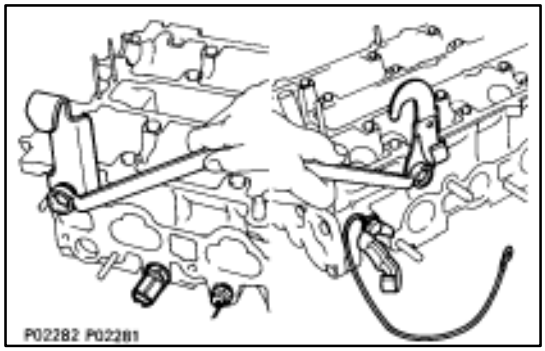

3. REMOVE ENGINE HANGERS

4. REMOVE ENGINE COOLANT TEMPERATURE SENSOR AND SENDER GAUGE

5. REMOVE THROTTLE CABLE BRACKET AND GROUND STRAP

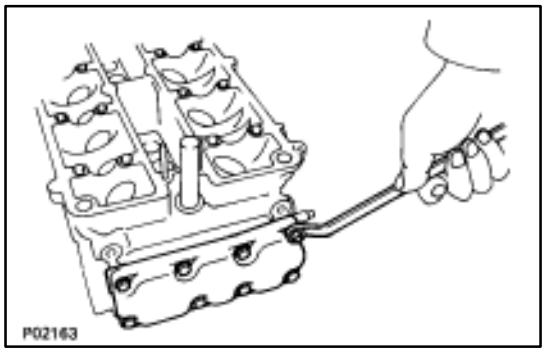

6. REMOVE EGR COOLER

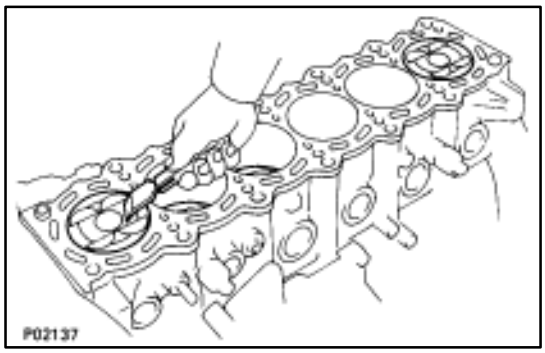

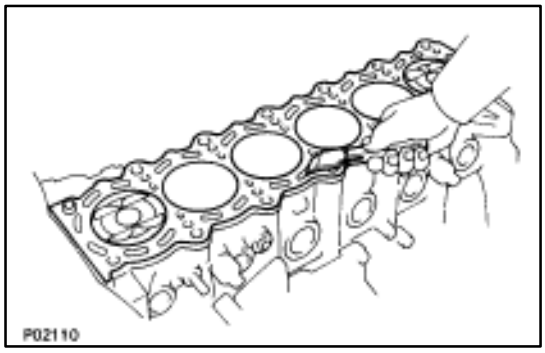

INSPECTION, CLEANING AND REPAIR OF CYLINDER HEAD COMPONENTS

1. CLEAN TOP SURFACES OF PISTONS AND CYLINDER BLOCK

(a) Turn the crankshaft, and bring each piston to top dead center (TDC). Using a gasket scraper, remove all the carbon from the piston top surface.

(b) Using a gasket scraper, remove all the gasket material from the top surface of the cylinder block.

(c) Using compressed air, blow carbon and oil from the bolt holes.

CAUTION: Protect your eyes when using high–compressed air.

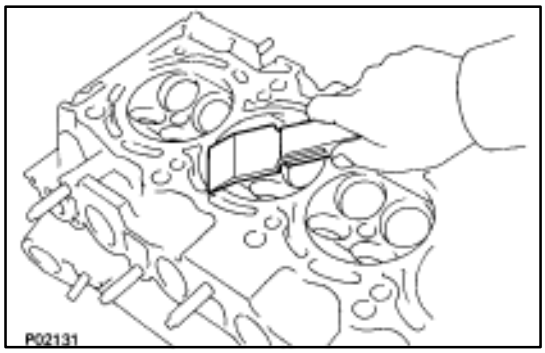

2. CLEAN CYLINDER HEAD

A. Remove gasket material

Using a gasket scraper, remove all the gasket material from the cylinder block surface.

NOTICE: Be careful not to scratch the cylinder block contact surface.

WhereEverybodyKnowsYourName

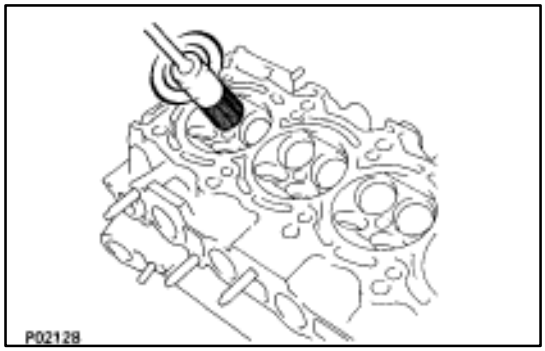

B. Clean combustion chambers

Using a wire brush, remove all the carbon from the combustion chambers.

NOTICE: Be careful not to scratch the cylinder block contact surface.

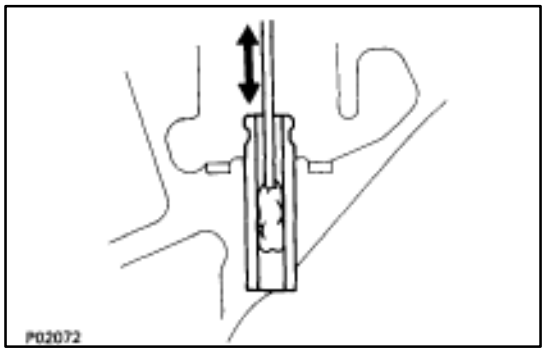

C. Clean valve guide bushings

Using a valve guide bushing brush and solvent, clean all the guide bushings.

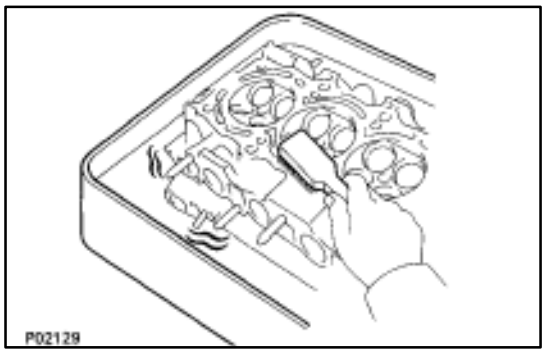

D. Clean cylinder head

Using a soft brush and solvent, thoroughly clean the cylinder head.

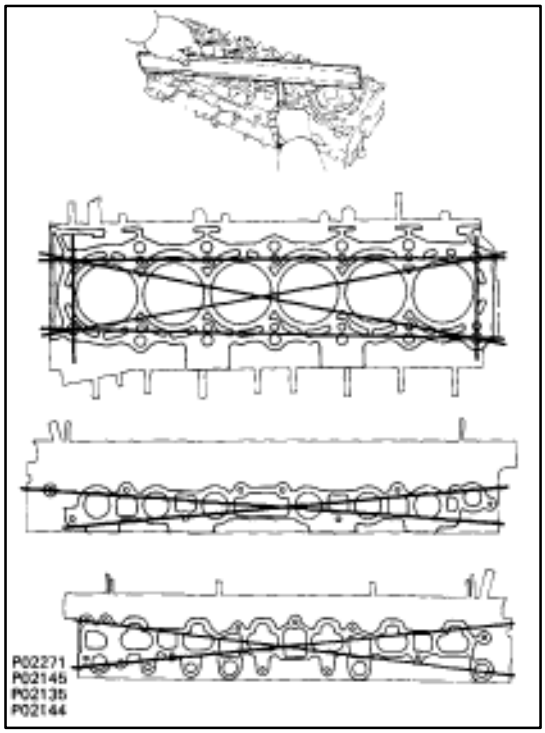

3. INSPECT CYLINDER HEAD

A. Inspect for flatness

Using precision straight edge and feeler gauge, measure the surfaces contacting the cylinder block, intake and exhaust manifolds for warpage.

Maximum warpage: 0.10 mm (0.0039 in.)

If warpage is greater than maximum, replace the cylinder head.

WhereEverybodyKnowsYourName

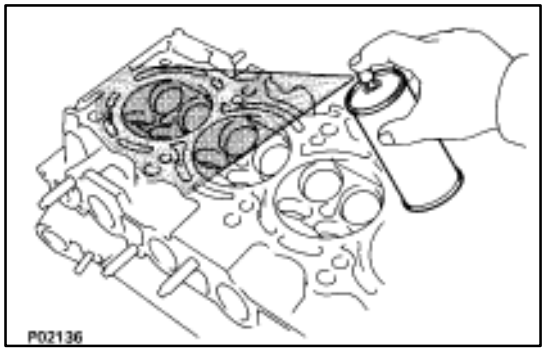

B. Inspect for cranks

Using a dye penetrant, check the combustion chamber, intake ports, exhaust ports and cylinder block surface for cracks.

If cracked, replace the cylinder head.

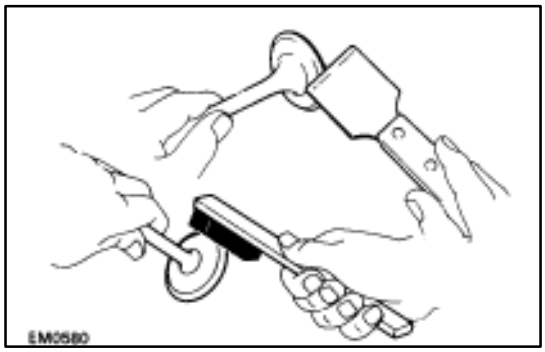

4. CLEAN VALVES

(a) Using a gasket scraper, chip off any carbon from the valve head.

(b) Using a wire brush, thoroughly clean the valve.

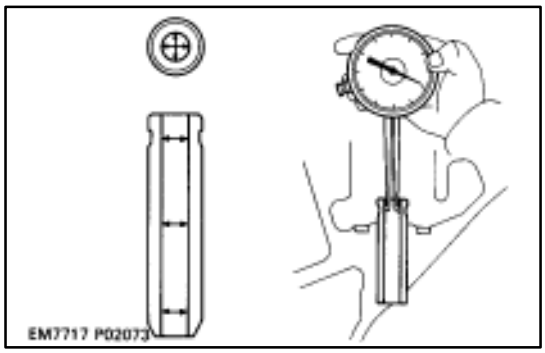

5. INSPECT VALVE STEMS AND GUIDE BUSHINGS

(a) Using a caliper gauge, measure the inside diameter of the guide bushing.

Bushing inside diameter:

6.010–6.030 mm (0.2366–0.2374 in.)

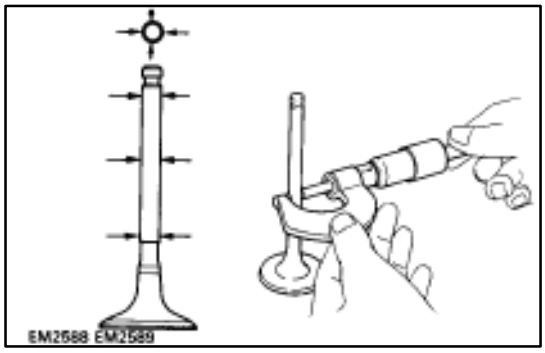

(b) Using a micrometer, measure the diameter of the valve stem.

Valve stem diameter:

Intake	**5.970–5.985 mm (0.2350–0.2356 in.)**
Exhaust	**5.965–5.980 mm (0.2348–0.2354 in.)**

(c) Subtract valve stem diameter measurement from the guide bushing inside diameter measurement.

Standard oil clearance:

Intake	**0.025–0.060 mm (0.0010–0.0024 in.)**
Exhaust	**0.030–0.065 mm (0.0012–0.0036 in.)**

Maximum oil clearance:

Intake	**0.08 mm (0.0031 in.)**
Exhaust	**0.10 mm (0.0039 in.)**

If the clearance is greater than maximum, replace the valve and guide bushing.

WhereEverybodyKnowsYourName

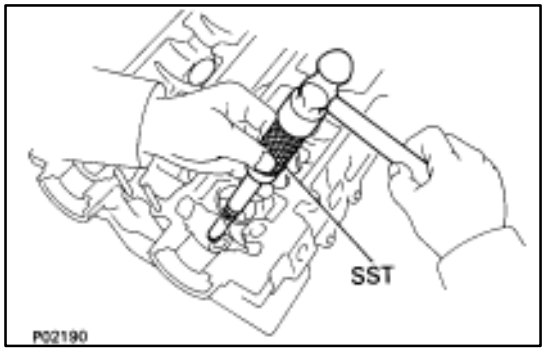

6. IF NECESSARY, REPLACE VALVE GUIDE BUSHINGS

(a) Using SST and a hammer, tap out the guide bushing.

SST 09201–70010

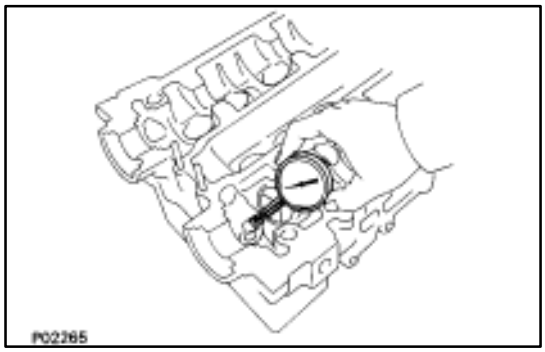

(b) Using a caliper gauge, measure the bushing bore diameter of the cylinder head.

(c) Select a new guide bushing (STD size or O/S 0.05).

Both intake and exhaust

Bushing bore diameter mm (in.)	Bushing size
11.033 – 11.044 (0.4344 – 0.4348)	Use STD
11.083 – 11.094 (0.4363 – 0.4368)	Use O/S 0.05

If the bushing bore diameter of the cylinder head is greater than 11.044 mm (0.4348 in.), machine the bushing bore to the following dimension:

11.035–11.056 mm (0.4344–0.4353 in.)

If the bushing bore diameter of the cylinder head is greater than 11.056 mm (0.4353 in.), replace the cylinder head.

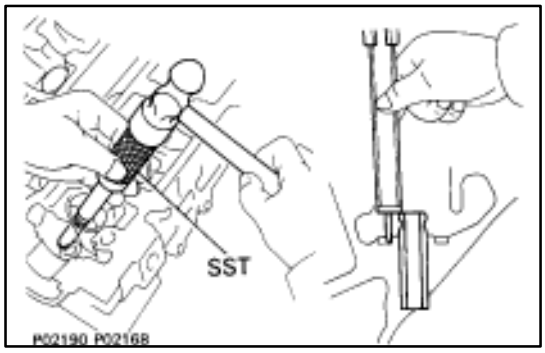

(d) Using SST and hammer, tap in a new guide bushing to the specified protrusion height.

SST 09201–70010

Protrusion height:

Intake	**12.3–12.7 mm (0.484–0.500 in.)**
Exhaust	**11.4–11.8 mm (0.449–0.465 in.)**

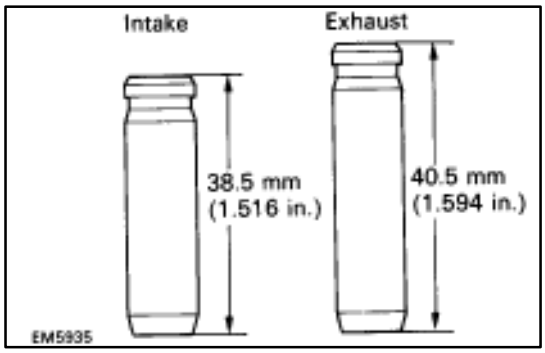

HINT: Different bushings are used for the intake and exhaust.

WhereEverybodyKnowsYourName

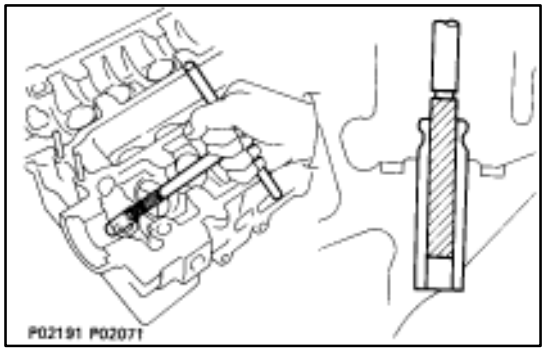

(e) Using a sharp 6 mm reamer, ream the guide bushing to obtain the standard specified clearance (See page EM–45) between the guide bushing and valve stem.

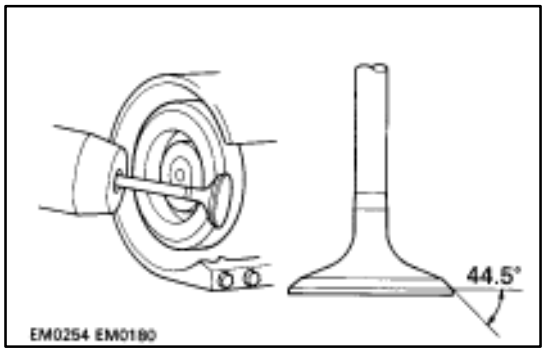

7. INSPECT AND GRIND VALVES

(a) Grind the valve enough to remove pits and carbon.

(b) Check that the valve is ground to the correct valve face angle.

Valve face angle: 44.5°

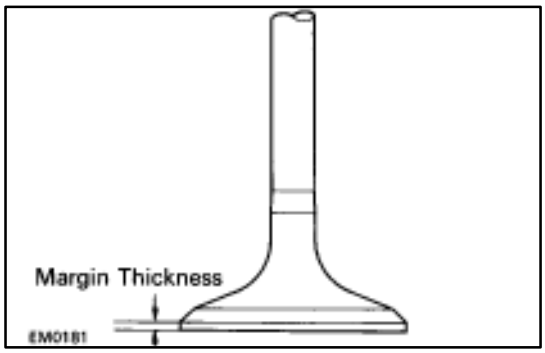

(c) Check the valve head margin thickness.

Standard margin thickness: 0.8–1.2 mm (0.031–0.047 in.)

Minimum margin thickness: 0.5 mm (0.020 in.)

If the margin thickness is less than minimum, replace the valve.

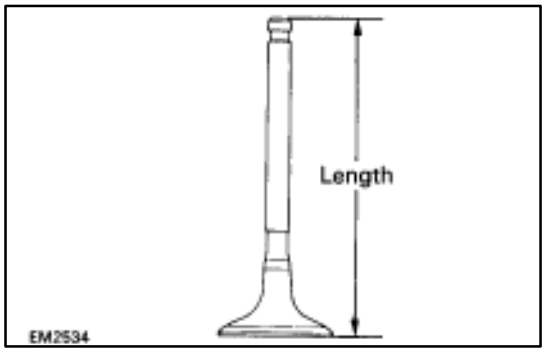

(d) Check the valve overall length.

Standard overall length:

Intake	**98.29–98.79 mm (3.8697–3.8894 in.)**
Exhaust	**98.84–99.34 mm (3.8657–3.9110 in.)**

Minimum overall length:

Intake	**98.19 mm (3.8657 in.)**
Exhaust	**98.74 mm (3.8874 in.)**

If the overall length is less than minimum, replace the valve.

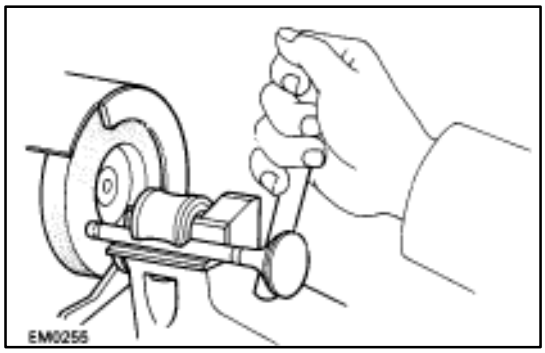

(e) Check the surface of the valve stem tip for wear.

If the valve stem tip is worn, resurface the tip with a grinder or replace the valve.

NOTICE: Do not grind off more than the minimum overall length.

WhereEverybodyKnowsYourName

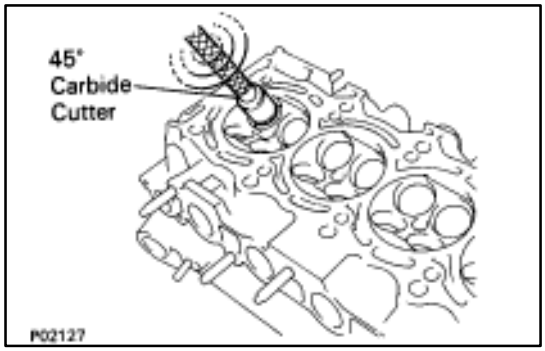

8. INSPECT AND CLEAN VALVE SEATS

(a) Using a 45▼carbide cutter, resurface the valve seats. Remove only enough metal to clean the seats.

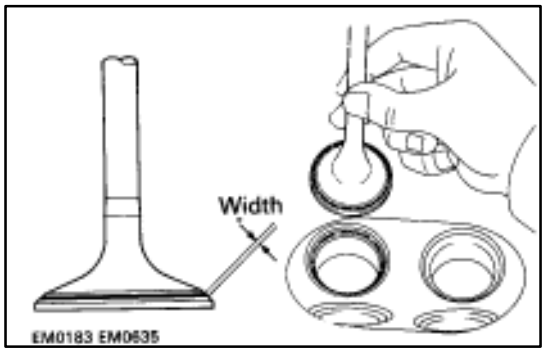

(b) Check the valve seating position.

Apply a thin coat of prussian blue (or white lead) to the valve face. Lightly press the valve against the seat. Do not rotate the valve.

(c) Check the valve face and seat for the following:

- If blue appears 360▼around the face, the valve is concentric. If not, replace the valve.
- If blue appears 360▼around the valve seat, the guide and face are concentric. If not, resurface the seat.
- Check that the seat contact is in the middle of the valve face with the following width:

Intake	**1.0–1.4 mm (0.039–0.055 in.)**
Exhaust	**1.2–1.6 mm (0.047–0.063 in.)**

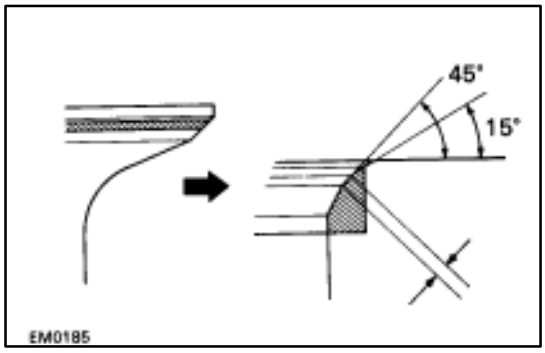

If not, correct the valve seats as follows:

(1) If the seating is too high on the valve face, use 15° and 45° cutters to correct the seat.

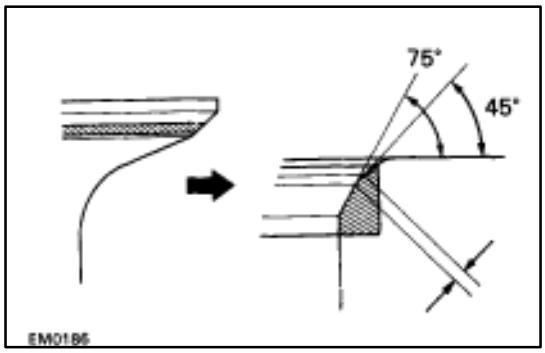

(2) If the seating is too low on the valve face, use 75° and 45° cutters to correct the seat.

WhereEverybodyKnowsYourName

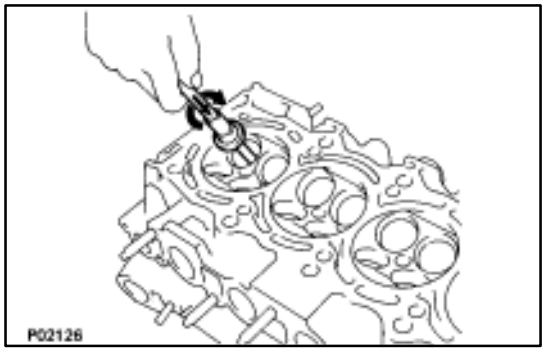

(d) Hand–lap the valve and valve seat with an abrasive compound.
(e) After hand–lapping, clean the valve and valve seat.

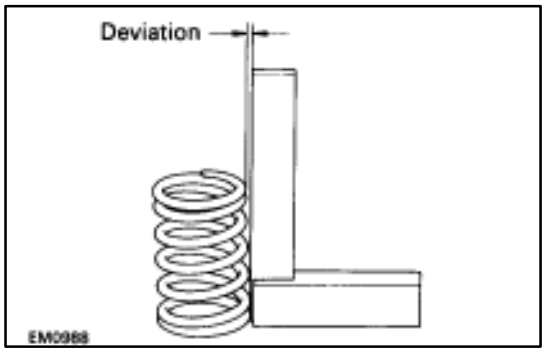

9. INSPECT VALVE SPRINGS

(a) Using a steel square, measure the squareness of the valve spring.

Maximum squareness: 2.0 mm (0.079 in.)

If deviation is greater than maximum, replace the valve spring.

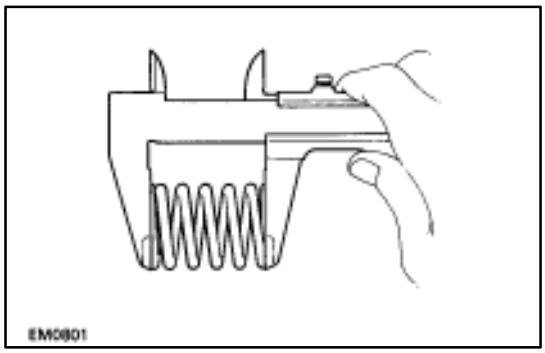

(b) Using vernier calipers, measure the free length of the valve spring.

Free length:

Pink painted mark 41.74 mm (1.6433 in.)
White painted mark 41.50 mm (1.6339 in.)

If the free length is not as specified, replace the valve spring.

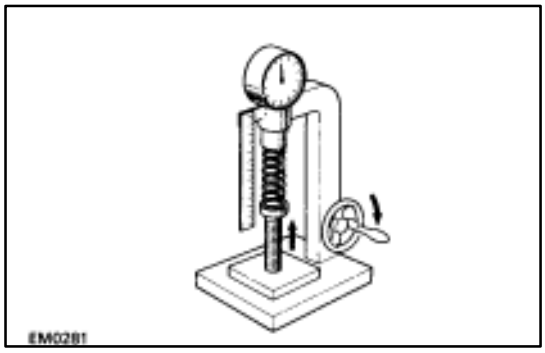

(c) Using a spring tester, measure the tension of the valve spring at the specified installed length.

Installed tension:

186–206 N (19–21 kgf, 42–46 lbf) at 34.5 mm (1.358 in.)

If the installed tension is not as specified, replace the valve spring.

10. INSPECT CAMSHAFTS AND BEARINGS

A. Inspect camshaft for runout

(a) Place the camshaft on V–blocks.
(b) Using a dial indicator, measure the circle runout at the center journal.

Maximum circle runout: 0.08 mm (0.0031 in.)

If the circle runout is greater than maximum, replace the camshaft.

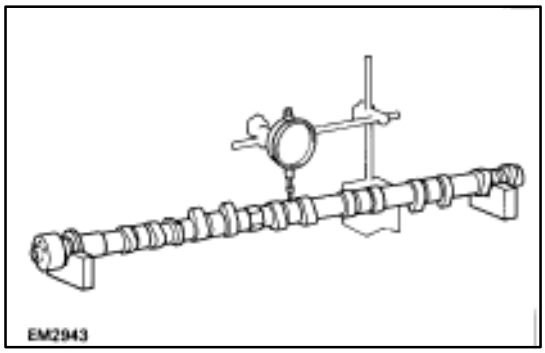

WhereEverybodyKnowsYourName

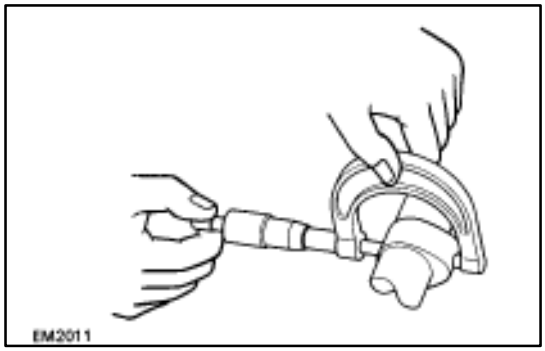

B. Inspect cam lobes

Using a micrometer, measure the cam lobe height.

Standard cam lobe height:

Intake	**44.570–44.670 mm (1.7547–1.7587 in.)**
Exhaust	**44.250–44.350 mm (1.7421–1.7461 in.)**

Maximum cam lobe height:

Intake	**44.42 mm (1.7488 in.)**
Exhaust	**44.10 mm (1.7362 in.)**

If the cam lobe height is less than minimum, replace the camshaft.

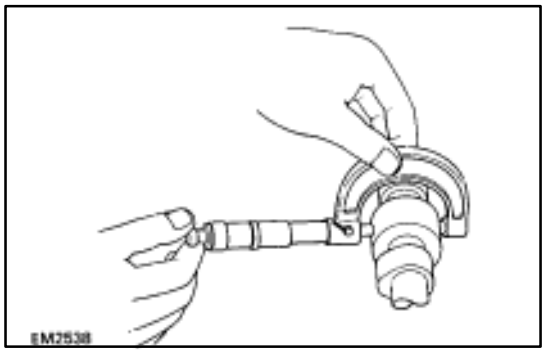

C. Inspect camshaft journals

Using a micrometer, measure the journal diameter.

Journal diameter: 28.949–28.965 mm (1.1397–1.1404 in.)

If the journal diameter is not as specified, check the oil clearance.

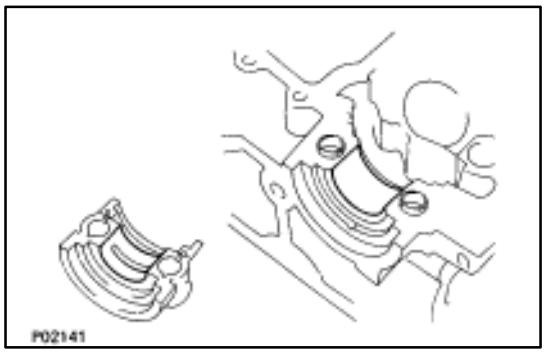

D. Inspect camshaft bearings

Check the bearings for flaking and scoring.

If the bearings are damaged, replace the bearing caps and cylinder head as a set.

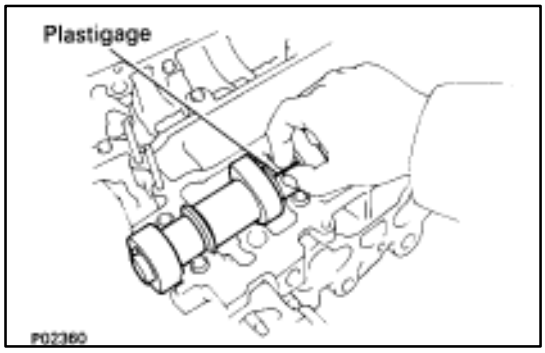

E. Inspect camshaft journal oil clearance

(a) Clean the bearing caps and camshaft journals.

(b) Place the camshafts on the cylinder head.

(c) Lay a strip of Plastigage across each of the camshaft journals.

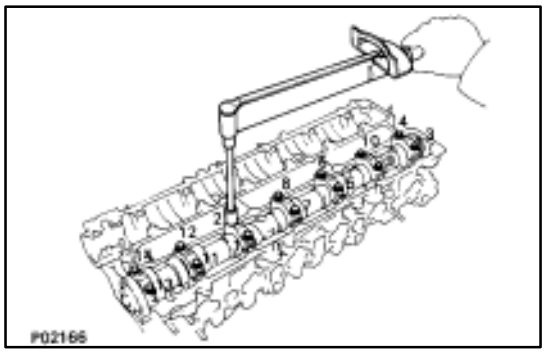

(d) Install the bearing caps.
(See step 2 on page EM–55)

Torque: 20 N·m (200 kgf·cm, 14 ft·lbf)

HINT: Do not turn the camshaft.

WhereEverybodyKnowsYourName

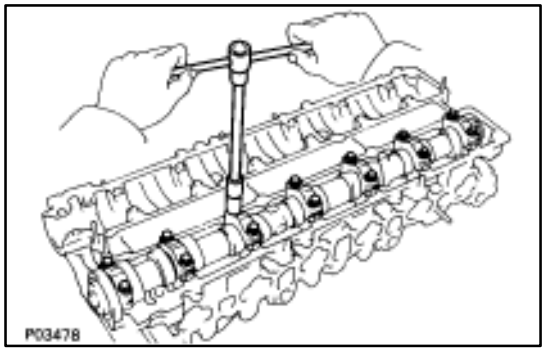

(e) Remove the bearing caps.

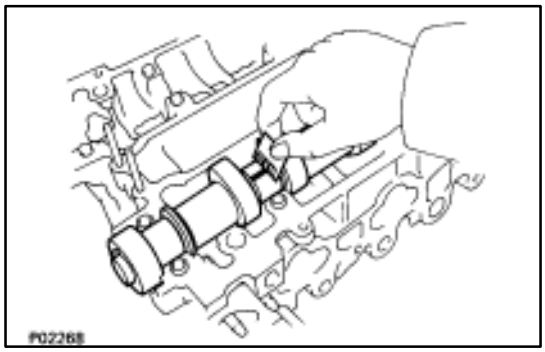

(f) Measure the Plastigage at its widest point.

Standard oil clearance: 0.035–0.072 mm (0.0014–0.0028 in.)

Maximum oil clearance: 0.10 mm (0.039 in.)

If the oil clearance is greater than maximum, replace the camshaft. If necessary, replace the bearing caps and cylinder head as a set.

(g) Completely remove the Plastigage.

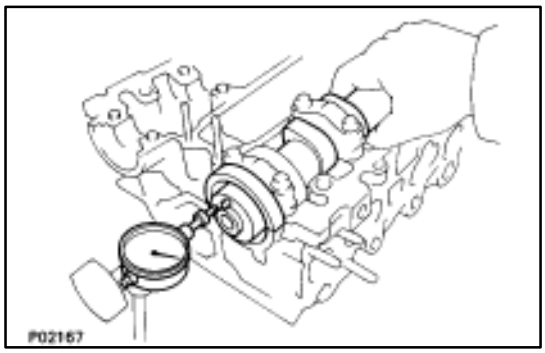

F. Inspect camshaft thrust clearance

(a) Install the camshafts.

(See step 2 on page EM–55)

(b) Using a dial indicator, measure the thrust clearance while moving the camshaft back and forth.

Standard thrust clearance: 0.080–0.190 mm (0.0031–0.0075 in.)

Maximum thrust clearance: 0.30 mm (0.0118 in.)

If the thrust clearance is greater than maximum, replace the camshaft. If necessary, replace the bearing caps and cylinder head as a set.

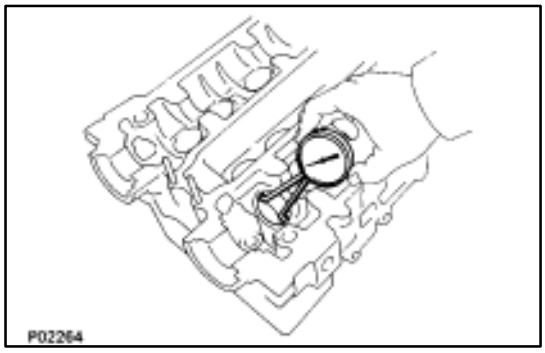

11. INSPECT VALVE LIFTERS AND LIFTER BORES

(a) Using a caliper gauge, measure the lifter bore diameter of the cylinder head.

Lifter bore diameter: 31.000–31.016 mm (1.2205–1.2211 in.)

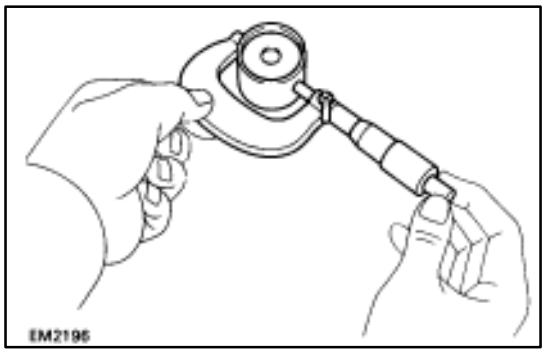

(b) Using a micrometer, measure the lifter diameter.

Lifter diameter: 30.966–30.976 mm (1.2191–1.2195 in.)

WhereEverybodyKnowsYourName

(c) Subtract the lifter diameter measurement from the lifter bore diameter measurement.

Standard oil clearance: 0.024–0.050 mm (0.0009–0.0020 in.)

Maximum oil clearance: 0.07 mm (0.0028 in.)

If the oil clearance is greater than maximum, replace the lifter. If necessary, replace the cylinder head.

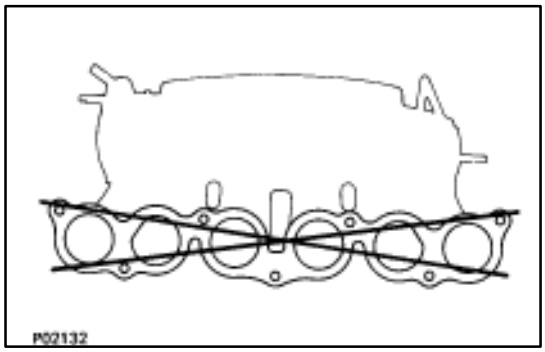

12. INSPECT AIR INTAKE CHAMBER

Using a precision straight edge and feeler gauge, measure the surfaces contacting the intake manifold for warpage.

Maximum warpage: 0.15 mm (0.0059 in.)

If warpage is greater than maximum, replace the chamber.

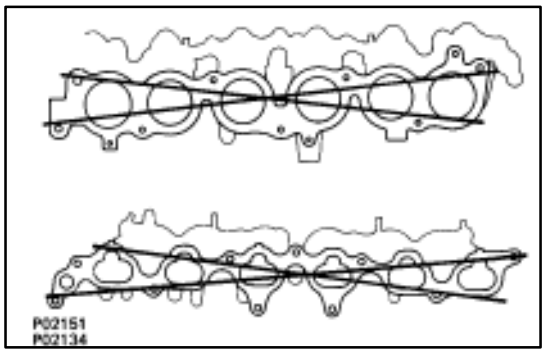

13. INSPECT INTAKE MANIFOLD

Using a precision straight edge and feeler gauge, measure the surfaces contacting the cylinder head and air intake chamber for warpage.

Maximum warpage: 0.15 mm (0.0059 in.)

If warpage is greater than maximum, replace the manifold.

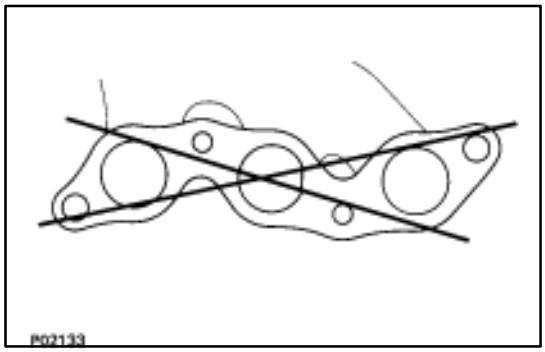

14. INSPECT EXHAUST MANIFOLDS

Using a precision straight edge and feeler gauge, measure the surfaces contacting the cylinder head for warpage.

Maximum warpage: 0.8 mm (0.031 in.)

If warpage is greater than maximum, replace the manifold.

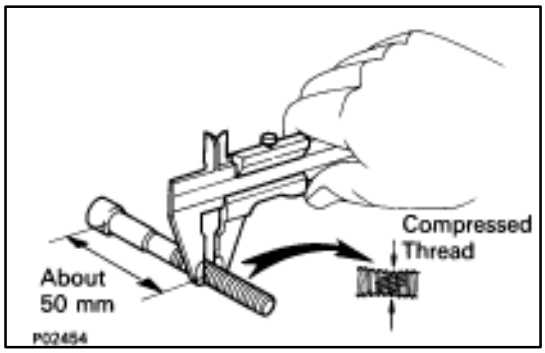

15. INSPECT CYLINDER HEAD BOLTS

Using a vernier caliper, measure the thread outside diameter of the bolt.

Standard outside diameter: 10.8–11.0 mm (0.425–0.433 in.)

Minimum outside diameter: 10.7 mm (0.421 in.)

If the diameter is less than minimum, replace the bolt.

WhereEverybodyKnowsYourName

ASSEMBLY OF CYLINDER HEAD

(See Components on page EM–35)

HINT:

- Thoroughly clean all parts to be assembled.
- Before installing the parts, apply new engine oil to all sliding and rotating surfaces.
- Replace all gaskets and oil seals with new ones.

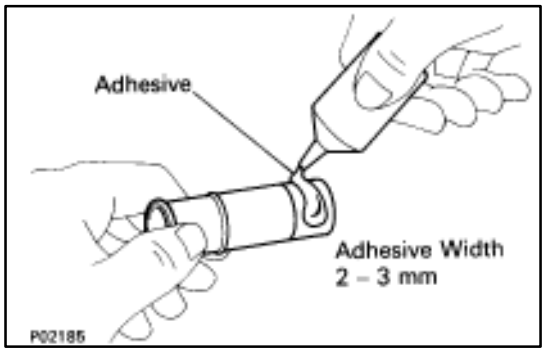

1. INSTALL HEATER UNION

HINT: When using a new cylinder head, heater union must be installed.

(a) Apply adhesive to the end of the heater union as shown in the illustration.

Adhesive: Part No. 08833–00070, THREE BOND 1324 or equivalent

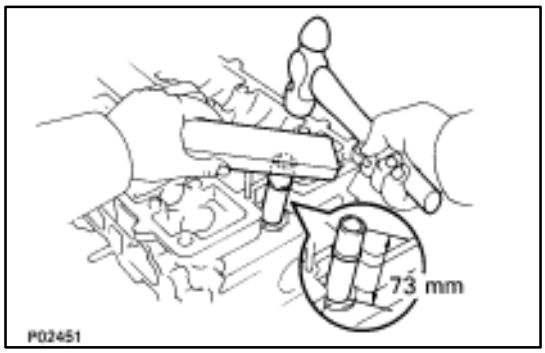

(b) Using a wooden block and hammer, tap in a new heater union, leaving 73 mm (2.87 in.) protruding from the cylinder head.

NOTICE: Do not tap it in too far.

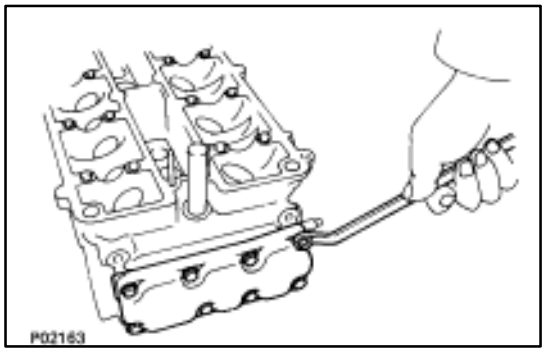

2. INSTALL EGR COOLER

Install a new gasket and EGR cooler with the eight bolts.

Torque: 14 N·m (140 kgf·cm, 10 ft·lbf)

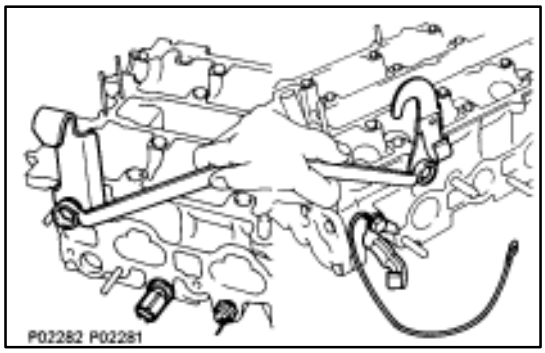

3. INSTALL ENGINE COOLANT TEMPERATURE SENSOR AND SENDER GAUGE

Torque: 20 N·m (200 kgf·cm, 14 ft·lbf)

4. INSTALL GROUND STRAP AND THROTTLE CABLE BRACKET

5. INSTALL ENGINE HANGERS

Torque: 39 N·m (400 kgf·cm, 29 ft·lbf)

WhereEverybodyKnowsYourName

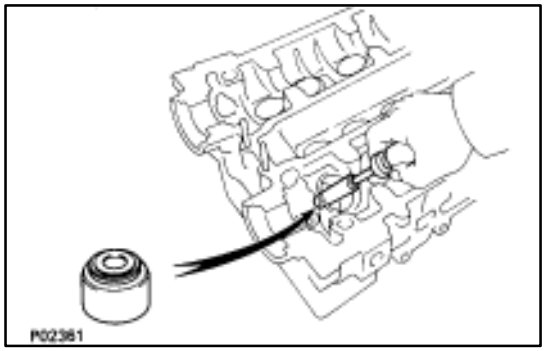

3. INSTALL VALVES

(a) Install new oil seal on the valve guide bushing.

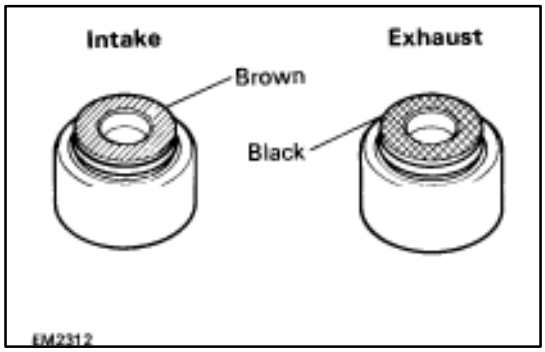

HINT: The intake valve oil seal is brown and the exhaust valve oil seal is black.

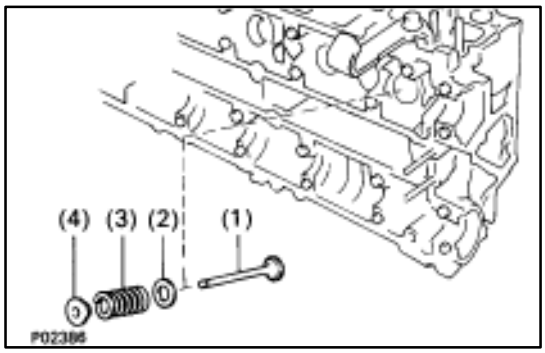

(b) Install the following parts:
(1) Valve
(2) Spring seat
(3) Valve spring
(4) Spring retainer

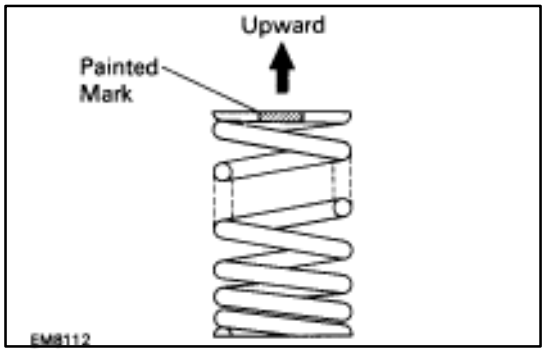

HINT: Install the valve spring, facing the painted mark upward.

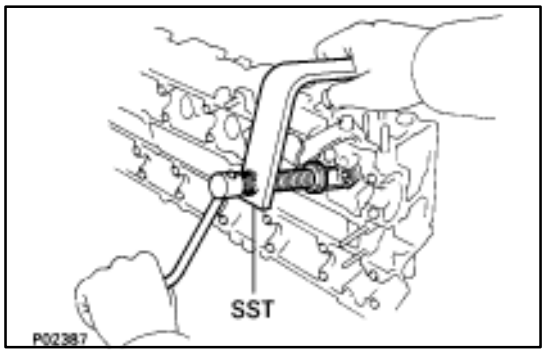

(c) Using SST, compress the valve spring and place the two keepers around the valve stem.

SST 09202–70010

WhereEverybodyKnowsYourName

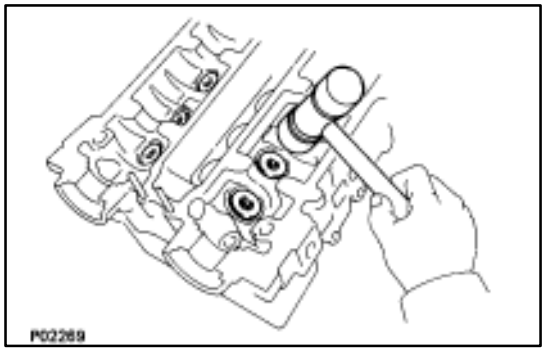

(d) Using a plastic–faced hammer, lightly tap the valve stem tip to assure proper fit.

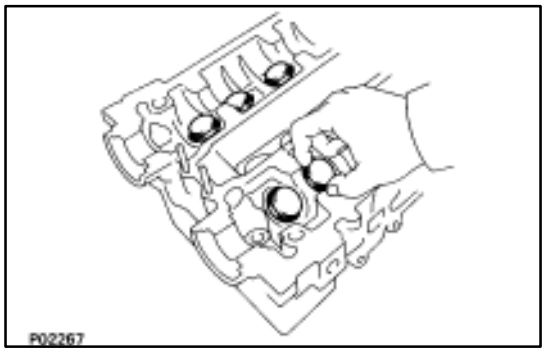

4. INSTALL VALVE LIFTERS AND SHIMS

(a) Install the valve lifter and shim.

(b) Check that the valve lifter rotates smoothly by hand.

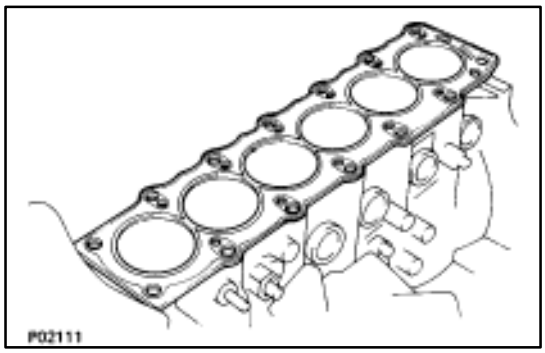

INSTALLATION OF CYLINDER HEAD

(See Components on pages EM–34 and 35)

1. INSTALL CYLINDER HEAD

A. Place cylinder head on cylinder block

(a) Place a new cylinder head gasket in position on the cylinder block.

NOTICE: Be sure to install it correctly.

(b) Place the cylinder head in position on the cylinder head gasket and connect the heater water hose to the union.

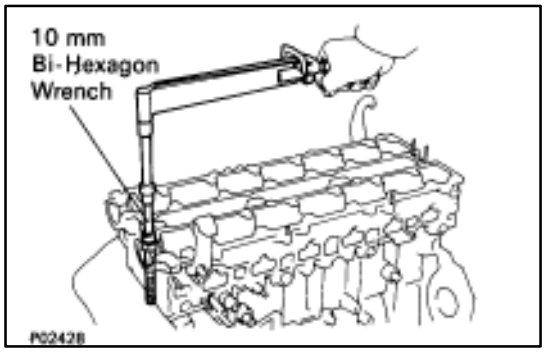

B. Install cylinder head bolts

HINT:

- The cylinder head bolts are tightened in two progressive steps (steps (c) and (f)).
- If any of bolts break or deform, replace them.

(a) Apply a light coat of engine oil on the threads and under the heads of the cylinder head bolts.

(b) Install the 14 plate washers to each cylinder head bolt.

(c) First, using a 10 mm bi–hexagon wrench, uniformly tighten the cylinder head bolts in several passes in the sequence shown.

Torque: 34 N·m (350 kgf·cm, 25 ft·lbf)

If any one of the bolts does not meet the torque specification, replace the bolt.

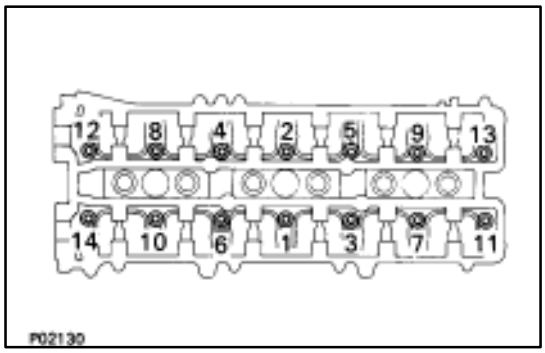

WhereEverybodyKnowsYourName

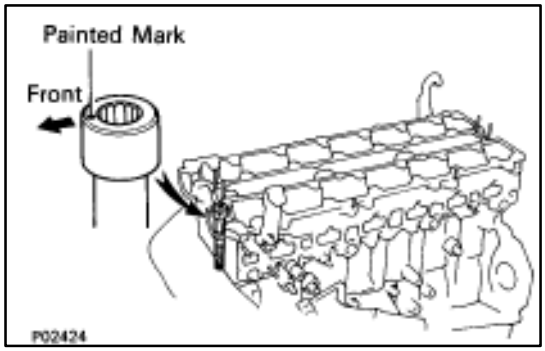

(d) Mark the front of the cylinder head bolt head with paint.

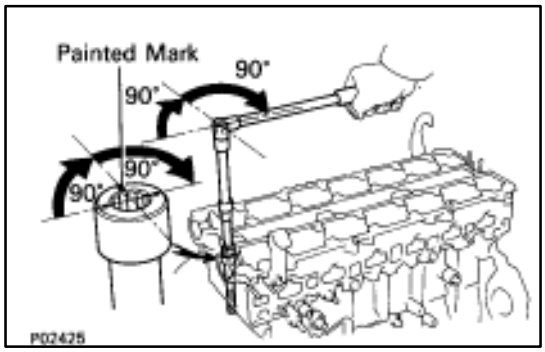

(e) Second retighten the cylinder head bolts 90▼in the numerical order shown above.
(f) Third retighten cylinder head bolts by an additional 90▼
(g) Check that the painted mark is now turned to the rear.

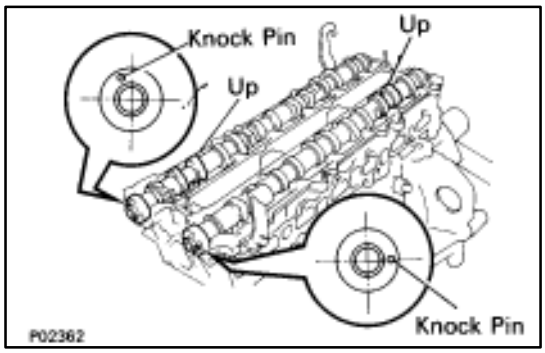

2. INSTALL CAMSHAFTS

(a) Apply engine oil to the thrust portion of the camshaft.
(b) Place the camshaft on the cylinder head with the cam lobe facing up as shown.

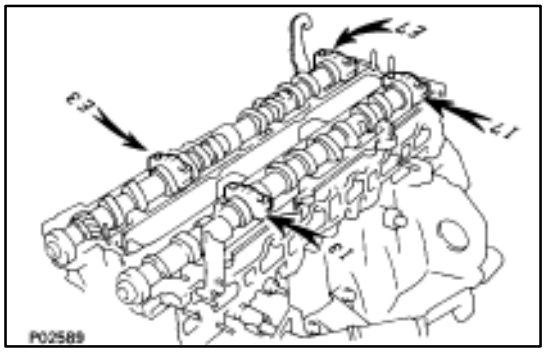

(c) Place the No.3 and No.7 bearing caps in their proper location.

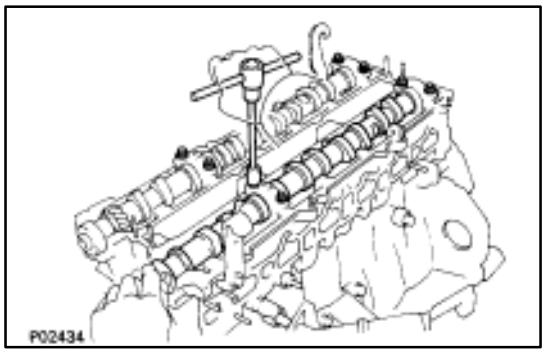

(d) Apply a light coat of engine oil on the threads and under the heads of the bearing cap bolts.
(e) Temporarily tighten these bearing cap bolts uniformly and alternately in several passes until the bearing caps are snug with the cylinder head.

WhereEverybodyKnowsYourName

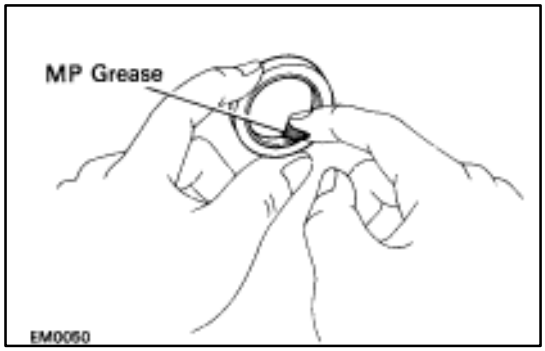

(f) Apply MP grease to a new camshaft oil seal lip.

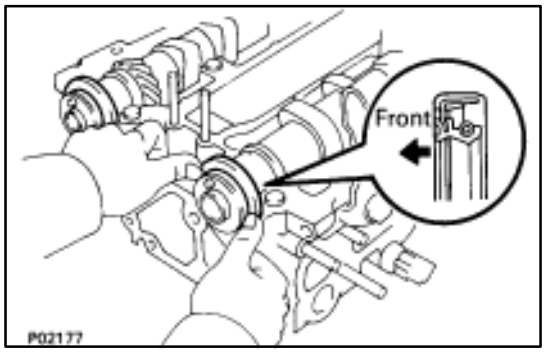

(g) Install the oil seal to the camshaft.

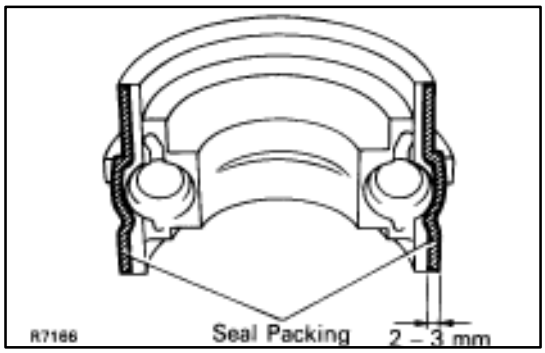

(h) Clean the installed surfaces of the No. 1 bearing cap and cylinder head with cleaner.

(i) Apply seal packing to the No. 1 bearing cap as shown.

Seal packing: Part No. 08826–00080 or equivalent

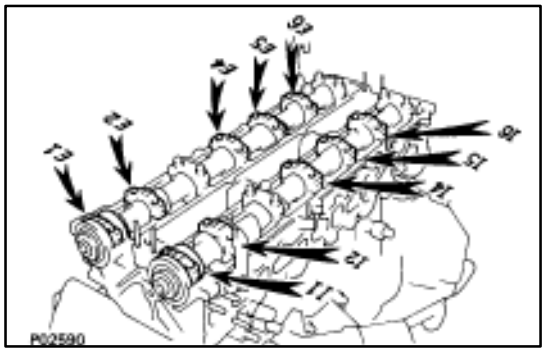

(j) Install other bearing caps in their proper locations.

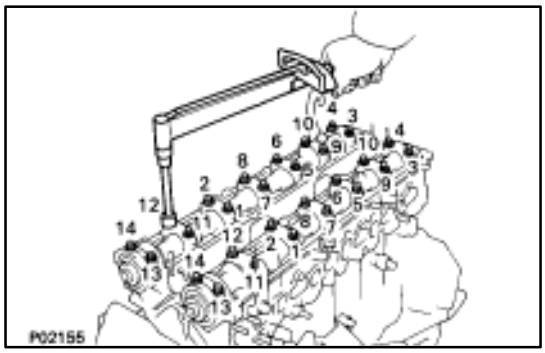

(k) Apply a light coat of engine oil on the threads and under the heads of the bearing cap bolts.

(l) Install and uniformly tighten the 14 bearing cap bolts on one side in several passes in the sequence shown.

Torque: 20 N·m (200 kgf·cm, 14 ft·lbf)

WhereEverybodyKnowsYourName

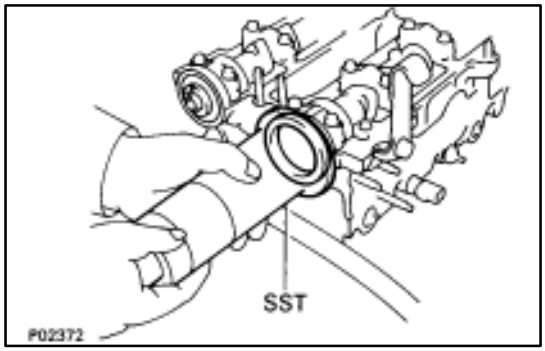

(m) Using SST, push the oil seal as far as it would go.
SST 09316–60010 (09316–00010, 09316–00050)

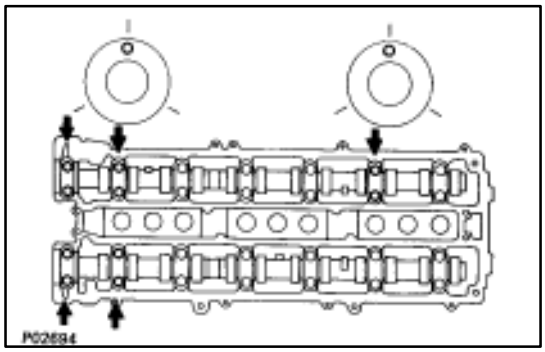

(n) Rotate the camshaft with a wrench at the hexagon position, bring the forward straight pin up.
(o) Loosen the two bearing cap bolts as shown, until they can be turned by hand; retighten in several passes.
Torque: 20 N·m (200 kgf·cm, 14 ft·lbf)

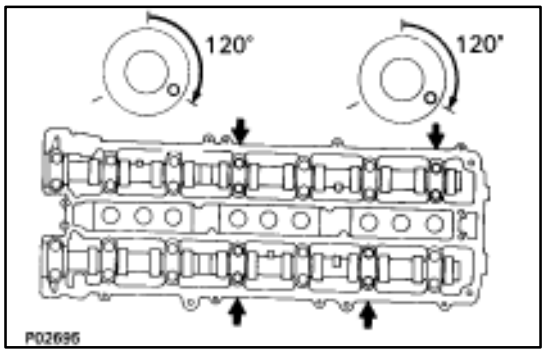

(p) Turn the camshaft 1/3 of revolution.
(q) Loosen the two bearing cap bolts as shown, until they can be turned by hand; retighten in several passes.
Torque: 20 N·m (200 kgf·cm, 14 ft·lbf)

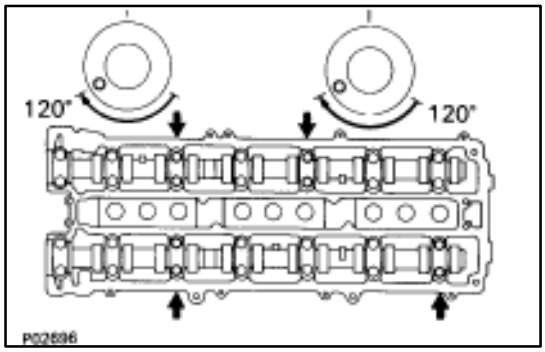

(r) Turn the camshaft a further 1/3 of a revolution.
(s) Loosen the two bearing cap bolts as shown, until they can be turned by hand; retighten is several passes.
Torque: 20 N·m (200 kgf·cm, 14 ft·lbf)

3. CHECK AND ADJUST VALVE CLEARANCE
(See steps 12 and 13 on pages EM–12 to 16)
Turn the camshaft, and position the cam lobe upward, check and adjust the valve clearance.
Valve clearance:

Intake	**0.15–0.25 mm (0.006–0.010 in.)**
Exhaust	**0.25–0.35 mm (0.010–0.014 in.)**

WhereEverybodyKnowsYourName

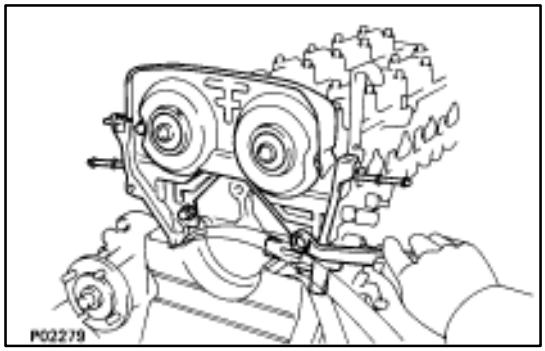

4. INSTALL NO. 4 TIMING BELT COVER

Install the No. 4 timing belt cover with four bolts.

Torque: 8.8 N·m (90 kgf·cm, 78 in.·lbf)

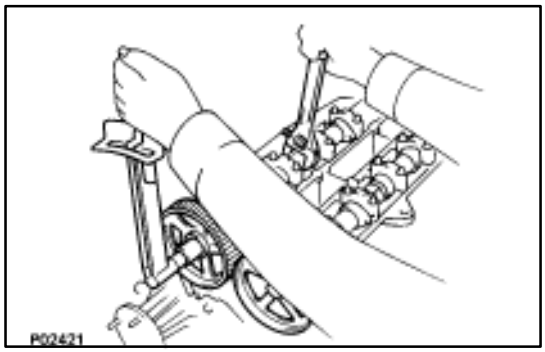

5. INSTALL CAMSHAFT TIMING PULLEYS

(a) Align the camshaft knock pin with the groove in the pulley, and slide on the pulley.

(b) Temporarily install the timing pulley bolt.

(c) Hold the hexagon portion of the camshaft with a wrench, and tighten the timing pulley bolt.

Torque: 79 N·m (810 kgf·cm, 59 ft·lbf)

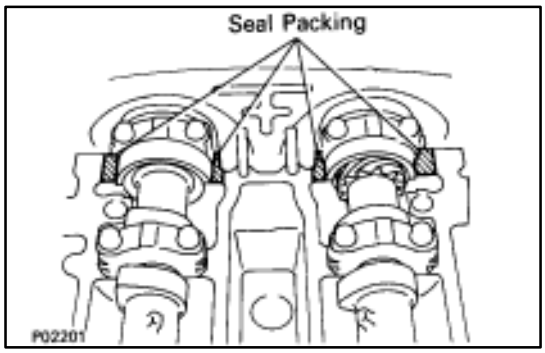

6. INSTALL NO. 3 NO. 1 AND NO. 2 CYLINDER HEAD COVERS

(a) Remove any oil packing (FIPG) material.

(b) Apply seal packing to the cylinder head as shown in the illustration.

Seal packing: Part No. 08826–00080 or equivalent

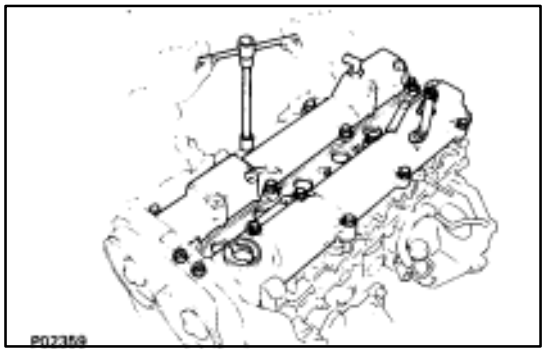

(c) Install the gaskets to the No. 1 and No. 2 cylinder head covers.

(d) Install the cylinder head cover with the 12 bolts and four nuts.

Torque: 5.4 N·m (55 kgf·cm, 48 in.·lbf)

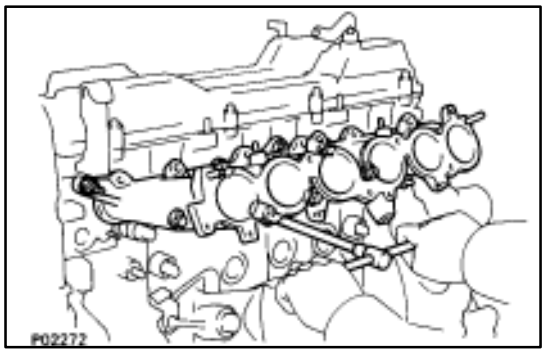

7. INSTALL INTAKE MANIFOLD

(a) Install a new gasket and the intake manifold with the six bolts and two nuts.

Torque: 21 N·m (210 kgf·cm, 15 ft·lbf)

(b) Install the intake manifold stay with the two bolts.

Torque: 39 N·m (400 kgf·cm, 29 ft·lbf)

WhereEverybodyKnowsYourName

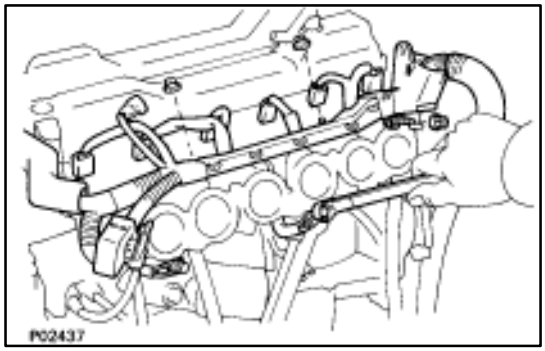

8. CONNECT ENGINE WIRE TO INTAKE MANIFOLD

(a) Install the harness protector to the intake manifold with the two bolts.

(b) Install the three clamp bolts and two nuts.

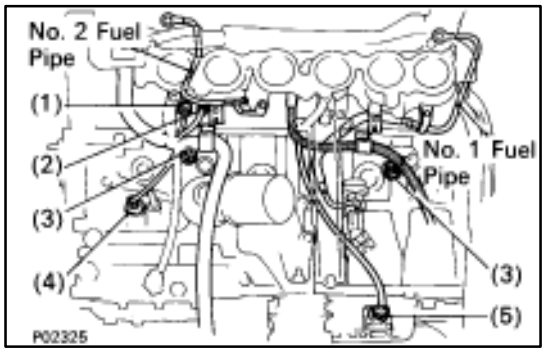

(c) Connect the following connectors:
(1) Engine coolant temperature sensor connector
(2) Engine coolant temperature sender gauge connector
(3) Two knock sensor connectors
(4) Oil pressure switch connector
(5) Oil level sensor connector
(6) A/C compressor connector

9. INSTALL NO. 1 AND NO. 2 FUEL PIPES

Torque: 8.8 N·m (90 kgf·cm, 78 in.·lbf)

10. INSTALL DELIVERY PIPE AND INJECTORS

(See steps 1, 3, 6 and 7 on pages FI–33 and 34)

Torque: 21 N·m (210 kgf·cm, 15 ft·lbf)

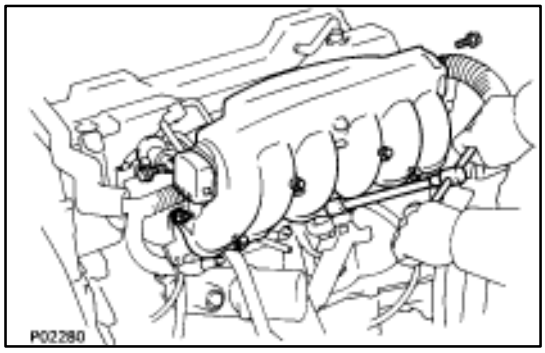

11. INSTALL AIR INTAKE CHAMBER

(a) Install a new gasket and the intake chamber with the five bolts and two nuts.

Torque: 21 N·m (210 kgf·cm, 15 ft·lbf)

(b) Install the check connector and harness protector to the air intake chamber with the two bolts.

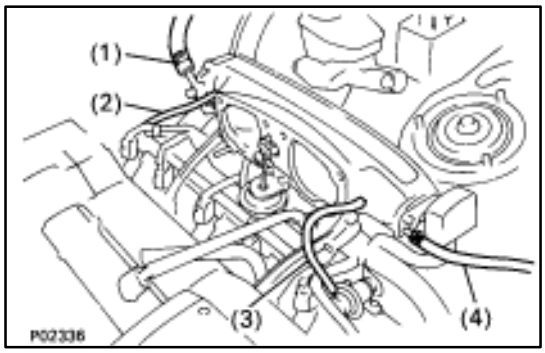

(c) Connect the following hoses:
(1) Vacuum hose to brake booster union
(2) Vacuum hose (to ACIS vacuum tank)
(3) Vacuum sensing hose
(4) Air hose (to PS air control valve)

WhereEverybodyKnowsYourName

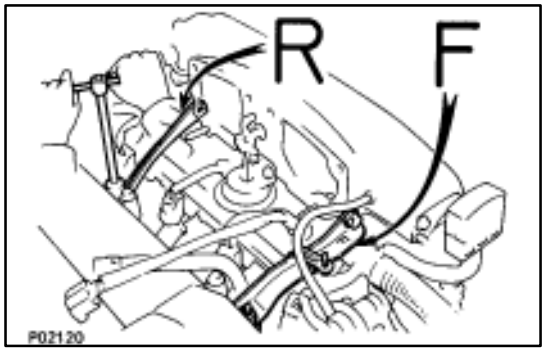

(d) Install the intake chamber stay with the bolt and nut. Install the No. 1 and No. 2 stay.

Torque: 18 N·m (185 kgf·cm, 13 ft·lbf)

HINT: The No. 1 stay is marked ”F” and No. 2 stay is marked with ”R”.

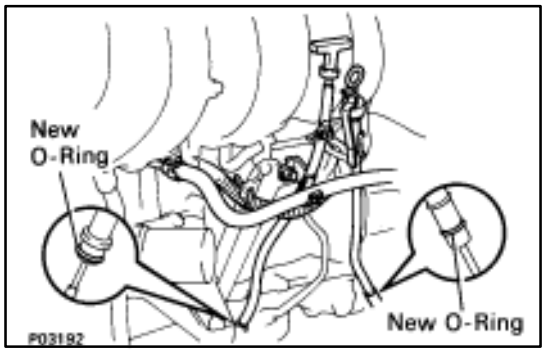

12. INSTALL OIL DIPSTICK GUIDES FOR ENGINE AND TRANSMISSION (A/T)

(a) Install a new O–ring on the dipstick guide.
(b) Apply soapy water on the O–ring.
(c) Connect the dipstick guide end to the tube of the oil pan.
(d) Install the dipstick guide with a bolt.
(e) Connect the fuel return hose to the engine oil dipstick guide.

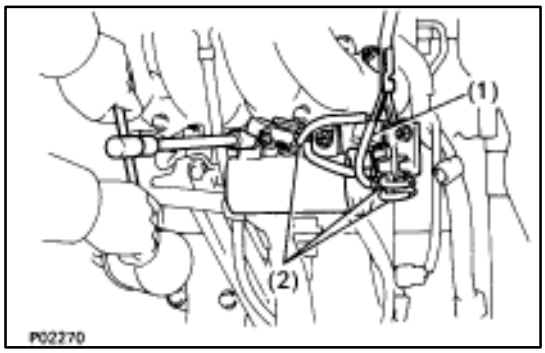

13. INSTALL VACUUM CONTROL VALVE SET AND NO. 2 VACUUM PIPE

(a) Install the vacuum control valve set and vacuum pipe with the four nuts.

Torque: 21 N·m (210 kgf·cm, 15 ft·lbf)

(b) Connect the following hoses:
(1) Vacuum hose to ACIS vacuum tank
(2) Three vacuum hoses to VSV
(c) Connect the two connectors to the VSV.

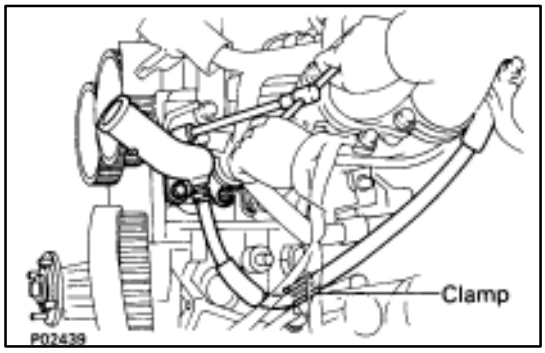

14. INSTALL WATER OUTLET AND NO. 1 BY–PASS HOSE

(a) Insert the No. 1 by–pass hose to the intake manifold, and connect the hose to the clamp.
(b) Install the water outlet with the two nuts and bolt.

Torque: 21 N·m (210 kgf·cm, 15 ft·lbf)

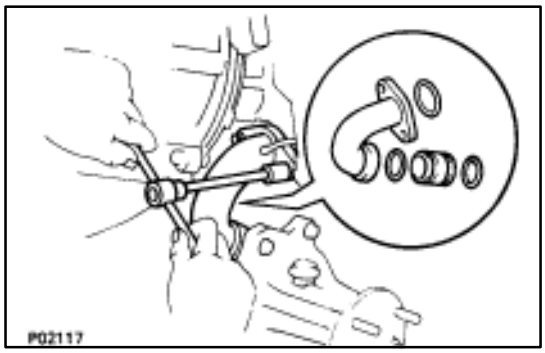

15. INSTALL WATER BY–PASS OUTLET AND NO. 1 WATER BY–PASS PIPE

(a) Install two new O–rings to the No. 1 water by–pass pipe.
(b) Install a new O–ring and the water by–pass outlet with the two bolts.

Torque: 8.8 N·m (90 kgf·cm, 78 in.·lbf)

WhereEverybodyKnowsYourName

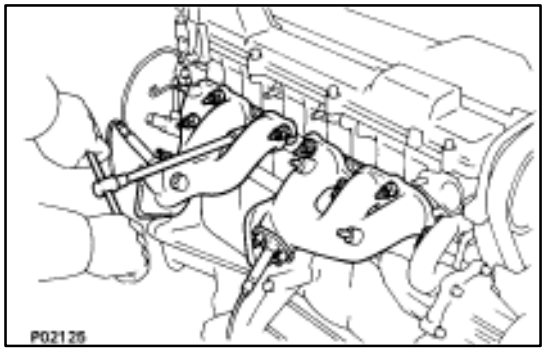

16. INSTALL EXHAUST MANIFOLD

(a) Install a new gasket and the exhaust manifold with the four nuts. Install the No. 1 and No. 2 exhaust manifolds.

Torque: 39 N·m (400 kgf·cm, 29 ft·lbf)

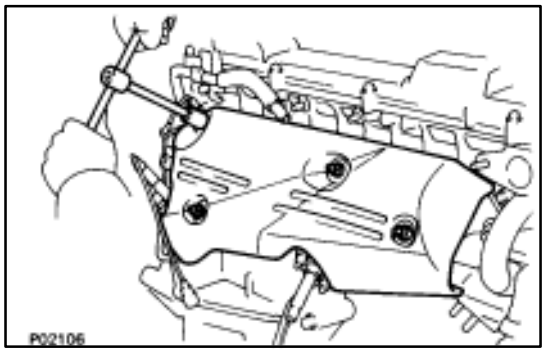

(b) Install the manifold heat insulator with the four nuts.

Torque: 18 N·m (185 kgf·cm, 13 ft·lbf)

(c) Connect the two oxygen sensor connectors.

17. INSTALL NO. 2 FRONT EXHAUST PIPE
(See step 5 on page EM–105)

18. INSTALL TIMING BELT
(See steps 8 to 14 on pages EM–30 to 33)

19. INSTALL RADIATOR AND WATER PUMP PULLEY
(See steps 15, 16, 19 and 24 on pages EM–110 to 112)

20. INSTALL SPARK PLUGS (See step 6 on page IG–9)

Torque: 18 N·m (180 kgf·cm, 13 ft·lbf)

21. CONNECT HIGH–TENSION CORDS TO SPARK PLUGS
(See steps 14 to 21 on pages EM–17 to 21)

22. FILL ENGINE WITH COOLANT (See page CO–5)

Capacity (w/ Heater):

M/T	**8.5 liters (9.0 US qts, 7.5 Imp. qts)**
A/T	**8.4 liters (8.9 US pts, 7.4 Imp. qts)**

23. START ENGINE AND CHECK FOR LEAKS

24. (A/T)
CHECK AUTOMATIC TRANSMISSION FLUID LEVEL
(See page MA–11)
NOTICE: Do not overfill.

25. CHECK IGNITION TIMING (See page IG–14)

Ignition timing:

10° BTDC @ idle
(w/ Terminals TE1 and E1 connected)

26. PERFORM ROAD TEST

Check for abnormal noise, shock, slippage, correct shift points and smooth operation.

27. RECHECK ENGINE COOLANT LEVEL

WhereEverybodyKnowsYourName

CYLINDER HEADS

COMPONENTS FOR REMOVAL AND INSTALLATION

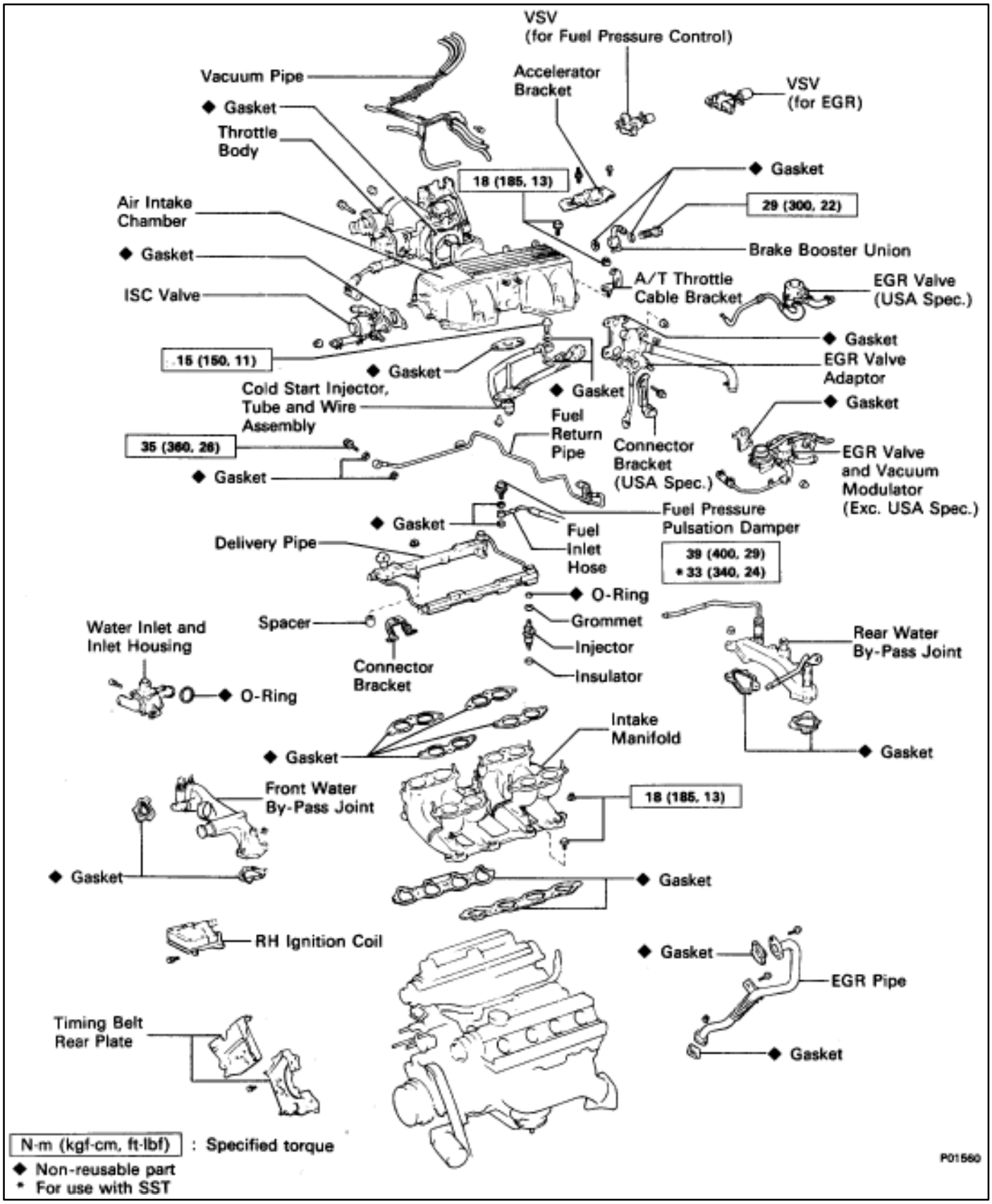

WhereEverybodyKnowsYourName

COMPONENTS FOR REMOVAL AND INSTALLATION (Cont'd)

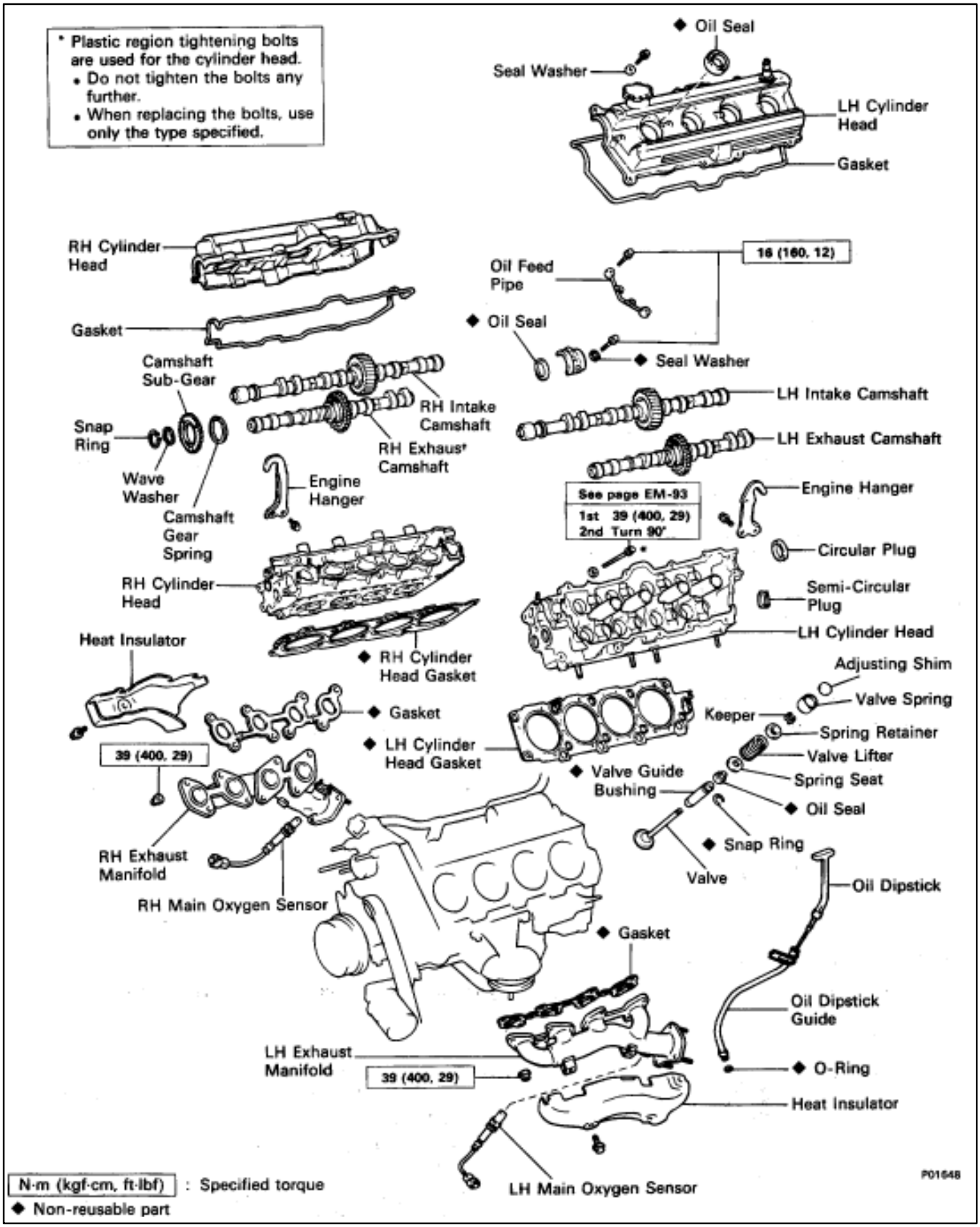

WhereEverybodyKnowsYourName

REMOVAL OF CYLINDER HEADS

(See Components on pages EM–58 and 59)

1. DISCONNECT TIMING BELT FROM CAMSHAFT TIMING PULLEYS
(See steps 1 to 28 on pages EM–35 to 42)

2. REMOVE CAMSHAFT TIMING PULLEYS AND HYDRAULIC PUMP
(See steps 29 and 31 on pages EM–42 and 43)

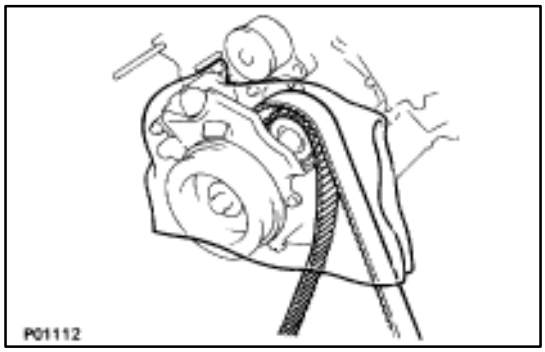

HINT:
- Be careful not to drop anything inside the timing belt cover.
- Do not allow the timing belt to come into contact with oil, water or dust.

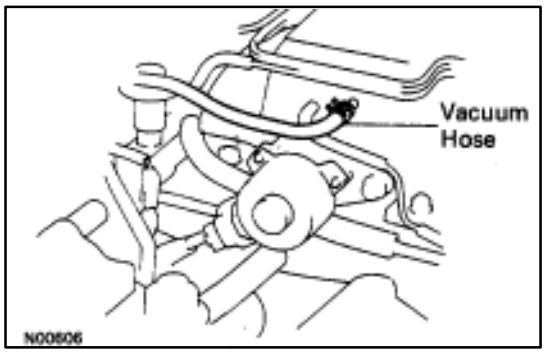

3. DISCONNECT PS PUMP FROM LH CYLINDER HEAD

(a) Disconnect the vacuum hose from the air intake chamber.

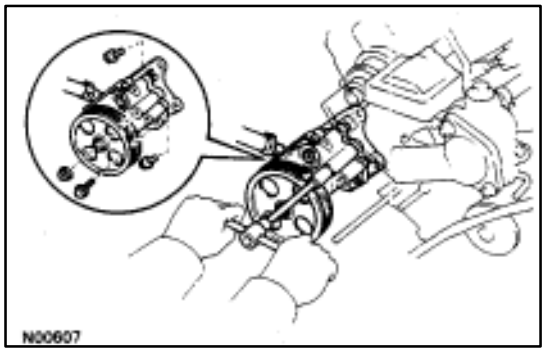

(b) Remove the three bolts and nut, and disconnect the PS pump.

HINT: Put aside the PS pump, and suspend it.

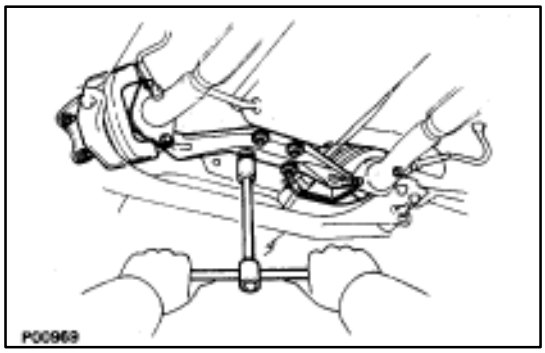

4. REMOVE CATALYTIC CONVERTERS (MAIN)

(a) Remove the four bolts holding the pipe support bracket to the transmission.

(b) Remove the four bolts and nuts holding the catalytic converters to the front exhaust pipe. Remove the pipe support bracket.

(c) Disconnect the front exhaust pipe from the catalytic converter, and remove the two gaskets.

(d) Remove the three nuts, catalytic converter and gasket. Remove the two catalytic converters.

WhereEverybodyKnowsYourName

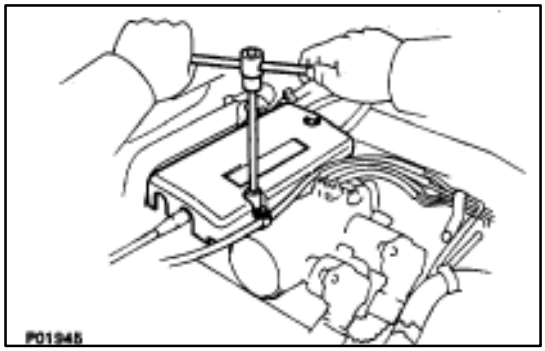

5. REMOVE THROTTLE BODY COVER

(a) Remove the mounting cap nut.

(b) Loosen the two bolts, and remove the throttle body cover.

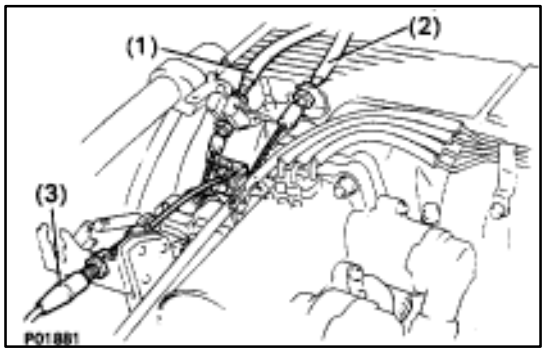

6. DISCONNECT CONTROL CABLES FROM THROTTLE BODY

Disconnect the following cables:

(1) Accelerator cable

(2) A/T throttle control cable

(3) (w/ Cruise Control System)
Cruise control actuator cable

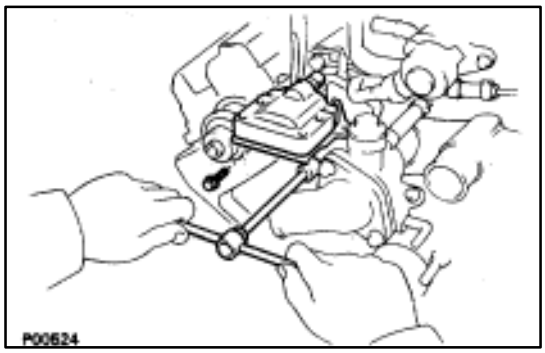

7. REMOVE RH IGNITION COIL

Remove the two bolts and ignition coil.

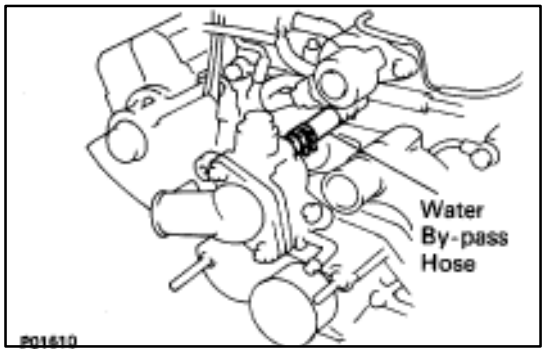

8. REMOVE WATER INLET AND INLET HOUSING

(a) Disconnect the water by–pass hose from the ISC valve.

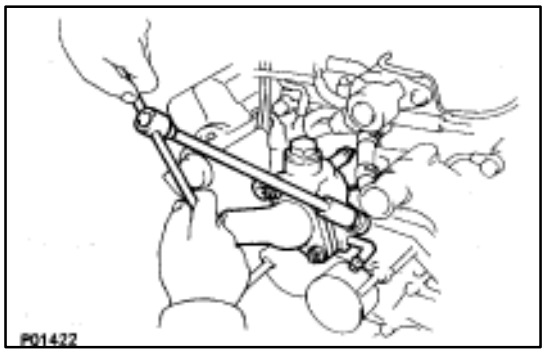

(b) Remove the two bolts holding the water inlet housing to the water pump.

(c) Pull out the water inlet and inlet housing assembly.

(d) Remove the O–ring from the water inlet housing.

WhereEverybodyKnowsYourName

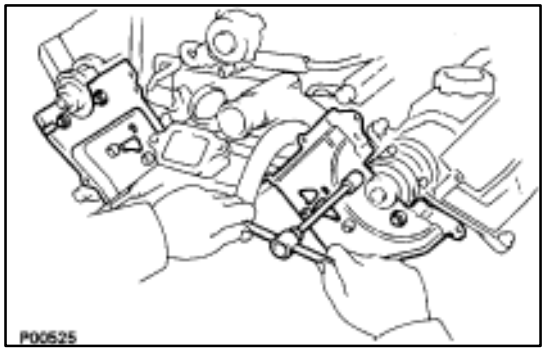

9. REMOVE TIMING BELT REAR PLATES

Remove the two bolts and rear plate. Remove the two rear plates.

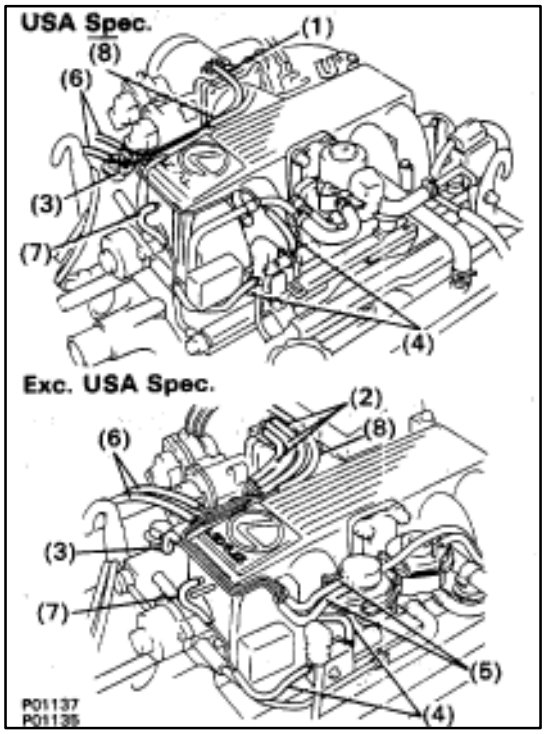

10. REMOVE VACUUM PIPE

(a) Disconnect the following hoses:
- (1) (USA Spec.)
  Vacuum hose from throttle body
- (2) (Exc. USA Spec.)
  Three vacuum hoses from throttle body
- (3) Vacuum hose from fuel pressure regulator
- (4) Two vacuum hoses from VSV for fuel pressure control system
- (5) (Exc. USA Spec.)
  Two vacuum hoses from EGR vacuum modulator
- (6) Two vacuum hoses (from VSV for EVAP system) from vacuum pipe
- (7) Vacuum hose (from VSV for fuel pressure control system) from air intake chamber
- (8) Vacuum hose (from charcoal canister) from vacuum pipe.

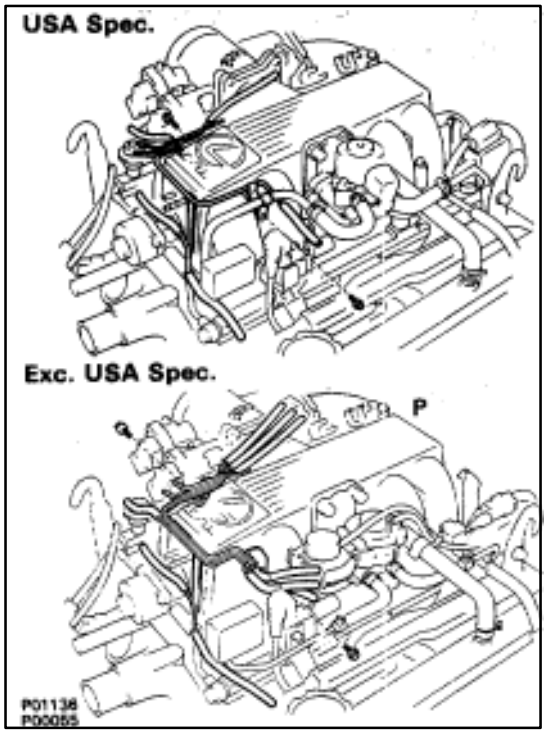

(b) Remove the two bolts, the vacuum pipe and vacuum hoses assembly.

WhereEverybodyKnowsYourName

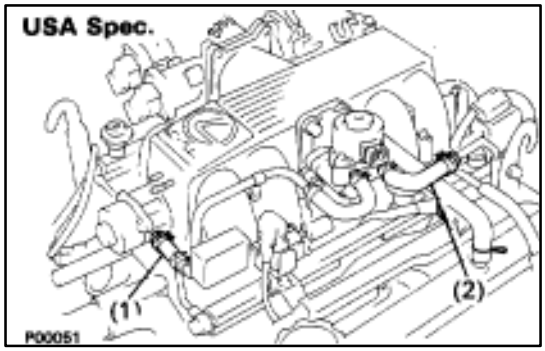

11. (USA Spec.)
REMOVE EGR VALVE
(a) Disconnect the EGR valve connector.
(b) Disconnect the following hoses:
(1) Water by–pass pipe hose from ISC valve
(2) Water by–pass hose from water by–pass pipe (from rear water by–pass joint)

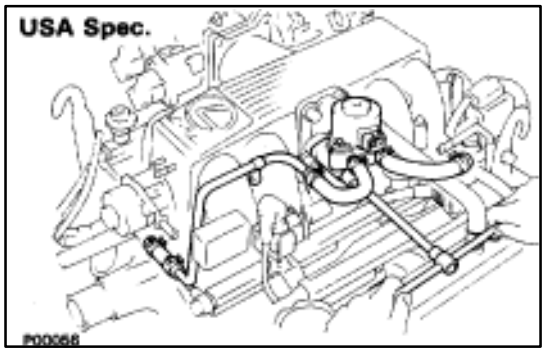

(c) Remove the two nuts, EGR valve and gasket.

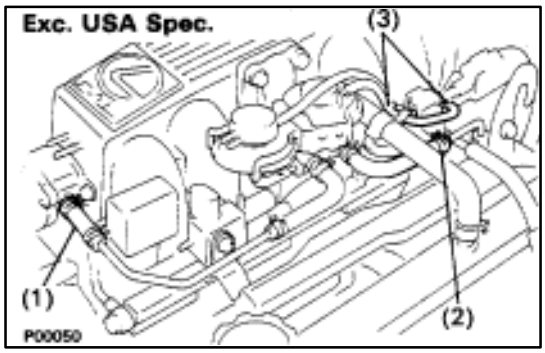

12. (Exc. USA Spec.)
REMOVE EGR VALVE AND VACUUM MODULATOR
(a) Disconnect the hose clamp (A) from the PCV hose.
(b) Disconnect the following hoses:
(1) Water by–pass pipe hose from ISC valve
(2) Water by–pass hose from water by–pass pipe (from rear water by–pass joint)
(3) Two vacuum hoses from VSV for EGR system

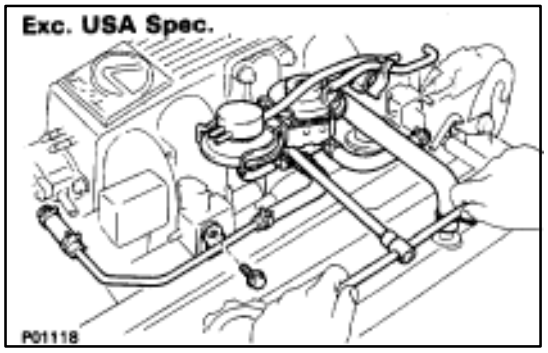

(c) Remove the bolt, two nuts, the EGR valve, vacuum modulator assembly and gasket.

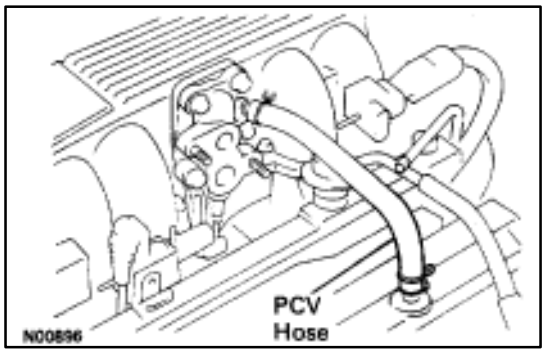

13. REMOVE EGR VALVE ADAPTOR
(a) Disconnect the PCV hose from the cylinder head.

WhereEverybodyKnowsYourName

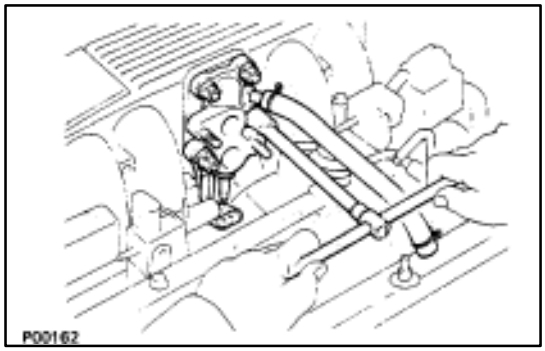

(b) Remove the two bolts, two nuts, adaptor and gasket.
(c) (USA Spec. only)
Disconnect the EGR gas temperature sensor connector.

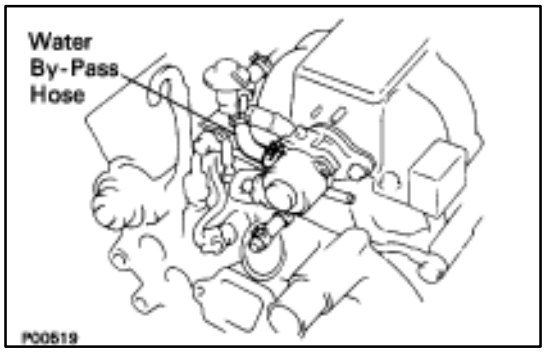

14. REMOVE ISC VALVE
(a) Disconnect the ISC valve connector.
(b) Disconnect the water by–pass hose from the ISC valve.

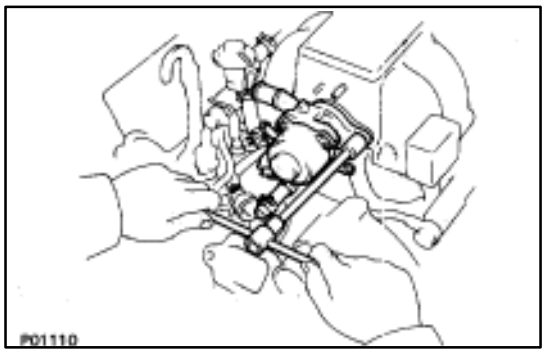

(c) Remove the two nuts, ISC valve and gasket.

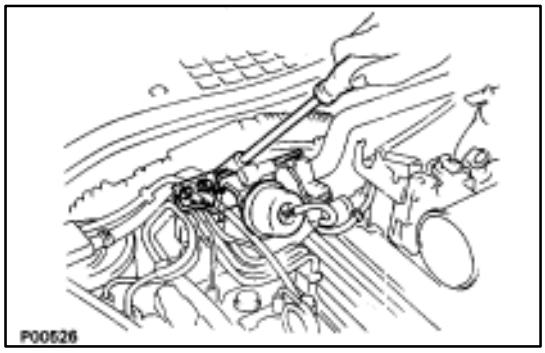

15. DISCONNECT HEATER WATER VALVE FROM BODY
(a) Disconnect the VSV connector.
(b) Remove the bolt holding the engine wire clamp to the water valve bracket.
(c) Remove the two bolts, and disconnect the water valve and bracket assembly.

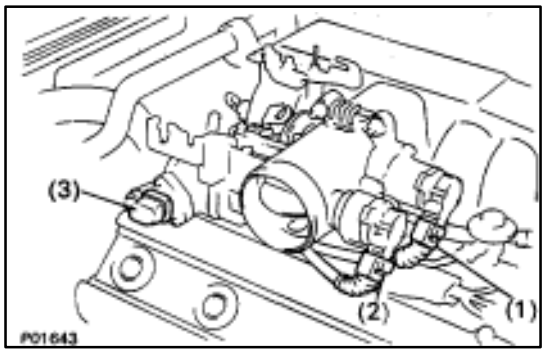

16. REMOVE THROTTLE BODY
(a) Disconnect the following connectors:
(1) Throttle position sensor connector
(2) (w/ TRAC)
Sub–throttle position sensor connector
(3) (w/ TRAC)
Sub–throttle actuator connector

WhereEverybodyKnowsYourName

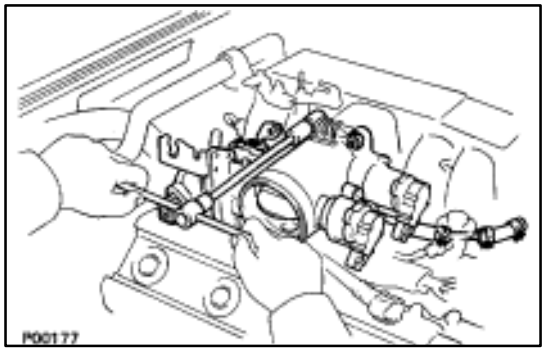

(b) Remove the two mounting bolts and two mounting nuts, and disconnect the throttle body from the air intake chamber.

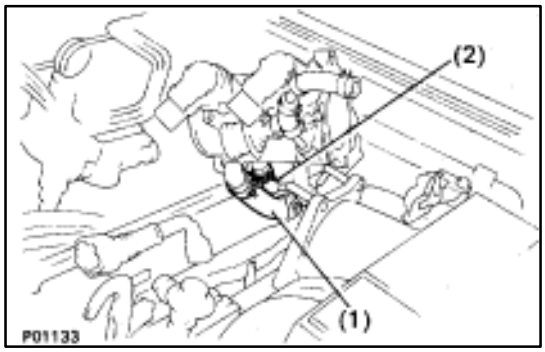

(c) Disconnect the following hoses, and remove the throttle body:
  (1) PCV hose from throttle body
  (2) Water by–pass hose from throttle body
(d) Remove the throttle body gasket.

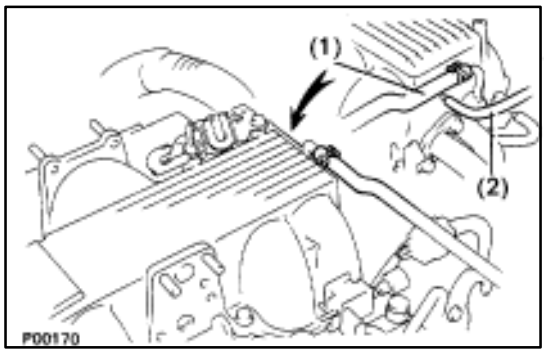

17. DISCONNECT VACUUM HOSES

Disconnect the following hoses:
  (1) Vacuum hose from brake booster union
  (2) Vacuum hose (from VSV for heater water valve) from air intake chamber

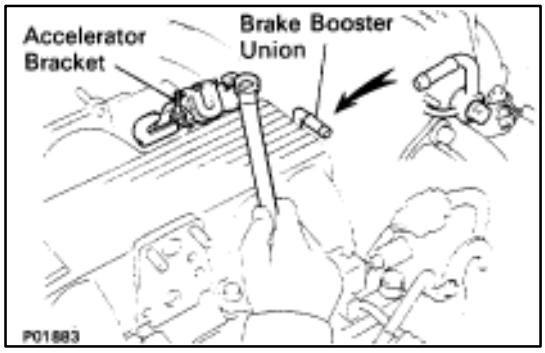

18. REMOVE ACCELERATOR BRACKET

Remove the bolt, stud bolt and bracket.

19. REMOVE BRAKE BOOSTER UNION

Remove the union bolt, union and two gaskets.

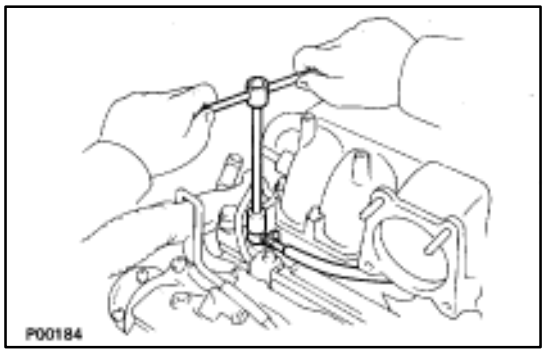

20. REMOVE AIR INTAKE CHAMBER

(a) Disconnect the following connectors:
  - Cold start injector connector
  - VSV connector for fuel pressure control system
  - (Exc. USA Spec.)
  VSV connector for EGR system
(b) Remove the union bolt and two gaskets, and disconnect the cold start injector tube from the RH delivery pipe.

WhereEverybodyKnowsYourName

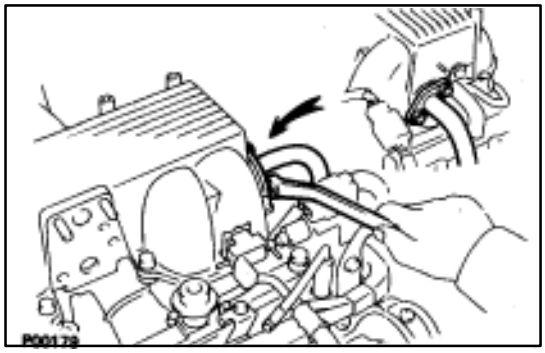

(c) Remove the two bolts and gaskets, and disconnect the EGR pipe from the air intake chamber.

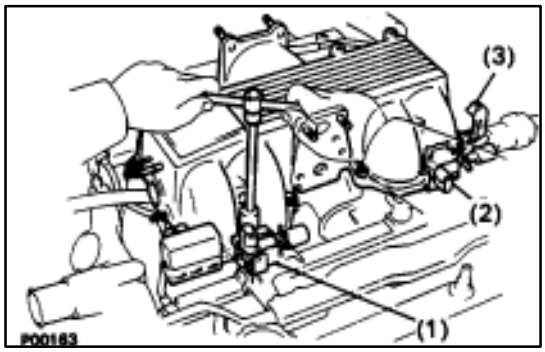

(d) Remove the four mounting bolts, eight mounting nuts and following parts:
   (1) VSV for fuel pressure control system
   (2) (Exc. USA Spec.)
   VSV for EGR system
   (3) A/T throttle cable bracket
(e) Disconnect the check (”DIAGNOSIS”) connector from the intake chamber.
(f) Remove the air intake chamber and four gaskets.

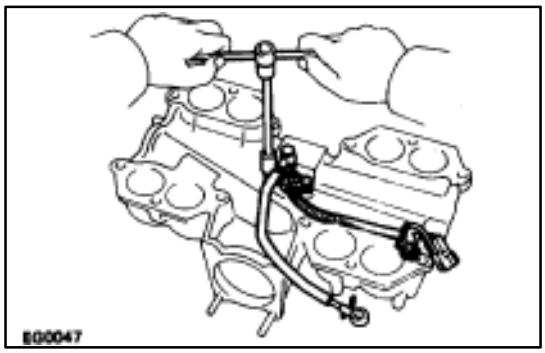

(g) Remove the three bolts, the cold start injector, tube, lead wire assembly and gasket.

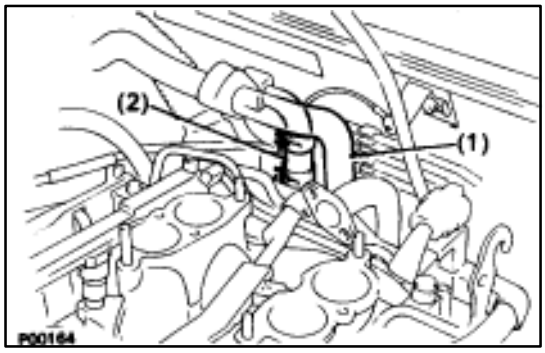

21. DISCONNECT HEATER WATER HOSES

Disconnect the following hoses:
   (1) Water hose from water by–pass pipe
   (2) Water hose from rear water by–pass joint

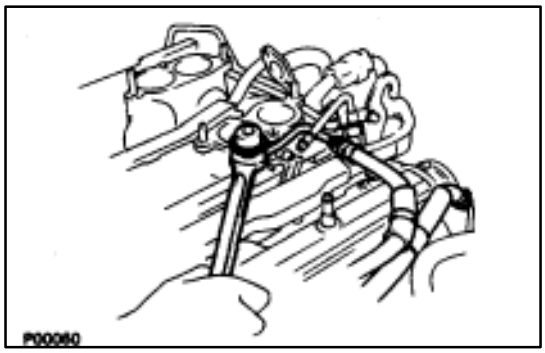

22. DISCONNECT FUEL INLET HOSE FROM LH DELIVERY PIPE

Remove the pulsation damper and two gaskets, and disconnect the inlet hose.

23. DISCONNECT FUEL RETURN HOSE FROM FUEL RETURN PIPE

WhereEverybodyKnowsYourName

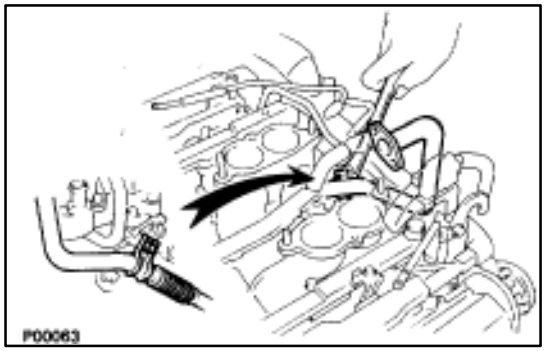

24. DISCONNECT EGR PIPE FROM RH CYLINDER HEAD

Remove the bolt holding the EGR pipe to the RH cylinder head, and disconnect the EGR pipe.

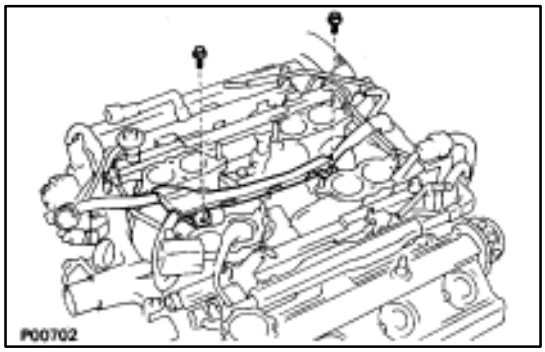

25. DISCONNECT ENGINE WIRE FROM INTAKE MANIFOLD

Remove the two bolts, and disconnect the engine wire.

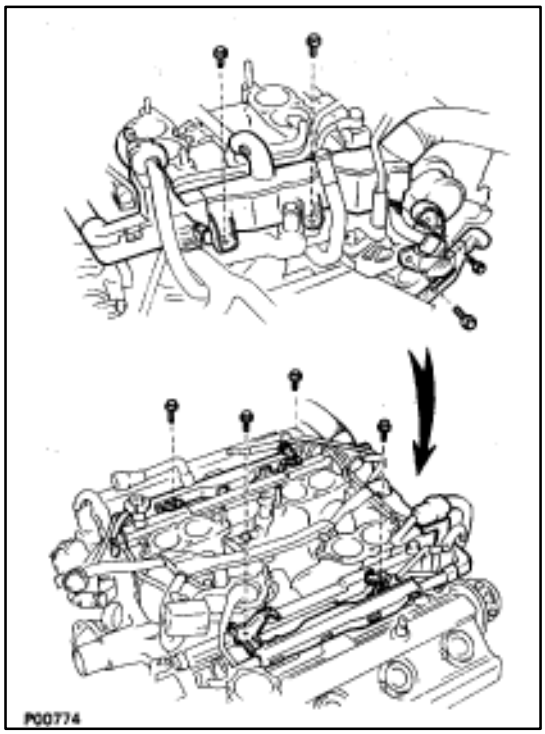

26. DISCONNECT ENGINE WIRE FROM DELIVERY PIPES, REAR WATER BY–PASS JOINT AND RH CYLINDER HEAD

(a) Remove the four bolts holding the engine wire to the delivery pipes, and disconnect the engine wire from the delivery pipes.

(b) Remove the two bolts holding the engine wire to the rear water by–pass joint, and disconnect the engine wire from the rear water by–pass joint.

(c) Remove the two bolts holding the engine wire to the rear side of the RH cylinder head, and disconnect the engine wire from the engine wire RH cylinder head.

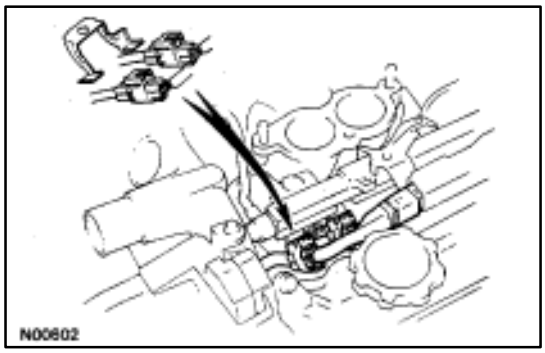

(d) Disconnect the two engine wire connectors from the connector bracket on the front side of the LH delivery pipe.

(e) Disconnect the eight injector connectors.

WhereEverybodyKnowsYourName

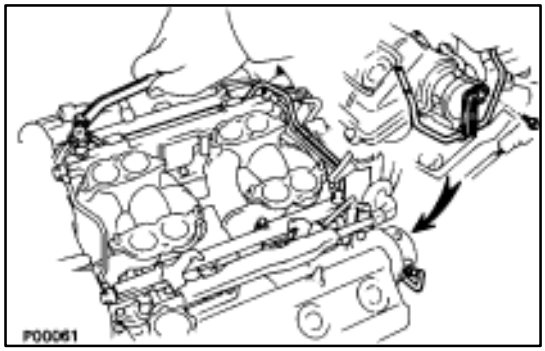

27. REMOVE FUEL RETURN PIPE

(a) Remove the bolt holding the fuel return pipe to the rear side of the LH cylinder head.

(b) Remove the union bolt, two gaskets and return pipe.

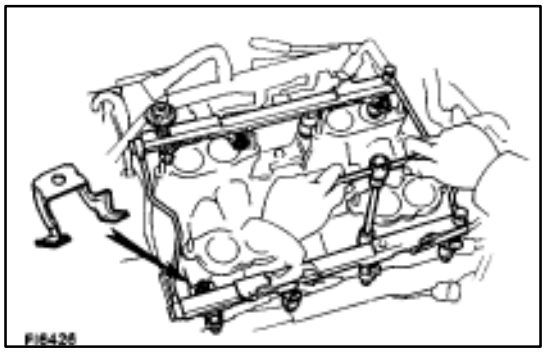

28. REMOVE DELIVERY PIPES AND INJECTORS

(a) Remove the four nuts holding the delivery pipe to the intake manifold.

(b) Remove the connector bracket, the two delivery pipes, eight injectors assembly, four spacers and eight insulators.

NOTICE: Be careful not to drop the injectors.

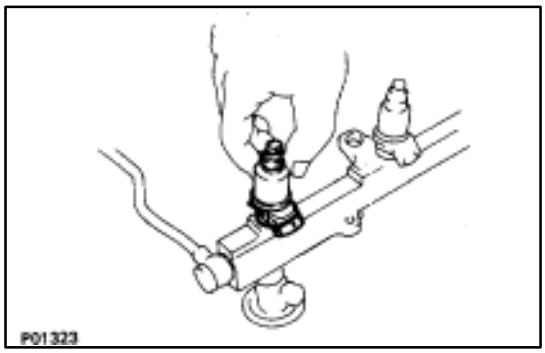

(c) Remove the eight injectors from the delivery pipes.

(d) Remove the O–ring and grommet from each injector.

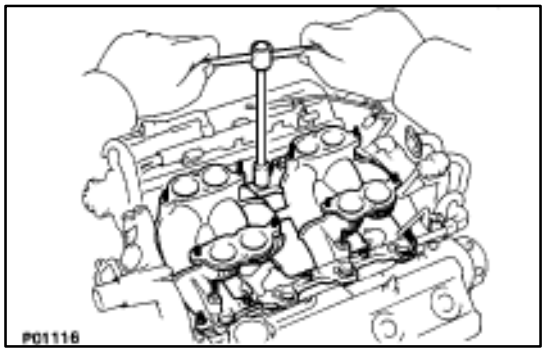

29. REMOVE INTAKE MANIFOLD

Remove the six bolts, four nuts, intake manifold and two gaskets.

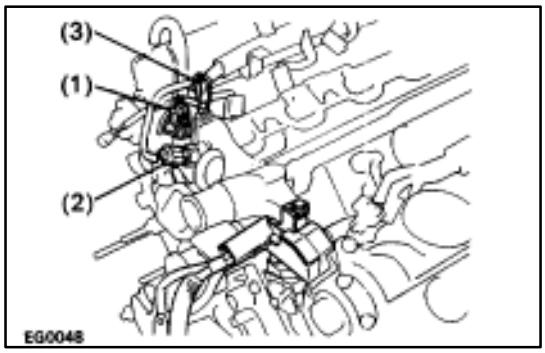

30. REMOVE FRONT WATER BY–PASS JOINT

(a) Disconnect the following connectors:

(1) Water temperature sensor connector

(2) Cold start injector time switch connector

(3) Water temperature sender gauge connector

(b) Remove the bolt, and disconnect the engine wire clamp from the water by–pass joint.

WhereEverybodyKnowsYourName

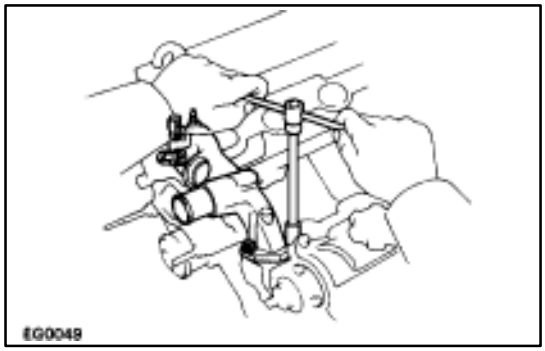

(c) Remove the four nuts, water by–pass joint and two gaskets.

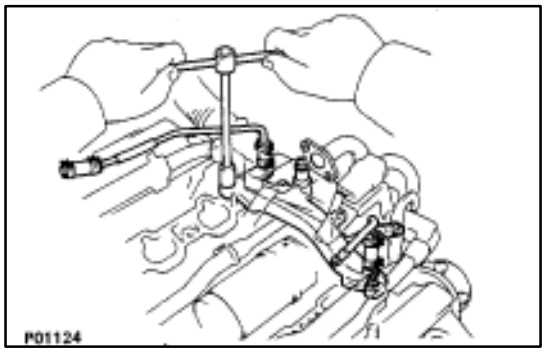

31. REMOVE REAR WATER BY–PASS JOINT

(a) Remove the bolt holding the water by–pass pipe to the engine hanger.

(b) Remove the four nuts, water by–pass joint and two gaskets.

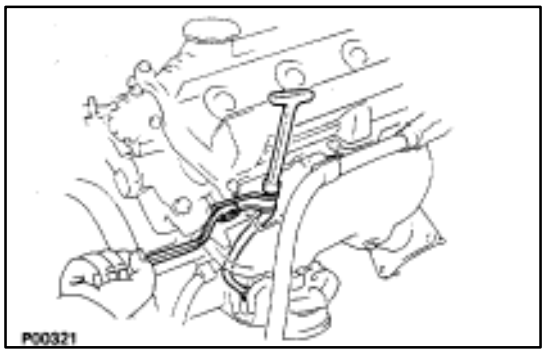

32. REMOVE OIL DIPSTICK AND GUIDE FOR ENGINE

(a) Remove the mounting bolt.

(b) Pull out the dipstick guide together with the dipstick.

(c) Remove the O–ring from the dipstick guide.

33. REMOVE OIL DIPSTICK AND GUIDE FOR A/T

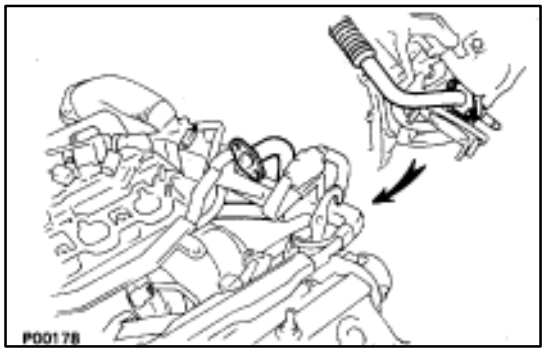

34. REMOVE EGR PIPE

(a) Remove the two nuts holding the EGR pipe to the RH exhaust pipe.

(b) Remove the EGR pipe and gasket.

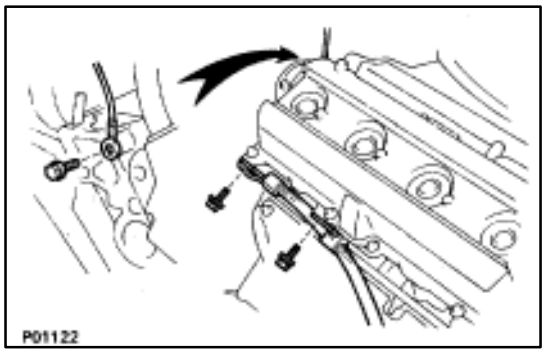

35. DISCONNECT GROUND STRAP FROM RH CYLINDER HEAD

36. DISCONNECT ENGINE WIRE FROM RH CYLINDER HEAD

Remove the two bolts, and disconnect the engine wire.

WhereEverybodyKnowsYourName

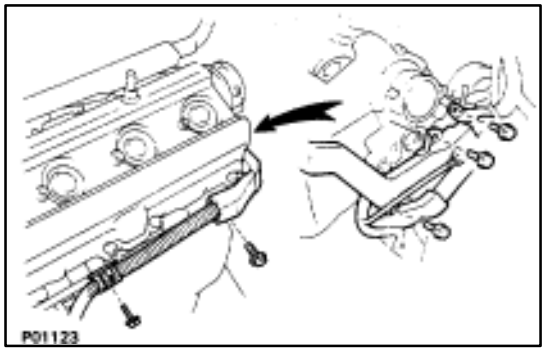

37. DISCONNECT ENGINE WIRE FROM LH CYLINDER HEAD

Remove the five bolts, and disconnect the engine wire.

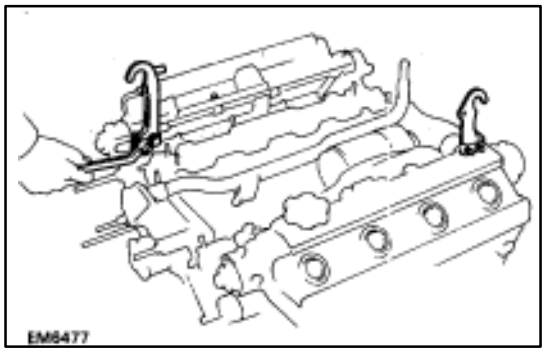

38. REMOVE ENGINE HANGERS

Remove the two bolts and engine hanger. Remove the two engine hangers.

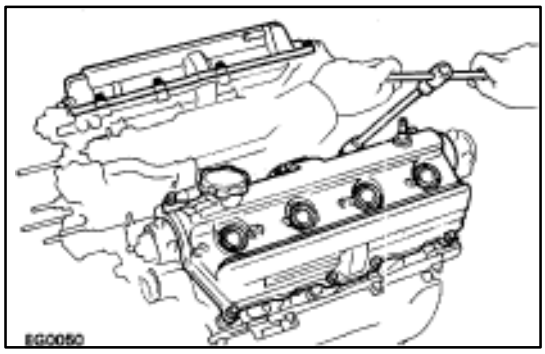

39. REMOVE CYLINDER HEAD COVERS

Remove the eight bolts, seal washers, cylinder head cover and gasket. Remove the two cylinder head covers.

40. IF NECESSARY, REMOVE SEMI–CIRCULAR PLUGS

41. REMOVE CAMSHAFTS

NOTICE: Since the thrust clearance of the camshaft is small, the camshaft must be held level while it is being removed. If the camshaft is not kept level, the portion of the cylinder head receiving the shaft thrust may crack or be damaged, causing due the camshaft to seize or break. To avoid this, the following steps should be carried out.

A. Remove exhaust camshaft from RH cylinder head

(a) Bring the service bolt hole of the driven sub–gear upward by turning the hexagon wrench head portion of the exhaust camshaft with a wrench.

(b) Secure the exhaust camshaft sub–gear to the driven gear with a service bolt.

Recommended service bolt:

Thread diameter 6 mm
Thread pitch 1.0 mm
Bolt length 16–20 mm (0.63–0.79 in.)

HINT: When removing the camshaft, make certain that the torsional spring force of the sub–gear has been eliminated by the above operation.

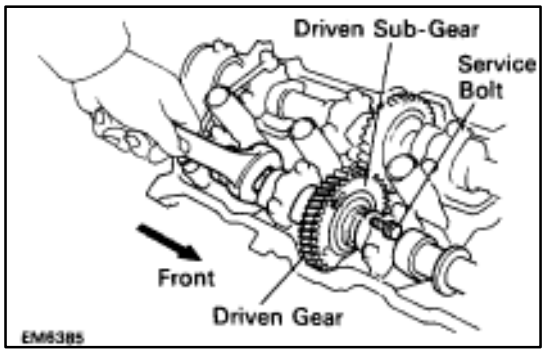

WhereEverybodyKnowsYourName

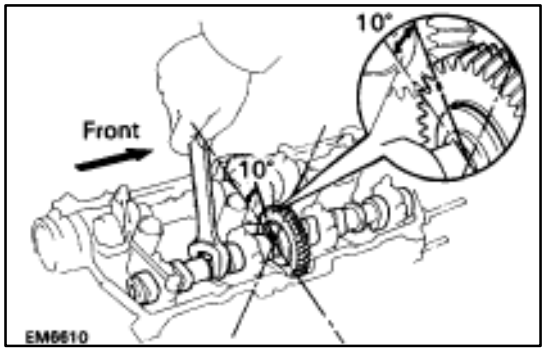

(c) Set the timing mark (one dot mark) of the camshaft driven gear at approx. 105 angle by turning the hexagon wrench head portion of the exhaust camshaft with a wrench.

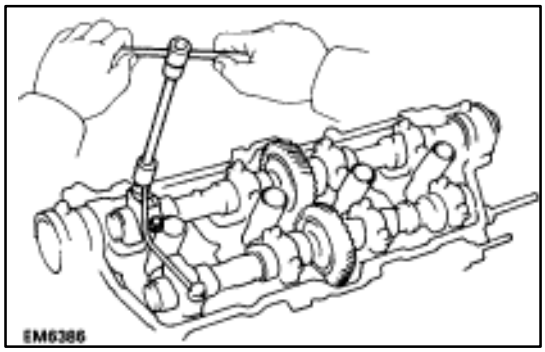

(d) Alternately loosen and remove the two bearing cap bolts holding the intake camshaft side of the oil feed pipe to the cylinder head.

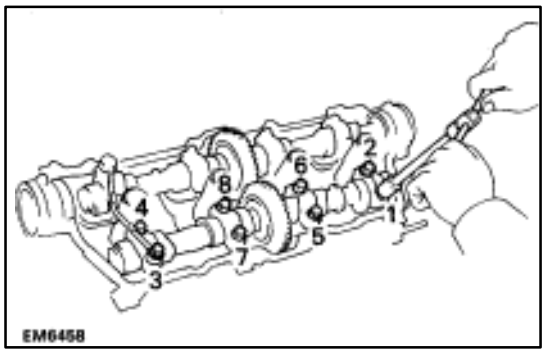

(e) Uniformly loosen and remove the eight bearing cap bolts in several passes in the sequence shown.
(f) Remove the oil feed pipe, four bearing caps and exhaust camshaft.

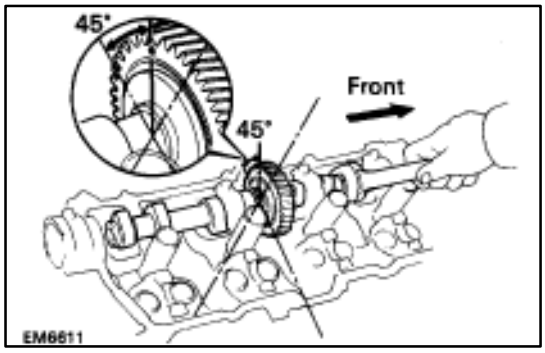

B. Remove intake camshaft from RH cylinder head

(a) Remove the rear bearing cap.
(b) Set the timing mark (one dot mark) of the camshaft drive gear at approx. 455 angle by turning the hexagon wrench head portion of the intake camshaft with a wrench.

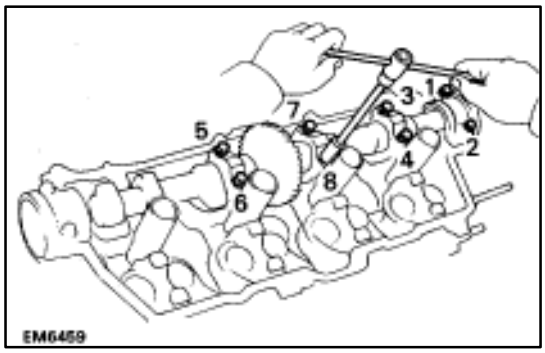

(c) Uniformly loosen and remove the eight bearing cap bolts in several passes in the sequence shown.
(d) Remove the four bearing caps, oil seal and intake camshaft.

WhereEverybodyKnowsYourName

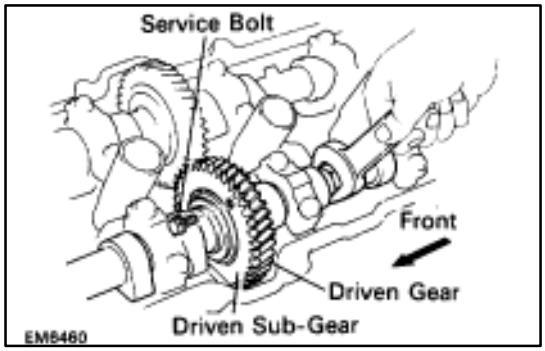

C. Remove exhaust camshaft from LH cylinder head

(a) Bring the service bolt hole of the driven sub–gear upward by turning the hexagon wrench head portion of the exhaust camshaft with a wrench.

(b) Secure the exhaust camshaft sub–gear to the driven gear with a service bolt.

Recommended service bolt:

Thread diameter 6 mm
Thread pitch 1.0 mm
Bolt length 16–20 mm (0.63–0.79 in.)

HINT: When removing the camshaft, make certain that the torsional spring force of the sub–gear has been eliminated by the above operation.

(c) Set the timing mark (two dot marks) of the camshaft driven gear at approx. 155 angle by turning the hexagon wrench head portion of the exhaust camshaft with a wrench.

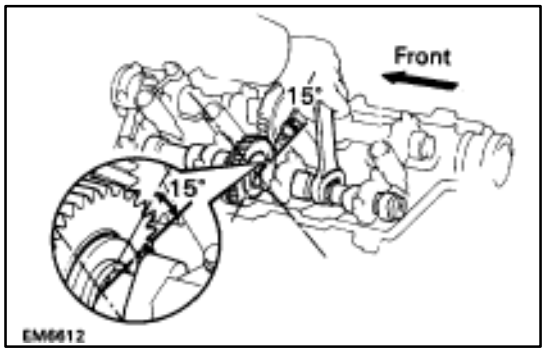

(d) Alternately loosen and remove the two bearing cap bolts holding the intake camshaft side of the oil feed pipe to the cylinder head.

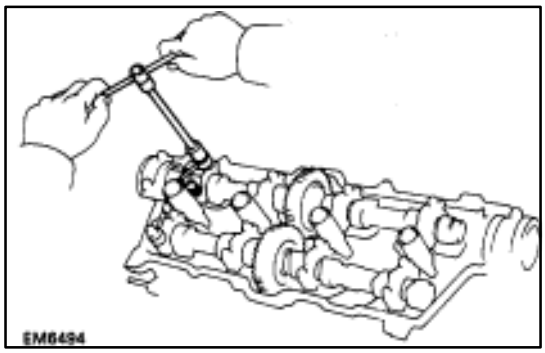

(e) Uniformly loosen and remove the eight bearing cap bolts in several passes in the sequence shown.

(f) Remove the oil feed pipe, four bearing caps and exhaust camshaft.

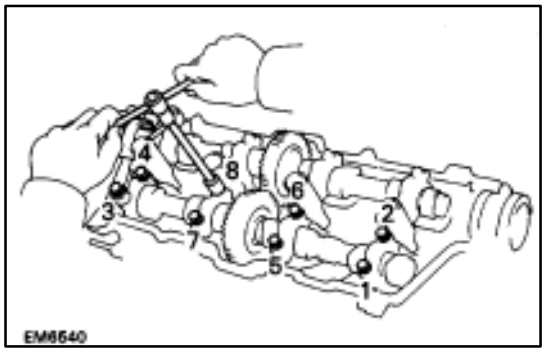

D. Remove intake camshaft from LH cylinder head

(a) Remove the front bearing cap.

(b) Set the timing mark (one dot mark) of the camshaft drive gear at approx. 605 angle by turning the hexagon wrench head portion of the intake camshaft with a wrench.

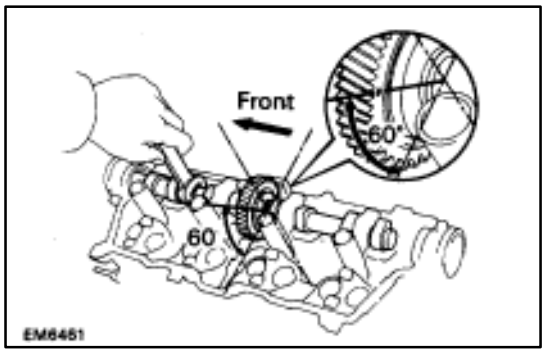

WhereEverybodyKnowsYourName

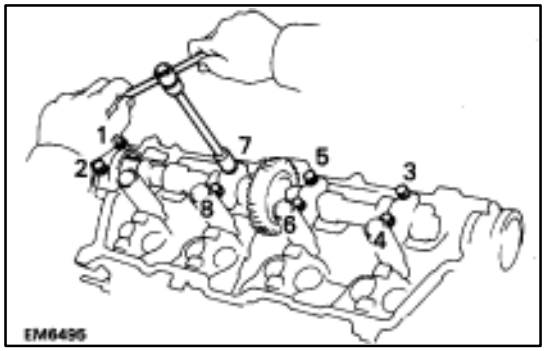

(c) Uniformly loosen and remove the eight bearing cap bolts in several passes in the sequence shown.
(d) Remove the four bearing caps, oil seal and intake camshaft.

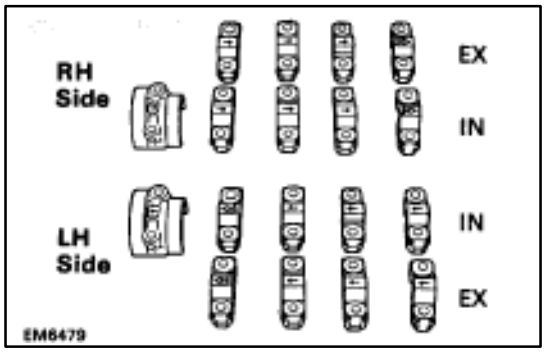

HINT: Arrange the bearing caps in correct order.

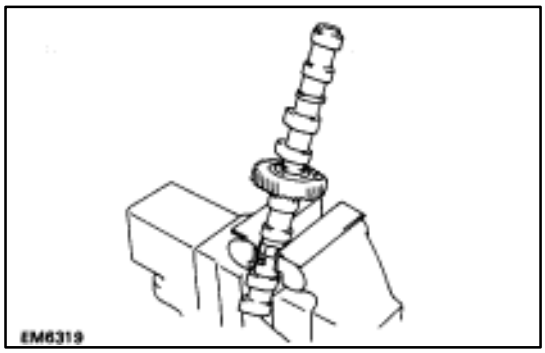

42. DISASSEMBLE EXHAUST CAMSHAFTS

(a) Mount the hexagon wrench head portion of the camshaft in a vise.

NOTICE: Be careful not to damage the camshaft.

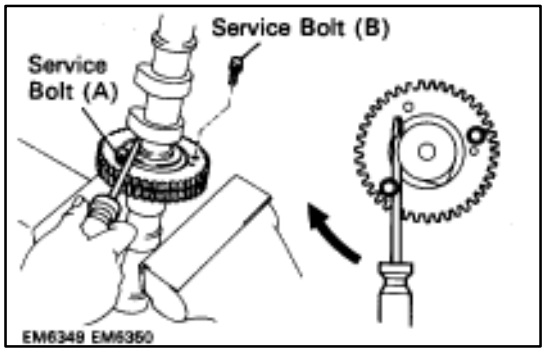

(b) Insert a service bolt (A) into the service hole of the camshaft sub–gear.
(c) Using a screwdriver, turn the sub–gear clockwise, and remove the service bolt (B).

NOTICE: Be careful not to damage the camshaft.

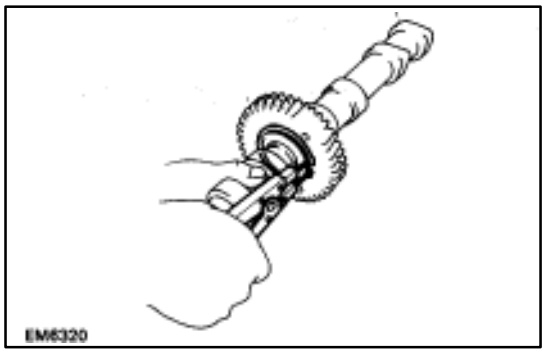

(d) Using snap ring pliers, remove the snap ring.

WhereEverybodyKnowsYourName

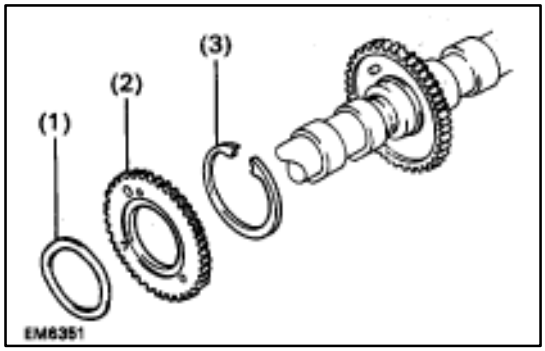

(e) Remove the following parts:
(1) Wave washer
(2) Camshaft sub–gear
(3) Camshaft gear spring

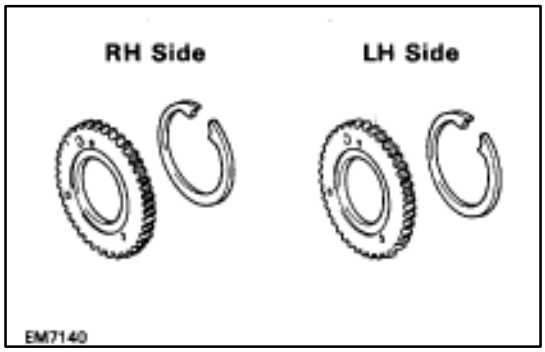

HINT: Arrange the camshaft sub–gears and gear springs (RH side and LH side).

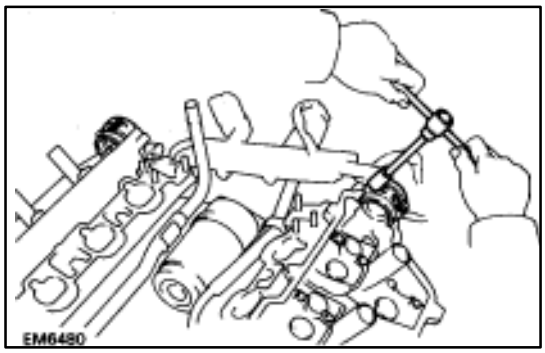

43. REMOVE CIRCULAR PLUGS

Remove the two bolts, seal washers, bearing cap and circular plug. Remove the two circular plugs.

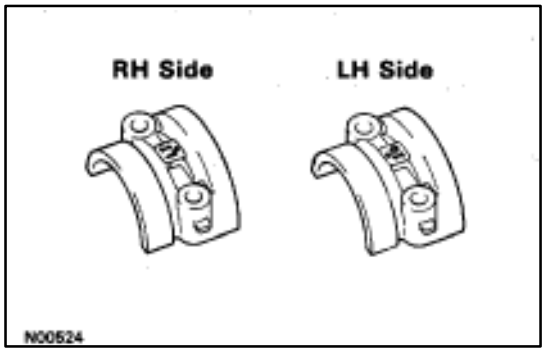

HINT: Arrange the bearing caps (RH side and LH side).

44. DISCONNECT MAIN OXYGEN SENSOR CONNECTORS

Disconnect the RH and LH oxygen sensor connector.

WhereEverybodyKnowsYourName

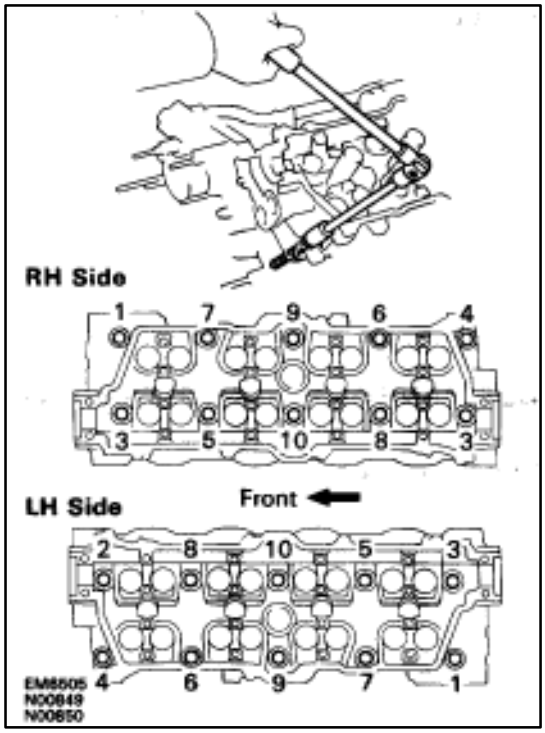

45. REMOVE CYLINDER HEADS

(a) Uniformly loosen the ten cylinder head bolts on one side of each cylinder head in several passes in the sequence shown, then do the other side as shown. Remove the twenty cylinder head bolts and plate washers.

NOTICE: Head warpage or cracking could result from removing bolts in an incorrect order.

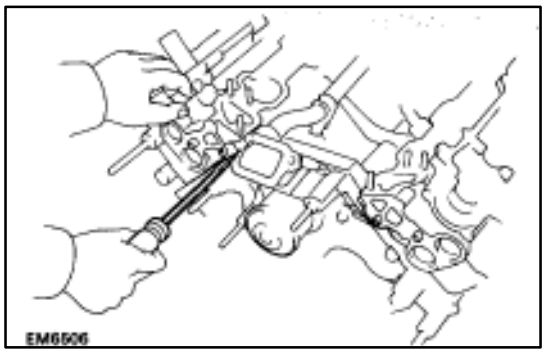

(b) Lift the cylinder heads from the dowels on the cylinder block, and place the two cylinder heads on wooden blocks on a bench.

HINT: If the cylinder head is difficult to lift off, pry between the cylinder head and cylinder block with a screwdriver.

NOTICE: Be careful not to damage the contact surfaces of the cylinder head and cylinder block.

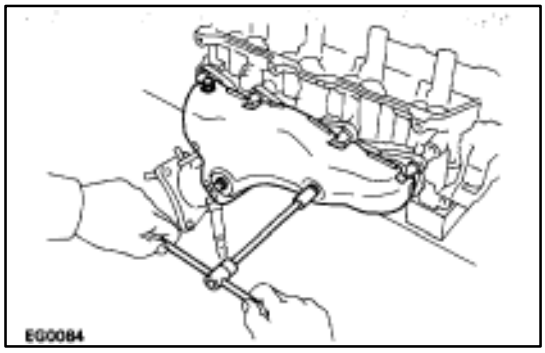

46. REMOVE EXHAUST MANIFOLD FROM RH CYLINDER HEAD

(a) Remove the three bolts and heat insulator.

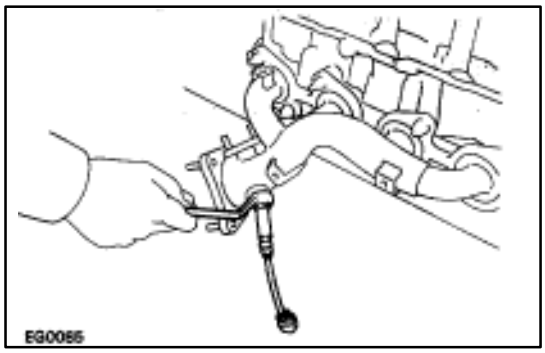

(b) Remove the main oxygen sensor.

WhereEverybodyKnowsYourName

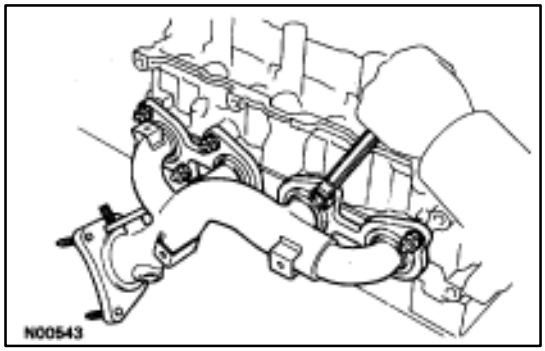

(c) Remove the eight nuts, exhaust manifold and gasket.

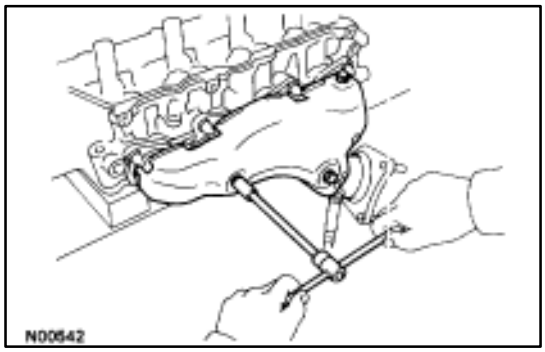

47. REMOVE EXHAUST MANIFOLD FROM LH CYLINDER HEAD

(a) Remove the three bolts and heat insulator.

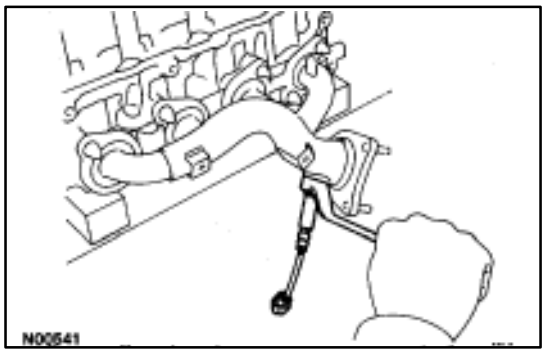

(b) Remove the main oxygen sensor.

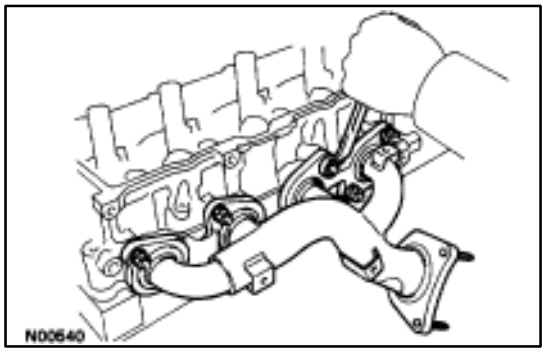

(c) Remove the eight nuts, exhaust manifold and gasket.

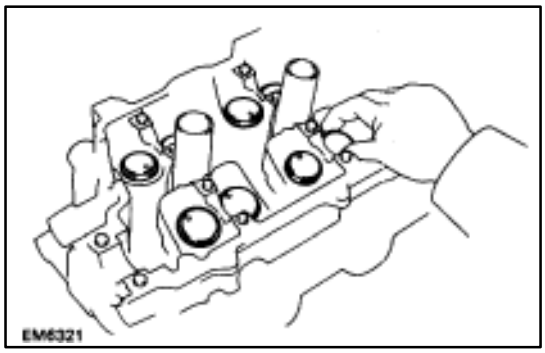

DISASSEMBLY OF CYLINDER HEADS

(See Components on page EM–59)

1. REMOVE VALVE LIFTERS AND ADJUSTING SHIMS

WhereEverybodyKnowsYourName

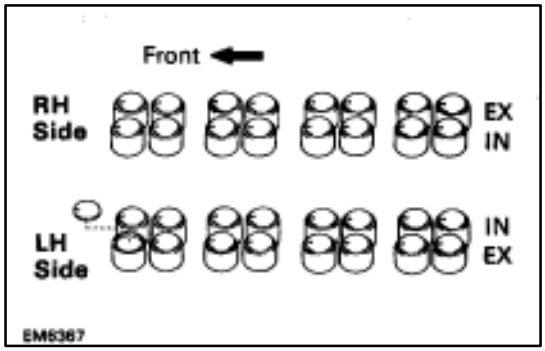

HINT: Arrange the valve lifters and adjusting shims in correct order.

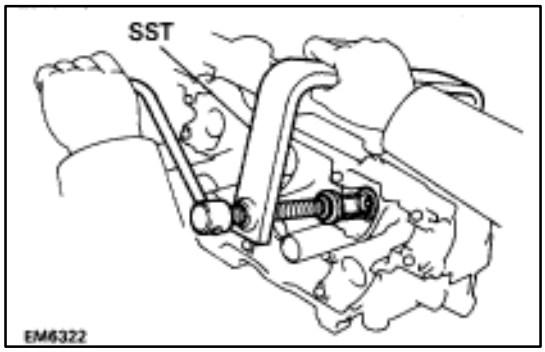

2. REMOVE VALVES

(a) Using SST, compress the valve spring and remove the two keepers.

SST 09202–70010

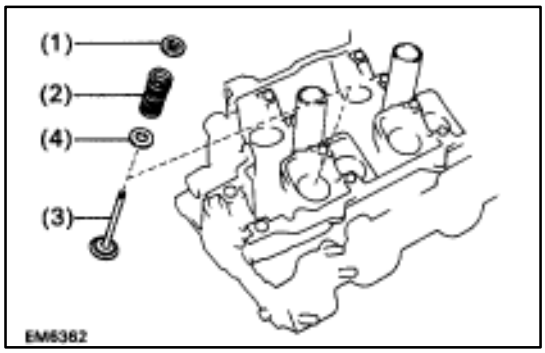

(b) Remove the following parts:
   (1) Spring retainer
   (2) Valve spring
   (3) Valve
   (4) Spring seat

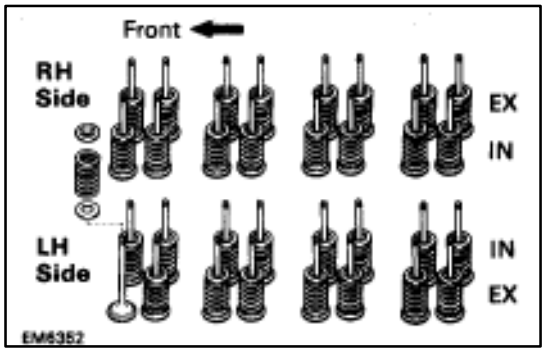

HINT: Arrange the valves, valve springs, spring seats and spring retainers in correct order.

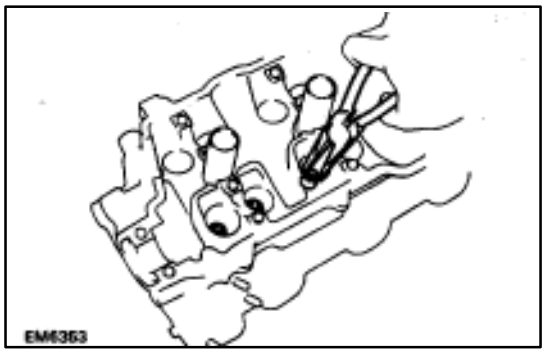

(c) Using needle–nose pliers, remove the oil seal.

WhereEverybodyKnowsYourName

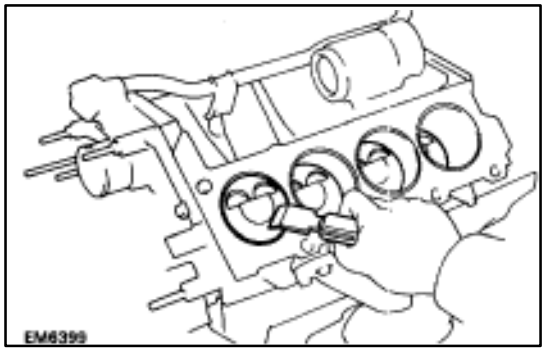

INSPECTION, CLEANING AND REPAIR OF CYLINDER HEAD COMPONENTS

1. CLEAN TOP SURFACES OF PISTONS AND CYLINDER BLOCK

(a) Turn the crankshaft and bring each piston to top dead center (TDC). Using a gasket scraper, remove all the carbon from the piston top surfaces.

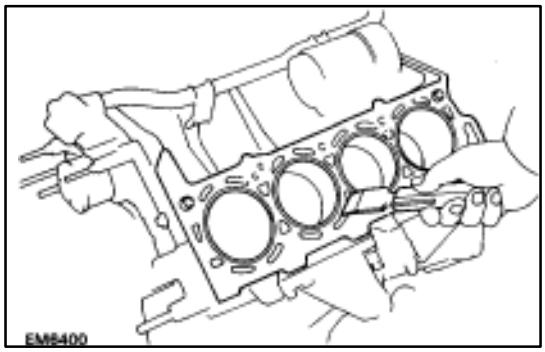

(b) Using a gasket scraper, remove all the gasket material from the top surfaces of the cylinder block.

(c) Using compressed air, blow carbon and oil from the bolt holes.

CAUTION: Protect your eyes when using high–pressure compressed air.

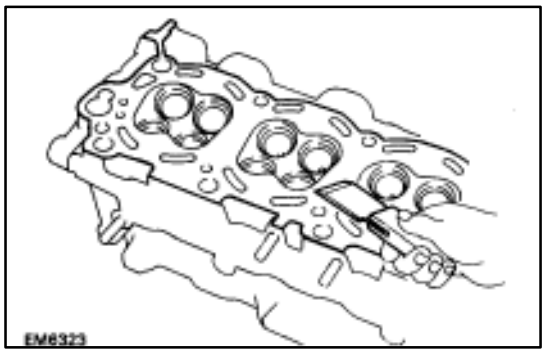

2. CLEAN CYLINDER HEADS

A. Remove gasket material Using a gasket scraper, remove all the gasket material from the cylinder block surface.

NOTICE: Be careful not to scratch the cylinder block contact surface.

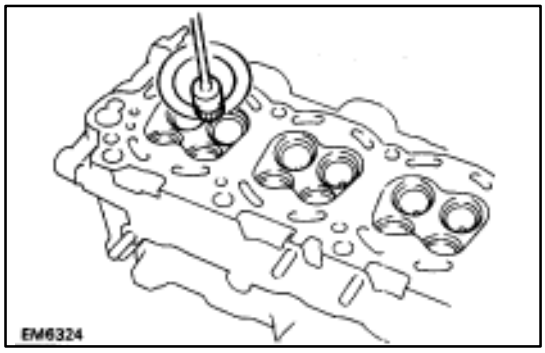

B. Clean combustion chambers

Using a wire brush, remove all the carbon from the combustion chambers.

NOTICE: Be careful not to scratch the cylinder block contact surface.

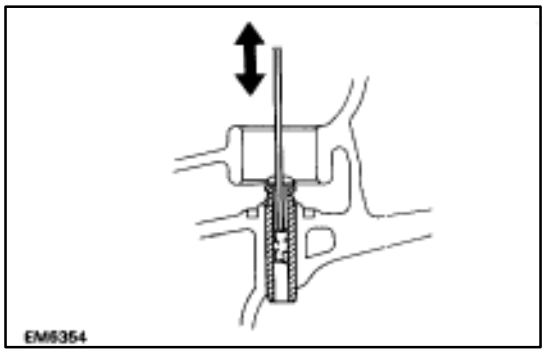

C. Clean valve guide bushings

Using a valve guide bushing brush and solvent, clean all the guide bushings.

WhereEverybodyKnowsYourName

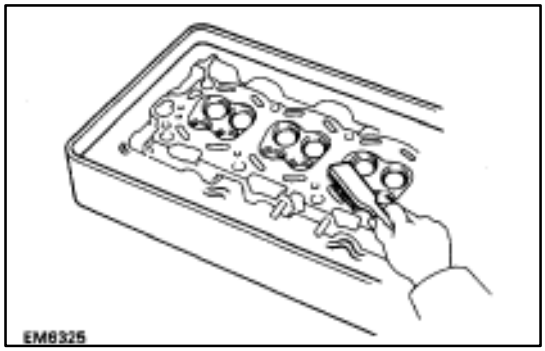

D. Clean cylinder heads

Using a soft brush and solvent, thoroughly clean the cylinder heads.

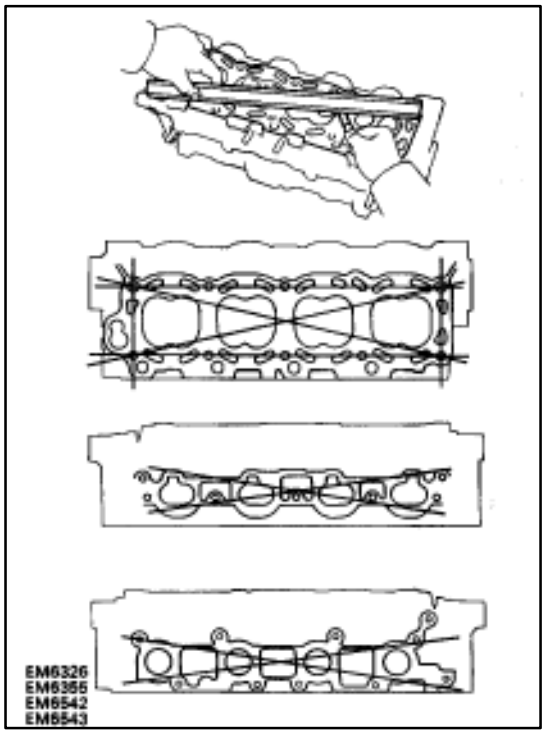

3. INSPECT CYLINDER HEADS

A. Inspect for flatness

Using a precision straight edge and feeler gauge, measure the surfaces contacting the cylinder block and manifolds for warpage.

Maximum warpage: 0.10 mm (0.0039 in.)

If warpage is greater than maximum, replace the cylinder head.

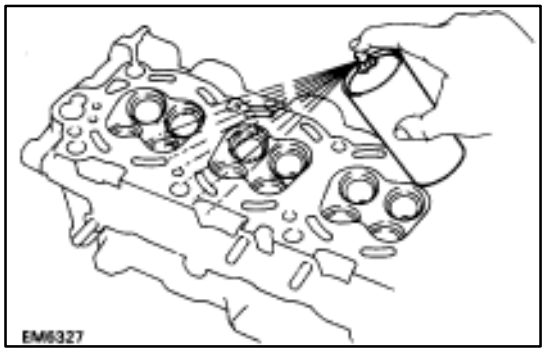

B. Inspect for cracks

Using a dye penetrant, check the combustion chamber, intake ports, exhaust ports and cylinder block surface for cracks.

If cracked, replace the cylinder head.

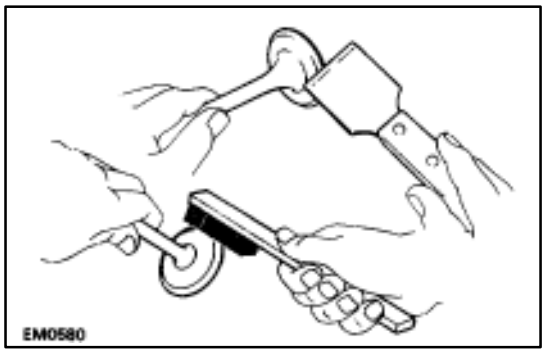

4. CLEAN VALVES

(a) Using a gasket scraper, chip any carbon from the valve head.

(b) Using a wire brush, thoroughly clean the valve.

WhereEverybodyKnowsYourName

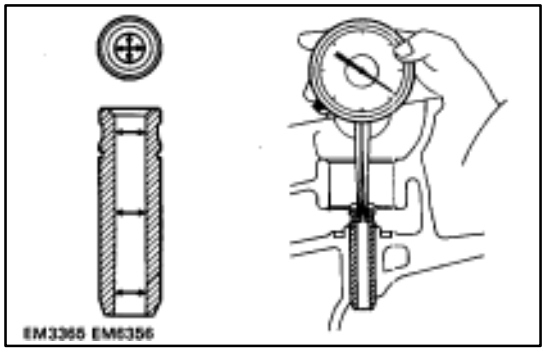

5. INSPECT VALVE STEMS AND GUIDE BUSHINGS

(a) Using a caliper gauge, measure the inside diameter of the guide bushing.

Bushing inside diameter:

6.010–6.030 mm (0.2366–0.2374 in.)

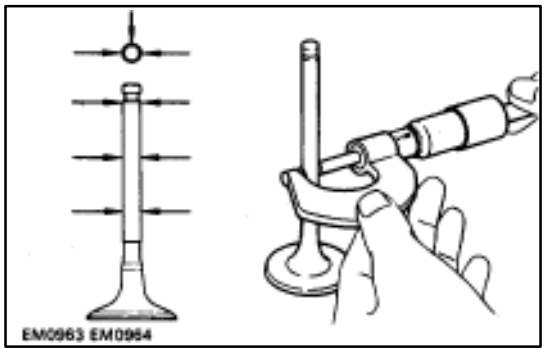

(b) Using a micrometer, measure the diameter of the valve stem.

Valve stem diameter:

Intake 5.970–5.985 mm (0.2350–0.2356 in.)

Exhaust 5.965–5.980 mm (0.2348–0.2354 in.)

(c) Subtract the diameter measurement of the valve stem from the inside diameter measurement of the guide bushing.

Standard oil clearance:

Intake 0.025–0.060 mm (0.0010–0.0024 in.)

Exhaust 0.030–0.065 mm (0.0012–0.0026 in.)

Maximum oil clearance:

Intake 0.08 mm (0.0031 in.)

Exhaust 0.10 mm (0.0039 in.)

If the clearance is greater than maximum, replace the valve and guide bushing.

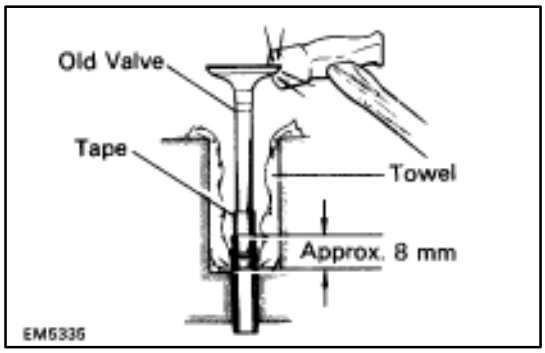

6. IF NECESSARY, REPLACE VALVE GUIDE BUSHINGS

(a) Insert an old valve wrapped with tape into the valve guide bushing, and break off the valve guide bushing by hitting it with a hammer. Remove the snap ring.

HINT: Wrap the tape approx. 8 mm (0.31 in.) from the stem end.

NOTICE: Be careful not to damage the valve lifter hole.

WhereEverybodyKnowsYourName

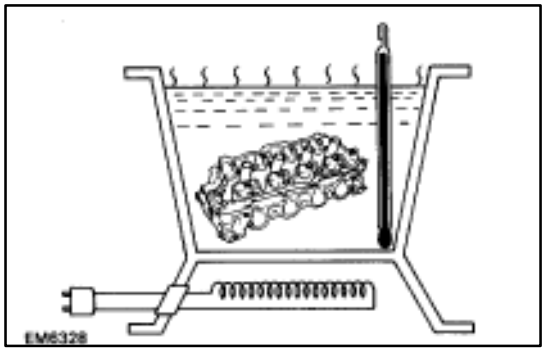

(b) Gradually heat the cylinder head to 80–1005C (176 –2125F).

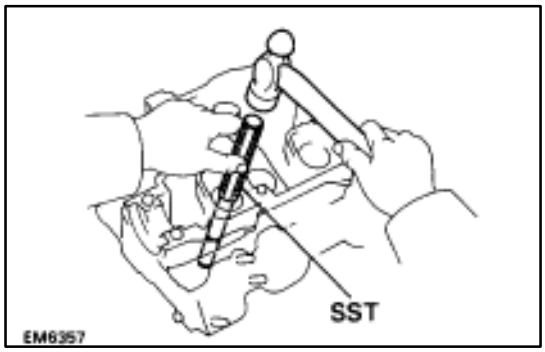

(c) Using SST and a hammer, tap out the guide bushing.
SST 09201–70010

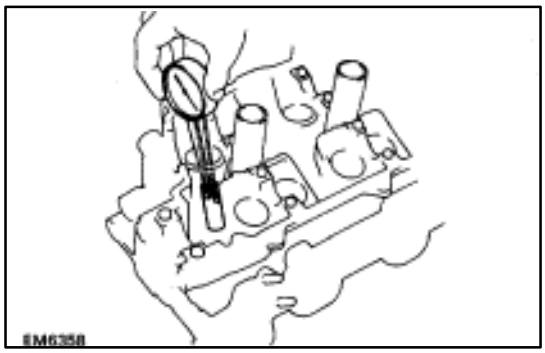

(d) Using a caliper gauge, measure the bushing bore diameter of the cylinder head.

Both intake and exhaust

Bushing bore diameter mm (in.)	Bushing size
11.000–11.027 (0.4331–0.4342)	Use STD
11.050–11.077 (0.4350–0.4361)	Use O/S 0.05

(e) Select a new guide bushing (STD size or O/S 0.05).
If the bushing bore diameter of the cylinder head is greater than 11.027 mm (0.4341 in.), grind the bushing bore to the following dimension:
11.050–11.077 mm (0.4350–0.4361 in.)
If the bushing bore diameter of the cylinder head is greater than 11.077 mm (0.4361 in.), replace the cylinder head.

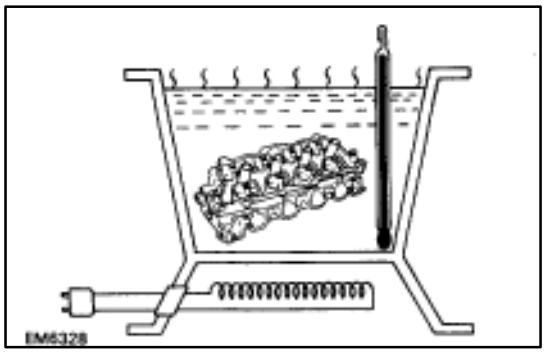

(f) Gradually heat the cylinder head to 80–1005C (176 –2125F).

WhereEverybodyKnowsYourName

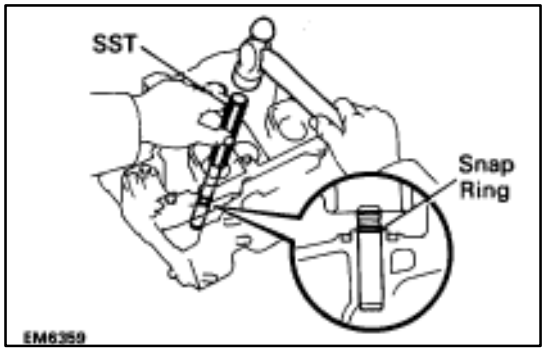

(g) Using SST and a hammer, tap in a new guide bushing until the snap ring makes contact with the cylinder head.

SST 09201–70010

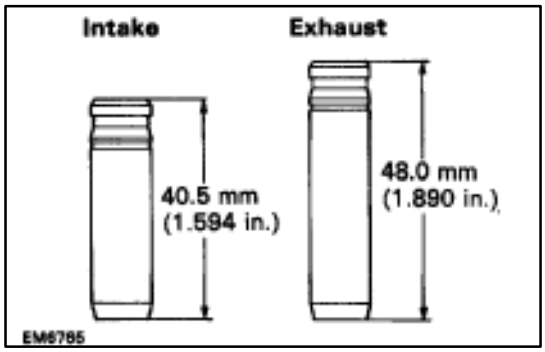

HINT: Different the bushings are used for the intake and exhaust.

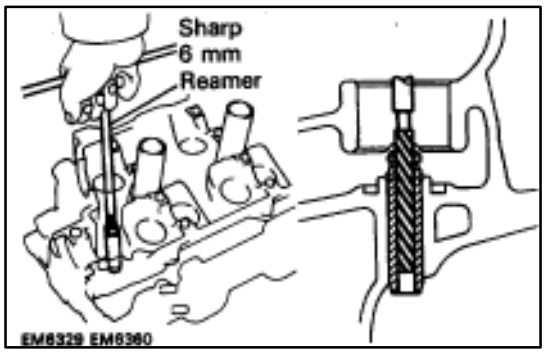

(h) Using a sharp 6 mm reamer, ream the guide bushing to obtain the standard specified clearance (See page EM–80) between the guide bushing and valve stem.

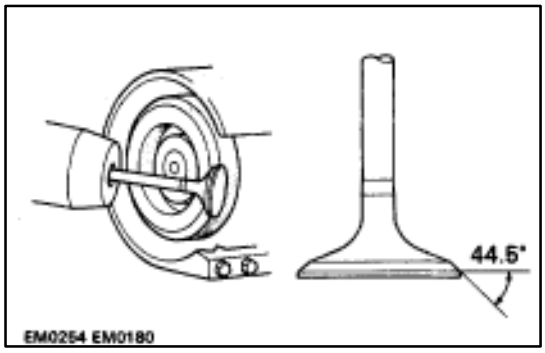

7. INSPECT AND GRIND VALVES

(a) Grind the valve enough to remove pits and carbon.

(b) Check that the valve is ground to the correct valve face angle.

Valve face angle: 44.5°

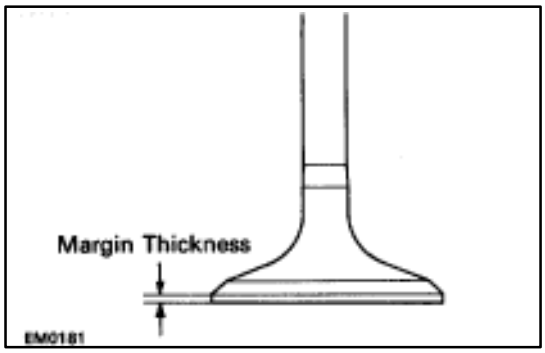

(c) Check the valve head margin thickness.

Standard margin thickness: 1.0 mm (0.039 in.)

Minimum margin thickness: 0.5 mm (0.020 in.)

If the margin thickness is less than minimum, replace the valve.

WhereEverybodyKnowsYourName

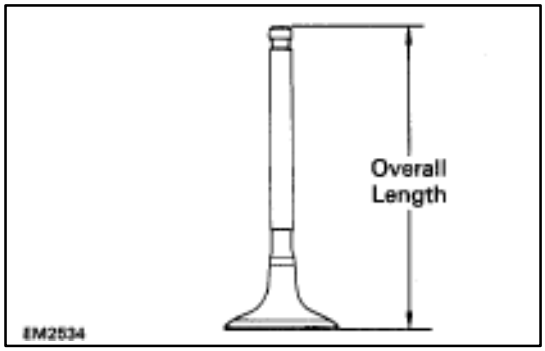

(d) Check the valve overall length.

Standard overall length:

Intake 94.95 mm (3.7382 in.)

Exhaust 96.90 mm (3.8150 in.)

Minimum overall length:

Intake 94.45 mm (3.7185 in.)

Exhaust 96.40 mm (3.7953 in.)

If the overall length is less than minimum, replace the valve.

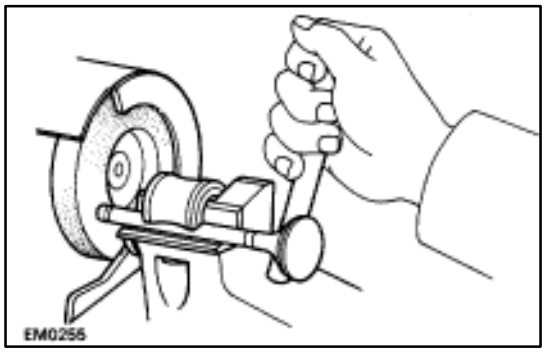

(e) Check the surface of the valve stem tip for wear.

If the valve stem tip is worn, resurface the tip with a grinder or replace the valve.

NOTICE: Do not grind off more than the minimum overall length.

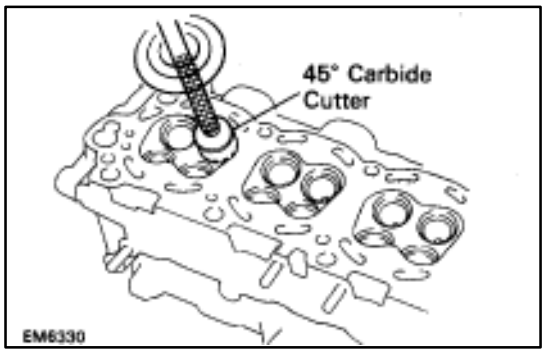

8. INSPECT AND CLEAN VALVE SEATS

(a) Using a 455 carbide cutter, resurface the valve seats. Remove only enough metal to clean the seats.

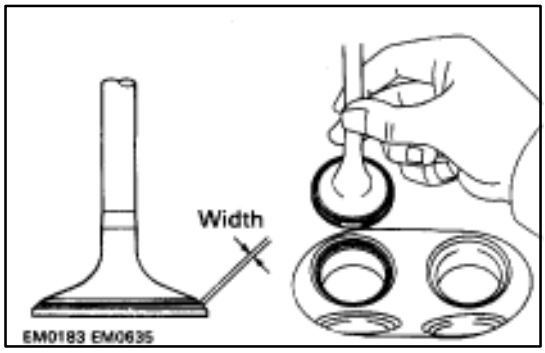

(b) Check the valve seating position.

Apply a thin coat of prussian blue (or white lead) to the valve face. Lightly press the valve against the seat. Do not rotate the valve.

(c) Check the valve face and seat for the following:

- If blue appears 3605 around the face, the valve is concentric. If not, replace the valve.
- If blue appears 3605 around the valve seat, the guide and face are concentric. If not, resurface the seat.
- Check that the seat contact is on the middle of the valve face with the following width:

  1.0–1.4 mm (0.039–0.055 in.)

  If not, correct the valve seats as follows:

  (1) If the seating is too high on the valve face, use 30° and 45° cutters to correct the seat.

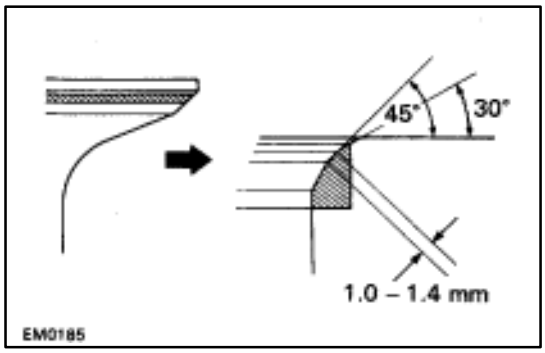

WhereEverybodyKnowsYourName

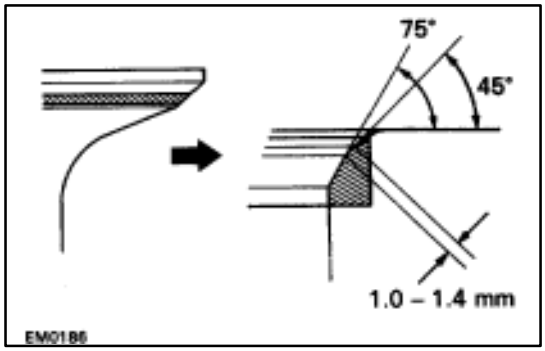

(2) If the seating is too low on the valve face, use 75° and 45° cutters to correct the seat.

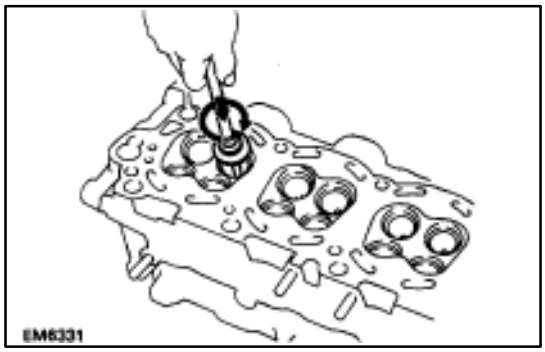

(d) Hand–lap the valve and valve seat with an abrasive compound.
(e) After hand–lapping, clean the valve and valve seat.

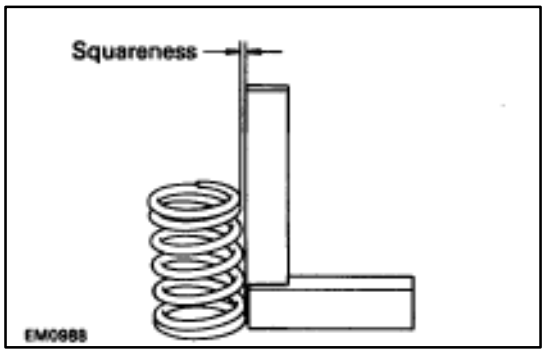

9. INSPECT VALVE SPRINGS

(a) Using a steel square, measure the squareness of the valve spring.

Maximum squareness: 2.0 mm (0.079 in.)

If squareness is greater than maximum, replace the valve spring.

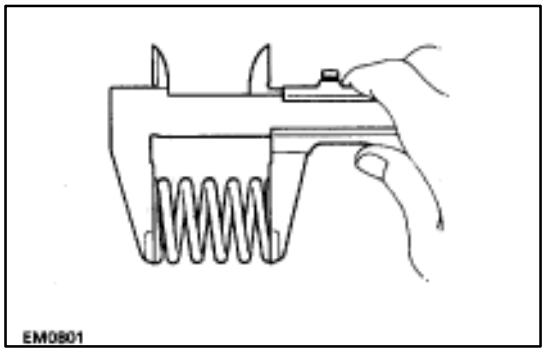

(b) Using a vernier caliper, measure the free length of the valve spring.

Free length: 43.6 mm (1.717 in.)

If the free length is not as specified, replace the valve spring.

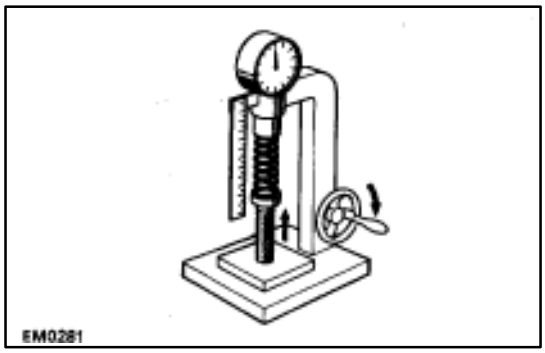

(c) Using a spring tester, measure the tension of the valve spring at the specified installed length.

Installed tension (at 32.9 mm (1.295 in.):
186–206 N (19.0–21.0 kgf, 41.9–46.3 lbf)

If the installed tension is not as specified, replace the valve spring.

WhereEverybodyKnowsYourName

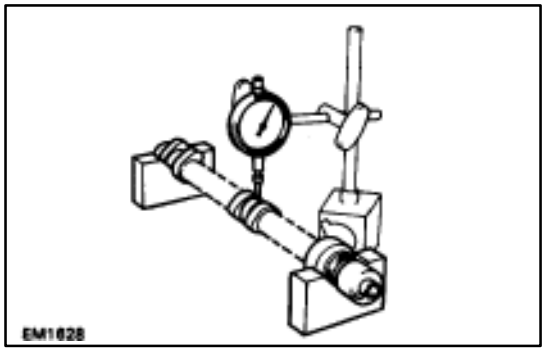

10. INSPECT CAMSHAFTS AND BEARINGS

A. Inspect camshaft for runout

(a) Place the camshaft on V–blocks.

(b) Using a dial indicator, measure the circle runout at the center journal.

Maximum circle runout: 0.08 mm (0.0031 in.)

If the circle runout is greater than maximum, replace the camshaft.

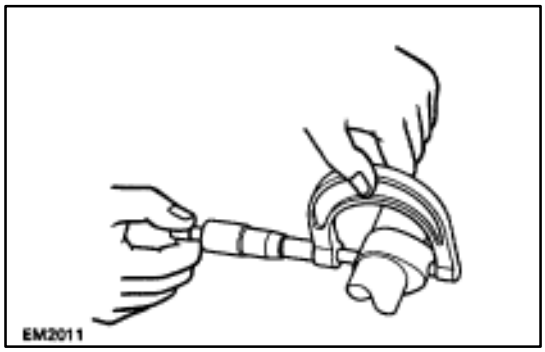

B. Inspect cam lobes

Using a micrometer, measure the cam lobe height.

Standard cam lobe height:

Intake 41.710–41.810 mm
(1.6421–1.6461 in.)

Exhaust 41.910–42.010 mm
(1.6500–1.6539 in.)

Minimum cam lobe height:

Intake 41.56 mm (1.6362 in.)

Exhaust 41.76 mm (1.6441 in.)

If the cam lobe height is less than minimum, replace the camshaft.

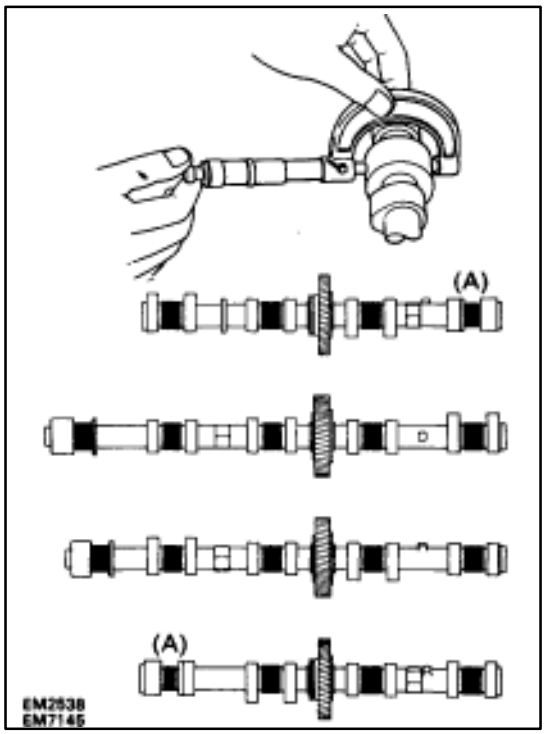

C. Inspect camshaft journals

Using a micrometer, measure the journal diameter.

Journal diameter:

Exhaust camshaft thrust portion (A)
23.959–23.975 mm
(0.9433–0.9439 in.)

Others 26.954–26.970 mm
(1.0612–1.0618 in.)

If the journal diameter is not as specified, check the oil clearance.

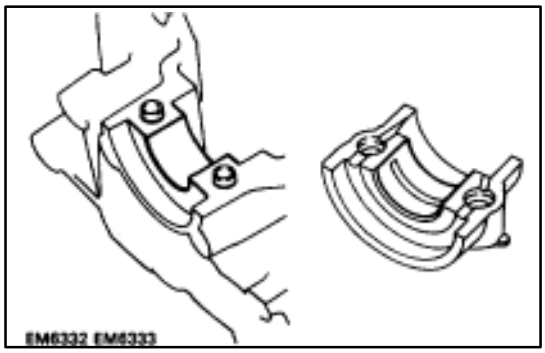

D. Inspect camshaft bearings

Check the bearings for flaking and scoring.

If the bearings are damaged, replace the bearing caps and cylinder head as a set.

WhereEverybodyKnowsYourName

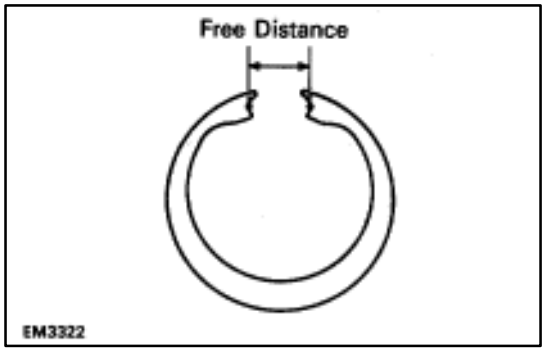

E. Inspect camshaft gear spring

Using a vernier caliper, measure the free distance between the spring ends.

Free distance: 18.2–18.8 mm (0.712–0.740 in.)

If the free distance is not as specified, replace the gear spring.

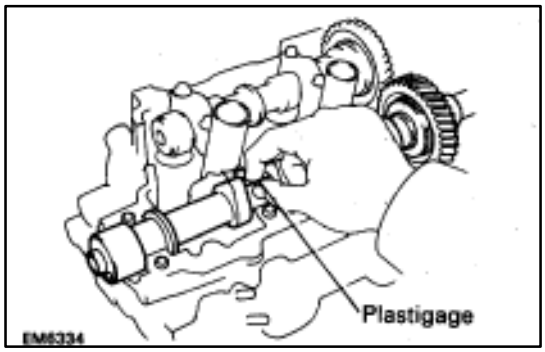

F. Inspect camshaft journal oil clearance

(a) Clean the bearing caps and camshaft journals.

(b) Place the camshafts on the cylinder head.

(c) Lay a strip of Plastigage across each of the camshaft journals.

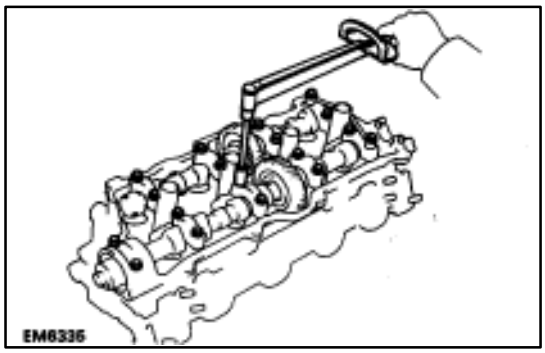

(d) Install the bearing caps.
(See step 7 on pages EM–95 to 101)

Torque: 16 N·m (160 kgf·cm, 12 ft·lbf)

NOTICE: Do not turn the camshaft.

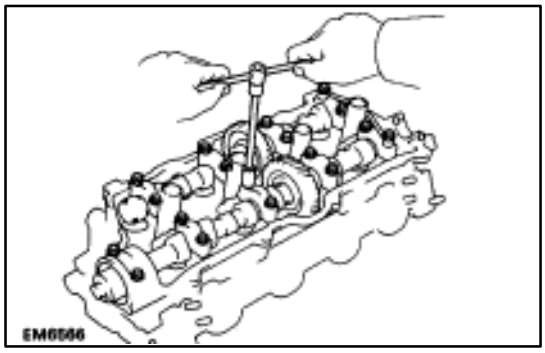

(e) Remove the bearing caps.

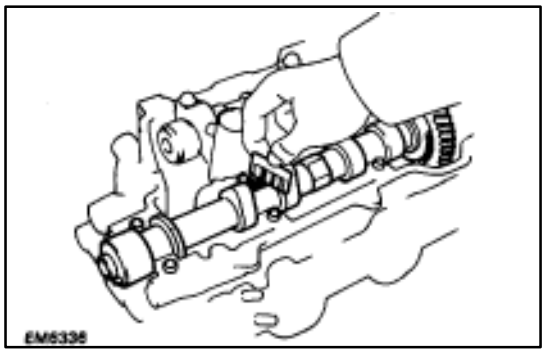

(f) Measure the Plastigage at its widest point.

Standard oil clearance:

Exhaust camshaft thrust portion
0.025–0.061 mm
(0.0010–0.0024 in.)

Others 0.030–0.067 mm
(0.0012–0.0026 in.)

Maximum oil clearance: 0.10 mm (0.0039 in.)

If the oil clearance is greater than maximum, replace the camshaft. If necessary, replace the bearing caps and cylinder head as a set.

(g) Completely remove the Plastigage.

WhereEverybodyKnowsYourName

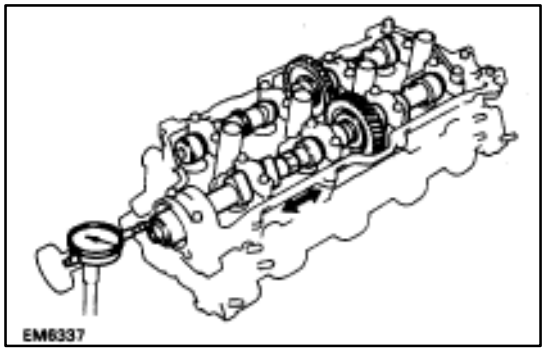

G. Inspect camshaft thrust clearance

(a) Install the camshafts.
(See step 7 on pages EM–95 to 101)

(b) Using a dial indicator, measure the thrust clearance while moving the camshaft back and forth.

Standard thrust clearance: 0.040–0.090 mm (0.0016–0.0035 in.)

Maximum thrust clearance: 0.12 mm (0.0047 in.)

If the thrust clearance is greater than maximum, replace the camshaft. If necessary, replace the bearing caps and cylinder head as a set.

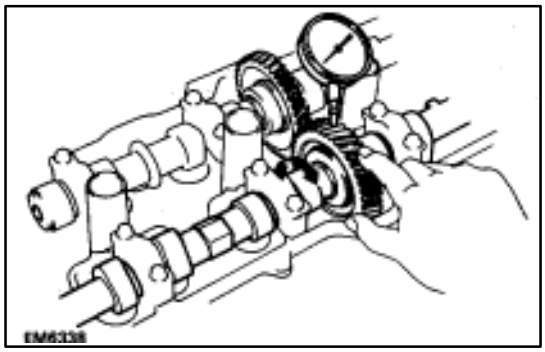

H. Inspect camshaft gear backlash

(a) Install the camshafts without installing the exhaust camshaft sub–gear.
(See step 7 on pages EM–95 to 101)

(b) Using a dial indicator, measure the backlash.

Standard backlash: 0.020–0.200 mm (0.0008–0.0079 in.)

Maximum backlash: 0.30 mm (0.0188 in.)

If the backlash is greater than maximum, replace the camshafts.

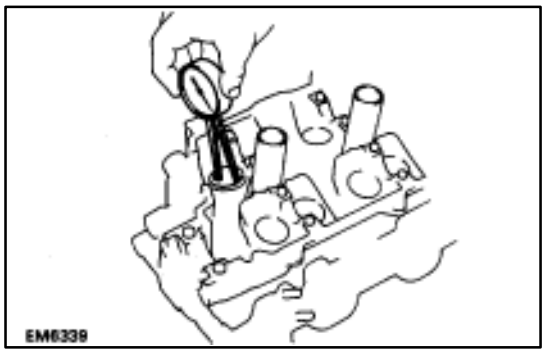

11. INSPECT VALVE LIFTERS AND LIFTER BORES

(a) Using a caliper gauge, measure the lifter bore diameter of the cylinder head.

Lifter bore diameter: 31.000–31.016 mm (1.2205–1.2211 in.)

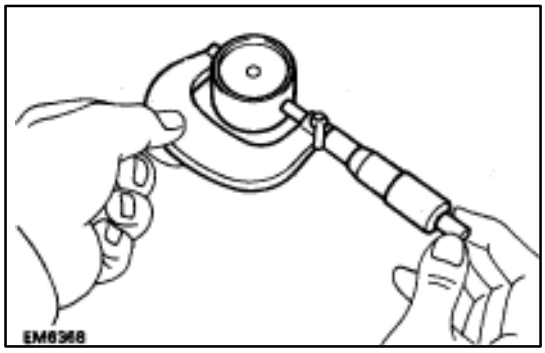

(b) Using a micrometer, measure the lifter diameter.

Lifter diameter: 30.966–30.976 mm (1.2191–1.2195 in.)

(c) Subtract the lifter diameter measurement from the lifter bore diameter measurement.

Standard oil clearance: 0.024–0.050 mm (0.0009–0.0020 in.)

Maximum oil clearance: 0.07 mm (0.0028 in.)

If the oil clearance is greater than maximum, replace the lifter. If necessary, replace the cylinder head.

WhereEverybodyKnowsYourName

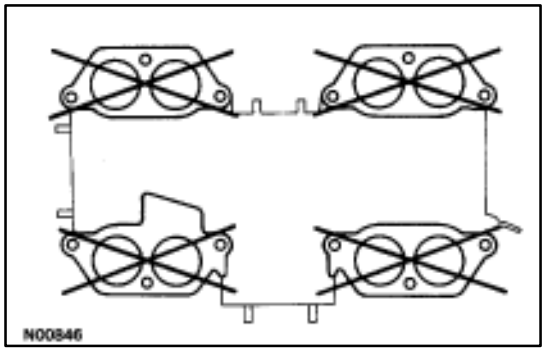

12. INSPECT AIR INTAKE CHAMBER

Using a precision straight edge and feeler gauge, measure the surfaces contacting the intake manifold for warpage.

Maximum warpage: 0.15 mm (0.0059 in.)

If warpage is greater than maximum, replace the chamber.

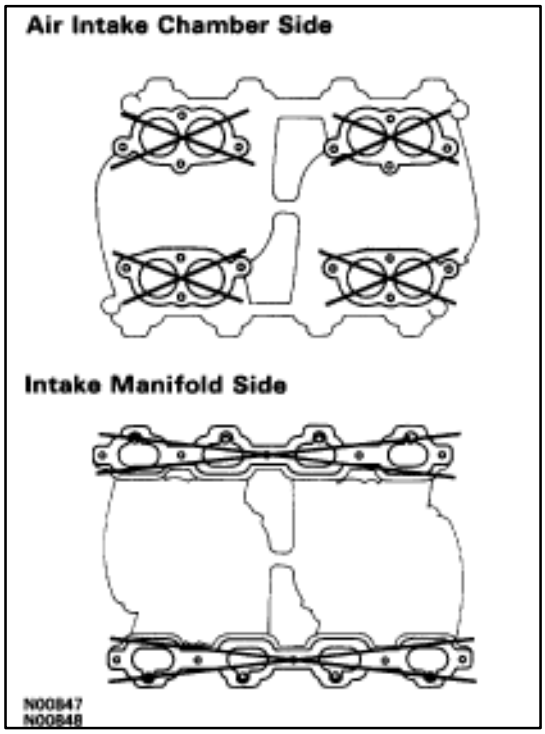

13. INSPECT INTAKE MANIFOLD

Using a precision straight edge and feeler gauge, measure the surfaces contacting the cylinder head and air intake chamber for warpage.

Maximum warpage: 0.15 mm (0.0059 in.)

If warpage is greater than maximum, replace the manifold.

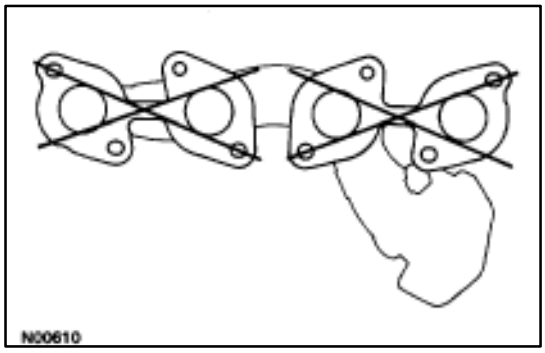

14. INSPECT EXHAUST MANIFOLD

Using a precision straight edge and feeler gauge, measure the surfaces contacting the cylinder head for warpage.

Maximum warpage: 1.00 mm (0.0394 in.)

If warpage is greater than maximum, replace the manifold.

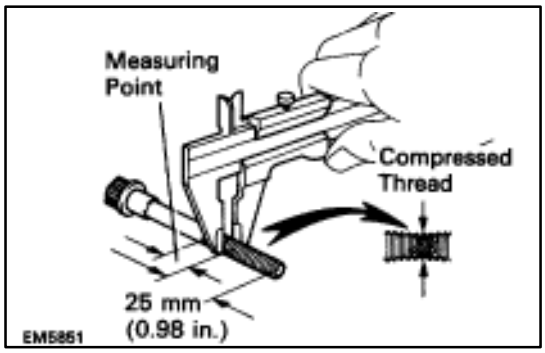

15. INSPECT CYLINDER HEAD BOLTS

Using a vernier caliper, measure the thread outside diameter of the bolt.

Standard outside diameter: 9.770–9.960 mm (0.3846–0.3921 in.)

Minimum outside diameter: 9.60 mm (0.3780 in.)

If the diameter is less than minimum, replace the bolt.

WhereEverybodyKnowsYourName

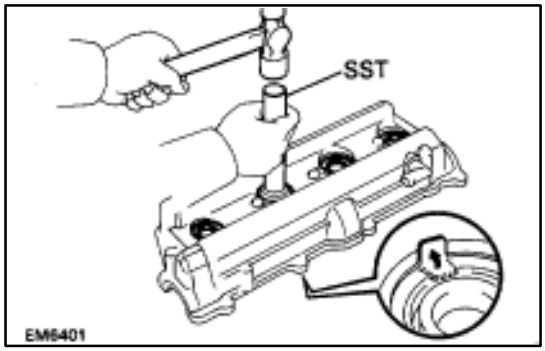

16. IF NECESSARY, REPLACE SPARK PLUG TUBE GASKETS

(a) Bend the ventilation case claw installed on the cylinder head cover to an angle of 905 or more.

(b) Using SST and a hammer, tap out the gasket.

SST 09550–10012 (09552–10010, 09560–10010)

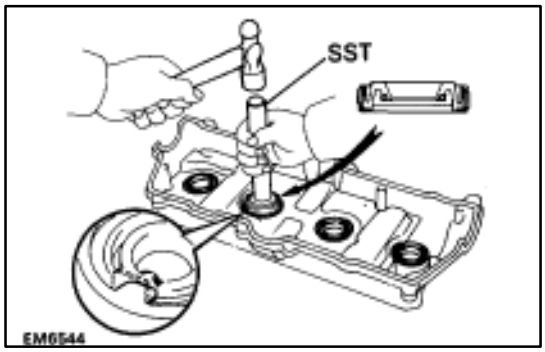

(c) Using SST and a hammer, tap in a new gasket until its surface is flush with the upper edge of the cylinder head cover.

SST 09550–10012 (09552–10010, 09560–10010)

(d) Apply a light coat of MP grease to the gasket lip.

(e) Return the ventilation case claw to its original position.

ASSEMBLY OF CYLINDER HEADS

(See Components on page EM–59)

HINT:

- Thoroughly clean all parts to be assembled.
- Before installing the parts, apply new engine oil to all sliding and rotating surfaces.
- Replace all gaskets and oil seals with new ones.

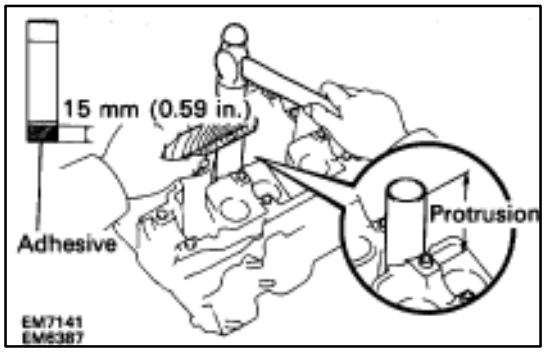

1. INSTALL SPARK PLUG TUBES

HINT: When using a new cylinder head, spark plug tubes must be installed.

(a) Apply adhesive to the end of the spark plug tube.

Adhesive: Part No.08833–00070, THREE BOND 1324 or equivalent

(b) Using a wooden block and hammer, tap in a new spark plug tube until there is 48.7–49.3 mm (1.917 –1.941 in.) protruding from the camshaft bearing cap installation surface of the cylinder head.

NOTICE: Avoid tapping a new spark plug tube in too far by measuring the amount of protrusion while tapping.

WhereEverybodyKnowsYourName

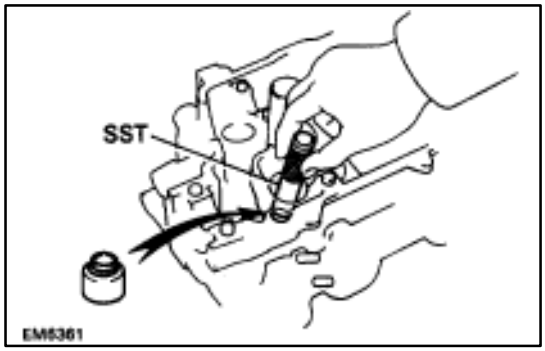

2. INSTALL VALVES

(a) Using SST, push in a new oil seal.

SST 09201–41020

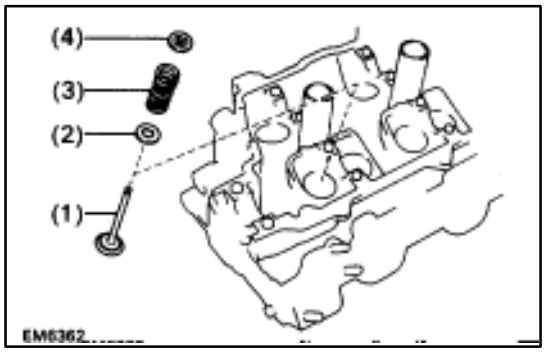

(b) Install the following parts:
- (1) Valve
- (2) Spring seat
- (3) Valve spring
- (4) Spring retainer

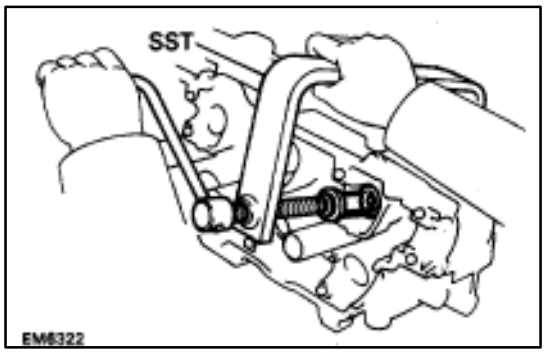

(c) Using SST, compress the valve spring and place the two keepers around the valve stem.

SST 09202–70010

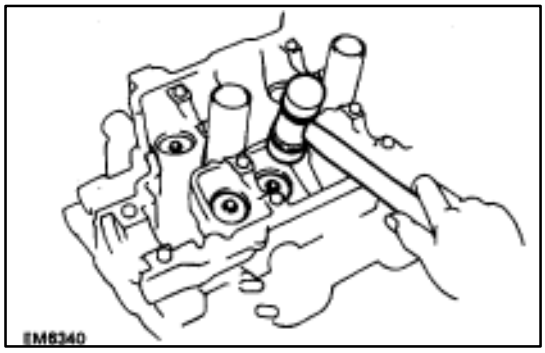

(d) Using a plastic–faced hammer, lightly tap the valve stem tip to assure proper fit.

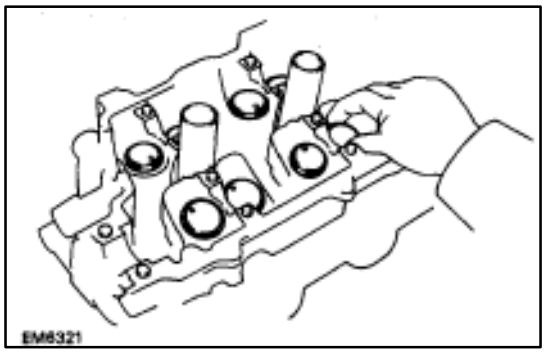

3. INSTALL VALVE LIFTERS AND SHIMS

Check the valve lifter rotates smoothly by hand.

WhereEverybodyKnowsYourName

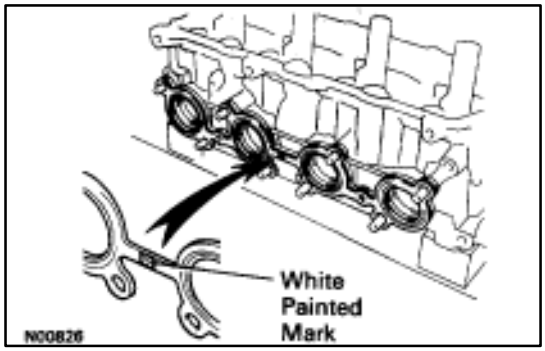

INSTALLATION OF CYLINDER HEADS

(See Components on pages EM–58 and 59)

1. INSTALL RH EXHAUST MANIFOLD TO RH CYLINDER HEAD

(a) Place a new gasket on the cylinder head with the white painted marks facing the manifold side.

NOTICE: Be careful of the installation direction.

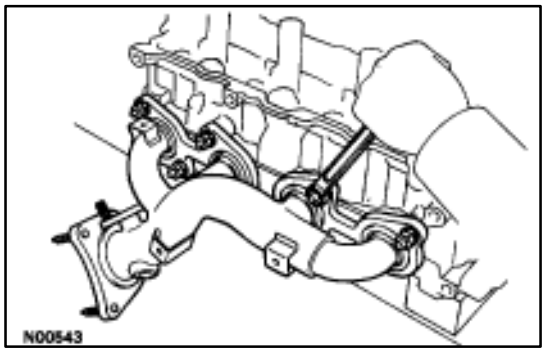

(b) Install the exhaust manifold with the eight new nuts. Uniformly tighten the nuts in several passes.

Torque: 39 N·m (400 kgf·cm, 29 ft·lbf)

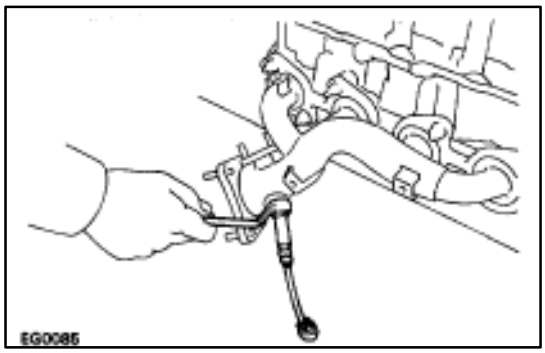

(c) Install the main oxygen sensor.

Torque: 44 N·m (450 kgf·cm, 33 ft·lbf)

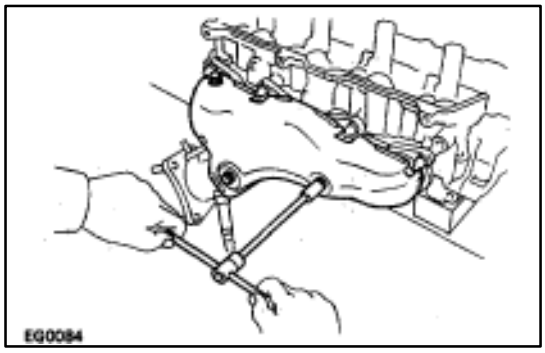

(d) Install the heat insulator with the three bolts.

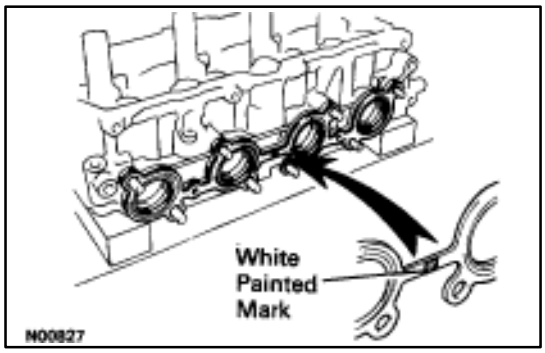

2. INSTALL LH EXHAUST MANIFOLD TO LH CYLINDER HEAD

(a) Place a new gasket on the cylinder head with the white painted marks facing the manifold side.

NOTICE: Be careful of the installation direction.

WhereEverybodyKnowsYourName

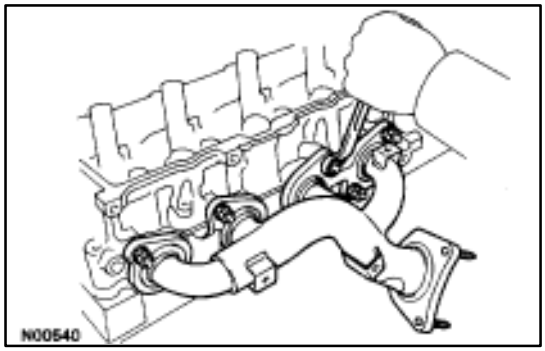

(b) Install the exhaust manifold with the eight new nuts. Uniformly tighten the nuts in several passes.
Torque: 39 N·m (400 kgf·cm, 29 ft·lbf)

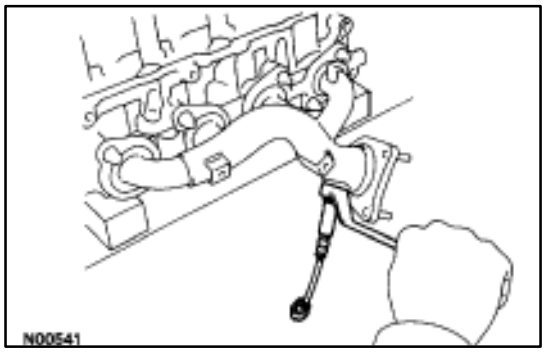

(c) Install the main oxygen sensor.
Torque: 44 N·m (450 kgf·cm, 33 ft·lbf)

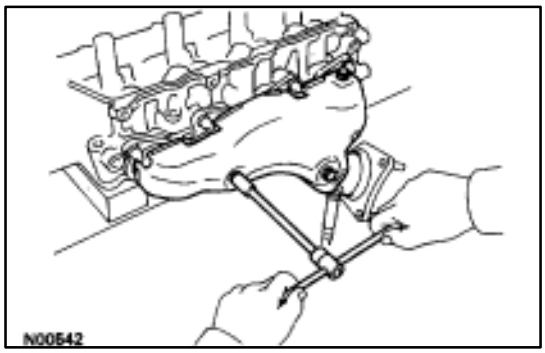

(d) Install the heat insulator with the three bolts.

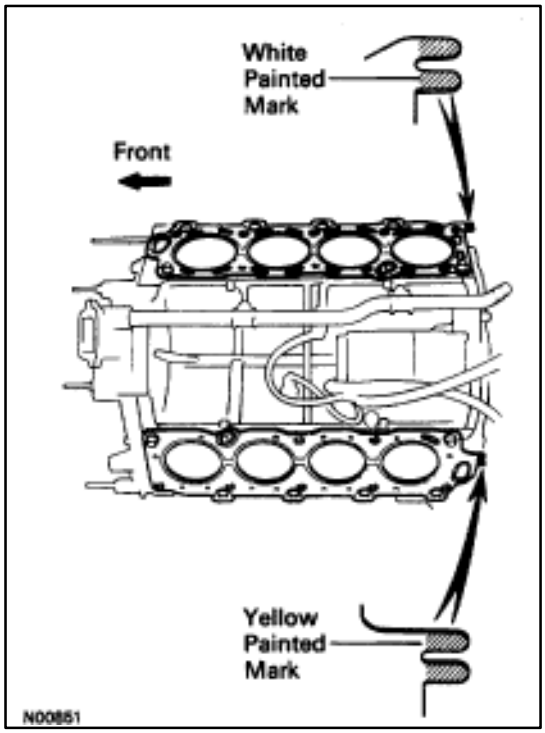

3. INSTALL CYLINDER HEADS

A. Place cylinder heads on cylinder block

(a) Place two new cylinder head gaskets in position on the cylinder block.

HINT: On the rear side of the cylinder head gasket are painted marks to distinguish the LH and RH banks, a white painted mark for the RH bank and a yellow painted mark for the LH bank.

NOTICE: Be careful of the installation direction.

(b) Place the two cylinder heads in position on the cylinder head gaskets.

WhereEverybodyKnowsYourName

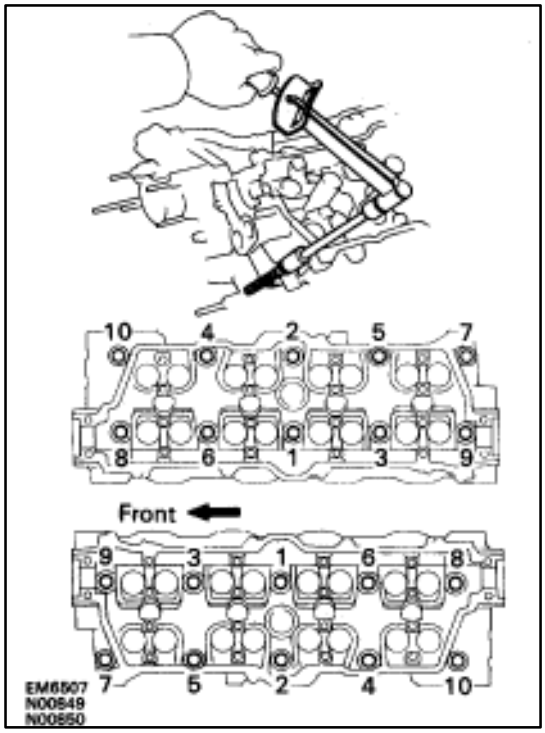

B. Install cylinder head bolts

HINT:

- The cylinder head bolts are tighten in two progressive steps (steps (c) and (e)).
- If any one of the cylinder head bolts broken or deformed, replace it.

(a) Apply a light coat of engine oil on the threads and under the heads of the cylinder head bolts.

(b) Temporarily install the twenty plate washers and cylinder head bolts.

(c) Uniformly tighten the ten cylinder head bolts on one side of the cylinder head in several passes in the sequence shown, then do the other side as shown.

Torque: 39 N·m (400 kgf·cm, 29 ft·lbf)

If any one of the bolts does not meet the torque specification, replace the bolt.

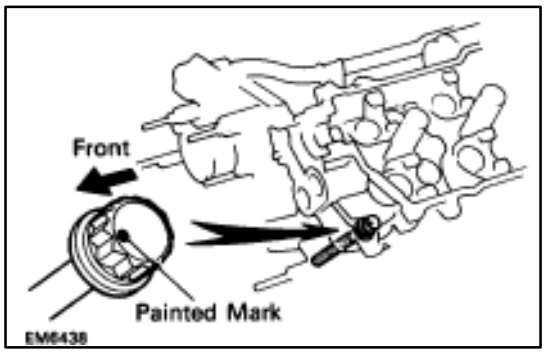

(d) Mark the front of the cylinder head bolt head with paint.

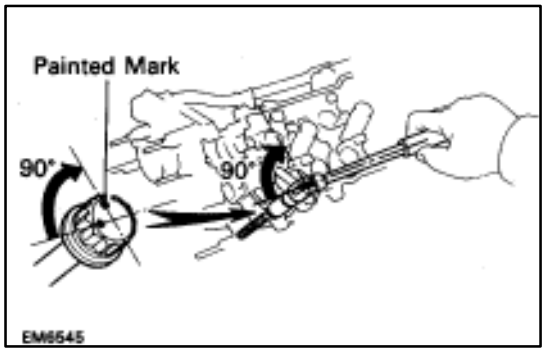

(e) Retighten the cylinder head bolts 90° in the numerical order shown.

(f) Check that the painted mark is now at a 90° angle to front.

4. CONNECT MAIN OXYGEN SENSOR CONNECTORS

Connect the RH and LH oxygen sensor connector.

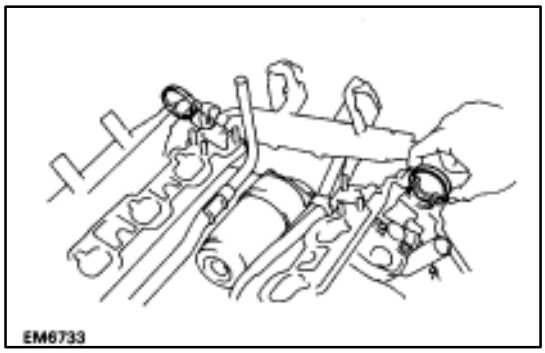

5. INSTALL CIRCULAR PLUGS

(a) Place two new circular plugs in position on the cylinder heads, facing the cup side forward.

WhereEverybodyKnowsYourName

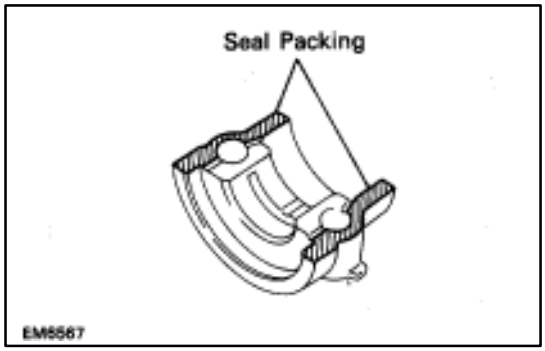

(b) Remove any old packing (FIPG) material.
(c) Apply seal packing to the bearing caps as shown.
Seal packing: Part No. 08826–00080 or equivalent

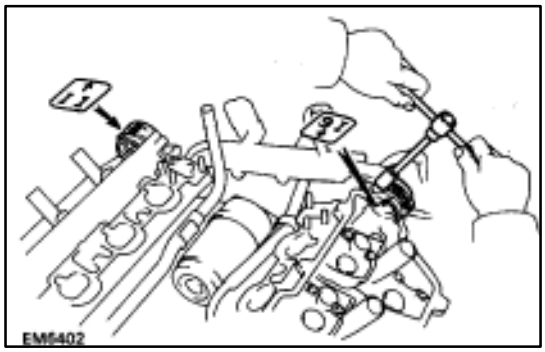

(d) (RH Cylinder Head)
Install the bearing cap (mark ”I1”) in position with the arrow mark facing rearward.
(e) (LH Cylinder Head)
Install the bearing cap (mark ”I6”) in position with the arrow mark facing forward.
(f) Install a new seal washer to the bearing cap bolt.
(g) Apply a light of engine oil on the threads of the bearing cap bolt.
(h) Install the four bearing cap bolts.
Torque: 16 N·m (160 kgf·cm, 12 ft·lbf)
HINT: Use silver colored bolts 38 mm (1.50 in.) in length.

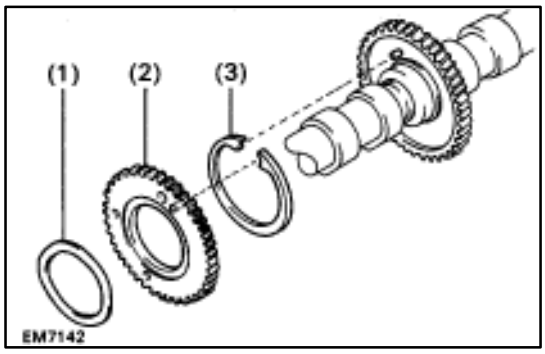

6. ASSEMBLE EXHAUST CAMSHAFTS
(a) Install the following parts:
(1) Camshaft gear spring
(2) Camshaft sub–gear
(3) Wave washer

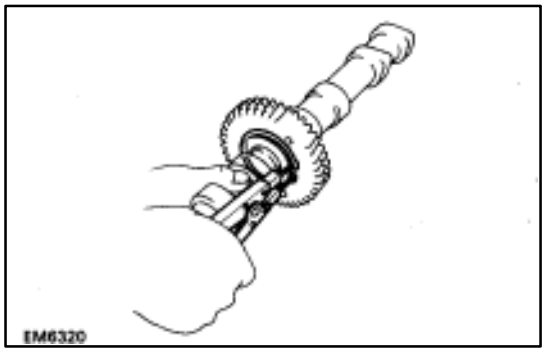

(b) Using snap ring pliers, install the snap ring.

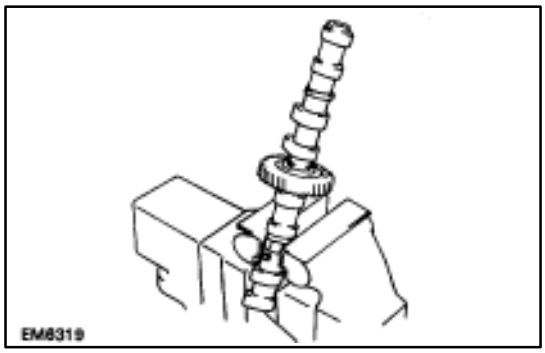

(c) Mount the hexagon wrench head portion of the camshaft in a vice.

WhereEverybodyKnowsYourName

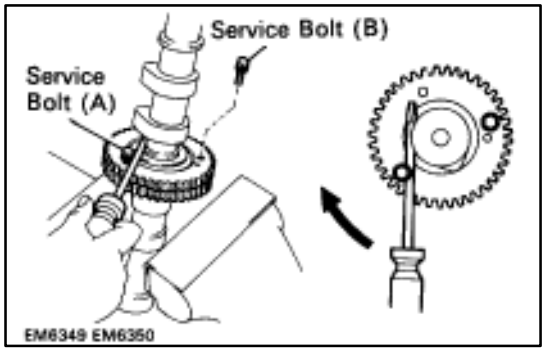

(d) Insert a service bolt (A) into the service hole of the camshaft sub–gear.
(e) Using a screwdriver, align the service holes and teeth of the camshaft driven gear and sub–gear by turning camshaft sub–gear clockwise, and install a service bolt (B).

NOTICE: Be careful not to damage the camshaft.

(f) Remove the service bolt (A).

7. INSTALL CAMSHAFTS

NOTICE: Since the thrust clearance of the camshaft is small, the camshaft must be held level while it is being installed. If the camshaft is not kept level, the portion of the cylinder head receiving the shaft thrust may crack or be damaged causing the camshaft to seize or break. To avoid this, the following steps should be carried out.

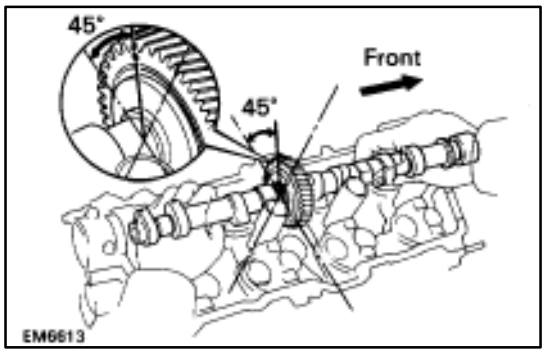

A. Install intake camshaft to RH cylinder head

(a) Apply MP grease to the thrust portion of the camshaft.
(b) Place the intake camshaft at 45° angle of the timing mark (one dot mark) on the cylinder head.

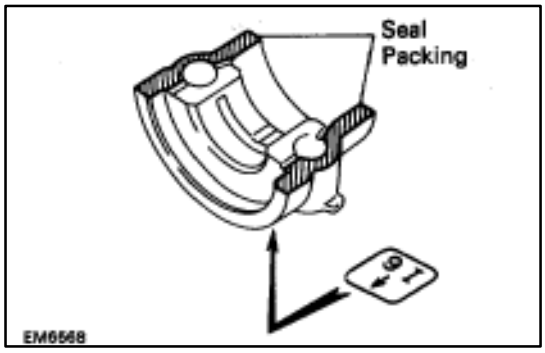

(c) Remove any old packing (FIPG) material.
(d) Apply seal packing to the bearing cap (mark ”I6”) as shown.

Seal packing: Part No. 08826–00080 or equivalent

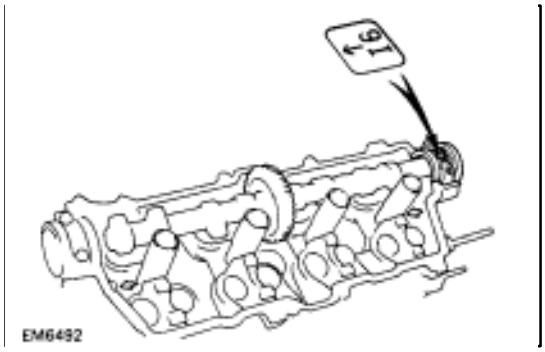

(e) Install the front bearing cap (mark ”I6”) with the arrow mark facing rearward.

HINT:

- Installing the front bearing cap will determine the thrust position of the camshaft.
- Align the arrow marks at front and rear of the cylinder head with the mark on the bearing cap.

WhereEverybodyKnowsYourName

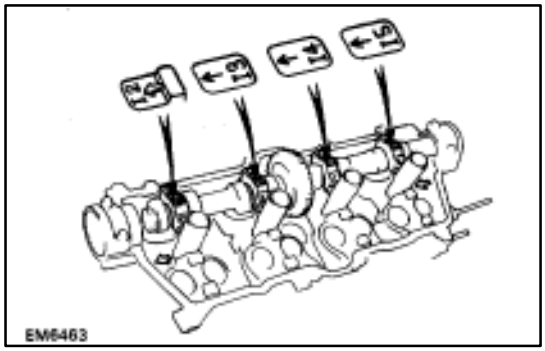

(f) Install the other bearing caps in the sequence shown with the arrow mark facing rearward.

HINT: Align the arrow marks at front and rear of the cylinder head with the mark on the bearing cap.

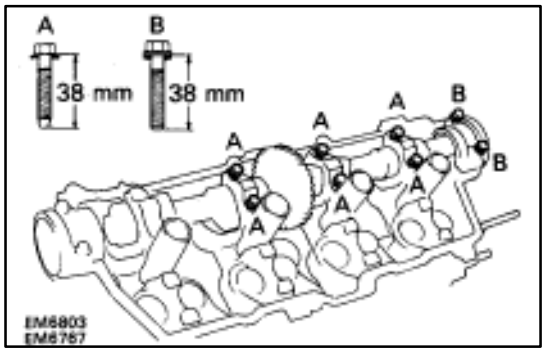

(g) Apply a light coat of engine oil on the threads and under the heads (A only) of the bearing cap bolts.

HINT: Do not apply engine oil under the heads of the bearing cap bolts (B).

(h) Install a new seal washer to the bearing cap bolt (B). Install the eight bearing cap bolts as shown.

HINT:

- Use bearing cap bolts 38 mm (1.50 in.) in length. The bolts are black (A) or silver (B) in color. Install the two silver bolts to the front bearing cap. Install the six black bolts to the other positions.
- After installing the oil feed pipe, install the two bolts to the rear bearing cap as directed in step B (i).

(i) Uniformly tighten the eight bearing cap bolts in several passes in the sequence shown.

Torque: 16 N·m (160 kgf·cm, 12 ft·lbf)

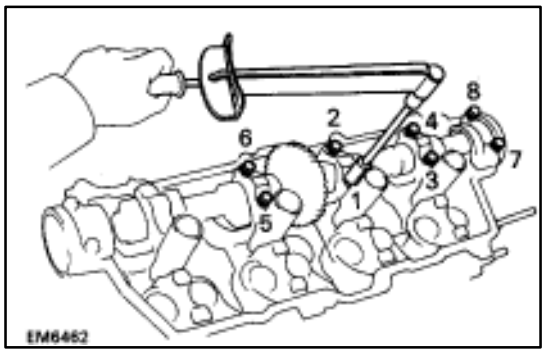

B. Install exhaust camshaft to RH cylinder head

(a) Set the timing mark (one dot mark) of the camshaft drive gear at 105 angle by turning the hexagon wrench head portion of the intake camshaft with a wrench.

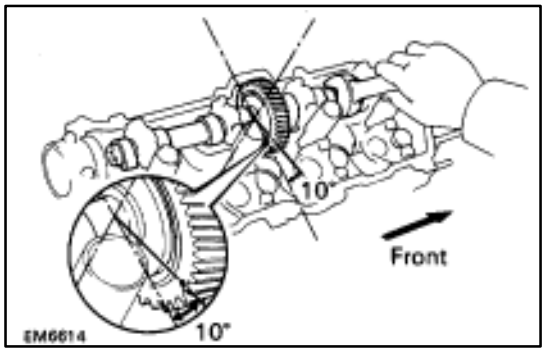

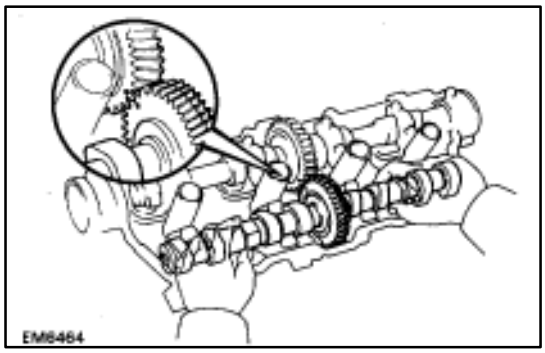

(b) Apply MP grease to the thrust portion of the exhaust camshaft.

(c) Align the timing marks (one dot mark) of the camshaft drive and driven gears.

(d) Place the exhaust camshaft on the cylinder head.

WhereEverybodyKnowsYourName

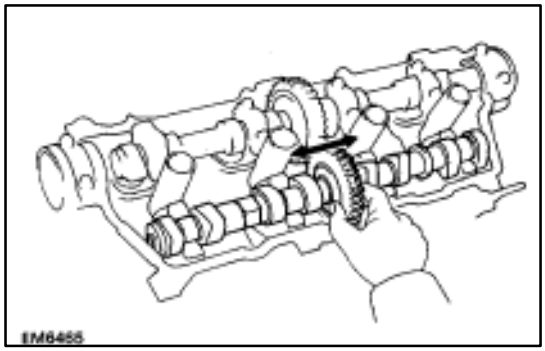

(e) Check that the exhaust camshaft moves smoothly in the thrust direction.

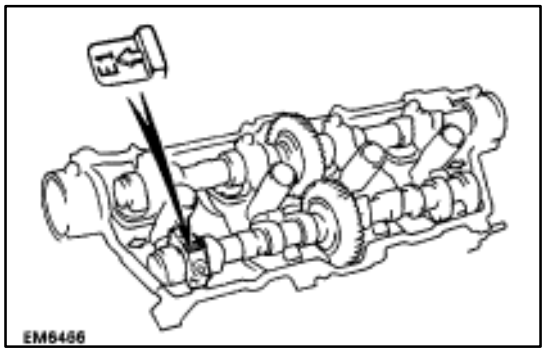

(f) Install the rear bearing cap with the arrow mark facing rearward.

HINT:

- Installing the rear bearing cap will determine the thrust position of the camshaft.
- Align the arrow marks at front and rear of the cylinder head with the mark on the bearing cap.

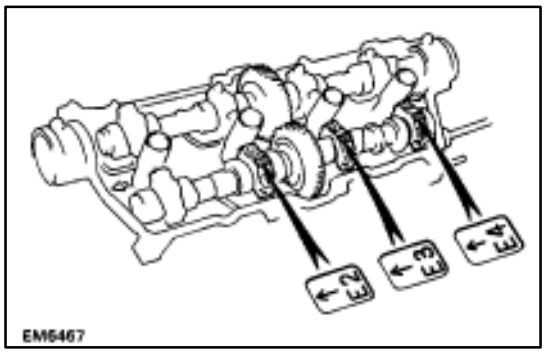

(g) Install the other bearing caps in the sequence shown with the arrow mark facing rearward.

HINT: Align the arrow marks at front and rear of the cylinder head with the mark on the bearing cap.

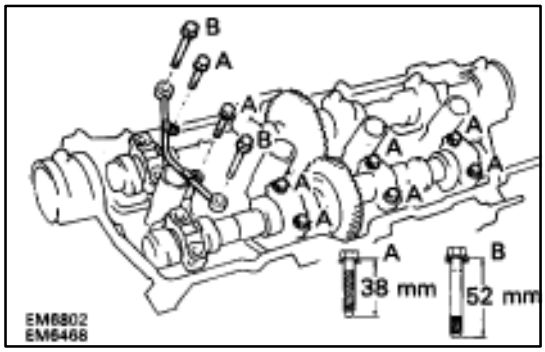

(h) Apply a light coat of engine oil on the threads and under the heads of the bearing cap bolts.

(i) Install the oil feed pipe and ten bolts.

HINT: Use bearing cap bolts 38 mm (1.50 in.) and 52 mm (2.05 in.) in length. Use black colored 38 mm (1.50 in.) bolts. Install the two 52 mm (2.05 in.) bolts in outside positions of the oil pipe. Install the eight 38 mm (1.50 in.) bolts in the other positions.

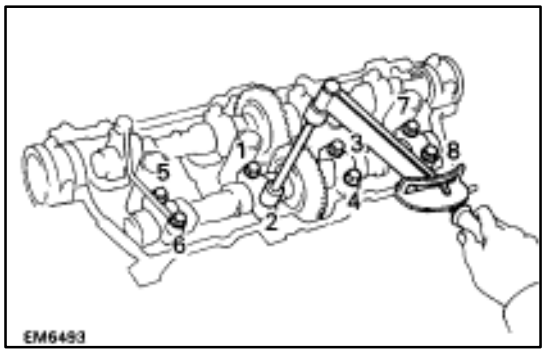

(j) Uniformly tighten the eight bearing cap bolts on the bearing caps of the exhaust camshaft in several passes in the sequence shown.

Torque: 16 N·m (160 kgf·cm, 12 ft·lbf)

WhereEverybodyKnowsYourName

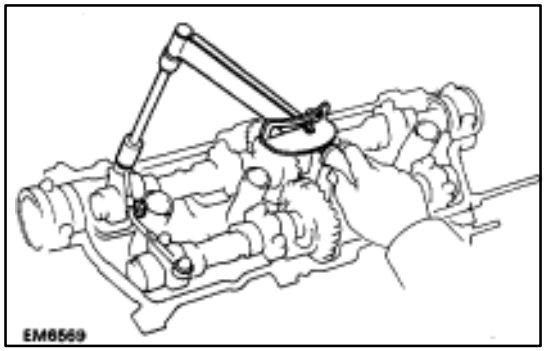

(k) Alternately tighten the two bearing cap bolts on the rear bearing cap of the intake camshaft in several passes.

Torque: 16 N·m (160 kgf·cm, 12 ft·lbf)

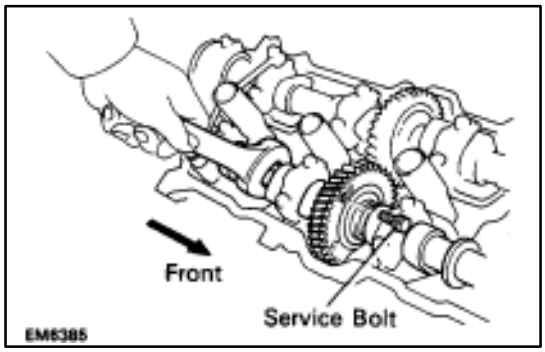

(l) Bring the service bolt installed in the driven subgear upward by turning the hexagon wrench head portion of the camshaft with a wrench.

(m) Remove the service bolt.

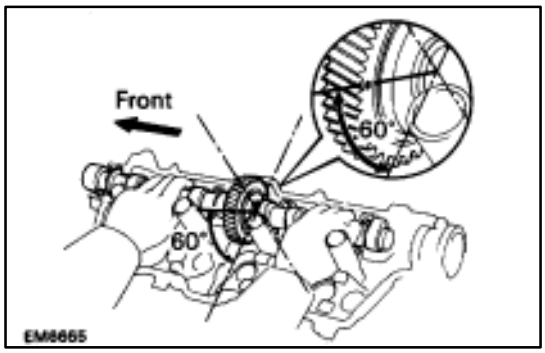

C. Install intake camshaft to LH cylinder head

(a) Apply MP grease to the thrust portion of the camshaft.

(b) Place the intake camshaft at 60° angle of the timing mark (one dot mark) on the cylinder head.

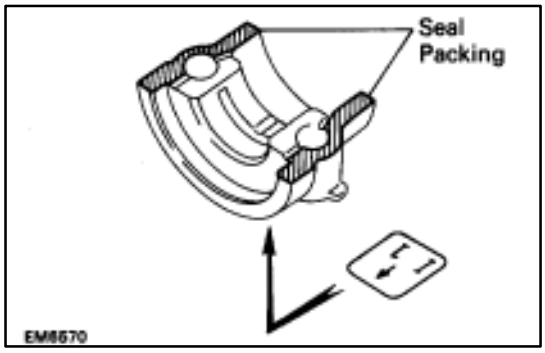

(c) Remove any old packing (FIPG) material.

(d) Apply seal packing to the bearing cap (mark ”I1”) as shown.

Seal packing: Part No. 08826–00080 or equivalent

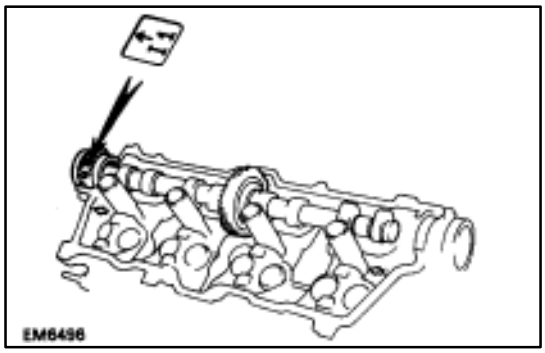

(e) Install the front bearing cap (mark ”I1”) with the arrow mark facing forward.

HINT:

- Installing the front bearing cap will determine the thrust position of the camshaft.
- Align the arrow marks at front and rear of the cylinder head with the mark on the bearing cap.

WhereEverybodyKnowsYourName

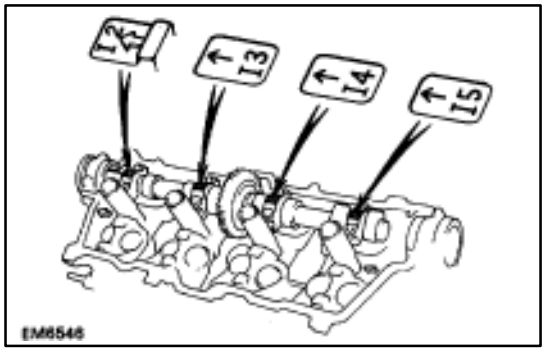

(f) Install the other bearing caps in the sequence shown with the arrow mark facing forward.

HINT: Align the arrow marks at front and rear of the cylinder head with the mark on the bearing cap.

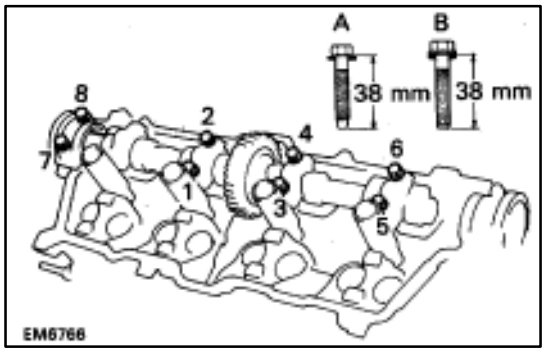

(g) Apply a light coat of engine oil on the threads and under the heads (A only) of the bearing cap bolts.

HINT: Do not apply engine oil under the heads of the bearing cap bolts (B).

(h) Install a new seal washer to the bearing cap bolt (B). Install the eight bearing cap bolts as shown.

HINT:

- Use bearing cap bolts 38 mm (1.50 in.) in length. The bolts are black (A) or silver (B) in color. Install the two silver bolts to the front bearing cap. Install the six black bolts to the other positions.
- After installing the oil feed pipe, install the two bolts to the bearing cap second from the front as directed in step D (i).

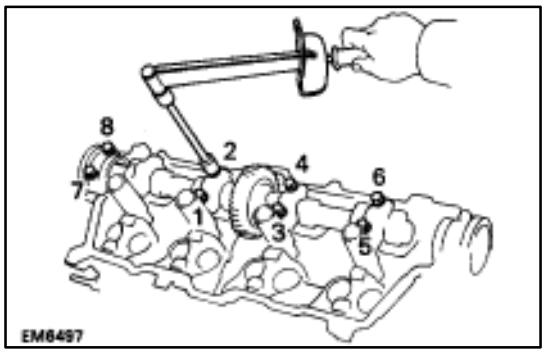

(i) Uniformly tighten the eight bearing cap bolts in several passes in the sequence shown.

Torque: 16 N·m (160 kgf·cm, 12 ft·lbf)

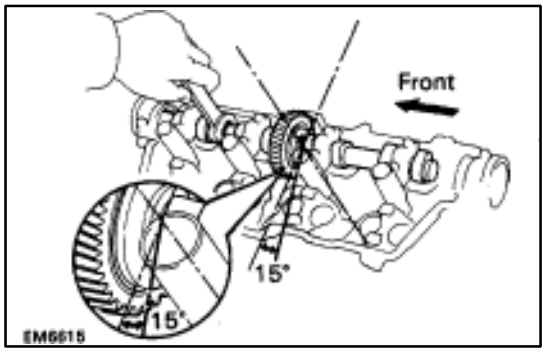

D. Install exhaust camshaft to LH cylinder head

(a) Set the timing mark (two dot marks) of the camshaft drive gear at 15° angle by turning the hexagon wrench head portion of the intake camshaft with a wrench.

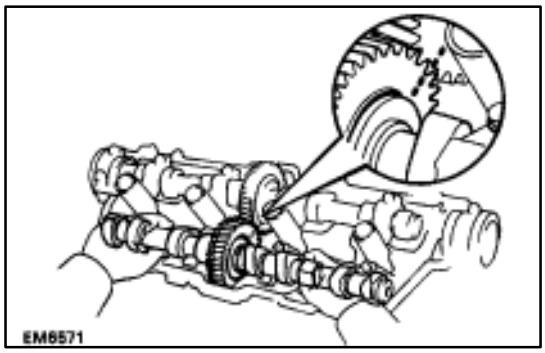

(b) Apply MP grease to the thrust portion of the exhaust camshaft.

(c) Align the timing marks (two dot marks) of the camshaft drive and driven gears.

(d) Place the exhaust camshaft on the cylinder head.

WhereEverybodyKnowsYourName

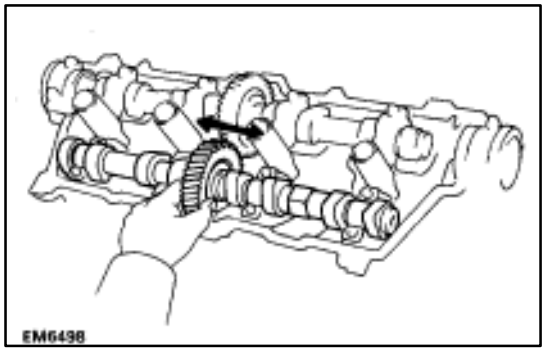

(e) Check that the exhaust camshaft moves smoothly in the thrust direction.

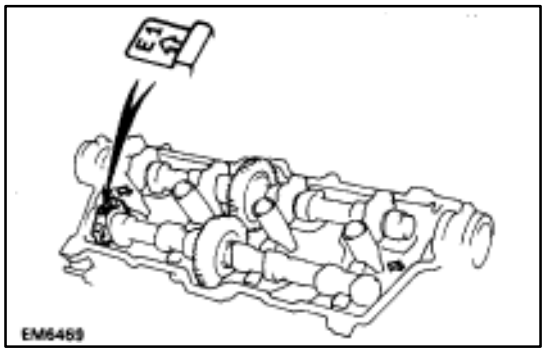

(f) Install the front bearing cap with the arrow mark facing forward.

HINT:

- Installing the front bearing cap will determine the thrust position of the camshaft.
- Align the arrow marks at front and rear of the cylinder head with the mark on the bearing cap.

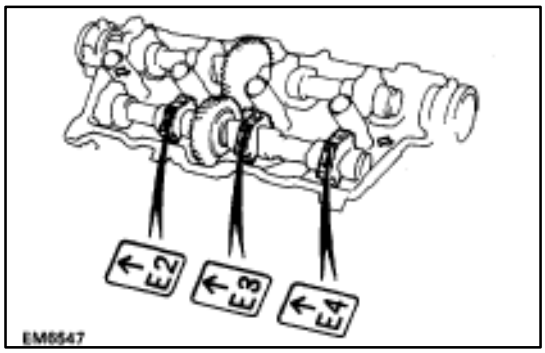

(g) Install the other bearing caps in the sequence shown with the arrow mark facing forward.

HINT: Align the arrow marks at front and rear of the cylinder head with the mark on the bearing cap.

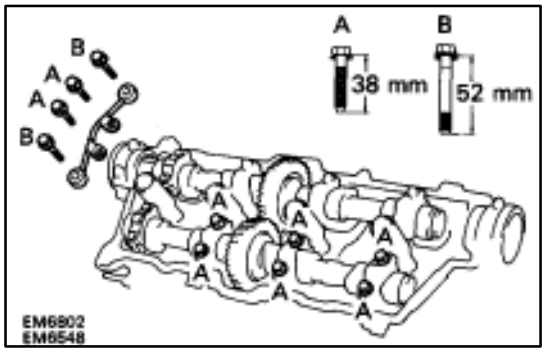

(h) Apply a light coat of engine oil on the threads and under the heads of the bearing cap bolts.

(i) Install the oil feed pipe and ten bolts.

HINT: Use bearing cap bolts 38 mm (1.50 in.) and 52 mm (2.05 in.) in length. Use black colored 38 mm (1.50 in.) bolts. Install the two 52 mm (2.05 in.) bolts in outside positions of the oil pipe. Install the eight 38 mm (1.50 in.) bolts in the other positions.

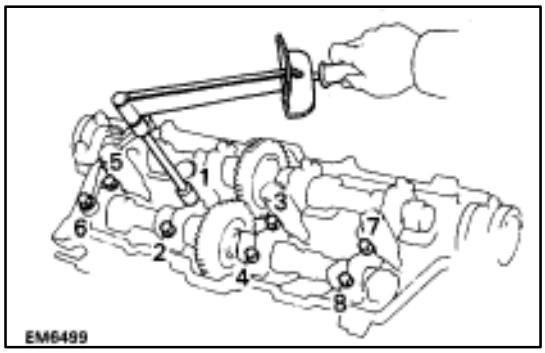

(j) Uniformly tighten the eight bearing cap bolts on the bearing caps of the exhaust camshaft in several passes in the sequence shown.

Torque: 16 N·m (160 kgf·cm, 12 ft·lbf)

WhereEverybodyKnowsYourName

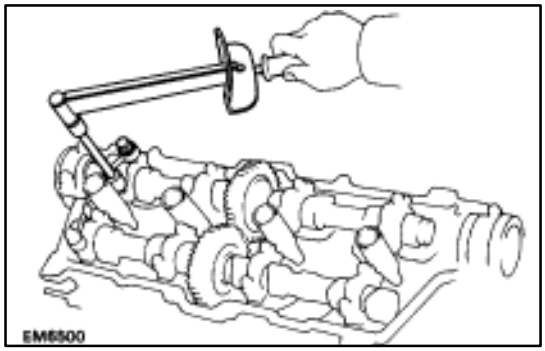

(k) Alternately tighten the two bearing cap bolts on the bearing cap of the intake camshaft second from the front in several passes.

Torque: 16 N·m (160 kgf·cm, 12 ft·lbf)

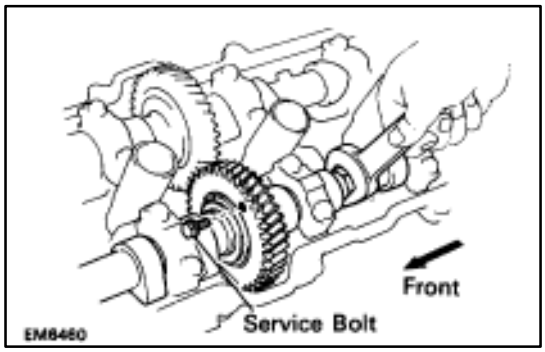

(l) Bring the service bolt installed in the driven subgear upward by turning the hexagon wrench head portion of the camshaft with a wrench.

(m) Remove the service bolt.

8. CHECK AND ADJUST VALVE CLEARANCE

(See steps 19 to 23 on pages EM–15 to 22)

Turn the camshaft, and position the cam lobe upward, check and adjust the valve clearance.

Valve clearance:

Intake 0.15–0.25 mm (0.006–0.010 in.)

Exhaust 0.25–0.35 mm (0.010–0.014 in.)

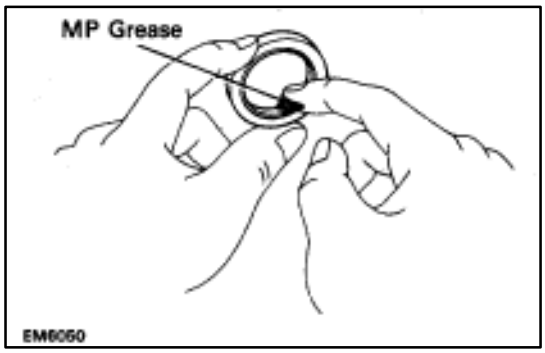

9. INSTALL CAMSHAFT OIL SEALS

(a) Apply MP grease to a new oil seal lip.

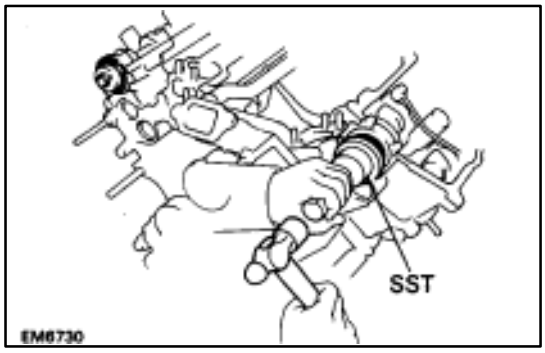

(b) Using SST and a hammer, tap in the two oil seals.

SST 09223–46011

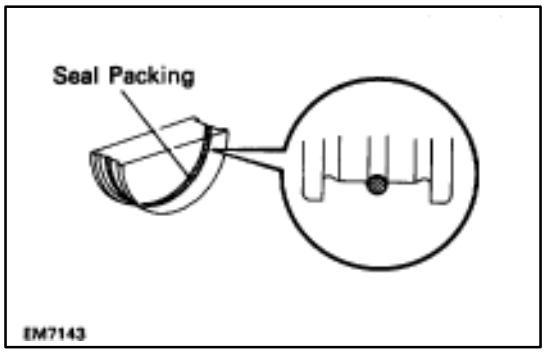

10. INSTALL SEMI–CIRCULAR PLUGS

(a) Remove any oil packing (FIPG) material.

(b) Apply seal packing to the semi–circular plug groove.

Seal packing: Part No. 08826–00080 or equivalent

WhereEverybodyKnowsYourName

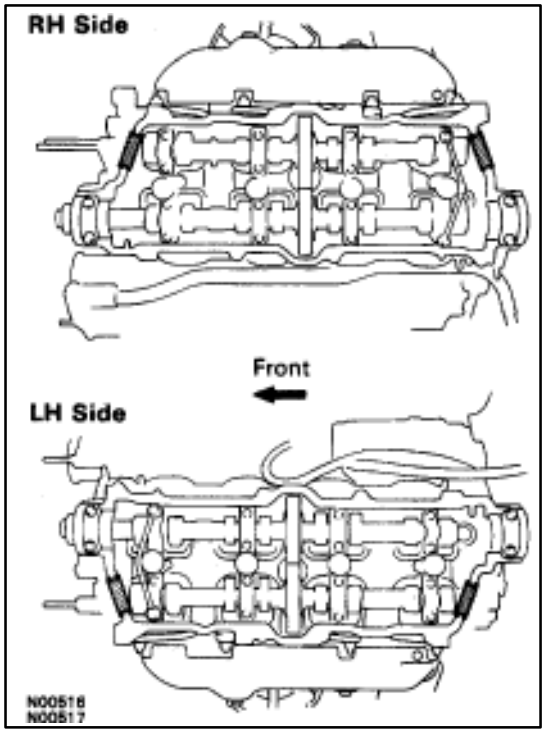

(c) Install the four semi–circular plugs.

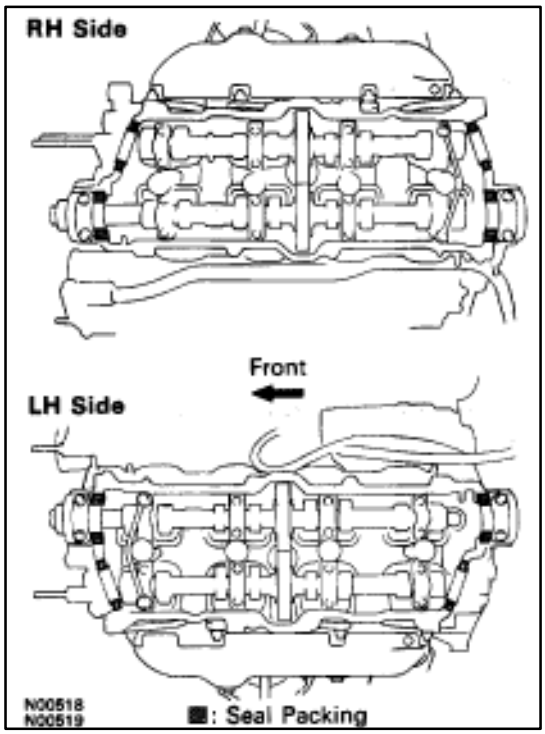

11. INSTALL CYLINDER HEAD COVERS

(a) Remove any oil packing (FIPG) material.

(b) Apply seal packing to the cylinder heads as shown in the figure.

Seal packing: Part No.08826–00080 or equivalent

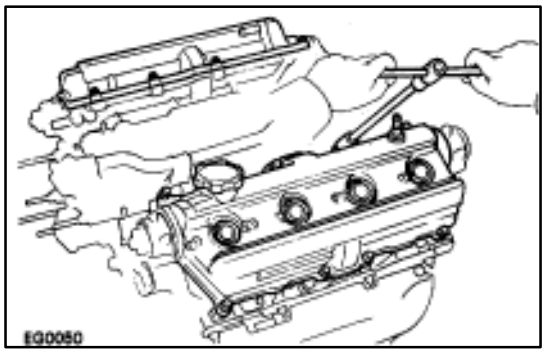

(c) Install the gasket to the cylinder head cover.

(d) Install the seal washer to the bolt. Install the cylinder head cover with the eight bolts. Uniformly tighten the bolts. Install the two cylinder head covers

Torque: 5.9 N·m (60 kgf·cm, 52 in.·lbf)

WhereEverybodyKnowsYourName

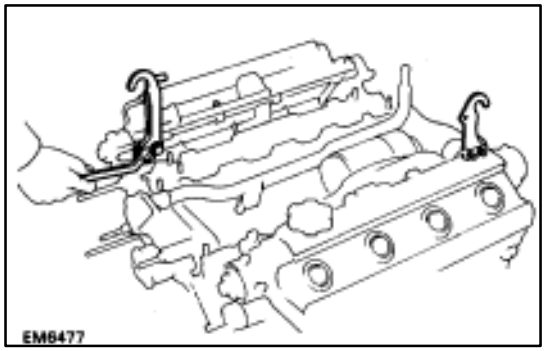

12. INSTALL ENGINE HANGERS

Install the engine hanger with the two bolts.

Install the two engine hangers.

Torque: 37 N·m (380 kgf·cm, 27 ft·lbf)

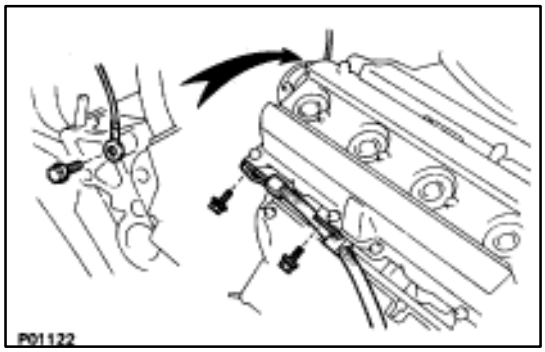

13. CONNECT GROUND STRAP TO RH CYLINDER HEAD

14. INSTALL ENGINE WIRE TO RH CYLINDER HEAD

Install the engine wire with the two bolts.

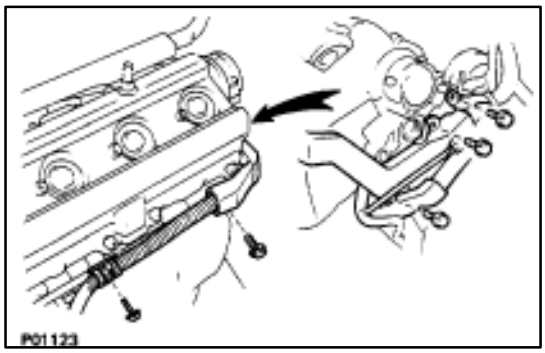

15. INSTALL ENGINE WIRE TO LH CYLINDER HEAD

Install the engine wire with the five bolts.

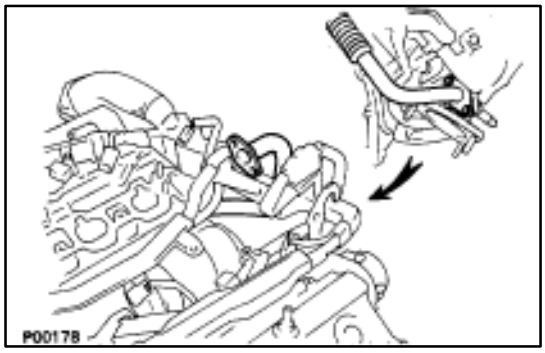

16. INSTALL EGR PIPE TO RH EXHAUST MANIFOLD

Install a new gasket and the EGR pipe with the two new nuts.

Torque: 18 N·m (185 kgf·cm, 13 ft·lbf)

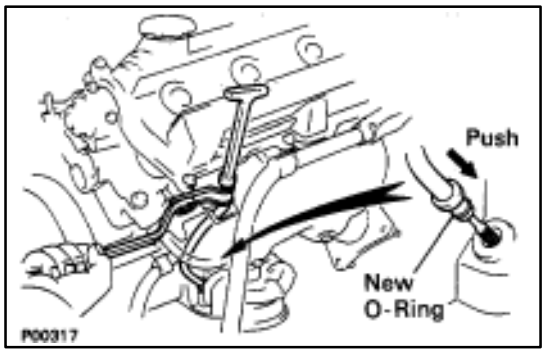

17. INSTALL OIL DIPSTICK AND GUIDE FOR ENGINE

(a) Install a new O–ring to the dipstick guide.
(b) Apply a light of engine oil on the O–ring.
(c) Push in the dipstick guide into the guide hole of the No.1 oil pan.
(d) Install the dipstick guide with the bolt.
(e) Install the oil dipstick.

18. INSTALL OIL DIPSTICK AND GUIDE FOR A/T

WhereEverybodyKnowsYourName

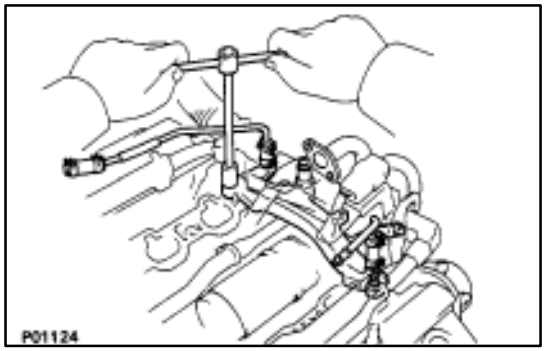

19. INSTALL REAR WATER BY–PASS JOINT

(a) Install two new gaskets and the water by–pass joint with the four nuts. Alternately tighten the nuts.

Torque: 18 N·m (185 kgf·cm, 13 ft·lbf)

(b) Install the bolt holding the water by–pass pipe to the engine hanger.

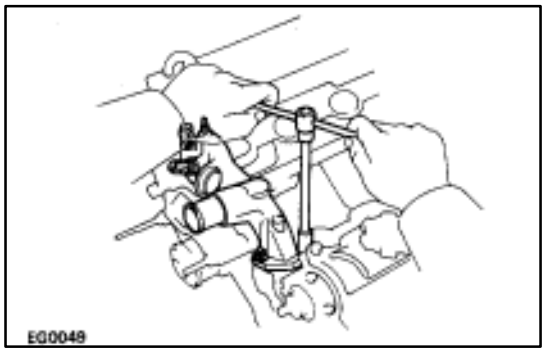

20. INSTALL FRONT WATER BY–PASS JOINT

(a) Install two new gaskets and the water by–pass joint with the four nuts. Alternately tighten the nuts.

Torque: 18 N·m (185 kgf·cm, 13 ft·lbf)

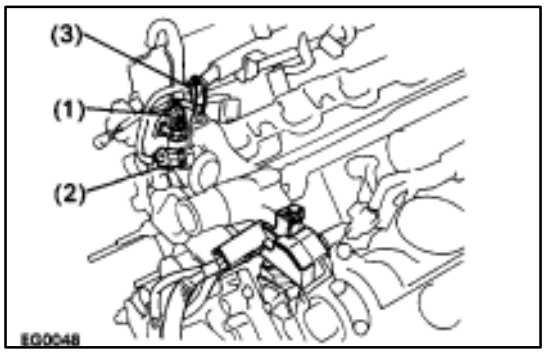

(b) Install the engine wire clamp with the bolt.

(c) Connect the following connectors:

(1) Water temperature sensor connector

(2) Cold start injector time switch connector

(3) Water temperature sender gauge connector

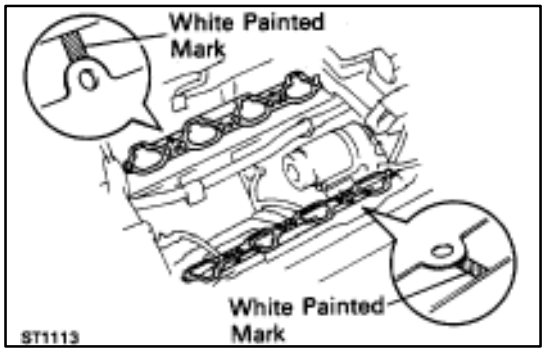

21. INSTALL INTAKE MANIFOLD

(a) Place two new gaskets on the cylinder heads with the white painted mark facing upward.

NOTICE: Align the port holes of the gasket and cylinder head. Be careful of the installation direction.

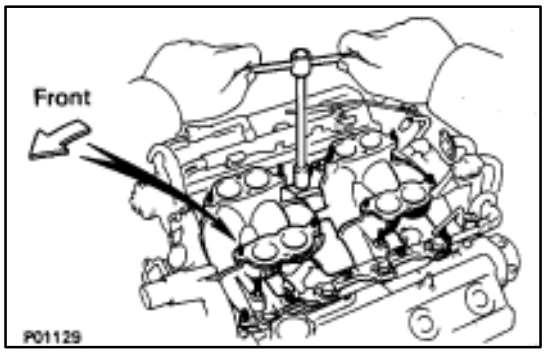

(b) Place the intake manifold in position on the cylinder head with the arrow mark facing forward.

NOTICE: Be careful of the installation direction.

(c) Install and uniformly tighten the six mounting bolts and four mounting nuts.

Torque: 18 N·m (185 kgf·cm, 13 ft·lbf)

HINT: Use bolts 30 mm (1.18 in.) in length.

WhereEverybodyKnowsYourName

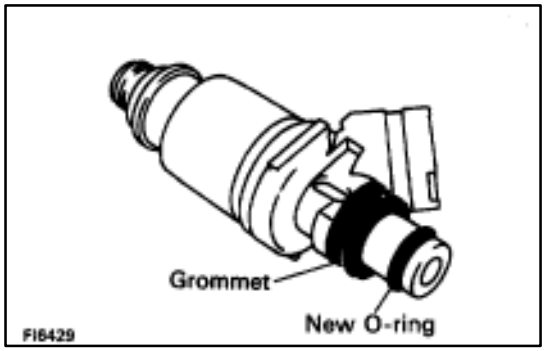

22. INSTALL DELIVERY PIPES AND INJECTORS

(a) Install the grommet and a new O–ring to each injector.

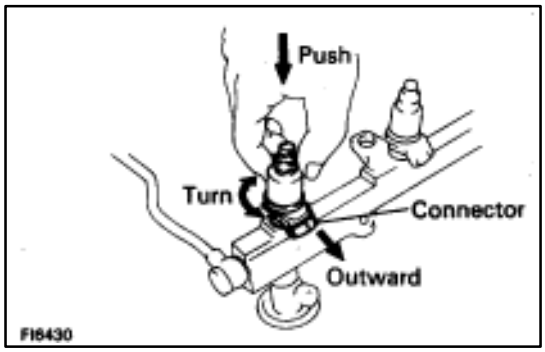

(b) While turning the Injector clockwise and counterclockwise, push it to delivery pipe. Install the eight injectors.

(c) Position the injector connector outward.

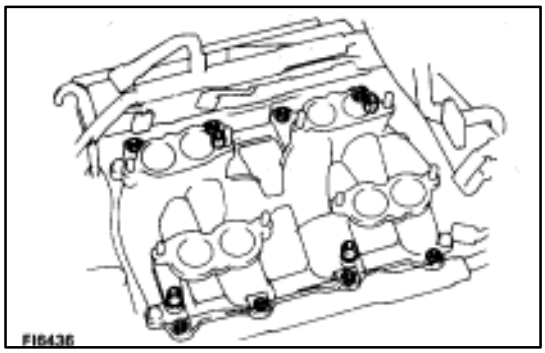

(d) Place the eight insulators and four spacers in positions on the intake manifold.

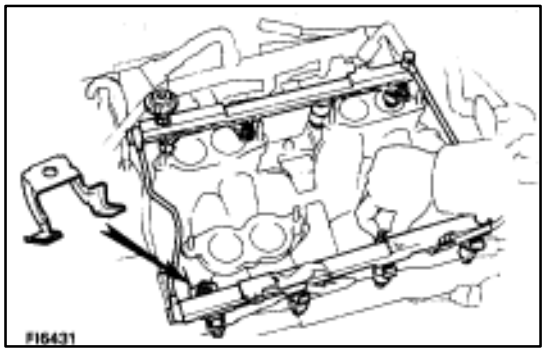

(e) Place the eight injectors and two delivery pipes assembly in position on the intake manifold.

(f) Temporarily install the connector bracket and four mounting nuts.

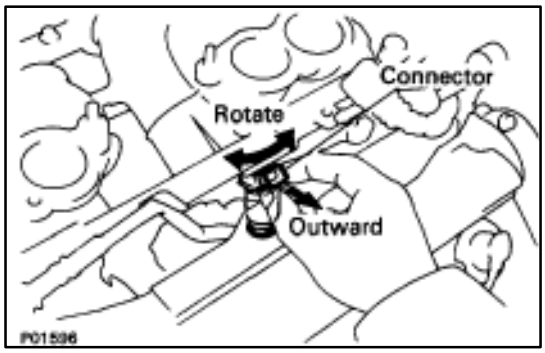

(g) Check that the injectors rotates smoothly.

(h) Position the injector connectors outward.

WhereEverybodyKnowsYourName

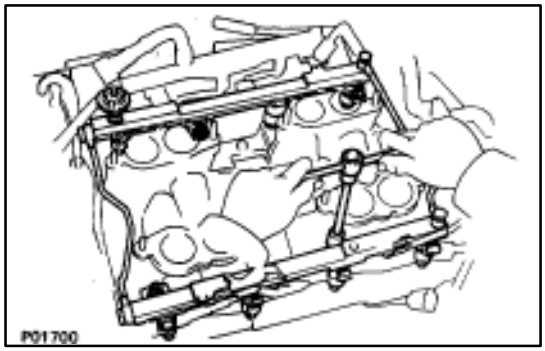

(i) Tighten the four mounting nuts.
Torque: 18 N·m (185 kgf·cm, 13 ft·lbf)

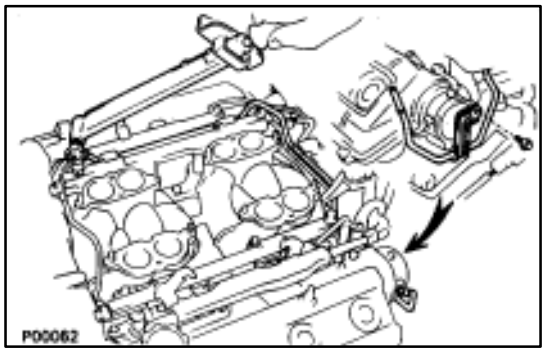

23. INSTALL FUEL RETURN PIPE

(a) Temporarily install the return pipe with the bolt, two new gaskets and union bolt.
(b) Tighten the union bolt holding the return pipe to the fuel pressure regulator.
Torque: 35 N·m (360 kgf·cm, 26 ft·lbf)
(c) Tighten the bolt holding the return pipe to the LH cylinder head.

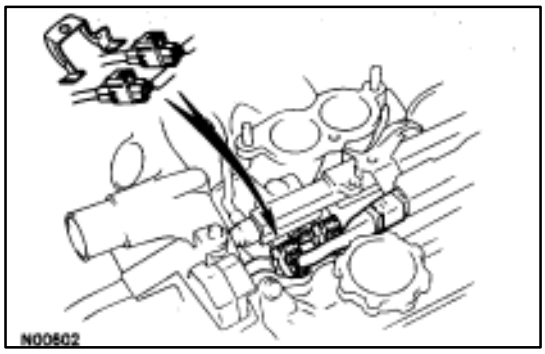

24. INSTALL ENGINE WIRE TO DELIVERY PIPES, REAR WATER BY–PASS JOINT AND RH CYLINDER HEAD

(a) Connect the eight injector connectors.
(b) Install the two engine wire connectors to connectors bracket on the LH delivery pipe.

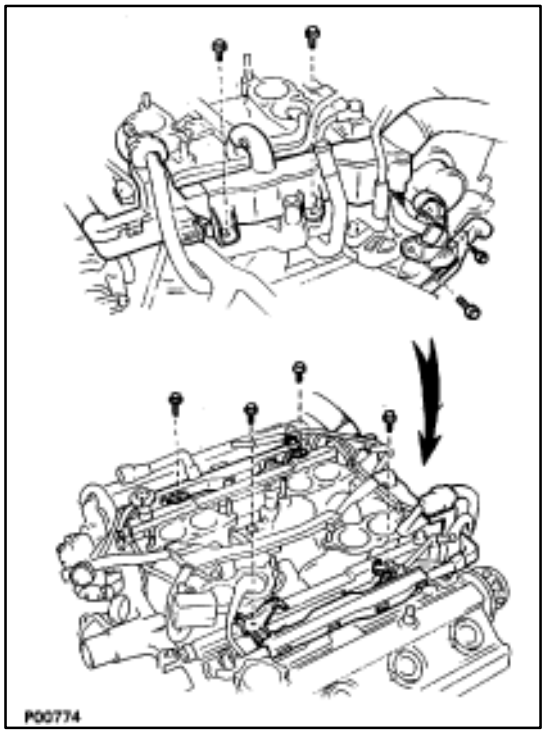

(c) Install the engine wire to the RH cylinder head with the two bolts.
(d) Install the engine wire to the rear water by–pass joint with the two bolts.
(e) Install the engine wire to the delivery pipes with the four bolts.

WhereEverybodyKnowsYourName

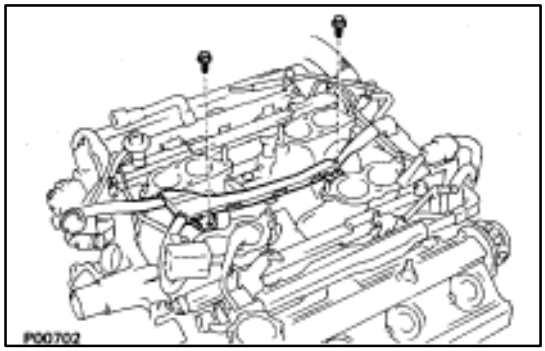

25. INSTALL ENGINE WIRE TO INTAKE MANIFOLD

Install the engine wire with the two bolts.

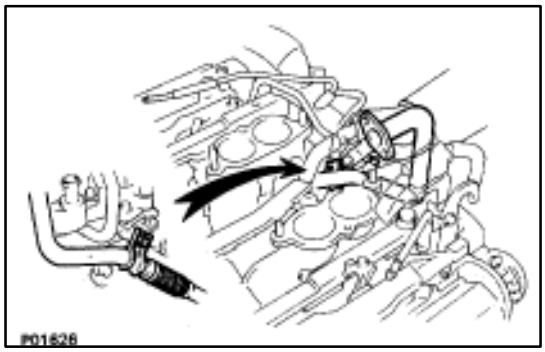

26. TEMPORARILY INSTALL EGR PIPE TO RH CYLINDER HEAD

Temporarily install a new gasket and the EGR pipe with the two bolts.

HINT: Use bolt 25 mm (0.98 in.) in length.

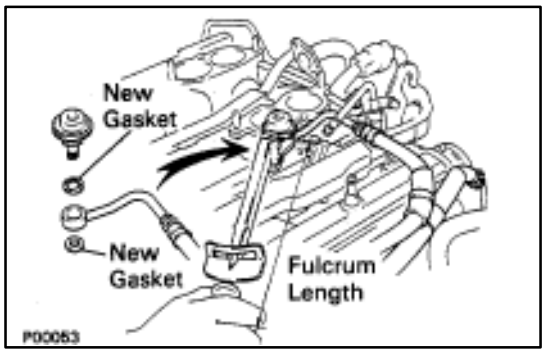

27. CONNECT FUEL RETURN HOSE TO FUEL RETURN PIPE

28. CONNECT FUEL INLET HOSE TO LH DELIVERY PIPE

Connect the inlet hose with two new gaskets and the pulsation damper.

SST 09612–24012 (09617–24011)

Torque: 39 N·m (400 kgf·cm, 29 ft·lbf)

33 N·m (340 kgf·cm, 24 ft·lbf) for SST

HINT: Use a torque wrench with a fulcrum length of 30 cm (11.81 in.).

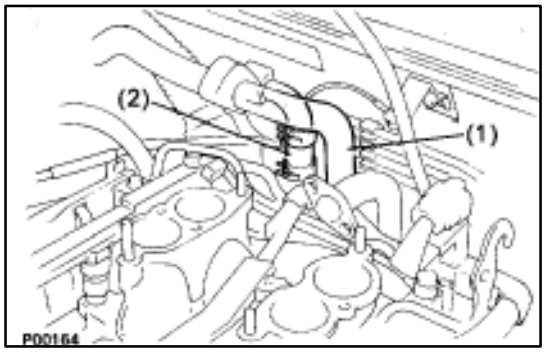

29. CONNECT HEATER WATER HOSES

Connect the following hoses:

(1) Water hose to water by–pass pipe

(2) Water hose to rear water by–pass joint

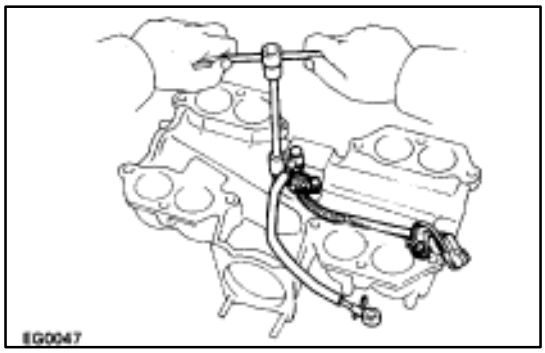

30. INSTALL AIR INTAKE CHAMBER

(a) Install the cold start injector, tube and wire assembly with the three bolts.

Torque: 7.8 N·m (80 kgf·cm, 69 in.·lbf)

WhereEverybodyKnowsYourName

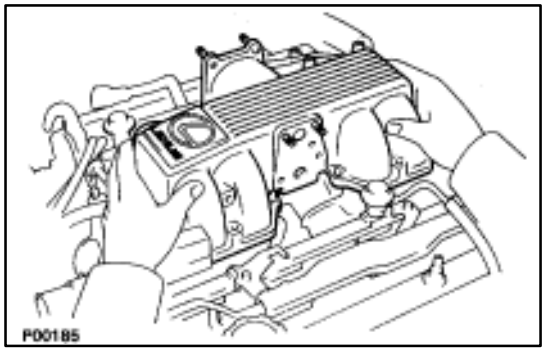

(b) Place four new gaskets on the intake manifold.

HINT: Gaskets can only be used twice before being replaced.

(c) Place the air intake chamber on the intake manifold.

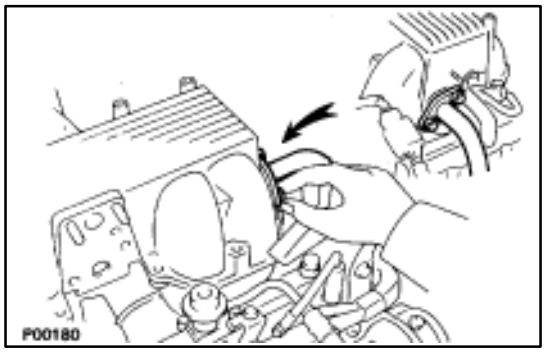

(d) Temporarily connect the EGR pipe to the air intake chamber with a new gasket and the two bolts.

HINT: Use bolts 20 mm (0.79 in.) in length.

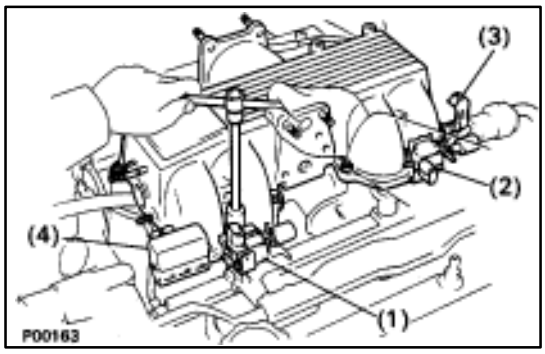

(e) Temporarily install the air intake chamber and following parts with the four bolts and eight nuts:
   (1) VSV for fuel pressure control system
   (2) (Exc. USA Spec.)
       VSV for EGR system
   (3) A/T throttle cable bracket
   (4) Check connector (”DIAGNOSIS”) connector

(f) Uniformly tighten the bolts and nuts in several passes.

Torque: 18 N·m (185 kgf·cm, 13 ft·lbf)

HINT: Use bolts 40 mm (1.57 in.) in length.

(g) Tighten the two bolts holding the EGR pipe to the air intake chamber.

Torque: 18 N·m (185 kgf·cm, 13 ft·lbf)

(h) Tighten the two bolts holding the EGR pipe to the RH cylinder head.

Torque: 18 N·m (185 kgf·cm, 13 ft·lbf)

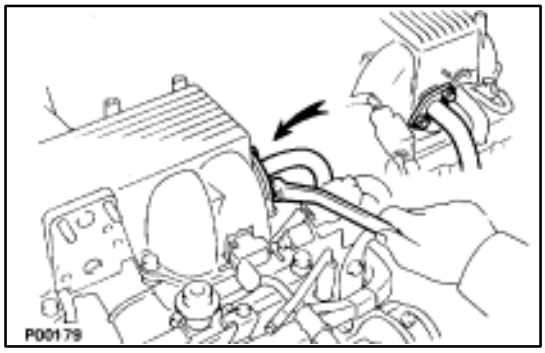

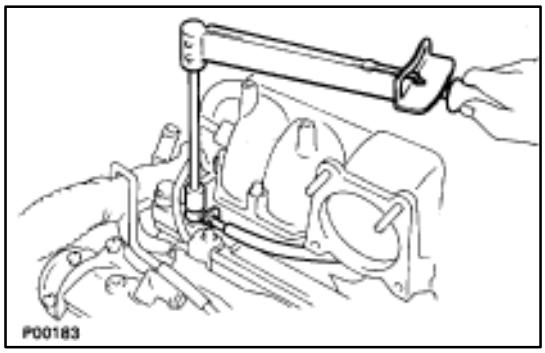

(i) Connect the cold start injector tube to the RH delivery pipe with the two new gaskets and the union bolt.

Torque: 15 N·m (150 kgf·cm, 11 ft·lbf)

(j) Connect the following connectors:
   - Cold start injector connector
   - SV connector for fuel pressure control system
   - (Exc. USA Spec.)
     VSV connector for EGR system

WhereEverybodyKnowsYourName

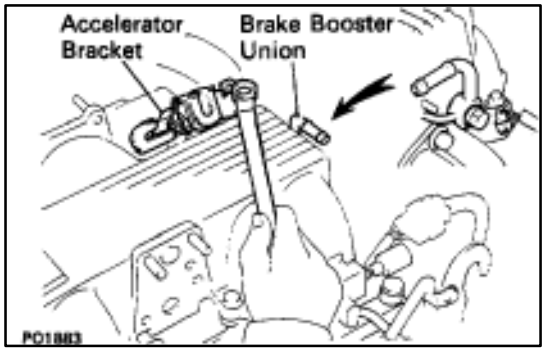

31. INSTALL ACCELERATOR BRACKET

Install the bracket with the bolt and stud bolt.

32. INSTALL BRAKE BOOSTER UNION

Install the union with two new gaskets and the union bolt.

Torque: 29 N·m (300 kgf·cm, 22 ft·lbf)

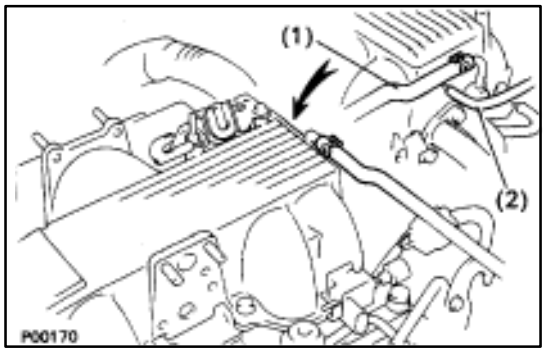

33. CONNECT VACUUM HOSES

Connect the following hoses:

(1) Vacuum hose to brake booster union

(2) Vacuum hose (from VSV for heater water valve) to air intake chamber

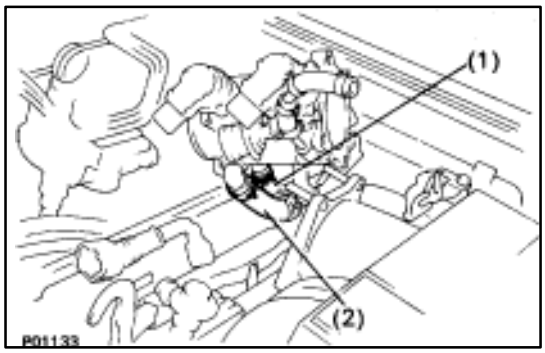

34. INSTALL THROTTLE BODY

(a) Connect the following hoses:

(1) Water by–pass hose to throttle body

(2) PCV hose to throttle body

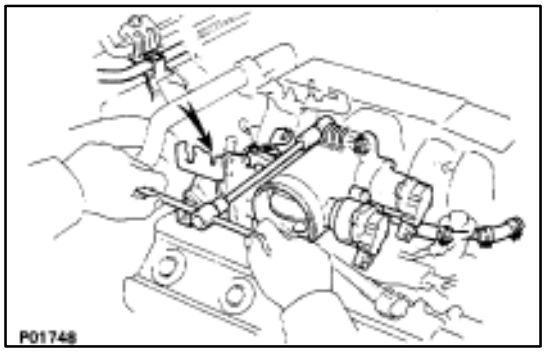

(b) Install a new gasket and throttle body with the two bolts and two nuts.

Torque: 18 N·m (185 kgf·cm, 13 ft·lbf)

HINT: Use bolts 40 mm (1.57 in.) in length.

(c) Install the water by–pass pipe (from rear water bypass joint) to the clamp on the engine wire cover.

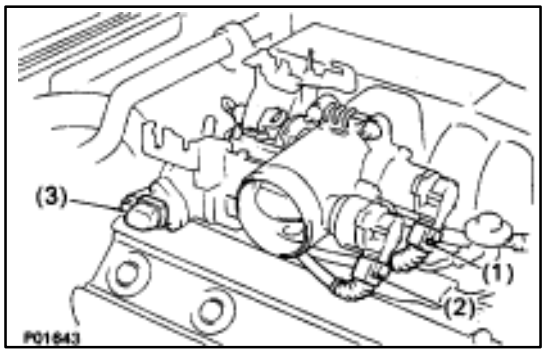

(d) Connect the following connectors:

(1) Throttle position sensor connector

(2) (w/ TRAC)
Sub–throttle position sensor connector

(3) (w/ TRAC)
Sub–throttle actuator connector

WhereEverybodyKnowsYourName

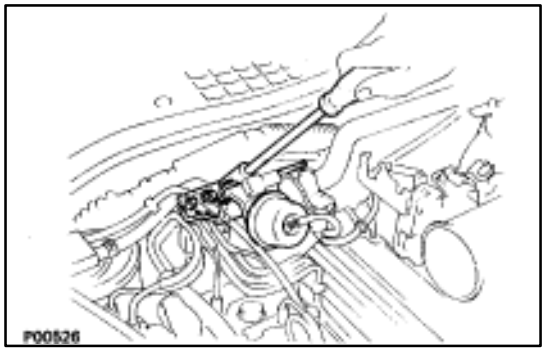

35. INSTALL HEATER WATER VALVE

(a) Install the water valve and bracket assembly with the two bolts.
(b) Install the engine wire clamp with the bolt.
(c) Connect the VSV connector.

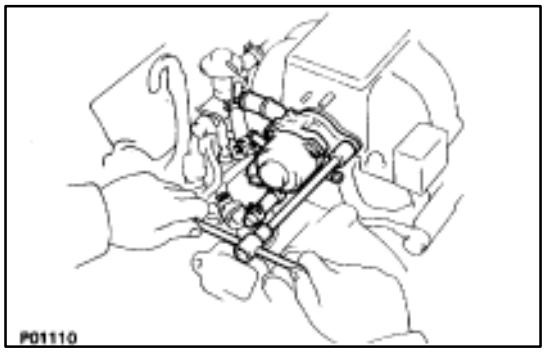

36. INSTALL ISC VALVE

(a) Install a new gasket and the ISC valve with the two nuts.
Torque: 18 N·m (185 kgf·cm, 13 ft·lbf)

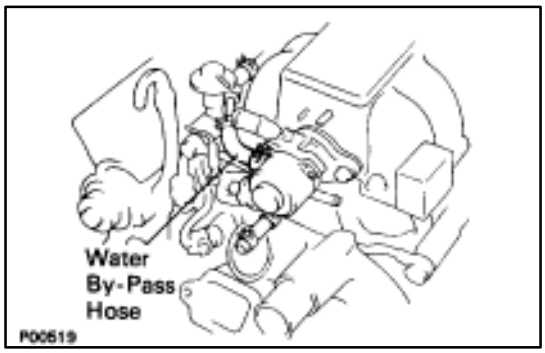

(b) Connect the water by–pass hose (from throttle body) to the ISC valve.
(c) Connect the ISC valve connector.

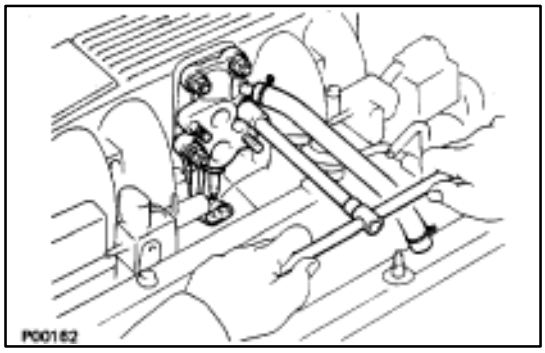

37. INSTALL EGR VALVE ADAPTOR

(a) Install a new gasket, the adaptor and connector bracket (USA spec. only) with the two bolts and two nuts.
Torque: 18 N·m (185 kgf·cm, 13 ft·lbf)
HINT: Use bolts 20 mm (1.79 in.) in length.
NOTICE: Do not touch the air intake chamber and adaptor surfaces of the gasket with your hand.

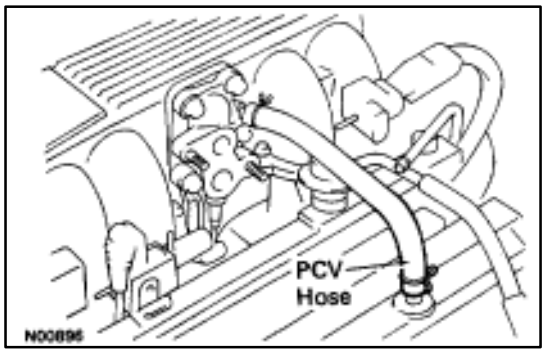

(b) Connect the PCV hose to cylinder head.
(c) (USA Spec. only)
Connect the EGR gas temperature sensor connector.

WhereEverybodyKnowsYourName

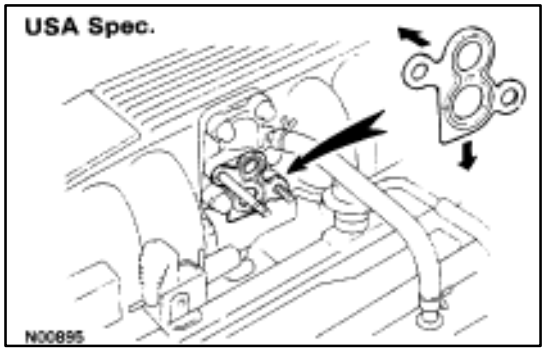

38. (USA Spec.)
INSTALL EGR VALVE

(a) Place a new gasket on the EGR valve adaptor.

NOTICE:

- **Do not touch the adapter and EGR valve surfaces of the gasket with your hand.**
- **Align the port holes of the gasket and adaptor. Be careful of the installation direction.**

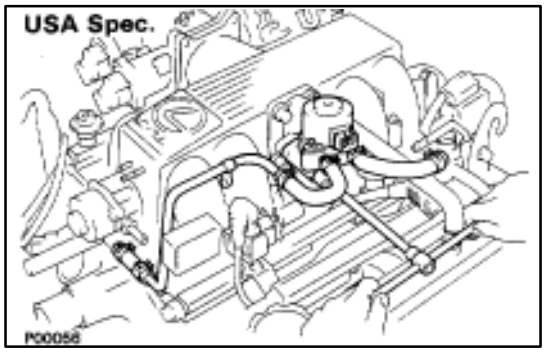

(b) Install the EGR valve with the two nuts.

Torque: 18 N·m (185 kgf·cm, 13 ft·lbf)

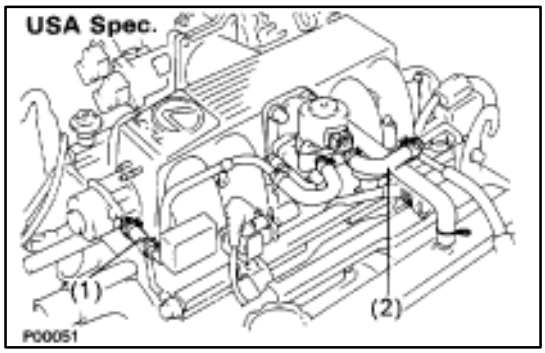

(c) Connect the following hoses:
  (1) Water by–pass pipe hose to ISC valve
  (2) Water by–pass pipe hose to water by–pass pipe (from rear water by–pass joint)

(d) Connect the EGR valve connector.

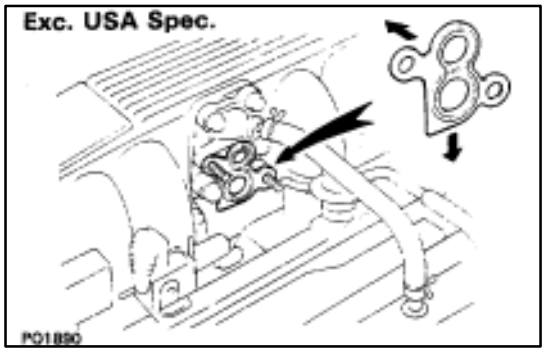

39. (Exc. USA Spec.)
INSTALL EGR VALVE AND VACUUM MODULATOR

(a) Place a new gasket on the EGR valve adaptor.

NOTICE:

- **Do not touch the adapter and EGR valve surfaces of the gasket with your hand.**
- **Align the port holes of the gasket and adaptor. Be careful of the installation direction.**

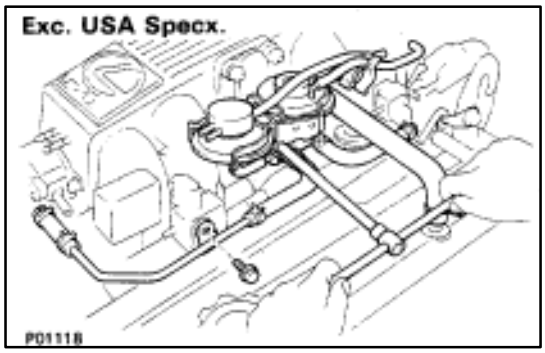

(b) Install the EGR valve and vacuum and modulator assembly with the two nuts and bolt.

Torque (Nut): 18 N·m (185 kgf·cm, 13 ft·lbf)

WhereEverybodyKnowsYourName

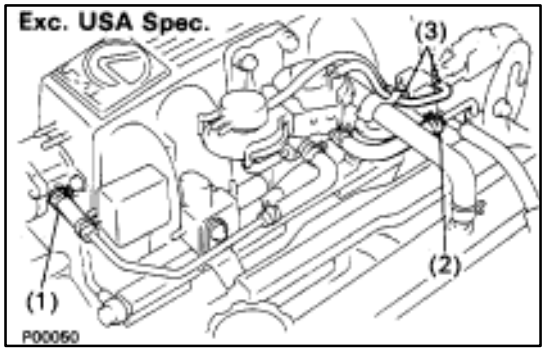

(c) Connect the following hoses:
  (1) Water by–pass pipe hose to ISC valve
  (2) Water by–pass pipe hose to water by–pass pipe (from rear water by–pass joint)
  (3) Two vacuum hoses to VSV for EGR system

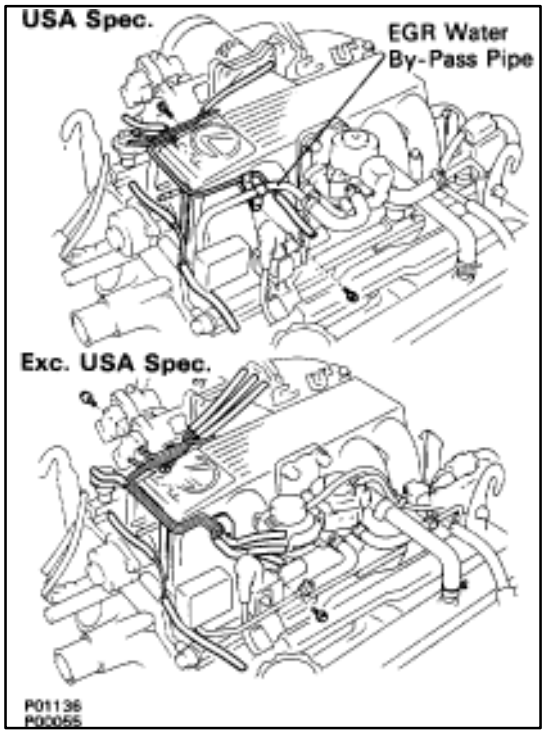

40. INSTALL VACUUM PIPE

(a) Install the vacuum pipe, vacuum hoses assembly and EGR water by–pass pipe (USA spec. only) with the two bolts.

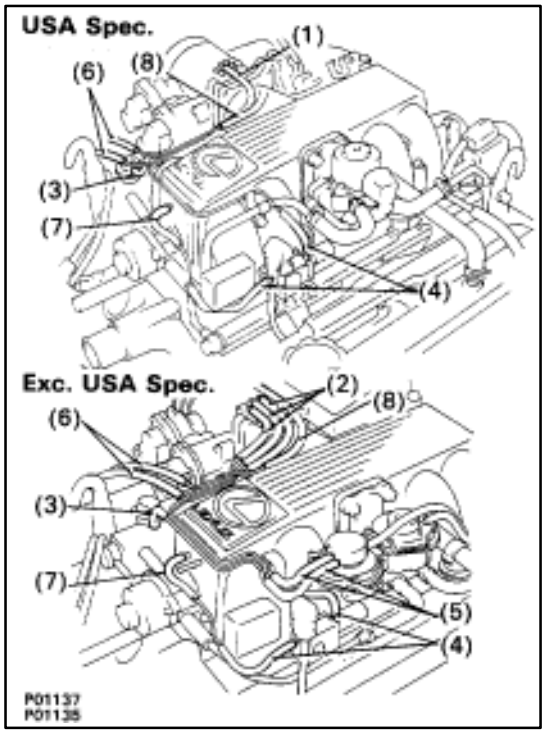

(b) Connect the following hoses:
  (1) (USA Spec.)
  Vacuum hose to throttle body
  (2) (Exc. USA Spec.)
  Three vacuum hoses to throttle body
  (3) Vacuum hose to fuel pressure regulator
  (4) Two vacuum hoses to VSV for fuel pressure control system
  (5) (Exc. USA Spec.)
  Two vacuum hoses to EGR vacuum modulator
  (6) Two vacuum hoses (from VSV for EVAP system) to vacuum pipe
  (7) Vacuum hose (from VSV for fuel pressure control system) to air intake chamber
  (8) Vacuum hose (from charcoal canister) to vacuum pipe

WhereEverybodyKnowsYourName

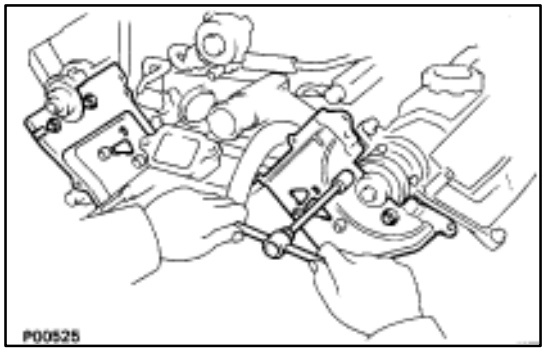

41. INSTALL TIMING BELT REAR PLATES

Install the rear plate with the two bolts. Install the two rear plates.

Torque: 7.8 N·m (80 kgf·cm, 69 in.·lbf)

42. INSTALL WATER INLET AND INLET HOUSING

(a) Remove any old packing (FIPG) material.
- Using a razor blade and gasket scraper, remove all the old packing (FIPG) materials from the gasket surfaces and sealing groove.
- Thoroughly clean all components to remove all the loose materials.
- Using a non–residue solvent, clean both sealing surfaces.

(b) Apply seal packing to the sealing groove of the water inlet housing as shown in the illustration.

Seal packing: Part No.08826–00100 or equivalent

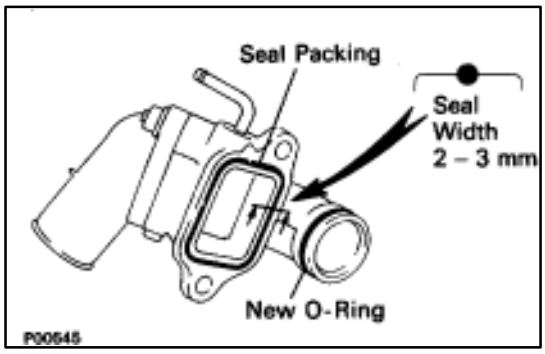

- Install a nozzle that has been cut to a 2–3 mm (0.08–0.12 in.) opening.
- Parts must be assembled within 5 minutes of application. Otherwise the material must be removed and reapplied.
- Immediately remove nozzle from the tube and reinstall cap.

(c) Install a new O–ring to the water inlet housing.

(d) Apply soapy water to the O–ring.

(e) Push the water inlet housing end into the water pump hole.

(f) Install the water inlet and housing assembly with the two bolts. Alternately tighten the bolts.

Torque: 18 N·m (185 kgf·cm, 13 ft·lbf)

HINT: Use bolts 25 mm (0.98 in.) in length.

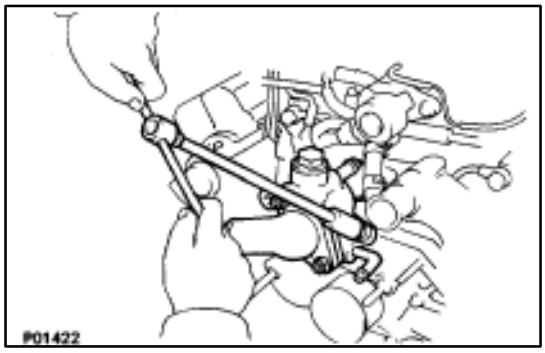

(g) Connect the water by–pass hose to the ISC valve.

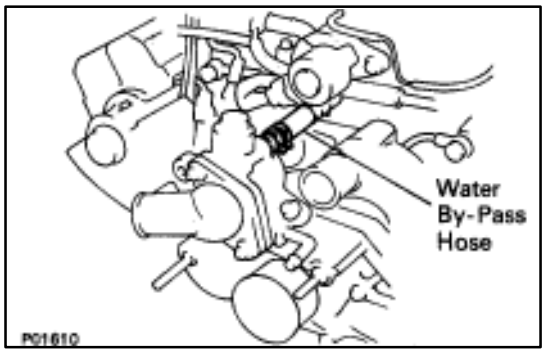

WhereEverybodyKnowsYourName

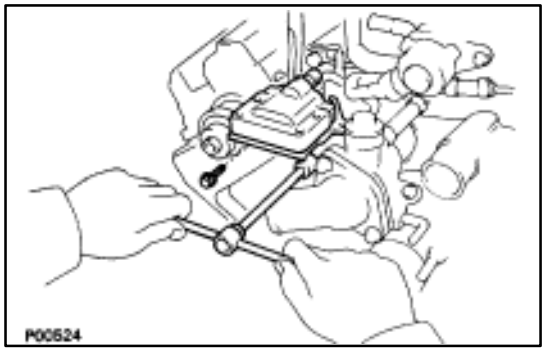

43. INSTALL RH IGNITION COIL

Install the ignition coil with the two bolts.

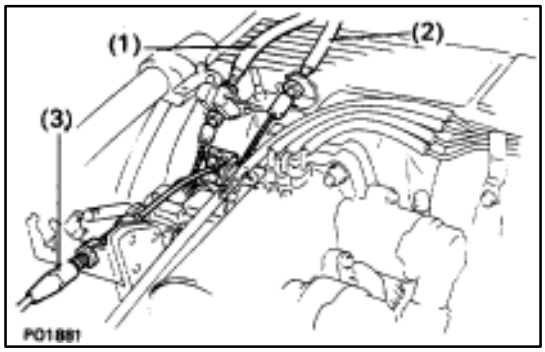

44. CONNECT CONTROL CABLES TO THROTTLE BODY

Connect the following cables:

(1) Accelerator cable
(2) A/T throttle cable
(3) (w/ Cruise Control System)

Cruise control actuator cable

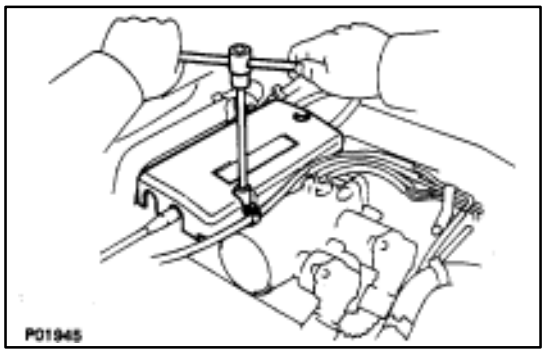

45. INSTALL THROTTLE BODY COVER

Install the throttle body cover and hose clamp with the two bolts and cap nut.

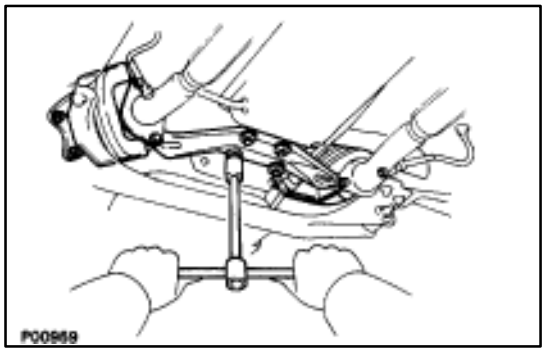

46. INSTALL CATALYTIC CONVERTERS (MAIN)

(a) Install a new gasket and the catalytic converter to the exhaust manifold with the three new bolts. Install the two catalytic converters.

Torque: 62 N·m (630 kgf·cm, 46 ft·lbf)

(b) Install a new gasket to each front end of the front exhaust pipe.

(c) Connect the front exhaust pipe to the catalytic converters.

(d) Temporarily install the four bolts holding the pipe support bracket to the transmission.

(e) Install the four bolts and nuts holding the catalytic converters to the front exhaust pipe.

Torque: 43 N·m (440 kgf·cm, 32 ft·lbf)

(f) Tighten the four bolts holding the pipe support bracket to the transmission.

Torque: 43 N·m (440 kgf·cm, 32 ft·lbf)

WhereEverybodyKnowsYourName

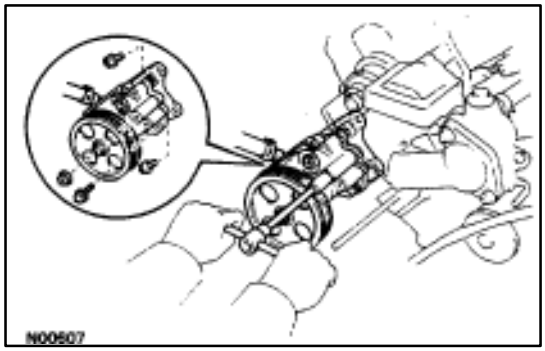

47. INSTALL PS PUMP

(a) Install the PS pump with the three bolts and nut. Alternately tighten the bolts and nut.

Torque:

Bolt 39 N·m (400 kgf·cm, 29 ft·lbf)
Nut 43 N·m (440 kgf·cm, 32 ft·lbf)

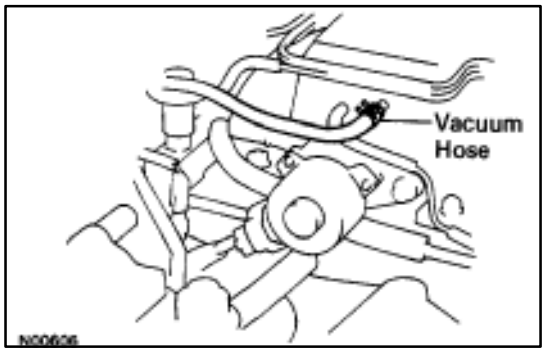

(b) Connect the vacuum hose to the vacuum pipe.

48. INSTALL HYDRAULIC PUMP AND CAMSHAFT TIMING PULLEYS
(See steps 8, 10 and 11 on pages EM–48 to 49)

49. INSTALL HYDRAULIC PUMP AND CAMSHAFT TIMING PULLEYS
(See steps 12 to 43 on pages EM–49 to 57)

50. PERFORM ROAD TEST

Check for abnormal noise, shock, slippage, correct shift points and smooth operation.

WhereEverybodyKnowsYourName

CYLINDER BLOCK

COMPONENTS FOR REMOVAL AND INSTALLATION OF ENGINE WITH TRANSMISSION

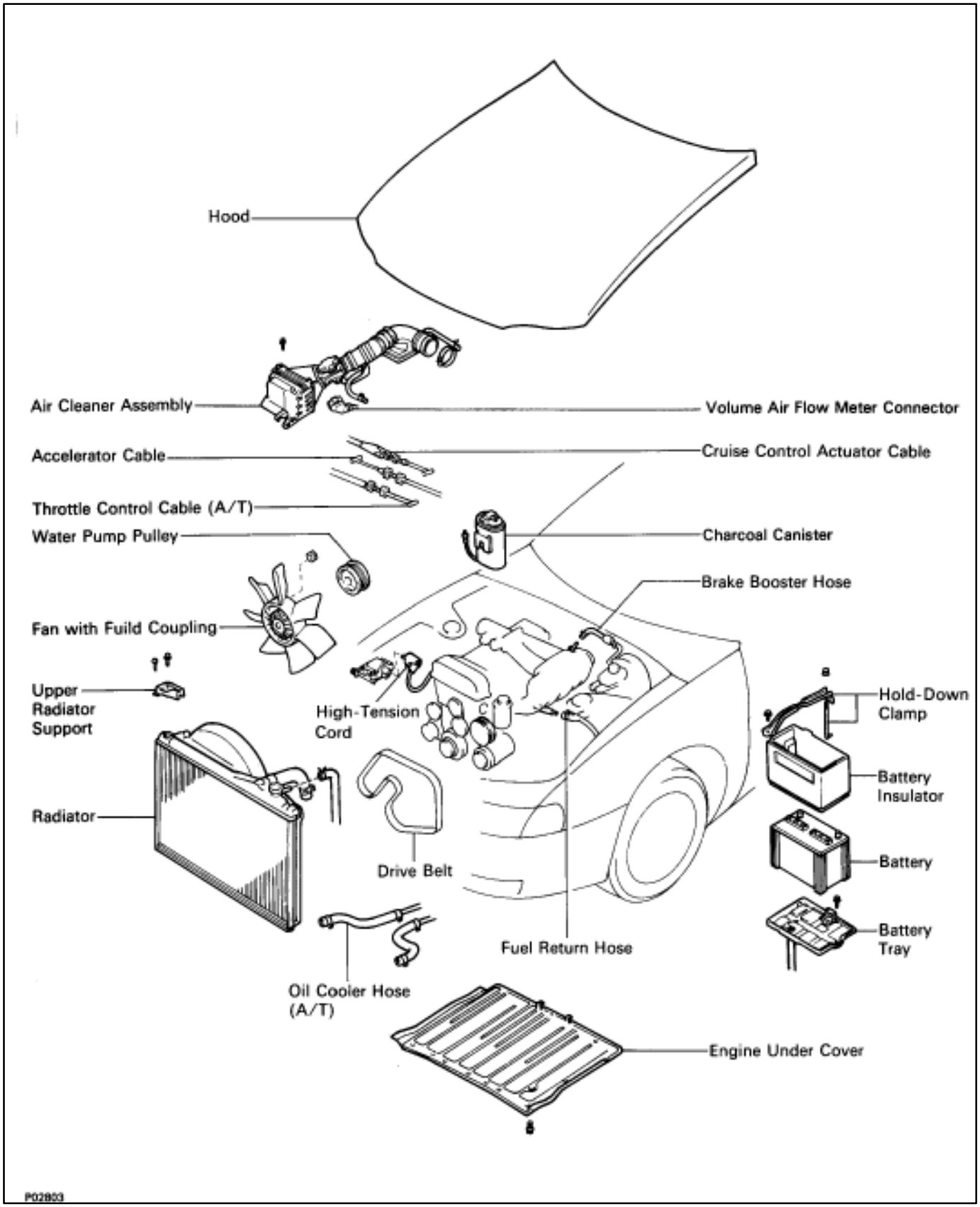

WhereEverybodyKnowsYourName

COMPONENTS FOR REMOVAL AND INSTALLATION OF ENGINE WITH TRANSMISSION (Cont'd)

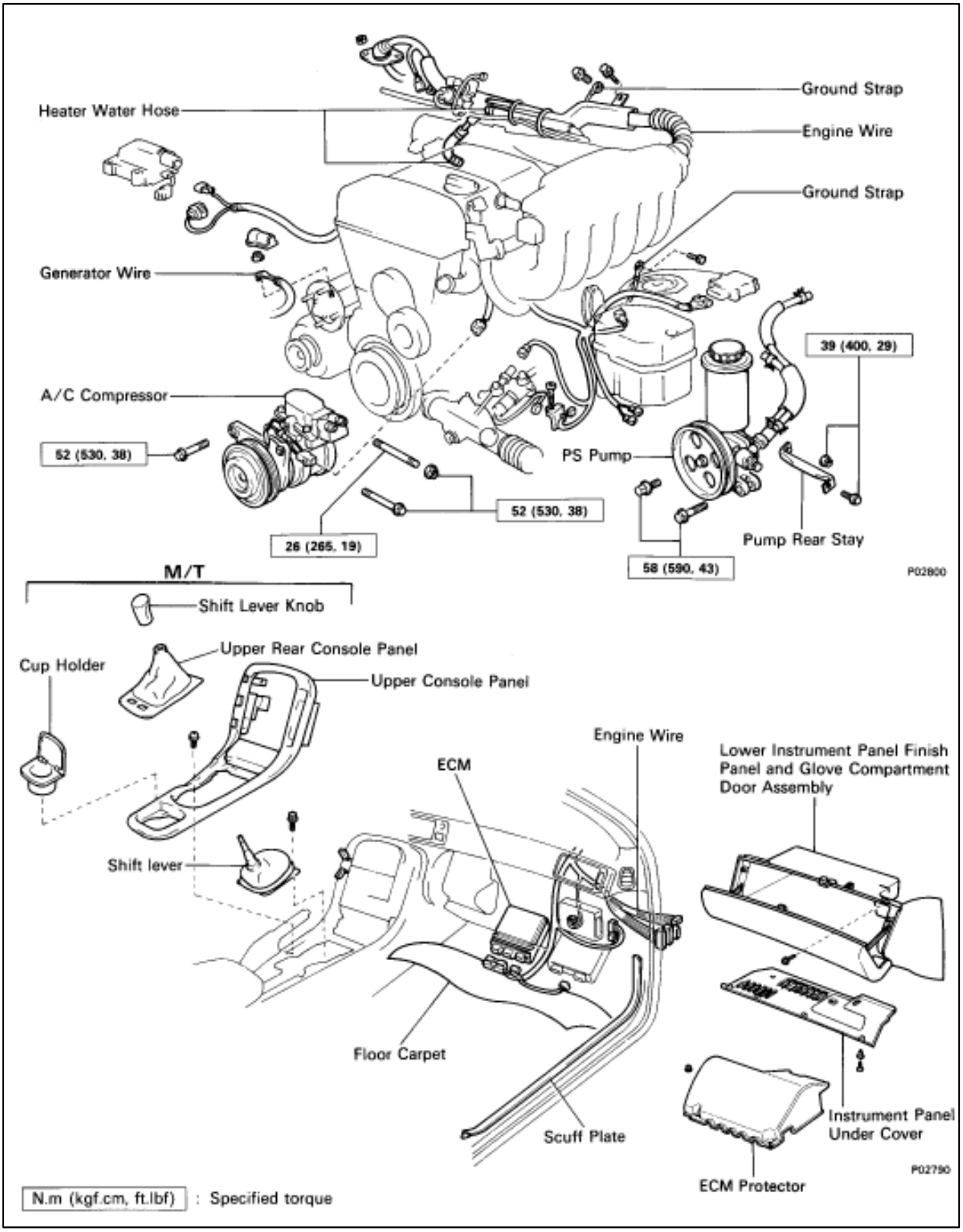

WhereEverybodyKnowsYourName

COMPONENTS FOR REMOVAL AND INSTALLATION OF ENGINE WITH TRANSMISSION (Cont'd)

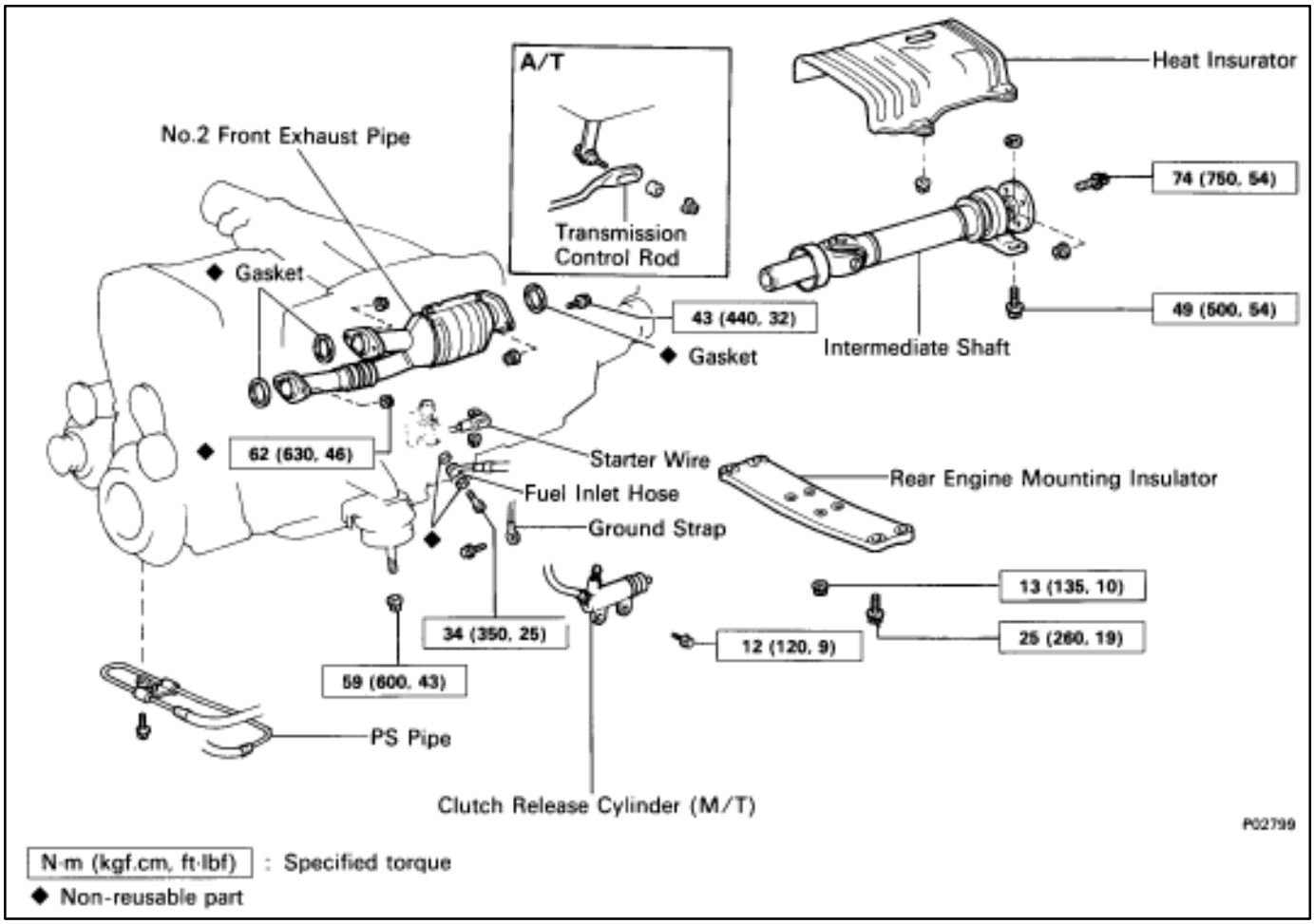

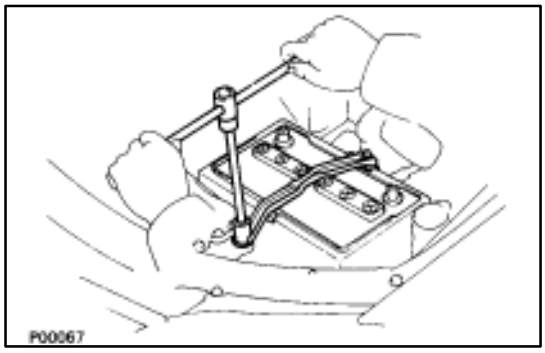

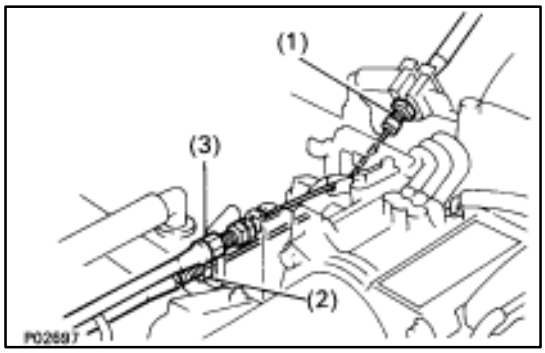

REMOVAL OF ENGINE WITH TRANSMISSION

1. **REMOVE BATTERY**
   CAUTION: Turn the ignition switch to "LOCK". Disconnect the cable from the negative (–) terminal of the battery. Wait at least 20 seconds before proceeding with work.
2. **REMOVE ENGINE UNDER COVER**
3. **DRAIN ENGINE COOLANT**
4. **DISCONNECT CONTROL CABLES FROM THROTTLE BODY**
   Disconnect the following cables:
   (1) Accelerator cable
   (2) (A/T)
   Throttle control cable
   (3) Cruise control actuator cable

WhereEverybodyKnowsYourName

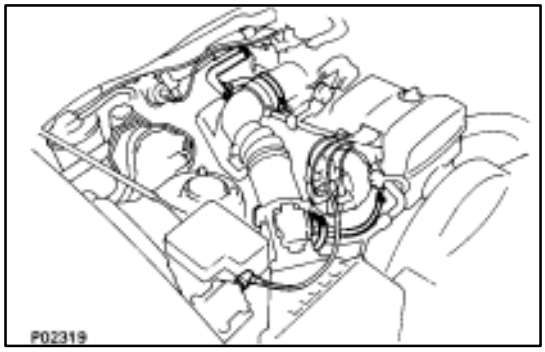

5. REMOVE AIR CLEANER ASSEMBLY

(a) Disconnect the high–tension cord from the ignition coil.
(b) Disconnect the volume air flow meter connector.
(c) Disconnect the following hose:
(1) PS air hose from No. 4 timing belt cover
(2) PCV hose from No. 2 cylinder head cover
(d) Loosen the hose clamp holding the air cleaner hose to the throttle body.
(e) Remove the three mounting bolts and air cleaner.

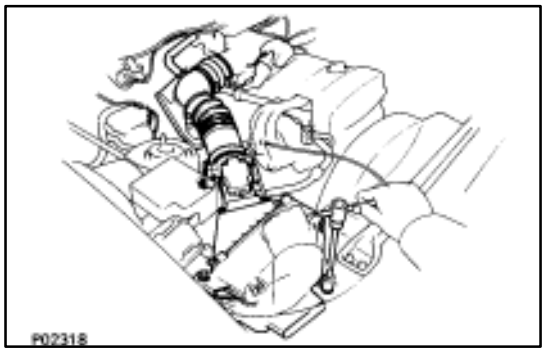

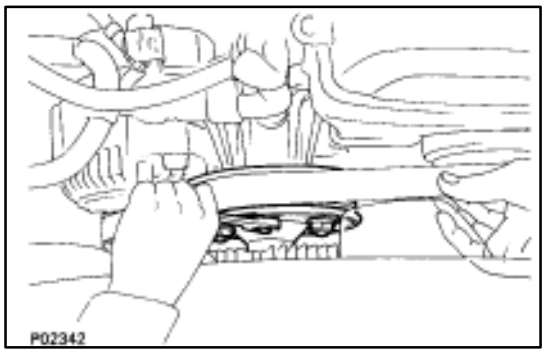

6. REMOVE DRIVE BELT, FAN WITH FLUID COUPLING AND WATER PUMP PULLEY

(a) Loosen the four nuts holding the fluid coupling to the water pump.

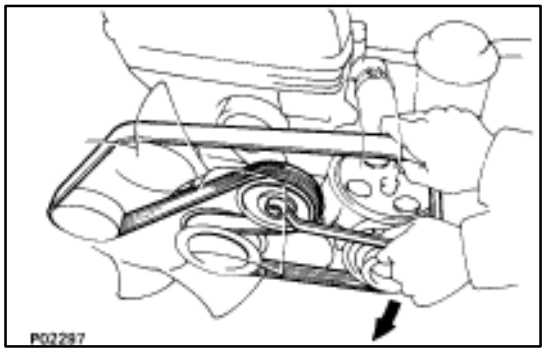

(b) Loosen the drive belt tension by turning the drive belt tensioner clockwise, and remove the drive belt.
(c) Remove the four nuts, fluid coupling and water pump pulley.

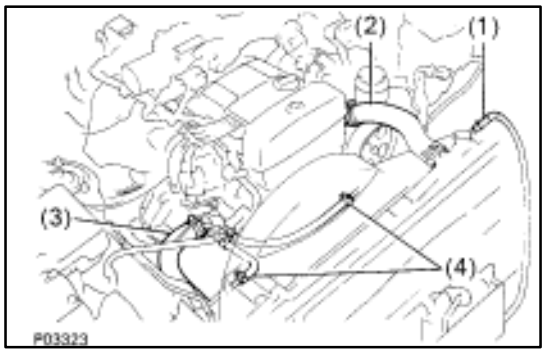

7. REMOVE RADIATOR

(a) Disconnect the following hoses:
(1) Reservior hose from radiator
(2) Upper radiator hose from water inlet
(3) Lower radiator hose from water outlet
(4) (A/T)
Two oil cooler hoses from radiator
Plug the hose ends.

WhereEverybodyKnowsYourName

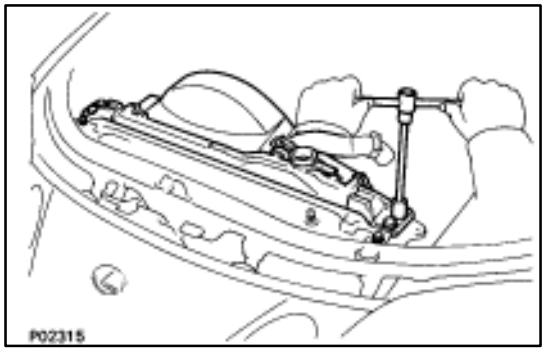

(b) Remove the two bolts, screw and upper radiator support. Remove the two upper radiator supports.
(c) Lift out the radiator with the hoses.

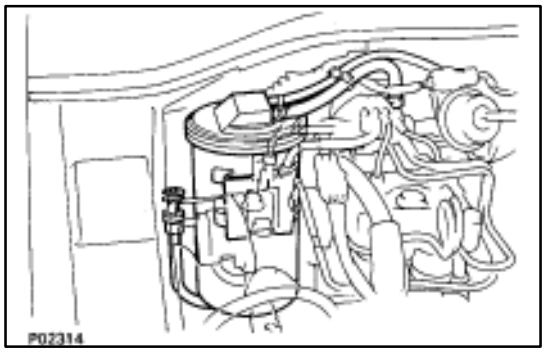

8. REMOVE CHARCOAL CANISTER
(a) Disconnect the vacuum hose and air hose from the charcoal canister.
(b) Remove the charcoal canister.

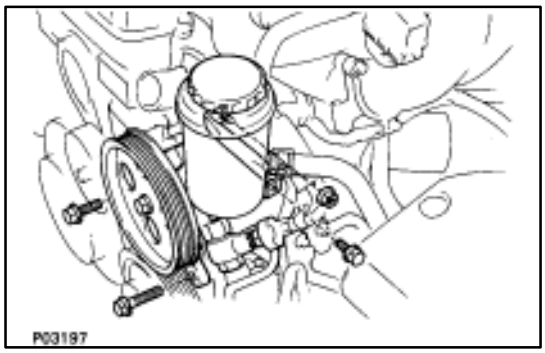

9. DISCONNECT PS PUMP WITHOUT DISCONNECTING HOSES
(a) Disconnect the following hoses:
(1) PS air hose from No. 4 timing belt cover
(2) PS air hose from air intake chamber
(b) Remove the bolt, nut and pump rear stay.
(c) Remove the two bolts, and disconnect the PS pump from the engine.
HINT: Put aside the PS pump, and suspend it.

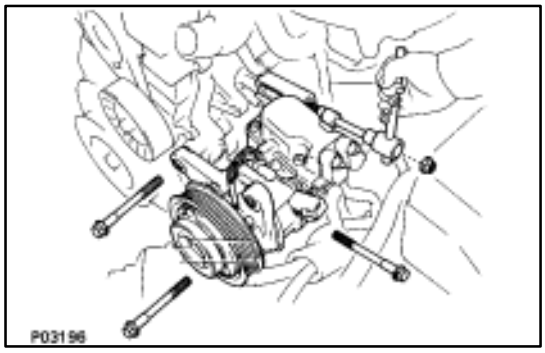

10. DISCONNECT A/C COMPRESSOR WITHOUT DISCONNECTING HOSES
(a) Disconnect the compressor connector.
(b) Remove the three mounting bolts and nut.
(c) Remove the through bolt, and disconnect the compressor from the engine.
HINT: Put aside the compressor, and suspend it.

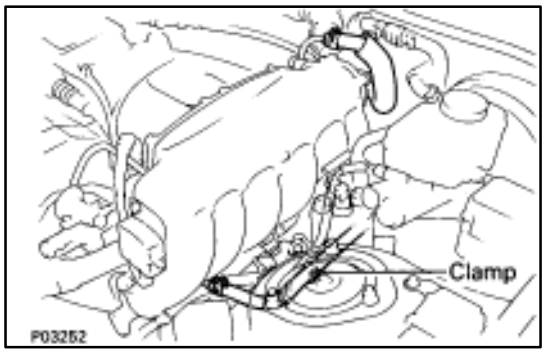

11. DISCONNECT ENGINE WIRE AND HOSES
(a) Disconnect the brake booster vacuum hose from the union.
(b) Disconnect the fuel return hose from the engine oil dipstick guide clamp and No. 2 fuel pipe. Plug the hose end.

WhereEverybodyKnowsYourName

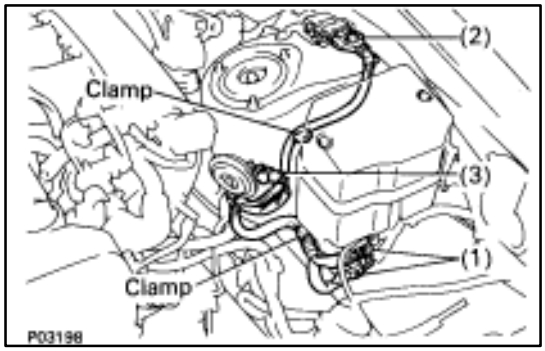

(c) Disconnect the following connectors:
  (1) Two connectors from engine room main wire
  (2) Igniter connector
  (3) Theft deterrent horn connector
(d) Disconnect the wire harness from the two wire clamps.

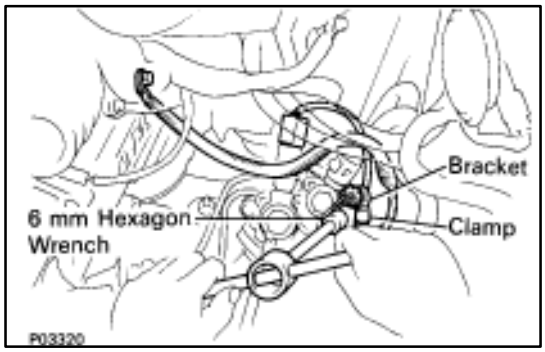

(e) Using a 6 mm hexagon wrench, remove the bolt and connector bracket.
(f) Disconnect the wire clamp and PS solenoid valve connector.
(g) Disconnect the ground strap from the cylinder block.
(h) Disconnect the PS pressure switch connector.

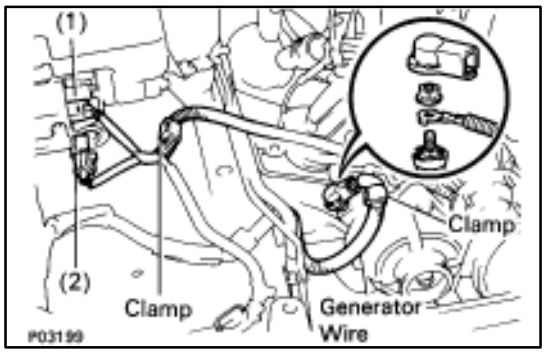

(i) Disconnect the following connectors:
  (1) Ignition coil connector
  (2) Noise filter connector
(j) Remove the cap and nut, and disconnect the generator wire.
(k) Disconnect the wire harness from the two wire clamps.

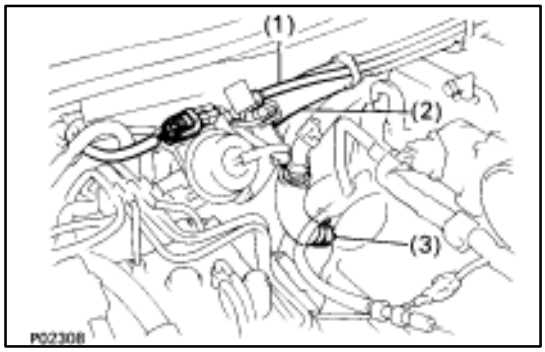

(l) Disconnect the following hoses:
  (1) Vacuum hose (from VSV for heater vale) from check valve.
  (2) Heater water hose from heater water valve.
  (3) Heater water hose from water by–pass pipe
(m) Disconnect the VSV connector.

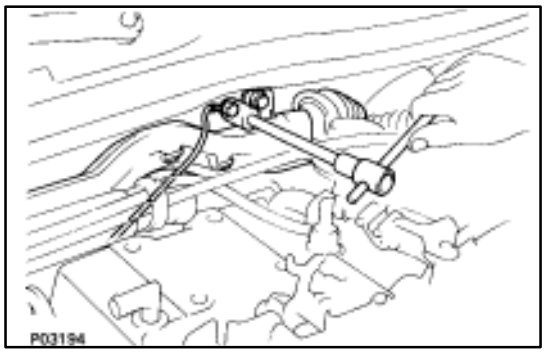

(n) Disconnect the ground strap from the bracket on the body.
(o) Remove the bolt holding the engine wire protector from the body.

WhereEverybodyKnowsYourName

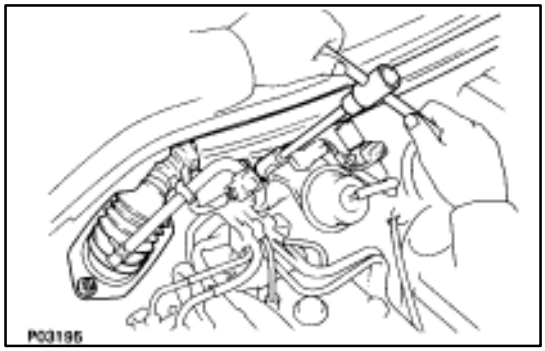

(p) Remove the bolt holding the engine wire protector from the heater valve bracket.
(q) Remove the two nuts holding the engine wire clamp from the body.

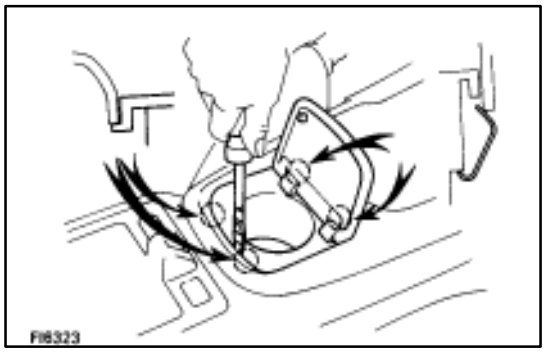

12. (M/T)
REMOVE TRANSMISSION SHIFT LEVER
(a) Using a screwdriver, pry out the rear side of the cup holder. Remove the cup holder.

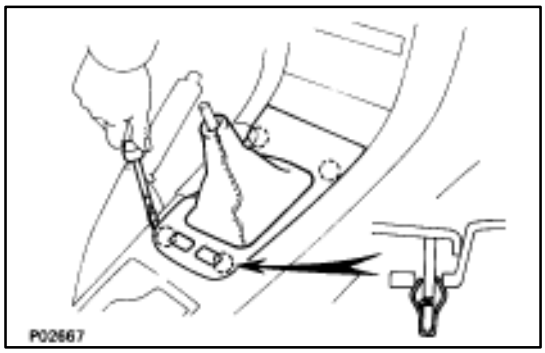

(b) Remove the shift lever knob.
(c) Using a screwdriver, pry out the upper rear console panel.

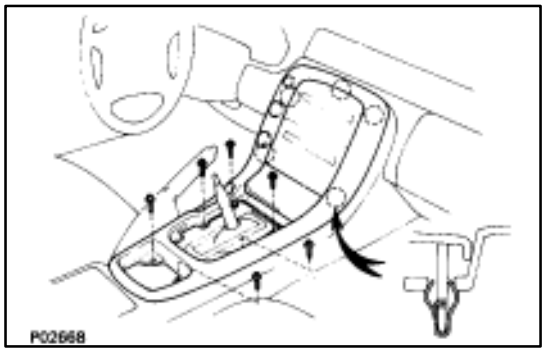

(d) Remove the six mounting screws.
(e) Using a screwdriver, pry out the upper console panel.

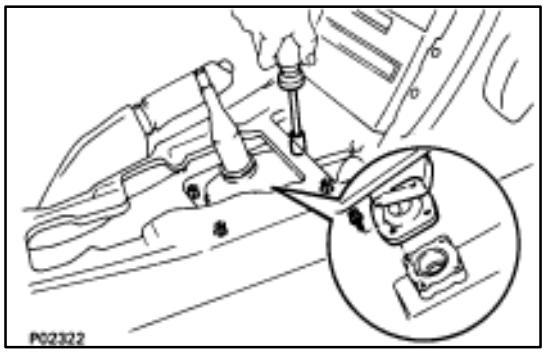

(f) Remove the eight mounting bolts and shift lever.

WhereEverybodyKnowsYourName

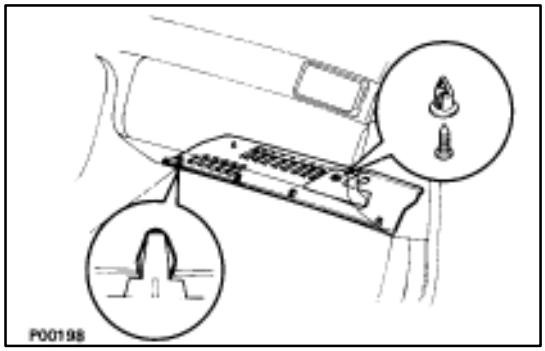

13. DISCONNECT ENGINE WIRE FROM CABIN

(a) Remove the two clips, and pull out the instrument panel under cover.

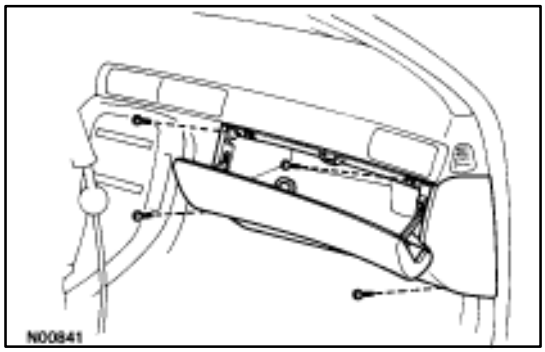

(b) Remove the four mounting screws.

(c) Disconnect the connectors, and remove the lower instrument panel finish panel and glove compartment door assembly.

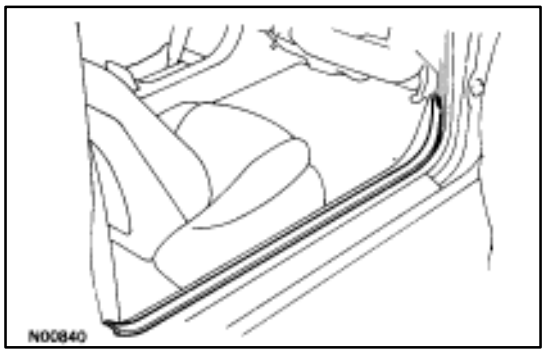

(d) Pull out the scuff plate.

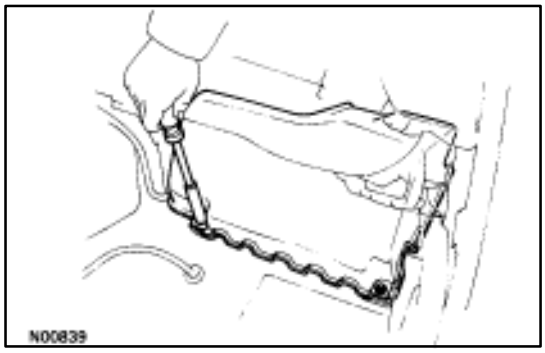

(e) Take out the front side of the floor carpet.

(f) Remove the two nuts and ECU protector.

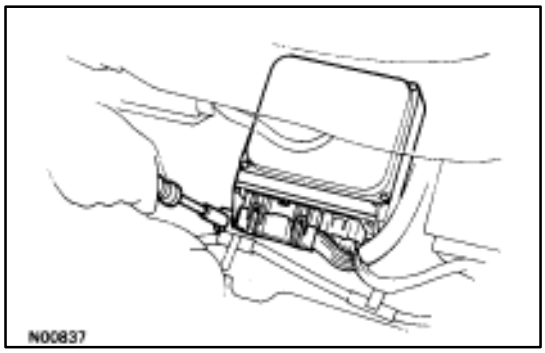

(g) Remove the nut, and disconnect the engine (& ECT) ECU from the floor panel.

WhereEverybodyKnowsYourName

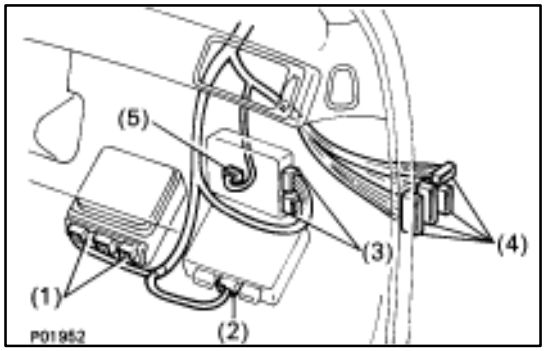

(h) Disconnect the following connectors:
  (1) Two connectors from engine (& ECT) ECU
  (2) Connector from ABS & TRAC ECU
  (3) Two connectors from TRAC ECU
  (4) Four connectors from connector cassette
  (5) Connector from A/C control assembly

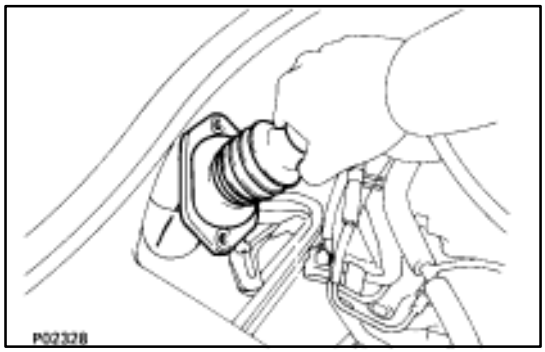

(i) Pull out the engine wire from the cabin.

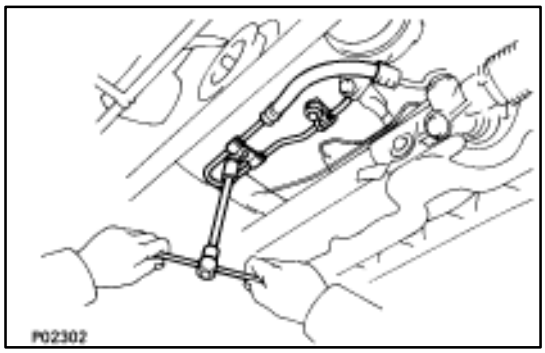

14. DISCONNECT PS PIPE FROM ENGINE

Remove the two clamp bolts, and disconnect the PS pipe.

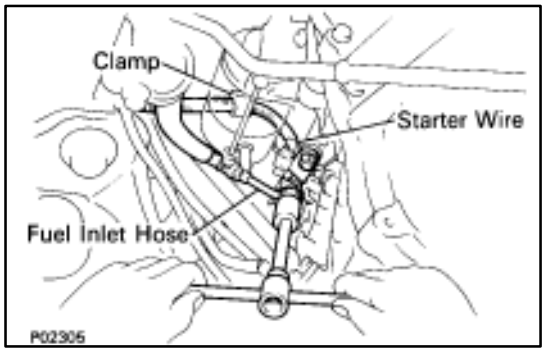

15. DISCONNECT HOSE, STARTER WIRE AND GROUND STRAP

(a) Remove the union bolt and two gaskets, disconnect the fuel inlet hose, and suspend the hose union end upward.

HINT:

- Put a suitable container or shop towel under the fuel pipe support.
- Slowly loosen the union bolt.

(b) Remove the nut and disconnect the starter wire.
(c) Disconnect the starter wire from the wire clamp.
(d) Disconnect the ground strap from the transmission.

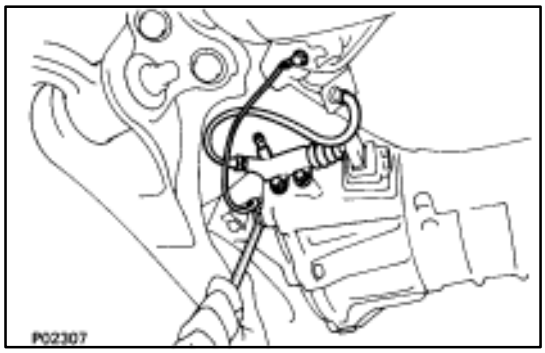

16. (M/T)

DISCONNECT CLUTCH RELEASE CYLINDER FROM TRANSMISSION

Remove the two bolts and pull out the release cylinder.

WhereEverybodyKnowsYourName

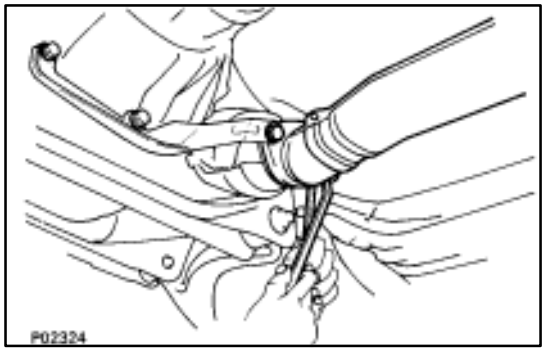

17. REMOVE NO. 2 FRONT EXHAUST PIPE

(a) Remove the two bolts and nuts holding the front exhaust pipe to the No. 2 front exhaust pipe.

(b) Remove the gasket and disconnect the front exhaust pipe.

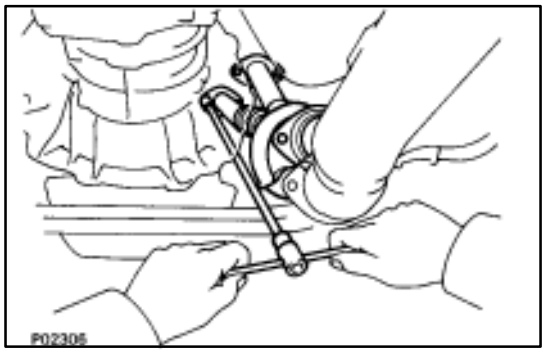

(c) Remove the four nuts, No. 2 front exhaust pipe and two gaskets.

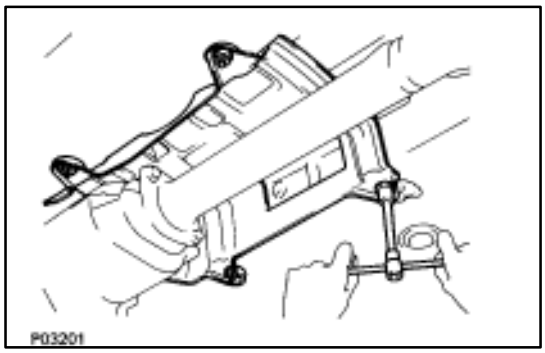

18. REMOVE EXHAUST PIPE HEAT INSULATOR

Remove the four nuts and heat insulator.

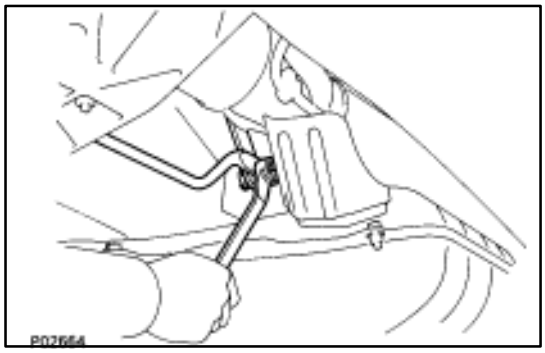

19. (A/T)

DISCONNECT TRANSMISSION CONTROL ROD

Remove the nut and disconnect the control rod from the shift lever.

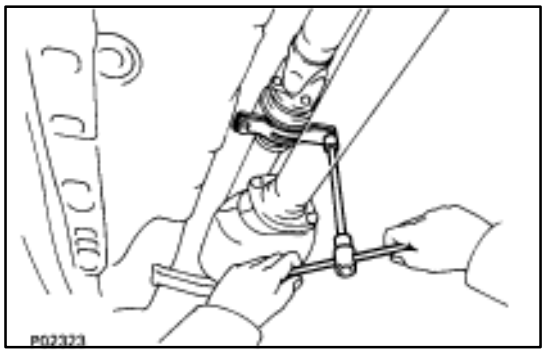

20. REMOVE INTERMEDIATE SHAFT

(a) Remove the two center support bearing set bolts and the adjusting washers.

HINT: Some vehicles are not equipped with an adjusting washer.

WhereEverybodyKnowsYourName

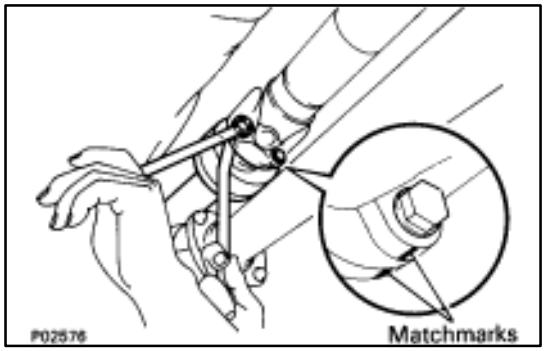

(b) Place the matchmarks on the both flanges.
(c) Remove the four bolts, washers, nuts and intermediate shaft.
(d) Insert SST in transmission to prevent oil leakage.

SST 09325–20010 (M/T)
09325–40010 (A/T)

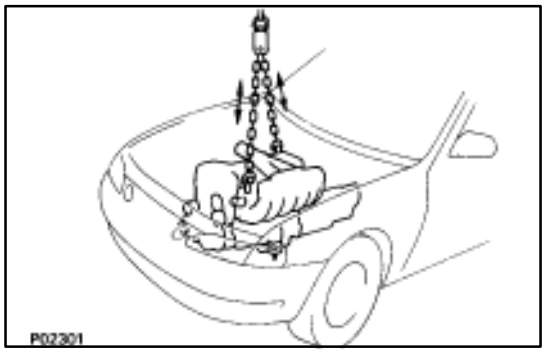

21. REMOVE ENGINE AND TRANSMISSION ASSEMBLY FROM VEHICLE

(a) Attach the engine hoist chain to the engine hangers.

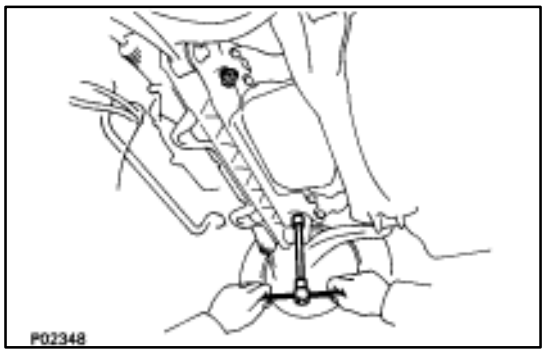

(b) Remove the two nuts holding the engine to the front suspension crossmember.

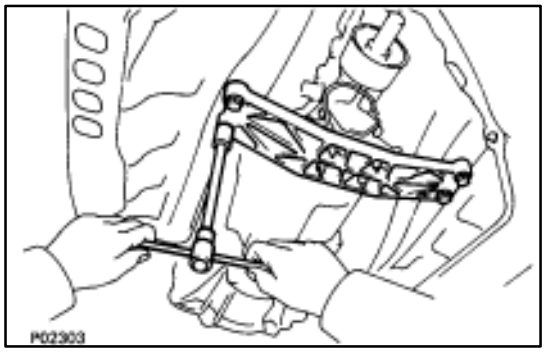

(c) Remove the four bolts, four nuts and rear engine mounting member.

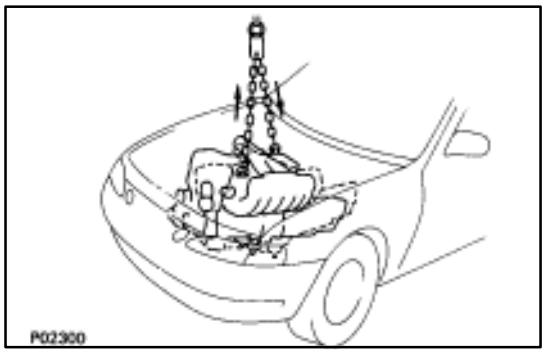

(d) Lift the engine out of the vehicle slowly and carefully.

NOTICE: Remove carefully without damaging the power steering gear housing or the park/neutral position switch (A/T only).

(e) Make sure the engine is clear of all wiring, hoses and cables.
(f) Place the engine and transmission assembly onto the stand.

WhereEverybodyKnowsYourName

COMPONENTS FOR SEPARATION AND ASSEMBLY OF ENGINE AND TRANSMISSION

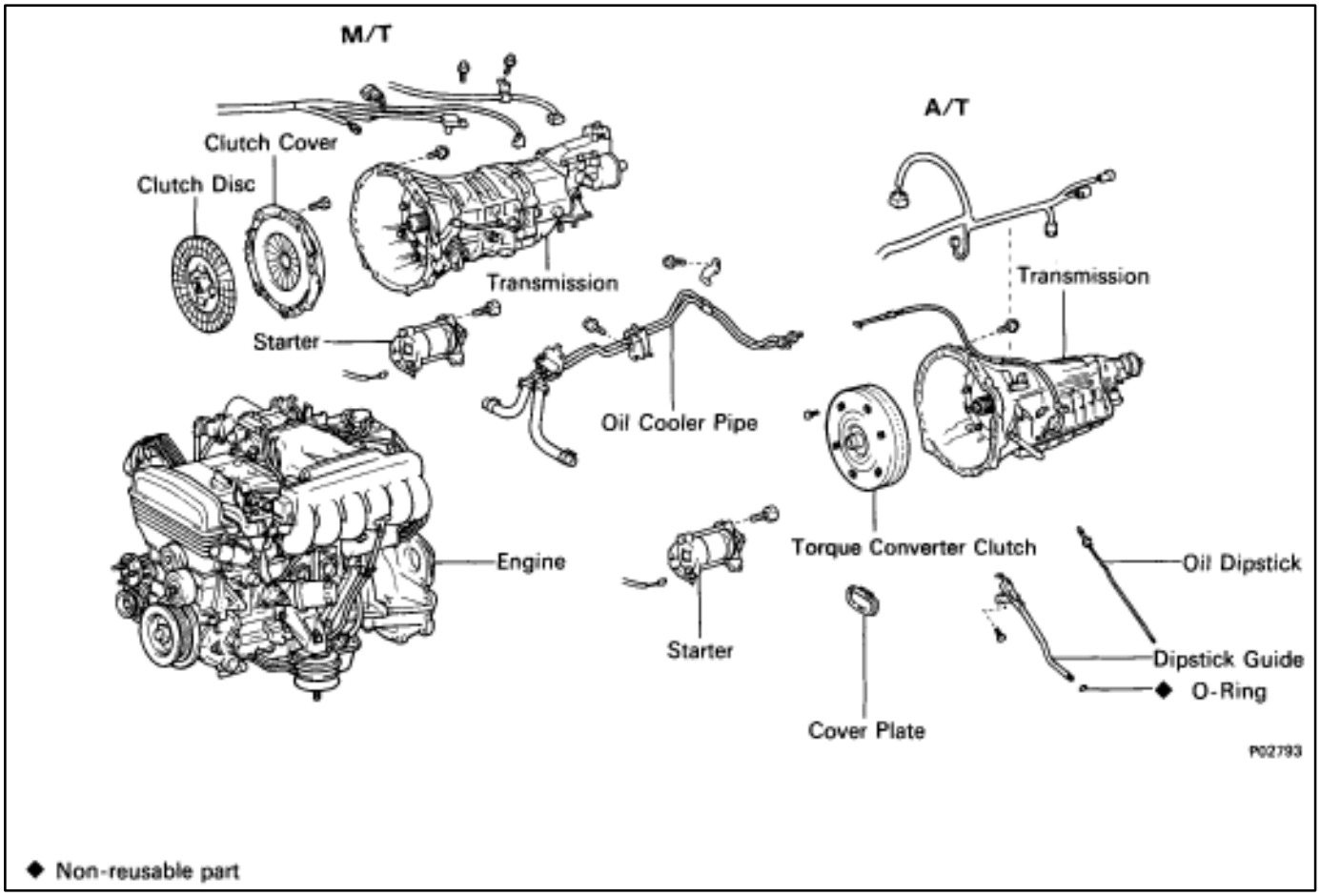

SEPARATION OF ENGINE AND TRANSMISSION

1. **(A/T)**
   REMOVE OIL DIPSTICK GUIDE FOR TRANSMISSION
2. **(A/T)**
   REMOVE OIL COOLER PIPES FOR TRANSMISSION
3. **DISCONNECT ENGINE WIRE FROM TRANSMISSION**
4. **REMOVE STARTER**
5. **SEPARATE ENGINE AND TRANSMISSION**
6. **(M/T)**
   REMOVE CLUTCH COVER AND DISC

WhereEverybodyKnowsYourName

COMPONENTS FOR DISASSEMBLY AND ASSEMBLY OF CYLINDER BLOCK

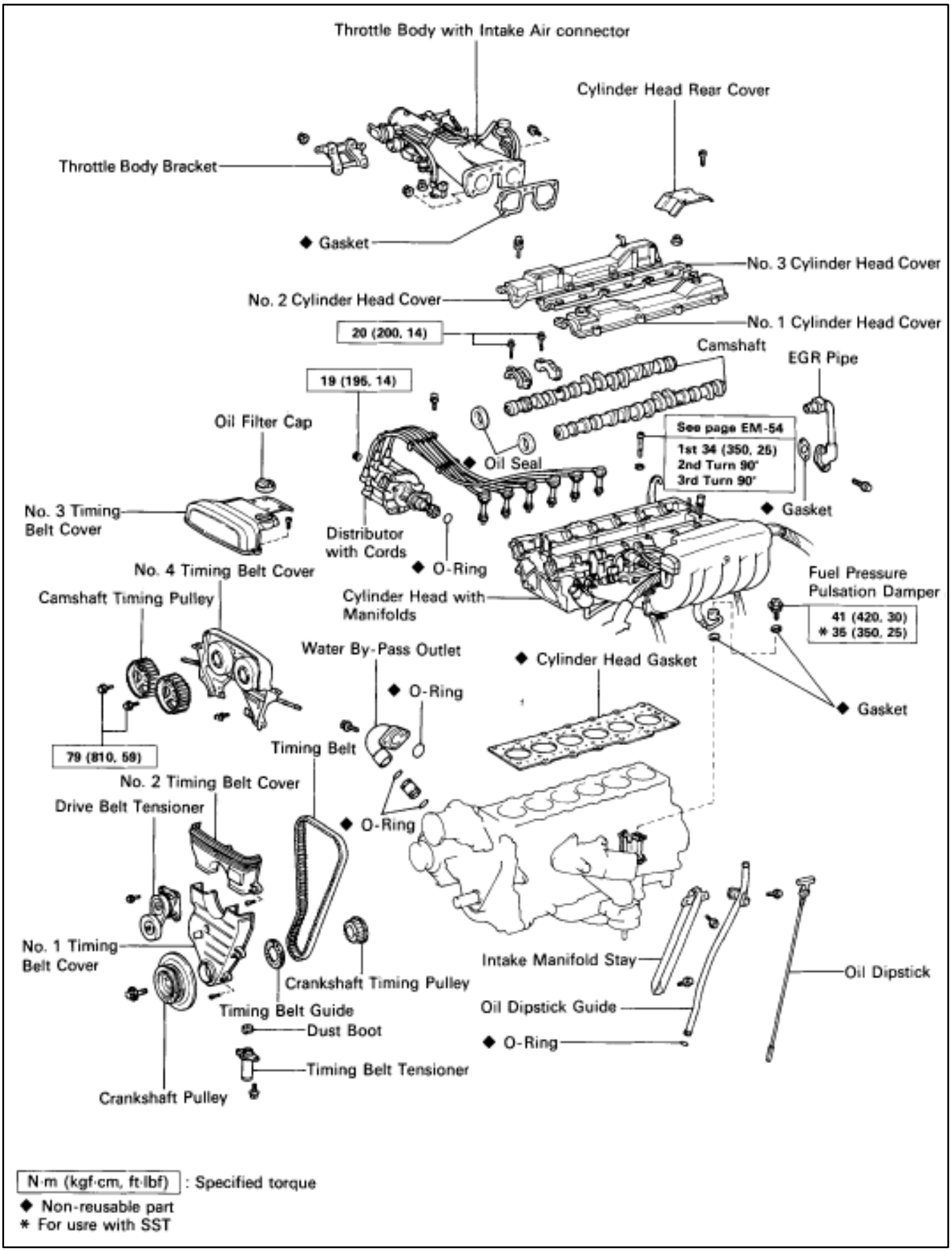

WhereEverybodyKnowsYourName

COMPONENTS FOR DISASSEMBLY AND ASSEMBLY OF CYLINDER BLOCK (Cont'd)

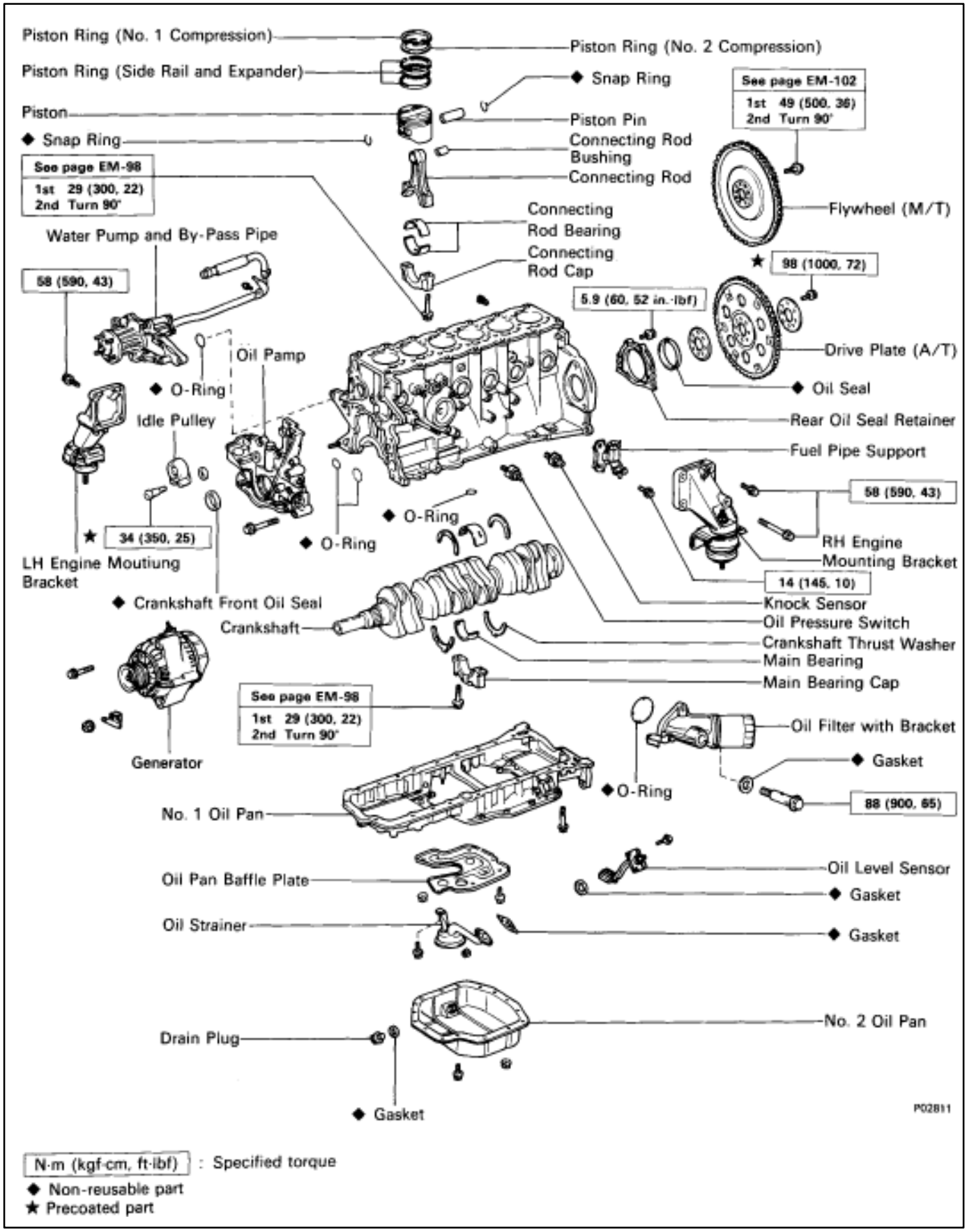

N·m (kgf·cm, ft·lbf) : Specified torque
◆ Non-reusable part
★ Precoated part

WhereEverybodyKnowsYourName

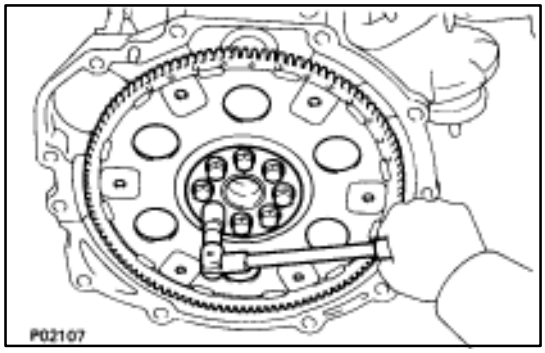

PREPARATION FOR DISASSEMBLY

(See Components on pages EM–74 and 75)

1. **(M/T)**
   REMOVE FLYWHEEL
2. **(A/T)**
   REMOVE DRIVE PLATE
   Remove the eight bolts, two spacers and drive plate.
3. **INSTALL ENGINE TO ENGINE STAND FOR DISASSEMBLY**
4. **REMOVE GENERATOR**
5. **REMOVE THROTTLE BODY WITH INTAKE AIR CONNECTOR (See pages EM–10 to 11)**
6. **REMOVE TIMING BELT AND PULLEYS (See pages EM–24 to 26)**
7. **REMOVE WATER PUMP AND BY–PASS HOSE**

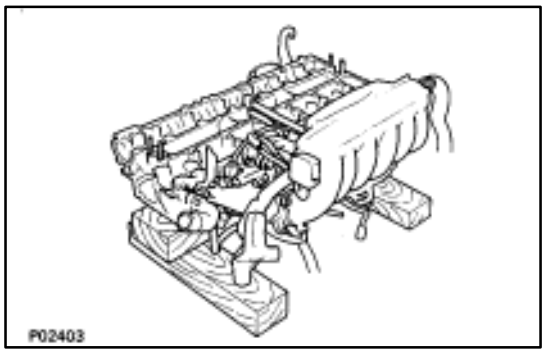

8. **REMOVE FUEL PRESSURE PULSATION DAMPER**
9. **REMOVE CYLINDER HEAD (See pages EM–36 to 40)**
10. **REMOVE FUEL PIPE SUPPORT**

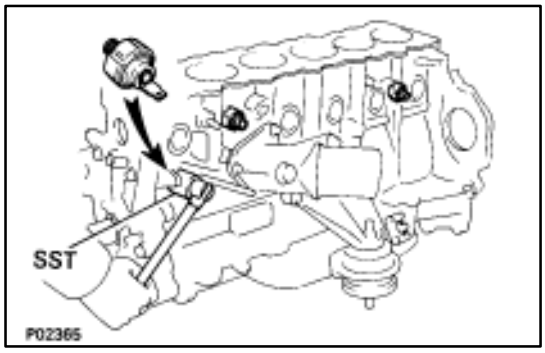

11. **REMOVE OIL PRESSURE SWITCH AND KNOCK SENSORS**
    SST 09816–30010
12. **REMOVE LH ENGINE MOUNTING BRACKET**
13. **REMOVE RH ENGINE MOUNTING BRACKET**

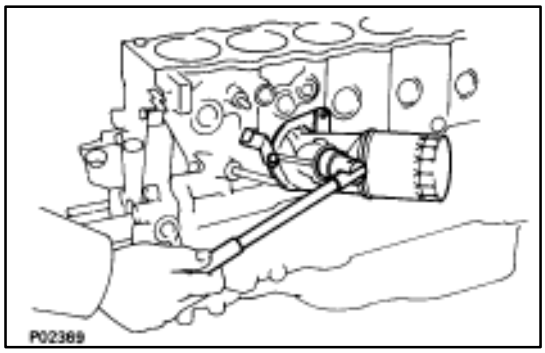

14. **REMOVE OIL FILTER BRACKET**
    (a) Remove the union bolt and oil filter bracket.
    (b) Remove the gasket from the union bolt.
    (c) Remove the O–ring from the oil filter bracket.
15. **REMOVE OIL PUMP (See page LU–10)**

WhereEverybodyKnowsYourName

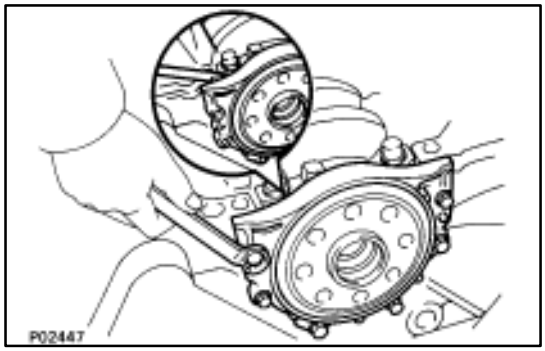

DISASSEMBLY OF CYLINDER BLOCK

(See Components on page EM–75)

1. REMOVE REAR OIL SEAL RETAINER

(a) Remove the six bolts.

(b) Remove the oil seal retainer by prying the area between the oil seal retainer and main bearing cap with a screwdriver.

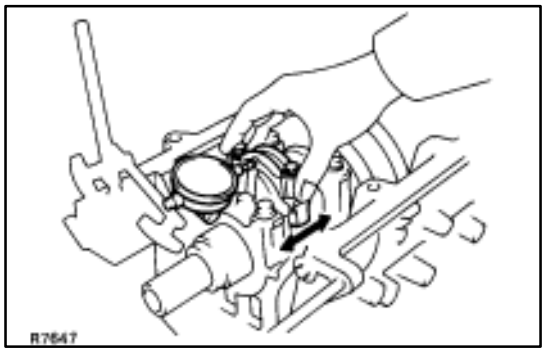

2. CHECK CONNECTING ROD THRUST CLEARANCE

Using a dial indicator, measure the thrust clearance while moving the two connecting rods back and forth.

Standard thrust clearance: 0.250–0.402 mm (0.0098–0.0158 in.)

Maximum thrust clearance: 0.50 mm (0.0197 in.)

If the thrust clearance is greater than maximum, replace the connecting rod assembly(s). If necessary, replace the crankshaft.

Connecting rod thickness: 25.898–25.950 mm (1.0196–1.0217 in.)

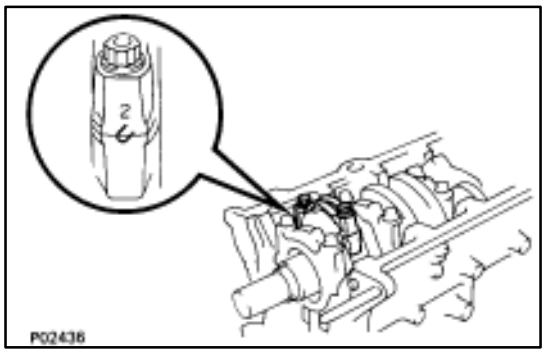

3. REMOVE CONNECTING ROD CAPS AND CHECK OIL CLEARANCE

(a) Check the matchmarks on the connecting rod and cap.

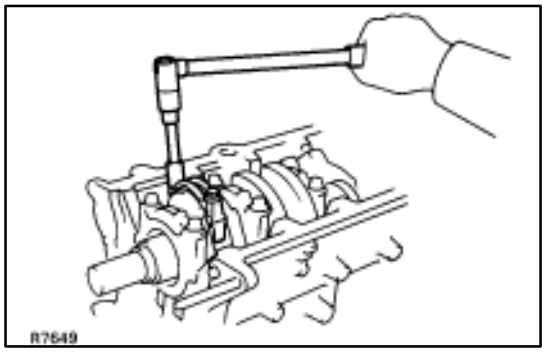

(b) Remove the connecting rod cap bolts.

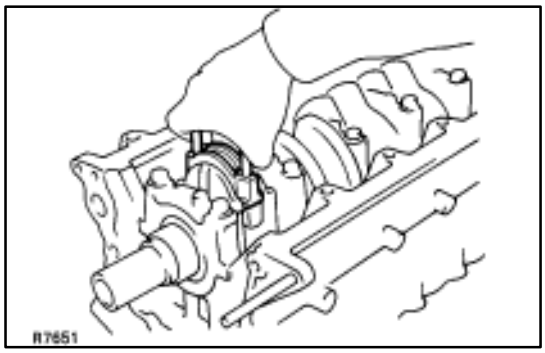

(c) Using the two removed connecting rod bolts, remove the connecting rod cap and lower bearing by wiggling the connecting rod cap right and left.

HINT: Keep the lower bearing inserted with the connecting rod cap.

WhereEverybodyKnowsYourName

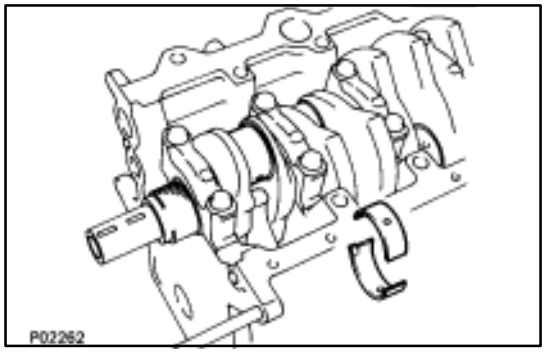

(d) Clean the crank pin and bearings.

(e) Check the crank pin and bearing for pitting and scratches.

If the crank pin or bearing are damaged, replace the bearings. If necessary, replace the crankshaft.

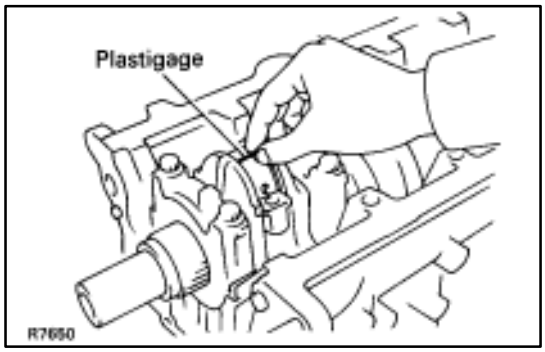

(f) Lay a strip of Plastigage across the crank pin.

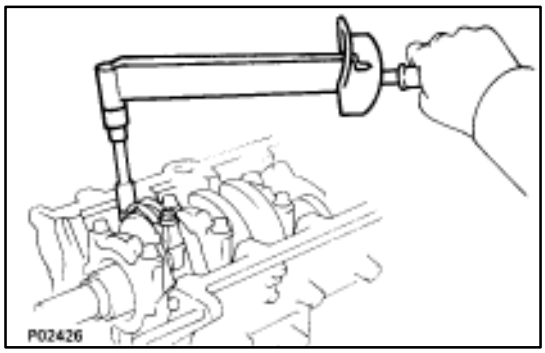

(g) Install the connecting rod cap with the two bolts.
(See step 6 on pages EM–98 and 99)

Torque: 1st 29 N·m (300 kgf·cm, 22 ft·lbf)
2nd turn 90°

HINT: Do not turn the crankshaft.

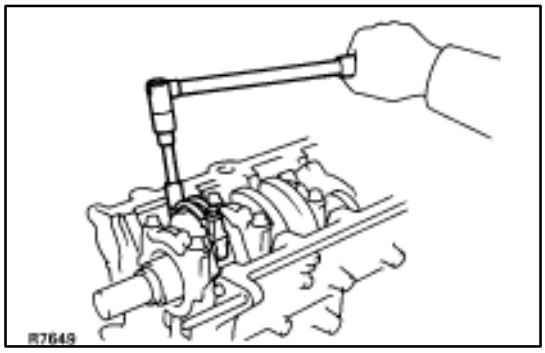

(h) Remove the two bolts, connecting rod cap and lower bearing. (See procedures (b) and (c) above)

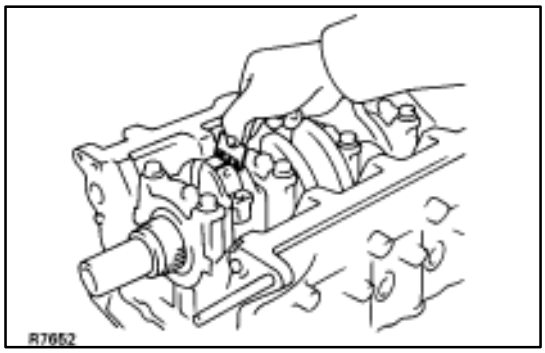

(i) Measure the Plastigage at widest point.

Standard oil clearance:

STD size	**0.035–0.053 mm (0.0014–0.0021 in.)**
U/S 0.25	**0.040–0.078 mm (0.0016–0.0031 in.)**

Maximum oil clearance:

STD size	**0.08 mm (0.0031 in.)**
U/S 0.25	**0.09 mm (0.0035 in.)**

If the oil clearance is greater than maximum, replace the bearings. If necessary, replace the crankshaft.

WhereEverybodyKnowsYourName

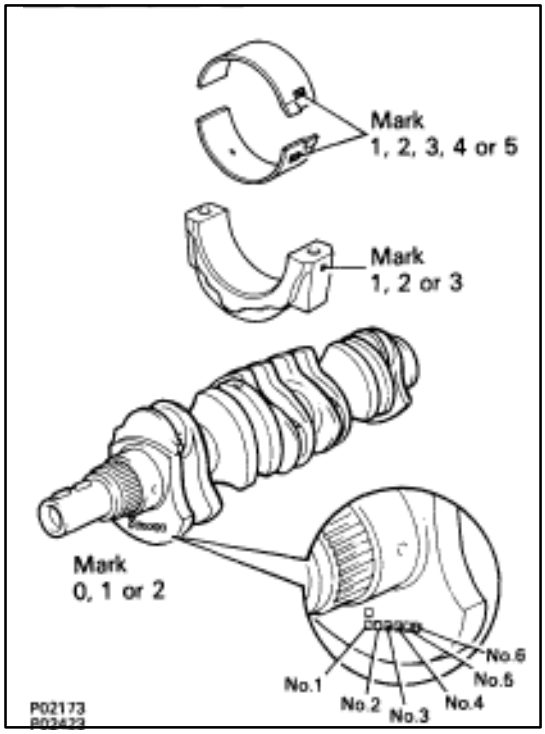

HINT: If using a standard bearing, replace with one having the same number. If the number of the bearing cannot be determined, select the correct bearing by adding together the numbers imprinted on the connecting rod cap and crankshaft, then select the bearing with the same number as the total. There are five sizes of standard bearings, marked ”1”, ”2”, ”3”, ”4” and ”5” accordingly.

	Number mark								
Connecting rod cap	1			2			3		
Crankshaft	0	1	2	0	1	2	0	1	2
Use bearing	1	2	3	2	3	4	3	4	5

EXAMPLE: Connecting rod cap ”3” + Crankshaft ”1” = Total number 4 (Use bearing ”4”)

(Reference)

Connecting rod big end inside diameter:

Mark ”1”	**55.025–55.031 mm (2.1663–2.1666 in.)**
Mark ”2”	**55.031–55.037 mm (2.1666–2.1668 in.)**
Mark ”3”	**55.037–55.043 mm (2.1668–2.1670 in.)**
U/S 0.25	**55.025–55.043 mm (2.1663–2.1670 in.)**

Crankshaft crank pin diameter:

Mark ”0”	**51.994–52.000 mm (2.0470–2.0472 in.)**
Mark ”1”	**51.988–51.994 mm (2.0468–2.0470 in.)**
Mark ”2”	**51.982–51.988 mm (2.0465–2.0468 in.)**
U/S 0.25	**51.745–51.755 in.) (2.0364–2.0376 in.)**

Bearing center wall thickness:

Mark ”1”	**1.492–1.495 mm (0.0587–0.0589 in.)**
Mark ”2”	**1.495–1.498 mm (0.0589–0.0590 in.)**
Mark ”3”	**1.498–1.501 mm (0.0590–1.501 in.)**
Mark ”4”	**1.501–1.504 mm (0.0591–0.0592 in.)**
Mark ”5”	**1.504–1.507 mm (0.0592–0.0593 in.)**
U/S 0.25	**1.610–1.615 mm (0.0634–0.0636 in.)**

(j) Completely remove the Plastigage.

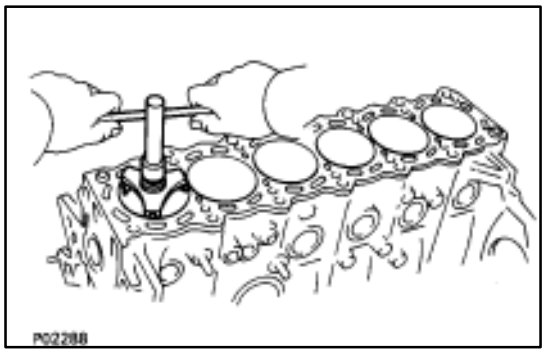

4. REMOVE PISTON AND CONNECTING ROD ASSEMBLIES

(a) Using a ridge reamer, remove all the carbon from the top of the cylinder.

(b) Push the piston, connecting rod assembly and upper bearing through the top of the cylinder block.

WhereEverybodyKnowsYourName

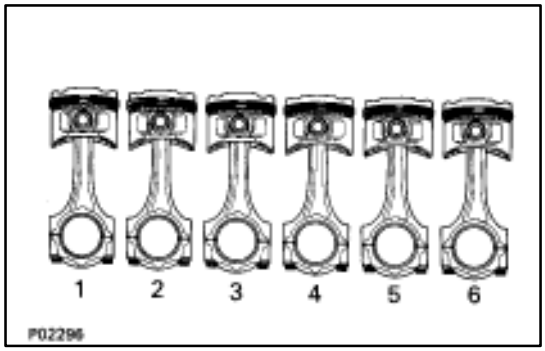

HINT:
- Keep the bearings, connecting rod and cap together.
- Arrange the piston and connecting rod assemblies in correct order.

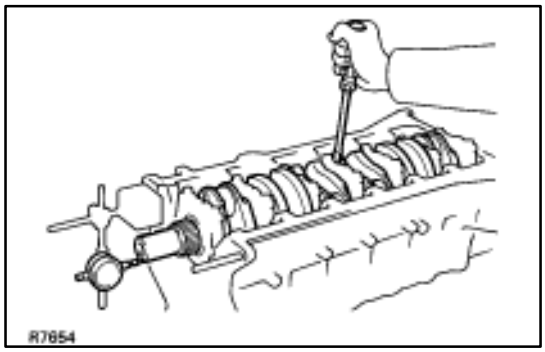

5. CHECK CRANKSHAFT THRUST CLEARANCE

Using a dial indicator, measure the thrust clearance while prying the crankshaft back and forth with a screwdriver.

Standard thrust clearance: 0.020–0.220 mm (0.0008–0.0087 in.)

Maximum thrust clearance: 0.30 mm (0.0118 in.)

If the thrust clearance is greater than maximum, replace the thrust washers as a set.

Thrust washer thickness:
1.940–1.990 mm (0.0764–0.0783 in.)

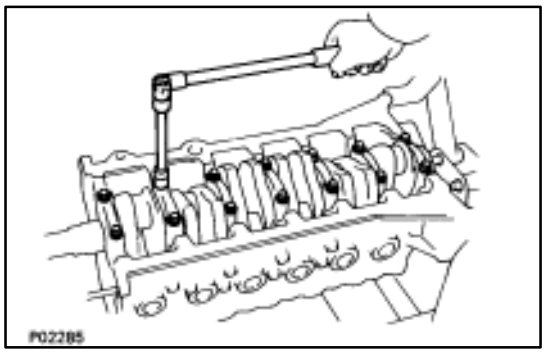

6. REMOVE MAIN BEARING CAPS AND CHECK OIL CLEARANCE

(a) Remove the main bearing cap bolts.

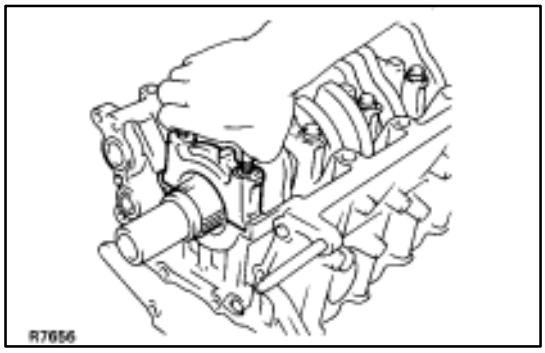

(b) Using the removed main bearing cap bolts, pry the main bearing cap back and forth, and remove the main bearing caps, lower bearings and lower thrust washers (No. 4 main bearing cap only).

HINT:
- Keep the lower bearing and main bearing cap together.
- Arrange the main bearing caps and lower thrust washers in correct order.

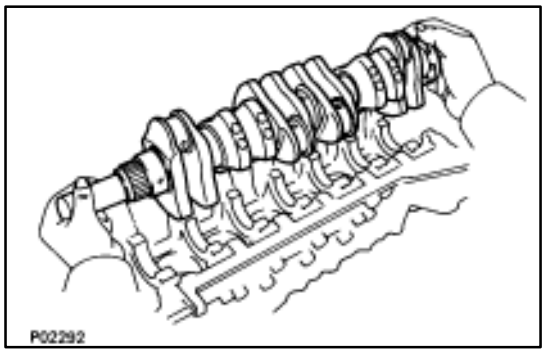

(c) Lift out the crankshaft.

HINT: Keep the upper bearing and upper thrust washer together with the cylinder block.

WhereEverybodyKnowsYourName

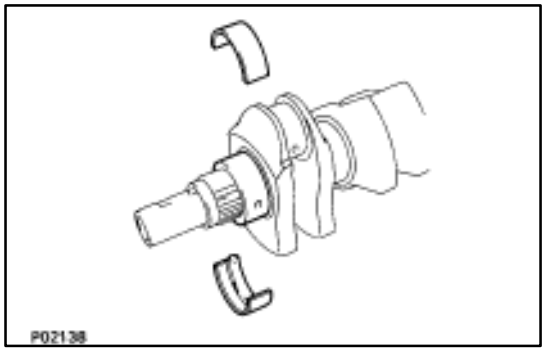

(d) Clean each main journal and bearing.
(e) Check each main journal and bearing for pitting and scratches.

If the journal or bearing is damaged, replace the bearings.
If necessary, grind or replace the crankshaft.

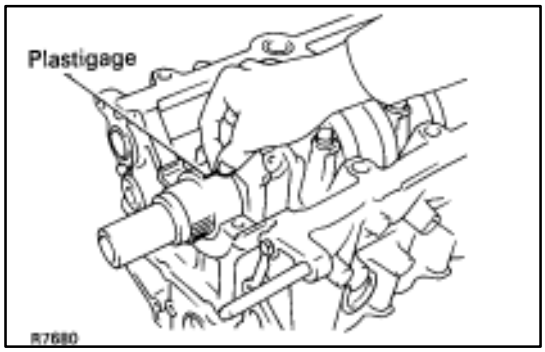

(f) Place the crankshaft on the cylinder block.
(g) Lay a strip of Plastigage across each journal.

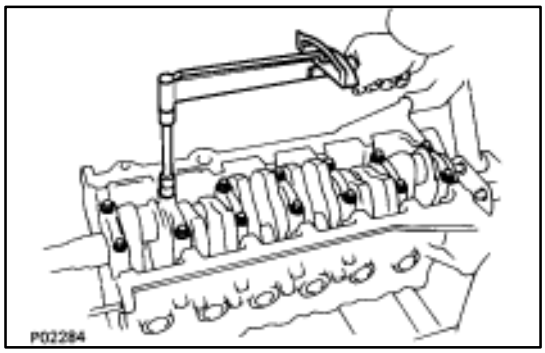

(h) Install the main bearing caps.
(See step 4 on pages EM–97 and 98)

Torque: 1st 44 N·m (450 kgf·cm, 33 ft·lbf)
2nd turn 90°

HINT: Do not turn the crankshaft.

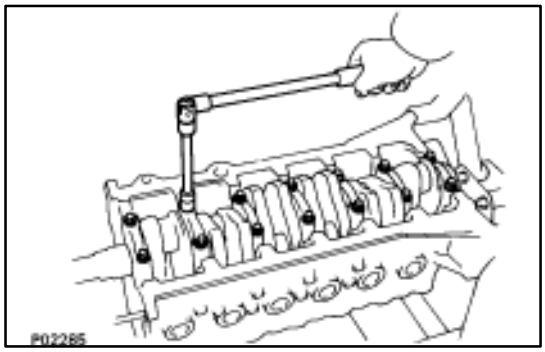

(i) Remove the main bearing caps.
(See procedures (a) and (b) above)

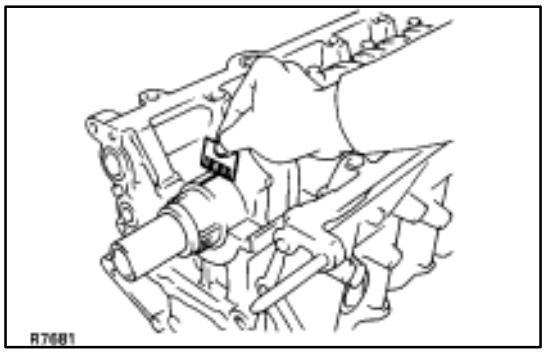

(j) Measure the Plastigage at its widest point.

Standard clearance:

STD size	**0.026–0.040 mm (0.0010–0.0016 in.)**
U/S 0.25	**0.025–0.061 mm (0.0010–0.0024 in.)**

Maximum clearance:

STD size	**0.06 mm (0.0024 in.)**
U/S 0.25	**0.08 mm (0.0031 in.)**

If the oil clearance is greater than maximum, replace the bearings.
If necessary, replace the crankshaft.

WhereEverybodyKnowsYourName

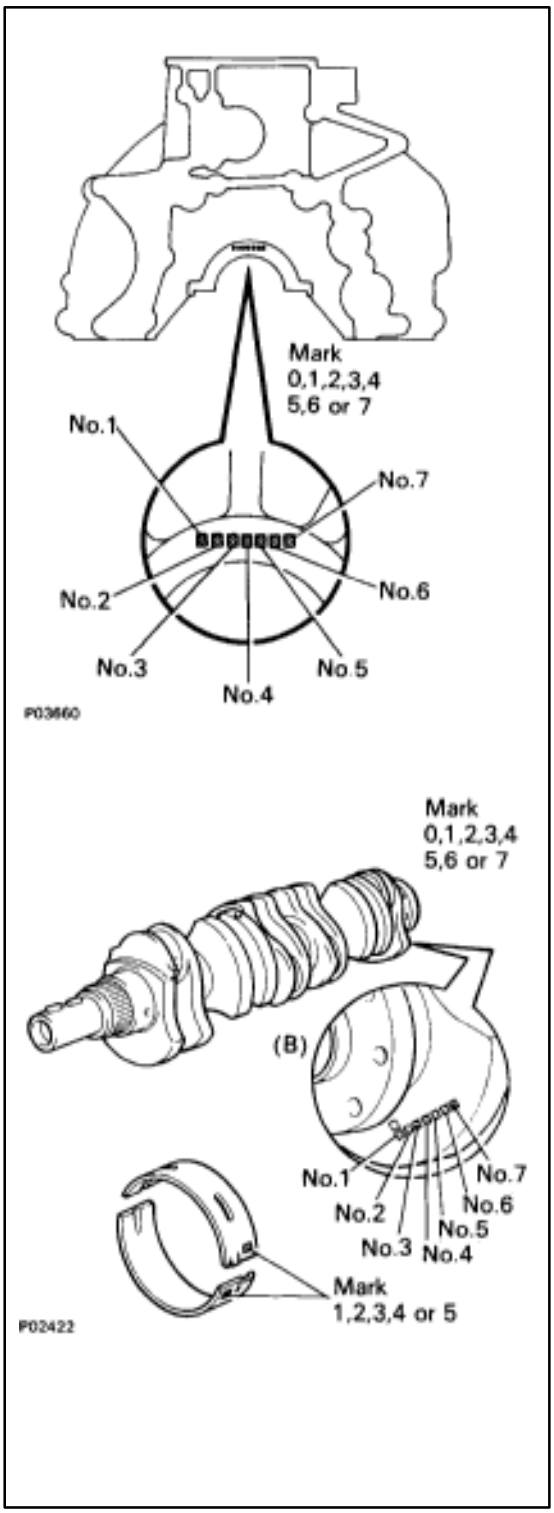

HINT: If using a standard bearing, replace with one having the same number. If the number of the bearing cannot be determined, select the correct bearing by adding together the numbers imprinted on the cylinder block and crankshaft, then refer to the table below for the appropriate bearing number. There are five sizes of standard bearings, marked ”1”, ”2”, ”3”, ”4” and ”5” accordingly.

	Total number		””: Number mark		
Cylinder block (A) + Crankshaft (B) =	0–2	3–5	6–8	9–11	12–14
Use bearing	”1”	”2”	”3”	”4”	”5”

EXAMPLE: Cylinder block ”3” (A)
+ Crankshaft ”4” (B)
= Total number 7 (Use bearing ”3”)

(Reference)

Cylinder block main journal bore diameter (A):

Mark ”0”	**66.020–66.022 mm (2.59921–2.59929 in.)**
Mark ”1”	**66.022–66.024 mm (2.59929–2.59937 in.)**
Mark ”2”	**66.024–66.026 mm (2.59937–2.59945 in.)**
Mark ”3”	**66.026–66.028 mm (2.59945–2.59953 in.)**
Mark ”4”	**66.028–66.030 mm (2.59953–2.59961 in.)**
Mark ”5”	**66.030–66.032 mm (2.59961–2.59969 in.)**
Mark ”6”	**66.032–66.034 mm (2.59969–2.59976 in.)**
Mark ”7”	**66.034–66.036 mm (2.59976–2.59984 in.)**
U/S 0.25	**66.020–66.036 mm (2.59921–2.59984 in.)**

Crankshaft main journal diameter (B):

Mark ”0”	**61.998–62.000 mm (2.44087–2.44095 in.)**
Mark ”1”	**61.996–61.998 mm (2.44079–2.44087 in.)**
Mark ”2”	**61.994–61.996 mm (2.44071–2.44079 in.)**
Mark ”3”	**61.992–61.994 mm (2.44063–2.44071 in.)**
Mark ”4”	**61.990–61.992 mm (2.44055–2.44063 in.)**
Mark ”5”	**61.988–61.990 mm (2.44047–2.44055 in.)**
Mark ”6”	**61.986–61.988 mm (2.44039–2.44047 in.)**
Mark ”7”	**61.984–61.986 mm (2.44031–2.44039 in.)**
U/S 0.25	**61.745–61.755 mm (2.43091–2.43130 in.)**

WhereEverybodyKnowsYourName

Bearing center wall thickness:

Mark ”1”	**1.994–1.997 mm (0.0785–0.0786 in.)**
Mark ”2”	**1.997–2.000 mm (0.0786–0.0787 in.)**
Mark ”3”	**2.000–2.003 mm (0.0787–0.0789 in.)**
Mark ”4”	**2.003–2.006 mm (0.0789–0.0790 in.)**
Mark ”5”	**2.006–2.009 mm (0.0790–0.0791 in.)**
U/S 0.25	**2.114–2.120 mm (0.0832–0.0835 in.)**

Standard sized Bearing Selection Chart

Crankshaft number mark	Cylinder block number mark							
	0	1	2	3	4	5	6	7
0	1	1	1	2	2	2	3	3
1	1	1	2	2	2	3	3	3
2	1	2	2	2	3	3	3	4
3	2	2	2	3	3	3	4	4
4	2	2	3	3	3	4	4	4
5	2	3	3	3	4	4	5	5
6	3	3	3	4	4	5	5	5
7	3	3	4	4	5	5	5	5

EXAMPLE: Cylinder block ”3”, Crankshaft ”4”
= Use bearing ”3”

(k) Completely remove the Plastigage.

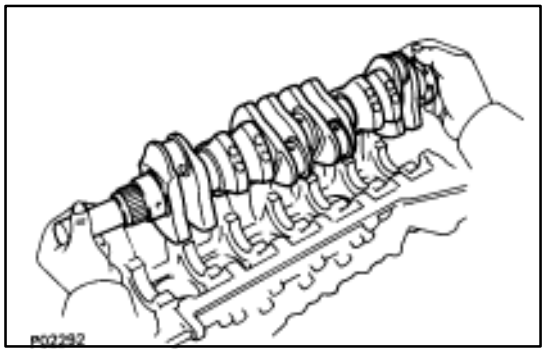

7. REMOVE CRANKSHAFT

(a) Lift out the crankshaft

(b) Remove the upper bearings and upper thrust washers from the cylinder block.

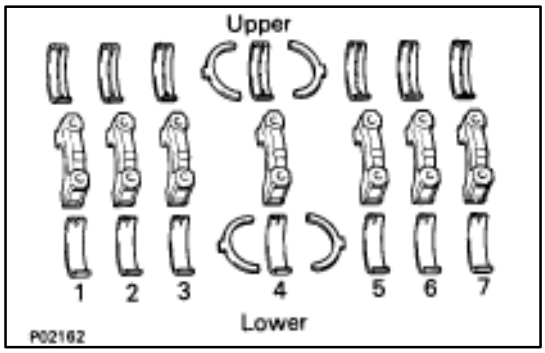

HINT: Arrange the main bearing caps, bearings and thrust washers in correct order.

WhereEverybodyKnowsYourName

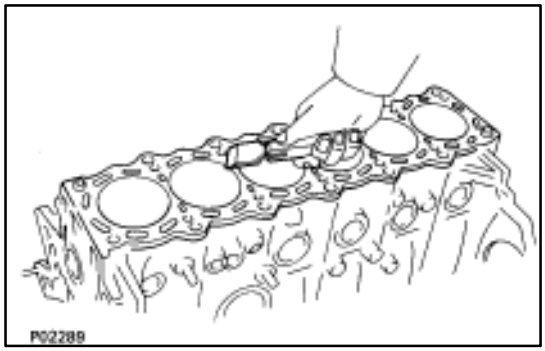

INSPECTION AND REPAIR OF CYLINDER BLOCK

1. CLEAN CYLINDER BLOCK

A. Remove gasket material

Using a gasket scraper, remove all the gasket material from the cylinder block surface.

B. Clean cylinder block

Using a soft brush and solvent, thoroughly clean the cylinder block.

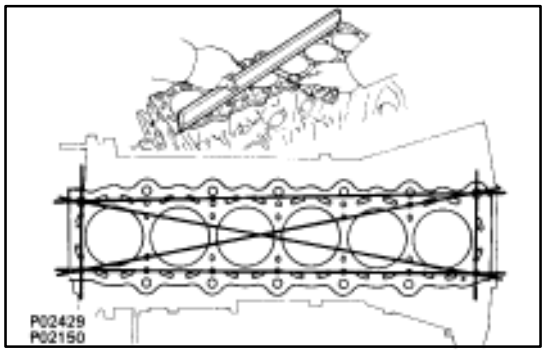

2. INSPECT CYLINDER BLOCK SURFACE FOR FLATNESS

Using precision straight edge and feeler gauge, measure the top surfaces of the cylinder block for warpage.

Maximum warpage: 0.07 mm (0.0028 in.)

If warpage is greater than maximum, replace the cylinder block.

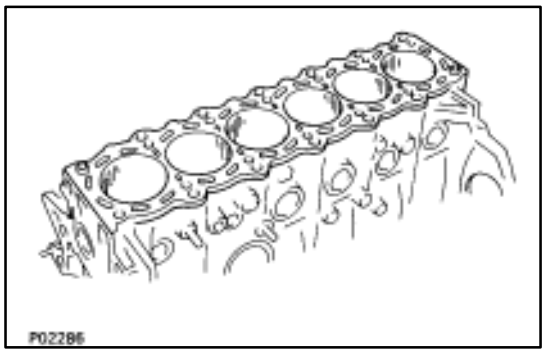

3. INSPECT CYLINDER FOR VERTICAL SCRATCHES

Visually check the cylinder for vertical scratches.

If deep scratches are present, replace the cylinder block.

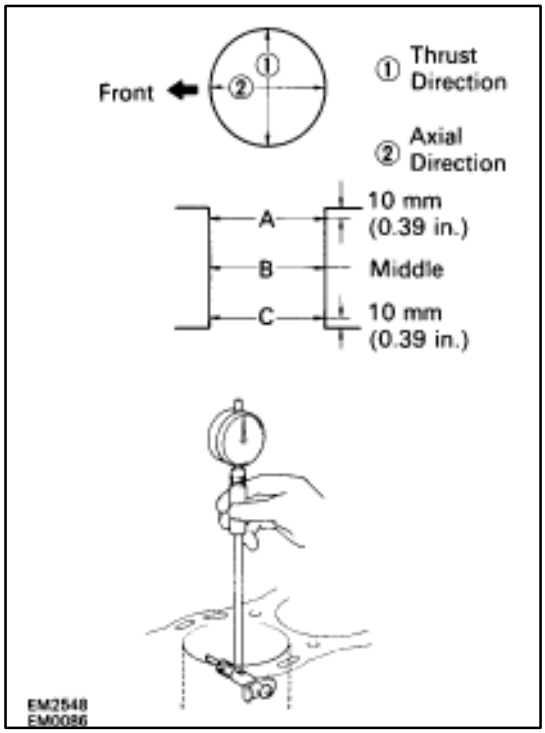

4. INSPECT CYLINDER BORE DIAMETER

(a) Using a cylinder gauge, measure the cylinder bore diameter at positions A, B and C in the thrust and axial directions.

Standard diameter: 86.000–86.013 mm (3.3858–3.3863 in.)

Maximum diameter: 86.02 mm (3.3866 in.)

If the diameter is greater than maximum, replace the cylinder block.

(b) Difference between measurements A, B and C is greater than taper limit.

Taper limit: 0.01 mm (0.0004 in.)

(c) Difference between the thrust and axial measurements is greater than out–of–round limit.

Out–of–round limit: 0.02 mm (0.0008 in.)

WhereEverybodyKnowsYourName

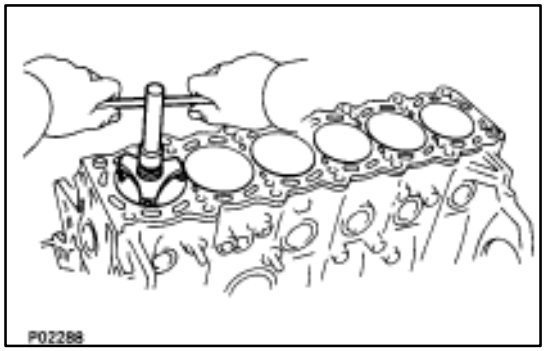

5. REMOVE CYLINDER RIDGE

If the wear is less than 0.2 mm (0.008 in.), using a ridge reamer, grind the top of the cylinder.

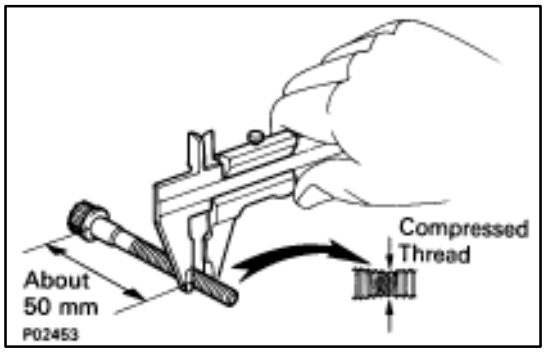

6. INSPECT MAIN BEARING CAP BOLTS

Using vernier calipers, measure the minimum diameter of the compressed thread at the measuring point.

Standard diameter: **9.96–9.97 mm (0.3921–0.3925 in.)**

Minimum diameter: **9.7 mm (0.3819 in.)**

If the diameter is less than minimum, replace the bolt.

DISASSEMBLY OF PISTON AND CONNECTING ROD ASSEMBLIES

1. CHECK FIT BETWEEN PISTON AND PISTON PIN

Try to move the piston back and forth on the piston pin.

If any movement is felt, replace the piston and pin as a set.

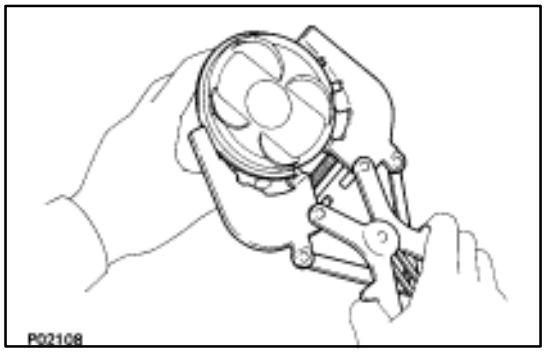

2. REMOVE PISTON RINGS

(a) Using a piston ring expander, remove the two compression rings.

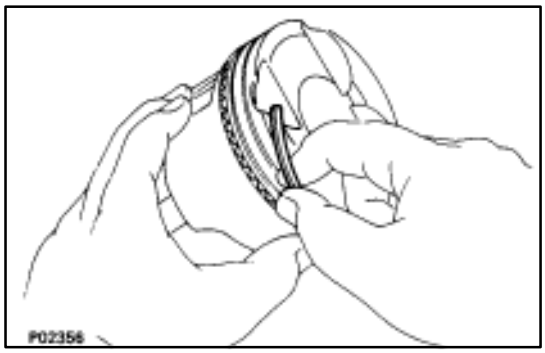

(b) Remove the two side rails and oil ring expander by hand.

HINT: Arrange the piston rings in correct order only.

WhereEverybodyKnowsYourName

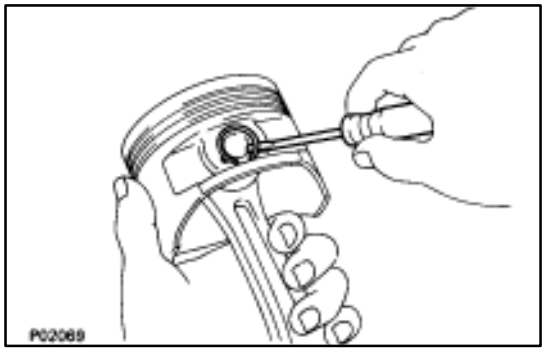

3. DISCONNECT CONNECTING ROD FROM PISTON

(a) Using a small screwdriver, remove the snap rings.

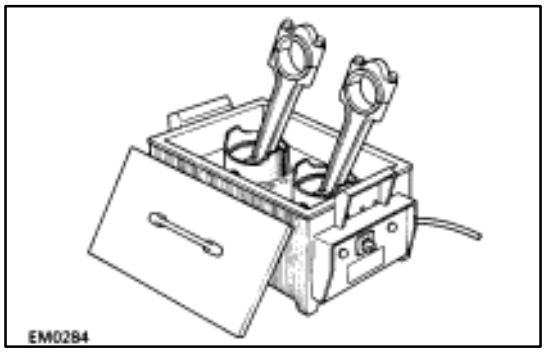

(b) Gradually heat the piston to about 80▼C (176▼F).

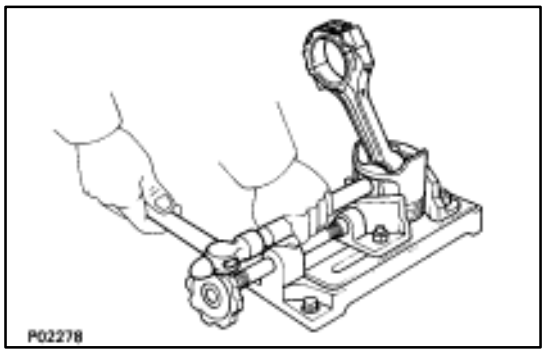

(c) Using a plastic–faced hammer and brass bar, lightly tap out the piston pin and remove the connecting rod.

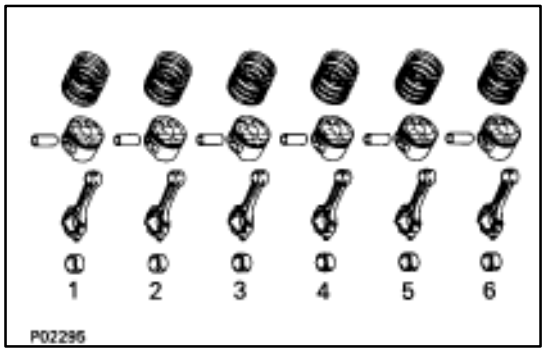

HINT:

- The piston and pin are a matched set.
- Arrange the pistons, pins, rings, connecting rods and bearings in correct order.

WhereEverybodyKnowsYourName

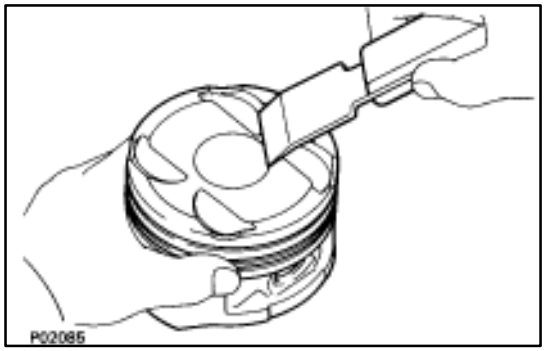

INSPECTION OF PISTON AND CONNECTING ROD ASSEMBLIES

1. CLEAN PISTON

(a) Using a gasket scraper, remove the carbon from the piston top.

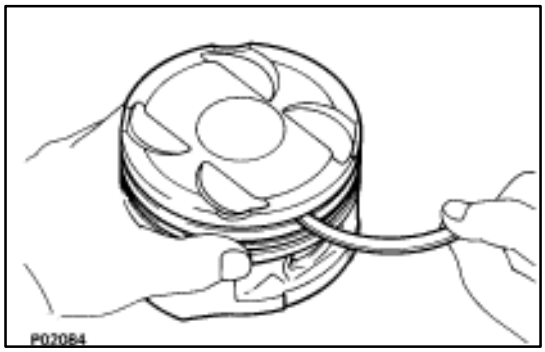

(b) Using a groove cleaning tool or broken ring, clean the piston ring grooves.

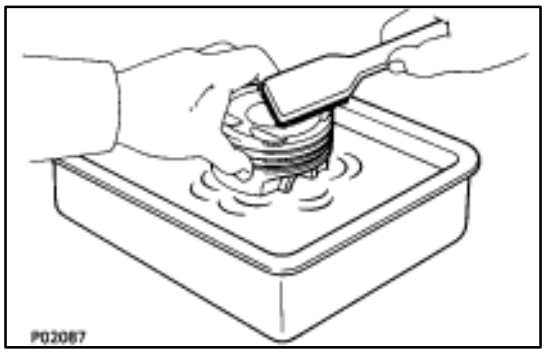

(c) Using solvent and a brush, thoroughly clean the piston.

NOTICE: Do not use a wire brush.

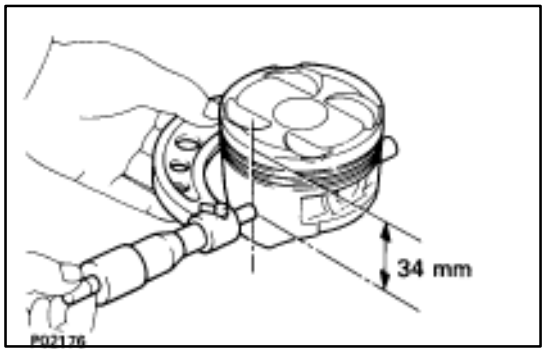

2. INSPECT PISTON

A. Inspect piston oil clearance

(a) Using a micrometer, measure the piston diameter at right angles to the piston pin center line, 34 mm (1.34 in.) from the piston head.

Piston diameter: 85.935–85.945 mm (3.3833–3.3837 in.)

(b) Measure the cylinder bore diameter in the thrust directions. (See step 4 on page EM–84)

(c) Subtract the piston diameter measurement from the cylinder bore diameter measurement.

Standard oil clearance: 0.055–0.078 mm (0.0022–0.0031 in.)

Maximum oil clearance: 0.10 mm (0.0039 in.)

If the oil clearance is greater than maximum, replace all the six pistons. If necessary, replace the cylinder block.

WhereEverybodyKnowsYourName

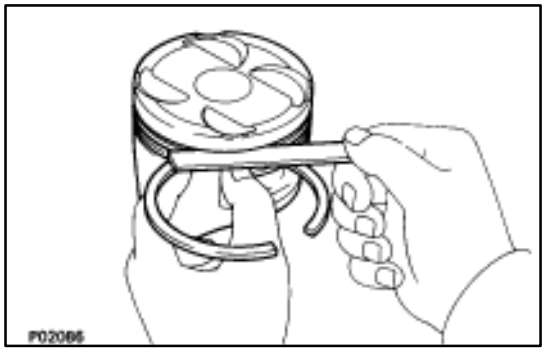

B. Inspect piston ring groove clearance

Using a feeler gauge, measure the clearance between new piston ring and the wall of the piston ring groove.

Ring groove clearance:

No. 1	**0.011–0.07 mm (0.0004–0.0028 in.)**
No. 2	**0.03–0.07 mm (0.0012–0.0028 in.)**

If the clearance is not as specified, replace the piston.

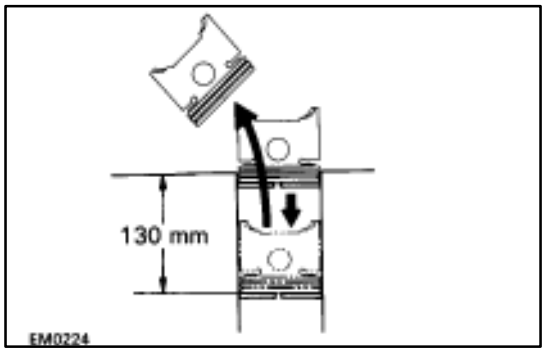

C. Inspect piston ring end gap

(a) Insert the piston ring into the cylinder bore.

(b) Using a piston, push the piston ring a little beyond the bottom of the ring travel, 130 mm (5.12 in.) from the top of the cylinder block.

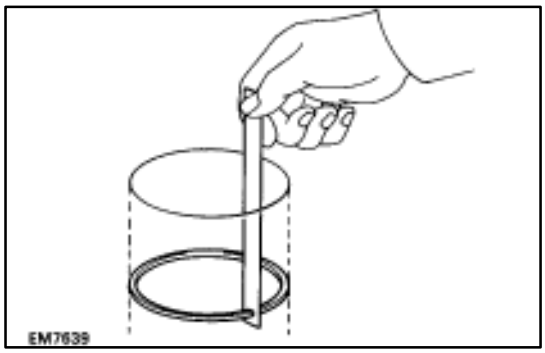

(c) Using a feeler gauge, measure the ring end gap.

Standard ring end gap:

No. 1	**0.30–0.47 mm (0.0120–0.0188 in.)**
No. 2	**0.35–0.52 mm (0.0138–0.0208 in.)**
Oil (Side rail)	**0.13–0.45 mm (0.0051–0.0177 in.)**

Maximum ring end gap:

No. 1	**1.07 mm (0.0428 in.)**
No. 2	**1.12 mm (0.0448 in.)**
Oil (Side rail)	**1.05 mm (0.0420 in.)**

If the end gap is greater than maximum, replace the piston ring. If the end gap is greater than maximum, even with a new piston ring, replace the cylinder block.

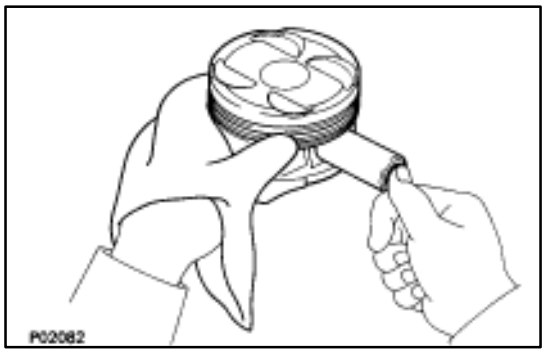

D. Inspect piston pin fit

At 80°C (176°F), you should be able to push the piston pin into the piston pin hole with your thumb.

If the piston pin can be pushed in at room temperature, the piston and the piston pin must be replaced as a set.

WhereEverybodyKnowsYourName

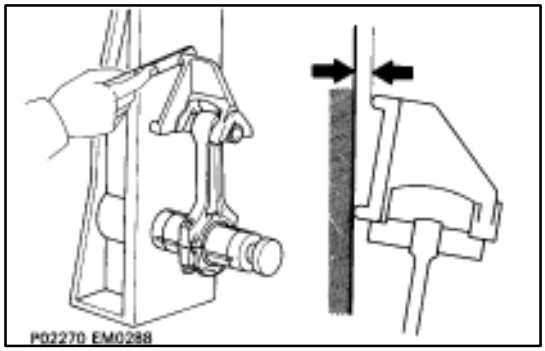

3. INSPECT CONNECTING ROD

A. Inspect connecting rod alignment

Using a feeler gauge and rod aligner, check the connecting rod alignment.

- Check for bend.

Maximum bend:

0.05 mm (0.0020 in.) per 100 mm (3.94 in.)

If bend is greater than maximum, replace the connecting rod assembly.

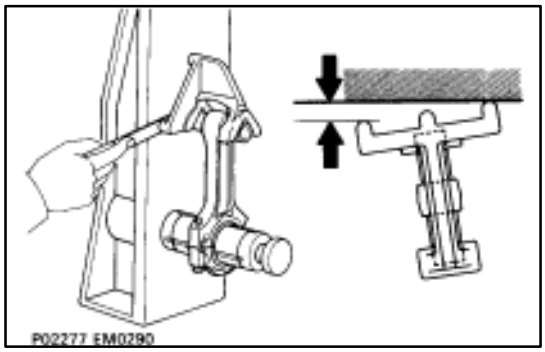

- Check for twist.

Maximum twist:

0.15 mm (0.0059 in.) per 100 mm (3.94 in.)

If twist is greater than maximum, replace the connecting rod assembly.

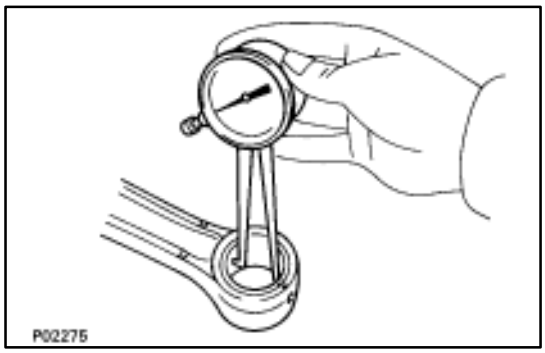

B. Inspect piston pin oil clearance

(a) Using a caliper gauge, measure the inside diameter of the connecting rod bushing.

Bushing inside diameter: 22.005–22.014 mm (0.8663–0.8667 in.)

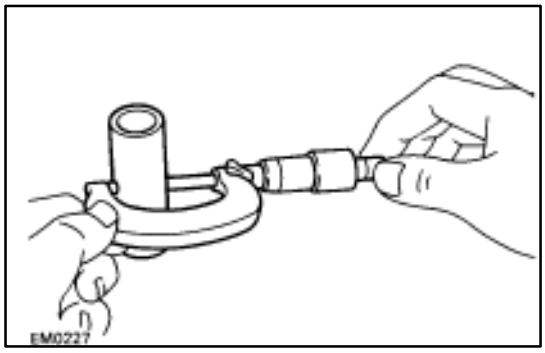

(b) Using a micrometer, measure the piston pin diameter.

Piston pin diameter: 21.997–22.006 mm (0.8660–0.8664 in.)

(c) Subtract the piston pin diameter measurement from the bushing inside diameter measurement.

Standard oil clearance: 0.005–0.011 mm (0.0002–0.0004 in.)

Maximum oil clearance: 0.05 mm (0.0020 in.)

If the oil clearance is greater than maximum, replace the bushing. If necessary, replace the piston and piston pin as a set.

WhereEverybodyKnowsYourName

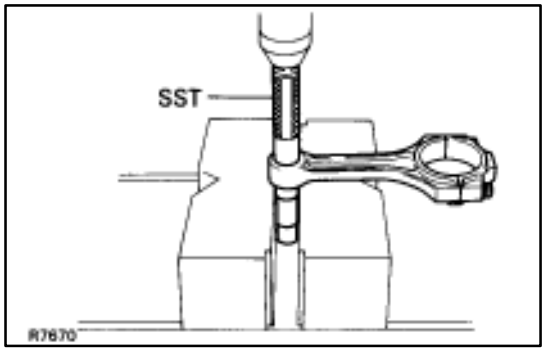

C. If necessary, replace connecting rod bushing

(a) Using SST and a press, press out the bushing.

SST 09222–30010

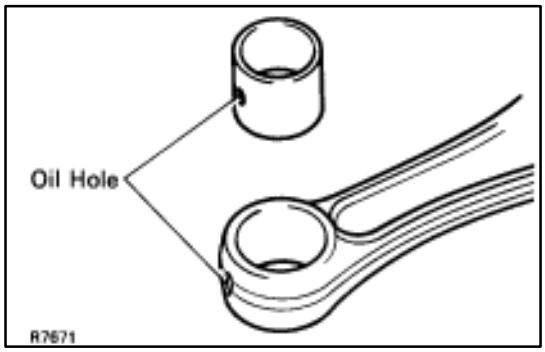

(b) Align the oil holes of a new bushing and the connecting rod.

(c) Using SST and a press, press in the bushing.

SST 09222–30010

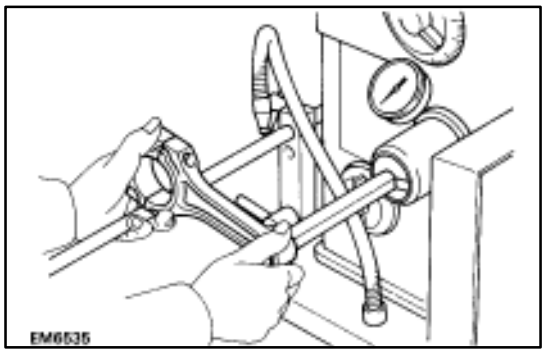

(d) Using a pin hole grinder, bore the bushing to obtain the standard specified clearance (see step B above) between the bushing and piston pin.

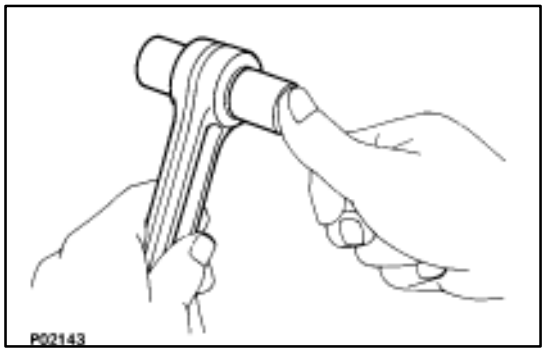

(e) Check the piston pin fit at room temperature.

Coat the piston pin with engine oil, and push it into the connecting rod with your thumb.

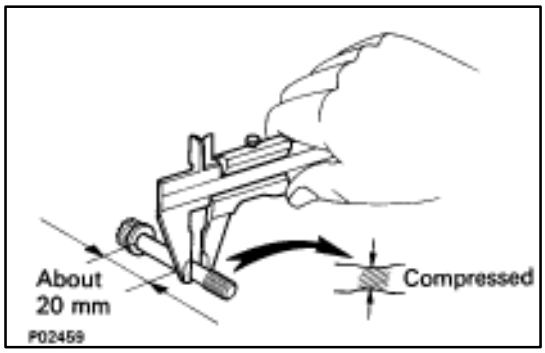

D. Inspect connecting rod bolts

Using vernier calipers, measure the minimum diameter of the compressed bolt at the measuring point.

Standard diameter: **8.2–8.3 mm (0.325–0.327 in.)**

Minimum diameter: **8.0 mm (0.315 in.)**

If the diameter is less than minimum, replace the connecting rod bolt.

WhereEverybodyKnowsYourName

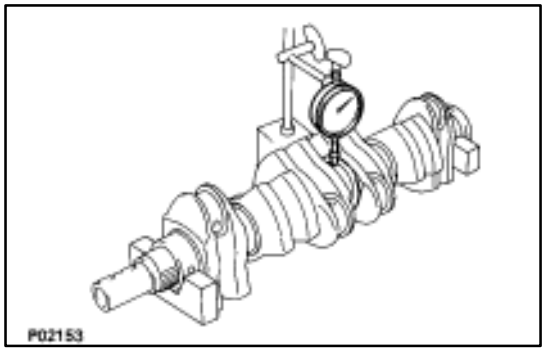

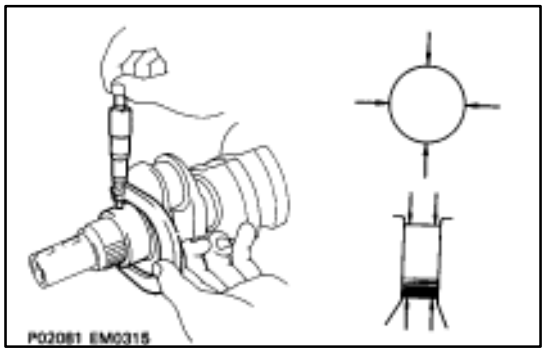

INSPECTION OF CRANKSHAFT

1. INSPECT CRANKSHAFT FOR RUNOUT

(a) Place the crankshaft on V–blocks.

(b) Using a dial indicator, measure the circle runout at the center journal.

Maximum circle runout: 0.06 mm (0.0024 in.)

If the circle runout is greater than maximum, replace the crankshaft.

2. INSPECT MAIN JOURNALS AND CRANK PINS

(a) Using a micrometer, measure the diameter of each main journal and crank pin.

Main journal diameter: 61.984–62.000 mm (2.4403–2.4409 in.)

Crank pin diameter: 51.982–52.000 mm (2.0465–2.0472 in.)

If the diameter is not as specified, check the oil clearance (See page EM–77 or EM–80).

(b) Check each main journal and crank pin for taper and out–of–round as shown.

Maximum taper and out–of round: 0.02 mm (0.0008 in.)

If the taper or out–of–round is greater than maximum, replace the crankshaft.

WhereEverybodyKnowsYourName

REPLACEMENT OF CRANKSHAFT OIL SEALS

1. REPLACE CRANKSHAFT FRONT OIL SEAL

HINT: There are two methods, A and B, to replace the oil seal as follows:

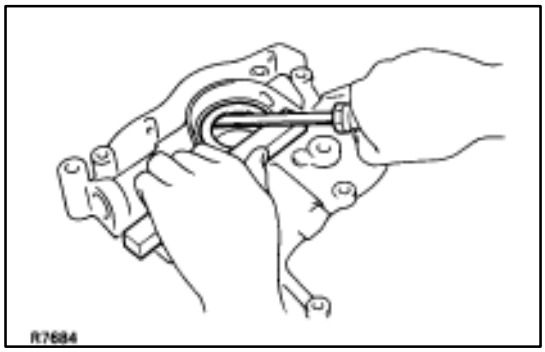

A. If oil pump is removed from cylinder block:

(a) Using a screwdriver, pry out the oil seal.

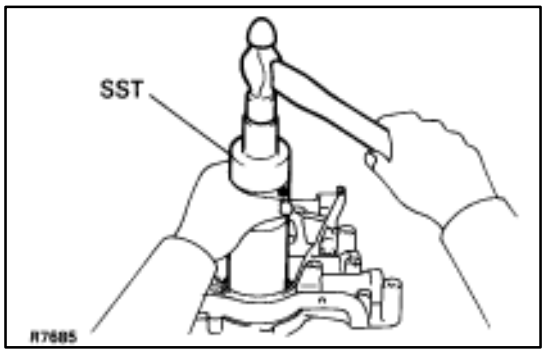

(b) Using SST and a hammer, tap in a new oil seal until its surface is flush with the oil pump body edge.

SST 09316–60010 (09316–00010)

(c) Apply MP grease to the oil seal lip.

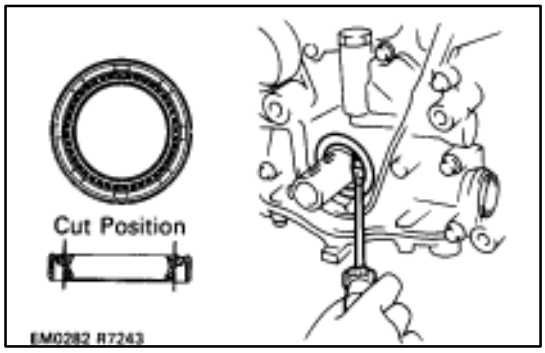

B. If oil pump is installed on cylinder block:

(a) Using a knife, cut off the oil seal lip.

(b) Using a screwdriver, pry out the oil seal.

NOTICE: Be careful not to damage the crankshaft. Tape the screwdriver tip.

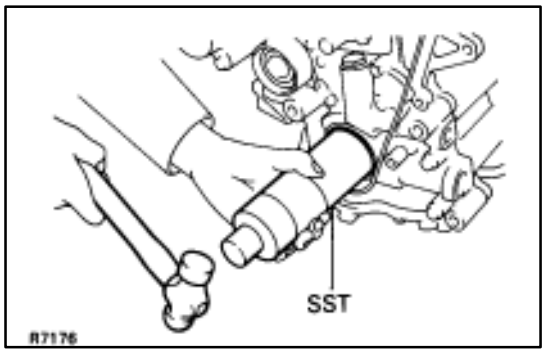

(c) Apply MP grease to a new oil seal lip.

(d) Using SST and a hammer, tap in the oil seal until its surface is flush with the oil pump body edge.

SST 09316 60010 (09316–00010)

WhereEverybodyKnowsYourName

2. REPLACE CRANKSHAFT REAR OIL SEAL

HINT: There are two methods, A and B, to replace the oil seal as follows:

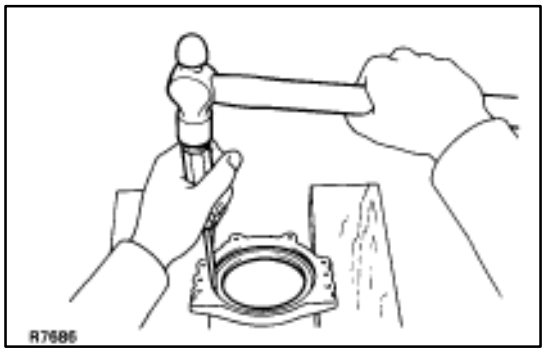

A. If rear oil seal retainer is removed from cylinder block:

(a) Using a screwdriver and hammer, tap out the oil seal.

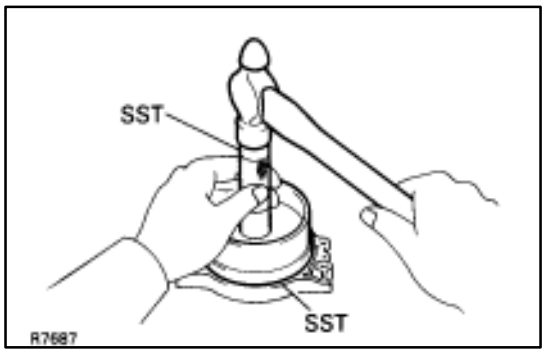

(b) Using SST and a hammer, tap in a new oil seal until its surface is flush with the rear oil seal retainer edge.

SST 09223–15030, 09608–30022 (09608–05010)

(c) Apply MP grease to the oil seal lip.

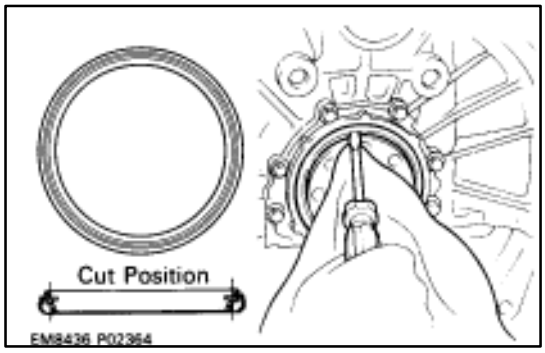

B. If rear oil seal retainer is installed on cylinder block:

(a) Using a knife, cut off the oil seal lip.

(b) Using a screwdriver, pry out the oil seal.

NOTICE: Be careful not to damage the crankshaft. Tape the screwdriver tip.

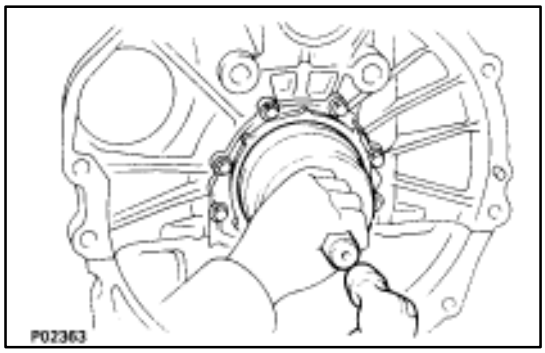

(c) Apply MP grease to a new oil seal lip.

(d) Using SST and a hammer, tap in the oil seal until its surface is flush with the rear oil seal retainer edge.

SST 09223–15030, 09608–30022 (09608–05011)

WhereEverybodyKnowsYourName

ASSEMBLY OF PISTON AND CONNECTING ROD ASSEMBLIES

1. ASSEMBLE PISTON AND CONNECTING ROD

(a) Install a new snap ring at one end of the piston pin hole.

HINT: Be sure that end gap of the snap ring is not aligned with the pin hole cutout portion of the piston.

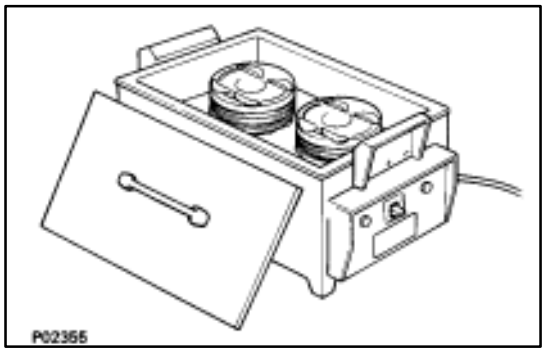

(b) Gradually heat the piston to about 80▼C (176▼F).

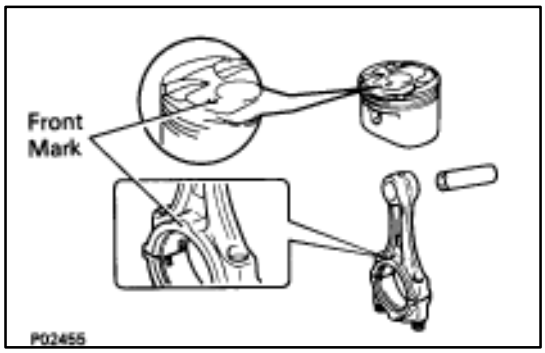

(c) Coat the piston pin with engine oil..

(d) Align the front marks of the piston and connecting rod, and push in the piston pin with your thumb.

(e) Install a new snap ring at the other end of the piston pin hole.

HINT: Be sure that end gap of the snap ring is not aligned with the pin hole cutout portion of the piston.

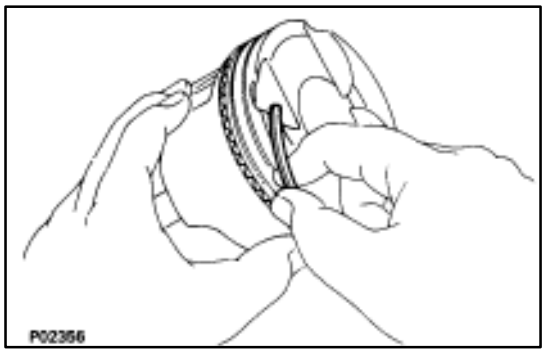

2. INSTALL PISTON RINGS

(a) Install the oil ring expander and two side rails by hand.

WhereEverybodyKnowsYourName

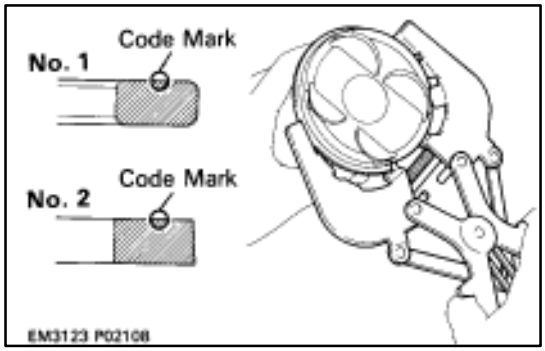

(b) Using a piston ring expander, install the two compression rings with the code mark facing up.

Code mark: No.1 1T
No.2 2T

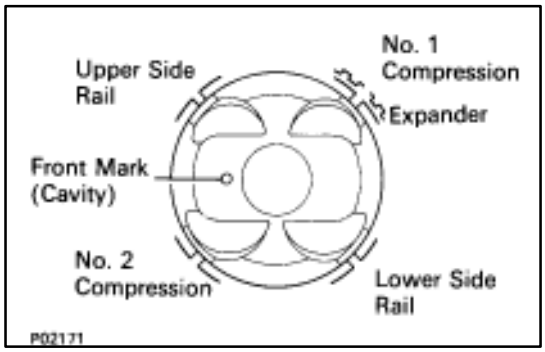

(c) Position the piston rings so that the ring ends are as shown.

NOTICE: Do not align the piston ring ends.

3. INSTALL BEARINGS

(a) Align the bearing claw with the groove of the connecting rod and connecting cap.

(b) Install the bearings in the connecting rod and connecting rod cap.

WhereEverybodyKnowsYourName

ASSEMBLY OF CYLINDER BLOCK

(See Components on page EM–75)

HINT:

- Thoroughly clean all parts to be assembled.
- Before installing the parts, apply new engine oil to all sliding and rotating surfaces.
- Replace all gaskets, O–rings and oil seals with new parts.

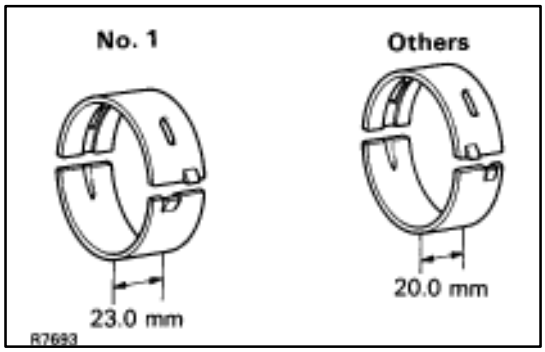

NOTICE: Apply a generous amount of oil on the sliding surface of the bearing, and not on the back of it or on the surface to which it is installed.

1. INSTALL MAIN BEARINGS

HINT: The No. 1 main bearing is different from the rest of the bearing.

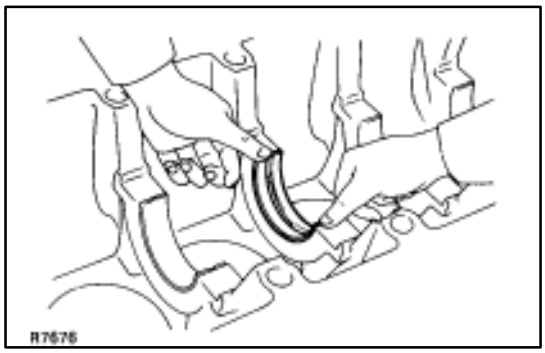

(a) Align the bearing claw with the claw groove of the main bearing cap or cylinder block.

NOTICE: Install the bearing with the oil hole in the cylinder block.

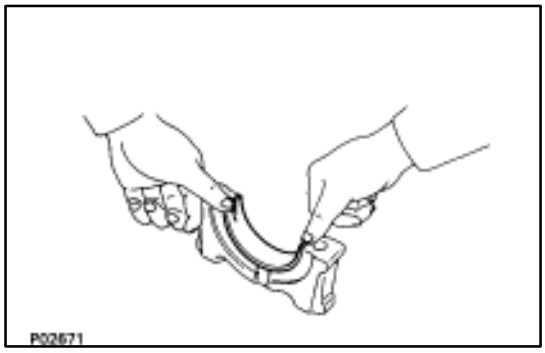

(b) Instal the bearings in the cylinder block and main bearing caps.

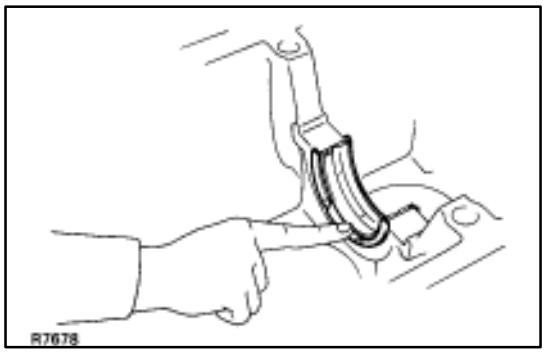

2. INSTALL UPPER THRUST WASHERS

Install the thrust washers under the No. 4 main journal position of the block with the oil grooves facing outward.

WhereEverybodyKnowsYourName

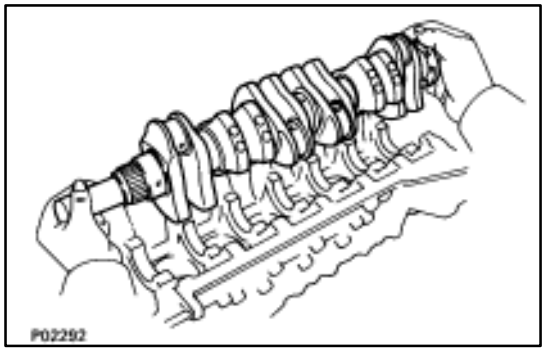

3. PLACE CRANKSHAFT ON CYLINDER BLOCK

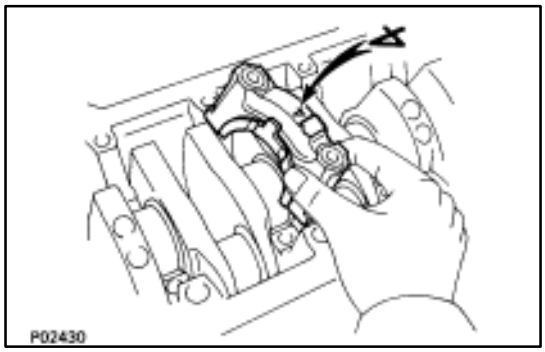

4. INSTALL MAIN BEARING CAP AND LOWER THRUST WASHERS

A. Place main bearing cap and lower thrust washers on cylinder block

(a) Install the lower thrust washers on the No. 4 main bearing with the grooves facing outward.

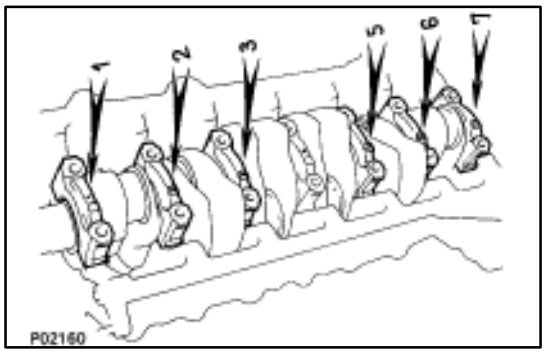

(b) Install the main bearing caps in numerical order with the arrows facing forward.

B. Install main bearing cap bolts

HINT:

- The main bearing cap bolts are tightened in two progressive steps (steps (b) and (d)).
- If any of the main bearing bolts break or deform, replace them.

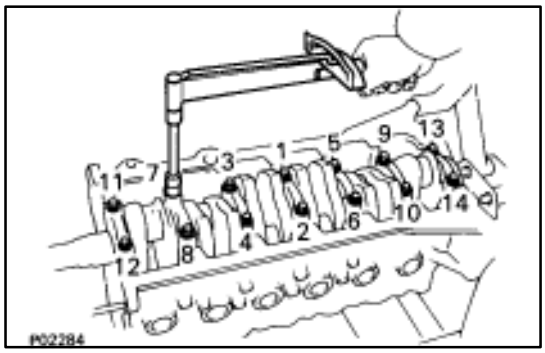

(a) Apply a light coat of engine oil on the threads and under the heads of the main bearing cap bolts.

(b) First, install and uniformly tighten the 14 main bearing cap bolts in several passes in the sequence shown.

Torque: 44 N·m (450 kgf·cm, 33 ft·lbf)

If any one of the main bearing cap bolts does not meet the torque specification, replace the main bearing cap bolt.

WhereEverybodyKnowsYourName

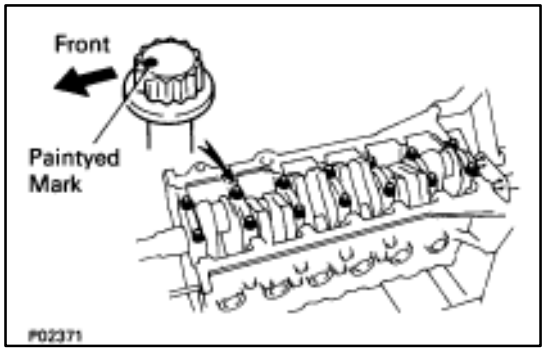

(c) Mark the front of the main bearing cap bolt head with paint.

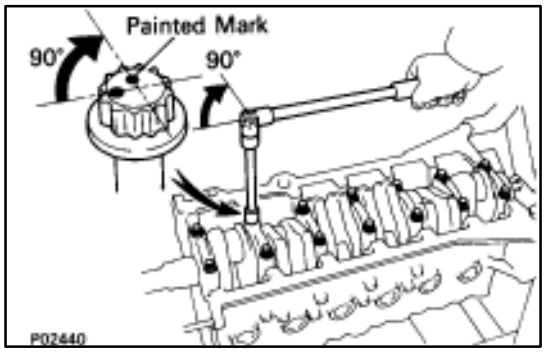

(d) Second, retighten the main bearing cap bolts 90▼in the numerical order shown above.
(e) Check that the painted mark is now at a 90▼angle to the front.
(f) Check that the crankshaft turns smoothly.
(g) Check the crankshaft thrust clearance.
(See step 5 on page EM–80)

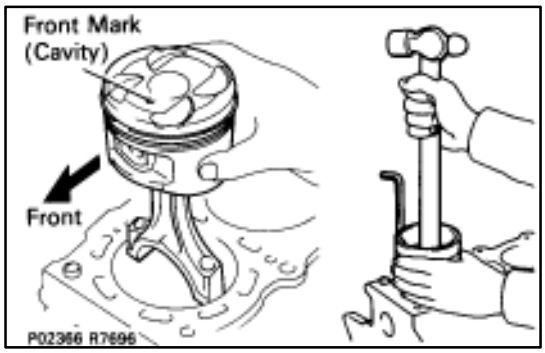

5. INSTALL PISTON AND CONNECTING ROD ASSEMBLIES

Using a piston ring compressor, push the correctly numbered piston and connecting rod assemblies into each cylinder with the front mark of the piston facing forward.

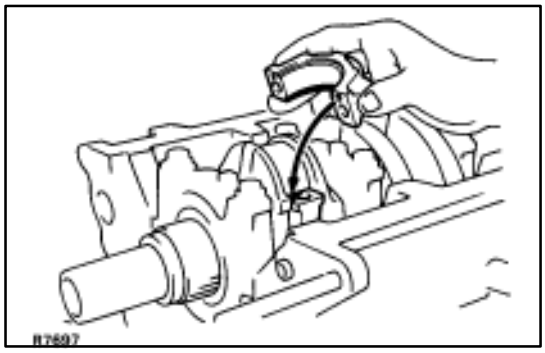

6. INSTALL CONNECTING ROD CAPS

A. Place connecting rod cap on connecting rod

(a) Match the numbered connecting rod cap with the connecting rod.
(b) Install the connecting rod cap by aligning the dowel pin to the corrosponding hole.

B. Install connecting rod cap bolts

HINT:

- The connecting rod cap bolts are tightened in two progressive steps (steps (b) and (d)).
- If any of the connecting rod bolts break or deform, replace them.

WhereEverybodyKnowsYourName

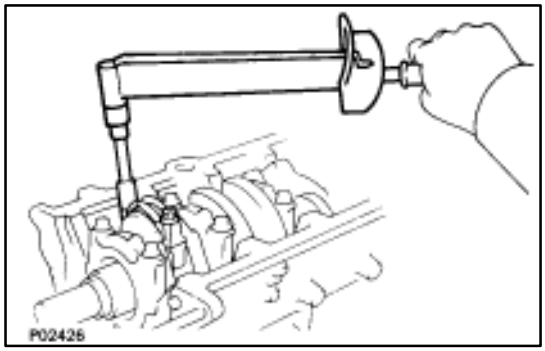

(a) Apply a light coat of engine oil on the threads and under the heads of the connecting rod cap bolts.
(b) At first, install and alternately tighten the bolts of the connecting rod cap in several passes.

Torque: 29 N·m (300 kgf·cm, 22 ft·lbf)

If any one of the connecting rod cap bolts does not meet the torque specification, replace the cap bolt.

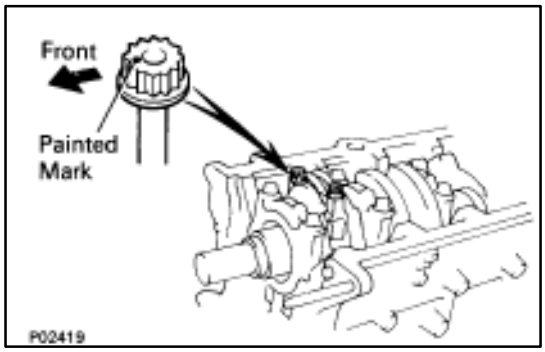

(c) Mark the front of the connecting rod cap bolt with paint.

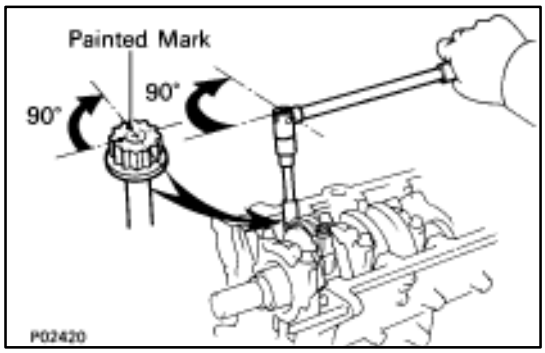

(d) Retighten the connecting rod cap bolts 905 in the numerical order shown.
(e) Check that the painted mark is now at a 905 angle to the front.
(f) Check that the crankshaft turns smoothly.
(g) Check the connecting rod thrust clearance.
(See step 2 on page EM–77)

7. INSTALL REAR OIL SEAL RETAINER

(a) Remove any old packing (FIPG) material and be careful not to drop any oil on the contact surfaces of the retainer and cylinder block.
- Using a razor blade and gasket scraper, remove all the old packing (FIPG) material from the gasket surfaces and sealing groove.
- Thoroughly clean all components to remove all debris.
- Using a non–residue solvent, clean both sealing surfaces.

(b) Apply seal packing to the retainer as shown in the illustration.

Seal packing: Part No. 08826–00080 or equivalent

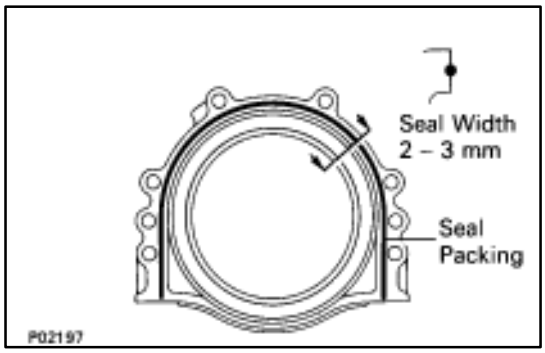

- Install a nozzle that has been cut to a 2–3 mm (0.08–0.12 in.) opening.
- Parts must be assembled within 3 minutes of application. Otherwise the material must be removed and reapplied.
- Immediately remove nozzle from the tube and reinstall cap.

WhereEverybodyKnowsYourName

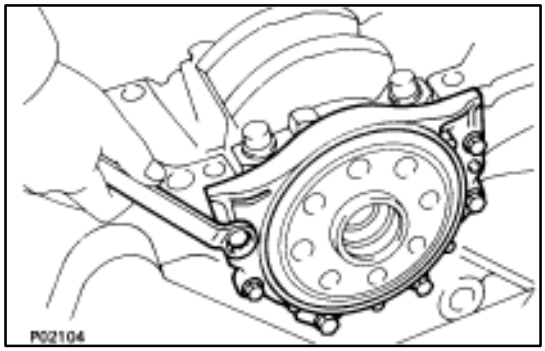

(c) Install the retainer with the six bolts.
Torque: 5.9 N·m (60 kgf·cm, 52 in.·lbf)

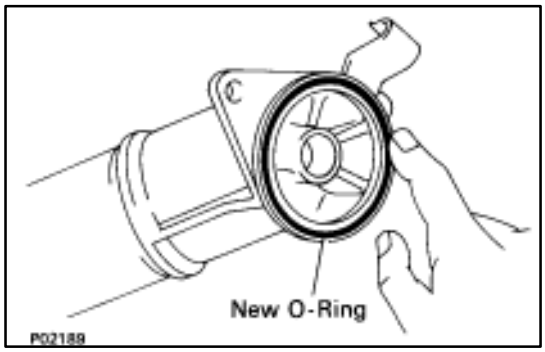

POST ASSEMBLY

(See Components on page EM–75)

1. **INSTALL OIL PUMP (See page LU–15)**
2. **INSTALL OIL FILTER BRACKET**
   (a) Place a new O–ring in position on the oil filter bracket.

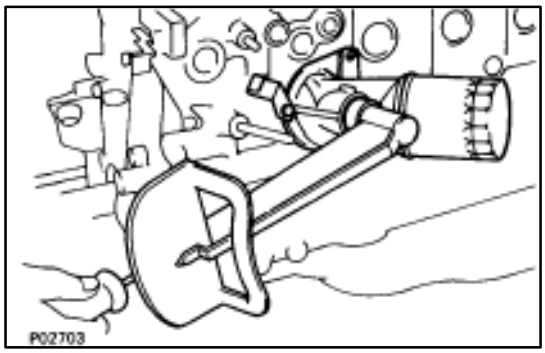

(b) Install a new gasket to the union bolt.
(c) Install the oil filter bracket with the union bolt.
Torque: 88 N·m (900 kgf·cm, 65 ft·lbf)

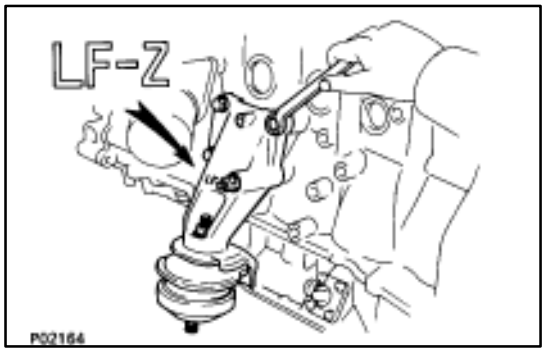

3. **INSTALL LH ENGINE MOUNTING BRACKET**
   Install the mounting bracket with the four bolts.
   Torque: 58 N·m (590 kgf·cm, 43 ft·lbf)
   HINT: The LH mounting bracket is marked ”LF–Z”.

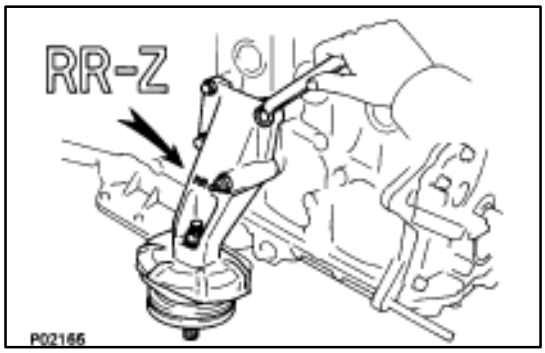

4. **INSTALL RH ENGINE MOUNTING BRACKET**
   Install the mounting bracket with the four bolts.
   Torque: 58 N·m (590 kgf·cm, 43 ft·lbf)
   HINT: The RH mounting bracket is marked ”RR–Z”.

WhereEverybodyKnowsYourName

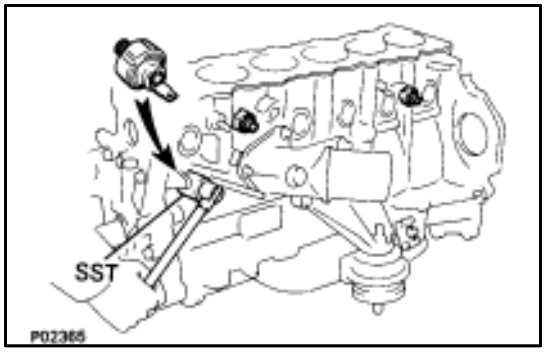

5. INSTALL KNOCK SENSORS AND OIL PRESSURE SWITCH

Using SST, install the two knock sensors and oil pressure switch.

SST 09816–30010

Torque:

Knock sensor	**44 N·m (450 kgf·cm, 33 ft·lbf)**
Oil pressure switch	**14 N·m (150 kgf·cm, 11 ft·lbf)**

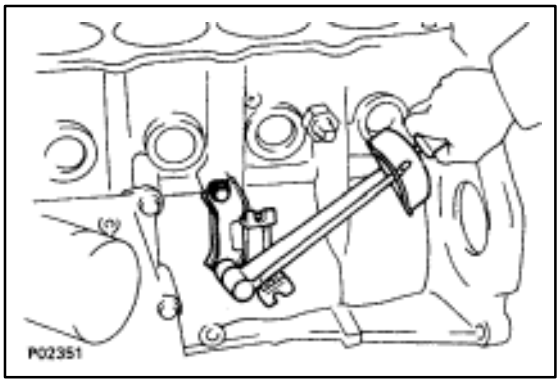

6. INSTALL FUEL PIPE SUPPORT

Torque: 14 N·m (145 kgf·cm, 10 ft·lbf)

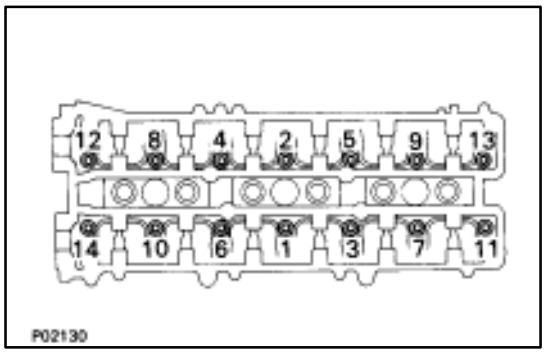

7. INSTALL CYLINDER HEAD

(See pages EM–54 to 57)

Torque: 1st 34 N·m (350 kgf·cm, 25 ft·lbf)
2nd turn 90°
3rd turn 90°

8. INSTALL FUEL PRESSURE PULSATION DAMPER

(See step 1 on page FI–36)

Torque: 41 N·m (420 kgf·cm, 30 ft·lbf)
35 N·m (350 kgf·cm, 25 ft·lbf) for SST

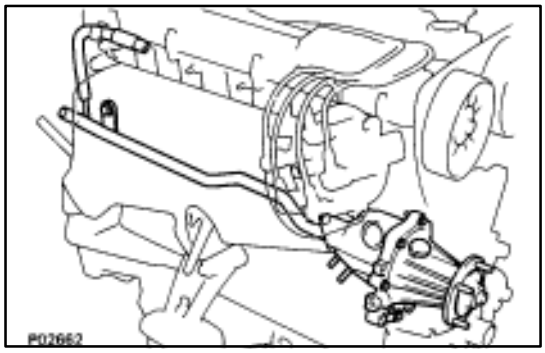

9. INSTALL WATER PUMP AND BY–PASS PIPE

(a) Install the water pump. (See page CO–7)

(b) Install the No. 2 water by–pass pipe with the bolt.

(c) Connect the No. 2 water by–pass hose to the engine hanger.

10. INSTALL THROTTLE BODY WITH INTAKE AIR CONNECTOR

(See page EM–18)

Torque: 21 N·m (210 kgf·cm, 15 ft·lbf)

11. INSTALL TIMING PULLEYS AND BELT

(See pages EM–29 to 33)

12. INSTALL GENERATOR

Torque: 37 N·m (380 kgf·cm, 27 ft·lbf)

13. REMOVE ENGINE STAND FROM ENGINE

WhereEverybodyKnowsYourName

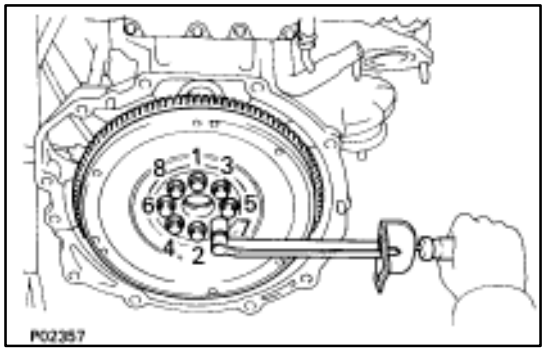

14. (M/T)

INSTALL FLYWHEEL

HINT: The flywheel bolts are tightened in two progressive steps, (b) and (d).

(a) Install the flywheel on the crankshaft.

(b) Install and uniformly tighten the eight mount bolts in several passes in the sequence shown.

Torque: 49 N·m (500 kgf·cm, 36 ft·lbf)

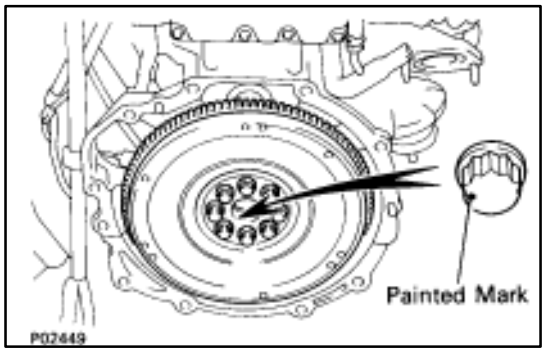

(c) Mark the flywheel bolt with paint.

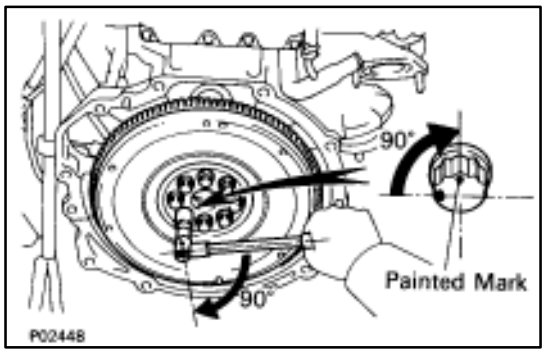

(d) Second, retighten the flywheel bolts by an additional 90▼

(e) Check that the painted mark is now at a 90▼angle to (c).

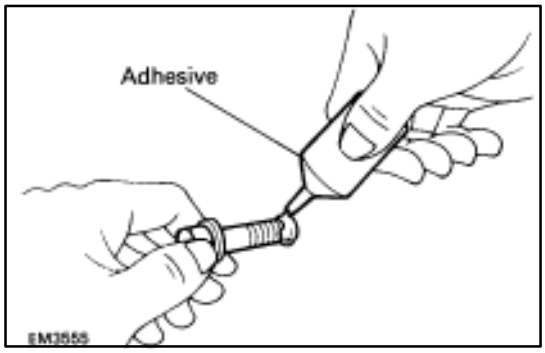

15. (A/T)

INSTALL DRIVE PLATE

(a) Apply adhesive to two or three threads of the mounting bolt end.

Adhesive: Part No. 08833–00070, THREE BOND 1324 or equivalent

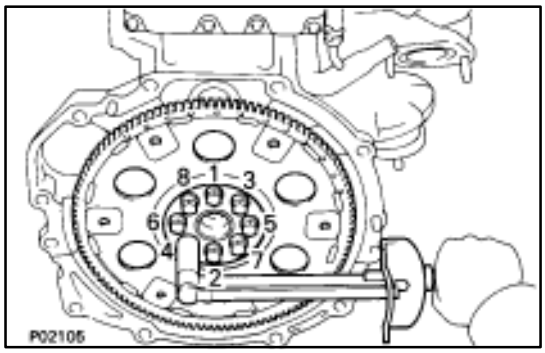

(b) Install the front spacer, drive plate and rear spacer on the crankshaft.

(c) Install and uniformly tighten the eight mounting bolts in several passes in the sequence shown.

Torque: 98 N·m (1,000 kgf·cm, 72 ft·lbf)

WhereEverybodyKnowsYourName

ASSEMBLY OF ENGINE AND TRANSMISSION

(See Components on page EM–73)

1. **(M/T)**
   INSTALL CLUTCH DISC AND COVER
   Torque: 19 N·m (195 kgf·cm, 14 ft·lbf)

2. **ASSEMBLE ENGINE AND TRANSMISSION**
   (See page AT–31)
   Torque:
   14 mm head bolt 37 N·m (380 kgf·cm, 27 ft·lbf)
   17 mm head bolt 72 N·m (730 kgf·cm, 53 ft·lbf)

3. **INSTALL STARTER**
   Torque: 39 N·m (400 kgf·cm, 29 ft·lbf)

4. **CONNECT ENGINE WIRE TO TRANSMISSION**

5. **(A/T)**
   INSTALL OIL COOLER PIPE
   Torque: 34 N·m (350 kgf·cm, 25 ft·lbf)

6. **(A/T)**
   INSTALL OIL DIPSTICK GUIDE FOR TRANSMISSION

WhereEverybodyKnowsYourName

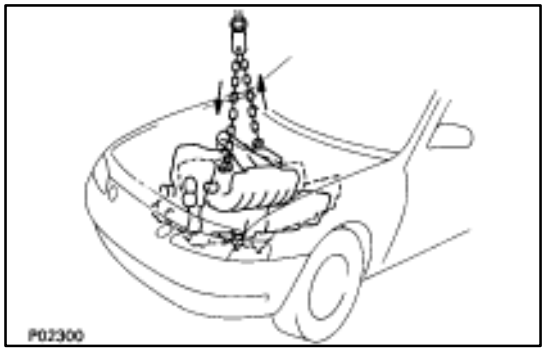

INSTALLATION OF ENGINE

(See Components on pages EM–62 to 64)

1. INSTALL ENGINE AND TRANSMISSION ASSEMBLY IN VEHICLE

(a) Attach the engine hoist chain to the engine hangers.

(b) Lower the engine and transmission assembly into the engine compartment.

CAUTION: Install carefully without damaging the power steering gear housing or the park/neutral position switch (A/T only).

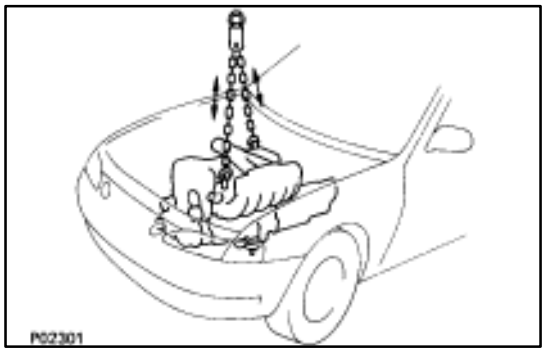

(c) Insert the stud bolts of the front engine mounting brackets into the stud bolt holes of the front suspension crossmember.

(d) Keep the engine level.

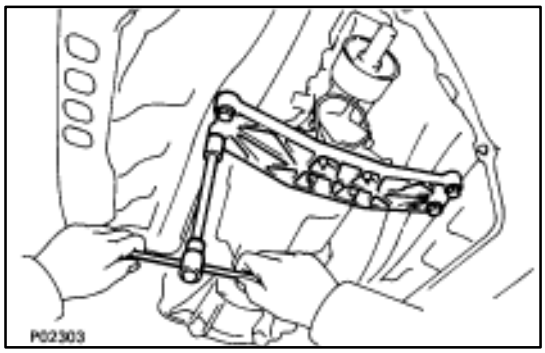

(e) Install the rear engine mounting member with the four bolts and four nuts.

Torque: Nut 13 N·m (135 kgf·cm, 10 ft·lbf)
Bolt 25 N·m (260 kgf·cm, 19 ft·lbf)

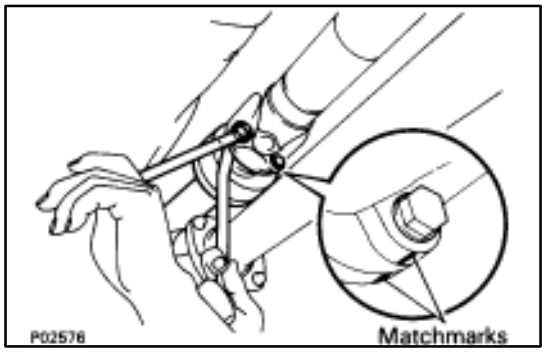

2. INSTALL INTERMEDIATE SHAFT

(a) Remove SST.

SST 09325–20010 (M/T)
09325–40010 (A/T)

(b) Insert the yoke into the transmission.

(c) Align the matchmarks on the flanges and connect the propeller shaft with the four bolts, washers and nuts.

(d) Torque the bolts and nuts.

Torque: 74 N·m (750 kgf·cm, 54 ft·lbf)

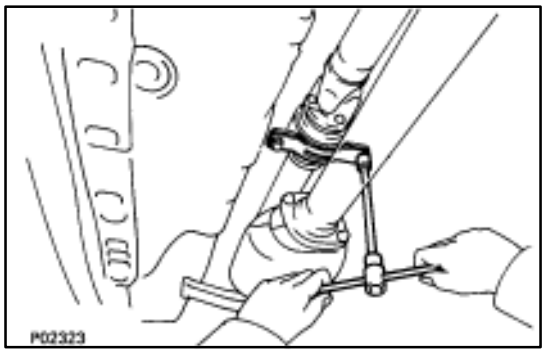

(e) Torque the bolts.

Torque: 49 N·m (500 kgf·cm, 36 ft·lbf)

WhereEverybodyKnowsYourName

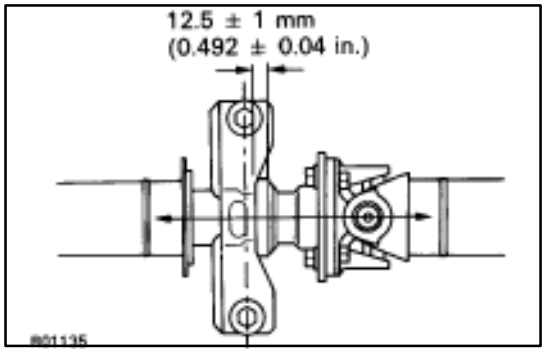

HINT: Adjust the center support bearing to keep the intervals as shown with the vehicle in the unladen condition.
Under the same condition, check if the center line of the center support bearing is at right angles to the shaft axial direction.

(f) Inspect the joint angle. (See page PR–13)

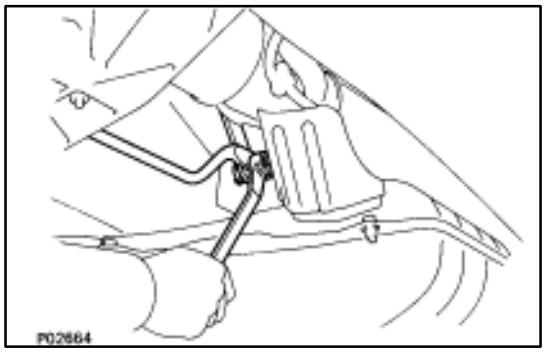

3. (A/T)
CONNECT TRANSMISSION CONTROL ROD
Connect the control rod to the shift lever with the nut.

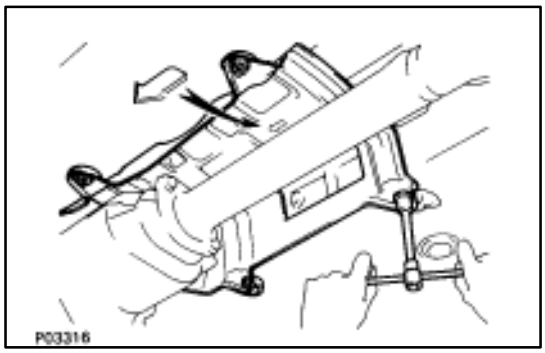

4. INSTALL EXHAUST PIPE HEAT INSULATOR
Install the heat insulator with the four nuts as shown.

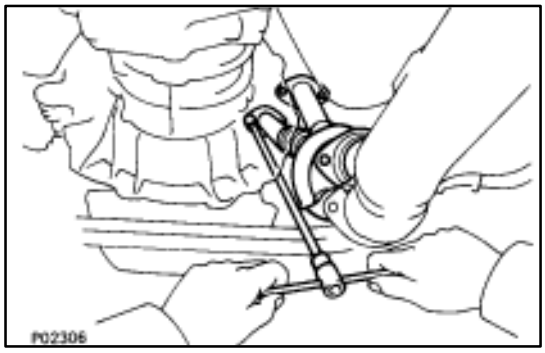

5. INSTALL NO. 2 FRONT EXHAUST PIPE

(a) Install new two gaskets and No. 2 front exhaust pipe with new four nuts.

Torque: 62 N·m (630 kgf·cm, 46 ft·lbf)

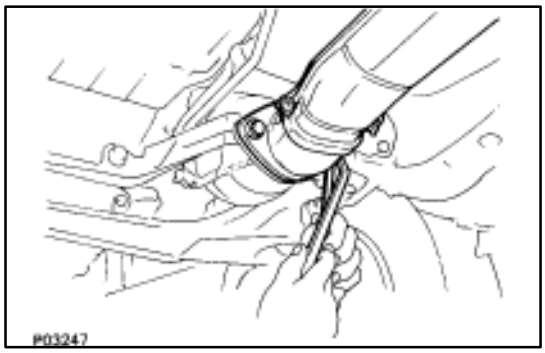

(b) Install a new gasket and the No. 2 front exhaust pipe to the front exhaust pipe with the two bolts and nuts.

Torque: 43 N·m (440 kgf·cm, 32 ft·lbf)

WhereEverybodyKnowsYourName

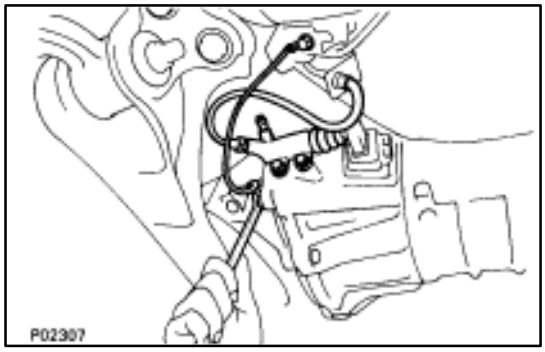

6. (M/T)

INSTALL CLUTCH RELEASE CYLINDER

Install the clutch release cylinder and torque the two bolts.

Torque: 12 N·m (120 kgf·cm, 9 ft·lbf)

7. INSTALL GROUND STRAP, STARTER WIRE AND HOSE

(a) Install the ground strap to the transmission.

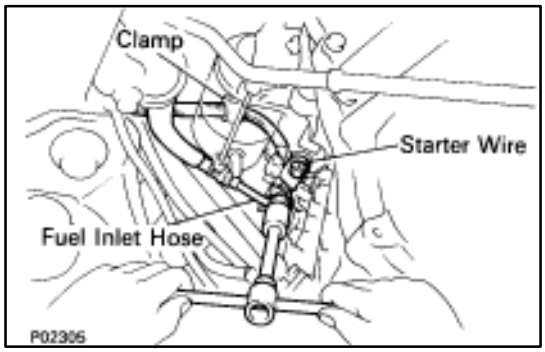

(b) Install the starter wire with the nuts.

(c) Install the starter wire with the wire clamp.

(d) Install two new gaskets and fuel inlet hose with the union bolt.

Torque: 34 N·m (350 kgf·cm, 25 ft·lbf)

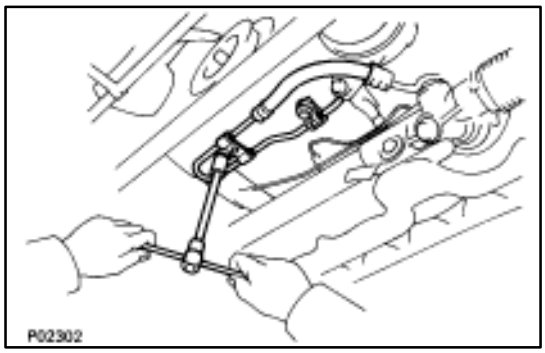

8. INSTALL PS PIPE

Install the PS pipe with the two clamp bolts.

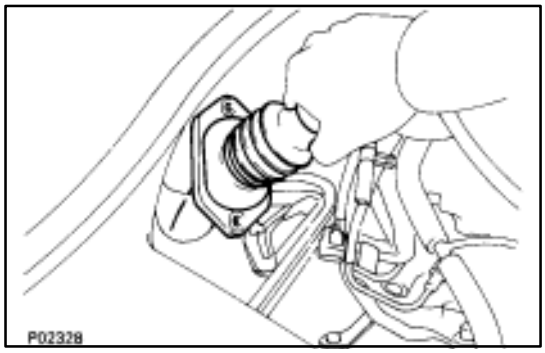

9. CONNECT ENGINE WIRE TO CABIN

(a) Push in the engine wire through the cowl panel.

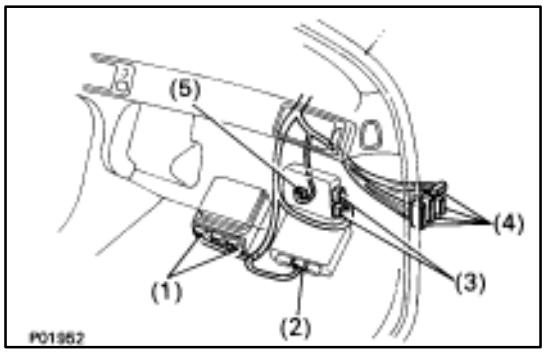

(b) Connect the following connectors:

(1) Two connectors to ECM
(2) Connectors to ABS & TRAC ECU
(3) Two connectors to TRAC ECU
(4) Four connectors to connector cassette
(5) Connector to A/C control assembly

WhereEverybodyKnowsYourName

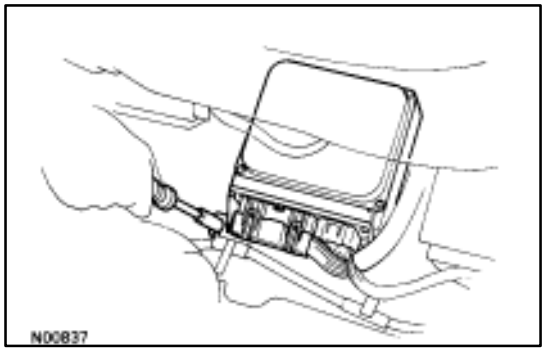

(c) Install the engine (& ECT) ECU with the nut.

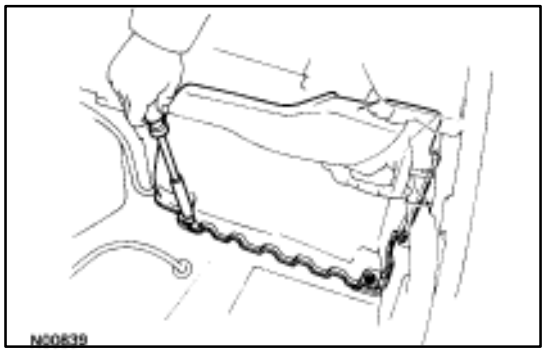

(d) Install the ECU cover with the two nuts.
(e) Install the floor carpet.

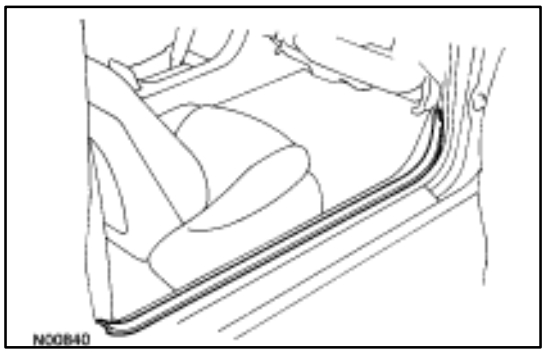

(f) Install the scuff plate.

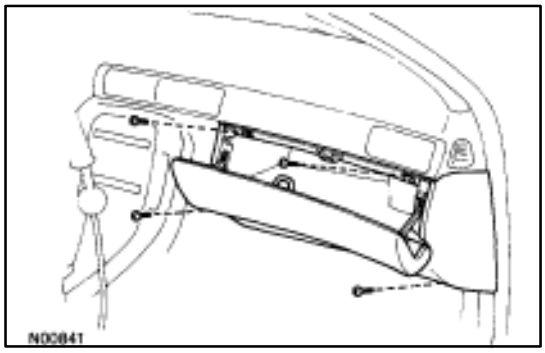

(g) Connect the connectors.
(h) Install the lower instrument panel finish panel and glove compartment door assembly with the four screws.

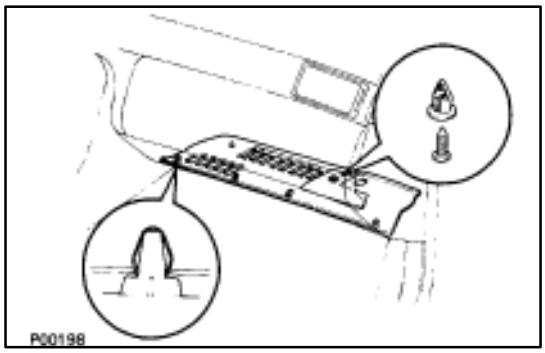

(i) Install the instrument panel under cover with the two clips.

WhereEverybodyKnowsYourName

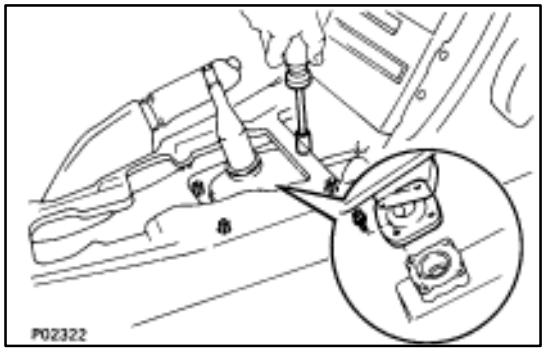

10. (M/T)
INSTALL TRANSMISSION SHIFT LEVER
(a) Install the shift lever with the eight bolts.

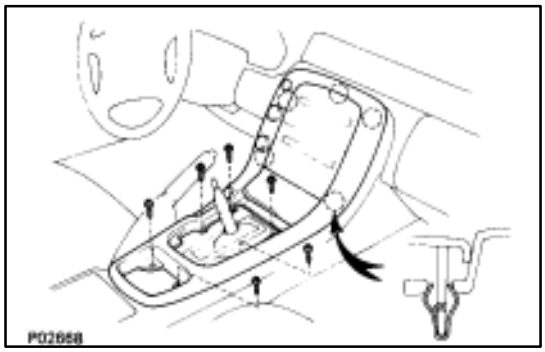

(b) Fit the upper console panel to the console box with five clips.
(c) Install the upper console panel with the six screws.

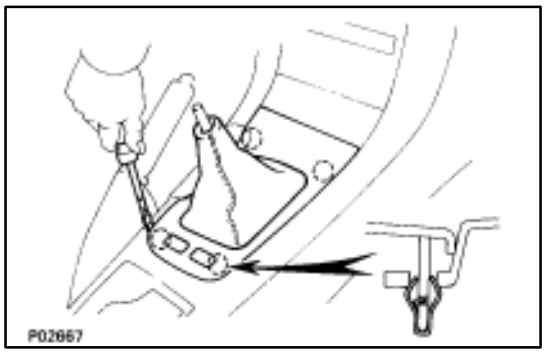

(d) Fit the upper rear console panel to the console box with the four clips.
(e) Install the shift lever knob.

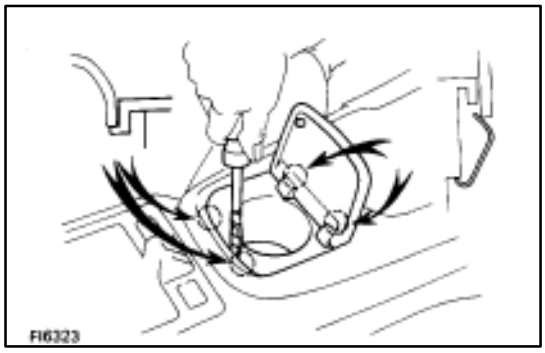

(f) Fit the cup holder to the console box.

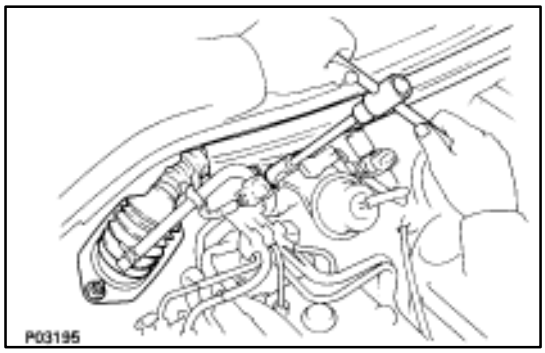

11. CONNECT ENGINE WIRE AND HOSE
(a) Install the engine wire clamp with the two nuts.
(b) Install the bolt holding the engine wire protector to the water valve bracket.

WhereEverybodyKnowsYourName

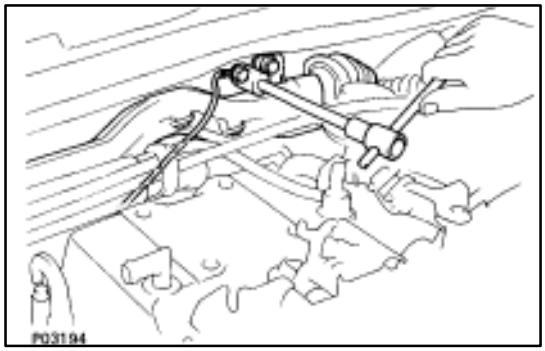

(c) Install the bolt holding the engine wire protector on the body.
(d) Install the ground strap to the bracket on the body.

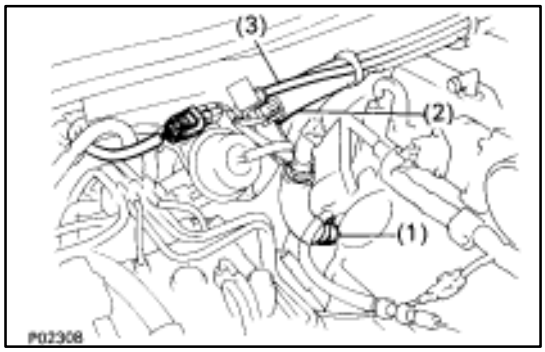

(e) Connect the VSV connector.
(f) Connect the following hose:
  (1) Heater water hose to water by–pass pipe
  (2) Heater water hose to heater water valve
  (3) Vacuum hose (from VSV for heater water valve) to check valve.

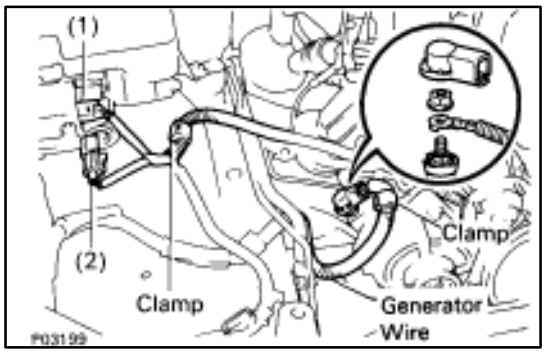

(g) Install the generator wire with the nut and cap.
(h) Connect the following connector:
  (1) Ignition coil connector
  (2) Noise filter connector
(i) Install the wire harness with the two wire clamps.

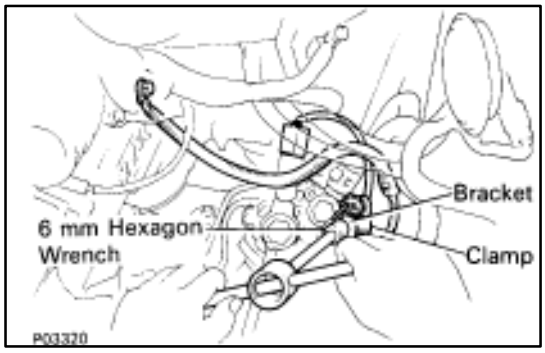

(j) Connect the PS pressure switch connector.
(k) Install the ground strap on the cylinder block.
(l) Connect the PS solenoid valve connector and wire clamp.
(m) Using a 6 mm hexagon wrench, install the connector bracket with the bolt.

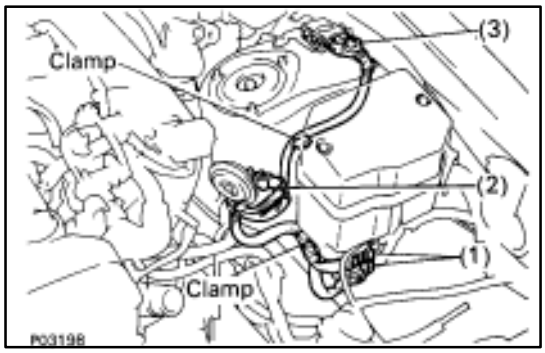

(n) Connect the following connectors:
  (1) Two connectors to engine room main wire
  (2) Igniter connector
  (3) Theft deterrent horn connector
(o) Install the wire harness with the two wire clamps.

WhereEverybodyKnowsYourName

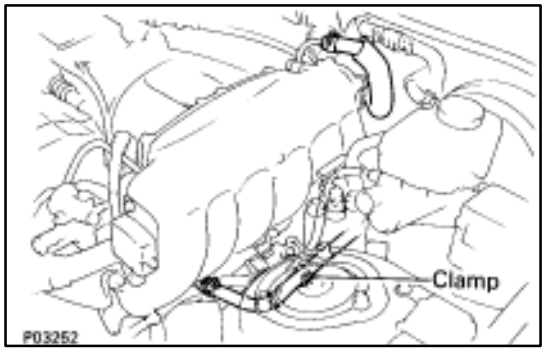

(p) Connect the fuel return hose to the No. 2 fuel pipe and engine oil dipstick guide clamp.
(q) Connect the brake booster vacuum hose to the union.

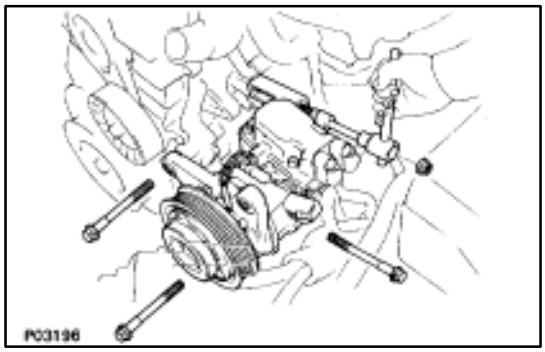

12. INSTALL A/C COMPRESSOR

(a) Install the A/C compressor with the through bolt, nut and three bolts.

Torque: Through bolt 26 N·m (265 kgf·cm, 19 ft·lbf)
Bolt and nut 52 N·m (530 kgf·cm, 38 ft·lbf)

(b) Connect the A/C compressor connector.

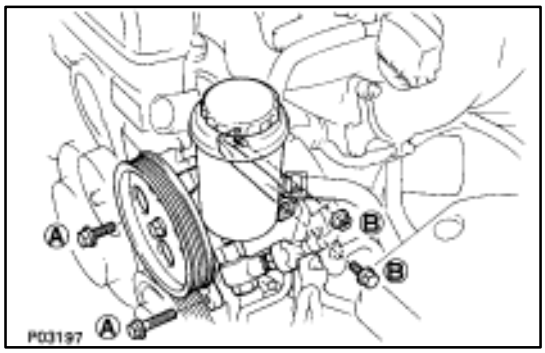

13. INSTALL PS PUMP

(a) Install the PS pump and pump rear stay with the three bolts and nut. Alternately tighten the bolts and nut.

Torque:
(A) 58 N·m (590 kgf·cm, 43 ft·lbf)
(B) 39 N·m (400 kgf·cm, 29 ft·lbf)

(b) Connect the following hoses:
(1) PS air hose to No. 4 timing belt cover
(2) PS air hose to air intake chamber

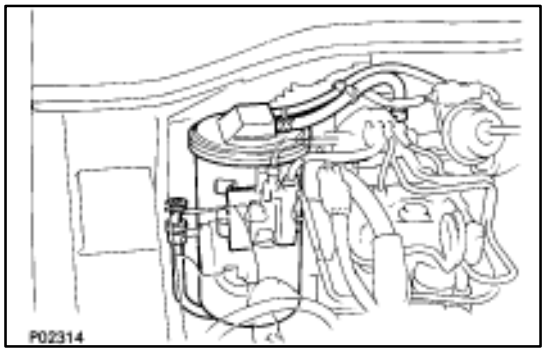

14. INSTALL CHARCOAL CANISTER

(a) Install the charcoal canister.
(b) Connect the vacuum hose and air hose to the charcoal canister.

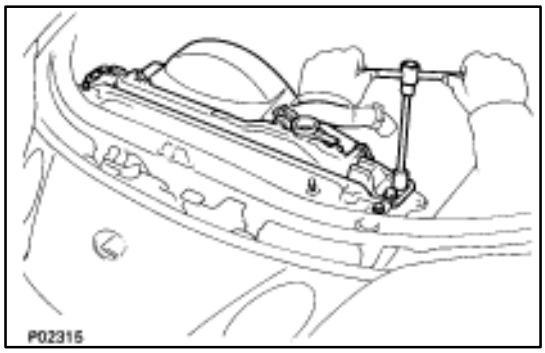

15. INSTALL RADIATOR

(a) Place the radiator on the body bracket.
(b) Install the upper radiator support with the two bolts and screw. Install the two upper radiator supports.

WhereEverybodyKnowsYourName

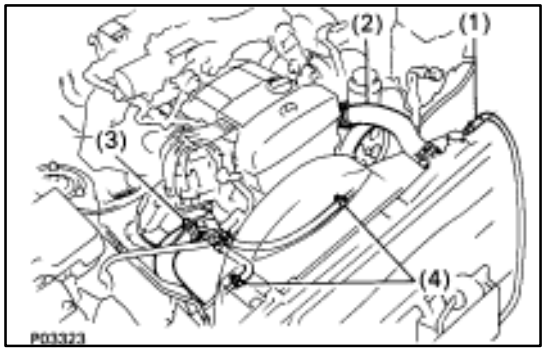

(c) Connect the following hoses:
  (1) Reservior hose to radiator
  (2) Upper radiator hose to water inlet
  (3) Lower radiator hose to water outlet
  (4) (A/T)

Two oil cooler hoses to radiator

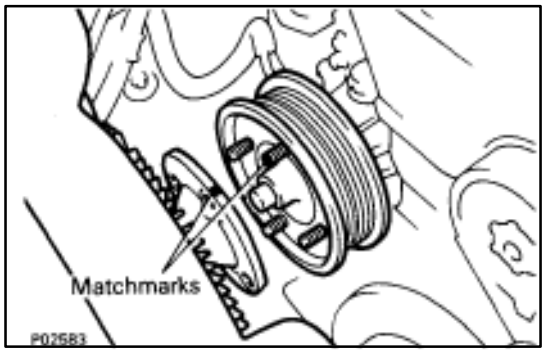

16. INSTALL WATER PUMP PULLEY, FAN WITH FLUID COUPLING AND DRIVE BELT

(a) Align the matchmarks, and install the water pump pulley and fan with fluid coupling with the four nuts.

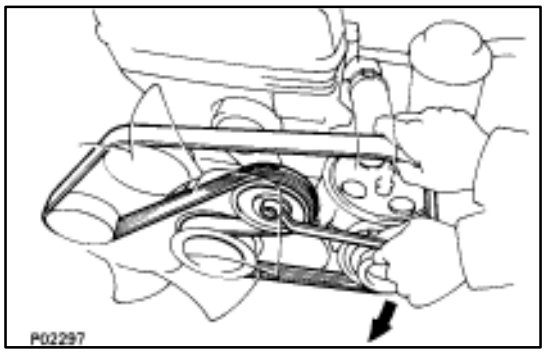

(b) Install the drive belt by turning the drive belt tensioner clockwise.

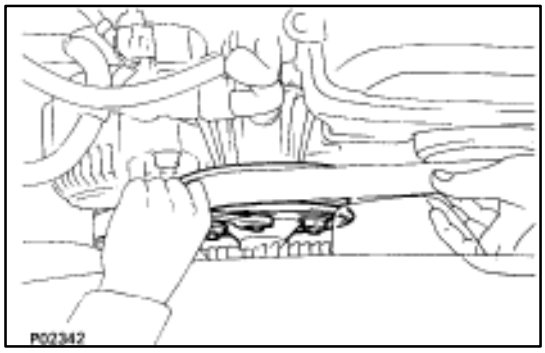

(c) Stretch the belt tight and tighten the four nuts.

Torque: 16 N·m (165 kgf·cm, 12 ft·lbf)

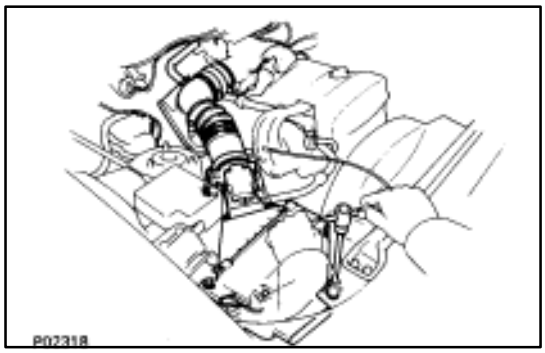

17. INSTALL AIR CLEANER ASSEMBLY

(a) Connect the air cleaner hose to the throttle body.
(b) Install the air cleaner case with the three mounting bolts.

WhereEverybodyKnowsYourName

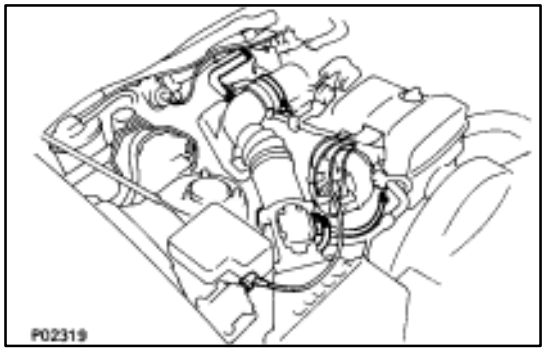

(c) Install the hose clamp.
(d) Connect the following hoses:
  (1) PS air hose to No. 4 timing belt cover
  (2) PCV hose to No. 2 cylinder head cover
(e) Connect the volume air flow meter connector.
(f) Connect the high–tension cord to the ignition coil.

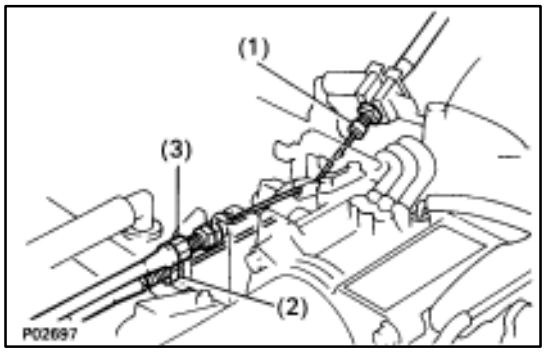

18. CONNECT CONTROL CABLES TO THROTTLE BODY

Connect the following cables:
  (1) Accelerator cables
  (2) (A/T)
  Throttle control cable
  (3) Cruise control actuator cable

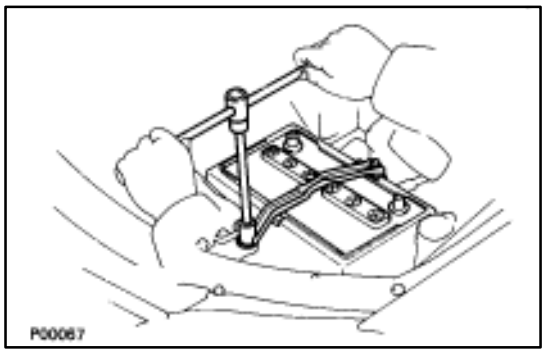

19. INSTALL BATTERY

20. FILL ENGINE WITH COOLANT (See page CO–5)

Capacity (w/Heater):

M/T	**8.5 liters (9.0 US qts, 7.5 Imp. qts)**
A/T	**8.4 liters (8.9 US qts, 7.4 Imp. qts)**

21. START ENGINE AND CHECK FOR LEAKS

22. (A/T)
CHECK AUTOMATIC TRANSMISSION FLUID LEVEL (See page MA–11)
NOTICE: Do not overfill.

23. CHECK IGNITION TIMING (See page IG–14)

Ignition timing:
10° BTDC @ idle
(w/ Terminals TE1 and E1 connected)

24. INSTALL ENGINE UNDER COVER

25. INSTALL HOOD

26. PERFORM ROAD TEST

Check for abnormal noise, shock, slippage, correct shift points and smooth operation.

27. RECHECK ENGINE COOLANT AND ENGINE OIL LEVELS

WhereEverybodyKnowsYourName

SERVICE SPECIFICATIONS

SERVICE DATA

Engine tune-up	Battery specific gravity			1.250 – 1.270 (when fully charged at 20°C (68°F))	
	High-tension cord resistance		Limit	25 kΩ per cord	
	Valve clearance		Intake	0.15 – 0.25 mm	0.006 – 0.010 in.
			Exhaust	0.25 – 0.35 mm	0.010 – 0.014 in.
	Ignition timing			10° BTDC @ idle (w/ Terminals TE1 and E1 connected)	
	Idle speed		M/T	700 ± 50 rpm	
			A/T	650 ± 50 rpm (N range)	
Intake manifold vacuum	at Idle speed			60 kPa 450 mmHg	17.7 in.Hg
Compression pressure	at 250 rpm		STD	1,226 kPa (12.5 kgf/cm², 178 psi) or more	
			Limit	981 kPa 10.0 kgf/cm²	142 psi
	Difference of pressure between each cylinder			98 kPa (1.0 kgf/cm², 14 psi) or less	
Timing belt tensioner	Protrusion (from housing end)			7.7 – 10.5 mm	0.303 – 0.413 in.
Cylinder head	Warpage	Cylinder block side	Limit	0.10 mm	0.0039 in.
		Intake manifold side	Limit	0.10 mm	0.0039 in.
		Exhaust manifold side	Limit	0.10 mm	0.0039 in.
	Valve guide bore		STD size	10.985 – 11.006 mm	0.4325 – 0.4333 in.
			O/S 0.05	11.035 – 11.056 mm	0.4344 – 0.4353 in.
	Valve seat	Refacing angle		15°, 45°, 60°	
		Contacting angle		45°	
		Contacting width	Intake	1.0 – 1.4 mm	0.039 – 0.055 in.
			Exhaust	1.2 – 1.6 mm	0.047 – 0.063 in.
	Cylinder head bolt diameter		STD	10.8 – 11.0 mm	0.425 – 0.433 in.
			Limit	10.7 mm	0.421 in.
Valve guide bushing	Inside diameter			6.010 – 6.030 mm	0.2366 – 0.2374 in.
	Outside diameter (for repair part)		STD size	11.033 – 11.044 mm	0.4344 – 0.4348 in.
			O/S 0.05	11.083 – 11.094 mm	0.4363 – 0.4368 in.
	Replacing temperature (Cylinder head side)			20°C	68°F
	Protrusion distance		Intake	12.3 – 12.7 mm	0.484 – 0.500 in.
			Exhaust	11.4 – 11.8 mm	0.449 – 0.465 in.
Valve	Valve overall length	STD	Intake	98.29 – 98.79 mm	3.8697 – 3.8894 in.
			Exhaust	98.84 – 99.34 mm	3.8659 – 3.9110 in.
		Limit	Intake	98.19 mm	3.8657 in.
			Exhaust	98.74 mm	3.8874 in.
	Valve face angle			44.5°	
	Stem diameter		Intake	5.970 – 5.985 mm	0.2350 – 0.2356 in.
			Exhaust	5.965 – 5.980 mm	0.2348 – 0.2354 in.
	Stem oil clearance	STD	Intake	0.025 – 0.060 mm	0.0010 – 0.0024 in.
			Exhaust	0.030 – 0.065 mm	0.0012 – 0.0026 in.
		Limit	Intake	0.08 mm	0.0031 in.
			Exhaust	0.10 mm	0.0039 in.
	Margin thickness	STD		1.0 mm	0.039 in.
		Limit		0.5 mm	0.020 in.

WhereEverybodyKnowsYourName

SERVICE DATA (Cont'd)

Valve spring	Squareness		Limit	2.0 mm	0.079 in.
	Free length		Pink painted mark	41.74 mm	1.6433 in.
			White painted mark	41.50 mm	1.6339 in.
	Installed tension at 34.5 mm (1.358 in.)			186 – 206 N (19.0 – 21.0 kgf, 41.9 – 46.3 lbf)	
Valve lifter	Lifter diameter			30.966 – 30.976 mm	1.2191 – 1.2195 in.
	Lifter bore diameter			31.000 – 31.016 mm	1.2205 – 1.2211 in.
	Oil clearance		STD	0.024 – 0.050 mm	0.0009 – 0.0020 in.
			Limit	0.07 mm	0.0028 in.
Manifold and chamber	Warpage	Intake manifold	Limit	0.15 mm	0.0059 in.
		Air intake chamber	Limit	0.15 mm	0.0059 in.
		Exhaust manifold	Limit	0.8 mm	0.031 in.
Camshaft	Thrust clearance	STD		0.080 – 0.190 mm	0.0031 – 0.0075 in.
		Limit		0.30 mm	0.0118 in.
	Cam lobe height	STD	Intake	44.570 – 44.670 mm	1.7547 – 1.7587 in.
			Exhaust	44.250 – 44.350 mm	1.7421 – 1.7461 in.
		Limit	Intake	44.42 mm	1.7488 in.
			Exhaust	44.10 mm	1.7362 in.
	Journal diameter			28.949 – 28.965 mm	1.1397 – 1.1401 in.
	Journal oil clearance	STD		0.035 – 0.072 mm	0.0014 – 0.0028 in.
		Limit		0.10 mm	0.0039 in.
	Circuit runout	Limit		0.08 mm	0.0031 in.
Cylinder block	Cylinder head surface warpage				
		Limit		0.07 mm	0.0028 in.
	Cylinder bore diameter	STD		86.000 – 86.013 mm	3.3858 – 3.3863 in.
		Limit		86.02 mm	3.3866 in.
	Taper	Limit		0.01 mm	0.0004 in.
	Out-of-round	Limit		0.02 mm	0.0008 in.
	Cylinder block main journal bore (Reference)	STD	Mark "0"	66.020 – 66.022 mm	2.59921 – 2.59929 in.
			Mark "1"	66.022 – 66.024 mm	2.59929 – 2.59937 in.
			Mark "2"	66.024 – 66.026 mm	2.59937 – 2.59945 in.
			Mark "3"	66.026 – 66.028 mm	2.59945 – 2.59953 in.
			Mark "4"	66.028 – 66.030 mm	2.59953 – 2.59961 in.
			Mark "5"	66.030 – 66.032 mm	2.59961 – 2.59969 in.
			Mark "6"	66.032 – 66.034 mm	2.59969 – 2.59976 in.
			Mark "7"	66.034 – 66.036 mm	2.59976 – 2.59984 in.
		U/S 0.25		66.020 – 66.036 mm	2.59921 – 2.59984 in.
Piston and piston ring	Piston diameter			85.935 – 85.945 mm	3.3833 – 3.3837 in.
	Piston oil clearance	STD		0.055 – 0.078 mm	0.0022 – 0.0031 in.
		Limit		0.10 mm	0.0039 in.
	Piston ring groove clearance		No. 1	0.011 – 0.07 mm	0.0004 – 0.0028 in.
			No. 2	0.03 – 0.07 mm	0.0012 – 0.0028 in.
	Piston ring end gap	STD	No. 1	0.30 – 0.47 mm	0.0120 – 0.0188 in.
			No. 2	0.35 – 0.52 mm	0.0138 – 0.0208 in.
			Oil	0.13 – 0.45 mm	0.0051 – 0.0180 in.
		Limit	No. 1	1.07 mm	0.0428 in.
			No. 2	1.12 mm	0.0448 in.
			Oil	1.15 mm	0.0420 in.
	Piston pin installing temperature			80°C	176°F

WhereEverybodyKnowsYourName

SERVICE DATA (Cont'd)

Connecting rod	Thrust clearance	STD		0.250 – 0.402 mm	0.0098 – 0.0158 in.
		Limit		0.50 mm	0.0197 in.
	Connecting bolt diameter	STD		8.2 – 8.3 mm	0.323 – 0.327 in.
		Limit		8.0 mm	0.315 in.
	Big end inner diameter	STD	Mark "1"	55.025 – 55.031 mm	2.1663 – 2.1666 in.
			Mark "2"	55.031 – 55.037 mm	2.1666 – 2.1668 in.
			Mark "3"	55.037 – 55.043 mm	2.1668 – 2.1670 in.
		U/S 0.25		55.025 – 55.043 mm	2.1663 – 2.1670 in.
	Connecting rod bearing center wall thickness				
	(Reference)	STD	Mark "1"	1.994 – 1.997 mm	0.0785 – 0.0786 in.
			Mark "2"	1.997 – 2.000 mm	0.0786 – 0.0787 in.
			Mark "3"	2.000 – 2.003 mm	0.0787 – 0.0789 in.
			Mark "4"	2.003 – 2.006 mm	0.0789 – 0.0790 in.
			Mark "5"	2.006 – 2.009 mm	0.0790 – 0.0791 in.
		U/S 0.25		2.114 – 2.120 mm	0.0832 – 0.0835 in.
	Connecting rod oil clearance				
		STD	STD size	0.035 – 0.053 mm	0.0014 – 0.0021 in.
			U/S 0.25	0.08 mm	0.0031 in.
		Limit	STD size	0.040 – 0.078 mm	0.0016 – 0.0031 in.
			U/S 0.25	0.09 mm	0.0035 in.
	Bushing inside diameter			22.005 – 22.014 mm	0.8663 – 0.8667 in.
	Piston pin diameter			21.997 – 22.006 mm	0.8660 – 0.8664 in.
	Piston pin oil clearance	STD		0.005 – 0.011 mm	0.0002 – 0.0004 in.
		Limit		0.05 mm	0.0020 in.
	Rod bent	Limit	per 100 mm (3.94 in.)	0.05 mm	0.0020 in.
	Rod twist	Limit	per 100 mm (3.94 in.)	0.15 mm	0.0059 in.
Crankshaft	Thrust clearance		STD	0.020 – 0.220 mm	0.0008 – 0.0087 in.
			Limit	0.30 mm	0.0118 in.
	Thrust washer thickness		STD	1.940 – 1.990 mm	0.0764 – 0.0783 in.
	Main journal oil clearance				
		STD	STD size	0.026 – 0.040 mm	0.0010 – 0.0016 in.
			U/S 0.25	0.025 – 0.061 mm	0.0010 – 0.0024 in.
		Limit	STD size	0.06 mm	0.0024 in.
			U/S 0.25	0.08 mm	0.0031 in.
	Main journal diameter				
	(Reference)	STD	Mark "0"	61.998 – 62.000 mm	2.44087 – 2.44095 in.
			Mark "1"	61.996 – 61.998 mm	2.44079 – 2.44087 in.
			Mark "2"	61.994 – 61.996 mm	2.44071 – 2.44079 in.
			Mark "3"	61.992 – 61.994 mm	2.44063 – 2.44071 in.
			Mark "4"	61.990 – 61.992 mm	2.44055 – 2.44063 in.
			Mark "5"	61.988 – 61.990 mm	2.44047 – 2.44055 in.
			Mark "6"	61.986 – 61.988 mm	2.44039 – 2.44047 in.
			Mark "7"	61.984 – 61.986 mm	2.44031 – 2.44039 in.
		U/S 0.25		61.745 – 61.755 mm	2.43091 – 2.43130 in.
	Main bearing center wall thickness				
	(Reference)	STD	Mark "1"	1.492 – 1.495 mm	0.0587 – 0.0589 in.
			Mark "2"	1.495 – 1.498 mm	0.0589 – 0.0590 in.
			Mark "3"	1.498 – 1.501 mm	0.0590 – 0.0591 in.
			Mark "4"	1.501 – 1.504 mm	0.0591 – 0.0592 in.
			Mark "5"	1.504 – 1.507 mm	0.0592 – 0.0593 in.
		U/S 0.25		1.610 – 1.615 mm	0.0634 – 0.0636 in.
	Crank pin diameter	STD	Mark "0"	51.994 – 52.000 mm	2.0470 – 2.0472 in.
	(Reference)		Mark "1"	51.988 – 51.994 mm	2.0468 – 2.0470 in.
			Mark "2"	51.982 – 51.988 mm	2.0465 – 2.0468 in.
		U/S 0.25		51.745 – 51.755 mm	2.0364 – 2.0376 in.

WhereEverybodyKnowsYourName

SERVICE DATA (Cont'd)

Crankshaft (cont'd)	Circle runout	Limit	0.06 mm	0.0024 in.
	Main journal taper and out-of-round	Limit	0.02 mm	0.0008 in.
	Crank pin taper and out-of-round	Limit	0.02 mm	0.0008 in.

TORQUE SPECIFICATIONS

Part tightened		N·m	kgf·cm	ft·lbf
Camshaft bearing cap X Cylinder head		20	200	14
No.1 cylinder head cover X Cylinder head		5.4	55	48 in.·lbf
No.2 cylinder head cover X Cylinder head		5.4	55	48 in.·lbf
Intake air connector X Air intake chamber		21	210	15
Throttle body bracket X Throttle body		21	210	15
Throttle body bracket X Cylinder head		21	210	15
EGR pipe X Intake manifold		21	210	15
EGR pipe X EGR valve		64	650	47
Spark plug X Cylinder head		18	180	13
Throttle body X Intake air connector		21	210	15
Idler pulley X Oil pump		34	350	25
Crankshaft pulley X Crankshaft		324	3,300	239
Camshaft timing pulley X Camshaft		79	810	59
Timing belt tensioner X Oil pump		26	270	20
Drive belt tensioner X Cylinder head		21	210	15
EGR cooler X Cylinder head		14	140	10
Engine coolant temperature sensor X Cylinder head		20	200	14
Engine coolant temperature sender gauge X Cylinder head		20	200	14
Engine hanger X Cylinder head		39	400	29
Cylinder head X Cylinder block	1st	34	350	25
	2nd	Turn 90°		
	3rd	Turn 90°		
No.4 Timing belt cover X Cylinder head		8.8	90	78 in.·lbf
Intake manifold X Cylinder head		21	210	15
Intake manifold stay X Intake manifold		39	400	29
Intake manifold stay X Cylinder head		39	400	29
No.1 fuel pipe X Intake manifold		8.8	90	78 in.·lbf
No.2 fuel pipe X Intake manifold		8.8	90	78 in.·lbf
Delivery pipe X Intake manifold		21	210	15
Air intake chamber X Intake manifold		21	210	15
Air intake chamber stay X Air intake chamber		18	185	13
Air intake chamber stay X Cylinder head		18	185	13
Vacuum control valve set X Intake manifold		21	210	15
No.2 vacuum pipe X Air intake chamber		21	210	15
Water outlet X Cylinder head		21	210	15
Water by–pass outlet X Cylinder head		8.8	90	78 in.·lbf
Exhaust manifold X Cylinder head		39	400	29
Exhaust manifold heat insulator X Exhaust manifold		18	185	13

WhereEverybodyKnowsYourName

TORQUE SPECIFICATIONS (Cont'd)

Part tightened		N·m	kgf·cm	ft·lbf
Main bearing cap X Cylinder block	1st	44	450	33
	2nd	Turn 90°		
Connecting rod cap X Connecting rod	1st	29	300	22
	2nd	Turn 90°		
Rear oil seal retainer X Cylinder block		5.9	60	52 in.·lbf
Oil filter bracket X Cylinder block		88	900	65
LH engine mounting bracket X Cylinder block		58	590	43
RH engine mounting bracket X Cylinder block		58	590	43
Knock sensor X Cylinder block		44	450	33
Oil pressure switch X Cylinder block		14	150	11
Fuel pipe support X Cylinder block		14	145	10
Fuel pressure pulsation damper		41	420	30
	(for SST)	35	350	25
Generator X Cylinder block		37	380	27
Flywheel X Crankshaft (M/T)	1st	49	500	36
	2nd	Turn 90°		
Drive Plate X Crankshaft (A/T)		98	1,000	72
Starter X Transmission		39	400	29
Oil cooler pipe X Transmission (A/T)		34	350	25
Rear engine mounting member X Body		25	260	19
Rear engine mounting member X Engine mounting insulator		13	135	10
Intermediate shaft X Propeller shaft		74	750	54
Propeller shaft center bearing X Body		49	500	36
No.2 front exhaust pipe X Exhaust manifold		62	630	46
Front exhaust pipe X No.2 front exhaust pipe		43	440	
Clutch release cylinder X Transmission (M/T)		12	120	9
Fuel inlet hose X Fuel pipe support		34	350	25
A/C compressor X Cylinder block	Through bolt	26	265	19
	Bolt and nut	52	530	38
PS pump X Cylinder block		58	590	43
PS pump X A/C compressor		58	590	43
PS pump X Pump rear stay		39	400	29
Cylinder block X Pump rear stay		39	400	29
Fluid coupling X Water water pump		16	165	12

WhereEverybodyKnowsYourName

EXHAUST SYSTEM

NOTE: The specification descriptions ”**USA Spec.**” and ”**Exc. USA Spec.**” used in this section indicate the following specifications.
USA Spec.: USA (50 States) Specifications.
Exc. USA Spec.: USA (except California) and Canadian Specifications.

WhereEverybodyKnowsYourName

COMPONENTS
EXHAUST PIPES AND HEAT INSULATORS

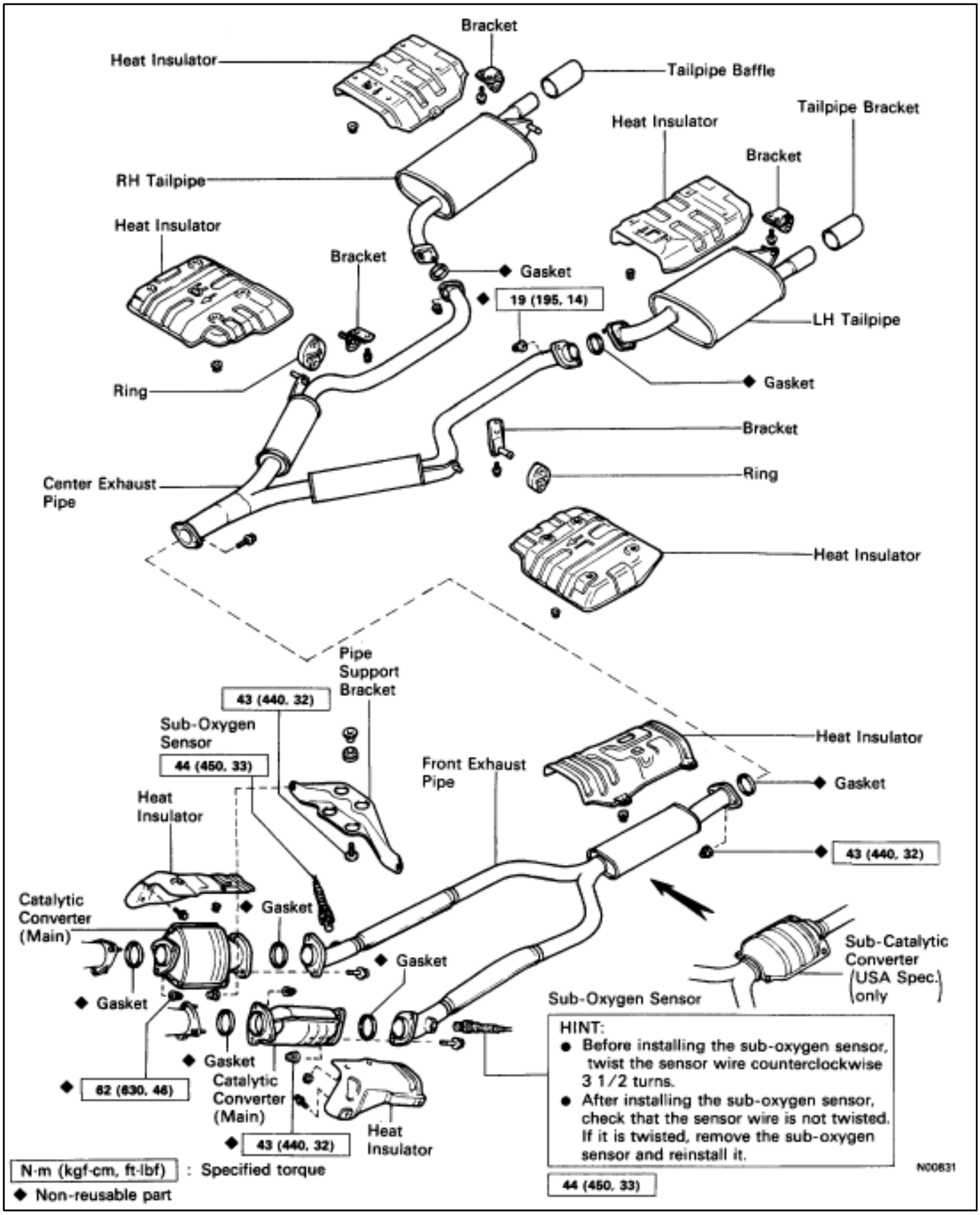

WhereEverybodyKnowsYourName

Injectors

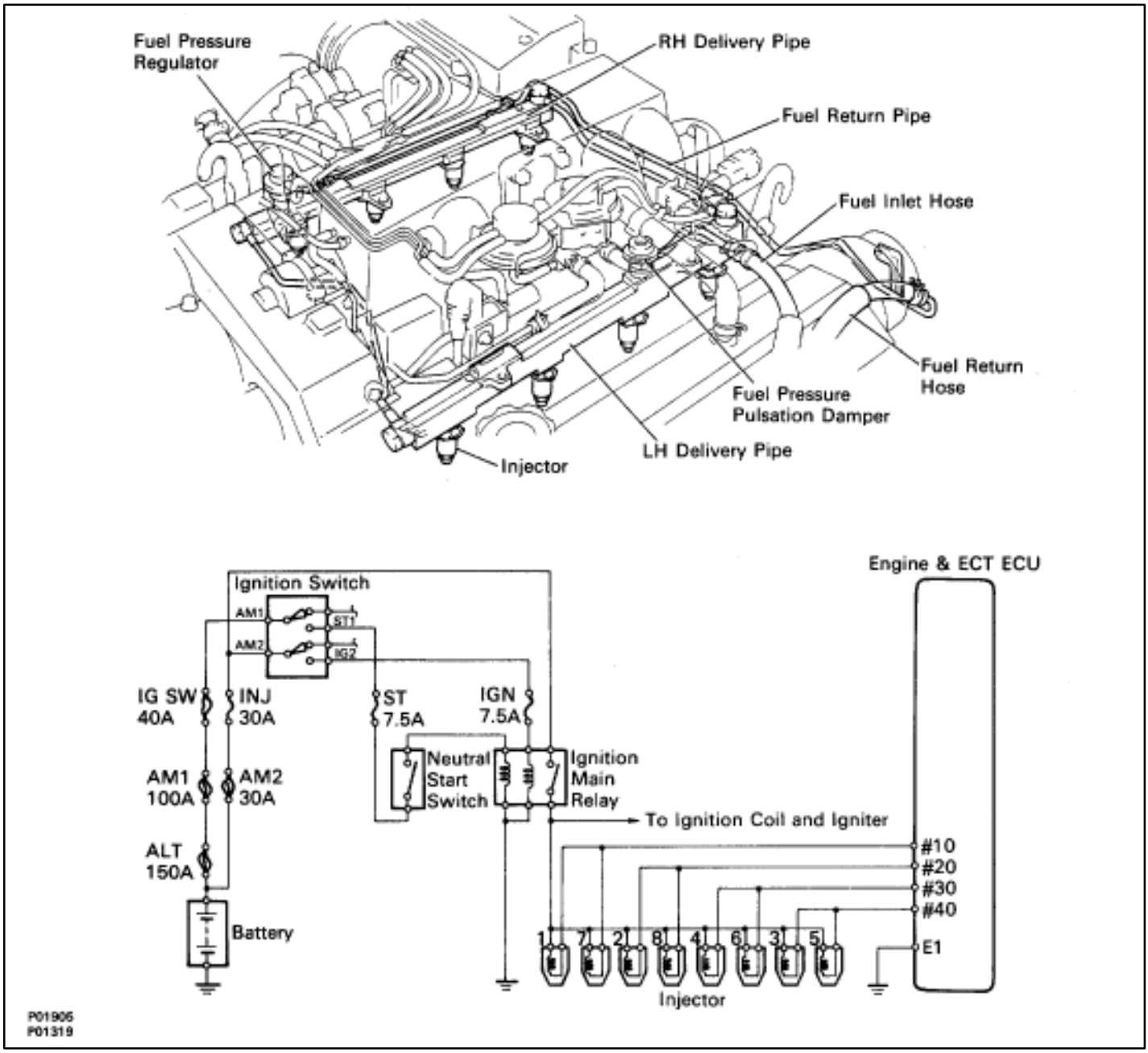

ON–VEHICLE INSPECTION

INSPECT INJECTOR RESISTANCE

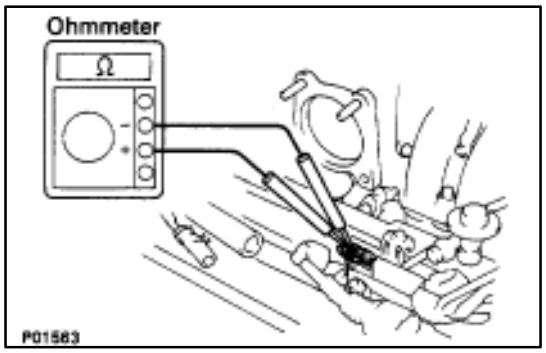

(a) Remove the engine wire covers and throttle body. (See steps 1 to 8 and 13 on pages FI–27 to 30)

(b) Disconnect the injector connectors.

(c) Using an ohmmeter, measure the resistance between the terminals.

Resistance: 13.4–14.2 ?

If the resistance is not as specified, replace the injector.

(d) Reconnect the injector connectors.

(e) Reinstall the throttle body and engine wire covers. (See steps 5 and 10 to 18 on pages FI–38 to 41)

WhereEverybodyKnowsYourName

COMPONENTS FOR REMOVAL AND INSTALLATION

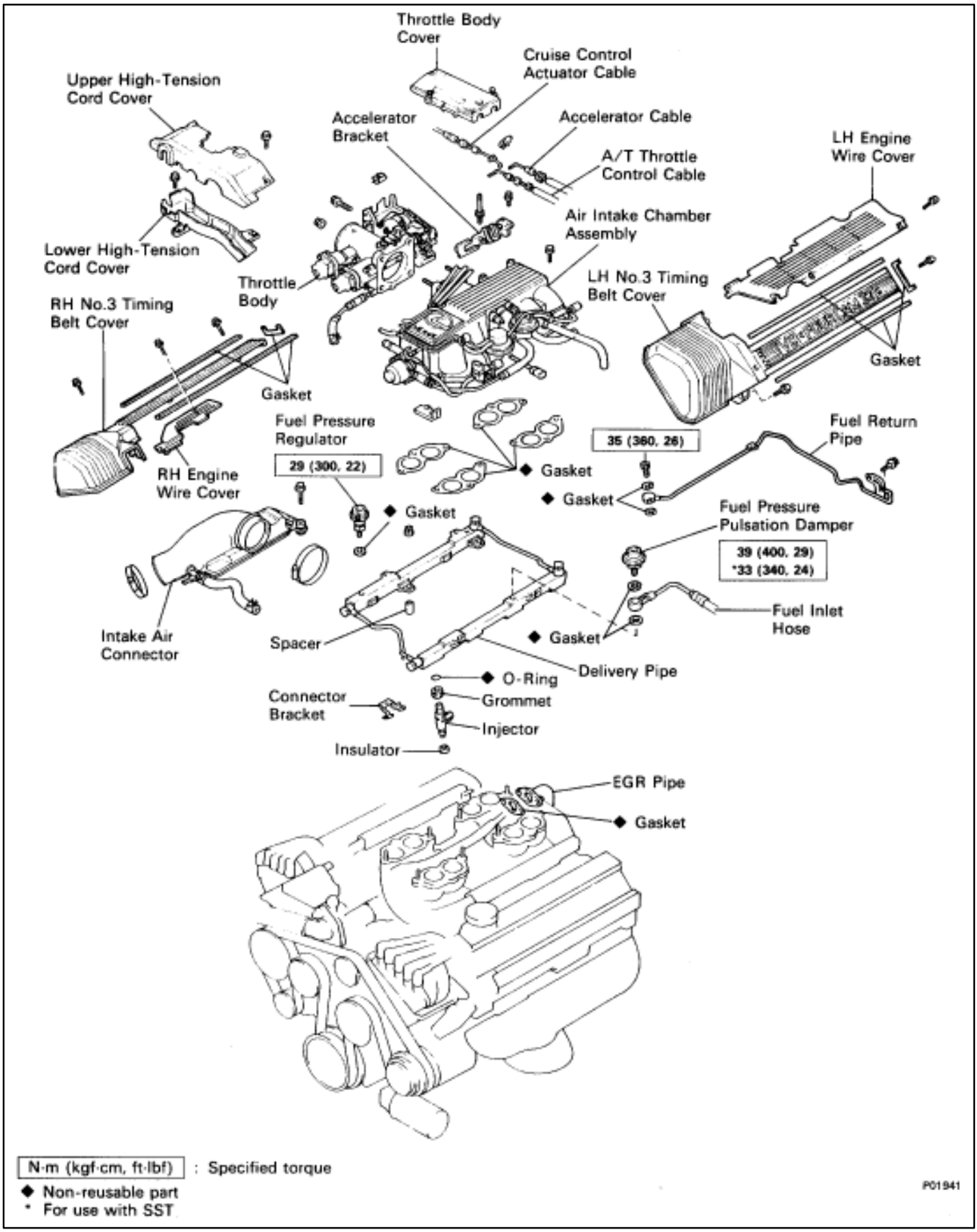

WhereEverybodyKnowsYourName

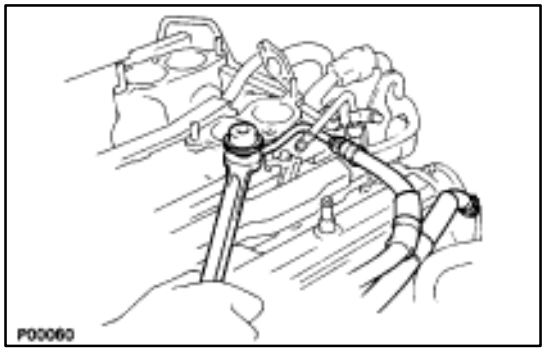

REMOVAL OF INJECTORS

(See Components on page FI–49)

1. **REMOVE AIR INTAKE CHAMBER**
   (See steps 1 to 16 on pages FI–27 to 32)
2. **DISCONNECT FUEL INLET HOSE FROM LH DELIVERY PIPE**
   Remove the pulsation damper and two gaskets, and disconnect the inlet hose.

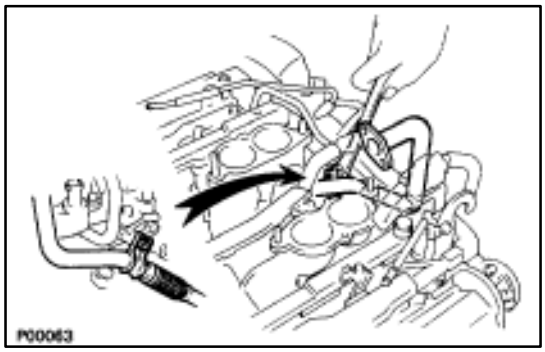

3. **DISCONNECT FUEL RETURN HOSE FROM FUEL RETURN PIPE**
4. **DISCONNECT EGR PIPE FROM RH CYLINDER HEAD**
   Remove the bolt holding the EGR pipe to the cylinder head, and disconnect the EGR pipe.

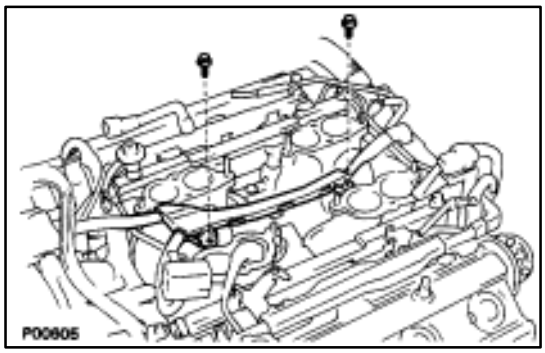

5. **DISCONNECT ENGINE WIRE FROM INTAKE MANIFOLD**
   Remove the two bolts, and disconnect the engine wire.

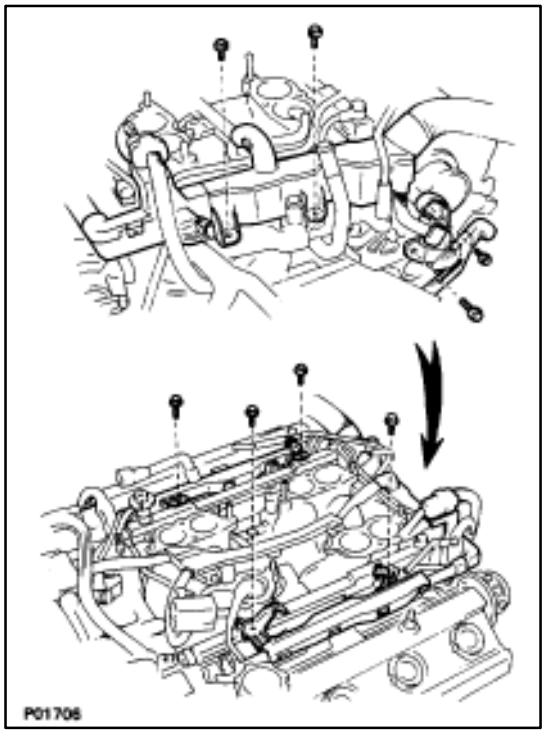

6. **DISCONNECT ENGINE WIRE FROM DELIVERY PIPES AND REAR WATER BY–PASS JOINT**
   (a) Remove the four bolts holding the engine wire to the delivery pipes, and disconnect the engine wire from the delivery pipes.
   (b) Remove the two bolts holding the engine wire to the rear water by–pass joint, and disconnect the engine wire from the rear water by–pass joint.
   (c) Remove the two bolts holding the engine wire to the rear side of the RH cylinder head, and disconnect the engine wire from the RH cylinder head.

WhereEverybodyKnowsYourName

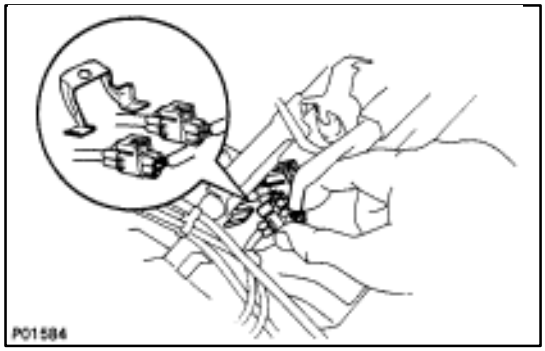

(d) Disconnect the two engine wire connectors from the connector bracket on the front side of the LH delivery pipe.
(e) Disconnect the eight injector connector.

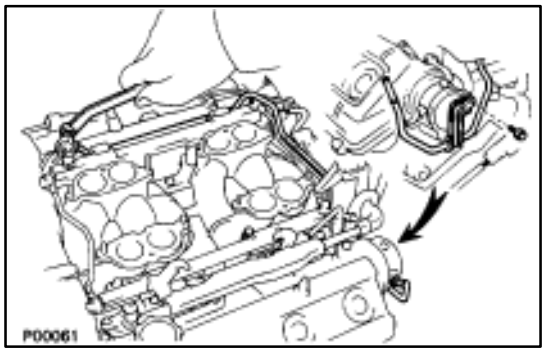

7. REMOVE FUEL RETURN PIPE

(a) Remove the bolt holding the return pipe to the LH cylinder head.
(b) Remove the union bolt and two gaskets and return pipe.

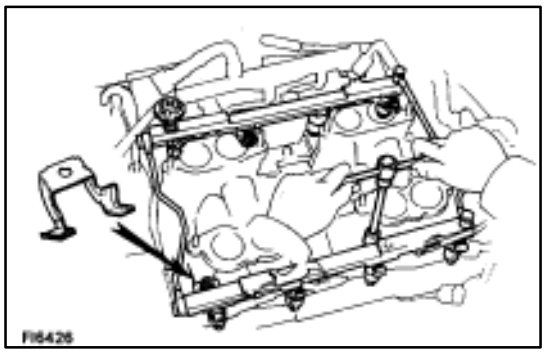

8. REMOVE DELIVERY PIPES AND INJECTORS

(a) Remove the four nuts holding the delivery pipe to the intake manifold.
(b) Remove the connector bracket, the two delivery pipes and eight injector assembly, four spacers and eight insulators.

NOTICE: Be careful not to drop the injectors, when removing the delivery pipe.

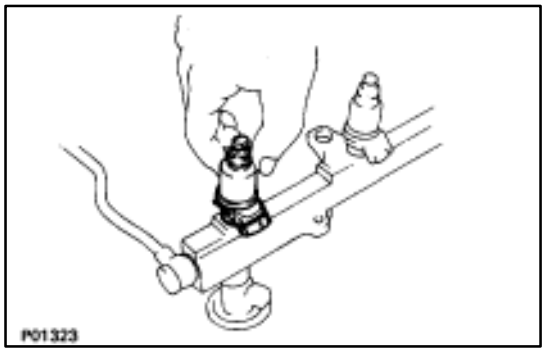

(c) Pull out the eight injectors from the delivery pipes.
(d) Remove the O–ring and grommet from each injector.

WhereEverybodyKnowsYourName

INSPECTION OF INJECTORS

1. INSPECT INJECTOR INJECTION

CAUTION: Keep injector clear of sparks during the test.

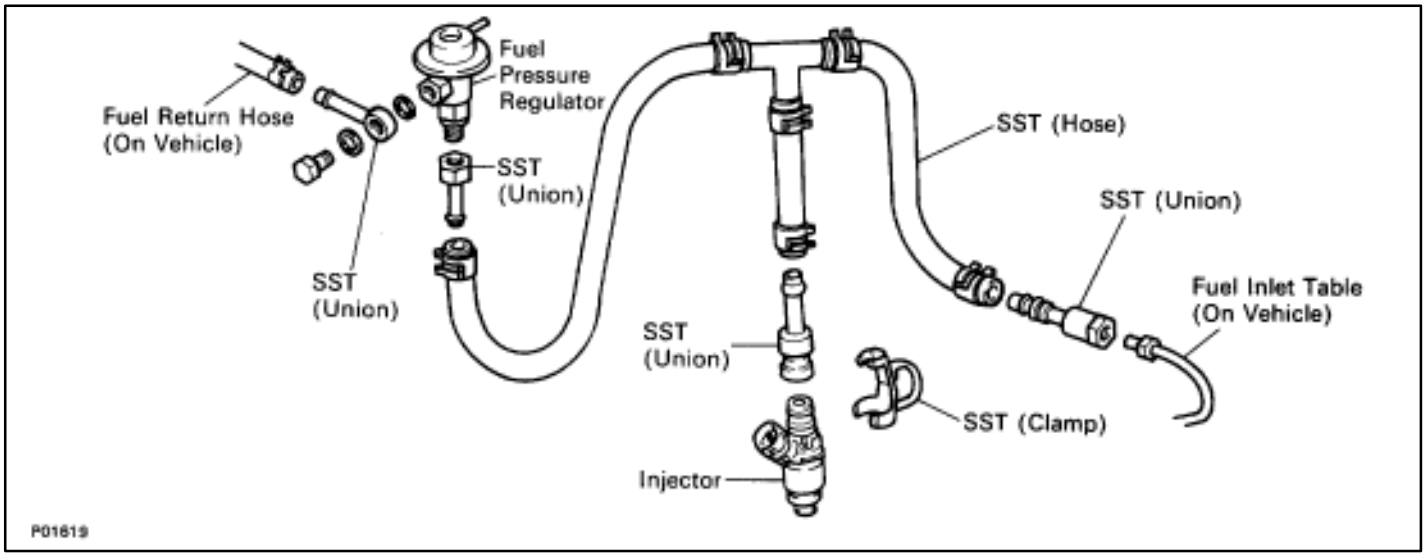

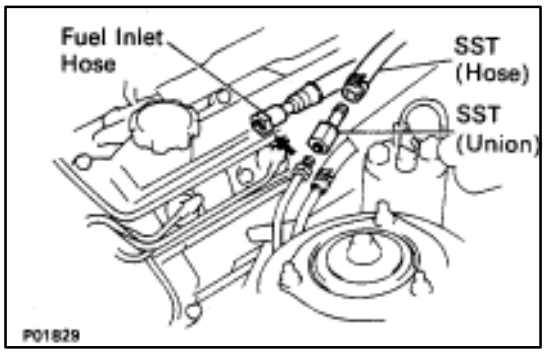

(a) Disconnect the fuel inlet hose from the fuel tube.

(b) Connect SST (hose) to the fuel inlet tube with SST (union). Tighten the flare nut on the fuel tube.

SST 09268–41045 (90405–52010)

Torque: 30 N·m (310 kgf·cm, 22 ft·lbf)

HINT: Use SST. (See page FI–15)

SST 09631–22020

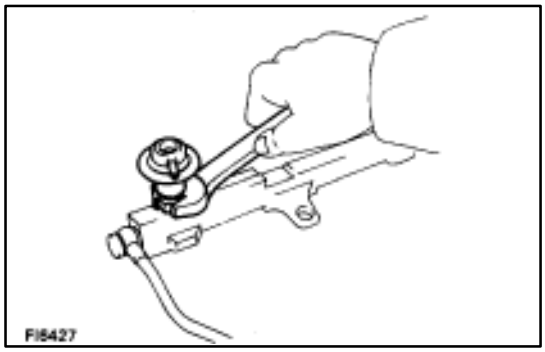

(c) Loosen the lock nut, and remove the pressure regulator from the RH delivery pipe. Remove the O–ring from the pressure regulator.

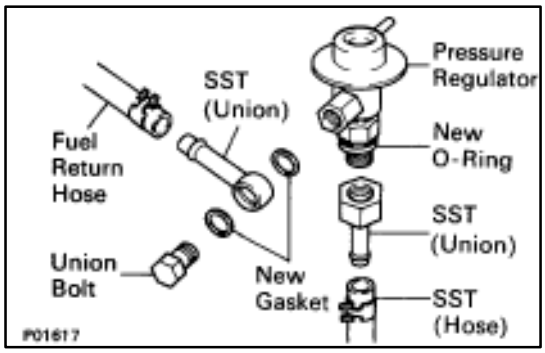

(d) Install a new O–ring to the fuel inlet of the pressure regulator.

(e) Connect SST (hose) to the pressure regulator with SST (union). Tighten the lock nut on the pressure regulator.

SST 09268–41045 (09268–52010)

Torque: 29 N·m (300 kgf·cm, 22 ft·lbf)

(f) Connect the fuel return hose to the fuel outlet of the pressure regulator with SST (union), two new gaskets and union bolt.

SST 09268–41045 (09268–41070)

WhereEverybodyKnowsYourName

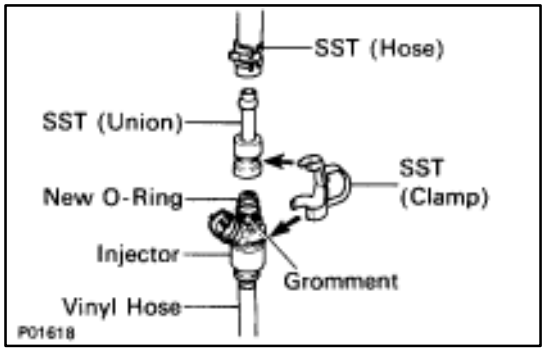

(g) Install the grommet and a new O–ring to the injector.

(h) Connect SST (hose) to the injector with SST (union), and hold the injector and union with SST (clamp).

SST 09268–41045

(i) Put the injector into the graduated cylinder.

HINT: Install a suitable vinyl hose onto the injector to prevent gasoline from splashing out.

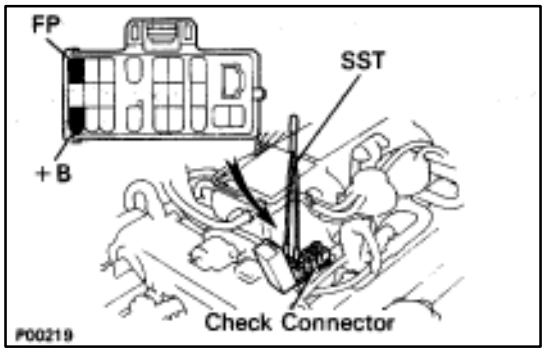

(j) Using SST, connect terminals +B and FP of the check (”DIAGNOSIS”) connector.

SST 09843–18020

(k) Reconnect the cable to negative (–) terminal of battery.

(l) Turn the ignition switch ON.

NOTICE: Do not start the engine.

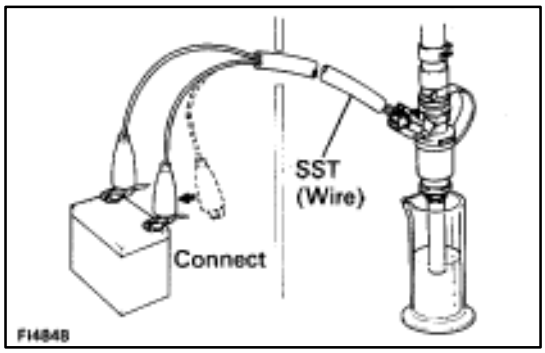

(m) Connect SST (wire) to the injector and battery for 15 seconds, and measure the injection volume with a graduated cylinder. Test each injector two or three times.

SST 09842–30070

Volume: 55–70 cc (3.4–4.3 cu in.) per 15 sec.

Difference between each injector:

10 cc (0.6 cu in.) or less

If the injection volume is not as specified, replace the injector.

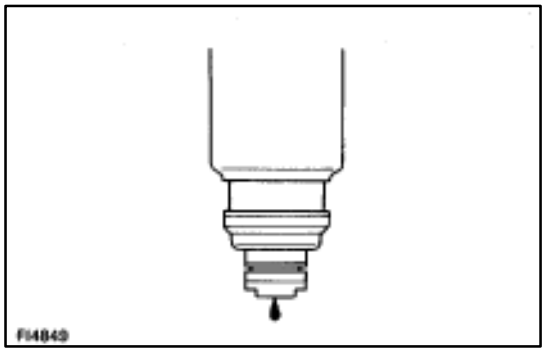

2. INSPECT LEAKAGE

(a) In the condition above, disconnect the test probes of SST (wire) from the battery and check the fuel leakage from the injector.

SST 09842–30070

Fuel drop: One drop or less per minute

(b) Disconnect the battery negative (–) cable.

(c) Remove SST.

SST 09268–41045 and 09843–18020

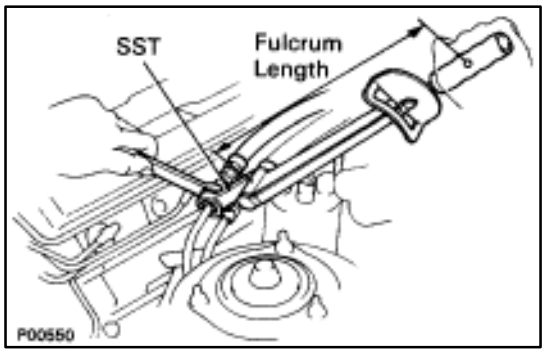

(d) Reconnect the fuel inlet hose to the fuel tube.

SST 09631–22020

Torque: 30 N·m (310 kgf·cm, 22 ft·lbf)

HINT: Use a torque wrench with a fulerum length of 30 cm (11.81 in.).

WhereEverybodyKnowsYourName

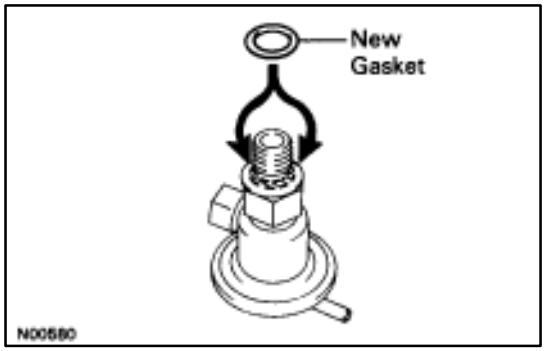

(e) Reinstall the fuel pressure regulator to the RH delivery pipe.
- Fully loosen the lock nut on the pressure regulator.
- Apply a light coat of gasoline to a new O–ring, and install it to the pressure regulator.

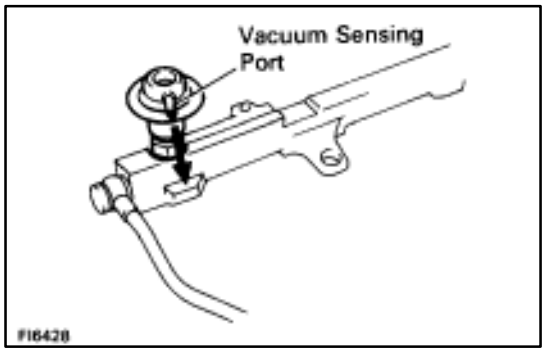

- Completely insert the pressure regulator into the delivery pipe by hand.
- Turn the pressure regulator counterclockwise until the vacuum sensing port faces in the direction indicated in the illustration.

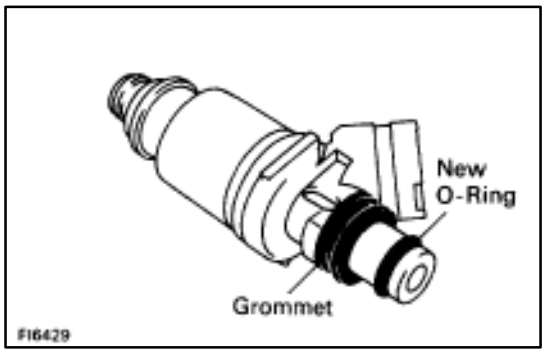

INSTALLATION OF INJECTORS

(See Components on page FI–49)

1. INSTALL INJECTORS AND DELIVERY PIPE

(a) Install the grommet to each injector.

(b) Apply a light coat of gasoline to a new O–ring and install it to each injector.

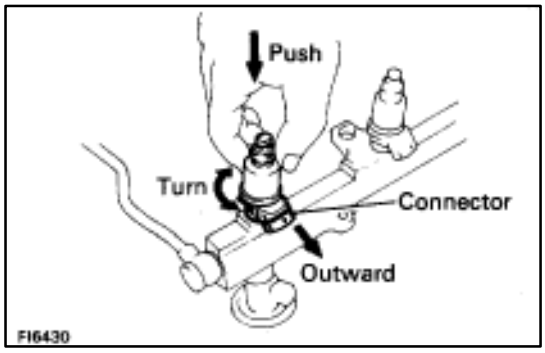

(c) While turning the injector clockwise and counterclockwise, push it to the delivery pipes. Install the eight injectors.

(d) Position the injector connector outward.

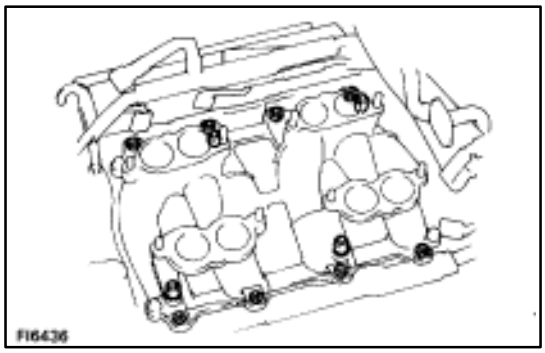

(e) Place the eight insulators and four spacers in position on the intake manifold.

WhereEverybodyKnowsYourName

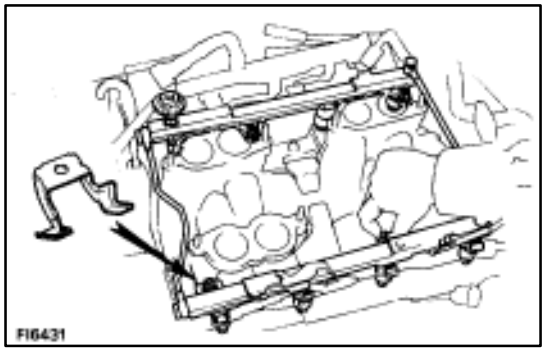

(f) Place the eight injectors and two delivery pipes assembly in position on the intake manifold.
(g) Temporarily install the connector bracket and four mounting bolts.

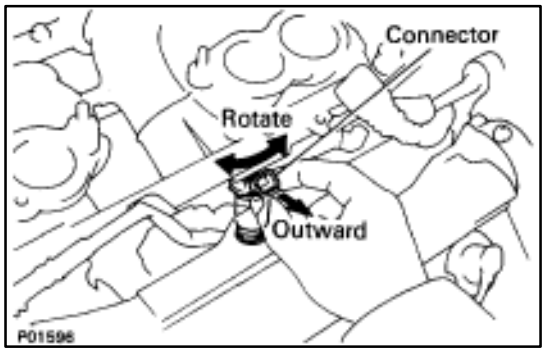

(h) Check that the injectors rotate smoothly.
HINT: If injectors do not rotate smoothly, the probable cause is incorrect installation of O–rings. Replace the O–rings.
(i) Position the injector connector outward.

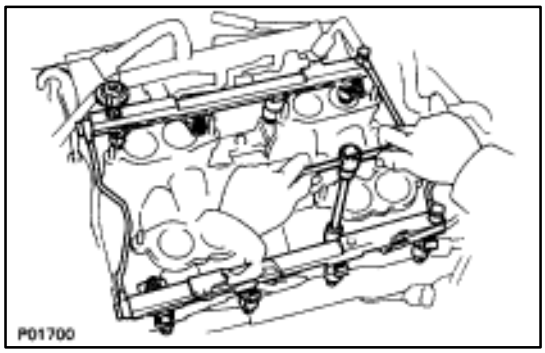

(j) Tighten the four bolts holding the delivery pipes to the intake manifold.

Torque: 18 N·m (185 kgf·cm, 13 ft·lbf)

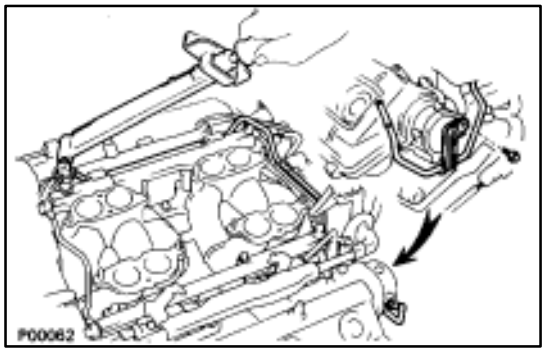

2. INSTALL FUEL RETURN PIPE

(a) Temporarily install the return pipe with the bolt, two gaskets and union bolt.
(b) Tighten the union bolt holding the return pipe to the pressure regulator.

Torque: 35 N·m (360 kgf·cm, 26 ft·lbf)

(c) Tighten the bolt holding the return pipe to the LH cylinder head.

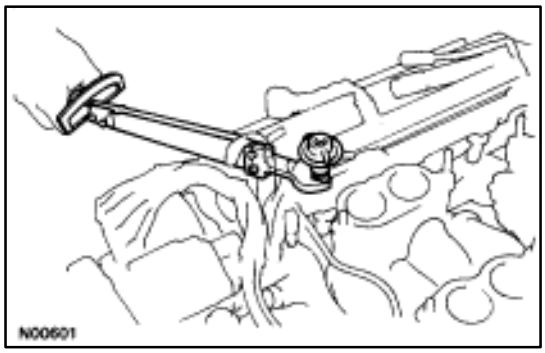

3. TIGHTEN LOCK NUT ON FUEL PRESSURE REGULATOR

Torque: 29 N·m (300 kgf·cm, 22 ft·lbf)

WhereEverybodyKnowsYourName

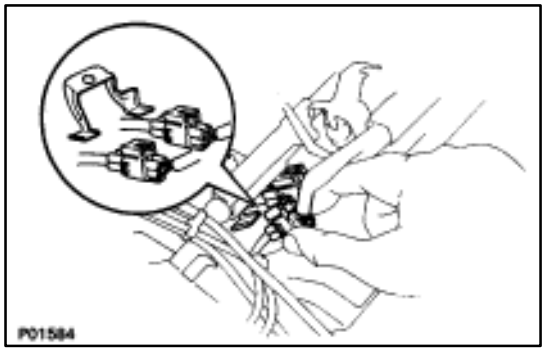

4. INSTALL ENGINE WIRE TO DELIVERY PIPES, REAR WATER BY–PASS JOINT AND RH CYLINDER HEAD

(a) Connect the eight injector connectors.

(b) Connect the two engine wire connectors to the connector bracket on the LH delivery pipe.

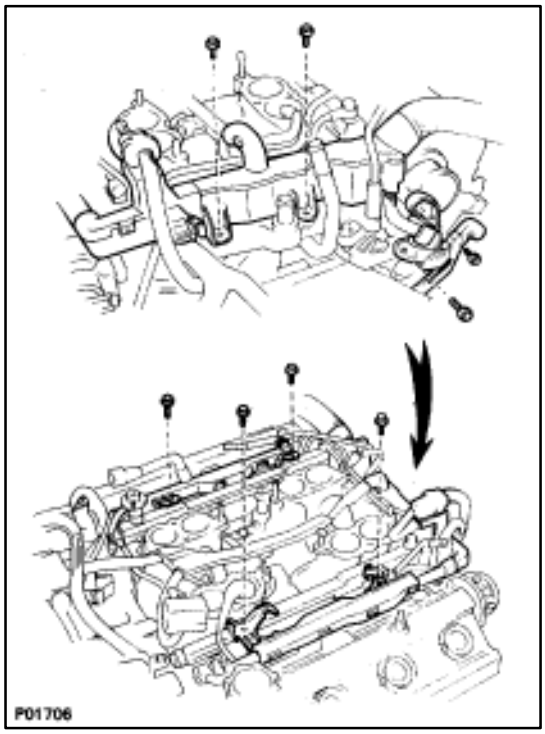

(c) Install the engine wire to the RH cylinder head with the two bolts.

(d) Install the engine wire to the rear water by–pass joint with the two bolts.

(e) Install the engine wire to the delivery pipes with the four bolts.

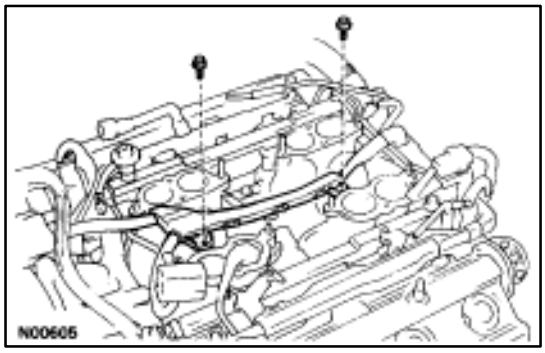

5. INSTALL ENGINE WIRE TO INTAKE MANIFOLD

Install the engine wire with the two bolts.

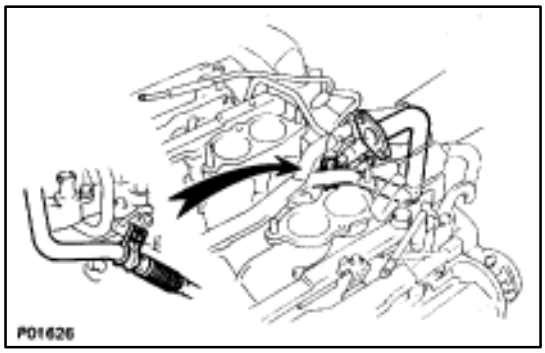

6. TEMPORARILY INSTALL EGR PIPE TO RH CYLINDER HEAD

Temporarily Install the EGR pipe with the bolt.

WhereEverybodyKnowsYourName

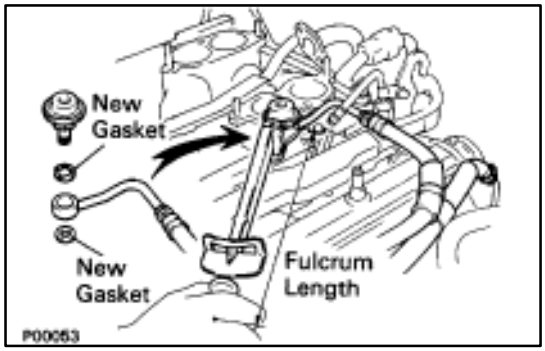

7. CONNECT FUEL RETURN HOSE TO FUEL RETURN PIPE

8. CONNECT FUEL INLET HOSE TO LH DELIVERY PIPE

Using SST, connect the inlet hose with two new gaskets and pulsation damper.

SST 09612–24014 (09617–24011)

Torque: 39 N·m (400 kgf·cm, 29 ft·lbf)
33 N·m (340 kgf·cm, 24 ft·lbf) for SST

HINT: Use a torque wrench with a fulcrum length of 30 cm (11.81 in.).

9. INSTALL AIR INTAKE CHAMBER

(See steps 2 to 18 on pages FI–35 to 41)

HINT: After the air intake chamber installed, tighten the bolt holding to the EGR pipe to the RH cylinder head.

WhereEverybodyKnowsYourName

Idle Speed Control (ISC) Valve

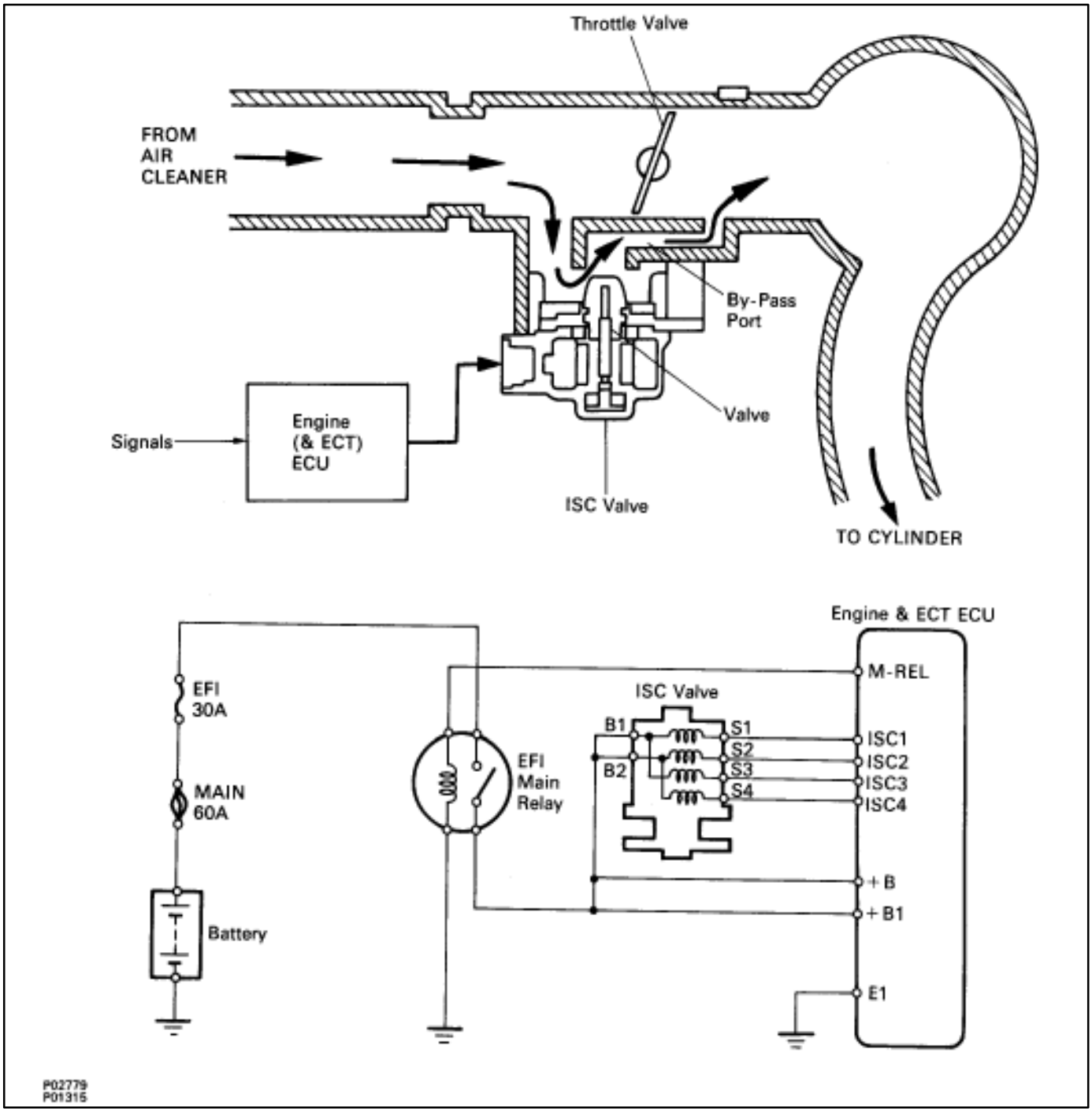

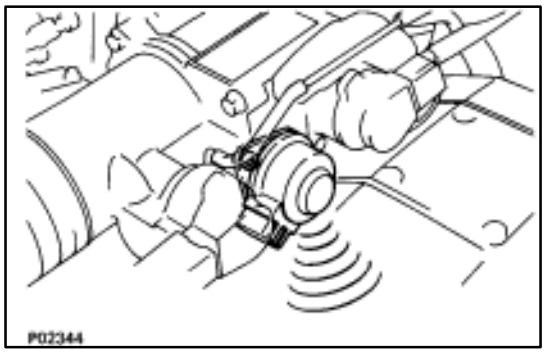

ON–VEHICLE INSPECTION

INSPECT ISC VALVE FOR OPERATING SOUND

Check that there is a clicking sound immediately after stopping the engine.

If the rpm operation is not as specified, check the ISC valve, wiring and ECU.

WhereEverybodyKnowsYourName

COMPONENTS

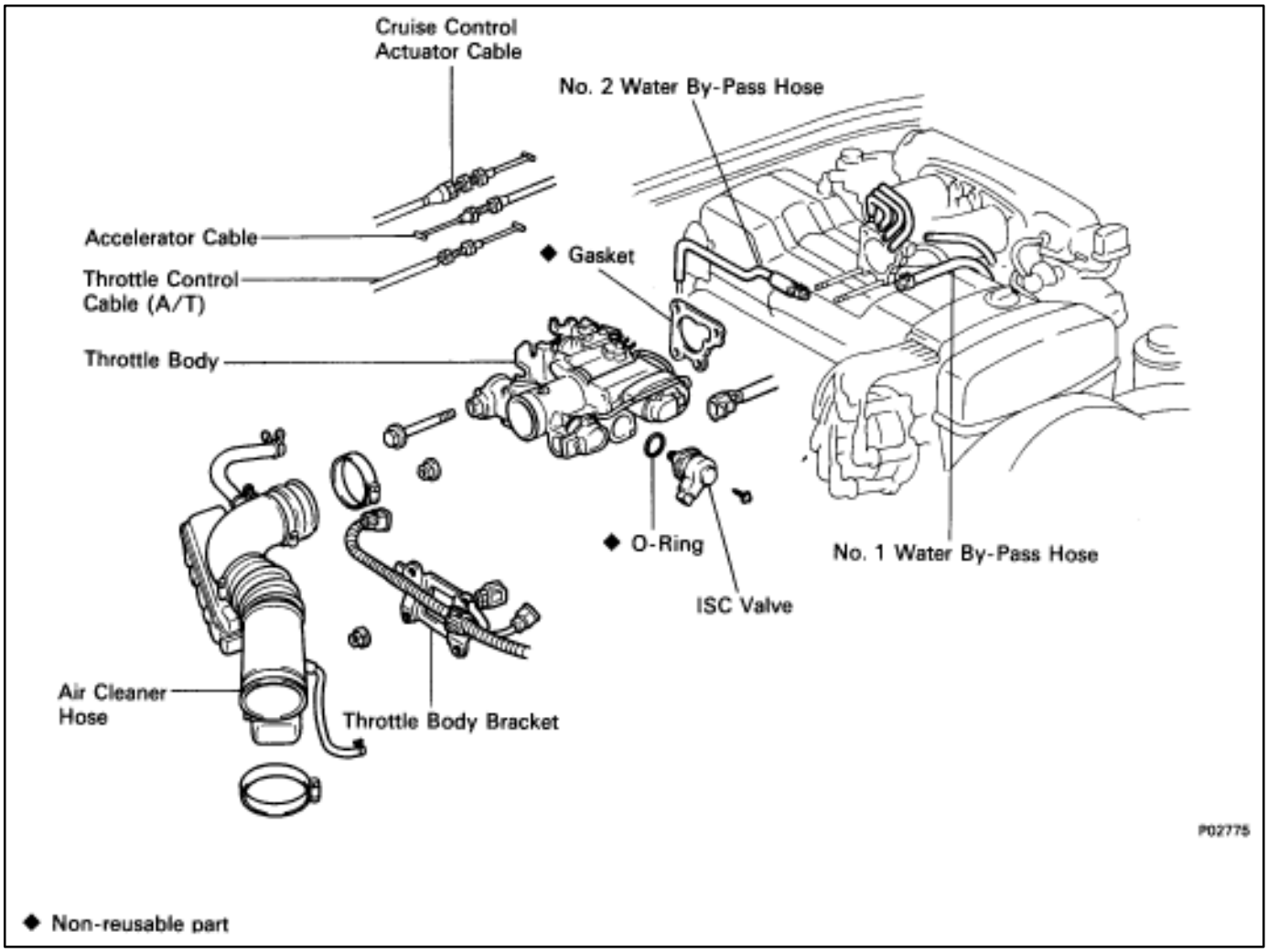

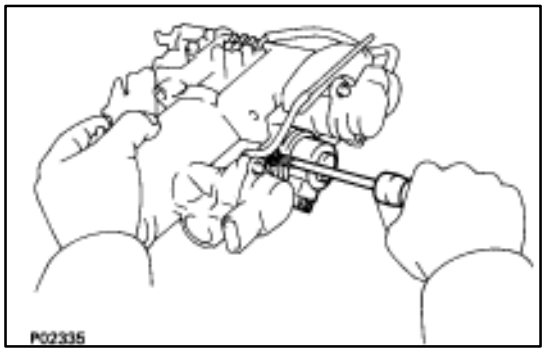

REMOVAL OF ISC VALVE

1. **REMOVE THROTTLE BODY (See page FI–45)**
2. **REMOVE ISC VALVE**
   Remove the two screws, ISC valve and O–ring.

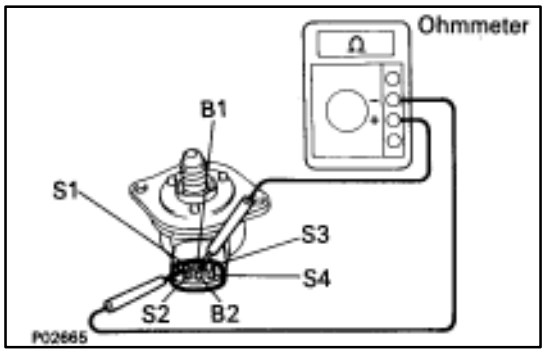

INSPECTION OF ISC VALVE

1. **INSPECT ISC VALVE RESISTANCE**
   Using an ohmmeter, measure the resistance between the terminals (B1–S1 and S3, B2–S2 and S4).
   Resistance: 10–30 ?
   If resistance is not as specified, replace the ISC valve.

WhereEverybodyKnowsYourName

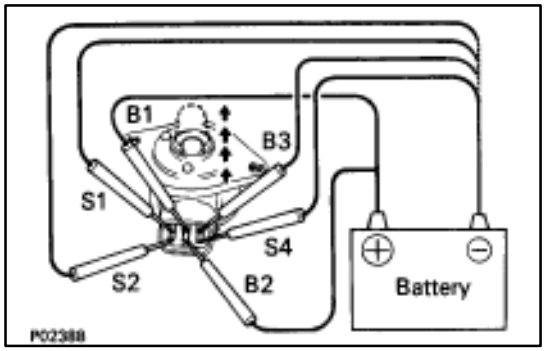

2. INSPECT ISC VALVE OPERATION

(a) Apply battery voltage to terminals B1 and B2, and while repeatedly grounding S1–S2–S3–S4–S1 in sequence, and check that the valve moves toward the closed position.

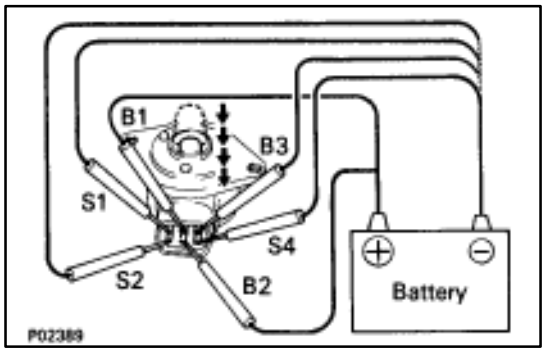

(b) Aplly battery voltage to terminals B1 and B2, and while repeatedly grounding S4–S3–S2–S1–S4 in sequence, and check that the valve moves toward the open position.

If operation is not as specified, replace the ISC valve.

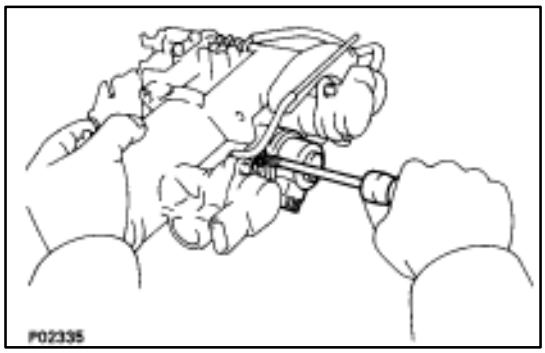

INSTALLATION OF ISC VALVE

(See Components on page FI–54)

1. INSTALL ISC VALVE

(a) Install a new O–ring on the throttle body.

(b) Install the ISC valve with the two screws.

2. INSTALL THROTTLE BODY

(See page FI–45)

WhereEverybodyKnowsYourName

Acoustic Control Induction System (ACIS)

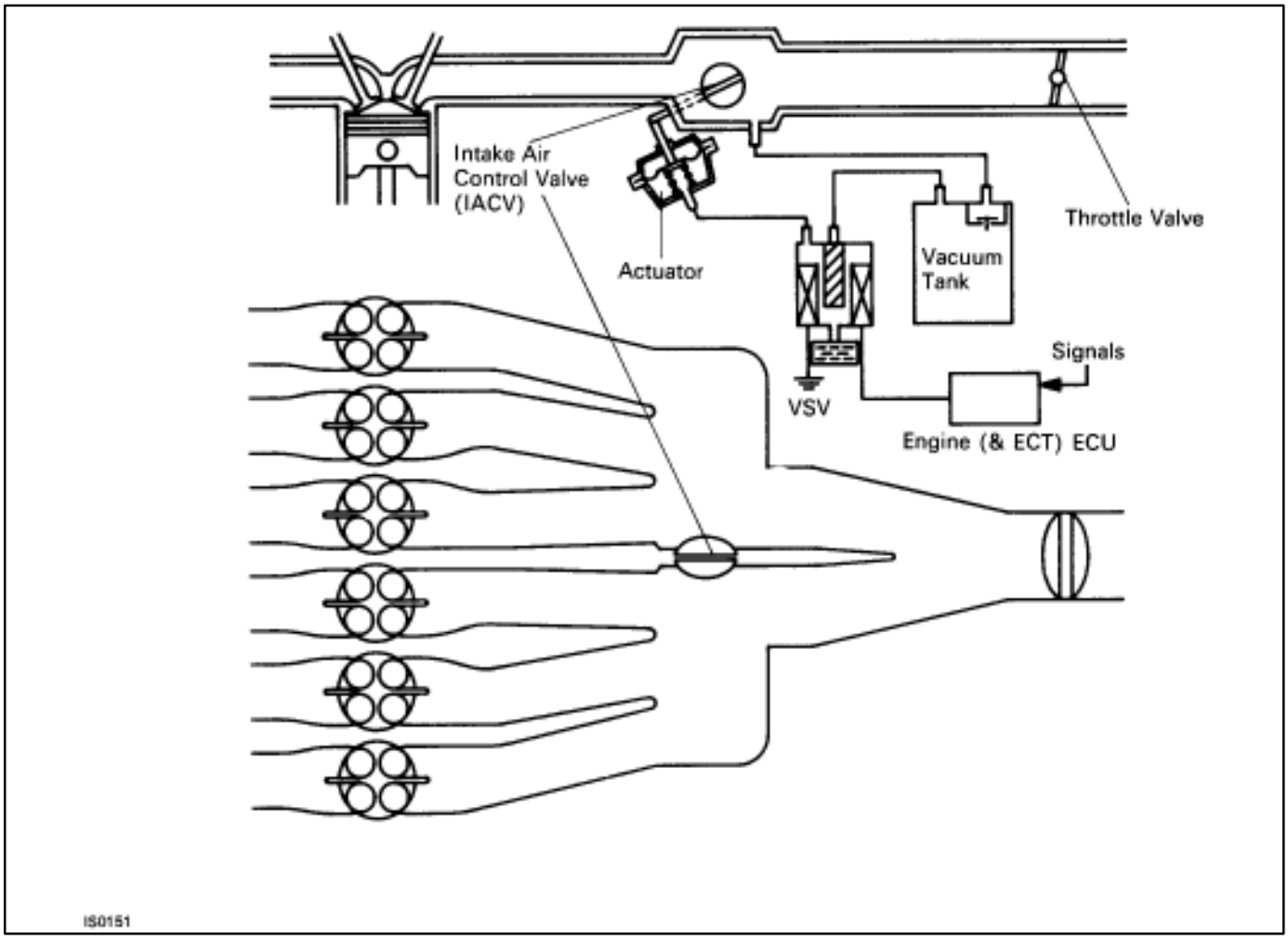

ON–VEHICLE INSPECTION

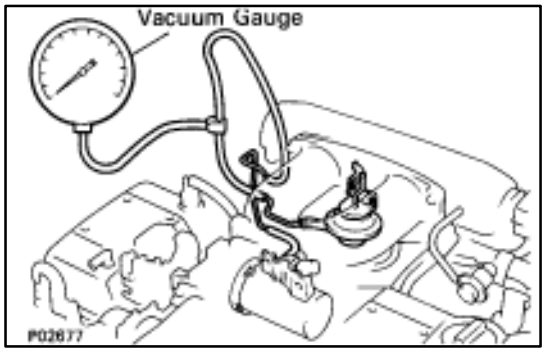

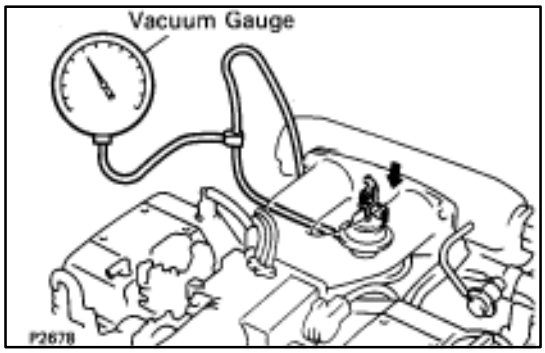

INSPECT IACV

(a) Using a 3–way connector, connect vacuum gauge to the actuator hose.

(b) Start the engine.

(c) While the engine is idling, check that the vacuum gauge needle does not move.

(d) Repidly depress the accelerator pedal to fully open position and check that the vacuum gauge needle momentarily fluctuates approx. 53.3 kPa (400 mmHg, 15.75 in.Hg). (The actuator rod is pulled out.)

WhereEverybodyKnowsYourName

COMPONENTS

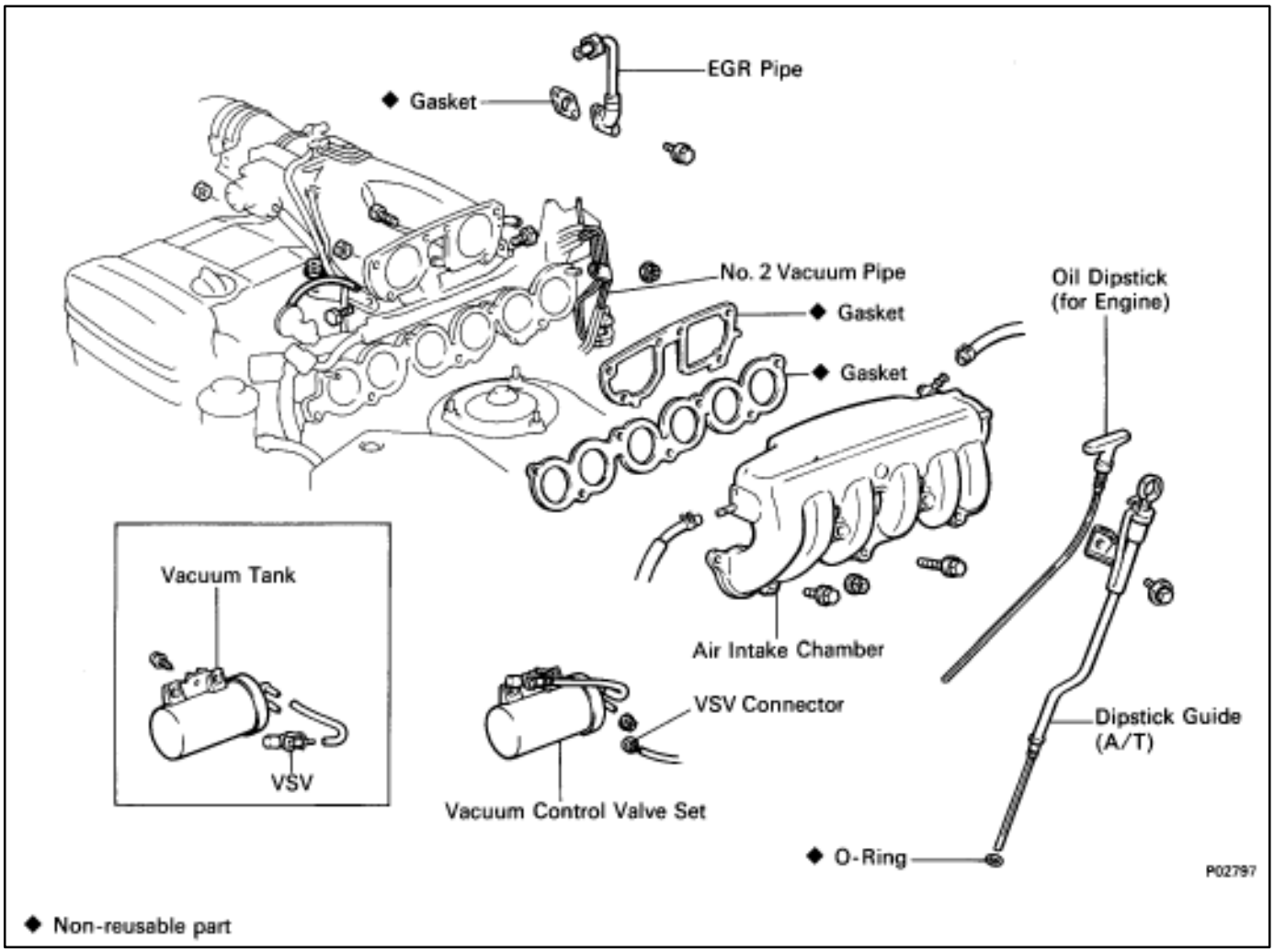

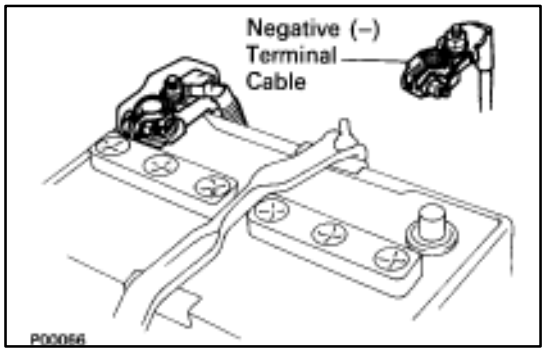

REMOVAL OF ACOUSTIC CONTROL INDUCTION SYSTEM (ACIS)

1. DISCONNECT CABLE FROM NEGATIVE TERMINAL OF BATTERY

CAUTION: Turn the ignition switch to ”LOCK”. Disconnect the cable from the negative (–) terminal of the battery. Wait at least 20 seconds before proceeding with work.

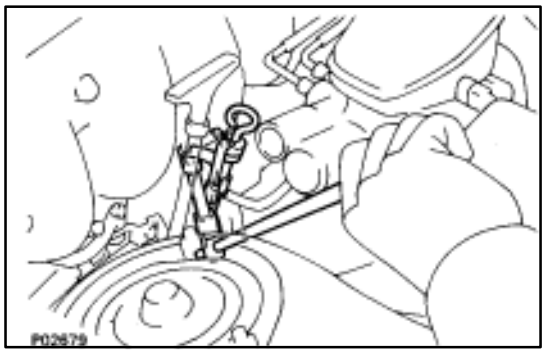

2. (A/T)

REMOVE DIPSTICK GUIDE FOR TRANSMISSION

(a) Remove the mounting bolt.

(b) Pull out the dipstick guide and dipstick from the transmission.

(c) Remove the O–ring from the dipstic guide.

WhereEverybodyKnowsYourName

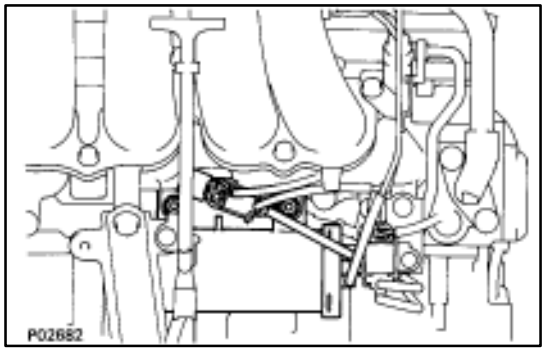

3. REMOVE VACUUM CONTROL VALVE SET

(a) Disconnect the connector from the VSV.

(b) Disconnect the following hoses:

(1) Vacuum hose from VSV

(2) Vacuum hose from vacuum pipe

(c) Remove the two nuts and vacuum control valve set.

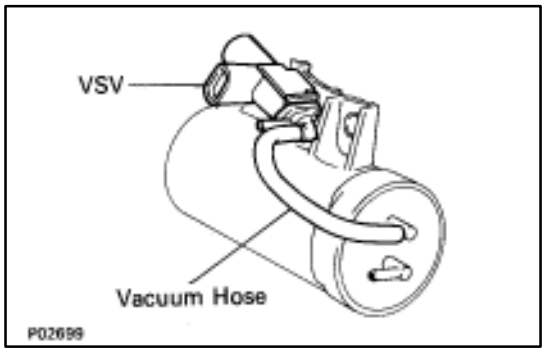

4. REMOVE VACUUM TANK AND VSV

Remove the screw, vacuum hose and VSV from the vacuum tank.

5. REMOVE OIL DIPSTICK FOR ENGINE

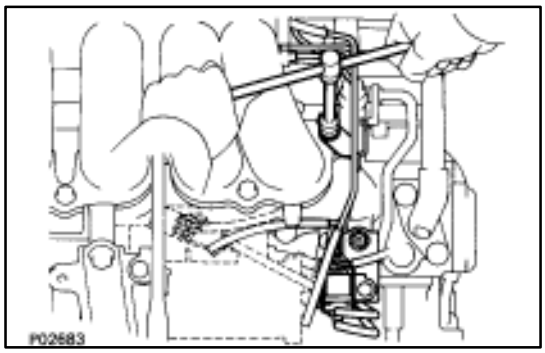

6. DISCONNECT NO. 2 VACUUM PIPE

Remove the two nuts and disconnect the vacuum pipe.

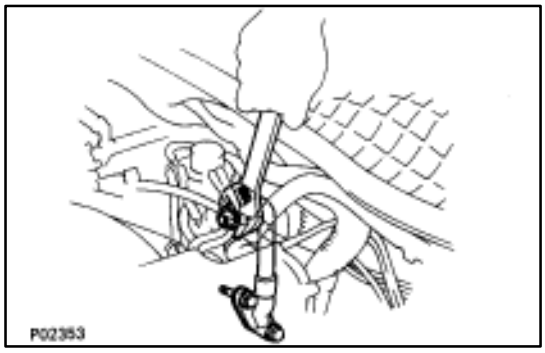

7. REMOVE EGR PIPE

(a) Loosen the union nut.

(b) Remove the two bolts, EGR pipe and gasket.

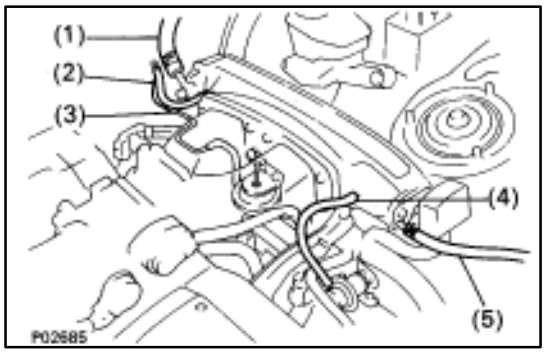

8. REMOVE AIR INTAKE CHAMBER

(a) Disconnect the following hoses:

(1) Vacuum hose from brake booster union

(2) Air hose (from charcoal canister)

(3) Vacuum hose from vacuum pipe

(4) Vacuum sensing hose

(5) Air hose (from PS air control valve)

WhereEverybodyKnowsYourName

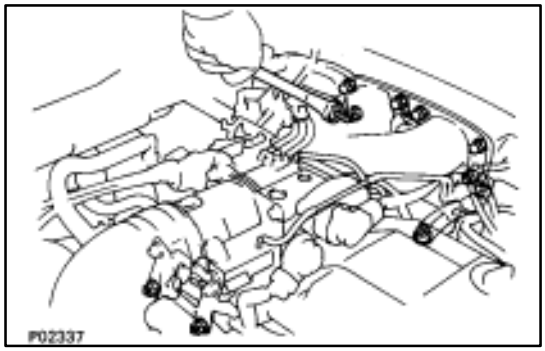

(b) Remove the six nuts and five bolts holding the intake air connector to the air intake chamber.

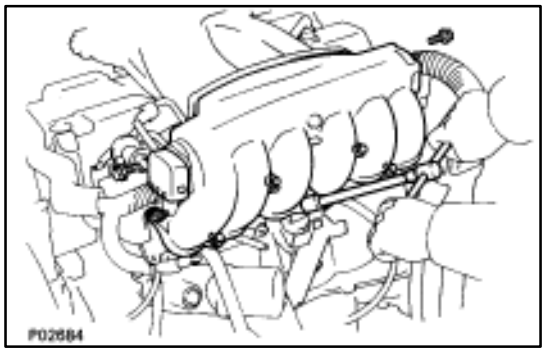

(c) Disconnect the check connector and harness protector from the air intake chamber.
(d) Remove the five bolts, two nuts, intake air chamber and two gaskets.

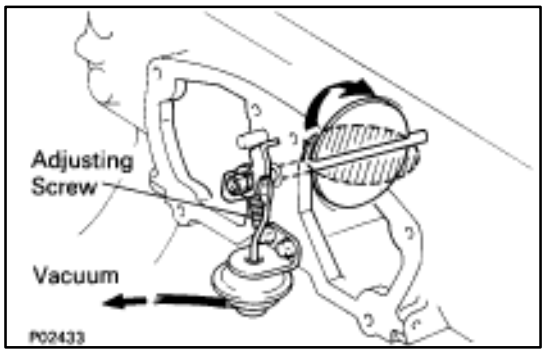

INSPECTION OF ACOUSTIC CONTROL INDUCTION SYSTEM (ACIS)

1. INSPECT IACV

(a) With 53.3 kPa (400 mmHg, 15.75 in.Hg) of vacuum applied to the actuator, check that the actuator rod moves.
(b) One minute after applying the vacuum in (a), check that the actuator rod does not return.

If the operation is not as specified, turn the adjusting screw.

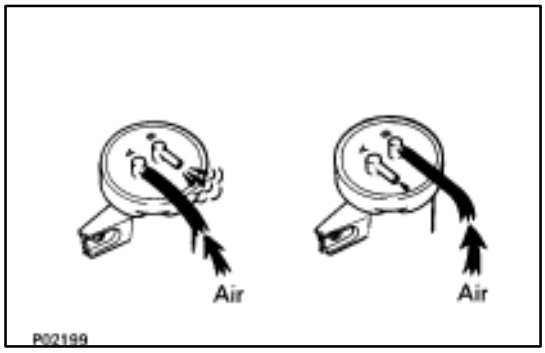

2. INSPECT VACUUM TANK

(a) Check that air flows from port A to port B.
(b) Check that air does not flow port B to port A.

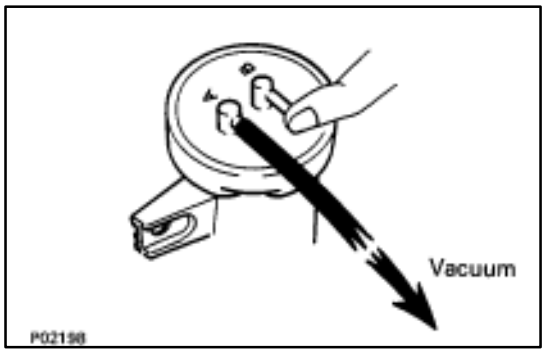

(c) Plug port B with your finger, and apply 53.3 kPa (400 mmHg, 15.75 in.Hg) of vacuum to port A, and check that there is no changer in vacuum after one minute.

If the operation is not as specified, replace the vacuum tank.

WhereEverybodyKnowsYourName

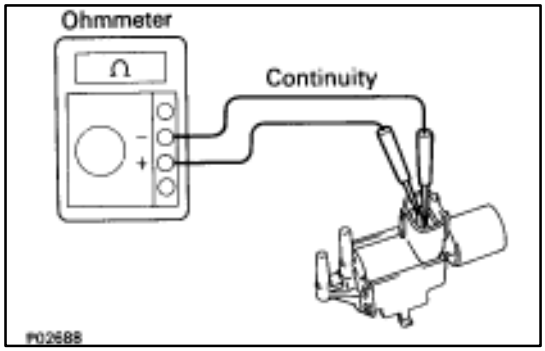

3. INSPECT VSV

A. Inspect VSV for open circuit

Using an ohmmeter, check that there is continuity, between the terminals.

Resistance (Cold): 38.5–44.5 ? at 20°C (68°F)

If there is no continuity, replace the VSV.

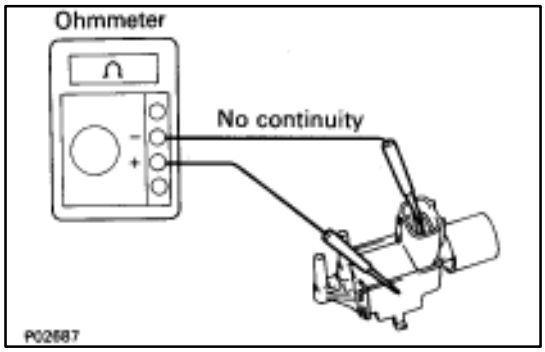

B. Inspect VSV for ground

Using an ohmmeter, check that there is no continuity between each terminal and the body.

If there is continuity, replace the VSV.

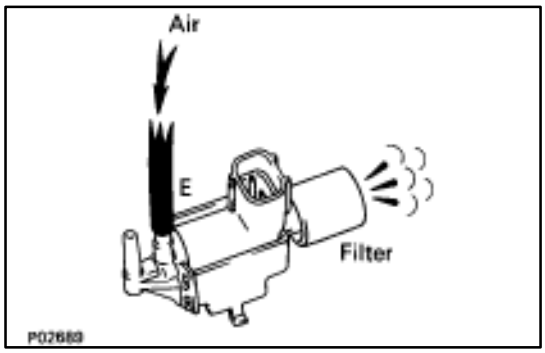

C. Inspect VSV operation

(a) Check that air flows from port E to the filter.

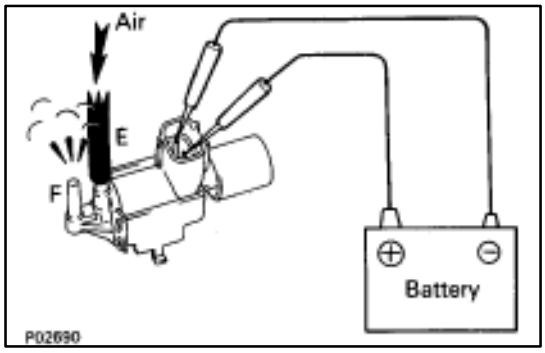

(b) Apply battery voltage across the terminals.

(c) Check that air flows from port E to port F.

If operation is not as specified, replace the VSV.

WhereEverybodyKnowsYourName

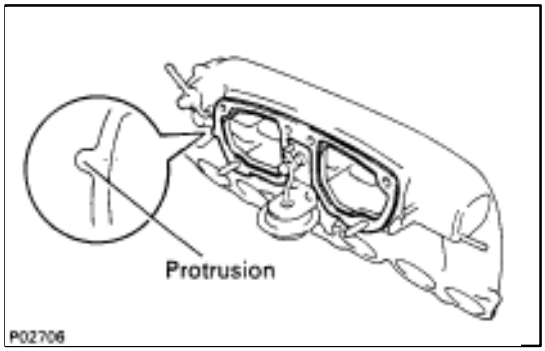

INSTALLATION OF ACOUSTIC CONTROL INDUCTION SYSTEM

(See Components on page FI–57)

1. INSTALL AIR INTAKE CHAMBER

(a) Place a new gasket so the protrusion faces the intake chamber.

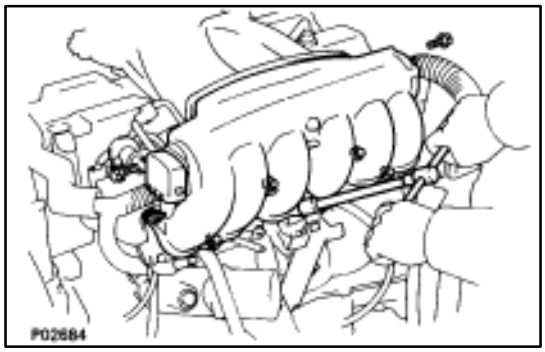

(b) Install a new gasket to the intake manifold, and the intake chamber with the five bolts and two nuts.

Torque: 21 N·m (210 kgf·cm, 15 ft·lbf)

(c) Connect the check connector and harness protector with the two bolts to the air intake chamber.

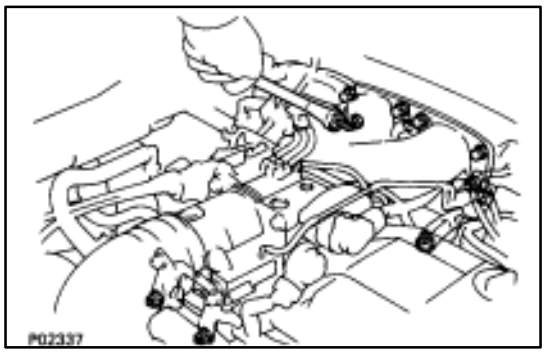

(d) Install the six nuts and five bolts holding the intake air connector to the air intake chamber.

Torque: 18 N·m (185 kgf·cm, 13 ft·lbf)

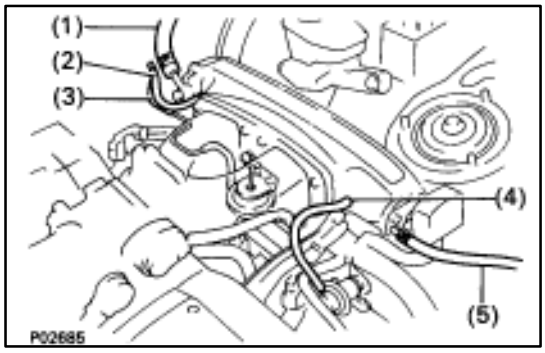

(e) Connect the following hoses:
(1) Vacuum hose to brake booster union
(2) Air hose (to charcoal canister)
(3) Vacuum hose from vacuum pipe
(4) Vacuum sensing hose
(5) Air hose (to PS air control valve)

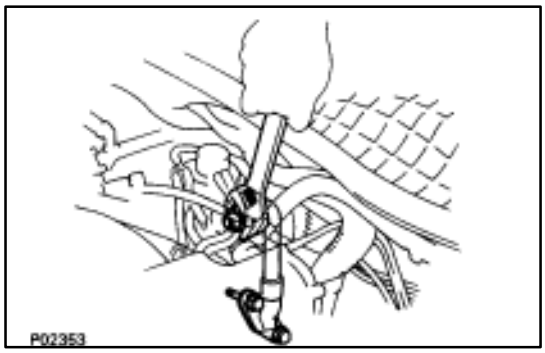

2. INSTALL EGR PIPE

(a) Install a gasket and the EGR pipe with the two bolts.

Torque: 21 N·m (210 kgf·cm, 15 ft·lbf)

(b) Tighten the union nut.

Torque: 64 N·m (650 kgf·cm, 47 ft·lbf)

WhereEverybodyKnowsYourName

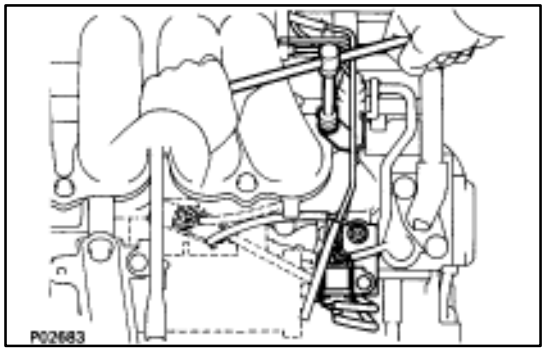

3. INSTALL NO.2 VACUUM PIPE

Install the vacuum pipe with the two nuts.

Torque: 21 N·m (210 kgf·cm, 15 ft·lbf)

4. INSTALL OIL DIPSTICK FOR ENGINE

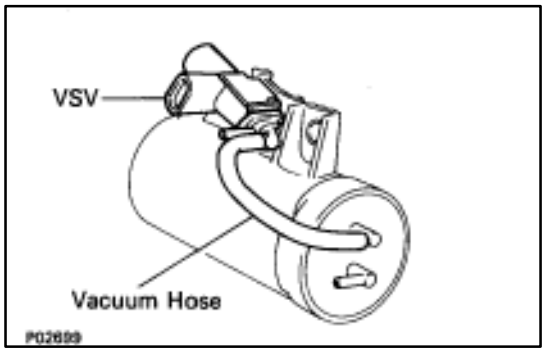

5. INSTALL VACUUM TANK AND VSV

(a) Install the VSV with the screw on the vacuum tank.

Torque: 8.8 N·m (90 kgf·cm, 78 in.·lbf)

(b) Install the vacuum hose.

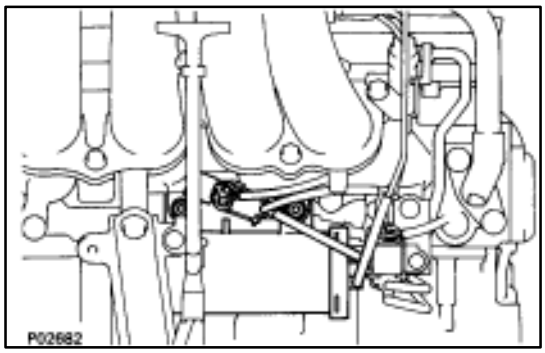

6. INSTALL VACUUM CONTROL VALVE SET

(a) Install the vacuum control valve set with the two nuts.

Torque: 21 N·m (210 kgf·cm, 15 ft·lbf)

(b) Connect the following hoses:

(1) Vacuum hose to VSV

(2) Vacuum hose to vacuum pipe

(c) Connect the connector to the VSV.

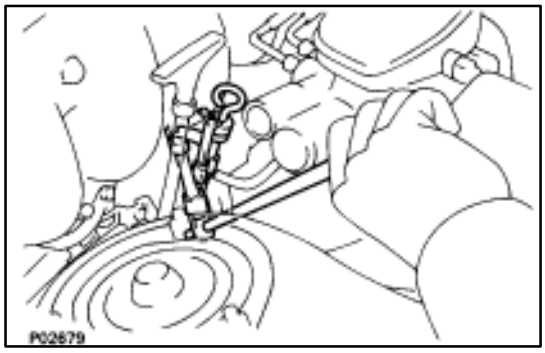

7. (A/T)

INSTALL DIPSTICK GUIDE FOR TRANSMISSION

(a) Install a new O–ring on the dipstick guide.

(b) Apply soapy on the O–ring.

(c) Connect the dipstick guide end to the tube of the oil pan, and install the dipstick guide with the bolt.

(d) Install the dipstick.

8. CONNECT CABLE TO NEGATIVE TERMINAL OF BATTERY

WhereEverybodyKnowsYourName

Fuel Pressure Pulsation Damper

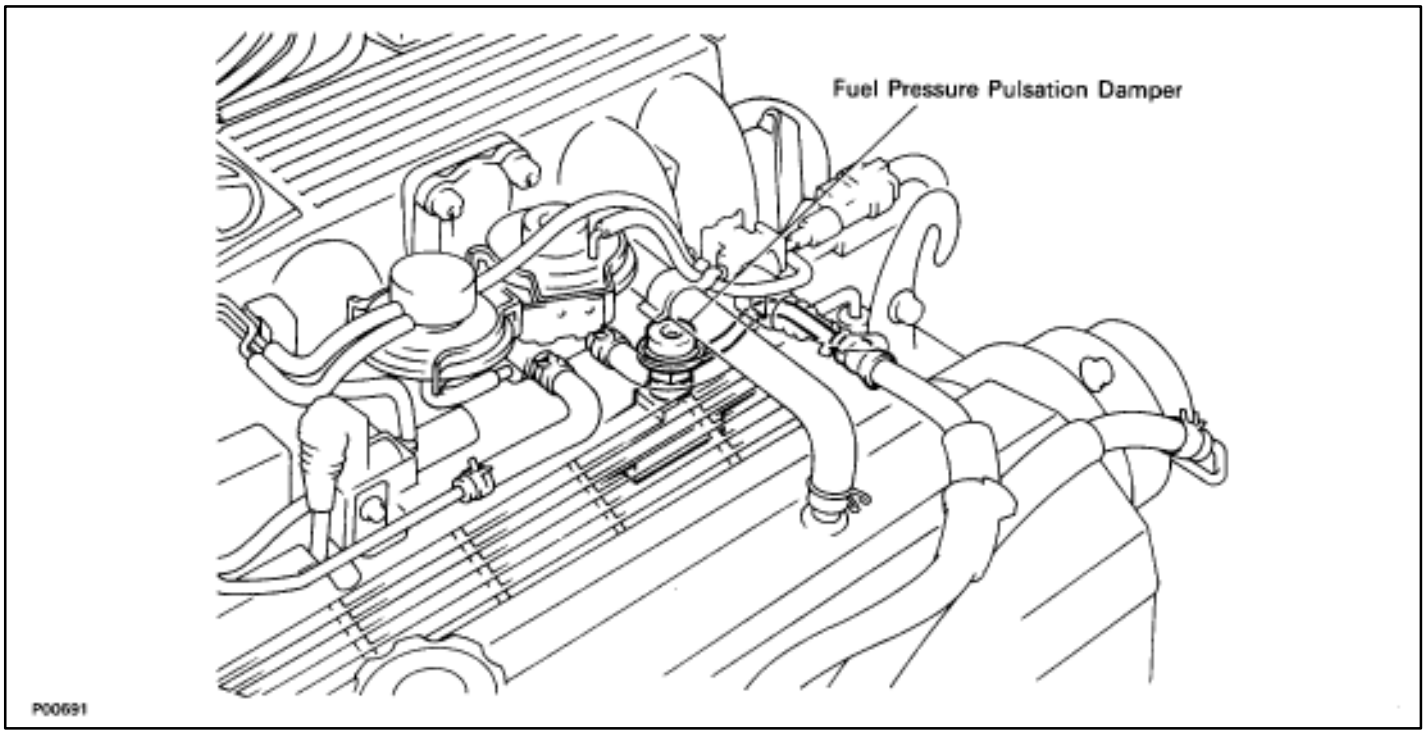

COMPONENTS FOR REMOVAL AND INSTALLATION

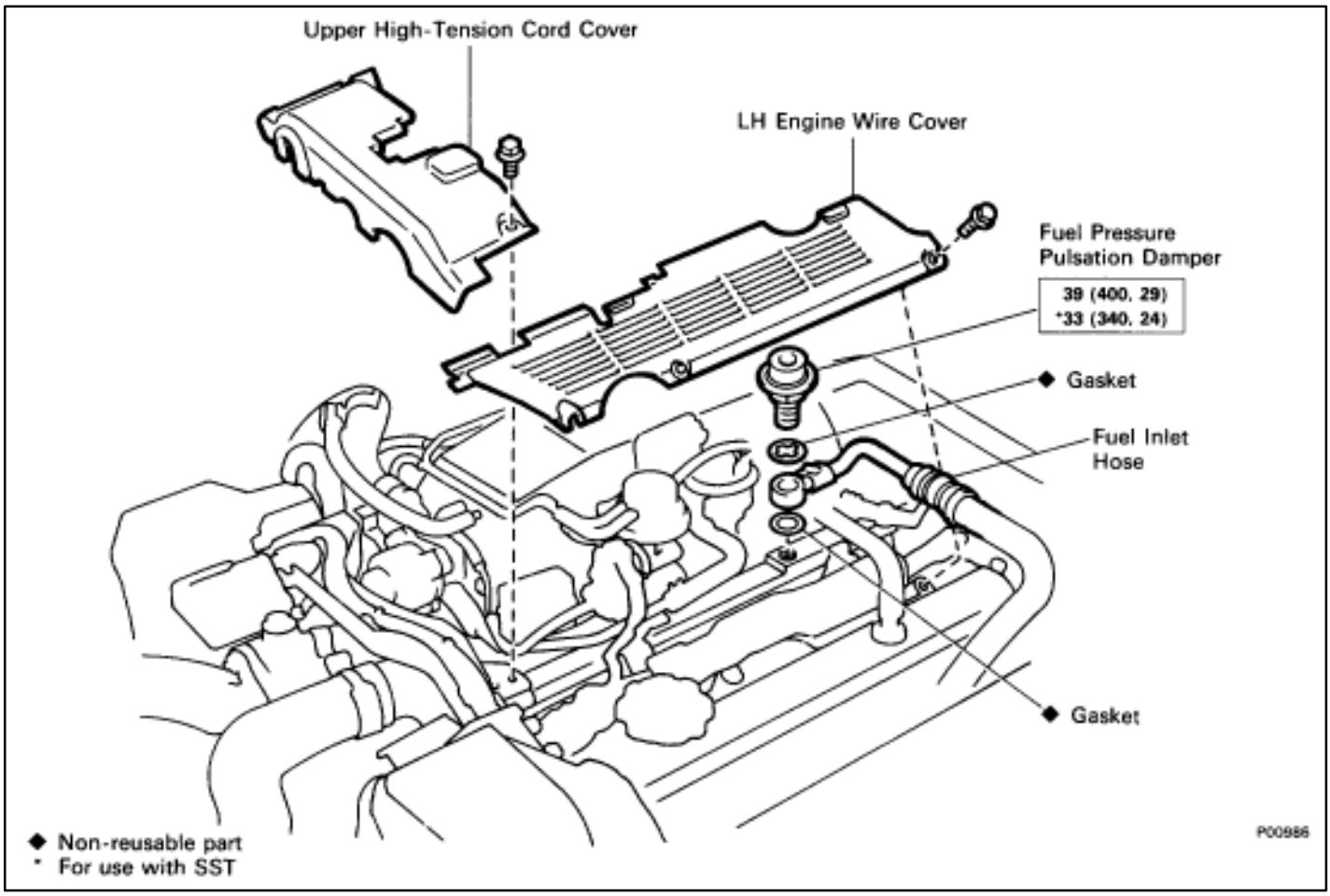

WhereEverybodyKnowsYourName

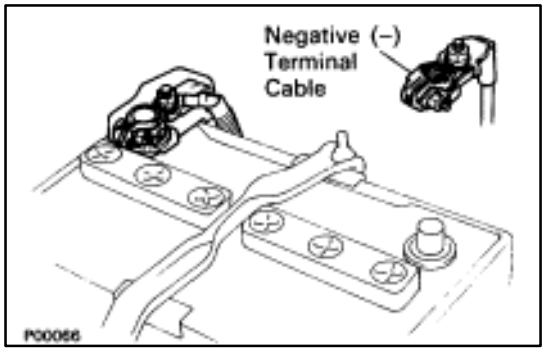

REMOVAL OF FUEL PRESSURE PULSATION DAMPER

(See Component on page FI–58)

1. DISCONNECT CABLE FROM NEGATIVE TERMINAL OF BATTERY

CAUTION: Work must be started after approx. 20 seconds or longer from the time the ignition switch is turned to the "LOCK" position and the negative (–) terminal cable is disconnected from the battery.

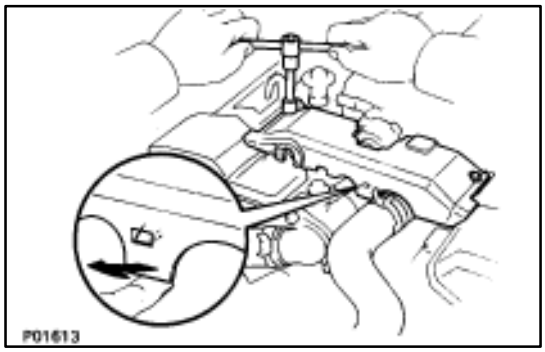

2. REMOVE UPPER HIGH–TENSION CORD COVER

(a) Remove the two mounting bolts.

(b) Disconnect the front side claw groove of the cord cover from the claw of the lower cover, and remove the cord cover.

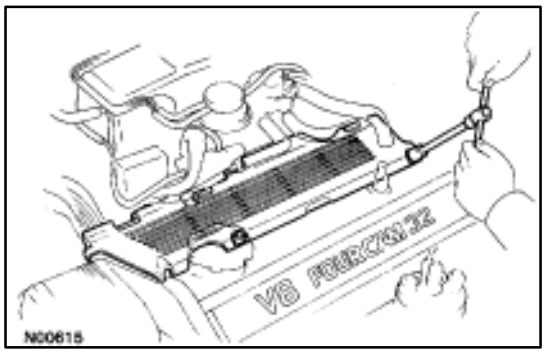

3. REMOVE LH ENGINE WIRE COVER

Remove the two bolts and engine wire cover.

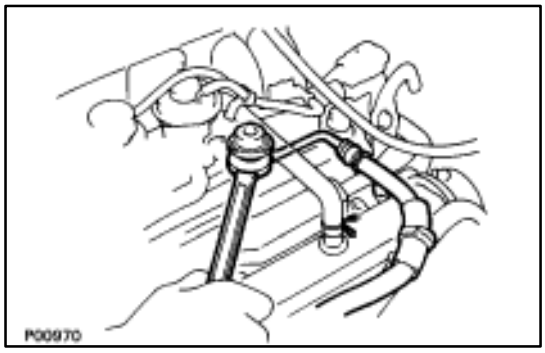

4. REMOVE FUEL PRESSURE PULSATION DAMPER

(a) Remove the pulsation damper and upper gasket.

(b) Disconnect the fuel inlet hose from the delivery pipe, and remove the lower gasket.

WhereEverybodyKnowsYourName

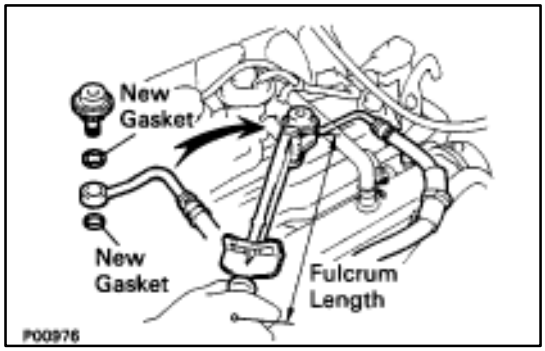

INSTALLATION OF FUEL PRESSURE PULSATION DAMPER

(See Components on page FI–58)

1. INSTALL FUEL PRESSURE PULSATION DAMPER

Using SST, install two new gaskets, the inlet hose and pulsation damper.

SST 09612–24014 (09617–24011)

Torque: 39 N·m (400 kgf·cm, 29 ft·lbf)
33 N·m (340 kgf·cm, 24 ft·lbf) for SST

HINT: Use a torque wrench with a fulcrum length of 30 cm (11.81 in.)

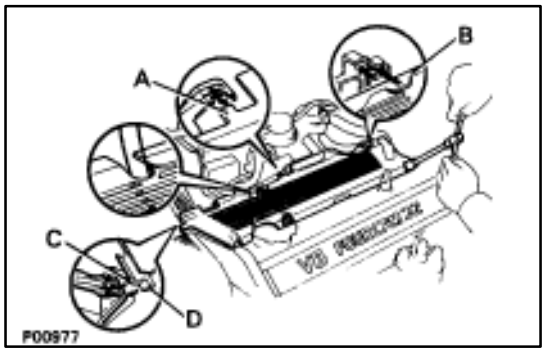

2. INSTALL LH ENGINE WIRE COVER

(a) Connect portions A and B engine wire cover to the wire brackets.

(b) Set the VSV (for fuel pressure control system) wire in original position.

(c) Fit portions C and D of the engine wire cover, matching them with the lower high–tension cord cover and No.3 timing belt cover.

(d) Install the engine wire cover with the two bolts.

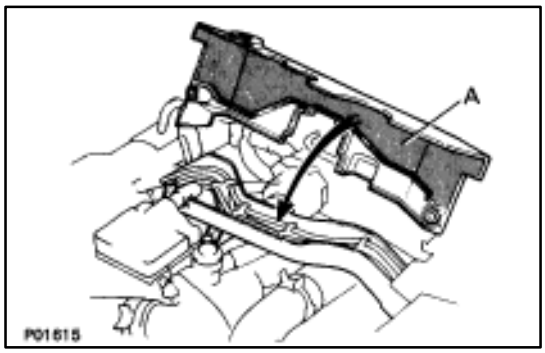

3. INSTALL UPPER HIGH–TENSION CORD COVER

(a) Fit portion A of the upper high–tension cover, matching it with the top of the lower high–tension cord cover.

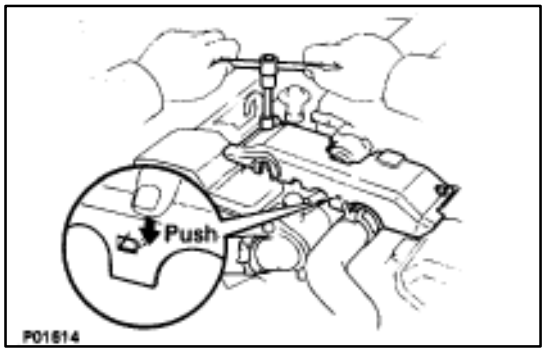

(b) Push the front side of the high–tension cord cover, and connect the front side claw groove of the upper high–tension cord cover to the claw of the lower high–tension cord cover.

(c) Install the upper high–tension cord cover with the two bolts.

4. CONNECT CABLE TO NEGATIVE TERMINAL OF BATTERY

5. CHECK FOR FUEL LEAKS (See page FI–16)

WhereEverybodyKnowsYourName

Fuel Tank and Lines

COMPONENTS

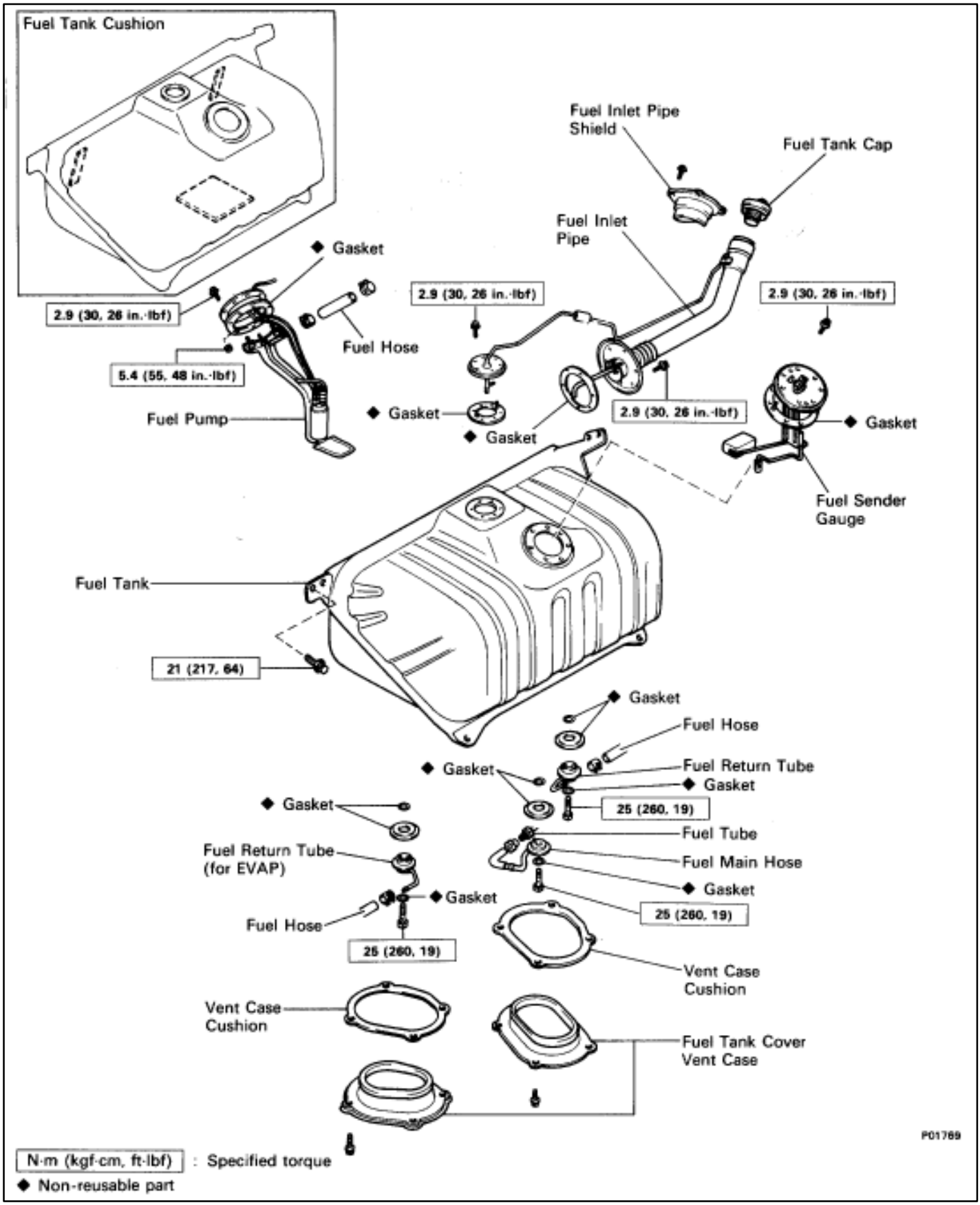

WhereEverybodyKnowsYourName

PRECAUTIONS

1. **Always use new gaskets when replacing the fuel tank or component part.**
2. **Apply the proper torque to all parts tightened.**

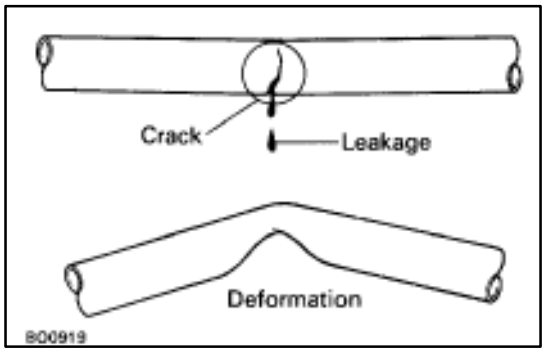

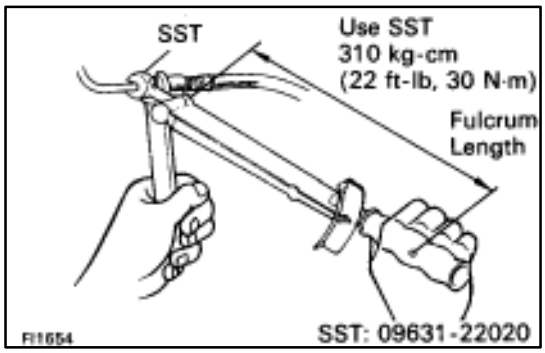

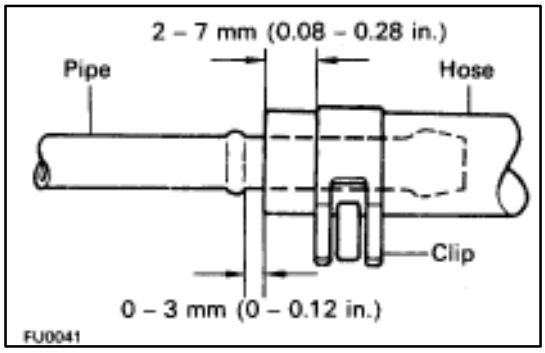

INSPECTION OF FUEL LINES AND CONNECTIONS

(a) Inspect the fuel lines and connections for cracks, leakage or deformation.

(b) Inspect the fuel tank vapor vent system hoses and connections for looseness, kinks or damage.

(c) Inspect the fuel tank for deformation, cracks, fuel leakage or tank band looseness.

(d) Check the filter neck for damage or fuel leakage.

(e) Hose and tube connections are as shown in the illustration.

If a problem is found, repair or replace the parts as necessary.

WhereEverybodyKnowsYourName

AIR INDUCTION SYSTEM
Air Flow Meter

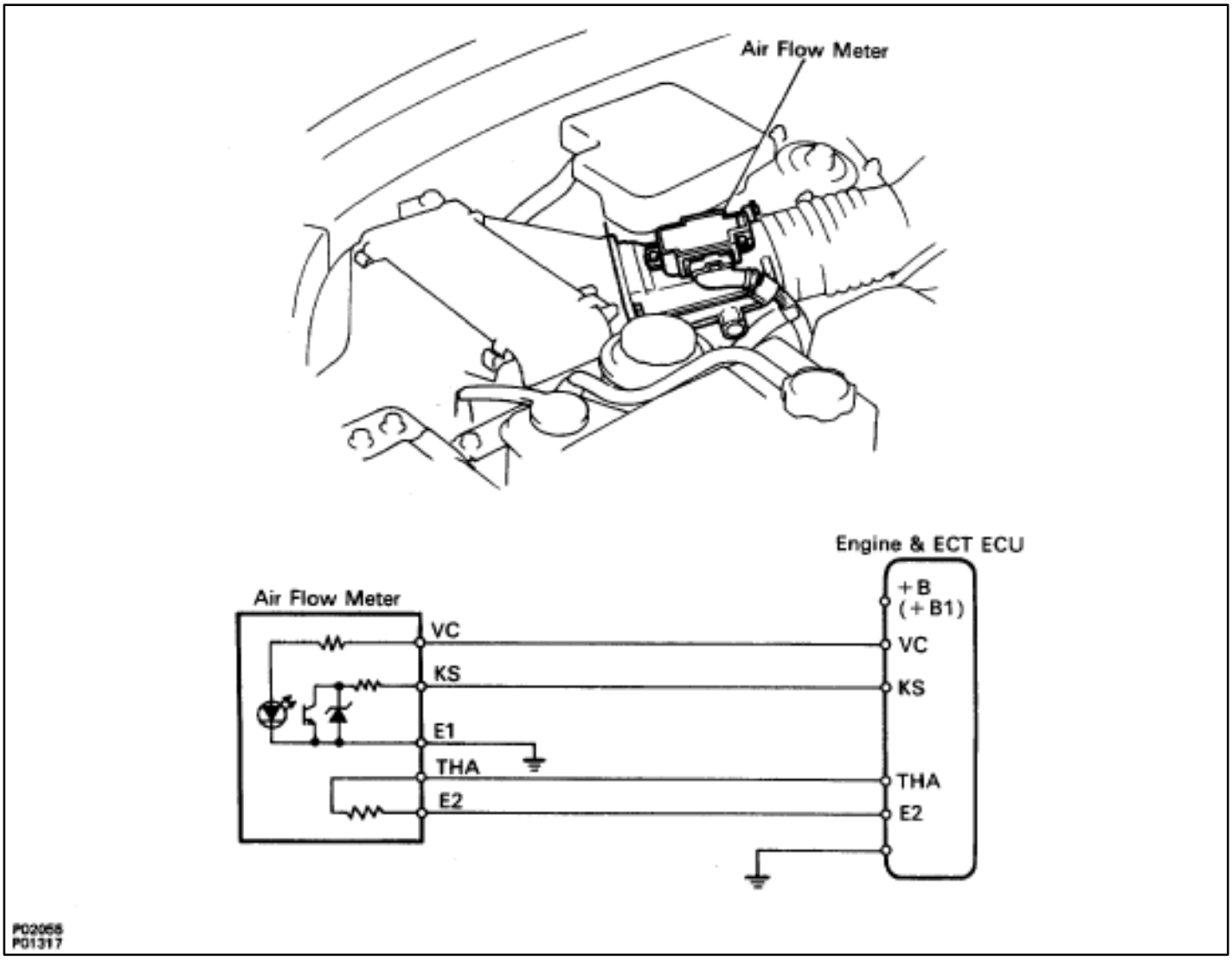

ON–VEHICLE INSPECTION

INSPECT RESISTANCE OF AIR FLOW METER

(a) Disconnect the air flow meter connector.

(b) Using an ohmmeter, measure the resistance between terminals THA and E2.

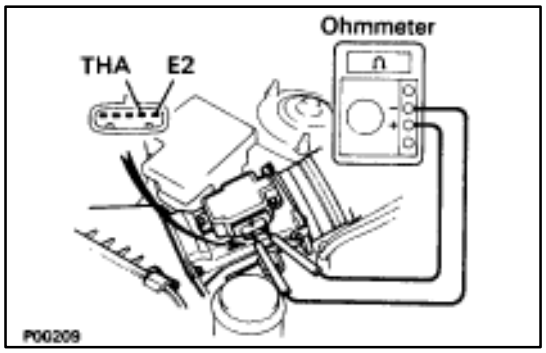

Between terminals	Resistance	Temperature
THA–E2	10–20 k?	–20˚C (–4˚F)
	4–7 k?	9˚C (32˚F)
	2–3 k?	20˚C (68˚F)
	0.9–1.3 k?	40˚C (104˚F)
	0.4–0.7 k?	60˚C (140˚F)

If the resistance is not as specified, replace the air flow meter.

(c) Reconnect the air flow meter connector.

WhereEverybodyKnowsYourName

COMPONENTS

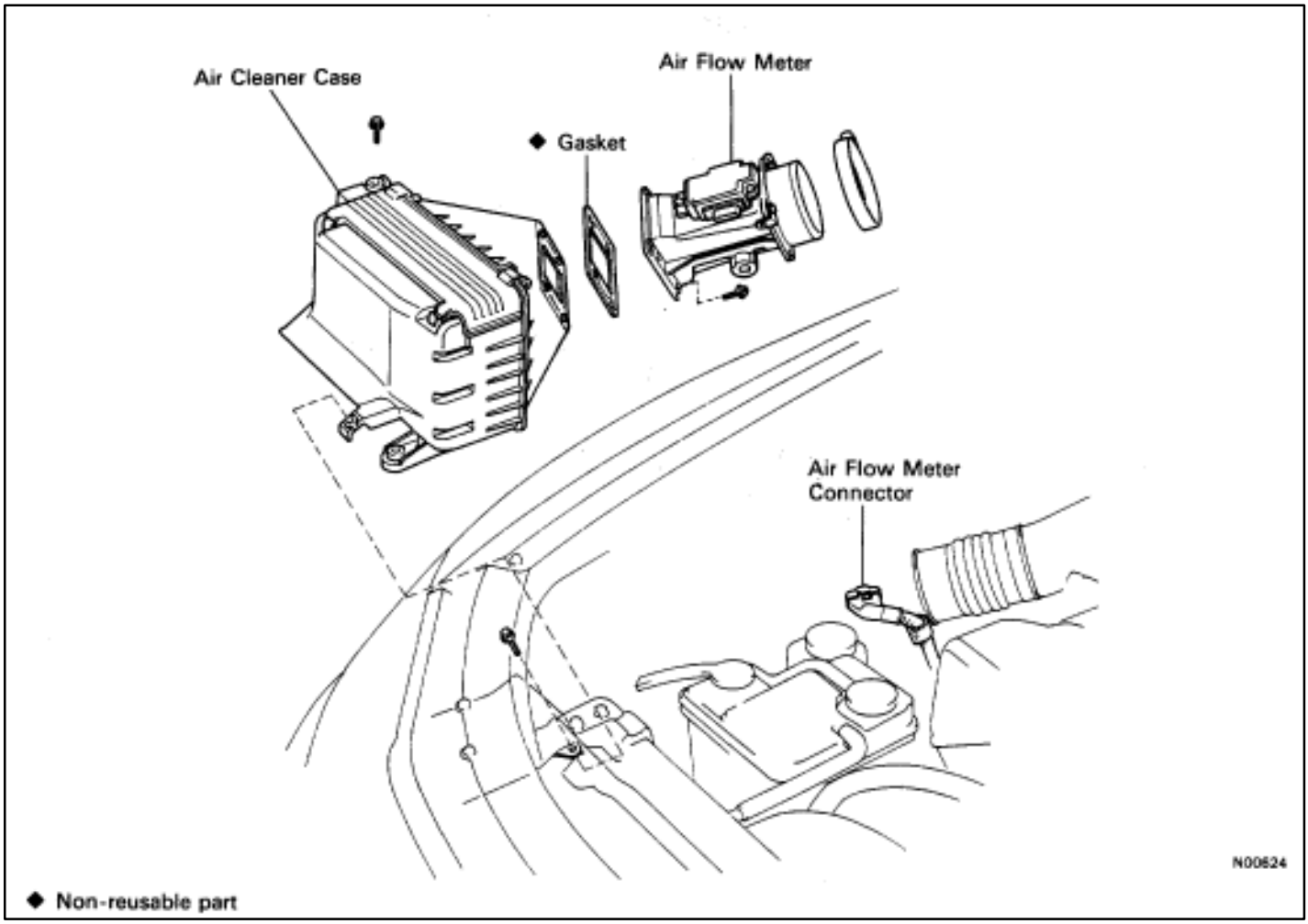

REMOVAL OF AIR FLOW METER

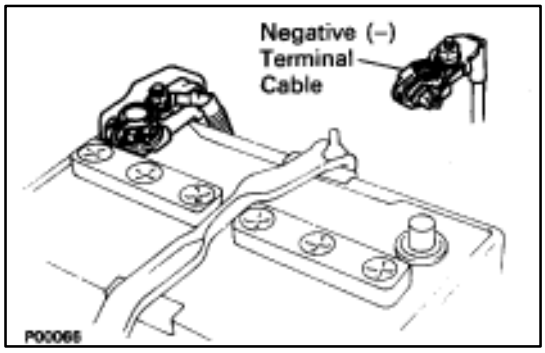

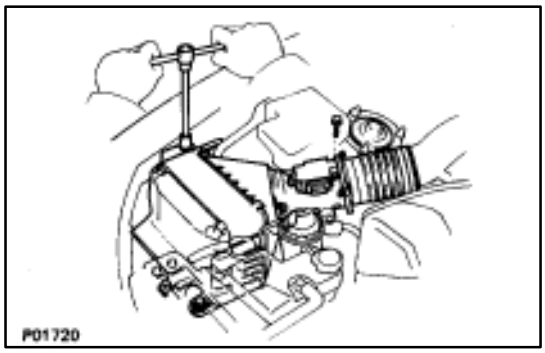

1. **DISCONNECT CABLE FROM NEGATIVE TERMINAL OF BATTERY**
   CAUTION: Work must be started after approx. 20 seconds or longer from the time the ignition switch is turned to the "LOCK" position and the negative (–) terminal cable is disconnected from the battery.
2. **DISCONNECT AIR FLOW METER CONNECTOR**
   (a) Disconnect the air flow meter connector.
   (b) Disconnect the wire clamp from the clamp bracket on the air flow meter.
3. **REMOVE AIR CLEANER CASE AND AIR FLOW METER ASSEMBLY**
   (a) Loosen the hose clamp.
   (b) Remove the four mounting bolts.
   (c) Disconnect the air cleaner hose from the air flow meter.
   (d) Disconnect the air duct from the air cleaner case, and remove the air cleaner case and air flow meter assembly.

WhereEverybodyKnowsYourName

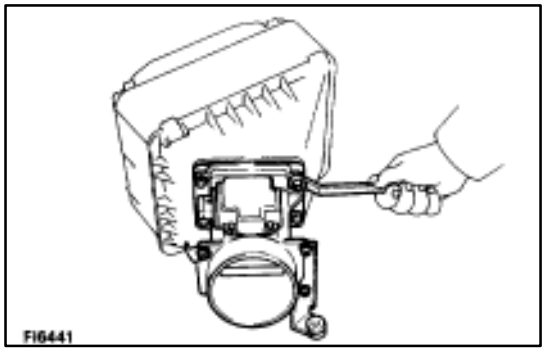

4. REMOVE AIR FLOW METER FROM AIR CLEANER CASE

Remove the four bolts and air flow meter and gasket.

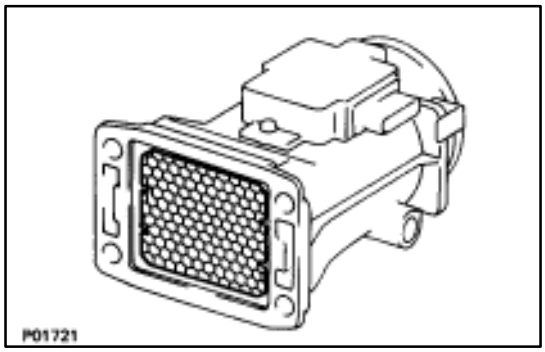

INSPECTION OF AIR FLOW METER

INSPECT AIR FLOW METER

Check that the honey–combed is neither deformed nor damaged.

If necessary, replace the air flow meter.

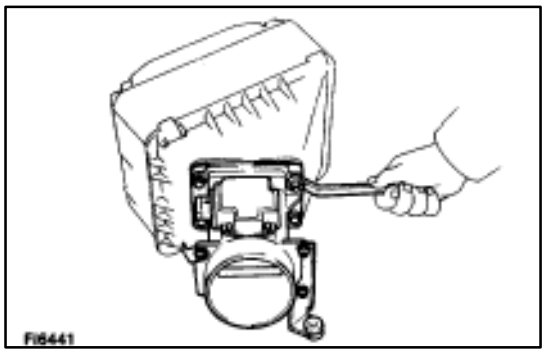

INSTALLATION OF AIR FLOW METER

(See Components on page FI–64)

1. INSTALL AIR FLOW METER FROM AIR CLEANER CASE

Install a new gasket and the air flow meter with the four bolts.

Torque: 10 N·m (100 kgf·cm, 7 ft·lbf)

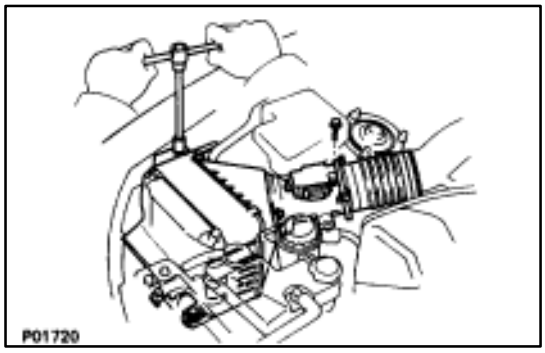

2. INSTALL AIR CLEANER CAP AND AIR FLOW METER ASSEMBLY

(a) Connect the air cleaner case to the air duct.
(b) Connect the air flow meter to the air cleaner hose.
(c) Install the air cleaner and air flow meter assembly with the four bolts.
(d) Tighten the hose clamp.

3. CONNECT AIR FLOW METER CONNECTOR

(a) Connect the air flow meter connector.
(b) Install the wire clamp to the clamp bracket on the air flow meter.

4. CONNECT CABLE FROM NEGATIVE TERMINAL OF BATTERY

WhereEverybodyKnowsYourName

EFI Main Relay

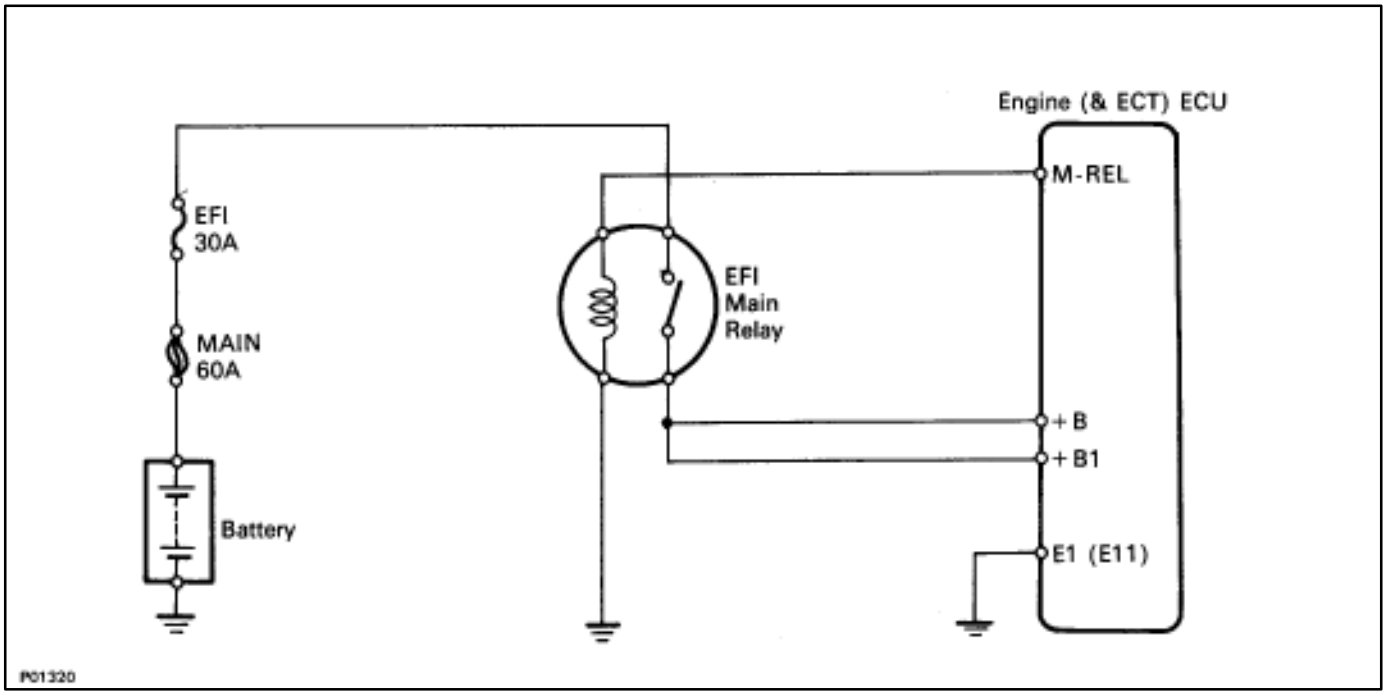

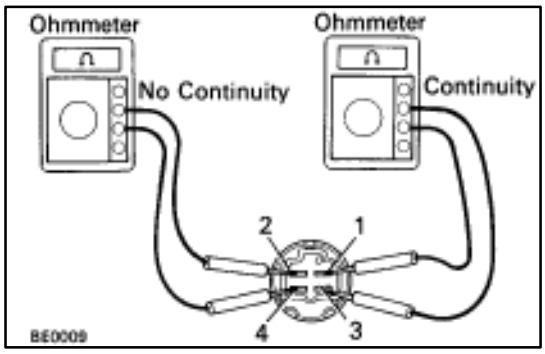

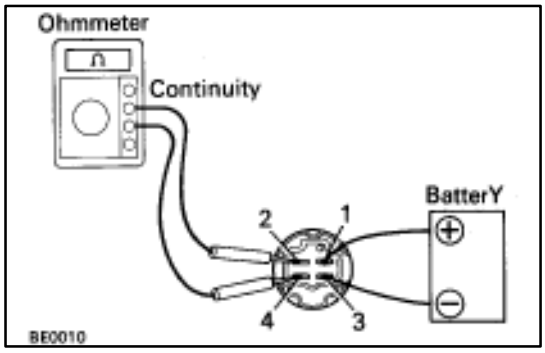

INSPECTION OF EFI MAIN RELAY

1. REMOVE EFI MAIN RELAY FROM RELAY BOX IN ENGINE COMPARTMENT

2. INSPECT EFI MAIN RELAY

A. Inspect relay continuity

(a) Using an ohmmeter, check that there is continuity between terminals 1 and 3.

(b) Check that there is no continuity between terminals 2 and 4.

If continuity is not as specified, replace the relay.

B. Inspect relay operation

(a) Apply battery voltage across terminals 1 and 3.

(b) Using an ohmmeter, check that there is continuity between terminals 2 and 4.

If operation is not as specified, replace the relay.

3. REINSTALL EFI MAIN RELAY

WhereEverybodyKnowsYourName

VSV for EVAP

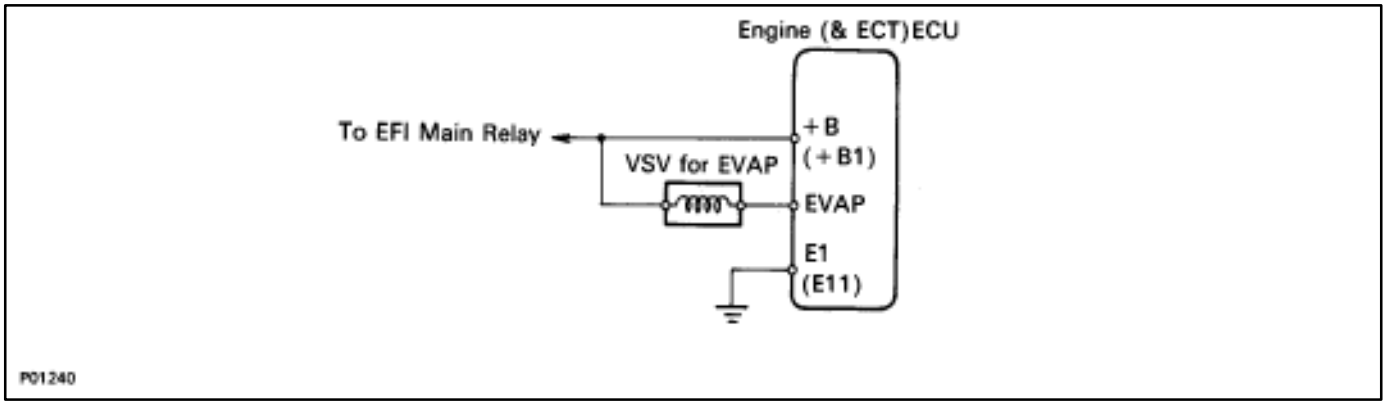

INSPECTION OF VSV FOR EVAP

(See Emission Control System on page EC–8)

VSV for EGR

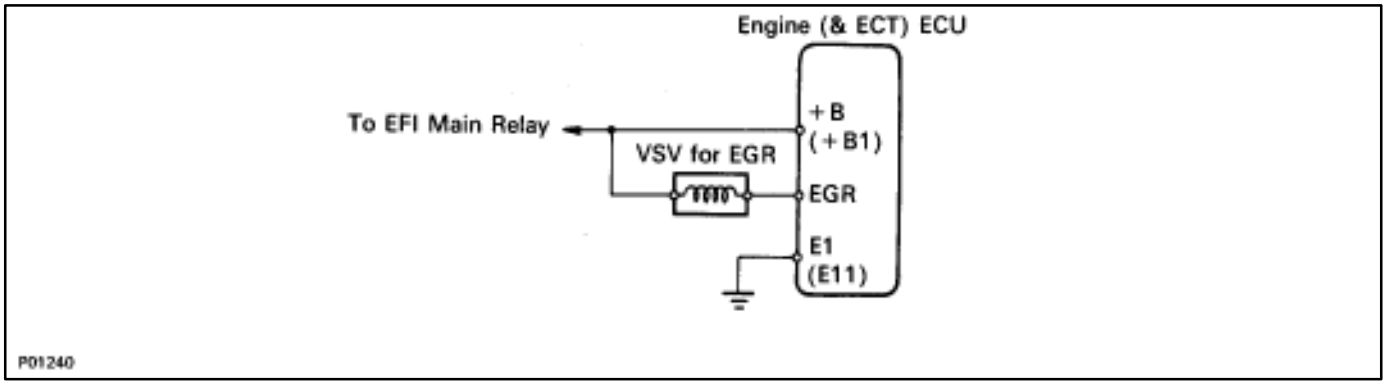

INSPECTION OF VSV FOR EGR

(See Emission Control Systems on page EC–13)

VSV for ACIS

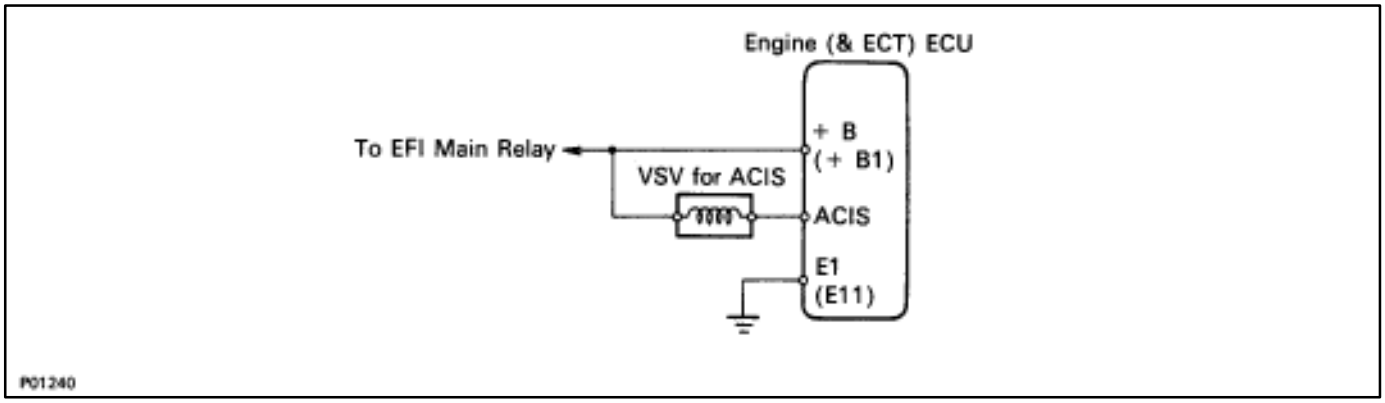

INSPECTION OF VSV FOR ACIS

(See page FI–60)

WhereEverybodyKnowsYourName

Throttle Body

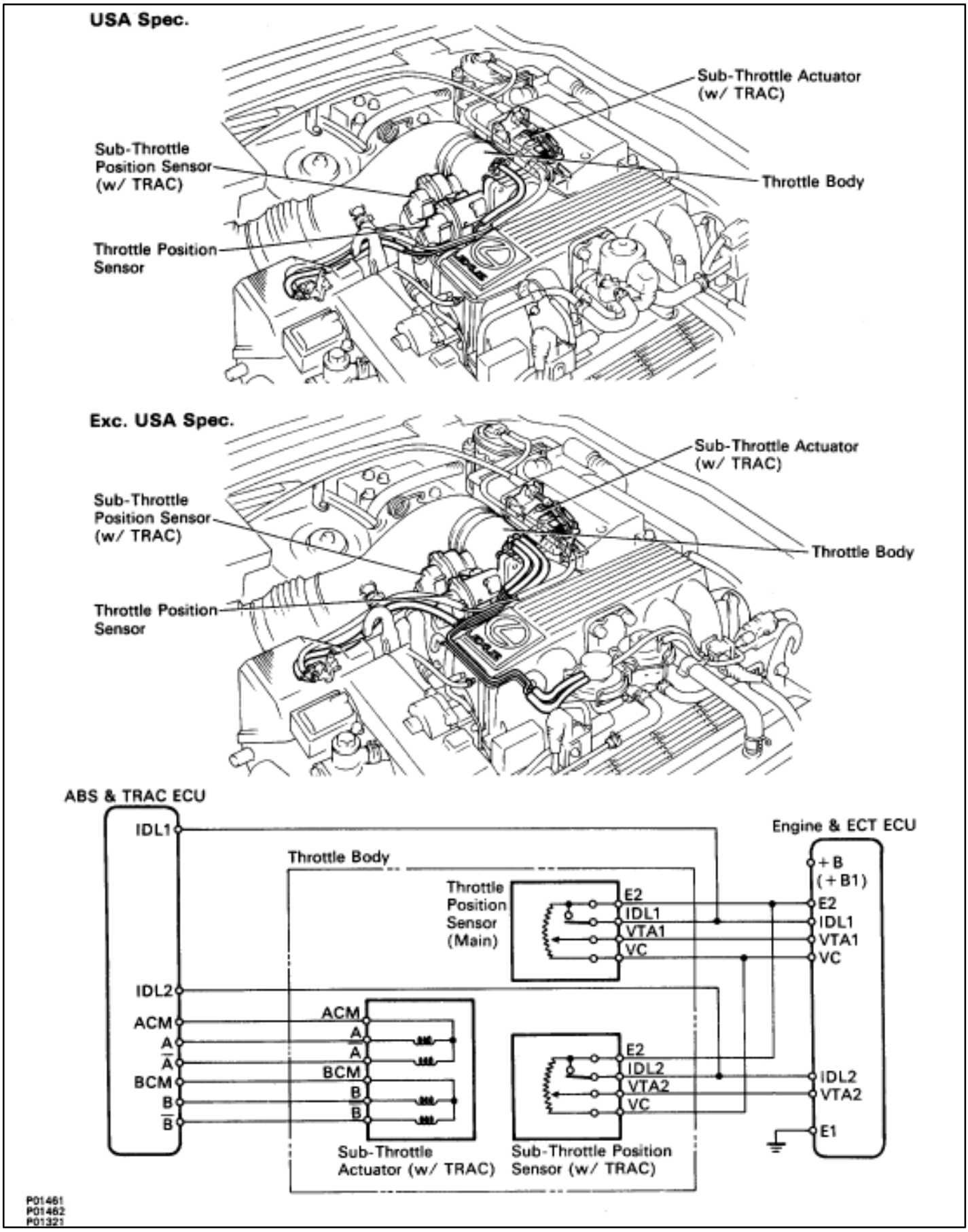

WhereEverybodyKnowsYourName

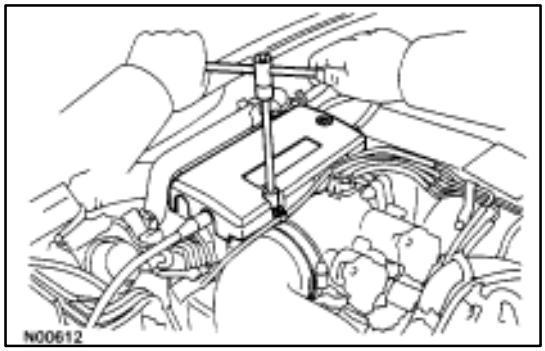

ON–VEHICLE INSPECTION

1. INSPECT THROTTLE BODY

(a) Remove the throttle body cover.
- Remove the mounting cap nut.
- Loosen the two bolts, and remove the throttle body cover.

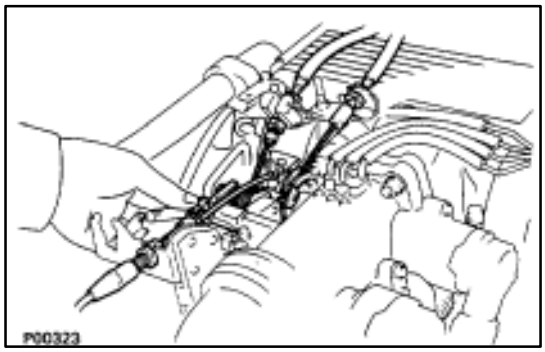

(b) Check that the throttle linkage moves smoothly.

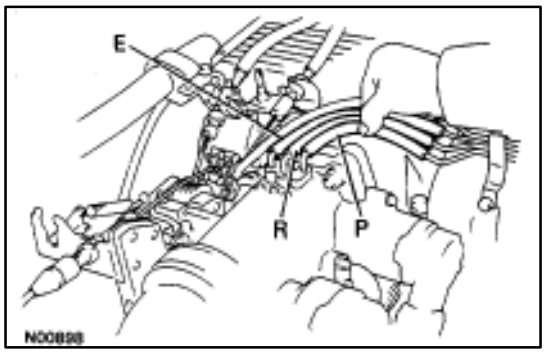

(c) Check the vacuum at each port.
- Start the engine.
- Check the vacuum with your finger.

Port name	At idling	At 3,000 rpm
P	No vacuum	Vacuum
*E	No vacuum	Vacuum
*R	No vacuum	Vacuum

* Exc. USA Spec.

(d) Reinstall the throttle body cover.

3. INSPECT AND ADJUST DASH POT (DP)

A. Warm up engine

Allow the engine to warm up to normal operating temperature.

B. Check idle speed

Idle speed: 700 ± 50 rpm

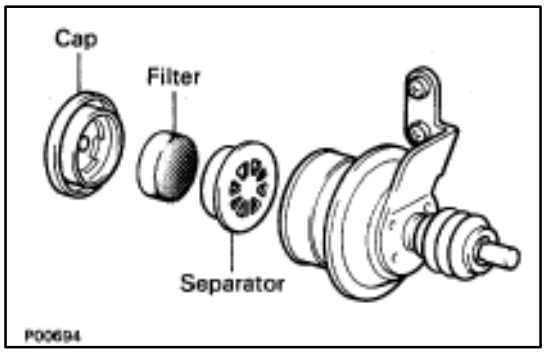

C. Remove cap, filter and separator from DP

WhereEverybodyKnowsYourName

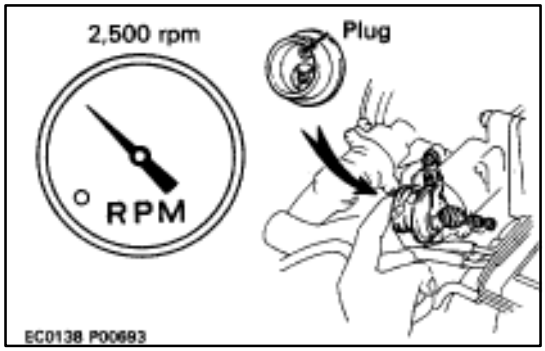

D. Check and adjust DP setting speed

(a) Maintain the engine at 2,500 rpm.

(b) Plug the VTV hole with your finger.

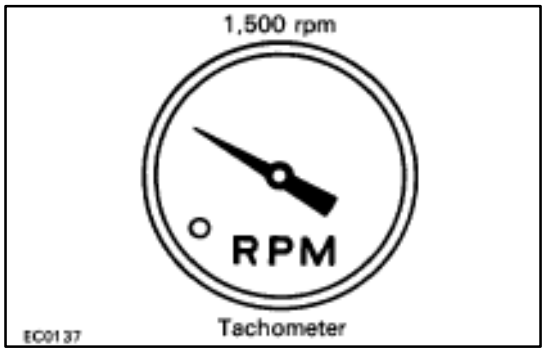

(c) Release the throttle valve.

(d) Check that the DP is set.

DP setting speed: 1,500 rpm

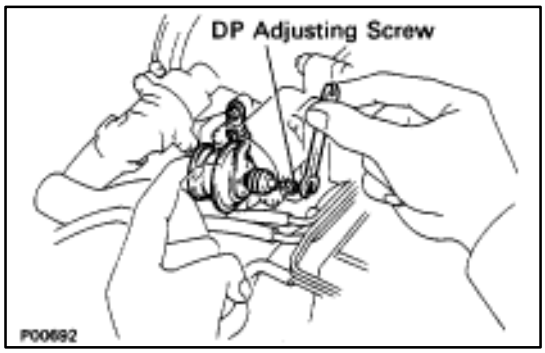

(e) Adjust the DP setting speed by turning the DP adjusting screw.

(f) Repeat steps from (a) to (c), and recheck the DP setting speed.

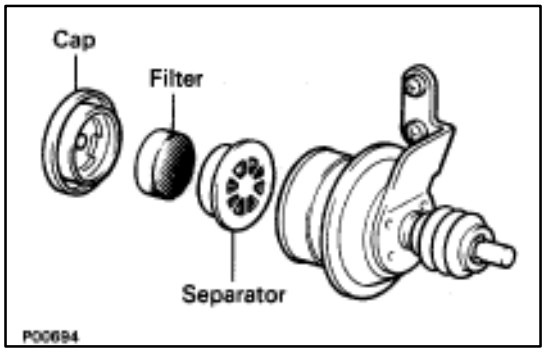

E. Reinstall separator, filter and cap to DP

HINT: Install the filter with the coarser surface facing the atmospheric side (outward).

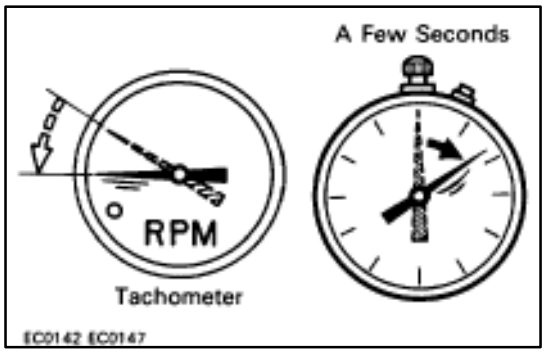

F. Check VTV operation

(a) Maintain the engine at 2,500 rpm.

(b) Release the throttle valve, and check that the engine returns to idle in a few seconds.

WhereEverybodyKnowsYourName

COMPONENTS

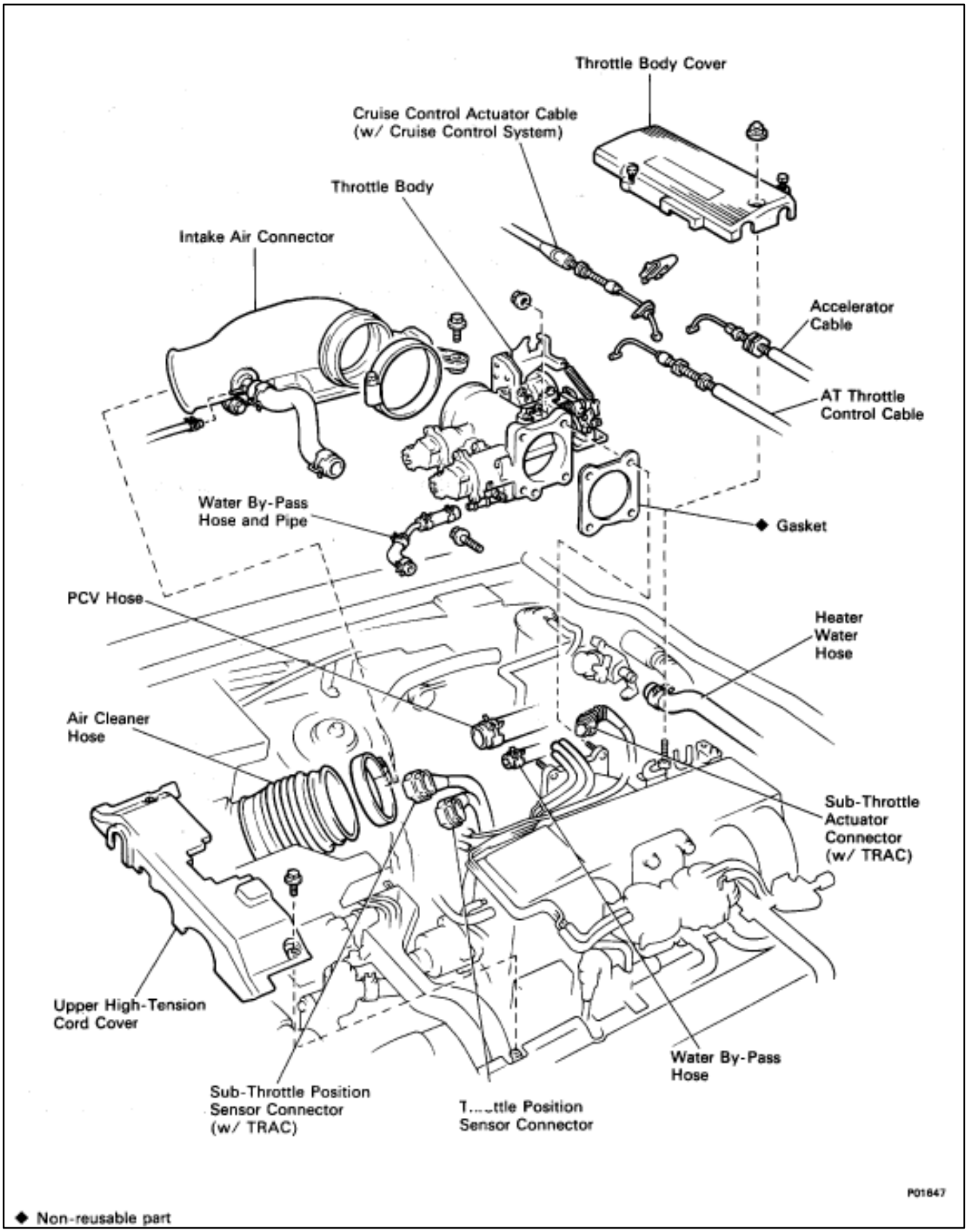

◆ Non-reusable part

WhereEverybodyKnowsYourName

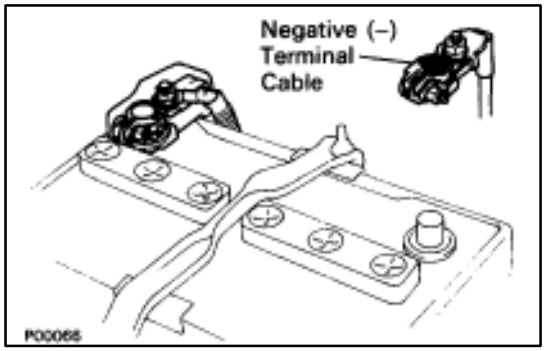

REMOVAL OF THROTTLE BODY

(See Components on page FI–69)

1. **DISCONNECT CABLE FROM NEGATIVE TERMINAL OF BATTERY**
   CAUTION: Work must be started after approx. 20 seconds or longer from the time the ignition switch is turned to the "LOCK" position and the negative (–) terminal cable is disconnected from the battery.
2. **DRAIN ENGINE COOLANT (See page CO–6)**

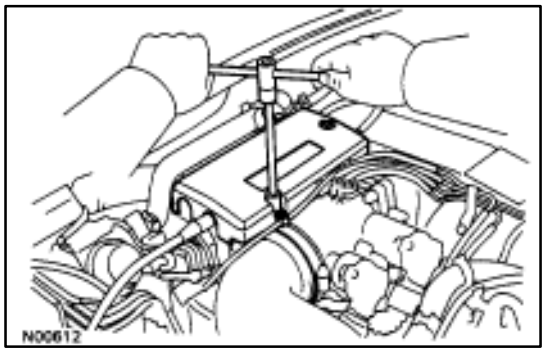

3. **REMOVE THROTTLE BODY COVER**
   (a) Remove the mounting cap nut.
   (b) Loosen the two bolts, and remove the throttle body cover.

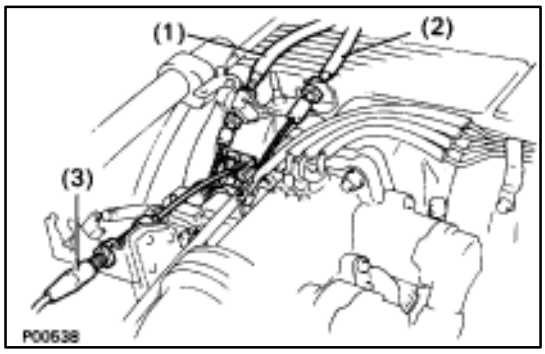

4. **DISCONNECT CONTROL CABLES FROM THROTTLE BODY**
   Disconnect the following cables:
   (1) Accelerator cable
   (2) A/T throttle control cable
   (3) (w/ Cruise Control System)
   Cruise control actuator cable

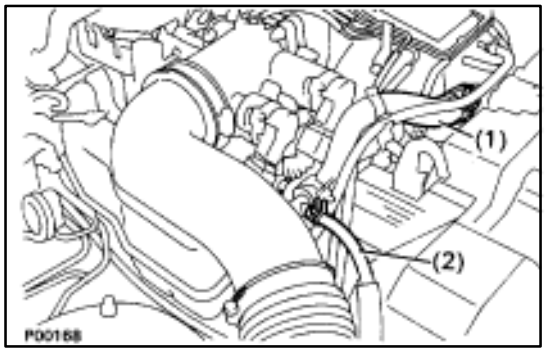

5. **REMOVE INTAKE AIR CONNECTOR**
   (a) Disconnect the following hoses:
   (1) Air hose from ISC valve
   (2) Air hose (from PS air control valve) from intake air connector

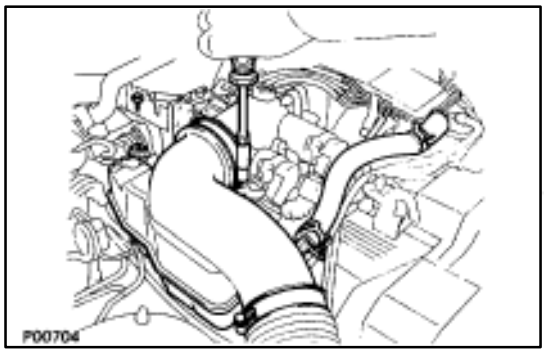

   (b) Remove the bolt holding the intake air connector to the cylinder head cover.
   (c) Loosen the two hose clamps.
   (d) Disconnect the intake air connector from the throttle body and air cleaner hose, and remove the intake air connector.

WhereEverybodyKnowsYourName

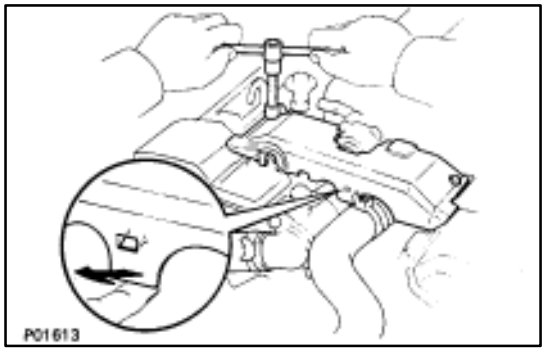

6. REMOVE UPPER HIGH–TENSION CORD COVER

(a) Remove the two mounting bolts.

(b) Disconnect the front side claw groove of the cord cover from the claw of the lower cover, and remove the cord cover.

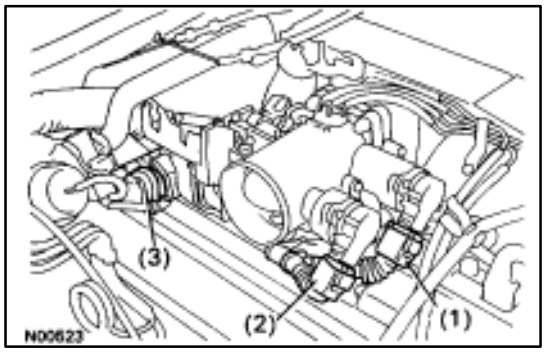

7. REMOVE THROTTLE BODY

(a) Disconnect the following connectors:

(1) Throttle position sensor connector

(2) (w/ TRAC)
Sub–throttle position sensor connector

(3) (w/ TRAC)
Sub–throttle actuator connector

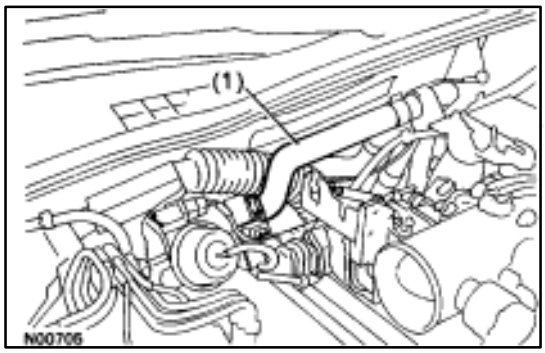

(b) Disconnect the following hoses:

(1) Heater water hose from heater water valve

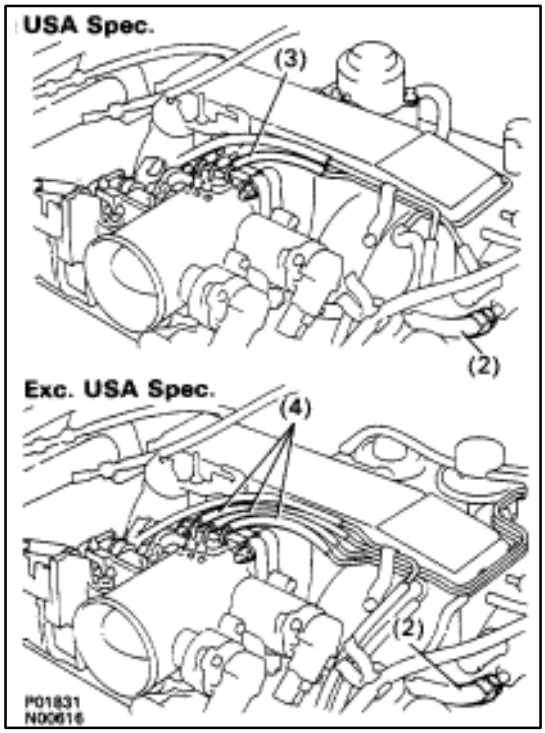

(2) Water by–pass hose from ISC valve

(3) (USA Spec.)
Vacuum hose from throttle body

(4) (Exc. USA Spec.)
Three vacuum hoses from throttle body

WhereEverybodyKnowsYourName

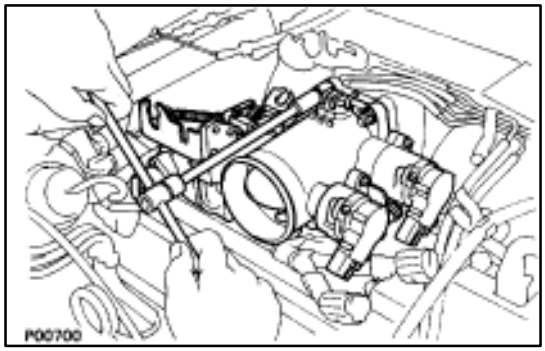

(c) Remove the two bolts and two nuts, disconnect the throttle body from the air intake chamber.

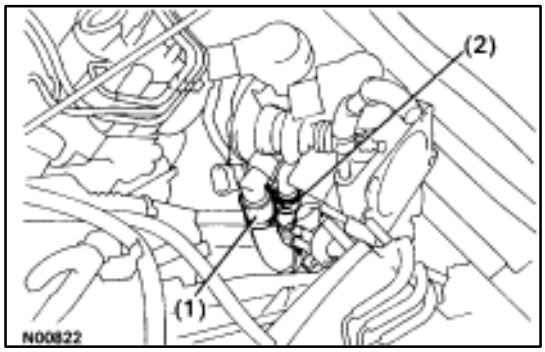

(d) Disconnect the following hoses, and remove the throttle body:
   (1) PCV hose from throttle body
   (2) Water by–pass hose from throttle body

(e) Remove the throttle body gasket.

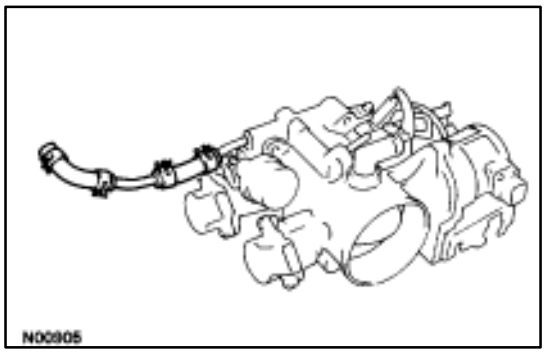

(f) Remove the two water by–pass hoses and pipe assembly.

WhereEverybodyKnowsYourName

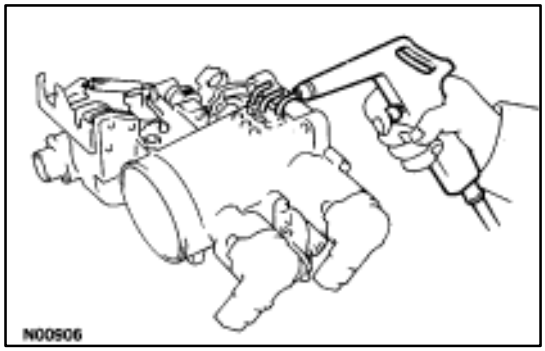

INSPECTION OF THROTTLE BODY

1. CLEAN THROTTLE BODY

(a) Using a soft brush and carburetor cleaner, clean the cast parts.

(b) Using compressed air, clean all the passages and apertures.

NOTICE: To prevent deterioration, do not clean the throttle position sensor and DP.

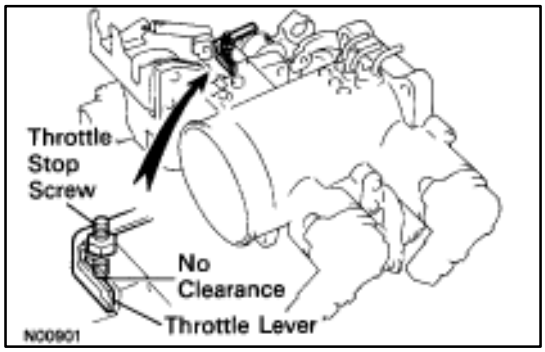

2. INSPECT THROTTLE VALVE AND THROTTLE POSI TION SENSOR

A. Inspect throttle valve

Check that there is no clearance between the throttle stop screw and throttle lever when the throttle valve is fully closed.

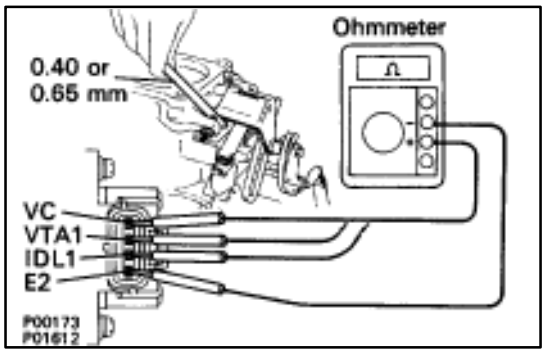

B. Inspect throttle position sensor

(a) Insert a 40 mm (0.016 in.) or 0.65 mm (0.026 in.) feeler gauge between the throttle stop screw and stop lever.

(b) Using an ohmmeter, measure the resistance between each terminal.

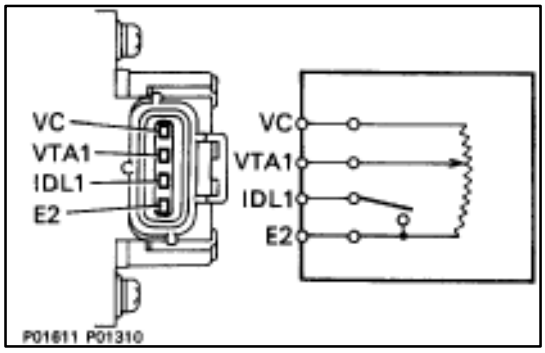

Clearance between lever and stop screw	Between terminals	Resistance
0 mm (0 in.)	VTA1–E2	0.2–0.8 ?
0.40 mm (0.016 in.)	IDL1–E2	2.3 k? or less
0.65 mm (0.026 in.)	IDL1–E2	Infinity
Throttle valve fully open	VTA1–E2	3.3–10.0 k?
–	VC–E2	4.0–9.0 k?

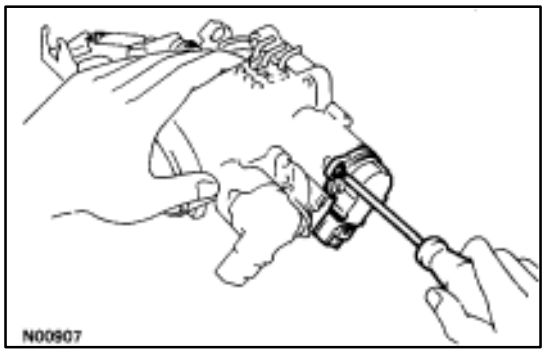

C. If necessary, adjust throttle position sensor

(a) Loosen the two set screws of the sensor.

WhereEverybodyKnowsYourName

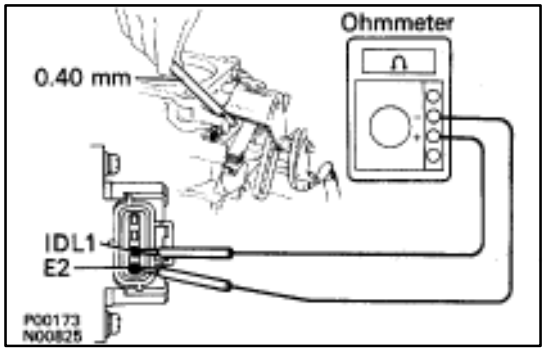

(b) Insert a 0.40 mm (0.016 in.) feeler gauge, between the throttle stop screw and stop lever.

(c) Connect the test probe of an ohmmeter to the terminals IDL1 and E2 of the sensor.

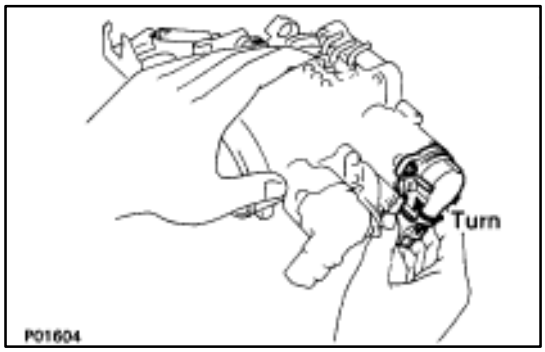

(d) Gradually turn the sensor clockwise until the ohmmeter deflects, and secure it with the two set screws.

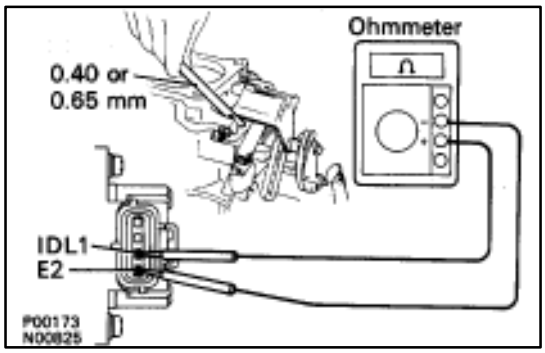

(e) Recheck the continuity between terminals IDL1 and E2.

Clearance between lever and stop screw	Continuity (IDL1–E2)
0.40 mm (0.016 in.)	Continuity
0.65 mm (0.026 in.)	No continuity

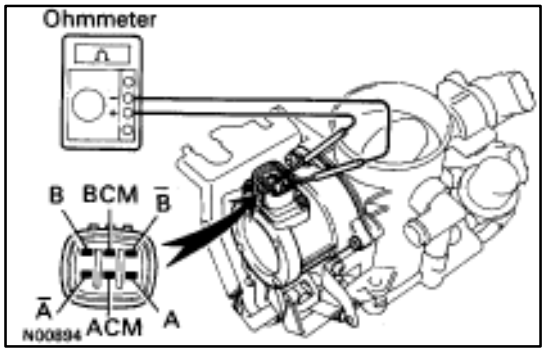

3. (w/ TRAC)
INSPECT SUB–THROTTLE ACTUATOR, SUBTHROTTLE VALVE AND SUB–THROTTLE POSITION SENSOR

A. Inspect sub–throttle actuator

Using an ohmmeter, measure the resistance between the terminals (ACM–A and Å, BCM–B and B).

Resistance: 0.5–1.0 ?

If the resistance is not as specified, replace the actuator valve.

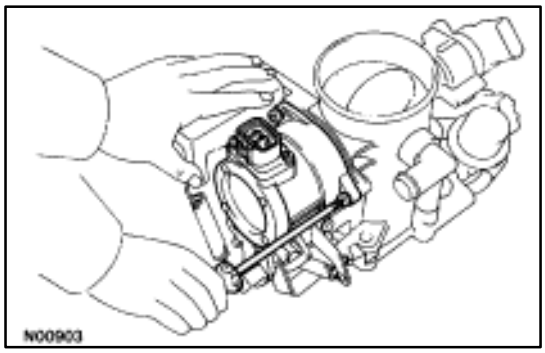

B. Inspect sub–throttle actuator

Remove the three screws and sub–throttle actuator.

WhereEverybodyKnowsYourName

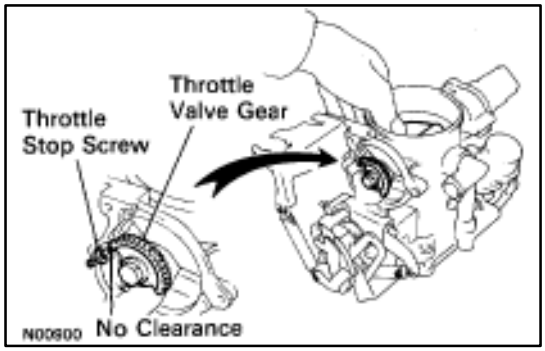

C. Inspect sub–throttle valve

Check that there is no clearance between the throttle stop screw and throttle valve gear when the sub–throttle valve is fully closed.

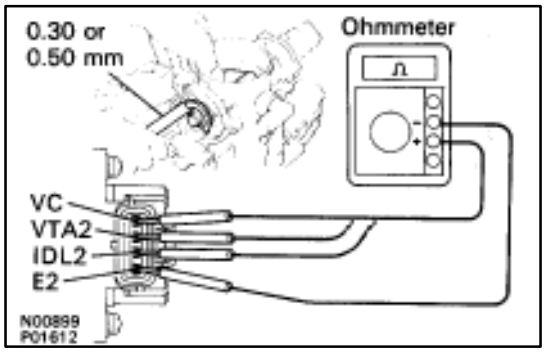

D. Inspect sub–throttle position sensor

(a) Insert a 0.30 mm (0.012 in.) or 0.50 mm (0.020 in.) feeler gauge between the throttle stop screw and throttle valve gear.

(b) Using an ohmmeter, measure the resistance between each terminal.

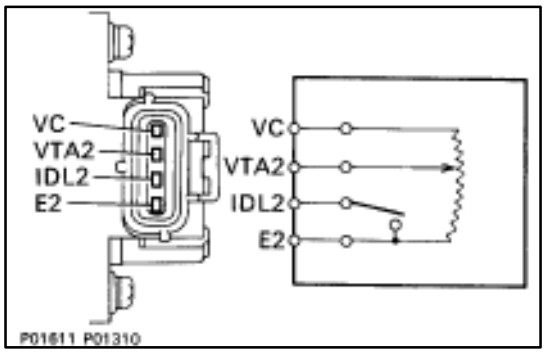

Clearance between lever and stop screw	Between terminals	Resistance
0 mm (0 in.)	VTA2–E2	0.2–0.8 ?
0.30 mm (0.012 in.)	IDL2–E2	2.3 k? or less
0.50 mm (0.020 in.)	IDL2–E2	Infinity
Throttle valve fully open	VTA2–E2	3.3–10.0 k?
–	VC–E2	4.0–9.0 k?

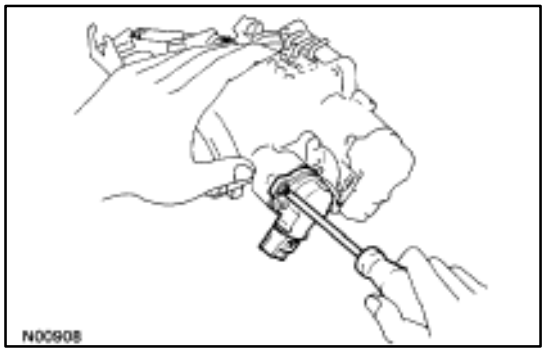

E. If necessary, adjust sub–throttle position sensor

(a) Loosen the two set screws of the sensor.

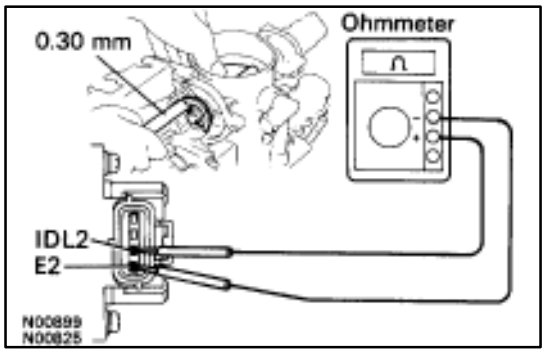

(b) Insert a 0.30 mm (0.012 in.) feeler gauge, between the throttle stop screw and throttle valve gear.

(c) Connect the test probe of an ohmmeter to the terminals IDL2 and E2 of the sensor.

WhereEverybodyKnowsYourName

(d) Gradually turn the sensor clockwise until the ohmmeter deflects, and secure it with the two set screws.

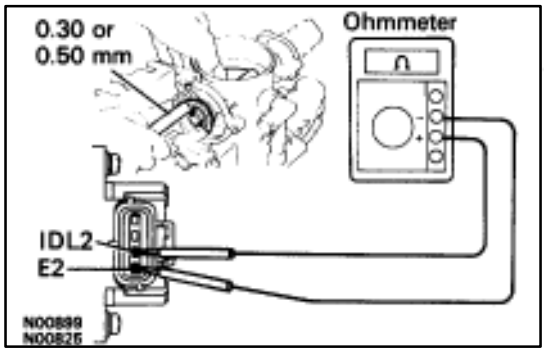

(e) Recheck the continuity between terminals IDL2 and E2.

Clearance between lever and stop screw	Continuity (IDL2–E2)
0.30 mm (0.012 in.)	Continuity
0.50 mm (0.020 in.)	No continuity

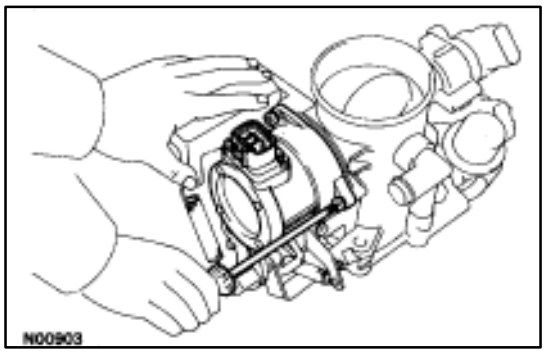

E. Reinstall sub–throttle actuator

Install the sub–throttle actuator with the three screws.

WhereEverybodyKnowsYourName

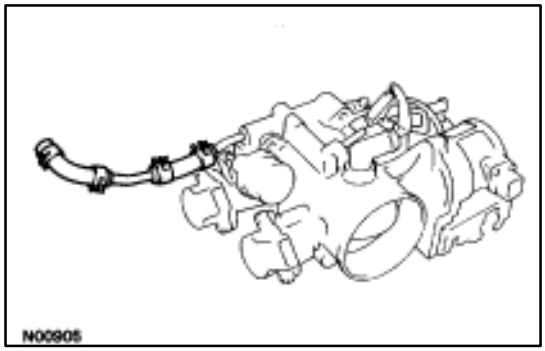

INSTALLATION OF THROTTLE BODY

(See Components o page FI–69)

1. INSTALL THROTTLE BODY

(a) Install the two water by–pass hoses and pipe to the throttle body.

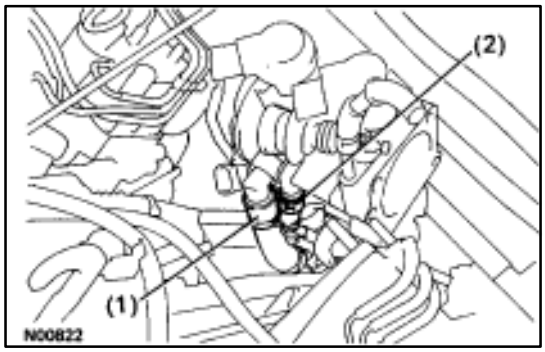

(b) Connect the following hoses:
   (1) PCV hose to throttle body
   (2) Water by–pass hose to throttle body

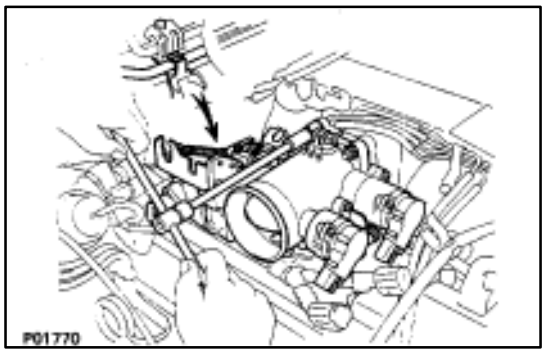

(c) Install a new gasket and throttle body with the two bolts and two nuts.

Torque: 18 N·m (185 kgf·cm, 13 ft·lbf)

HINT: Use bolts 40 mm (1.57 in.) in length.

(d) Install the water by–pass pipe (from rear water by–pass joint) to the clamp on the engine wire cover.

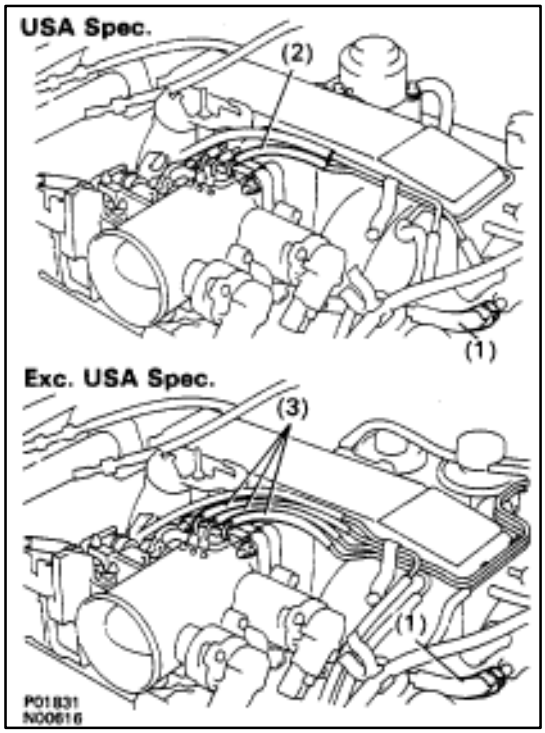

(e) Connect the following hoses:
   (1) Water by–pass hose to the ISC valve
   (2) (USA Spec.)
   Vacuum hose to throttle body
   (3) (Exc. USA Spec.)
   Three vacuum hoses to throttle body

WhereEverybodyKnowsYourName

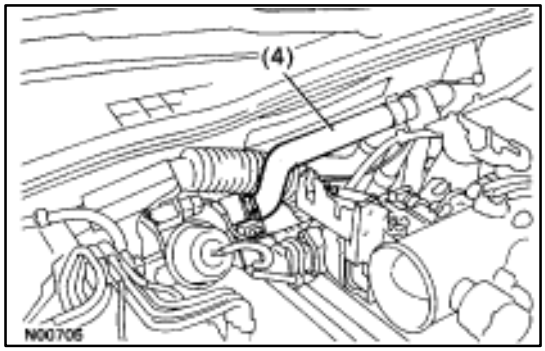

(4) Heater water hose to heater water valve

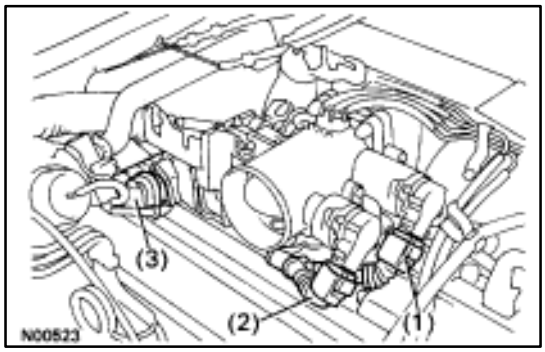

(f) Connect the following connectors:
  (1) Throttle position sensor connector
  (2) (w/ TRAC)
      Sub–throttle position sensor connector
  (3) (w/ TRAC)
      Sub–throttle actuator connector

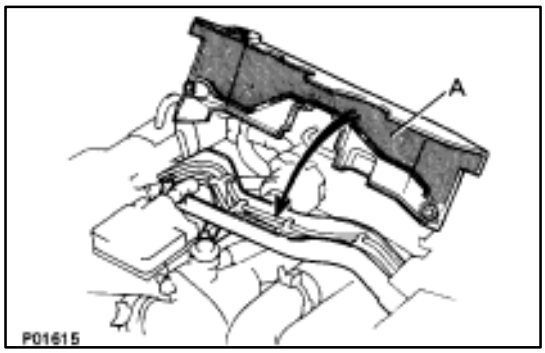

2. INSTALL UPPER HIGH–TENSION CORD COVER

(a) Fit portion A of the upper high–tension cover, matching it with the top of the lower high–tension cord cover.

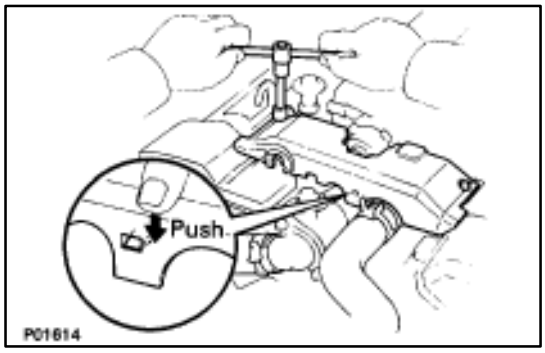

(b) Push the front side of the high–tension cord cover, and connect the front side claw groove of the upper high–tension cord cover to the claw of the lower high–tension cord cover.

(c) Install the upper high–tension cord cover with the two bolts.

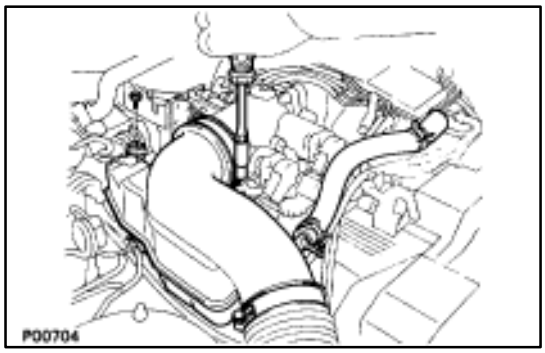

3. INSTALL INTAKE AIR CONNECTOR

(a) Connect the end portions of the intake air connector to the throttle body and air cleaner hose.

(b) Tighten the two hose clamps.

(c) Install the bolt holding the intake air connector to the cylinder head cover.

WhereEverybodyKnowsYourName

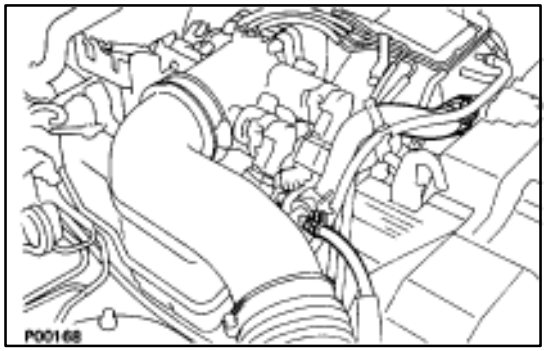

(d) Connect the following hoses:
  (1) Air hose to ISC valve
  (2) Air hose (from PS air control valve) to intake air connector

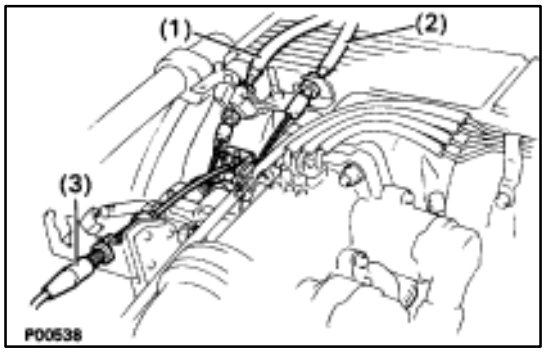

4. CONNECT CONTROL CABLES TO THROTTLE BODY

Connect the following cables:
  (1) Accelerator cable
  (2) A/T throttle control cable
  (3) (w/ Cruise Control System)
  Cruise control actuator cable

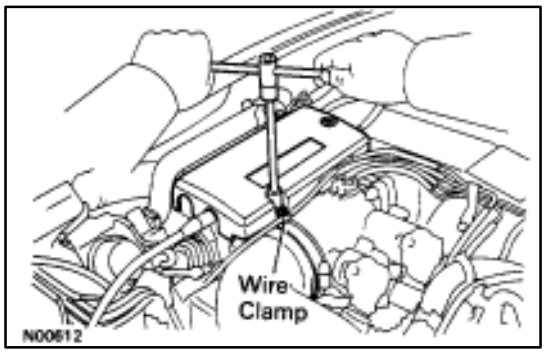

5. INSTALL THROTTLE BODY COVER

Install the throttle body cover and hose clamp with the two bolts and cap nut.

6. CONNECT CABLE TO NEGATIVE TERMINAL OF BATTERY

7. FILL WITH ENGINE COOLANT (See page CO–7)

WhereEverybodyKnowsYourName

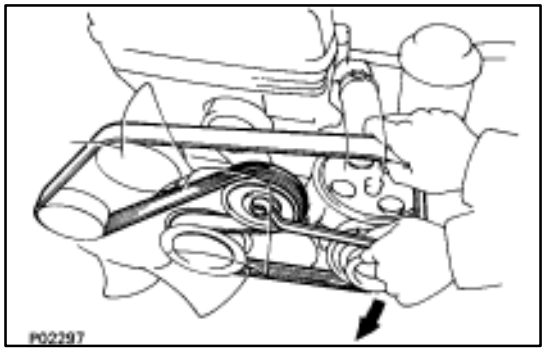

11. RECONNECT DRIVER BELT

Install the drive belt by turning the drive belt tensioner clockwise.

12. RECONNECT CABLE FROM NEGATIVE TERMINAL OF BATTERY

13. REFILL WITH ENGINE COOLANT

Knock Sensors

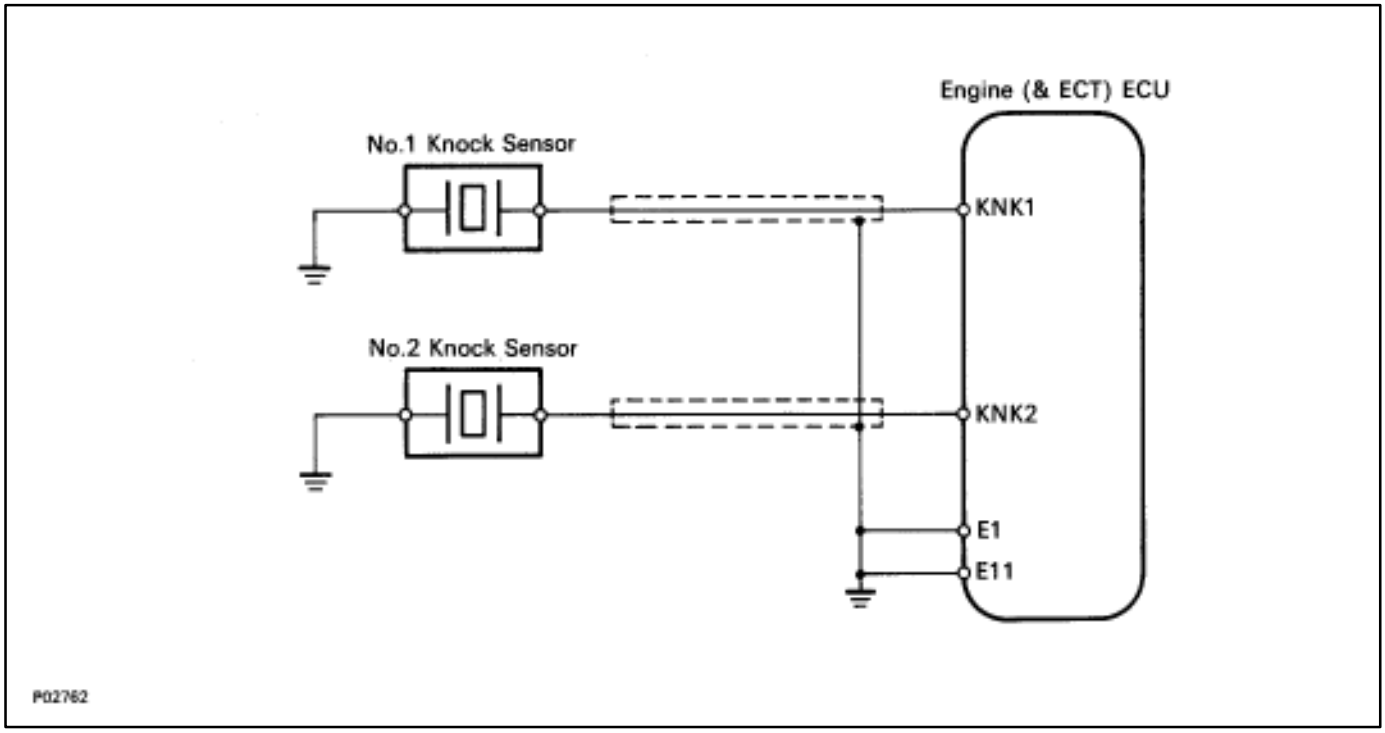

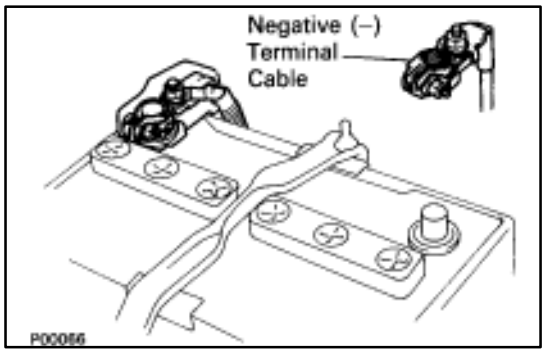

INSPECTION OF KNOCK SENSORS

1. DISCONNECT CABLE FROM NEGATIVE TERMINAL OF BATTERY

CAUTION: Turn the ignition switch to ”LOCK”. Disconnect the cable from the negative (–) terminal of the battery. Wait at least 20 seconds before proceeding with work.

WhereEverybodyKnowsYourName

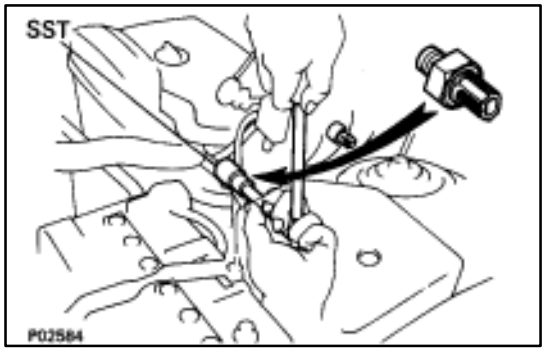

2. REMOVE KNOCK SENSOR

(a) Disconnect the knock sensor connectors.

(b) Using SST, remove the two knock sensors.

SST 09816–30010

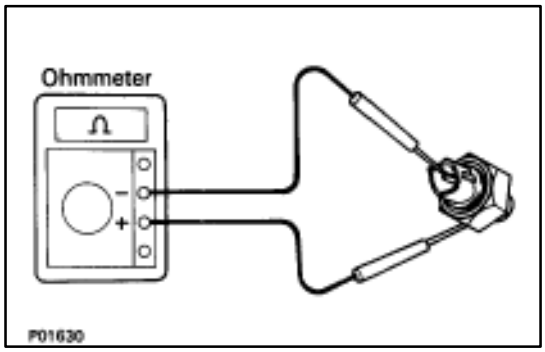

3. INSPECT KNOCK SENSOR

Using an ohmmeter, check that there is no continuity between the terminal and body.

If there is continuity, replace the sensor.

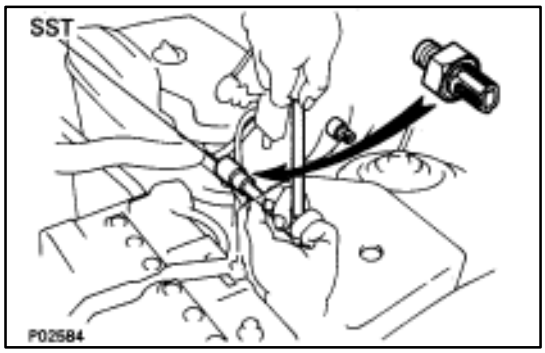

4. REINSTALL KNOCK SENSOR

(a) Using SST, remove the two knock sensors.

SST 09816–30010

Torque: 44 N·m (450 kgf·cm, 33 ft·lbf)

(b) Connect the knock sensor connectors.

5. RECONNECT CABLE FROM NEGATIVE TERMINAL OF BATTERY

WhereEverybodyKnowsYourName

EGR Gas Temperature Sensor (USA Spec. only)

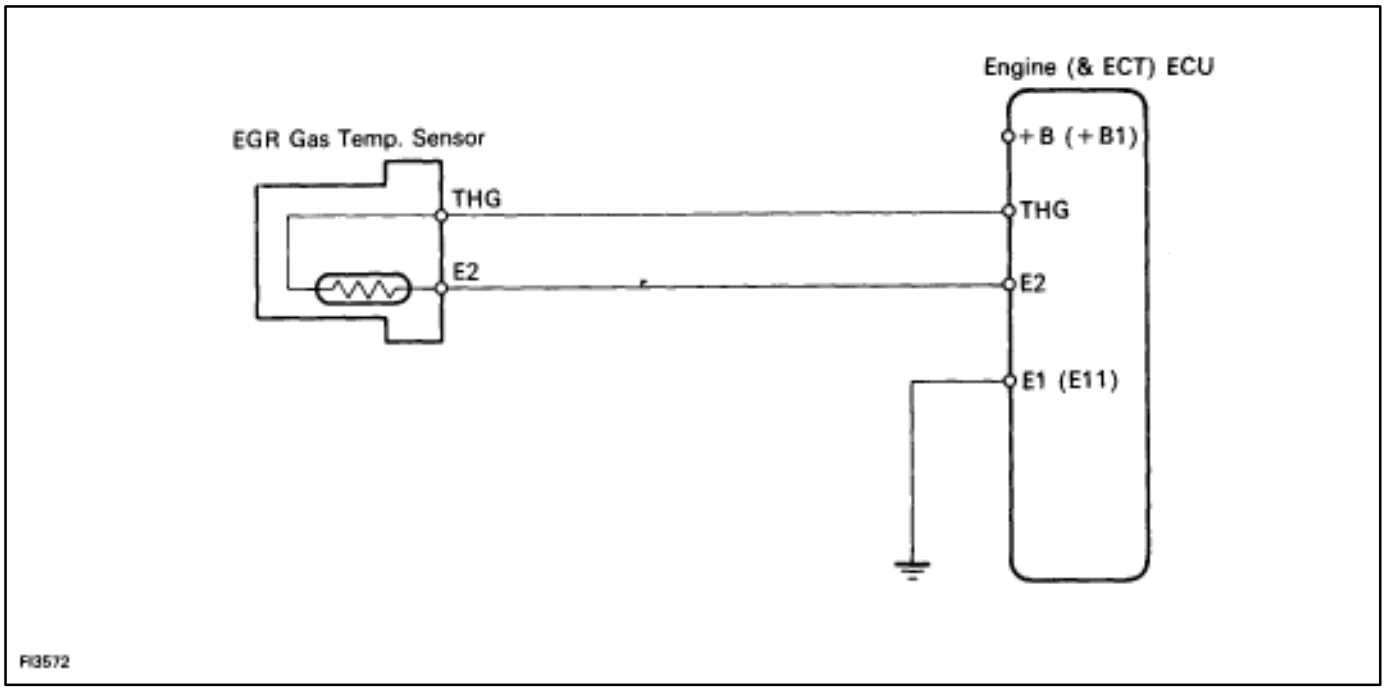

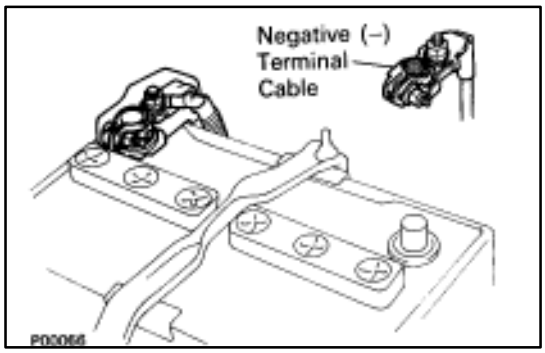

INSPECTION OF EGR GAS TEMPERATURE SENSOR

1. DISCONNECT CABLE FROM NEGATIVE TERMINAL OF BATTERY

CAUTION: Turn the ignition switch to "LOCK". Disconnect the cable from the negative (–) terminal of the battery. Wait at least 20 seconds before proceeding with work.

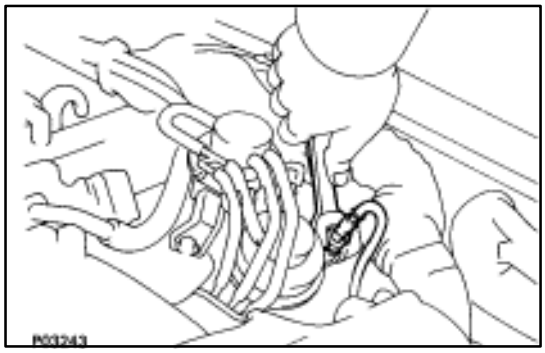

2. REMOVE EGR GAS TEMPERATURE SENSOR

(a) Disconnect the EGR gas temperature sensor connector.

(b) Remove the EGR gas temperature sensor and gasket.

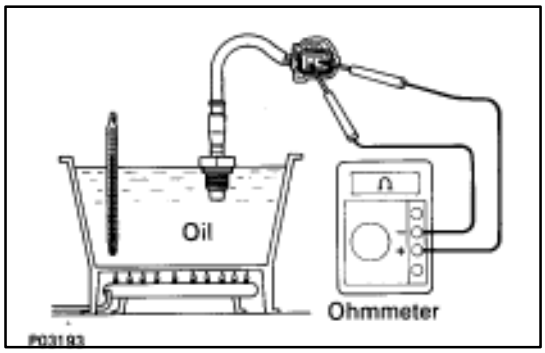

3. INSPECT EGR GAS TEMPERATURE SENSOR

Using an ohmmeter, measure the resistance between the terminals.

Resistance: 69–89 k? at 50°C (112°F)
12–15 k? at 100°C (212°F)
2–4 k? at 150°C (302°F)

If the resistance is not as specified, replace the sensor.

WhereEverybodyKnowsYourName

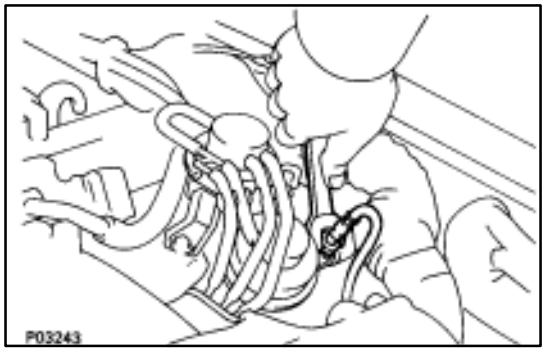

4. REINSTALL EGR GAS TEMPERATURE SENSOR

(a) Install a gasket and the EGR gas temperature sensor.

Torque: 20 N·m (200 kgf·cm, 14 ft·lbf)

(b) Connect the EGR gas temperature sensor connector.

5. RECONNECT CABLE FROM NEGATIVE TERMINAL OF BATTERY

WhereEverybodyKnowsYourName

Main Oxygen Sensors

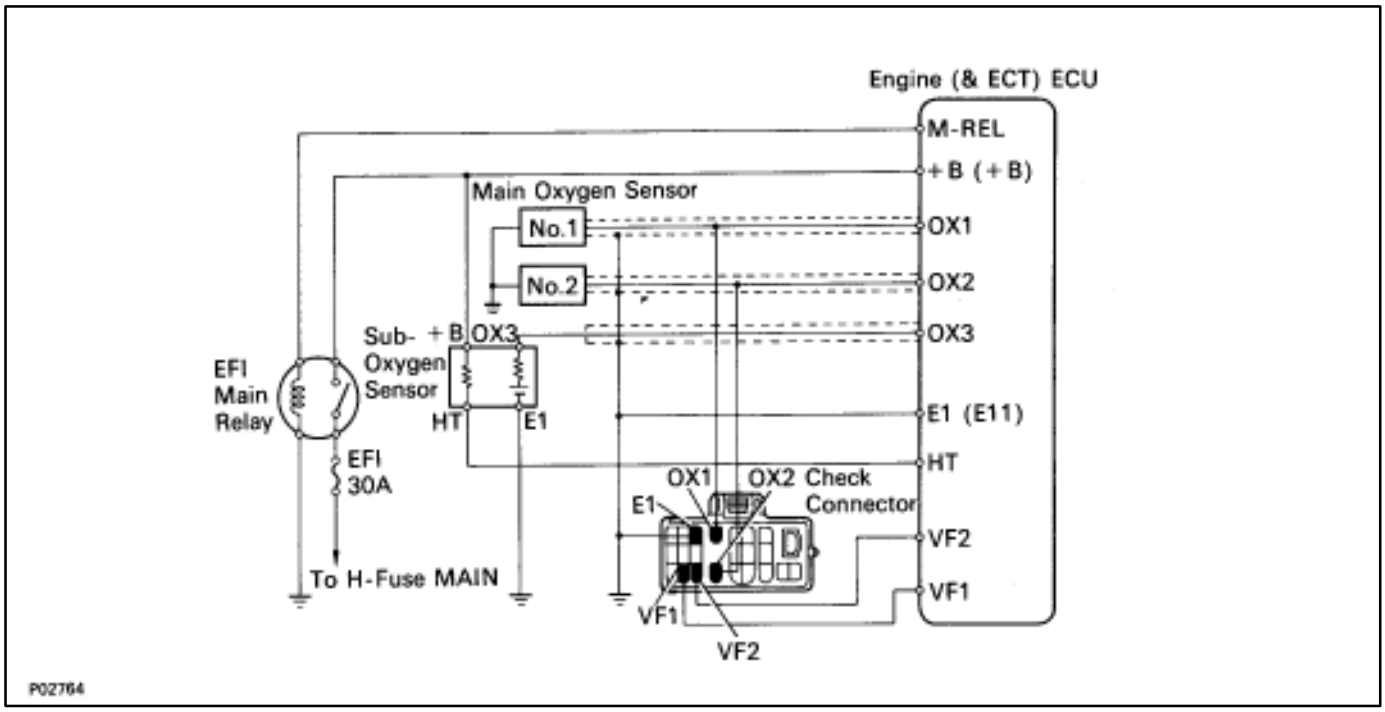

INSPECTION OF MAIN OXYGEN SENSORS

1. WARM UP ENGINE

Allow the engine to warm up to normal operating temperature.

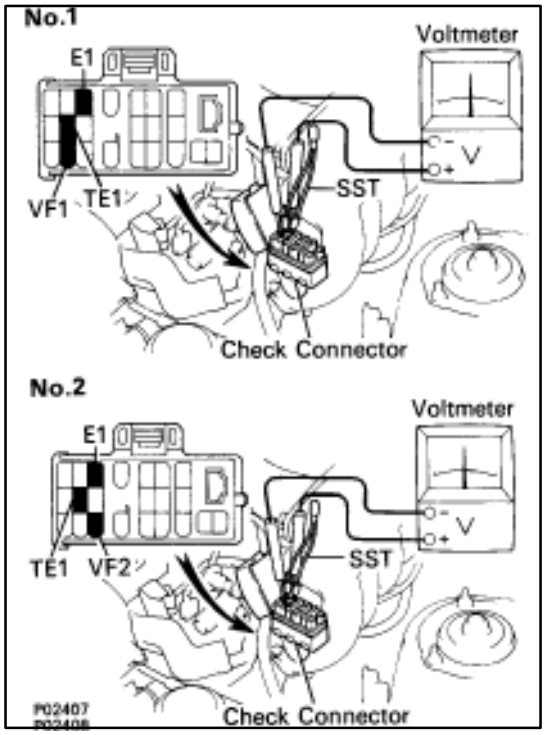

2. INSPECT FEEDBACK VOLTAGE

Connect the positive (+) probe of a voltmeter to terminal VF1 (for No.1) or VF2 (for No.2) of the check (”DIAGNOSIS”) connector, and negative (–) probe to terminal E1. Perform the test as follows described on the next page.

HINT: Use SST when connecting between terminals TE1 and E1 of the check connector.

SST 09843–18020

WhereEverybodyKnowsYourName

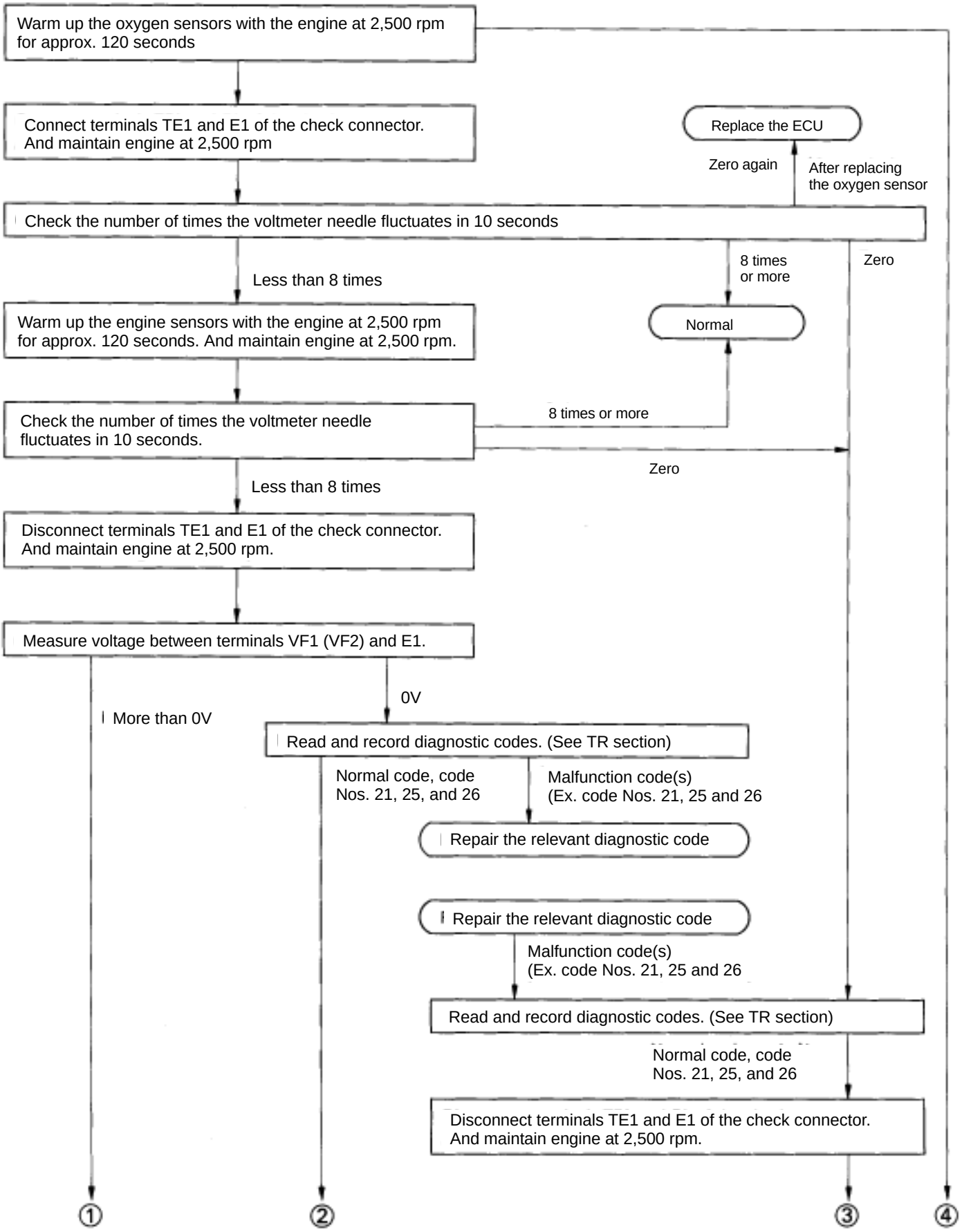

CONTINUED ON PAGE FI-75

WhereEverybodyKnowsYourName

CONTINUED FROM PAGE FI-74

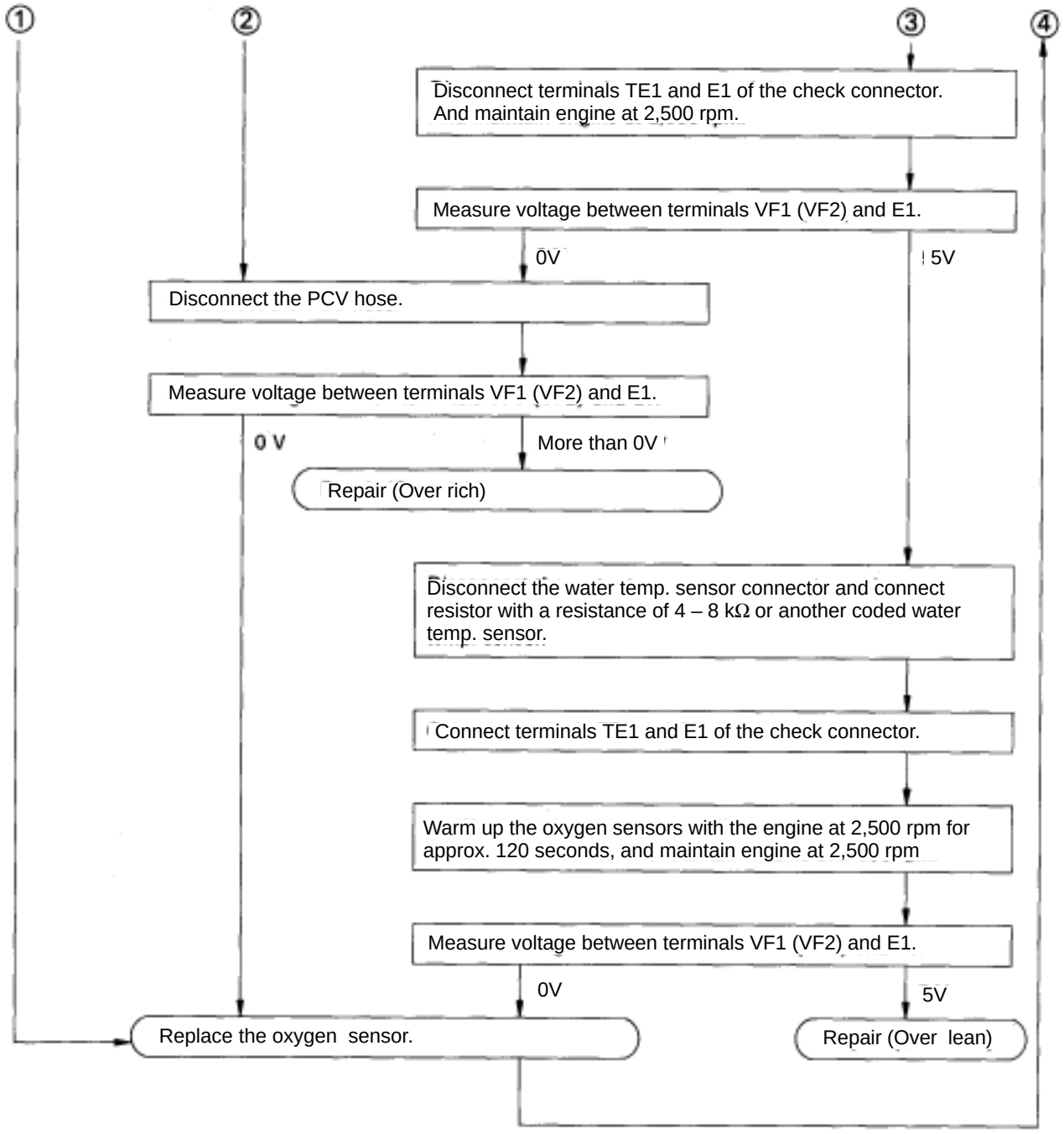

WhereEverybodyKnowsYourName

Sub–Oxygen Sensor (USA Spec. only)

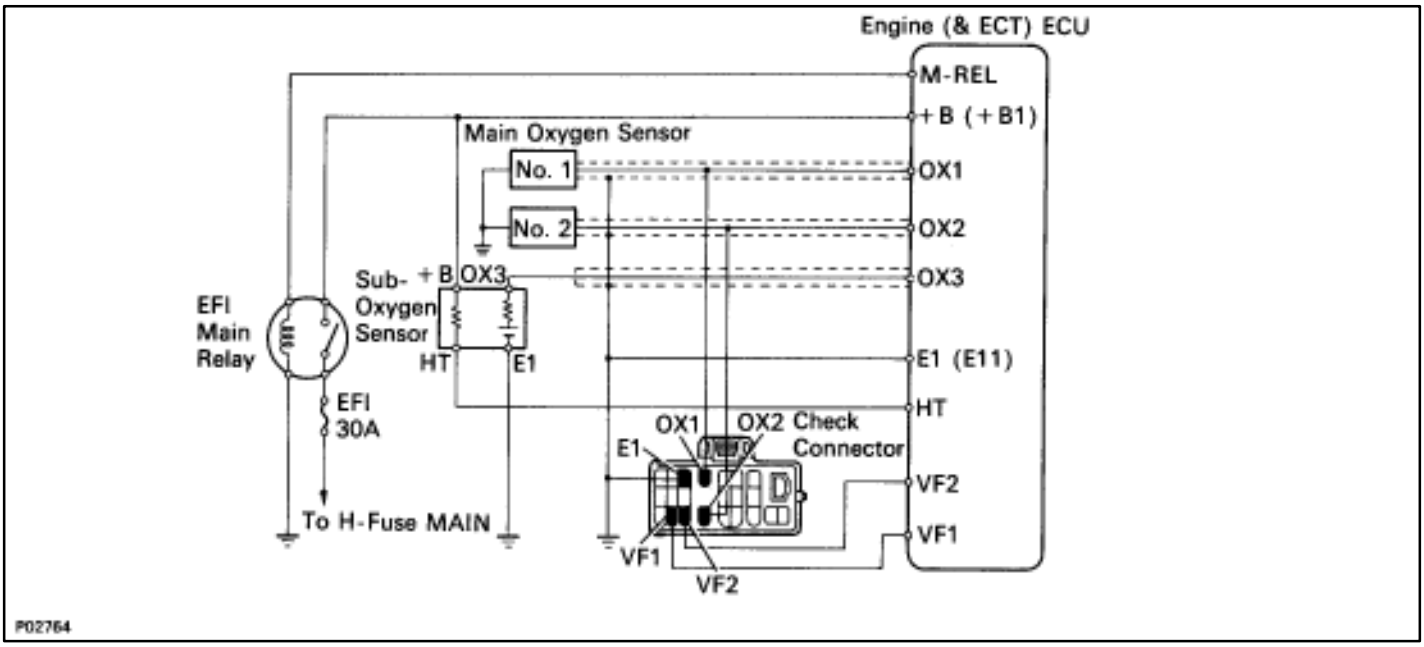

COMPONENTS FOR REMOVAL AND INSTALLATION

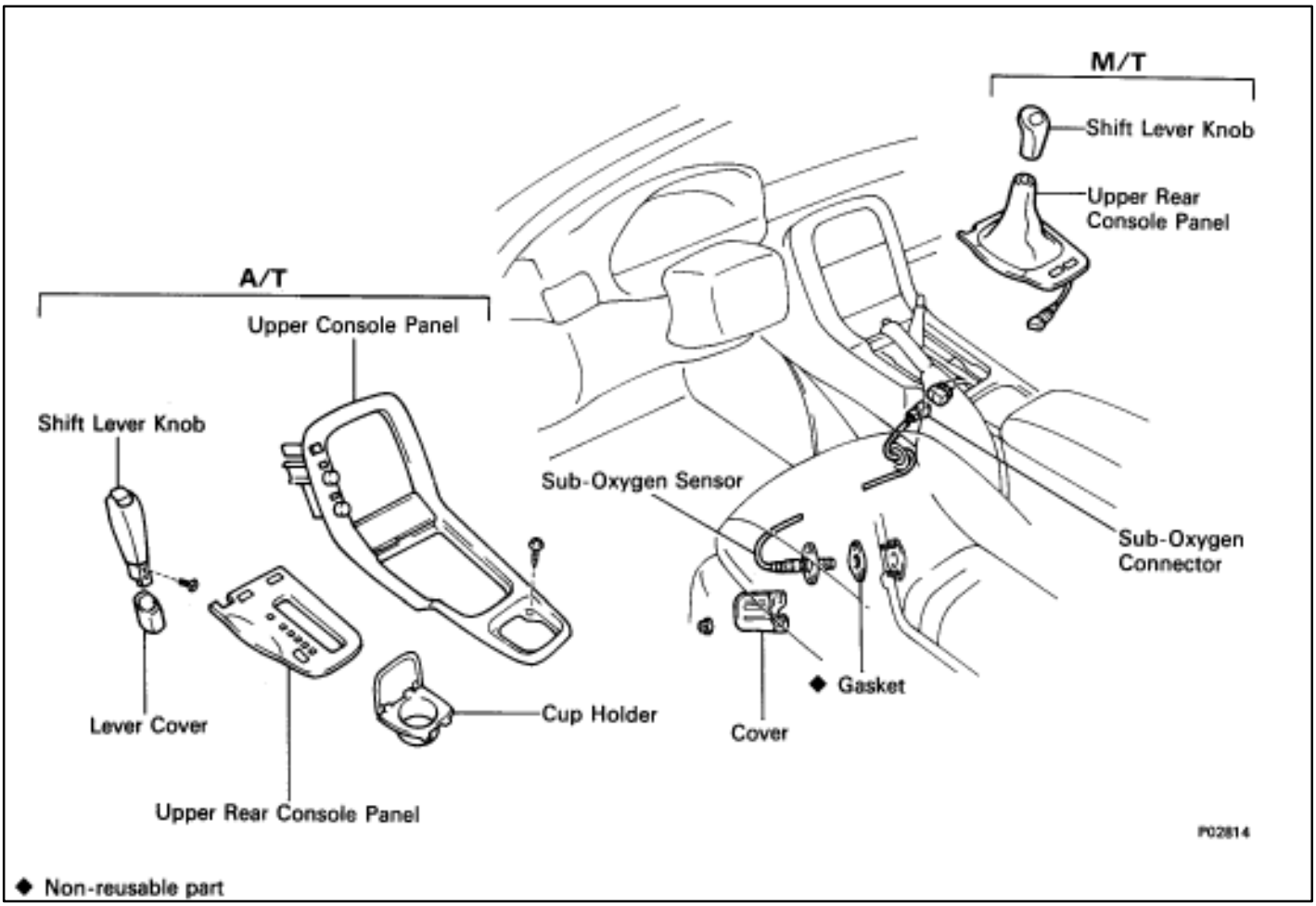

WhereEverybodyKnowsYourName

INSPECTION OF SUB–OXYGEN SENSOR

1. INSPECT SUB–OXYGEN SENSOR

(a) Cancel diagnostic code. (See TR section)

(b) Allow the engine to warm up to normal operating temperature.

(c) Drive for 5 minutes or more between 80km/h (50 mph) and 100 km/h (62 mph) in ”D” range.

(d) Following the conditions in step (c), press fully on the accelerator pedal for 2 seconds or more.

HINT: Do not exceed 100 km/h (62 mph), or diagnostic code will be cancelled.

(e) Stop the vehicle, and turn the ignition switch to OFF.

(f) Carry out steps (b), (c) and (d) again to test acceleration.

If code No. 27 reappears again, check the sub–oxygen sensor circuit. If the circuit is normal, replace the sub–oxygen sensor.

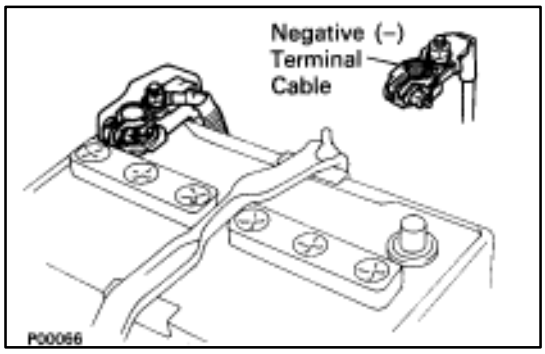

2. DISCONNECT CABLE FROM NEGATIVE TERMINAL OF BATTERY

CAUTION: Turn the ignition switch to ”LOCK”. Disconnect the cable from the negative (–) terminal of the battery. Wait at least 20 seconds before proceeding with work.

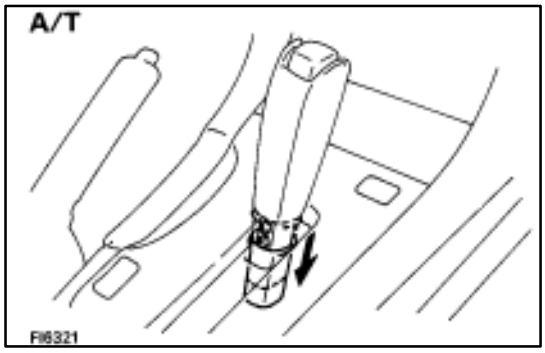

3. REMOVE TRANSMISSION SHIFT LEVER KNOB

(A/T)

(a) Push down the lever cover.

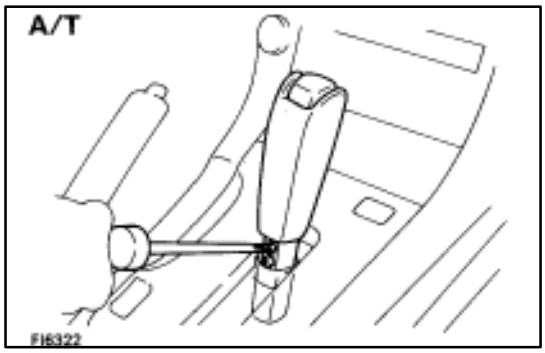

(b) Remove the two screws and shift lever knob.

(c) Remove the lever cover.

WhereEverybodyKnowsYourName

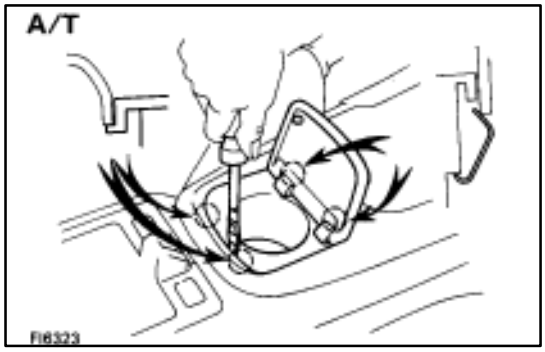

4. (A/T)

REMOVE CUP HOLDER

Using a screwdriver, pry out the rear side of the cup holder. Remove the cup holder.

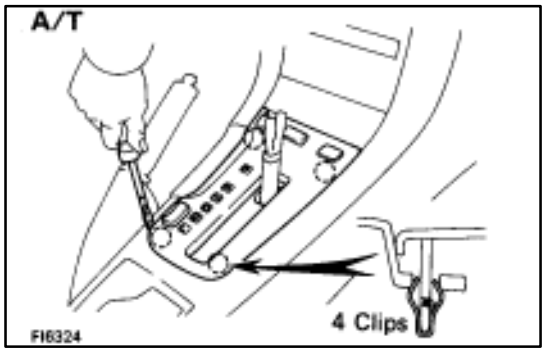

5. REMOVE UPPER REAR CONSOLE PANEL

Using a screwdriver, pry out the console panel.

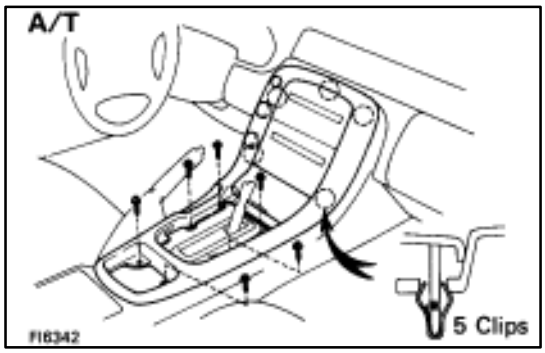

6. (A/T)

REMOVE UPPER CONSOLE PANEL

(a) Remove the six mounting screws.
(b) Using a screwdriver, pry out the console panel.

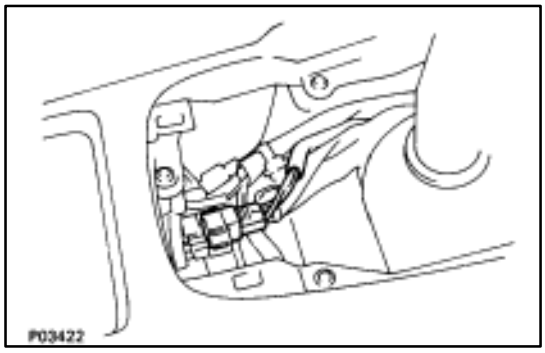

7. DISCONNECT SUB–OXYGEN SENSOR CONNECTOR

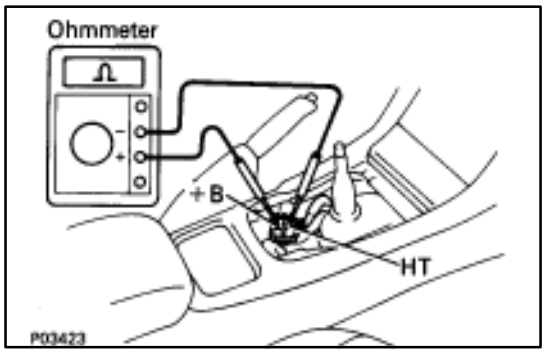

8. INSPECT HEATER RESISTANCE OF SUB–OXYGEN SENSOR

Using an ohmmeter, measure the resistance between the terminals +B and HT.

Resistance: 5.1–6.3 ? at 20°C (68°F)

WhereEverybodyKnowsYourName

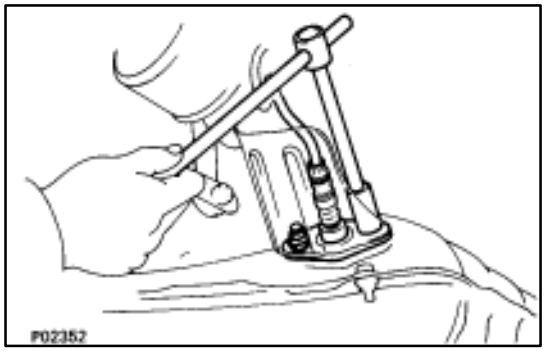

If the resistance is not as specified, replace the sensor as follows:

- Disconnect the grommet from the floor panel, and pull out the wire of the sub–oxygen sensor from the floor panel.
- Remove the two nuts, cover and sub–oxygen sensor from the front exhaust pipe.
- Install a new gasket, a new sub–oxygen sensor and the cover to the front exhaust pipe with the two nuts.

Torque: 18 N·m (180 kgf·cm, 13 ft·lbf)

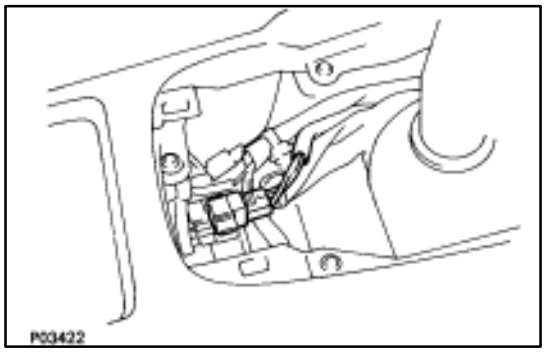

- Run the wire of the sub–oxygen sensor through the hole in the floor panel.

9. RECONNECT SUB–OXYGEN SENSOR CONNECTOR

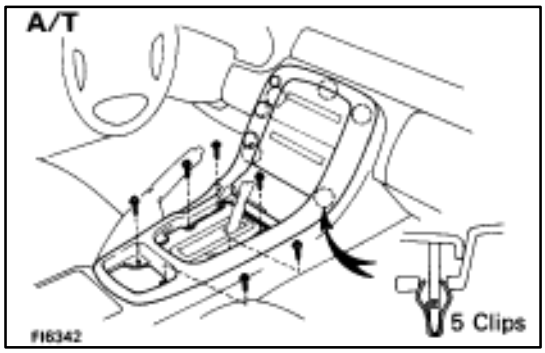

10. (A/T)
REINSTALL UPPER REAR CONSOLE PANEL

(a) Fit the console panel to the console box with five clips.
(b) Install the console panel with the six screws.

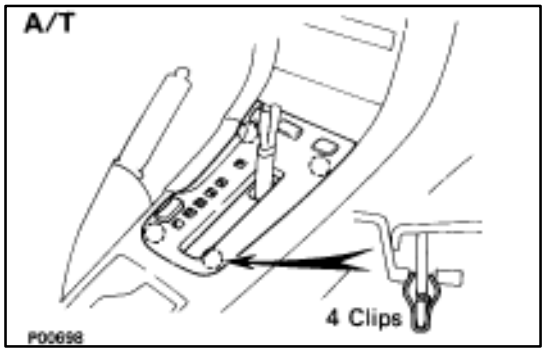

11. REINSTALL UPPER CONSOLE PANEL

Fit the console panel to the console box with the four clips.

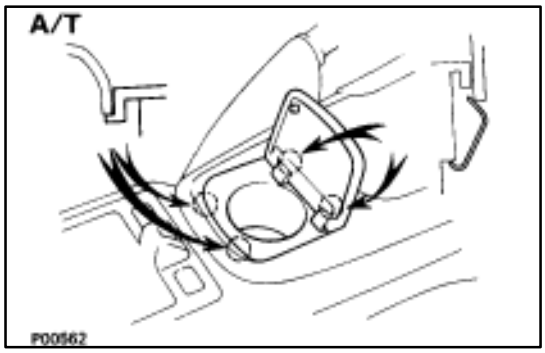

12. (A/T)
REINSTALL CUP HOLDER

Fit the cup holder to the console box.

WhereEverybodyKnowsYourName

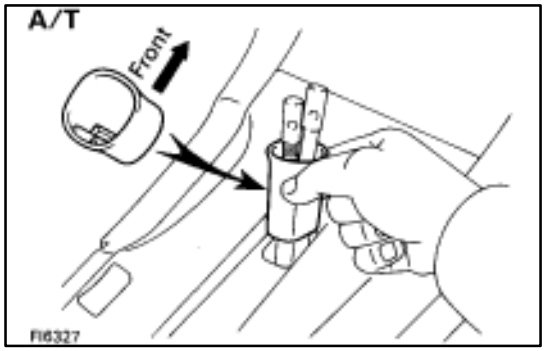

13. REINSTALL TRANSMISSION SHIFT LEVER KNOB

(A/T)

(a) Slide the lever cover on the lever shaft.

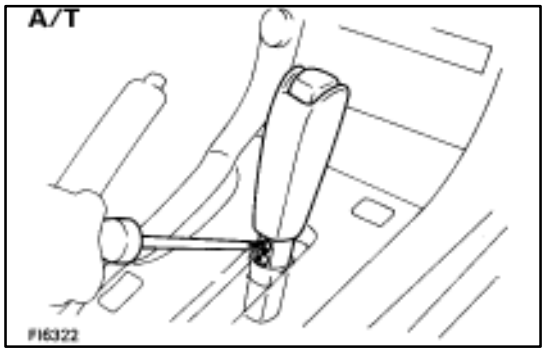

(b) Install the shift lever knob with the two screws.

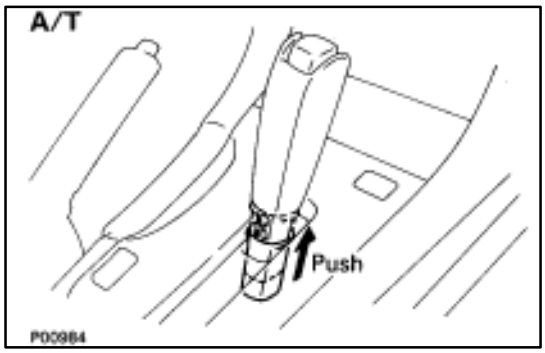

(c) Attach the lever cover to the lower side of the lever knob.

14. RECONNECT CABLE TO NEGATIVE TERMINAL OF BATTERY

WhereEverybodyKnowsYourName

Idle Speed Control (ISC) Valve

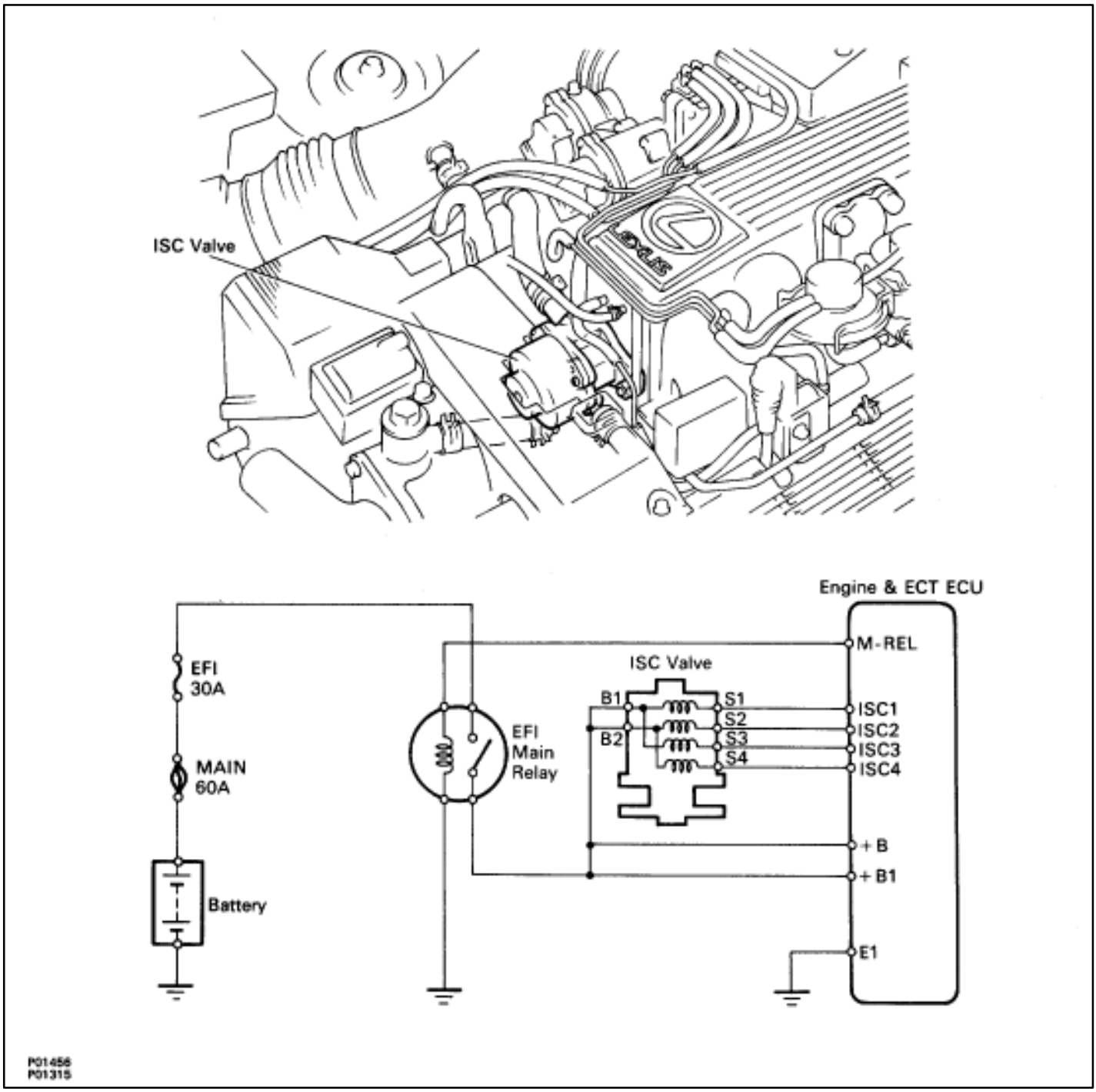

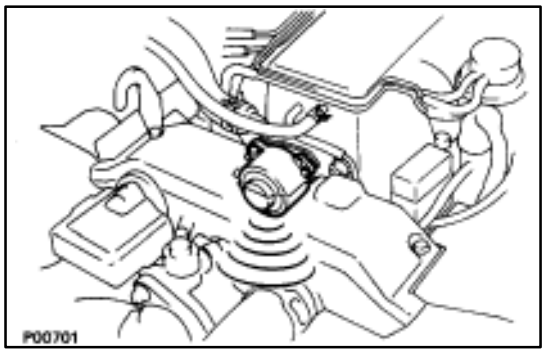

ON–VEHICLE INSPECTION

INSPECT ISC VALVE FOR OPERATING SOUND

Check that there is a clicking sound immediately after stopping the engine.

If the rpm operation is not as specified, check the ISC valve, wiring and ECU.

WhereEverybodyKnowsYourName

COMPONENTS

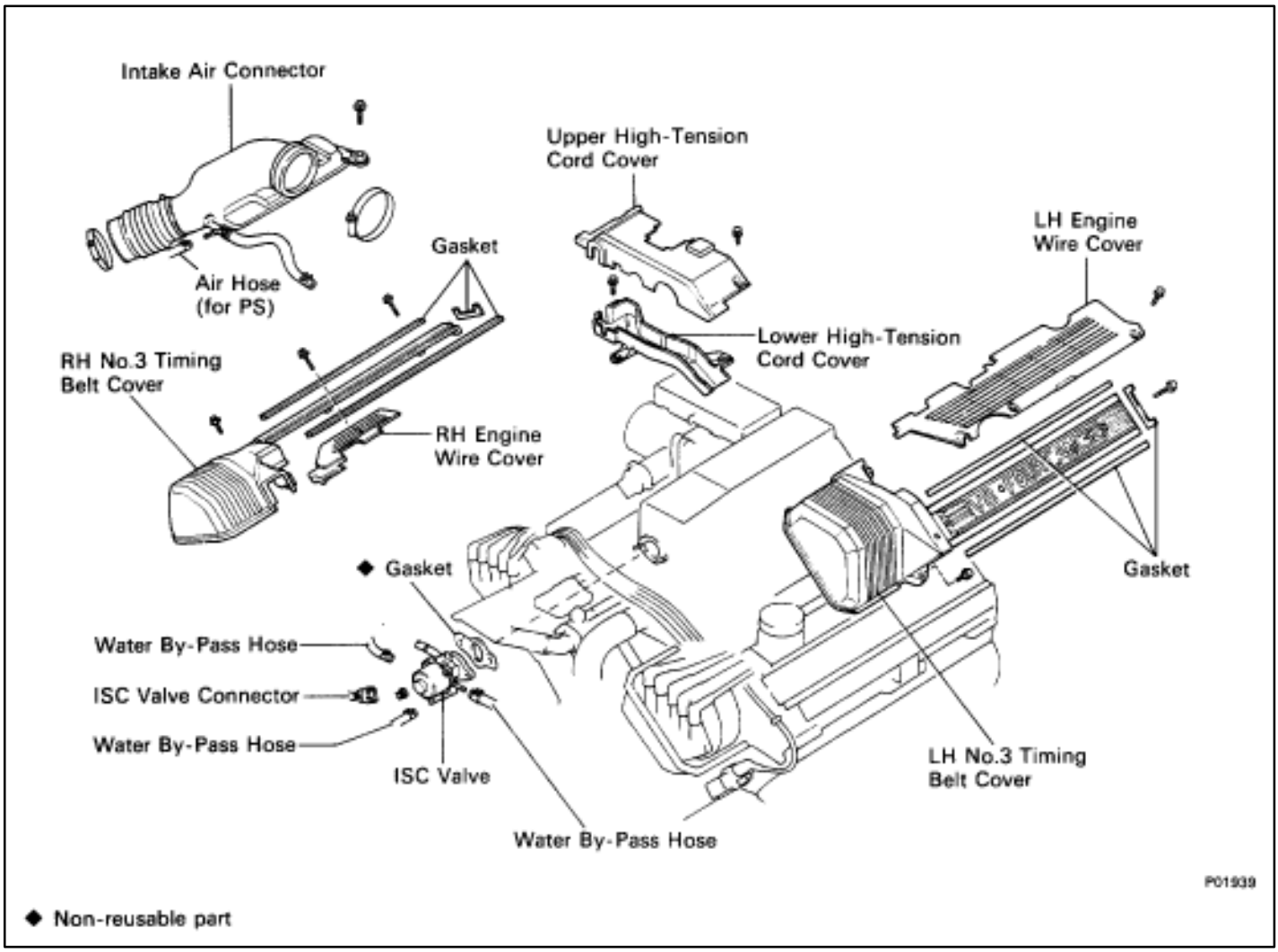

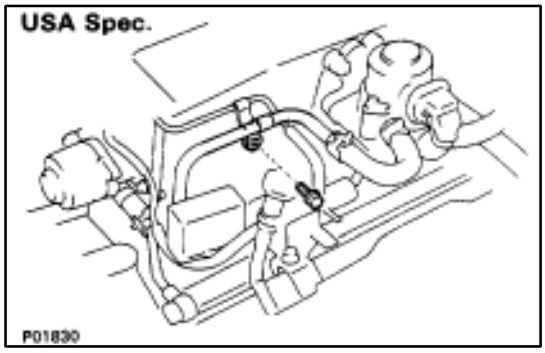

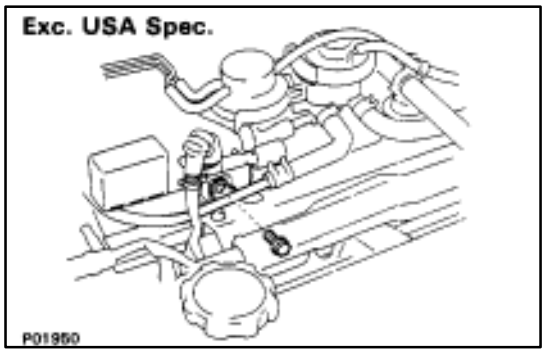

REMOVAL OF ISC VALVE

1. **REMOVE LOWER HIGH–TENSION CORD COVER**
   (See steps 1, 2 and 5 to 12 on pages FI–27 to 29)
2. **REMOVE ISC VALVE**
   (a) Disconnect the ISC valve connector.
   (b) (USA Spec.)
   Remove the bolt holding the water by–pass pipe (between ISC valve and EGR valve) to the air intake chamber.

   (c) (Exc. USA Spec.)
   Remove the bolt holding the water by–pass pipe (between ISC valve and EGR valve) to the VSV (for fuel pressure control).

WhereEverybodyKnowsYourName

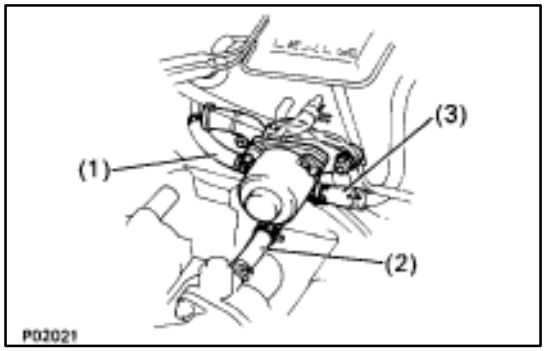

(d) Disconnect the following hoses from the ISC valve:
  (1) Water by–pass hose (from throttle valve)
  (2) Water by–pass hose (from water inlet housing)
  (3) Water by–pass hose (from EGR valve)

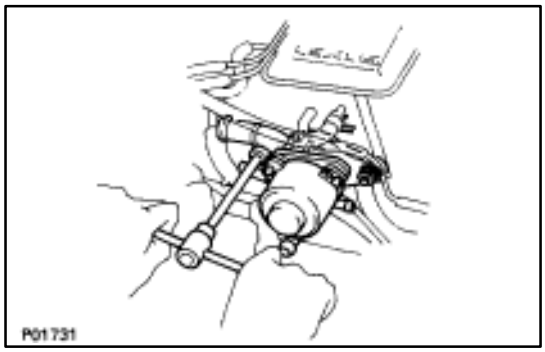

(e) Remove the two nuts, ISC valve and gasket.

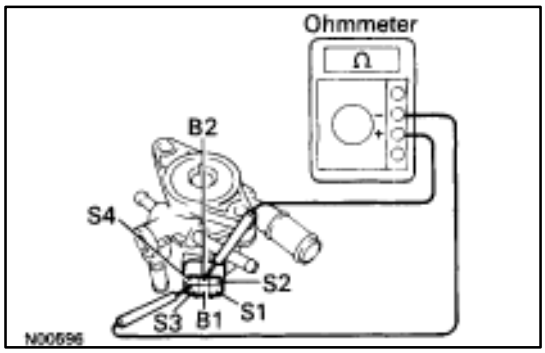

INSPECTION OF ISC VALVE

1. INSPECT ISC VALVE RESISTANCE

Using an ohmmeter, measure the resistance between the terminals (B1–S1 and S3, B2–S2 and S4).

Resistance: 10–30 ?

If resistance is not as specified, replace the ISC valve.

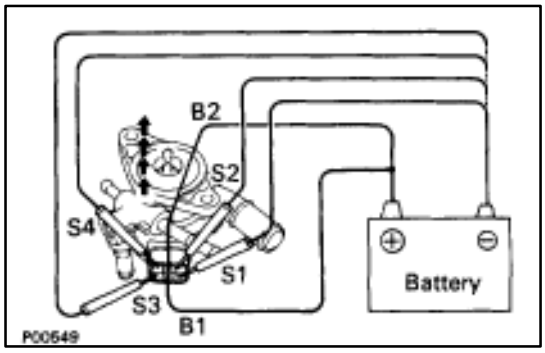

2. INSPECT ISC VALVE OPERATION

(a) Apply battery voltage to terminals B1 and B2, and while repeatedly grounding S1–S2–S3–S4–S1 in sequence, and check that the valve moves toward the closed position.

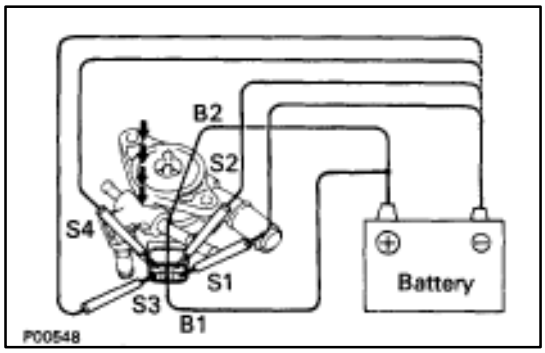

(b) Apply battery voltage to terminals B1 and B2, and while repeatedly grounding S4–S3–S2–S1–S4 in sequence, and check that the valve moves toward the open position.

If operation is not as specified, replace the ISC valve.

WhereEverybodyKnowsYourName

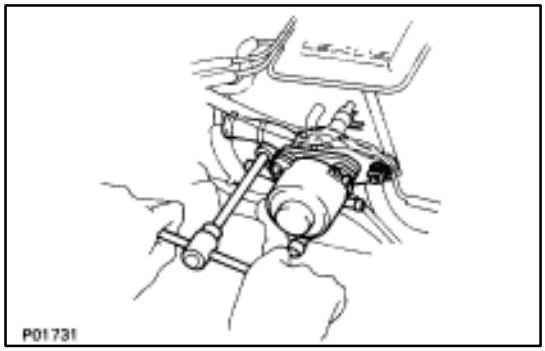

INSTALLATION OF ISC VALVE

(See Components on page FI–81)

1. INSTALL ISC VALVE

(a) Install a new gasket and the ISC valve with the two nuts.
Torque: 18 N·m (185 kgf·cm, 13 ft·lbf)

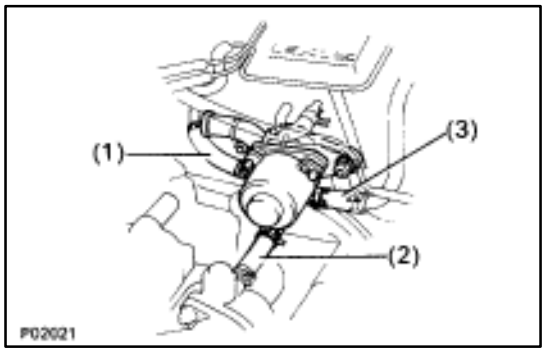

(b) Connect the following hoses to the ISC valve:
(1) Water by–pass hose (from throttle valve)
(2) Water by–pass hose (from water inlet housing)
(3) Water by–pass hose (from EGR valve)

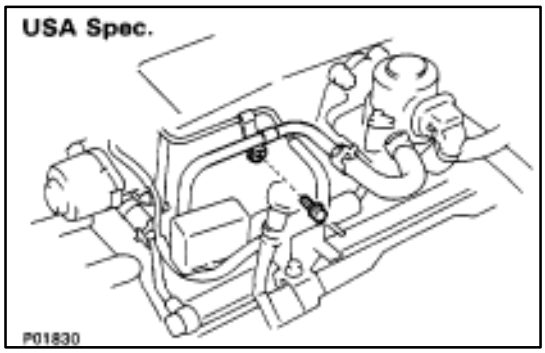

(c) (USA Spec.)
Install the vacuum pipe and water by–pass pipe (between ISC valve and EGR valve) to the air intake chamber with the bolt.

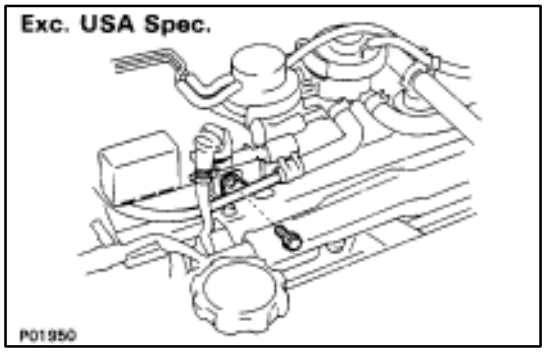

(d) (Exc. USA Spec.)
Install the water by–pass pipe (between ISC valve and EGR valve) to the VSV (for fuel pressure control) with the bolt.

(e) Connect the ISC valve connector.

1. INSTALL LOWER HIGH–TENSION CORD COVER
(See steps 5 to 13 and 16 to 18 on pages FI–39 to 41)

WhereEverybodyKnowsYourName

Fuel Pump ECU

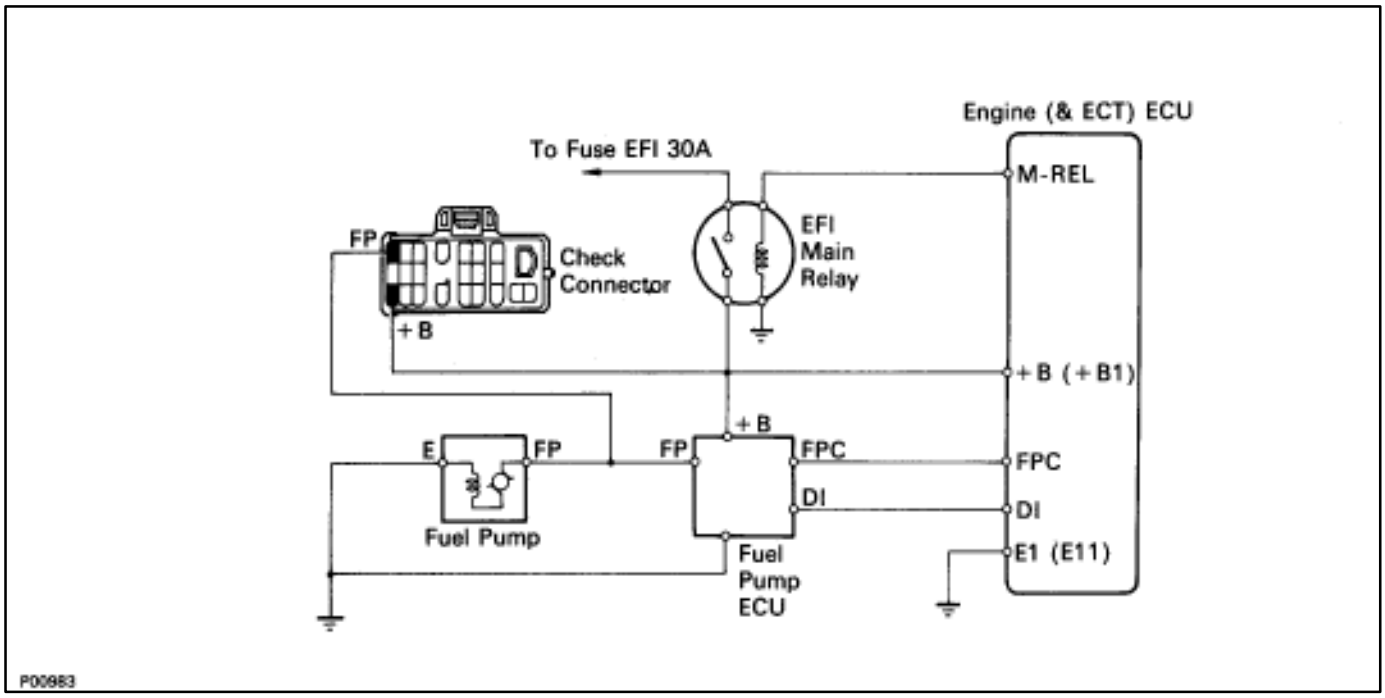

COMPONENTS FOR REMOVAL AND INSTALLATION

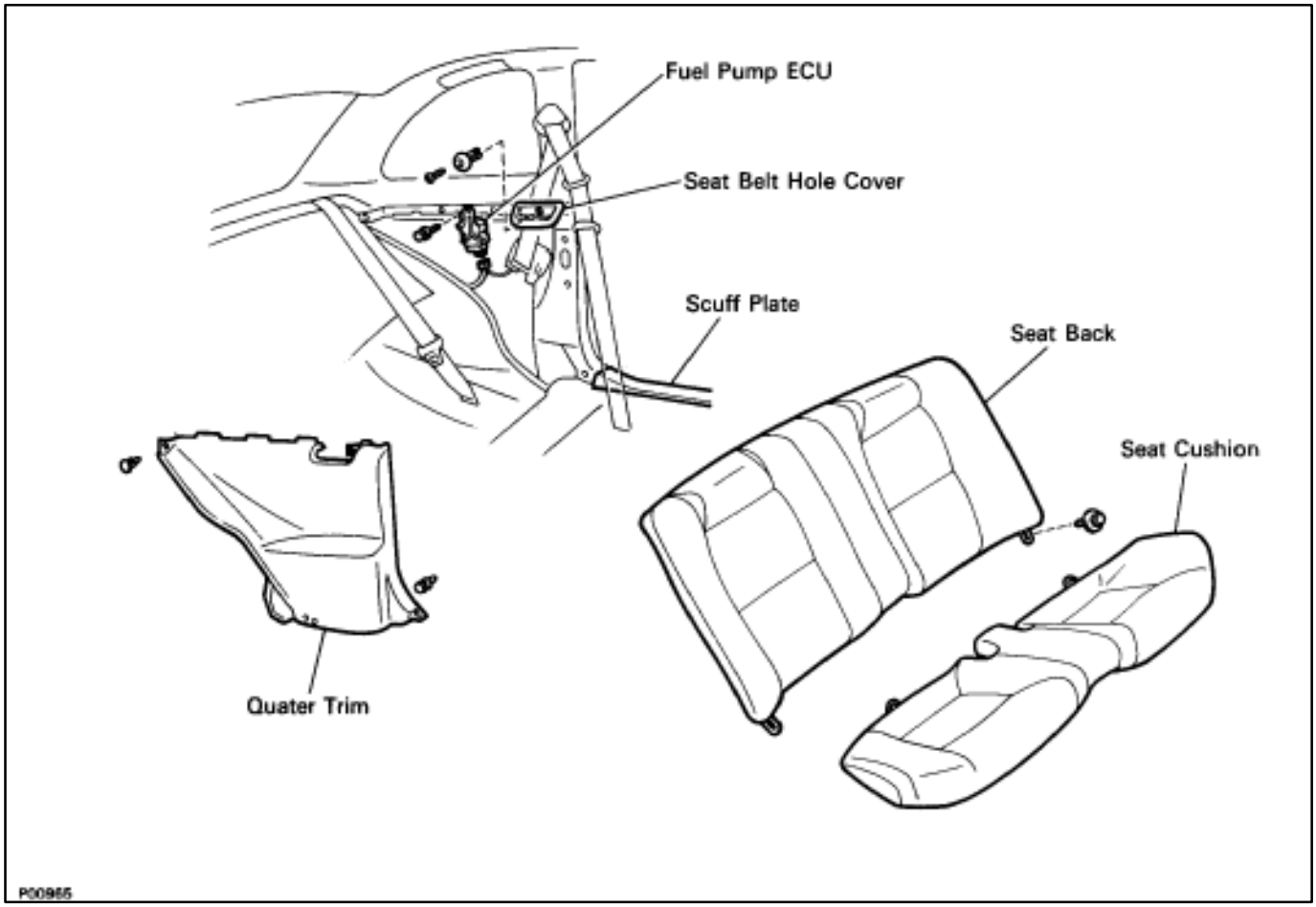

WhereEverybodyKnowsYourName

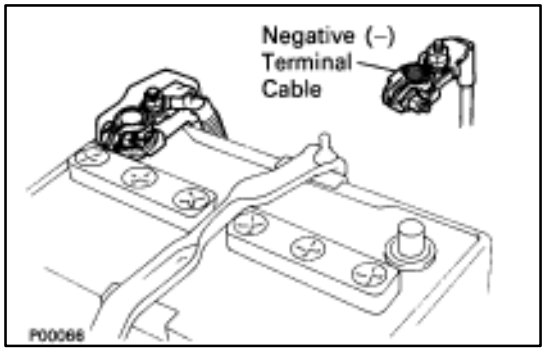

INSPECTION OF FUEL PUMP ECU

1. **DISCONNECT CABLE FROM NEGATIVE TERMINAL OF BATTERY**
   CAUTION: Turn the ignition switch to ”LOCK”. Disconnect the cable from the negative (–) terminal of the battery. Wait at least 20 seconds before proceeding with work.
2. **REMOVE SEAT CUSHION AND BACK**

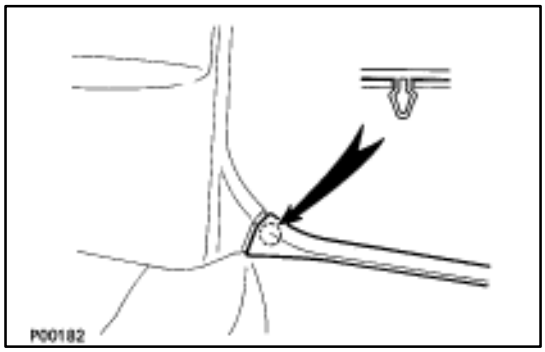

3. **REMOVE QUARTER TRIM**
   (a) Disconnect the rear side of the scuff plate by pulling it.

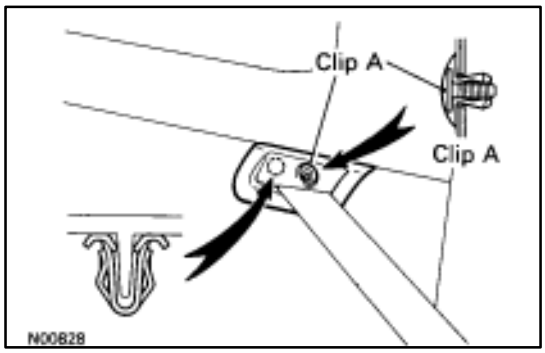

   (b) Remove clip A.
   (c) Remove the belt hole cover by pulling it.

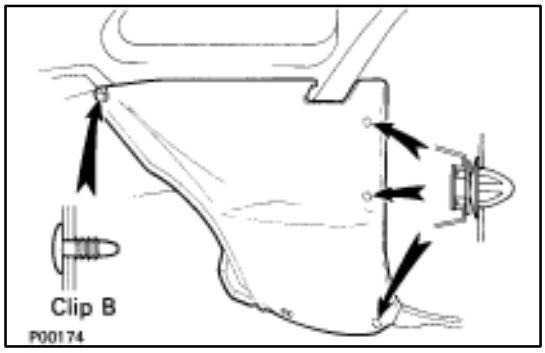

   (d) Remove clip B.
   (e) Remove the quarter trim by pulling it.

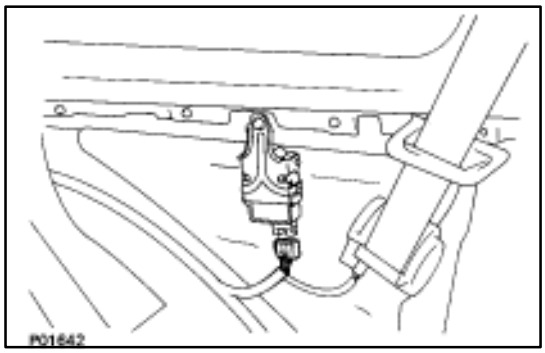

4. **DISCONNECT FUEL PUMP ECU CONNECTOR**

WhereEverybodyKnowsYourName

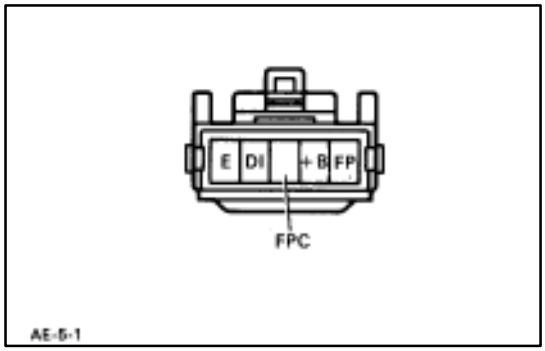

5. INSPECT FUEL PUMP ECU

(a) Connect the cable to the negative (–) terminal of the battery.

(b) Check the connector on the wiring harness side as shown in the chart.

Check for	Tester connection	Condition	Specified value
Continuity	E–Ground	–	Continuity
Continuity	DI–Ground	–	Continuity
Voltage	FP–Ground	Sudden racing	12–14 V
		Idling	8–10 V
Voltage	+B–Ground	IG SW ON	8–16 V
Voltage	FPC–Ground	Sudden racing (6,000 rpm or more)	4–6 V
		Idling	2.5 V

If circuit is as specified, replace the fuel pump ECU.

(c) Disconnect the cable from the negative (–) terminal of the battery.

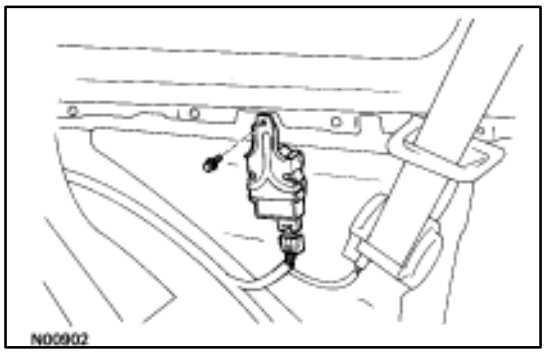

6. RECONNECT FUEL PUMP ECU CONNECTOR

7. INSTALL QUARTER TRIM

(a) Attach the upper side of the quarter trim to the quarter panel.

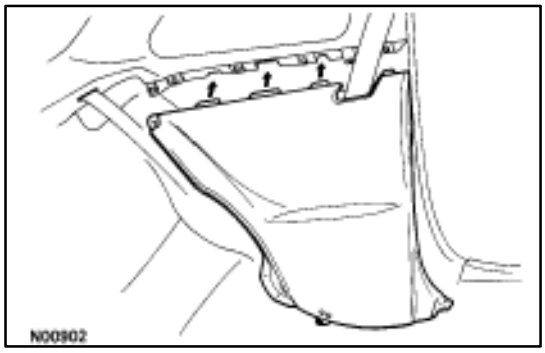

(b) Install the quarter trim with the four clips.

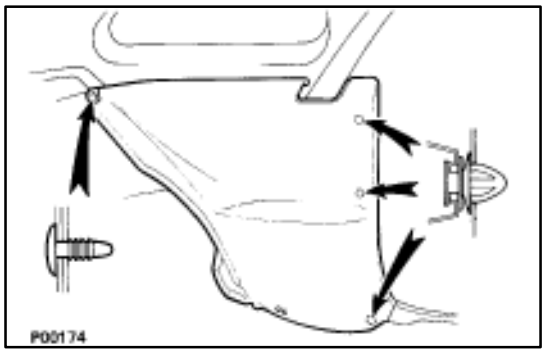

WhereEverybodyKnowsYourName

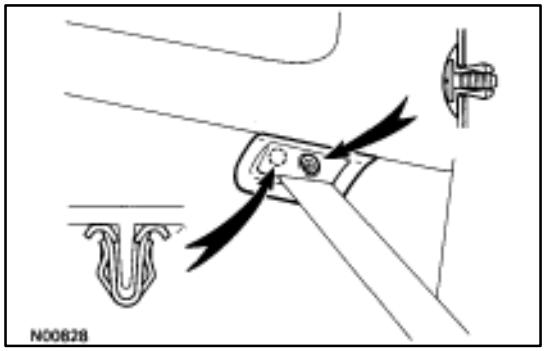

(c) Install the belt hole cover with the two clips.

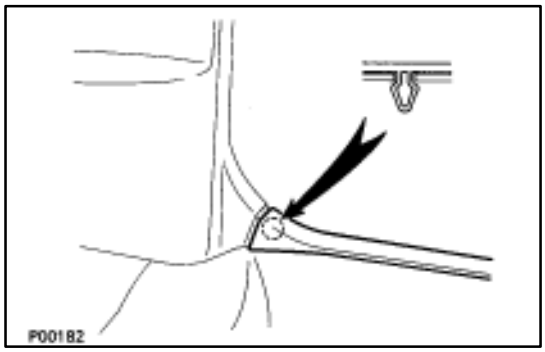

(d) Install the rear side of the scuff.

8. REINSTALL SEAT BACK AND CUSHION

9. RECONNECT CABLE FROM NEGATIVE TERMINAL OF BATTERY

WhereEverybodyKnowsYourName

ELECTRONIC CONTROL SYSTEM
Location of Electronic Control Parts

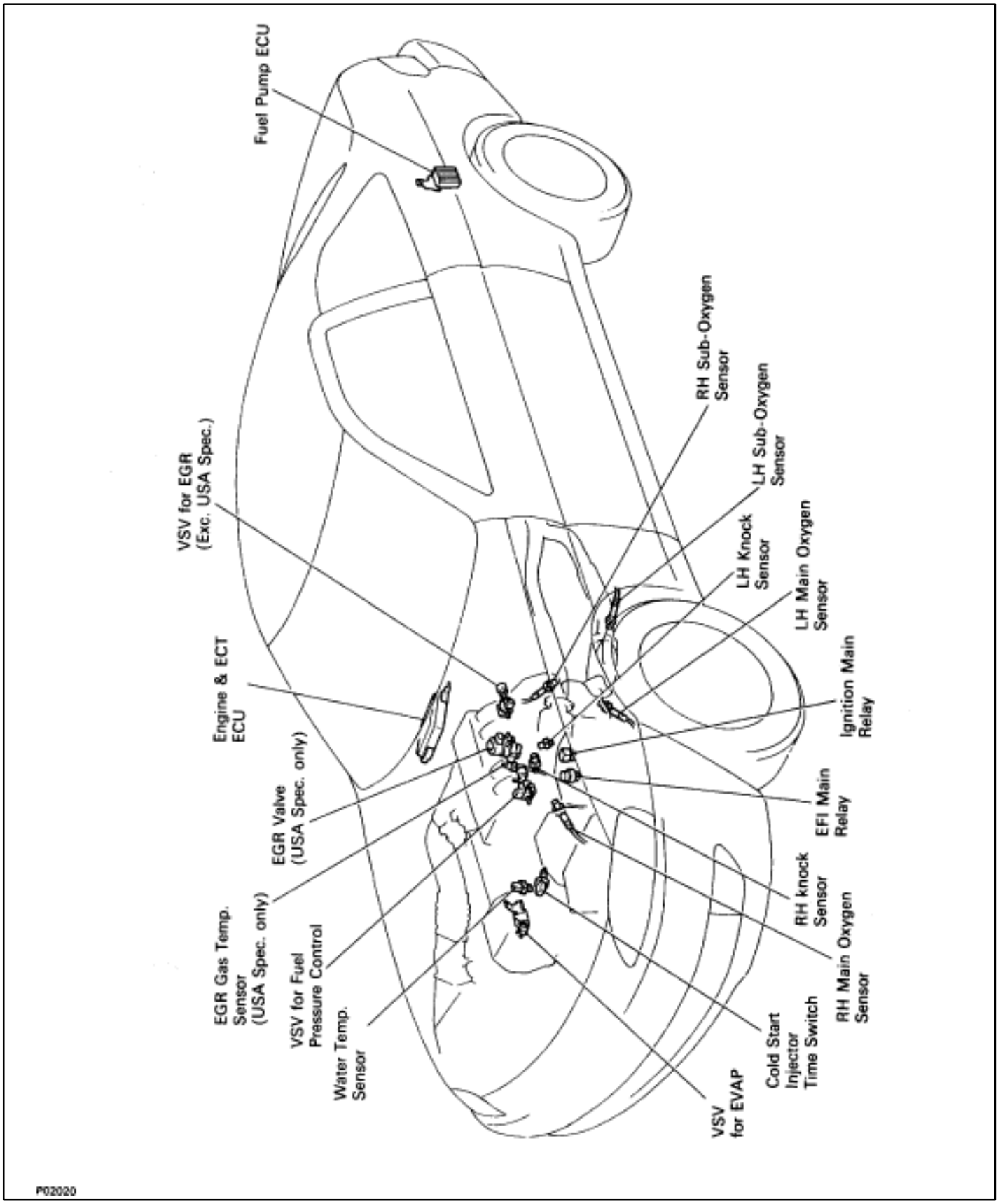

WhereEverybodyKnowsYourName

EFI Main Relay

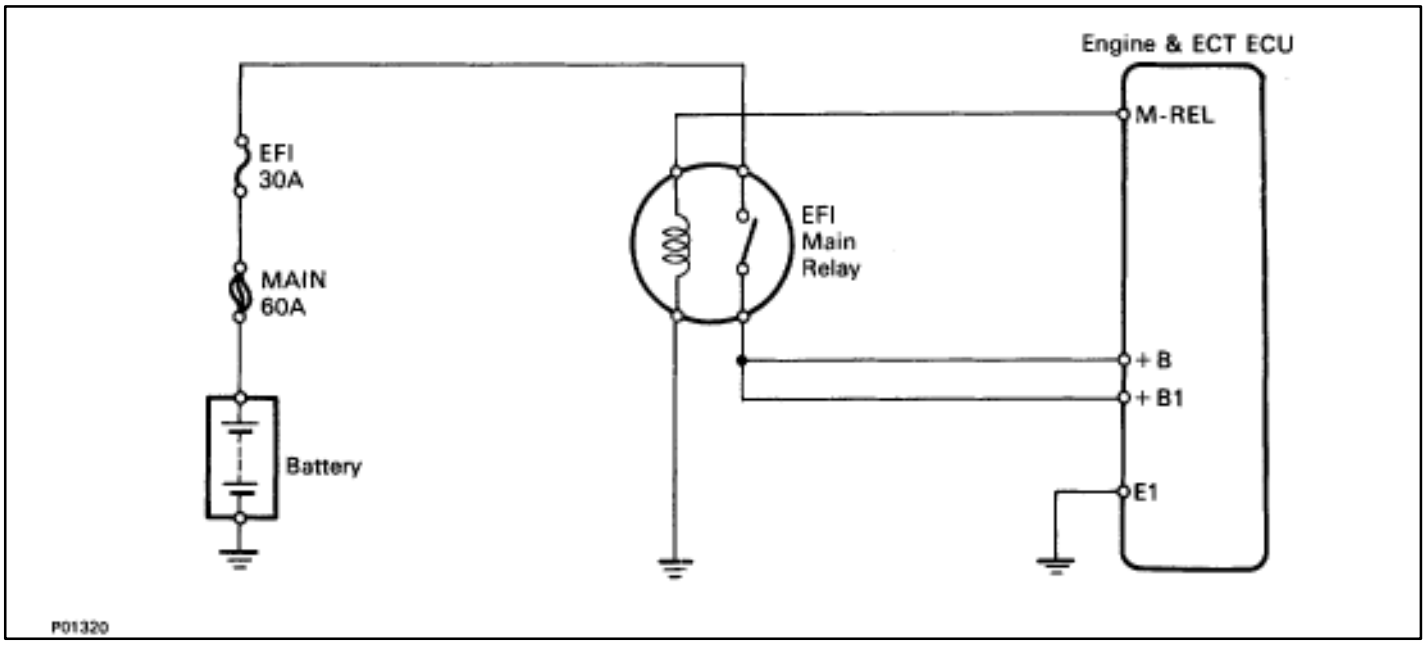

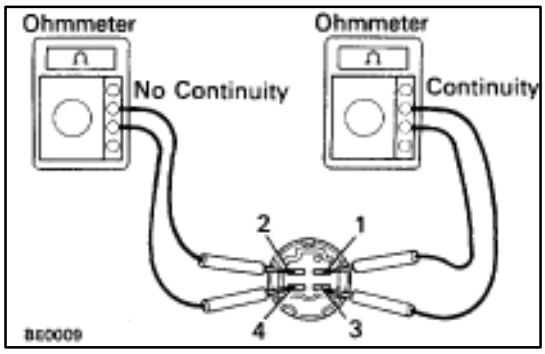

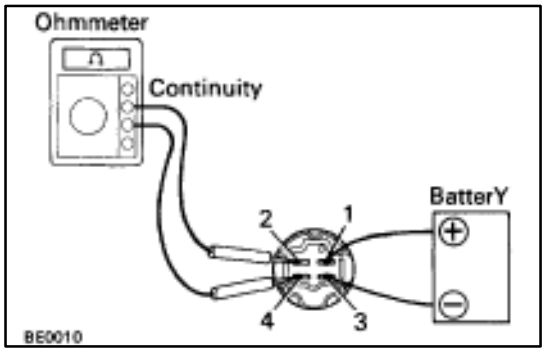

INSPECTION OF EFI MAIN RELAY

1. REMOVE EFI MAIN RELAY FROM RELAY BOX IN ENGINE COMPARTMENT

2. INSPECT EFI MAIN RELAY

A. Inspect relay continuity

(a) Using an ohmmeter, check that there is continuity between terminals 1 and 3.

(b) Check that there is no continuity between terminals 2 and 4.

If continuity is not as specified, replace the relay.

B. Inspect relay operation

(a) Apply battery voltage across terminals 1 and 3.

(b) Using an ohmmeter, check that there is continuity between terminals 2 and 4.

If operation is not as specified, replace the relay.

3. REINSTALL EFI MAIN RELAY

WhereEverybodyKnowsYourName

Ignition Main Relay

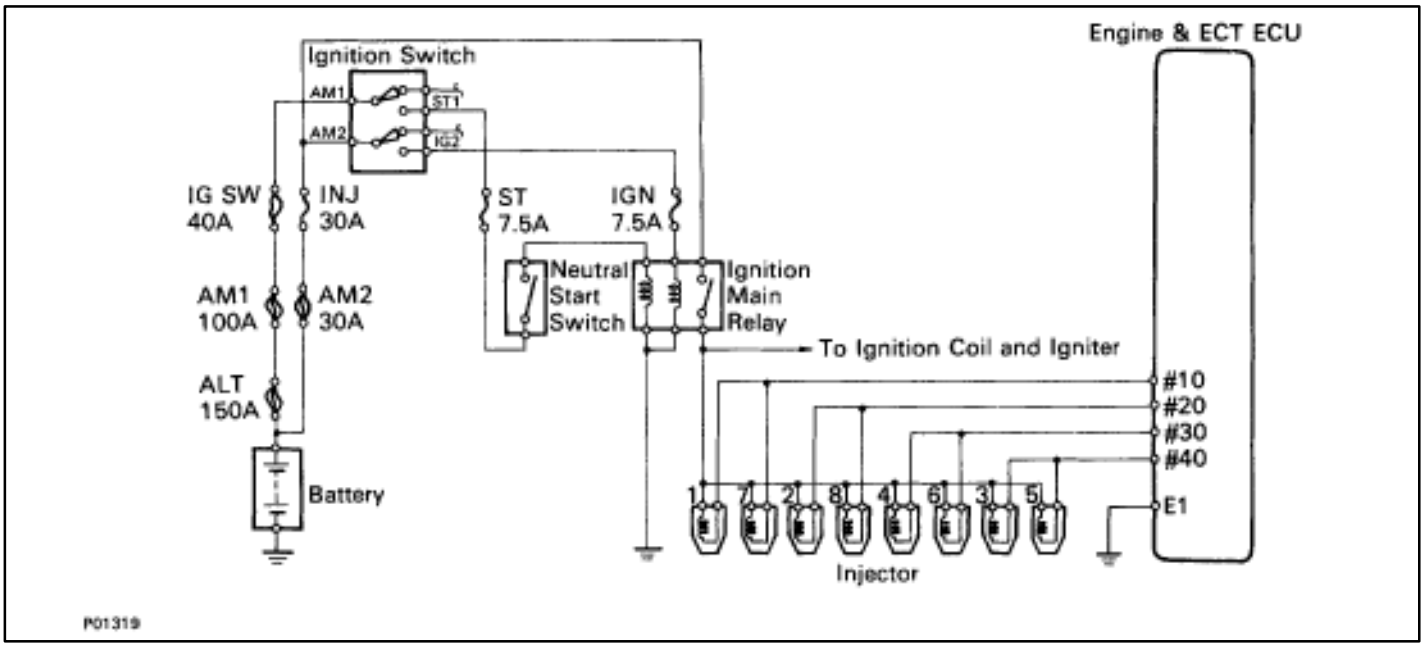

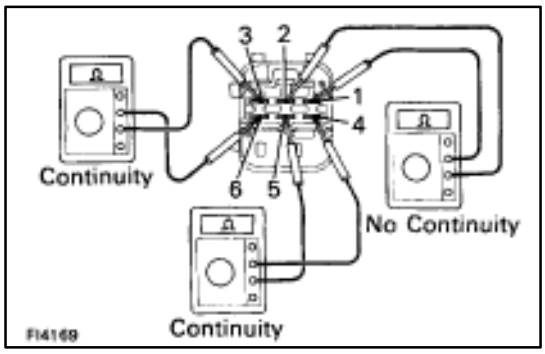

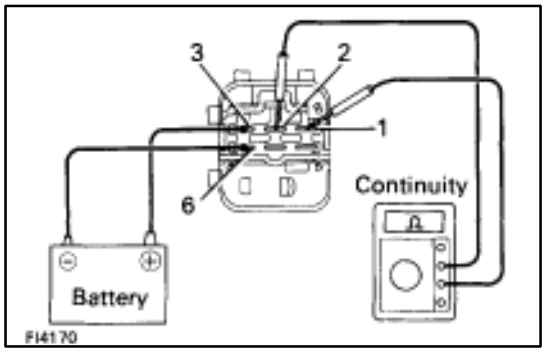

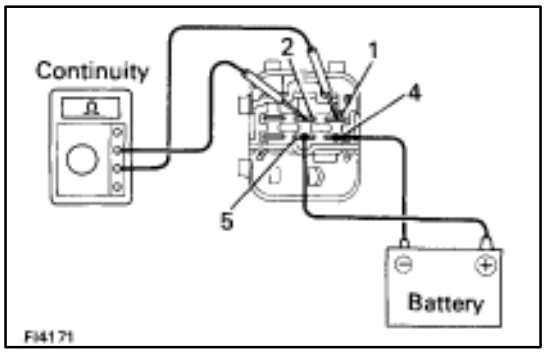

INSPECTION OF IGNITION MAIN RELAY

1. REMOVE IGNITION MAIN RELAY FROM RELAY BOX IN ENGINE COMPARTMENT

2. INSPECT IGNITION MAIN RELAY

A. Inspect relay continuity

(a) Using an ohmmeter, check that there is continuity between terminals 3 and 6.

(b) Check that there is continuity between terminals 4 and 5.

(c) Check that there is no continuity between terminals 1 and 2.

If continuity is not as specified, replace the relay.

B. Inspect relay operation

(a) Apply battery voltage across terminals 3 and 6.

(b) Using an ohmmeter, check that there is continuity between terminals 1 and 2.

(c) Apply battery voltage across terminals 4 and 5.

(d) Check that there is continuity between terminals 1 and 2.

If operation is not as specified, replace the relay.

3. REINSTALL IGNITION MAIN RELAY

WhereEverybodyKnowsYourName

Cold Start Injector Time Switch

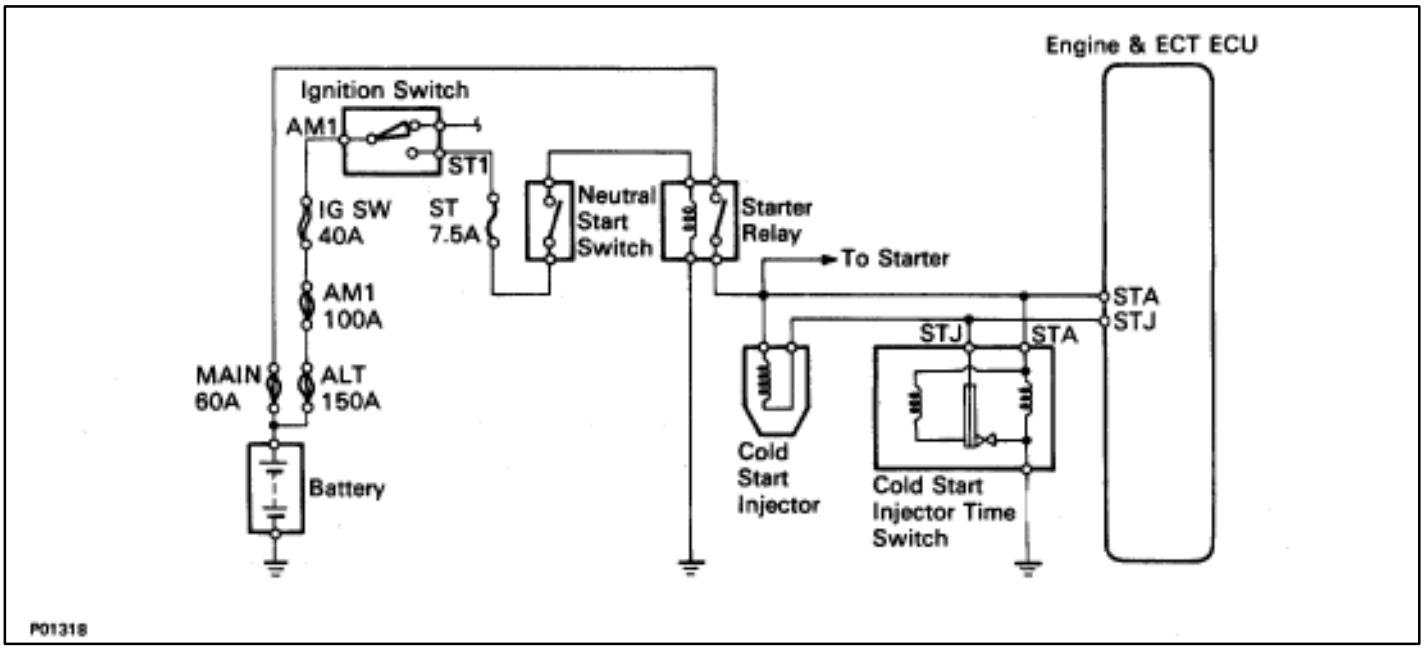

COMPONENTS FOR REMOVAL AND INSTALLATION

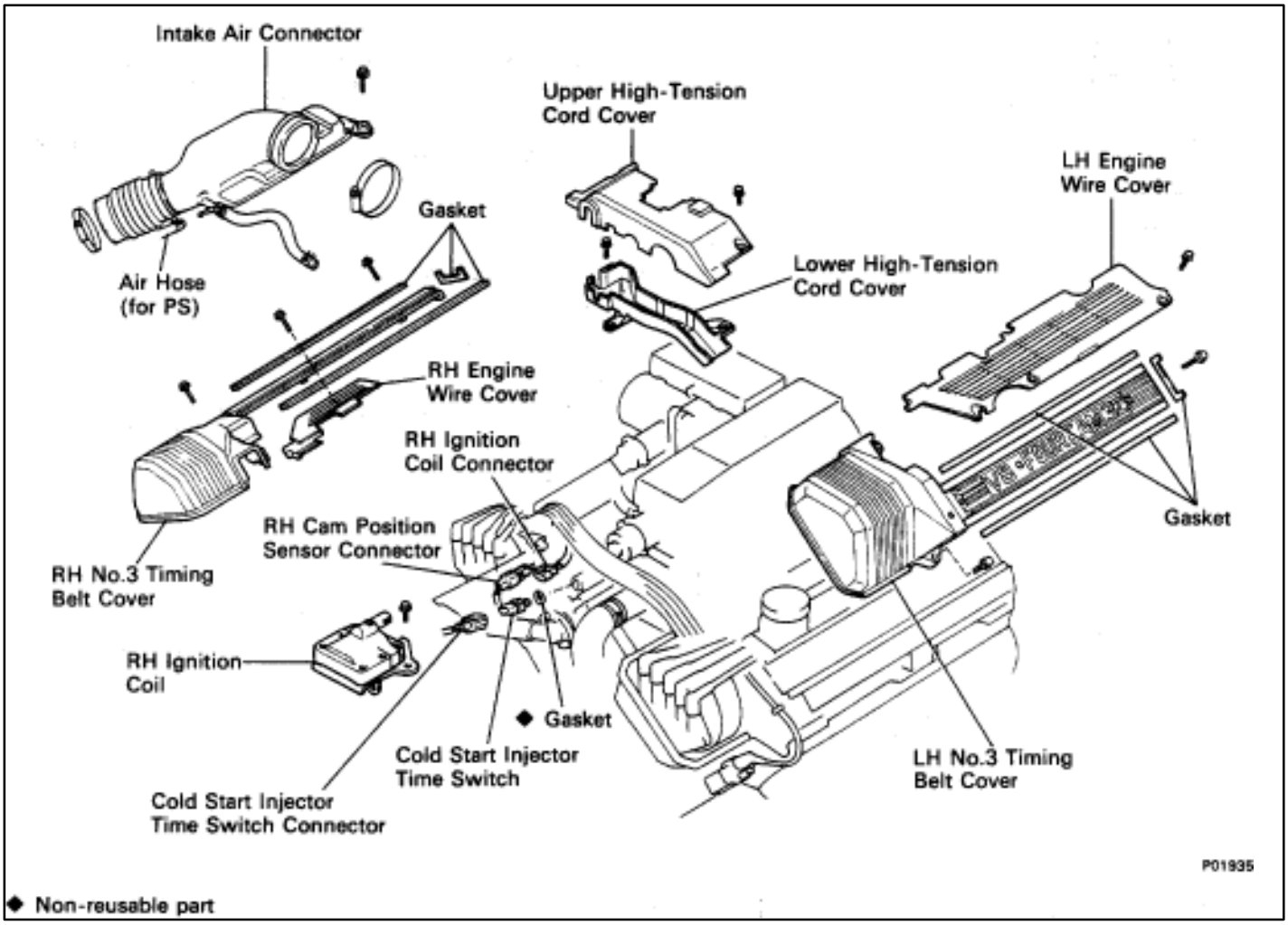

WhereEverybodyKnowsYourName

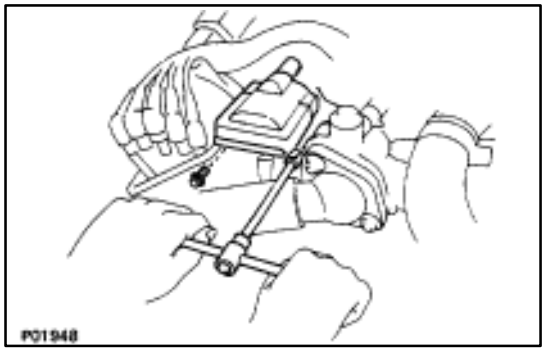

INSPECTION OF COLD START INJECTOR TIME SWITCH

1. REMOVE LOWER HIGH–TENSION CORD COVER (See steps 1, 2 and 5 to 12 on pages FI–27 to 29)

2. REMOVE RH IGNITION COIL

(a) Disconnect the ignition coil connector.

(b) Remove the two bolts, and disconnect the ignition coil.

(c) Disconnect the cam position sensor connector from the ignition coil bracket, and remove the ignition coil.

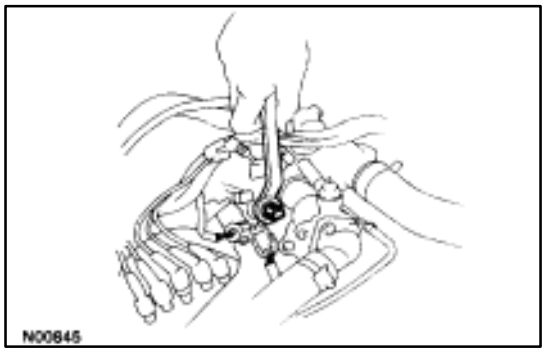

3. REMOVE COLD START INJECTOR TIME SWITCH

(a) Disconnect the injector time switch connector.

(b) Remove the injector time switch and gasket.

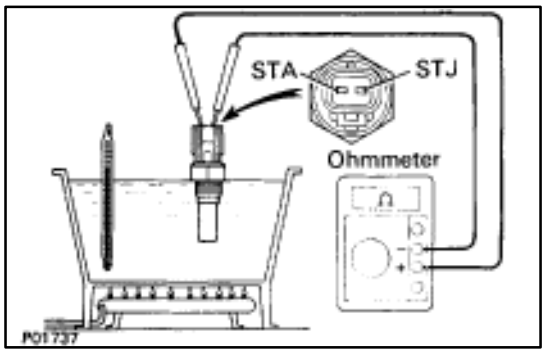

4. INSPECT COLD START INJECTOR TIME SWITCH

Using an ohmmeter, measure the resistance between each terminal.

Resistance:

STA–STJ	**25–45 ? below 15˚C (59˚F)**	
	65–85 ? above 30˚C (86˚F)	
STA–Ground	**25–85 ?**	

If the resistance is not as specified, replace the switch.

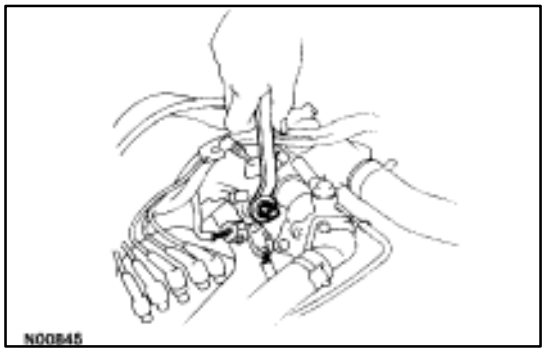

5. REINSTALL COLD START INJECTOR TIME SWITCH

(a) Install a new gasket to the injector time switch.

(b) Install the injector time switch.

Torque: 34 N·m (350 kgf·cm, 25 ft·lbf)

(c) Connect the injector time switch connector.

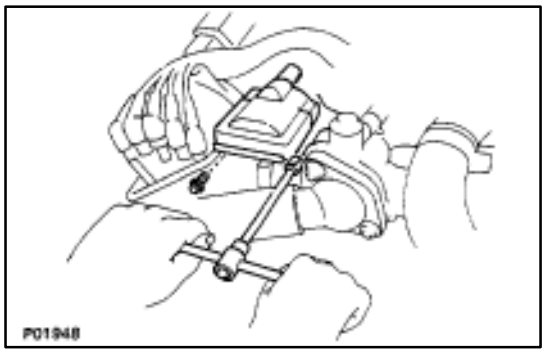

6. REINSTALL RH IGNITION COIL

(a) Install the ignition coil with the two bolts.

WhereEverybodyKnowsYourName

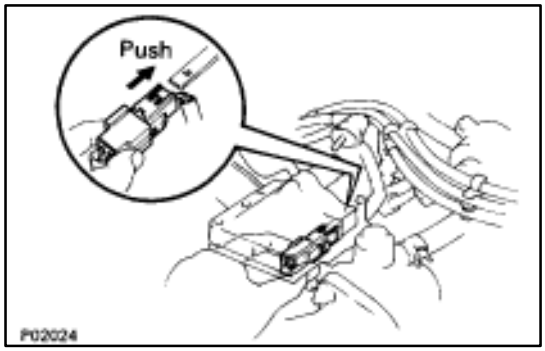

(b) Install the cam position sensor connector to the ignition coil bracket.

(c) Connect the ignition coil connector.

7. REINSTALL LOWER HIGH–TENSION CORD COVER (See steps 1 to 13 and 16 to 18 on pages FI–39 to 41)

WhereEverybodyKnowsYourName

VSV for Fuel Pressure Control

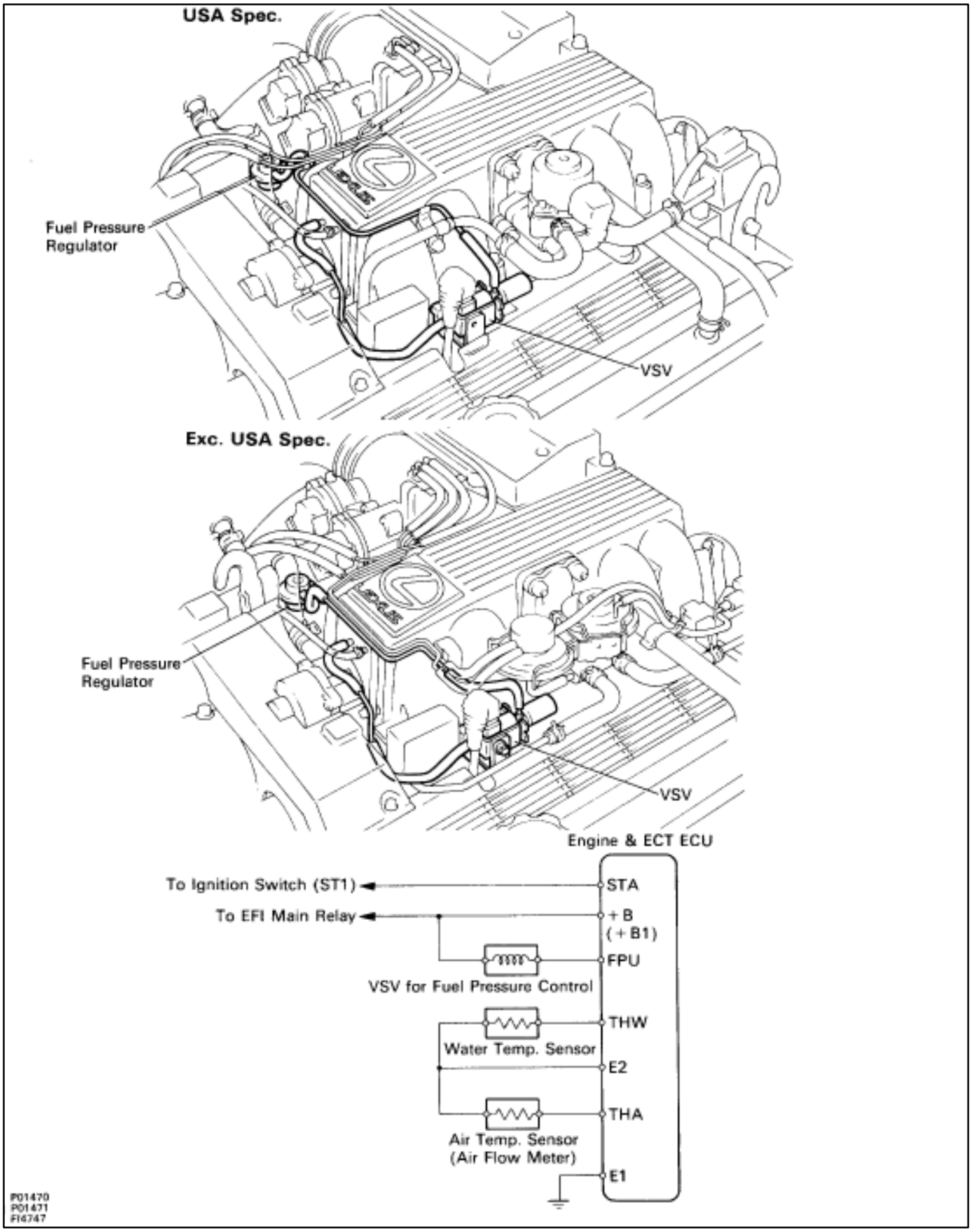

WhereEverybodyKnowsYourName

COMPONENTS FOR REMOVAL AND INSTALLATION

Exc. USA Spec.

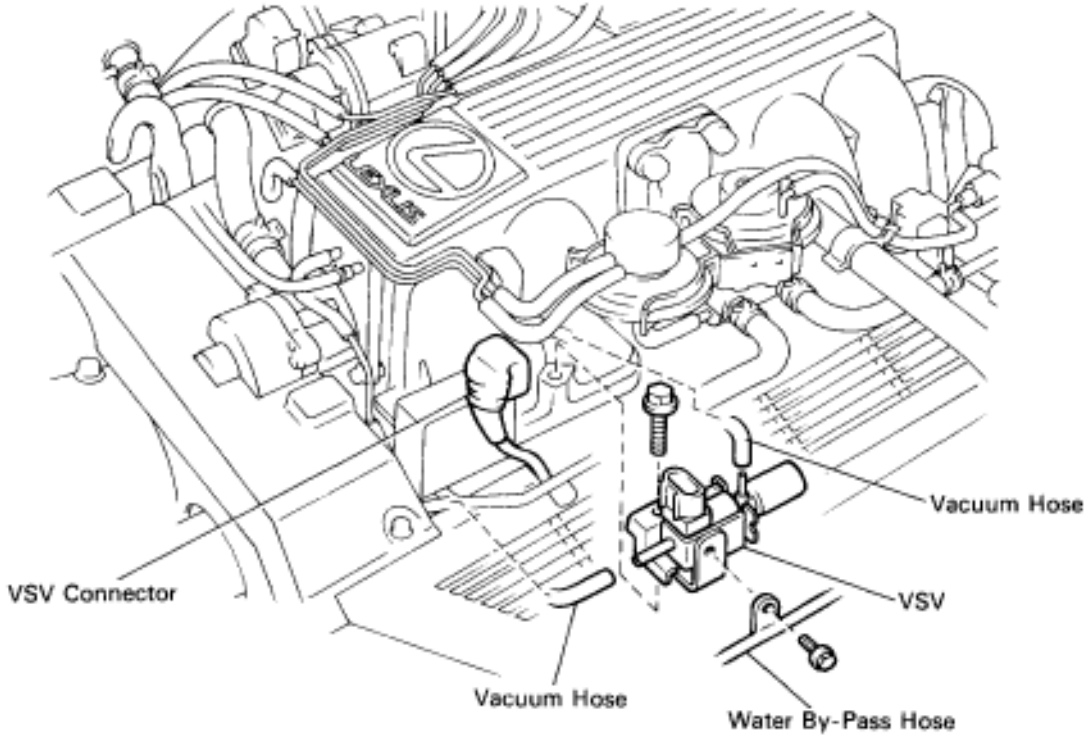

P01460

USA Spec.

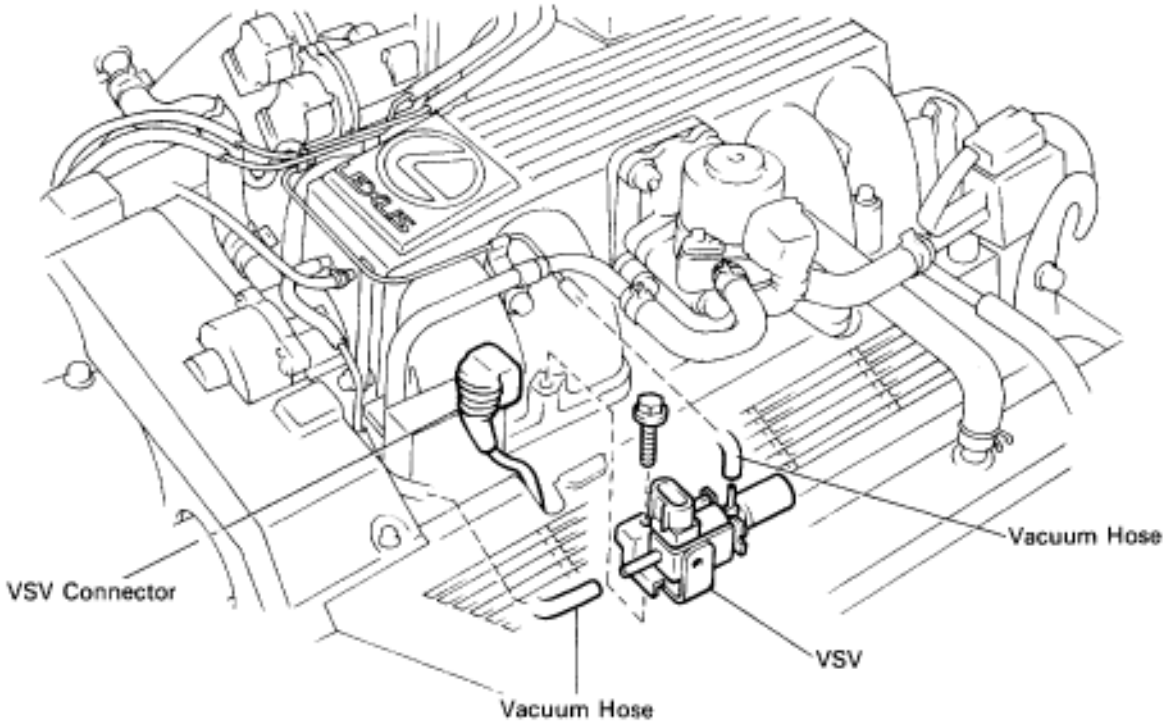

P01459

WhereEverybodyKnowsYourName

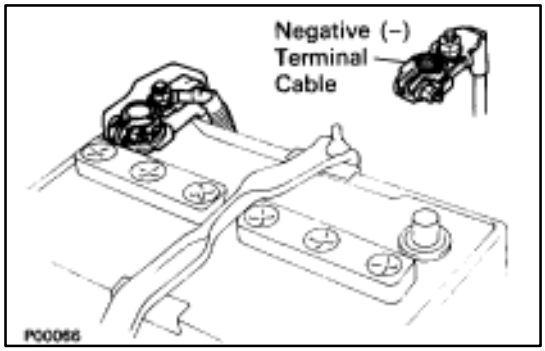

INSPECTION OF VSV FOR FUEL PRESSURE CONTROL

1. DISCONNECT CABLE FROM NEGATIVE TERMINAL OF BATTERY

CAUTION: Work must be started after approx. 20 seconds or longer from the time the ignition switch is turned to the "LOCK" position and the negative (–) terminal cable is disconnected from the battery.

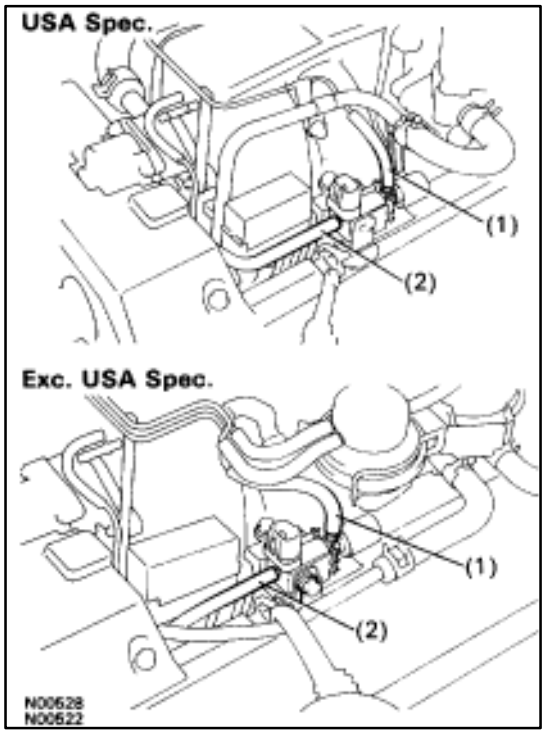

2. REMOVE VSV

(a) Disconnect the VSV connector.

(b) Disconnect the following hoses from VSV:

(1) Vacuum hose (from fuel pressure regulator)

(2) Vacuum hose (from air intake chamber)

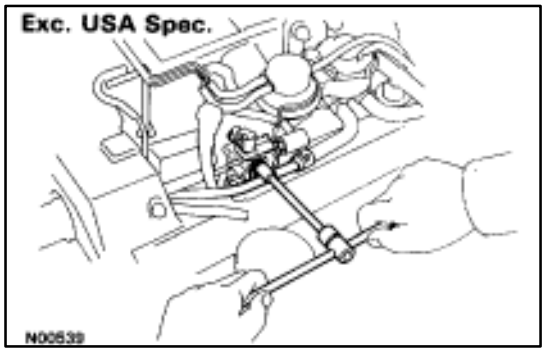

(c) (Exc. USA Spec.)
Remove the bolt holding the water by–pass pipe to the VSV.

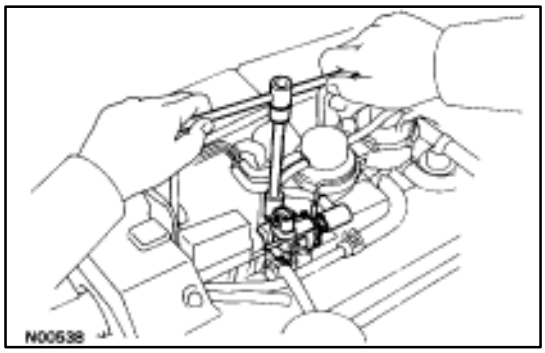

(d) Remove the bolt and VSV.

WhereEverybodyKnowsYourName

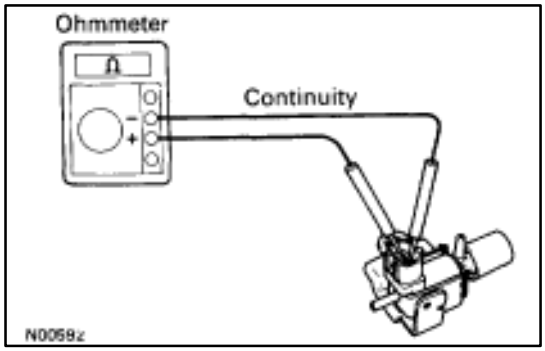

3. INSPECT VSV

A. Inspect VSV for open circuit

Using an ohmmeter, check that there is continuity between the terminals.

Resistance (Cold): 37–44 ?

If there is no continuity, replace the VSV.

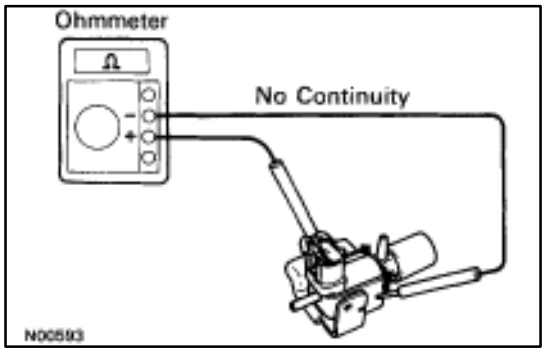

B. Inspect VSV for ground

Using an ohmmeter, check that there is no continuity between each terminal and the body.

If there is continuity, replace the VSV.

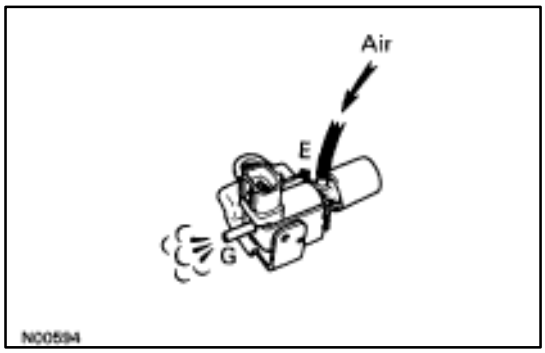

C. Inspect VSV operation

(a) Check that air flows from ports E to G.

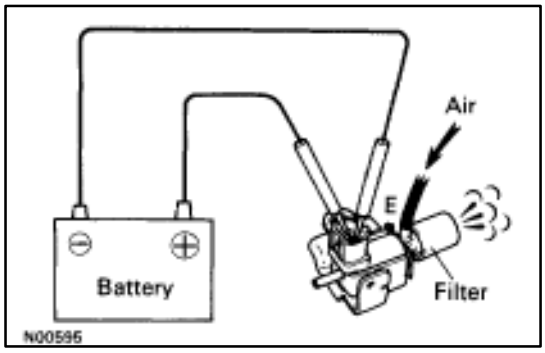

(b) Apply battery voltage across the terminals.

(c) Check that air flows from ports E to the filter.

If operation is not as specified, replace the VSV.

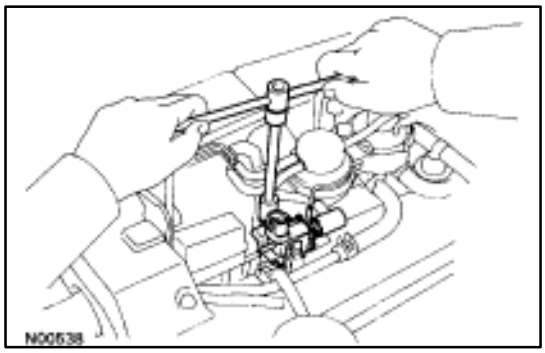

4. REINSTALL VSV

(a) Install the VSV with the bolt.

Torque: 18 N·m (185 kgf·cm, 13 ft·lbf)

WhereEverybodyKnowsYourName

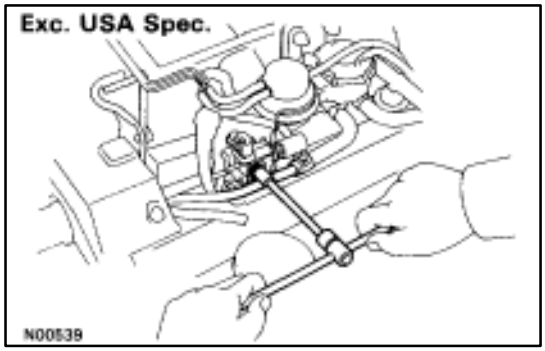

(b) (Exc. USA Spec.)
Install the water by–pass pipe to the VSV with the bolt.

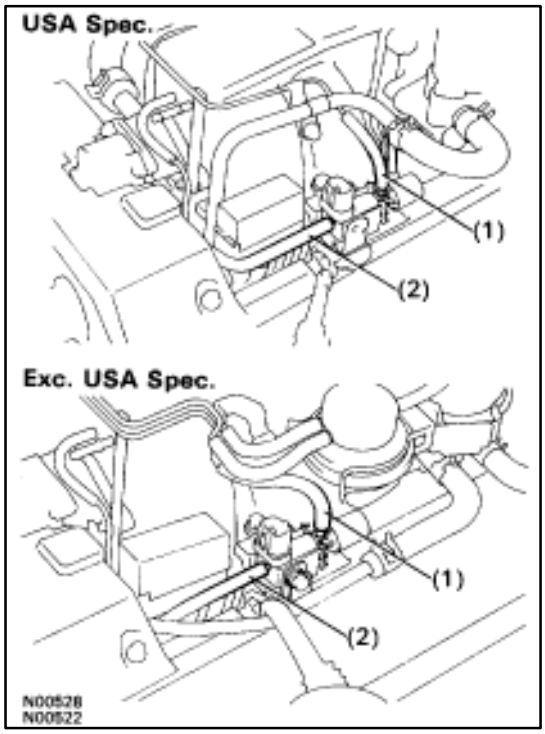

(c) Connect the following hoses to VSV:
(1) Vacuum hose (from fuel pressure regulator)
(2) Vacuum hose (from air intake chamber)

(d) Connect the VSV connector.

5. RECONNECT CABLE TO NEGATIVE TERMINAL OF BATTERY

WhereEverybodyKnowsYourName

VSV for EVAP

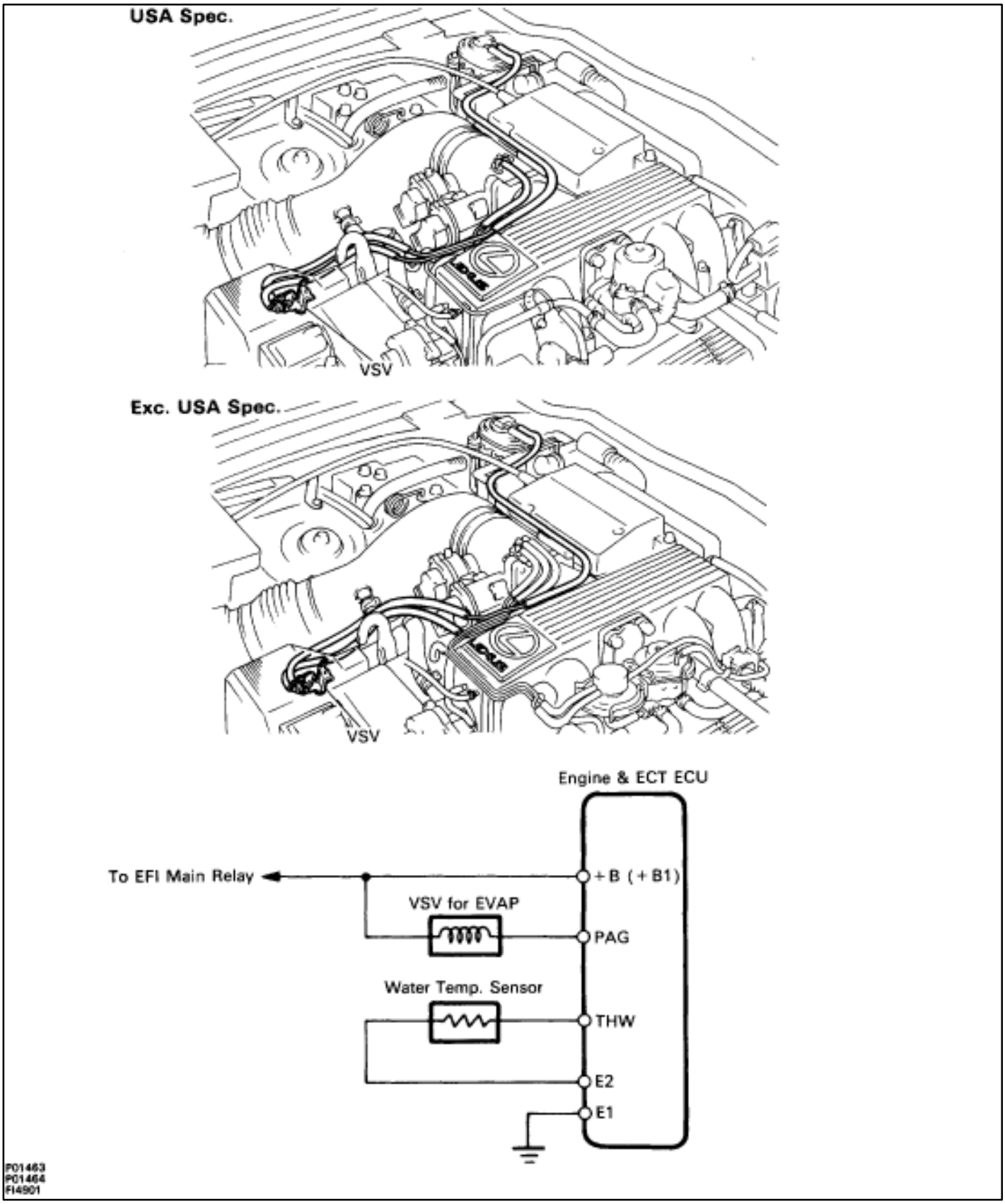

INSPECTION OF VSV FOR EVAP

(See Emission Control System on page EC–11)

WhereEverybodyKnowsYourName

VSV for EGR (Exc. USA Spec.)

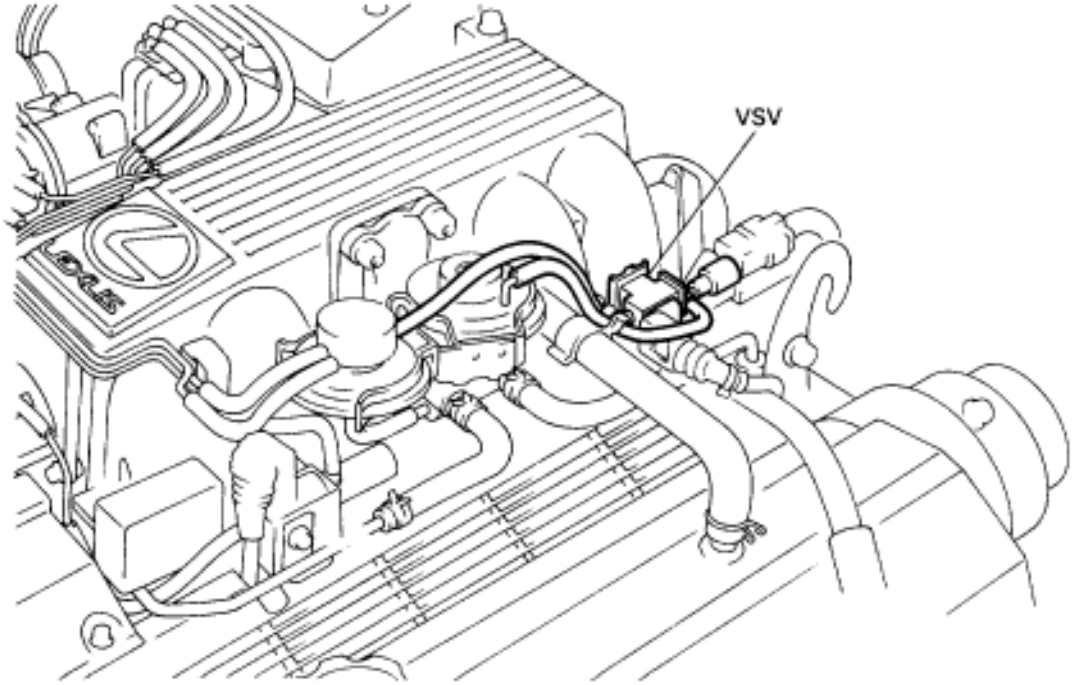

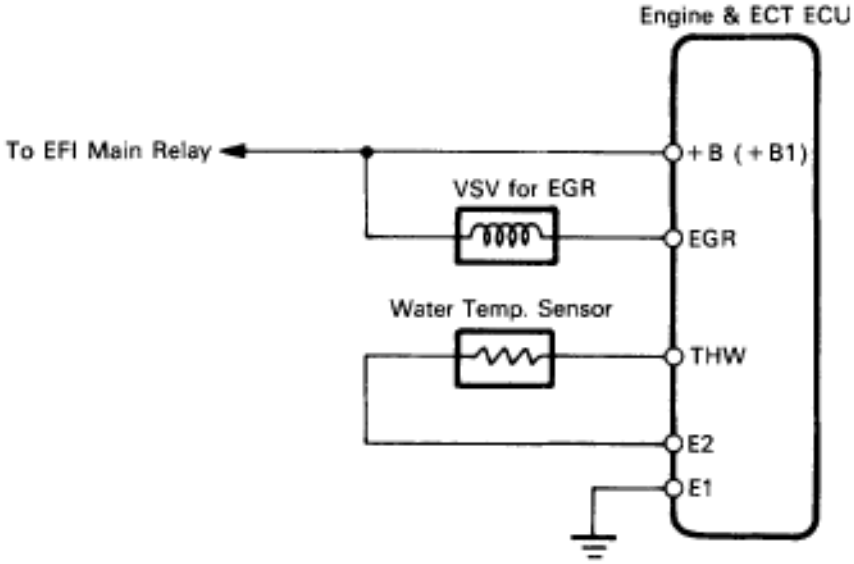

P01455
FI4901

INSPECTION OF VSV FOR EGR

(See Emission Control Systems on page EC–18)

WhereEverybodyKnowsYourName

EGR Valve (USA Spec. only)

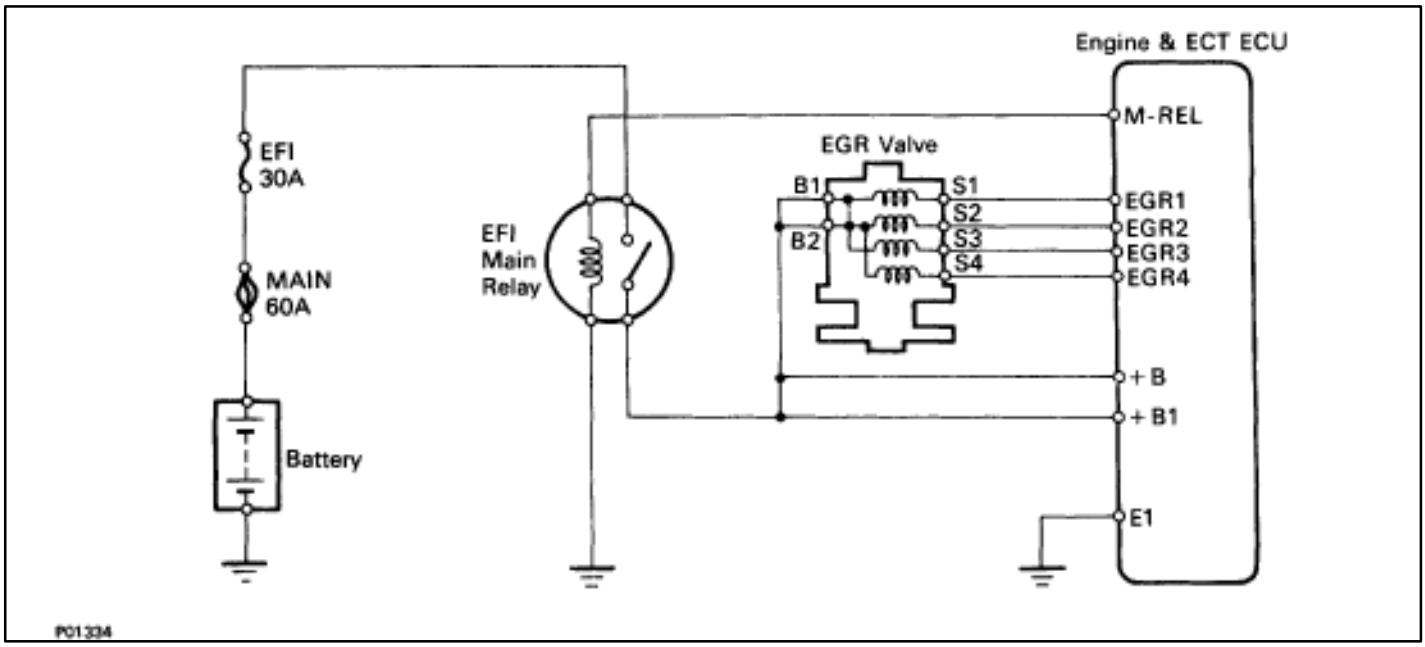

INSPECTION OF VSV FOR EGR

(See Emission Control Systems on page EC–21)

WhereEverybodyKnowsYourName

Water Temperature Sensor

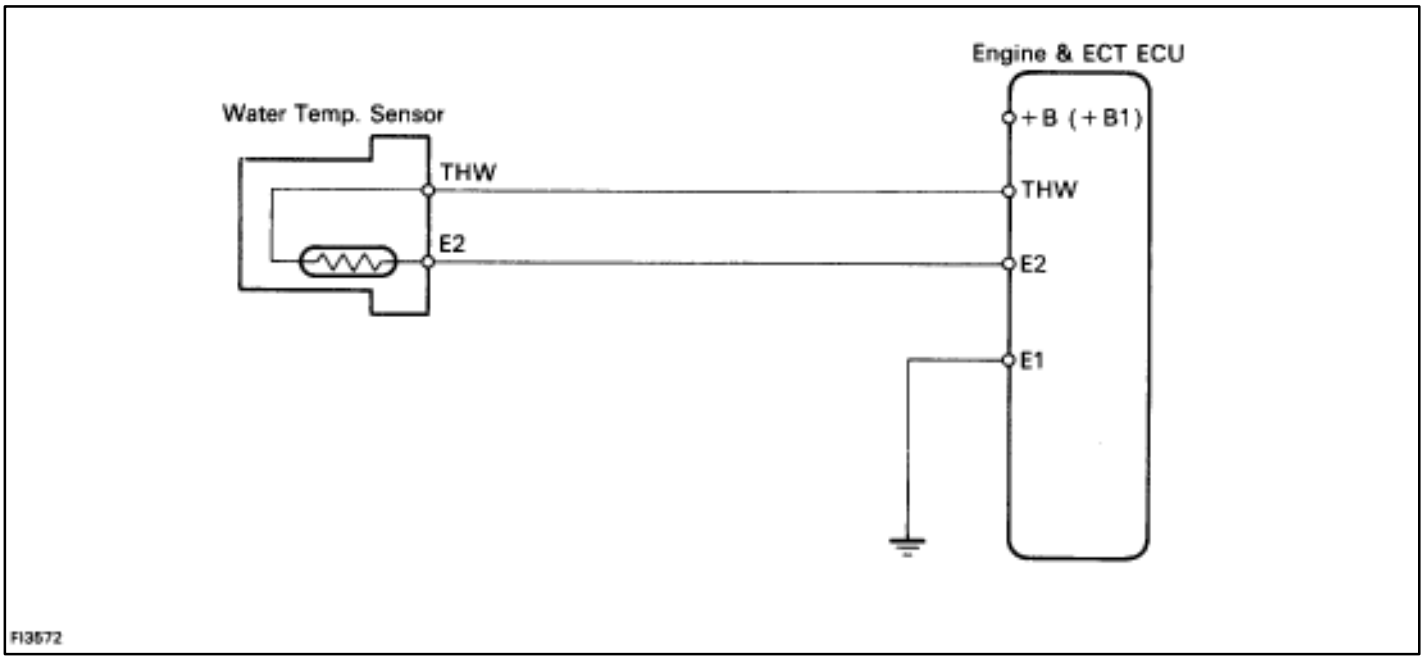

COMPONENTS FOR REMOVAL AND INSTALLATION

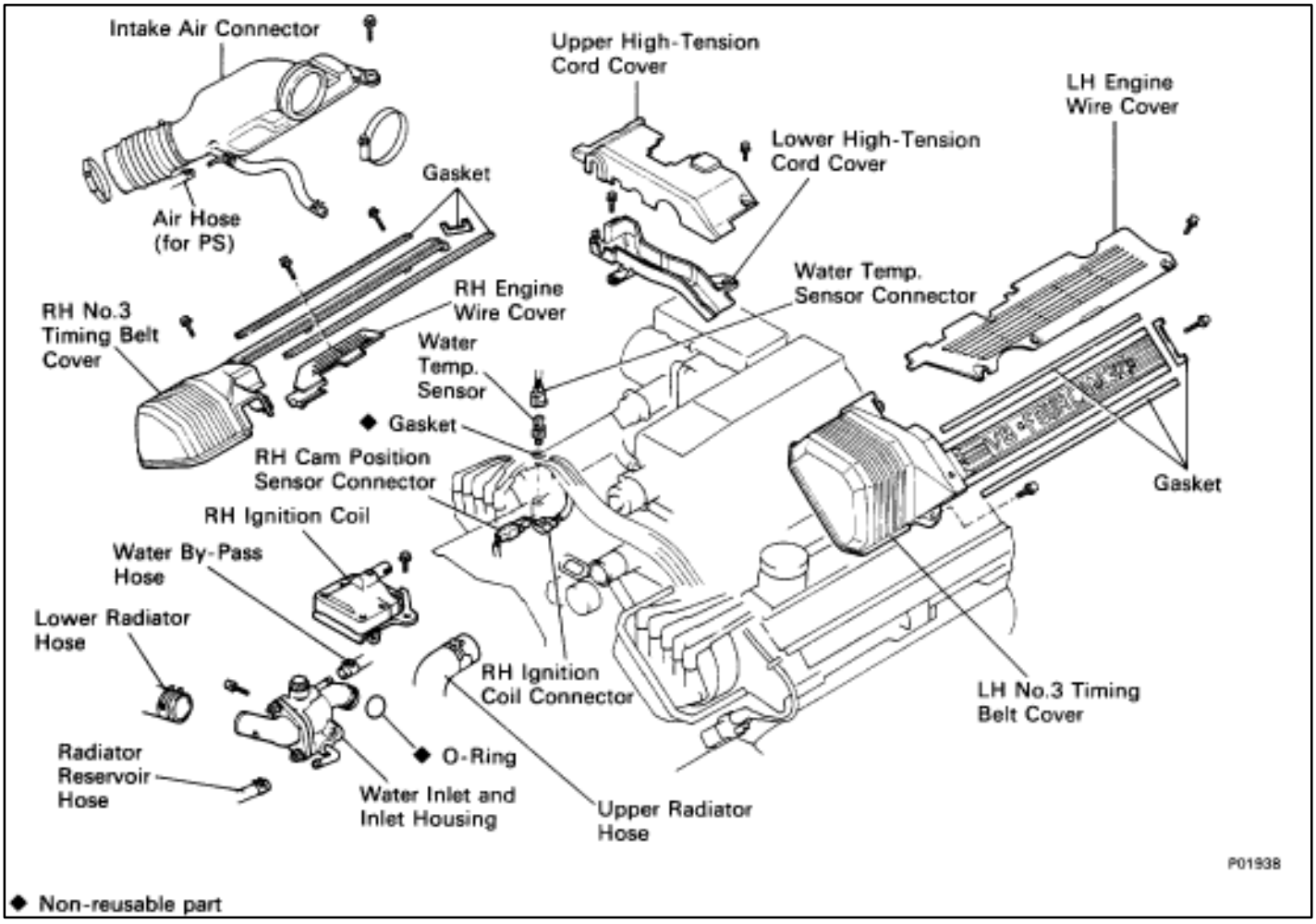

WhereEverybodyKnowsYourName

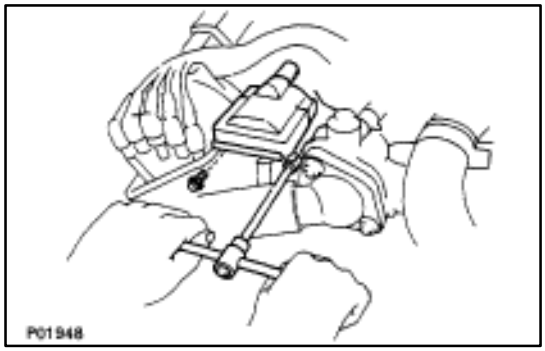

INSPECTION OF WATER TEMPERATURE SENSOR

1. REMOVE LOWER HIGH–TENSION CORD COVER
(See steps 1, 2 and 5 to 12 on pages FI–27 to 29)

2. REMOVE RH IGNITION COIL

(a) Disconnect the ignition coil connector.
(b) Remove the two bolts, and disconnect the ignition coil.
(c) Disconnect the cam position sensor connector from the ignition coil bracket, and remove the ignition coil.

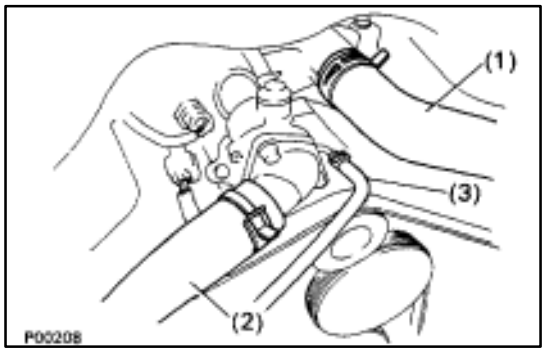

3. DISCONNECT HOSES

Disconnect the following hoses:
(1) Upper radiator hose from front water by–pass joint
(2) Lower radiator hose from water inlet
(3) Radiator reservoir hose from front water inlet housing

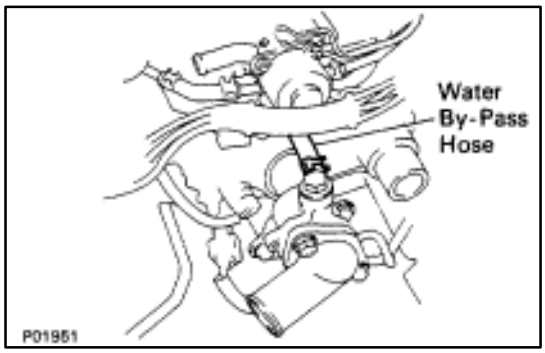

4. REMOVE WATER INLET AND INLET HOUSING

(a) Disconnect the water by–pass hose from the water inlet housing.

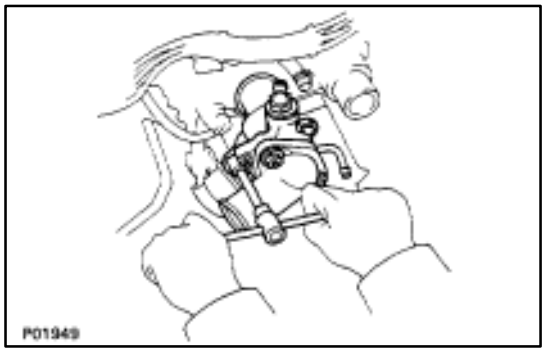

(b) Remove the two bolts holding the water inlet housing to the water pump.
(c) Pull out the water inlet and inlet housing assembly.
(d) Remove the O–ring from the water inlet housing.

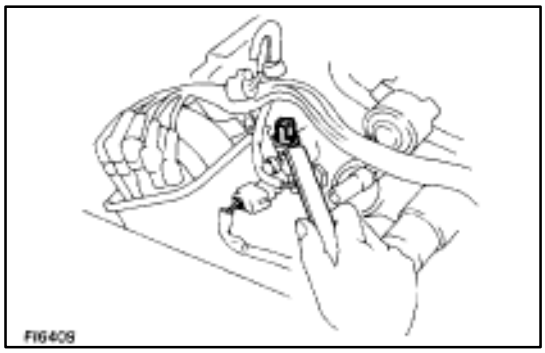

5. REMOVE WATER TEMPERATURE SENSOR

(a) Disconnect the water temperature sensor connector.
(b) Remove the water temperature sensor and gasket.

WhereEverybodyKnowsYourName

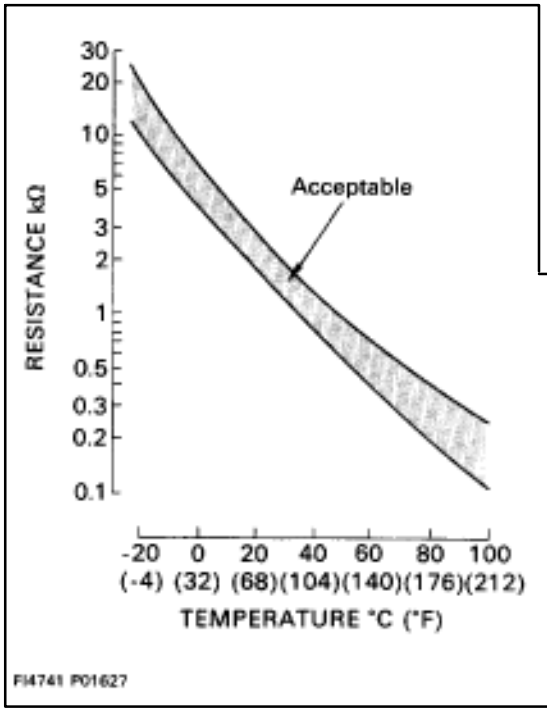

6. INSPECT WATER TEMPERATURE SENSOR

Using an ohmmeter, measure the resistance between the terminals.

Resistance: Refer to the chart graph

If the resistance is not as specified, replace the sensor.

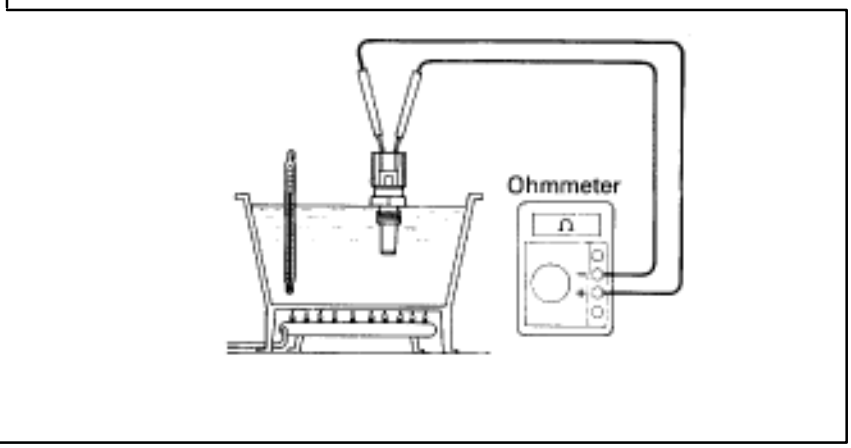

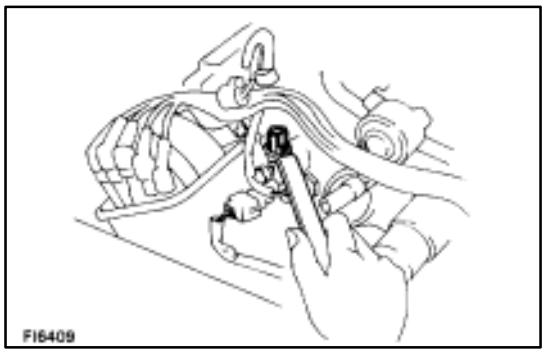

7. REINSTALL WATER TEMPERATURE SENSOR

(a) Install a new gasket to the water temperature sensor.

(b) Install the water temperature sensor.

Torque: 20 N·m (200 kgf·cm, 14 ft·lbf)

(c) Connect the water temperature sensor connector.

8. REINSTALL WATER INLET AND INLET HOUSING

(a) Remove any old packing (FIPG) material and be careful not to drop any oil on the contact surfaces of the water inlet housing and water pump.

- Using a razor blade and gasket scraper, remove all the old packing (FIPG) material from the gasket surfaces and sealing groove.
- Thoroughly clean all components to remove all the loose material.
- Using a non–residue solvent, clean both sealing surfaces.

(b) Apply seal packing to the sealing groove of the water inlet housing as shown in the illustration.

Seal packing: Part No. 08826–00100 or equivalent

- Install a nozzle that has been cut to a 2–3 mm (0.08–0.12 in.) opening.

HINT: Avoid applying an excessive amount to the surface.

- Parts must be assembled within 5 minutes of application. Otherwise the material must be removed and reapplied.
- Immediately remove nozzle from the tube and reinstall cap.

(c) Install a new O–ring to the water inlet housing.

(d) Apply soapy water to the O–ring.

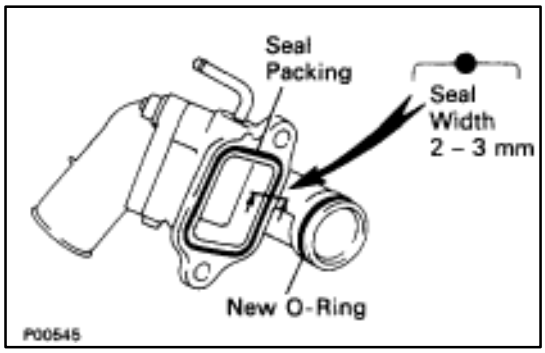

WhereEverybodyKnowsYourName

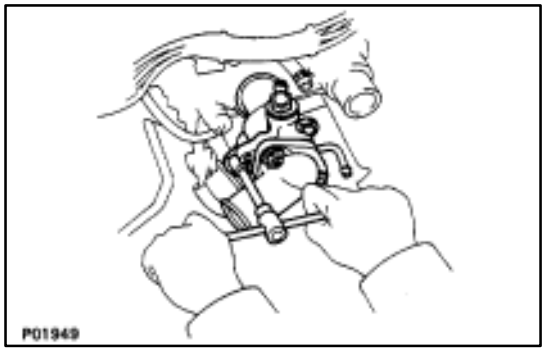

(e) Push in the water inlet housing end into the water pump hole.

(f) Install the water inlet and inlet housing assembly with the two bolts. Alternately tighten the bolts.

Torque: 18 N·m (185 kgf·cm, 13 ft·lbf)

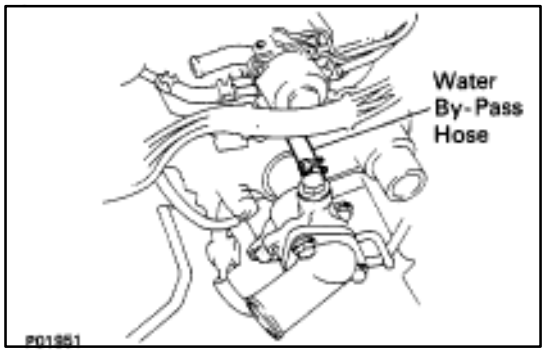

(g) Connect the water by–pass hose to the water inlet housing.

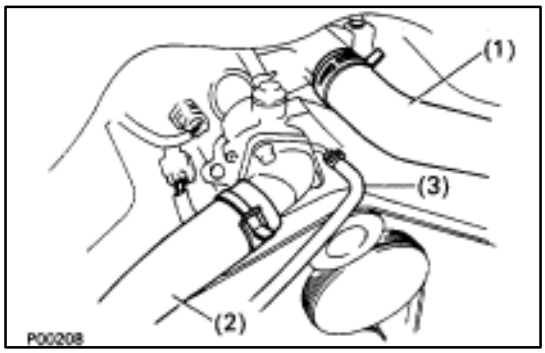

9. RECONNECT HOSES

Connect the following hoses:

(1) Upper radiator hose to front water by–pass joint
(2) Lower radiator hose to water inlet
(3) Radiator reservoir hose to front water inlet housing

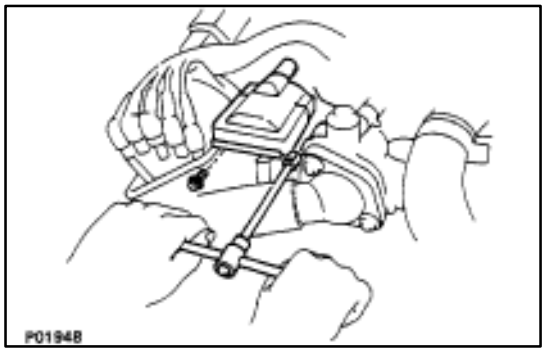

10. REINSTALL RH IGNITION COIL

(a) Install the ignition coil with the two bolts.

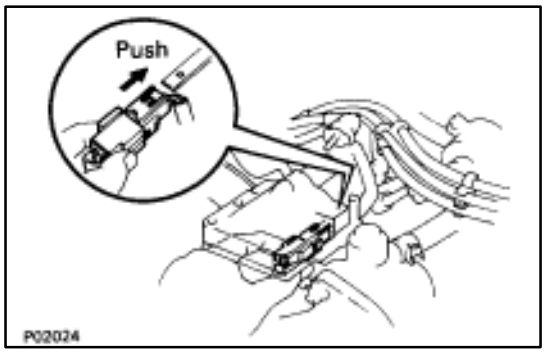

(b) Install the cam position sensor connector to the ignition coil bracket.

(c) Connect the ignition coil connector.

11. REINSTALL LOWER HIGH–TENSION CORD COVER

(See steps 1 to 13 and 16 to 18 on pages FI–39 to 41)

WhereEverybodyKnowsYourName

EGR Gas Temperature Sensor (USA Spec. only)

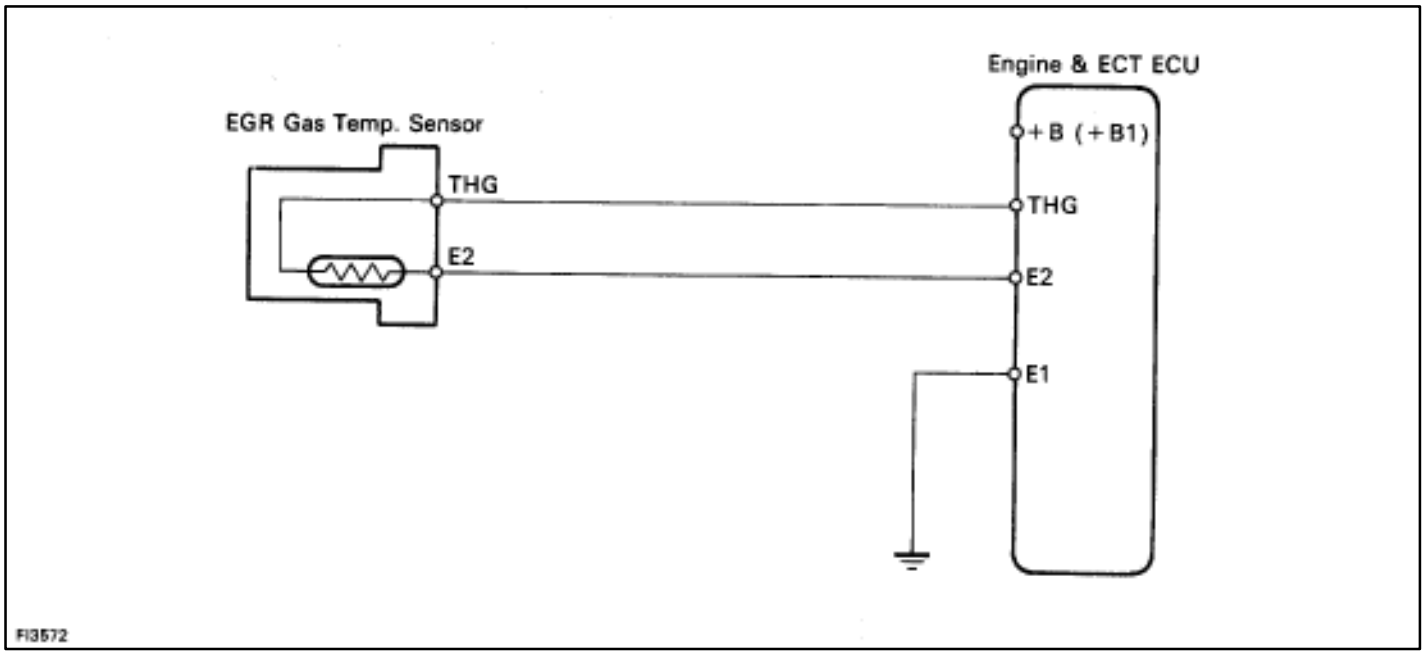

COMPONENTS FOR REMOVAL AND INSTALLATION

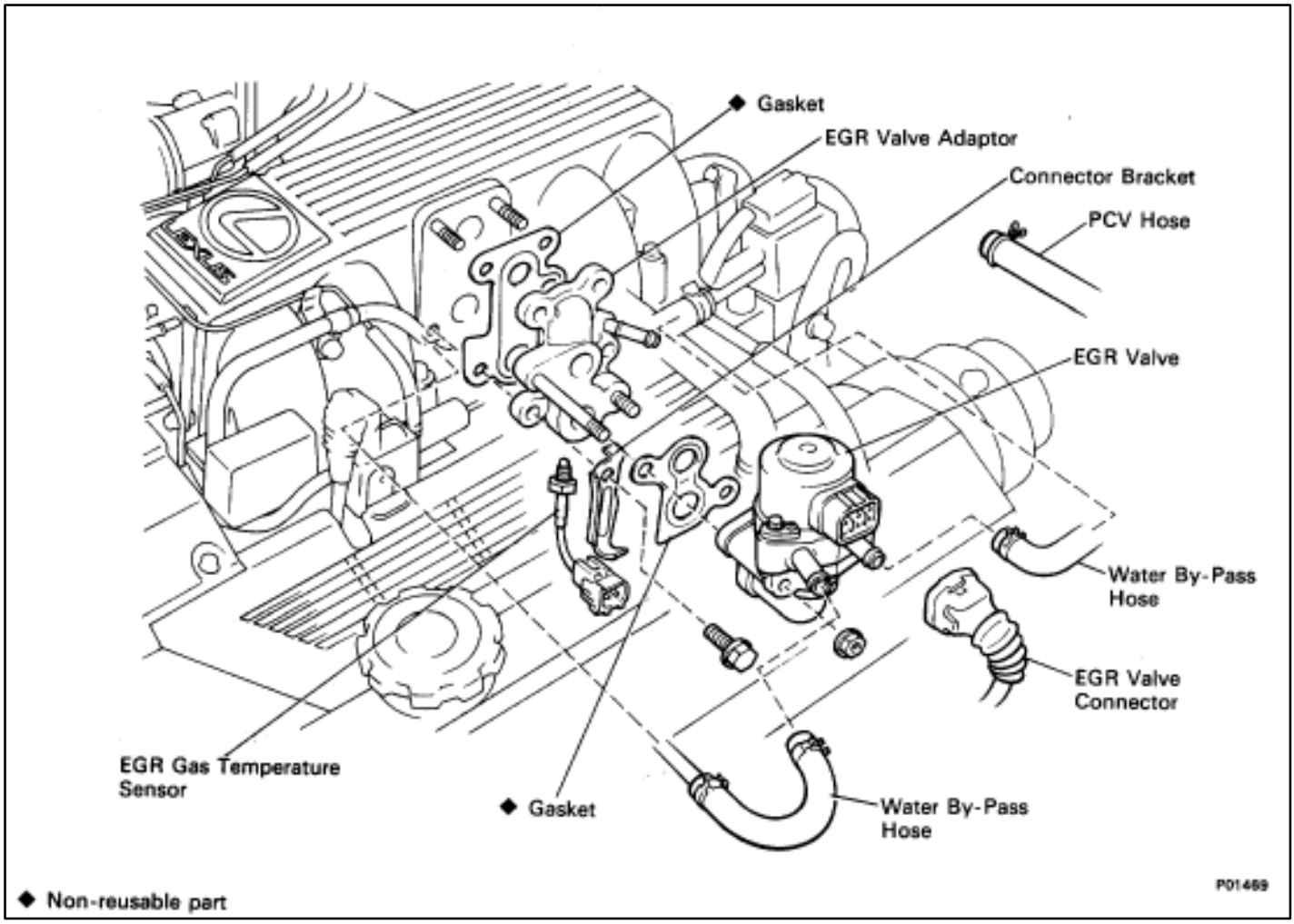

WhereEverybodyKnowsYourName

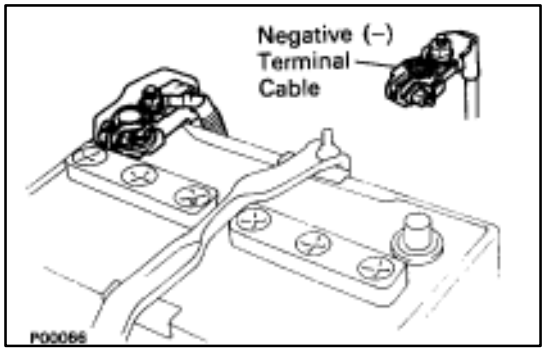

INSPECTION OF EGR GAS TEMPERATURE SENSOR

1. **DISCONNECT CABLE FROM NEGATIVE TERMINAL OF BATTERY**
   CAUTION: Work must be started after approx. 20 seconds or longer from the time the ignition switch is turned to the "LOCK" position and the negative (–) terminal cable is disconnected from the battery.
2. **DRAIN ENGINE COOLANT**
3. **REMOVE EGR VALVE**
   (a) Disconnect the EGR gas temperature sensor.
   (b) Disconnect the following hoses from the EGR valve:
      (1) Water by–pass hose (from ISC valve)
      (2) Water by–pass hose (from rear water by–pass joint)

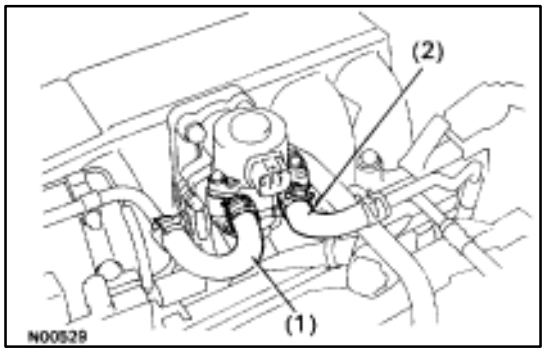

   (c) Remove the two nuts, EGR valve and gasket.

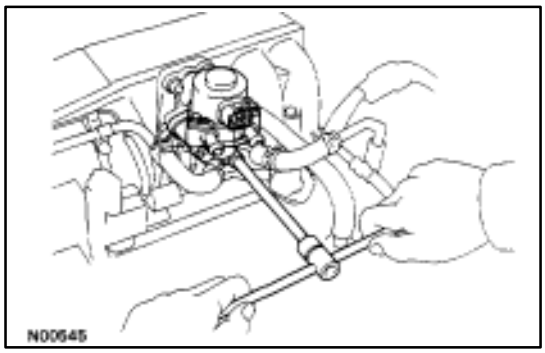

4. **REMOVE EGR VALVE ADAPTOR**
   (a) Disconnect the EGR gas temperature sensor.
   (b) Disconnect the PCV hose from the EGR valve adaptor.

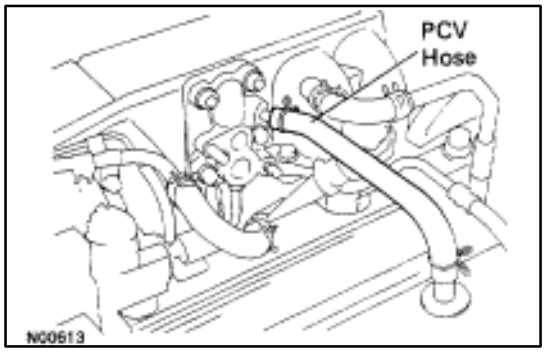

   (c) Remove the two bolts, two nuts, EGR valve adaptor and gasket.

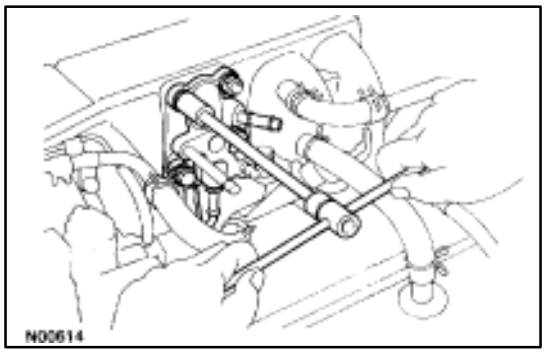

WhereEverybodyKnowsYourName

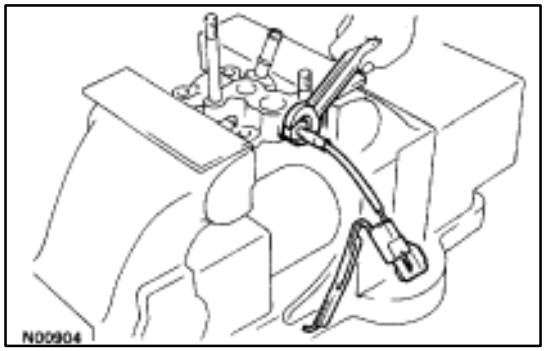

5. REMOVE EGR GAS TEMPERATURE SENSOR FROM EGR VALVE ADAPTOR

(a) Mount the EGR valve adaptor in a vise.
(b) Remove the EGR valve adaptor.
(c) Remove the connector bracket from the sensor connector.

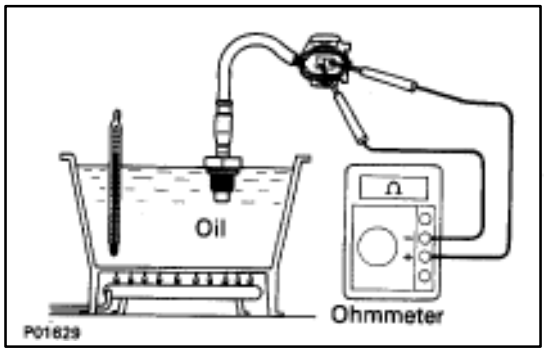

6. INSPECT EGR GAS TEMPERATURE SENSOR

Using an ohmmeter, measure the resistance between the terminals.

Resistance: 69–89 k? at 50˚C (112˚F)
12–15 k? at 100˚C (212˚F)
2–4 k? at 150˚C (302˚F)

If the resistance is not as specified, replace the sensor.

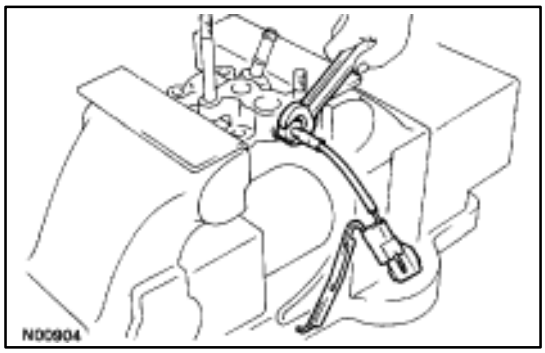

7. REINSTALL EGR GAS TEMPERATURE SENSOR TO EGR VALVE ADAPTOR

(a) Mount the EGR valve adaptor in a vise.
(b) Install the EGR gas temperature to the adaptor.
Torque: 20 N·m (200 kgf·cm, 14 ft·lbf)
(c) Install the connector bracket to the sensor connector.

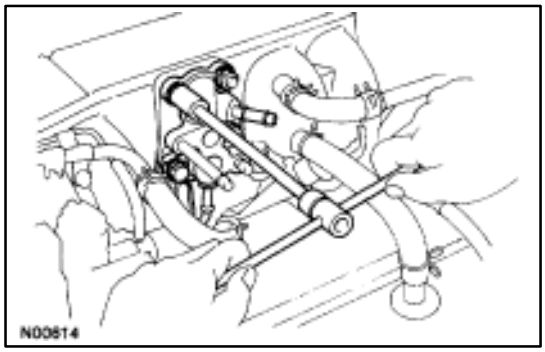

8. REINSTALL EGR VALVE ADAPTOR

(a) Install a new gasket, the adaptor and connector bracket with the two bolts, two nuts, EGR valve adaptor and gasket.
Torque: 18 N·m (185 kgf·cm, 13 ft·lbf)

NOTICE: Do not touch the air intake chamber and adaptor surfaces of the gasket with your hand.

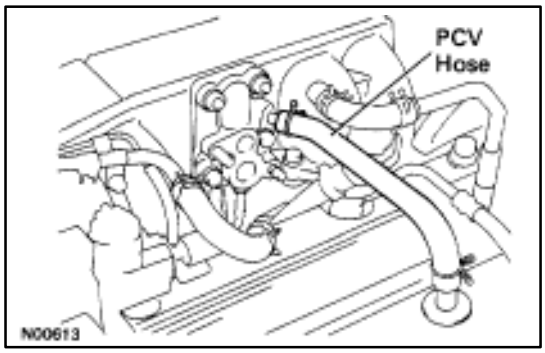

(b) Connect the PCV hose to the EGR valve adaptor.
(c) Connect the EGR gas temperature sensor.

WhereEverybodyKnowsYourName

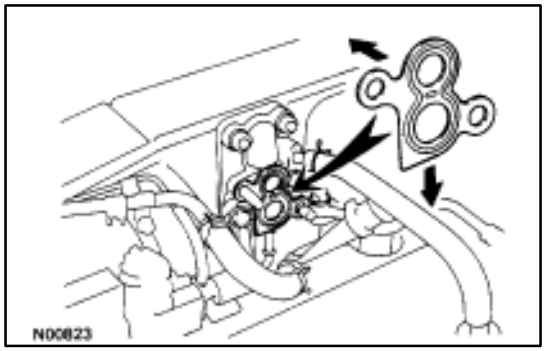

9. REINSTALL EGR VALVE

(a) Place a new gasket on the EGR valve adaptor.

NOTICE:

- **Do not touch the adaptor and EGR valve surfaces of the gasket with your hand.**
- **Align the port holes of the gasket and adaptor. Be careful of the installation direction.**

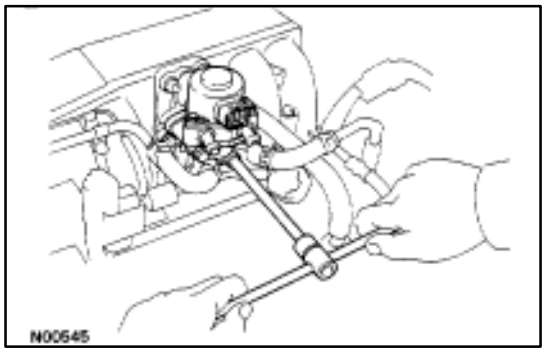

(b) Install the EGR valve with the two nuts.

Torque: 18 N·m (185 kgf·cm, 13 ft·lbf)

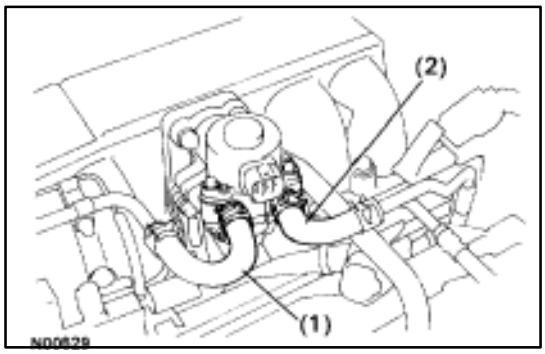

(c) Connect the following hoses to the EGR valve:
  (1) Water by–pass hose (from ISC valve)
  (2) Water by–pass hose (from rear water by–pass joint)

(d) Connect the EGR gas temperature sensor.

10. RECONNECT CABLE FROM NEGATIVE TERMINAL OF BATTERY

11. REFILL WITH ENGINE COOLANT

WhereEverybodyKnowsYourName

Knock Sensors

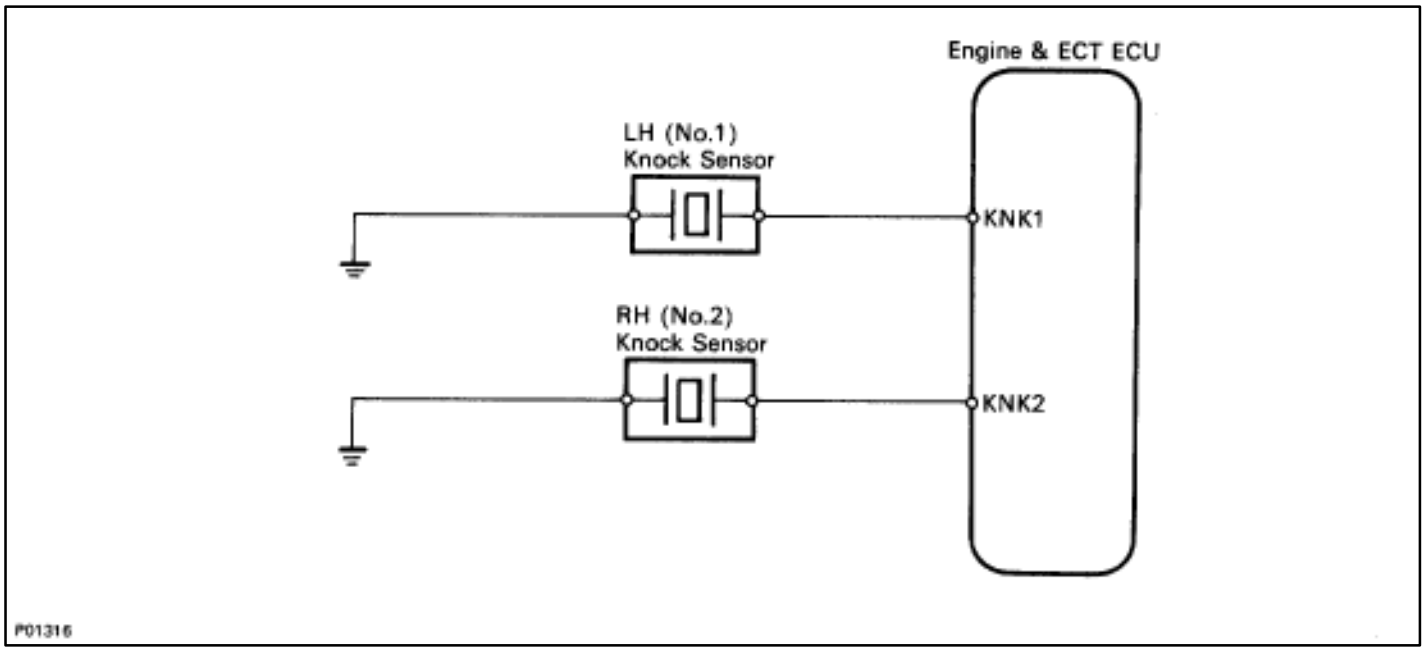

WhereEverybodyKnowsYourName

COMPONENTS FOR REMOVAL AND INSTALLATION

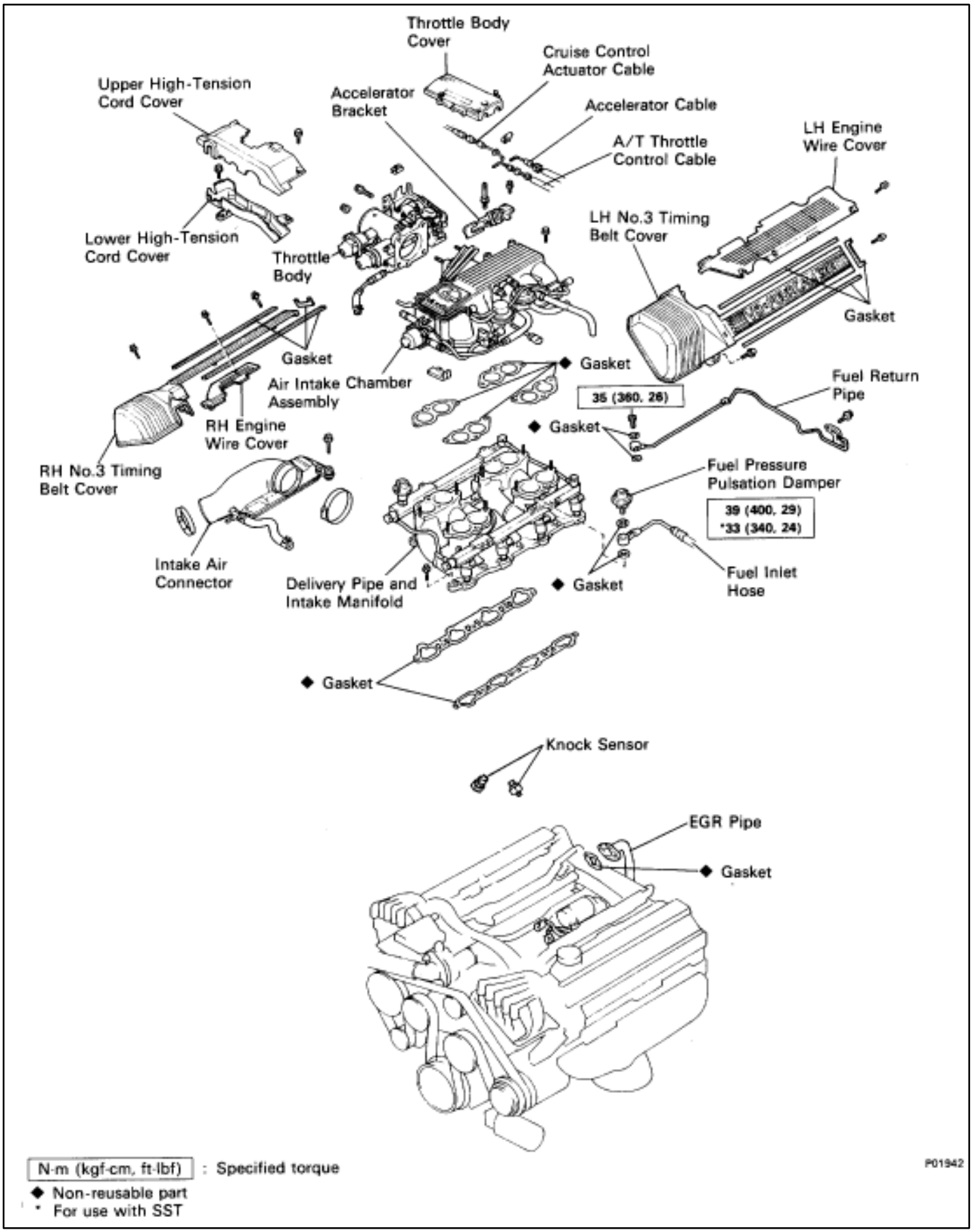

N·m (kgf·cm, ft·lbf) : Specified torque

◆ Non-reusable part

* For use with SST

WhereEverybodyKnowsYourName

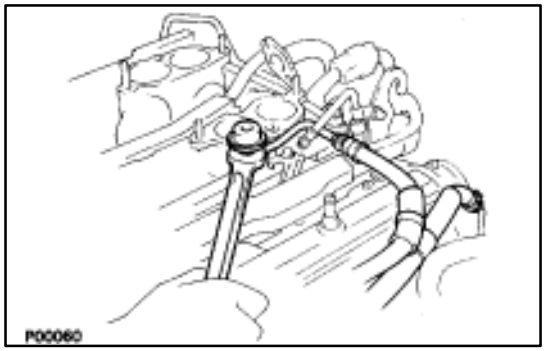

INSPECTION OF KNOCK SENSORS

1. **REMOVE AIR INTAKE CHAMBER**
   (See steps 1 to 16 on pages FI–27 to 32)
2. **DISCONNECT FUEL INLET HOSE FROM LH DELIVERY PIPE**
   Remove the pulsation damper and two gaskets, and disconnect the inlet hose.
3. **DISCONNECT FUEL RETURN HOSE FROM FUEL RETURN PIPE**

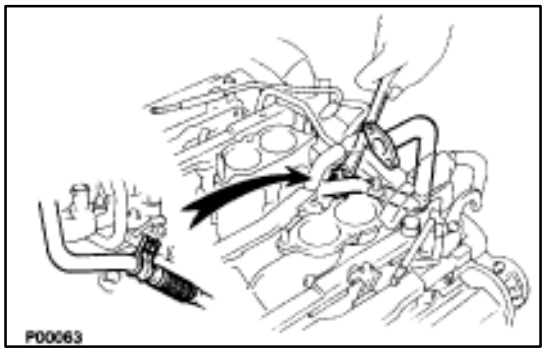

4. **DISCONNECT EGR PIPE FROM RH CYLINDER HEAD**
   Remove the bolt holding the EGR pipe to the cylinder head, and disconnect the EGR pipe.

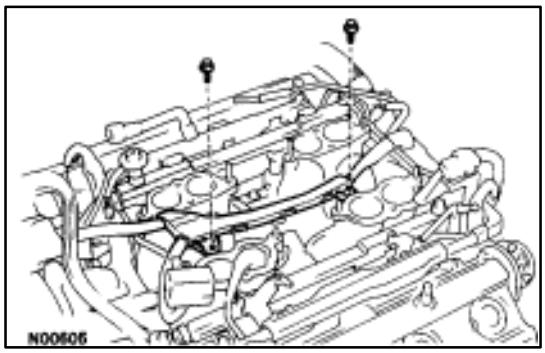

5. **DISCONNECT ENGINE WIRE FROM INTAKE MANIFOLD**
   Remove the two bolts, and disconnect the engine wire.

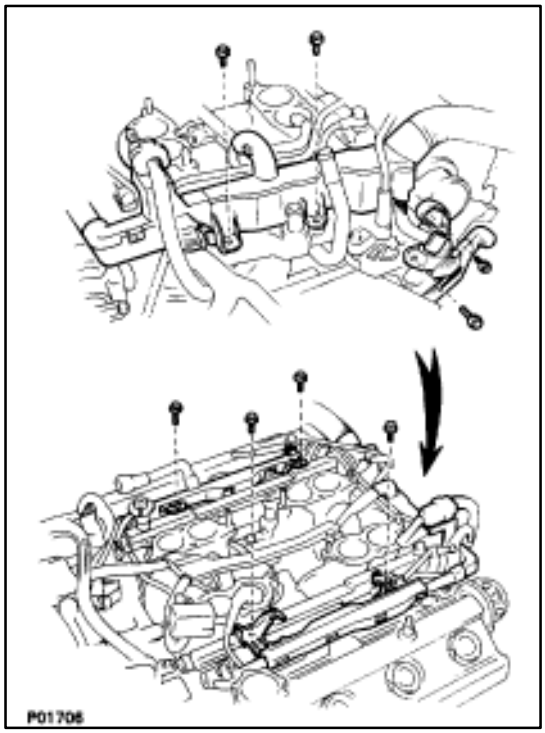

6. **DISCONNECT ENGINE WIRE FROM DELIVERY PIPES, REAR WATER BY–PASS JOINT AND RH CYLINDER HEAD**
   (a) Remove the four bolts holding the engine wire to the delivery pipes, and disconnect the engine wire from the delivery pipe.
   (b) Remove the two bolts holding the engine wire to the rear water by–pass joint, and disconnect the engine wire from the rear water by–pass joint.
   (c) Remove the two bolts holding the engine wire to the rear side of the RH cylinder head, and disconnect the engine wire from the RH cylinder head.

WhereEverybodyKnowsYourName

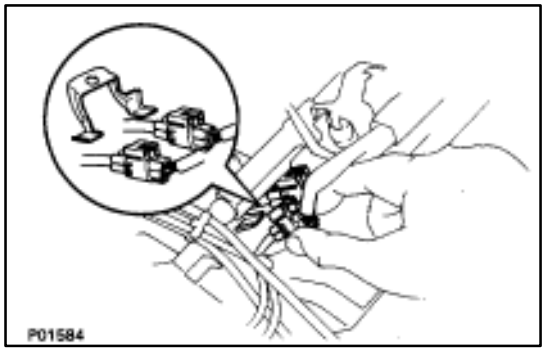

(d) Disconnect the two engine wire connectors from the connector bracket on the front side of the LH delivery pipe.
(e) Disconnect the eight injector connectors.

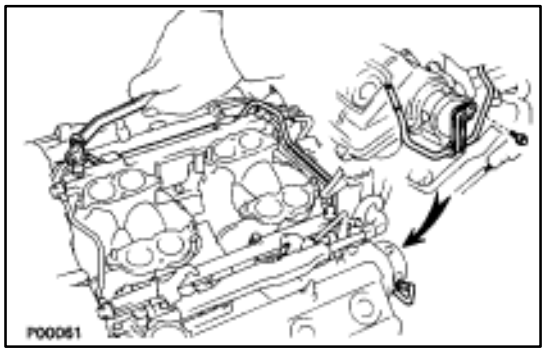

7. REMOVE FUEL RETURN PIPE
(a) Remove the bolt holding the return pipe to the LH cylinder head.
(b) Remove the union bolt, two gaskets and return pipe.

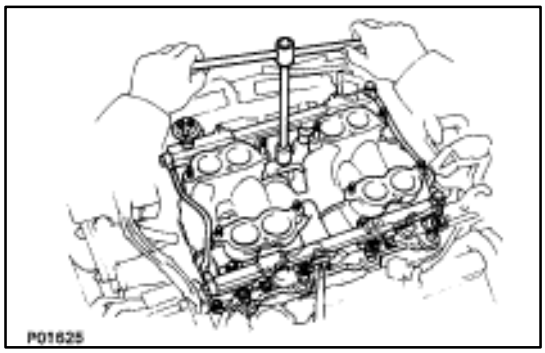

8. REMOVE DELIVERY PIPES AND INTAKE MANIFOLD ASSEMBLY
(a) Remove the six bolts and four nuts holding the intake manifold to the cylinder heads.
(b) Remove the two delivery pipes and intake manifold assembly.
(c) Remove the two intake manifold gaskets.

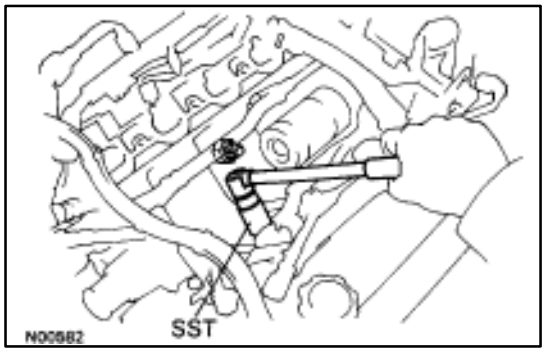

9. REMOVE KNOCK SENSOR
(a) Disconnect the knock sensor connectors
(b) Using SST, remove the two knock sensors.
SST 09816–30010

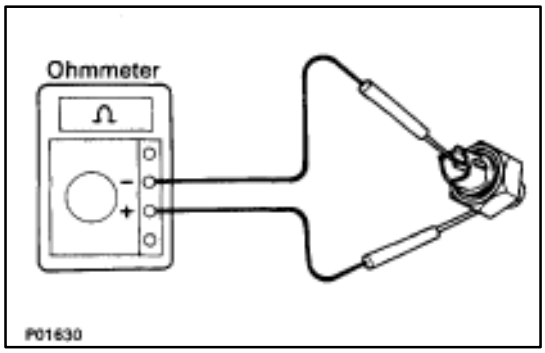

10. INSPECT KNOCK SENSOR
Using an ohmmeter, check that there is no continuity between the terminal and body.
If there is continuity, replace the sensor.

WhereEverybodyKnowsYourName

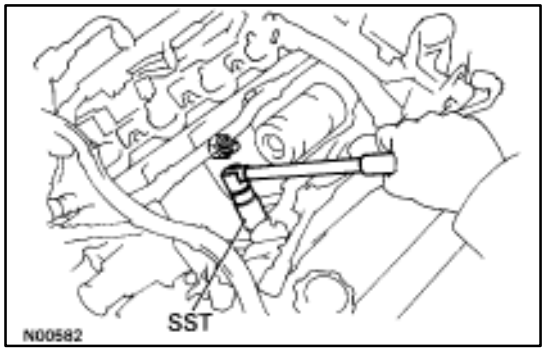

11. REINSTALL KNOCK SENSOR

(a) Using SST, remove the two knock sensors.

SST 09816–30010

Torque: 44 N·m (450 kgf·cm, 33 ft·lbf)

(b) Connect the knock sensor connectors.

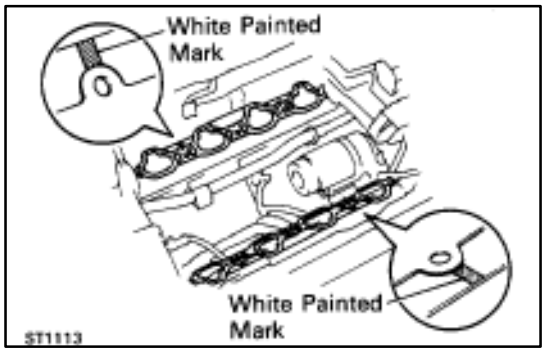

12. REINSTALL DELIVERY PIPES AND INTAKE MANIFOLD ASSEMBLY

(a) Place two new gaskets on the cylinder heads with the white painted mark facing upward.

NOTICE: Align the port holes of the gasket and cylinder head. Be careful of the installation direction.

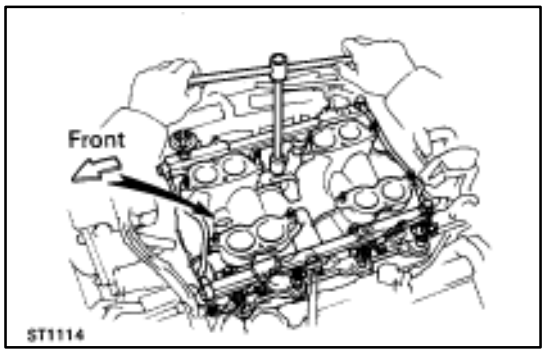

(b) Place the delivery pipes and intake manifold assembly in position on the cylinder heads with the arrow mark on the intake manifold facing forward.

NOTICE: Be careful of the installation direction.

(c) Install the six mounting bolts and four mounting nuts.

Torque: 18 N·m (185 kgf·cm, 13 ft·lbf)

HINT: Use bolts 30 mm (1.18 in.) in length.

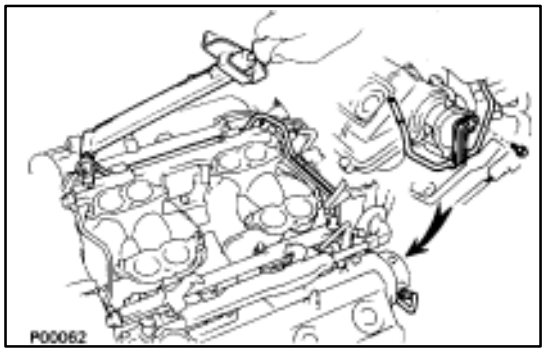

13. REINSTALL FUEL RETURN PIPE

Install the return pipe with two new gaskets, union bolt and bolt.

Torque (Union bolt):

35 N·m (360 kgf·cm, 26 ft·lbf)

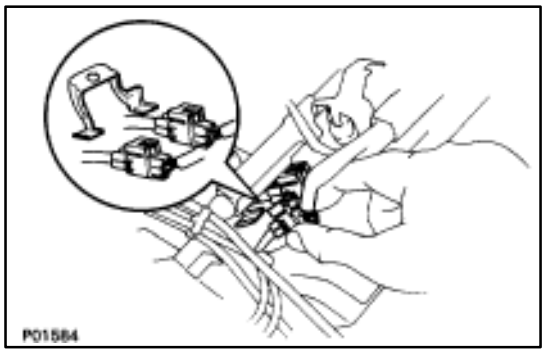

14. REINSTALL ENGINE WIRE TO DELIVERY PIPES, REAR WATER BY–PASS JOINT AND RH CYLINDER HEAD

(a) Connect the eight injector connectors.

(b) Connect the two engine wire connectors to the connector bracket on the LH delivery pipe.

WhereEverybodyKnowsYourName

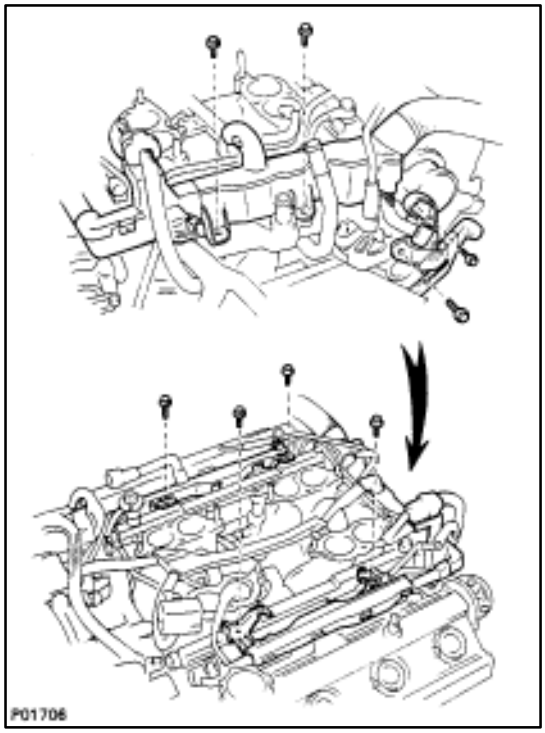

(c) Install the engine wire to the RH cylinder head with the two bolts.
(d) Install the engine wire to the rear water by–pass joint with the two bolts.
(e) Install the engine wire to the delivery pipes with the four bolts.

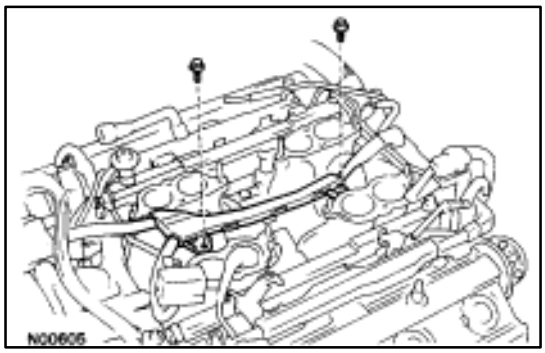

15. REINSTALL ENGINE WIRE TO INTAKE MANIFOLD
Install the engine wire with the two bolts.

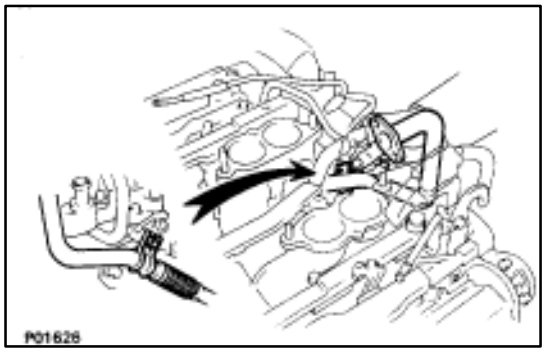

16. TEMPORARILY REINSTALL EGR PIPE TO RH CYLINDER HEAD
Temporarily Install the EGR pipe with the bolt.

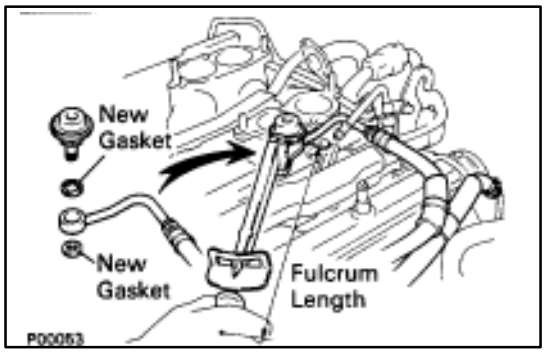

17. RECONNECT FUEL RETURN HOSE TO FUEL RETURN PIPE
18. RECONNECT FUEL INLET HOSE TO LH DELIVERY PIPE
Using SST, connect the inlet hose with two new gaskets and pulsation damper.
SST 09612–24014 (09617–24011)
Torque: 39 N·m (400 kgf·cm, 29 ft·lbf)
33 N·m (340 kgf·cm, 24 ft·lbf) for SST
HINT: Use a torque wrench with a fulcrum length of 30 cm (11.81 in.).

WhereEverybodyKnowsYourName

19. INSTALL AIR INTAKE CHAMBER
(See steps 2 to 18 on pages FI–35 to 41)
HINT: After the air intake chamber is installed, tighten the bolt holding the EGR pipe to the RH cylinder head.

WhereEverybodyKnowsYourName

Main Oxygen Sensors

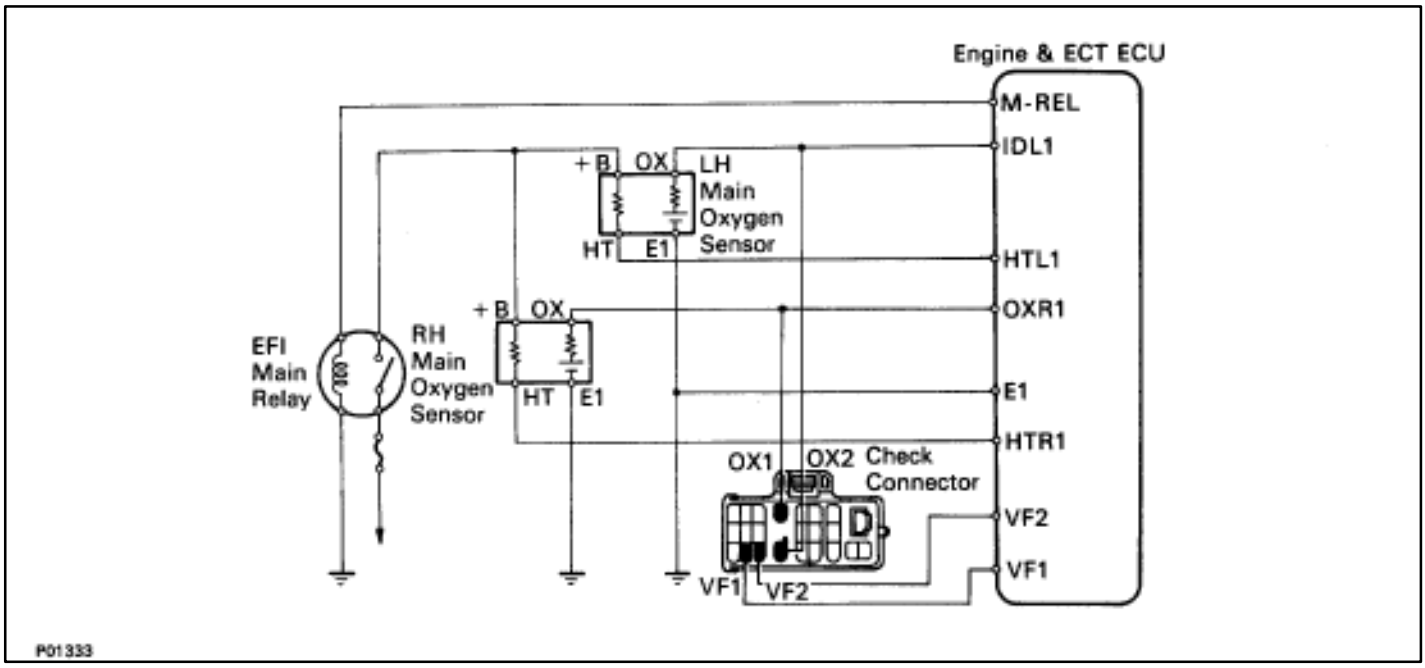

INSPECTION OF MAIN OXYGEN SENSORS

1. WARM UP ENGINE

Allow the engine to warm up to normal operating temperature.

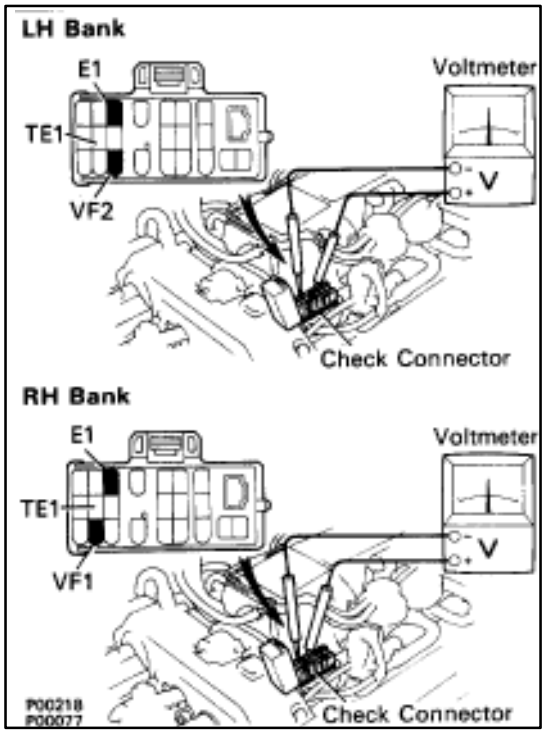

2. INSPECT FEEDBACK VOLTAGE

Connect the positive (+) probe of a voltmeter to terminal VF1 (for LH bank) or VF2 (for RH bank) of the check (”DIAGNOSIS”) connector, and negative (–) probe to terminal E1. Perform the test as follows described on the next page.

HINT: Use SST when connecting between terminals TE1 and E1 of the check connector.

SST 09843–18020

WhereEverybodyKnowsYourName

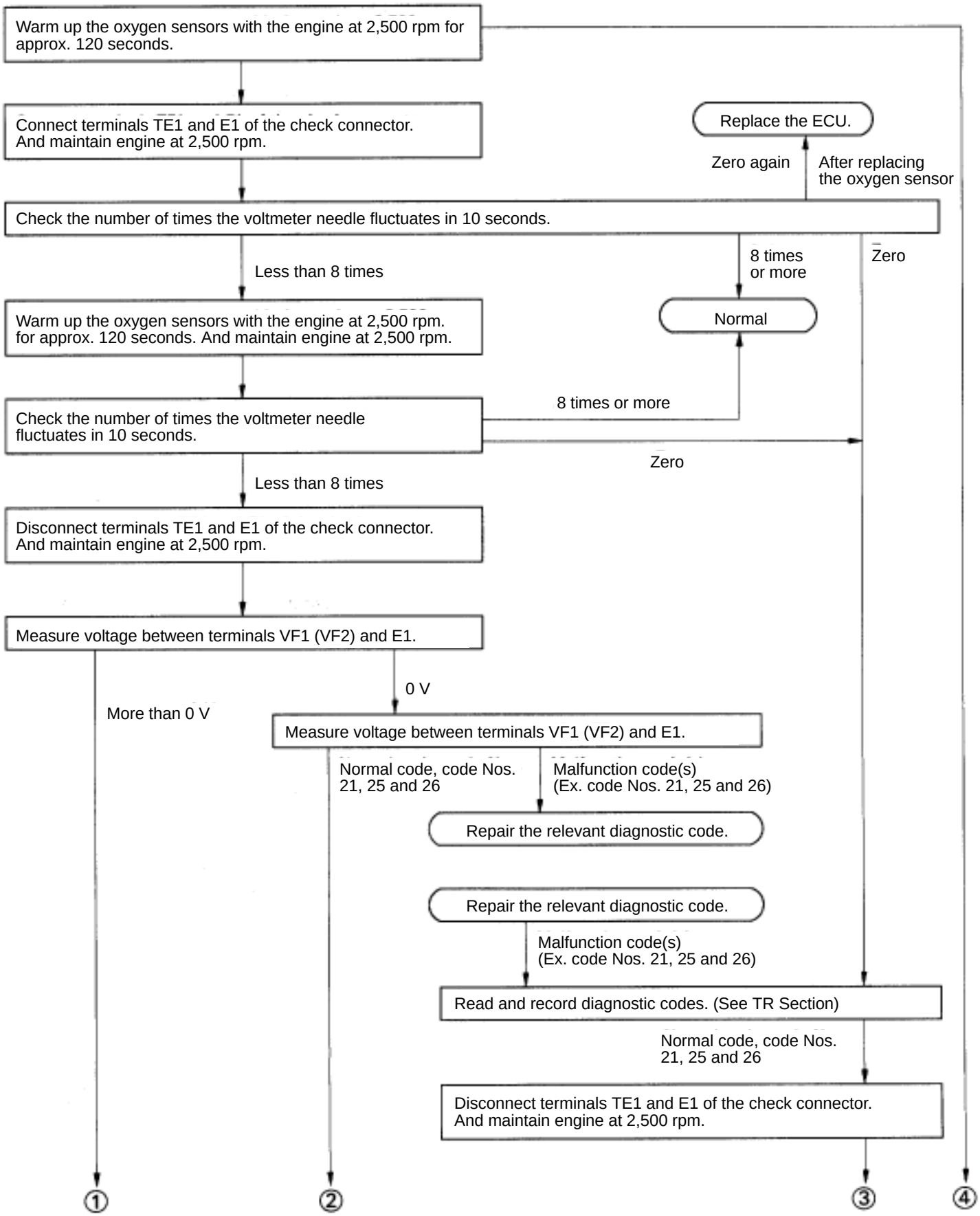

CONTINUED ON PAGE FI–115

WhereEverybodyKnowsYourName

CONTINUED FROM PAGE FI–114

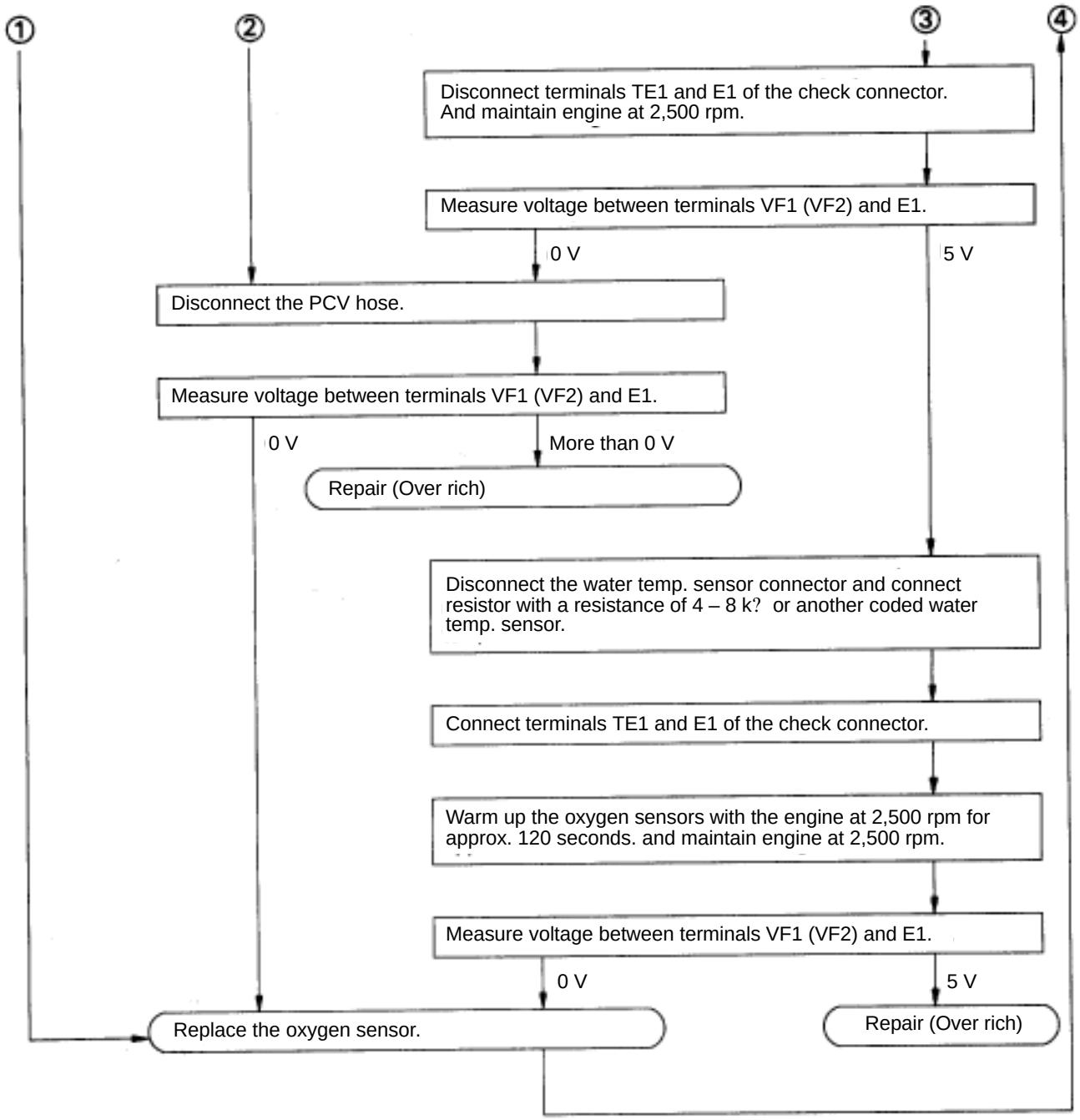

WhereEverybodyKnowsYourName

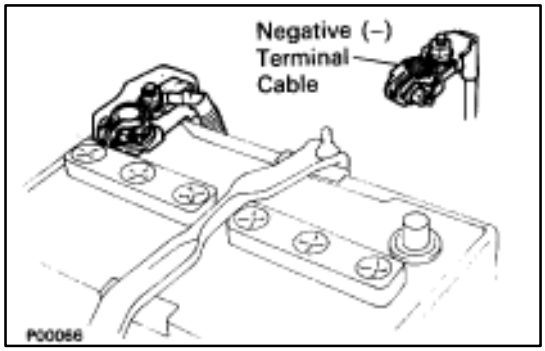

3. DISCONNECT CABLE FROM NEGATIVE TERMINAL OF BATTERY

CAUTION: Work must be started after approx. 20 seconds or longer from the time the ignition switch is turned to the "LOCK" position and the negative (–) terminal cable is disconnected from the battery.

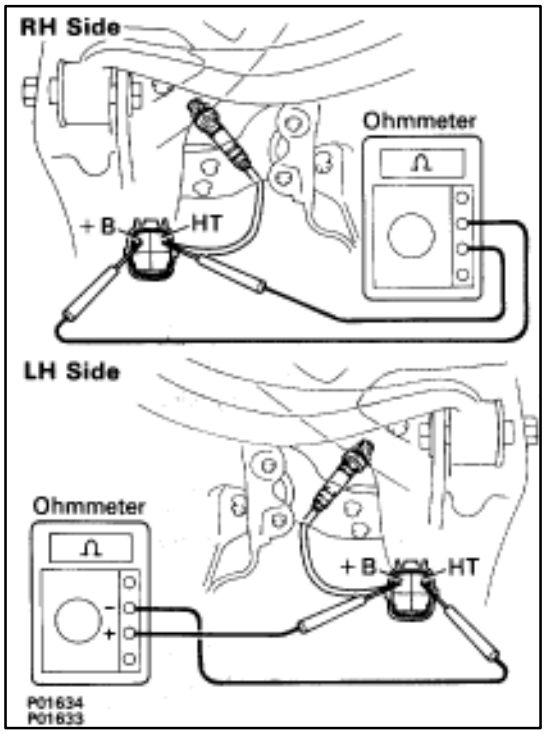

4. INSPECT HEATER RESISTANCE OF MAIN OXYGEN SENSORS

(a) Disconnect the oxygen sensor connectors.

(b) Using an ohmmeter, measure the resistance between the terminals +B and HT.

Resistance: 5.1–6.3 ? at 20˚C (68˚F)

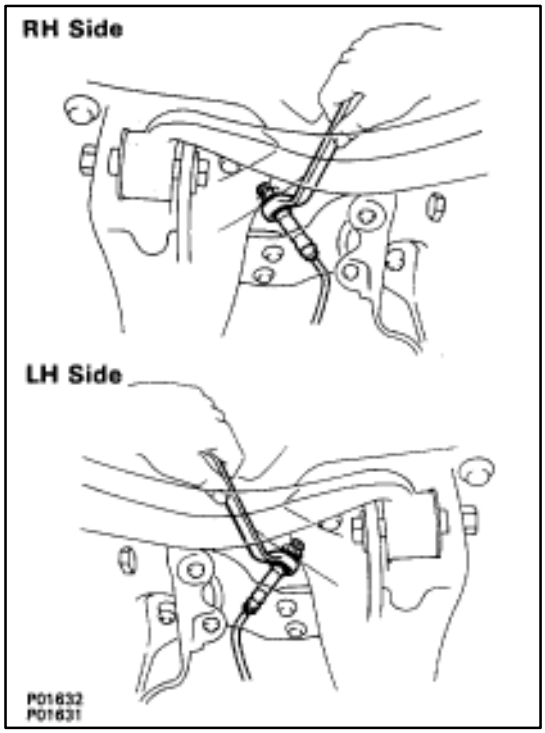

If the resistance is not as specified, replace the sensor.

Torque: 44 N·m (450 kgf·cm, 33 ft·lbf)

(c) Reconnect the oxygen sensor connectors.

5. RECONNECT CABLE TO NEGATIVE TERMINAL OF BATTERY

WhereEverybodyKnowsYourName

Sub–Oxygen Sensors

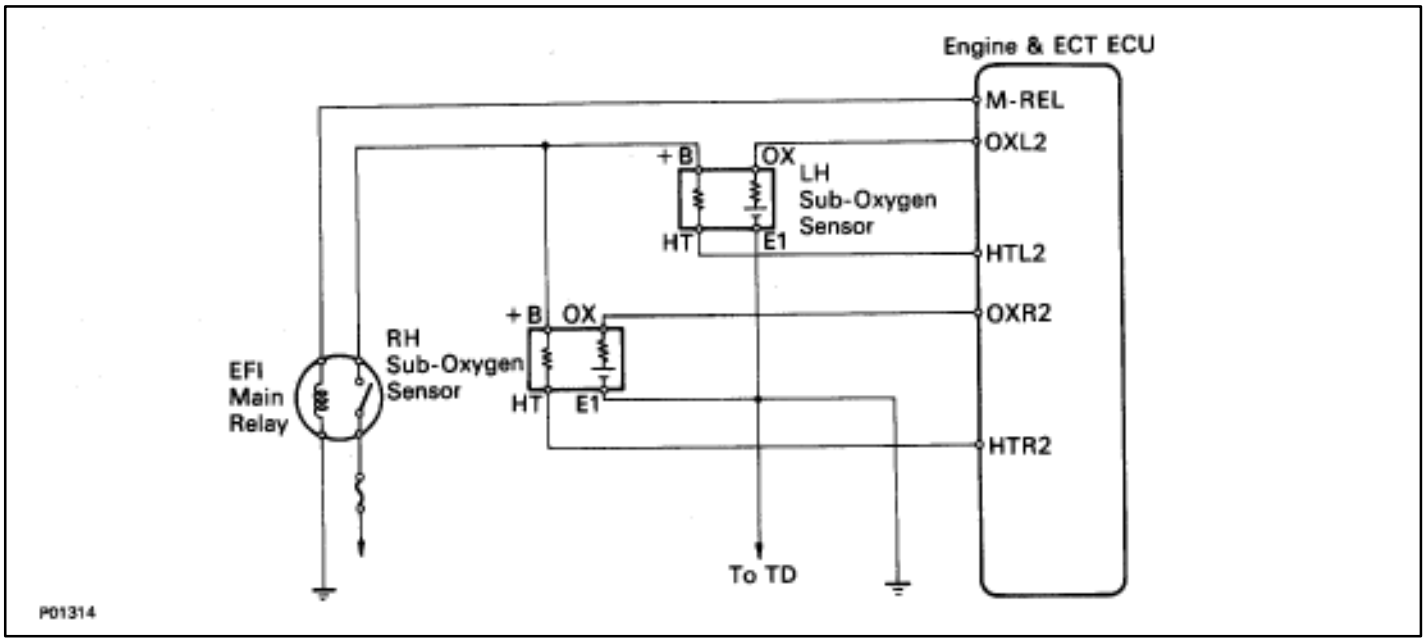

COMPONENTS FOR REMOVAL AND INSTALLATION

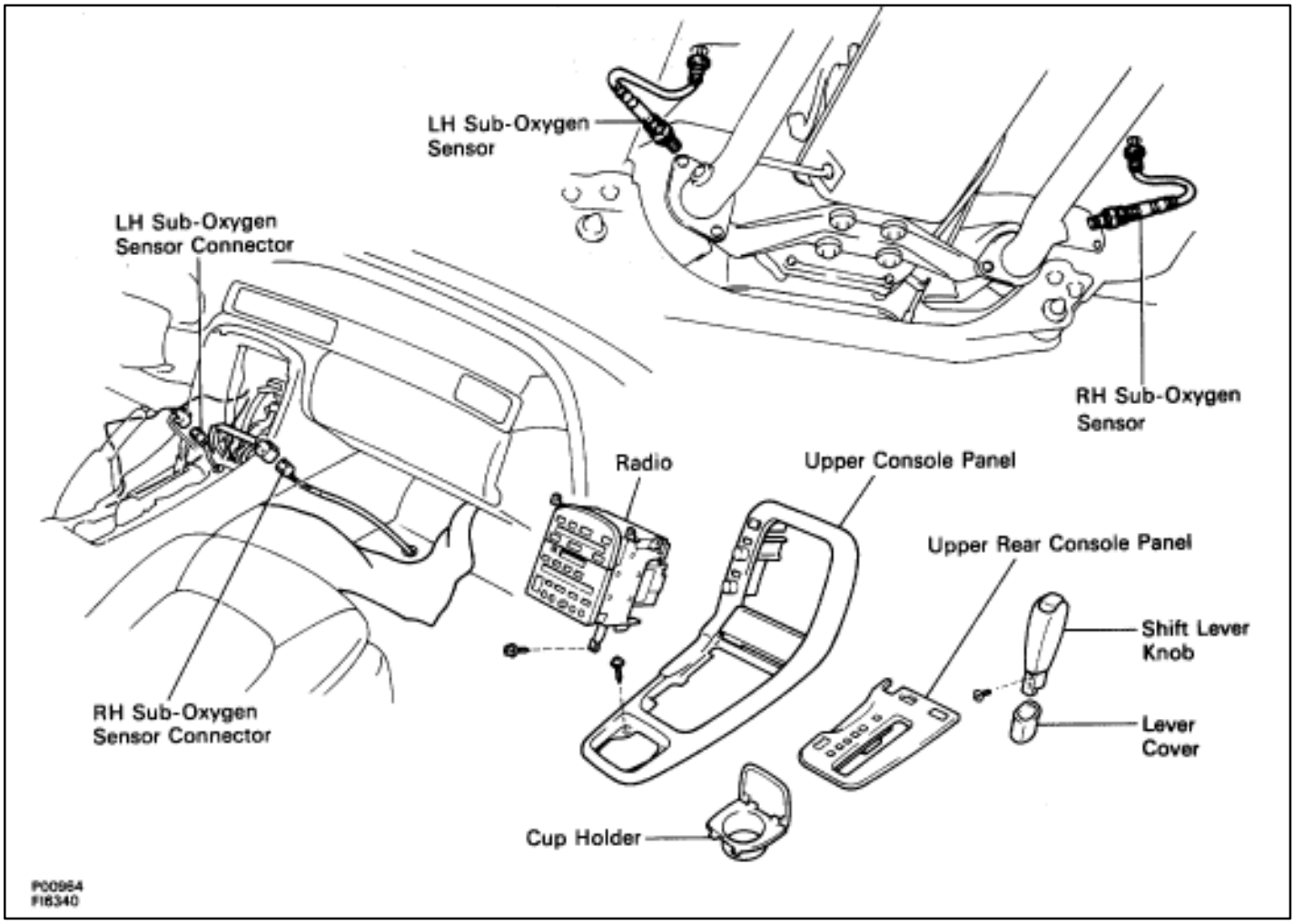

WhereEverybodyKnowsYourName

INSPECTION OF SUB–OXYGEN SENSORS

1. INSPECT SUB–OXYGEN SENSORS

(a) Cancel diagnostic code. (See TR section)

(b) Allow the engine to warm up to normal operating temperature.

(c) Drive for 5 minutes or more between 80km/h (50 mph) and 100 km/h (62 mph) in ”D” range.

(d) Following the conditions in step (c), press fully on the accelerator pedal for 2 seconds or more.

HINT: Do not exceed 100 km/h (62 mph), or diagnostic code will be cancelled.

(e) Stop the vehicle, and turn the ignition switch to OFF.

(f) Carry out steps (b), (c) and (d) again to test acceleration.

If code No.27 reappears again, check the sub–oxygen sensor circuit. If the circuit is normal, replace the sub–oxygen sensor.

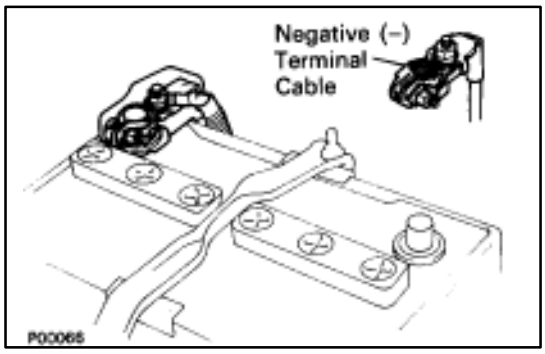

2. DISCONNECT CABLE FROM NEGATIVE TERMINAL OF BATTERY

CAUTION: Work must be started after approx. 20 seconds or longer from the time the ignition switch is turned to the ”LOCK” position and the negative (–) terminal cable is disconnected from the battery.

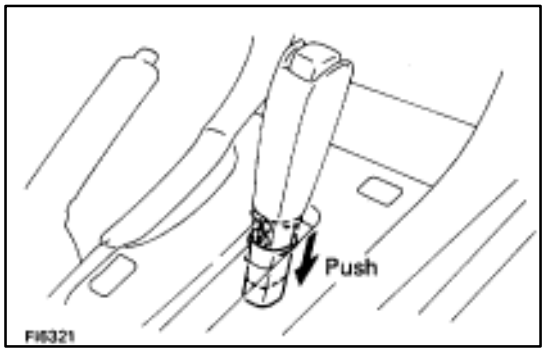

3. REMOVE TRANSMISSION SHIFT LEVER KNOB

(a) Push down the lever cover.

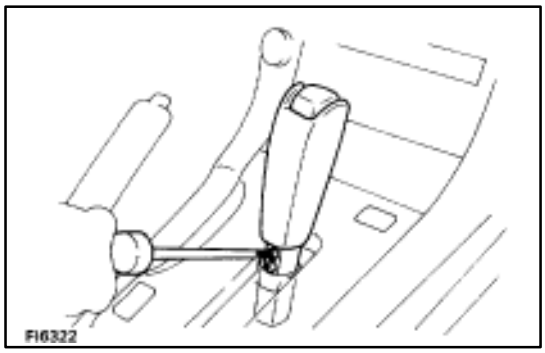

(b) Remove the two screws and shift lever knob.

(c) Remove the lever cover.

WhereEverybodyKnowsYourName

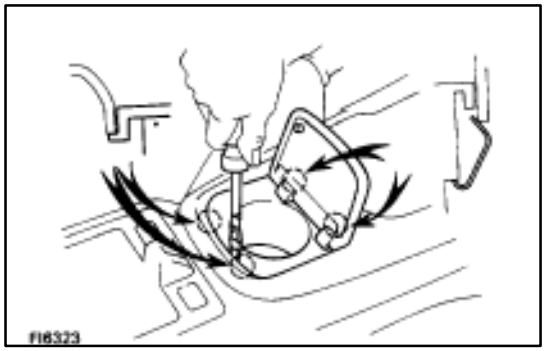

4. REMOVE CUP HOLDER

Using a screwdriver, pry out the rear side of the cup holder. Remove the cup holder.

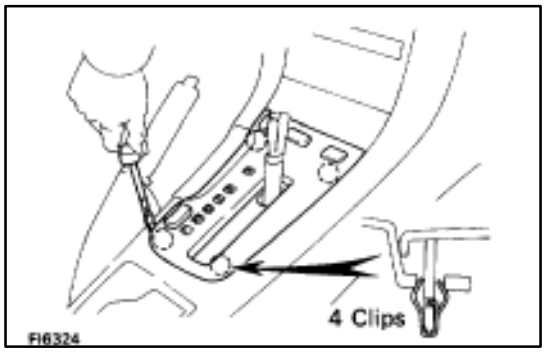

5. REMOVE UPPER REAR CONSOLE PANEL

Using a screwdriver, pry out the console panel.

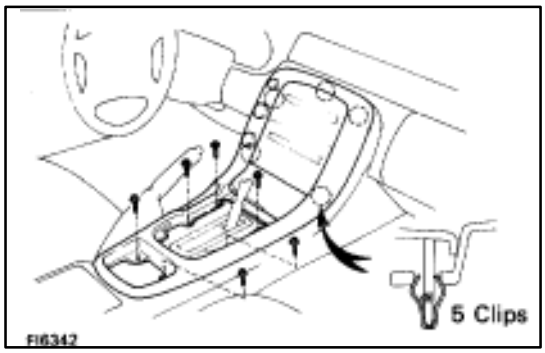

6. REMOVE UPPER CONSOLE PANEL

(a) Remove the six mounting screws.
(b) Using a screwdriver, pry out the console panel.

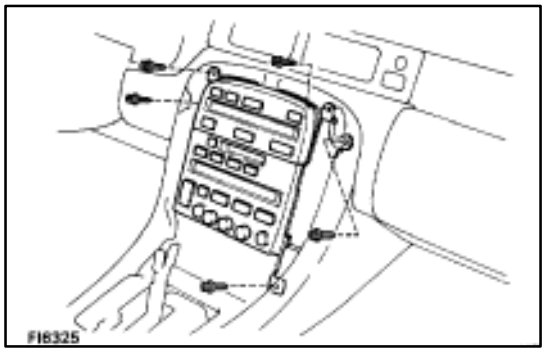

7. REMOVE RADIO

(a) Remove the five mounting bolts.
(b) Disconnect the wiring connectors and antenna cable, and remove the radio.

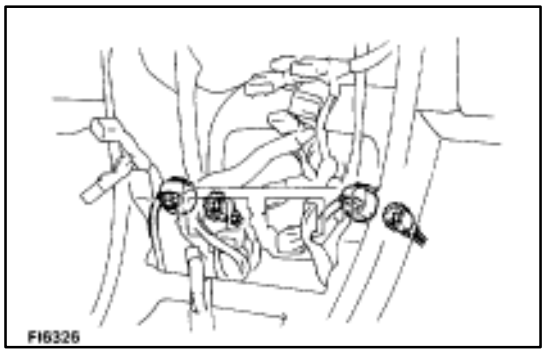

8. DISCONNECT SUB–OXYGEN SENSOR CONNECTORS

WhereEverybodyKnowsYourName

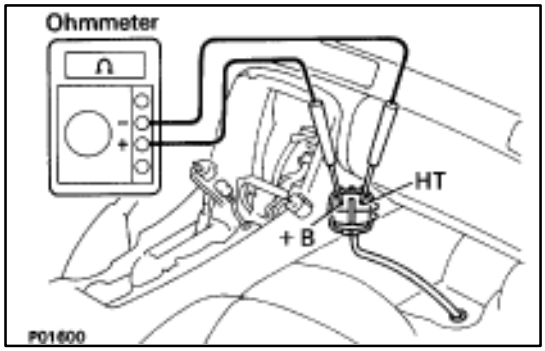

9. INSPECT HEATER RESISTANCE OF SUB–OXYGEN SENSORS

Using an ohmmeter, measure the resistance between the terminals +B and HT.

Resistance: 5.1–6.3 ? at 20˚C (68˚F)

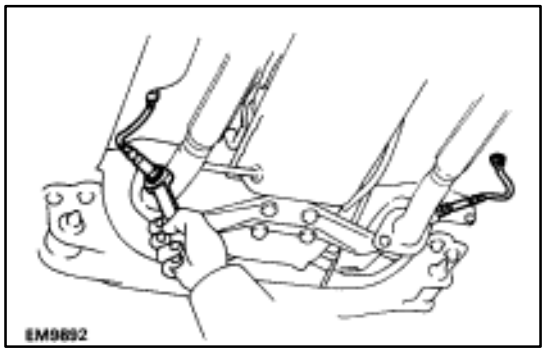

If the resistance is not as specified, replace the sensor as follows:

- Disconnect the grommet from the floor panel, and pull out the wire of the sub–oxygen sensor from the floor panel.
- Remove the sub–oxygen sensor.
- Install a new sub–oxygen sensor.

Torque: 44 N·m (450 kgf·cm, 33 ft·lbf)

- Run the wire of the sub–oxygen sensor through the hole in the floor panel.

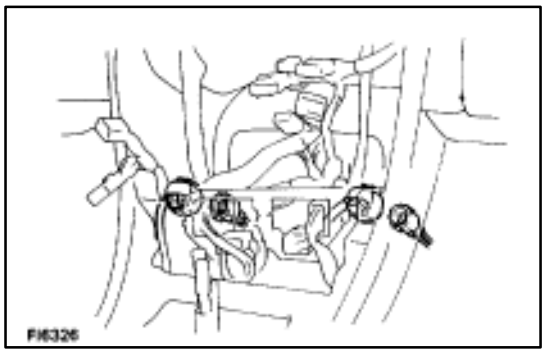

10. RECONNECT SUB–OXYGEN SENSOR CONNECTORS

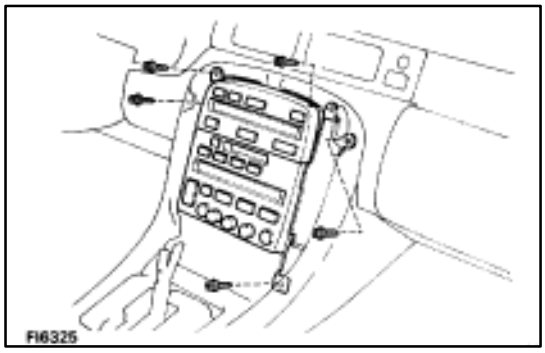

11. REINSTALL RADIO

(a) Connect the wiring connectors and antenna cable.
(b) Install the radio with the five bolts.

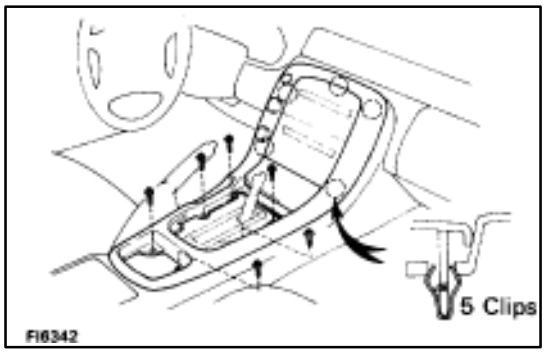

12. REINSTALL UPPER REAR CONSOLE PANEL

(a) Fit the console panel to the console box with five clips.
(b) Install the console panel with the six screws.

WhereEverybodyKnowsYourName

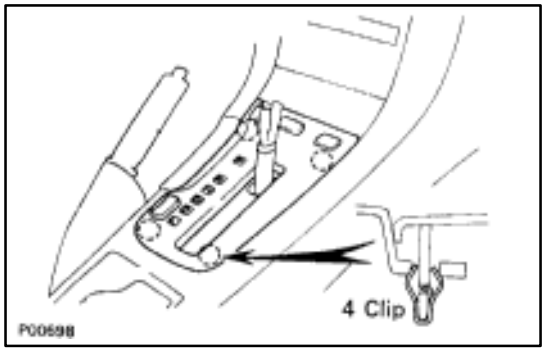

13. REINSTALL UPPER CONSOLE PANEL

Fit the console panel to the console box with the four clips.

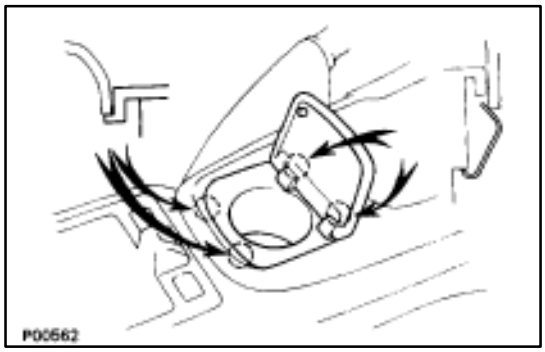

14. REINSTALL CUP HOLDER

Fit the cup holder to the console box.

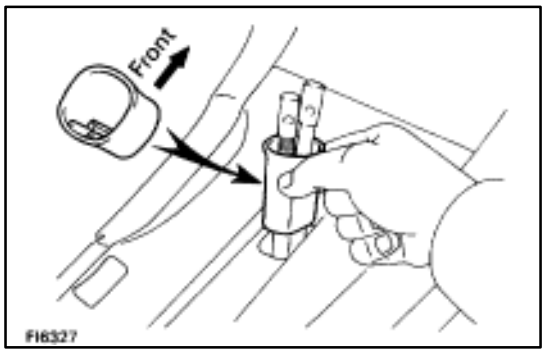

15. REINSTALL TRANSMISSION SHIFT LEVER KNOB

(a) Slide the lever cover on the lever shaft.

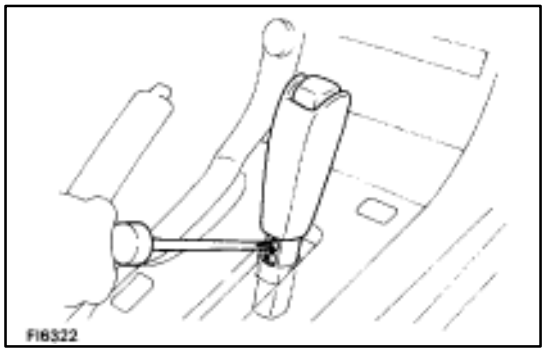

(b) Install the shift lever knob with the two screws.

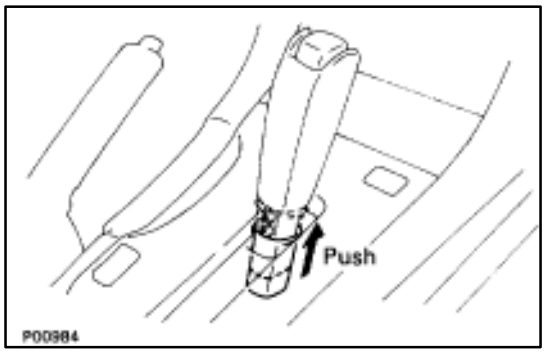

(c) Attach the lever cover to the lower side of the lever knob.

16. RECONNECT CABLE TO NEGATIVE TERMINAL OF BATTERY

WhereEverybodyKnowsYourName

Preparation

SST (SPECIAL SERVICE TOOLS)

Illustration	Part No.	Part Name	Note
	09268–41045	Injection Measuring Tool Set	
	(90268–41070)	No. 4 Union	Injector
	(09268–41080)	No. 6 Union	Cold start Injector
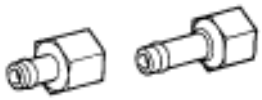	**(09268–52010)**	Injection Measuring Attachment	Injector
	09268–45012	EFI Fuel Pressure Gauge	
	09612–24014	Steering Gear Housing Overhaul Tool Set	
	(09617–24011)	Steering Rack Wrench	Fuel pressure pulsation damper
	09631–22020	Power Steering Hose Nut 14 X 17 mm Wrench Set	Fuel line flare nut
	09816–30010	Oil Pressure Switch Socket	Knock sensor
	09842–30055	Wire “G” EFI Inspection	Cold start Injector
	09842–30070	Wire “F” EFI Inspection	Injector
	09843–18020	Diagnosis Check Wire	
	0990–01000	Engine Control Computer Check Harness “A”	

WhereEverybodyKnowsYourName

RECOMMENDED TOOLS

Illustration	Part No.	Part Name	Note
	09082–0015	TOYOTA Electrical Tester	
	09200–00010	Engine Adjust Kit	
	09258–00030	Hose Plug Set	Plug for the Vacuum hose, fuel hose ect.

EQUIPMENT

Part Name	Note
Graduated cylinder	Injector
Tachometer	
Torque wrench	

SSM (SERVICE SPECIAL MATERIALS)

Part Name	Part No.	Use etc.
Seal packing 1282B, Three bond 1282B or equivalent	08826–00100	Water inlet housing

WhereEverybodyKnowsYourName

Fuel pump ECU

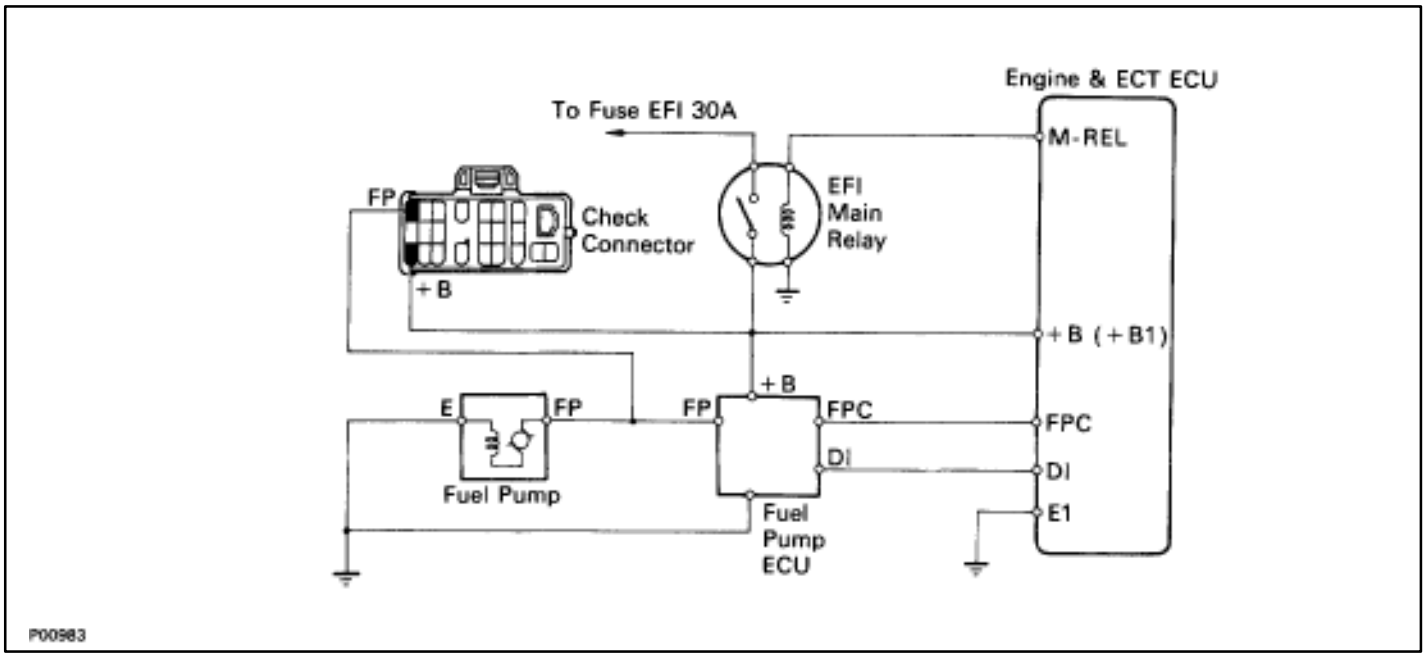

COMPONENTS FOR REMOVAL AND INSTALLATION

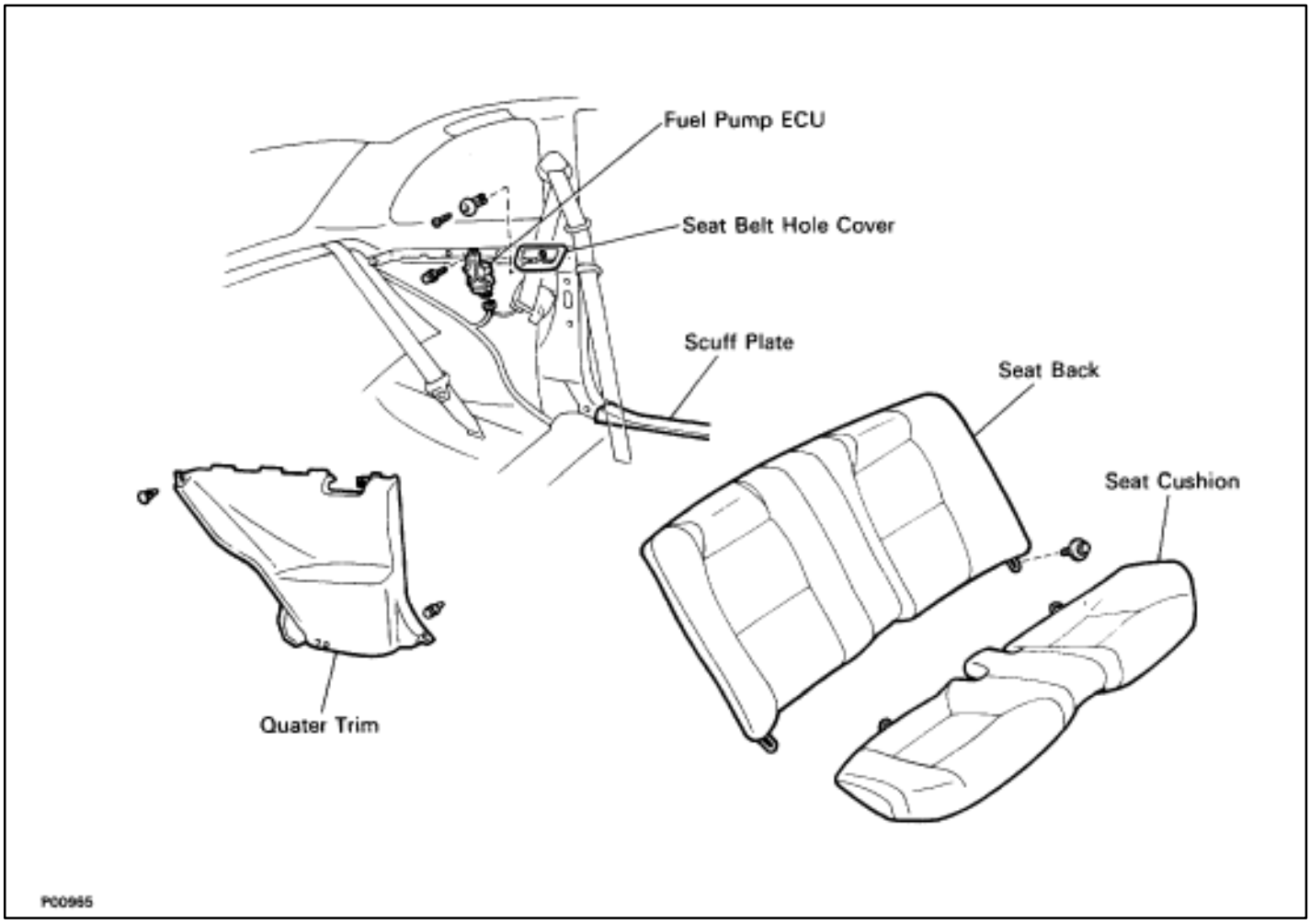

WhereEverybodyKnowsYourName

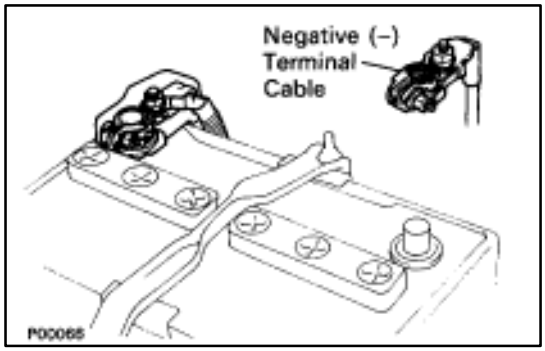

INSPECTION OF FUEL PUMP ECU

1. **DISCONNECT CABLE FROM NEGATIVE TERMINAL OF BATTERY**
   CAUTION: Work must be started after approx. 20 seconds or longer from the time the ignition switch is turned to the "LOCK" position and the negative (–) terminal cable is disconnected from the battery.
2. **REMOVE SEAT CUSHION AND BACK**

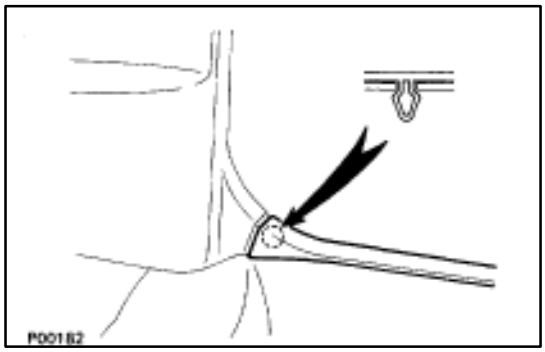

3. **REMOVE QUARTER TRIM**
   (a) Disconnect the rear side of the scuff plate by pulling it.

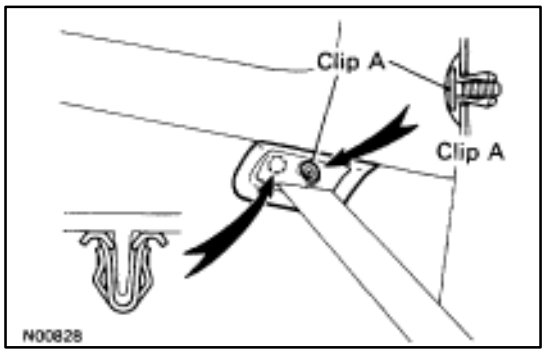

   (b) Remove clip A.
   (c) Remove the belt hole cover by pulling it.

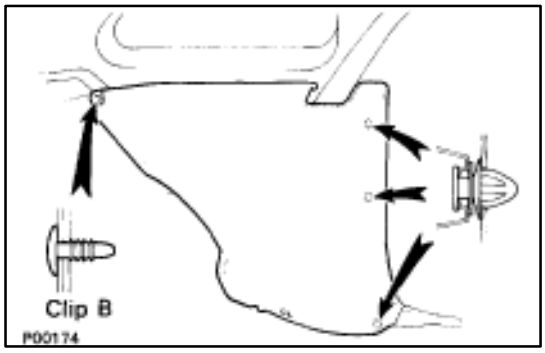

   (d) Remove clip B.
   (e) Remove the quarter trim by pulling it.

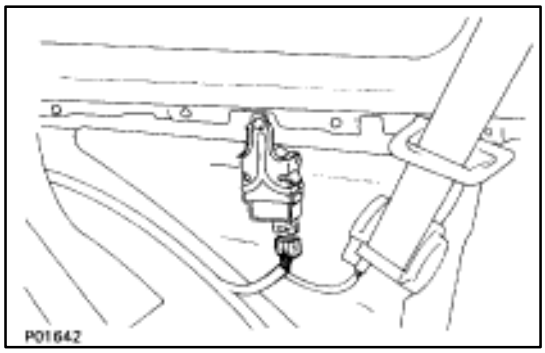

4. **DISCONNECT FUEL PUMP ECU CONNECTOR**

WhereEverybodyKnowsYourName

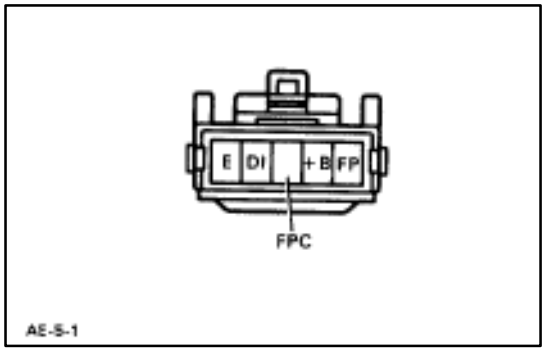

5. INSPECT FUEL PUMP ECU

(a) Connect the cable to the negative (–) terminal of the battery.

(b) Check the connector on the wiring harness side as shown in the chart.

Check for	Tester connection	Condition	Specified value
Continuity	E – Ground	–	Continuity
Continuity	DI – Ground	–	Continuity
Voltage	FP – Ground	Sudden racing	12 – 14 V
		Idling	8 – 10 V
Voltage	+ B – Ground	IG SW ON	10 – 14 V
Voltage	FPC – Ground	Sudden racing (1,600 rpm or more)	4 – 6 V
		Idling	2.5 V

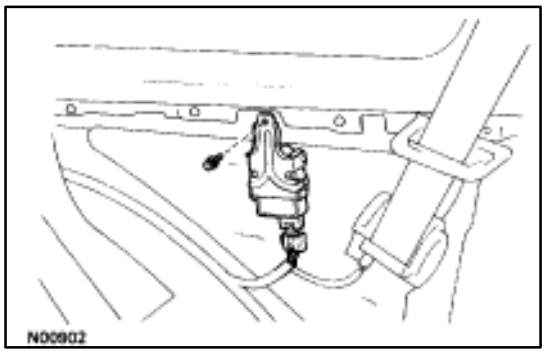

If circuit is as specified, replace the fuel pump ECU.

(c) Disconnect the cable from the negative (–) terminal of the battery.

6. RECONNECT FUEL PUMP ECU CONNECTOR

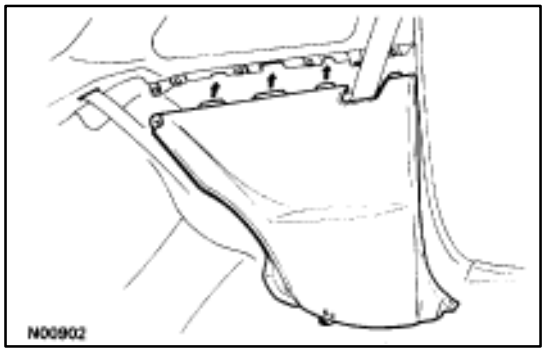

7. INSTALL QUARTER TRIM

(a) Attach the upper side of the quarter trim to the quarter panel.

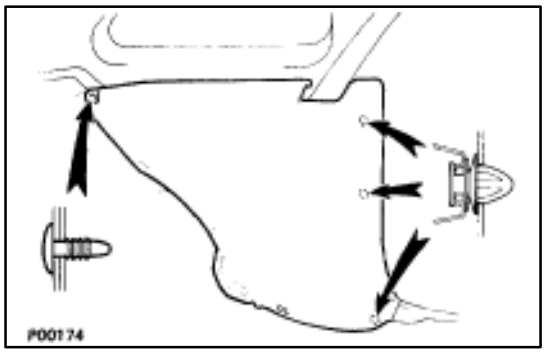

(b) Install the quarter trim with the four clips.

WhereEverybodyKnowsYourName

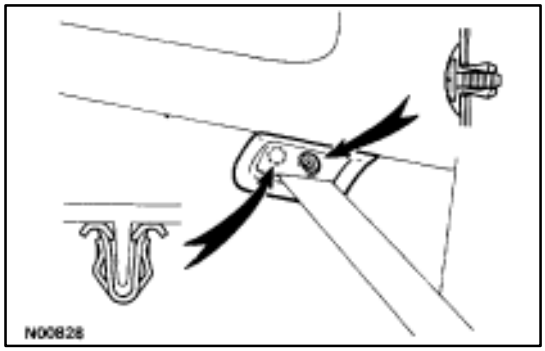

(c) Install the belt hole cover with the two clips.

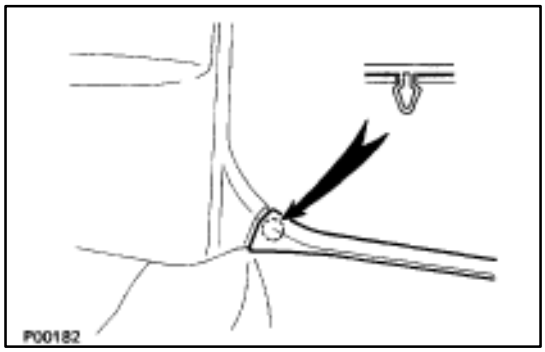

(d) Install the rear side of the scuff.

8. REINSTALL SEAT BACK AND CUSHION

9. RECONNECT CABLE FROM NEGATIVE TERMINAL OF BATTERY

WhereEverybodyKnowsYourName

Engine & ECT ECU

TERMINALS OF ENGINE & ECT ECU

Terminal No.	Symbol	Connection	Terminal No.	Symbol	Connection
E9 – 1	IGSW	Ignition Switch	E9 – 31	+ B	EFI Main Relay
2	SPD	No. 1 Speed Sensor	32	+ B1	EFI Main Relay
3	KD	Kick–Down Switch	33	BATT	Battery
4	STP	Stop light Switch	34	A/C	A/C Control Assembly
5		–	35		–
6	W	“CHECK” Engine Warning Light	36		–
7	R	Neutral Start Switch	37	TR	TRAC ECU
8		–	38	NEO	TRAC ECU
9	2	Neutral Start Switch	39	VTO2	TRAC ECU
10	L	Neutral Start Switch	40	VTO1	TRAC ECU
11	AD	CC ECU	E10 – 1	NCO↔	T/M Input Speed Sensor
12	OD1	CC ECU	2		–
13		–	3	SP2↔	No. 2 Speed Sensor for ECT
14		–	4	E11	ECU Ground
15		–	5	G2↔	Cam position Sensor
16		–	6	G1↔	Cam position Sensor
17	TT	TDCL	7	NF↔	Engine Speed Sensor
18	P	ECT Pattern Select Switch	8		–
19	TE2	Check Connector	9	S2	ECT Solenoid Value
20	TE1	Check Connector	10	S1	ECT Solenoid Value
21	D1	Fuel Pump ECU	11		–
22	FPC	Fuel Pump ECU	12		–
23	ACMG	A/C Magnet Clutch Relay	13	SLN≦	No.3 ECT Solenoid Valve
24	M–REL	EFI Main Relay	14	SLU↔	No.4 ECT Solenoid Valve
25		–	15		–
26		–	16		–
27		–	17	#10	No.3 and No.5 Injectors
28	OD2	O/D Main Relay	18	#20	No.4 and No.6 Injectors
29		–	19	#20	No.2 and No.8 Injectors
30		–	20	#40	No.1 and No.7 Injectors

Engine & ECT ECU Terminals

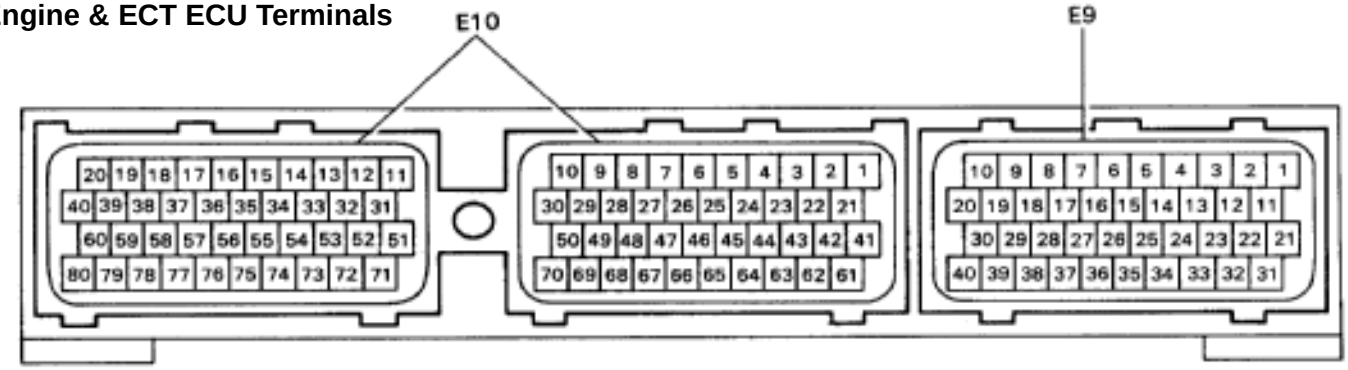

WhereEverybodyKnowsYourName

TERMINALS OF ENGINE & ECT ECU (Cont'd)

Terminal No.	Symbol	Connection	Terminal No.	Symbol	Connection
E10– 21	NCO	T/M Input Speed Sensor	E10 – 51		–
22		–	52	HTL2	LH Sub–Oxygen Sensor Heater
23	SP2	No.2 Speed Sensor for ECT	53	HTR2	RH Sub–Oxygen Sensor Heater
24		–	54		–
25	G2	LH (No.2) Cam Position Sensor	55		–
26	G1	RH (No.1) Cam Position Sensor	56	IGT2	No.2 Igniter for RH Bank
27	NE	Engine Speed Sensor	57	IGT1	No.1 Igniter for LH Bank
28	VF2	Check Connector	58	IGF1	No.1 Igniter for LH Bank
29	VF1	Check Connector	59	IGF2	No.2 Igniter for RH Bank
30		–	60		–
31		–	61		–
32	ISC4	ISC Valve	62		–
33	ISC3	ISC Valve	63	IDL2	Sub–Throttle Position Sensor
34	ISC2	ISC Valve	64	IDL1	Throttle Position Sensor
35	ISC1	ISC Valve	65	E2	Sensor Ground
36	*2EGR4	EGR Valve	66	KS	Air Flow Meter
37	*2EGR3	EGR Valve	67	OXR2	
38	*2EGR2	EGR Valve	68	OXL2	LH Sub–Oxygen Sensor
39	*2EGR1	EGR Valve	69	E1	ECU Ground
	*10EGR	VSV for EGR			
40		–	70		–
41	VC	Throttle Position Sensor Air Flow Meter	71	HTL1	LH Main Oxygen Sensor
42	VTA2	Fuel Pump ECU	72	HTR1	RH Main Oxygen Sensor
43	VTA1	A/C Magnet Clutch Relay	73	FPU	VSV for Fuel Pressure Control Value
44	THW	Water Temp. Sensor	74	*10PAG	VSV for EVAP
45	THA	Intake Air Temp. Sensor	75		–
46	THG	EGR Gas Temp. Sensor	76	NSW	Neutral Start Switch
47	OXR1	RH Main Oxygen Sensor	77	STA	Starter Relay
48	OXL1	LH Main Oxygen Sensor	78	STJ	Cold Start Injector
49	KNK2	RH (No.2) Knock Sensor	79	E02	Power Ground
50	KNK1	LH (No.1) Knock Sensor	80	E01	Power Ground

Engine & ECT ECU Terminals

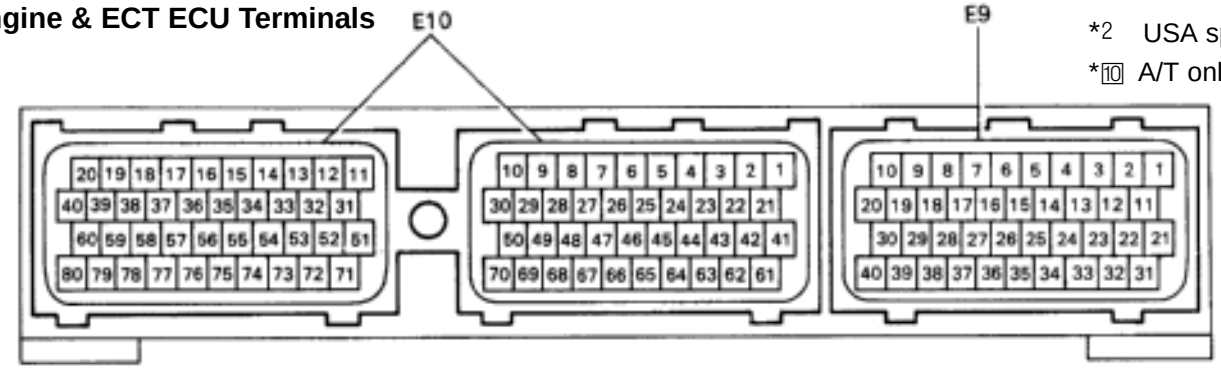

*2 USA spec. only
*10 A/T only

WhereEverybodyKnowsYourName

COMPONENTS FOR REMOVAL AND INSTALLATION

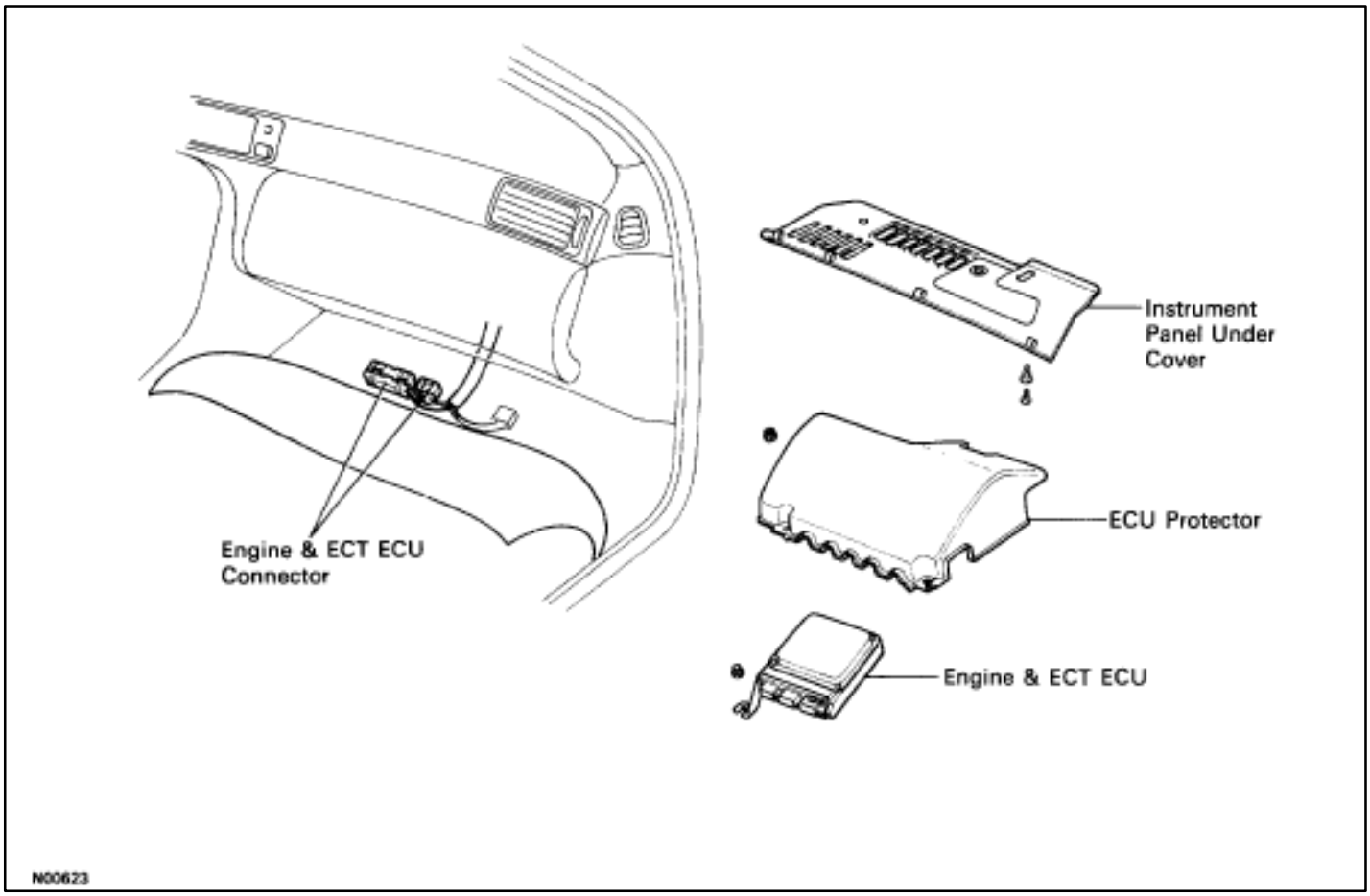

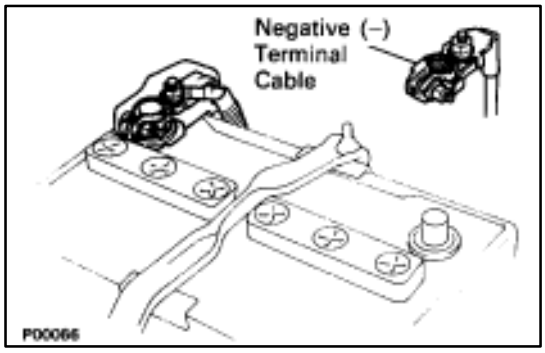

INSPECTION OF ENGINE & ECT ECU

1. **DISCONNECT CABLE FROM NEGATIVE TERMINAL OF BATTERY**
   CAUTION: Work must be started after approx. 20 seconds or longer from the time the ignition switch is turned to the "LOCK" position and the negative (–) terminal cable is disconnected from the battery.

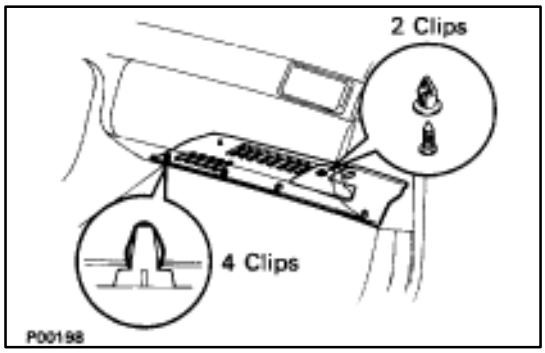

2. **DISCONNECT ENGINE & ECT ECU FROM FLOOR PANEL**
   (a) Remove the two clips, and pull out the instrument panel under cover.

WhereEverybodyKnowsYourName

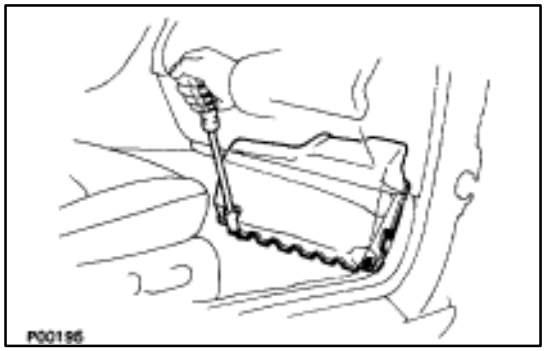

(b) Take out the front side of the floor carpet.
(c) Remove the two nuts and protector.

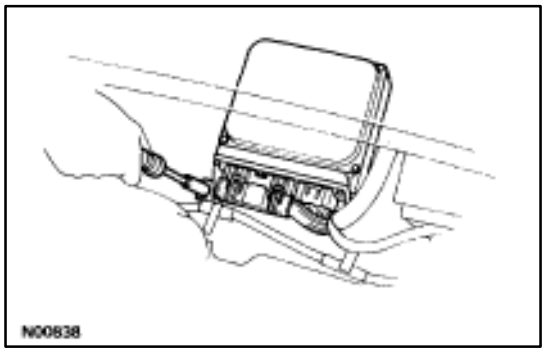

(d) Remove the nut, and disconnect the engine & ECT ECU from the floor panel.

3. INSPECT ENGINE & ECT ECU

A. Install SST (check harness) between engine & ECT ECU and wiring connectors

HINT:

- ECU connectors are water–proof and are the bolt type.
- For water–proof type connectors, in order to measure the voltage of ECU terminals and the resistance of connected parts, connect a check harness (SST 09990–01000) between the ECU and wiring connectors, then perform the inspection.
- Avoid inserting a tester probe from the other side of connector as this noticeably reduces the water–proof ability.
- Disconnect the ECU connectors by fully loosening the bolt.

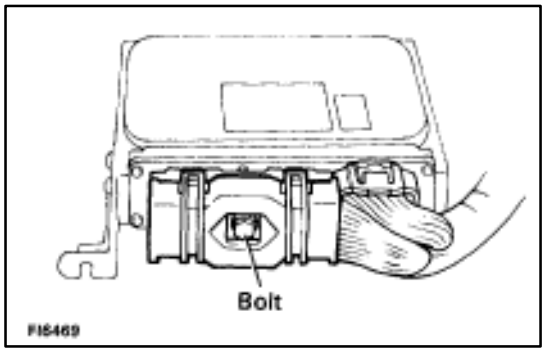

(a) Remove the bolt, and disconnect the two ECU connectors.

NOTICE:

- **Do not pull the wiring harness when disconnecting the connectors.**
- **When disconnecting the connector, the ECU's back–up power source is cut off, so the malfunction codes, etc. recorded in the ECU memory are cancelled.**
- **Never insert a tester probe or male terminal used for inspection purposes into the female terminal of the vehicle wire harness. Otherwise, the female terminal may be widened, which can reselt in faulty connection.**

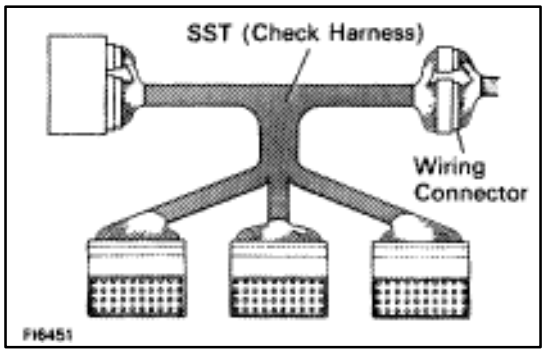

(b) Connect SST (check harness) between ECU and wiring connectors.

SST 09990–01000

HINT: SST (check harness) connector terminals are arranged the same as those of the ECU.

WhereEverybodyKnowsYourName

B. Inspect voltage of engine & ECT ECU

Check the voltage between each terminal.

- Turn the ignition switch ON.
- Measure the voltage at each terminal.

HINT:

- Perform all voltage measurements with the connectors connected.
- Verify that the battery voltage is 11 V or more when the ignition switch is ON.

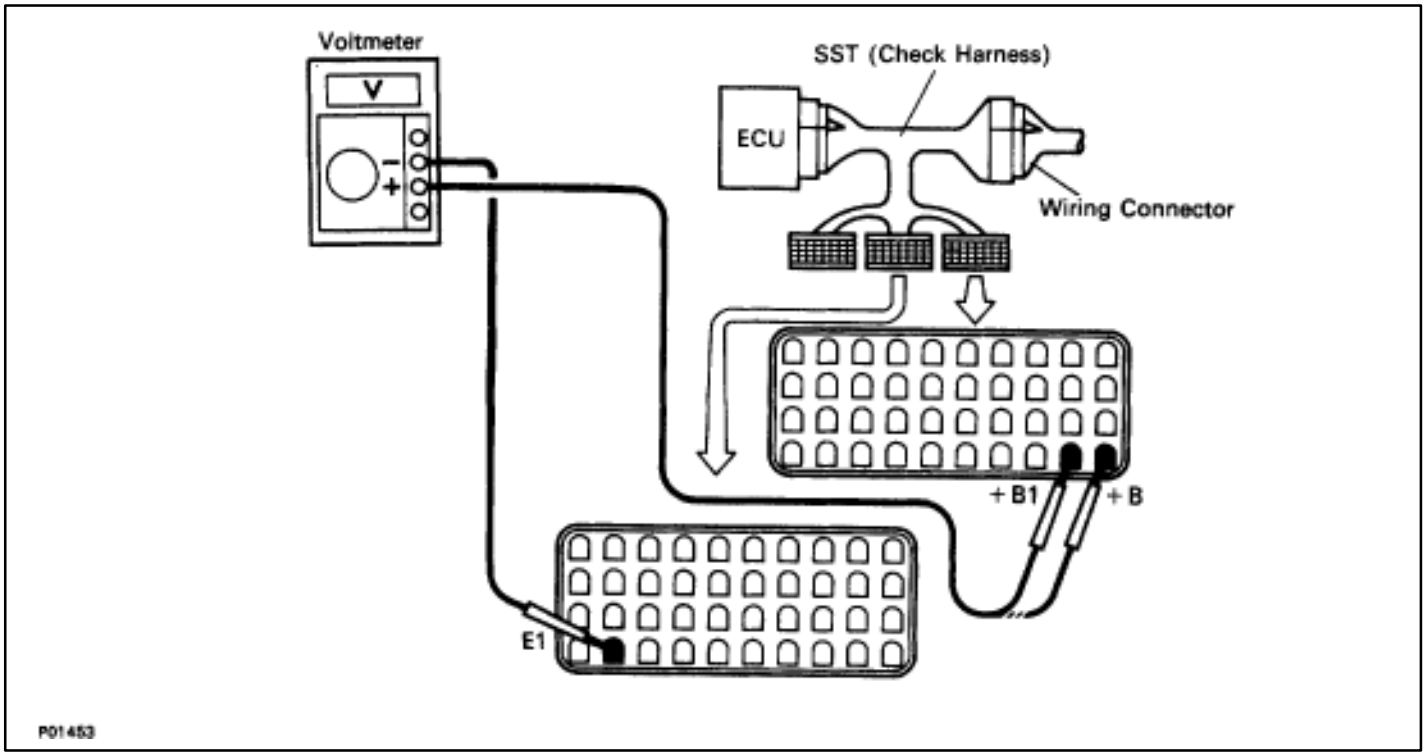

WhereEverybodyKnowsYourName

Voltage at Engine (& ECT) ECU Wiring Connectors

Terminals			Condition		STD voltage (V)
BATT (E9 – 33)	–	E1 (E10 – 69)	–		10 – 14
IGSW (E9 – 1) +B (E9 – 31) +B1 (E9 – 32)	–	E1 (E10 – 69)	IG SW ON		10 – 14
VC (E10 – 41)	–	E2 (E10 – 65)	IG SW ON	–	4.0 – 6.0
IDL1 (E10 – 64) IDL2 (E10 – 63)	–	E2 (E10 – 65)		Throttle (or sub–throttle) valve fully closed	1.0 or less
				Throttle (or sub–throttle) valve fully open	10 – 14
VTA1 (E10 – 43) VTA1 (E10 – 42)	–	E2 (E10 – 65)		Throttle (or sub–throttle) valve fully closed	0.1 – 1.0
				Throttle (or sub–throttle) valve fully open	3.0 – 6.0
KS (E10 – 66)	–	E1 (E10 – 69)	Idling		Pulse generation
THA (E10 – 45)	–	E2 (E10 – 65)	Idling	Intake air temp. 20˚C (68˚F)	1.0 – 3.0
THW (E10 – 44)	–	E2 (E10 – 65)		Engine Coolant temp. 80˚C (176˚F)	0.1 – 1.0
STA (E10 – 77)	–	E1 (E10 – 69)	Cranking		6.0 or more
#10 (E10 – 20) #20 (E10 – 19) #30 (E10 – 18) #40 (E10 – 17)	–	E01 (E10 – 80) E02 (E10 – 79)	IG SW ON		10 – 14
			Idling		Pulse generation
IGT1 (E10 – 57) IGT2 (E10 – 56)	–	E1 (E10 – 69)	Idling		Pulse generation
IGF1 (E10 – 58) IGF2 (E10 – 59)	–	E1 (E10 – 69)	Idling		Pulse generation
G1 (E10 – 26) G2 (E10 – 25)	–	G1↔ – (E10–6) G2↔ – (E10–5)	Idling		Pulse generation
NE (E10 – 27)	–	G – (E10 – 7)	Idling		Pulse generation
M – REL (E9 – 24)	–	E1 (E10 – 69)	IG SW ON		10 – 14
FPC (E9 – 22)	–	E1 (E10 – 69)	Cranking, Sudden racing (6,000 rpm)		4.2 – 6.0
			Idling		Pulse generation
D1 (E9 – 21)	–	E1 (E10 – 69)	Idling		7.5 or more
FPU (E10 – 73)	–	E1 (E10 – 69)	IG SW ON		10 – 14
			Restarting high temp.		2.0 or less
PAG (E10 – 74)	–	E01 (E10 – 69)	IG SW ON		10 – 14

Engine & ECT ECU Terminals

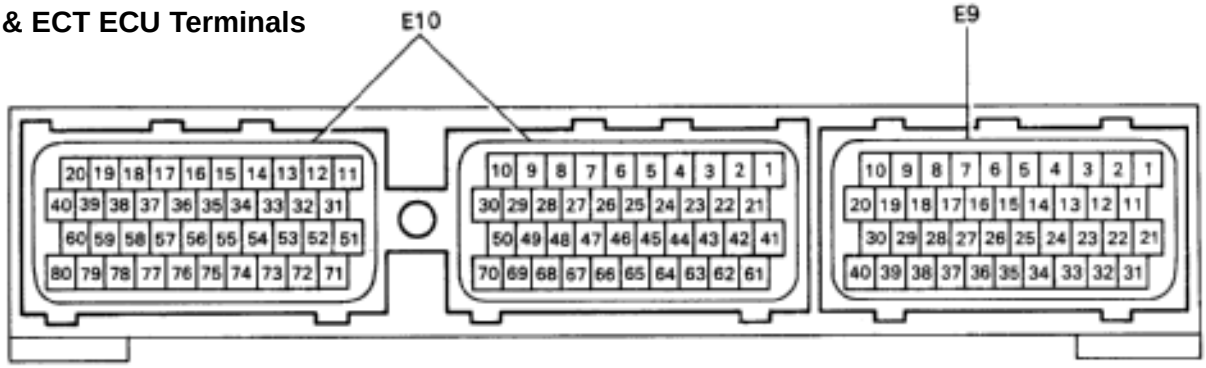

WhereEverybodyKnowsYourName

Voltage at Engine (& ECT) ECU Wiring Connectors (Cont'd)

Terminals		Condition		STD voltage (V)
ISC1 (E10 – 35) ISC2 (E10 – 34) ISC3 (E10 – 33) ISC4 (E10 – 32)	– E1 (E10 – 69)	IG SW ON		10 – 14
VF1 (E10 – 29) VF2 (E10 – 28)	– E1 (E10 – 69)	Maintain engine speed at 2,500 rpm for 120 seconds after warming up then return to idling		1.0 – 4.0
OX1 (E10 – 48) OX2 (E10 – 47)	– E1 (E10 – 69)	Maintain engine speed at 2,500 rpm for 120 seconds after warming up		Pulse generation (0 – 1.0)
HT (E10 – 71)	– E01 (E10 – 80)	Idle		2.0 or less
KNK1 (E10 – 50) KNK2 (E10 – 49)	– E1 (E10 – 69)	Idle		Pulse generation
NSW (E10 – 76)	– E1 (E10 – 69)	IG SW ON	Shift position "P" or "N" range	1.0 or less
			Ex. shift position "P" or "N" range	10 – 14
SP1 (E9 – 2)	– E1 (E10 – 69)	IG SW ON	Rotate driving wheel slowly.	4 or more
TE1 (E9 – 20) TE2 (E9 – 19)	– E1 (E10 – 69)	IG SW ON		10 – 14
W (E9 – 6)	– E1 (E10 – 69)	IG SW ON		2.0 or less
		Idle		10 – 14
OD1 (E9 – 12)	– E1 (E10 – 69)	IG SW ON		4.0 – 6.0
A/C (E9 – 34)	– E1 (E10 – 69)	A/C SW ON (at idle)		2.0 or less
		A/C SW OFF		10 – 14
ACMG (E9 – 23)	– E1 (E10 – 69)	A/C SW ON (at idle)		2.0 or less
		A/C SW OFF		10 – 14
TR (E9 – 37)	– E1 (E10 – 69)	IG SW ON		10 – 14
VT01 (E9 – 40)	– E2 (E10 – 65)	IG SW ON	Throttle (or sub–throttle) valve fully closed	1.0 or less
VT02 (E9 – 39)			Throttle (or sub–throttle) valve fully open	3.0 – 5.5
NEO (E9 – 38)	– E1 – (E10 – 69)	IG SW ON		4.0 – 6.0

Engine & ECT ECU Terminals

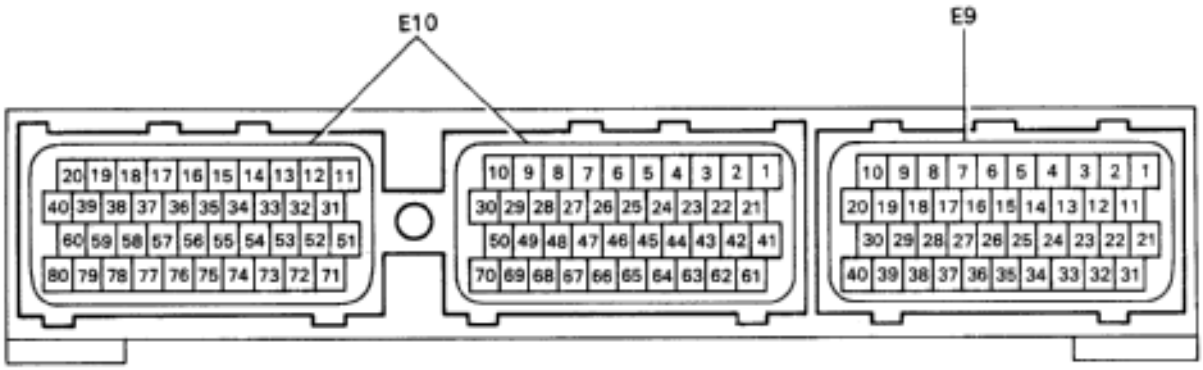

WhereEverybodyKnowsYourName

B. Inspect resistance of engine & ECT ECU wiring connectors

NOTICE: Do not touch the ECU terminals.

Check the resistance between each terminal of the wiring connectors.

- Disconnect the SST (check harness) connectors from the ECU.
- Measure the resistance at each terminal.

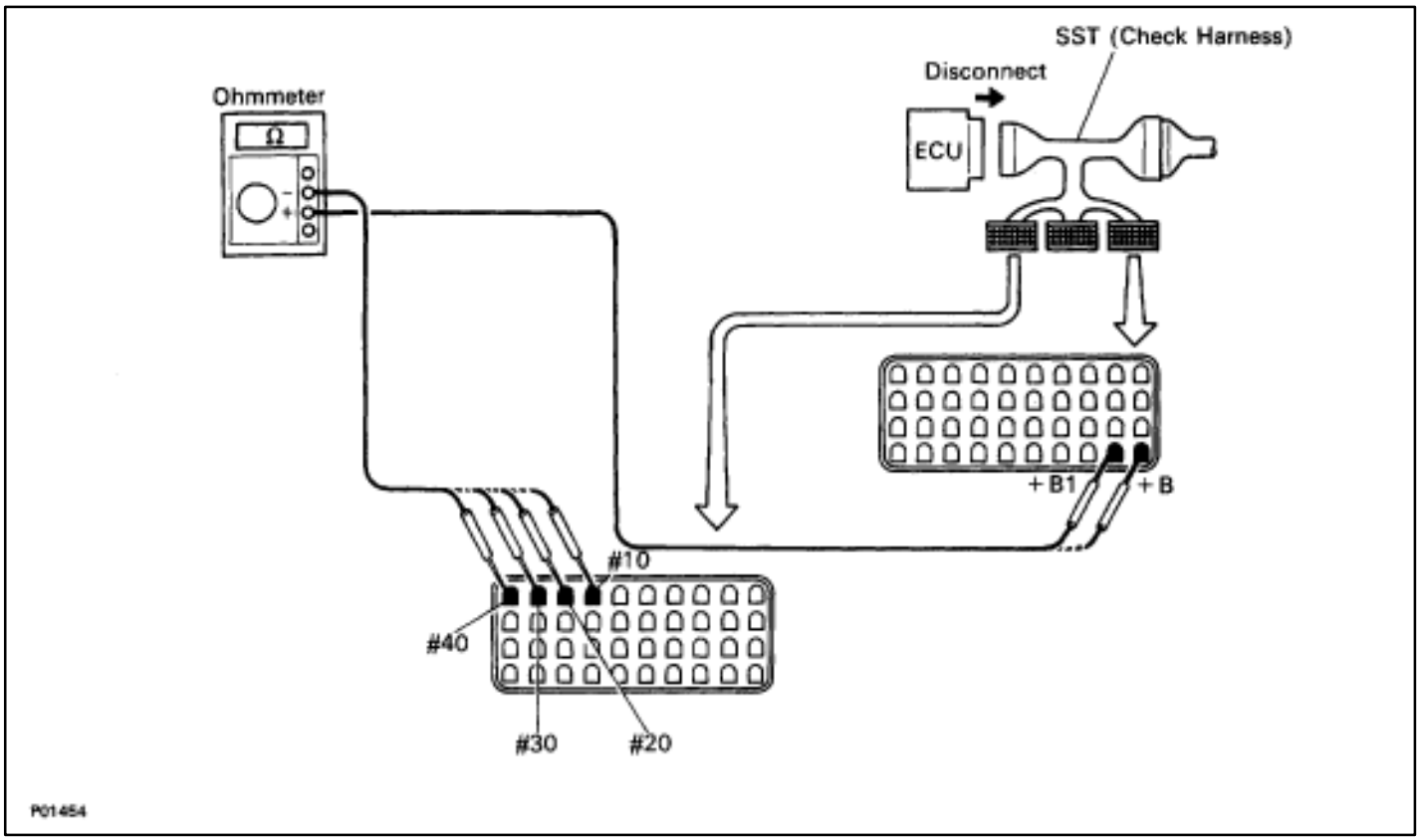

WhereEverybodyKnowsYourName

Resistance of ECU Wiring Connectors

Terminals			Condition	STD voltage (V)
#10 (E10 – 20) #20 (E10 – 19) #30 (E10 – 18) #40 (E10 – 17) #50 (E10 – 16) #60 (E10 – 15)	–	+ B (E9 – 31) + B1 (E9 – 32)	–	13.2 – 14.2
ISC1 (E10 – 35) ISC2 (E10 – 34) ISC3 (E10 – 33) ISC4 (E10 – 32)	–	+ B (E9 – 31) + B1 (E9 – 32)	–	10 – 30
ACIS (E10 – 39)	–	+ B (E9 – 31) + B1 (E9 – 32)	–	38.5 – 44.5
HT (E10 – 71)	–	+ B (E9 – 31) + B1 (E9 – 32)	–	5.1 – 6.3
EVAP (E10 – 74)	–	+ B (E9 – 31) + B1 (E9 – 32)	–	30 – 34
ERG (E10 – 75)	–	+ B (E9 – 31) + B1 (E9 – 32)	–	33 – 39
IDL1 (E10 – 64) IDL2 (E10 – 63)	–	E2 – (E10 – 65)	Throttle valve open	Infinity
			Throttle valve fully closed	2,300 or less
VTA1 (E10 – 43) VTA2 (E10 – 42)	–	E2 – (E10 – 65)	Throttle valve open	3,300 – 10,000
			Throttle valve fully closed	200 – 800
VC (E10 – 41)	–	E2 – (E10 – 65)	–	4,000 – 9,000
THA (E10 – 45)	–	E2 – (E10 – 65)	Intake air temp. 20˚C (68˚F)	2,000 – 3,000
THW (E10 – 44)	–	E2 – (E10 – 65)	Coolant temp. 80˚C (176˚F)	200 – 400
THG (E10 – 46)	–	E2 – (E10 – 65)	EGR gas temp. 50˚C (112˚F)	69,400 – 88,500
G1 (E10 – 26) G2 (E10 – 25)	–	G (E10 – 7)	Cam position sensor – 10 – + 40˚C (14 – 104˚F)	125 – 190
NE (E10 – 27)	–	G (E10 – 7)	Cam position sensor – 10 – + 40˚C (14 – 104˚F)	155 – 240

Engine & ECT ECU Terminals

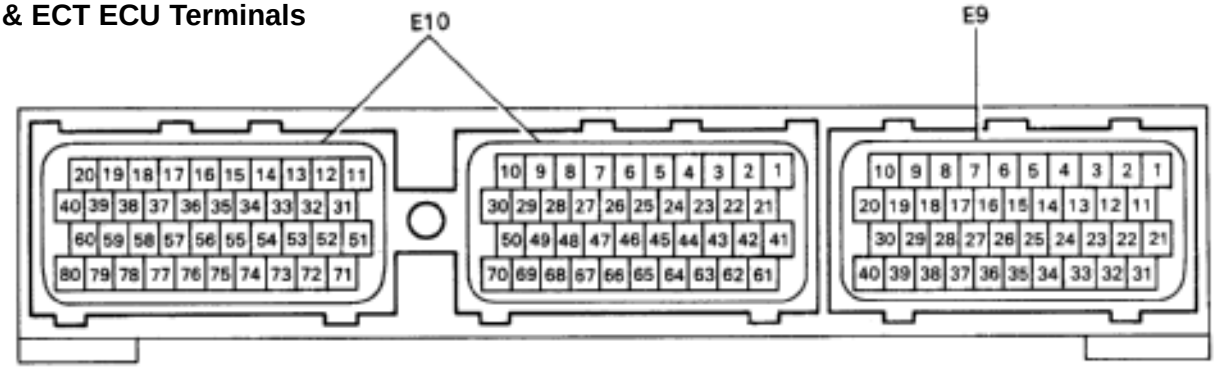

WhereEverybodyKnowsYourName

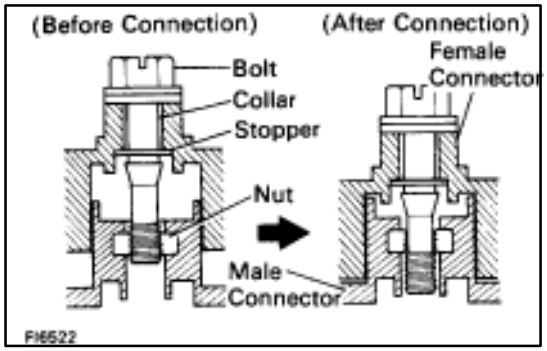

- Disconnect the SST from the wiring connectors.

SST 09990–01000

4. REINSTALL ENGINE & ECT ECU TO FLOOR PANEL

(a) Connect the two ECU connectors.

- Match the male connector correctly with the female connector, then press them together.
- Tighten the bolt.

Make sure the connector is completely connected, by tightening the bolt until there is a clearance of less than 1 mm (0.04 in.) between bottom of the male connector and end of the female connector.

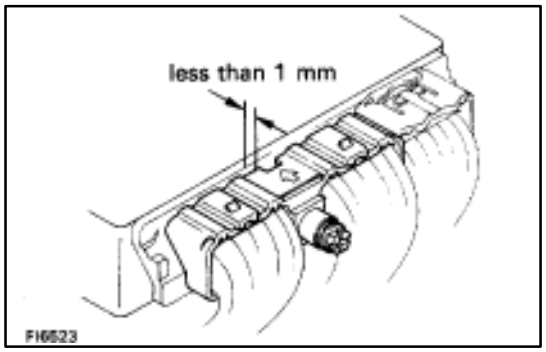

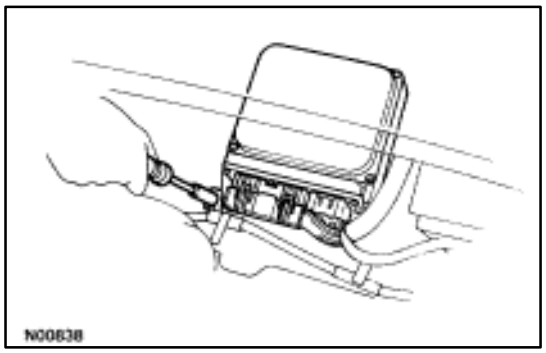

(b) Install the ECU with the bolt.

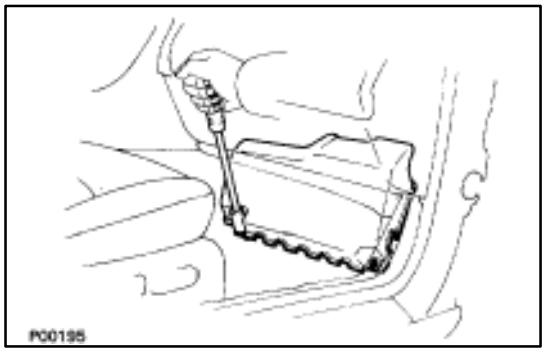

(c) Install the ECU protector with the two nuts.

(d) Install the floor carpet.

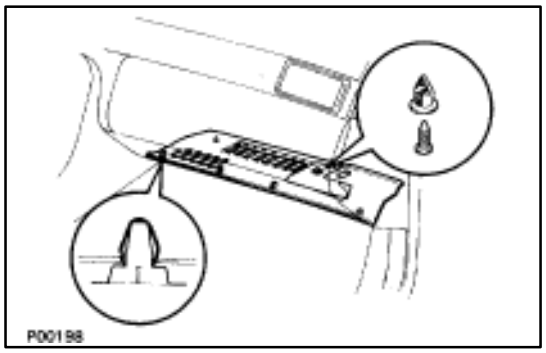

(e) Install the instrument panel under cover with the two clips.

5. RECONNECT CABLE TO NEGATIVE TERMINAL OF BATTERY

WhereEverybodyKnowsYourName

Fuel Cut RPM

INSPECTION OF FUEL CUT RPM

1. WARM UP ENGINE

Allow the engine to warm up to normal operating temperature.

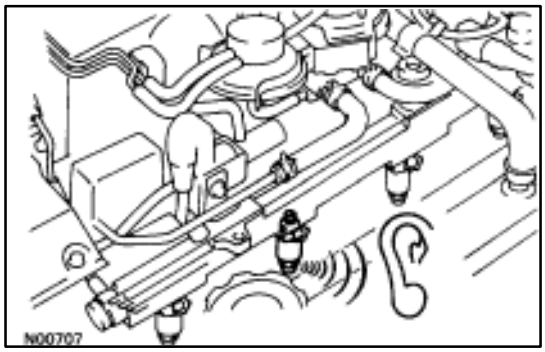

2. CONNECT TACHOMETER

Connect the test probe of a tachometer to terminal IG of the check connector.

NOTICE

- **Never allow the tachometer terminal to touch ground as it could result in damage to the igniter and/or ignition coil.**
- **As some tachometers are not compatible with this ignition system, we recommend that you confirm the compatibility of yours before use.**

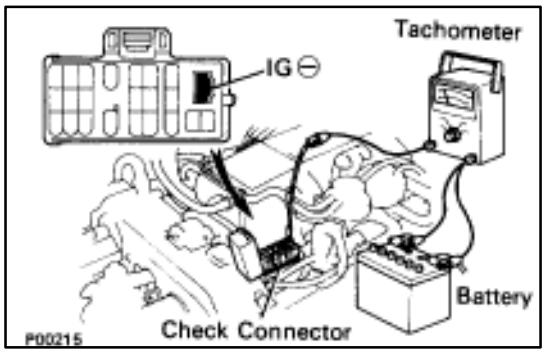

3. INSPECT FUEL CUT OPERATION

(a) Increase the engine speed to at least 2,500 rpm.
(b) Check for injector operating noise.
(c) Check that when the throttle lever is released, injector operation noise stops momentarily and then resumes.

HINT:

- The vehicle should be stopped.
- Measure with the A/C OFF.

Fuel return rpm: 1,400 rpm

4. REMOVE TACHOMETER

WhereEverybodyKnowsYourName

SERVICE SPECIFICATIONS

SERVICE DATA

Fuel pump	Resistance	0.2 – 3.0 ?	
Cold start injector	Resistance Fuel leakage	2 – 4 ? One drop or less per minute	
Fuel pressure regulator	Fuel pressure at no vacuum	265 – 304 kPa (2.7 – 3.1 kgf/cm^2, 38 – 44 psi)	
Injector	Resistance Injection volume Difference between each cylinder Fuel leakage	13.4 – 14.2 ? 55 – 70 cc (3.4 – 4.3 cu in.) per 15 sec. 10 cc (0.6 cu in.) or less One drop or less per minute	
Air flow meter	Resistance (THA – E2) at–20˚C (–4˚F) at 0˚C (32˚F) at 20˚C (68˚F) at 40˚C (104˚F) at 60˚C (140˚F) at 80˚C (176˚F)	10 – 20 k? 4 – 7 k? 2 – 7 k? 0.9 – 1.3 k? 0.4 – 0.7 k? 0.2 – 0.4 k?	
Throttle body	Throttle body fully closed angle	6˚	
Throttle position sensor (main)	Clearance between stop screw and lever	Between terminals	Resistance
	0 mm 0 in. 0.40 mm 0.016 in. 0.65 mm 0.026 in. Throttle valve fully opened position –	VTA1 – E2 IDL1 – E2 IDL1 – E2 VTA1 – E2 VC – E2	0.2 – 0.8 k? 2.3 k? or less Infinity 3.3 – 10.0 k? 4.0 – 9.0 k?
Sub–throttle position sensor (w/ TRAC)	Clearance between stop screw and lever	Between terminals	Resistance
	0 mm 0 in. 0.30 mm 0.012 in. 0.50 mm 0.020 in. Throttle valve fully opened position –	VTA2 – E2 IDL2 – E2 IDL2 – E2 VTA2 – E2 VC – E2	0.2 – 0.8 k? 2.3 k? or less Infinity 3.3 – 10.0 k? 4.0 – 9.0 k?
Sub–throttle actuator (w/ TRAC)	Resistance (ACM – A and A, BCM – B and B)	0.5 – 1.0 ?	
ISC valve	Resistance (B1 – S1 and S3, B2 – S2 and S4)	10 – 30 ?	
Cold start injector time switch	Resistance STA – STJ below 15˚C (59˚F) above 30˚C (86˚F) STA – Ground	25 – 45 ? 65 – 85 25 – 85 ?	
VSV for fuel pressure control	Resistance	37 – 44 ?	

WhereEverybodyKnowsYourName

SERVICE DATA (Cont'd)

Water temp. sensor	Resistance	at –20˚C (–4˚F) at 0˚C (32˚F) at 20˚C (68˚F) at 40˚C (104˚F) at 60˚C (140˚F) at 80˚C (176˚F)	10 – 20 k? 4 – 7 k? 2 – 7 k? 0.9 – 1.3 k? 0.4 – 0.7 k? 0.2 – 0.4 k?
EGR gas temp. sensor	Resistance	at 50˚C (112˚F) at 100˚C (212˚F) at 150˚C (302˚F)	69 – 89 k? 12 – 15 k? 2 – 4 k?
Main oxygen sensor	Heater coil resistance		5.1 – 6.3 ?
Sub–oxygen sensor	Heater coil resistance		5.1 – 6.3 ?

ECU

HINT:
▼Perform all voltage and resistance measurements with the ECU connected.
▼Verify that the battery voltage in 11 V or above with the ignition switch is ON.

Voltage

Terminals	Condition		STD voltage (V)
BATT – E1	–		10 – 14
IGSW +B – E1 +B1	IG SW ON		10 – 14
VC – E2	IG SW ON	–	4.0 – 6.0
IDL1 IDL2 – E2	IG SW ON	Throttle (or sub–throttle) valve fully closed	1 or less
	IG SW ON	Throttle (or sub–throttle) valve fully open	10 – 14
VTA1 VTA 2 – E2	IG SW ON	Throttle (or sub–throttle) valve fully closed	0.1 or less
	IG SW ON	Throttle (or sub–throttle) valve fully open	3.0 – 6.0
KS – E1	Idling		Pulse generation
THA – E2 THW – E2	Idling	Intake air temp. 20˚C (68˚F)	1.0 – 3.0
	Idling	Engine coolant temp. 80˚C (176˚F)	0.1 – 1.0
STA – E1	Cranking		6.0 or more
#10 #20 #30 #40 – E01 E02	IG SW ON		10 – 14
	Idling		Pulse generation
IGT1 IGT2 – E1	Idling		Pulse generation

WhereEverybodyKnowsYourName

SERVICE DATA (Cont'd)

ECU (cont'd)	Voltage (cont'd)			
	Terminals	Condition		STD voltage (V)
	IGF1 IGF2 – E1	IG SW ON		1.0 or less
		Idling		Pulse generation
	G1 G2 – G1 (–) G2 (–)	Idling		Pulse generation
	NE – NE (+)	Idling		Pulse generation
	M–REL – E1	IG SW ON		10 – 14
	FPC – E1	Cracking, Sudden racing (6,000 rpm)		4.2 – 6.0
		Idling		Pulse generation
	DI – E1	Idling		7.5 or more
	FPU – E1	IG SW ON		10 – 14
		Restarting high temp.		2.0 or less
	PAG – E1	IG SW ON		10 – 14
	ISC1 ISC2 ISC3 ISC4 – E1	IG SW ON		10 – 14
	VF1 VF2 – E1	Maintain engine speed at 2,500 rpm for 120 seconds after warming up then return to idling.		1.0 – 4.0
	OXR1 OXL1 – E1	Maintain engine speed at 2,500 rpm for 120 seconds after warming up		Pulse generation (0 – 1.0)
	HTR1 HTR2 HTL1 HTL2 – E01 E02	IG SW ON		10 – 14
		Idling		2.0 or less
	EGR1 EGR2 EGR3 EGR4 – E1	IG SW ON		10 – 14
	EGR – E1	Idling		10 – 14
	KNK1 KNK2 – E1	Idling		Pulse generation
	NSW – E1	IG SW ON	Shift position "P" or "N" range	1.0 or less
			Ex. shift position "P" or "N" range	10 – 14

WhereEverybodyKnowsYourName

SERVICE DATA (Cont'd)

ECU (cont'd)	Voltage (cont'd)			
	Terminals	Condition		STD voltage (V)
	SPD – E1	IG SW ON	Rotate driving wheel slowly.	4 or more
	TE1 TE2 – E1	IG SW ON		10 – 14
	W – E1	IG SW ON		2.0 or less
		Idling		10 – 14
	AD – E1	Idling		10 – 14
	OD1 – E1	IG SW ON		4.0 – 6.0
	A/C – E1	A/C SW ON (at idling)		2.0 or less
		A/C SW OFF		10 – 14
	ACMG – E1	A/C SW ON (at idling)		2.0 or less
		A/C SW OFF		10 – 14
	TR – E1	IG SW ON		10 – 14
	VT01 VT02 – E2	IG SW ON	Throttle (or sub–throttle) valve fully closed	1.0 or less
			IG SW ON Throttle (or sub–throttle) valve fully open	3.0 – 5.5
	NE0 – E1	IG SW ON		4.0 – 6.0
	Resistance of wiring connector side			
	Terminals	Condition		STD voltage (?)
	#10 #20 #30 #40 – +B +B1	–		13.2 – 14.2
	STJ – +B +B1	–		2 – 4
	ISC1 ISC2 ISC3 ISC4 – +B +B1	–		10 – 30
	FPU – +B +B1	–		37 – 44
	EGR1 EGR2 EGR3 EGR4 – +B +B1	–		19.9 – 23.4
	EGR – +B +B1	–		33 – 39

WhereEverybodyKnowsYourName

SERVICE DATA (Cont'd)

ECU (cont'd)	Resistance of wiring connector side (cont'd)		
	Terminals	Condition	STD voltage (?)
	HTR1 HTR2 HTL1 HTL2 – +B +B1	–	5.1 – 6.3
	PAG – +B +B1	–	30 – 34
	IDL1 IDL2 – +B +B1	Throttle valve fully open	Infinity
		Throttle valve fully closed	2,300 or less
	VTA1 VTA2 – E2	Throttle valve fully open	3,300 – 10,000
		Throttle valve fully closed	200 – 800
	VC – E2	–	4,000 – 9,000
	THS – E2	Intake air temp, 20˚C (68˚F)	2,000 – 3,000
	THW – E2	Coolant temp. 80˚C (176˚F)	200 – 400
	THG – E2	EGR gas temp. 50˚C (112˚F)	69,400 – 88,500
	G1 G2 – G1 (–) G2 (–)	Cam position sensor – 10 – +40˚C (14 – 104˚F)	835 – 1,350
	NE – NE (–)	engine speed sensor – 10 – +40˚C (14 – 104˚F)	835 – 1,350
Fuel cut rpm	w/ Vehicle speed 0 km/h and coolant temp. 80˚C (176˚F)	Fuel cut rpm Fuel return rpm	1,800 rpm 1,400 rpm

WhereEverybodyKnowsYourName

TORQUE SPECIFICATIONS

Part tightened		N·m	kgf·cm	ft·lbf
Fuel line	Union bolt type Flare nut type	29	300	22
Fuel pipe X Delivery pipe		39	400	29
Fuel pump bracket X Fuel tank		5.4	55	48 in.·lbf
Fuel pump set plate X Fuel tank		3.9	40	35 in.·lbf
Fuel tank X Body		25	250	18
Fuel sender gauge X Fuel tank		2.9	30	26 in.·lbf
Fuel inlet pipe X Fuel tank		2.9	30	26 in.·lbf
Fuel tank main tube X Fuel tank		29	300	22
Fuel tank return tube X Fuel tank		29	300	22
Fuel tank evaporation vent tube X Fuel tank		29	300	22
Air flow meter X Air cleaner case		10	100	7
Cold start injector X Air intake chamber		7.8	80	69 in.·lbf
Cold start injector tube X Cold start injector		15	150	11
Air intake chamber X Intake manifold		18	185	13
EGR pipe X Air intake chamber		18	185	13
EGR pipe X RH cylinder head		18	185	13
Cold start injector tube X RH Delivery pipe		15	150	11
Throttle body X Air intake chamber		18	185	13
Fuel return pipe X Fuel pressure regulator		35	360	26
Fuel pressure regulator X RH delivery pipe		29	300	22
Delivery pipe X Intake manifold		18	185	13
Fuel inlet hose X LH delivery pipe		39	400	29
	for SST	33	340	24
ISC valve X Air intake chamber		18	185	13
Cold start injector time switch X Front water by–pass joint		34	350	25
Water temperature sensor X Front water by–pass joint		20	200	14
Water inlet housing X Water pump		18	185	13
EGR gas temperature sensor X EGR valve adaptor		20	200	14
EGR valve adaptor X Air intake chamber		18	185	13
EGR valve X EGR valve adaptor		18	185	13
Knock sensor X Cylinder block		44	450	33
Intake manifold X Cylinder head		18	185	13
Main oxygen sensor X Exhaust manifold		44	450	33
Sub–oxygen sensor X Exhaust manifold		44	450	33

WhereEverybodyKnowsYourName

EFI SYSTEM

NOTE: The specification descriptions "**USA Spec.**" and "**Exc. USA Spec.**" used in this section indicate the following specifications.
USA Spec.: USA (50 States) Specifications
Exc. USA Spec.: USA (except California) and Canadian Specifications.

WhereEverybodyKnowsYourName

DESCRIPTION

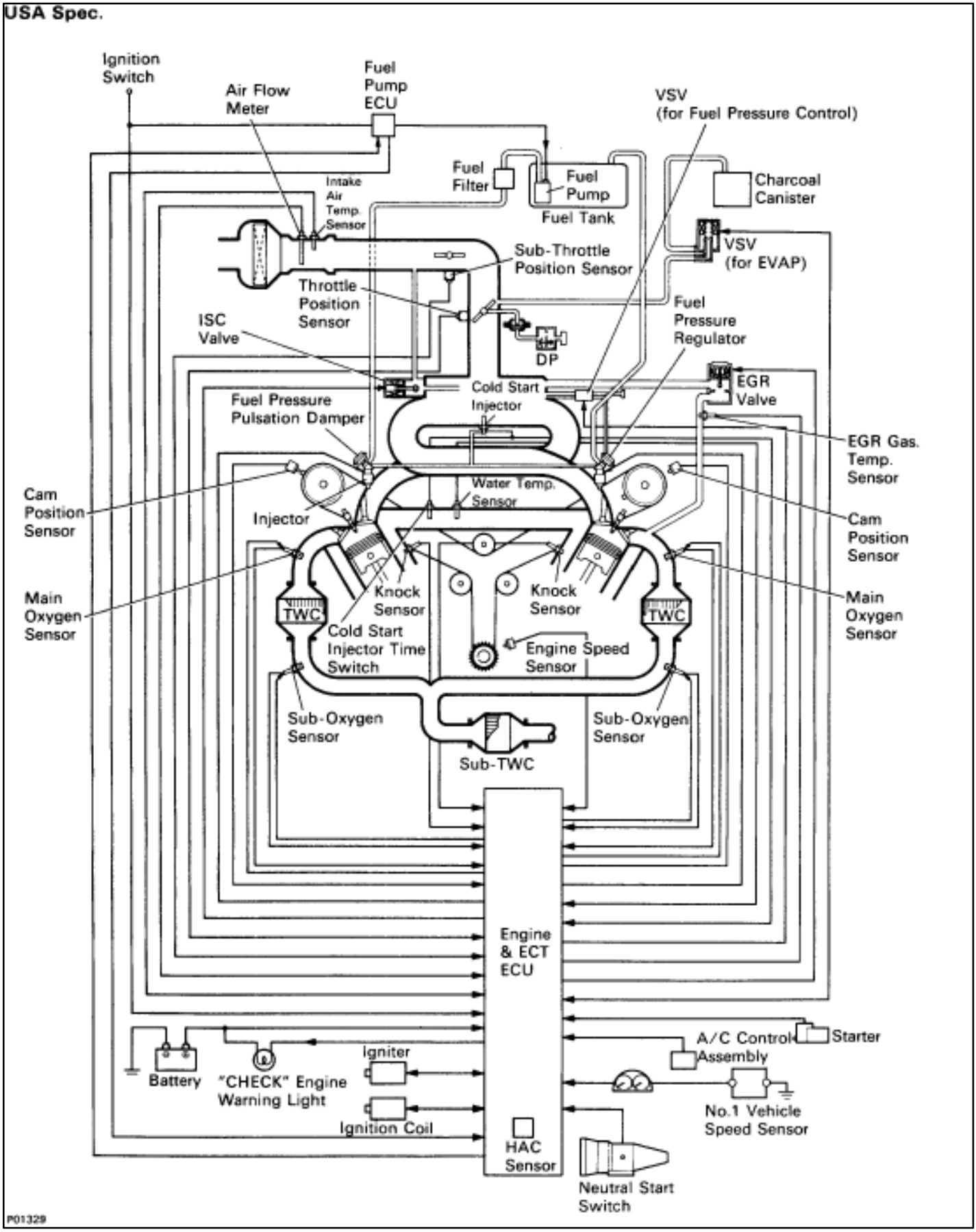

WhereEverybodyKnowsYourName

Exc. USA Spec.

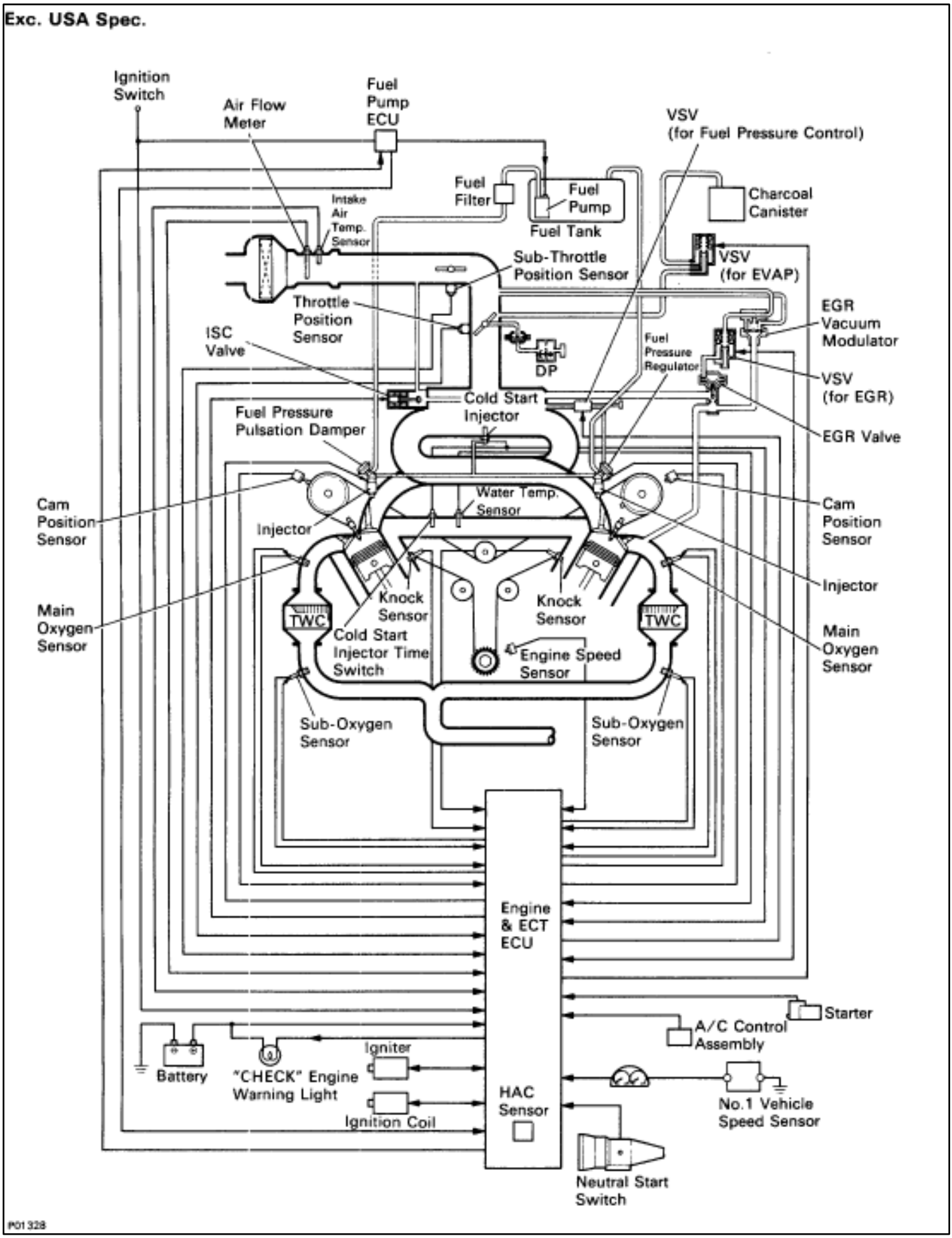

WhereEverybodyKnowsYourName

The EFI system is composed of three basic sub–systems: Fuel, Air Induction and Electronic Control Systems.

FUEL SYSTEM

An electric pump fuel pressure supplies sufficient fuel, under a constant pressure, to the EFI injectors. In accordance with signals from the ECU (Electronic Control Unit), these injectors inject the quantity of fuel most appropriate for the engine condition into the intake manifold.

AIR INDUCTION SYSTEM

The air induction system provides sufficient air for engine operation.

ELECTRONIC CONTROL SYSTEM

The 1UZ–FE engine (ECU–formerly EFI computer) with a microcomputer centrally controls the EFI, ESA, ISC and Diagnosis system, etc.

The ECU controls the following functions:

1. Electronic Fuel Injection (EFI)

   The ECU receives signals from various sensors indicating changing engine operation conditions such as:
   - Intake air volume
   - Intake air temperature
   - Coolant temperature
   - Engine rpm
   - Acceleration/deceleration
   - Exhaust oxygen content etc.

   The signals are utilized by the ECU to determine the injection duration necessary for an optimum air–fuel ratio.
2. Electronic Spark Advance (ESA)

   The ECU is programmed with data for optimum ignition timing under any and all operating conditions. Using data provided by sensors which monitor various engine functions (rpm, coolant temperature, etc.), the Electronic Control Unit (ECU) triggers the spark at precisely right instant. (See IG section)
3. Idle Speed Control (ISC)

   The ECU is programmed with idle speed data for various engine conditions (coolant temperature, air conditioner ON/OFF, etc.).

   The air volume flowing through the throttle valve by–pass passage is adjusted according to the signal from each sensor and the idle speed is kept at the set value.
4. Diagnosis Function

   When the ECU detects any malfunctions or abnormalities in the sensor network, it lights the ”CHECK” engine warning light in the combination meter. At the same time, the trouble is identified and a diagnostic code is recorded by the ECU. The diagnostic code can be read by the number of blinks of the ”CHECK” engine warning light when terminals TE1 and E1 are connected. The diagnostic codes are refer to the later page. (See TR section)
5. Self–Correction Function

   If any sensor malfunctions, an average value recorded in the back–up circuit is substituted to make driving possible.

   If danger is predicted, the engine is stopped and the ”CHECK” engine warning light will light up.
6. Fail–Safe Function

   Even if an abnormality occurs in the ECU, the back–up circuit uses a specified fuel injection and ignition timing to provide vehicle driveability, and also lightsup the ”CHECK” engine warning light.

WhereEverybodyKnowsYourName

OPERATION

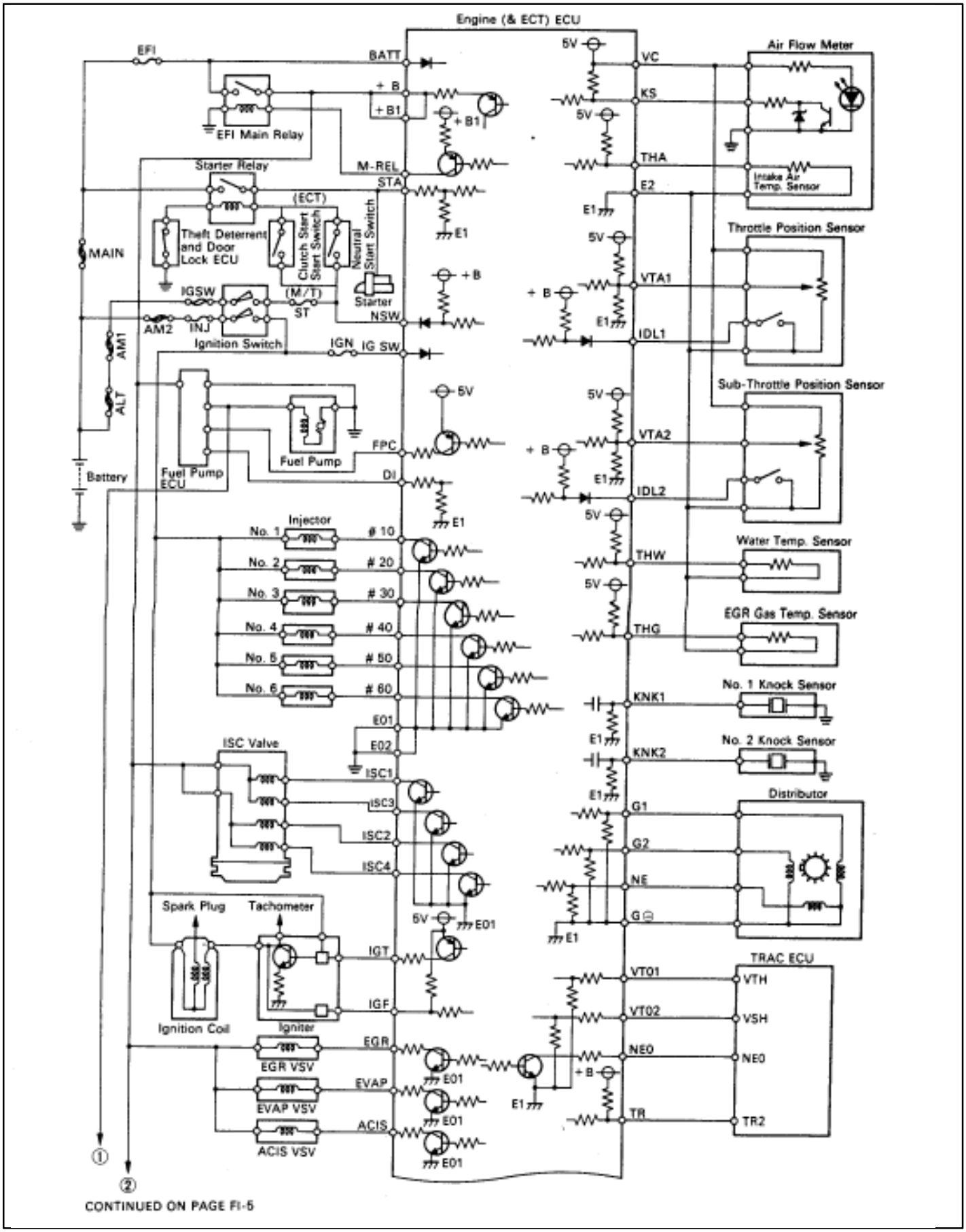

CONTINUED ON PAGE FI-5

WhereEverybodyKnowsYourName

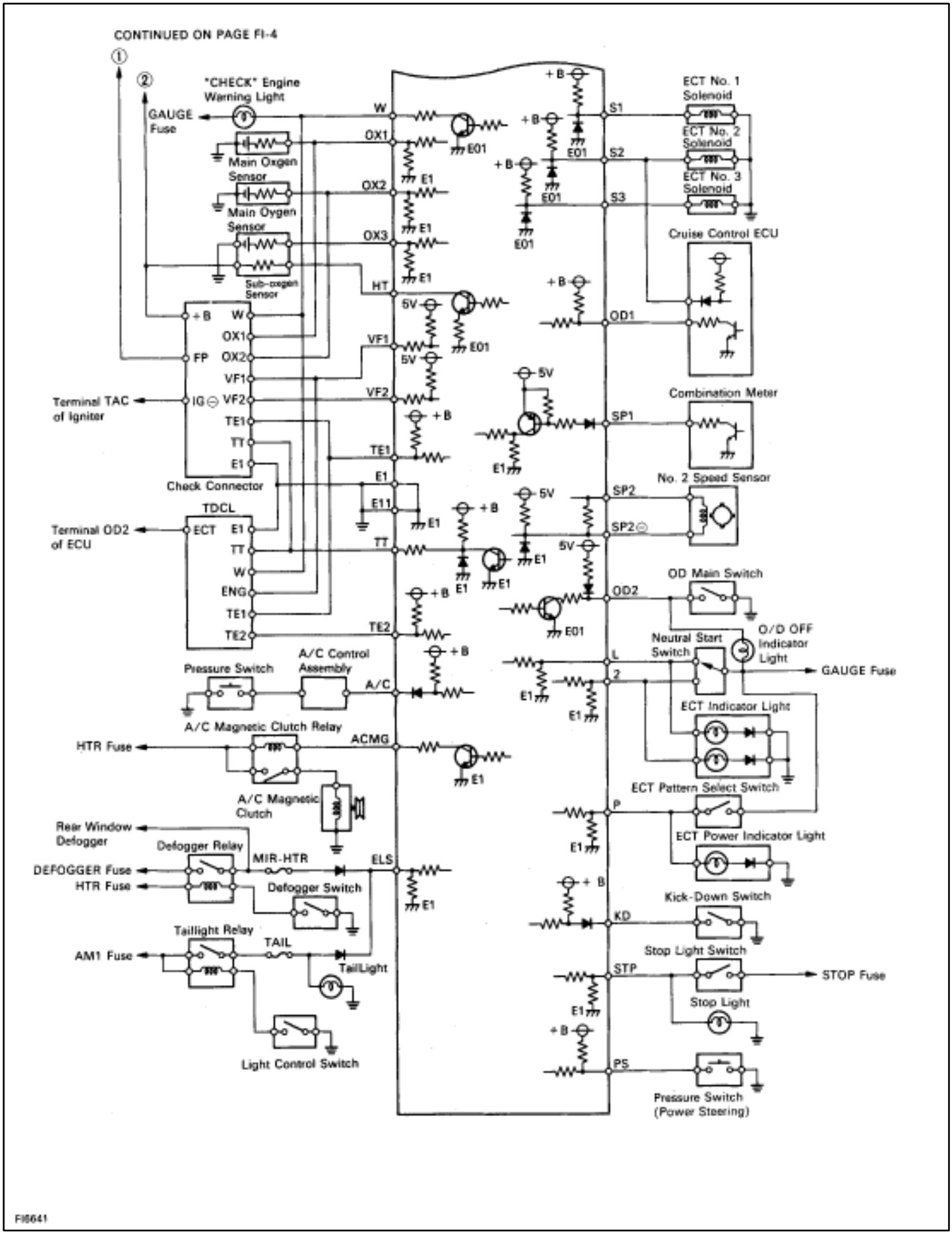

WhereEverybodyKnowsYourName

FUEL SYSTEM

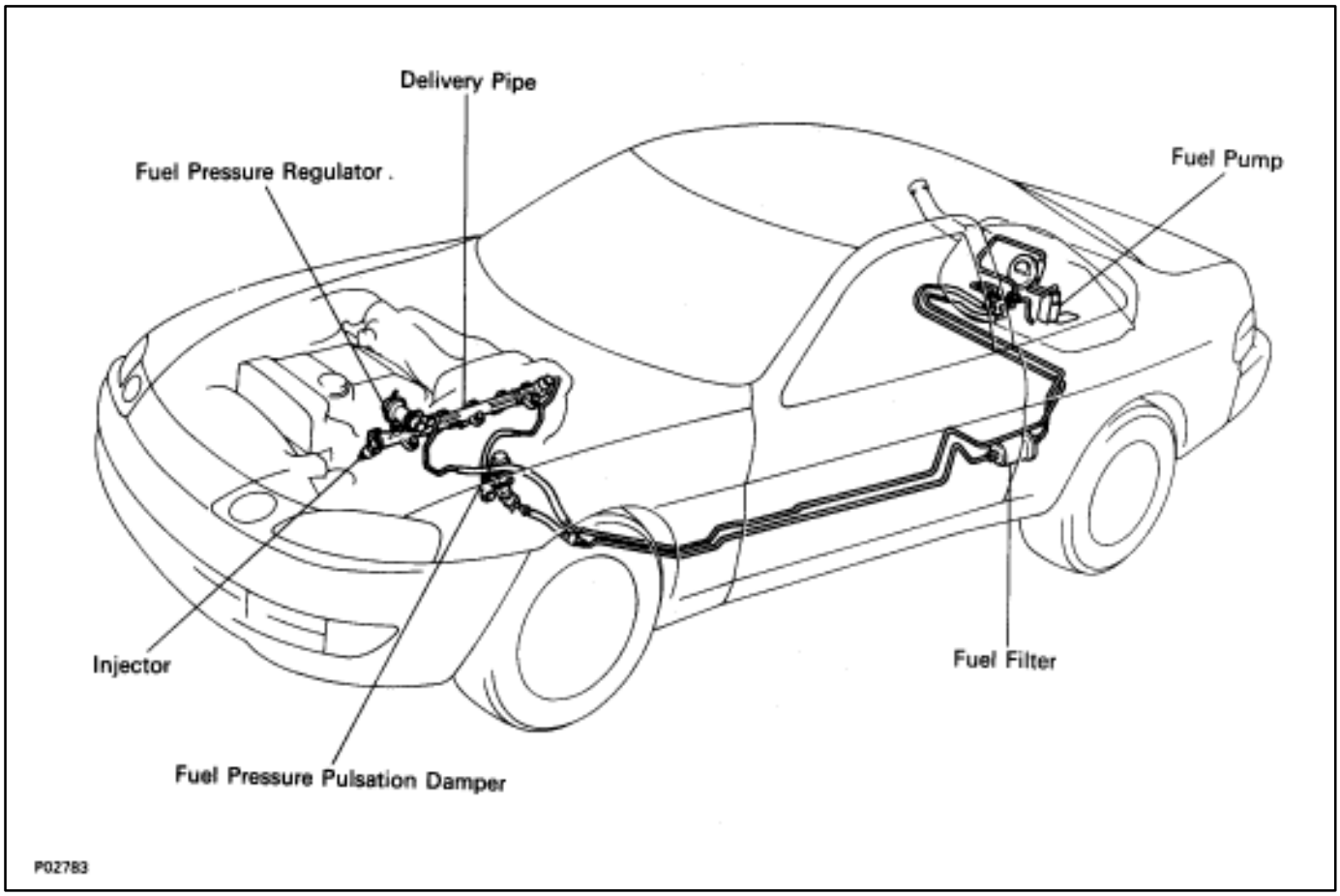

Fuel is pumped up by the fuel pump, which flows through the fuel filter under pressure through the fuel pipe to the delivery pipe where it is distributed to each injector.

The fuel pressure regulator adjusts the pressure of the fuel from the fuel line (high pressure side) to a pressure 284 kPa (2.9 kgf/cm2, 41 psi) higher than the pressure inside the intake manifold, and excess fuel is returned to the fuel tank through the return pipe.

When the engine is hot, the fuel pressure is increased to control percolation in the fuel system and improve restartability and idling stability.

The pulsation damper absorbs the slight fluctuations in fuel pressure caused by the injector.

The injectors operate on input of injection signals from the ECU and inject fuel into the intake manifold.

WhereEverybodyKnowsYourName

AIR INDUCTION SYSTEM

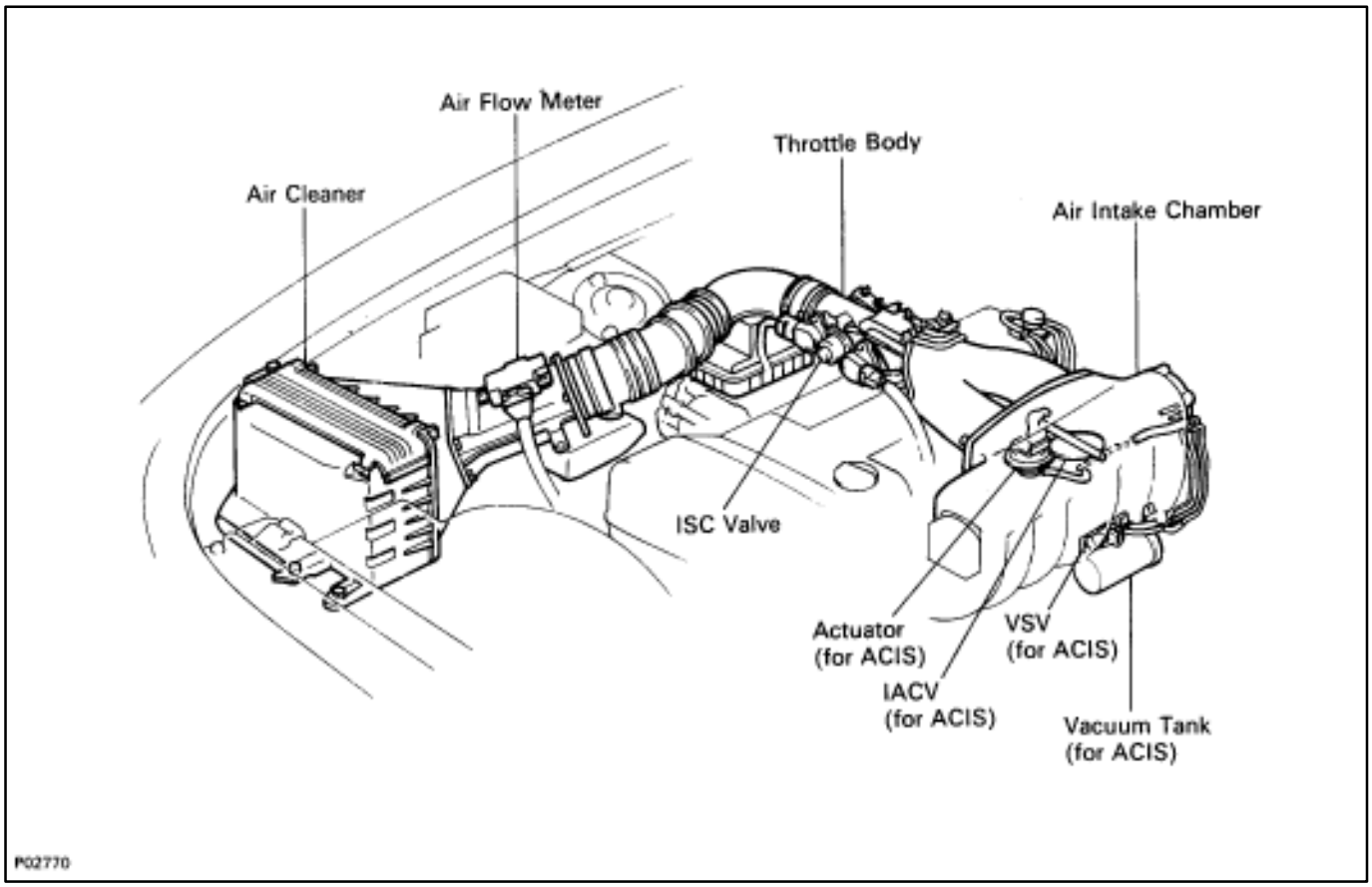

Air filtered through the air cleaner passes through the air flow meter and the amount flowing to the air intake chamber is determined by the throttle valve opening in the throttle body and the engine rpm.

Air flow meter measures the air intake flow to the engine by the swirl frequency.

Located in the throttle body is the throttle valve, which regulates the volume of air intake to the engine. Air intake controlled by the throttle valve opening is distributed from the intake chamber to the manifold of each cylinder and is drain into the combustion chamber.

At low air temperature the ISC valve opens and the air flows through the ISC valve, as well as the throttle body, into the air intake chamber. During engine warm up, the fast idle is accomplished by air flowing into the intake chamber via ISC valve, even when the throttle valve is completely closed.

The air intake chamber prevents pulsation of the intake air, reduces the influence on the air flow meter and increases the air intake volume. It also prevents intake air interference in each cylinder.

There is also the Intake Air Control Valve (IACV) attached to the air intake chamber. Part of the Acoustic Control Induction System (ACIS), the ECU provides signals to the Vacuum Switch Valve (VSV) to open or close. This valve opens or closes, the vacuum source to the actuator, which in turn opens or closes the IACV. The IACV is designed to modify the effective manifold length in two stages for increased power in all driving ranges.

WhereEverybodyKnowsYourName

ELECTRONIC CONTROL SYSTEM

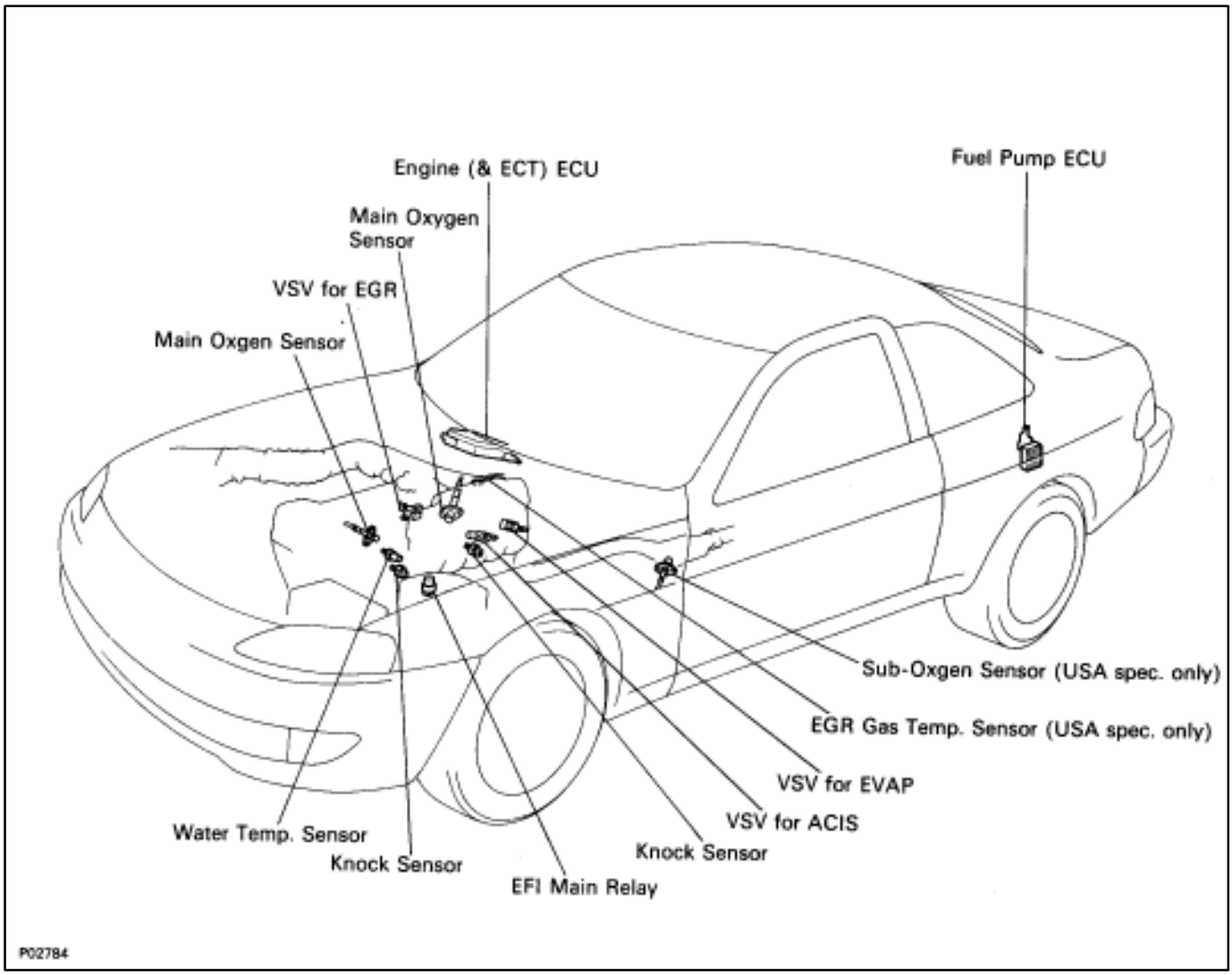

The control system consists of sensors which detect various engine conditions, and a ECU which determines the injection volume (timing) based on the signals from the sensors.

The various sensors detect the air intake volume, engine rpm, oxygen density in the exhaust gas, coolant temperature, air intake temperature and atmospheric pressure etc. and convert the information into an electrical signal which is sent to the ECU. Based on these signals, the ECU calculates the optimum ignition timing for the current conditions and operates the injectors.

The ECU not only controls the fuel injection timing, but also the self diagnostic function which records the occurrence of a malfunction, ignition timing control, idle rpm control, EGR control, EVAP control, ACIS and fuel pump control, which switches between the high and low fuel pump speeds according to varied load conditions.

WhereEverybodyKnowsYourName

OPERATION

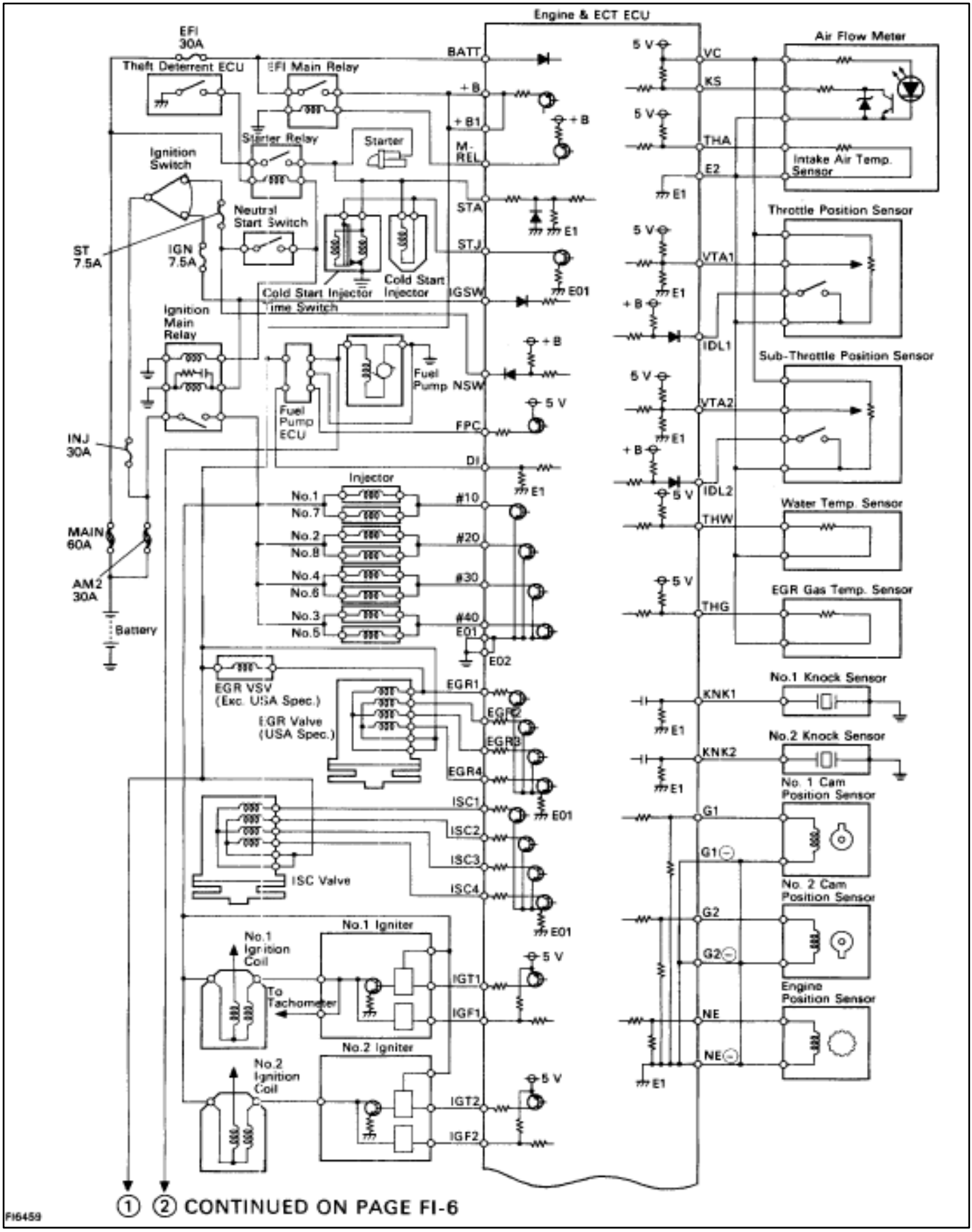

① ② CONTINUED ON PAGE FI-6

WhereEverybodyKnowsYourName

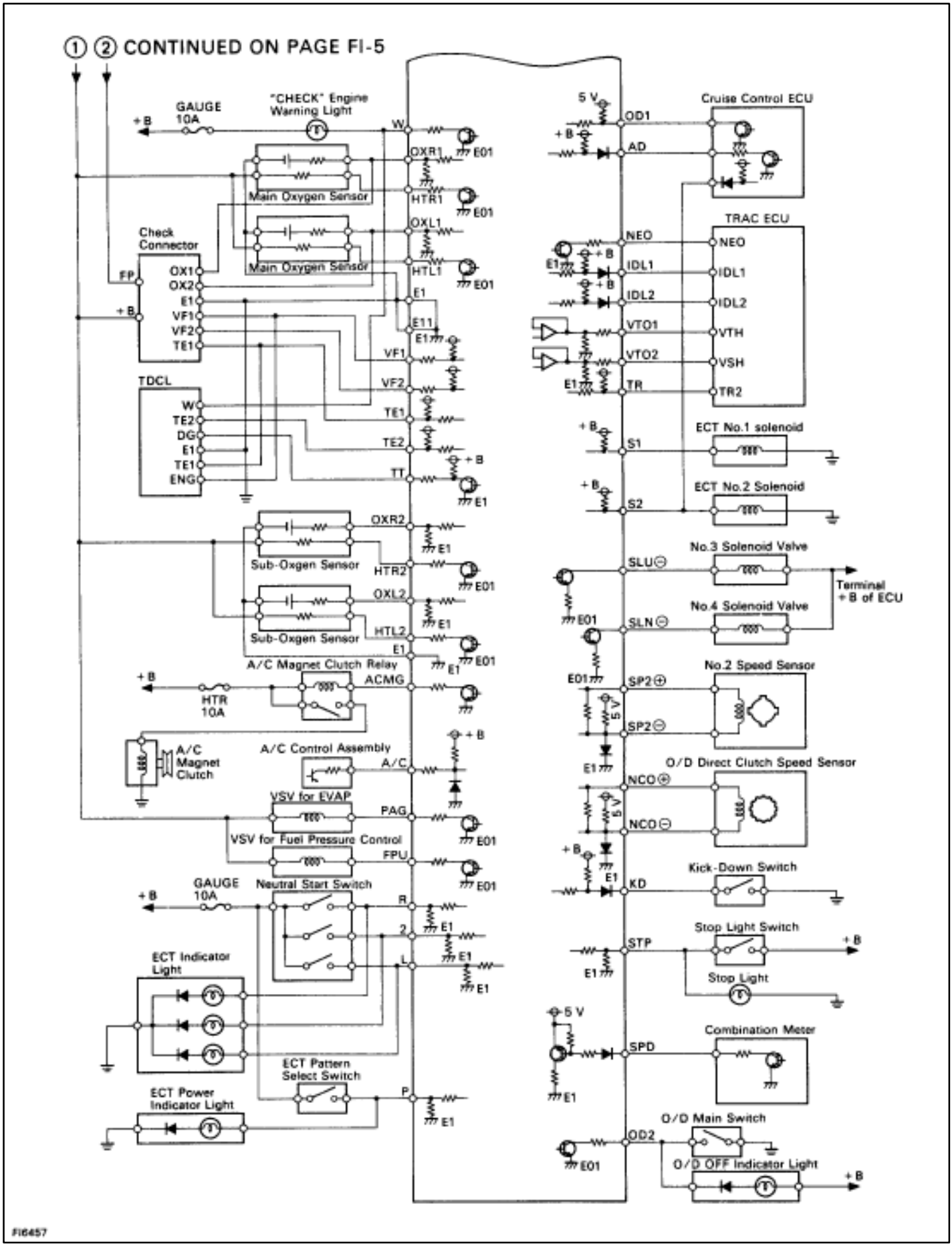

WhereEverybodyKnowsYourName

FUEL SYSTEM

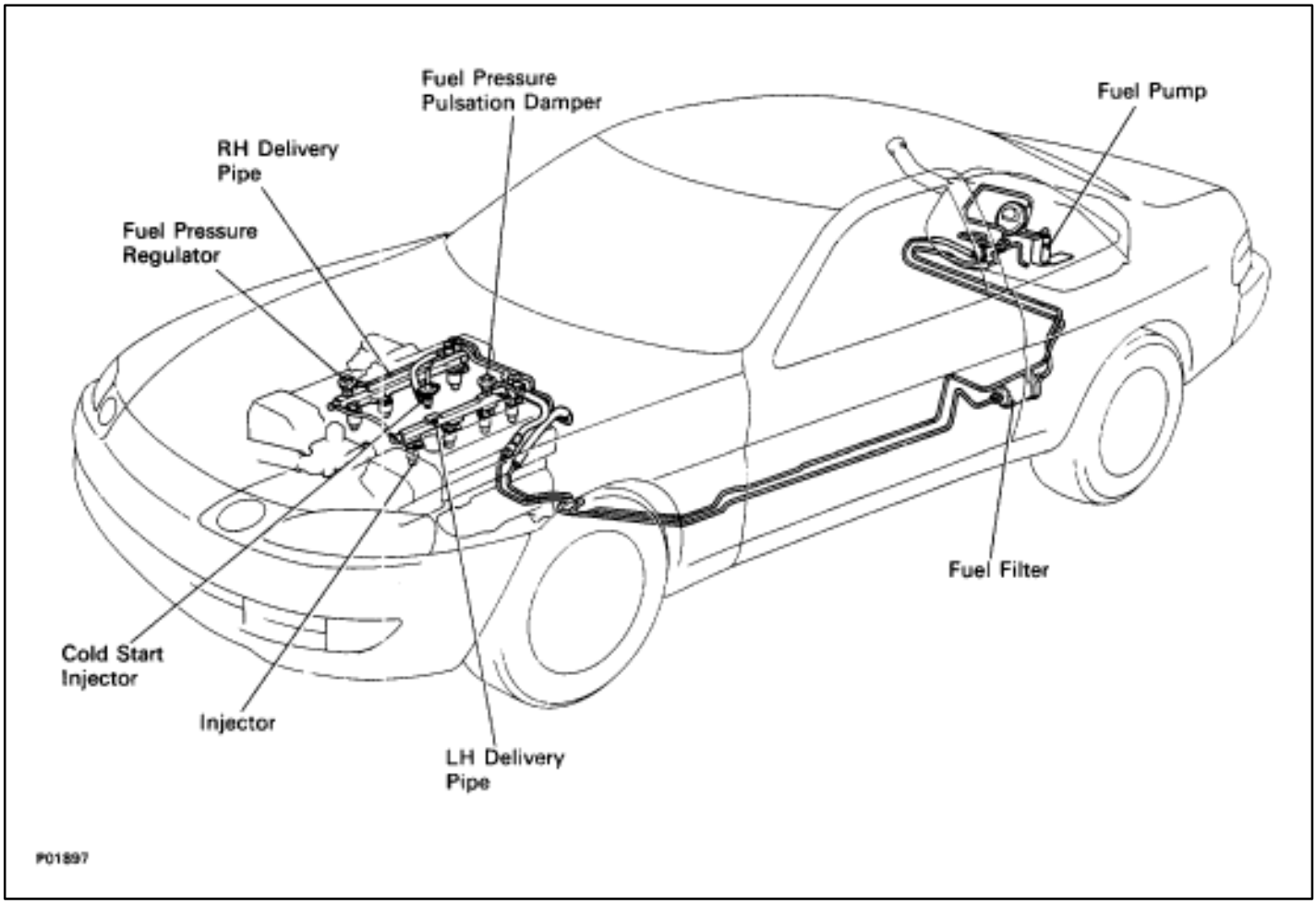

Fuel is pumped up by the fuel pump, which flows through the fuel filter under pressure through the fuel pipe to the delivery pipe where it is distributed to each injector and the cold start injector.

The fuel pressure regulator adjusts the pressure of the fuel from the fuel line (high pressure side) to a pressure 284 kPa (2.9 kgf/cm^2, 41 psi) higher than the pressure inside the intake manifold, and excess fuel is returned to the fuel tank through the return pipe.

When the engine is hot, the fuel pressure is increased to control percolation in the fuel system and improve restartability and idling stability.

The pulsation damper absorbs the slight fluctuations in fuel pressure caused by the injector.

The injectors operate on input of injection signals from the ECU and inject fuel into the intake manifold.

The cold start injector operates when starting with low coolant temperature or at normal temperature ranges, injecting fuel into the air intake chamber to improve startability.

WhereEverybodyKnowsYourName

AIR INDUCTION SYSTEM

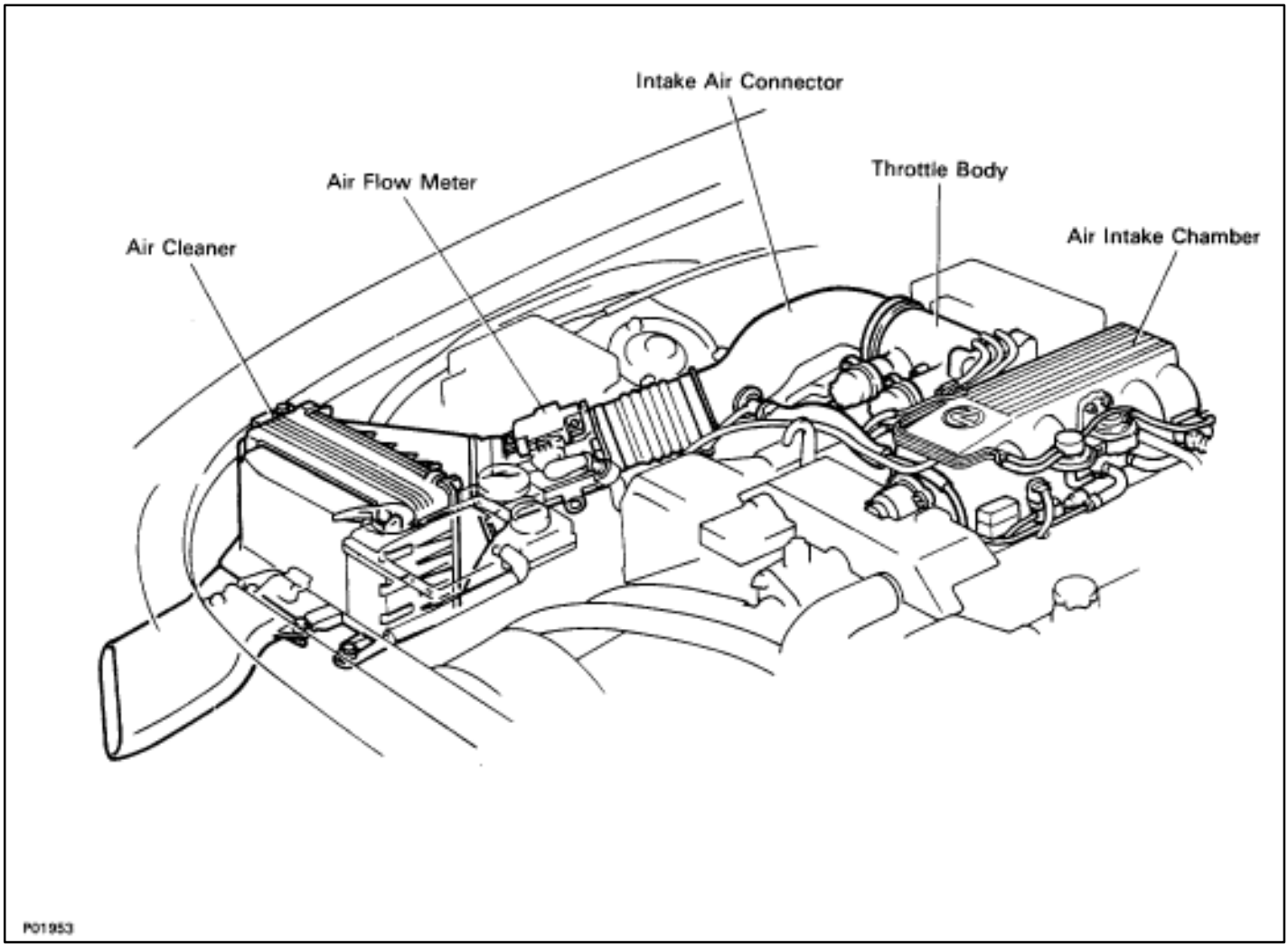

Air filtered through the air cleaner passes through the air flow meter and the amount flowing to the air intake chamber is determined according to the throttle valve opening in the throttle body and the engine rpm.

Air flow meter measures the air intake flow to the engine by the swirl frequency.

Located in the throttle body is the throttle valve, which regulates the volume of air intake to the engine. Air intake controlled by the throttle valve opening is distributed from the intake chamber to the manifold of each cylinder and is drain into the combustion chamber.

At air low temperature the ISC valve opens and the air flows through the ISC valve, as well as the throttle body, into the air intake chamber. During engine warming up, even if the throttle valve is completely closed, air flows to the air intake chamber, thereby increasing the idle speed (first idle operation).

The air intake chamber prevents pulsation of the intake air, reduces the influence on the air flow meter and increases the air intake volume. It also prevents intake air interference in each cylinder.

WhereEverybodyKnowsYourName

ELECTRONIC CONTROL SYSTEM

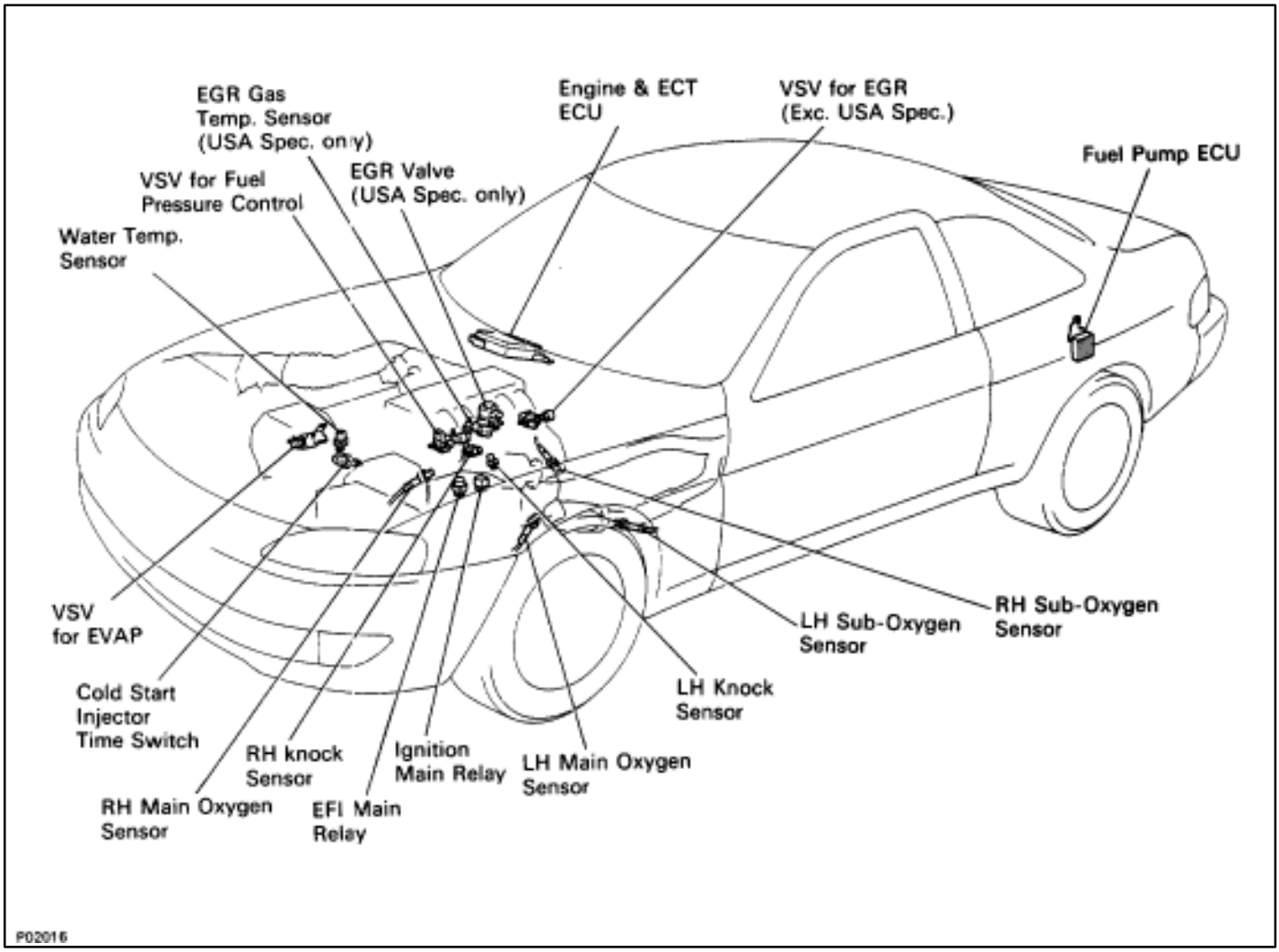

The control system consists of sensors which detect various engine conditions, and a ECU which determines the injection volume (timing) based on the signals from the sensors.

The various sensors detect the air intake volume, engine rpm, oxygen density in the exhaust gas, coolant temperature, air intake temperature and atmospheric pressure etc. and convert the information into an electrical signal which is sent to the ECU. Based on these signals, the ECU calculates the optimum ignition timing for the current conditions and operates the injectors.

The ECU not only controls the fuel injection timing, but also the self diagnostic function which records the occurrence of a malfunction, ignition timing control, idle rpm control, EGR control, EVAP control, fuel pressure control and fuel pump control.

WhereEverybodyKnowsYourName

PREPARATION

SST (SPECIAL SERVICE TOOLS)

Illustration	Part No.	Part Name	Note
	09268–41045	Injection Measuring Tool Set	
	(09268–41090)	(No. 7 Union)	Injector
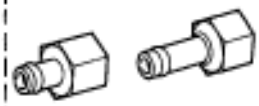	**(09268–52010)**	(Injection Measuring Attachment)	Injector
	(09405–09015)	(No. 1 Union)	Injector
	09268–45012	EFI Fuel Pressure Gauge	
	09612–24014	Steering Gear Housing Overhaul Tool Set	
	(09617–24011	(Steering Rack Wrench)	Fuel pressure pulsation damper
	09631–22020	Power Steering Hose Nut 14 x 17 mm Wrench Set	Fuel line flare nut
	09816–30010	Oil Pressure Switch Socket	Knock sensor
	09842–30070	Wire “F” EFI Inspection	Injector
	09843–18020	Diagnosis Check Wire	
	09990–01000	Engine Control Computer Check Harness “A”	

WhereEverybodyKnowsYourName

RECOMMENDED TOOLS

Illustration	Part No.	Part Name	Note
	09082–00015	TOYOTA Electrical Tester	
	09200–00010	Engine Adjust Kit	
	09258–00030	Hose Plug Set	Plug for the vacuum hose, fuel hose, etc.

EQUIPMENT

Part Name	Note
Graduted cylinder	Injector
Tachometer	
Torque wrench	
Soft brush	
Carburetor cleaner	Throttle body
Stethoscope	Injector
Vacuum gauge	

EQUIPMENT

Part Name	Note
Graduted cylinder	Injector
Tachometer	
Torque wrench	
Soft brush	
Carburetor cleaner	Throttle body
Stethoscope	Injector
Vacuum gauge	

WhereEverybodyKnowsYourName

Preparation

SST (SPECIAL SERVICE TOOLS)

Illustration	Part No.	Part Name	Note
	09268–41045	Injection Measuring Tool Set	
	(90268–41070)	No. 4 Union	Injector
	(09268–41080)	No. 6 Union	Cold start Injector
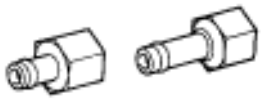	**(09268–52010)**	Injection Measuring Attachment	Injector
	09268–45012	EFI Fuel Pressure Gauge	
	09612–24014	Steering Gear Housing Overhaul Tool Set	
	(09617–24011)	Steering Rack Wrench	Fuel pressure pulsation damper
	09631–22020	Power Steering Hose Nut 14 X 17 mm Wrench Set	Fuel line flare nut
	09816–30010	Oil Pressure Switch Socket	Knock sensor
	09842–30055	Wire “G” EFI Inspection	Cold start Injector
	09842–30070	Wire “F” EFI Inspection	Injector
	09843–18020	Diagnosis Check Wire	
	0990–01000	Engine Control Computer Check Harness “A”	

WhereEverybodyKnowsYourName

RECOMMENDED TOOLS

Illustration	Part No.	Part Name	Note
	09082–0015	TOYOTA Electrical Tester	
	09200–00010	Engine Adjust Kit	
	09258–00030	Hose Plug Set	Plug for the Vacuum hose, fuel hose ect.

EQUIPMENT

Part Name	Note
Graduated cylinder	Injector
Tachometer	
Torque wrench	

SSM (SERVICE SPECIAL MATERIALS)

Part Name	Part No.	Use etc.
Seal packing 1282B, Three bond 1282B or equivalent	08826–00100	Water inlet housing

WhereEverybodyKnowsYourName

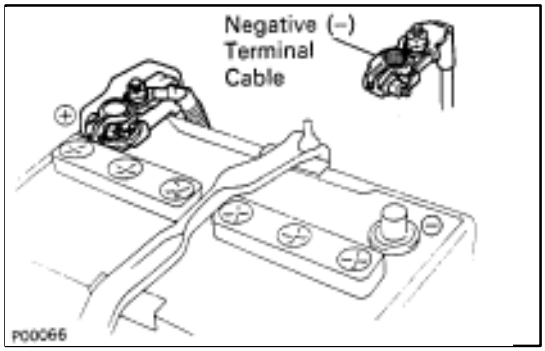

PRECAUTIONS

1. **Before working on the fuel system, disconnect the cable from negative (–) terminal of the battery.**
   HINT: Any diagnostic code retained by the computer will be erased when the battery terminal is removed. Therefore, if necessary, read the diagnosis before removing the battery terminal.
   CAUTION: Turn the ignition switch to ”LOCK”. Disconnect the cable from the negative (–) terminal of the battery. Wait at least 20 seconds before proceeding with work.
2. **Do not smoke or work on open flame when working on the fuel system.**
3. **Keep gasoline away from rubber or leather parts.**

INSPECTION PRECAUTIONS

MAINTENANCE PRECAUTIONS

1. **CHECK CORRECT ENGINE TUNE–UP**
   (See page EM–8)

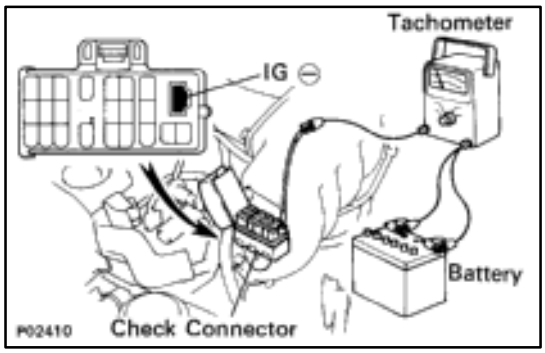

2. **PRECAUTIONS WHEN CONNECTING GAUGE**
   (a) Use the battery as the power source for the timing light, tachometer, etc.
   (b) Connect the test probe of a tachometer to the terminal IG ≦ of the check connector.

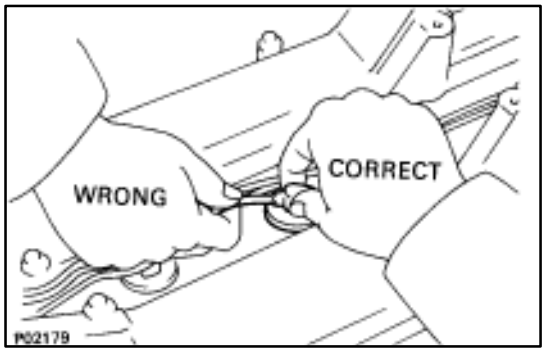

3. **IN EVENT OF ENGINE MISFIRE, FOLLOWING PRECAUTIONS SHOULD BE TAKEN**
   (a) Check proper connection of battery terminals, etc.
   (b) Handle high–tension cords carefully.
   (c) After repair work, check that the ignition coil terminals and all other ignition system lines are reconnected securely.
   (d) When cleaning the engine compartment, be especially careful to protect the electrical system from water.
4. **PRECAUTIONS WHEN HANDLING OXYGEN SENSOR**
   (a) Do not allow oxygen sensor to drop or hit against an object.
   (b) Do not allow the sensor to come into contact with water.

WhereEverybodyKnowsYourName

IF VEHICLE IS EQUIPPED WITH MOBILE RADIO SYSTEM (HAM, CB, ETC.)

The ECU has been designed so that it will not be affected by outside interference. However, if your vehicle is equipped with a CB radio transceiver, etc. (even one with about 10 W output), it may, at times, have an effect upon ECU operation, especially if the antenna and feeder are installed nearby.

Therefore, observe the following precautions:

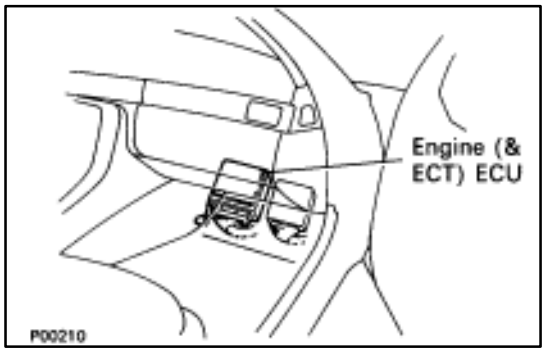

1. Install the antenna as far away as possible from the ECU. The ECU is located on the floor panel on the passenger side so the antenna should be installed at the rear of the vehicle.
2. Keep the antenna feeder as far away as possible from the ECU wires–at least 20 cm (7.87 in.) –and, especially, do not wind them together.
3. Check that the feeder and antenna are properly adjusted.
4. Do not equip your vehicle with a powerful mobile radio system.
5. Do not open the cover or the case of the ECU unless absolutely necessary. (If the IC terminals are touched, the IC may be destroyed by static electricity.)

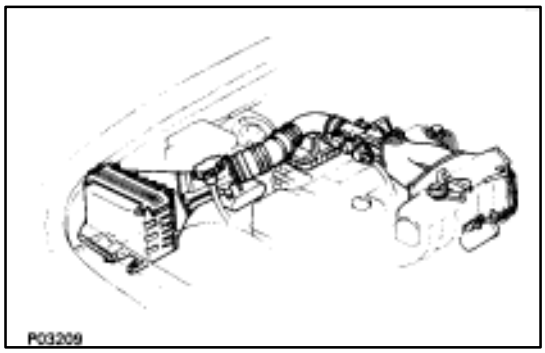

AIR INDUCTION SYSTEM

1. Separation of the engine oil dipstick, oil filler cap, PCV hose, etc. may cause the engine to run out of tune.
2. Disconnection, looseness or cracks in the parts of the air induction system between the throttle body and cylinder head will cause air suction and cause the engine to run out of tune.

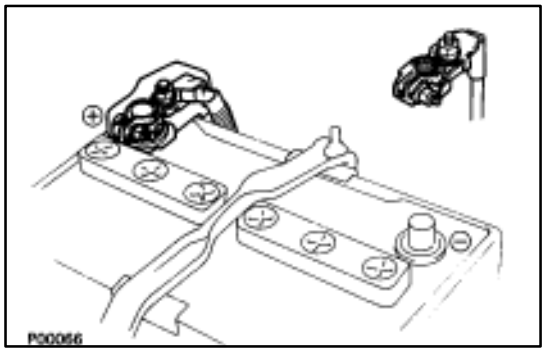

ELECTRONIC CONTROL SYSTEM

1. Before removing EFI wiring connectors, terminals, etc., first disconnect the power by either turning the ignition switch OFF or disconnecting the battery terminals.
   HINT: Always check the diagnosis code before disconnecting the battery terminals.
2. When installing the battery, be especially careful not to incorrectly connect the positive (+) and negative (–) cables.
3. Do not permit parts to receive a severe impact during removal or installation. Handle all EFI parts carefully, especially the ECU.
4. Do not be careless during troubleshooting as there are numerous transistor circuits and even slight terminal contact can cause further troubles.
5. Do not open the ECU cover.
6. When inspecting during rainy weather, take care to prevent entry of water. Also, when washing the engine compartment, prevent water from getting on the EFI parts and wiring connectors.
7. Parts should be replaced as an assembly.

WhereEverybodyKnowsYourName

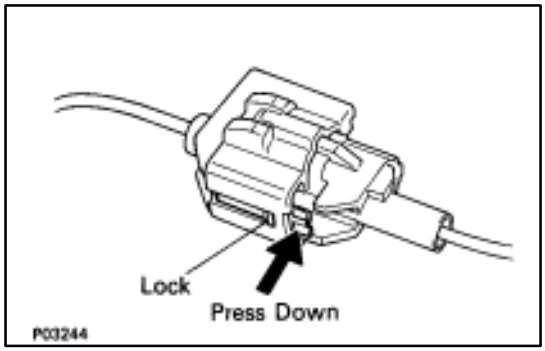

8. Care is required when pulling out and inserting wiring connectors.
   (a) Release the lock and pull out the connector, pulling on the connectors.

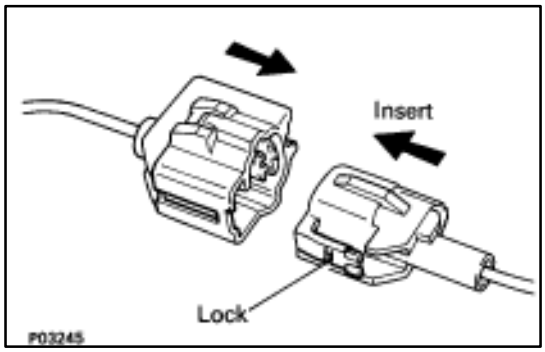

   (b) Fully insert the connector and check that it is locked.

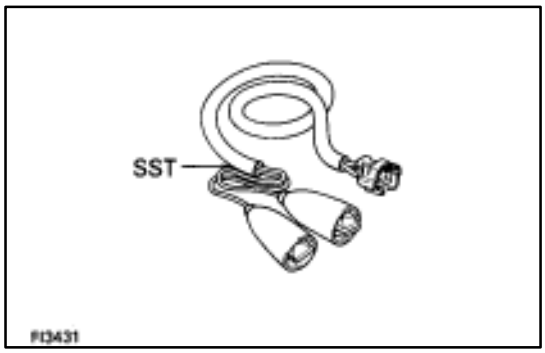

9. Use SST for inspection or test of the injector or its wiring connector.
   SST 09842–30070

WhereEverybodyKnowsYourName

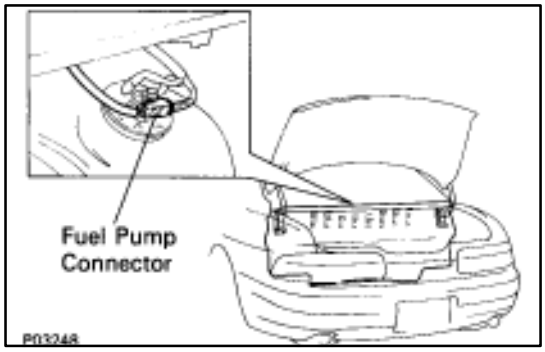

FUEL SYSTEM

1. When disconnecting the high fuel pressure line, a large amount of gasoline will spill out, so observe the following procedures:
   (a) Remove the luggage compartment trim cover.
   (b) Disconnect the fuel pump connector.
   (c) Start the engine, After the engine has stopped on its own, turn off the ignition switch.

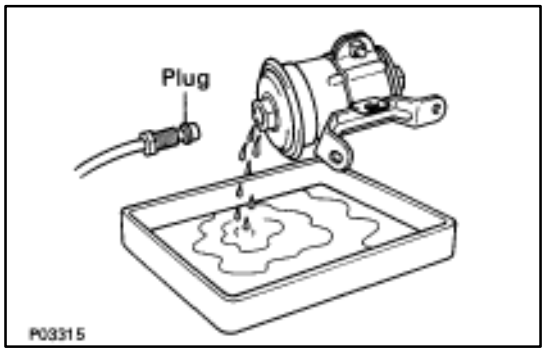

   (d) Put a container under the connection.
   (e) Slowly loosen the connection.
   (f) Disconnect the connection.
   (g) Plug the connection with a rubber plug.
   (h) Reconnect the fuel pump connector.
   (i) Reinstall the luggage compartment trim cover.

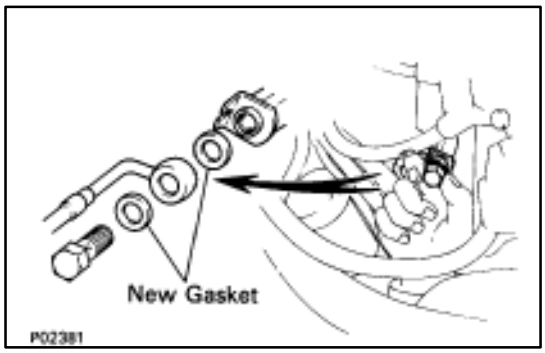

2. When connecting the flare nut or union bolt on the high pressure pipe union, observe the following procedures:
   (Union Bolt Type)
   (a) Always use a new gasket.
   (b) Tighten the union bolt by hand.
   (c) Tighten the union bolt to the specified torque.
   Torque: 34 N·m (350 kgf·cm, 25 ft·lbf)

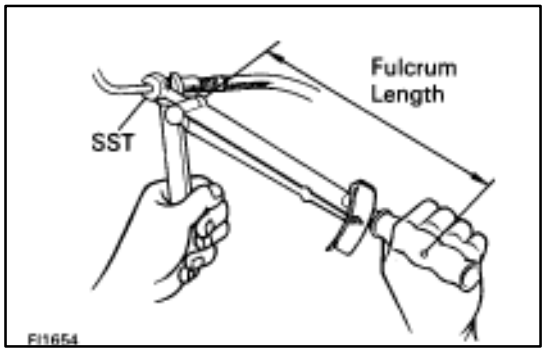

   (Flare Nut Type)
   (a) Apply a light coat of engine oil to the flare nut and tighten the flare nut by hand.
   (b) Using SST, tighten the flare nut to specified torque.
   SST 09631–22020
   Torque: 30 N·m (310 kgf·cm, 22 ft·lbf)
   HINT: Use a torque wrench with a fulcrum length of 30 cm (11.81 in.).

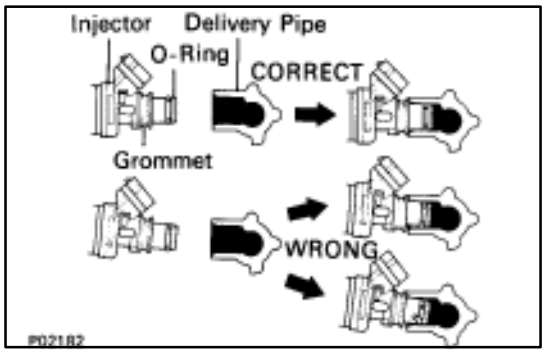

3. Observe the following precautions when removing and installing the injectors.
   (a) Never reuse the O–ring.
   (b) When placing a new O–ring on the injector, take care not to damage it in any way.
   (c) Coat a new O–ring with spindle oil or gasoline before installing–never use engine, gear or brake oil.

WhereEverybodyKnowsYourName

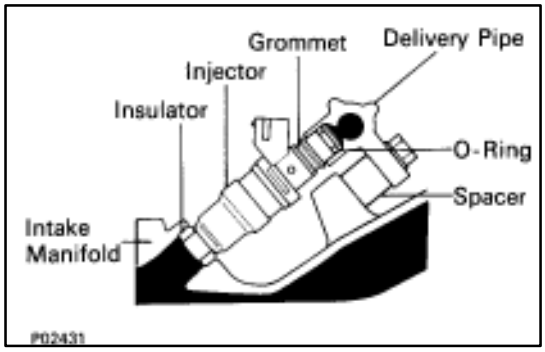

4. Install the injector to delivery pipe and cylinder head as shown in the illustration.

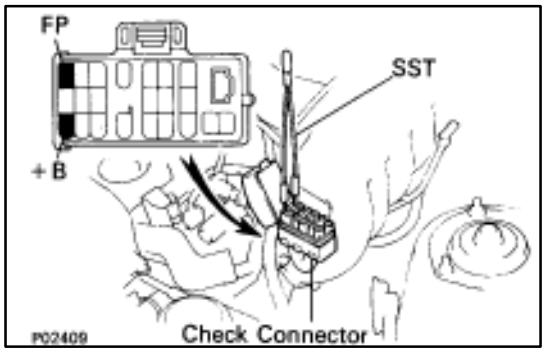

5. Check that there are no fuel leaks after performing any maintenance on the fuel system.
   (a) Using SST, connect terminals +B and FP of the check (”DIAGNOSIS”) connector.
   SST 09843–18020
   (b) With engine stopped, turn the ignition switch ON.

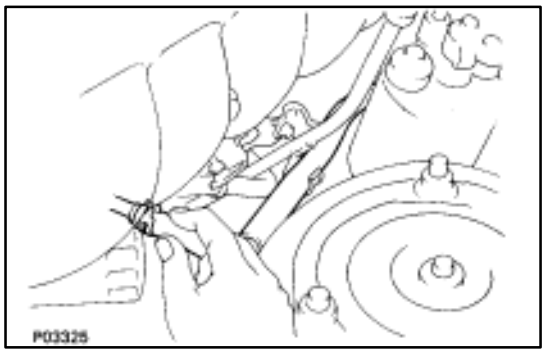

   (c) When the fuel return hose is pinched, the pressure within high pressure line will rise to approx. 392 kPa (4 kgf/cm2, 57 psi). In this state, check to see that there are no leaks from any part of the fuel system.
   NOTICE: Always pinch the hose. Avoid bending as it may cause the hose to crack.

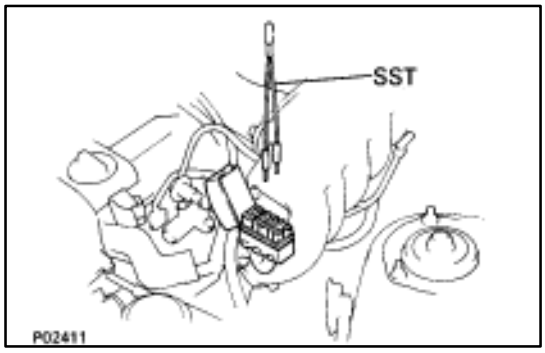

   (d) Turn the ignition switch OFF.
   (e) Remove SST from the check connector.
   SST 09843–18020

WhereEverybodyKnowsYourName

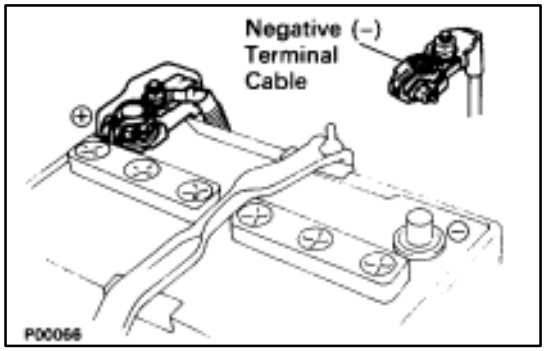

PRECAUTIONS

1. **Before working on the fuel system, disconnect the cable from negative (–) terminal of the battery.**
   HINT: Any diagnostic code retained by the computer will be erased when the battery terminal is removed. Therefore, if necessary, read the diagnosis before removing the battery terminal.

   CAUTION: Work must be started after approx. 20 seconds or longer from the time the ignition switch is turned to the "LOCK" position and negative (–) terminal cable is disconnected from the battery.

2. **Do not smoke or work on open flame when working on the fuel system.**

3. **Keep gasoline away from rubber or leather parts.**

INSPECTION PRECAUTIONS

MAINTENANCE PRECAUTIONS

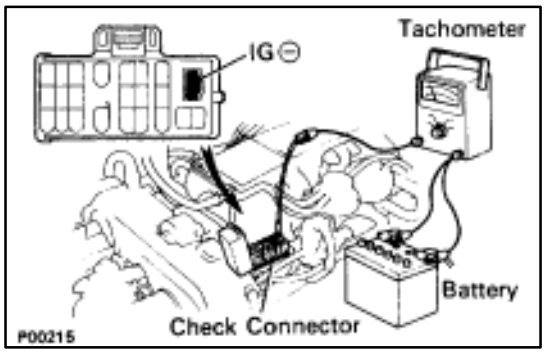

1. **CHECK CORRECT ENGINE TUNE–UP**
   (See page EM–8)

2. **PRECAUTIONS WHEN CONNECTING GAUGE**
   (a) Use the battery as the power source for the timing light, tachometer, etc.
   (b) Connect the test probe of a tachometer to the terminal IG of the check connector.

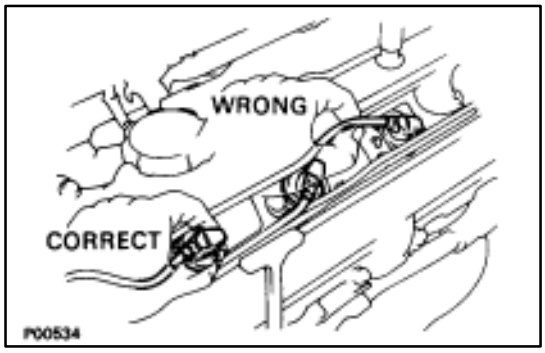

3. **IN EVENT OF ENGINE MISFIRE, FOLLOWING PRECAUTIONS SHOULD BE TAKEN**
   (a) Check proper connection of battery terminals, etc.
   (b) Handle high–tension cords carefully.
   (c) After repair work, check that the ignition coil terminals and all other ignition system lines are reconnected securely.
   (d) When cleaning the engine compartment, be especially careful to protect the electrical system from water.

4. **PRECAUTIONS WHEN HANDLING OXYGEN SENSOR**
   (a) Do not allow oxygen sensor to drop or hit against an object.
   (b) Do not allow the sensor to come into contact with water.

WhereEverybodyKnowsYourName

IF VEHICLE IS EQUIPPED WITH MOBILE RADIO SYSTEM (HAM, CB, ETC.)

The ECU has been designed so that it will not be affected by outside interference. However, if your vehicle is equipped with a CB radio transceiver, etc. (even one with about 10 W output), it may, at times, have an effect upon ECU operation, especially if the antenna and feeder are installed nearby.

Therefore, observe the following precautions:

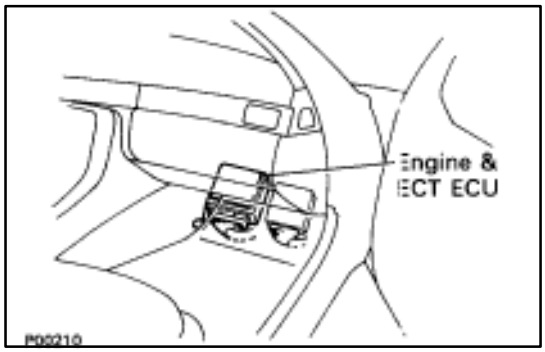

1. Install the antenna as far away as possible from the ECU. The ECU is located on the floor panel on the passenger side so the antenna should be installed at the rear of the vehicle.
2. Keep the antenna feeder as far away as possible from the ECU wires–at least 20 cm (7.87 in.)–and, especially, do not wind them together.
3. Check that the feeder and antenna are properly adjusted.
4. Do not equip your vehicle with a powerful mobile radio system.
5. Do not open the cover or the case of the ECU unless absolutely necessary. (If the IC terminals are touched, the IC may be destroyed by static electricity.)

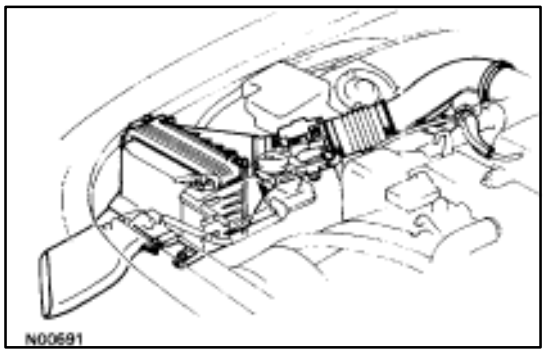

AIR INDUCTION SYSTEM

1. Separation of the engine oil dipstick, oil filler cap, PCV hose, etc. may cause the engine to run out of tune.
2. Disconnection, looseness or cracks in the parts of the air induction system between the throttle body and cylinder head will cause air suction and cause the engine to run out of tune.

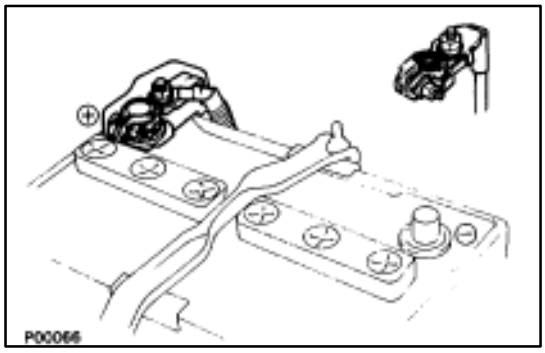

ELECTRONIC CONTROL SYSTEM

1. Before removing EFI wiring connectors, terminals, etc., first disconnect the power by either turning the ignition switch OFF or disconnecting the battery terminals.
   HINT: Always check the diagnosis code before disconnecting the battery terminals.
2. When installing the battery, be especially careful not to incorrectly connect the positive (+) and negative (–) cables.
3. Do not permit parts to receive a severe impact during removal or installation. Handle all EFI parts carefully, especially the ECU.
4. Do not be careless during troubleshooting as there are numerous transistor circuits and even slight terminal contact can cause further troubles.
5. Do not open the ECU cover.
6. When inspecting during rainy weather, take care to prevent entry of water. Also, when washing the engine compartment, prevent water from getting on the EFI parts and wiring connectors.
7. Parts should be replaced as an assembly.

WhereEverybodyKnowsYourName

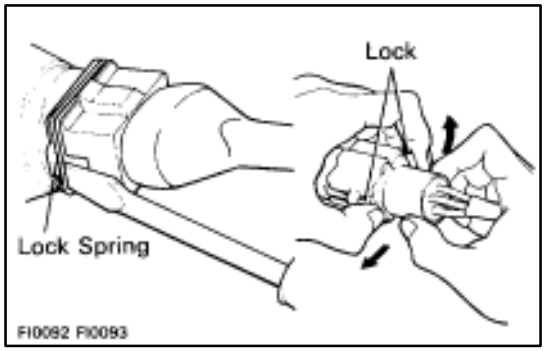

8. Care is required when pulling out and inserting wiring connectors.
   (a) Release the lock and pull out the connector, pulling on the connectors.

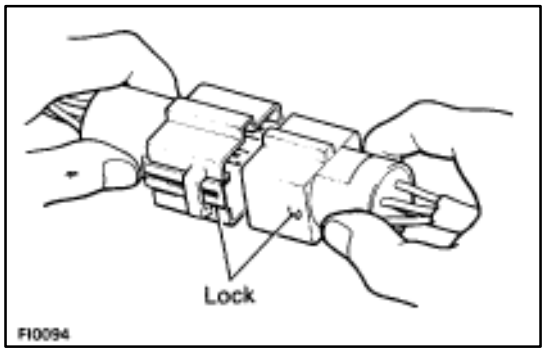

   (b) Fully insert the connector and check that it is locked.

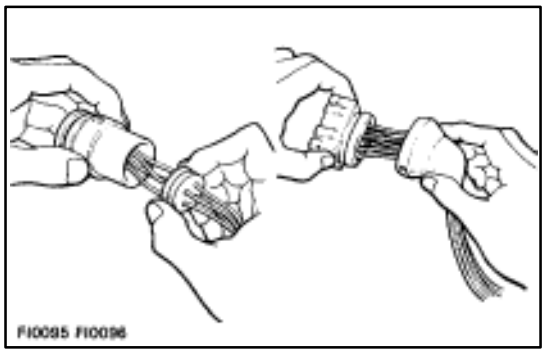

9. When inspecting a connector with a volt/ohmmeter.
   (a) Carefully take out the water–proofing rubber if it is a water–proof type connector.

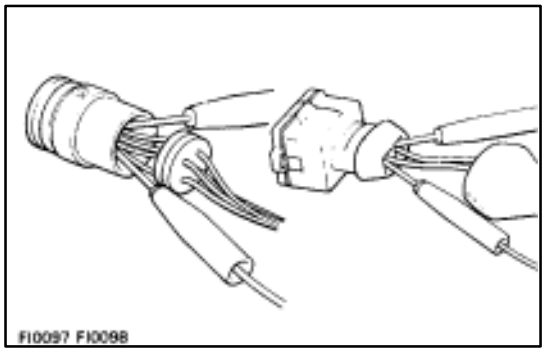

   (b) Insert the test probe into the connector from wiring side when checking the continuity, amperage or voltage.
   (c) Do not apply unnecessary force to the terminal.
   (d) After checking, install the water–proofing rubber on the connector securely.

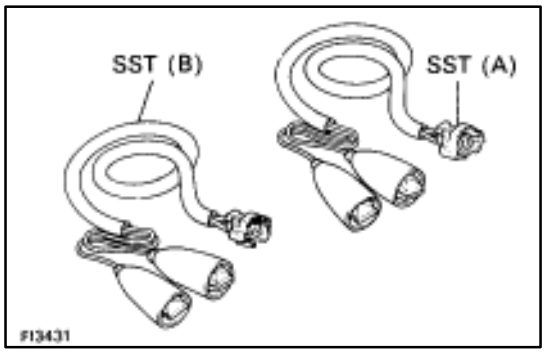

10. Use SST for inspection or test of the injector, cold start injector or its wiring connector.

    SST 09842–30055 (A) and 09842–30070 (C)

WhereEverybodyKnowsYourName

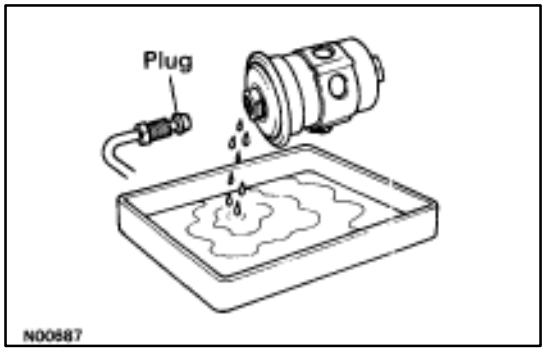

FUEL SYSTEM

1. When disconnecting the high fuel pressure line, a large amount of gasoline will spill out, so observe the following procedures:
   (a) Put a container under the connection.
   (b) Slowly loosen the connection.
   (c) Disconnect the connection.
   (d) Plug the connection with a rubber plug.

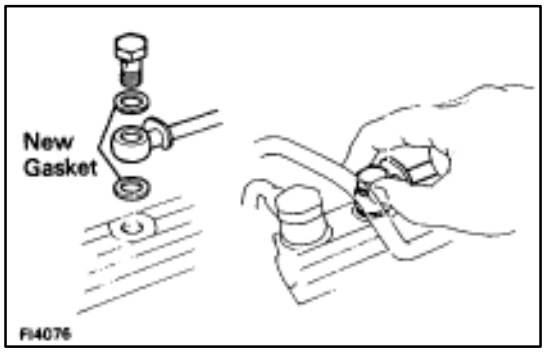

2. When connecting the flare nut or union bolt on the high pressure pipe union, observe the following procedures:
   (Union Bolt Type)
   (a) Always use a new gasket.
   (b) Tighten the union bolt by hand.
   (c) Tighten the union bolt to the specified torque.
   Torque: 15 N·m (150 kgf·cm, 11 ft·lbf)

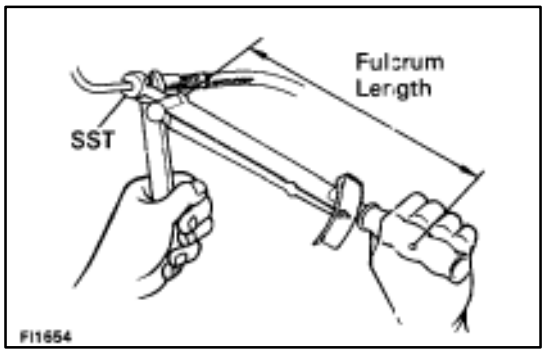

   (Flare Nut Type)
   (a) Apply a light coat of engine oil to the flare nut and tighten the flare nut by hand.
   (b) Using SST, tighten the flare nut to specified torque.
   SST 09631–22020
   Torque: 30 N·m (310 kgf·cm, 22 ft·lbf)
   HINT: Use a torque wrench with a fulcrum length of 30 cm (11.81 in.).

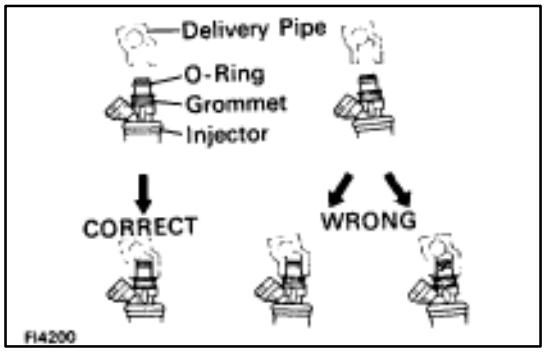

3. Observe the following precautions when removing and installing the injectors.
   (a) Never reuse the O–ring.
   (b) When placing a new O–ring on the injector, take care not to damage it in any way.
   (c) Coat a new O–ring with spindle oil or gasoline before installing–never use engine, gear or brake oil.

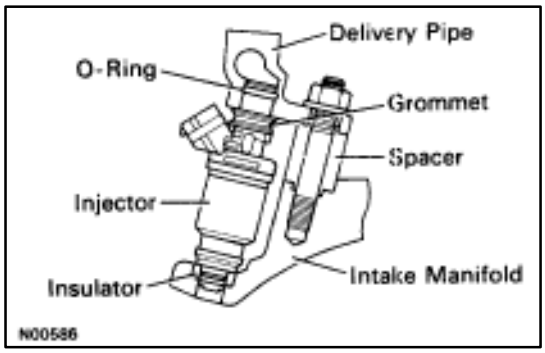

4. Install the injector to delivery pipe and cylinder head as shown in the illustration.

WhereEverybodyKnowsYourName

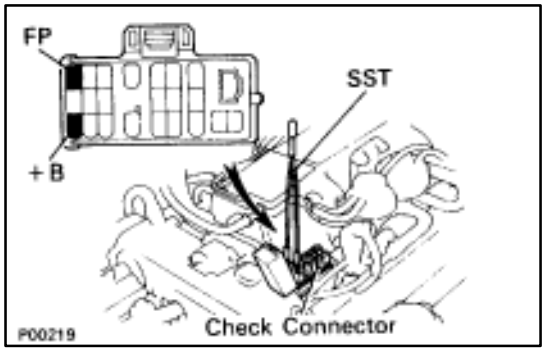

5. Check that there are no fuel leaks after performing any maintenance on the fuel system.
   (a) Using SST, connect terminals +B and FP of the check (”DIAGNOSIS”) connector.
   SST 09843–18020
   (b) With engine stopped, turn the ignition switch ON.

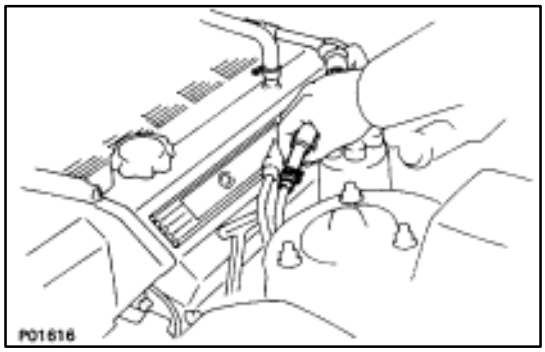

   (c) When the fuel return hose is pinched, the pressure within high pressure line will rise to approx. 392 kPa (4 kgf/cm2, 57 psi). In this state, check to see that there are no leaks from any part of the fuel system.
   NOTICE: Always pinch the hose. Avoid bending as it may cause the hose to crack.

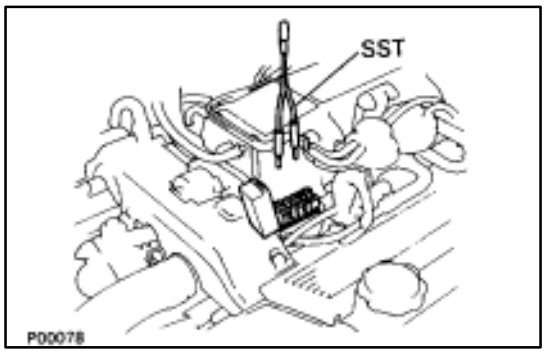

   (d) Turn the ignition switch OFF.
   (e) Remove the SST from the check connector.
   SST 09843–18020

WhereEverybodyKnowsYourName

FUEL SYSTEM
Fuel Pump

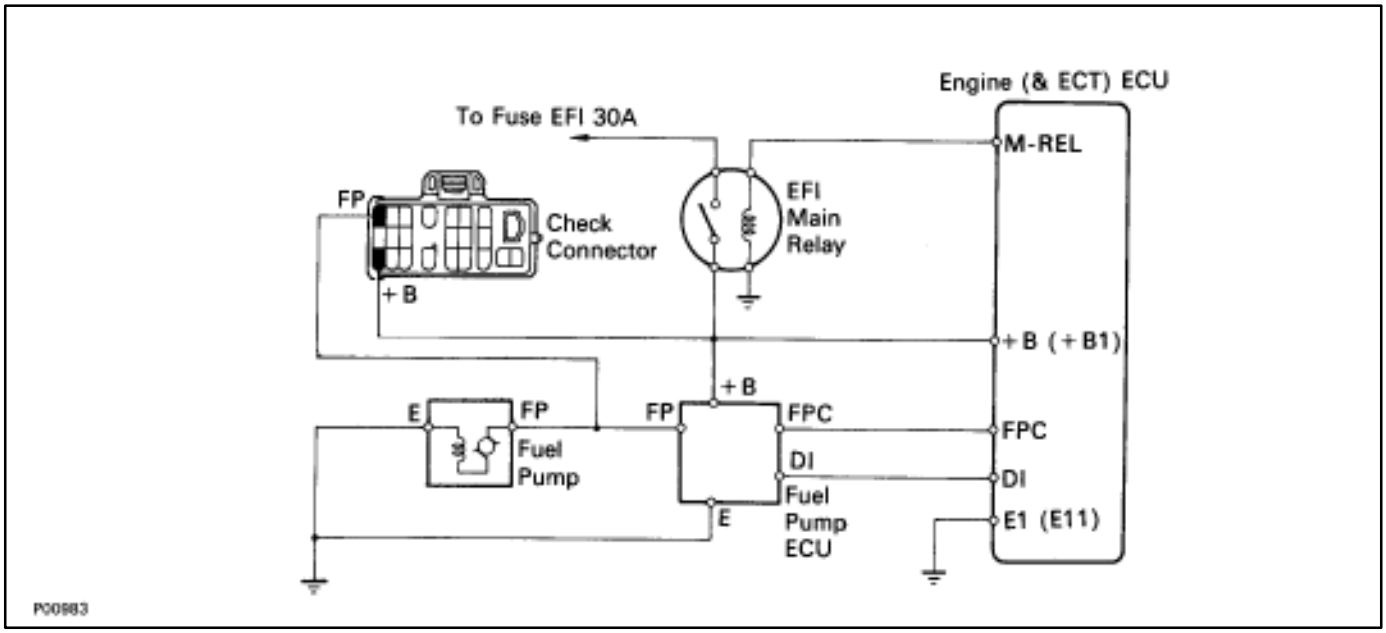

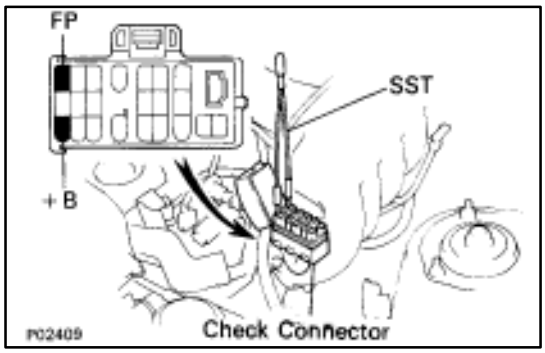

ON–VEHICLE INSPECTION

1. CHECK FUEL PUMP OPERATION

(a) Using SST, connect terminals +B and FP of the check (”DIAGNOSIS”) connector.

SST 09843–18020

(b) Turn the ignition switch ON.

NOTICE: Do not start the engine.

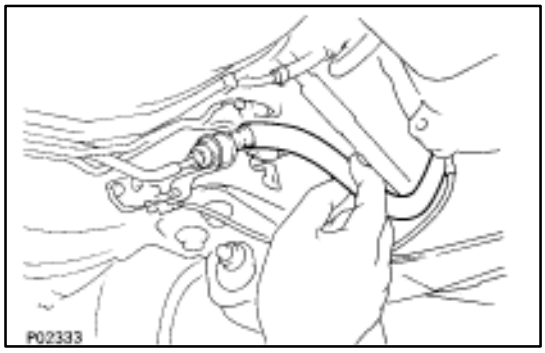

(c) Check that there is pressure in the fuel inlet hose from the fuel filter.

HINT: At this time, you will hear fuel return noise.

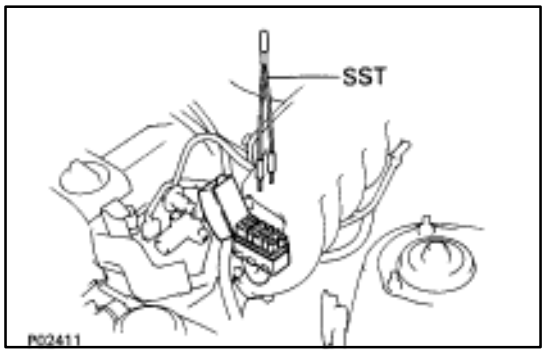

(d) Turn the ignition switch OFF.

(e) Remove SST from the check connector.

SST 09843–18020

WhereEverybodyKnowsYourName

If there is no pressure, check the following parts:

- Fuses
- EFI main relay
- Fuel pump ECU
- Fuel pump
- Engine (& ECT) ECU
- Wiring connections

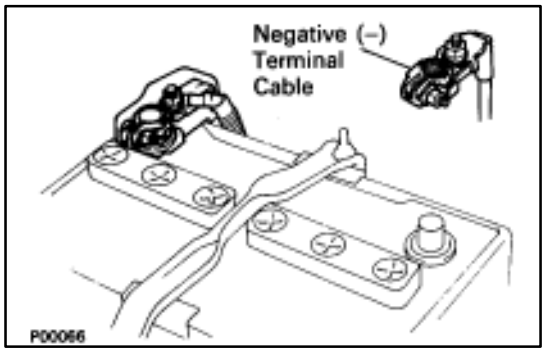

2. CHECK FUEL PRESSURE

(a) Check the battery voltage above 12 volts.

(b) Disconnect the cable from the negative (–) terminal of the battery.

CAUTION: Turn the ignition switch to "LOCK". Disconnect the cable from the negative (–) terminal of the battery. Wait at least 20 seconds before proceeding with work.

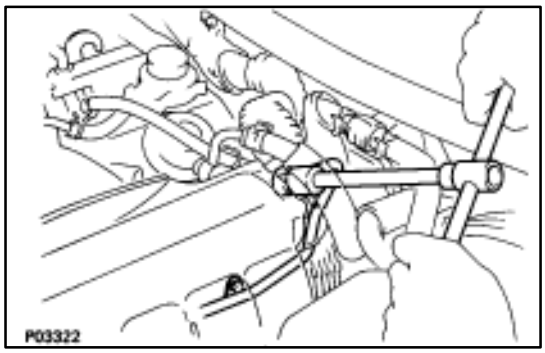

(c) Remove the union bolt holding the deliver pipe to the No. 1 fuel pipe. Remove the two gaskets.

HINT:

- Put a suitable container or shop towel under the delivery pipe.
- Slowly loosen the union bolt.

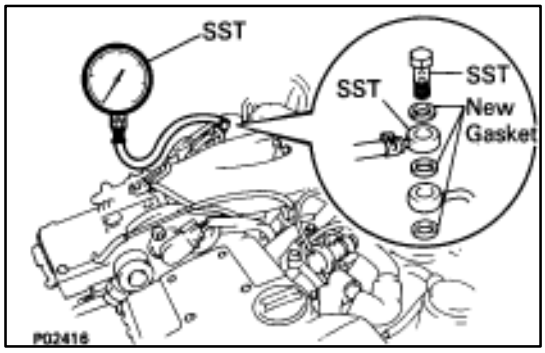

(d) Install the No. 1 fuel pipe and SST (pressure gauge) to the delivery pipe with three new gaskets and the union bolt.

SST 09268–45012

Torque: 42 N·m (420 kgf·cm, 30 ft·lbf)

(e) Wipe off any splattered gasoline.

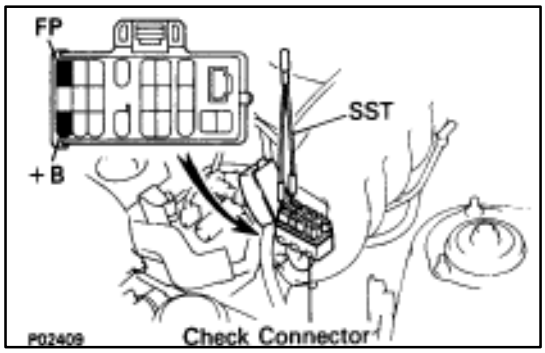

(f) Using SST, connect terminals +B and FP of the check ("DIAGNOSIS") connector.

SST 09843–18020

(g) Reconnect the cable to the negative (–) terminal of the battery.

WhereEverybodyKnowsYourName

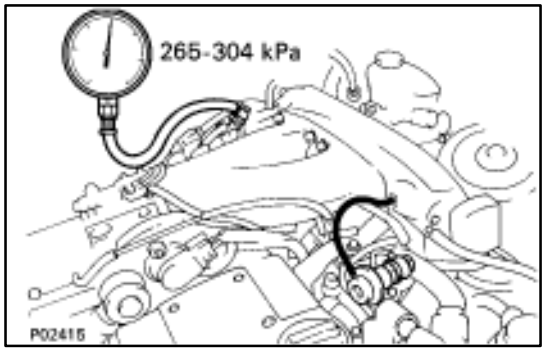

(h) Turn the ignition switch ON.

(i) Measure the fuel pressure.

Fuel pressure: 265–304 kPa
(2.7–3.1 kgf/cm, 38–44 psi)

If pressure is high, replace the fuel pressure regulator.

If pressure is low, check the following parts:

- Fuel hoses and connections
- Fuel pump
- Fuel filter
- Fuel pressure regulator

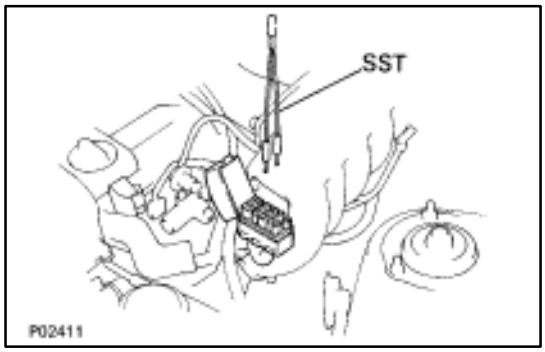

(j) Remove SST from the check connector.

SST 09843–18020

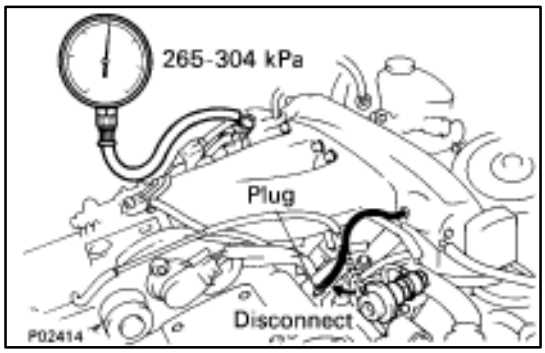

(k) Start the engine.

(l) Disconnect the vacuum sensing hose from the fuel pressure regulator, and plug the hose end.

(m) Measure the fuel pressure at idle.

Fuel pressure: 265–304 kPa
(2.7–3.1 kgf/cm, 38–44 psi)

(n) Reconnect the vacuum sensing hose to the fuel pressure regulator.

(o) Measure the fuel pressure at idle.

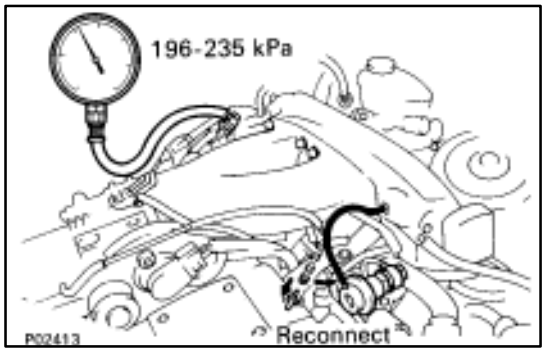

Fuel pressure: 196–235 kPa
(2.0–2.4 kgf/cm, 28–34 psi)

If pressure is not as specified, check the vacuum sensing hose and fuel pressure regulator.

(p) Stop the engine. Check that the fuel pressure remains 147 kPa (1.5 kgf/cm2, 21 psi) or more for 5 minutes after the engine is turned off.

If pressure is not as specified, check the fuel pump, pressure regulator and/or injectors.

(q) After checking fuel pressure, disconnect the battery negative (–) cable and carefully remove SST to prevent gasoline from splashing.

SST 09268–45012

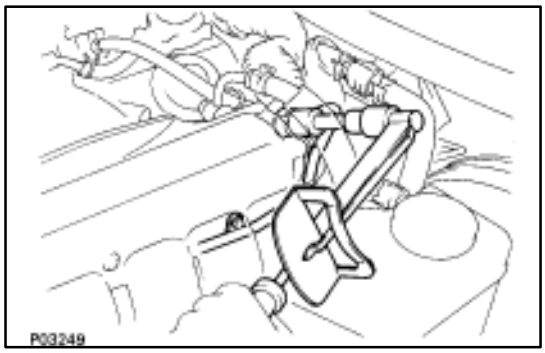

(r) Connect the No. 1 fuel pipe to the delivery pipe with two new gaskets and the union bolt.

Torque: 42 N·m (420 kgf·cm, 30 ft·lbf)

(s) Reconnect the cable to the negative (–) terminal of the battery.

(t) Check for fuel leaks. (See page FI–15)

WhereEverybodyKnowsYourName

COMPONENTS FOR REMOVAL AND INSTALLATION

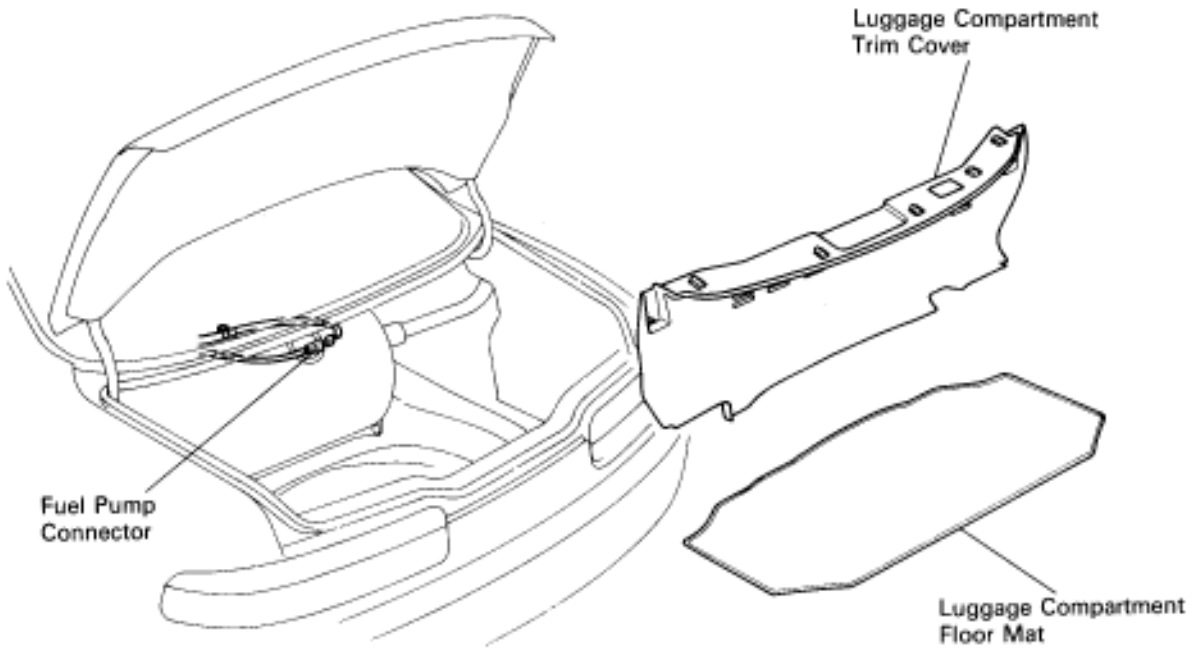

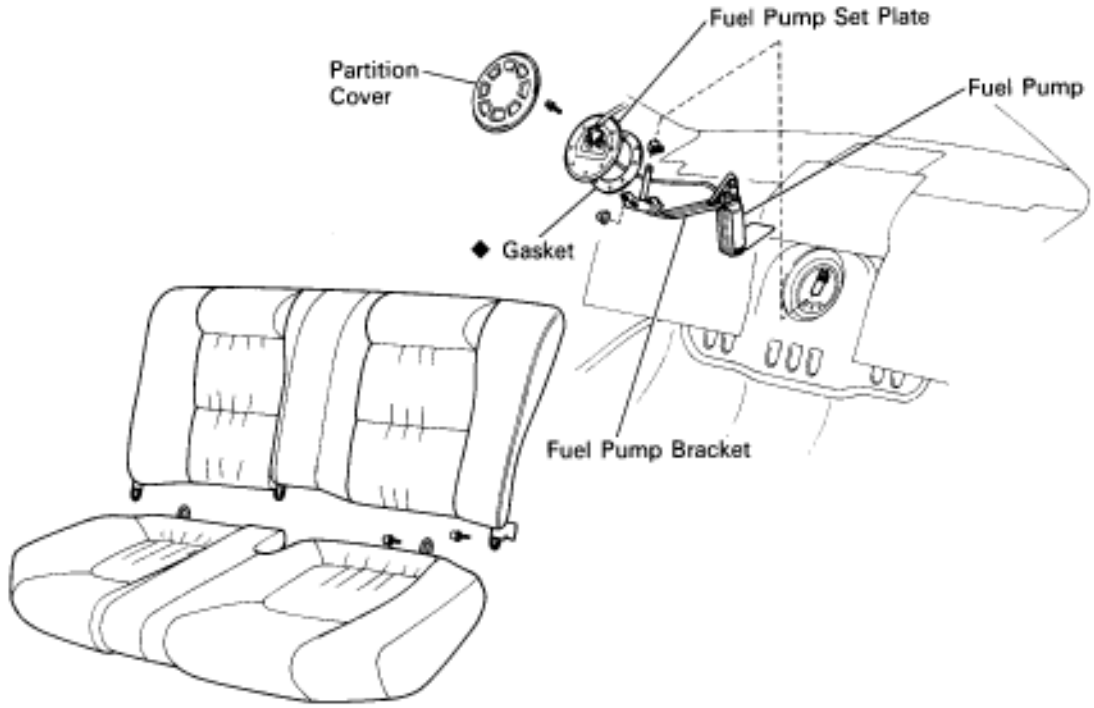

P01768
FI8302

N·m (kgf·cm, ft·lbf) : Specified torque
◆ Non-reusable part

WhereEverybodyKnowsYourName

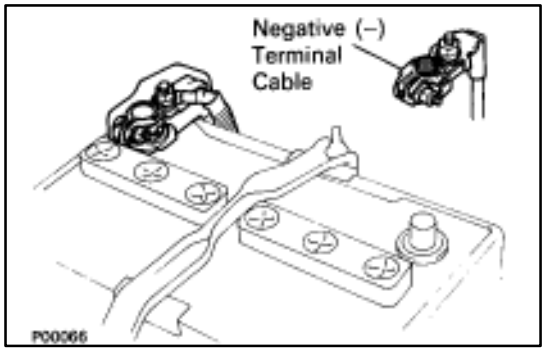

REMOVAL OF FUEL PUMP

(See Components on page FI–19)

CAUTION: Do not smoke or work near an open flame when working on the fuel pump.

1. **DISCONNECT CABLE FROM NEGATIVE TERMINAL OF BATTERY**

   CAUTION: Turn the ignition switch to ”LOCK”. Disconnect the cable from the negative (–) terminal of the battery. Wait at least 20 seconds before proceeding with work.

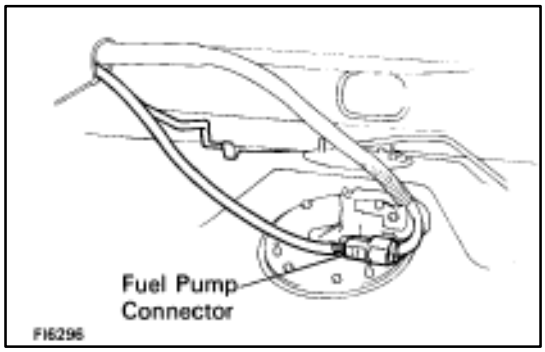

2. **REMOVE LUGGAGE COMPARTMENT FLOOR MAT**
3. **REMOVE SPARE TIRE**
4. **REMOVE LUGGAGE COMPARTMENT TRIM COVER**
5. **DISCONNECT FUEL PUMP CONNECTOR**
6. **REMOVE SEAT CUSHION AND BACK**

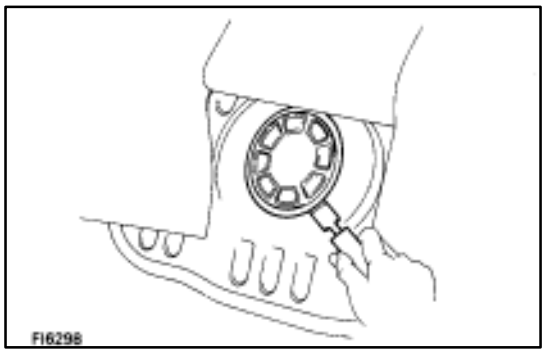

7. **REMOVE PARTITION COVER**

   Using a scraper, pry out the partition cover.

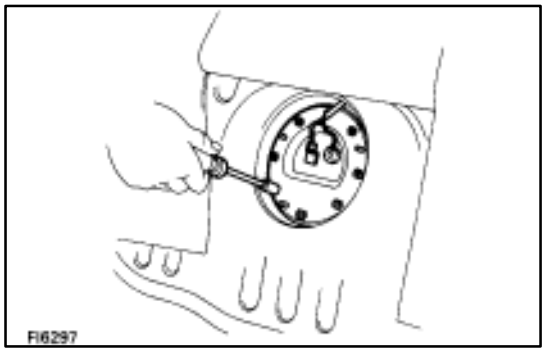

8. **REMOVE FUEL PUMP**
   (a) Remove the eight bolts, and disconnect the fuel pump set plate from the fuel tank.

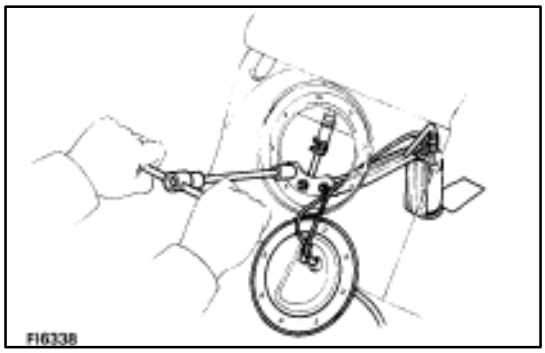

   (b) Remove the three nuts, and disconnect the fuel pump bracket from the fuel tank.
   (c) Disconnect the fuel hose from the fuel pump bracket, and remove the fuel pump, bracket and set plate assembly.

WhereEverybodyKnowsYourName

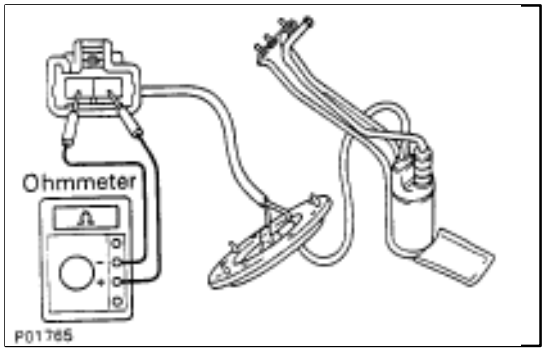

INSPECTION OF FUEL PUMP

1. INSPECT FUEL PUMP RESISTANCE

Using an ohmmeter, measure the resistance between the terminals.

Resistance: 0.2–3.0 ? at 20°C (68°F)

If the resistance is not as specified, replace the fuel pump and/or set plate.

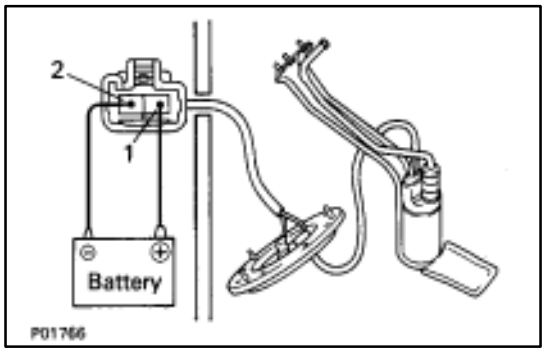

2. INSPECT FUEL PUMP OPERATION

Connect a test lead from the terminal 1 of the connector to the positive (+) terminal of the battery; connect another test lead from the terminal 2 of the connector to the negative (–) terminal of the battery.

NOTICE:

- **These tests must be performed quickly (within 10 seconds) to prevent the coil from burning out.**
- **Keep the fuel pump as far away from the battery as possible.**
- **Always connect or disconnect at the battery.**

If operation is not as specified, replace the fuel pump and/or set plate.

COMPONENTS FOR DISASSEMBLY AND ASSEMBLY

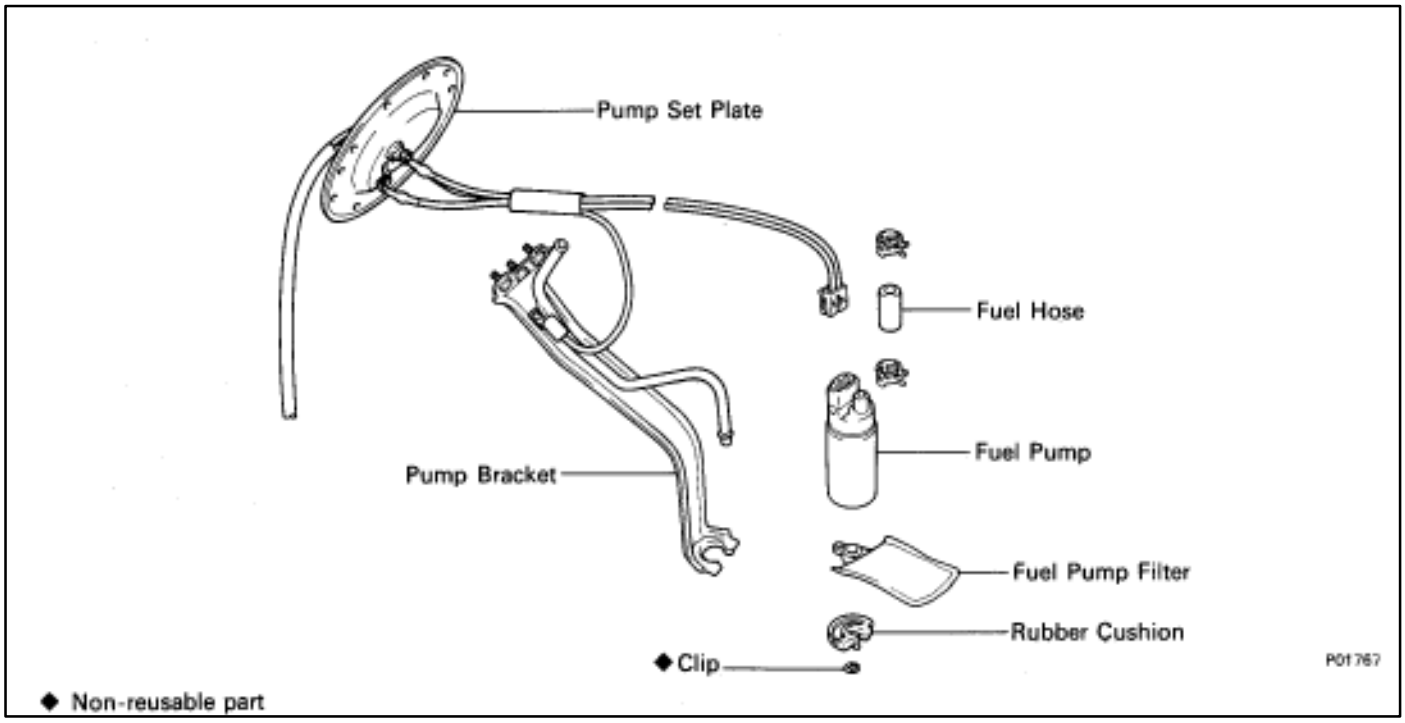

WhereEverybodyKnowsYourName

DISASSEMBLY OF FUEL PUMP

(See Components on page FI–21)

1. REMOVE PUMP SET PLATE FROM FUEL PUMP

Disconnect the lead connector from the fuel pump, and remove the set plate.

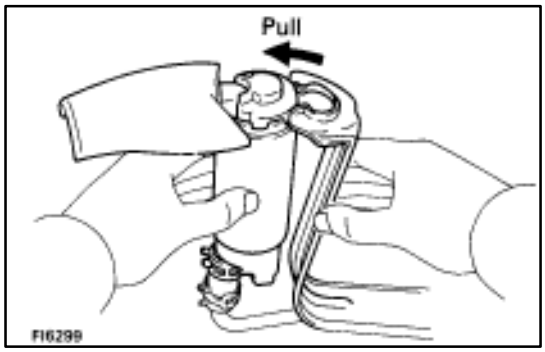

2. REMOVE FUEL PUMP FROM PUMP BRACKET

(a) Pull out the lower side of the fuel pump from the pump bracket.
(b) Remove the rubber cushion from the fuel pump.
(c) Disconnect the fuel hose from the fuel pump, and remove the fuel pump.

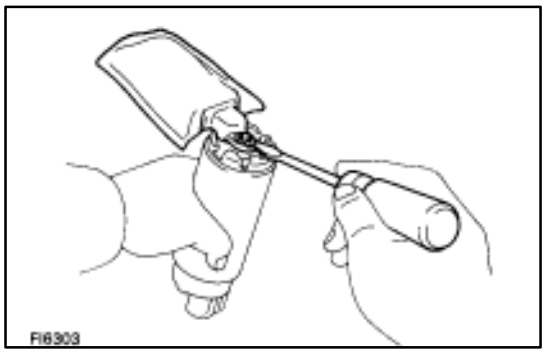

3. REMOVE FUEL PUMP FILTER FROM FUEL PUMP

(a) Using a small screwdriver, remove the clip.
(b) Pull out the pump filter.

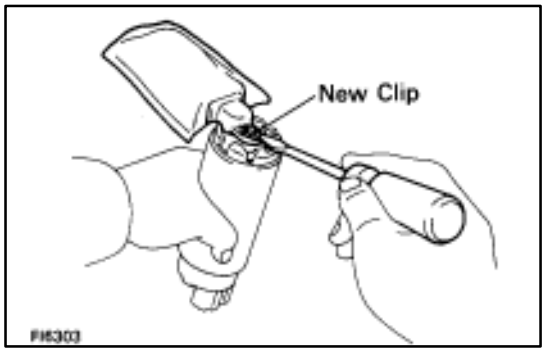

ASSEMBLY OF FUEL PUMP

(See Components on page FI–21)

1. INSTALL FUEL PUMP FILTER TO FUEL PUMP

Install the pump filter with a new clip.

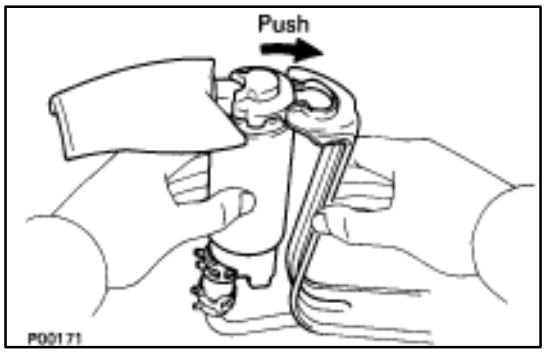

2. INSTALL FUEL PUMP TO FUEL PUMP BRACKET

(a) Connect the fuel hose to the outlet port of the fuel pump.
(b) Install the rubber cushion to the fuel pump.
(c) Install the fuel pump by pushing the lower side of the fuel pump.

3. INSTALL PUMP SET PLATE TO FUEL PUMP

Connect the lead connector on the set plate to the fuel pump.

WhereEverybodyKnowsYourName

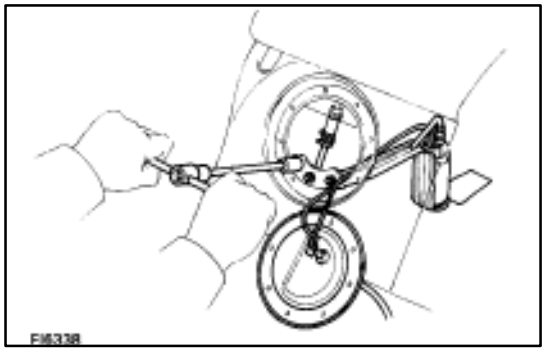

INSTALLATION OF FUEL PUMP

(See Components on page FI–19)

1. INSTALL FUEL PUMP

(a) Install a new gasket to the pump set plate.

(b) Connect the fuel hose to the fuel pump bracket, and install the fuel pump and bracket assembly with the three nuts.

Torque: 5.4 N·m (55 kgf·cm, 48 in.·lbf)

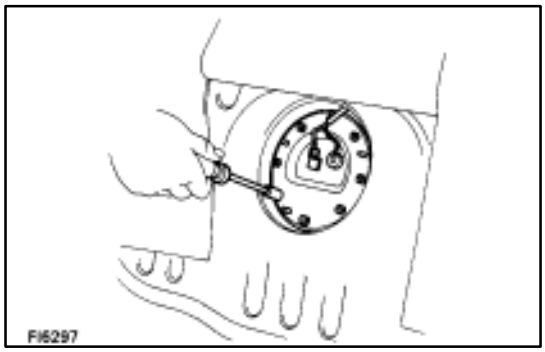

(b) Install the fuel pump set plate with the eight bolts.

Torque: 3.9 N·m (40 kgf·cm, 35 in.·lbf)

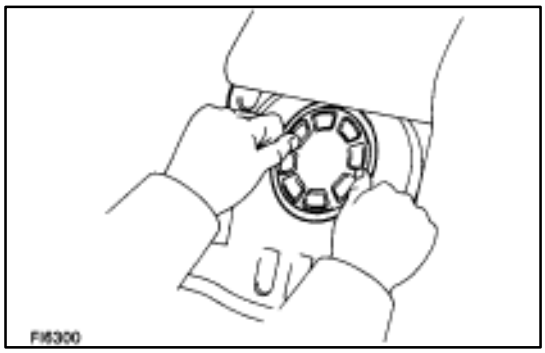

2. INSTALL PARTITION COVER

Install the partition cover with butyl tape.

3. INSTALL SEAT BACK AND CUSHION

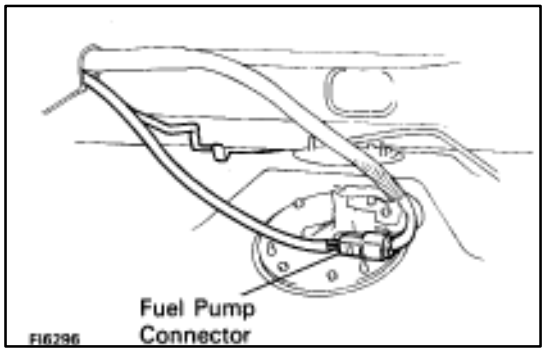

4. CONNECT FUEL PUMP CONNECTOR

5. INSTALL LUGGAGE COMPARTMENT TRIM COVER

6. INSTALL SPARE TIRE

7. INSTALL LUGGAGE COMPARTMENT FLOOR MAT

8. CONNECT CABLE TO NEGATIVE TERMINAL OF BATTERY

9. START ENGINE, AND CHECK FOR FUEL LEAKS

WhereEverybodyKnowsYourName

FUEL SYSTEM
Fuel Pump

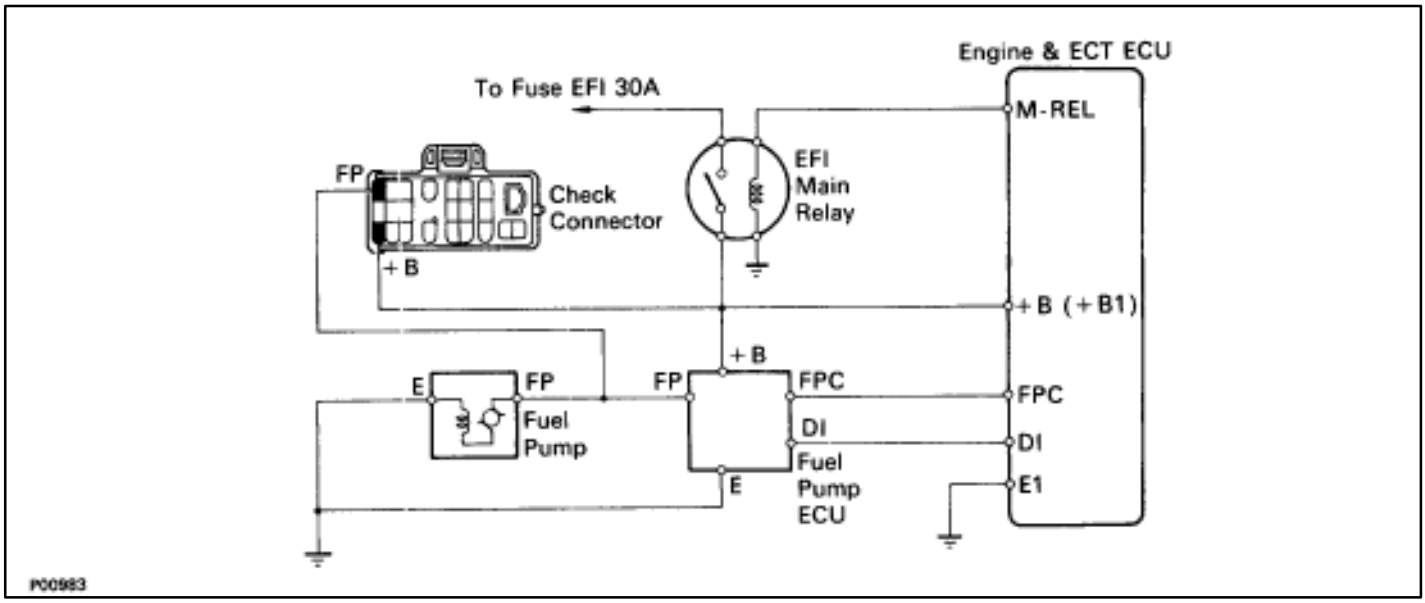

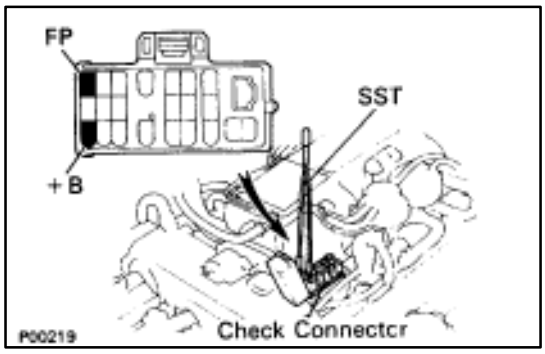

ON–VEHICLE INSPECTION

1. CHECK FUEL PUMP OPERATION

(a) Using SST, connect terminals +B and FP of the check (”DIAGNOSIS”) connector.

SST 09843–18020

(b) Turn the ignition switch ON.

NOTICE: Do not start the engine.

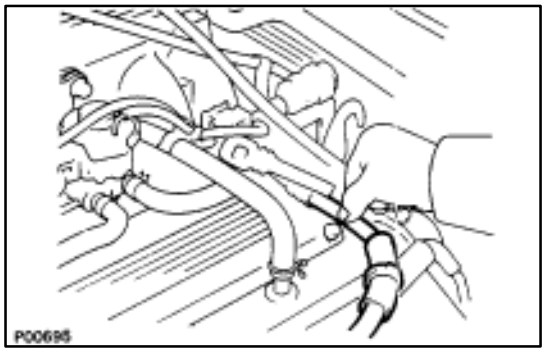

(c) Check that there is pressure in the fuel inlet hose from the fuel filter.

HINT: At this time, you will hear fuel return noise.

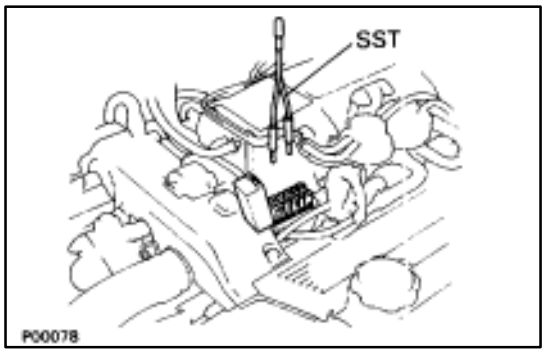

(d) Turn the ignition switch OFF.

(e) Remove SST from the check connector.

SST 09843–18020

WhereEverybodyKnowsYourName

If there is no pressure, check the following parts:

- Fuses
- EFI main relay
- Fuel pump ECU
- Fuel pump
- Engine & ECT ECU
- Wiring connections

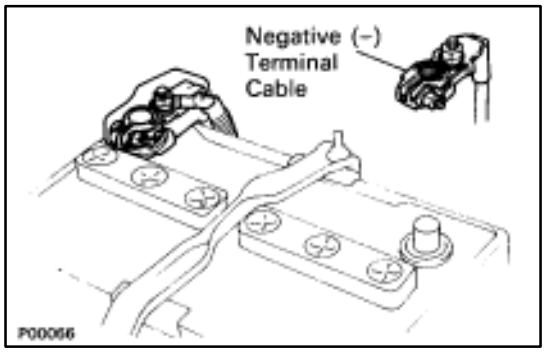

2. CHECK FUEL PRESSURE

(a) Check the battery voltage above 12 volts.

(b) Disconnect the cable from the negative (–) terminal of the battery.

CAUTION: Work must be started after approx. 20 seconds or longer from the time the ignition switch is turned to the "LOCK" position and negative (–) terminal cable is disconnected from the battery.

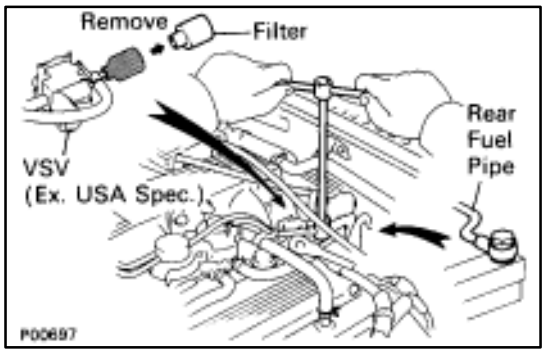

(c) (Exc. USA Spec.)
Remove the filter from the VSV (for EGR system).

(d) Remove the union bolt holding the LH deliver pipe to the rear fuel pipe. Remove the two gaskets.

HINT:

- Put a suitable container or shop towel under the cold start injector pipe.
- Slowly loosen the union bolt.

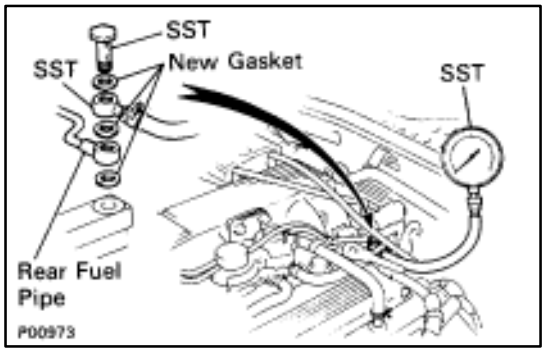

(e) Install the rear fuel pipe and SST (pressure gauge) to the LH delivery pipe with three new gaskets and the union bolt.

SST 09268–45012

Torque: 39 N·m (400 kgf·cm, 29 ft·lbf)

(f) Wipe off any splattered gasoline.

(g) (Exc. USA Spec.)
Reinstall the filter to the VSV.

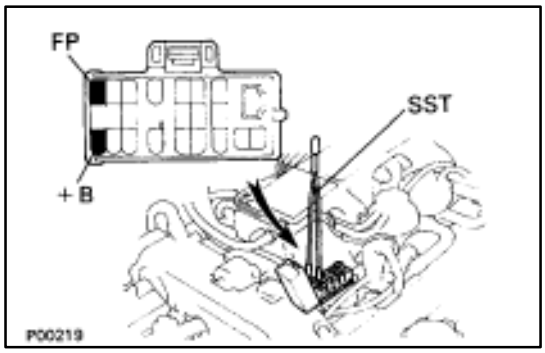

(h) Using SST, connect terminals B and FP of the check ("DIAGNOSIS") connector.

SST 09843–18020

(i) Reconnect the cable to the negative (–) terminal of the battery.

WhereEverybodyKnowsYourName

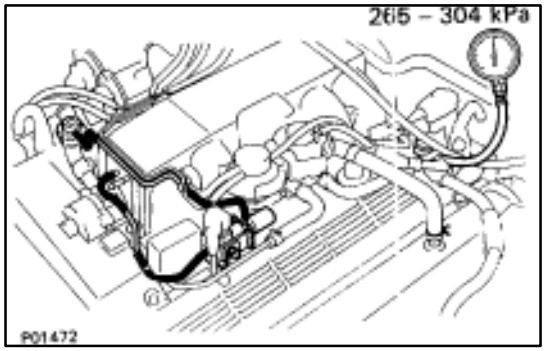

(j) Turn the ignition switch ON.

(k) Measure the fuel pressure.

Fuel pressure: 265–304 kPa

(2.7–3.1 kgf/cm^2, 38–44 psi)

If pressure is high, replace the fuel pressure regulator.

If pressure is low, check the following parts:

- Fuel hoses and connections
- Fuel pump
- Fuel filter
- Fuel pressure regulator

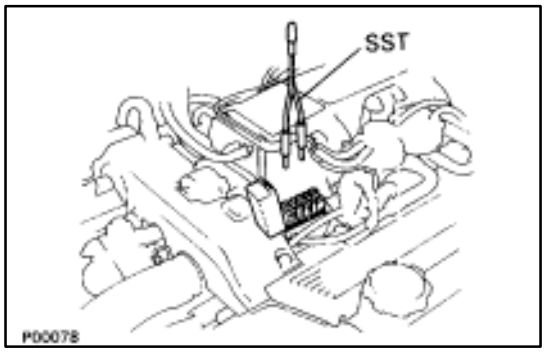

(l) Remove SST from the check connector.

SST 09843–18020

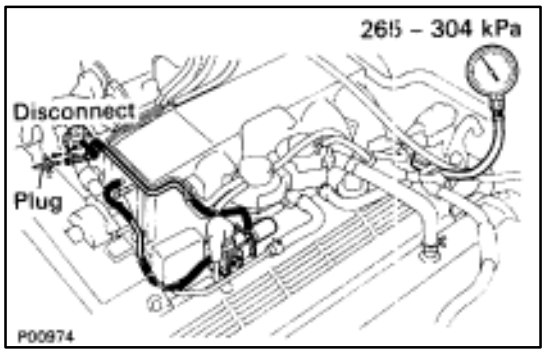

(m) Start the engine.

(n) Disconnect the vacuum sensing hose from the fuel pressure regulator, and plug the hose end.

(o) Measure the fuel pressure at idling.

Fuel pressure: 265–304 kPa

(2.7–3.1 kgf/cm^2, 38–44 psi)

(p) Reconnect the vacuum sensing hose to the fuel pressure regulator.

(q) Measure the fuel pressure at idling.

Fuel pressure: 196–235 kPa

(2.0–2.4 kgf/cm^2, 28–34 psi)

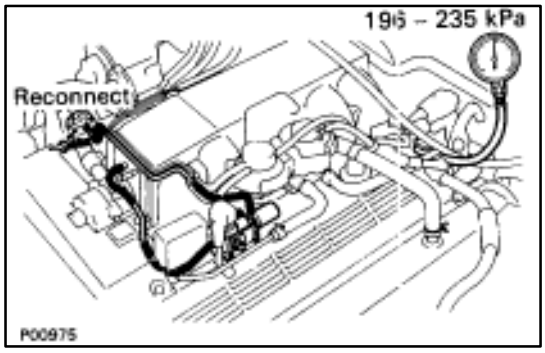

If pressure is not as specified, check the vacuum sensing hose and fuel pressure regulator.

(r) Stop the engine. Check that the fuel pressure remains 147 kPa (1.5 kgf/cm^2, 21 psi) or more for 5 minutes after the engine is turned off.

If pressure is not as specified, check the fuel pump, pressure regulator and/or injectors.

(s) After checking fuel pressure, disconnect the battery negative (–) cable and carefully remove the SST to prevent gasoline from splashing.

SST 09268–45012

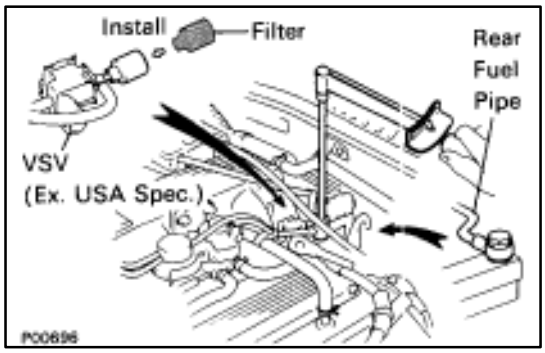

(t) Connect the rear fuel pipe to the delivery pipe with two new gaskets and the union bolt.

Torque: 39 N·m (400 kgf·cm, 29 ft·lbf)

(u) (Exc. USA spec.)
Reinstall the filter to the VSV.

(v) Reconnect the cable to the negative (–) terminal of the battery.

(w) Check for fuel leaks. (See page FI–16)

WhereEverybodyKnowsYourName

COMPONENTS FOR REMOVAL AND INSTALLATION

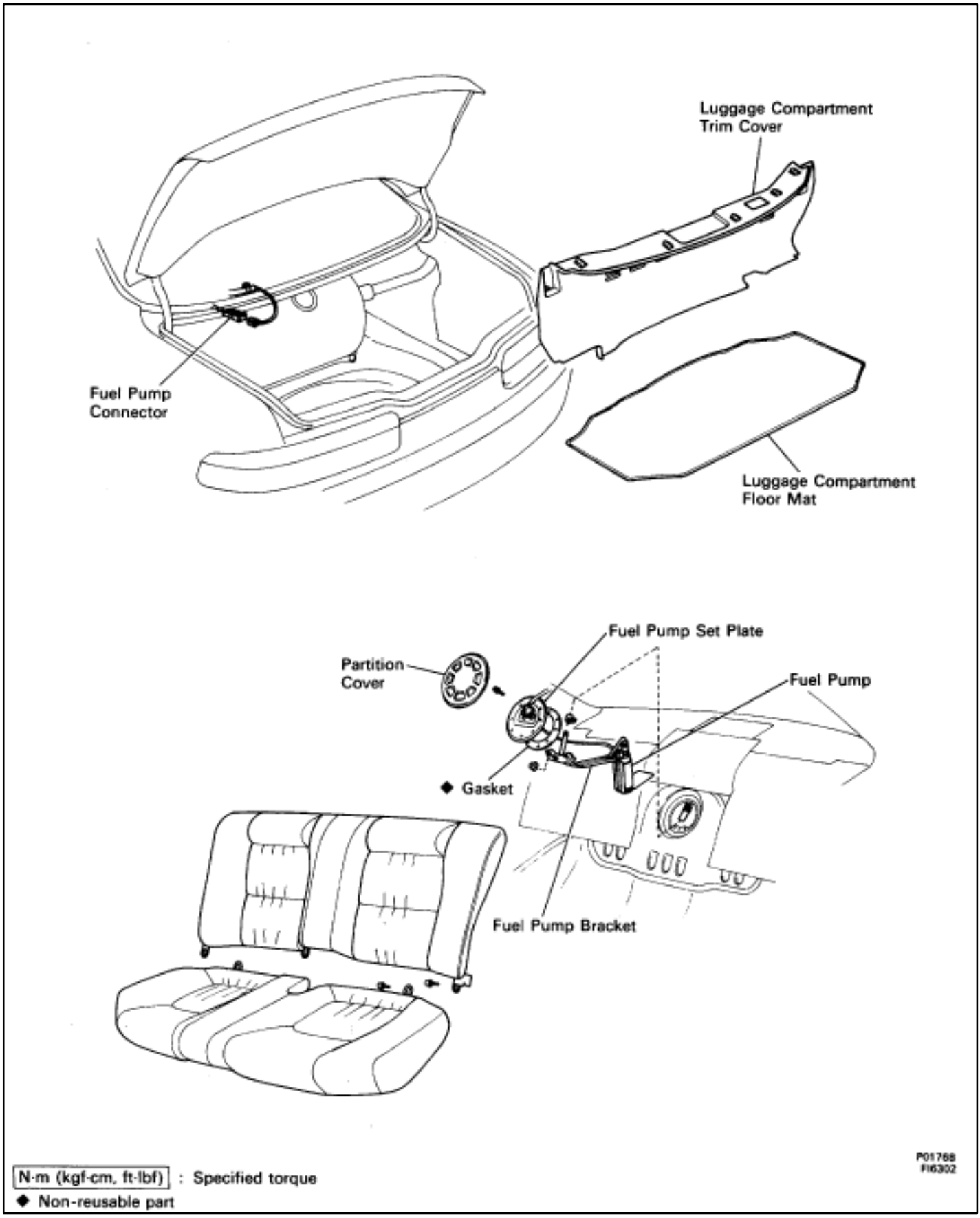

WhereEverybodyKnowsYourName

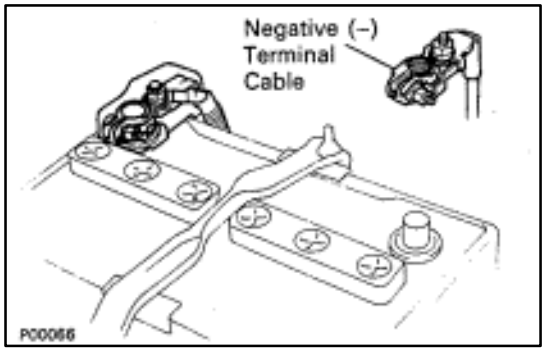

REMOVAL OF FUEL PUMP

(See Components on page FI–20)

CAUTION: Do not smoke or work near an open flame when working on the fuel pump.

1. **DISCONNECT CABLE FROM NEGATIVE TERMINAL OF BATTERY**
   CAUTION: Work must be started after approx. 20 seconds or longer from the time the ignition switch is turned to the "LOCK" position and negative (–) terminal cable is disconnected from the battery.

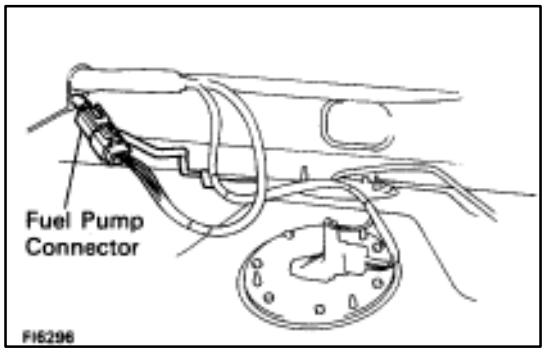

2. **REMOVE LUGGAGE COMPARTMENT FLOOR MAT**
3. **REMOVE SPARE TIRE**
4. **REMOVE LUGGAGE COMPARTMENT TRIM COVER**
5. **DISCONNECT FUEL PUMP CONNECTOR**
6. **REMOVE SEAT CUSHION AND BACK**

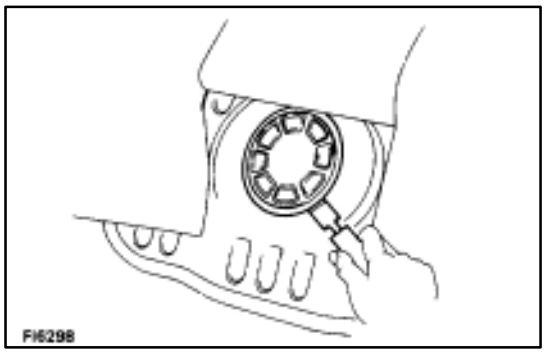

7. **REMOVE PARTITION COVER**
   Using a scraper, pry out the partition cover.

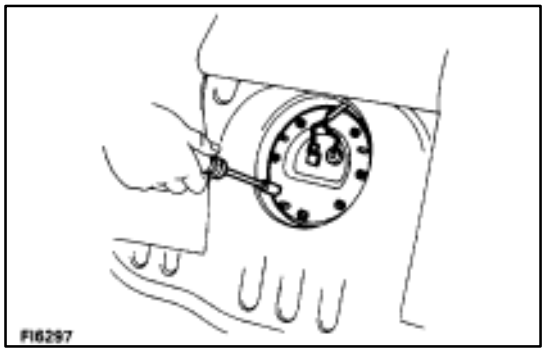

8. **REMOVE FUEL PUMP**
   (a) Remove the eight bolts, and disconnect the fuel pump set plate from the fuel tank.

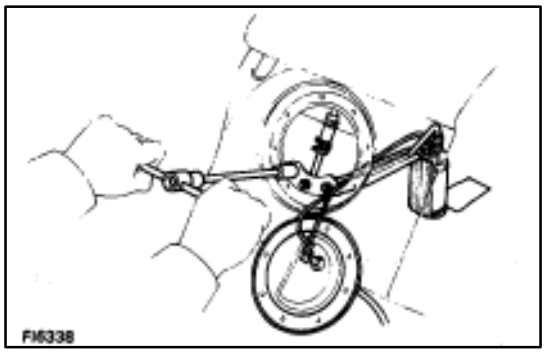

   (b) Remove the three nuts, and disconnect the fuel pump bracket from the fuel tank.
   (c) Disconnect the fuel hose from the fuel pump bracket, and remove the fuel pump, bracket and set plate assembly.

WhereEverybodyKnowsYourName

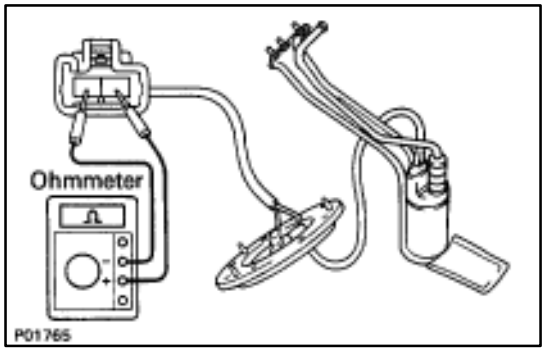

INSPECTION OF FUEL PUMP

1. INSPECT FUEL PUMP RESISTANCE

Using an ohmmeter, measure the resistance between the terminals.

Resistance: 0.2–3.0 ?

If the resistance is not as specified, replace the fuel pump and/or set plate.

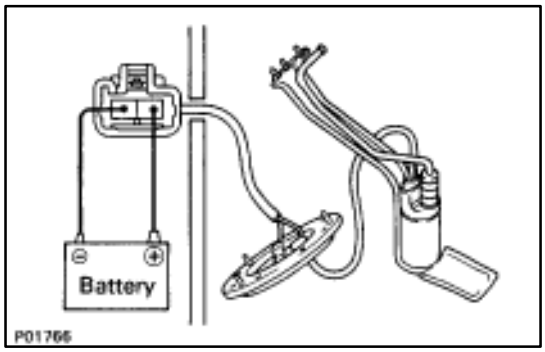

2. INSPECT FUEL PUMP OPERATION

Connect the positive (+) lead from the battery to terminal 1 of the connector, and the negative (–) lead to terminal 2. Check that the fuel pump operates.

NOTICE:

- **These tests must be performed quickly (within 10 seconds) to prevent the coil from burning out.**
- **Keep the fuel pump as far away from the battery as possible.**
- **Always perform switching at the battery side.**

If operation is not as specified, replace the fuel pump and/or set plate.

COMPONENTS FOR DISASSEMBLY AND ASSEMBLY

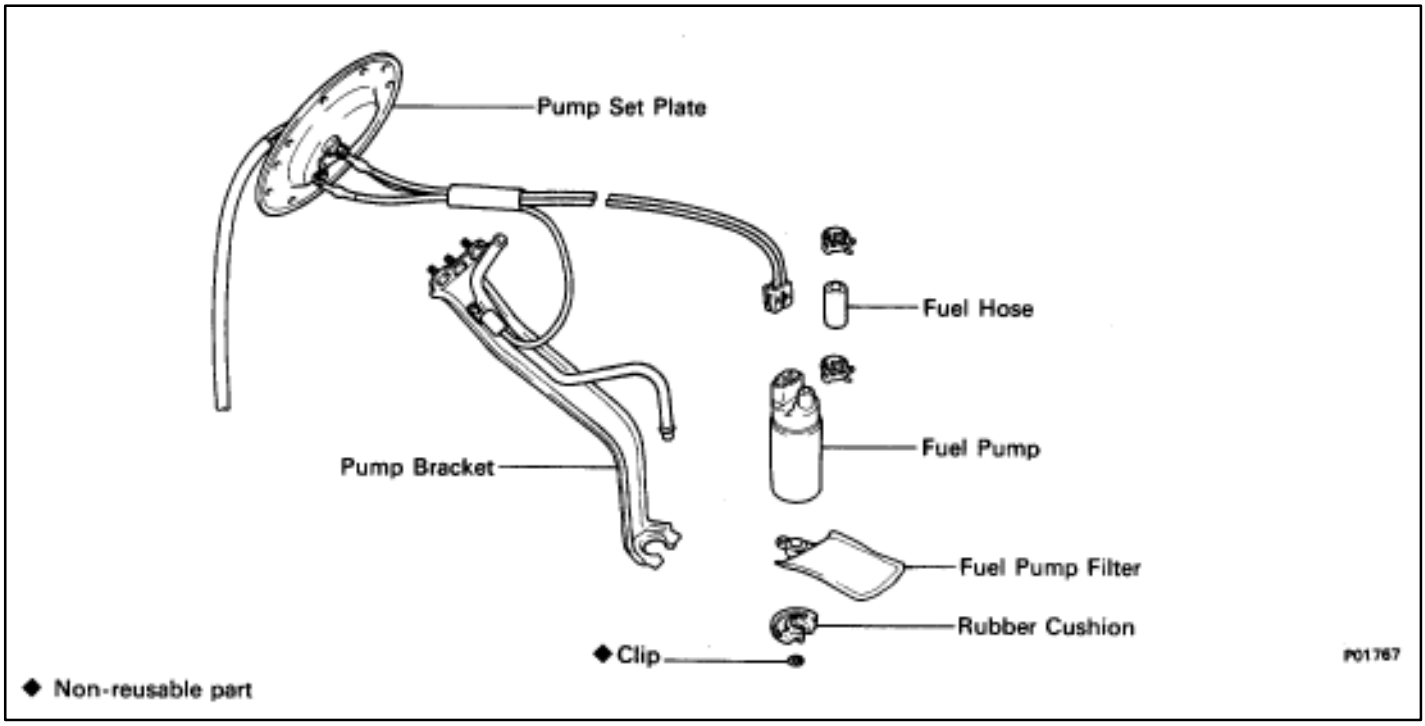

WhereEverybodyKnowsYourName

DISASSEMBLY OF FUEL PUMP

(See Components on page FI–22)

1. REMOVE PUMP SET PLATE FROM FUEL PUMP

Disconnect the lead connector from the fuel pump, and remove the set plate.

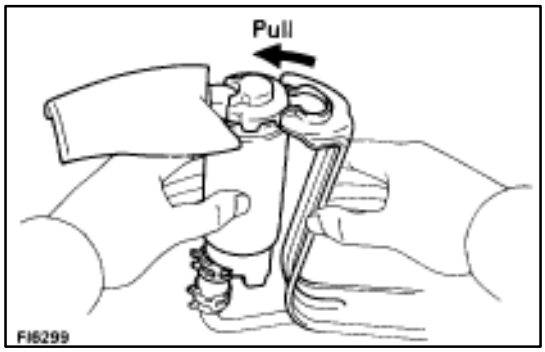

2. REMOVE FUEL PUMP FROM PUMP BRACKET

(a) Pull out the lower side of the fuel pump from the pump bracket.
(b) Remove the rubber cushion from the fuel pump.
(c) Disconnect the fuel hose from the fuel pump, and remove the fuel pump.

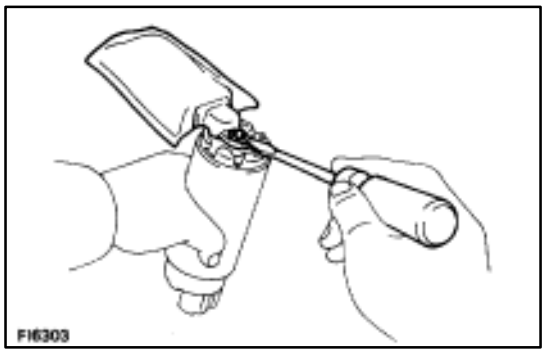

3. REMOVE FUEL PUMP FILTER FROM FUEL PUMP

(a) Using a small screwdriver, remove the clip.
(b) Pull out the pump filter.

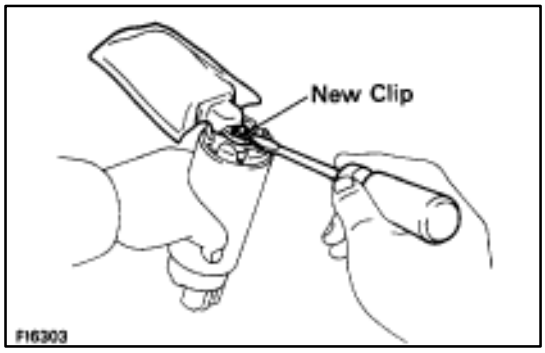

ASSEMBLY OF FUEL PUMP

(See Components on page FI–22)

1. INSTALL FUEL PUMP FILTER TO FUEL PUMP

Install the pump filter with a new clip.

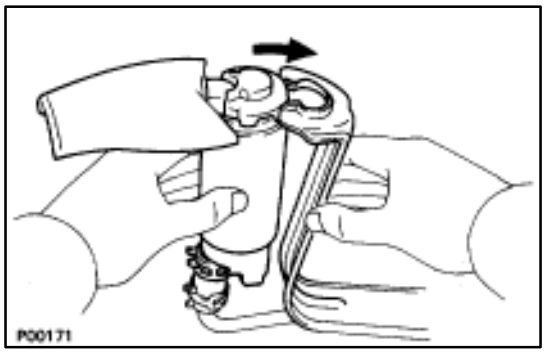

2. INSTALL FUEL PUMP TO FUEL PUMP BRACKET

(a) Connect the fuel hose to the outlet port of the fuel pump.
(b) Install the rubber cushion to the fuel pump.
(c) Install the fuel pump by pushing the lower side of the fuel pump.

3. INSTALL PUMP SET PLATE TO FUEL PUMP

Connect the lead connector on the set plate to the fuel pump.

WhereEverybodyKnowsYourName

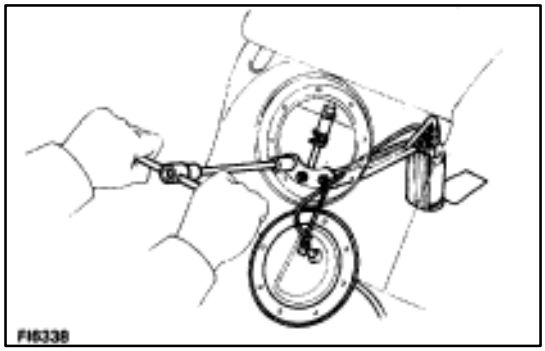

INSTALLATION OF FUEL PUMP

(See Components on page FI–20)

1. INSTALL FUEL PUMP

(a) Install a new gasket to the pump set plate.

(b) Connect the fuel hose to the fuel pump bracket, and install the fuel pump and bracket assembly with the three nuts.

Torque: 5.4 N·m (55 kgf·cm, 48 in.·lbf)

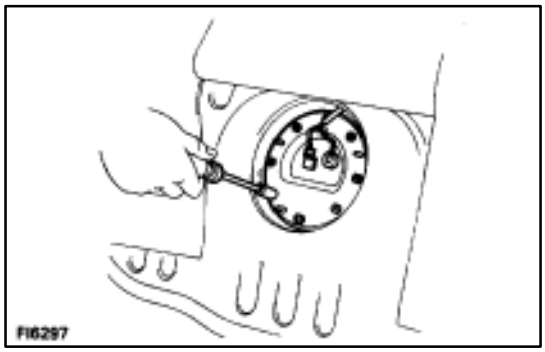

(b) Install the fuel pump set plate with the eight bolts.

Torque: 3.9 N·m (40 kgf·cm, 35 in.·lbf)

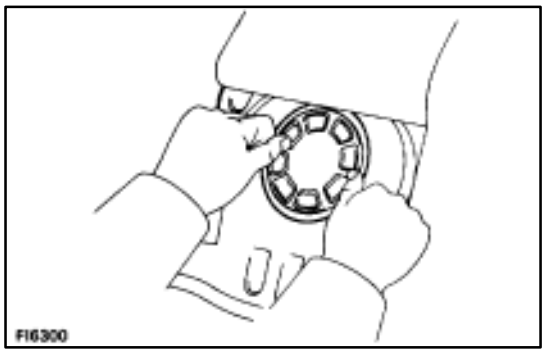

2. INSTALL PARTITION COVER

Install the partition cover with butyl tape.

3. INSTALL SEAT BACK AND CUSHION

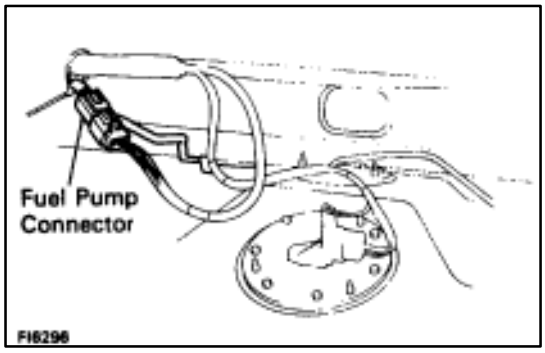

4. CONNECT FUEL PUMP CONNECTOR

5. INSTALL LUGGAGE COMPARTMENT TRIM COVER

6. INSTALL SPARE TIRE

7. INSTALL LUGGAGE COMPARTMENT FLOOR MAT

8. CONNECT CABLE TO NEGATIVE TERMINAL OF BATTERY

9. START ENGINE, AND CHECK FOR FUEL LEAKS

WhereEverybodyKnowsYourName

Fuel Pressure Regulator

ON–VEHICLE INSPECTION

CHECK FUEL PRESSURE (See page FI–17)

COMPONENTS FOR REMOVAL AND INSTALLATION

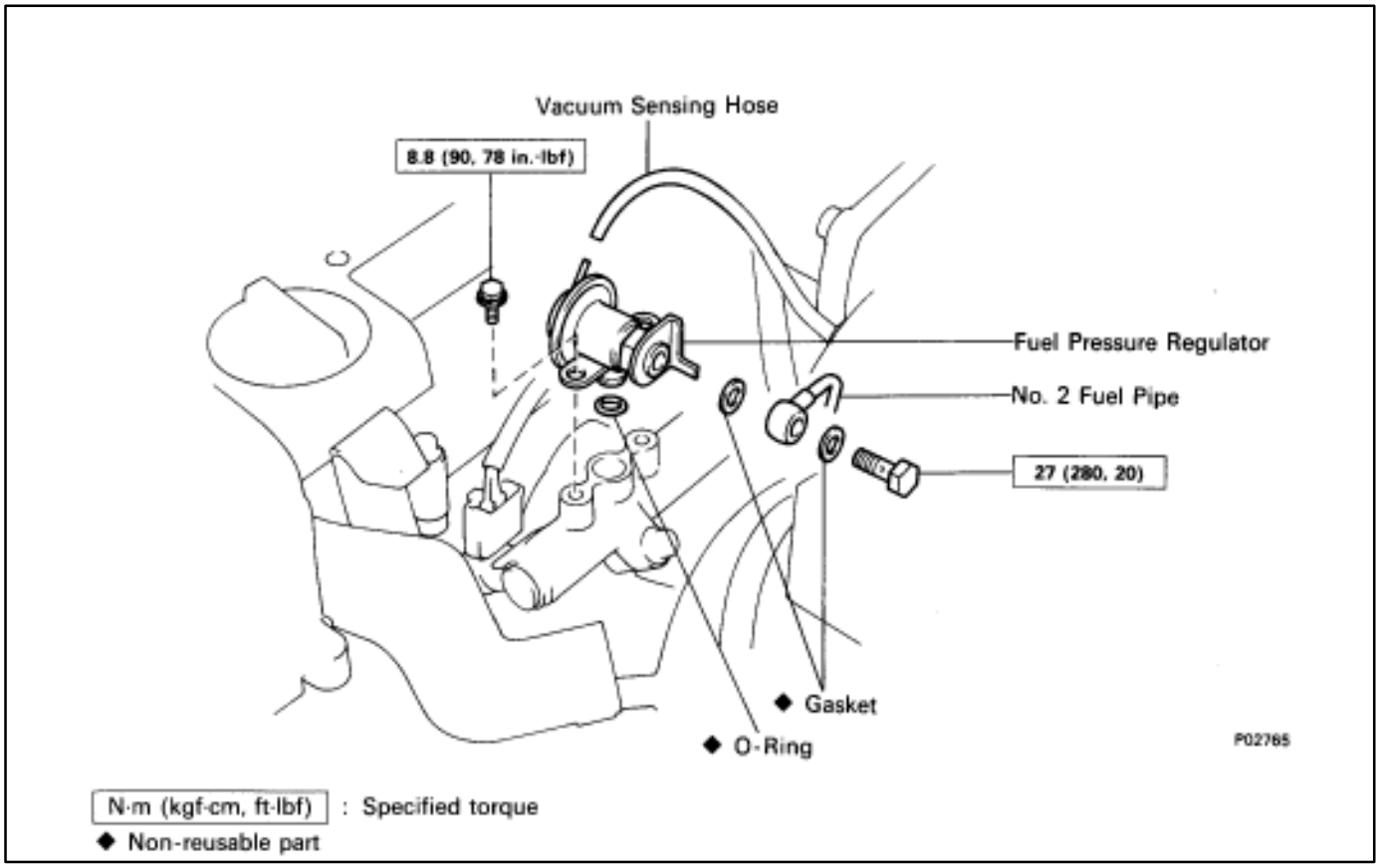

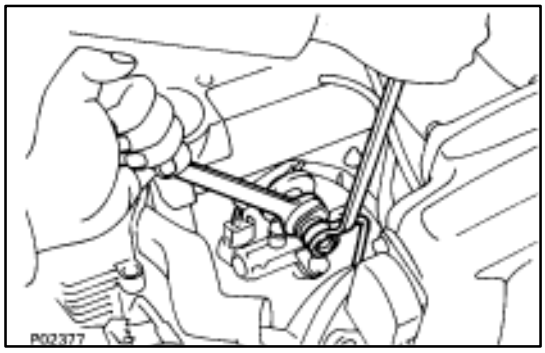

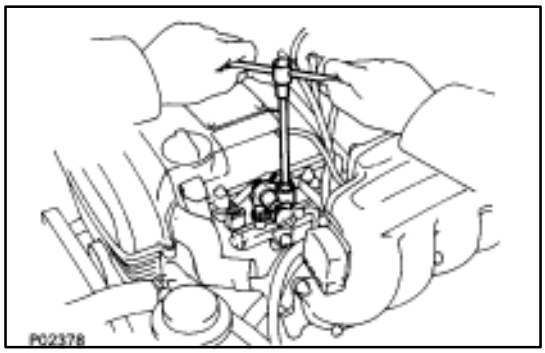

REMOVAL OF FUEL PRESSURE REGULATOR

1. **DISCONNECT VACUUM SENSING HOSE FROM FUEL PRESSURE REGULATOR**

2. **DISCONNECT NO. 2 FUEL PIPE FROM FUEL PRESSURE REGULATOR**
   Remove the union bolt and two gasket, and disconnect the fuel pipe from the pressure regulator.
   HINT:
   - Put a suitable container or shop towel under the pressure regulator.
   - Slowly loosen the union bolt.

3. **REMOVE FUEL PRESSURE REGULATOR**
   (a) Remove the two bolts and pressure regulator.
   (b) Remove the O–ring from the pressure regulator.

WhereEverybodyKnowsYourName

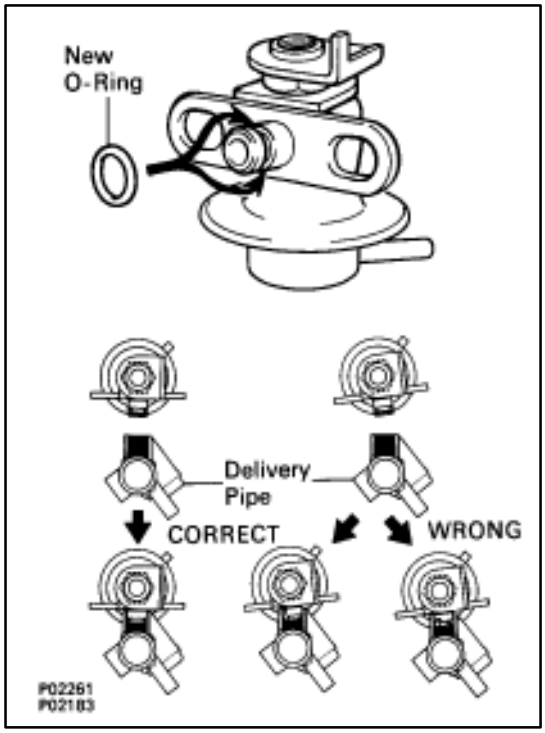

INSTALLATION OF FUEL PRESSURE REGULATOR

(See components on page FI–24)

1. INSTALL FUEL PRESSURE REGULATOR AND FUEL RETURN PIPE

(a) Apply a light coat of gasoline to a new O–ring, and install it to the pressure regulator.

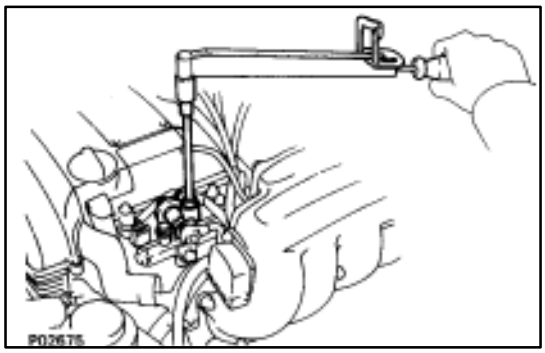

(b) Install the pressure regulator with the two bolts.

Torque: 8.8 N·m (90 kgf·cm, 78 in.·lbf)

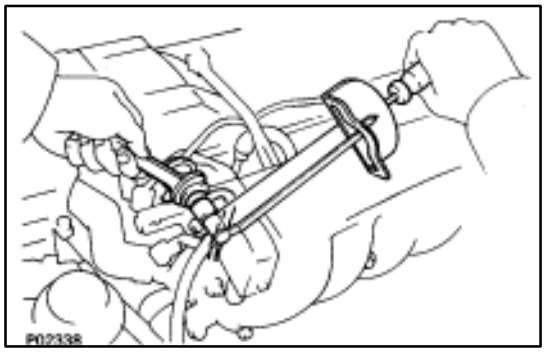

2. CONNECT NO. 2 FUEL PIPE TO FUEL PRESSURE REGULATOR

Connect the fuel pipe to the pressure regulator with new two gaskets and the union bolt.

Torque: 27 N·m (280 kgf·cm, 20 ft·lbf)

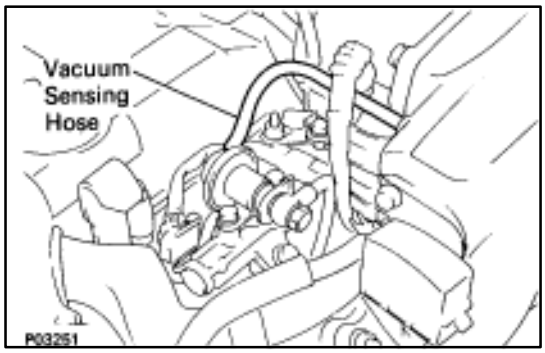

3. CONNECT VACUUM SENSING HOSE TO FUEL PRESSURE REGULATOR

4. CHECK FOR FUEL LEAKS (See page FI–15)

WhereEverybodyKnowsYourName

Cold Start Injector

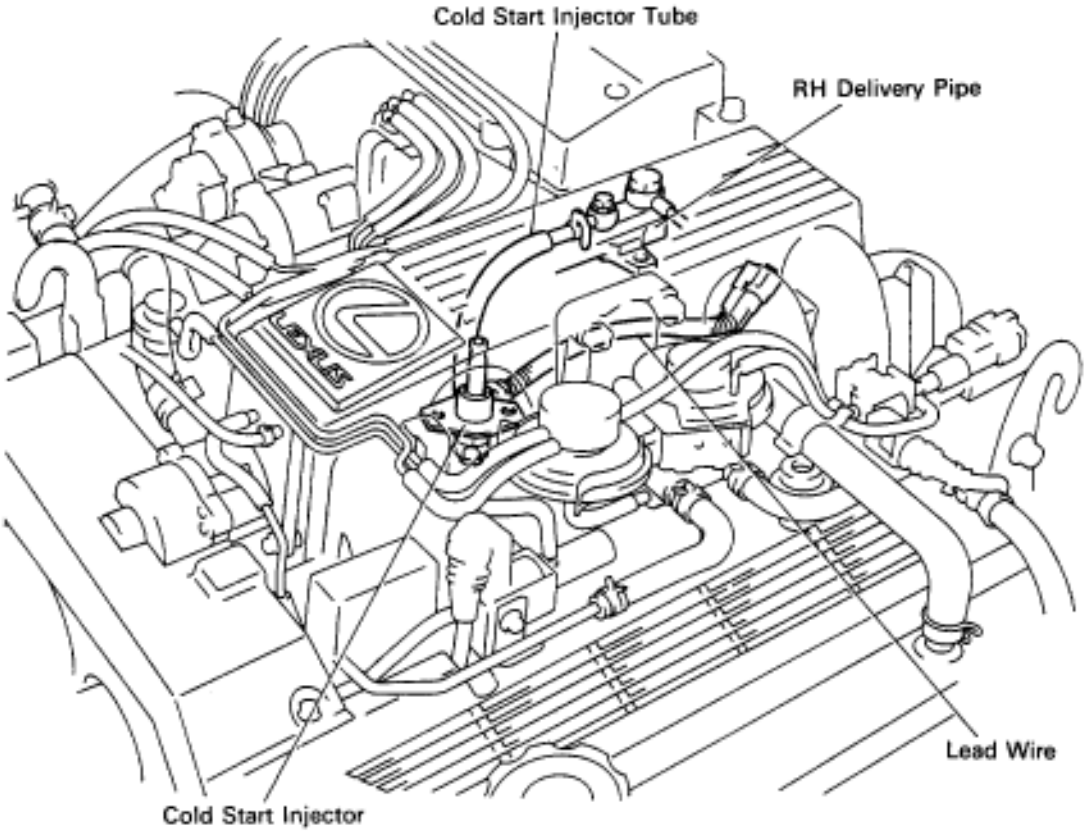

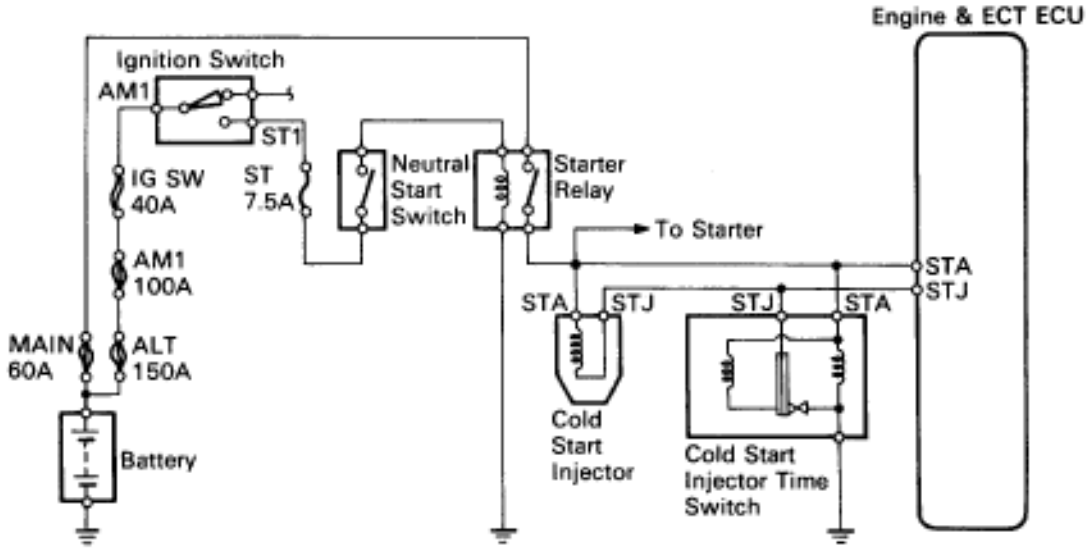

P01906
P01318

WhereEverybodyKnowsYourName

COMPONENTS FOR REMOVAL AND INSTALLATION

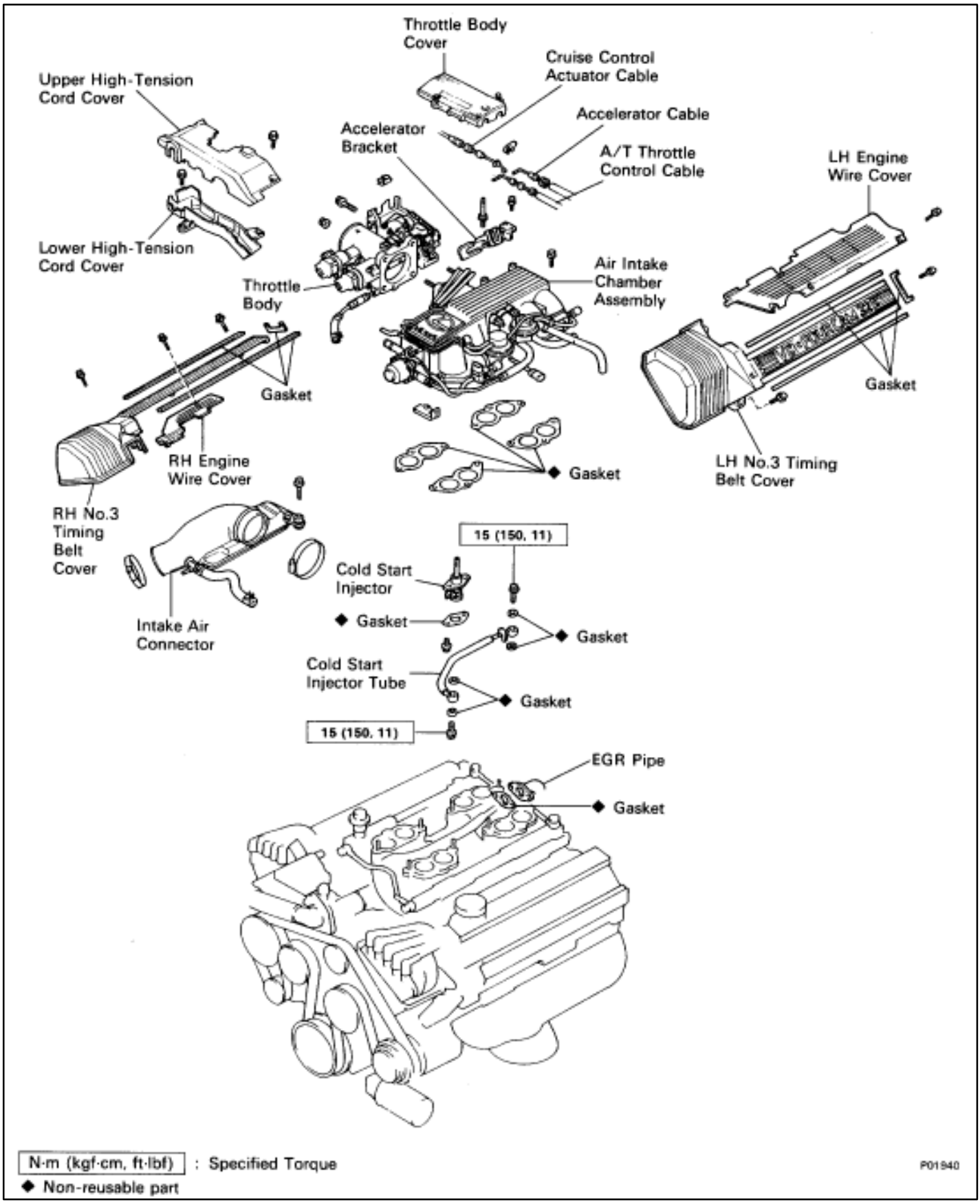

WhereEverybodyKnowsYourName

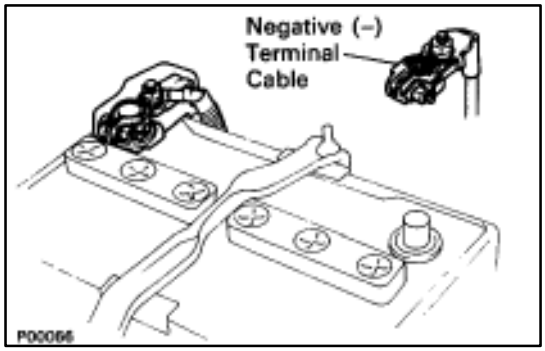

REMOVAL OF COLD START INJECTOR

(See Components on page FI–26)

1. **DISCONNECT CABLE FROM NEGATIVE TERMINAL OF BATTERY**
   CAUTION: Work must be started after approx. 20 seconds or longer from the time the ignition switch is turned to the "LOCK" position and the negative (–) terminal cable is disconnected from the battery.
2. **DRAIN ENGINE COOLANT (See page CO–6)**

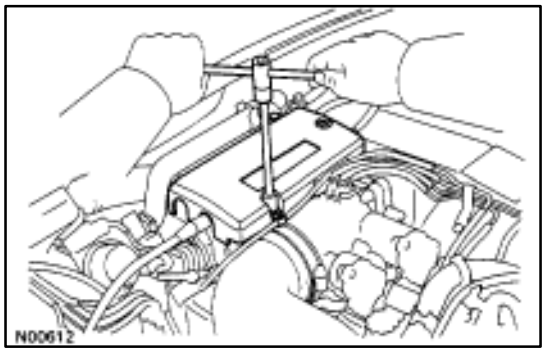

3. **REMOVE THROTTLE BODY COVER**
   (a) Remove the mounting cap nut.
   (b) Loosen the two bolts, and remove the throttle body cover.

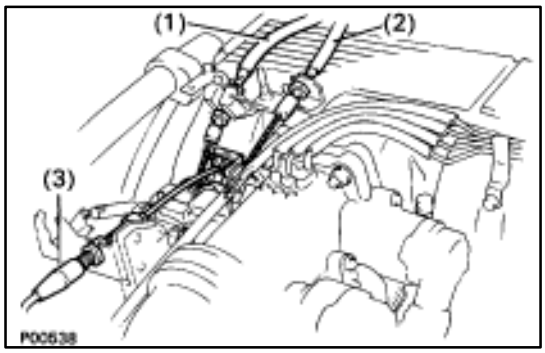

4. **DISCONNECT CONTROL CABLES FROM THROTTLE BODY**
   Disconnect the following cables:
   (1) Accelerator cable
   (2) A/T throttle control cable
   (3) (w/ Cruise Control System)
   Cruise control actuator cable

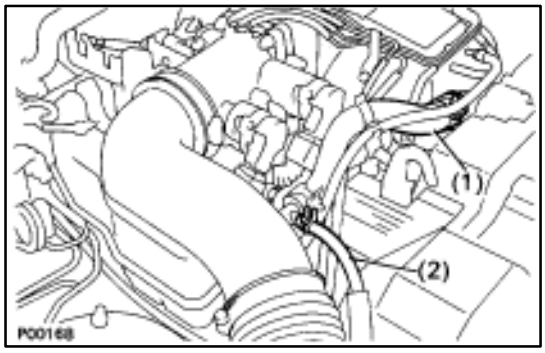

5. **REMOVE INTAKE AIR CONNECTOR**
   (a) Disconnect the following hoses:
   (1) Air hose from ISC valve
   (2) Air hose (from PS air control valve) from intake air connector

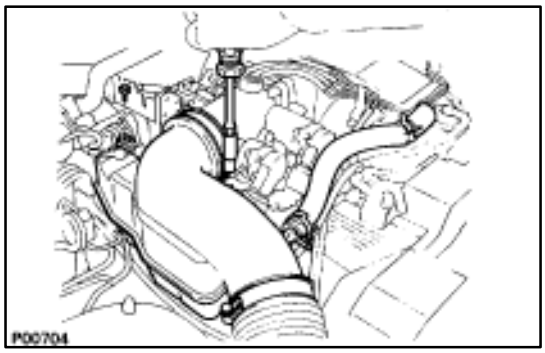

   (b) Remove the bolt holding the intake air connector to the cylinder head cover.
   (c) Loosen the two hose clamps.
   (d) Disconnect the intake air connector from the throttle body and air cleaner hose, and remove the intake air connector.

WhereEverybodyKnowsYourName

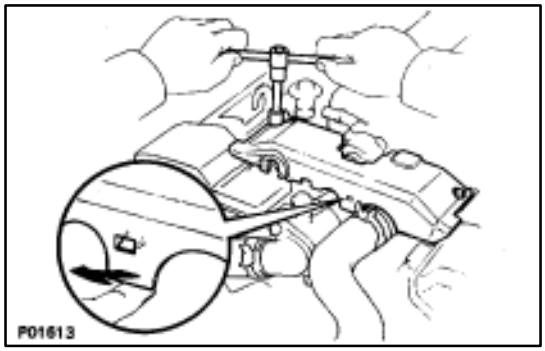

6. REMOVE UPPER HIGH–TENSION CORD COVER

(a) Remove the two mounting bolts.

(b) Disconnect the front side claw groove of the cord cover from the claw of the lower cover, and remove the cord cover.

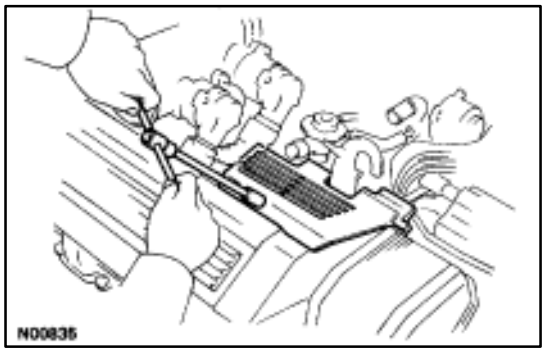

7. REMOVE RH ENGINE WIRE COVER

Remove the bolt and wire cover.

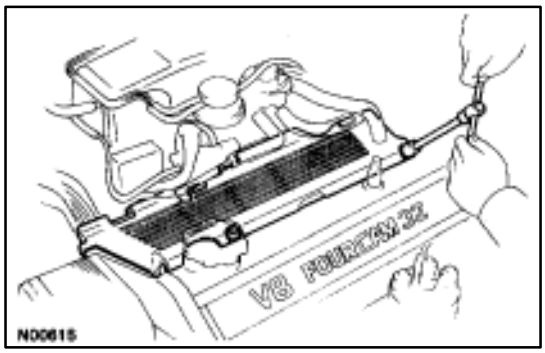

8. REMOVE LH ENGINE WIRE COVER

Remove the two bolts and wire cover.

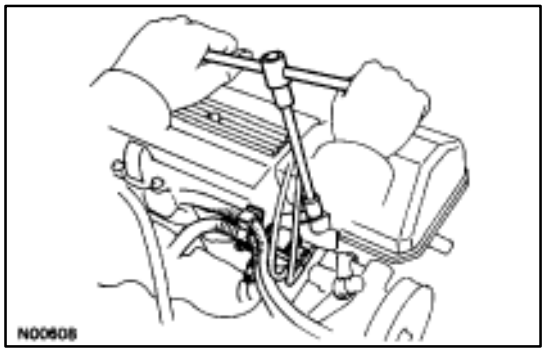

9. REMOVE VSV FOR EVAP SYSTEM

Remove the two bolts, and disconnect the VSV from cylinder head and timing belt cover.

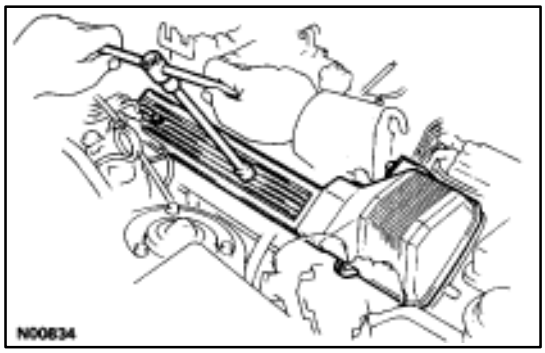

10. REMOVE RH NO.3 TIMING BELT COVER

Remove the three bolts and timing belt cover.

WhereEverybodyKnowsYourName

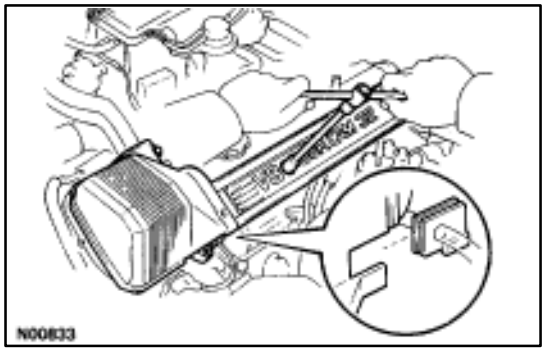

11. REMOVE LH NO.3 TIMING BELT COVER

(a) Remove the four mounting bolts.

(b) Disconnect the cord grommet from the timing belt cover, and remove the timing belt cover.

(c) Remove the cord grommet from the high–tension cord.

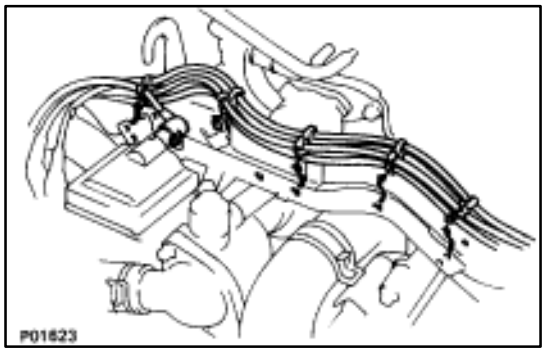

12. REMOVE LOWER HIGH–TENSION CORD COVER

(a) Disconnect the high–tension cord from the RH ignition coil.

(b) Disconnect the high–tension cords from the high–tension cord cover.

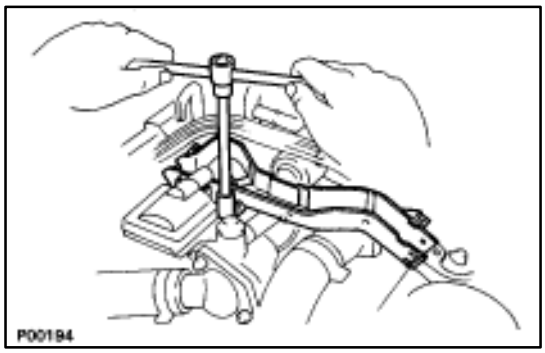

(c) Remove the bolt and cord cover.

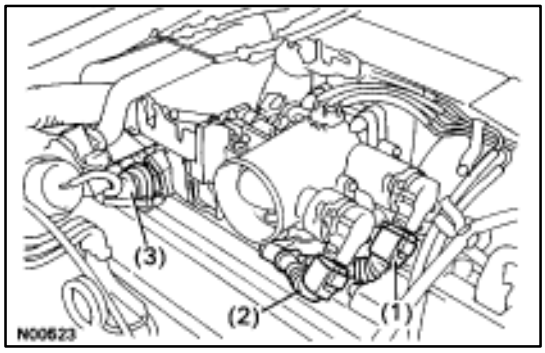

13. REMOVE THROTTLE BODY

(a) Disconnect the following connectors:

(1) Throttle position sensor connector

(2) (w/ TRAC)
Sub–throttle position sensor connector

(3) (w/ TRAC)
Sub–throttle actuator connector

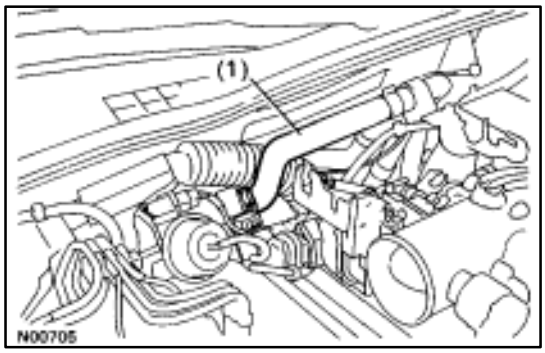

(b) Disconnect the following hoses:

(1) Heater water hose from heater water valve

WhereEverybodyKnowsYourName

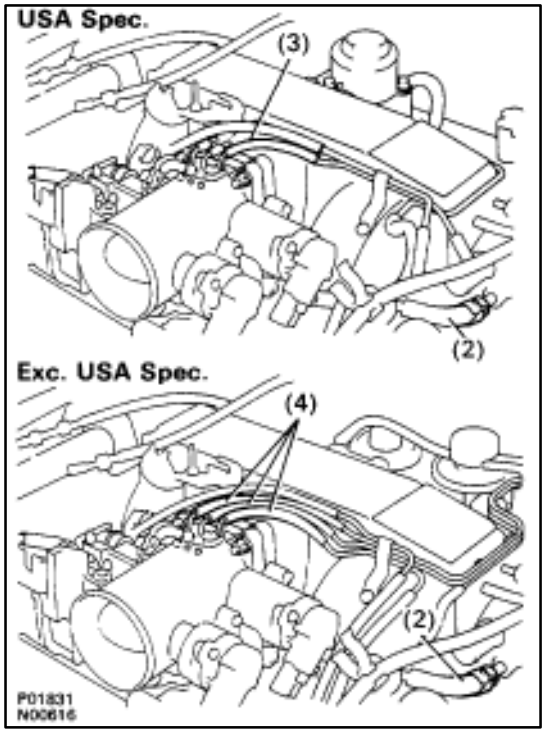

(2) Water by–pass hose from ISC valve
(3) (USA Spec.)
Vacuum hose
(4) (Exc. USA Spec.)
Three vacuum hoses

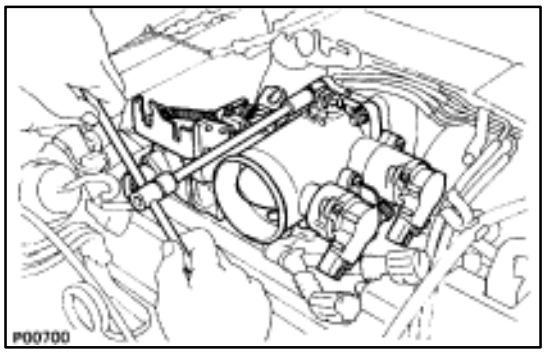

(c) Remove the two bolts and two nuts, disconnect the throttle body from the air intake chamber.

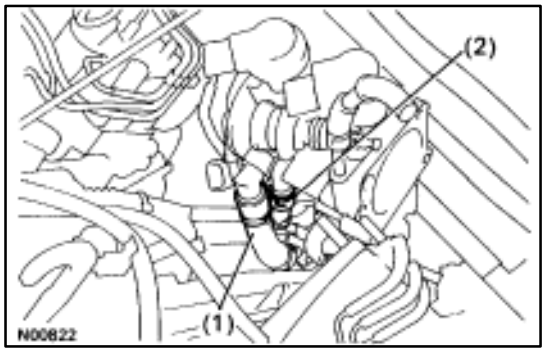

(d) Disconnect the following hoses, and remove the throttle body:
(1) PCV hose from throttle body
(2) Water by–pass hose from throttle body
(e) Remove the throttle body gasket.

14. DISCONNECT CONNECTORS

Disconnect the following connectors:

- Cold start injector connector
- ISC valve connector
- (USA Spec.)
  EGR valve connector for EGR system
- (Exc. USA Spec.)
  VSV connector for EGR
- VSV connector for fuel pressure control system

WhereEverybodyKnowsYourName

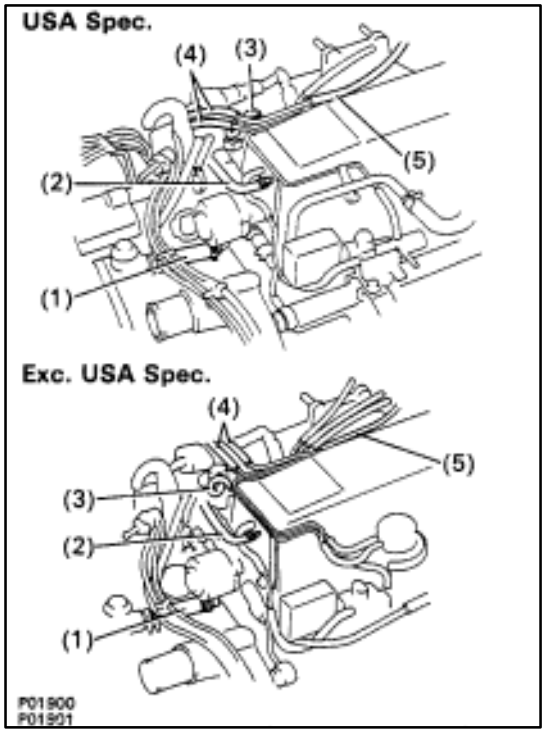

15. DISCONNECT HOSES

Disconnect the following hoses:

(1) Water by–pass hose (from water inlet housing) from ISC valve
(2) Vacuum hose (from PS air control valve) from air intake chamber
(3) Vacuum sensing hose (from fuel pressure regulator) from vacuum pipe
(4) Two vacuum hoses (from VSV for EVAP system) from vacuum pipe
(5) Vacuum hose (from charcoal canister) from vacuum pipe

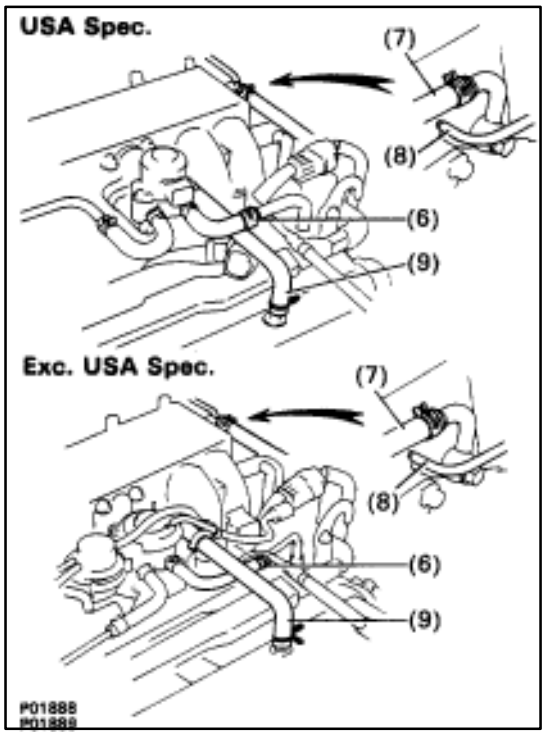

(6) Water by–pass hose (from EGR valve) from water by–pass pipe
(7) Vacuum hose (from brake booster) from air intake chamber
(8) Vacuum hose (from VSV for heater water valve) from air intake chamber
(9) PCV hose from LH cylinder head cover

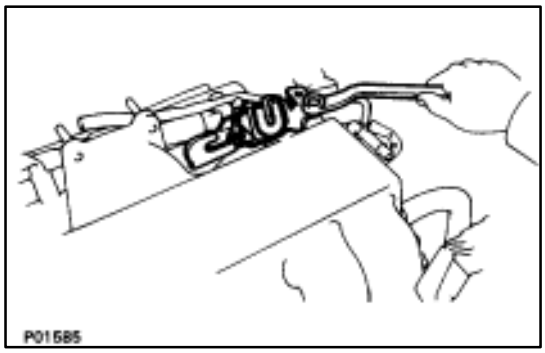

16. REMOVE AIR INTAKE CHAMBER

(a) Remove the bolt, stud bolt and accelerator bracket.

WhereEverybodyKnowsYourName

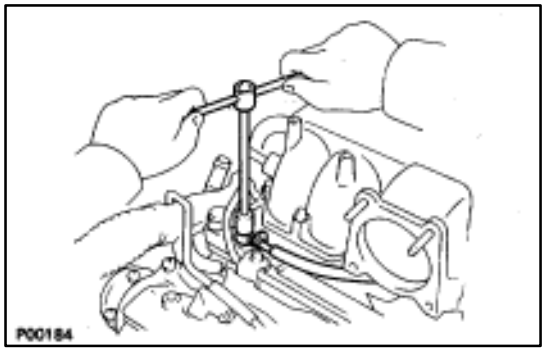

(b) Remove the union bolt and two gaskets, and disconnect the cold start injector tube from the RH delivery pipe.

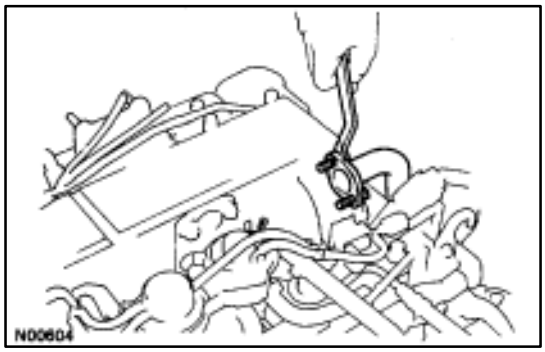

(c) Remove the two bolts and gasket, and disconnect the EGR pipe from the air intake chamber.

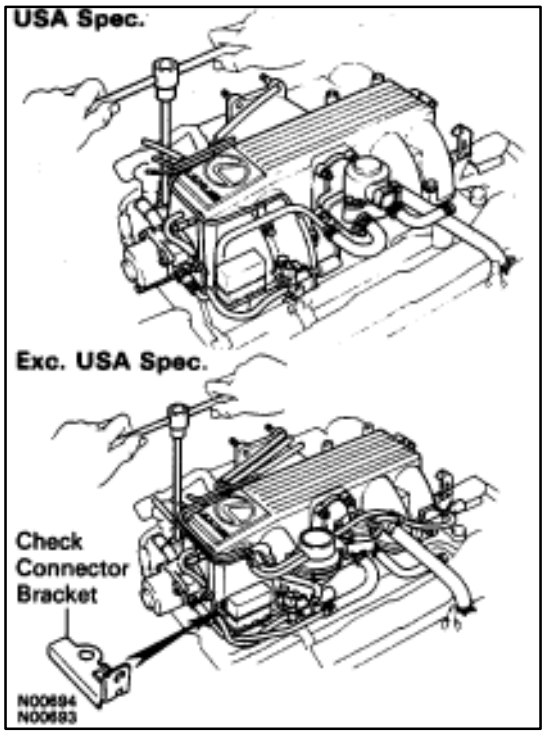

(d) Remove the four bolts, eight nuts and A/T throttle cable bracket.
(e) (USA Spec.)
Disconnect the check (”DIAGNOSIS”) connector bracket from the air intake chamber.
(f) (Exc. USA Spec.)
Remove the connector bracket from the check (DIAGNOSIS”) connector
(g) Remove the air intake chamber assembly and four gaskets.

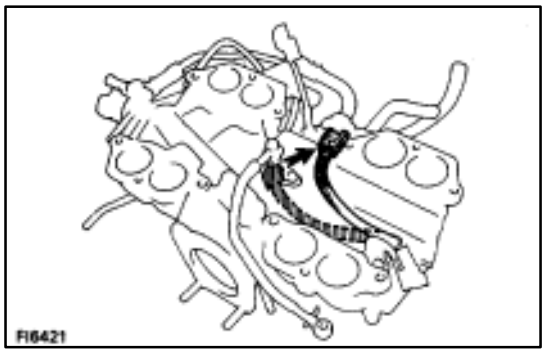

17. REMOVE COLD START INJECTOR FROM AIR INTAKE CHAMBER

(a) Disconnect the cold start injector connector.

WhereEverybodyKnowsYourName

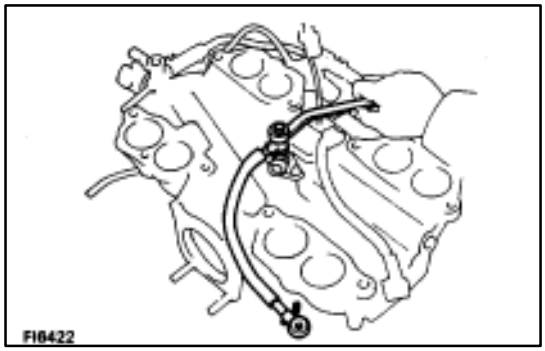

(b) Remove the union bolt, two gasket, and cold start injector tube.

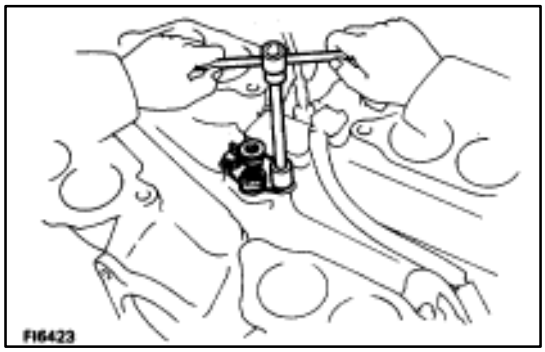

(c) Remove the two bolts, cold start injector and gasket.

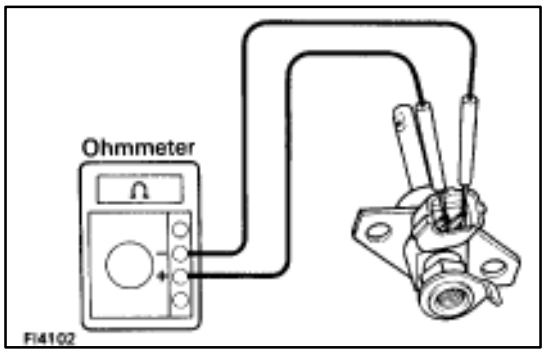

INSPECTION OF COLD START INJECTOR

1. INSPECT RESISTANCE OF COLD START INJECTOR

(a) Disconnect the cold start injector connector.

(b) Using an ohmmeter, measure the resistance between the terminals.

Resistance: 2–4 ?

If the resistance is not as specified, replace the cold start injector.

(c) Reconnect the cold start injector connector.

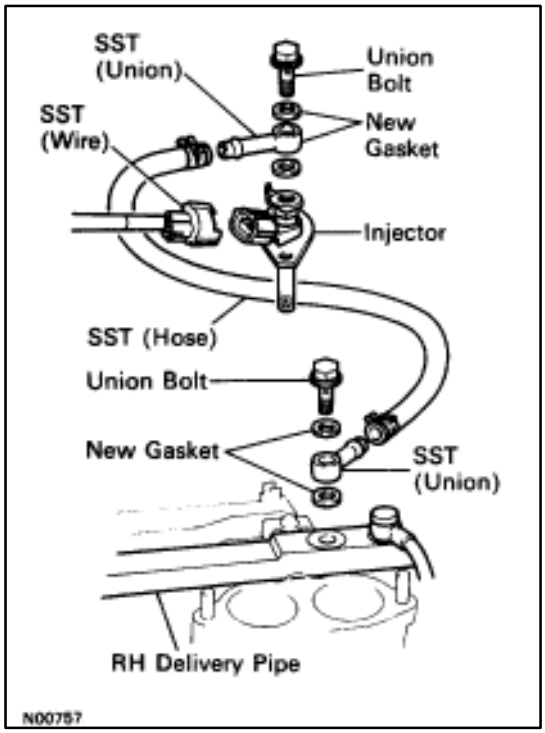

2. INSPECT INJECTION OF COLD START INJECTOR

CAUTION: Keep clear of sparks during the test.

(a) Install SST (two unions) to the injector and delivery pipe with four new gaskets and the union bolts.

SST 09268–41045 (09268–41080)

Torque: 180 kg–cm (13 ft–lb, 18 N·m)

(b) Connect SST (hose) to the unions.

SST 09268–41045

(c) Connect SST (wire) to the injector.

SST 09842–30055

(d) Put a container under the injector.

WhereEverybodyKnowsYourName

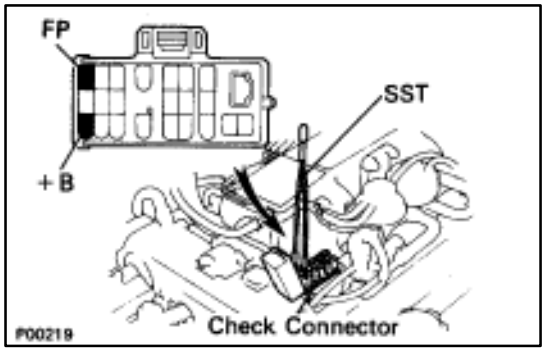

(e) Using SST, connect terminals +B and FP of the check (”DIAGNOSIS”) connector.

SST 09843–18020

(f) Reconnect the cable to the negative (–) terminal of the battery.

(g) Turn the ignition switch ON.

NOTICE: Do not start the engine.

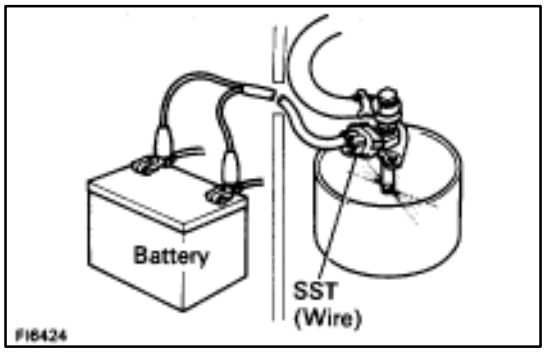

(h) Connect the test probes of the SST (wire) to the battery, and check that the fuel spray is as shown.

SST 09842–30055

NOTICE: Perform this check within the shortest possible time.

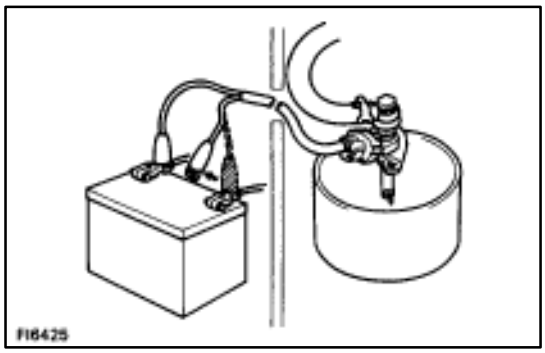

3. INSPECT LEAKAGE

(a) In the condition above, disconnect the test probes of SST (wire) from the battery and check fuel leakage from the injector.

SST 09842–30055

Fuel drop: One drop or less per minute

(b) Disconnect the cable from the negative (–) terminal of the battery.

(c) Remove SST.

SST 09268–41045, 09842–30050 and 09843–18020

WhereEverybodyKnowsYourName

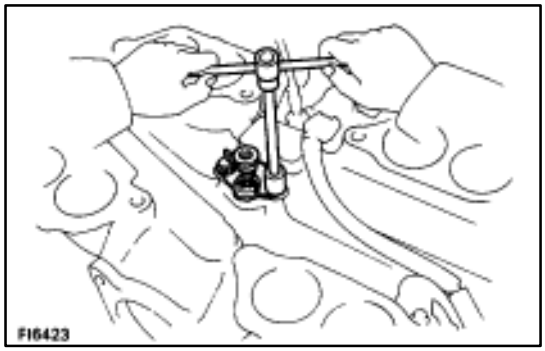

INSTALLATION OF COLD START INJECTOR

(See Components on page FI–26)

1. INSTALL COLD START INJECTOR

(a) Install a new gasket and the injector with the two bolts.

Torque: 7.8 N·m (80 kgf·cm, 69 in.·lbf)

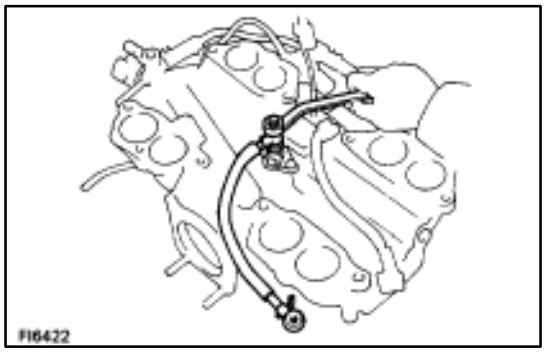

(b) Install the cold start injector tube with a new gasket and the union bolt.

Torque: 15 N·m (150 kgf·cm, 11 ft·lbf)

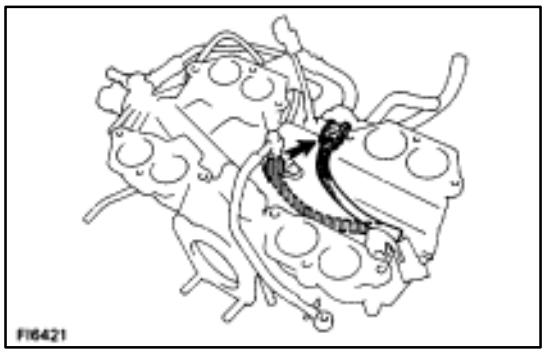

(c) Connect the cold start injector connector.

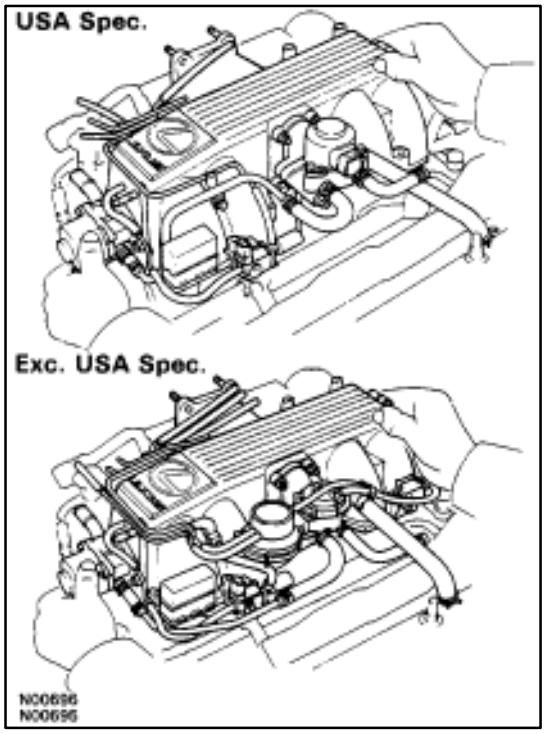

2. INSTALL AIR INTAKE CHAMBER

(a) Place four new gaskets and the air intake chamber on the intake manifold.

WhereEverybodyKnowsYourName

(b) Temporarily install a new gasket and the EGR pipe to air intake chamber with the two bolt.

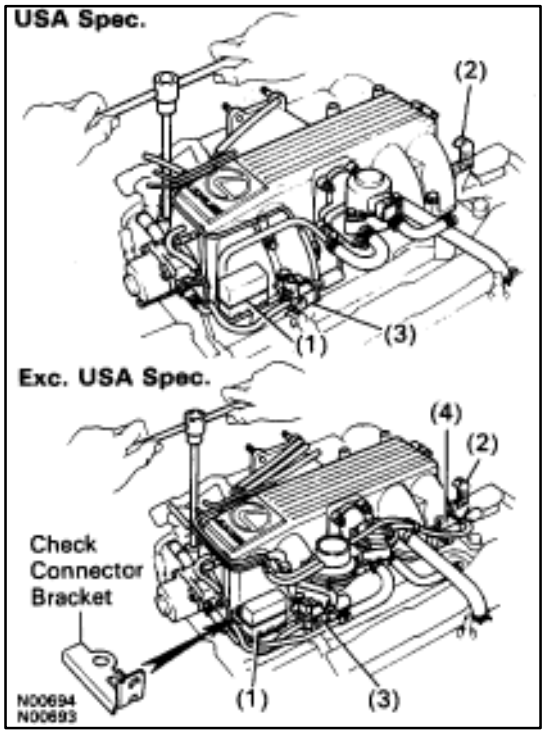

(c) (Exc. USA Spec.)
Install the connector bracket to check (”DIAGNOSIS”) connector.

(d) Install the air intake chamber and following parts with the four bolts and eight nuts:
(1) Check (”DIAGNOSIS”) connector
(2) A/T throttle cable bracket
(3) VSV for fuel pressure control system
(4) VSV for EGR system

Torque: 18 N·m (185 kgf·cm, 13 ft·lbf)

HINT: Use bolts 40 mm (1.57 in.) of length.

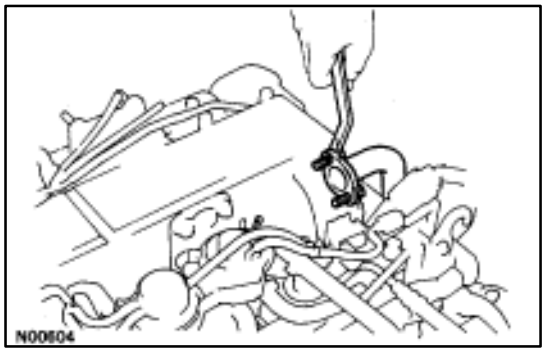

(e) Tighten the bolt holding the EGR pipe to the air intake chamber.

Torque: 18 N·m (185 kgf·cm, 13 ft·lbf)

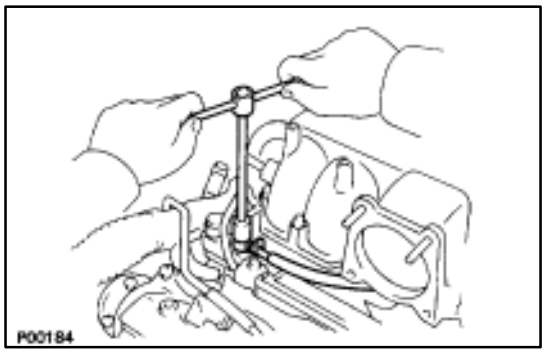

(f) Connect the cold start injector tube to the RH delivery pipe with two new gaskets and union bolt.

Torque: 15 N·m (150 kgf·cm, 11 ft·lbf)

WhereEverybodyKnowsYourName

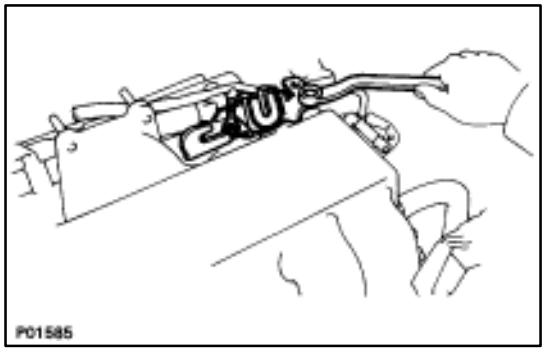

(g) Install the accelerator bracket with the bolt and stud bolt.

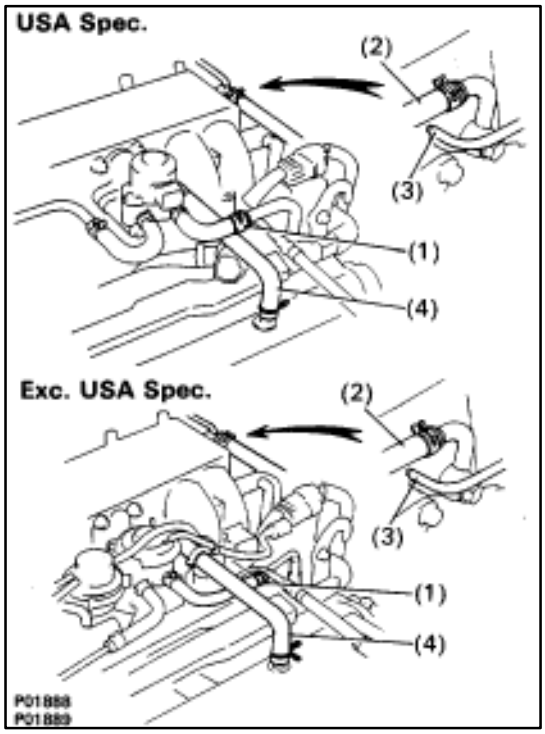

3. CONNECT HOSES

Connect the following hoses:

(1) Water by–pass hose (from EGR valve) to water by–pass pipe
(2) Vacuum hose (from brake booster) to air intake chamber
(3) Vacuum hose (from VSV for heater water valve) to air intake chamber
(4) PCV hose to LH cylinder head cover

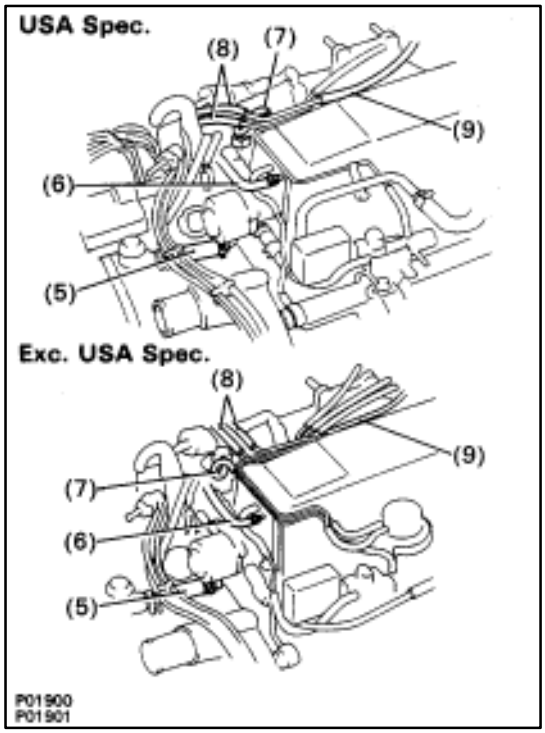

(5) Water by–pass hose (from water inlet housing) to ISC valve
(6) Vacuum hose (from PS air control valve) to air intake chamber
(7) Vacuum sensing hose (from fuel pressure regulator) to vacuum pipe
(8) Two vacuum hoses (from VSV for EVAP system) to vacuum pipe
(9) Vacuum hose (from charcoal canister) to vacuum pipe

WhereEverybodyKnowsYourName

4. CONNECT CONNECTORS

Connect the following connectors:

- Cold start injector connector
- ISC valve connector
- (USA Spec.)
  EGR valve connector
- (Exc. USA Spec.)
  VSV connector for EGR system
- SV connector for fuel pressure control system

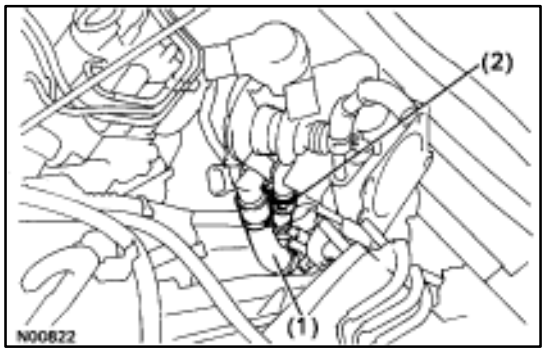

5. INSTALL THROTTLE BODY

(a) Connect the following hoses:
  (1) PCV hose to throttle body
  (2) Water by–pass hose to throttle body

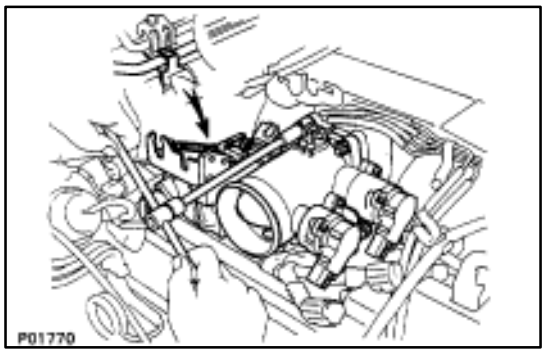

(b) Install a new gasket and throttle body with the two bolts and two nuts.

Torque: 18 N·m (185 kgf·cm, 13 ft·lbf)

HINT: Use bolts 40 mm (1.57 in.) in length.

(c) Install the water by–pass pipe (from rear water bypass joint) to the clamp on the engine wire cover.

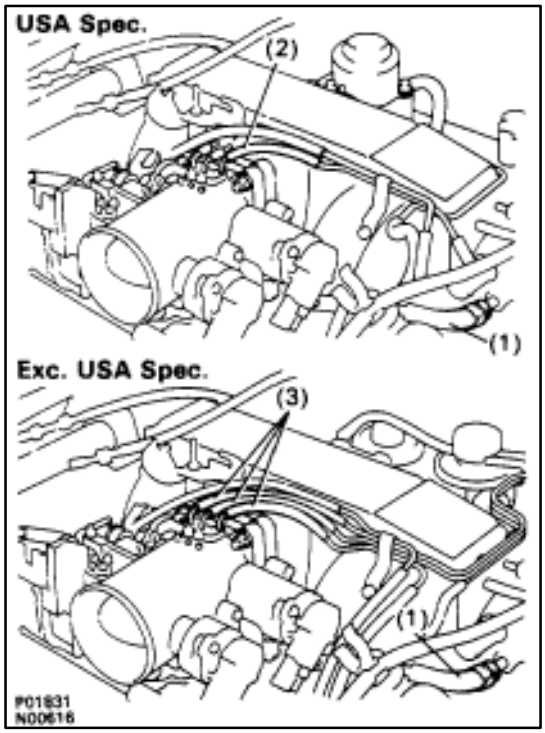

(d) Connect the following hoses:
  (1) Water by–pass hose to the ISC valve
  (2) (USA Spec.)
  Vacuum hose to throttle body
  (3) (Exc. USA Spec.)
  Three vacuum hoses to throttle body

WhereEverybodyKnowsYourName

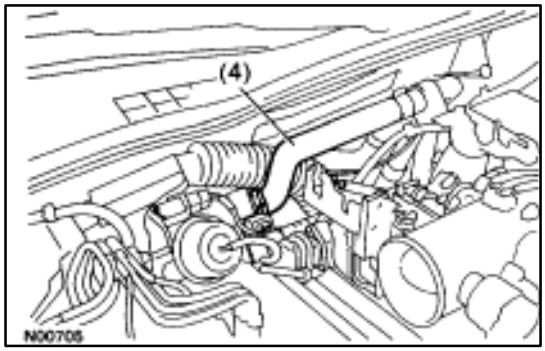

(4) Heater water hose to heater water valve

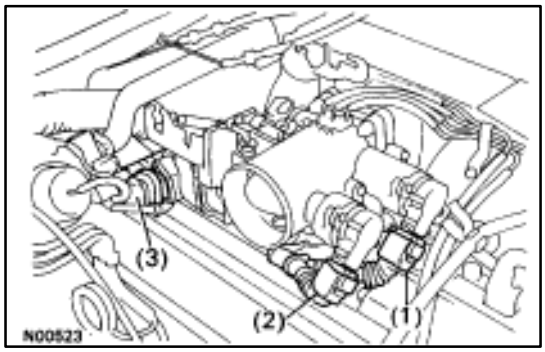

(e) Connect the following connectors:
  (1) Throttle position sensor connector
  (2) (w/ TRAC)
  Sub–throttle position sensor connector
  (3) (w/ TRAC)
  Sub–throttle actuator connector

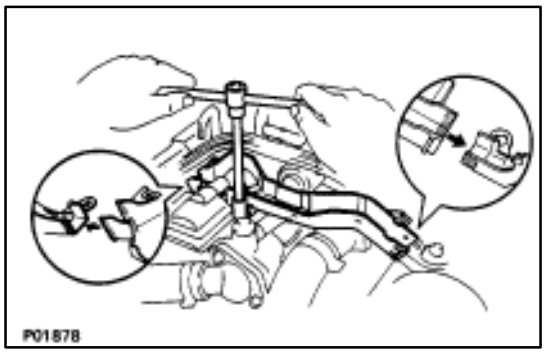

5. INSTALL LOWER HIGH–TENSION CORD COVER

(a) Connect the end portions of the high–tension cord to the cord clamps
(b) Install the high–tension cord cover with the bolt.

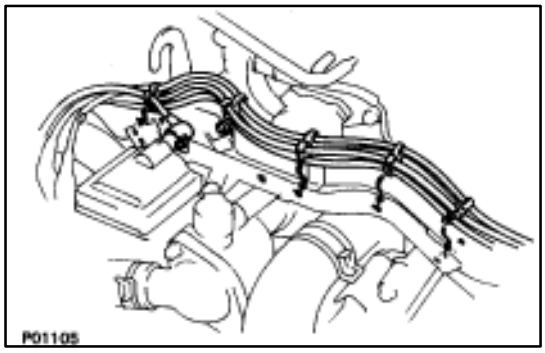

(c) Install the clamps on the high–tension cords to the high–tension cord cover.
(d) Connect the high–tension cord to the RH ignition coil.

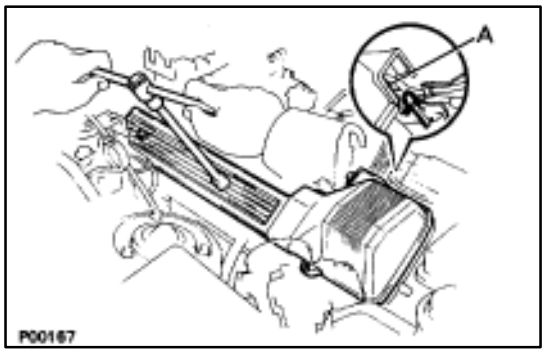

7. INSTALL RH NO.3 TIMING BELT COVER

(a) Install the three gaskets to the timing belt cover.
(b) Fit portion A of the timing belt cover, matching it with the lower high–tension cord cover.
(c) Install the timing belt cover with the three bolts.

WhereEverybodyKnowsYourName

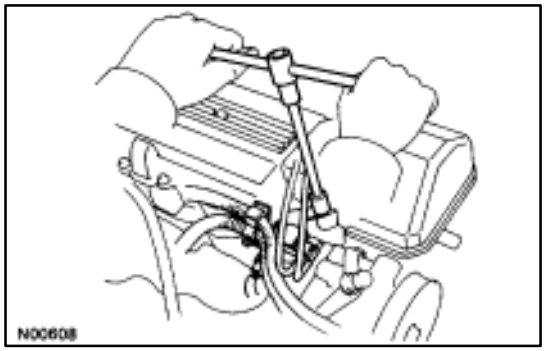

8. INSTALL VSV FOR EVAP SYSTEM

Install the VSV with the two bolts.

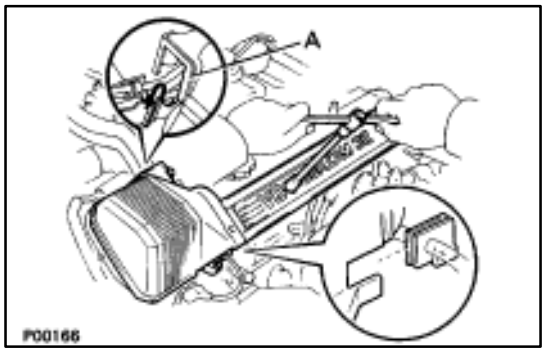

9. INSTALL LH NO.3 TIMING BELT COVER

(a) Install the three gaskets to the timing belt cover.
(b) Install the cord grommet to the high–tension cord.
(c) Install the cord grommet to the timing belt cover.
(d) Fit portion A of the timing belt cover, matching it with the lower high–tension cord cover.
(e) Install the timing belt cover with the four bolts.

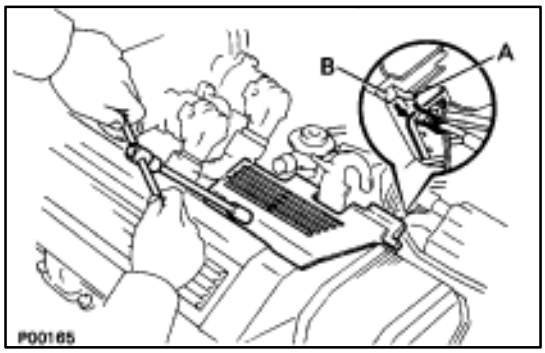

10. INSTALL RH ENGINE WIRE COVER

(a) Fit portions A and B of the engine wire cover, matching them with the lower high–tension cord cover and No.3 timing belt cover.
(d) Install the engine wire cover with the bolt.

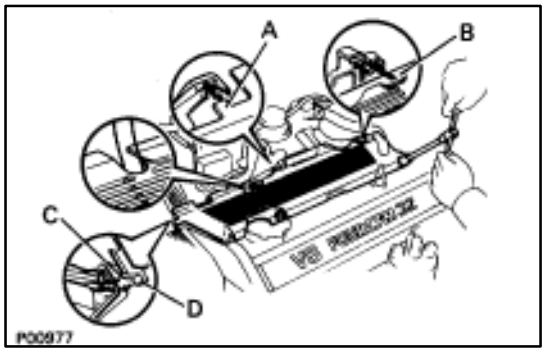

11. INSTALL LH ENGINE WIRE COVER

(a) Connect portions A and B engine wire cover to the wire brackets.
(b) Set the VSV (for fuel pressure control system) wire in original position.
(c) Fit portions C and D of the engine wire cover, matching them with the lower high–tension cord cover and No.3 timing belt cover.
(d) Install the engine wire cover with the two bolts.

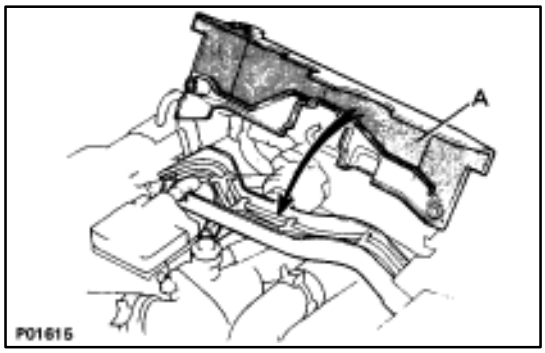

12. INSTALL UPPER HIGH–TENSION CORD COVER

(a) Fit portion A of the upper high–tension cover, matching it with the top of the lower high–tension cord cover.

WhereEverybodyKnowsYourName

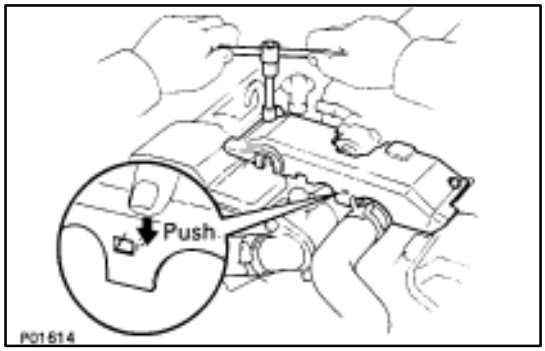

(b) Push the front side of the high–tension cord cover, and connect the front side claw groove of the upper high–tension cord cover to the claw of the lower high–tension cord cover.
(c) Install the upper high–tension cord cover with the two bolts.

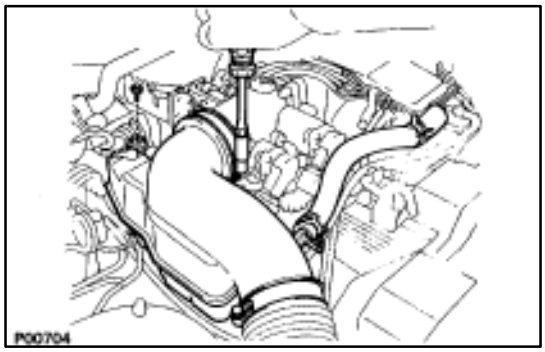

13. INSTALL INTAKE AIR CONNECTOR
(a) Connect the end portions of the intake air connector to the throttle body and air cleaner hose.
(b) Tighten the two hose clamps.
(c) Install the bolt holding the intake air connector to the cylinder head cover.

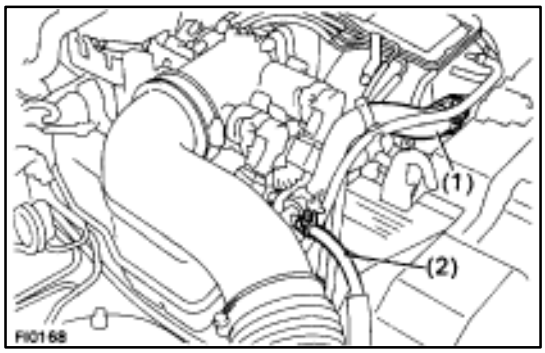

(d) Connect the following hoses:
(1) Air hose to ISC valve
(2) Air hose (from PS air control valve) to intake air connector

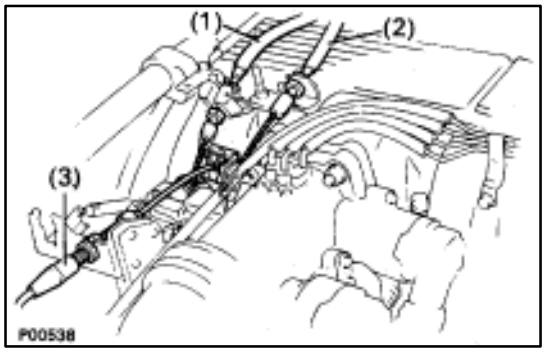

14. CONNECT CONTROL CABLES TO THROTTLE BODY
Connect the following cables:
(1) Accelerator cable
(2) A/T throttle control cable
(3) (w/ Cruise Control System)
Cruise control actuator cable

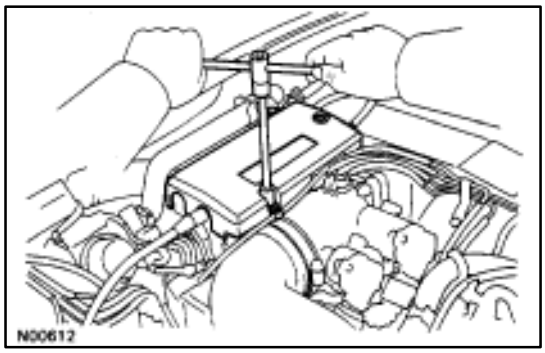

15. INSTALL THROTTLE BODY COVER
Install the throttle body cover and hose clamp with the two bolts and cap nut.

16. CONNECT CABLE TO NEGATIVE TERMINAL OF BATTERY

17. FILL WITH ENGINE COOLANT (See page CO–7)

18. CHECK FOR FUEL LEAKS (See page FI–16)

WhereEverybodyKnowsYourName

Injectors

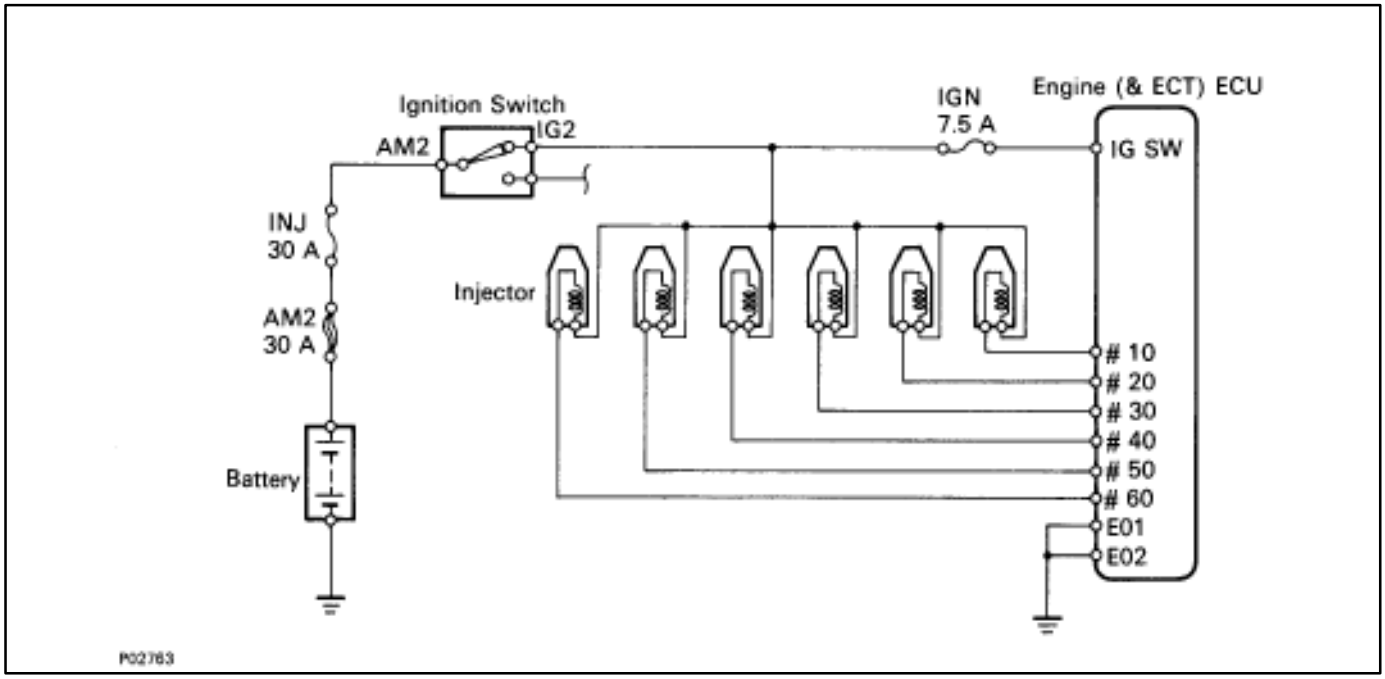

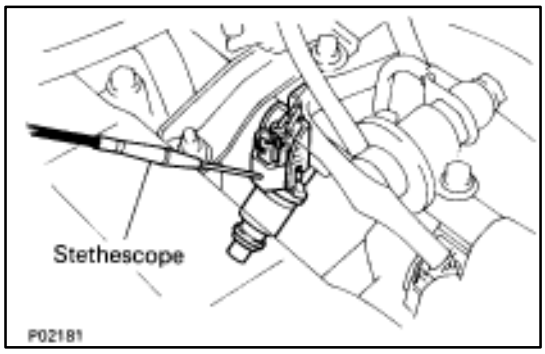

ON–VEHICLE INSPECTION

1. INSPECT INJECTOR OPERATION

Check operation sound from each injector.

(a) With the engine running or cranking, use a stethescope to check that there is normal operating noise in proportion to engine rpm.

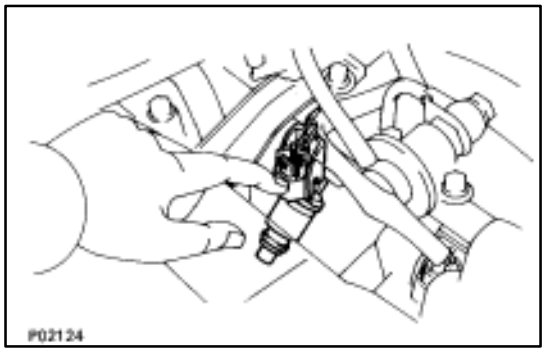

(b) If you have no stethescope, you can check the injector transmission operation with your finger.

If no sound or an unusual sound is heard, check the wiring connector, injector or injection signal from the ECU.

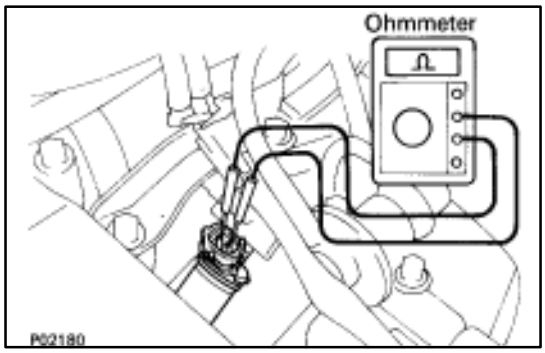

2. INSPECT INJECTOR RESISTANCE

(a) Disconnect the injector connector.

(b) Using an ohmmeter, measure the resistance between the terminals.

Resistance: 13.4–14.2 ? at 20°C (68°F)

If the resistance is not as specified, replace the injector.

(c) Reconnect the injector connector.

WhereEverybodyKnowsYourName

COMPONENTS FOR REMOVAL AND INSTALLATION

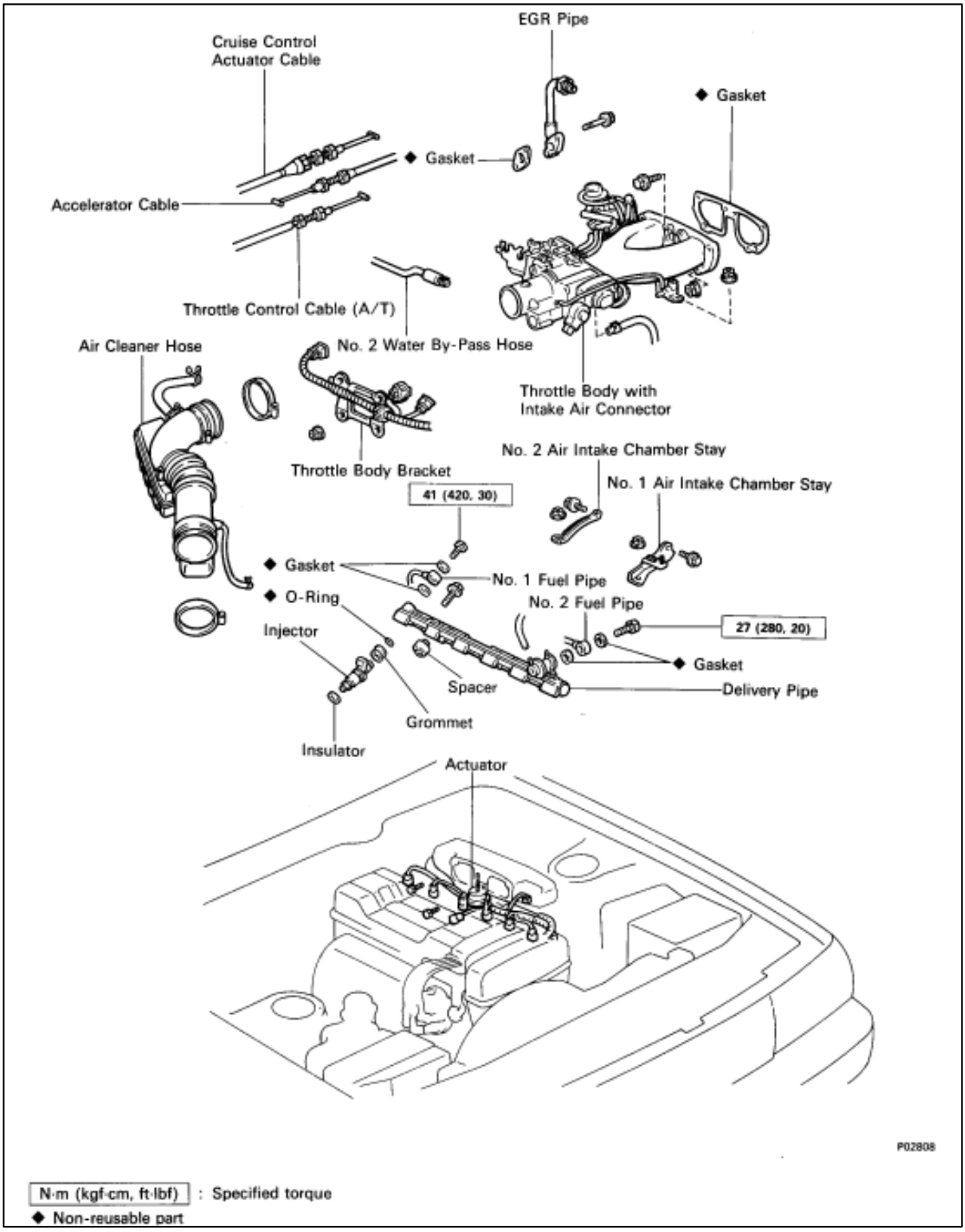

N·m (kgf·cm, ft·lbf) : Specified torque
◆ Non-reusable part

WhereEverybodyKnowsYourName

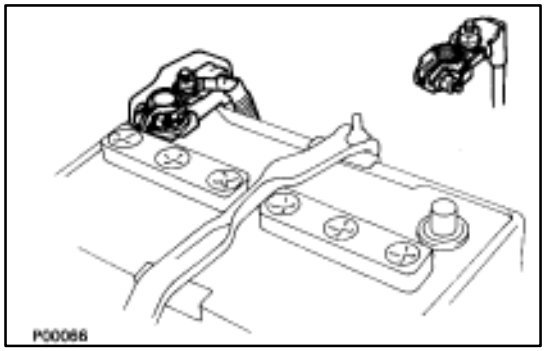

REMOVAL OF INJECTORS
(See Components on page FI–27)

1. **DISCONNECT CABLE FROM NEGATIVE TERMINAL OF BATTERY**
   CAUTION: Turn the ignition switch to ”LOCK”. Disconnect the cable from the negative (–) terminal of the battery. Wait at least 20 seconds before proceeding with work.
2. **DRAIN ENGINE COOLANT**
3. **REMOVE THROTTLE BODY WITH INTAKE AIR CONNECTOR**
   (See steps 2 to 6 on pages EM–10 and 11)

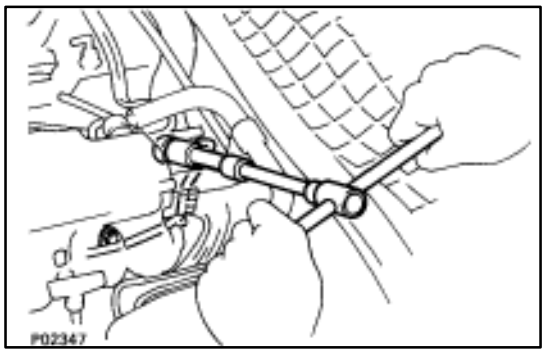

4. **DISCONNECT NO.1 FUEL PIPE FROM DELIVERY PIPE**
   Remove the union bolt and two gaskets, and disconnect the fuel pipe.
   HINT:
   - Put a suitable container or shop towel under the delivery pipe.
   - Slowly loosen the union bolt.

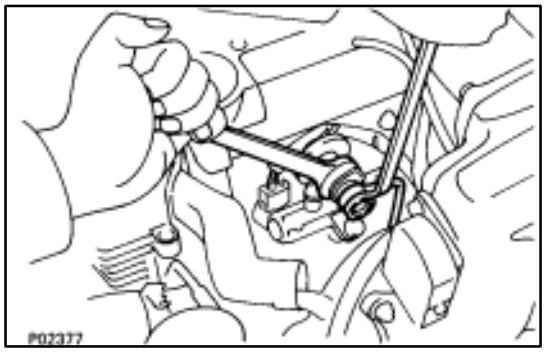

5. **DISCONNECT NO. 2 FUEL PIPE FROM FUEL PRESSURE REGULATOR**
   Remove the union bolt and two gaskets, and disconnect the fuel pipe from the pressure regulator.
   HINT:
   - Put a suitable container or shop towel under the pressure regulator.
   - Slowly loosen the union bolt.

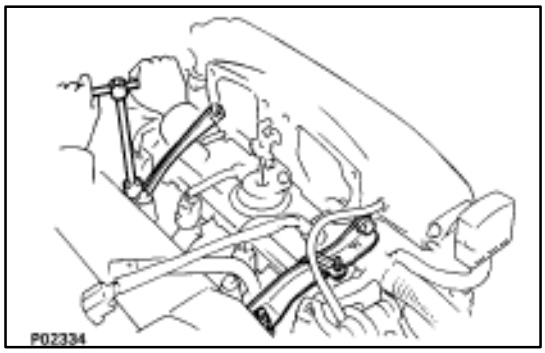

6. **REMOVE AIR INTAKE CHAMBER STAYS**
   Remove the bolt, nut and intake chamber stay.
   Remove the No. 1 and No. 2 stays.

WhereEverybodyKnowsYourName

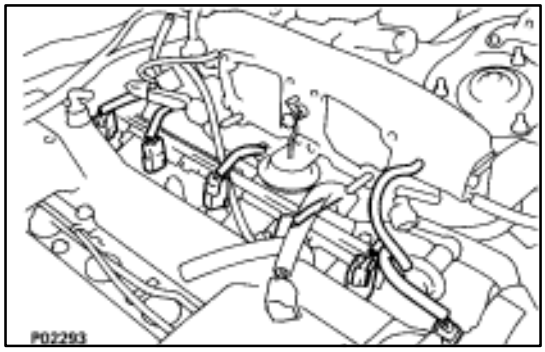

7. DISCONNECT VACUUM SENSING HOSE FROM PRESSURE REGULATOR

8. DISCONNECT INJECTOR CONNECTORS

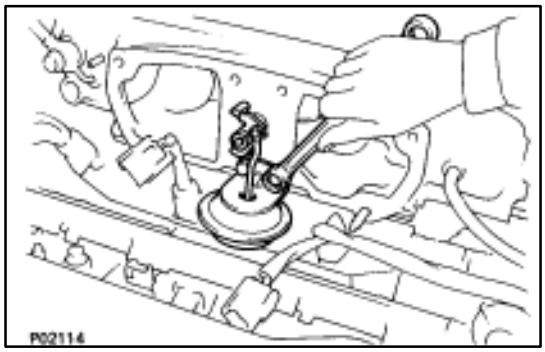

9. DISCONNECT CONTROL VALVE ACTUATOR

Remove the two bolts and turn the actuator sideways.

HINT: Wrap the actuator with adhesive tape and attach it to the intake chamber.

NOTICE: Do not apply any force on the actuator rod and prevent the rod clip from detaching.

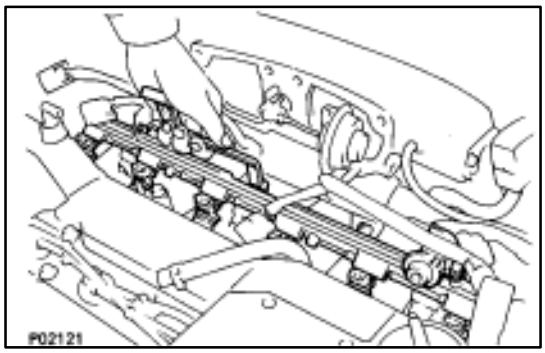

10. REMOVE DELIVERY PIPE AND INJECTORS

(a) Remove the three bolts and delivery pipe together with the six injectors.

NOTICE: Be careful not to drop the injectors when removing the delivery pipe.

(b) Pull out the six injectors from the delivery pipe.

(c) Remove the O–ring and grommet from each injector.

(d) Remove the six insulators and three spacers from the cylinder head.

WhereEverybodyKnowsYourName

INSPECTION OF INJECTORS

1. INSPECT INJECTOR INJECTION

CAUTION: Keep injector clear of sparks during the test.

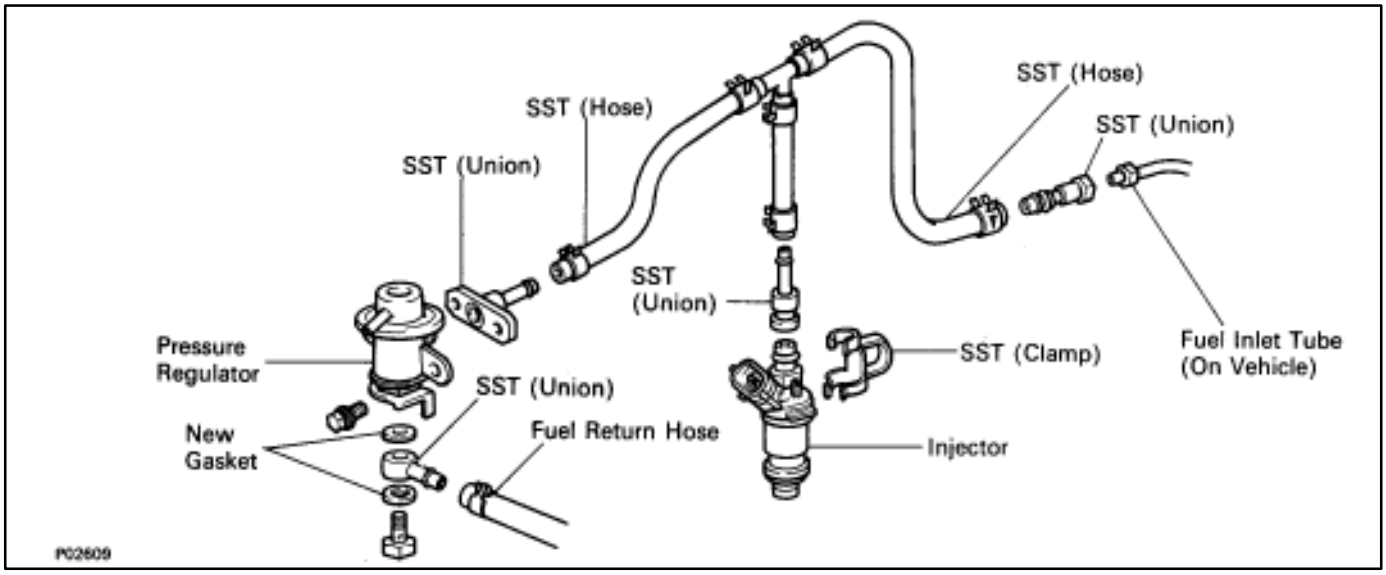

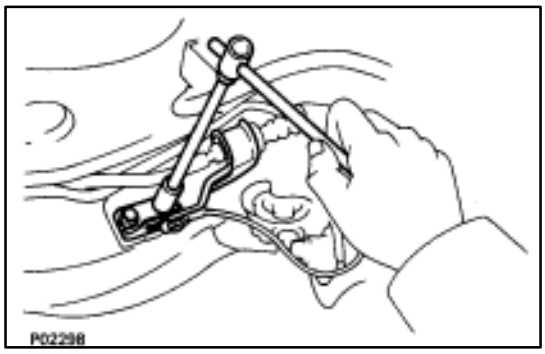

(a) Remove the two bolts and fuel hose clamp.

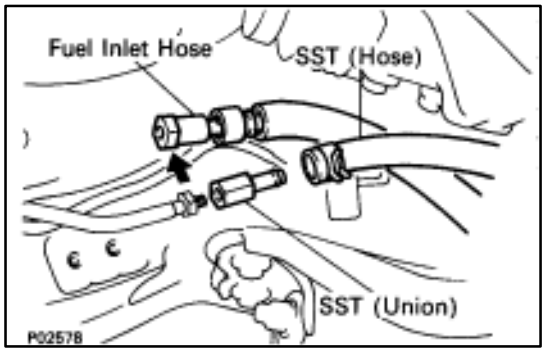

(b) Disconnect the fuel inlet hose from the fuel tube.

(c) Connect SST (hose) to the fuel inlet tube with SST (union). Tighten the flare nut on the fuel tube.

SST 09268–41045 (90405–52010)

Torque: 30 N·m (310 kgf·cm, 22 ft·lbf)

HINT: Use SST. (See page FI–14)

SST 09631–22020

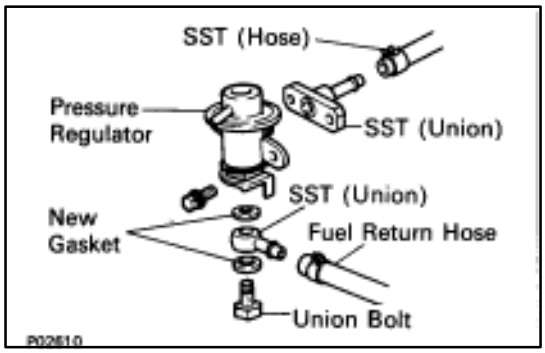

(d) Install a new O–ring to the fuel inlet of the pressure regulator.

(e) Connect SST (hose) to the fuel inlet of the pressure regulator with SST (union) and the two bolts.

SST 09268–41045 (09268–41090)

(f) Connect the fuel return hose to the fuel outlet of the pressure regulator with SST (union), two new gaskets and union bolt.

SST 09268–41045 (90405–09015)

WhereEverybodyKnowsYourName

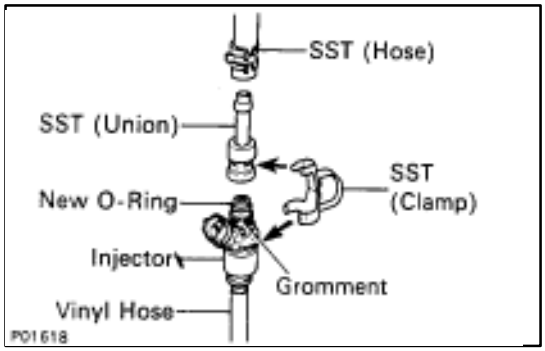

(g) Install the grommet and a new O–ring to the injector.
(h) Connect SST (hose) to the injector with SST (union), and hold the injector and union with SST (clamp).

SST 09268–41045

(i) Put the injector into the graduated cylinder.

HINT: Install a suitable vinyl hose onto the injector to prevent gasoline from splashing out.

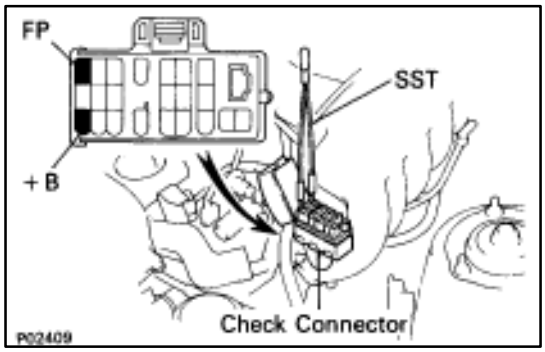

(j) Using SST, connect terminals +B and FP of the check (”DIAGNOSIS”) connector.

SST 09843–18020

(k) Reconnect the cable to negative (–) terminal of battery.
(l) Turn the ignition switch ON.

NOTICE: Do not start the engine.

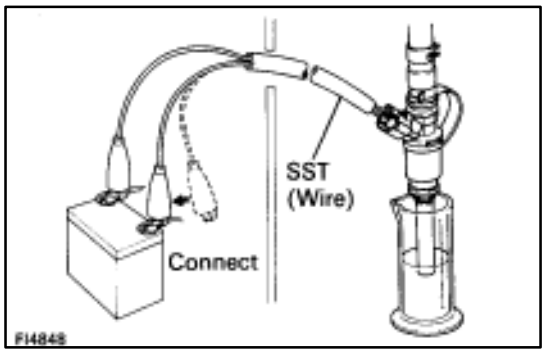

(m) Connect SST (wire) to the injector and battery for 15 seconds, and measure the injection volume with a graduated cylinder. Test each injector two or three times.

SST 09842–30070

Volume: 70–88 cm^3 (4.3–5.4 cu in.) per 15 sec.
Difference between each injector:
9 cm^3 (0.5 cu in.) or less

If the injection volume is not as specified, replace the injector.

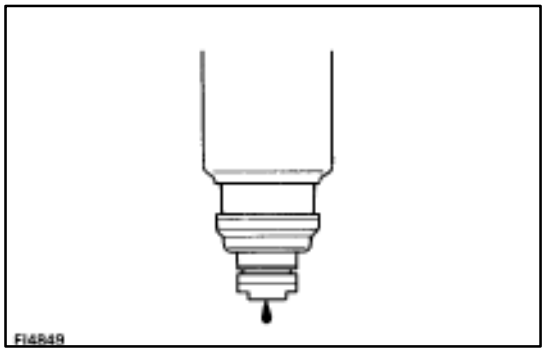

2. INSPECT LEAKAGE

(a) In the condition above, disconnect the test probes of SST (wire) from the battery and check the fuel leakage from the injector.

SST 09842–30070

Fuel drop: One drop or less per minute

(b) Disconnect the battery negative (–) cable.
(c) Remove SST.

SST 09268–41045 and 09843–18020

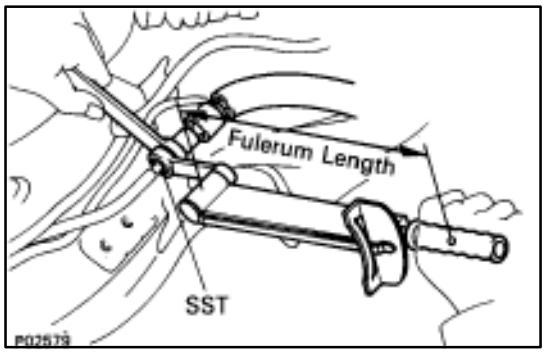

(d) Reconnect the fuel inlet hose to the fuel tube.

SST 09631–22020

Torque: 30 N·m (310 kgf·cm, 22 ft·lbf)

HINT: Use a torque wrench with a fulcrum length of 30 cm (11.81 in.).

WhereEverybodyKnowsYourName

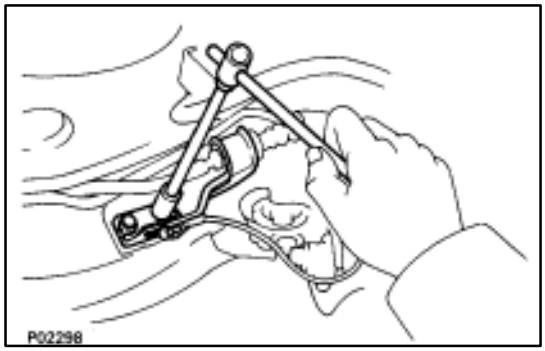

(e) Install the fuel hose clamp with the two bolts.

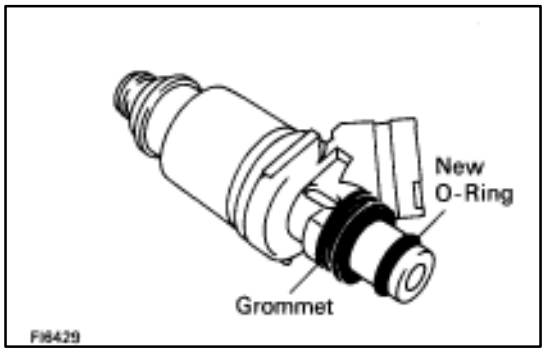

INSTALLATION OF INJECTORS

(See Components on page FI–27)

1. INSTALL INJECTORS AND DELIVERY PIPE

(a) Install the grommet to each injector.

(b) Apply a light coat of gasoline to a new O–ring and install it to each injector.

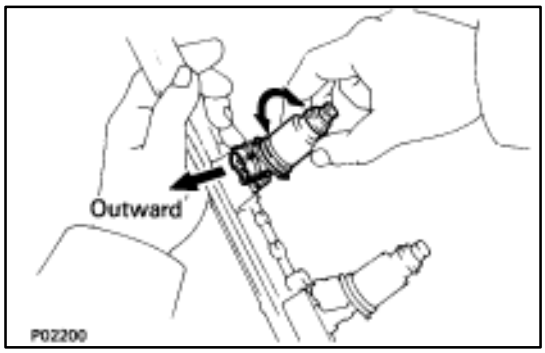

(c) While turning the injector clockwise and counterclockwise, push it to the delivery pipe. Install the six injectors.

(d) Position the injector connector outward.

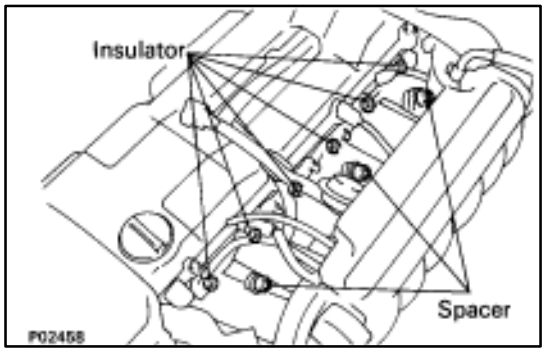

(e) Place the six insulators and three spacers in position on the intake manifold.

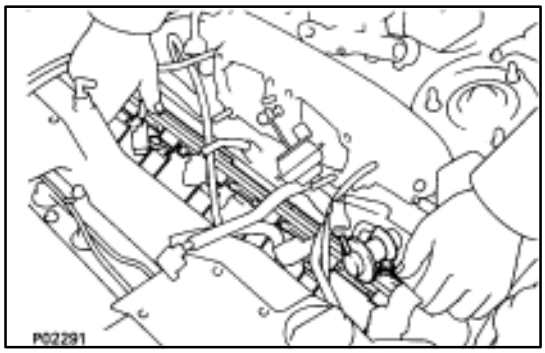

(f) Place the six injectors together with the delivery pipe in position on the cylinder head.

WhereEverybodyKnowsYourName

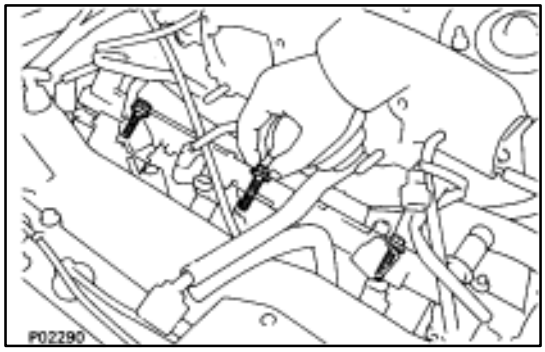

(g) Temporarily install the three bolts holding the delivery pipe to the cylinder head.

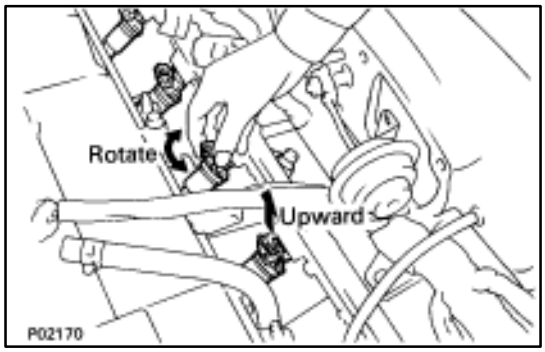

(h) Check that the injectors rotate smoothly.
HINT: If injectors do not rotate smoothly, the probable cause is incorrect installation of O–rings. Replace the O–rings.
(i) Position the injector connector upward.

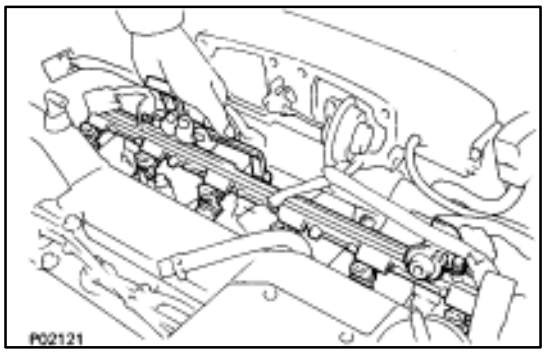

(j) Tighten the three bolts holding the delivery pipes to the intake manifold.
Torque: 21 N·m (210 kgf·cm, 15 ft·lbf)

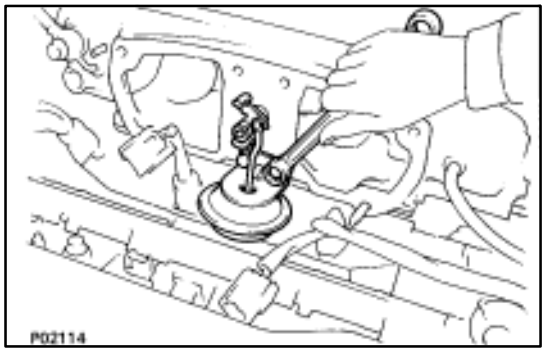

2. INSTALL CONTROL VALVE ACTUATOR
(a) Install the actuator with the two bolts.
Torque: 6.8 N·m (70 kgf·cm, 61 in.·lbf)
(b) Inspect the IACV. (See page FI–59)

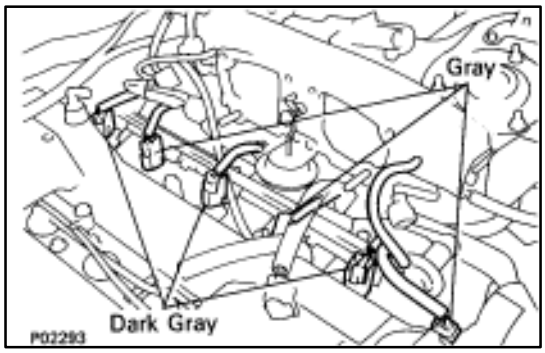

3. CONNECT INJECTOR CONNECTORS
HINT: The No. 1, No. 3 and No. 5 injector connectors are gray, and the No. 2, No. 4 and No. 6 injector connectors are dark gray.

4. CONNECT VACUUM SENSING HOSE

WhereEverybodyKnowsYourName

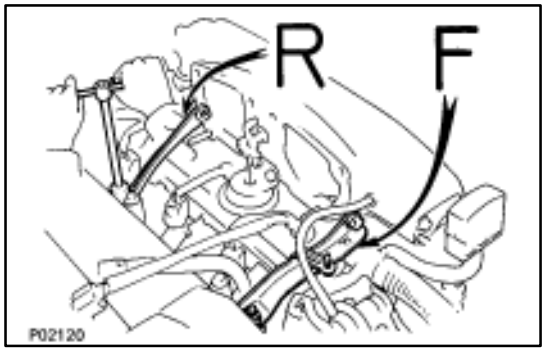

5. INSTALL AIR INTAKE CHAMBER STAYS

Install the intake chamber stay with the bolt and nut.
Install the No. 1 and No. 2 stays.

Torque: 18 N·m (185 kgf·cm, 13 ft·lbf)

HINT: The No. 1 stay is marked ”F” and No. 2 stay is marked with ”R”.

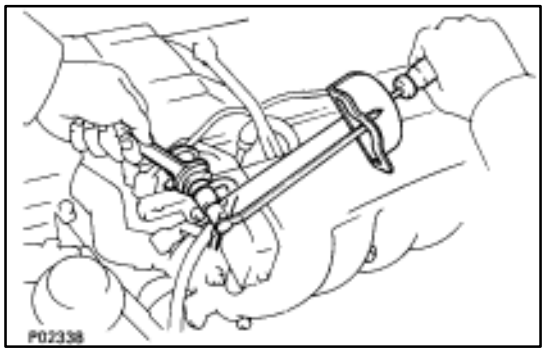

6. CONNECT NO. 2 FUEL PIPE TO FUEL PRESSURE REGULATOR

Connect the fuel pipe with two new gaskets and the union bolt.

Torque: 27 N·m (280 kgf·cm, 20 ft·lbf)

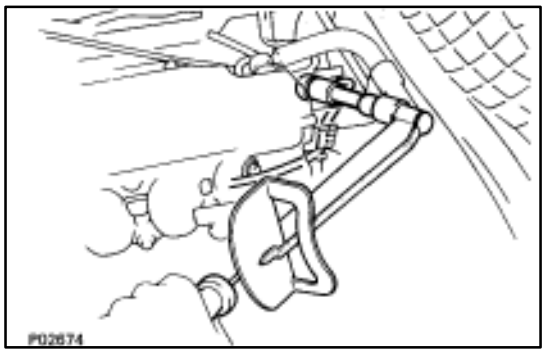

7. CONNECT NO. 1 FUEL PIPE TO DELIVERY PIPE

Connect the fuel pipe with two new gaskets and the union bolt.

Torque: 42 N·m (420 kgf·cm, 30 ft·lbf)

8. INSTALL THROTTLE BODY WITH INTAKE AIR CONNECTOR

(See steps 16 to 20 on pages EM–18 and 19)

9. FILL WITH COOLANT (See page CO–5)

10. CONNECT CABLE TO NEGATIVE TERMINAL OF BATTERY

WhereEverybodyKnowsYourName

Fuel Pressure Pulsation Damper

COMPONENTS FOR REMOVAL AND INSTALLATION

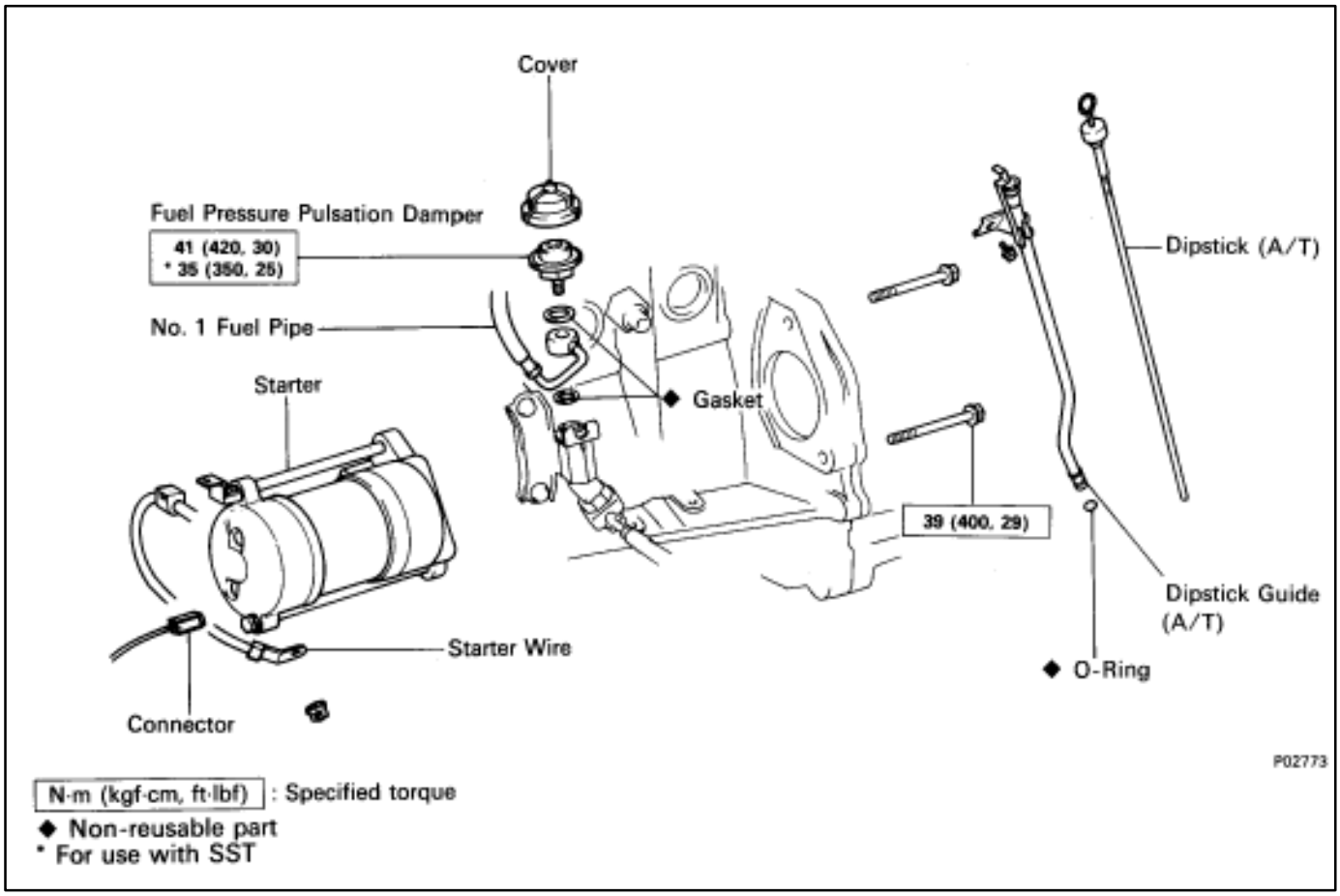

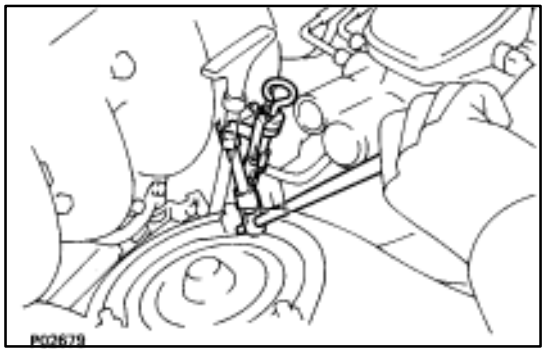

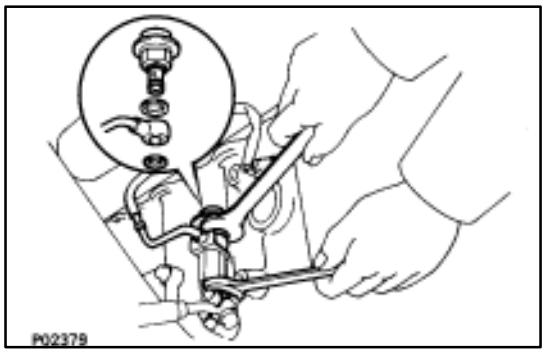

REMOVAL OF FUEL PRESSURE PULSATION DAMPER

1. **(A/T)**
   REMOVE DIPSTICK GUIDE FOR TRANSMISSION
   (a) Remove the mounting bolt.
   (b) Pull out the distick guide and dipstick from the transmission.
   (c) Remove the O–ring from the dipstick guide.
2. **REMOVE STARTER (See page ST–5)**
3. **REMOVE FUEL PRESSURE PULSATION DAMPER**
   (a) Remove the pulsation damper and upper gasket.
   (b) Disconnect the No. 1 fuel pipe from the fuel pipe support, and remove the lower gasket.

WhereEverybodyKnowsYourName

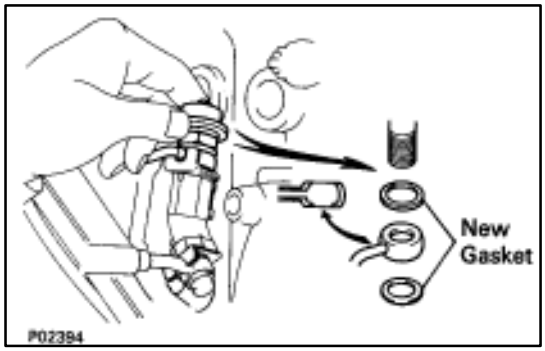

INSTALLATION OF FUEL PRESSURE PULSATION DAMPER

(See Components on page FI–35)

1. INSTALL FUEL PRESSURE PULSATION DAMPER

(a) Install two new gaskets, the No. 1 fuel pipe and pulsation damper.

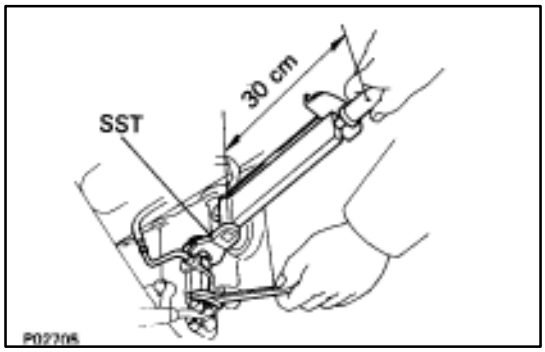

(b) Using SST, torque the pulsation damper.

SST 09612–24014 (09617–24011)

Torque: 41 N·m (420 kgf·cm, 30 ft·lbf)
35 N·m (350 kgf·cm, 25 ft·lbf) for SST

HINT: Use a torque wrench with a fulcrum length of 30 cm (11.81 in.).

2. INSTALL STARTER (See page ST–5)

Torque: 39 N·m (400 kgf·cm, 29 ft·lbf)

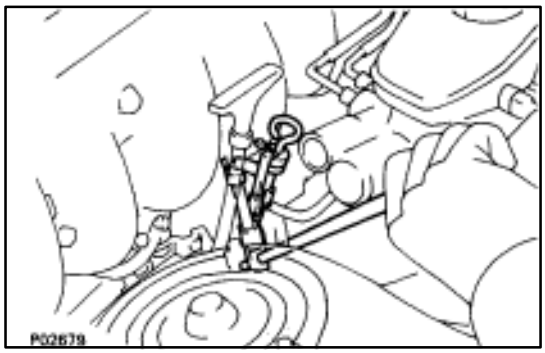

3. (A/T)

INSTALL DIPSTICK GUIDE FOR TRANSMISSION

(a) Install a new O–ring to the dipstick guide.
(b) Apply soapy water to the O–ring.
(c) Connect the dipstick guide end to the tube of the oil pan, and install the dipstick guide with the bolt.
(d) Install the dipstick.

4. CHECK FOR FUEL LEAKS (See page FI–15)

WhereEverybodyKnowsYourName

Fuel Tank and Lines

COMPONENTS

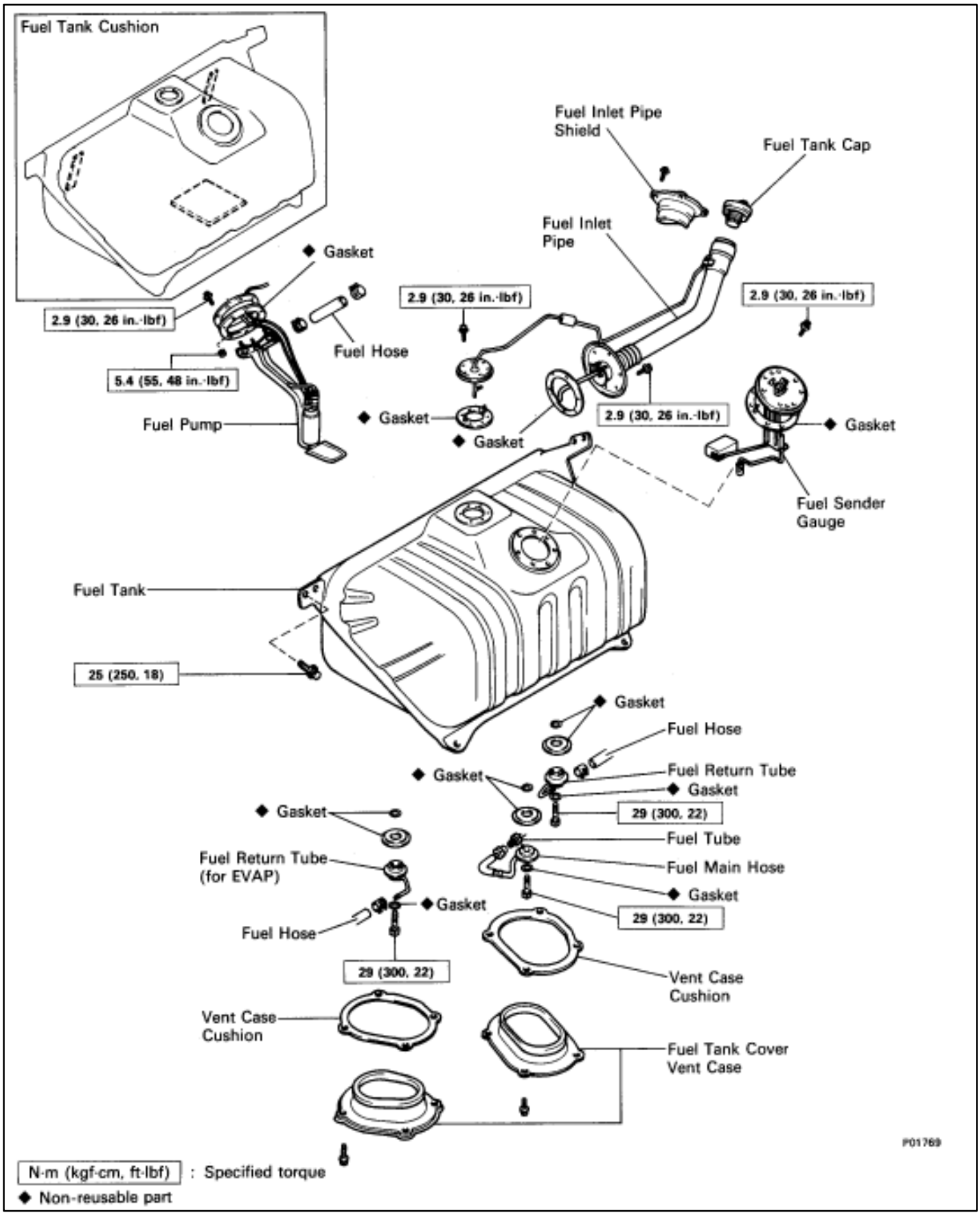

WhereEverybodyKnowsYourName

PRECAUTIONS

1. **Always use new gaskets when replacing the fuel tank or component part.**
2. **Apply the proper torque to all parts tightened.**

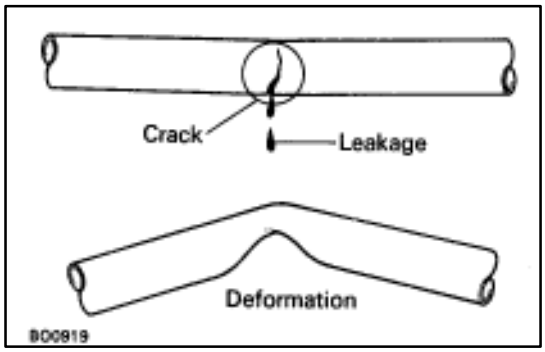

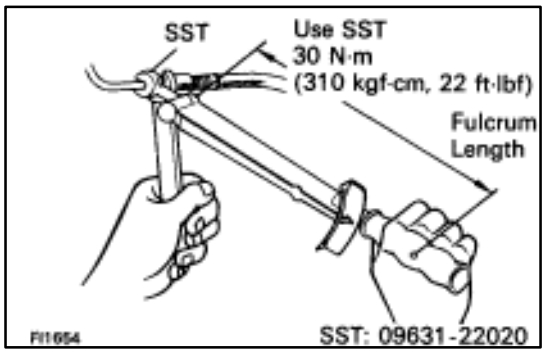

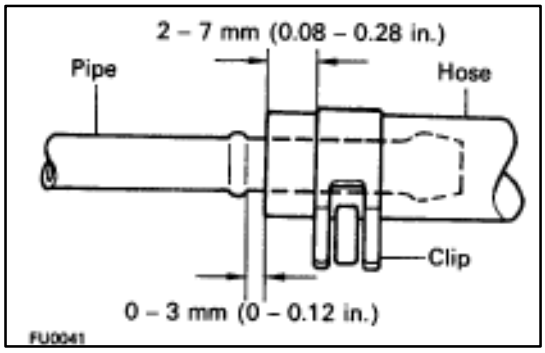

INSPECTION OF FUEL LINES AND CONNECTIONS

(a) Inspect the fuel lines and connections for cracks, leakage or deformation.

(b) Inspect the fuel tank vapor vent system hoses and connections for looseness, kinks or damage.

(c) Inspect the fuel tank for deformation, cracks, fuel leakage or tank band looseness.

(d) Check the filter neck for damage or fuel leakage.

(e) Hose and tube connections are as shown in the illustration.

If a problem is found, repair or replace the parts as necessary.

WhereEverybodyKnowsYourName

AIR INDUCTION SYSTEM
Air Flow Meter

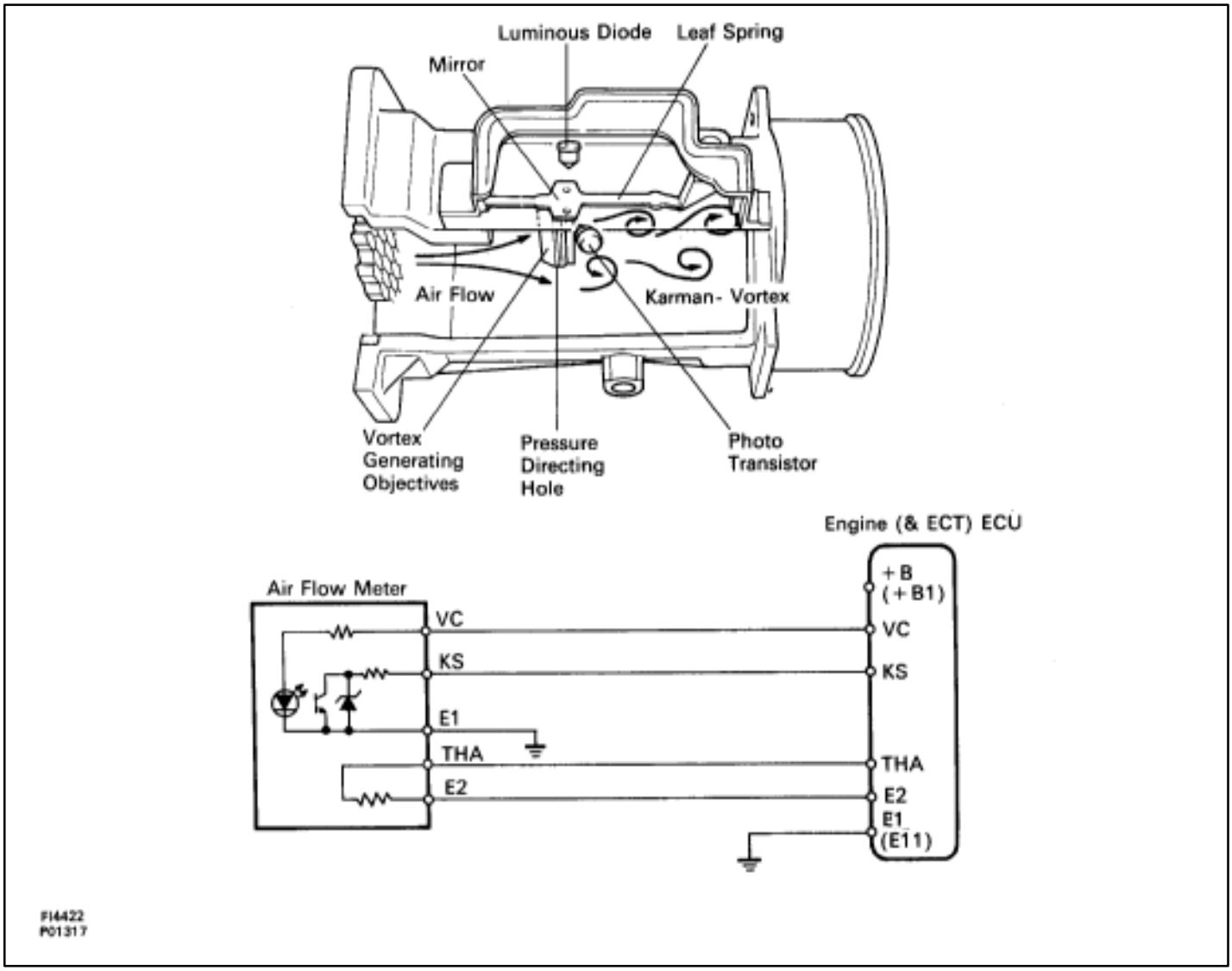

ON–VEHICLE INSPECTION

INSPECT RESISTANCE OF AIR FLOW METER

(a) Disconnect the air flow meter connector.

(b) Using an ohmmeter, measure the resistance between terminals THA and E2.

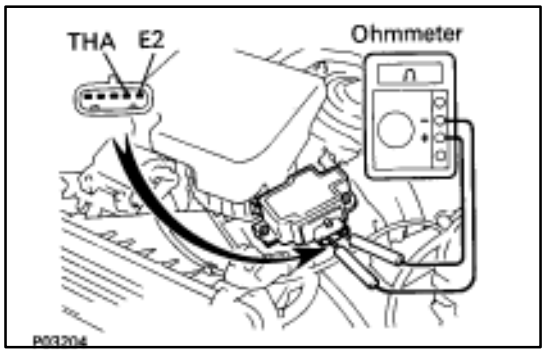

Between terminals	Resistance	Temperature
THA–E2	10–20 k?	–20°C (–4°F)
	4–7 k?	9°C (32°F)
	2–3 k?	20°C (68°F)
	0.9–1.3 k?	40°C (104°F)
	0.4–0.7 k?	60°C (140°F)

If the resistance is not as specified, replace the air flow meter.

(c) Reconnect the air flow meter connector.

WhereEverybodyKnowsYourName

COMPONENTS

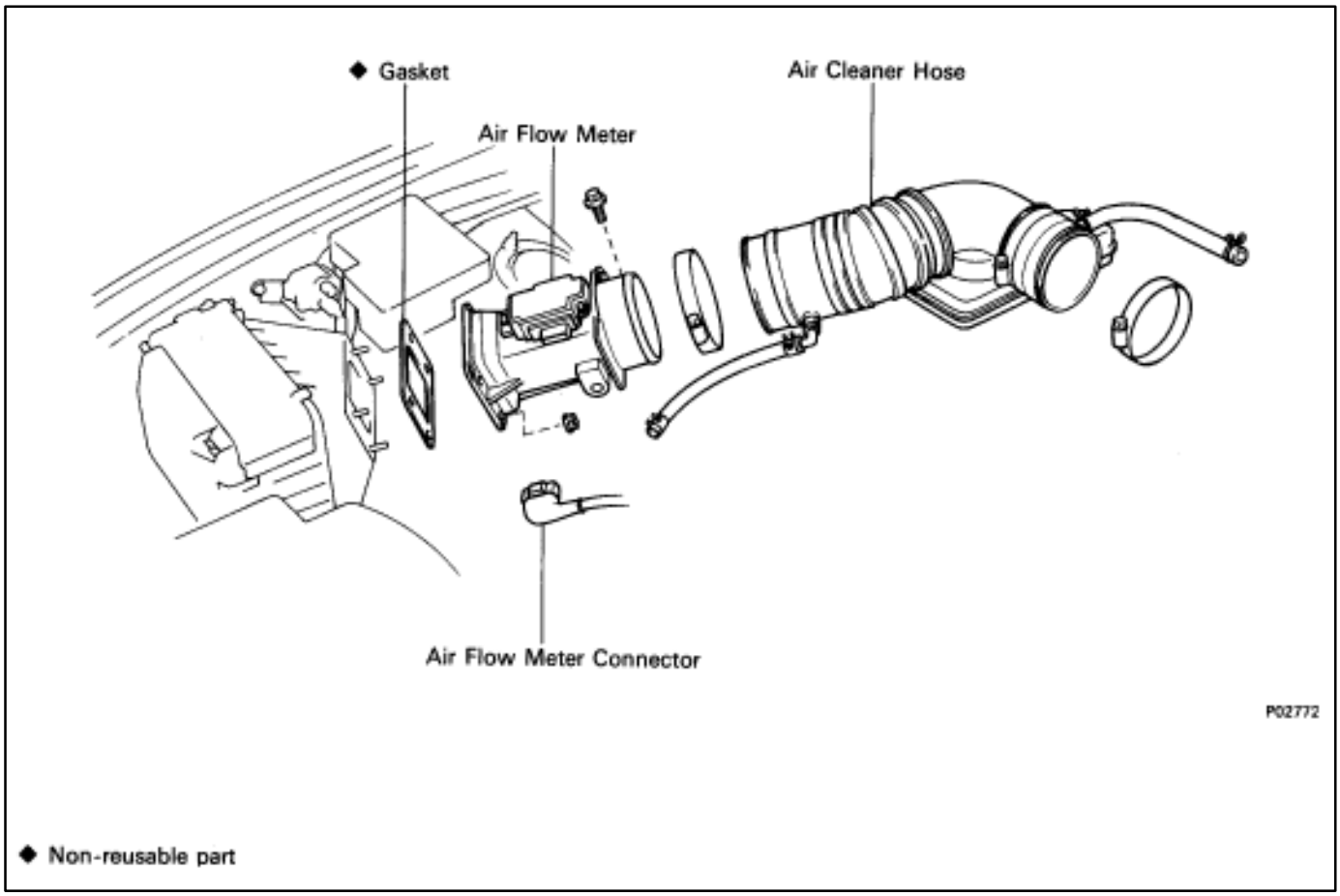

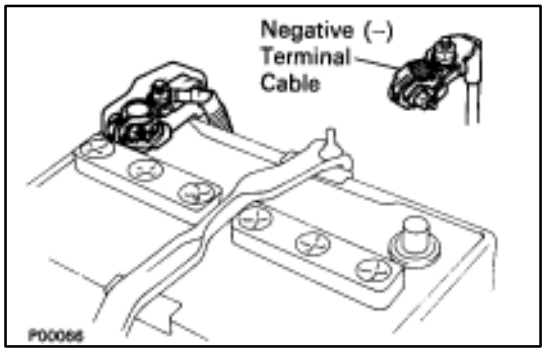

REMOVAL OF AIR FLOW METER

1. **DISCONNECT CABLE FROM NEGATIVE TERMINAL OF BATTERY**
   CAUTION: Turn the ignition switch to ”LOCK”. Disconnect the cable from the negative (–) terminal of the battery. Wait at least 20 seconds before proceeding with work.

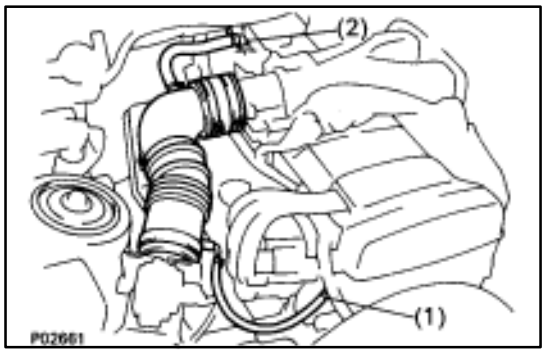

2. **REMOVE AIR CLEANER HOSE**
   (a) Disconnect the following hoses:
   (1) PS air hose from No. 4 timing belt cover
   (2) PCV hose from No. 2 cylinder head cover
   (b) Loosen the two hose clamps and remove the air cleaner hose.

WhereEverybodyKnowsYourName

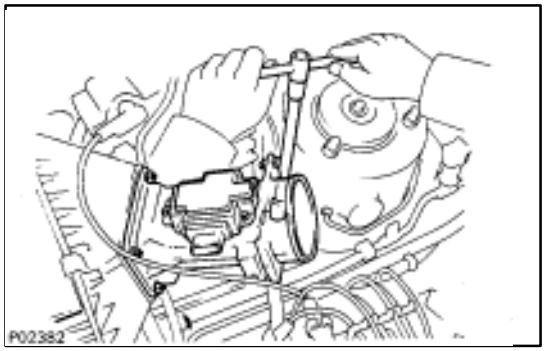

3. REMOVE AIR FLOW METER FROM AIR CLEANER CASE

(a) Disconnect the air flow meter connector.

(b) Remove the four nuts, bolt, air flow meter and gasket.

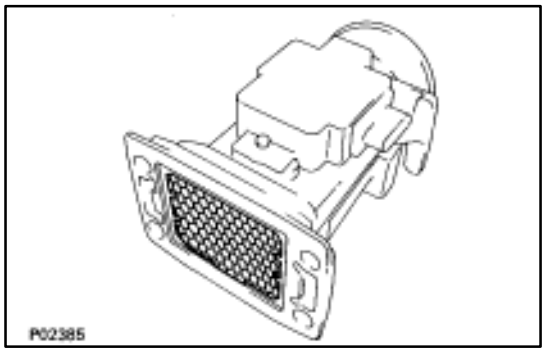

INSPECTION OF AIR FLOW METER

INSPECT AIR FLOW METER

Check that the honey–combed is neither deformed nor damaged.

If necessary, replace the air flow meter.

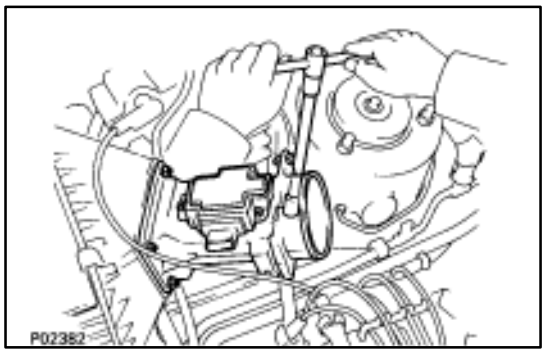

INSTALLATION OF AIR FLOW METER

(See Components on page FI–40)

1. INSTALL AIR FLOW METER FROM AIR CLEANER CASE

(a) Install a new gasket and the air flow meter with the four nuts and a bolt.

Torque: 10 N·m (100 kgf·cm, 7 ft·lbf)

(b) Connect the air flow meter connector.

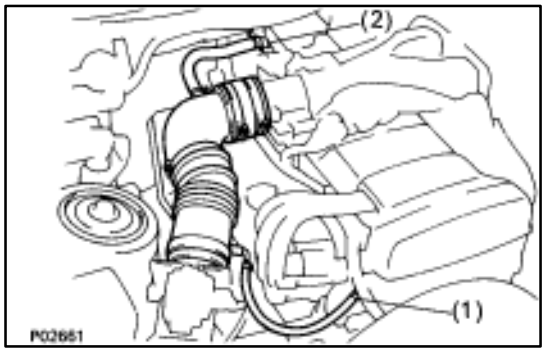

2. INSTALL AIR CLEANER HOSE

(a) Install the air cleaner hose with two hose clamps.

(b) Connect the following hoses:

(1) PS air hose to No. 4 timing belt cover

(2) PCV hose to No. 2 cylinder head cover

3. CONNECT CABLE FROM NEGATIVE TERMINAL OF BATTERY

WhereEverybodyKnowsYourName

Fuel Pressure Regulator

USA Spec.

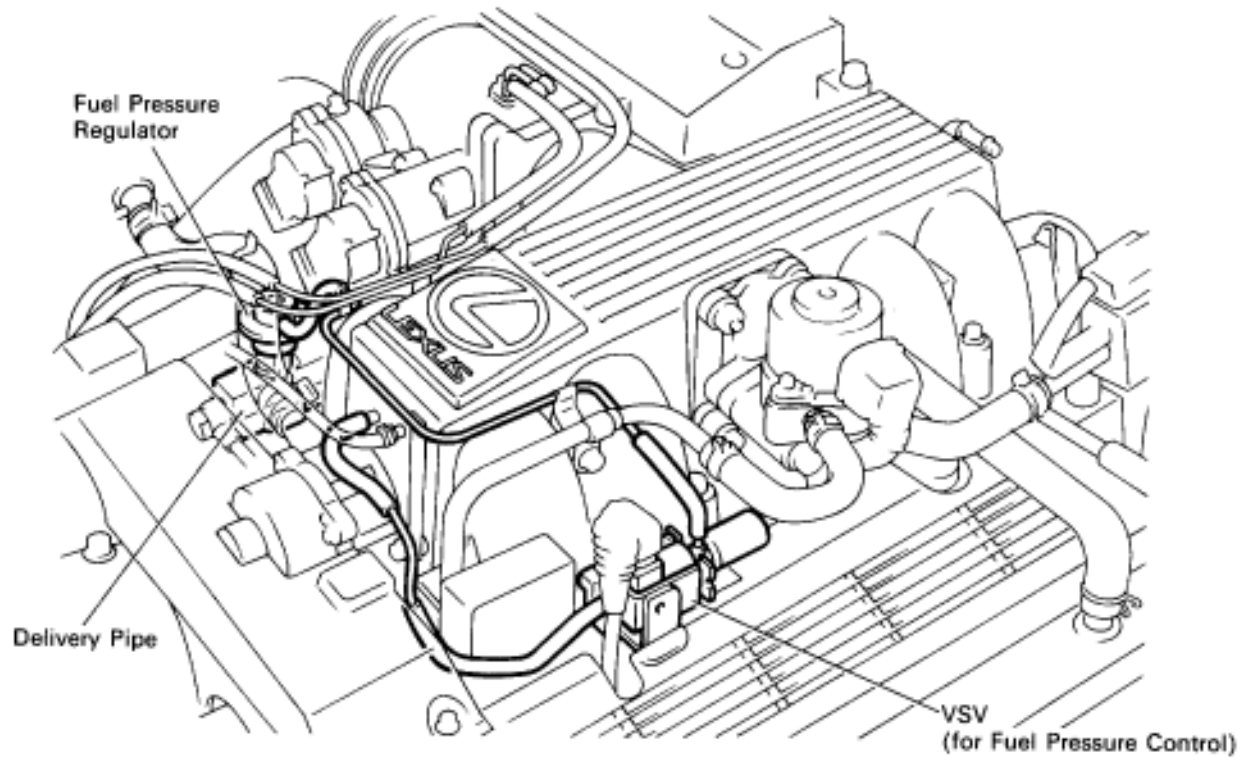

P01467

Exc. USA Spec.

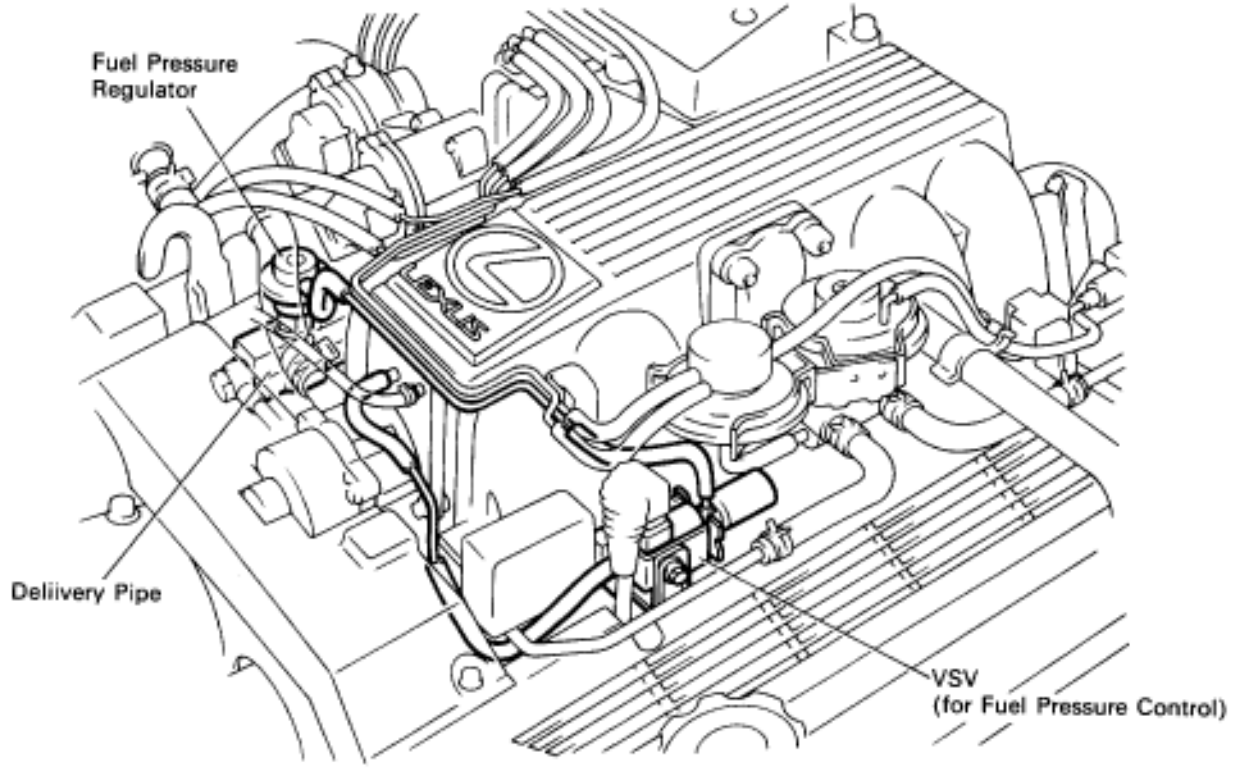

P01468

ON–VEHICLE INSPECTION

INSPECT FUEL PRESSURE (See page FI–18)

WhereEverybodyKnowsYourName

COMPONENTS FOR REMOVAL AND INSTALLATION

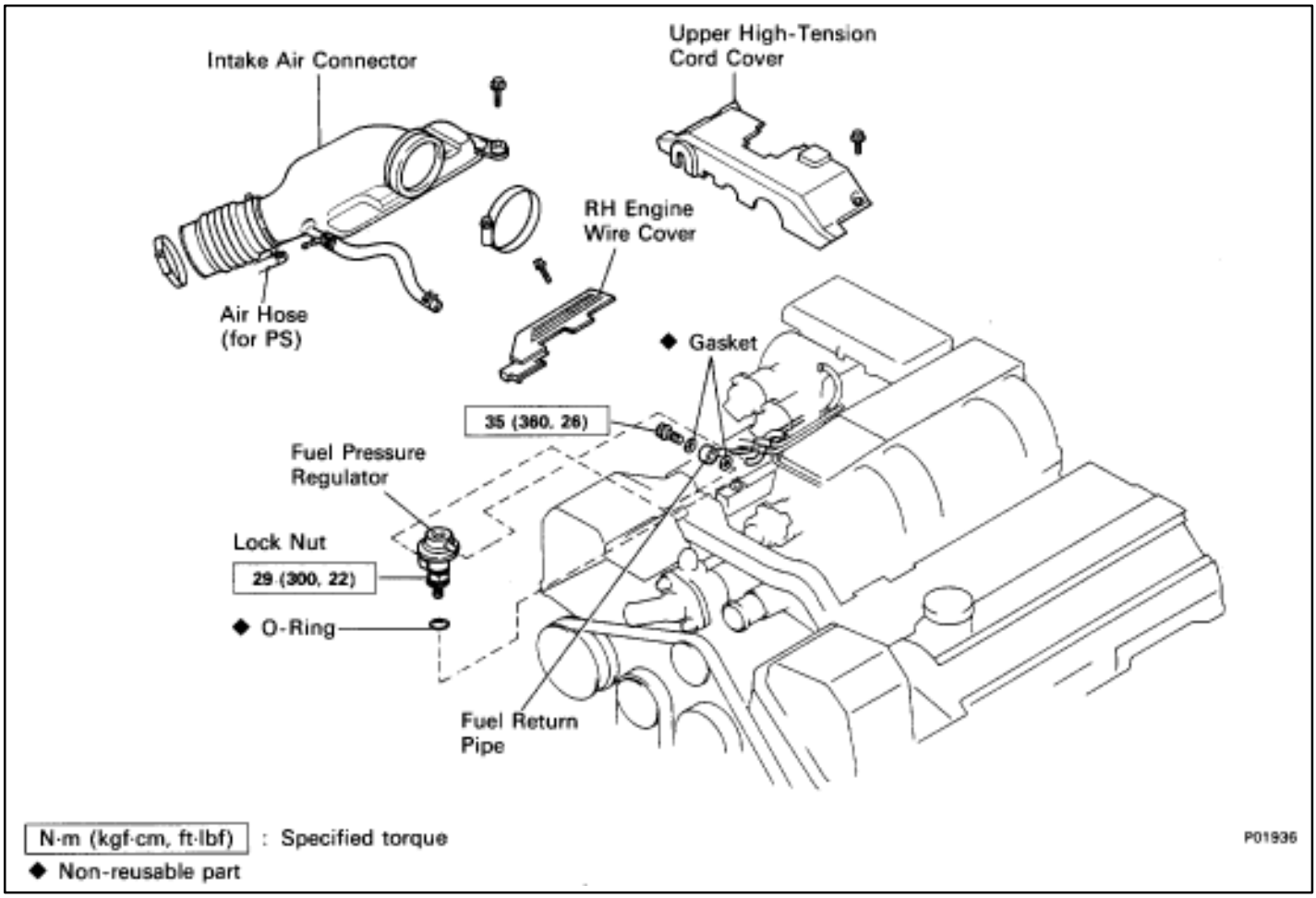

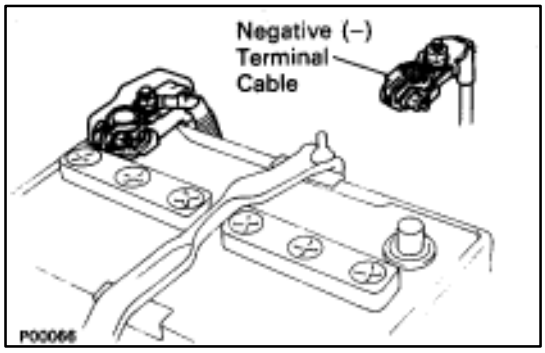

REMOVAL OF FUEL PRESSURE REGULATOR

1. **DISCONNECT CABLE FROM NEGATIVE TERMINAL OF BATTERY**

   CAUTION: Work must be started after approx. 20 seconds or longer from the time the ignition switch is turned to the "LOCK" position and the negative (–) terminal cable is disconnected from the battery.

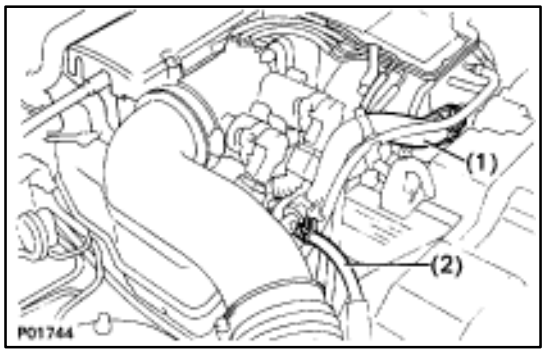

2. **REMOVE INTAKE AIR CONNECTOR**
   (a) Disconnect the following hoses:
      (1) Air hose from ISC valve
      (2) Air hose (from PS air control valve) from intake air connector

WhereEverybodyKnowsYourName

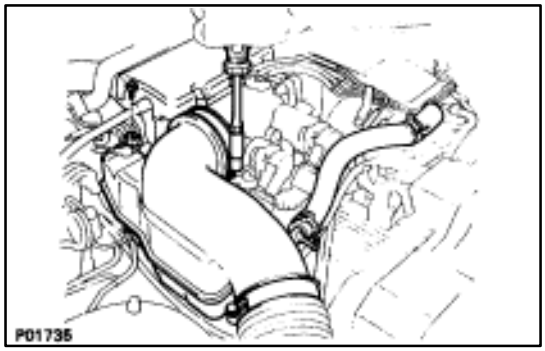

(b) Remove the bolt holding the intake air connector to the cylinder head cover.
(c) Loosen the two hose clamps.
(d) Disconnect the intake air connector from the throttle body and air cleaner hose, and remove the intake air connector.

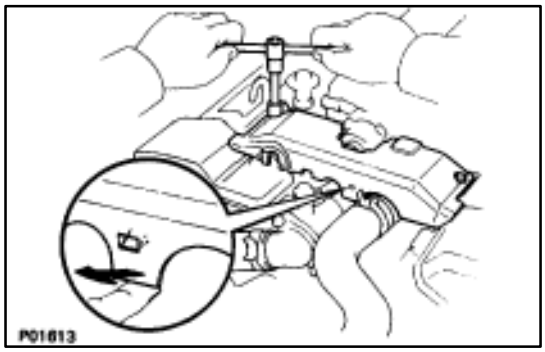

3. REMOVE UPPER HIGH–TENSION CORD COVER
(a) Remove the two mounting bolts.
(b) Disconnect the front side claw groove of the cord cover from the claw of the lower cover, and remove the cord cover.

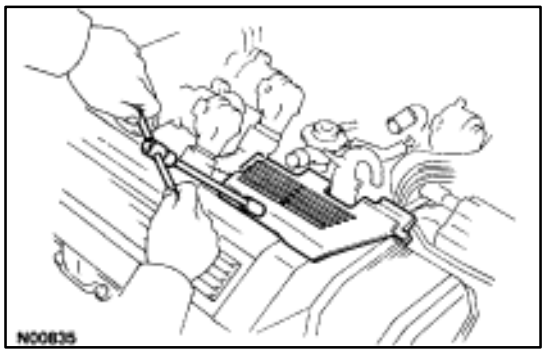

4. REMOVE RH ENGINE WIRE COVER
Remove the bolt and wire cover.

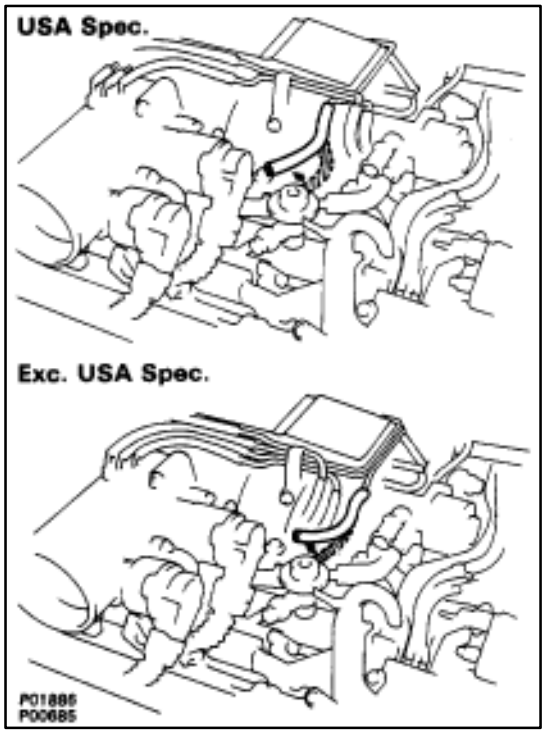

5. DISCONNECT VACUUM SENSING HOSE FROM FUEL PRESSURE REGULATOR

WhereEverybodyKnowsYourName

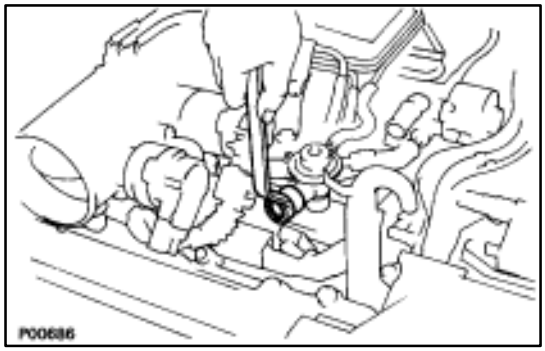

6. DISCONNECT FUEL RETURN PIPE FROM FUEL PRESSURE REGULATOR

Remove the union bolt and two gasket, and disconnect the return pipe from the pressure regulator.

HINT:

- Put a suitable container or shop towel under the pressure regulator.
- Slowly loosen the union bolt.

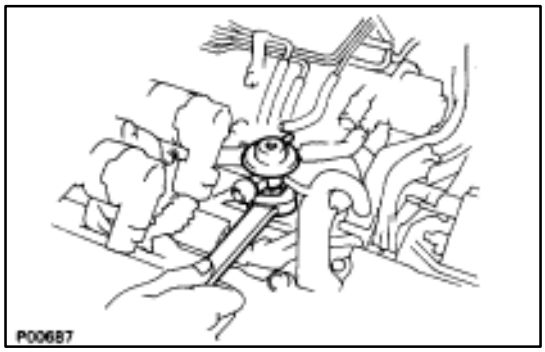

7. REMOVE FUEL PRESSURE REGULATOR

(a) Loosen the lock nut.

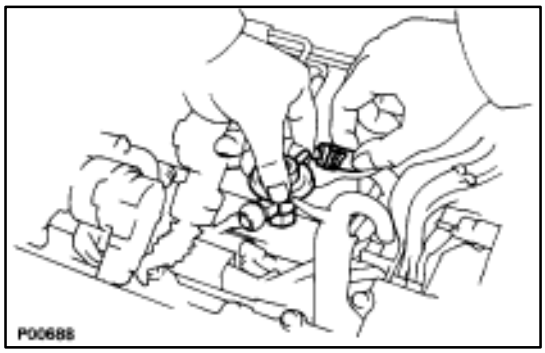

(b) Lift up the water by–pass hose between the ISC valve and throttle body, and remove the pressure regulator.

(c) Remove the O–ring from the pressure regulator.

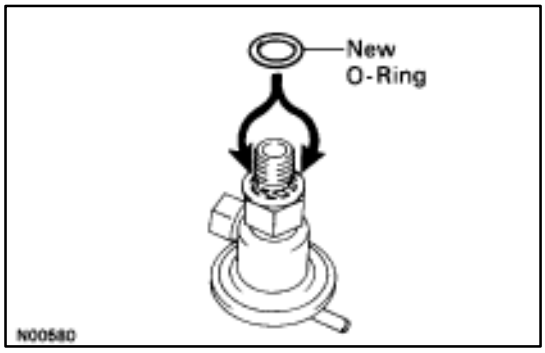

INSTALLATION OF FUEL PRESSURE REGULATOR

(See components on page FI–43)

1. INSTALL FUEL PRESSURE REGULATOR AND FUEL RETURN PIPE

(a) Fully loosen the lock nut on the pressure regulator.

(b) Apply a light coat of gasoline to a new O–ring, and install it to the pressure regulator.

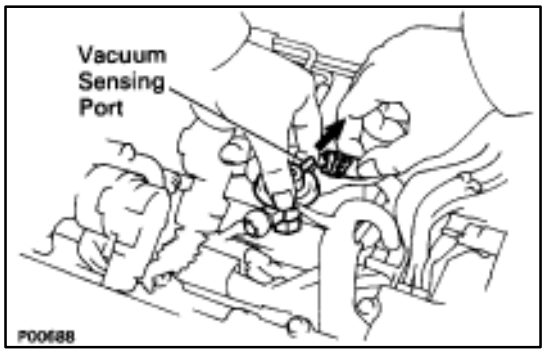

(c) Lift up the water by–pass hose between the ISC valve and throttle body, and completely insert the pressure regulator into the delivery pipe by hand.

(d) Turn the pressure regulator counterclockwise until the vacuum sensing port faces in the direction indicated in the illustration.

WhereEverybodyKnowsYourName

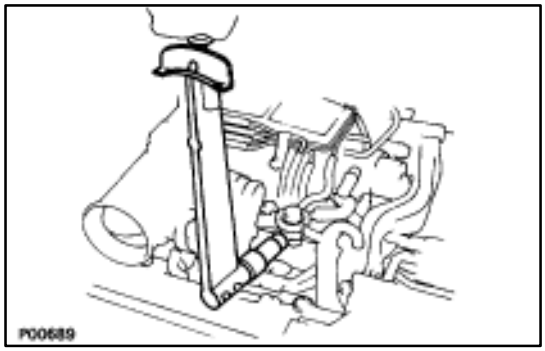

(e) Connect the fuel return pipe to the pressure regulator with new two gaskets and the union bolt.
Torque: 35 N·m (360 kgf·cm, 26 ft·lbf)

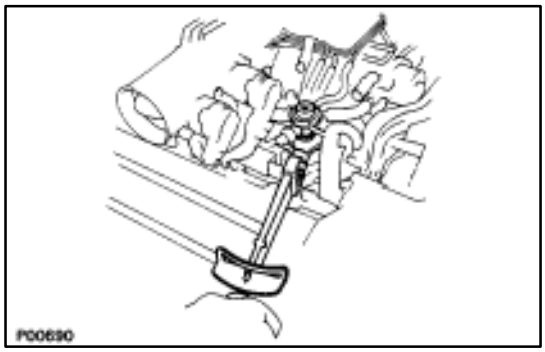

(f) Tighten the lock nut.
Torque: 29 N·m (300 kgf·cm, 22 ft·lb)

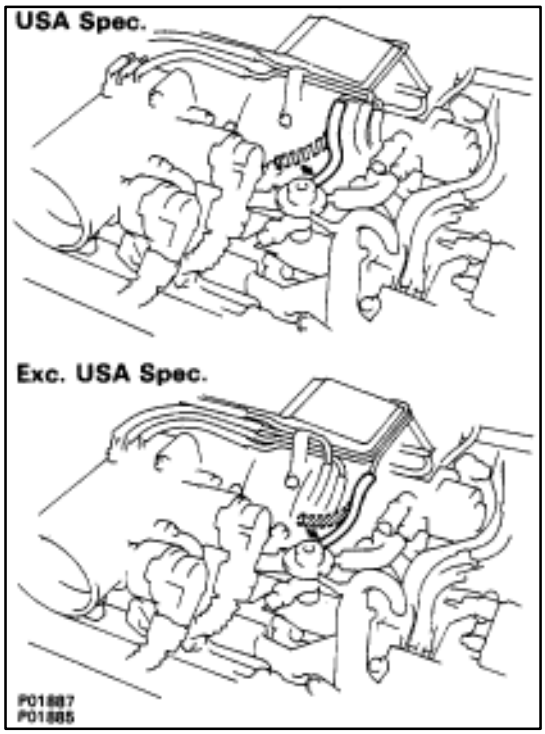

2. CONNECT VACUUM SENSING HOSE TO FUEL PRESSURE REGULATOR

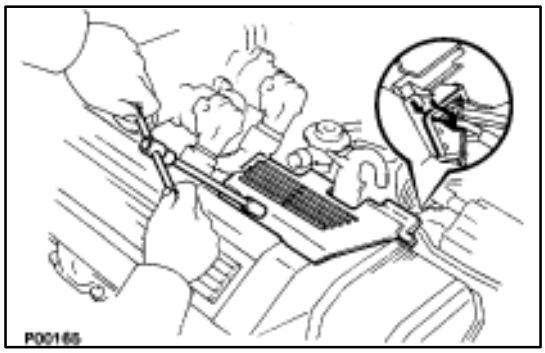

3. INSTALL RH ENGINE WIRE COVER

(a) Fit portions A and B of the engine wire cover, matching them with the lower high–tension cord cover and No.3 timing belt cover.

(d) Install the engine wire cover with the bolt.

WhereEverybodyKnowsYourName

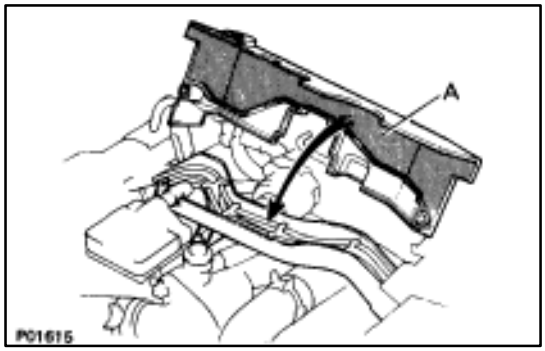

4. INSTALL UPPER HIGH–TENSION CORD COVER

(a) Fit portion A of the upper high–tension cover, matching it with the top of the lower high–tension cord cover.

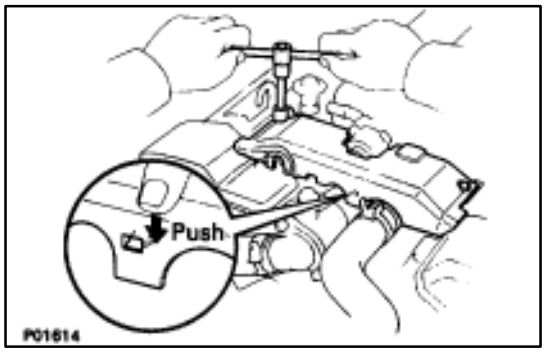

(b) Push the front side of the high–tension cord cover, and connect the front side claw groove of the upper high–tension cord cover to the claw of the lower high–tension cord cover.

(c) Install the upper high–tension cord cover with the two bolts.

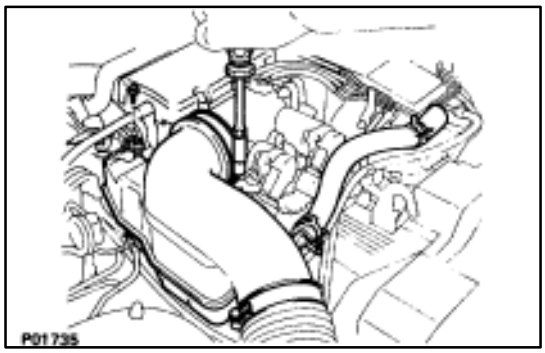

5. INSTALL INTAKE AIR CONNECTOR

(a) Connect the end portions of the intake air connector to the throttle body and air cleaner hose.

(b) Tighten the two hose clamps.

(c) Install the bolt holding the intake air connector to the cylinder head cover.

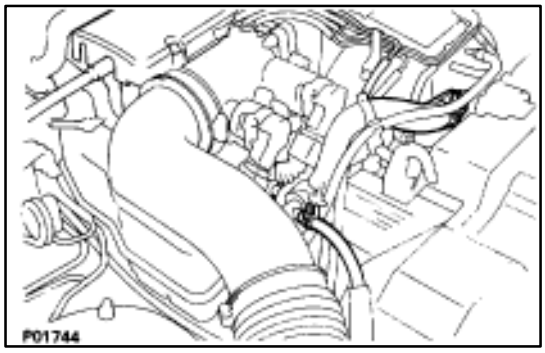

(d) Connect the following hoses:

(1) Air hose to ISC valve

(2) Air hose (from PS air control valve) to intake air connector

6. CONNECT CABLE TO NEGATIVE TERMINAL OF BATTERY

7. CHECK FOR FUEL LEAKS (See page FI–16)

WhereEverybodyKnowsYourName

ENGINE SPEED SENSOR

COMPONENTS FOR REMOVAL AND INSTALLATION

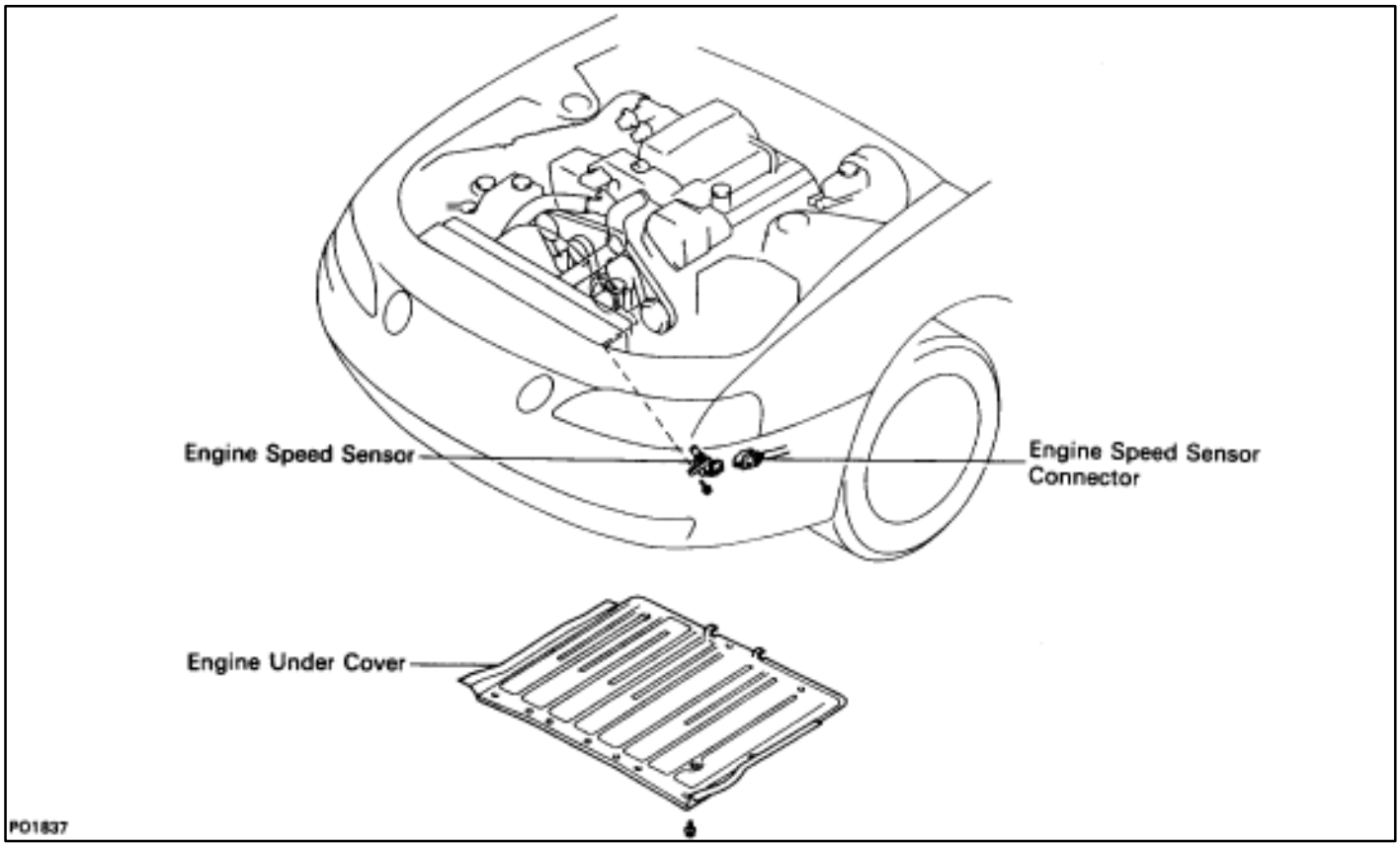

REMOVAL OF ENGINE SPEED SENSOR

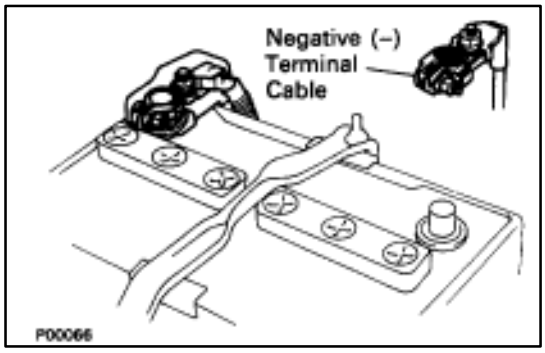

1. **DISCONNECT CABLE FROM NEGATIVE TERMINAL OF BATTERY**
   CAUTION: Work must be started after approx. 20 seconds or longer from the time the ignition switch is turned to the "LOCK" position and the negative (–) terminal cable is disconnected from the battery.
2. **REMOVE ENGINE UNDER COVER**
3. **DISCONNECT ENGINE SPEED SENSOR CONNECTOR**
4. **REMOVE ENGINE SPEED SENSOR**
   Remove the bolt and engine speed sensor.

INSTALLATION OF ENGINE SPEED SENSOR

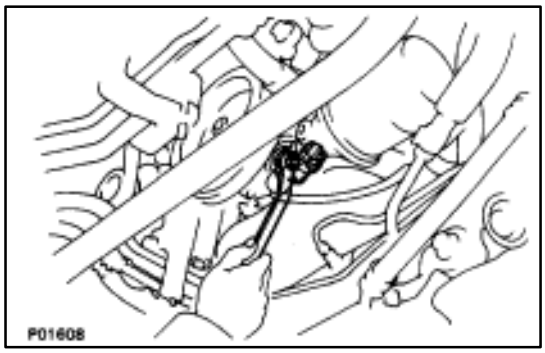

1. **INSTALL ENGINE SPEED SENSOR**
   Torque: 6.4 N·m (65 kgf·cm, 56 in.·lbf)
2. **CONNECT ENGINE SPEED SENSOR CONNECTOR**
3. **INSTALL ENGINE UNDER COVER**
4. **CONNECT CABLE TO NEGATIVE TERMINAL OF BATTERY**

WhereEverybodyKnowsYourName

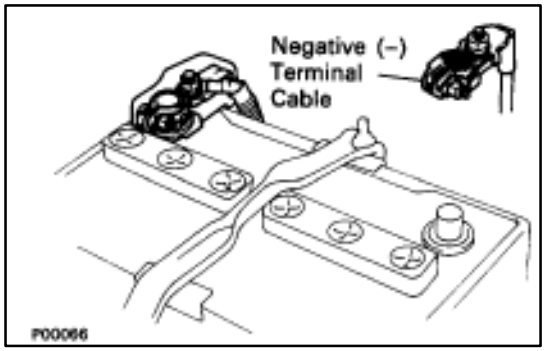

IGNITION MAIN RELAY

INSPECTION OF IGNITION MAIN RELAY

1. **DISCONNECT CABLE FROM NEGATIVE TERMINAL OF BATTERY**
   CAUTION: Work must be started after approx. 20 seconds or longer from the time the ignition switch is turned to the "LOCK" position and the negative (–) terminal cable is disconnected from the battery.

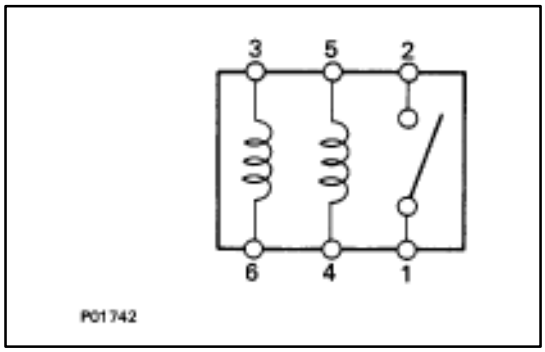

2. **REMOVE IGNITION MAIN RELAY**
   LOCATION: In the engine compartment relay box.
3. **INSPECT IGNITION MAIN RELAY**

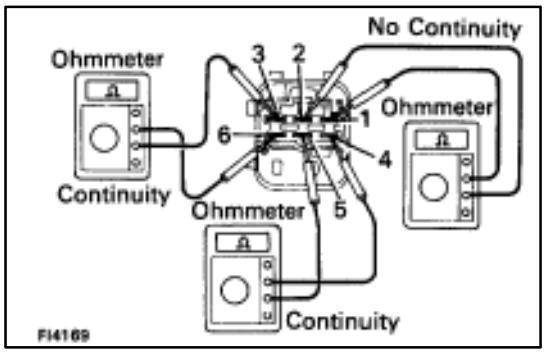

A. Inspect relay continuity
   (a) Using an ohmmeter, check that there is continuity between terminals 3 and 6.
   (b) Check that there is continuity between terminals 4 and 5.
   (c) Check that there is no continuity between terminals 1 and 2.
   If continuity is not as specified, replace the relay.

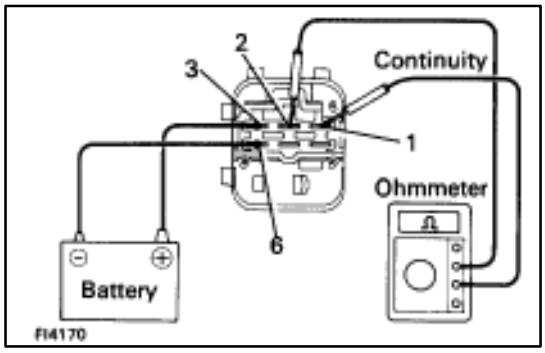

B. Inspect relay operation
   (a) Apply battery voltage across terminals 3 and 6.
   (b) Using an ohmmeter, check that there is continuity between terminals 1 and 2.

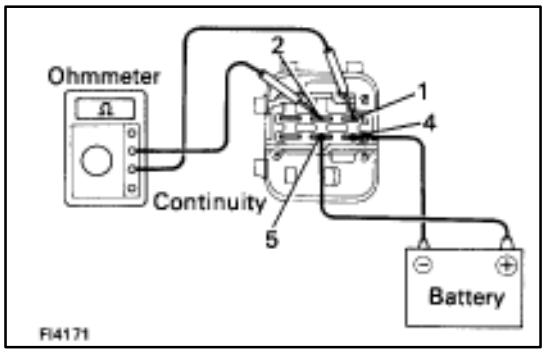

   (c) Apply battery voltage across terminals 4 and 5.
   (d) Using an ohmmeter, check that there is continuity between terminals 1 and 2.
   If operation is not as specified, replace the relay.
4. **REINSTALL IGNITION MAIN RELAY**
5. **RECONNECT CABLE TO NEGATIVE TERMINAL OF BATTERY**

WhereEverybodyKnowsYourName

SERVICE SPECIFICATIONS

SERVICE DATA

Ignition timing				8–12° BTDC @ idle (w/ Terminals TE1 and E1 connected)	
Firing order				1–8–4–3–6–5–7–2	
Spark plug	Type		ND	PK20R11	
			NGK	BKR6EP11	
	Electrode gap	New plug	STD	1.1 mm	0.043 in.
		Used plug	Limit	1.3 mm	0.051 in.
High–tension cord	Resistance			25 k? per cord	
Ignition coil	Primary coil resistance Secondary coil resistance			0.40–0.50 ? 10.0–14.0 k?	
Cam position sensor	Resistance	at –10– +40°C (14–104°F)		835–1,350 ?	
Engine speed sensor	Resistance	at –10– +40°C (14–104°F)		835–1,350 ?	

TORQUE SPECIFICATIONS

Part tightened	N·m	kgf·cm	ft·lbf
Spark plug X Cylinder head	18	180	13
Cam position sensor X Distributor housing	18	185	13
Distributor cap X Distributor housing	3.8	39	34 in.·lbf
Distributor rotor X Camshaft timing pulley	3.8	39	34 in.·lbf
RH No.2 timing belt cover X Cylinder block (for 12 mm head)	16	160	12
Drive belt idler pulley X Hydraulic pump	37	380	27
Engine speed sensor X Oil pump	6.4	65	56 in.·lbf

WhereEverybodyKnowsYourName

IGNITION SYSTEM

WhereEverybodyKnowsYourName

DESCRIPTION

The ECU is programmed with data for optimum ignition timing under any and all operating conditions. Using data provided by sensors which monitor various engine functions (rpm, intake air volume, engine temperature, etc.) the microcomputer (ECU) triggers the spark at precisely the right instant.

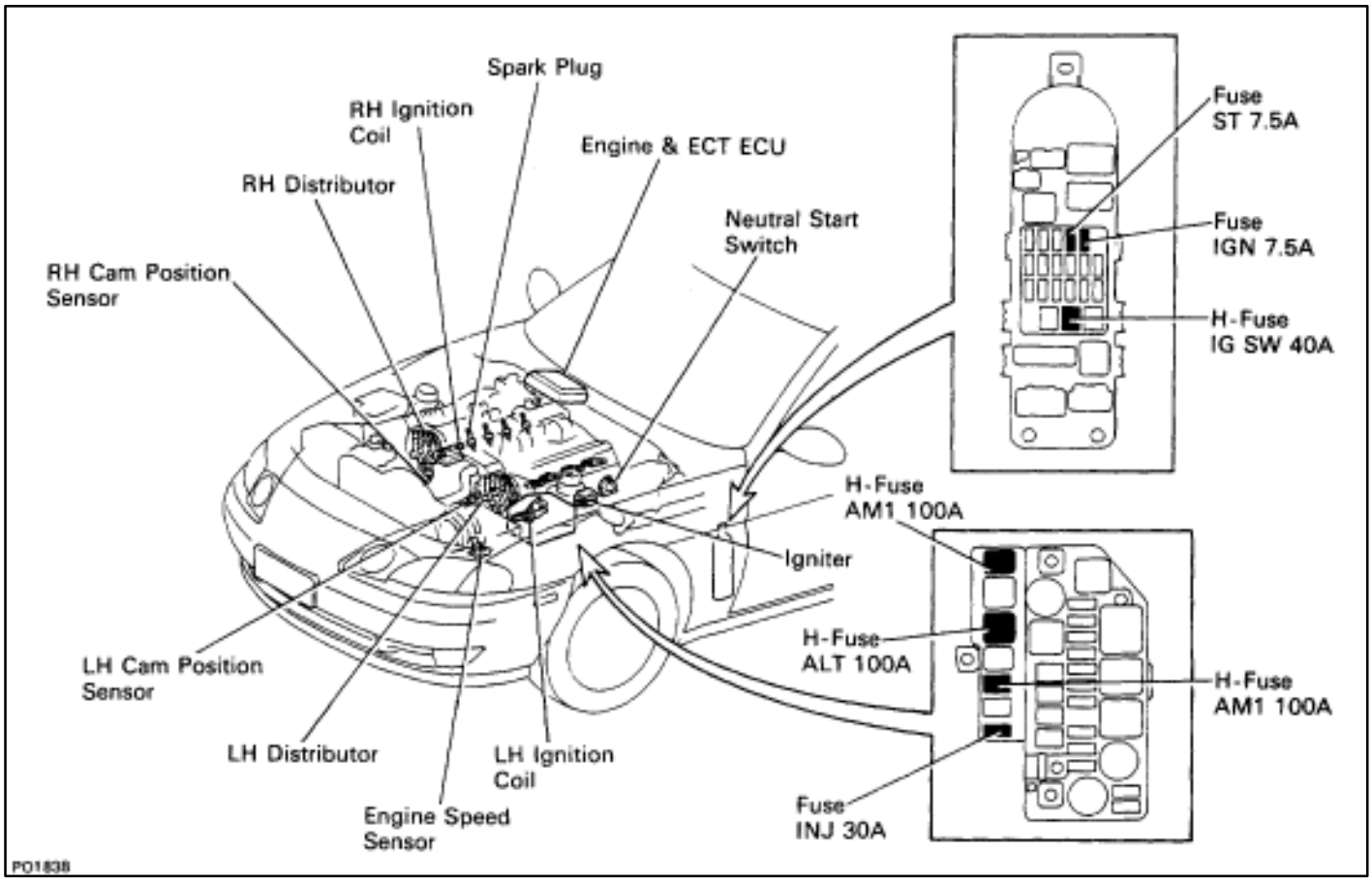

The ECU monitors the engine condition by signals from each sensor, calculates the ignition timing and sends an ignition signal to the igniter. High voltage from the ignition is distributed to each spark plug in the appropriate order to generate a spark between the electrodes, which ignites the air–fuel mixture.

IGNITERS

The igniter temporarily interrupts the primary current with the ignition signal (IGT signal) from the ECU and generates sparks at the spark plug. Also, as a fail–safe measure, when ignition occurs, an ignition confirmation signal (IGF signal) is sent to the ECU.

IGNITION COIL

The ignition coil uses a closed core coil with the primary coil wrapped around the core and the secondary coil wrapped around the primary coil. This allows the generation of a high voltage sufficient to cause a spark to jump across the spark plug gap.

DISTRIBUTORS

This correctly distributes high voltage to the spark plug of each cylinder in the specified ignition order.

ENGINE SPEED SENSOR

The engine speed sensor detects the crank angle.

CAM POSITION SENSORS

The RH and LH cam position sensors detect the cam angle.

WhereEverybodyKnowsYourName

PRECAUTIONS

1. **Do not leave the ignition switch on for more than 10 minutes if the engine will not start.**

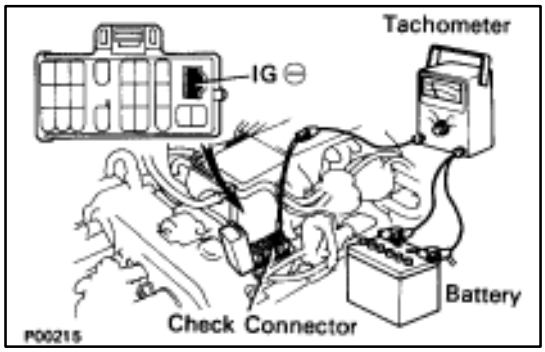

2. **With a tachometer connected to the system, connect the tester probe of the tachometer to terminal IG È of the check (”DIAGNOSIS”) connector.**
   HINT:
   - Allow the engine to warm up to normal operation temperature.
   - Set the tachometer to the 4–cylinder range.
3. **As some tachometers are not compatible with this ignition system, we recommend that you confirm the compatibility of your unit before use.**
4. **Never allow the tachometer terminal to touch ground as this could damage the igniter and/or ignition coil.**
5. **Do not disconnect the battery when the engine is running.**
6. **Check that the igniter is properly grounded to the body.**

WhereEverybodyKnowsYourName

SYSTEM CIRCUIT

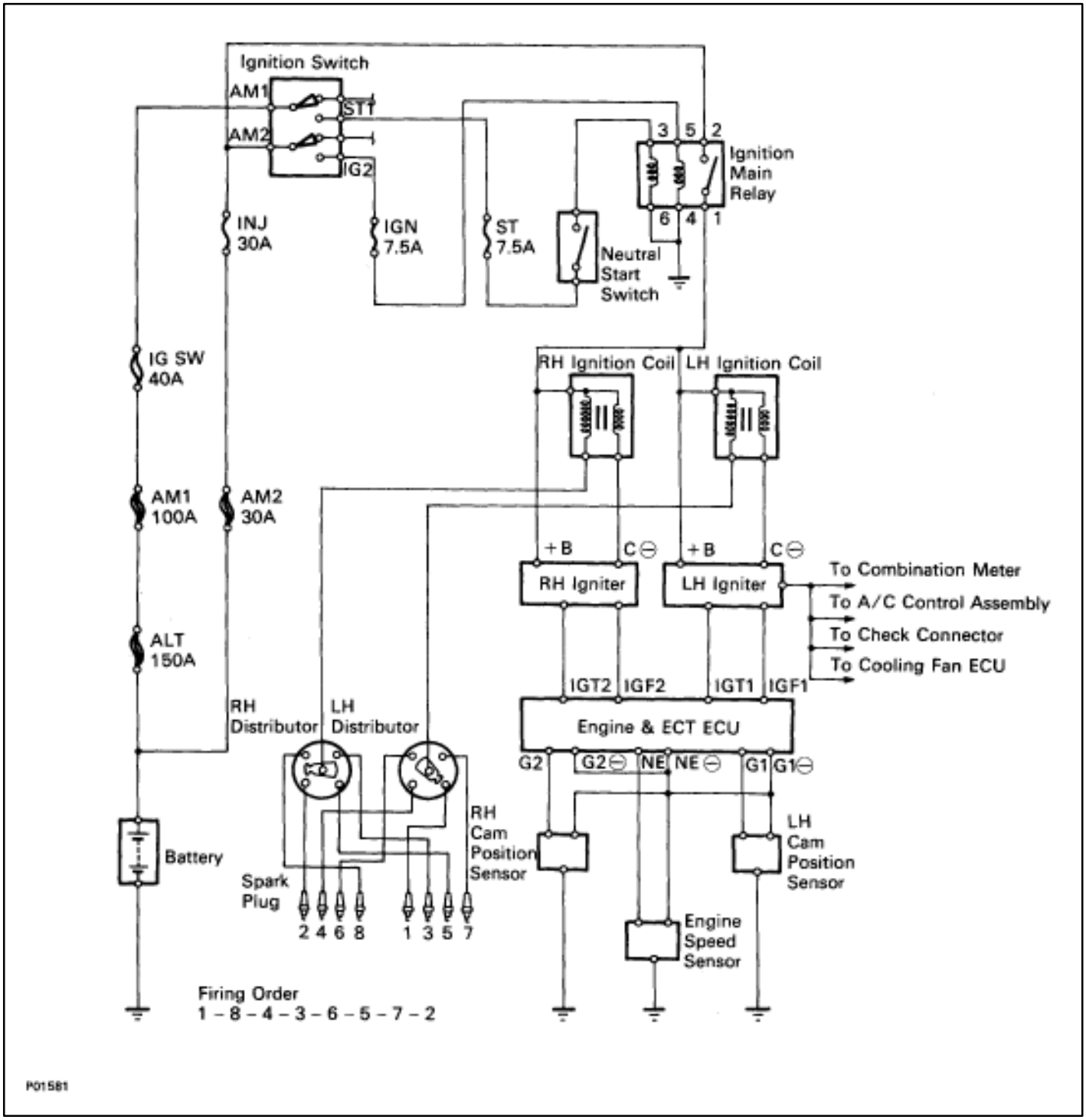

OPERATION

To maintain the most appropriate ignition timing, the ECU sends a control signal so that the igniter sends current to the ignition coil and the spark plugs produce a spark.

WhereEverybodyKnowsYourName

PREPARATION

SST (SPECIAL SERVICE TOOLS)

Illustration	Part No.	Part Name	Note
	09843-18020	Diagnosis Check Wire	

RECOMMENDED TOOLS

Illustration	Part No.	Part Name	Note
	09082-00015	TOYOTA Electrical Tester	
	09200-00010	Engine Adjust Kit	

EQUIPMENT

Part Name	Note
Engine tune–up tester	Ignition timing
Megger (Insulation resistance meter)	Spark plug
Spark plug cleaner	
Torque wrench	
16 mm plug wrench	

WhereEverybodyKnowsYourName

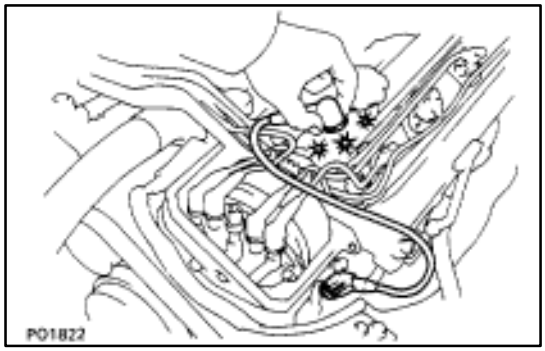

ON–VEHICLE INSPECTION

SPARK TEST

CHECK THAT SPARK OCCURS

(a) Remove the No.3 timing belt covers.
(See steps 2 to 8 on pages IG–11 to 13)

(b) Disconnect the high–tension cords (from the ignition coils) from the distributor caps.

(c) Hold the end about 12.5 mm (0.50 in.) from the body ground.

(d) Check if spark occurs while engine is being cranked.

HINT: To prevent gasoline from being injected from injectors during this test, crank the engine for no more than 1–2 seconds at a time.

If the spark does not occur, perform the test as follows:

SPARK TEST

↓ NO

CHECK CONNECTION OF IGNITION COIL, IGNITER AND DISTRIBUTOR CONNECTORS → BAD → Connect securely.

↓ OK

CHECK RESISTANCE OF HIGH-TENSION CORDS (See page IG-7)
Maximum resistance: 25 kΩ per cord → BAD → Replace the cord(s).

↓ OK

CHECK POWER SUPPLY TO IGNITION COILS
1. Ignition switch is turned to ON.
2. Check that there is battery voltage at ignition coil positive (+) terminal.

→ BAD → Check wiring between ignition switch and ignition coil(s)

↓ OK

CHECK RESISTANCE OF IGNITION COILS (See pages IG-9)
Resistance (Cold):
Primary 0.40 – 0.50 Ω
Secondary 10.0 – 14.0 kΩ

→ BAD → Replace the ignition coil(s).

↓ OK

CHECK RESISTANCE OF CAM POSITION AND ENGINE SPEED SENSORS (See page IG-10)
Resistance (Cold): 835 – 1,350 Ω
at –10 – +40°C (14 – 104°F)

→ BAD → Replace the sensor(s).

↓ OK

CHECK IGT SIGNAL FROM ECU (See TR section) → BAD → Check wiring between ECU and distributor, and then try another ECU.

↓ OK

TRY ANOTHER IGNITER

(e) Reconnect the high–tension cords to the distributor caps.

(f) Reinstall the No.3 timing belt covers.
(See steps 5 to 11 on pages IG–17 to 19)

WhereEverybodyKnowsYourName

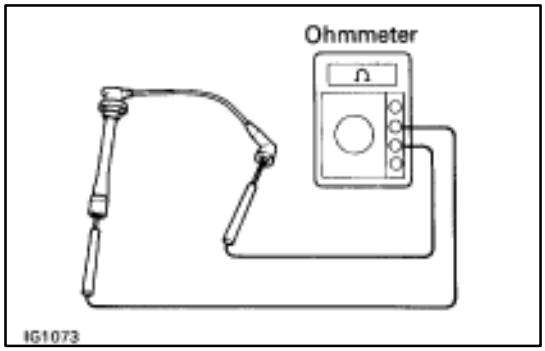

INSPECTION OF HIGH–TENSION CORDS

1. REMOVE HIGH–TENSION CORDS
(See steps 1 to 9 on pages IG–11 to 14)

2. INSPECT HIGH–TENSION CORD RESISTANCE
Using an ohmmeter, measure the resistance.
Maximum resistance: 25 k? per cord
If the resistance is greater than maximum, replace the high–tension cord.

3. REINSTALL HIGH–TENSION CORDS
(See steps 4 to 13 on pages IG–11 to 19)

INSPECTION OF SPARK PLUGS

NOTICE:
- **Never use a wire brush for cleaning.**
- **Never attempt to adjust the electrode gap on used spark plug.**
- **Spark plug should be replaced every 100,000 km (60,000 miles).**

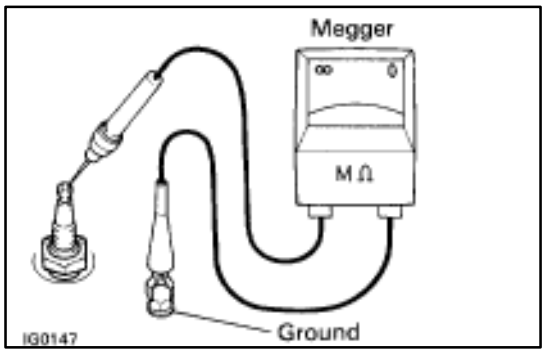

1. DISCONNECT HIGH–TENSION CORDS FROM SPARK PLUGS (See steps 1 to 9 on pages IG–11 to 13)

2. INSPECT ELECTRODE
Using a megger (insulation resistance meter), measure the insulation resistance.
Correct insulation resistance: 10 M? or more
If the resistance is less than specified, proceed to step 4.
HINT: If a megger is not available, the following simple method of inspection provides fairy accurate results.

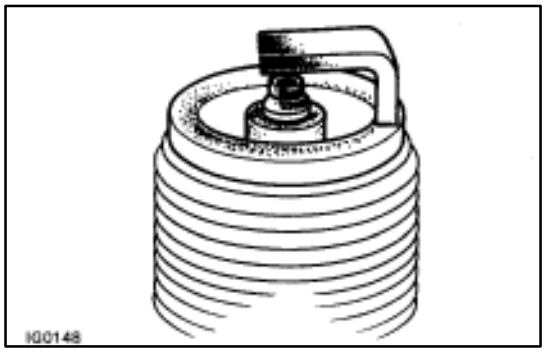

(Simple Method)
(a) Quickly race the engine to 4,000 rpm five times.
(b) Remove the spark plug. (See step 3)
(c) Visually check the spark plug.
If the electrode is dry. . . . . Okay
If the electrode is wet . . . . . Proceed to step 4
(d) Reinstall the spark plug.
(See step 7 on page IG–8)

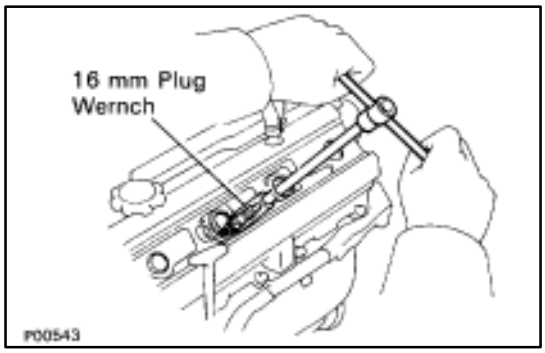

3. REMOVE SPARK PLUGS
Using a 16 mm plug wrench, remove the spark plugs.

WhereEverybodyKnowsYourName

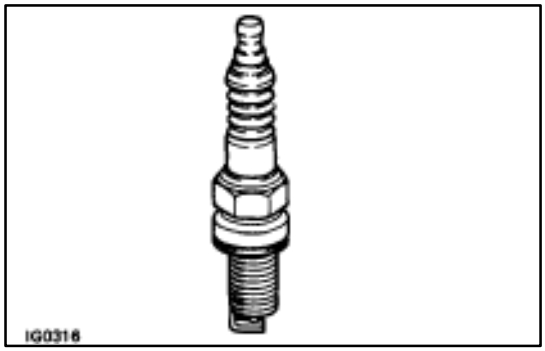

4. VISUALLY INSPECT SPARK PLUGS

Check the spark plug for thread damage and insulator damage.

If abnormal, replace the spark plug.

Recommended spark plug: ND PK20R11
NGK BKR6EP11

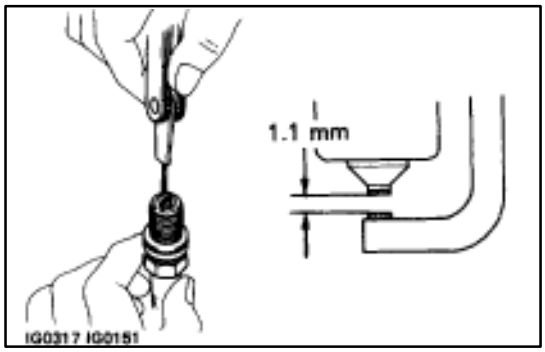

5. INSPECT ELECTRODE GAP

Maximum electrode gap: 1.3 mm (0.051 in.)

If the gap is greater than maximum, replace the spark plug.

Correct electrode gap of new spark plug:
1.1 mm (0.043 in.)

NOTICE: If adjusting the gap of a new spark plug, bent only the base of the ground electrode. Do not touch the tip. Never attempt to adjust the gap on the used plug.

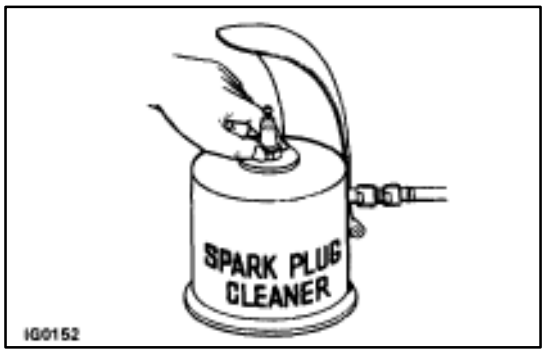

6. CLEAN SPARK PLUGS

If the electrode has traces of wet carbon, allow it to dry and then clean with a spark plug cleaner.

Air pressure: Below 588 kPa (6 kgf/cm2, 85 psi)
Duration: 20 seconds or less

HINT: If there are traces of oil, remove it with gasoline before using the spark plug cleaner.

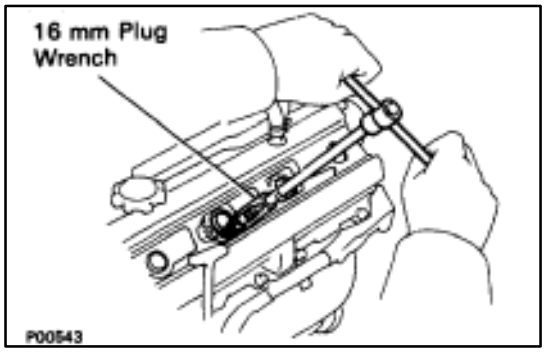

7. REINSTALL SPARK PLUGS

Using a 16 mm plug wrench, install the spark plug.

Torque: 18 N·m (180 kgf·cm, 13 ft·lbf)

8. RECONNECT HIGH–TENSION CORDS TO SPARK PLUGS

(See steps 4 to 13 on pages IG–16 to 19)

WhereEverybodyKnowsYourName

INSPECTION OF IGNITION COIL

1. **(RH IGNITION COIL)**
   REMOVE IGNITION COIL (See page IG–21)
2. **(LH IGNITION COIL)**
   DISCONNECT IGNITION COIL CONNECTOR AND HIGH–TENSION CORD FROM IGNITION COIL

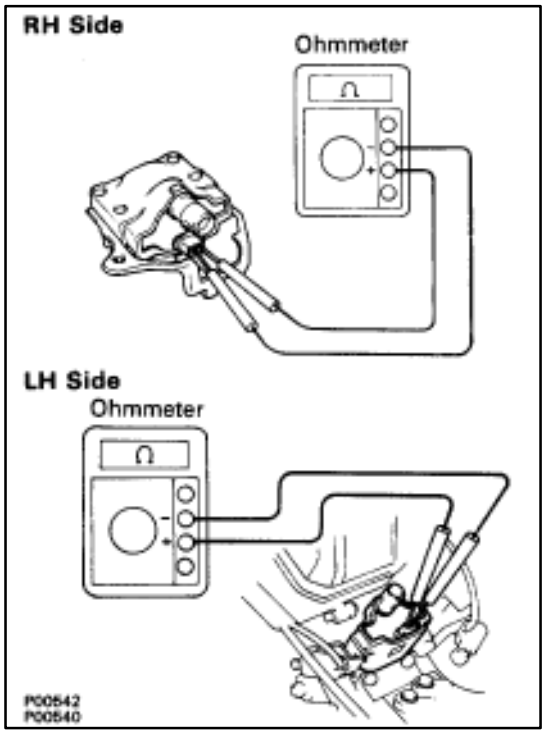

3. **INSPECT PRIMARY COIL RESISTANCE**
   Using an ohmmeter, measure the resistance between positive (+) and negative (–) terminals.
   Primary coil resistance (Cold): 0.40–0.50 ?
   If the resistance is not as specified, replace the ignition coil.

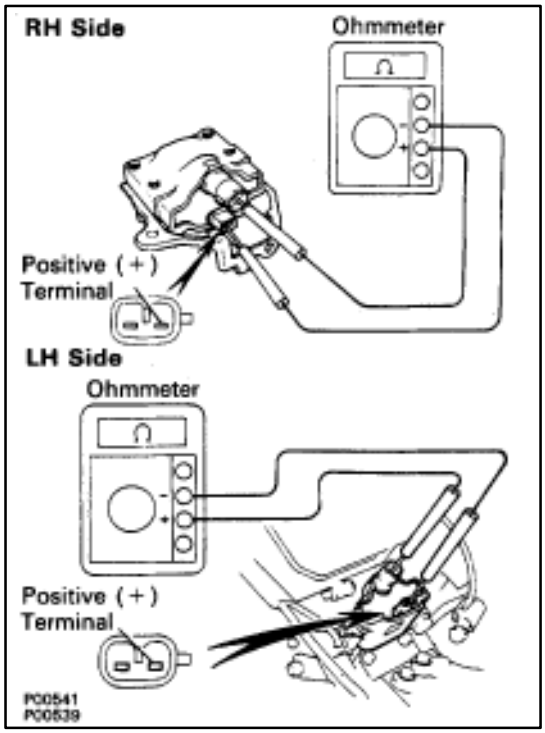

4. **INSPECT SECONDARY COIL RESISTANCE**
   Using an ohmmeter, measure the resistance between positive (+) and high–tension terminals.
   Secondary coil resistance (Cold): 10.0–14.0 k?
   If the resistance is not as specified, replace the ignition coil.
5. **(RH IGNITION COIL)**
   REINSTALL IGNITION COIL (See page IG–22)
6. **(LH IGNITION COIL)**
   RECONNECT IGNITION COIL CONNECTOR AND HIGH–TENSION CORD FROM IGNITION COIL

WhereEverybodyKnowsYourName

INSPECTION OF CAM POSITION SENSORS

1. **DISCONNECT CAM POSITION SENSOR CONNECTORS**
   (a) (RH Cam Position Sensor)
   Disconnect the cam position sensor connector from the ignition coil bracket.
   (See steps 5 (a) on page IG–24)
   (b) Disconnect the cam position sensor connectors.

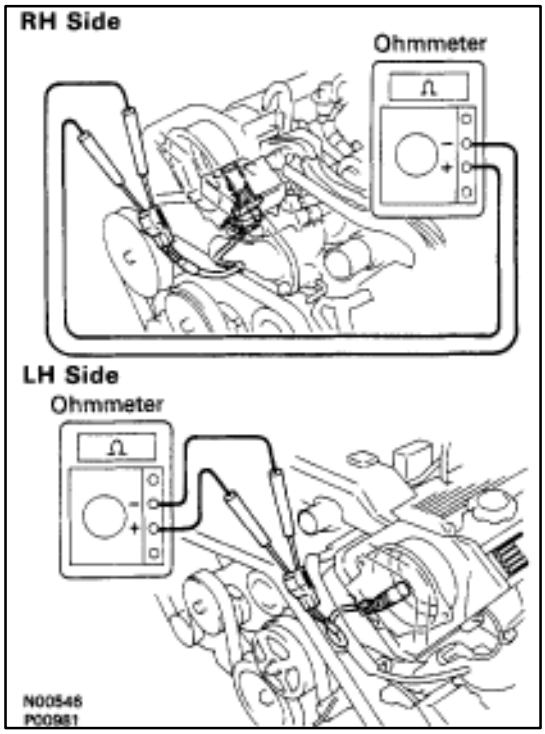

2. **INSPECT CAM POSITION SENSOR RESISTANCE**
   Using an ohmmeter, measure the resistance between terminals.
   Resistance (Cold):
   835–1,350 ? at –10– +40°C (14–104°F)
   If the resistance is not as specified, replace the cam position sensor.
3. **RECONNECT CAM POSITION SENSOR CONNECTORS**

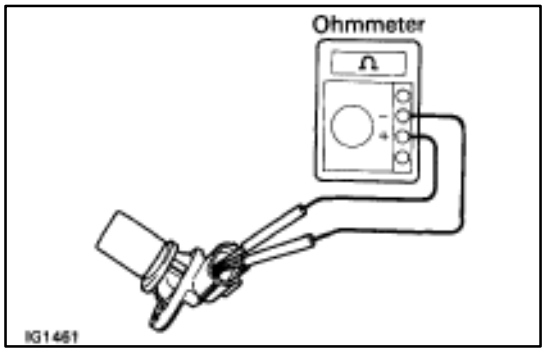

INSPECTION OF ENGINE SPEED SENSOR

1. **REMOVE ENGINE SPEED SENSOR**
   (See page IG–30)
2. **INSPECT ENGINE SPEED SENSOR RESISTANCE**
   Using an ohmmeter, measure the resistance between terminals.
   Resistance (Cold):
   835–1,350 ? at –10– +40°C (14–104°F)
   If the resistance is not as specified, replace the engine speed sensor.
3. **REINSTALL ENGINE SPEED SENSOR**
   (See page IG–30)

INSPECTION OF ENGINE SPEED SENSOR

(See procedure Spark Test on page IG–6)

WhereEverybodyKnowsYourName

HIGH–TENSION CORDS AND CORD CLAMPS

COMPONENTS FOR REMOVAL AND INSTALLATION

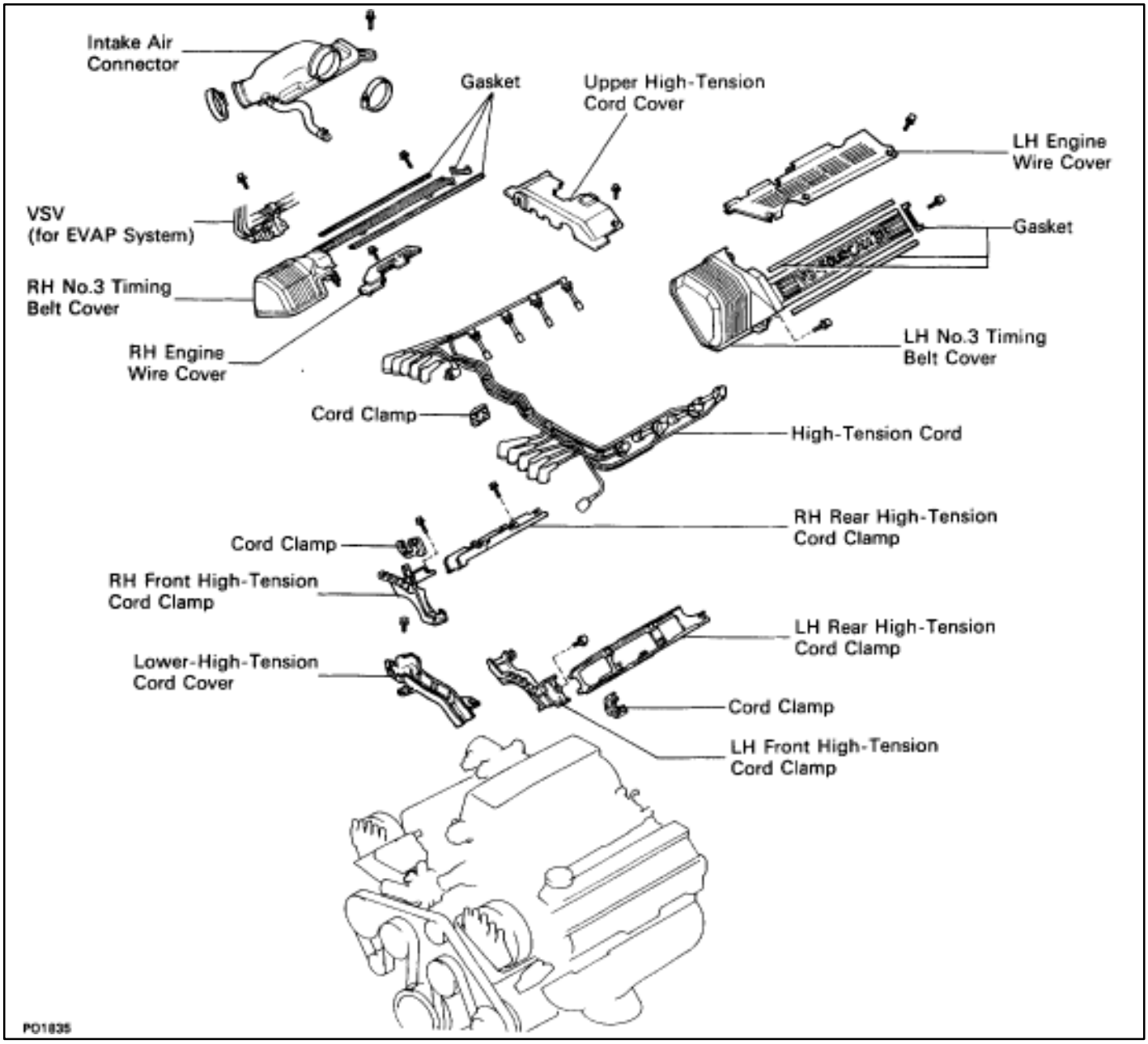

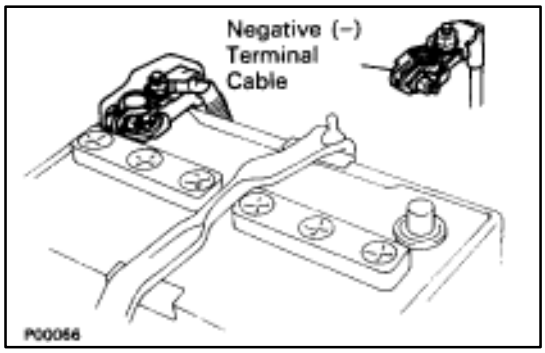

REMOVAL OF HIGH–TENSION CORDS

1. **DISCONNECT CABLE FROM NEGATIVE TERMINAL OF BATTERY**

   CAUTION: Work must be started after approx. 20 seconds or longer from the time the ignition switch is turned to the "LOCK" position and the negative (–) terminal cable is disconnected from the battery.

WhereEverybodyKnowsYourName

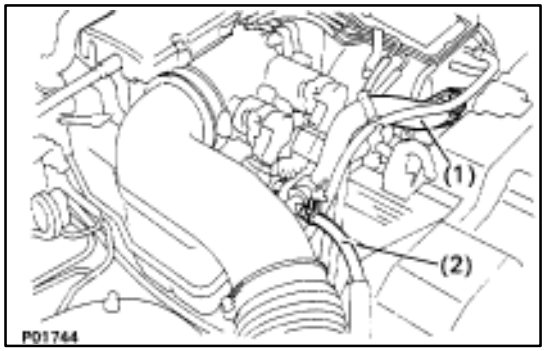

2. REMOVE INTAKE AIR CONNECTOR

(a) Disconnect the following hoses:
  (1) Air hose from ISC valve
  (2) Air hose (from PS air control valve) from intake air connector

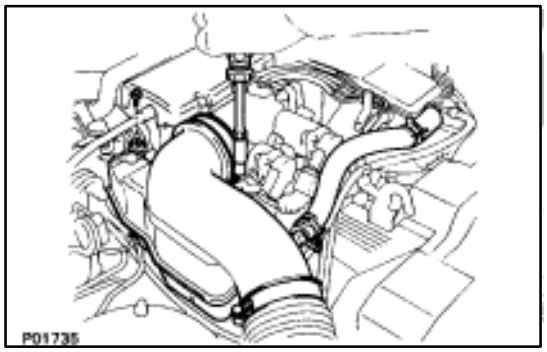

(b) Remove the bolt holding the intake air connector to the cylinder head cover.
(c) Loosen the two hose clamps.
(d) Disconnect the intake air connector from the throttle body and air cleaner hose, and remove the throttle body.

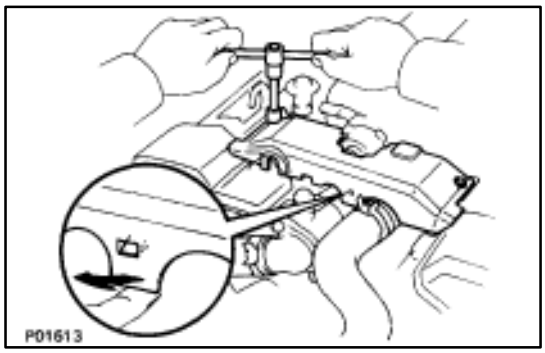

3. REMOVE UPPER HIGH–TENSION CORD COVER

(a) Remove the two mounting bolts.
(b) Disconnect the front side claw groove of the cord cover from the claw of the lower cover, and remove the cord cover.

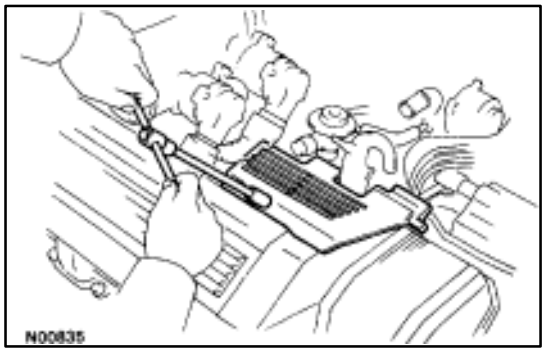

4. REMOVE RH ENGINE WIRE COVER

Remove the bolt and engine wire cover.

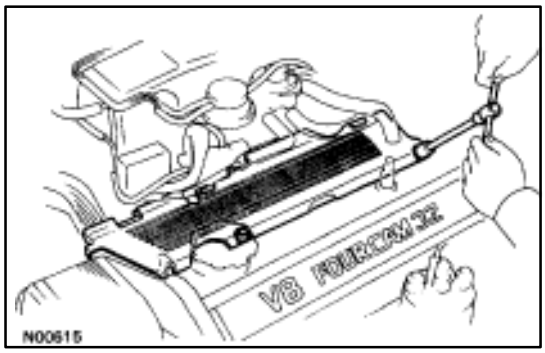

5. REMOVE LH ENGINE WIRE COVER

Remove the two bolts and engine wire cover.

WhereEverybodyKnowsYourName

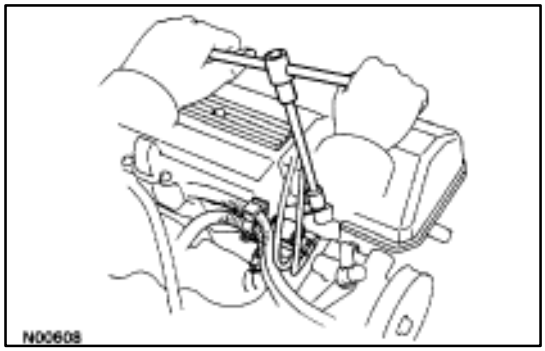

6. REMOVE VSV FOR EVAP SYSTEM

Remove the two bolts, and disconnect the VSV from cylinder head and timing belt cover.

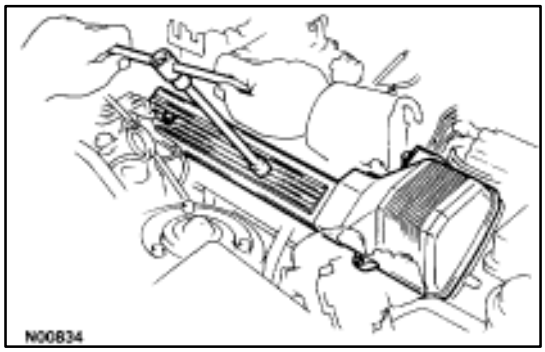

7. REMOVE RH NO.3 TIMING BELT COVER

Remove the three bolts and timing belt cover.

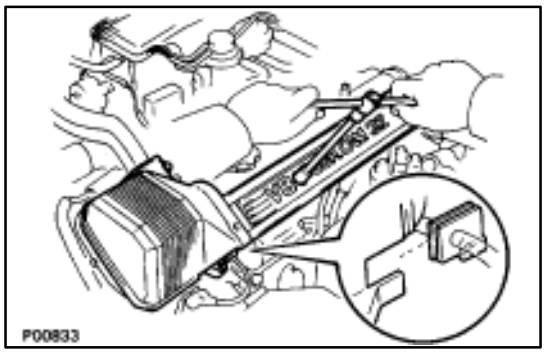

8. REMOVE LH NO.3 TIMING BELT COVER

(a) Remove the four mounting bolts.
(b) Disconnect the cord grommet from the timing belt cover, and remove the timing belt cover.
(c) Remove the cord grommet from the high–tension cord.

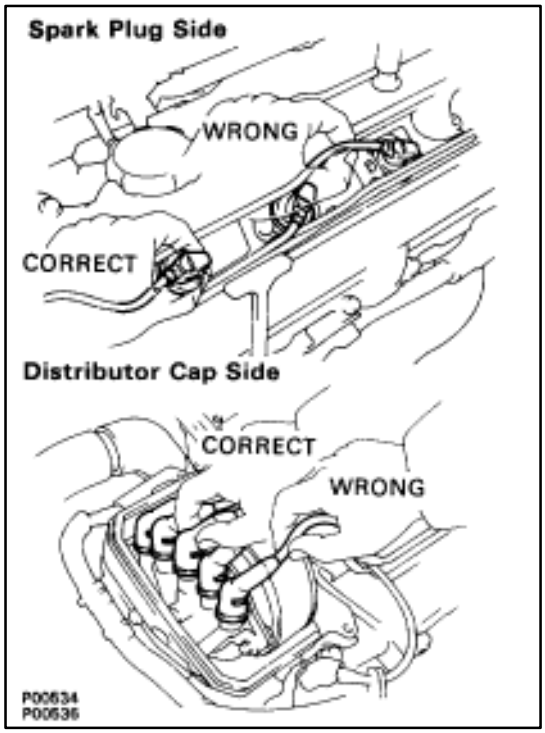

9. REMOVE HIGH–TENSION CORDS

(a) Disconnect the high–tension cords from the spark plugs and distributor caps. Disconnect the high–tension cords at the rubber boot. Do not pull on the cords.

NOTICE: Pulling on or bending the cords may damage the conductor inside.

WhereEverybodyKnowsYourName

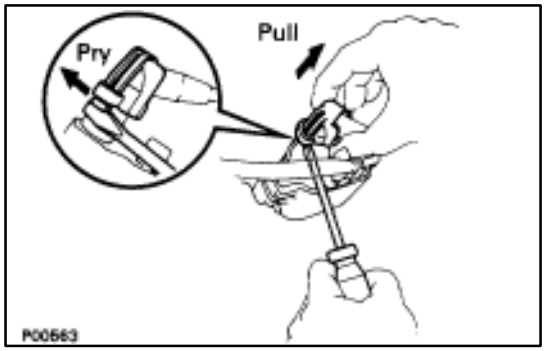

(b) Disconnect the high–tension cords from the ignition coils.
- Using a screwdriver, lift up the lock claw and disconnect the holder from the ignition coil.

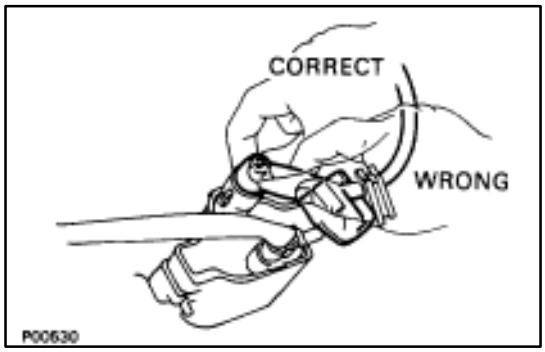

- Disconnect the high–tension cord at the grommet. Do not pull on the cord.

NOTICE: Pulling on or bending the cords may damage the conductor inside.

(c) Disconnect the high–tension cords from the cord clamps and lower high–tension cord cover, and remove the ten high–tension cords.

(d) Remove the five cords clamp from the high–tension cords.

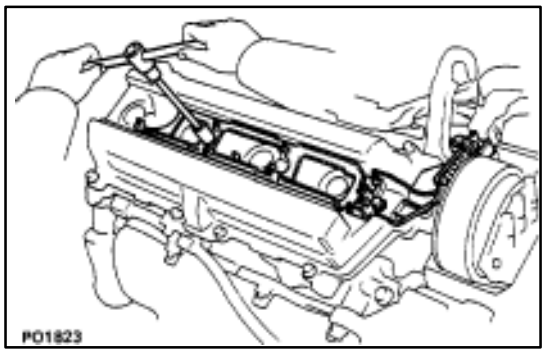

10. REMOVE RH HIGH–TENSION CORD CLAMPS

(a) Remove the two bolts and two high–tension cord clamps.

(b) Remove the cord clamp from the front high–tension cord clamp.

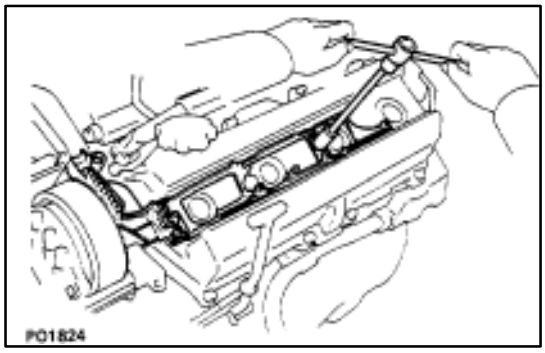

11. REMOVE LH HIGH–TENSION CORD CLAMPS

(a) Remove the two bolts and two high–tension cord clamps.

(b) Remove the cord clamp from the front high–tension cord clamp.

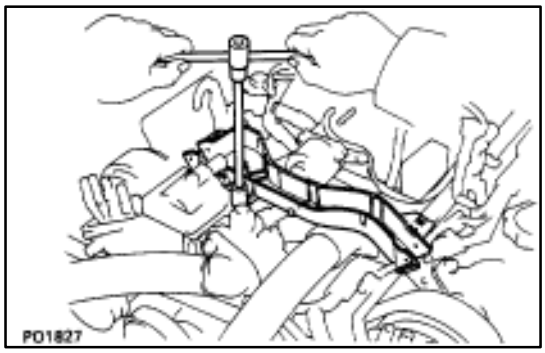

12. REMOVE LOWER HIGH–TENSION CORD COVER

Remove the bolt and high–tension cord cover.

WhereEverybodyKnowsYourName

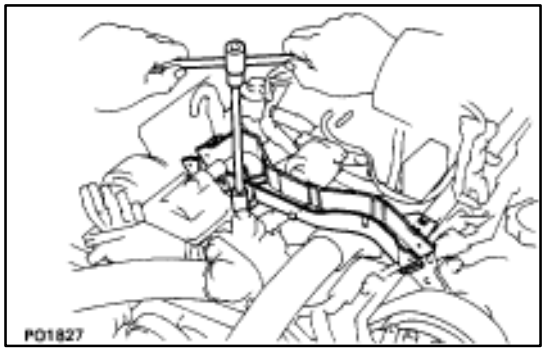

INSTALLATION OF HIGH–TENSION CORDS AND CORD CLAMPS

(See Components on page IG–11)

1. INSTALL LOWER HIGH–TENSION CORD COVER

Install the high–tension cord cover with the bolt.

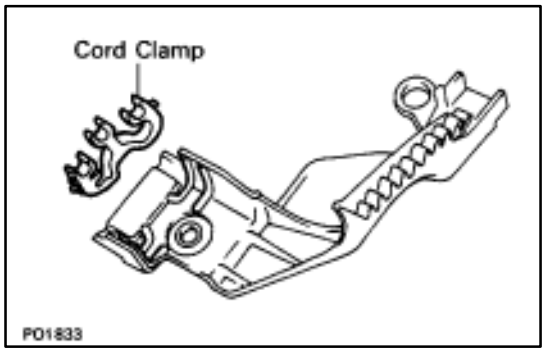

2. INSTALL RH HIGH–TENSION CORD CLAMPS

(a) Install the cord clamp to the front high–tension cord clamp.

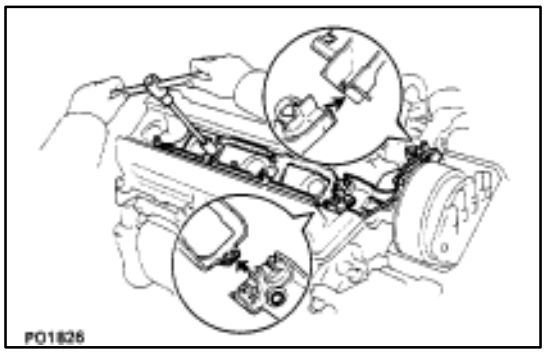

(b) Install front and rear high–tension cord clamps with the two bolts.

HINT: Place the front and rear ends of the front high–tension cord clamp on the rear high–tension cord clamp and lower high–tension cord cover.

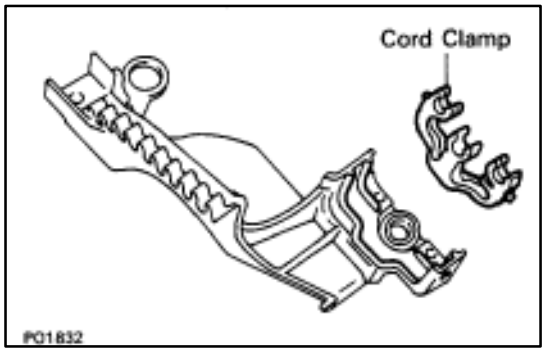

3. INSTALL LH HIGH–TENSION CORD CLAMPS

(a) Install the cord clamp to the front high–tension cord clamp.

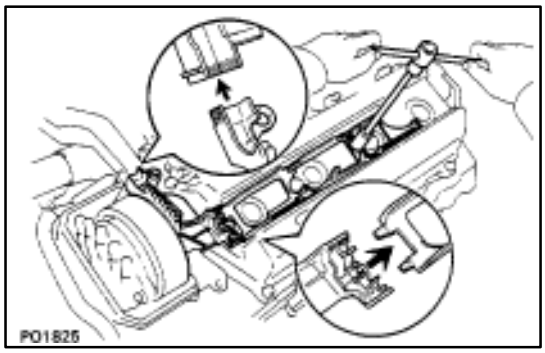

(b) Install front and rear high–tension cord clamps with the two bolts.

HINT: Place the front and rear ends of the front high–tension cord clamp on the rear high–tension cord clamp and lower high–tension cord cover.

WhereEverybodyKnowsYourName

4. INSTALL HIGH–TENSION CORDS

(a) Connect the high–tension cords to the spark plugs and distributor caps.

(b) Secure the high–tension cords with the cord clamps as shown in the illustration.

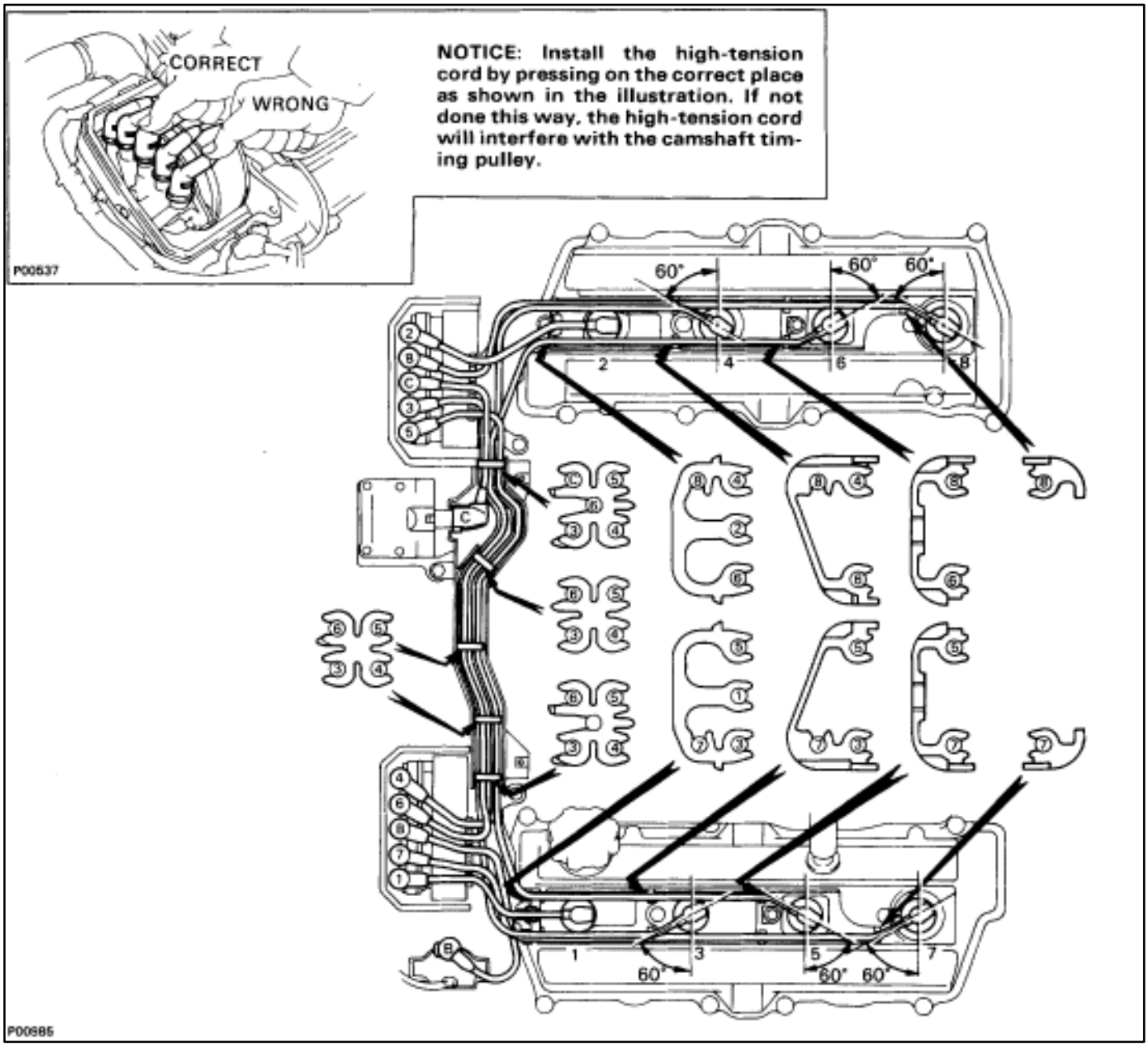

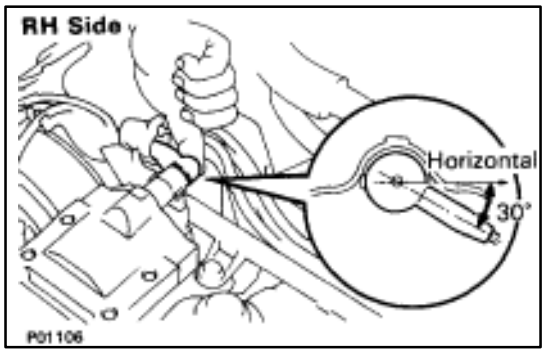

(b) Connect the high–tension cords to the ignition coils.

- Insert the grommet portion into the terminal hole of the ignition coil.

WhereEverybodyKnowsYourName

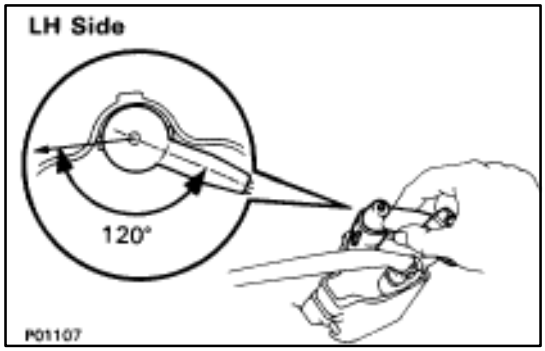

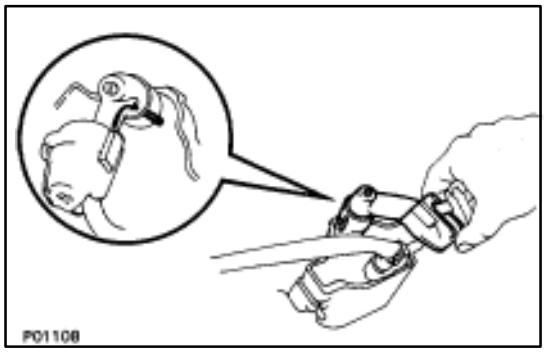

- Align the spline of the ignition coil with the spline of the holder, and slide on the holder.

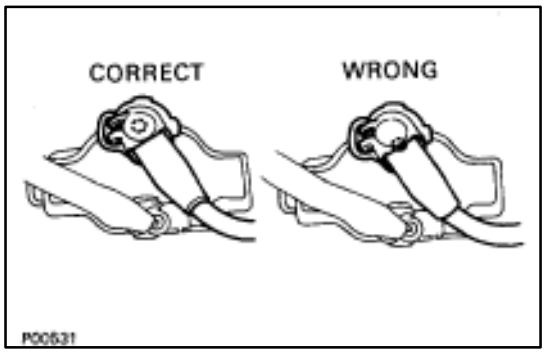

NOTICE: Check that holder is correctly installed to the grommet and ignition coil as shown in the illustration.

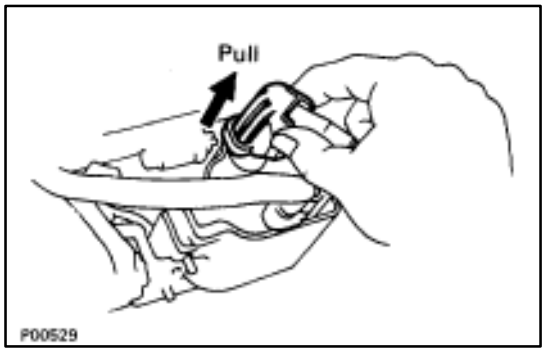

- Check that the lock claw of the holder is engaged by lightly pulling the holder.

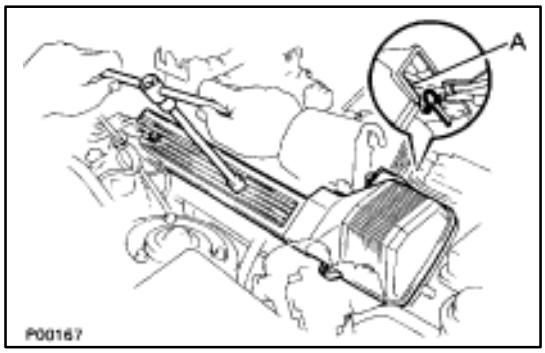

5. INSTALL RH NO.3 TIMING BELT COVER

(a) Install the three gaskets to the timing belt cover.
(b) Fit portion A of the timing belt cover, matching it with the lower high–tension cord cover.
(c) Install the timing belt cover with the three bolts.

WhereEverybodyKnowsYourName

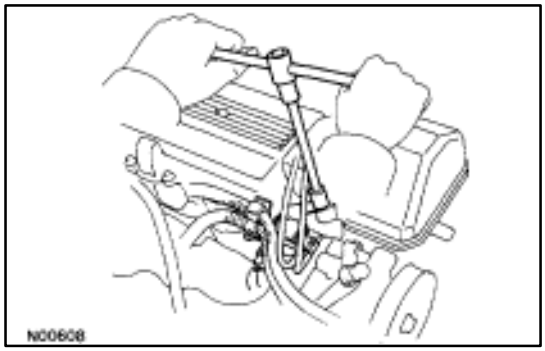

6. INSTALL VSV FOR EVAP SYSTEM

Install the VSV with the two bolts.

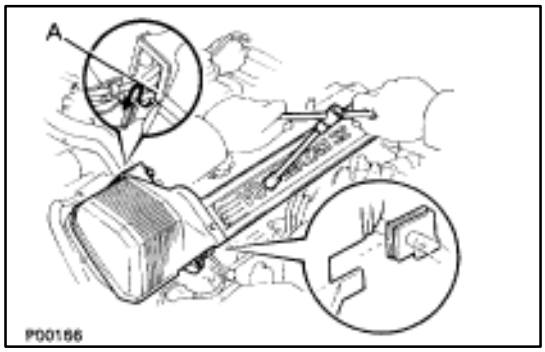

7. INSTALL LH NO.3 TIMING BELT COVER

(a) Install the three gaskets to the timing belt cover.
(b) Install the cord grommet to the high–tension cord.
(c) Install the cord grommet to the timing belt cover.
(d) Fit portion A of the timing belt cover, matching it with the lower high–tension cord cover.
(e) Install the timing belt cover with the four bolts.

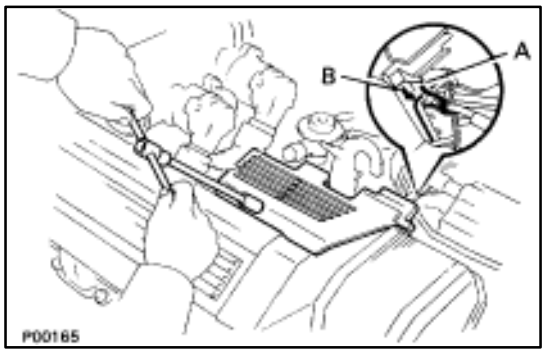

8. INSTALL RH ENGINE WIRE COVER

(a) Fit portions A and B of the engine wire cover, matching them with the lower high–tension cord cover and No.3 timing belt cover.
(d) Install the engine wire cover with the bolt.

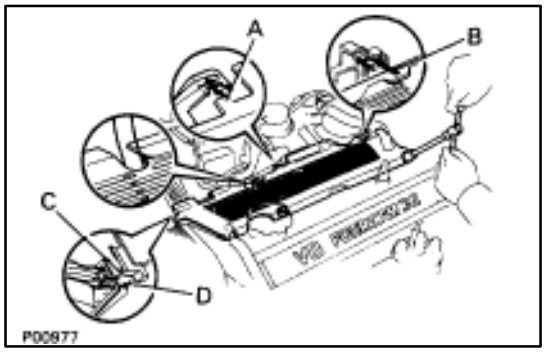

9. INSTALL LH ENGINE WIRE COVER

(a) Connect portions A and B engine wire cover to the wire brackets.
(b) Set the VSV (for fuel pressure control system) wire in original position.
(c) Fit portions C and D of the engine wire cover, matching them with the lower high–tension cord cover and No.3 timing belt cover.
(d) Install the engine wire cover with the two bolts.

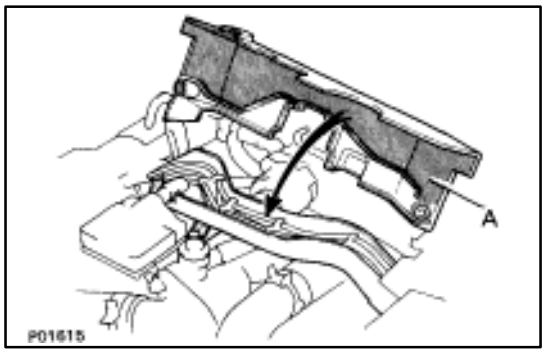

10. INSTALL UPPER HIGH–TENSION CORD COVER

(a) Fit portion A of the upper high–tension cover, matching it with the top of the lower high–tension cord cover.

WhereEverybodyKnowsYourName

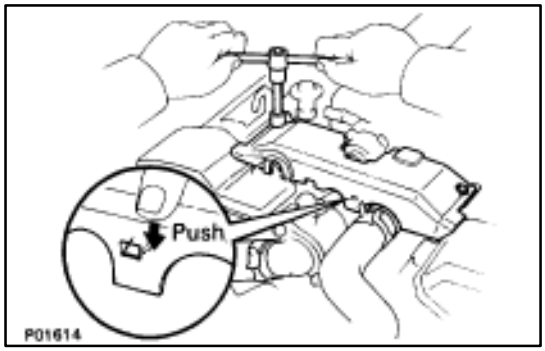

(b) Push the front side of the high–tension cord cover, and connect the front side claw groove of the upper high–tension cord cover to the claw of the lower high–tension cord cover.
(c) Install the upper high–tension cord cover with the two bolts.

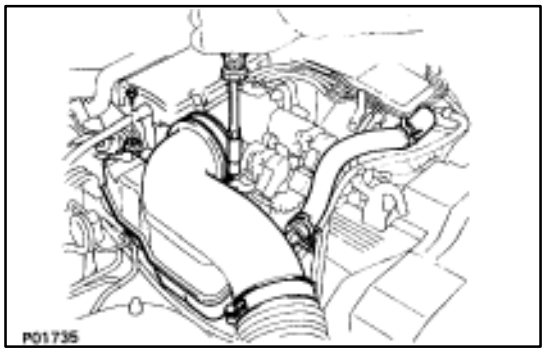

11. INSTALL INTAKE AIR CONNECTOR

(a) Connect the end portions of the intake air connector to the throttle body and air cleaner hose.
(b) Tighten the two hose clamps.
(c) Install the bolt holding the intake air connector to the cylinder head cover.

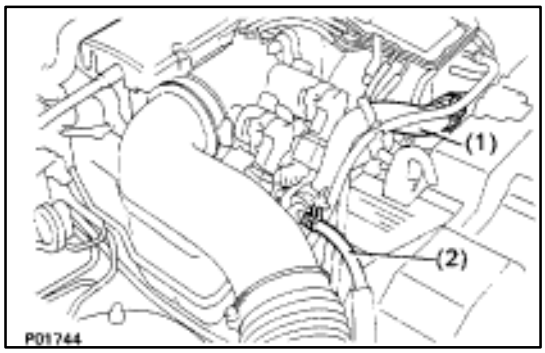

(d) Connect the following hoses:
  (1) Air hose to ISC valve
  (2) Air hose (from PS air control valve) to intake air connector

12. CONNECT CABLE TO NEGATIVE TERMINAL OF BATTERY

13. CHECK THAT ENGINE STARTS

WhereEverybodyKnowsYourName

SERVICE SPECIFICATIONS

SERVICE DATA

Ignition timing	T/M in N range		10° BTDC @ idle [Check connector terminals TE1 and E1 connect]	
Spark plug	Type	ND NGK	PK16R11 BKR5EP11	
	GAP	STD Limit	1.1 mm 1.3 mm	0.043 in. 0.051 in.
High–tension cord	Resistance	Limit	25 kΩ per cord	
Ignition coil	Primary coil resistance Secondary coil resistance		0.2–0.3 ? 6–11 k ?	
Distributor	Air gaps Pickup coil resistance (cold)	 G1–G (–) G2–G (–) NE–G (–)	0.2–0.4 mm 125–190 Ω 125–190 Ω 155–240 Ω	0.008–0.016 in.

WhereEverybodyKnowsYourName

IGNITION COILS

COMPONENTS FOR REMOVAL AND INSTALLATION

RH Ignition Coil

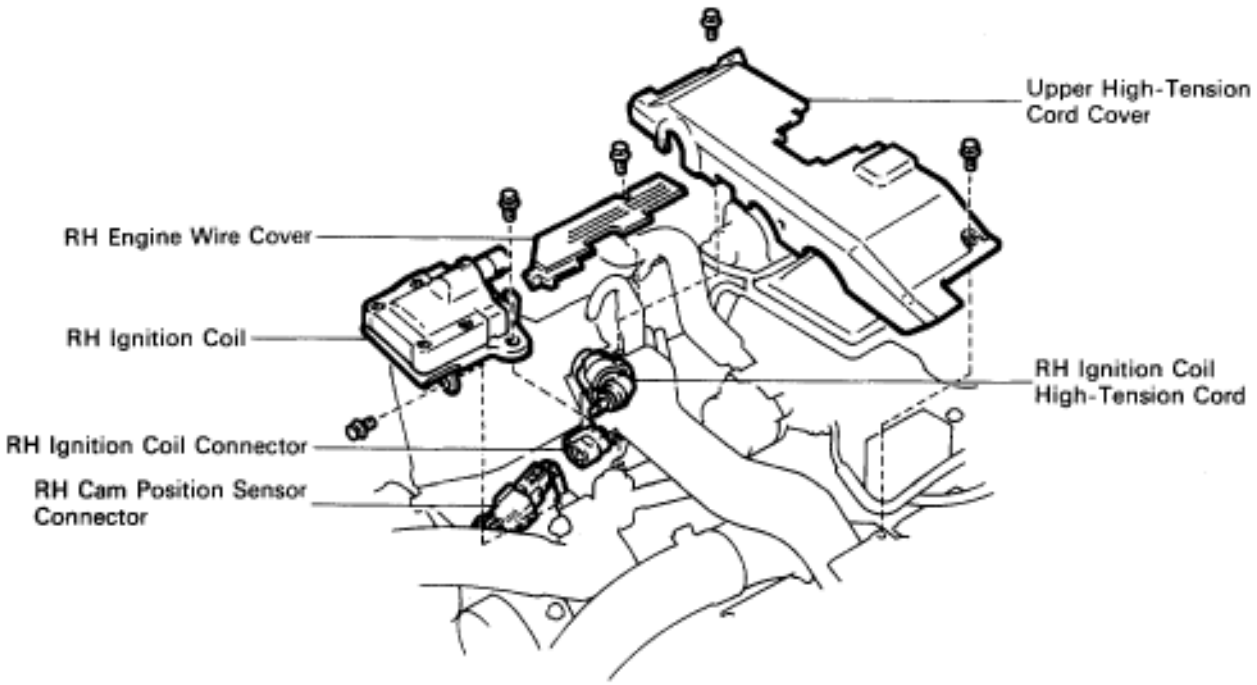

P01327

LH Ignition Coil

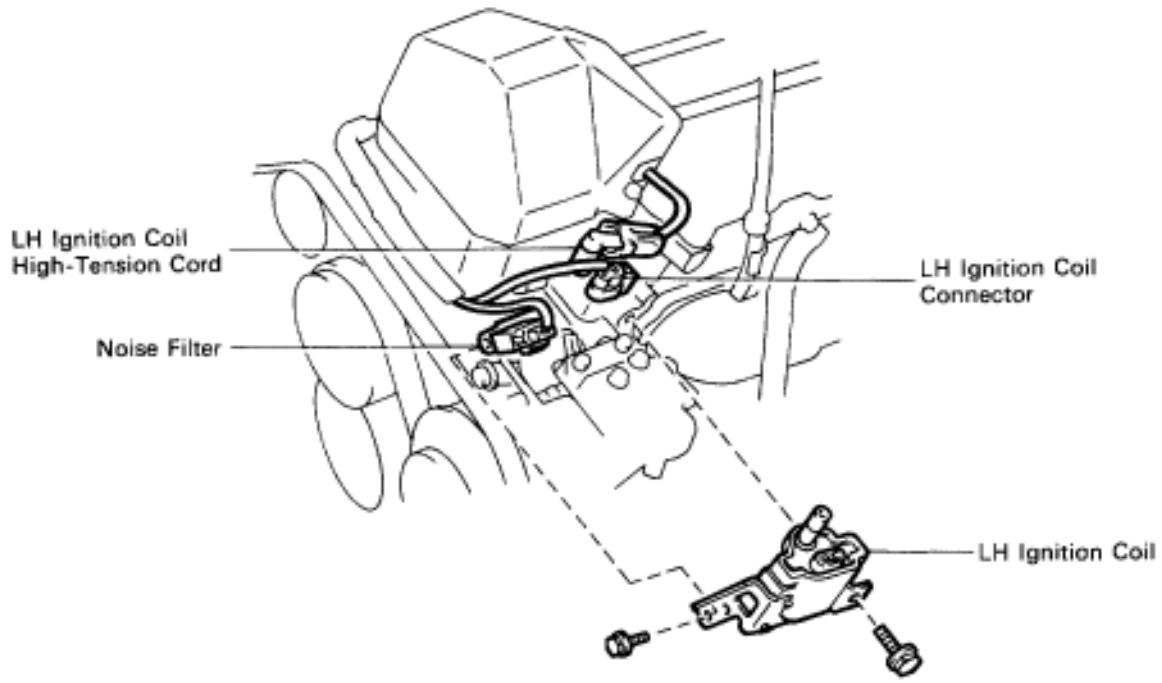

P01423

WhereEverybodyKnowsYourName

REMOVAL OF RH IGNITION COIL

(See Components on page IG–20)

1. **REMOVE RH ENGINE WIRE COVER**
   (See steps 1, 3 and 4 on pages IG–11 and 12)
2. **DISCONNECT HIGH–TENSION CORD**
   (See step 9 on pages IG–13 and 14)
3. **DISCONNECT IGNITION COIL CONNECTOR**

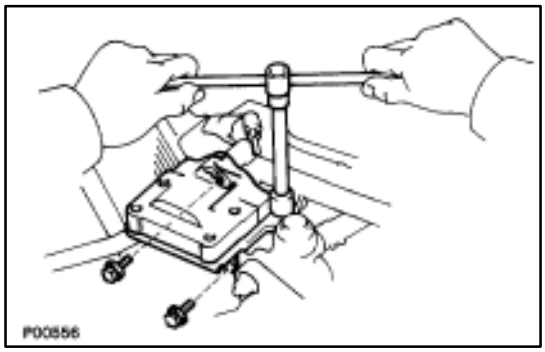

4. **REMOVE IGNITION COIL**
   (a) Remove the three bolts, and disconnect the ignition coil.
   (b) Disconnect the cam position sensor connector, and remove the ignition coil.

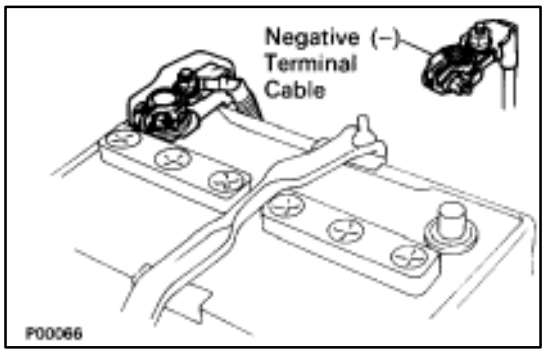

REMOVAL OF LH IGNITION COIL

(See Components on page IG–20)

1. **DISCONNECT CABLE FROM NEGATIVE TERMINAL OF BATTERY**
   CAUTION: Work must be started after approx. 20 seconds or longer from the time the ignition switch is turned to the "LOCK" position and the negative (–) terminal cable is disconnected from the battery.

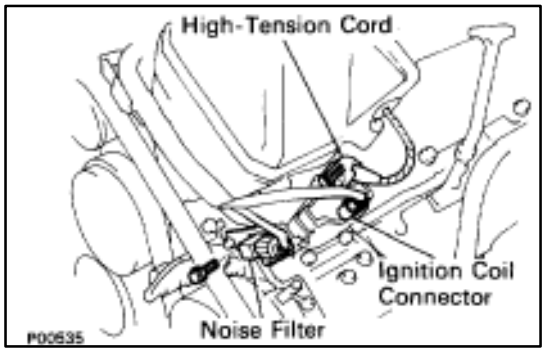

2. **DISCONNECT IGNITION COIL CONNECTOR**
3. **DISCONNECT HIGH–TENSION CORD**
   (See step 9 on pages IG–13 and 14)
4. **DISCONNECT NOISE FILTER FROM IGNITION COIL**
   Remove the bolt, and disconnect the noise filter.

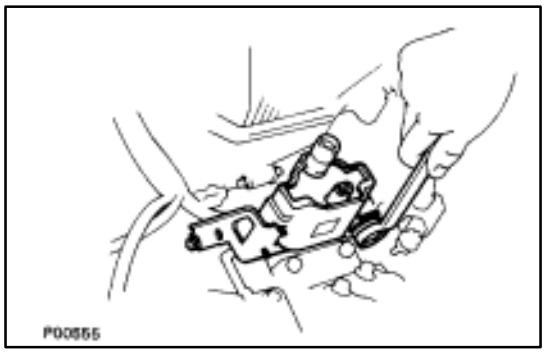

5. **REMOVE IGNITION COIL**
   Remove the two bolts and ignition coil.

WhereEverybodyKnowsYourName

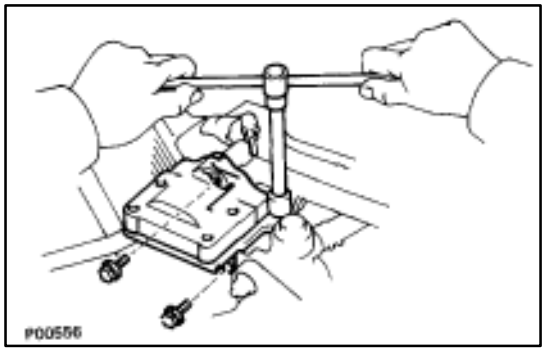

INSTALLATION OF RH IGNITION COIL

(See Components on page IG–20)

1. **INSTALL IGNITION COIL**
   (a) Install the ignition coil with the three bolts.

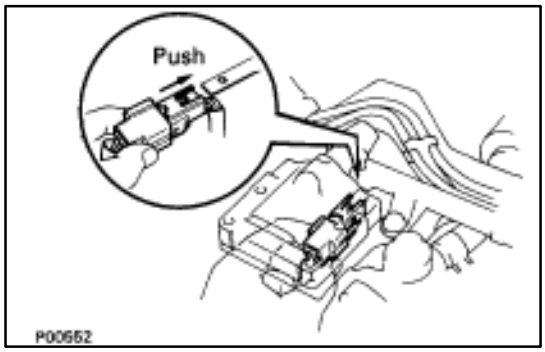

   (b) Install the cam position sensor connector to the ignition coil bracket.
2. **CONNECT IGNITION COIL CONNECTOR**
3. **CONNECT HIGH–TENSION CORD**
   (See step 4 on pages IG–16 and 17)
4. **INSTALL RH ENGINE WIRE COVER**
   (See steps 8, 10, 12 and 13 on pages IG–11 and 12)

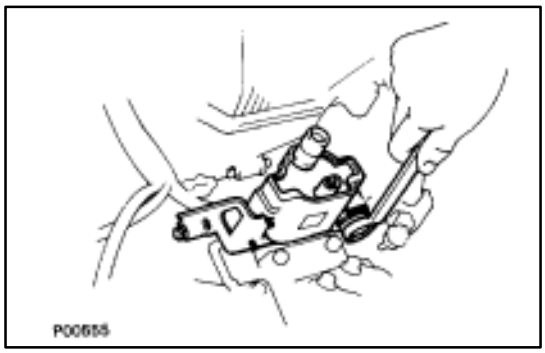

INSTALLATION OF LH IGNITION COIL

(See Components on page IG–20)

1. **INSTALL IGNITION COIL**
   Install the ignition coil with the two bolts.

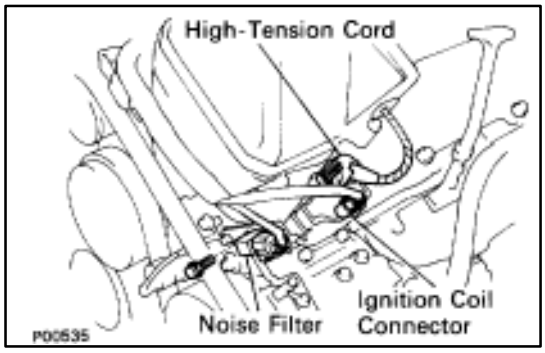

2. **INSTALL NOISE FILTER TO IGNITION COIL**
   Install the noise filter with the bolt.
3. **CONNECT HIGH–TENSION CORD**
   (See step 4 on pages IG–16 and 17)
4. **CONNECT IGNITION COIL CONNECTOR**
5. **CONNECT CABLE TO NEGATIVE TERMINAL OF BATTERY**

WhereEverybodyKnowsYourName

DISTRIBUTOR

COMPONENTS FOR REMOVAL AND INSTALLATION

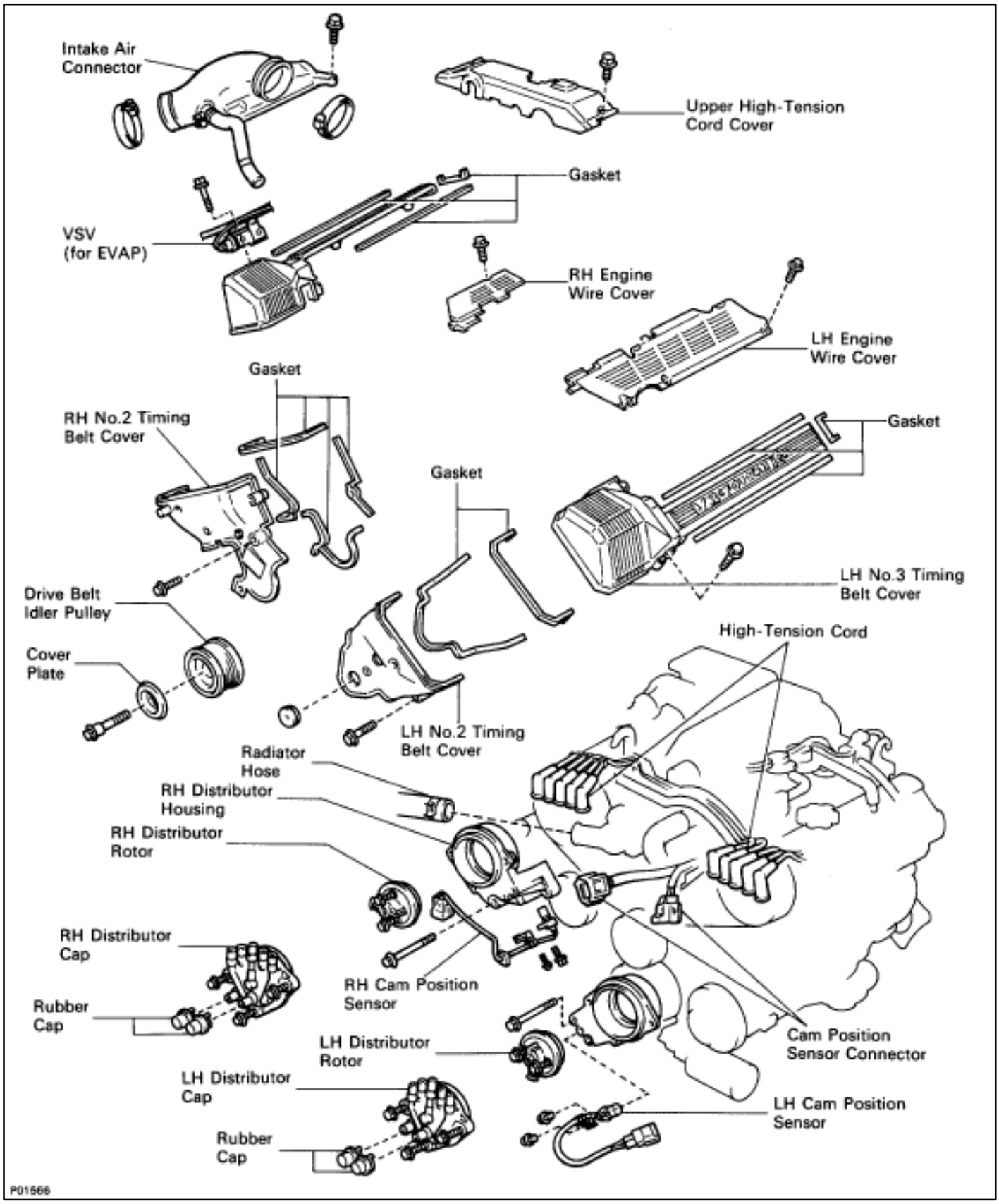

WhereEverybodyKnowsYourName

REMOVAL OF DISTRIBUTOR

(See Components on page IG–23)

1. **DRAIN ENGINE COOLANT (See page CO–6)**
2. **DISCONNECT RADIATOR HOSE FROM WATER INLET**
3. **REMOVE NO.3 TIMING BELT COVERS**
   (See steps 1 to 8 on pages IG–11 to 13)

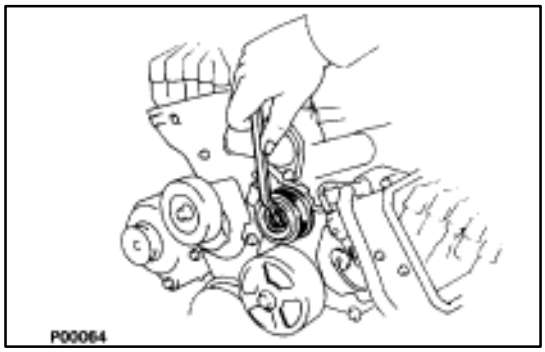

4. **REMOVE DRIVE BELT IDLER PULLEY**
   Remove the pulley bolt, cover plate and idler pulley.

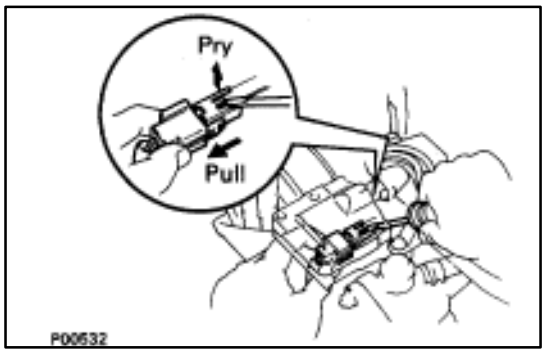

5. **REMOVE RH NO.2 TIMING BELT COVER**
   (a) Disconnect the cam position sensor connector from the ignition coil bracket.

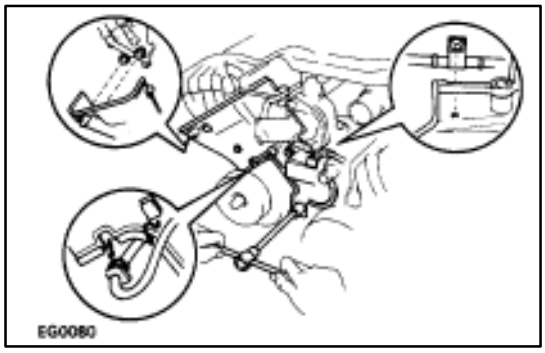

   (b) Disconnect the cam position sensor wire from the clamp on the timing belt cover.
   (c) Remove the five mounting bolts.
   (d) Disconnect the connector grommet from the timing belt cover.
   (e) Disconnect the wire clamp from the timing belt cover, and remove the timing belt cover and four gaskets.

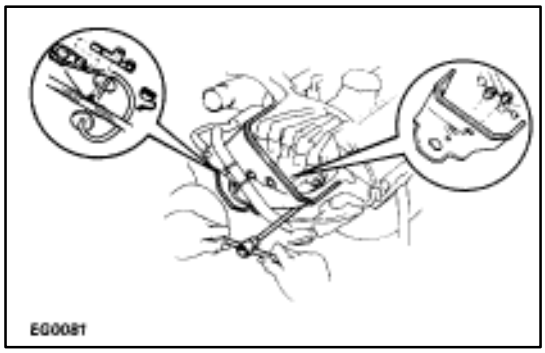

6. **REMOVE LH NO.2 TIMING BELT COVER**
   (a) Disconnect the cam position sensor wire from the clamp on the timing belt cover.
   (b) Disconnect the cam position sensor connector.
   (c) Remove the three mounting bolts.
   (d) Disconnect the connector grommet from the timing belt cover, and remove the timing belt cover and two gaskets.

WhereEverybodyKnowsYourName

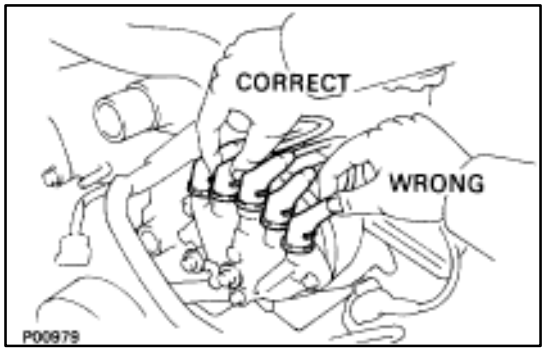

7. DISCONNECT HIGH–TENSION CORDS FROM DISTRIBUTOR CAPS

Disconnect the high–tension cords at the rubber boot. Do not pull on the cord.

NOTICE: Pulling or bending the cords may damage the conductor inside.

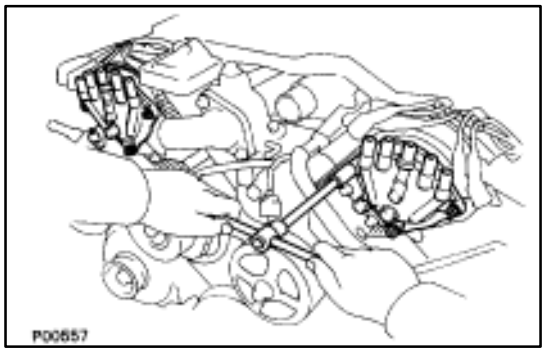

8. REMOVE DISTRIBUTOR CAPS

Loosen the three bolts, and remove the distributor cap. Remove the two distributor caps.

HINT: Arrange the distributor caps (RH side and LH side).

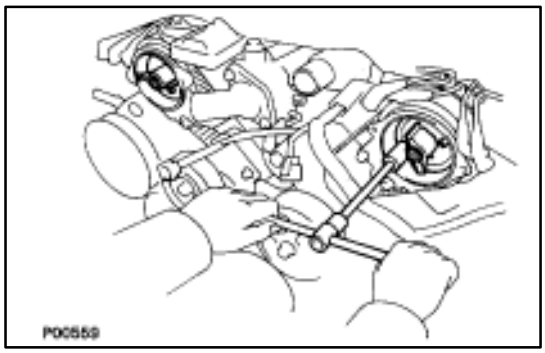

9. REMOVE DISTRIBUTOR ROTORS

Loosen the two bolts, and remove the distributor rotor. Remove the two distributor rotors.

HINT: Arrange the distributor rotors (RH side and LH side).

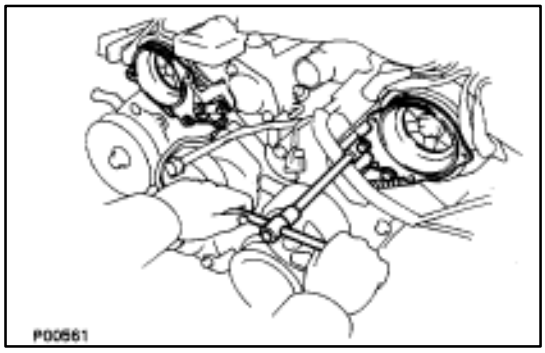

10. REMOVE DISTRIBUTOR HOUSINGS

(a) (RH Distributor Housing)
Disconnect the cam position sensor connector.

(b) Remove the three bolts and distributor housing. Remove the two distributor housings.

11. REMOVE CAM POSITION SENSORS FROM DISTRIBUTOR HOUSINGS

Remove the bolt, screw and cam position sensor.

Remove the two cam position sensors.

WhereEverybodyKnowsYourName

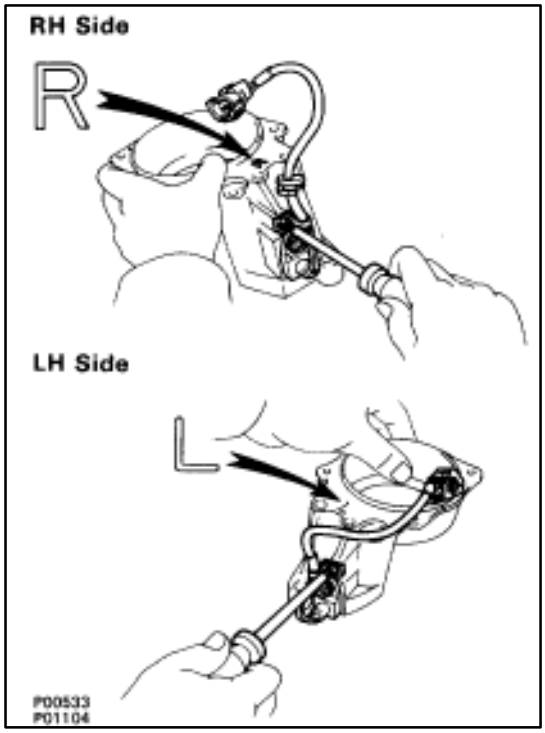

INSTALLATION OF DISTRIBUTOR

(See Components on page IG–23)

1. INSTALL CAM POSITION SENSORS TO DISTRIBUTOR HOUSINGS

Install the cam position sensor with the bolt and screw. Install the two cam position sensors.

Torque: 6.4 N·m (65 kgf·cm, 56 in.·lbf)

HINT:

- The RH distributor housing is marked with ”R”.
- The LH distributor housing is marked with ”L”.

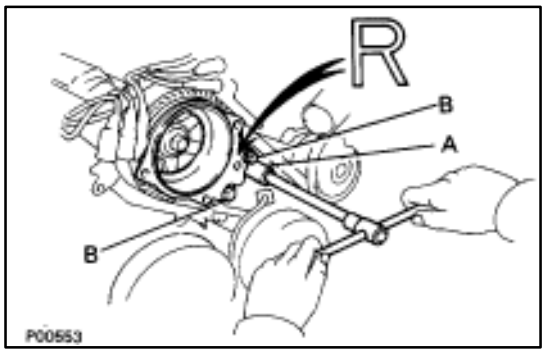

2. INSTALL RH DISTRIBUTOR HOUSING

(a) Install the distributor housing with the three bolts.

Torque: 18 N·m (185 kgf·cm, 13 ft·lbf)

HINT:

- The RH distributor housing is marked with ”R”.
- Each bolt length is indicated in the illustration.

Bolt length: A 38 mm (1.50 in.)
B 96 mm (3.78 in.)

(b) Connect the cam position sensor connector.

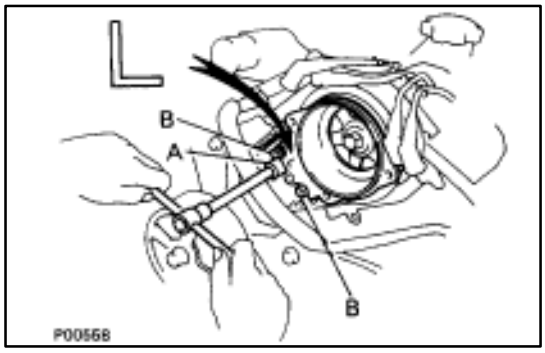

3. INSTALL LH DISTRIBUTOR HOUSING

(a) Install the distributor housing with the three bolts.

Torque: 18 N·m (185 kgf·cm, 13 ft·lbf)

HINT:

- The LH distributor housing is marked with ”L”.
- Each bolt length is indicated in the illustration.

Bolt length: A 38 mm (1.50 in.)
B 80 mm (3.15 in.)

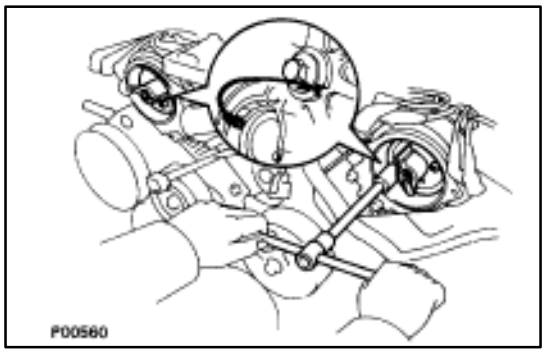

4. INSTALL DISTRIBUTOR ROTORS

(a) Align the protrusion of the distributor rotor with the groove of the camshaft timing pulley.

(b) Install the distributor rotor with the two bolts. Install the two distributor rotors.

Torque: 3.8 N·m (39 kgf·cm, 34 in.·lbf)

WhereEverybodyKnowsYourName

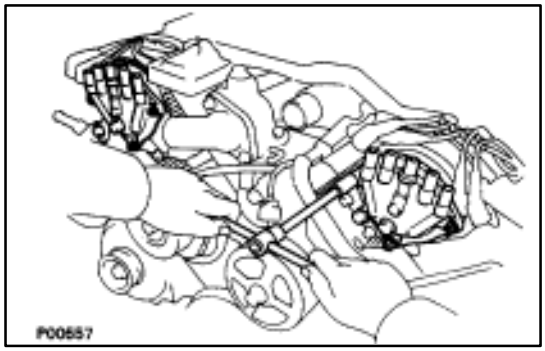

5. INSTALL DISTRIBUTOR CAPS

Install the distributor cap with the three bolts. Install the two distributor caps.

Torque: 3.8 N·m (39 kgf·cm, 34 in.·lbf)

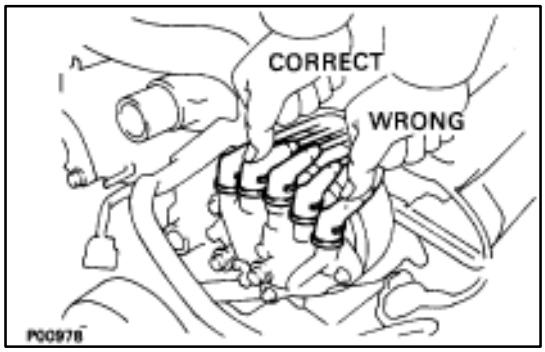

6. CONNECT HIGH–TENSION CORDS TO DISTRIBUTOR CAPS

Connect the ten high–tension cords.

NOTICE: Connect the high–tension cord by pressing on the correct place as shown in the illustration.

If not done this way, the high–tension cord will interfere with the camshaft timing pulley.

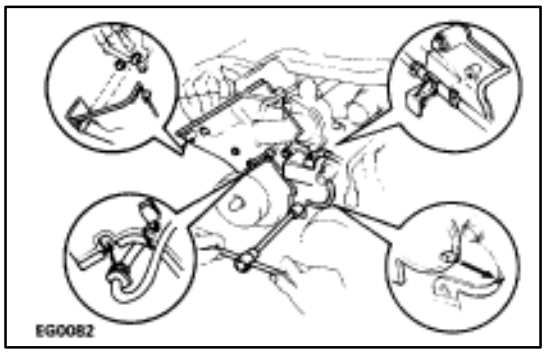

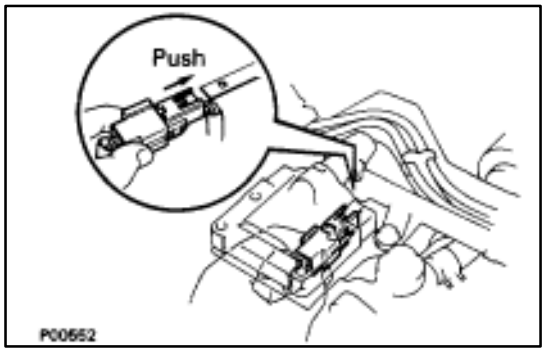

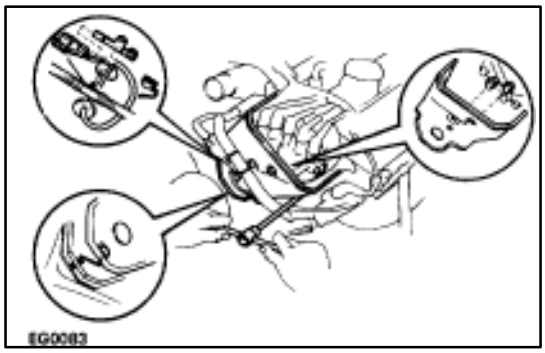

7. INSTALL RH NO.2 TIMING BELT COVER

(a) Install the four gaskets to the timing belt cover.
(b) Install the connector grommet to the timing belt cover.
(c) Install the timing belt cover with the five bolts.

Torque: 16 N·m (160 kgf·cm, 12 ft·lbf)

HINT (12 mm head bolt): Use bolts 106 mm (4.17 in.) in length.

(d) Install the wire clamp to the timing belt cover.
(e) Install the cam position sensor wire to the wire clamp on the timing belt cover.
(f) Install the cam position sensor connector to the ignition coil bracket.

8. INSTALL LH NO.2 TIMING BELT COVER

(a) Install the two gaskets to the timing belt cover.
(b) Run the cam position sensor wire through the timing belt cover hole.
(c) Install the timing belt cover and connector bracket with the three bolts.
(d) Connect the cam position sensor connector.
(e) Install the cam position sensor connector to the connector bracket.
(f) Install the cam position sensor wire to the wire clamp on the timing belt cover.
(g) Install the connector grommet to the timing belt cover.

WhereEverybodyKnowsYourName

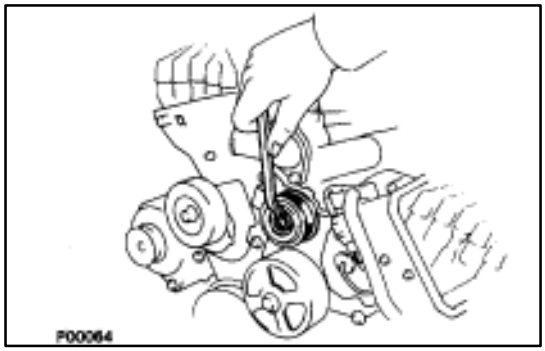

9. INSTALL DRIVE BELT IDLER PULLEY

Install the idler pulley and cover plate with the pulley bolt.

Torque: 37 N·m (380 kgf·cm, 27 ft·lbf)

10. INSTALL NO.3 TIMING BELT COVERS

(See steps 5 to 9 and 11 on pages IG–17 to 19)

11. CONNECT RADIATOR HOSE TO WATER INLET

12. CONNECT CABLE TO NEGATIVE TERMINAL OF BATTERY

13. FILL ENGINE WITH COOLANT (See page CO–6)

14. WARM UP ENGINE

Allow the engine to warm up to normal operating temperature.

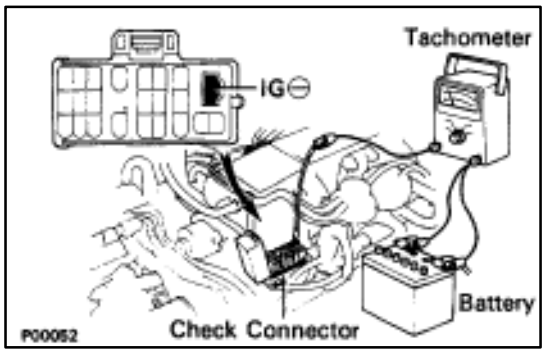

15. CONNECT TACHOMETER

Connect the tester probe of a tachometer to terminal IG± of the check (”DIAGNOSIS”) connector.

HINT: Set the tachometer to the 4–cylinder range.

NOTICE:

- **Never allow the tachometer tester probe to touch ground as it could result in damage to the igniter and/or ignition coil.**
- **As some tachometers are not compatible with this ignition system, we recommend that you confirm the compatibility of your unit before use.**

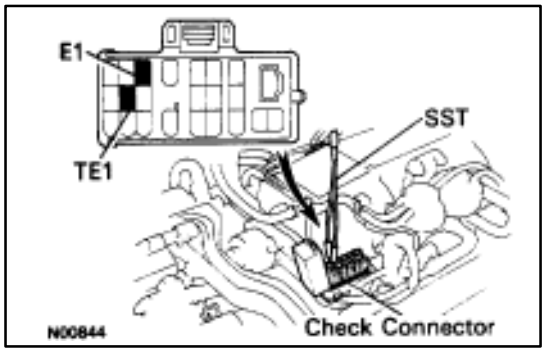

16. CHECK IGNITION TIMING

(a) Using SST, connect terminals TE1 and E1 of the check (”DIAGNOSIS”) connector.

SST 09843–18020

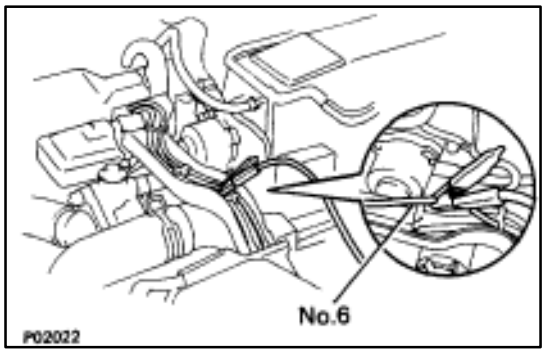

(b) Connect the tester probe of a timing light to the high–tension cord for No.6 cylinder.

WhereEverybodyKnowsYourName

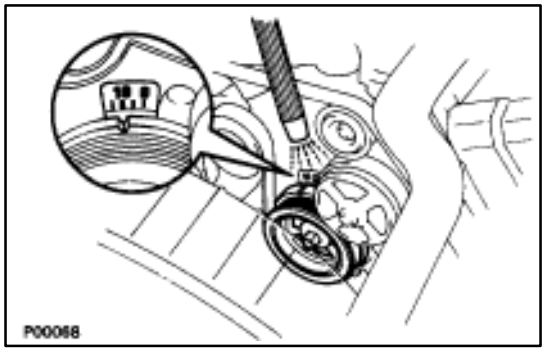

(c) Check the ignition timing.

Ignition timing: 8–12° BTDC @ idle

(Transmission in neutral range)

If the ignition timing is not as specified, check that following conditions are normal:

- Throttle valve fully closed
- Continuity between terminals IDL1 and E2 of the throttle position sensor (See page FI–73)
- Valve timing (See page EM–51)

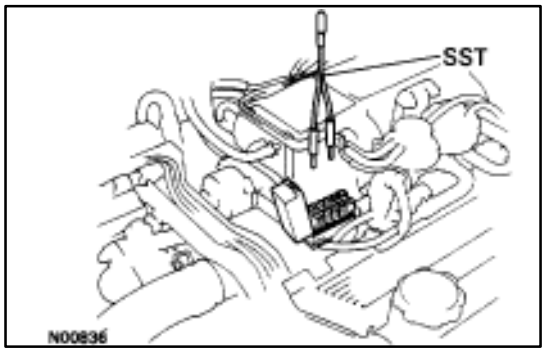

(e) Remove the SST from the check connector.

SST 09843–18020

17. DISCONNECT TACHOMETER AND TIMING LIGHT FROM ENGINE

18. INSTALL UPPER HIGH–TENSION CORD COVER (See step 10 on pages IG–18 and 19)

WhereEverybodyKnowsYourName

SERVICE SPECIFICATIONS

SERVICE DATA

Oil pressure		at idle speed	29 kPa (0.3 kgf/cm, 4.3 psi) or more	
		at 3,000 rpm	294–539 kPa (3.0–5.5 kgf/cm, 43–78 psi)	
Oil pump	Tip clearance	STD	0.310–0.490 mm	0.0122–0.0193 in.
		Limit	0.53 mm	0.0209 in.
	Body clearance	STD	0.100–0.175 mm	0.0039–0.0069 in.
		Limit	0.20 mm	0.0079 in.
	Rotor clearance	STD	0.030–0.090 mm	0.0012–0.0035 in.
		Limit	0.12 mm	0.0047 in.

TORQUE SPECIFICATIONS

Part tightened		N m	kgf cm	ft·lbf
A/C compressor X Cylinder block	Through bolt	26	265	19
	Bolt and nut	52	530	38
Oil pressure switch X Cylinder block		14	150	11
Oil drain plug X No.2 oil pan		45	450	33
Oil pump body cover X Oil pump body		10	105	8
Plug X Oil pump body		49	500	36
Oil pump X Cylinder block		21	210	15
No.1 oil pan X Cylinder block	12 mm head bolt	21	210	15
	14 mm head bolt	39	400	29
Oil pan baffle plate X No.1 oil pan		8.8	90	78 in.·lbf
Oil strainer X No.1 oil pan		8.8	90	78 in.·lbf
No.2 oil pan X No.1 oil pan		8.8	90	78 in.·lbf
Oil level sensor X No.1 oil pan		5.4	55	48 in.·lbf

WhereEverybodyKnowsYourName

SERVICE SPECIFICATIONS

SERVICE DATA

Oil pressure		at idling	29 kPa (0.3 kgf/cm^2, 4.3 psi) or more	
		at 3,000 rpm	294–588 kPa (3.0–6.0 kgf/cm^2, 43–85 psi)	
Oil pump	Tip clearance	STD	0.110–0.240 mm	0.0043–0.0094 in.
		Limit	0.35 mm	0.0138 in.
	Side clearance	STD	0.030–0.090 mm	0.0012–0.0035 in.
		Limit	0.15 mm	0.0059 in.
	Body clearance	STD	0.100–0.175 mm	0.0039–0.0069 in.
		Limit	0.30 mm	0.0118 in.

TORQUE SPECIFICATIONS

Part tightened		N·m	kgf·cm	ft·lbf
Oil oumo body cover X Oil pump body		10	105	8
Oil pump X Cylinder block	12 mm head	16	160	12
	14 mm head	30	310	22
Engine speed sensor X Oil pump		6.4	65	56 in.·lbf
Oil filter bracket X Oil pump		18	185	13
Oil strainer X Oil pump		7.8	80	69 in.·lbf
Oil strainer X Cylinder block		7.8	80	69 in.·lbf
No.2 oil pan X Cylinder block	10 mm head	7.8	80	69 in.·lbf
	12 mm head	18	185	13
Oil pan baffle plate X No.1 oil pan		7.8	80	69 in.·lbf
No.2 oil pan X No.1 oil pan		7.8	80	69 in.·lbf
No.2 oil pan X Cylinder block		7.8	80	69 in.·lbf
Oil level sensor X No.1 oil pan		5.4	55	48 in.·lbf

WhereEverybodyKnowsYourName

LUBRICATION SYSTEM

WhereEverybodyKnowsYourName

DESCRIPTION

A fully pressurized, fully filtered lubrication system has been adopted for this engine.

OPERATION

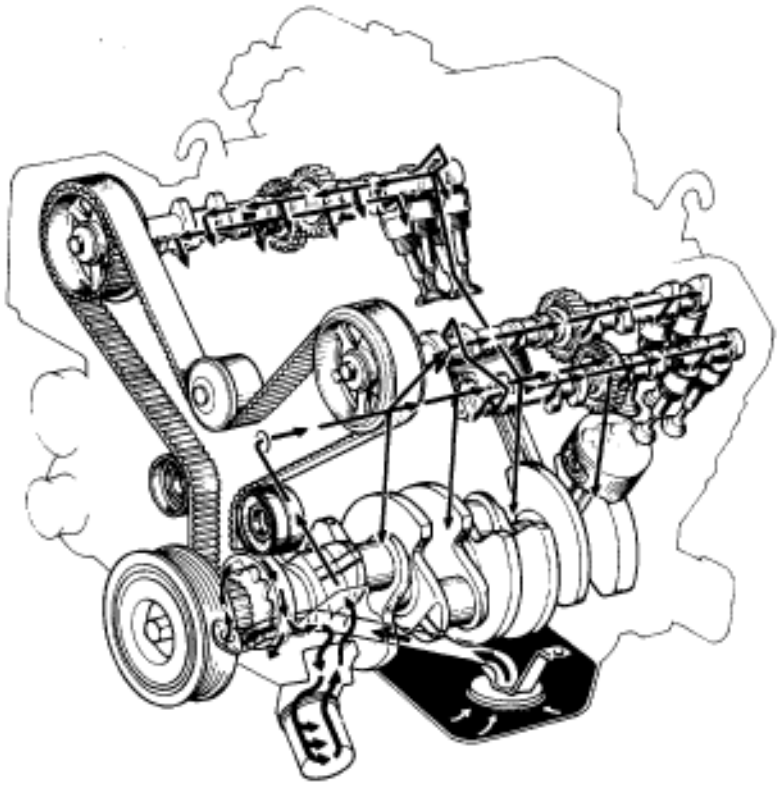

P01708

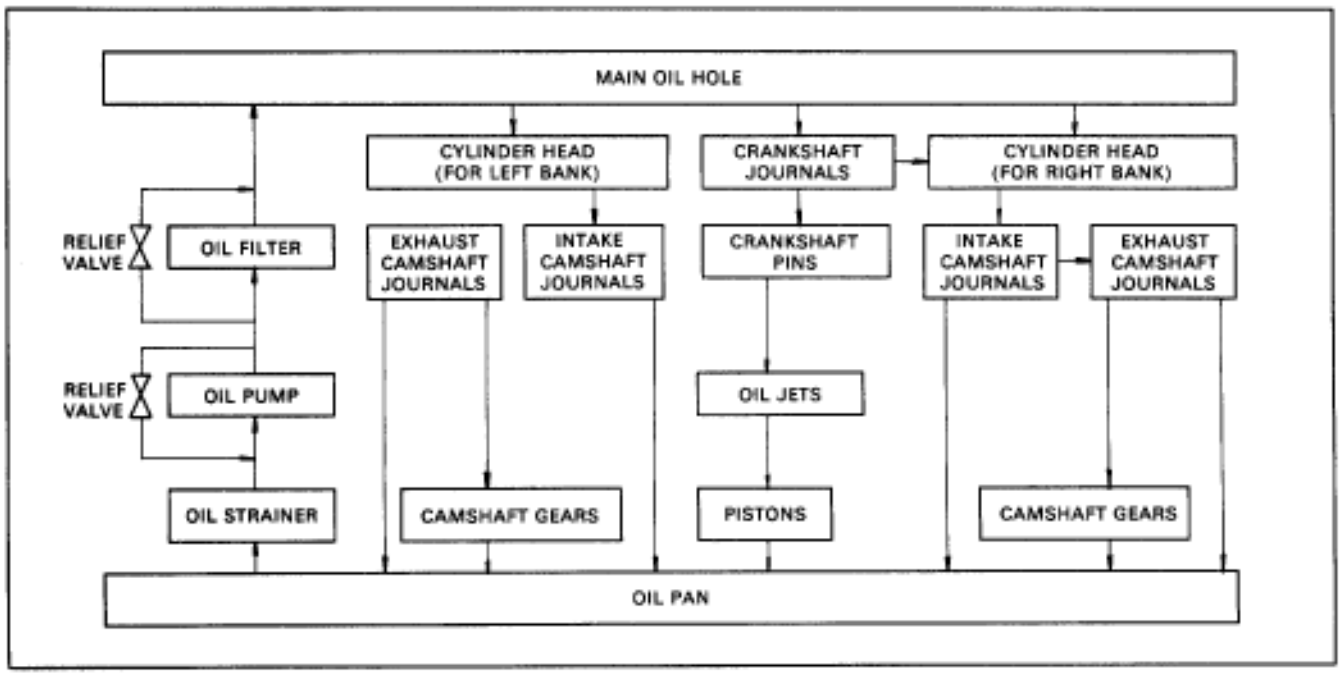

WhereEverybodyKnowsYourName

DESCRIPTION

A fully pressurized, fully filtered lubrication system has been adopted for this engine.

OPERATION

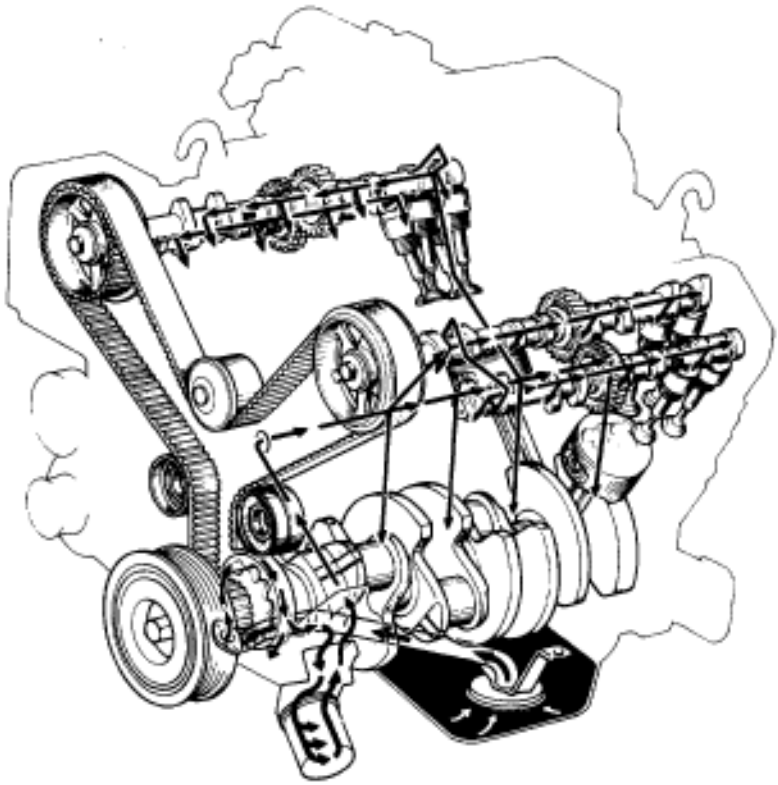

P01708

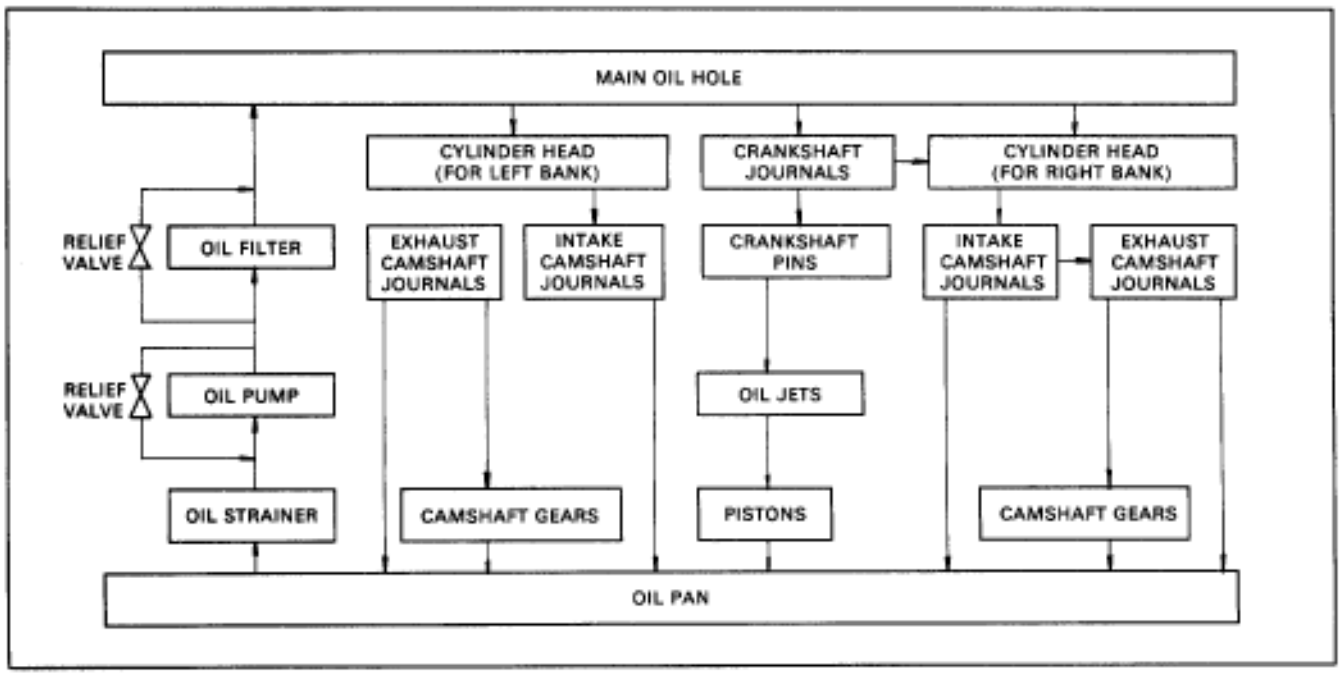

WhereEverybodyKnowsYourName

A pressure feeding lubrication system has been adopted to supply oil to the moving parts of this engine. The lubrication system consists of an oil pan, oil pump, oil filter and other external parts which supply oil to the moving parts in the engine block. The oil circuit is shown in the illustration at the top of the previous page. Oil from the oil pan is pumped up by the oil pump. After it passes through the oil filter, it is fed through the various oil holes in the crankshaft and cylinder block. After passing through the cylinder block and performing its lubricating function, the oil is returned by gravity to the oil pan. A dipstick on the center left side of the cylinder block is provided to check the oil level.

OIL PUMP

The oil pump pumps up oil from the oil pan and sends it under pressure to the various parts of the engine. An oil strainer is mounted in front of the inlet to the oil pump. The oil pump itself is a trochoid type pump, inside of which there is a drive rotor and a driven rotor. When the drive rotor rotates, the driven rotor rotates in the same direction, and since the axis of the driven rotor shaft is different from the center of the driven rotor, the space between the two rotors is changed as they rotate. Oil is drawn in when the space is wide and is discharged when the space in narrow.

OIL PRESSURE REGULATOR

At high engine speeds, the engine oil supplied by the oil pump exceeds the capacity of the engine to utilize it. For that reason, the oil pressure regulator works to prevent an oversupply of oil. During normal oil supply, a coil spring and valve keep the bypass closed, but when too much oil is being fed, the pressure become extremely high, overpowering the force of the spring and opening the valves. This allows the excess oil to flow through the valve and return to the oil pump inlet.

OIL FILTER

The oil filter is a full flow type filter with a built–in paper filter element. Particles of metal from wear, airborne dirt, carbon and other impurities can get into the oil during use and could cause accelerated wear or seizing if allowed to circulate through the engine. The oil filter, integrated into the oil line, removes these impurities as the oil passes through it. The filter is mounted outside the engine to simplify replacement of the filter element. A relief valve is also included ahead of the filter element to relieve the high oil pressure in case the filter element becomes clogged with impurities. The relief valve opens when the oil pressure overpowers the force of the spring. Oil passing through the relief valve by–passes the oil filter and flows directly into the main oil hole in the engine.

WhereEverybodyKnowsYourName

PREPARATION

SST (SPECIAL SERVICE TOOLS)

Illustration	Part No.	Part Name	Note
	09032-00100	Oil Pan Seal Cutter	No.2 oil pan
	09228-07500	Oil Filter Wrench	

RECOMMENDED TOOLS

Illustration	Part No.	Part Name	Note
	09200-00010	Engine Adjust Kit	

EQUIPMENT

Part Name	Note
Oil pressure gauge	
Precision straight edge	Oil pump
Torque wrench	

LUBRICANT

Item	Capacity			Classification
	Liters	US qts	Imp. qts	
Engine oil				API grade SG, Energy–Conserving II multigrade. Recommended viscosity is as shown, with SAE 5W–30 being the preferred engine oil.
Dry fill				
Drain and refill	6.0	6.3	5.3	
w/ Oil filter change	4.8	5.1	4.2	
w/o Oil filter change	4.5	4.8	5.3	

SSM (SPECIAL SERVICE MATERIALS)

Part Name	Part No.	Use etc.
Seal packing or equivalent	08826–00080	Oil pump, Oil pan
Adhesive 1344, Three bond 1344, Loctite 242 or equivalent	08833–00080	Oil pressure switch

WhereEverybodyKnowsYourName

OIL PRESSURE CHECK

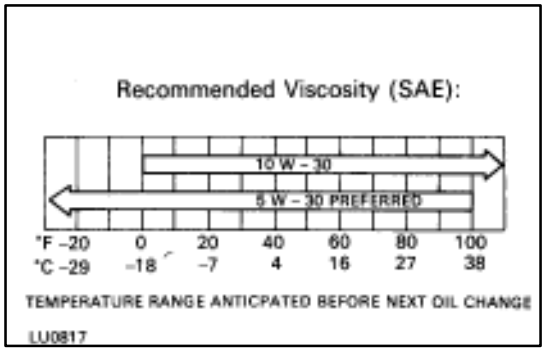

1. CHECK ENGINE OIL QUALITY

Check the oil for deterioration, presence of water, discoloring or thinning.

If the quality is poor, replace the oil.

Oil grade: API grade SG, Energy–Conserving II multigrade. Recommended viscosity is as shown, with SAE 5W–30 being the preferred engine oil.

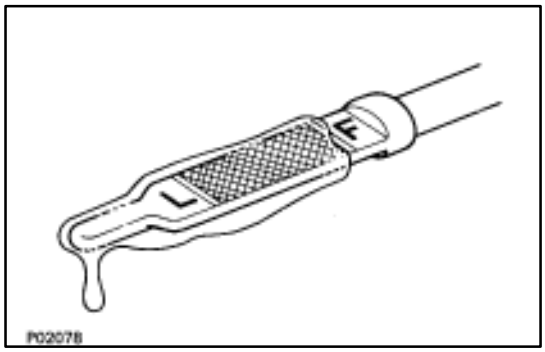

2. CHECK ENGINE OIL LEVEL

The oil level should be between the ”L” and ”F” marks on the dipstick.

If low, check for the leakage and add oil up to ”F” mark.

3. REMOVE ENGINE UNDER COVER

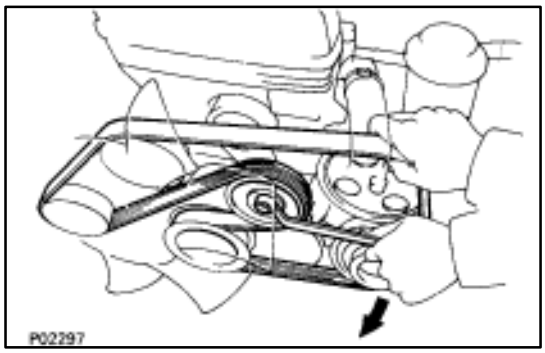

4. REMOVE DRIVE BELT

Loosen the drive belt tension by turning the drive belt tensioner clockwise, and remove the drive belt.

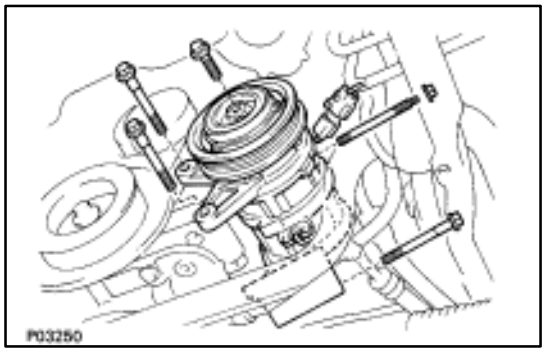

5. DISCONNECT A/C COMPRESSOR WITHOUT DISCONNECTING HOSES

(a) Disconnect the compressor connector.
(b) Remove the four mounting bolts and nut.
(c) Remove the throught bolt, and disconnect the compressor from the engine.

HINT: Put aside the compressor, and suspend it.

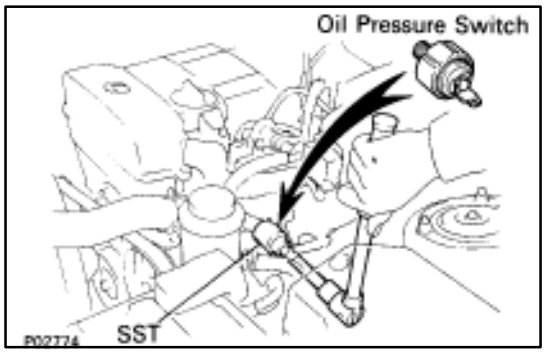

6. REMOVE OIL PRESSURE SWITCH, AND INSTALL OIL PRESSURE GAUGE

(a) Disconnect the oil pressure switch connector.
(b) Using SST, remove the oil pressure switch.

SST 09816–30010

(c) Install an oil pressure gauge.

WhereEverybodyKnowsYourName

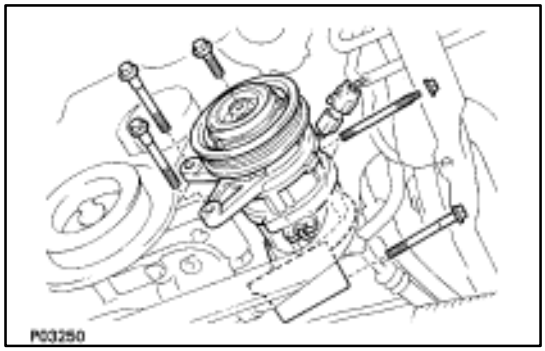

7. REINSTALL A/C COMPRESSOR

(a) Install the A/C compressor with the through bolt, four bolts and nut.

Torque:

Through bolt 26 N·m (265 kgf·cm, 19 ft·lbf)
Bolt and nut 52 N·m (530 kgf·cm, 38 ft·lbf)

(b) Connect the compressor connector.

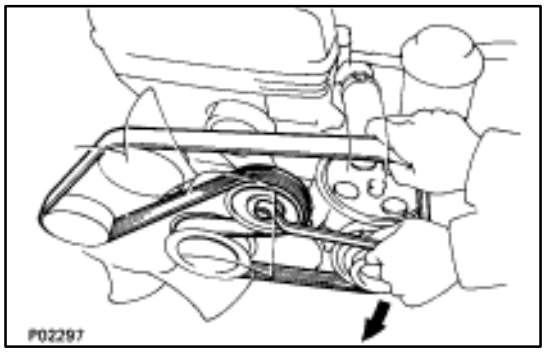

8. REINSTALL DRIVE BELT

Install the drive belt by turning the drive belt tensioner clockwise.

9. WARM UP ENGINE

Allow the engine to warm up to normal operating temperature.

10. CHECK OIL PRESSURE

Oil pressure:

At idle speed	**29 kPa (0.3 kgf/cm▼4.3 psi) or more**
At 3,000 rpm	**294–539 kPa (3.0–5.5 kgf/cm▼78 psi)**

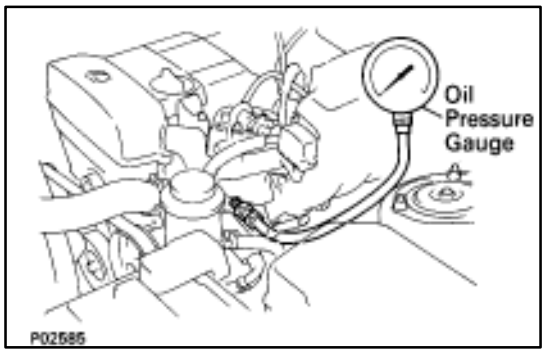

11. REMOVE DRIVE BELT (See step 4)

12. DISCONNECT A/C COMPRESSOR FROM ENGINE (See step 5)

13. REMOVE OIL PRESSURE GAUGE AND REINSTALL OIL PRESSURE SWITCH

(a) Remove an oil pressure gauge.

(b) Apply adhesive to two or three threads of the oil pressure switch.

Adhesive: Part No. 08833–00080, THREE BOND 1344, LOCTITE 242 or equivalent

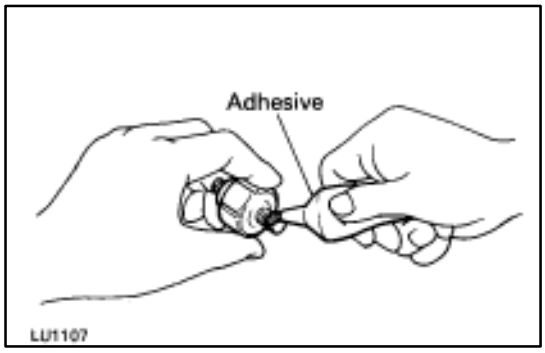

(c) Using SST, install the oil pressure switch.

SST 09816–30010

Torque: 14 N·m (150 kgf·cm, 11 ft·lbf)

(d) Connect the compressor connector.

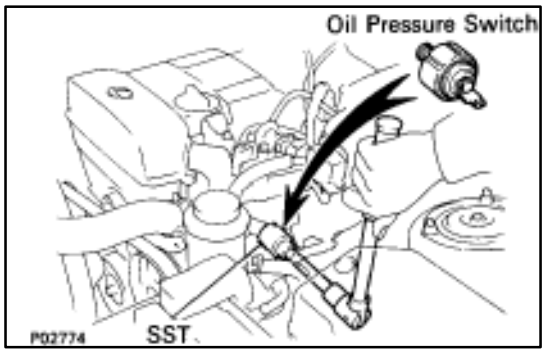

14. REINSTALL A/C COMPRESSOR (See step 7)

15. REINSTALL DRIVE BELT (See step 8)

16. START ENGINE AND CHECK FOR LEAKS

17. REINSTALL ENGINE UNDER COVER

WhereEverybodyKnowsYourName

REPLACEMENT OF ENGINE OIL AND OIL FILTER

CAUTION:

- **Prolonged and repeated contact with mineral oil will result in the removal of natural fats from the skin, leading to dryness, irritation and dermatitis. In addition, used engine oil contains potentially harmful contaminants which may cause skin cancer.**
- **Exerise caution in order to minimize the length and frequency of contact of your skin to used oil. Wear protective clothing and gloves. The skin should be thoroughly washed with soap and water, or use waterless hand cleaner, to remove any used engine oil. Do not use gasoline, thinners, or solvents.**
- **In order to preserve the environment, used oil and used oil filter must be disposed of only at designated disposal sites.**

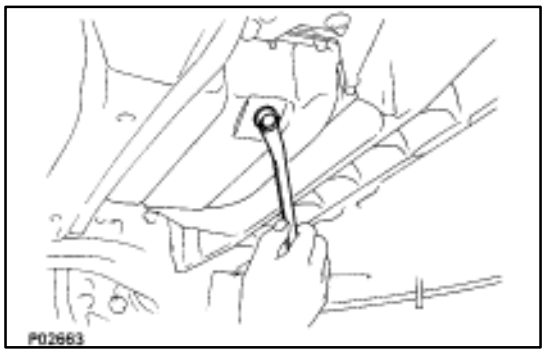

1. DRAIN ENGINE OIL

(a) Remove the oil filler cap.

(b) Remove the oil drain plug, and drain the oil into a container.

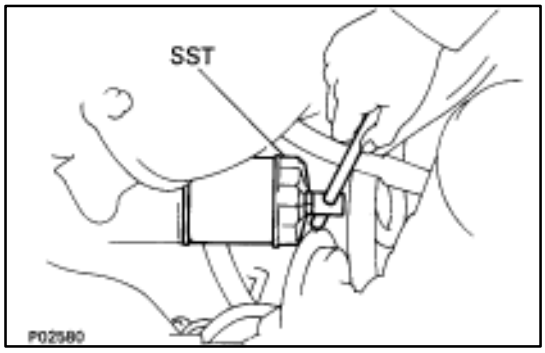

2. REPLACE OIL FILTER

(a) Using SST, remove the oil filter.

SST 09228–07500

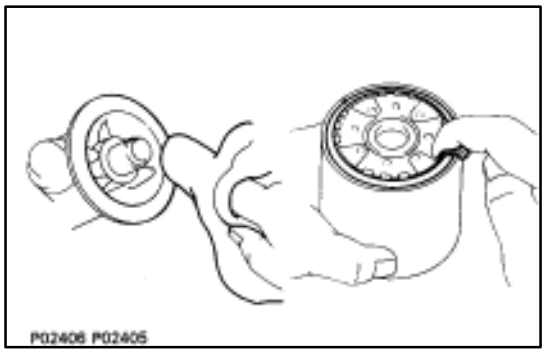

(b) Check and clean the oil filter installation surface.

(c) Apply clean engine oil to the gasket of a new oil filter.

WhereEverybodyKnowsYourName

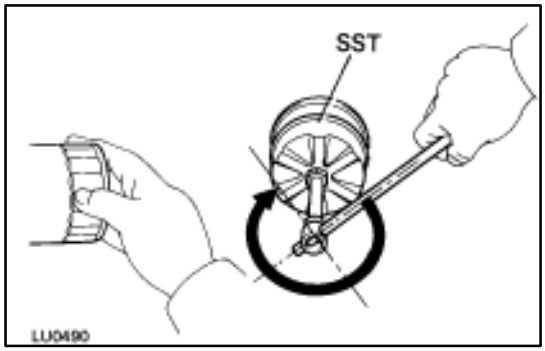

(d) Lightly screw the oil filter into place, and tighten it until the gasket contacts the seat.
(e) Using SST, tighten it an additional 3/4 turn.
SST 09228–07500

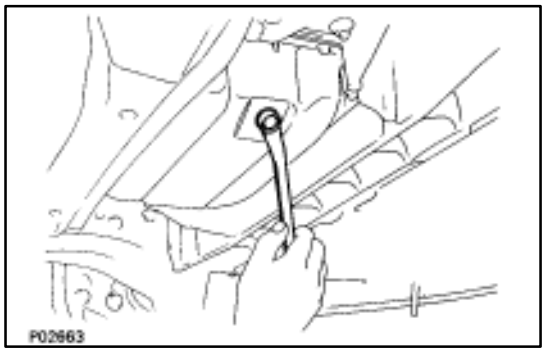

3. FILL WITH ENGINE OIL

(a) Clean and install the oil drain plug with a new gasket.

Torque: 45 N·m (450 kgf·cm, 33 ft·lbf)

(b) Fill with fresh engine oil.

Oil grade: See page LU–5

Capacity:

Drain and refill

w/ Oil filter change
4.8 liters (5.1 US qts, 4.2 Imp. qts)
w/o Oil filter change
4.5 liters (4.8 US qts, 4.0 Imp. qts)

Dry fill 5.2 liters (5.5 US qts, 4.6 Imp. qts)

(c) Reinstall the oil filler cap.

4. START ENGINE AND CHECK FOR LEAKS

5. RECHECK ENGINE OIL LEVEL (See page LU–5)

WhereEverybodyKnowsYourName

OIL PUMP

COMPONENTS FOR REMOVAL AND INSTALLATION

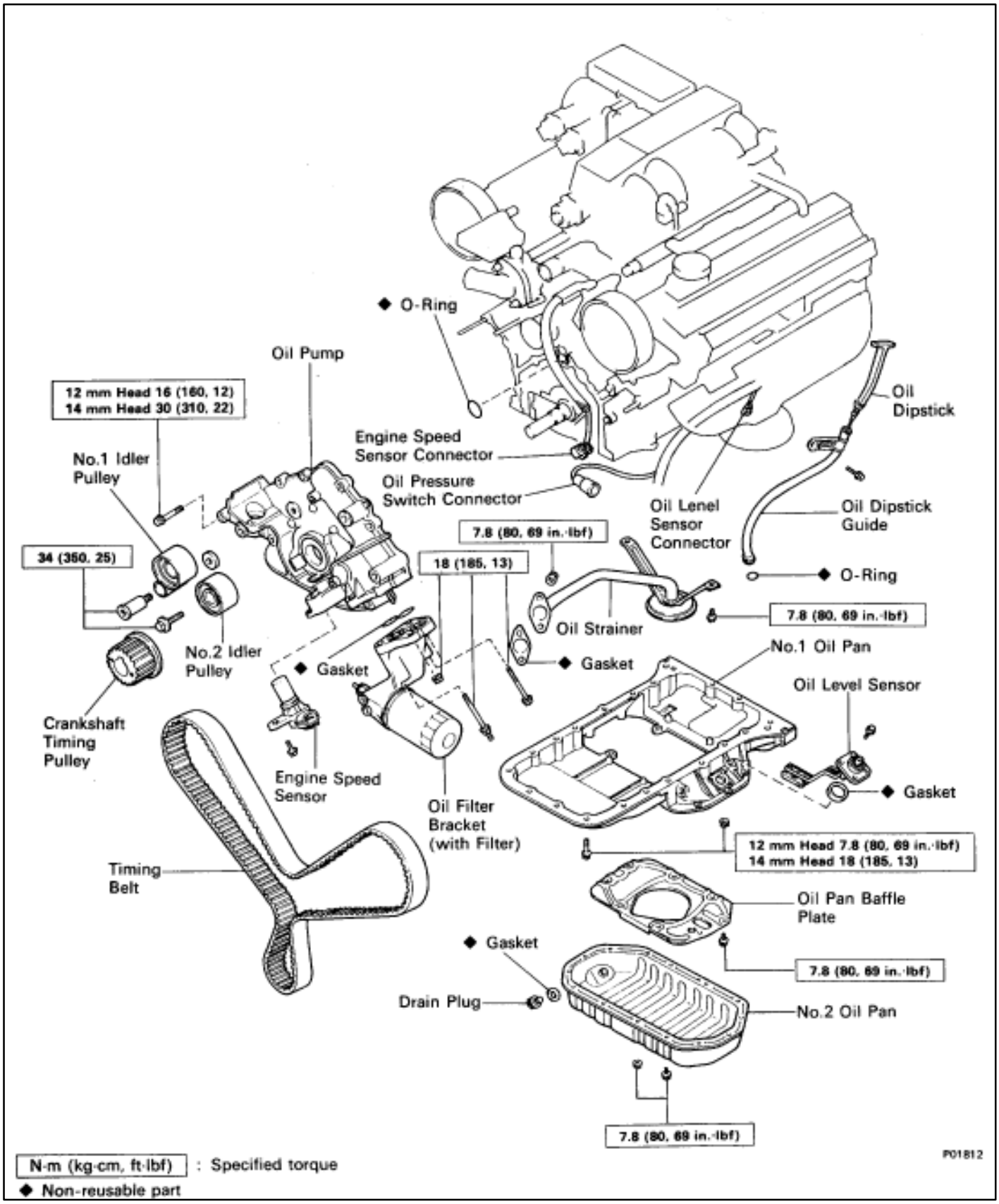

WhereEverybodyKnowsYourName

REMOVAL OF OIL PUMP

(See Components on page LU–8)

HINT: When repairing the oil pump, the oil pan and strainer should be removed and cleaned.

1. **REMOVE ENGINE WITH TRANSMISSION**
   (See pages EM–118 to 128)
2. **SEPARATE ENGINE AND TRANSMISSION**
   (See pages EM–129 to 130)
3. **INSTALL ENGINE TO ENGINE STAND FOR REMOVAL**
4. **REMOVE TIMING BELT**
   (See steps 8 to 35 on pages EM–36 to 43)
5. **REMOVE NO.2 IDLER PULLEY, NO.1 IDLER PULLEY AND CRANKSHAFT TIMING PULLEY**
   (See steps 36 to 38 on page EM–44)

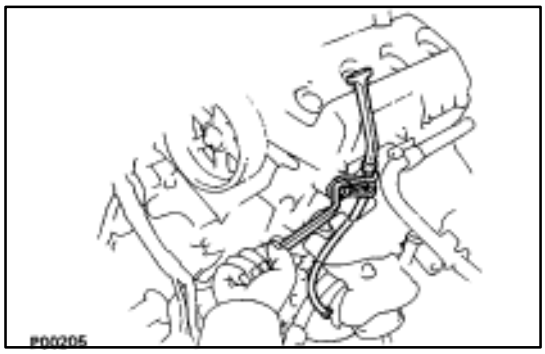

6. **REMOVE OIL DIPSTICK AND GUIDE**
   (a) Remove the mounting bolt.
   (b) Pull out the dipstick guide together with dipstick guide.
   (c) Remove the O–ring from the dipstick guide.

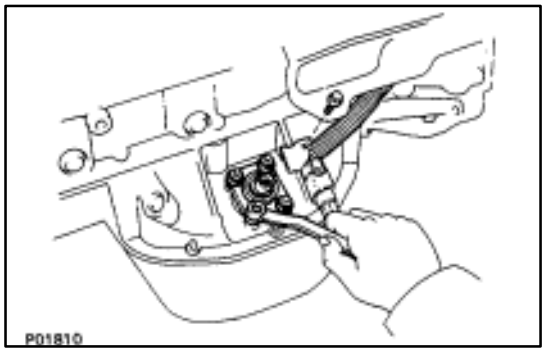

7. **REMOVE BRACKET OF MAIN OXYGEN SENSOR CONNECTOR FROM NO.1 OIL PAN**
   Remove the bolt, and disconnect the connector bracket.
8. **REMOVE OIL LEVEL SENSOR**
   (a) Disconnect the level sensor connector.
   (b) Remove the four mounting bolts, and disconnect the engine wire bracket.
   (c) Remove the level sensor.
   (d) Remove the gasket from the level sensor.

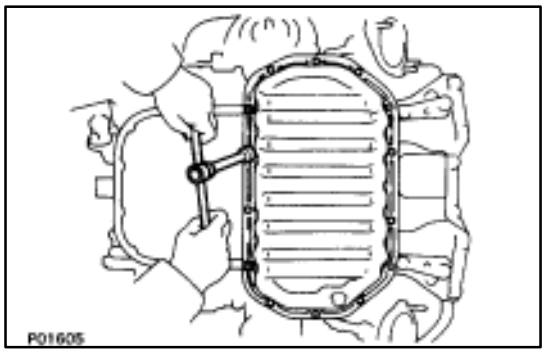

9. **REMOVE NO.2 OIL PAN**
   (a) Remove the twelve mounting bolts and two nuts.

WhereEverybodyKnowsYourName

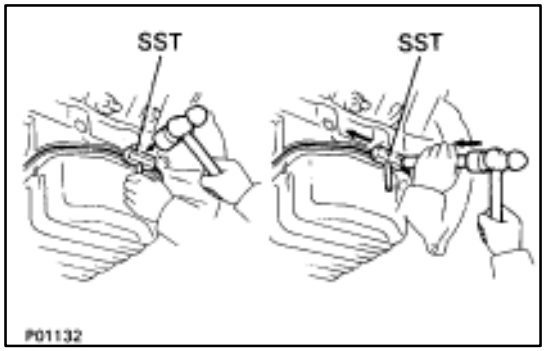

(b) Insert the blade of SST between the No.1 and No.2 oil pan, cut off applied sealer and remove the No.1 oil pan.

SST 09032–00100

NOTICE:

- **Be careful not to damage the No.2 oil pan contact surface of the No.1 oil pan.**
- **Be careful not to damage the oil pan flange.**

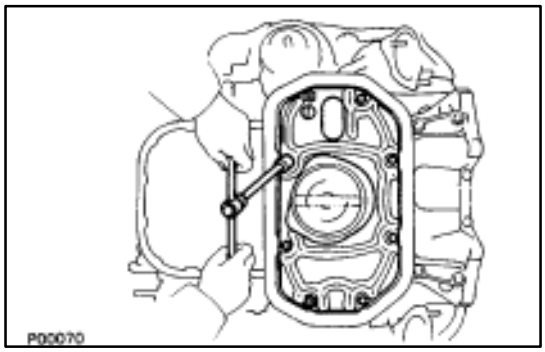

10. REMOVE OIL PAN BAFFLE PLATE

Remove the six bolts, two nuts and baffle plate.

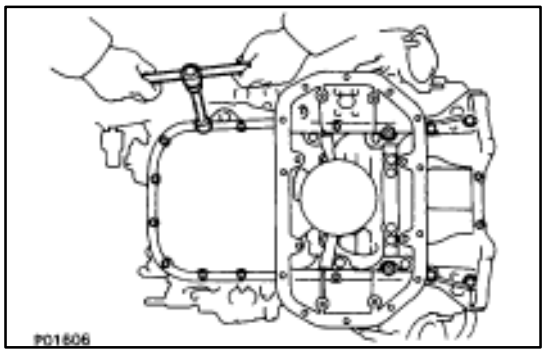

11. REMOVE NO.1 OIL PAN

(a) Remove the sixteen mounting bolts and two nuts.

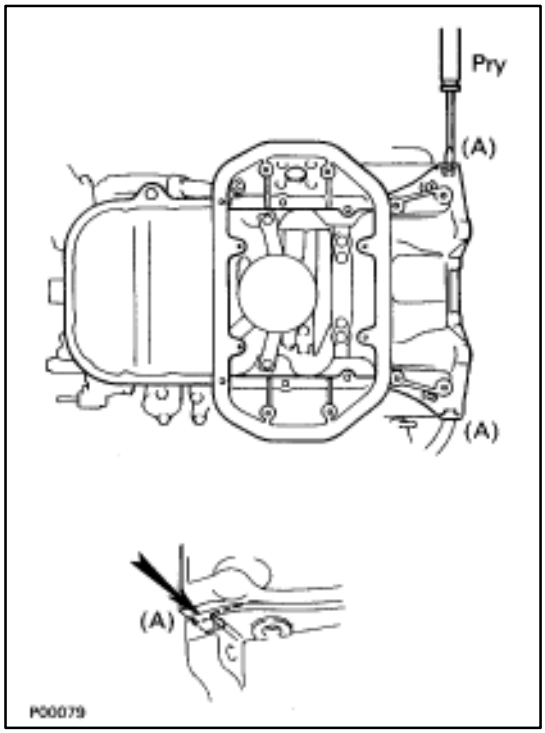

(b) Remove the No.1 oil pan by prying the portions (A) between the cylinder block and No.1 oil pan with a screwdriver.

NOTICE: Be careful not to damage the contact surfaces of the cylinder block and No.1 oil pan.

WhereEverybodyKnowsYourName

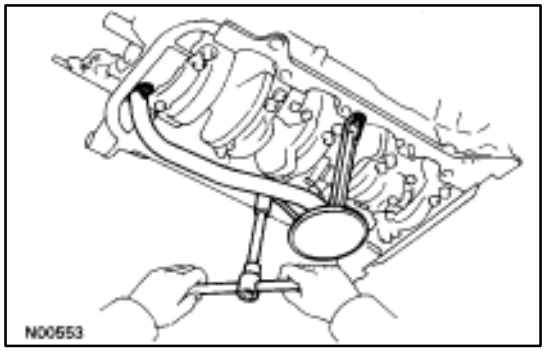

12. REMOVE OIL STRAINER

Remove the two bolts, two nuts, oil strainer and gasket.

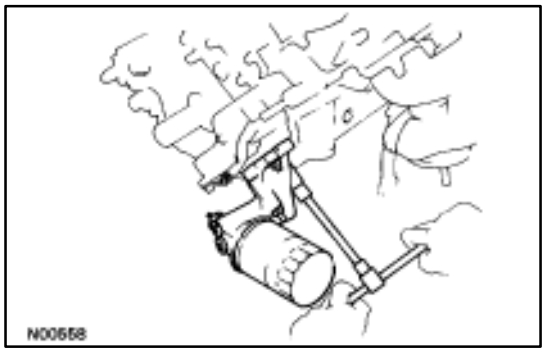

13. REMOVE OIL FILTER BRACKET

(a) Disconnect the oil pressure switch connector.
(b) Remove the two bolts, stud bolt, the filter bracket and oil filter assembly.
(c) Remove the gasket from the filter bracket.

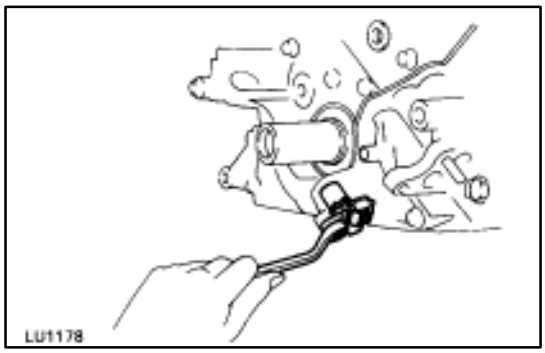

14. REMOVE ENGINE SPEED SENSOR

(a) Disconnect the speed sensor connector.
(b) Remove the bolt and speed sensor.

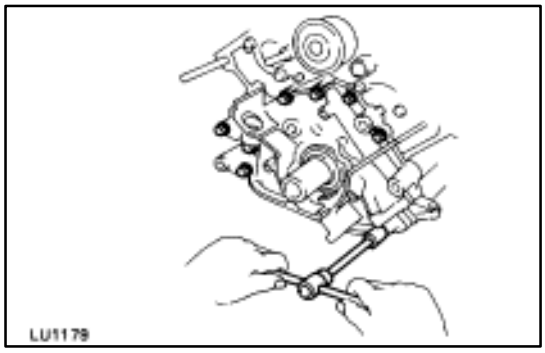

15. REMOVE OIL PUMP

(a) Remove the eight mounting bolts.

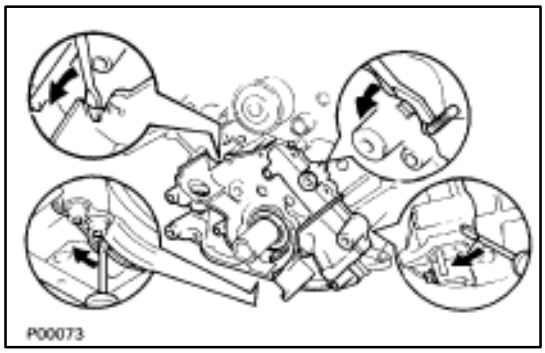

(b) Remove the oil pump by prying the portions between the cylinder block and oil pump with a screwdriver.

NOTICE: Be careful not to damage the contact surfaces of the cylinder block and oil pump.

(c) Remove the O–ring from the cylinder block.

WhereEverybodyKnowsYourName

COMPONENTS FOR DISASSEMBLY AND ASSEMBLY OF OIL PUMP

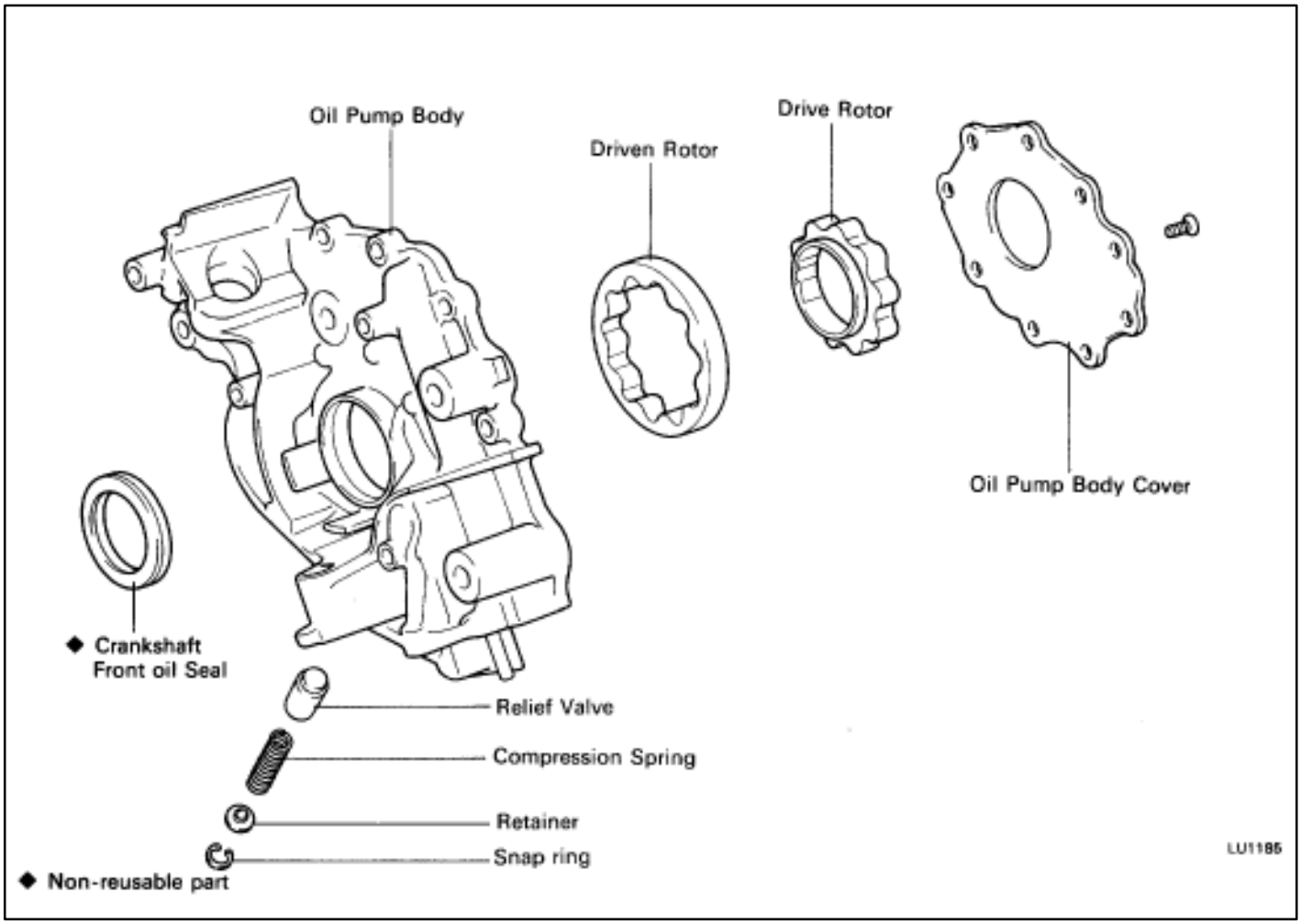

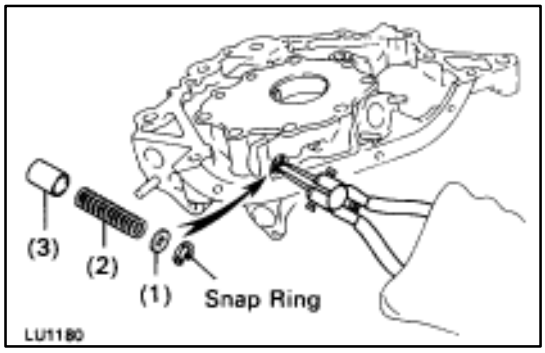

DISASSEMBLY OF OIL PUMP

1. REMOVE RELIEF VALVE

Using snap ring pliers, remove the snap ring and following parts:

(1) Retainer
(2) Compression spring
(3) Relief valve.

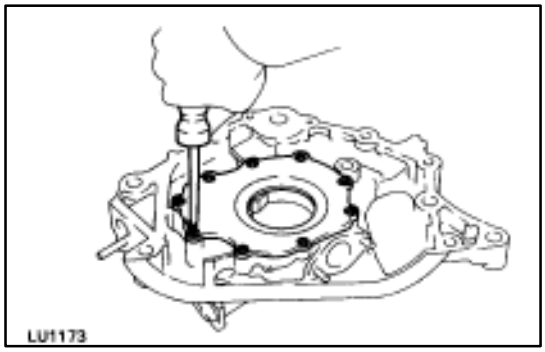

2. REMOVE DRIVE AND DRIVEN ROTORS

Remove the nine screws, pump body cover, the drive and driven rotors.

WhereEverybodyKnowsYourName

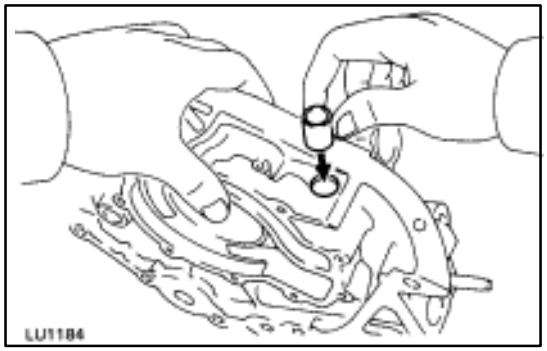

INSPECTION OF OIL PUMP

1. INSPECT RELIEF VALVE

Coat the valve with engine oil and check that it falls smoothly into the valve hole by its own weight.

If it doesn't, replace the relief valve. If necessary, replace the oil pump assembly.

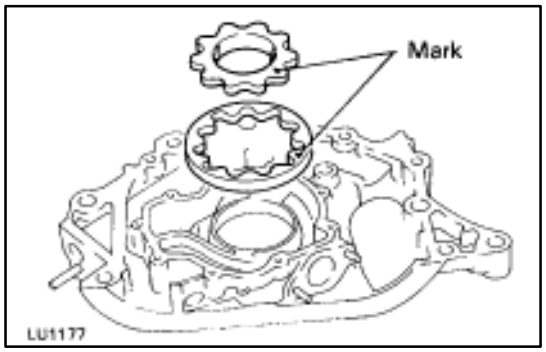

2. INSPECT DRIVE AND DRIVEN ROTORS

A. Place drive and driven rotors into oil pump body

Face the mark of the rotors upward.

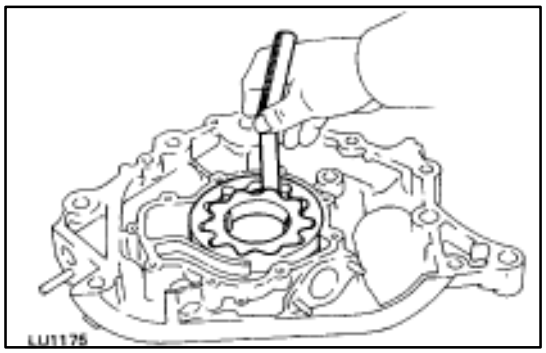

B. Inspect rotor tip clearance

Using a feeler gauge, measure the clearance between the drive and driven rotors.

Standard tip clearance: 0.110–0.240 mm (0.0043–0.0094 in.)

Maximum tip clearance: 0.35 mm (0.0138 in.)

If the tip clearance is greater than maximum, replace the rotors as a set.

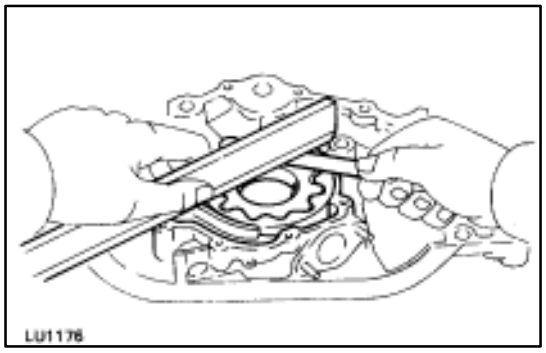

C. Inspect rotor side clearance

Using a feeler gauge and precision straight edge, measure the clearance between the rotors and precision straight edge.

Standard side clearance: 0.030–0.090 mm (0.0012–0.0035 in.)

Maximum side clearance: 0.15 mm (0.0059 in.)

If the side clearance is greater than maximum, replace the rotors as a set. If necessary, replace the oil pump assembly.

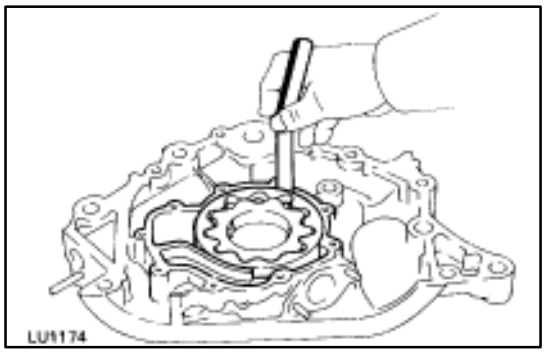

D. Inspect rotor body clearance

Using a feeler gauge, measure the clearance between the driven rotor and pump body.

Standard body clearance: 0.100–0.175 mm (0.0039–0.0069 in.)

Maximum body clearance: 0.30 mm (0.0118 in.)

If the body clearance is greater than maximum, replace the rotors as a set. If necessary, replace the oil pump assembly.

E. Remove drive and driven rotors

WhereEverybodyKnowsYourName

REPLACEMENT OF CRANKSHAFT FRONT OIL SEAL

(See page EM–152)

ASSEMBLY OF OIL PUMP

(See Components on page LU–12)

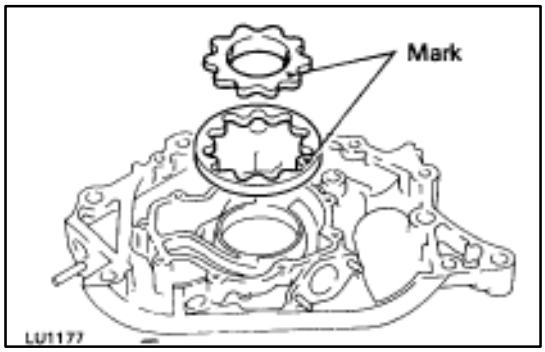

1. INSTALL DRIVE AND DRIVEN ROTORS

(a) Place the drive and driven rotors into oil pump body with the mark facing upward.

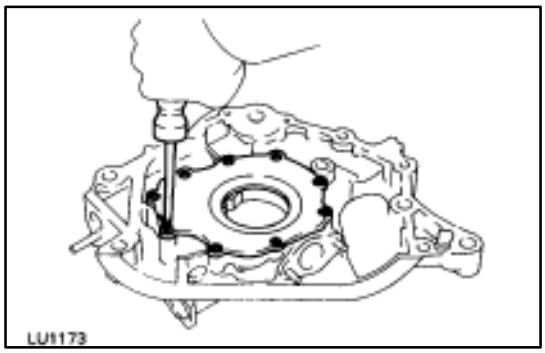

(b) Install the pump body cover with the nine screws.
Torque: 10 N·m (105 kgf·cm, 8 ft·lbf)

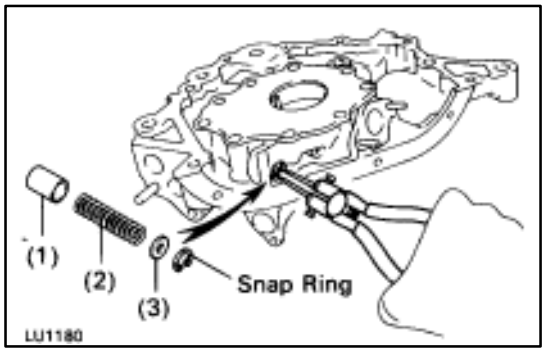

2. INSTALL RELIEF VALVE

(a) Insert the following parts into the oil pump body hole:
(1) Relief valve
(2) Compression spring
(3) Retainer

(b) Using snap ring pliers, install the snap ring.

WhereEverybodyKnowsYourName

INSTALLATION OF OIL PUMP

(See Components on page LU–8)

1. INSTALL OIL PUMP

(a) Remove any old packing (FIPG) material and be careful not to drop any oil on the contact surfaces of the oil pump cylinder block.

- Using a razor blade and gasket scraper, remove all the old packing (FIPG) material from the gasket surfaces and sealing groove.
- Thoroughly clean all components to remove all the loose material.
- Using a non–residue solvent, clean both sealing surfaces.

NOTICE: Do not use a solvent which will affect the painted surfaces.

(b) Apply seal packing to the oil pump as shown in the illustration.

Seal packing: Part No. 08826–00080 or equivalent

- Install a nozzle that has been cut to a 2–3 mm (0.08–0.12 in.) opening.

HINT: Avoid applying an excessive amount to the surface. Be particularly careful near oil passages.

- Parts must be assembled within 5 minutes of application. Otherwise the material must be removed and reapplied.
- Immediately remove nozzle from the tube and reinstall cap.

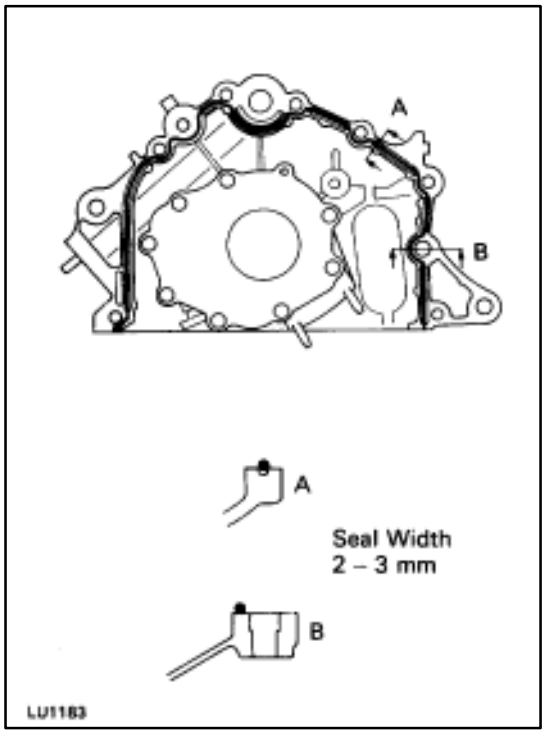

(c) Place a new gasket in position on the cylinder block.

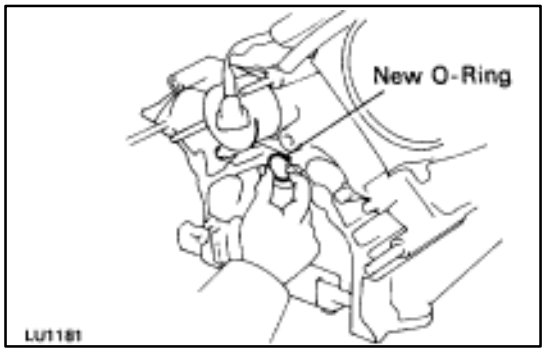

(d) Engage the spline teeth of the oil pump drive rotor with the large teeth of the crankshaft, and slide the oil pump.

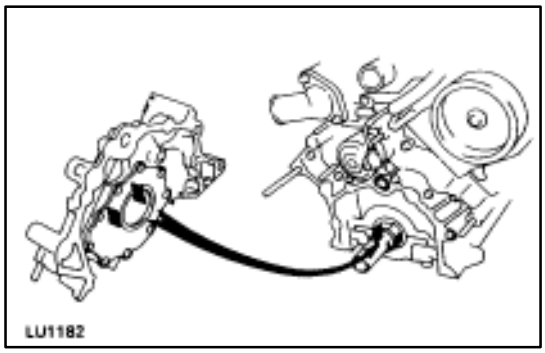

WhereEverybodyKnowsYourName

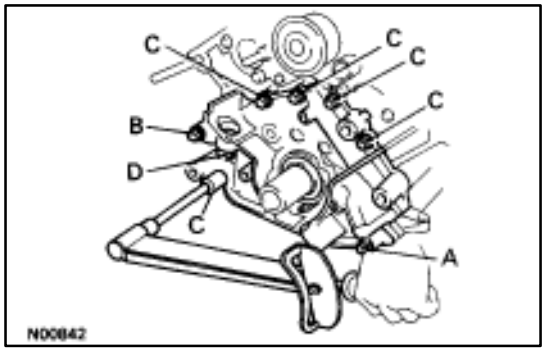

(e) Install the oil pump with the eight bolts.

Torque:

12 mm head 16 N·m (160 kgf·cm, 12 ft·lbf)

14 mm head 30 N·m (310 kgf·cm, 22 ft·lbf)

HINT: Each bolt length is indicated in the illustration.

Bolt length:

A 50 mm (1.97 in.) for 12 mm head
B 106 mm (4.17 in.) for 12 mm head
C 30 mm (1.18 in.) for 12 mm head
D 40 mm (1.57 in.) for 14 mm head

2. INSTALL ENGINE SPEED SENSOR

(a) Install the speed sensor with the bolt.

Torque: 6.4 N·m (65 kgf·cm, 56 in.·lbf)

(b) Connect the speed sensor connector.

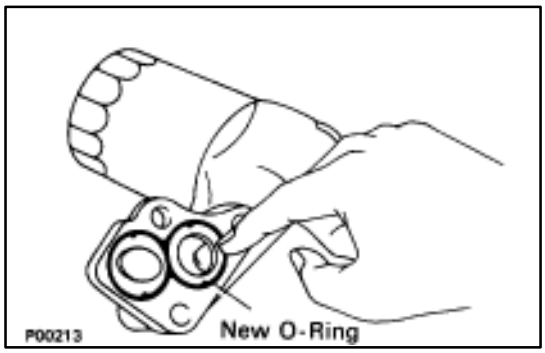

3. INSTALL OIL FILTER BRACKET

(a) Place a new gasket in position on the oil filter bracket.

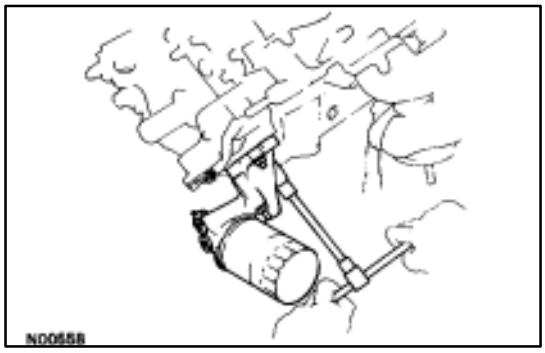

(b) Install the oil filter bracket with the two bolts and stud bolt.

Torque: 18 N·m (185 kgf·cm, 13 ft·lbf)

(c) Connect the oil pressure switch connector.

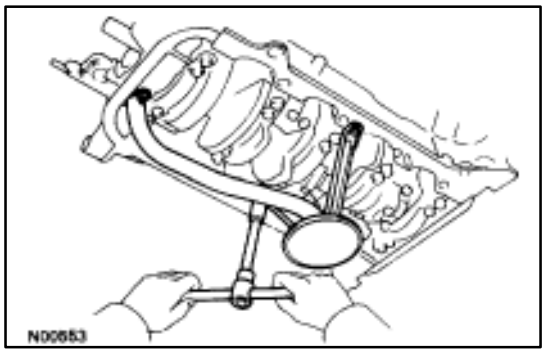

4. INSTALL OIL STRAINER

Install a new gasket and the oil strainer with the two bolts and two nuts.

Torque: 7.8 N·m (80 kgf·cm, 69 in.·lbf)

WhereEverybodyKnowsYourName

5. INSTALL NO.1 OIL PAN

(a) Remove any old packing (FIPG) material and be careful not to drop any oil on the contact surfaces of the No.1 oil pan and cylinder block.

- Using a razor blade and gasket scraper, remove all the old packing (FIPG) material from the gasket surfaces and sealing groove.
- Thoroughly clean all components to remove all the loose material.
- Using a non–residue solvent, clean both sealing surfaces.

NOTICE: Do not use a solvent which will affect the painted surfaces.

(b) Apply seal packing to the No.1 oil pan as shown in the illustration.

Seal packing: Part No. 08826–00080 or equivalent

- Install a nozzle that has been cut to a 2–3 mm (0.08–0.12 in.) opening.

HINT: Avoid applying an excessive amount to the surface.

- Parts must be assembled within 5 minutes of application. Otherwise the material must be removed and reapplied.
- Immediately remove nozzle from the tube and reinstall cap.

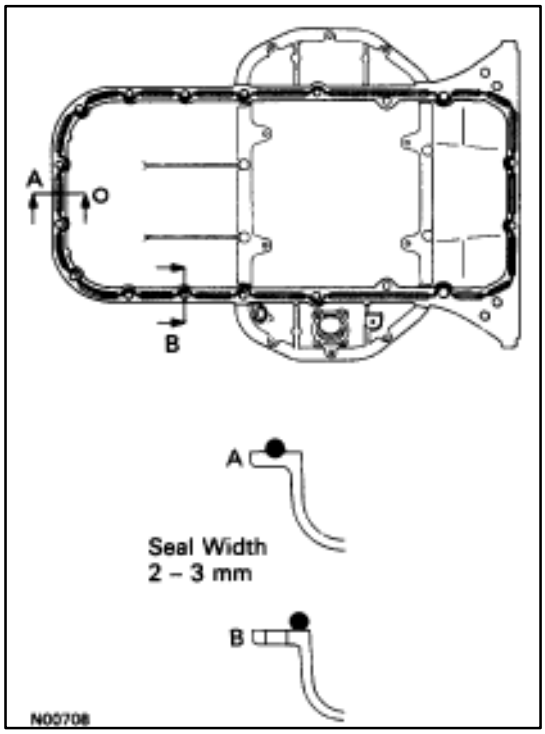

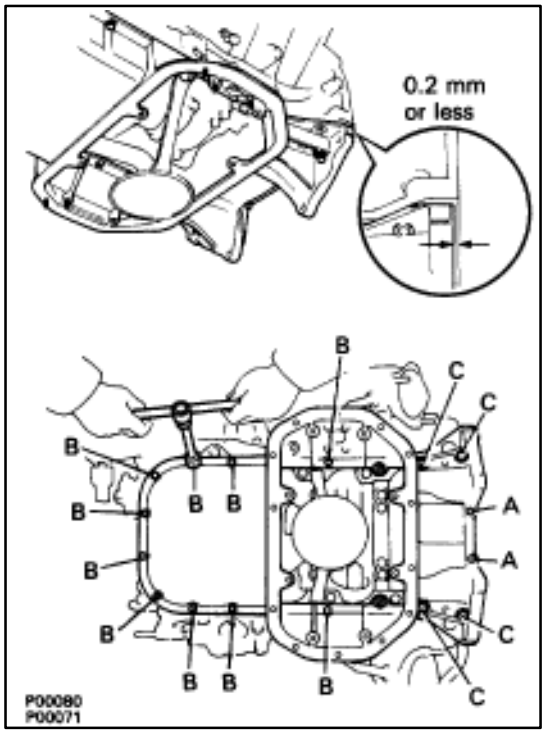

(c) Temporarily install the No.1 oil pan with the sixteen bolts and two nuts.

HINT: Each bolt length is indicated in the illustration.

Bolt length:

A 20 mm (0.78 in.) for 10 mm head
B 35 mm (1.38 in.) for 10 mm head
C 55 mm (2.17 in.) for 12 mm head

(d) Set the No.1 oil pan as shown in the illustration.

NOTICE: Make sure the clearance between the rear ends of the oil pan and cylinder block is 0.2 mm (0.008 in.) or less. If the clearance is more than 0.2 mm (0.008 in.), the oil pan will be stretched.

(e) Tighten the sixteen bolts and two nuts.

Torque:

10 mm head 7.8 N·m (80 kgf·cm, 69 in.·lbf)
12 mm head 18 N·m (185 kgf·cm, 13 ft·lbf)

WhereEverybodyKnowsYourName

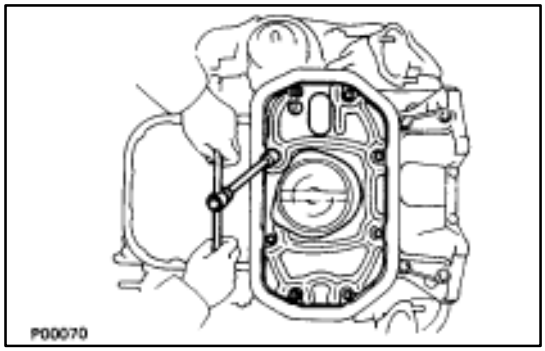

6. INSTALL OIL PAN BAFFLE PLATE

Install the baffle plate with the six bolts and two nuts.

Torque: 7.8 N·m (80 kgf·cm, 69 in.·lbf)

HINT: Use bolts 14 mm (0.55 in.) in length.

7. INSTALL NO.2 OIL PAN

(a) Remove any old packing (FIPG) material and be careful not to drop any oil on the contact surfaces of the No.1 and No.2 oil pans.

- Using a razor blade and gasket scraper, remove all the old packing (FIPG) material from the gasket surfaces and sealing groove.
- Thoroughly clean all components to remove all the loose material.
- Using a non–residue solvent, clean both sealing surfaces.

NOTICE: Do not use a solvent which will affect the painted surfaces.

(b) Apply seal packing to the No.2 oil pan as shown in the illustration.

Seal packing: Part No. 08826–00080 or equivalent

- Install a nozzle that has been cut to a 3–4 mm (0.12–0.16 in.) opening.

HINT: Avoid applying an excessive amount to the surface.

- Parts must be assembled within 5 minutes of application. Otherwise the material must be removed and reapplied.
- Immediately remove nozzle from the tube and reinstall cap.

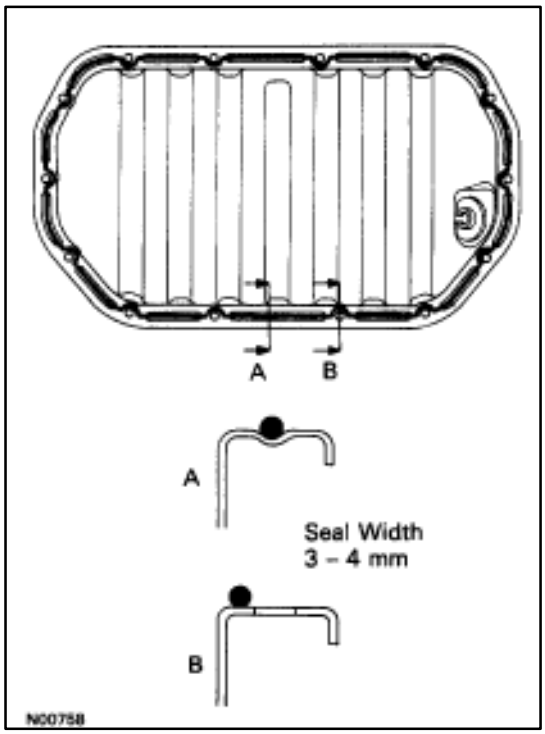

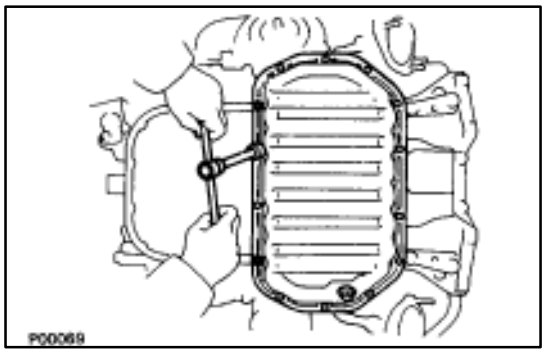

(c) Install the No.2 oil pan with the twelve bolts and two nuts.

Torque: 7.8 N·m (80 kgf·cm, 69 in.·lbf)

HINT: Use bolts 14 mm (0.55 in.) in length.

WhereEverybodyKnowsYourName

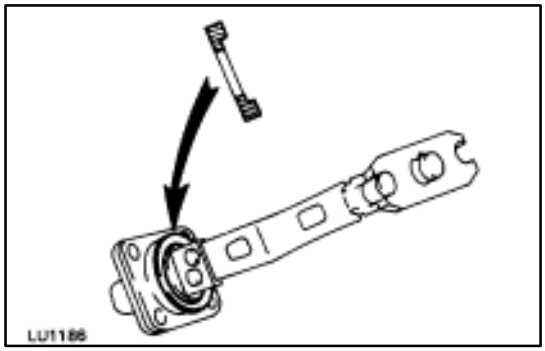

8. INSTALL OIL LEVEL SENSOR

(a) Install a new gasket to the level sensor.

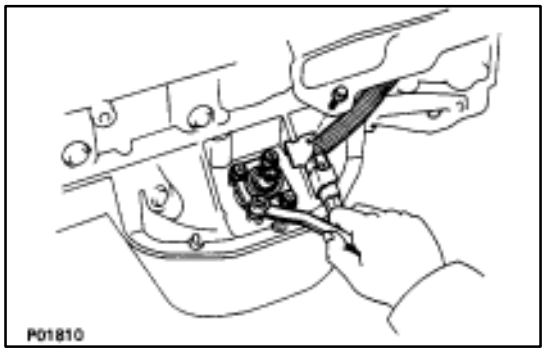

(b) Install the level sensor with the four bolts.

Torque: 5.4 N·m (55 kgf·cm, 48 in.·lbf)

HINT: Use bolts 16 mm (0.63 in.) in length.

(c) Connect the level sensor connector.

9. INSTALL BRACKET OF MAIN OXYGEN SENSOR CONNECTOR TO NO.1 OIL PAN

Install the connector bracket with bolt.

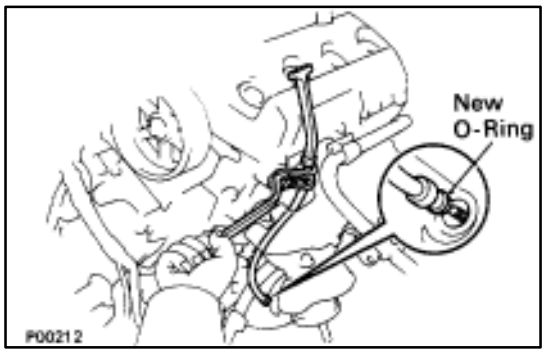

10. INSTALL OIL DIPSTICK GUIDE AND DIPSTICK

(a) Install a new O–ring to the dipstick guide.

(b) Apply soapy water to the O–ring.

(c) Push in the dipstick guide into the guide hole of the No.1 oil pan.

(d) Install the engine wire bracket and dipstick guide with bolt.

(e) Install the oil dipstick.

11. INSTALL CRANKSHAFT TIMING PULLEY, NO.1 IDLER PULLEY AND NO.2 IDLER PULLEY

(See steps 1 to 3 on pages EM–46 and 47)

12. INSTALL TIMING BELT

(See steps 4 to 35 on pages EM–47 to 56)

13. REMOVE ENGINE STAND FROM ENGINE

14. ASSEMBLE ENGINE AND TRANSMISSION

(See pages EM–165 and 166)

15. INSTALL ENGINE WITH TRANSMISSION

(See pages EM–167 to 177)

WhereEverybodyKnowsYourName

OIL PUMP

COMPONENTS FOR REMOVAL AND INSTALLATION

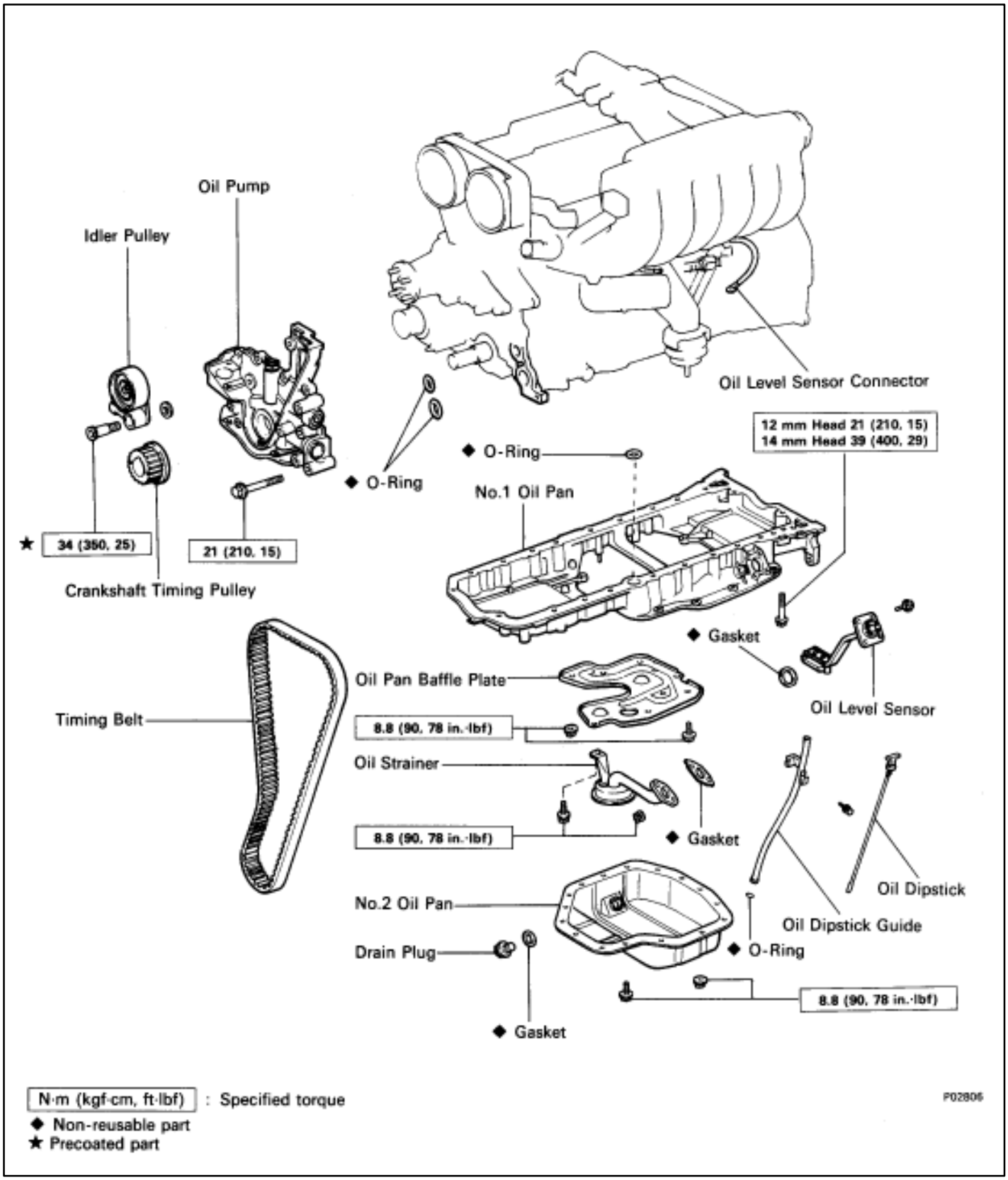

WhereEverybodyKnowsYourName

REMOVAL OF OIL PUMP

(See Components on page LU–9)

HINT: When repairing the oil pump, the oil pan and strainer should be removed and cleaned.

1. **REMOVE ENGINE WITH TRANSMISSION**
   (See pages EM–62 to 72)
2. **SEPARATE ENGINE AND TRANSMISSION**
   (See page EM–73)
3. **INSTALL ENGINE TO ENGINE STAND FOR REMOVAL**
4. **REMOVE TIMING BELT**
   (See steps 2 to 10 on pages EM–24 to 26)
5. **REMOVE IDLER PULLEY AND CRANKSHAFT TIMING PULLEY**
   (See steps 11 and 12 on page EM–26)

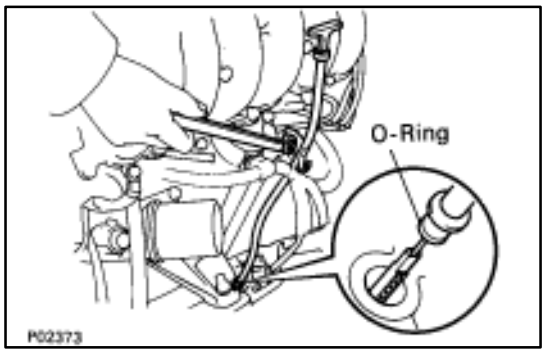

6. **REMOVE OIL DIPSTICK AND GUIDE**
   (a) Remove the mounting bolt.
   (b) Pull out the dipstick guide together with dipstick.
   (c) Remove the O–ring from the dipstick guide.

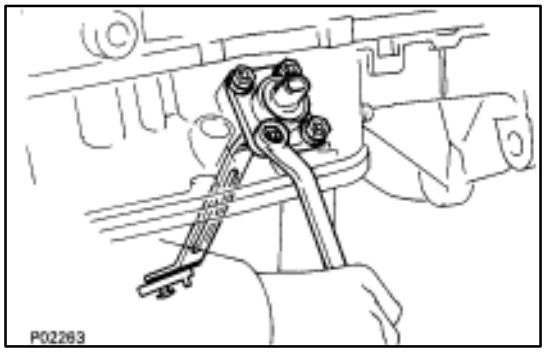

7. **REMOVE OIL LEVEL SENSOR**
   (a) Disconnect the level sensor connector.
   (b) Remove the four mounting bolts and level sensor.
   (c) Remove the gasket from the level sensor.
   NOTICE: Be careful not to drop the oil level sensor when removing it.

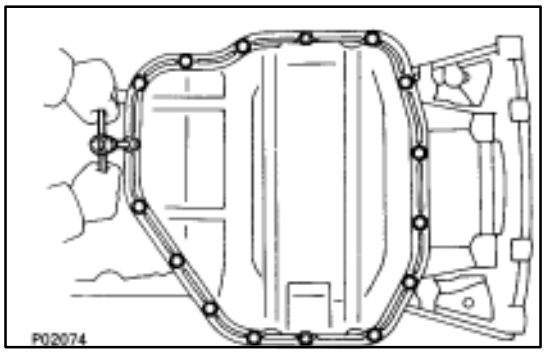

8. **REMOVE NO.2 OIL PAN**
   (a) Remove the 14 mounting bolts and two nuts.

WhereEverybodyKnowsYourName

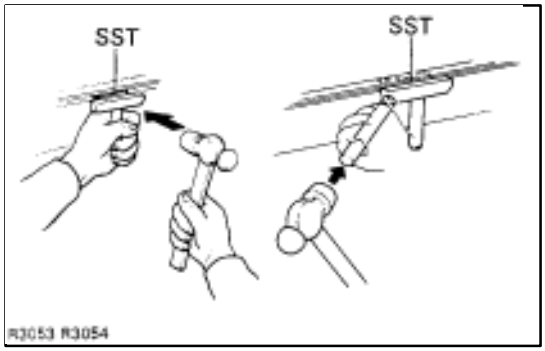

(b) Insert the blade of SST between the No.1 and No.2 oil pan, break the seal of the applied sealer and remove the No.1 oil pan.

SST 09032–00100

NOTICE:

- **Be careful not to damage the No.2 oil pan contact surface of the No.1 oil pan.**
- **Be careful not to damage the oil pan flange.**

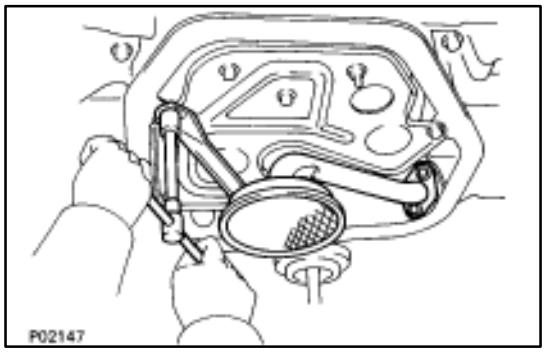

9. REMOVE OIL STRAINER

Remove the bolt, two nuts, oil strainer and gasket.

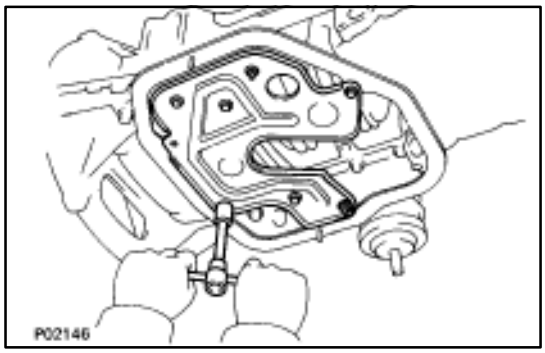

10. REMOVE OIL PAN BAFFLE PLATE

Remove the five bolts, two nuts and baffle plate.

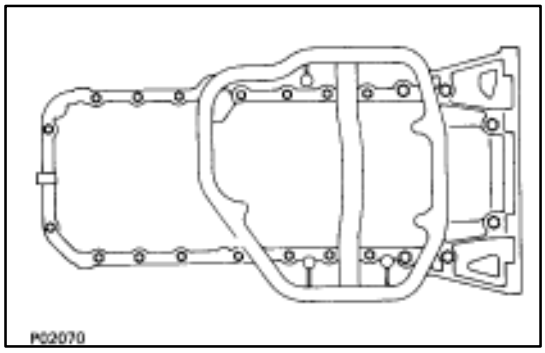

11. REMOVE NO.1 OIL PAN

(a) Remove the 22 mounting bolts.

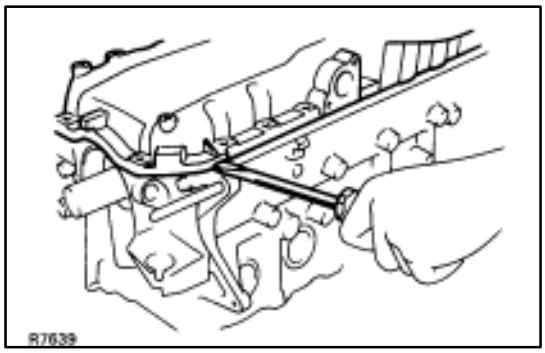

(b) Remove the No.1 oil pan by prying the portions between the cylinder block and No.1 oil pan with a screwdriver.

NOTICE: Be careful not to damage the contact surfaces of the cylinder block and No.1 oil pan.

(c) Remove the O–ring from the cylinder block.

WhereEverybodyKnowsYourName

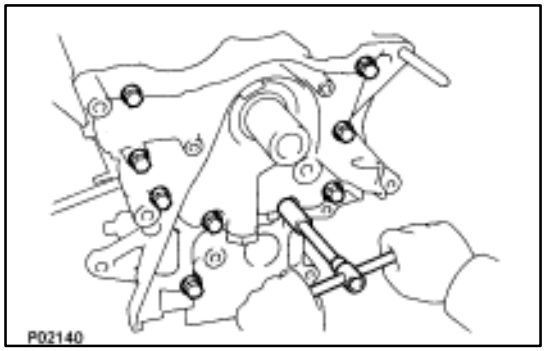

12. REMOVE OIL PUMP

(a) Remove the nine mounting bolts.

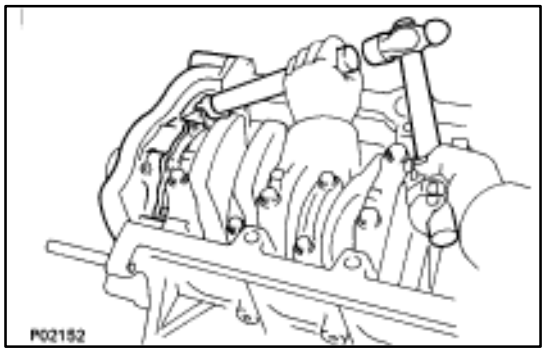

(b) Using a hammer and a brass bar, remove the oil pump by carefully tapping the oil pump body.

(c) Remove the two O–ring from the cylinder block.

COMPONENTS FOR DISASSEMBLY AND ASSEMBLY OF OIL PUMP

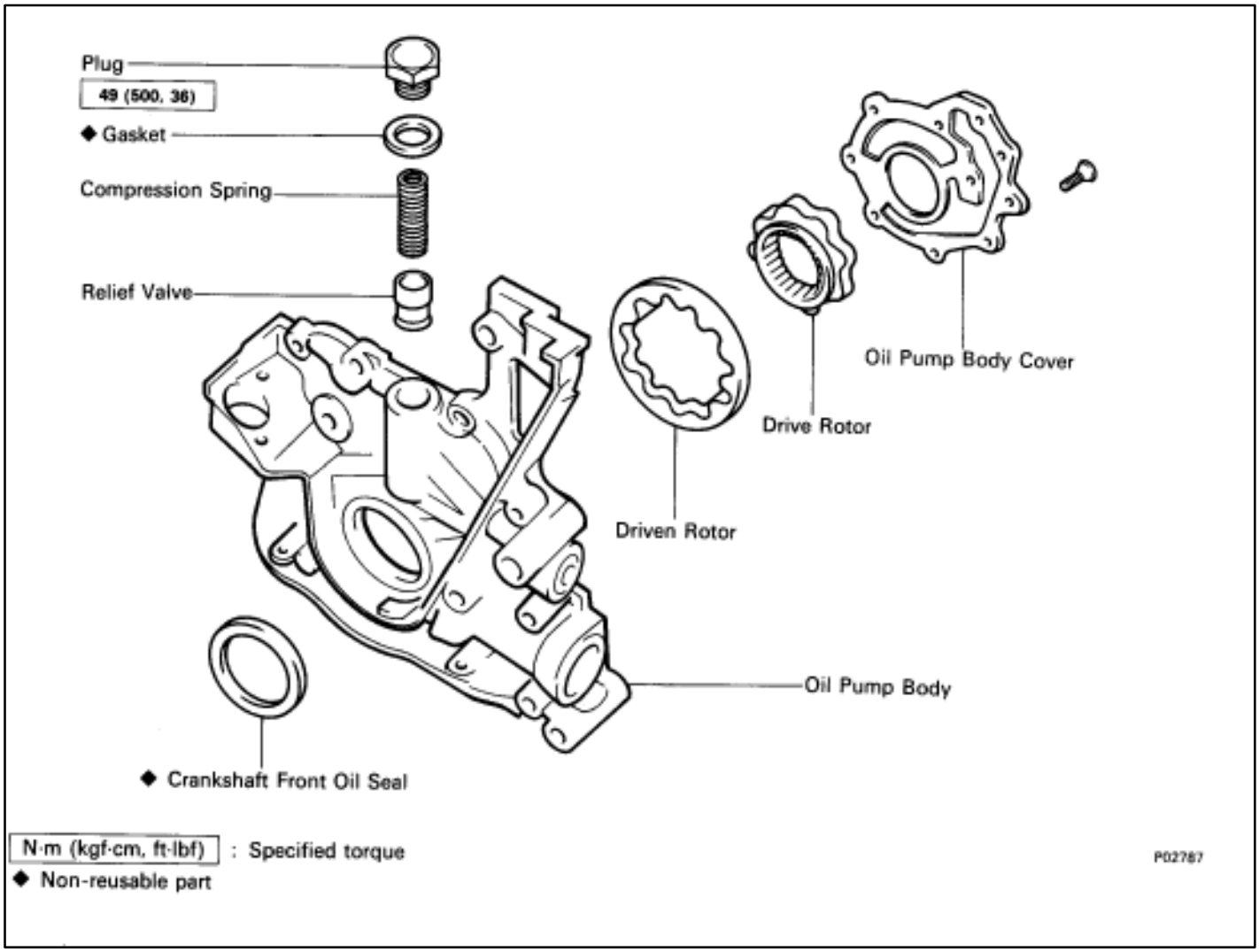

WhereEverybodyKnowsYourName

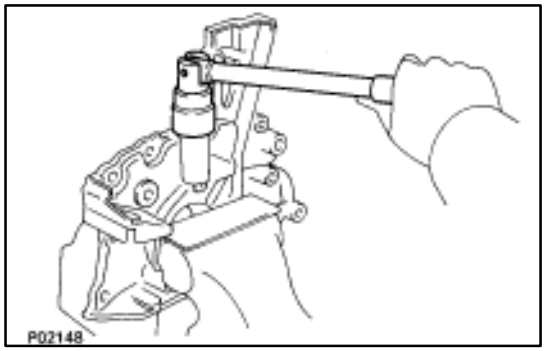

DISASSEMBLY OF OIL PUMP

(See Components on page LU–12)

1. REMOVE RELIEF VALVE

(a) Slighty mount the pump body in a vise.

(b) Remove the plug, gasket, compression spring and relief valve.

NOTICE: Be careful not to damage the pump body.

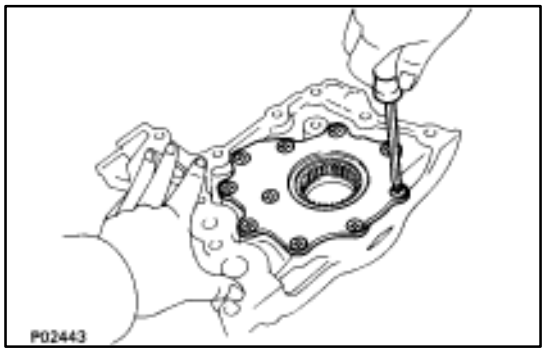

2. REMOVE DRIVE AND DRIVEN ROTORS

Remove the ten screws, pump body cover, the drive and driven rotors.

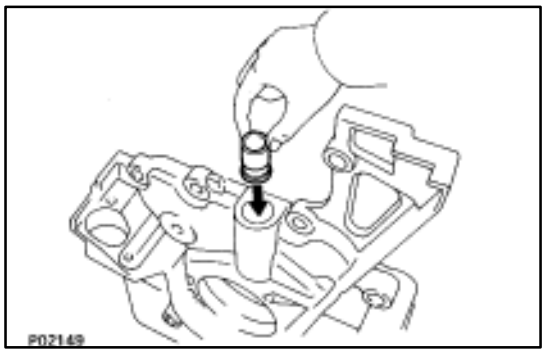

INSPECTION OF OIL PUMP

1. INSPECT RELIEF VALVE

Coat the valve with engine oil and check that it falls smoothly into the valve hole on its own weight.

If it doesn't, replace the relief valve. If necessary, replace the oil pump assembly.

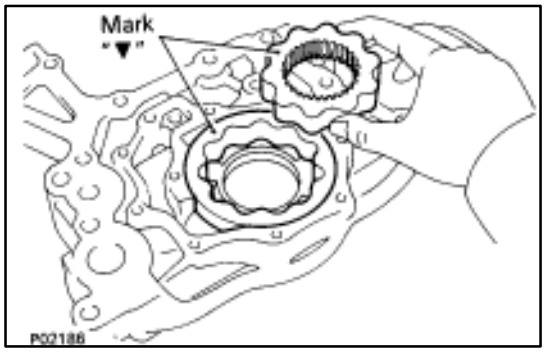

2. INSPECT DRIVE AND DRIVEN ROTORS

A. Place drive and driven rotors into oil pump body

The marks on the rotors must face up.

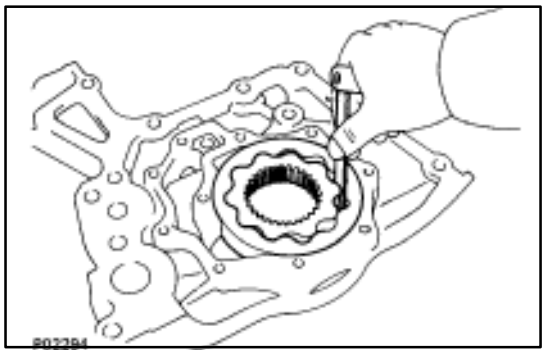

B. Inspect rotor tip clearance

Using a feeler gauge, measure the clearance between the drive and driven rotors.

Standard tip clearance: 0.310–0.490 mm (0.0122–0.0193 in.)

Maximum tip clearance: 0.53 mm (0.0209 in.)

If the tip clearance is greater than maximum, replace the rotors as a set.

WhereEverybodyKnowsYourName

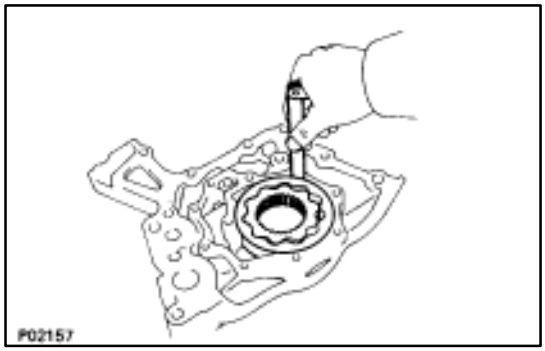

C. Inspect rotor body clearance

Using a feeler gauge, measure the clearance between the driven rotor and pump body.

Standard body clearance: 0.100–0.175 mm (0.0039–0.0069 in.)

Maximum body clearance: 0.20 mm (0.0079 in.)

If the body clearance is greater than maximum, replace the rotors as a set. If necessary, replace the oil pump assembly.

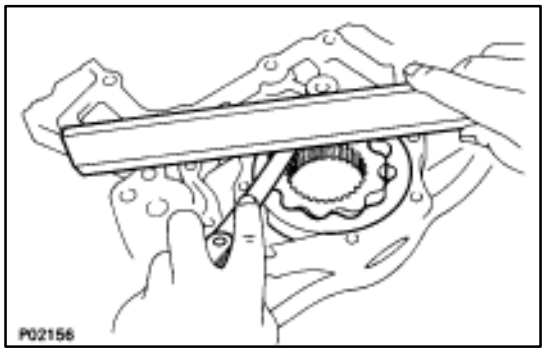

D. Inspect rotor side clearance

Using a feeler gauge and precision straight edge, measure the clearance between the rotors and precision straight edge.

Standard side clearance: 0.030–0.090 mm (0.0012–0.0035 in.)

Maximum side clearance: 0.12 mm (0.0047 in.)

If the side clearance is greater than maximum, replace the rotors as a set. If necessary, replace the oil pump assembly.

E. Remove drive and driven rotors

REPLACEMENT OF CRANKSHAFT FRONT OIL SEAL

(See page EM–92)

ASSEMBLY OF OIL PUMP

(See Components on page LU–12)

1. INSTALL DRIVE AND DRIVEN ROTORS

(a) Place the drive and driven rotors into oil pump body with the mark facing upward.

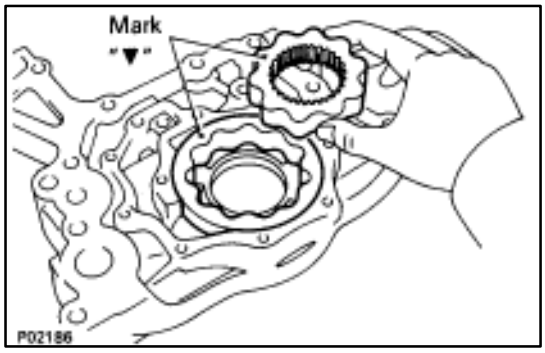

(b) Install the pump body cover with the ten screws.

Torque: 10 N·m (105 kgf·cm, 8 ft·lbf)

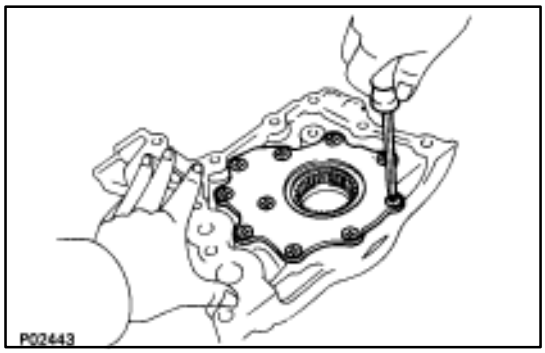

WhereEverybodyKnowsYourName

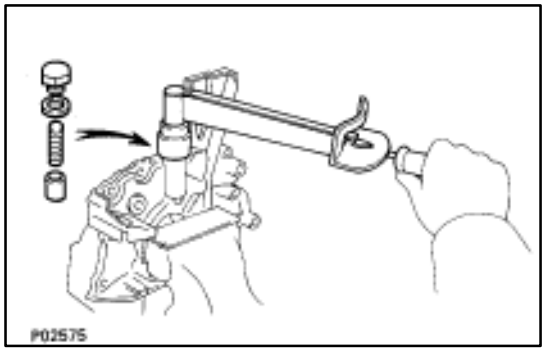

2. INSTALL RELIEF VALVE

(a) Slighty mount the pump body in a vise.

NOTICE: Be careful not to damage the pump body.

(b) Insert the relief valve and compression spring into the oil pump body hole.

(c) Install the plug with a new gasket.

Torque: 49 N·m (500 kgf·cm, 36 ft·lbf)

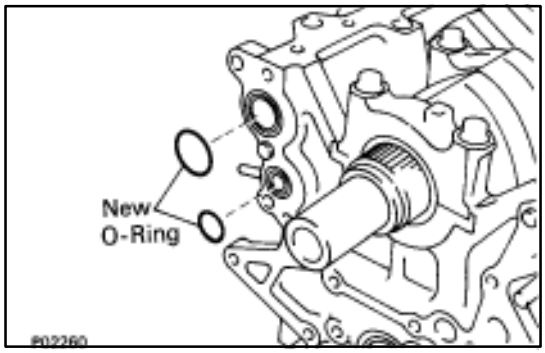

INSTALLATION OF OIL PUMP

(See Components on page LU–9)

1. INSTALL OIL PUMP

(a) Place two new O–rings in position on the cylinder block.

(b) Remove any old packing (FIPG) material and be careful not to drop any oil on the contact surfaces of the oil pump cylinder block.

- Using a razor blade gasket scraper, remove all the old packing (FIPG) material from the gasket surfaces and sealing groove.
- Thoroughly clean all components to remove all the debris.
- Using a non–residue solvent, clean both sealing surfaces.

NOTICE: Do not use a solvent which will affect the painted surfaces.

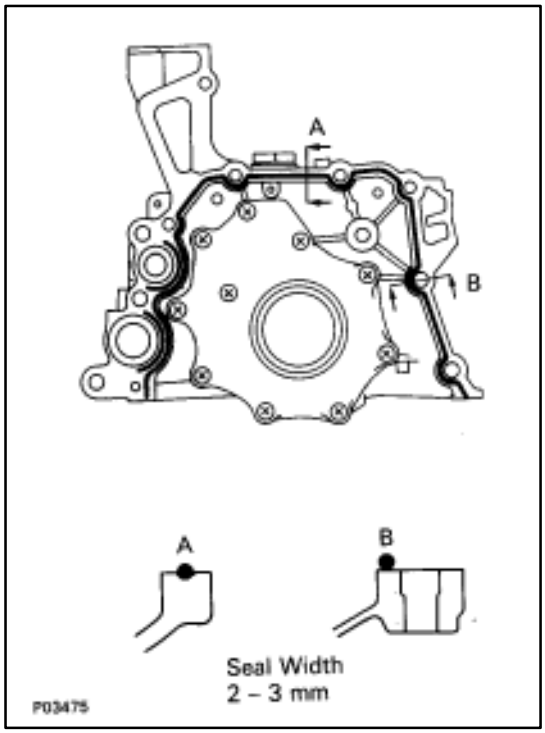

(c) Apply seal packing to the oil pump as shown in the illustration.

Seal packing: Part No. 08826–00080 or equivalent

- Install a nozzle that has been cut to a 2–3 mm (0.08–0.12 in.) opening.

HINT: Avoid applying an excessive amount to the surface. Be particularly careful near oil passages.

- Parts must be assembled within 5 minutes of application. Otherwise the material must be removed and reapplied.
- Immediately remove nozzle from the tube and reinstall cap.

WhereEverybodyKnowsYourName

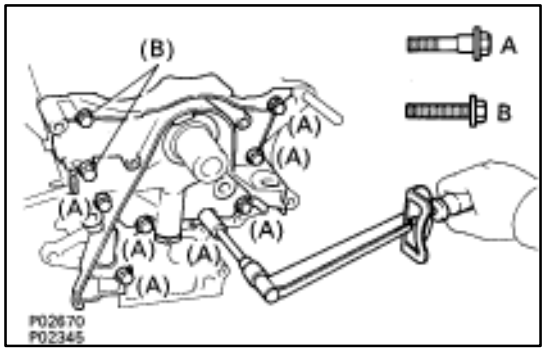

(d) Install the oil pump with the seven bolts (A) and two bolts (B).

Torque: 21 N·m (210 kgf·cm, 15 ft·lbf)

HINT: Hand tighten the (A) bolts first.

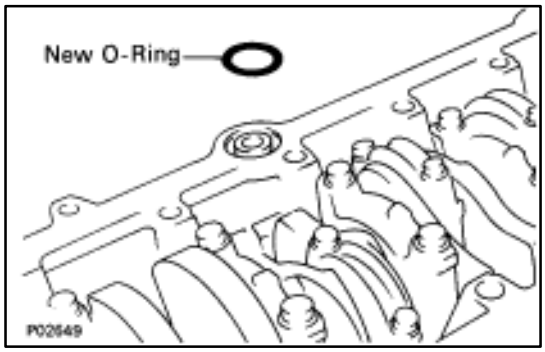

2. INSTALL NO.1 OIL PAN

(a) Place a new O–ring in the position on the cylinder block.

(b) Remove any old packing (FIPG) material and be careful not to drop any oil on the contact surfaces of the No.1 oil pan and cylinder block.

- Using a razor blade and gasket scraper, remove all the old packing (FIPG) material from the gasket surfaces and sealing groove.
- thoroughly clean all components to remove all the debris.
- Using a non–residue solvent, clean both sealing surfaces.

NOTICE: Do not use a solvent which will affect the painted surfaces.

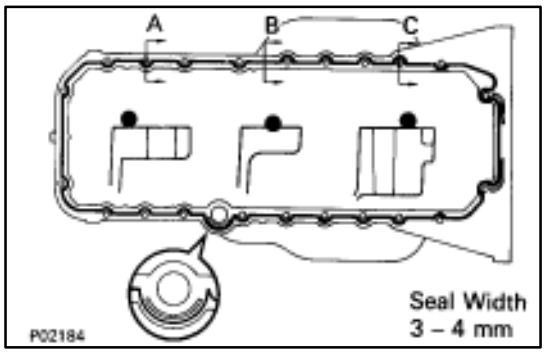

(c) Apply seal packing to the No.1 oil pan as shown in the illustration.

Seal packing: Parts No. 08826–00080 or equivalent

- Install a nozzle that has been cut to a 3–4 mm (0.12–0.16 in.) opening.

HINT: Avoid applying an excessive amount to the surface.

- Parts must be assembled within 5 minutes of application. Otherwise the material must be removed and reapplied.
- Immediately remove nozzle from the tube and reinstall cap.

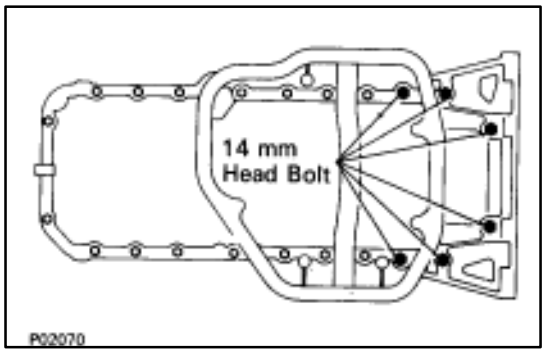

(d) Install the No.1 oil pan with the 22 bolts.

Torque:

12 mm head bolt 21 N·m (210 kgf·cm, 15 ft·lbf)
14 mm head bolt 39 N·m (400 kgf·cm, 29 ft·lbf)

WhereEverybodyKnowsYourName

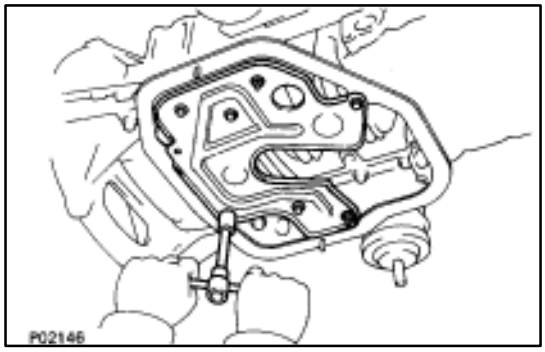

3. INSTALL OIL PAN BAFFLE PLATE

Install the baffle plate with the five bolts and two nuts.

Torque: 8.8 N·m (90 kgf·cm, 78 in.·lbf)

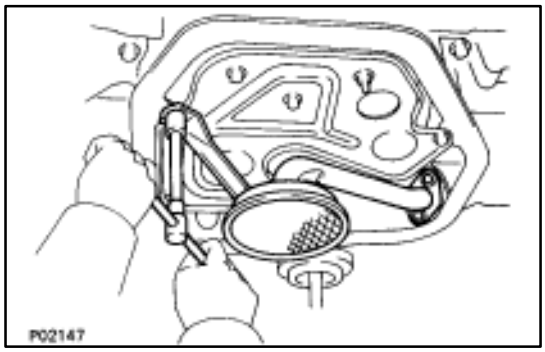

4. INSTALL OIL STRAINER

Install a new gasket and the oil strainer with the bolt and two nuts.

Torque: 8.8 N·m (90 kgf·cm, 78 in.·lbf)

5. INSTALL NO.2 OIL PAN

(a) Remove any old packing (FIPG) material and be careful not to drop any oil on the contact surfaces of the No.1 and No.2 oil pans.

- Using a razor blade and gasket scraper, remove all the old packing (FIPG) material from the gasket surfaces and sealing groove.
- Thoroughly clean all components ro remove all the debris.
- Using a non–residue solvent, clean both sealing surfaces.

NOTICE: Do not use a solvent which will affect the painted surfaces.

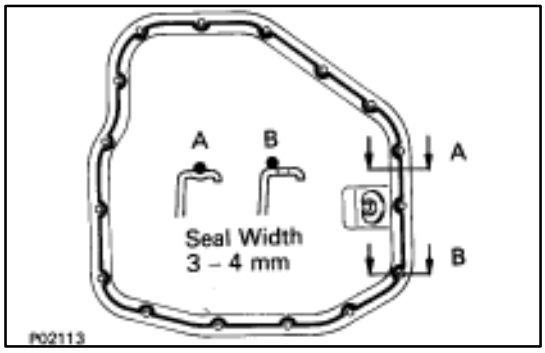

(b) Apply seal packing to the No.2 oil pan as shown in the illustration.

Seal packing: Part No. 08826–00080 or equivalent

- Install a nozzle that has been cut to a 3–4 mm (0.12–0.16 in.) opening.

HINT: Avoid applying an excessive amount to the surface.

- Parts must be assembled within 5 minutes of application. Otherwise the material must be removed and reapplied.
- Immediately remove nozzle from the tube and reinstall cap.

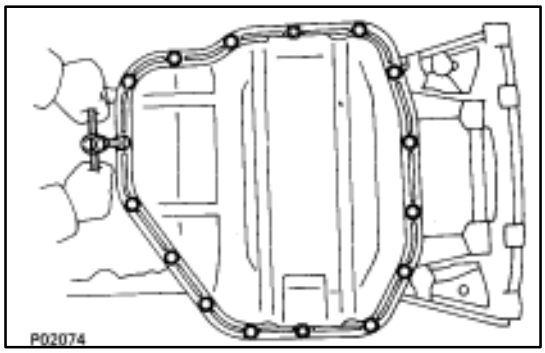

(c) Install the No.2 oil pan with the 14 bolts and two nuts.

Torque: 8.8 N·m (90 kgf·cm, 78 in.·lbf)

WhereEverybodyKnowsYourName

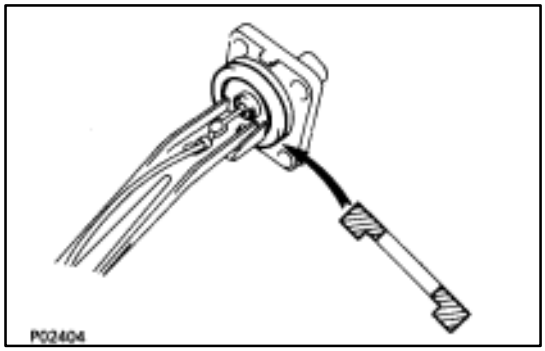

6. INSTALL OIL LEVEL SENSOR

(a) Install a new gasket to the level sensor.

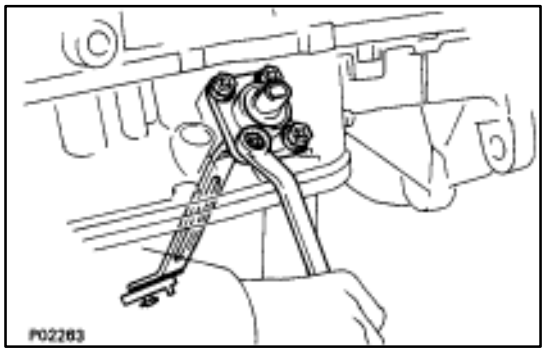

(b) Install the level sensor with the four bolts.

Torque: 5.4 N·m (55 kgf·cm, 48 in.·lbf)

(c) Connect the level sensor connector.

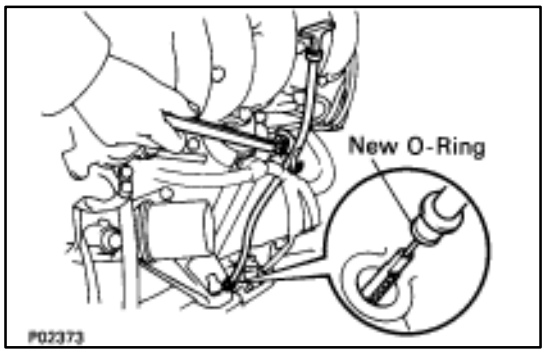

7. INSTALL OIL DIPSTICK GUIDE AND DIPSTICK

(a) Install a new O–ring on the dipstick guide.

(b) Apply soapy water on the O–ring.

(c) Push in the dipstick guide into the guide hole of the No.1 oil pan.

(d) Install the guide with the mounting bolt.

8. INSTALL CRANKSHAFT TIMING PULLEY AND IDLER PULLEY

(See steps 1 and 2 on page EM–29)

9. INSTALL TIMING BELT

(See steps 3 to 14 on pages EM–29 to 33)

10. REMOVE ENGINE STAND FROM ENGINE

11. ASSEMBLE ENGINE AND TRANSMISSION

(See page EM–103)

12. INSTALL ENGINE WITH TRANSMISSION

(See pages EM–104 to 112)

WhereEverybodyKnowsYourName

SERVICE SPECIFICATIONS

SERVICE DATA

MA002–0B

Engine	Spark plug		
	Recommended spark plug	ND	PK20R11
		NGK	BKR6EP11
	Correct electrode gap		1.1 mm (0.043 in.)
	Firing order		1 – 8 – 4 – 3 – 6 – 5 – 7 – 2
	Valve clearance	Intake	0.15 – 0.25 mm (0.006 – 0.010 in.)
		Exhaust	0.25 – 0.35 mm (0.010 – 0.014 in.)
Brake	Front and rear brakes		
	Pad thickness	Limit	1.0 mm (0.039 in.)
	Disc thickness	Limit (Front)	30.0 mm (1.181 in.)
		(Rear)	15.0 mm (0.591 in.)
	Disc runout	Limit	0.05 mm (0.0020 in.)
	Parking brake		
	Lining thickness	Limit	1.0 mm (0.039 in.)
	Drum inside diameter	Limit	191 mm (7.520 in.)
Chassis	Steering linkage		
	Steering wheel freeplay	Limit	30 mm (1.18 in.)
	Ball joint		
	Vertical play	Limit	0.3 mm (0.012 in.)

MA002–0B

TORQUE SPECIFICATIONS

Part tightened		N·m	kgf·cm	ft·lbf
Spark plug x Cylinder head		18	180	13
Front seat x Body		37	375	27
Front suspension crossmember x Body	for nut	127	1,300	94
	for bolt	201	2,050	148
Rear suspension member x Body		176	1,800	130
Rear suspension member rear cushion x Body		38	390	28

WhereEverybodyKnowsYourName

MAINTENANCE

GENERAL NOTES:

- There are 2 separate maintenance schedules, namely A and B, which apply to different driving conditions. Find out how the vehicle is driven, select the appropriate schedule and service the vehicle accordingly.
- Every service item in the periodic maintenance list must be performed.
- Next to the columns of periods in the schedule, reference pages have been added for easy access to service data and procedures necessary for each operation.
- The service interval for scheduled maintenance is determined by the odometer reading or time interval, whichever comes first, shown in the schedule.
- Maintenance services after the last period should be performed at the same interval as before unless otherwise noted.
- Skipping even 1 item in the list can cause the engine to run poorly and increase exhaust emissions.

WhereEverybodyKnowsYourName

(1UZ–FE)
MAINTENANCE SCHEDULE

MA04E–01

SCHEDULE A

CONDITIONS:

- Towing a trailer, using a camper or car top carrier.
- Repeated short trips of less than 8 km (5 miles) with outside temperature remaining below freezing.
- Extensive idling and/or low speed driving for long distances, such as police, taxi or door–to–door delivery use.
- Operating on dusty, rough, muddy or salt spread roads.

Maintenance operation: A = Check and adjust if necessary.
R = Replace, change or lubricate.
I = Inspect and correct or replace if necessary.

System	Service interval (Odometer reading or months, whichever comes first) / Maintenance items	Maintenance services beyond 96,000 km (60,000 miles) should continue to be performed at the same intervals shown for each maintenance schedule.																		See page (item No.)
	x 1,000 km	1.6	6	12	18	24	30	36	42	48	54	60	66	72	78	84	90	96	Months	
	x 1,000 miles	1	3.75	7.5	11.25	15	18.75	22.5	26.25	30	33.75	37.5	41.25	45	48.75	52.5	56.25	60		
ENGINE	Timing belt (1)																	R	–	MA-6 (item 1)
	Valve clearance																	A	A: Every 72 months	MA-10 (item 12)
	Drive belt	I: First period, 96,000 km (60,000 miles) or 72 months. I: After that every 12,000 km (7,500 miles) or 12 months.																		MA-6 (item 2)
	Engine oil and oil filter ★		R	R	R	R	R	R	R	R	R	R	R	R	R	R	R	R	R: Every 6 months	MA-9 (item 6)
	Engine coolant	R: First period, 72,000 km (45,000 miles) or 36 months. R: After that every 48,000 km (30,000 miles) or 24 months.																		MA-9 (item 7)
	Exhaust pipes and mountings					I				I				I				I	I: Every 24 months	MA-10 (item 11)
FUEL	Air filter (2)★		I	I	I	I	I	I	I	R	I	I	I	I	I	I	I	R	I: Every 6 months R: Every 36 months	MA-7 (item 3, 4)
	Fuel lines and connections (3)									I								I	I: Every 36 months	MA-10 (item 10)
	Fuel tank cap gasket																	R	R: Every 72 months	MA-10 (item 9)
IGNITION	Spark plugs (Platinum tipped type)																	R	R: Every 72 months	MA-8 (item 5)
EVAP	Charcoal canister																	I	I: Every 72 months	MA-9 (item 8)

V04408

▼mark indicates maintenance which is part of the warranty conditions for the Emission Control Systems. The warranty period is in accordance with the owner's guide or the warranty booklet.
(▼: California and New York specification vehicles only)

(1) Applicable to vehicles operated under conditions of extensive idling and/or low speed driving for long distances such as police, taxi or door–to–door delivery use.
(2) Applicable when operating mainly on dusty roads.
(3) Includes inspection of fuel tank band and vaper vent system.

WhereEverybodyKnowsYourName

System	Service interval (Odometer reading or months, whichever comes first) / Maintenance items	Maintenance services beyond 96,000 km (60,000 miles) should continue to be performed at the same intervals shown for each maintenance schedule.																		See page (item No.)
		x 1,000 km	1.6	6	12	18	24	30	36	42	48	54	60	66	72	78	84	90	96	Months	
		x 1,000 miles	1	3.75	7.5	11.25	15	18.75	22.5	26.25	30	33.75	37.5	41.25	45	48.75	52.5	56.25	60		
BRAKES	Brake linings and drums (4)				I		I		I		I		I		I		I		I	I: Every 12 months	MA-11 (item 15)
	Brake pads and discs (Front and rear)				I		I		I		I		I		I		I		I	I: Every 12 months	MA-12 (item 14)
	Brake fluid (5)		I				I				R				I				R	I: Every 24 months R: Every 36 months	MA-13 (item 16)
	Brake line pipes and hoses						I				I				I				I	I: Every 24 months	MA-11 (item 13)
CHASSIS	Steering linkage				I		I		I		I		I		I		I		I	I: Every 12 months	MA-13 (item 17)
	SRS airbag		I: First period, 10 years. I: After that every 2 years.																		MA-14 (item 18)
	Ball joints and dust covers				I		I		I		I		I		I		I		I	I: Every 12 months	MA-15 (item 20)
	Automatic transmission, and differential oil		I				R				R				R				R	R: Every 24 months	MA-15 (item 21, 22)
	Steering gear housing oil (6)		I				I				I				I				I	I: Every 24 months	MA-14 (item 19)
	Bolts and nuts on chassis and body (7)		I		I		I		I		I		I		I		I		I	I: Every 12 months	MA-17 (item 23)
	Body inspection		I		I		I		I		I		I		I		I		I	I: Every 12 months	MA-17 (item 24)
	Road test		I		I		I		I		I		I		I		I		I	I: Every 12 months	MA-17 (item 25)

V04535

(4) Also applicable to drum lining for parking brake. For other usage conditions, refer to SCHEDULE B.
(5) Check for leakage.
(6) Check for oil leaks from steering gear housing.
(7) Applicable only when operating mainly on rough, muddy roads. The applicable parts are listed below. For other usage conditions, refer to SCHEDULE B.
- 2 Front and rear suspension member to cross body.
- 2 Bolts for seat installation.

WhereEverybodyKnowsYourName

MA033–0C

SCHEDULE B

CONDITIONS:

Conditions others than those listed for SCHEDULE A.

Maintenance operation: A = Check and adjust if necessary.
R = Replace, change or lubricate.
I = Inspect and correct or replace if necessary.

System	Service interval (Odometer reading or months, whichever comes first) / Maintenance items	Maintenance service beyond 96,000 km (60,000 miles) should continue to be performed at the same intervals shown for each maintenance schedule.										See page (item No.)
		x 1,000 km	1.6	12	24	36	48	60	72	84	96	Months	
		x 1,000 miles	1	7.5	15	22.5	30	37.5	45	52.5	60		
ENGINE	Valve clearance										A	A: Every 72 months	MA-10 (item 12)
	Drive belt		I: First period, 96,000 km (60,000 miles) or 72 months. I: After that every 12,000 km (7,500 miles) or 12 months.										MA-6 (item 2)
	Engine oil and oil filter ★			R	R	R	R	R	R	R	R	R: Every 12 months	MA-9 (item 6)
	Engine coolant		R: First period, 72,000 km (45,000 miles) or 36 months. R: After that every 48,000 km (30,000 miles) or 24 months.										MA-9 (item 7)
	Exhaust pipes and mountings						I				I	I: Every 36 months	MA-10 (item 11)
FUEL	Air filter ★						R				R	R: Every 36 months	MA-7 (item 4)
	Fuel lines and connections (1)						I				I	I: Every 36 months	MA-10 (item 10)
	Fuel tank cap gasket										R	R: Every 72 months	MA-10 (item 9)
IGNITION	Spark plugs (Platinum tipped type)										R	R: Every 72 months	MA-8 (item 5)
EVAP	Charcoal canister										I	I: Every 72 months	MA-9 (item 8)
BRAKES	Brake linings and drums (2)				I		I		I		I	I: Every 24 months	MA-11 (item 15)
	Brake pads and discs (Front and rear)				I		I		I		I	R: Every 24 months	MA-12 (item 14)
	Brake fluid (3)		I		I		R		I		R	I: Every 24 months R: Every 36 months	MA-13 (item 16)
	Brake line pipes and hoses				I		I		I		I	I: Every 24 months	MA-11 (item 13)
CHASSIS	Steering linkage				I		I		I		I	I: Every 24 months	MA-13 (item 17)
	SRS airbag		I: First period, 10 years. I: After that every 2 years.										MA-14 (item 18)
	Ball joints and dust covers				I		I		I		I	I: Every 24 months	MA-15 (item 20)
	Automatic transmission and differential oil (3)		I		I		I		I		I	I: Every 24 months	MA-15 (item 21)
	Steering gear housing oil (4)		I		I		I		I		I	I: Every 24 months	MA-14 (item 19)
	Bolts and nuts on chassis and body (5)		I		I		I		I		I	I: Every 24 months	MA-17 (item 23)
	Body inspection		I	I	I	I	I	I	I	I	I	I: Every 12 months	MA-17 (item 24)
	Road test		I	I	I	I	I	I	I	I	I	I: Every 12 months	MA-17 (item 25)

V04409

▼ mark indicates maintenance which is part of the warranty conditions for the Emission Control Systems. The warranty period is in accordance with the owner's guide or the warranty booklet.
(▼: California and New York specification vehicles only)

(1) Includes inspection of fuel tank band and vaper vent system.
(2) Also applicable to drum lining for parking brake.
(3) Check for leakage.
(4) Check for oil leaks from steering gear housing.
(5) The applicable parts are listed below.
  2 Front and rear suspension member to cross body.
  2 Bolts for seat installation.

WhereEverybodyKnowsYourName

PREPARATION

EG0AZ–0A

RECOMMENDED TOOLS

	09200–00010 Engine Adjust Kit	

MA009–02

EQUIPMENT

Dial indicator with magnetic base	
Micrometer	
Mirror	Brake hose
Steel square	
Thermometer	
Torque wrench	
Vernier calipers	

MA00B–02

COOLANT

Item	Capacity	Classification
Engine coolant (w/ Heater)	10.8 liters (11.4 US qts, 9.5 Imp. qts)	Ethylene–glycol base

MA00D–0E

LUBRICANT

Item	Capacity	Classification
Engine oil (Drain and refill) w/ Oil filter change w/o Oil filter change	 4.8 liters (5.1 US qts, 4.2 Imp. qts) 4.5 liters (4.8 US qts, 4.0 Imp. qts)	API grade SG or SH, Energy–Conserving II or ILSAC multigrade, and recommended viscosity oil with SAE 5W–30 being preferred engine oil
Brake fluid	—	SAE J1703 or FMVSS No.116 DOT3
Automatic transmission fluid (Drain and refill)	1.9 liters (2.0 US qts, 1.7 Imp. qts)	ATF TYPE T–II
Differential oil	1.35 liters (1.43 US qts, 1.19 Imp. qts)	Hypoid gear oil API GL–5 Above–18°C (0°F): SAE 90 Below–18°C (0°F): SAE 80W–90 or 80W

WhereEverybodyKnowsYourName

MAINTENANCE OPERATIONS

MA035–04

ENGINE

Cold Engine Operations

1. REPLACE TIMING BELT

(a) Remove the timing belt.
(See page EG–46)

(b) Install the timing belt.
(See page EG–59)

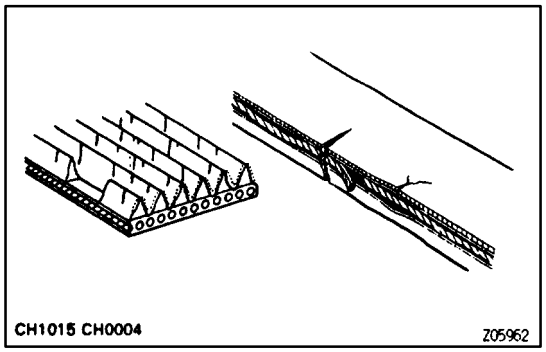

2. INSPECT DRIVE BELT

HINT: A belt tensioner is used, so checking the belt tension is not necessary.

(a) Visually check the drive belt for excessive wear, frayed cords, etc.
If necessary, replace the drive belt.
HINT:

- Cracks on the rib side of a drive belt are considered acceptable. If the drive belt has chunks missing from the ribs, it should be replaced.

- The drive belt tension can be released by turning the belt tensioner counterclockwise. The pulley bolt for the belt tensioner has a left–hand thread.

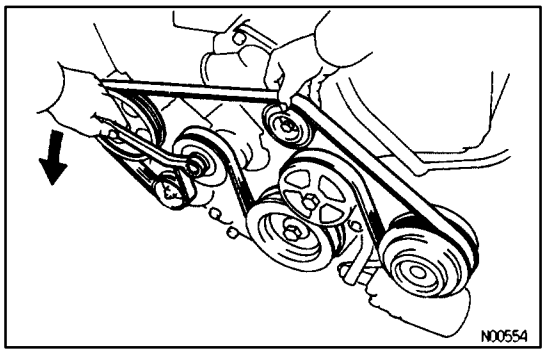

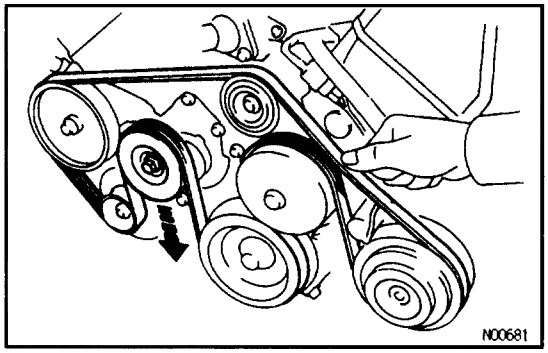

(b) Check the belt tensioner operation.

- Check that the belt tensioner moves downward when the drive belt is pressed down at the points indicated in the illustration with approx. 98 N (10 kgf, 22.0 lbf) of force.
- Check the alignment of the belt tensioner pulley to make sure the drive belt will not slip off the pulley.

If necessary, replace the belt tensioner.

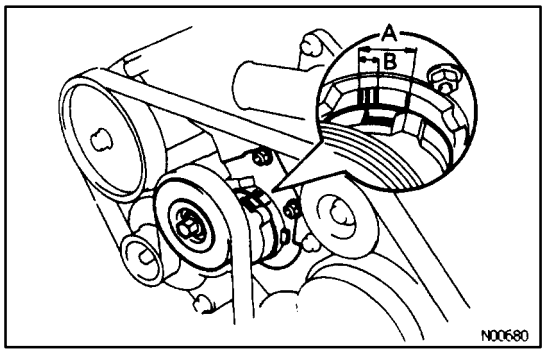

- Check that the arrow mark on the belt tensioner falls within area A of the scale.

If it is outside area A, replace the drive belt.
HINT:

- When a new belt is installed, it should lie within area B. If not, the drive belt is not correct.

WhereEverybodyKnowsYourName

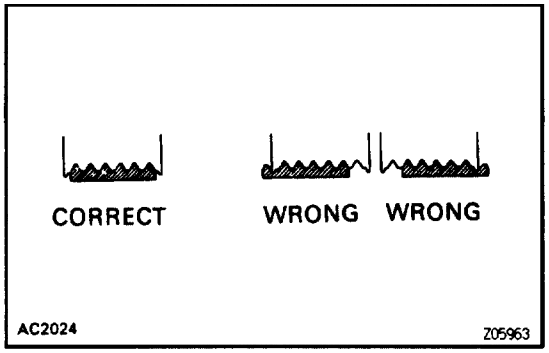

- After installing a drive belt, check that it fits properly in the ribbed grooves.
- Check by hand to confirm that the belt has not slipped out of the groove on the bottom of the pulley.

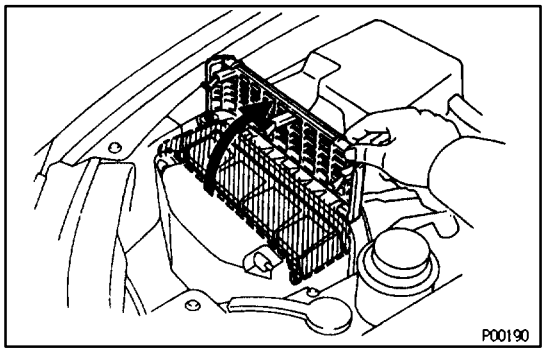

3. INSPECT AIR FILTER

(a) Open the air cleaner cap.

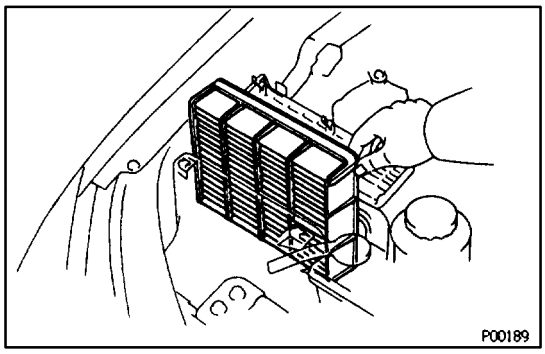

(b) Remove the air filter.

(c) Visually check that the air filter is not excessively damaged or oily.
If necessary, replace the air filter.

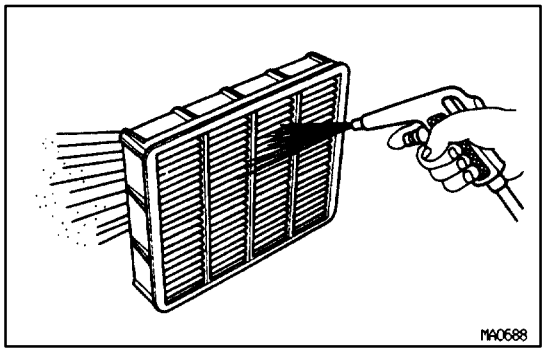

(d) Clean the air filter with compressed air.
First blow from the inside thoroughly, then blow off from the outside of the air filter.

(e) Reinstall the air filter and air cleaner cap.

4. REPLACE AIR FILTER

Replace the air filter with a new one.

WhereEverybodyKnowsYourName

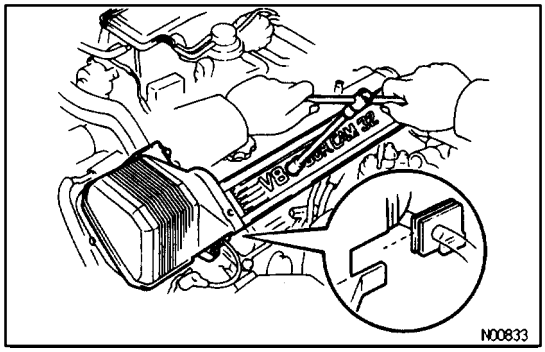

5. REPLACE SPARK PLUGS

(See Ignition System, steps 1 to 8 on pages IG–16 to 18)

(a) Remove the No.3 timing belt covers.

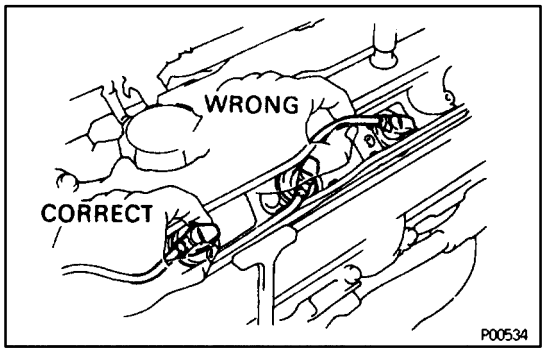

(b) Disconnect the high–tension cords at the rubber boot. Do not pull on the high–tension cords.

NOTICE: Pulling on or bending the cords may damage the conductor inside.

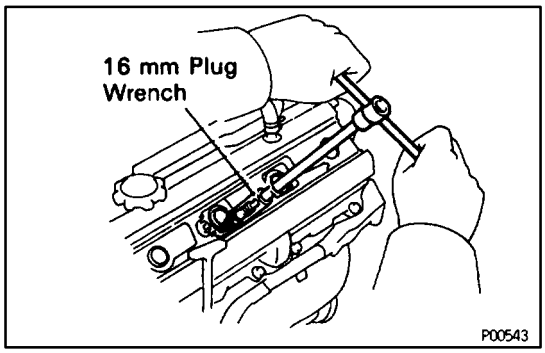

(c) Using a 16 mm plug wrench, remove the 8 spark plugs.

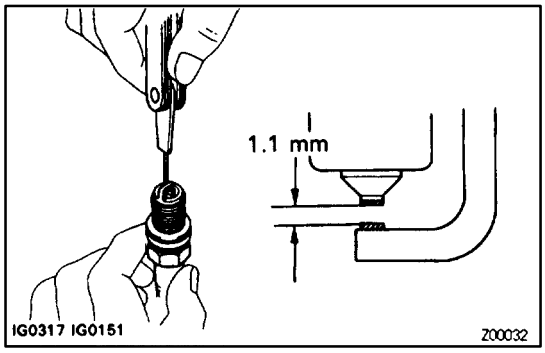

(d) Check the electrode gap of new spark plugs.

Correct electrode gap:

1.1 mm (0.043 in.)

Recommended spark plug:

PK20R11 for ND

BKR6EP11 for NGK

NOTICE: If adjusting the gap of a new spark plug, bend only the base of the ground electrode. Do not touch the tip.

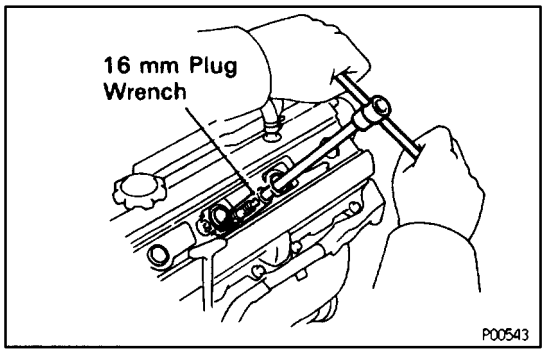

(e) Using a 16 mm plug wrench, reinstall the 8 spark plugs.

Torque: 18 N·m (180 kgf·cm, 13 ft·lbf)

(f) Reconnect the high–tension cords.

(g) Reinstall the No.3 timing belt covers.

(See Ignition System, steps 5 to 13 on pages IG–22 to 24)

WhereEverybodyKnowsYourName

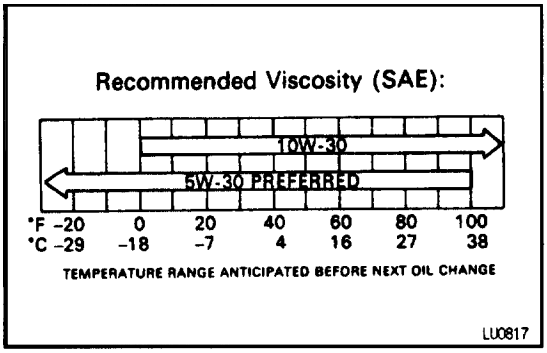

6. REPLACE ENGINE OIL AND OIL FILTER
(See Lubrication System on page EG–497)

Oil grade:

API grade SG or SH, Energy–Conserving II or ILSAC multigrade engine oil. Recommended viscosity is as shown in the illustration, with SAE 5W–30 being the preferred engine oil.

Drain and refill capacity:

w/ Oil filter change

4.8 liters (5.1 US qts, 4.2 Imp. qts)

w/o Oil filter change

4.5 liters (4.8 US qts, 4.0 Imp. qts)

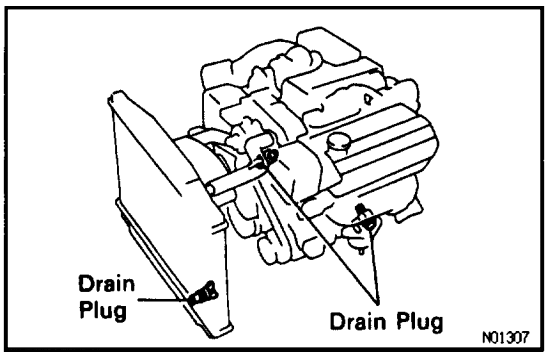

7. REPLACE ENGINE COOLANT
(See Cooling System on page EG–425)

Coolant capacity (w/ Heater):

10.8 liters (11.4 US qts, 9.5 Imp. qts)

HINT:

- Use a good brand of ethylene–glycol base coolant and mix it according to the manufacturer's directions.
- Using coolant which includes more than 50 % ethylene–glycol (but not more than 70 %) is recommended.

NOTICE:

- **Do not use a alcohol type coolant.**
- **The coolant should be mixed with demineralized water or distilled water.**

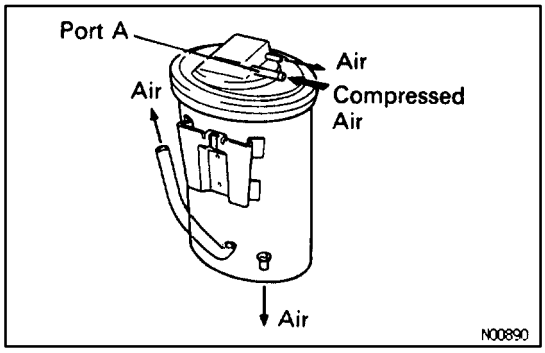

8. INSPECT CHARCOAL CANISTER

(a) Remove the charcoal canister.
(See Emission Control System on page EG–221)

(b) Visually inspect the canister case.

(c) Check for crogged each port and stuck check valve.

- Using low compressed air (4.71 kPa (48 gf/cm^2, 0.68 psi)), blow into port A and check that air flows without resistance from the other ports.

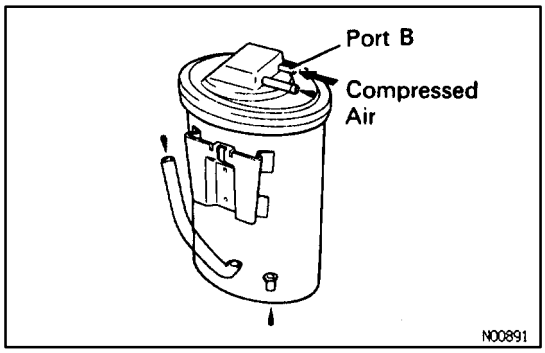

- Blow low compressed air (4.71 kPa (48 gf/cm^2, 0.68 psi)) into port B and check that air does not flow from the other ports.

If operation is not as specified, replace the charcoal canister.

WhereEverybodyKnowsYourName

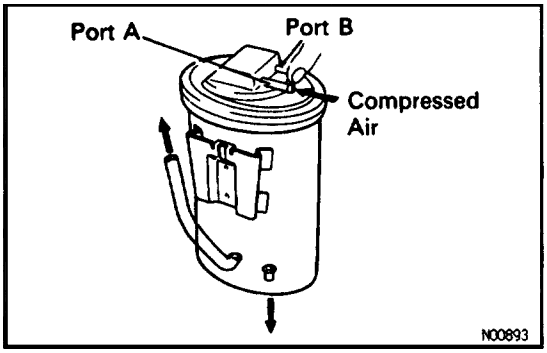

(d) Clean the filter in the canister.
Clean the filter by blowing 294 kPa (3 kgf/cm^2, 43 psi) of compressed air into port A while holding port B closed.
NOTICE:
- **Do not attempt to wash the canister.**
- **No activated carbon should come out.**

(e) Reinstall the charcoal canister.
(See Emission Control System on page EG–222)

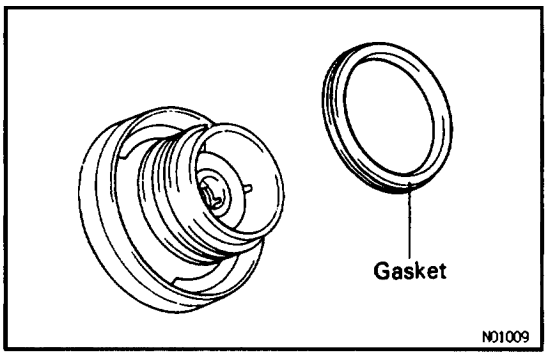

9. REPLACE GASKET IN FUEL TANK CAP

(a) Remove the old gasket from the tank cap. Do not damage the cap.
(b) Install a new gasket by hand.
(c) Check the cap for damage or cracks.
(d) Install the cap and check the torque limiter.

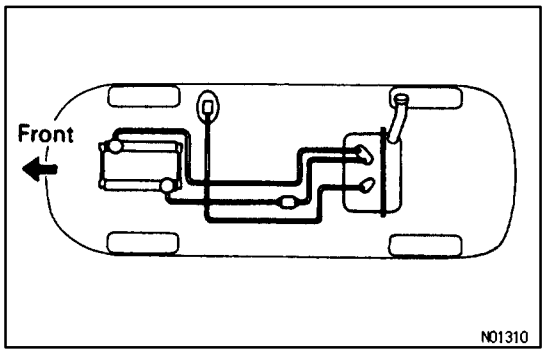

10. INSPECT FUEL LINES AND CONNECTIONS

Visually check the fuel lines for cracks, leakage, loose connections, deformation or tank band looseness.

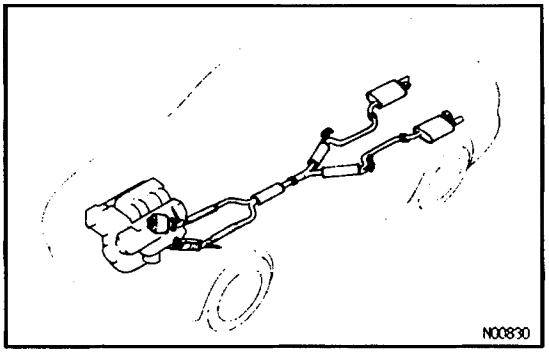

11. INSPECT EXHAUST PIPES AND MOUNTINGS

Visually check the pipes, hangers and connections for severe corrosion, leaks or damage.

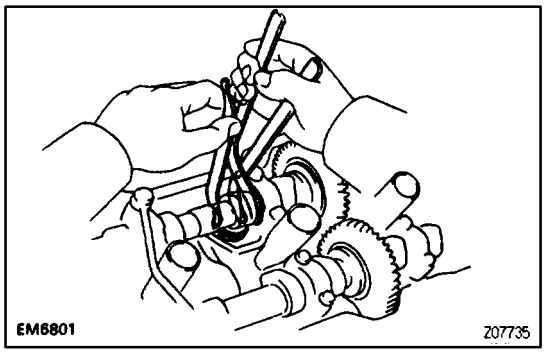

12. ADJUST VALVE CLEARANCE

(See Engine Mechanical on page EG–14)

Valve clearance (Cold):

Intake

.15 – 0.25 mm (0.006 – 0.010 in.)

Exhaust

.25 – 0.35 mm (0.010 – 0.014 in.)

WhereEverybodyKnowsYourName

MA04N–01

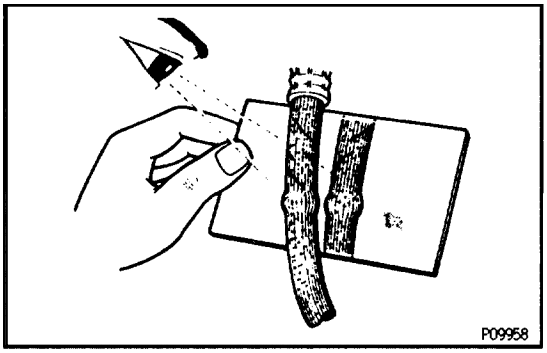

BRAKES

13. INSPECT BRAKE LINE PIPES AND HOSES

HINT: Check in a well lighted area. Check the entire circumference and length of the brake hoses using a mirror as required. Turn the front wheels fully right or left before checking the front brake.

(a) Check all brake lines and hoses for:
- Damage
- Wear
- Deformation
- Cracks
- Corrosion
- Leaks
- Bends
- Twists

(b) Check all clamps for tightness and connections for leakage.

(c) Check that the hoses and lines are clear of sharp edges, moving parts and the exhaust system.

(d) Check that the lines installed in grommets pass through the center of the grommets.

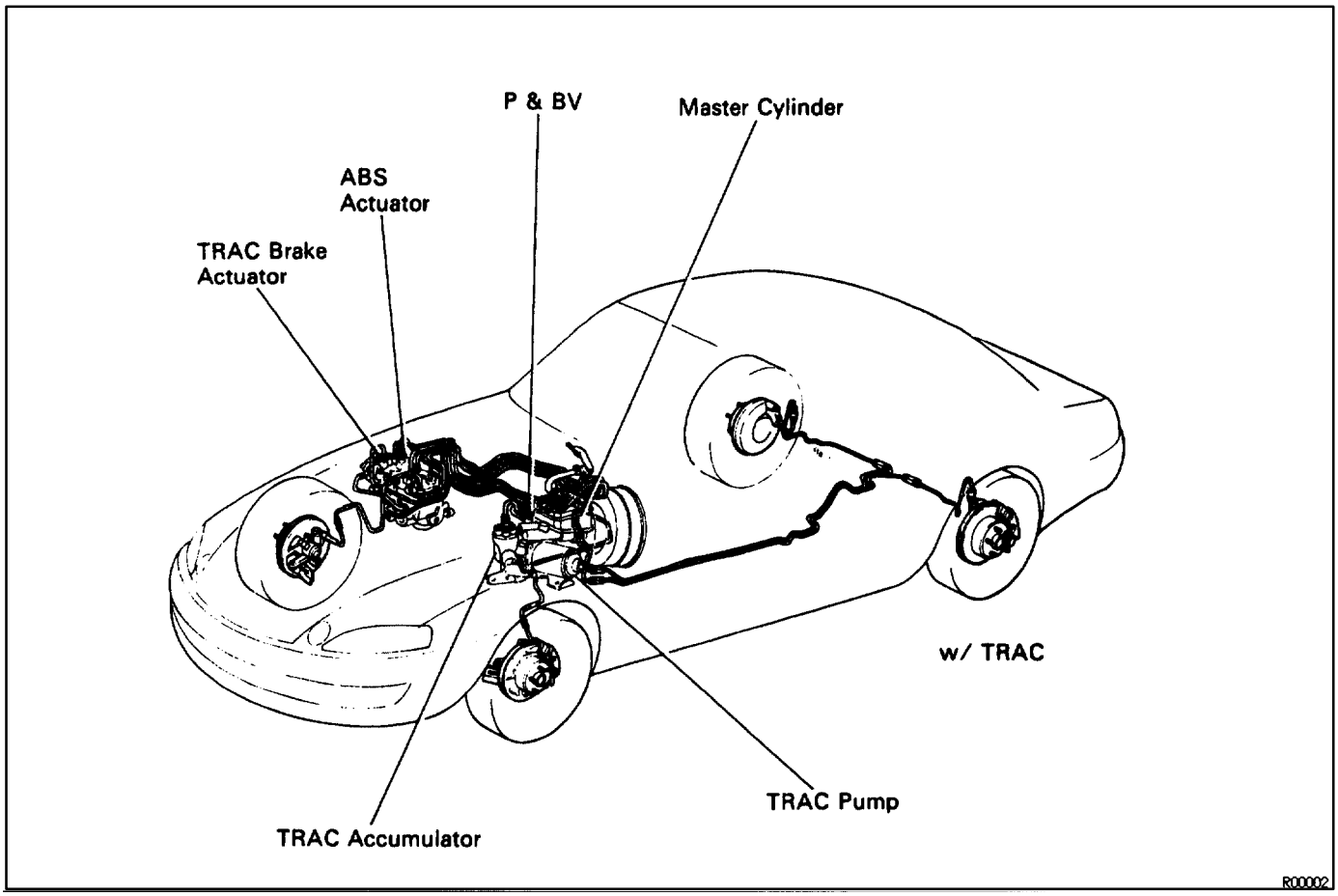

WhereEverybodyKnowsYourName

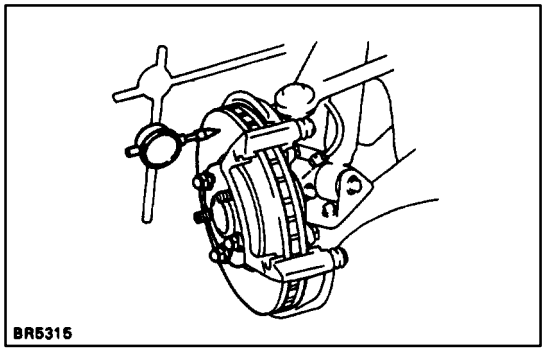

14. INSPECT BRAKE PADS AND DISCS FOR FRONT AND REAR

(a) Check the thickness of the disc brake pads and check for irregular wear.

Minimum pad thickness:

1.0 mm (0.039 in.)

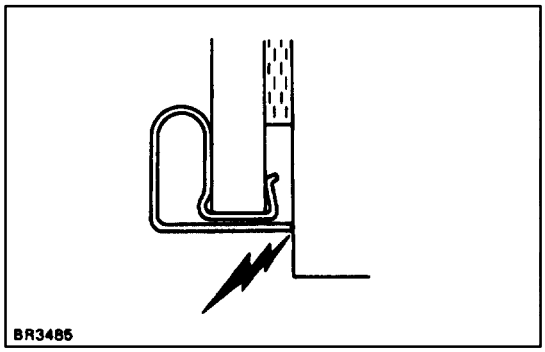

HINT: If a squealing or scraping noise comes from the brake during driving, check the pad wear indicator to see if it is contacting the disc rotor. If so, the disc pad should be replaced.

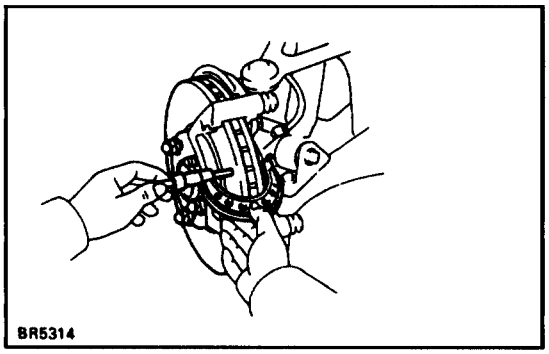

(b) Check the disc for wear or runout.

Minimum disc thickness:

Front

30.0 mm (1.181 in.)

Rear

15.0 mm (0.591 in.)

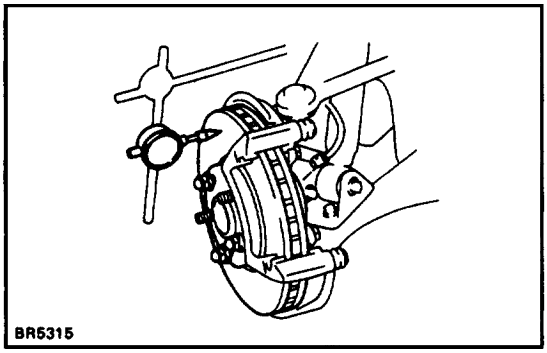

(c) Check the disc for runout.

Maximum disc runout:

0.05 mm (0.0020 in.)

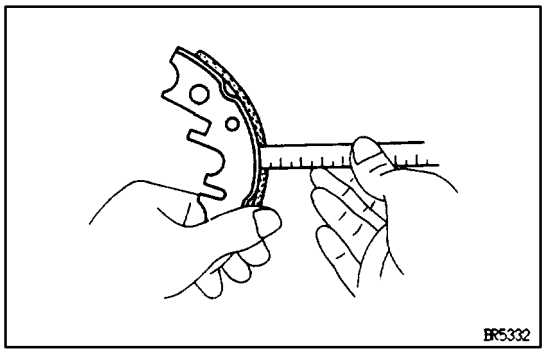

15. INSPECT BRAKE LININGS AND DRUMS FOR PARKING BRAKE

(a) Check the lining–to–drum contact condition and lining wear.

Minimum lining thickness:

1.0 mm (0.039 in.)

WhereEverybodyKnowsYourName

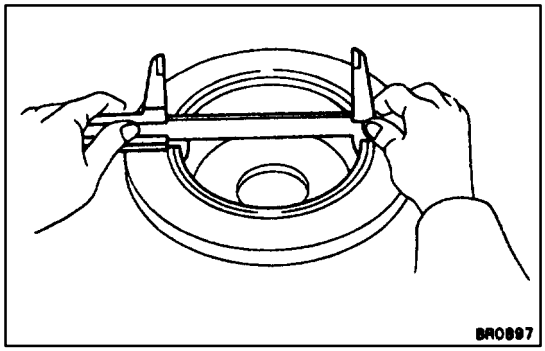

(b) Check the brake drums for scoring or wear.
Maximum drum inside diameter:
191 mm (7.520 in.)

(c) Clean the brake parts with a damp cloth.
NOTICE: Do not use compressed air to clean the brake parts.

(d) Seat the parking brake shoes during the road test (item 25) in do the following:
- Drive the vehicle at approx. 50 km/h (30 mph) on a safe, level and dry road.
- With the parking brake release buttom pushed in, pull on the lever with 88 N (9 kgf, 20 lbf) of force.
- Drive the vehicle for approx. 400 meters (1/4 mile) in this condition.
- Repeat this procedure 2 or 3 times.
- Check parking pedal travel.

If necessary, adjust the parking brake.

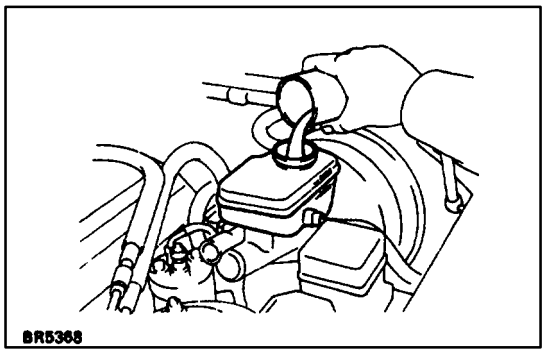

16. INSPECT AND CHANGE BRAKE FLUID

(a) Visually inspect the master cylinder for leaks.

(b) Change brake fluid (See BR section)
Fluid:
SAE J1703 or FMVSS No.116 DOT3

MA04F–01

CHASSIS

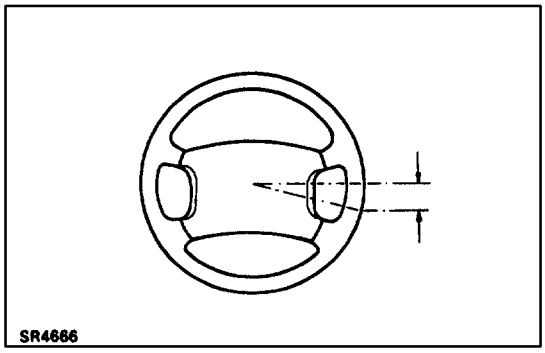

17. INSPECT STEERING LINKAGE

(a) Check the steering wheel freeplay.
Maximum freeplay:
30 mm (1.18 in.)
With the vehicle stopped and pointed straight ahead, rock the steering wheel gently back and forth with light finger pressure.

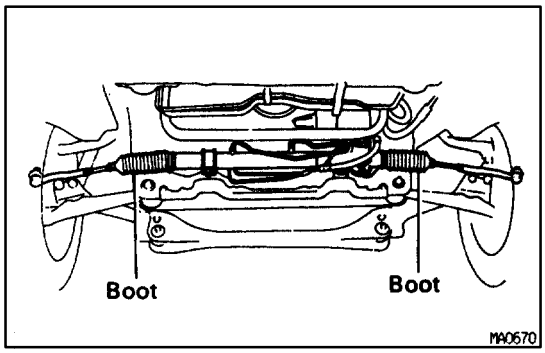

(b) Check the steering linkage for looseness or damage.
Check that:
- Tie rod ends do not have excessive play.
- Dust seals and boots are not damaged.
- Boot clamps are not loose.

WhereEverybodyKnowsYourName

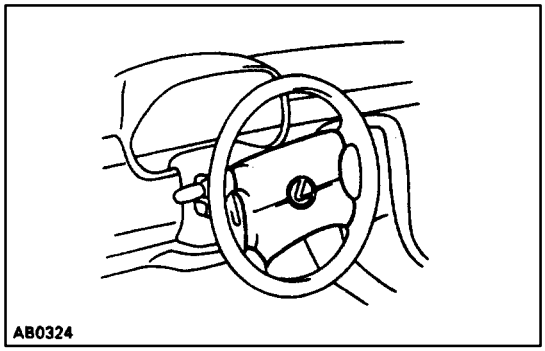

18. INSPECT SRS AIRBAG

Driver Airbag:

Visually inspect the steering wheel pad (airbag and inflater).

- Use the diagnosis check to check if there are abnormalities.
- Check that there are no cuts, cracks or noticeable color changes on the surface of the steering wheel pad or in the center groove of the pad.
- Remove the steering wheel pad from the vehicle and check the wiring and steering wheel for damage and corrosion due to rusting, etc.

If necessary, replace the steering wheel pad.

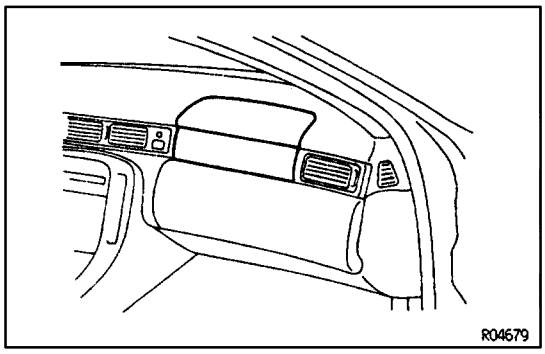

Front Passenger Airbag:

Visually inspect the front passenger airbag assembly (airbag and inflater).

- Use the diagnosis check to check if there are abnormalities.
- Check that there are no cuts, cracks or noticeable color changes in the front passenger airbag door.
- Remove the front passenger airbag assembly from the vehicle and check the wiring and front passenger airbag door for damage and corrosion due to rusting, etc.

If necessary, replace the front passenger airbag assembly.

CAUTION:

- **For removal and replacement of the steering wheel pad or front passenger airbag assembly, see page RS–28 and be sure to perform the operation in the correct order.**
- **Before disposing of the steering wheel pad or front passenger airbag assembly must first be deployed by using SST and wiring harness connector (See page RS–28).**

19. INSPECT STEERING GEAR HOUSING OIL

Check the steering gear housing for oil leakage.

WhereEverybodyKnowsYourName

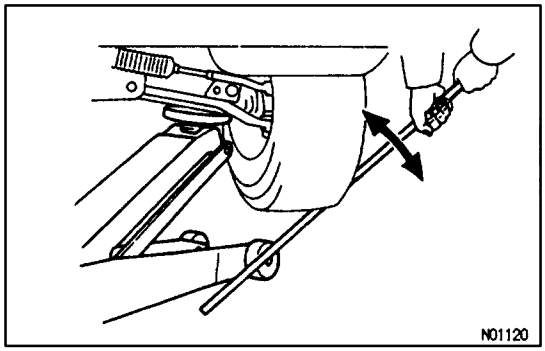

20. INSPECT BALL JOINTS AND DUST COVERS

(a) Inspect the ball joints for excessive looseness.

- Jack up the front of the vehicle and support it with stands.
- Make sure the front wheels are in a straight–ahead position, and depress the brake pedal.
- Jack up the lower suspension arm until there is about half a load on the front coil spring.
- Move the front wheel up and down and check that the ball joint has no excessive play.

Maximum lower ball joint vertical play.

0.3 mm (0.012 in.)

If the play is greater than maximum, replace the ball joint.

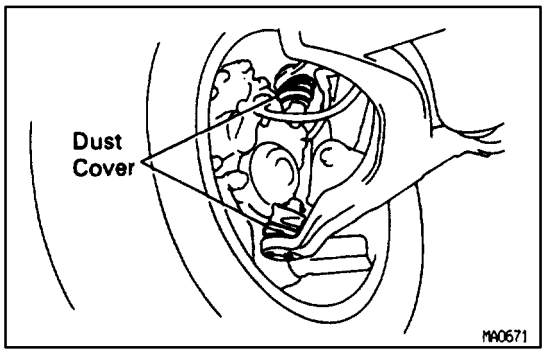

(b) Visually check the dust covers for damage

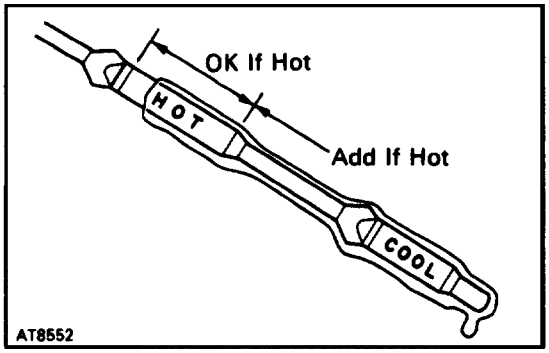

21. CHECK AUTOMATIC TRANSMISSION AND DIFFERENTIAL OIL (FLUID)

A. Inspect automatic transmission fluid

(a) Visually check the differential for fluid and leakage.
If leakage is found, check for the cause and repair.

(b) Check the fluid level with the engine idling and shift lever at “P”.
If the level is low, add fluid.

Transmission fluid:

See item 22 (A)

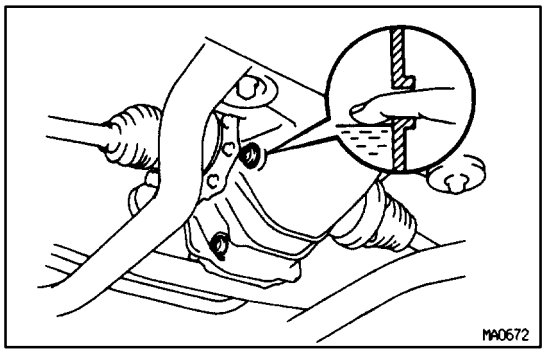

B. Inspect differential oil

(a) Visually check the transmission for oil and leakage.
If leakage is found, check for the cause and repair.

(b) Remove the filler plug, and feel inside the hole with your finger. Check that the oil comes to within 5 mm (0.20 in) of the bottom edge of the filler hole.
If the level is low, add oil until it begins to run out of the filler hole.

WhereEverybodyKnowsYourName

Differential oil:

See item 22 (B)

(c) Reinstall the filler plug securely.

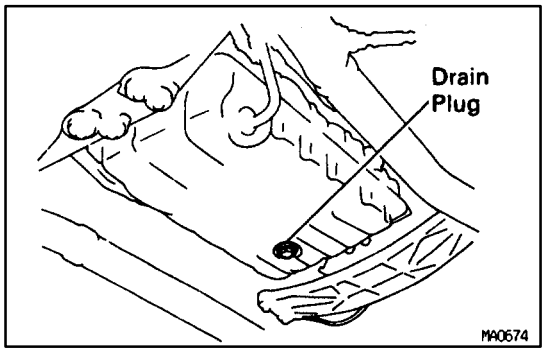

22. REPLACE AUTOMATIC TRANSMISSION AND DIFFERENTIAL OIL (FLUID)

A. Replace automatic transmission fluid

(a) Remove the drain plug, and drain the fluid.

(b) Clean the drain plug.

(c) Reinstall the drain plug securely.

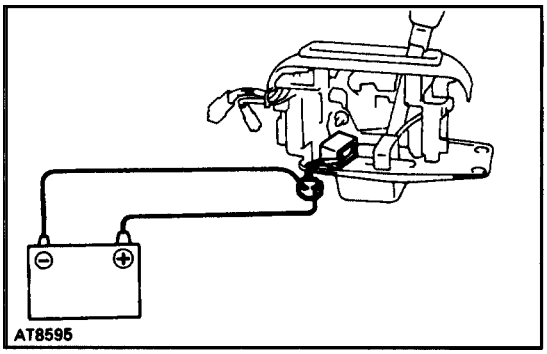

(d) With the engine “OFF”, add new fluid through the dipstick tube.

Fluid type:

ATF Type T–II or equivalent

Drain and refill capacity:

1.9 liters (2.0 US qts. 1.7 Imp. qts)

(e) Start the engine and shift the selector into all positions from “P” through “L”, and then shift into “P” position.

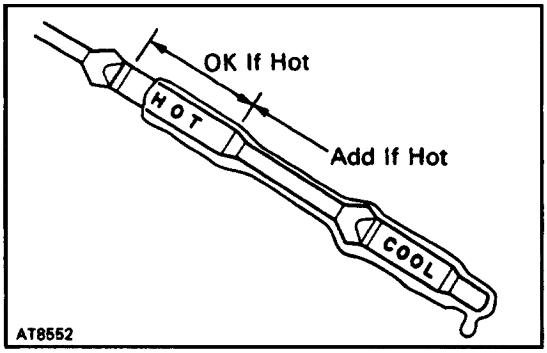

(f) With the engine idling, check the fluid level. Add fluid up the “COOL” level on the dipstick.

(g) Check that the fluid level is in the “HOT” range at the normal operating temperature (70 – 80▼C (158 – 176▼F)) and add as necessary.

NOTICE: Do not overfill.

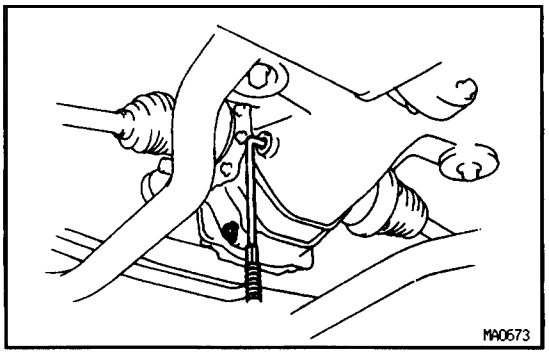

B. Replace differential oil

(a) Remove the filler and drain plugs, and drain the oil.

(b) Clean the drain plug.

(c) Reinstall the drain plug securely.

(d) Add new oil until it begins to run out of the filler hole.

Differential oil:

Oil grade

API GL–5

WhereEverybodyKnowsYourName

Viscosity

Above – 185C (05F) SAE 90

Below – 18°C (0°F) SAE 80W–90 or 80W

Capacity:

1.35 liters (1.43 US qts, 1.19 Imp. qts)

(e) Reinstall the filler plug securely.

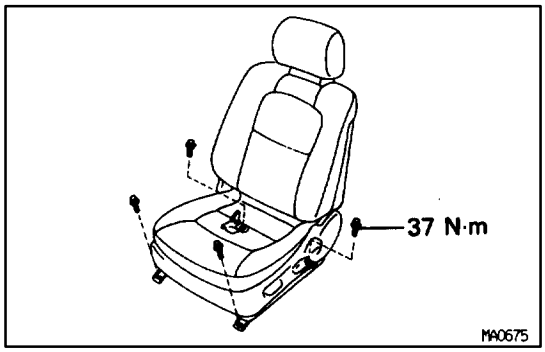

23. TIGHTEN BOLTS AND NUTS ON CHASSIS AND BODY

Tighten the following parts.

- Front seat–to–body mounting bolts

Torque: 37 N·m (375 kgf·cm, 27 ft·lbf)

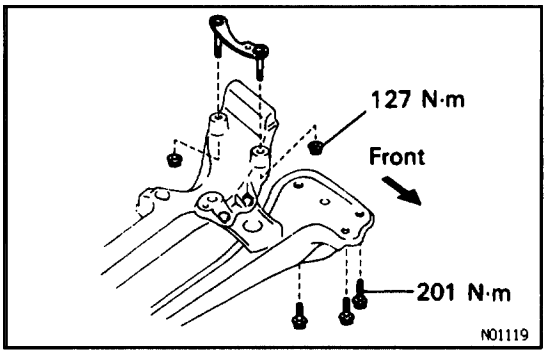

- Front suspension crossmembers - to - body mounting nuts and bolts

Torque:

127 N·m (1.300 kgf·cm, 94 ft·lbf) for nut

201 N·m (2,050 kgf·cm, 148 ft·lbf) for bolt

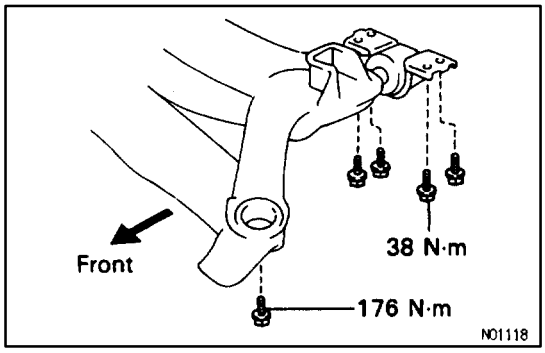

- Rear suspension member - to - body mounting bolts

Torque: 176 NVm (1,800 kgfVcm, 130 ftVlbf)

- Rear suspension member rear cushion - to - body mounting bolts

Torque: 38 N·m (390 kgf·cm, 28 ft·lbf)

24. BODY INSPECTION

(a) Check the body exterior for dents, scratches and rust

(b) Check the underbody for rust and damage.
If necessary, replace or repair.

25. ROAD TEST

(a) Check the engine and chassis for abnormal noises.

(b) Check that the vehicle does not wander or pull to one side.

(c) Check that the brakes work properly and do not drag.

(d) Perform setting of the parking brake shoes and drum.

WhereEverybodyKnowsYourName

26. FINAL INSPECTION

(a) Check the operation of the body parts:

- Hood:
  Auxiliary catch operates properly Hood locks securely when closed
- Doors:
  Door locks operate properly Doors close properly
- Luggage compartment door:
  Door lock operates properly
- Seats:
  Seat adjusts easily and locks securely in any position Front seat back locks securely in any position Folding–down rear seat backs lock securely

(b) Be sure to deliver a clean car. Especially check:

- Steering wheel
- Shift lever knob
- All switch knobs
- Seats

WhereEverybodyKnowsYourName

GENERAL MAINTENANCE

MA00M–03

There are the maintenance and inspection items which are considered to be the owner's responsibility. They can be performed by the owner or be can have them done at a service shop. These items include those which should be checked on a daily basis, those which, in most cases, do not require (special) tools and those which are considered to be reasonable for the owner to perform. Items and procedures for general maintanance are as follows:

MA00P–04

OUTSIDE VEHICLE

1. TIRES

(a) Check the pressure with a gauge. Adjust if necessary.

(b) Check for cuts, damage or excessive wear.

2. WHEEL NUTS

Wheel checking the tires, check the nuts for looseness or for missing nuts. If necessary, tighten them.

3. TIRE ROTATION

It is recommended that tires be rotated every 12,000 km (7,500 miles).

4. WINDSHIELD WIPER BLADES

Check for wear or cracks whenever they do not wipe clean. Replace if necessary.

5. FLUID LEAKS

(a) Check underneath for leaking fuel, oil, water or other fluid.

(b) If you smell gasoline fumes or notice any leak, have the cause found and corrected.

6. DOORS AND ENGINE HOOD

(a) Check that all doors including the trunk lid operate smoothly, and that all latches lock securely.

(b) Check that the engine hood secondary latch secures the hood from opening when the primary latch is released.

MA00R–05

INSIDE VEHICLE

7. LIGHTS

(a) Check that the headlights, stop lights, tail–lights, turn signal lights, and other lights are all working.

(b) Check the headlight aiming.

8. WARNING LIGHT AND BUZZERS

Check that all warning lights and buzzers function properly.

9. HORN

Check that it is working.

10. WINDSHIELD GLASS

Check for scratches, pits or abrasions.

11. WINDSHIELD WIPER AND WASHER

(a) Check operation of the wipers and washer.

(b) Check that the wipers do not streak.

12. WINDSHIELD DEFROSTER

Check that the air comes out from the defroster outlet when operating the heater air conditioner at defroster mode.

13. REAR VIEW MIRROR

Check that it is mounted securely.

14. SUN VISORS

Check that they move freely and are mounted securely.

15. STEERING WHEEL

Check that it has the specified freeplay. Be alert for changes in steering condition, such as hard steering, excessive freeplay or strange noise.

16. SEATS

(a) Check that all front seat controls such as seat adjusters, seatback recliner, etc. operate smoothly.

(b) Check that all latches lock securely in any position.

(c) Check that the locks hold securely in any latched position.

(d) Check that the head restraints move up and down smoothly and that the locks hold securely in ay latches position.

(e) For folding–down rear seat backs, check that the latches lock securely.

17. SEAT BELTS

(a) Check that the seat belt system such as buckles, retractors and anchors operate properly and smoothly.

(b) Check that the belt webbing is not cut, frayed, worn or damaged.

18. ACCELERATOR PEDAL

Check the pedal for smooth operation and uneven pedal effort or catching.

WhereEverybodyKnowsYourName

19. BRAKE PEDAL

(a) Check that pedal for smooth operation.

(b) Check that the pedal has the proper reserve distance and freeplay.

(c) Check the brake booster function.

20. BRAKES

At a safe place, check that the brakes do not pull to one side when applied.

21. PARKING BRAKE

(a) Check that the pedal has the proper travel.

(b) On a safe incline, check that the vehicle is held securely with only the parking brake applied.

22. AUTOMATIC TRANSMISSION PARK MECHANISM

(a) Check the lock release button of the selector lever for proper and smooth operation.

(b) On a safe incline, check that the vehicle is held securely with the selector lever in the “P” position and all brakes released.

MA00T–0A

UNDER HOOD

23. WINDSHIELD WASHER FLUID

Check that there is sufficient fluid in the tank.

24. ENGINE COOLANT LEVEL

Check that the coolant level is between the LEVEL lines on the see–through reservoir at normal temperature (20° C (68° F)).

25. RADIATOR AND HOSES

(a) Check that the front of the radiator is clean and not blocked with leaves, dirt or bugs.

(b) Check the hoses for cracks, kinks, rot or loose connections.

26. BATTERY ELECTROLYTE LEVEL

Check the indicator.

When the indicator color is blue, the condition is satisfactory. A red color indicates that distilled water must be added, and white indicates that charging is necessary.

27. BRAKE FLUID LEVEL

Check that the brake fluid level is near the upper level line on the see–through reservoir.

28. ENGINE DRIVE BELT

Check drive belt for fraying, cracks, wear or oiliness.

29. ENGINE OIL LEVEL

Check that level on the dipstick with the engine turned off.

30. POWER STEERING FLUID LEVEL

Check the level on the dipstick.

The level should be in the “HOT” or “COLD” range depending on the fluid temperature.

31. AUTOMATIC TRANSMISSION FLUID LEVEL

(a) Park the vehicle on a level surface.

(b) With the engine idling and the parking and foot brake applied, shift the selector into all positions from “P” to “L”, and then shift into “P”.

(c) Turn and pull out the dipstick and wipe off the fluid with a clean rag.

Re–insert the dipstick fully and check that the fluid level is in the “HOT” range.

(d) Perform this check with the fluid at normal driving temperature (70 – 80▼C (158 – 176▼F)).

If the level is at the low side, add fluid.

NOTICE: Do not overfill.

HINT: Wait about 30 minutes before checking the fluid level after extended driving at high speeds in hot weather, driving in heavy traffic or with a trailer.

32. EXHAUST SYSTEM

Visually inspect for cracks, holes or loose supports.

If any change in the sound of the exhaust or smell of the exhaust fumes is noticed, have the cause located and corrected.

WhereEverybodyKnowsYourName

SERVICE SPECIFICATIONS

SERVICE DATA

PR036–03

Shaft runout	Limit	0.8 mm (0.031 in.)
Joint angle	No.2 joint	–1° 01′ ± 36′
	No.3 joint	54′ ± 36′

TORQUE SPECIFICATIONS

PR037–04

Part tightened	N·m	kgf·cm	ft·lbf
Propeller shaft x Differential	79	805	58
Propeller shaft x Intermediate shaft	74	750	54
Intermediate shaft x Center bearing x Universal joint flange			
1st	181	1,850	134
2nd	Loosen nut	Loosen nut	Loosen nut
3rd	69	700	51
Center support bearing x Body	49	500	36
Oxygen senser x Exhaust front pipe	44	450	33
Exhaust front pipe x Exhaust manifold	43	440	32
Exhaust center pipe x Exhaust front pipe	43	440	32
Exhaust center pipe x Exhaust rear pipe	19	195	14
Crossmember x Body	13	130	8
Heat insulator x Body	5.4	55	48 in.·lbf

WhereEverybodyKnowsYourName

PROPELLER SHAFT

WhereEverybodyKnowsYourName

DESCRIPTION

(SC400)

PR02N–04

The propeller shaft is a 2–part type, each part consisting of a strong, compact precisely balanced tube. The propeller shaft is connected to the transmission and the differential via 3 joints. No.1 and No.3 joints are made of flexible rubber couplings. No.2 joint is a Hooke's universal joint. All 3 joints are carefully arranged in such a way that their shaft angles rest on a straight line. This design ensures a precise drive line linearity from the engine through the differential to minimize noise and vibration.

A shaft length adjusting mechanism is incorporated in order to make propeller shaft removal and reinstallation easier.

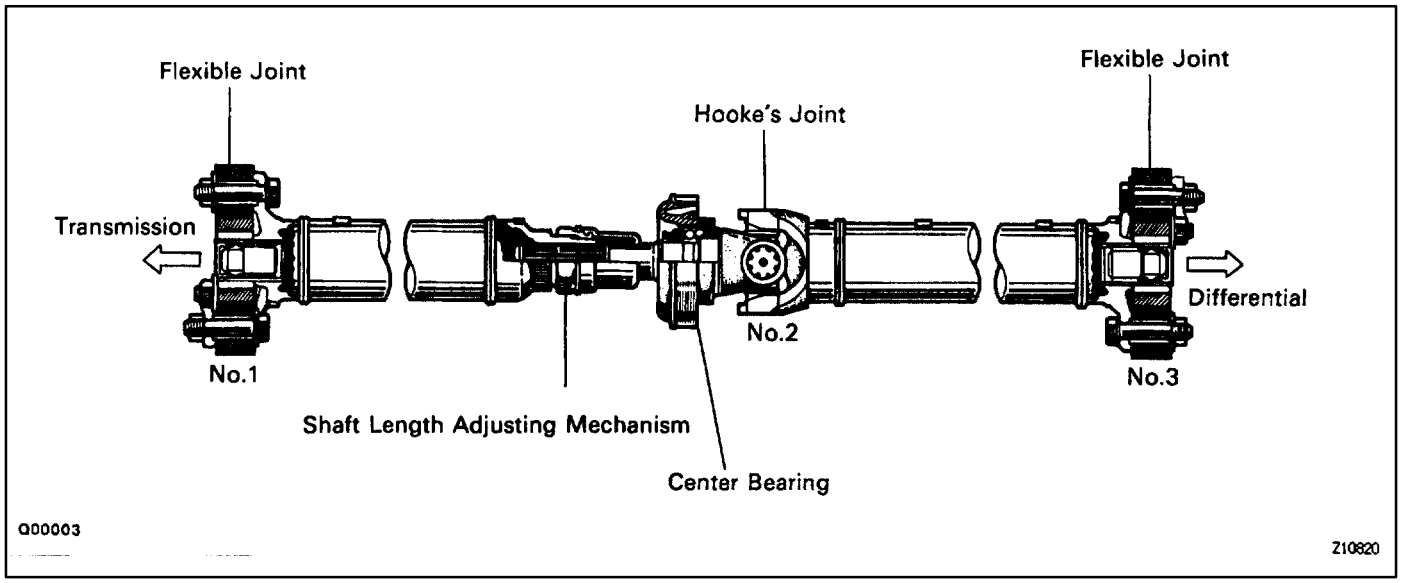

WhereEverybodyKnowsYourName

PREPARATION

SST (SPECIAL SERVICE TOOLS)

	09330–50010	Propeller Shaft Center Bearing Replacer	
	09370–50010	Drive Line Angle Gauge	
	09608–12010	Front Hub & Drive Pinion Bearing Replacer Set	
	(09608–00070)	Drive Pinion Rear Bearing Cone Replacer	
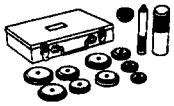	09608–35014	Axle Hub & Drive Pinion Bearing Tool Set	
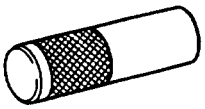	(09608–06040)	Front Hub Inner Bearing Cone Replacer	
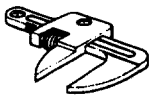	09922–10010	Variable Open Wrench	Adjusting nut
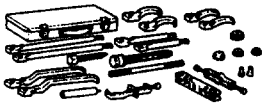	09950–20017	Universal Puller	

PR01A–04

RECOMMENDED TOOLS

PR01B–02

	09905–00012	Snap Ring No. 1 Expander	

EQUIPMENT

PR01C–02

Torque wrench	
Dial indicator	
Vernier calipers	

WhereEverybodyKnowsYourName

PRECAUTION

PR02P–02

Be careful not to grip the propeller shaft tube too tightly in the vise as this will cause deformation.

TROUBLESHOOTING

PR019–09

Use the table to help you find the cause of the problem. The numbers indicate the priority of the likely cause of the problem. Check each part in order. If necessary, replace these parts.

See page	PR–8	PR–10	PR–10	PR–10	PR–8	—
Parts Name / Trouble	Center bearing worn	Propeller shaft runout	Propeller shaft imbalance	Spider bearing worn or stuck	Flexible rubber coupling worn	Transmission extension housing rear bushing worn
Noise	1			3	2	
Vibration		2	3			1

WhereEverybodyKnowsYourName

PROPELLER SHAFT
COMPONENTS

PR00W–06

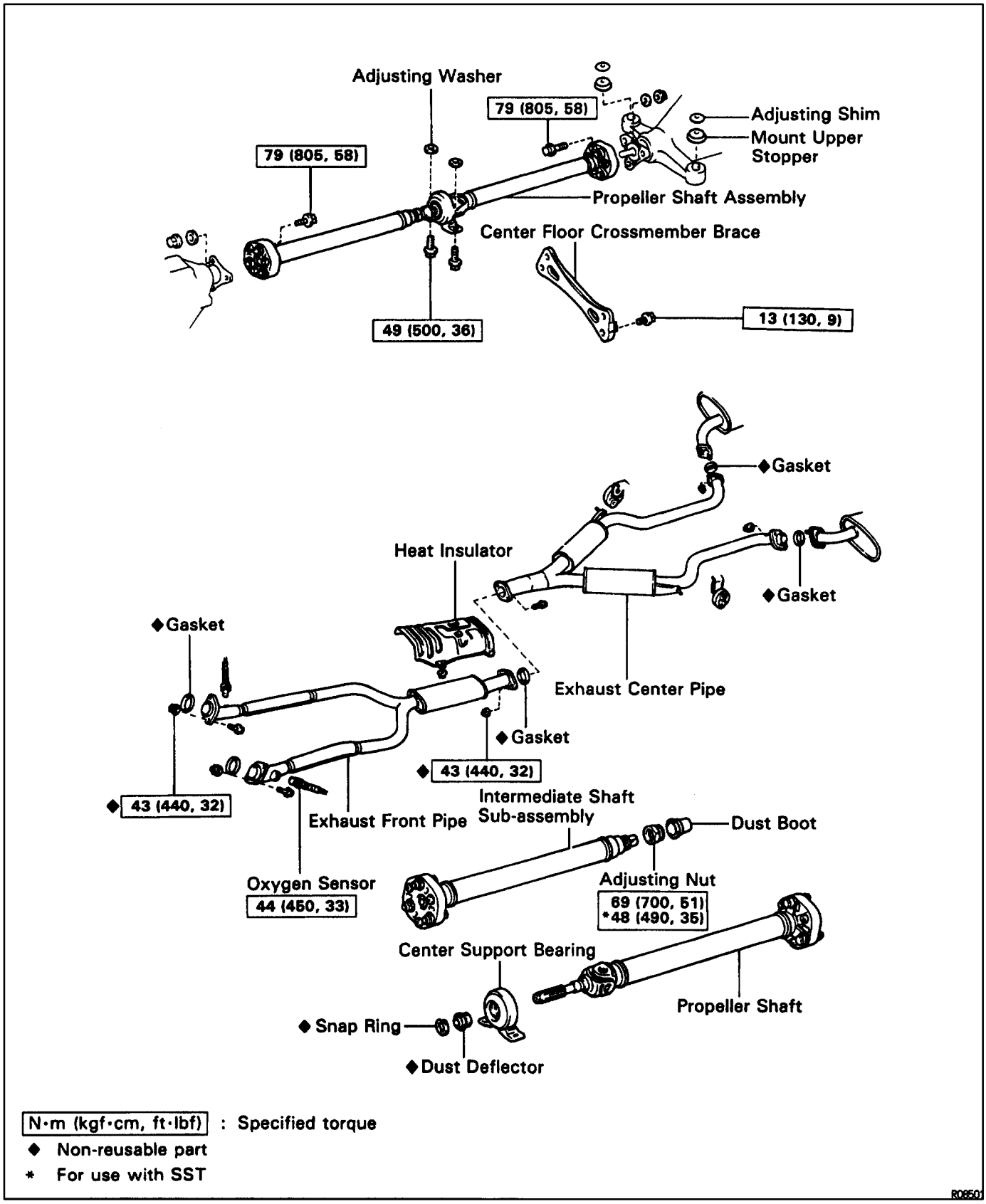

WhereEverybodyKnowsYourName

PROPELLER SHAFT REMOVAL

PR02Q–06

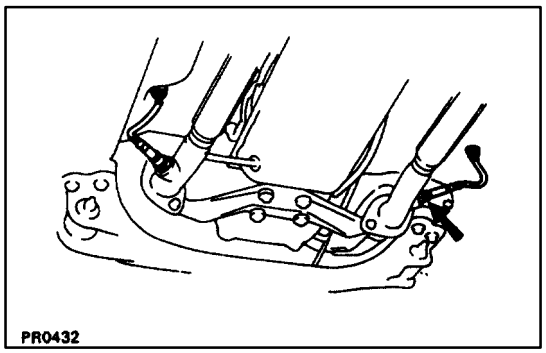

1. REMOVE EXHAUST FRONT PIPE

(a) Disconnect the oxygen sensor grommets from the floor.

(b) Disconnect the oxygen sensors from the exhaust front pipe.

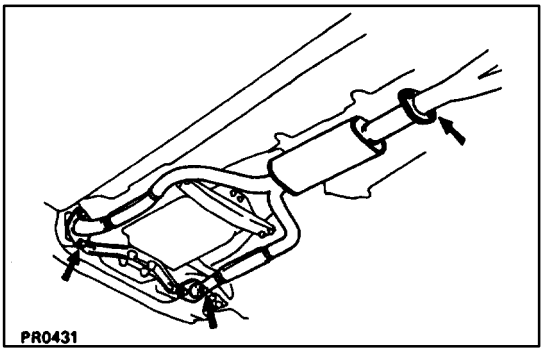

(c) Remove the 6 nuts, bolts and exhaust center pipe.

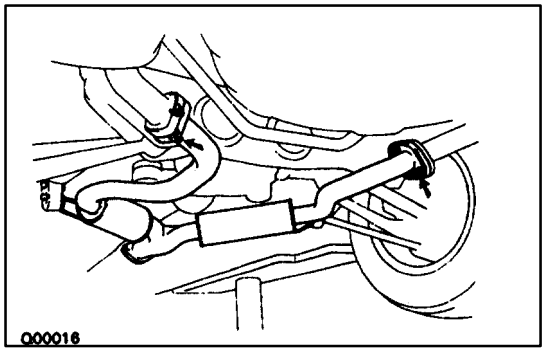

2. REMOVE EXHAUST CENTER PIPE

HINT: To prevent interference, of the tail pipes must be suspended from the stabilizer bar.

(a) Disconnect the exhaust center pipe from the 2 rings.

(b) Remove the 4 nuts.

(c) Remove the exhaust center pipe.

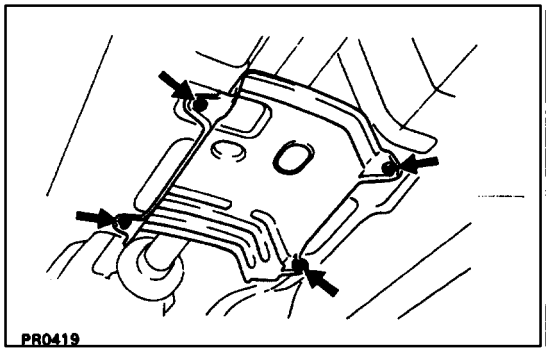

3. REMOVE HEAT INSULATOR

Remove the 4 nuts and the heat insulator.

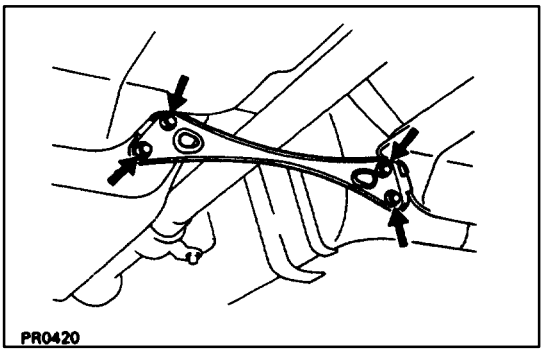

4. REMOVE CROSSMEMBER BRACE

Remove the 4 bolts and the center floor crossmember brace.

WhereEverybodyKnowsYourName

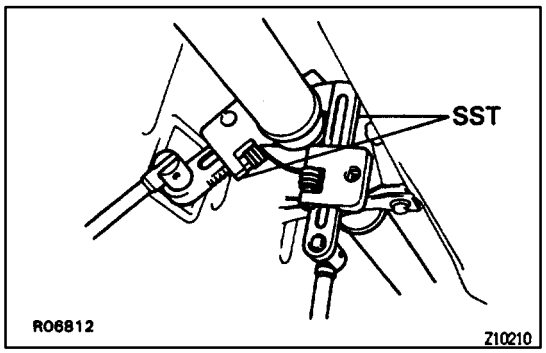

5. REMOVE PROPELLER SHAFT

(a) Using SST, loosen the adjusting nut until it can be turned by hand.
SST 09922–10010
HINT: Use 2 of the same type of SST.

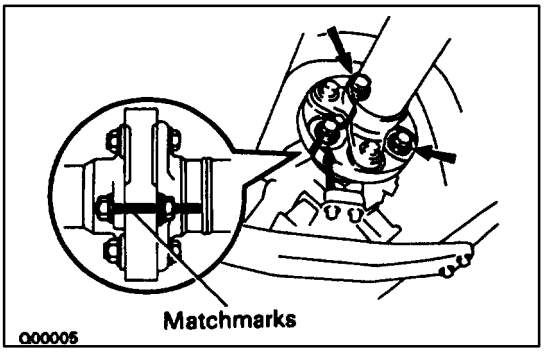

(b) Place matchmarks on the transmission companion flange and flexible coupling.

(c) Remove the 3 bolts inserted in the transmission companion flange.
NOTICE: The bolts inserted in the propeller shaft flange should not be removed.

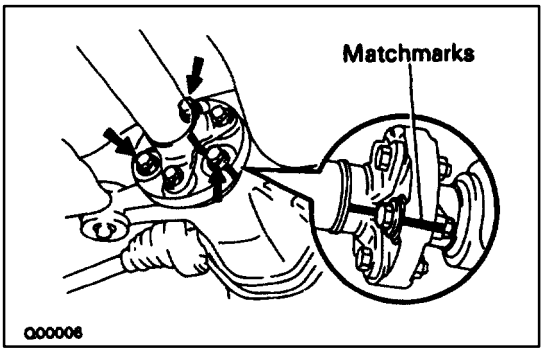

(d) Place matchmarks on the differential companion flange and flexible coupling.

(e) Remove the 3 bolts inserted in the differential companion flange.
NOTICE: The bolts inserted in the propeller shaft companion flange should not be removed.

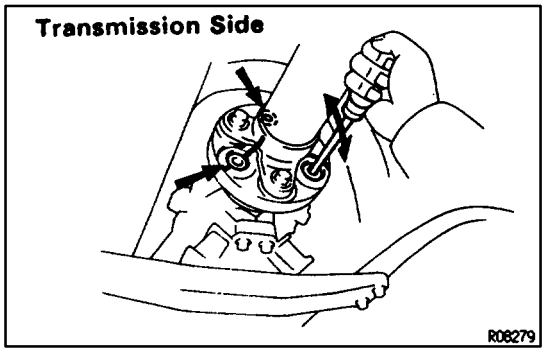

(f) Separate the flexible couplings from the transmission side and differential side.
HINT: If the flexible coupling can not be easily separated by hand, insert a screwdriver into the bolt hole of the flexible coupling, as shown in the illustration, then pry the coupling out.
NOTICE: Do not bring the screwdriver blade in direct contact with the flexible coupling's rubber portion.

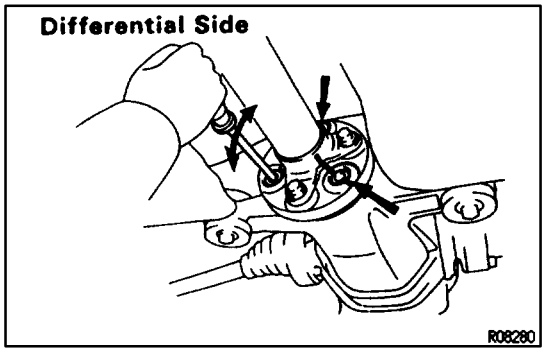

WhereEverybodyKnowsYourName

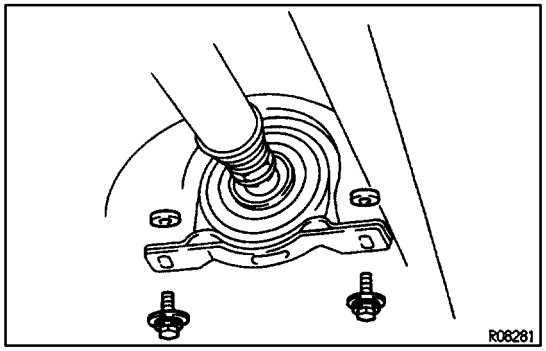

(g) Remove the 2 center support bearing set bolts and the adjusting washers.
HINT: Some vehicles are not equipped with an adjusting washer.
NOTICE: When removing the set bolts, support the center support bearing by hand so that the transmission and intermediate shaft, and propeller shaft and differential, remain in a straight line.
Maximum joint angle: 52

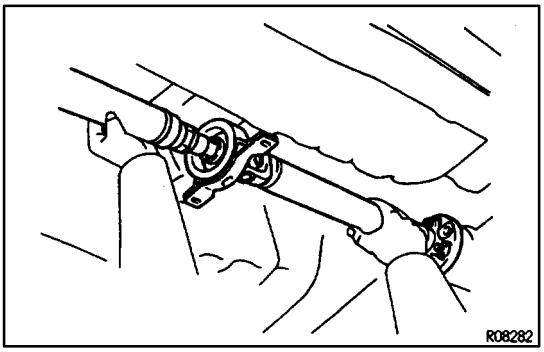

(h) Push the rear propeller shaft straight forward to compress the propeller shaft and pull out the propeller shaft from the centering pin of the differential.
NOTICE: Press the propeller shaft straight ahead to keep the transmission and intermediate shaft aligned straight.

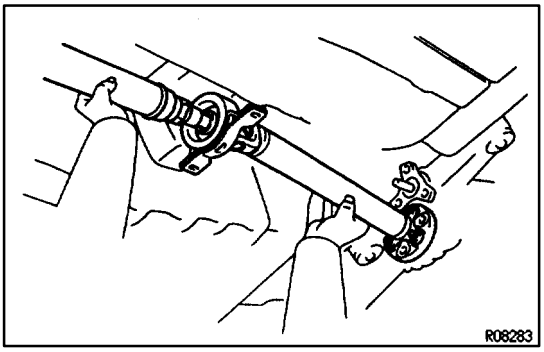

.(i) Pull the propeller shaft out toward the vehicle's rear.
NOTICE: The intermediate shaft and propeller shaft should not be separated.

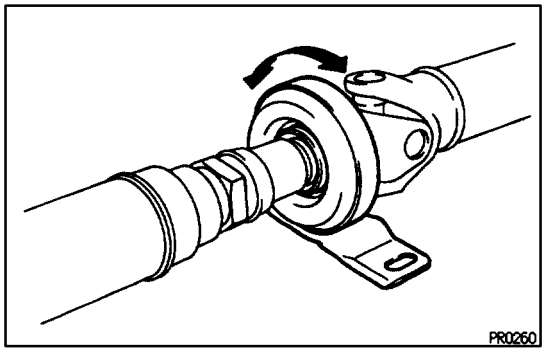

CENTER SUPPORT BEARING AND FLEXIBLE COUPLINGS INSPECTION

PR02R–04

1. INSPECT CENTER SUPPORT BEARING

- Check for cracks in or damage to the cushion.
- Check if the bearing turns smoothly. If the center support bearing is damaged, worn or does not turn smoothly, replace it.

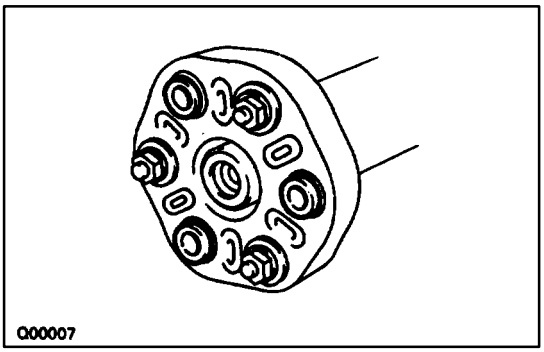

2. INSPECT FLEXIBLE COUPLINGS

- Check for cracks in or damage to the front and rear flexible couplings.

If the flexible coupling is damaged, replace the propeller shaft assembly.

WhereEverybodyKnowsYourName

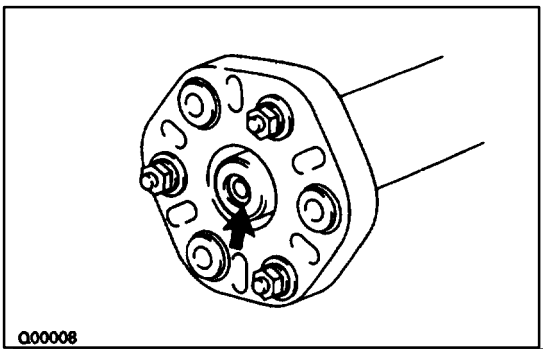

3. INSPECT FLEXIBLE COUPLING CENTERING BUSHING

- Check for damage to the bushing.

If the bushing is damaged, replace the propeller shaft assembly.

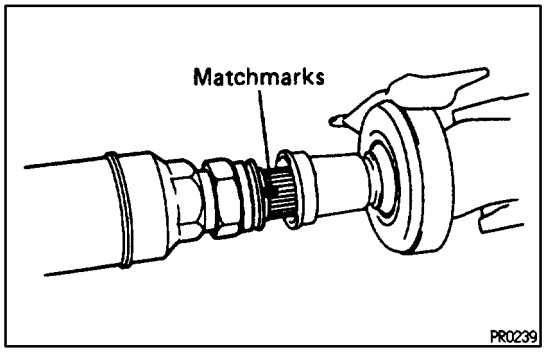

CENTER SUPPORT BEARING REPLACEMENT

PR04K–01

1. SEPARATE INTERMEDIATE SHAFT AND PROPELLER SHAFT

(a) Place matchmarks on the intermediate shaft and propeller shaft.

(b) Separate the intermediate shaft and propeller shaft.

(c) Remove the dust boot from the propeller shaft.
HINT: If the dust boot is reused, remove it after wrapping vinyl tape around the spline, so it will not be damaged.

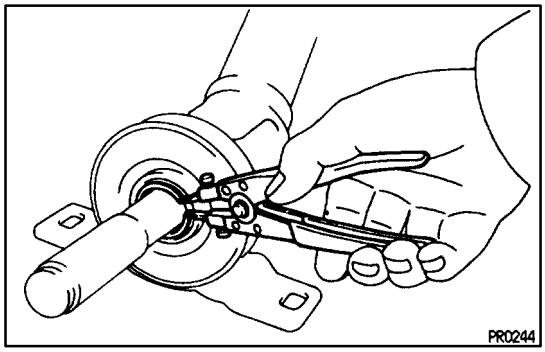

2. REMOVE CENTER SUPPORT BEARING

(a) Using a snap ring expander, remove the snap ring.

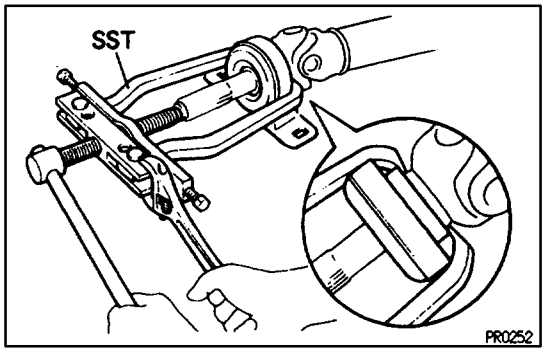

(b) Using SST, remove the center bearing and dust deflector.
SST 09950–20017

WhereEverybodyKnowsYourName

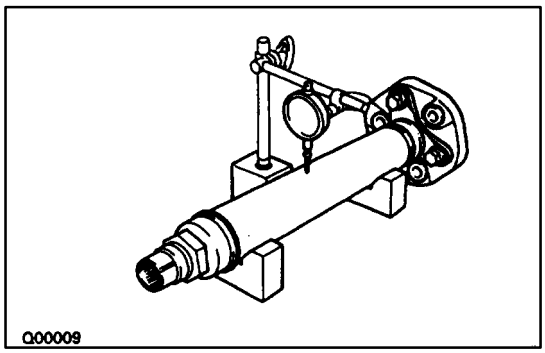

3. INSPECT RUNOUT OF INTERMEDIATE SHAFT AND PROPELLER SHAFT

Maximum runout:

0.8 mm (0.031 in.)

If the runout is greater than the maximum, replace the propeller shaft assembly.

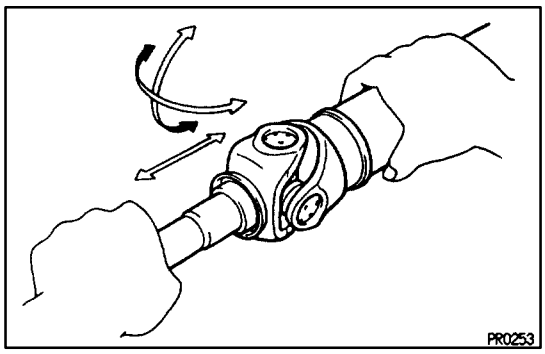

4. INSPECT SPIDER BEARING

- Check if the spider bearing rotates smoothly.
- Check if there is any play in the spider bearing.

If necessary, replace the propeller shaft assembly.

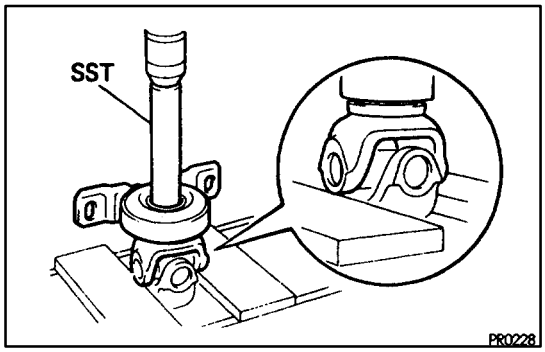

5. INSTALL CENTER SUPPORT BEARING

(a) Using SST and a press, install the center support bearing.
SST 09330–50010

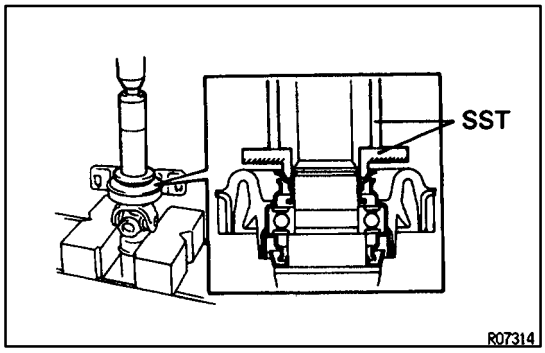

(b) Using SST and a press, insert a new dust deflector until it almost the rubber of the center support bearing.
SST 09608–12010 (09608–00070),
09608–35014 (09608–06040)

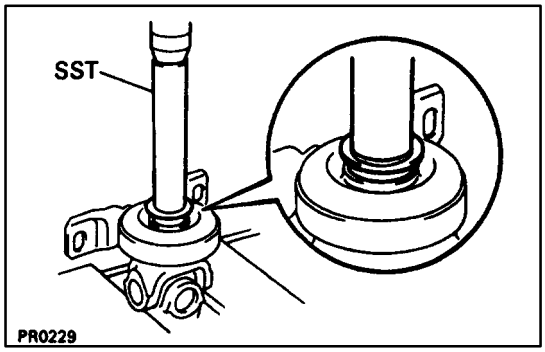

(c) Using SST and a press, install a new dust deflector till end.
SST 09330–50010

WhereEverybodyKnowsYourName

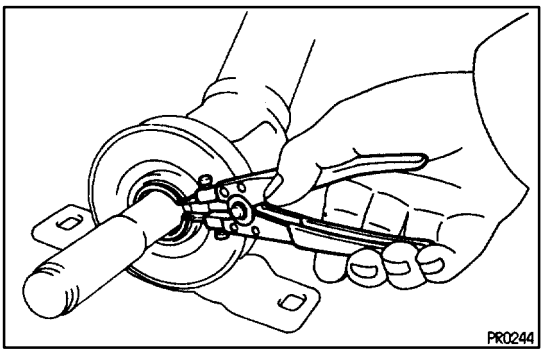

(d) Using a snap ring expander, install the new snap ring.

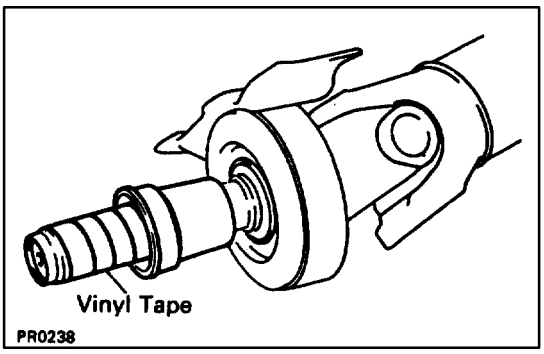

6. ASSEMBLE INTERMEDIATE SHAFT AND PROPELLER SHAFT

(a) Install the dust boot.

NOTICE: Assemble after wrapping vinyl tape around the spline so it will not damage the boot.

(b) Apply grease to the spline.

Grease:

Molybdenum disulphide lithium base, NLGI No.2.

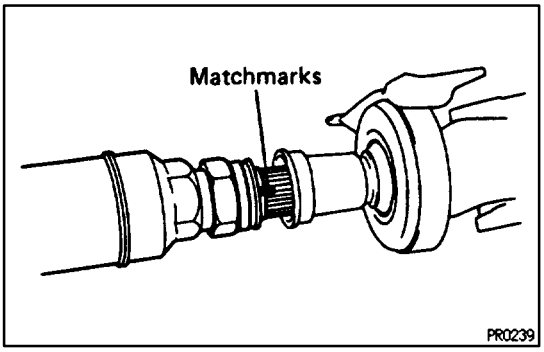

(c) Align the matchmarks and assemble the intermediate shaft and propeller shaft.

(d) Cover the adjusting nut with the dust boot.

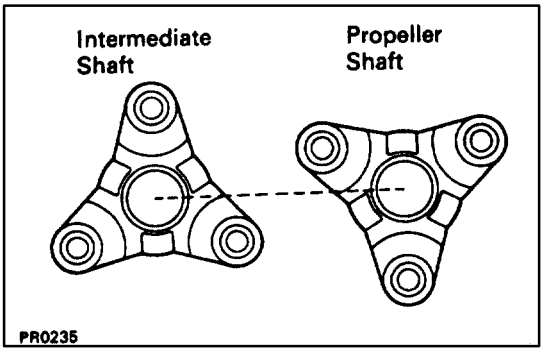

NOTICE: The directions of the intermediate shaft companion flange and the propeller shaft companion flange should differ by 180°.

(e) Tighten the adjusting nut fully by hand.

WhereEverybodyKnowsYourName

PROPELLER SHAFT INSTALLATION

PR04L–01

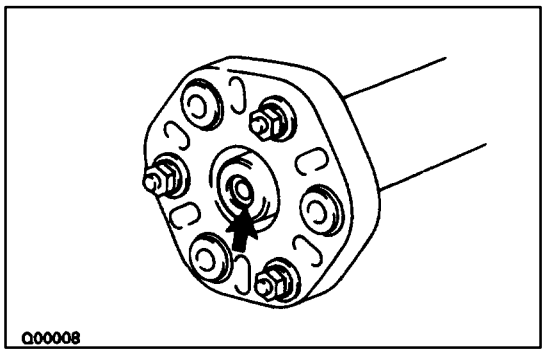

1. INSTALL PROPELLER SHAFT

(a) Apply grease to the flexible coupling centering bushings.
Grease:
Molybdenum disulphide lithium base, NLGI No.1 or No.2.

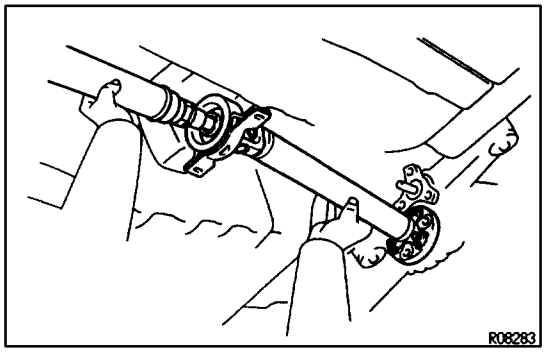

(b) Insert the propeller shaft from the vehicle's rear and connect the transmission and differential.
NOTICE: Support the center support bearing by hand so that the transmission and intermediate shaft, and propeller shaft and differential, remain in a straight line.

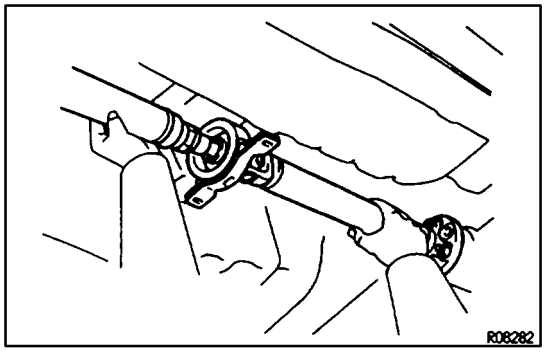

(c) Temporarily install the center support bearing set bolts with the adjusting washers.
HINT: Use the adjusting washers which were removed.

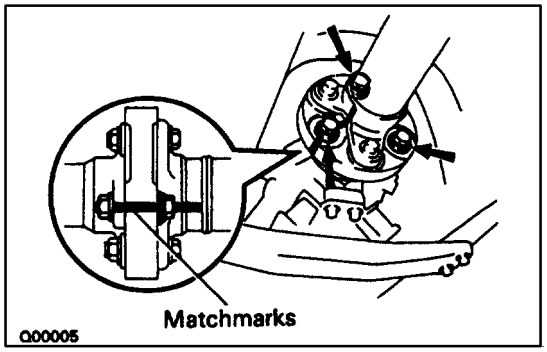

(d) Align the matchmarks and connect the propeller shaft to the transmission.

(e) Install the 3 bolts, washers and nuts.
NOTICE: Bolts should be inserted from the propeller shaft side.
Torque: 79 N·m (805 kgf·cm, 58 ft·lbf)

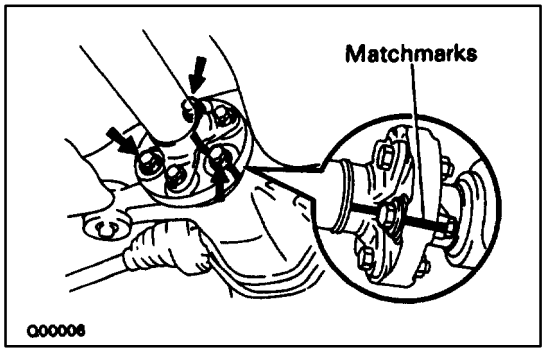

(g) Align the matchmarks and install the propeller shaft on the differential with the 3 bolts, washers and nuts.
NOTICE: Bolts should be inserted from the propeller shaft side.
Torque: 79 N·m (805 kgf·cm, 58 ft·lbf)

WhereEverybodyKnowsYourName

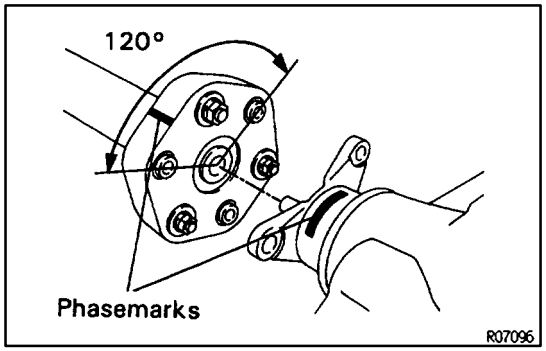

If using a new propeller shaft w / Phasemarks:
Install the propeller shaft phasemarks and differential phasemarks so that their respective alignment phasemarks match. If the propeller shaft phasemarks and differential phasemarks do not align, install the propeller shaft and differential alignment phasemarks are as close together as possible.
w / o Phasemarks:
Install the propeller shaft.
(See page PR–12)

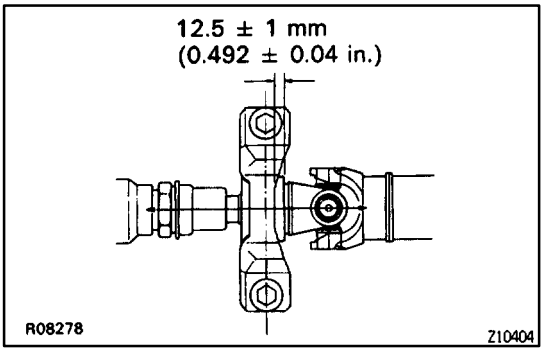

(h) Torque the center support bearing set bolts.
Torque: 49 N·m (500 kgf·cm, 36 ft·lbf)
HINT: Adjust the center support bearing to keep the dimension within the limits, as shown.
Under the same condition, check if the center line of the center support bearing is at right angles to the shaft axial direction.

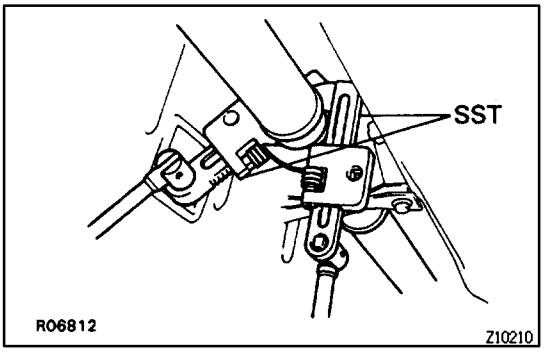

(i) Using SST, tighten the adjusting nut.
SST 09922–10010
Torque: 48 N·m (490 kgf·cm, 35 ft·lbf)
HINT: Use a torque wrench with a fulcrum length of 350 mm (13.8 in.).

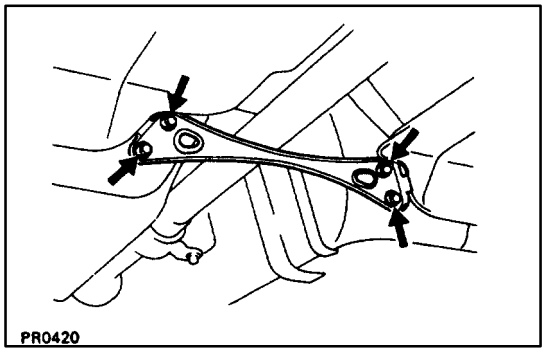

2. INSPECT JOINT ANGLE
(See page PR–15)
NOTICE: The joint angle should by all means be checked when the propeller shaft is removed and installed.

3. INSTALL CROSSMEMBER BRACE
Install the center floor crossmember brace and torque the 4 bolts.
Torque: 13 N·m (130 kgf·cm, 8 ft·lbf)

WhereEverybodyKnowsYourName

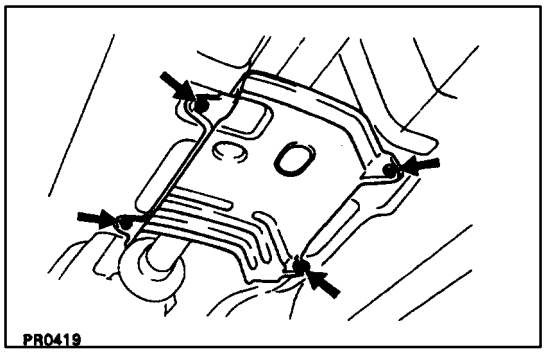

4. INSTALL HEAT INSULATOR

Install the heat insulator and torque the 4 nuts.

Torque: 5.4 N·m (55 kgf·cm, 48 in.·lbf)

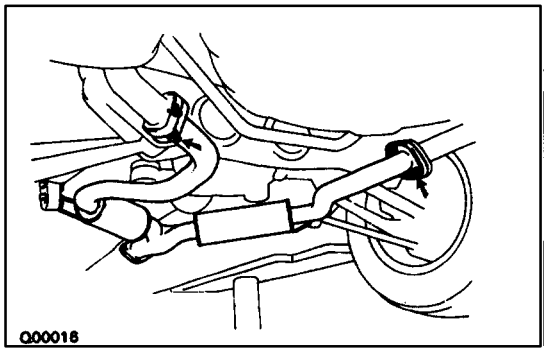

5. INSTALL EXHAUST CENTER PIPE

(a) Install new gaskets.
(b) Install the exhaust center pipe.
(c) Install the exhaust center pipe to the 2 rings.
(d) Install and torque the new 4 nuts.
Torque: 19 N·m (195 kgf·cm, 14 ft·lbf)

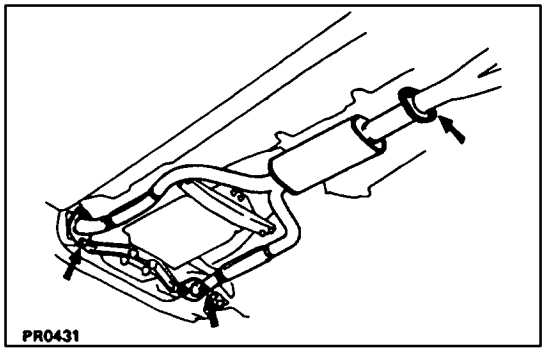

6. INSTALL EXHAUST FRONT PIPE

(a) Install new gaskets.
(b) Install the front pipe.
(c) Install and torque the 6 bolts and new nuts.
Torque: 43 N·m (440 kgf·cm, 32 ft·lbf)

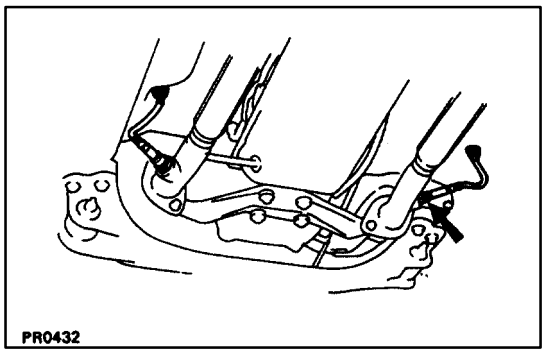

(d) Connect both oxygen sensors.
HINT: When connecting the oxygen sensor, turn it to the left about 3 times.
NOTICE: After installing the oxygen sensor, check that the wire is not twisted.
(e) Tighten the oxygen sensors.
Torque: 44 N·m (450 kgf·cm, 33 ft·lbf)
(f) Connect the oxygen sensor grommets to the floor.

WhereEverybodyKnowsYourName

JOINT ANGLE INSPECTION AND ADJUSTMENT

PR02U–08

NOTICE: When performing operations which involve the removal and installation of the propeller shaft, always check the joint. Make adjustments if necessary.

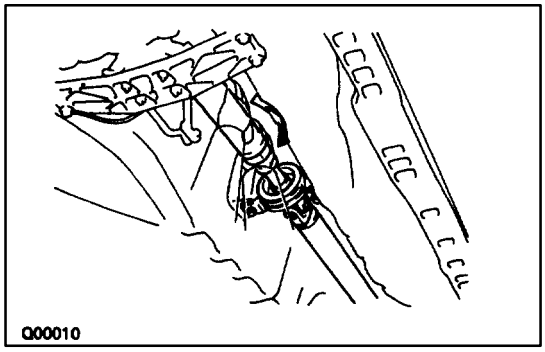

1. STABILIZE PROPELLER SHAFT AND DIFFERENTIAL

(a) Turn the propeller shaft several times by hand to stabilize the center support bearing and flexible couplings.

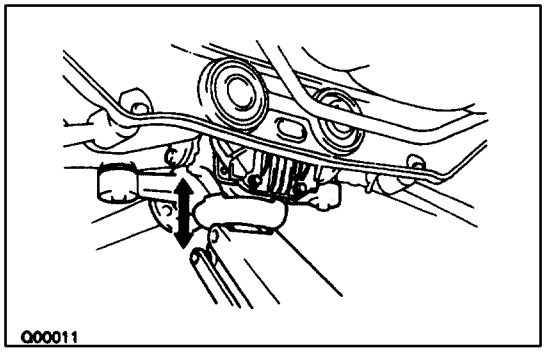

(b) Using a jack, raise and lower the differential to stabilize the differential mounting cushion.

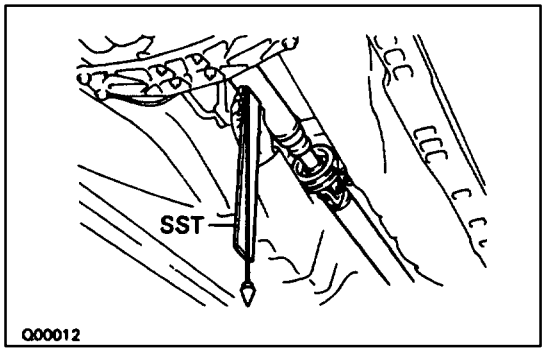

2. CHECK JOINT ANGLE OF NO.2 JOINT AND NO.3 JOINT

(a) Using SST, measure the installation angle of the intermediate shaft and propeller shaft.
SST 09370–50010
HINT: The SST should be directly underneath the tube.

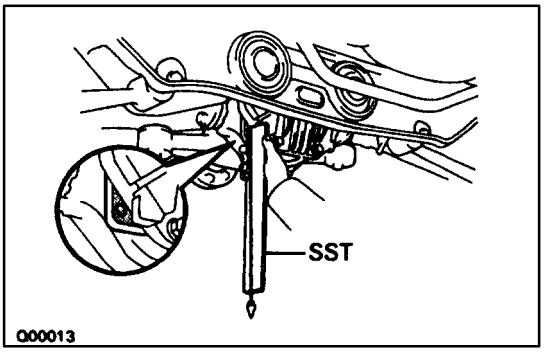

(b) Using SST, measure the installation angle of the differential.
SST 09370–50010
HINT: Measure the installation angle by placing the SST in the position, as shown in the illustration.

(c) Calculate the No.2 joint angle.

WhereEverybodyKnowsYourName

No.2 joint angle:

A–B = –1°05′ ± 36′

A: Intermediate shaft installation angle

B: Propeller shaft installation angle

(d) Calculate the No.3 joint angle.

No.3 joint angle:

B–C = 1°001′ ± 36′

B: Propeller shaft installation angle

C: Differential installation angle

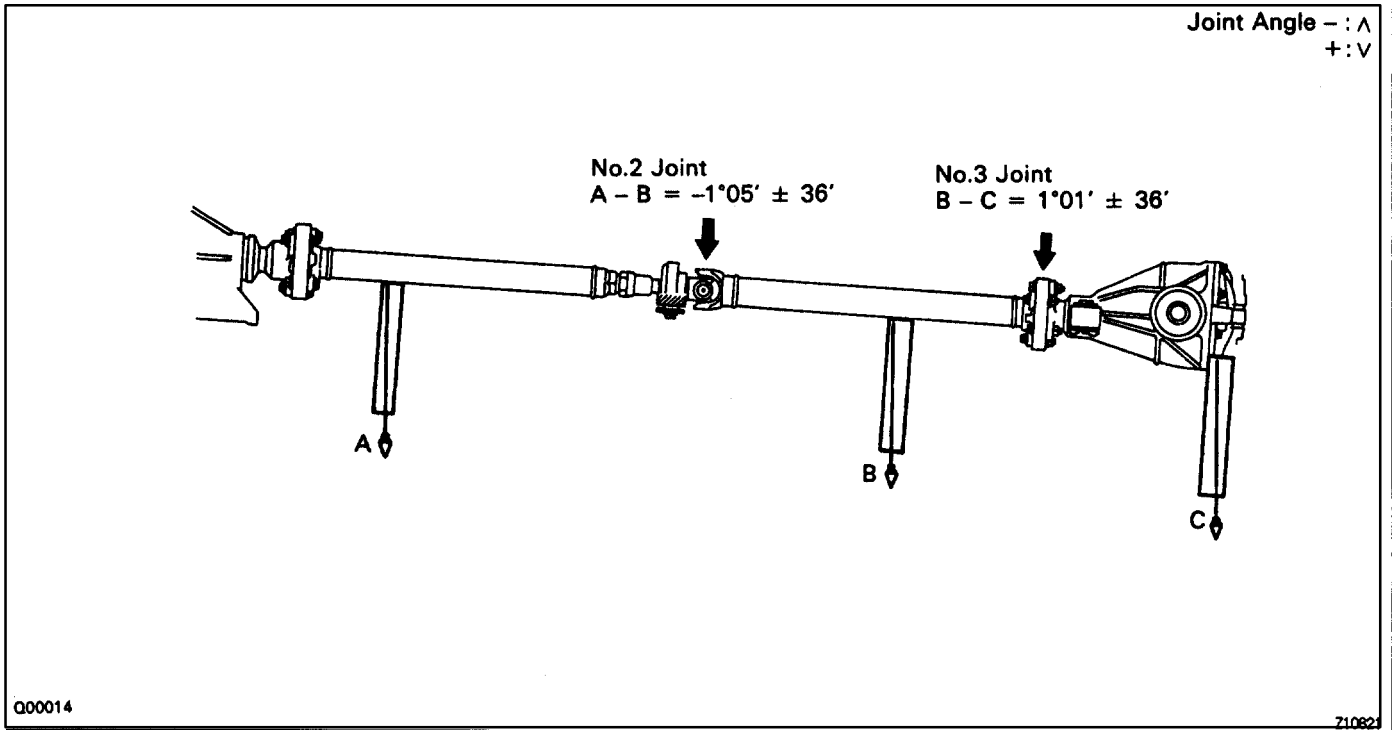

If the measure angle is not within the specification, adjust it with the center support bearing adjusting washer, differential mount upper stopper and adjusting shim.

		Thickness mm (in.)	Remarks
Center support bearing	Adjusting washer	2.0 (0.079) 4.0 (0.157) 6.0 (0.236) 8.5 (0.335)	▼Left and right washers should be the same thickness ▼2 washers should not be assembled together. ▼Standard parts are used 6.0 mm (0.236 in.) washers.
	Set bolt	40.0 (1.575)	
Differential	Mount upper stopper	2.3 (0.091) 2.8 (0.110)	▼When the vehicle is new a 2.8 mm (0.110 in.) stopper used in assembly
	Adjusting shim	1.0 (0.039) 1.6 (0.063) 2.0 (0.079)	▼Left and right washers should be the same thickness ▼This shim is installed on top of the mount upper stopper and is used for adjustment.

WhereEverybodyKnowsYourName

ADJUSTMENT CHART

PR02V–04

HOW TO READ THIS CHART

Take measurements, then calculate the No.2 and No. 3 joint angle.

Mark the calculated values on the chart and read the coordinates.

Replace the adjusting washer, shim and mount upper stopper in accordance with the coordinates read and adjust the joint angles.

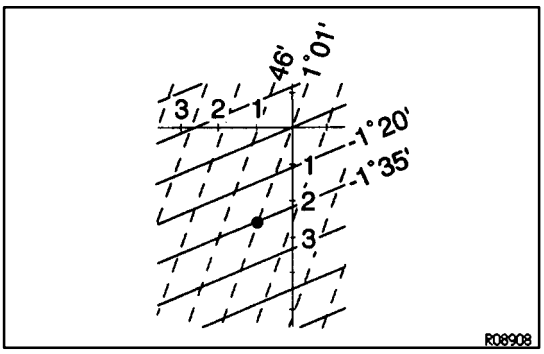

Example

Measurements (Installation angle):

Intermediate shaft 1° 10′

Propeller shaft 2° 45′

Differential 1° 01′

Joint angle:

No.2 1° 10′ – 2° 46′ = 1° 35′

No.3 2° 45′ – 1° 44′ = 1° 01′

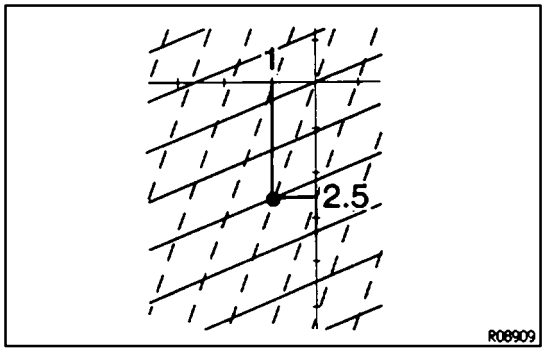

Adjustment:

Center support bearing

Standard parts 6.5 mm (0.256 in.) + 2.5 mm (0.118 in.) = 8.5 mm (0.138 in.)

Use adjusting washers which are 8.5 mm (0.335 in.) thicker.

Differential

Use adjusting shims which are 1.0 mm (0.039 in.) thicker.

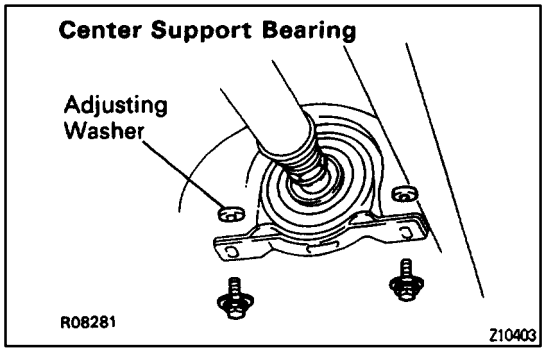

HINT:

- Maintain the same thickness for the adjusting washers and adjusting shims on both the left and right sides.
- If a washer, stopper and shim of the exact thickness are not available, use the parts which are nearest in thickness.

NOTICE: Check the joint angle once again after making the adjustment.

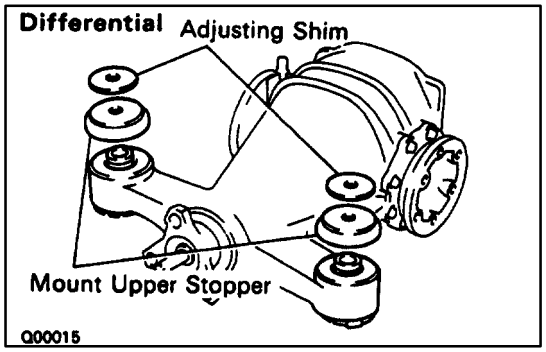

WhereEverybodyKnowsYourName

ADJUSTMENT CHART

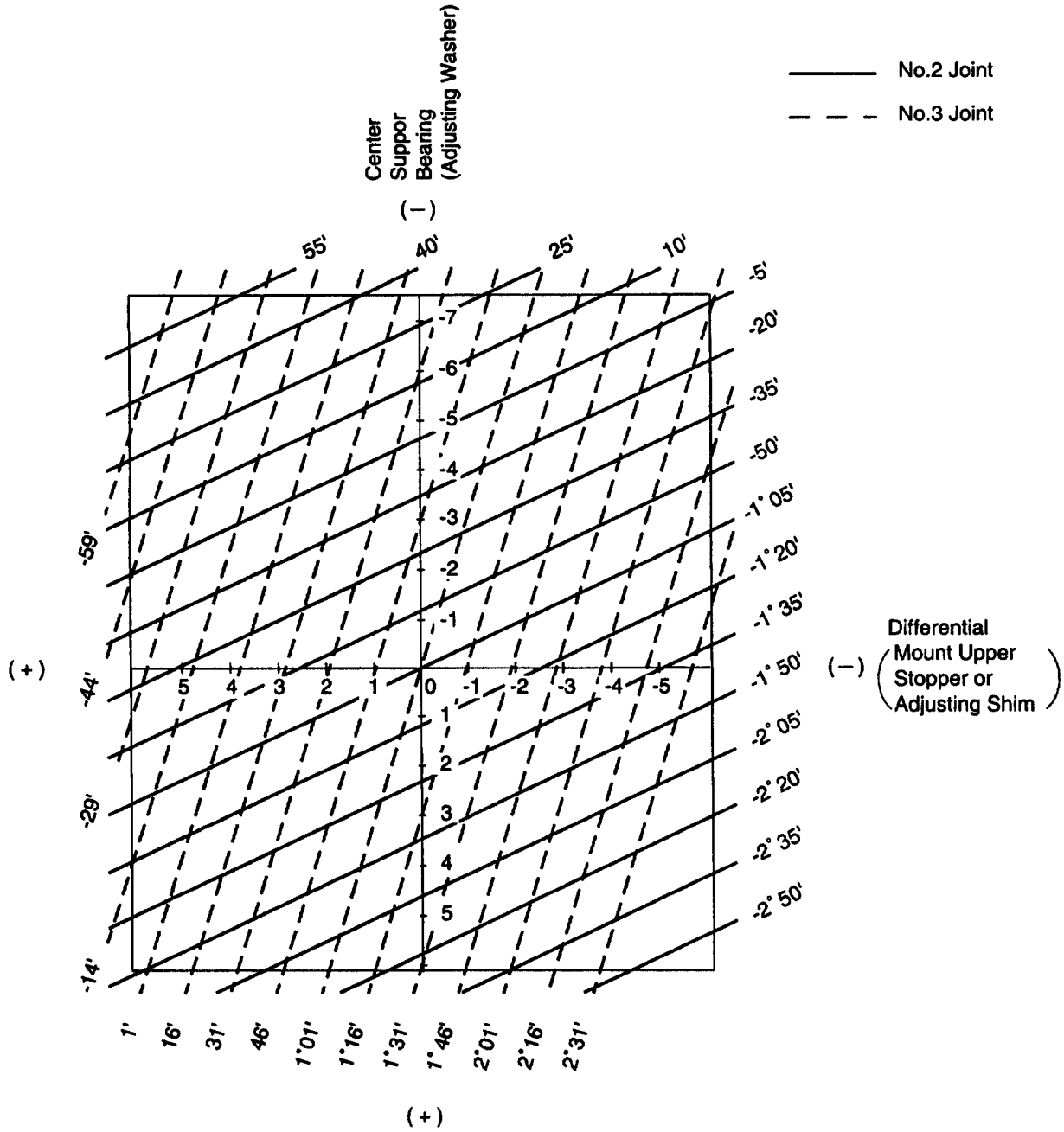

WhereEverybodyKnowsYourName

SERVICE SPECIFICATIONS

SERVICE DATA

PR01M–06

Shaft runout	Limit	0.8 mm (0.031 in.)
Joint angle	No.2 joint	–1° 05′ ± 36′
	No.3 joint	1° 01′ ± 36′

TORQUE SPECIFICATIONS

PR01N–07

Part tightened	N·m	kgf·cm	ft·lbf
Intermediate shaft X Transmission	79	805	58
Propeller shaft X Differential	79	805	58
Crossmember X Body	13	130	8
Exhaust center pipe X Exhaust rear pipe	19	195	14
Exhaust center pipe X Exhaust front pipe	43	440	32
Exhaust front pipe X Exhaust manifold	43	440	32
Center support bearing X Body	49	500	36
Heat insulator X Body	5.4	55	48 in.·lbf

WhereEverybodyKnowsYourName

DESCRIPTION (SC300)

PR038–02

The propeller shaft is a 2–part type, each part consisting of a strong tube having a high centering and dimensional precision and a small diameter. The propeller shaft is connected to the transmission and the differential via 3 joints. No.1 and No.2 joints are hooke universal joint.
NO.3 joint are made of flexible rubber couplings.

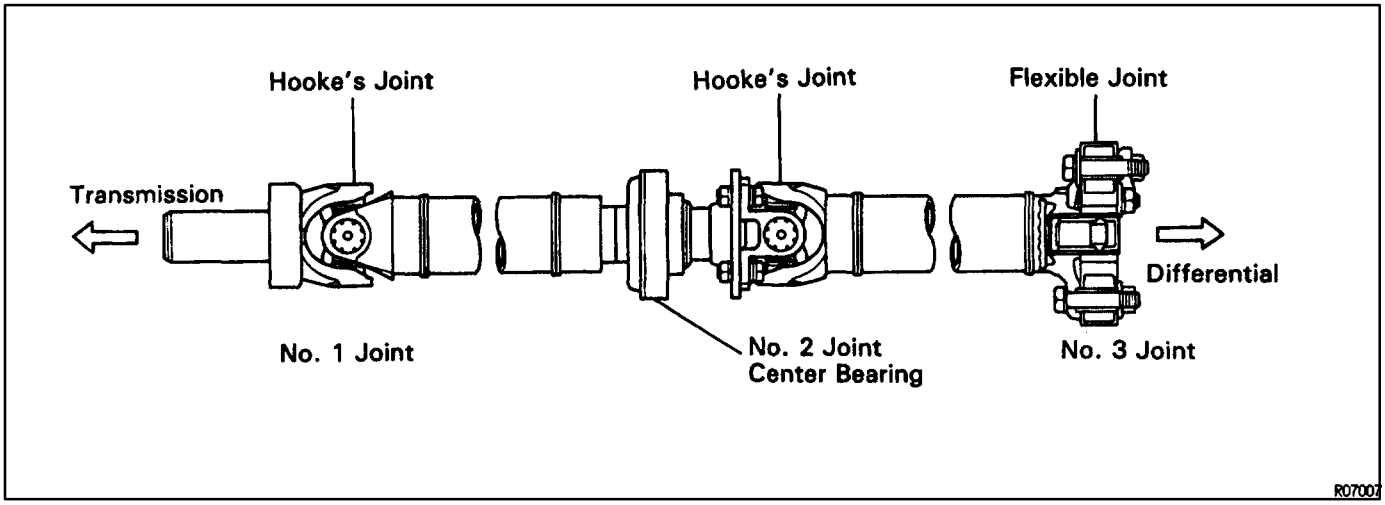

WhereEverybodyKnowsYourName

PREPARATION

SST (SPECIAL SERVICE TOOLS)

PR02W–03

	09325–20010	Transmission Oil Plug	M/T
	09325–40010	Transmission Oil Plug	A/T
	09330–00021	Companion Flange Holding Tool	
	09557–22022	Companion Flange Remover & Replacer	
	09370–50010	Drive Line Angle Gauge	

EQUIPMENT

PR02X–01

Torque wrench	
Dial indicator	
Vernier calipers	

WhereEverybodyKnowsYourName

PRECAUTION

PR02Y–01

Be careful not to grip the propeller shaft tube too tightly in the vise as this will cause deformation.

TROUBLESHOOTING

PR039–02

Use the table to help you find the cause of the problem. The numbers indicate the priority of the likely cause of the problem. Check each part in order. If necessary, replace these parts.

See Page	PR–27	PR–26	PR–27	PR–27	PR–27	PR–27	PR–26	–
Parts Name / Trouble	Sleeve yoke spline worn	Center bearing worn	Propeller shaft runout	Propeller shaft imbalance	Sleeve yoke spline stuck	Spider bearing worn or stuck	Flexible rubber coupling worn	Transmission extension housing rear bushing worn
Noise	2	1				4	3	
Vibration			3	4	2			1

WhereEverybodyKnowsYourName

PROPELLER SHAFT
COMPONENTS

PR02Z–02

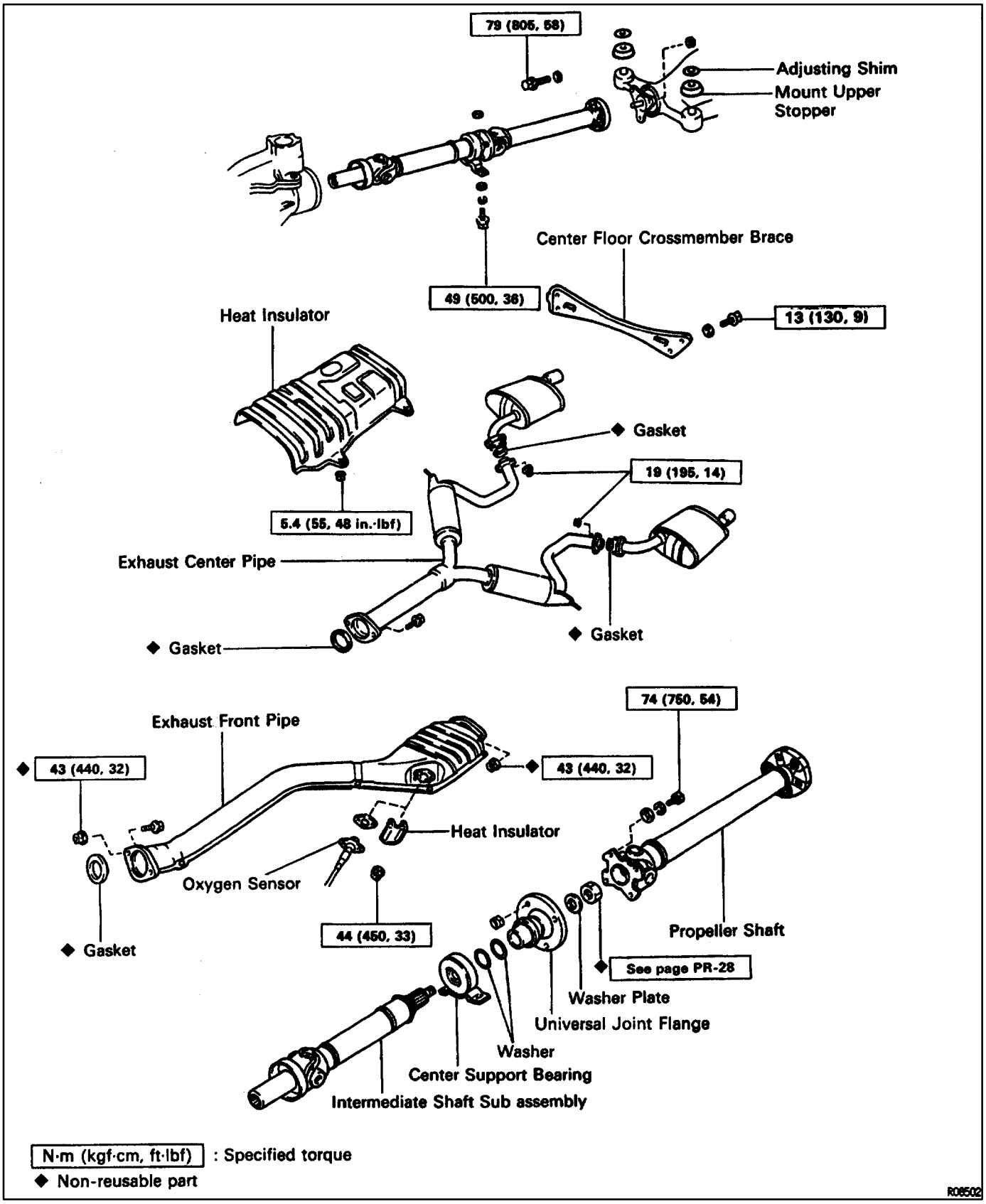

WhereEverybodyKnowsYourName

PROPELLER SHAFT REMOVAL

PR030–02

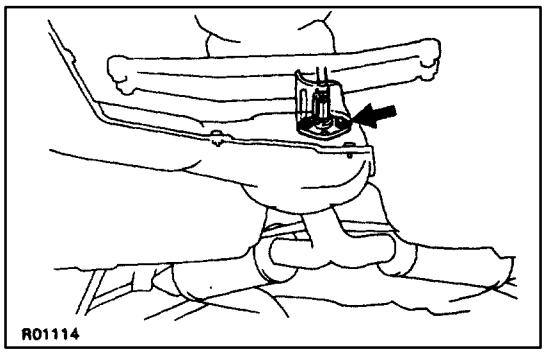

1. REMOVE EXHAUST FRONT PIPE

(a) Disconnect the oxygen sensor grommets from the floor.

(b) Disconnect the oxygen sensors and heat insulator.

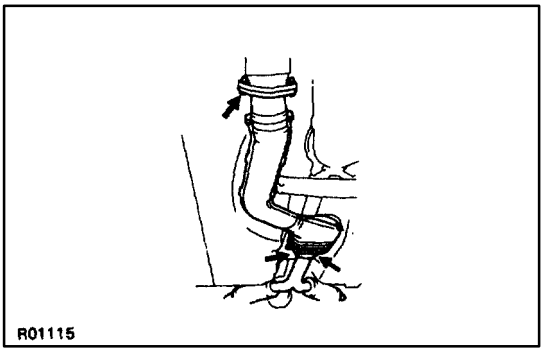

(c) Remove the 4 nuts, boolts and exhaust front pipe.

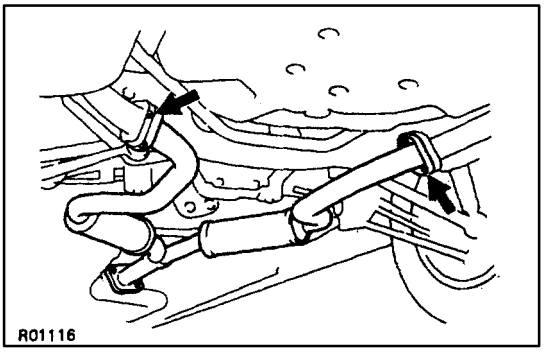

2. REMOVE EXHAUST CENTER PIPE

HINT: To prevent interference of the tail pipe from with the rear bumper, the front side of the tail pipe is suspended from the stabilizer bar.

(a) Disconnect the exhaust center pipe from the 2 rings.

(b) Remove the 4 nuts and exhaust center pipe.

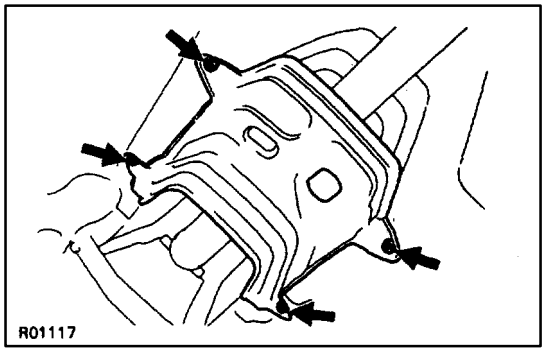

3. REMOVE HEAT INSULATOR

Remove the 4 nuts and the heat insulator.

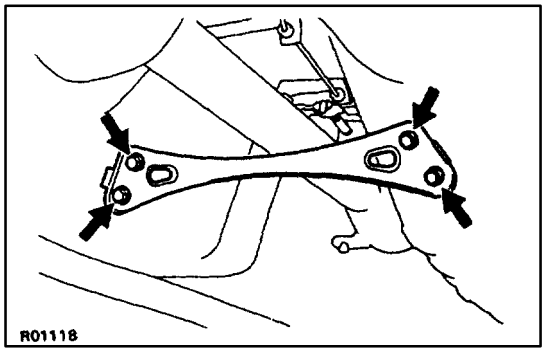

4. REMOVE CROSSMEMBER BRACE

Remove the 4 bolts and the center floor crossmember brace.

WhereEverybodyKnowsYourName

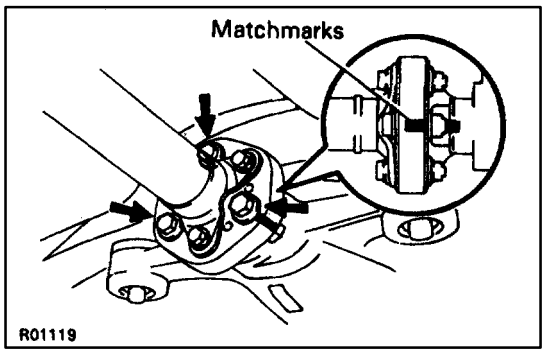

5. REMOVE PROPELLER SHAFT

(a) Place the matchmarks on the differential companion flange and flexible coupling.

(b) Remove the 3 bolts inserted in the differential companion flange.

NOTICE: The bolts inserted in the propeller shaft companion flange should not be removed.

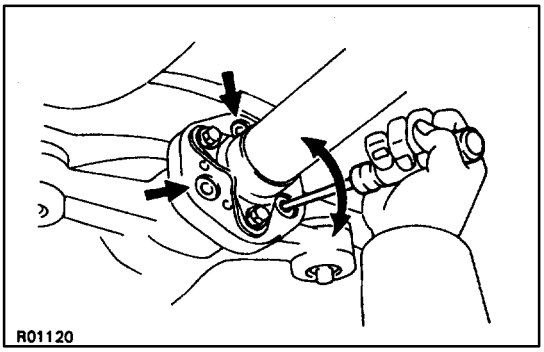

(c) Separate the flexible couplings from the differential side.

HINT: If the flexible coupling can not be easily separated by hand, insert a screwdriver into the bolt hole of the flexible coupling, as shown in the illustration, then pry the coupling out.

NOTICE: Do not bring the screwdriver blade in direct contact with the flexible coupling's rubber portion.

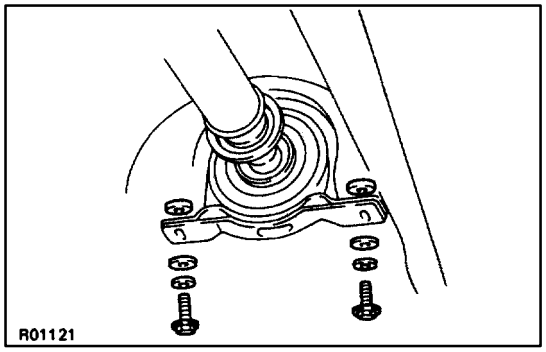

(d) Remove the 2 center support bearing set bolts and the adjusting washers.

HINT: Some vehicles are not equipped with an adjusting washer.

NOTICE: When removing the set bolts, support the center support bearing by hand so that the transmission and intermediate shaft, and propeller shaft and differential, remain in a straight line.

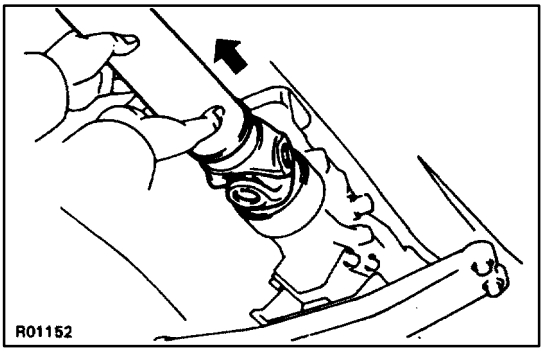

(e) Pull the yoke from the transmission.

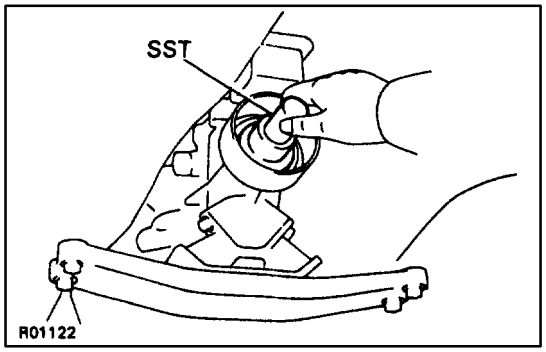

(f) Insert SST in the transmission to prevent oil leakage.

SST 09325–20010 (M/T)

09325–40010 (A/T)

WhereEverybodyKnowsYourName

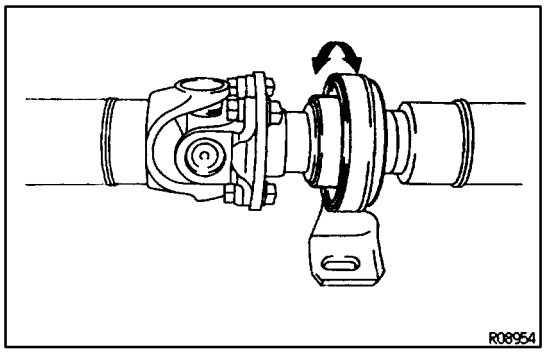

CENTER SUPPORT BEARING AND FLEXIBLE COUPLINGS INSPECTION

PR031–02

1. INSPECT CENTER SUPPORT BEARING

- Check for cracks in or damage to the cushion.
- Check if the bearing turns smoothly.

If the center support bearing is damaged, worn or does not turn smoothly, replace it.

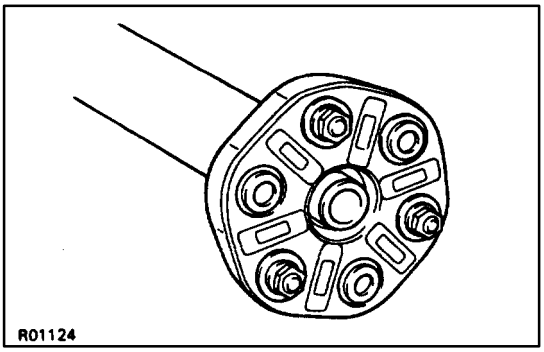

2. INSPECT FLEXIBLE COUPLINGS

- Check for cracks in or damage to rear flexible couplings.

If the flexible coupling is damaged, replace the propeller shaft assembly.

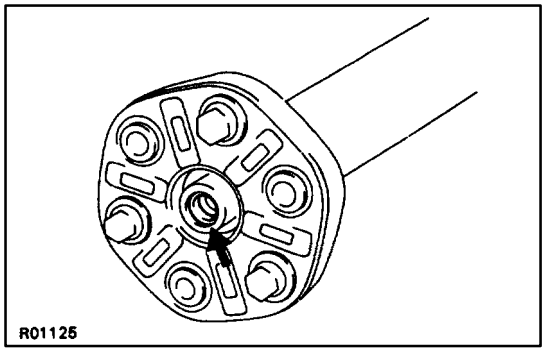

3. INSPECT FLEXIBLE COUPLING CENTERING BUSHING

- Check for damage to the bushing.

If the bushing is damaged, replace the propeller shaft assembly.

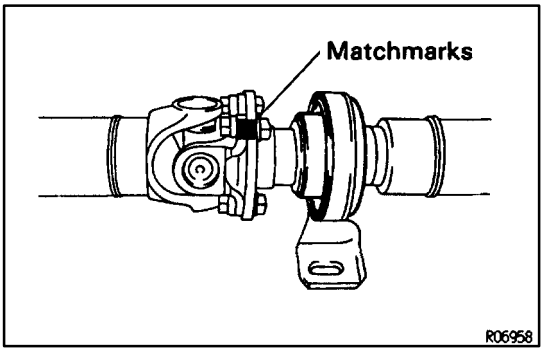

PROPELLER SHAFT REPLACEMENT

PR032–02

1. SEPARATE PROPELLER SHAFT AND INTERMEDIATE SHAFT

(a) Place the matchmarks on the flanges.

(b) Remove the 4 nuts, washers and bolts.

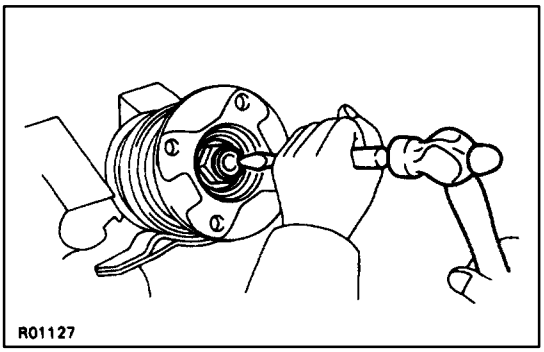

2. REMOVE CENTER SUPPORT BEARING FROM INTERMEDIATE SHAFT

(a) Using a chisel and a hammer, loosen the staked part of the nut.

WhereEverybodyKnowsYourName

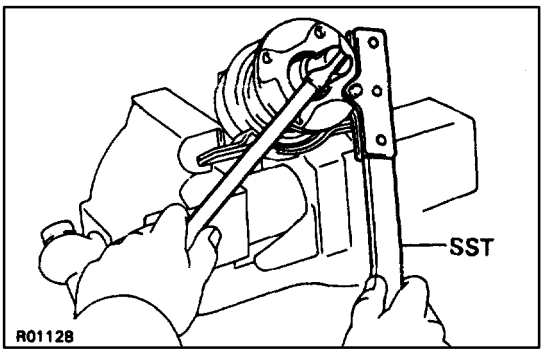

(b) Using SST to hold the flange, remove the nut.
SST 09930–00021

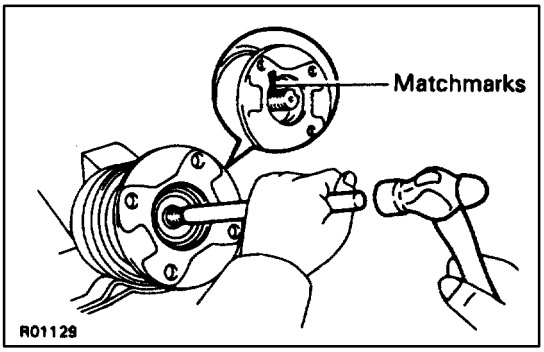

(c) Place the matchmarks on the flange and intermediate shaft.
(d) Remove the flange and center support bearing from the intermediate shaft.

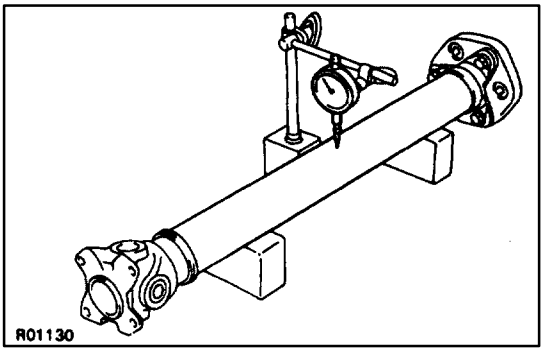

3. INSPECT RUNOUT OF INTERMEDIATE SHAFT AND PROPELLER SHAFT

Maximum runout:

0.8 mm (0.031 in.)

If the runout is greater than the maximum, replace the propeller shaft assembly.

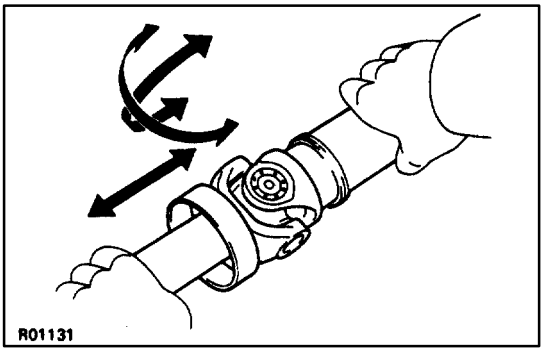

4. INSPECT SPIDER BEARING

- Check if the spider bearing rotates smoothly.
- Check if there is any play in the spider bearing.

If necessary, replace the propeller shaft assembly.

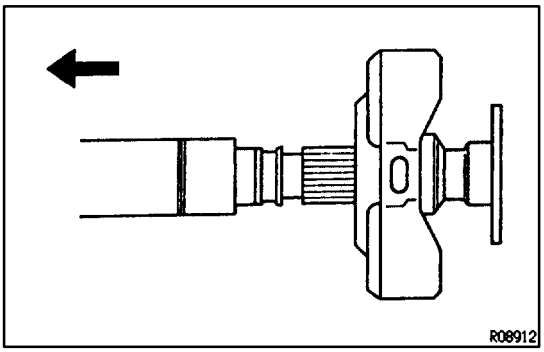

5. INSTALL CENTER SUPPORT BEARING ON INTERMEDIATE SHAFT

HINT: Install the center support bearing in the direction, as shown and install the 2 washers.

WhereEverybodyKnowsYourName

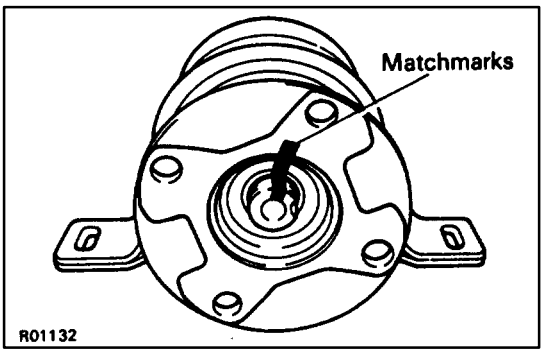

6. INSTALL FLANGE ON INTERMEDIATE SHAFT

(a) Coat the spline of the intermediate with MP grease.

(b) Place the flange on the shaft and align the matchmarks.
HINT: If replacing either the center flange or intermediate shaft, reassemble them so that the front yoke of the intermediate shaft and the rear yoke of the propeller shaft are facing in the same direction.

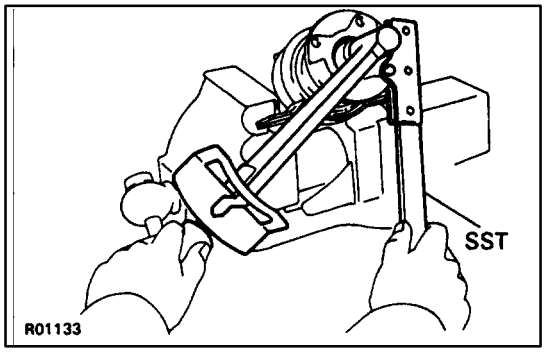

(c) Using SST to hold the flange, press the bearing into position by tightening down a new nut.
SST 09330–00021
Torque: 181 N·m (1,850 kgf·cm, 134 ft·lbf)

(d) Loosen the nut.

(e) Torque the nut again.
Torque: 69 N·m (700 kgf·cm, 51 ft·lbf)

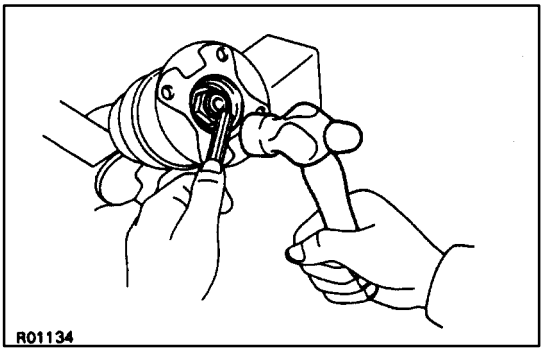

(f) Using a punch and a hammer, stack the shaft.

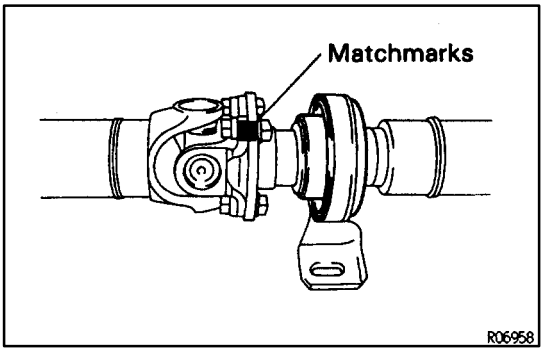

7. INSTALL PROPELLER SHAFT

(a) Align the matchmarks on the flanges and connect the flanges with 4 bolts, washers and nuts.
HINT: If replacing either the center flange or intermediate shaft, reassemble them so that the front yoke of the intermediate shaft and the rear yoke of the propeller shaft are facing in the same direction.

(b) Torque the bolts and nuts.
Torque: 74 N·m (750 kgf·cm, 54 ft·lbf)

PROPELLER SHAFT INSTALLATION

PR04M–01

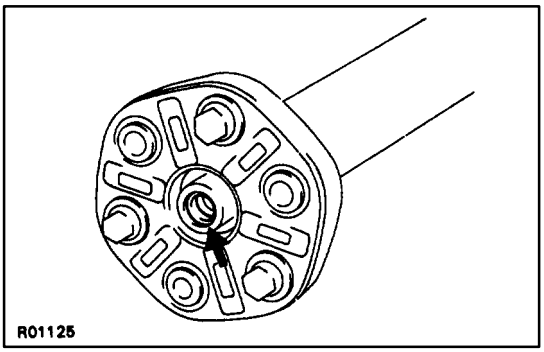

1. INSTALL PROPELLER SHAFT

(a) Apply grease to the flexible coupling centering bushings.
Grease:
Molybdenum disulphide lithium base, NLGI No.1 or No.2.

WhereEverybodyKnowsYourName

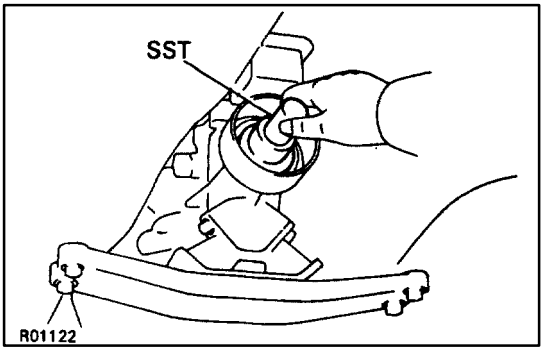

(b) Remove SST.

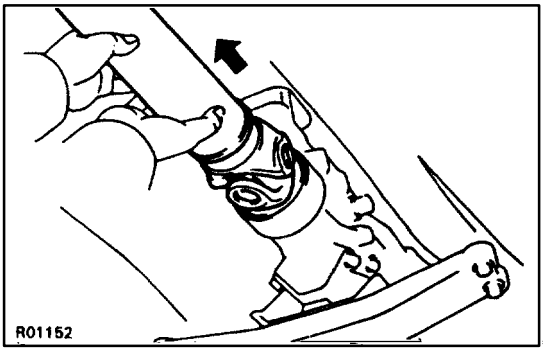

(c) Insert the yoke into the transmission.

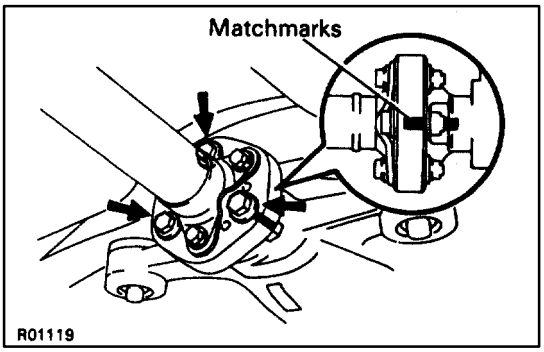

(d) Align the matchmarks and install the propeller shaft on the differential with the 3 bolts, washers and nuts.
NOTICE: Bolts should be inserted from the propeller shaft side.
Torque: 79 N·m (805 kgf·cm, 58 ft·lbf)

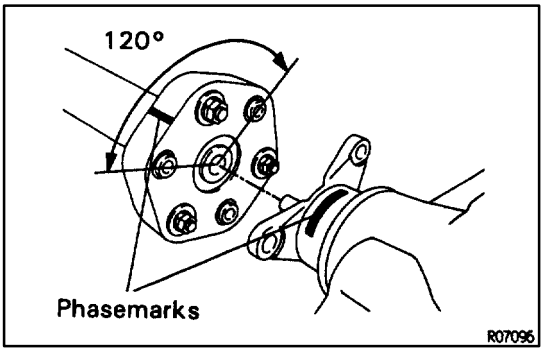

If using a new propeller shaft (w/ Phasemarks)
Install the propeller shaft phasemarks and differential phasemarks so that their respective alignment phasemarks match. If the propeller shaft phasemarks and differential phasemarks do not align, install the propeller shaft and differential alignment phasemarks are as close together as possible.
(w/o Phasemarks)
Install the propeller shaft.
(See page PR–28)

WhereEverybodyKnowsYourName

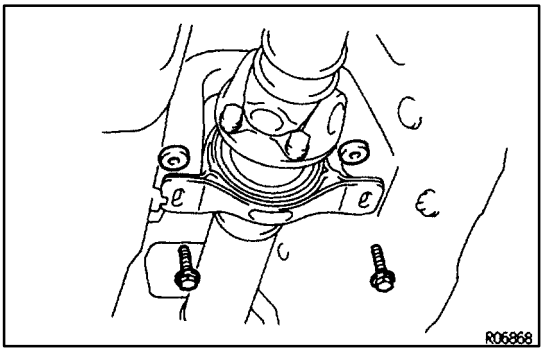

(f) Temporarily install the center support bearing set bolts with the adjusting washers.
HINT: Use the adjusting washers which were removed.

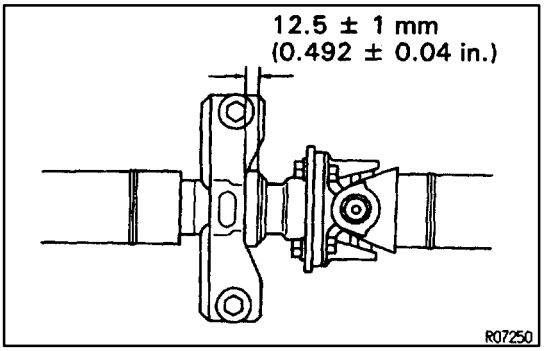

(g) Torque the center support bearing set bolts.
Torque: 49 N·m (500 kgf·cm, 36 ft·lbf)
HINT: Adjust the center support bearing to keep the intervals, as shown with the vehicle in the unladen condition.
Under the same condition, check if the center line of the center support bearing is at right angles to the shaft axial direction.

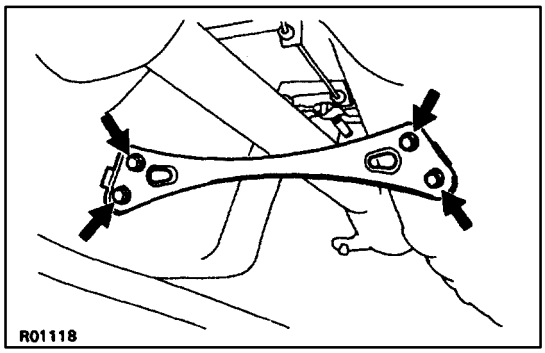

2. INSPECT JOINT ANGLE
(See page PR–32)
NOTICE: The joint angle should by all means be checked when the propeller shaft is removed and installed.

3. INSTALL CROSSMEMBER BRACE
Install the center floor crossmember brace and torque the 4 bolts.
Torque: 13 N·m (130 kgf·cm, 9 ft·lbf)

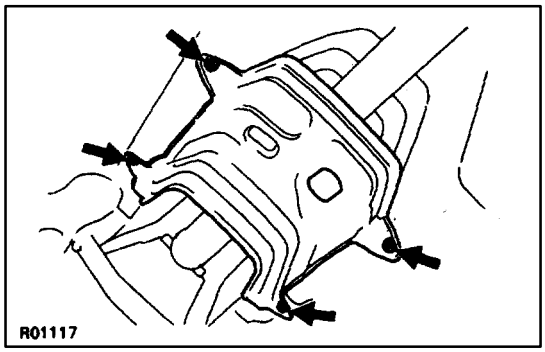

4. INSTALL HEAT INSULATOR
Install the heat insulator and torque the 4 nuts.
Torque: 5.4 N·m (55 kgf·cm, 48 in.·lbf)

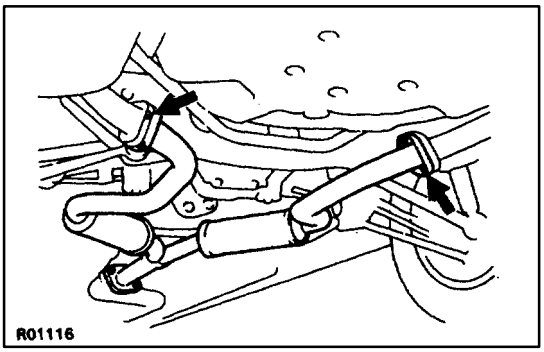

5. INSTALL EXHAUST CENTER PIPE
(a) Install new gaskets.
(b) Install the exhaust center pipe.
(c) Connect the exhaust center pipe to the 2 rings.
(d) Install and torque the new 4 nuts.
Torque: 19 N·m (195 kgf·cm, 14 ft·lbf)

WhereEverybodyKnowsYourName

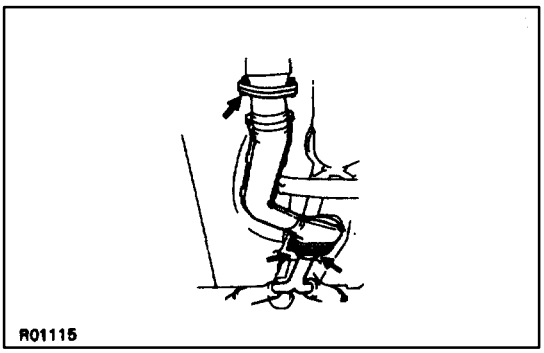

6. INSTALL EXHAUST FRONT PIPE

(a) Install new gaskets.

(b) Install the front pipe.

(c) Install and torque the 4 bolts and new nuts.
Torque: 43 N·m (440 kgf·cm, 32 ft·lbf)

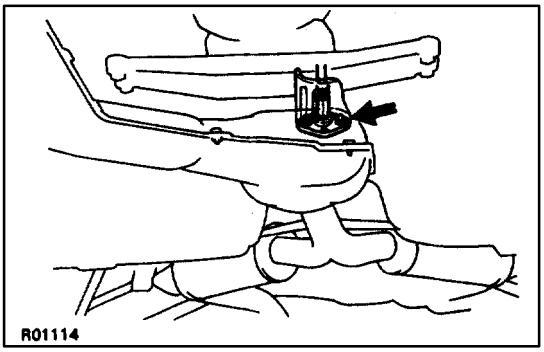

(d) Connect both oxygen sensor with heat insulator.
HINT: When connecting the oxygen sensor, turn it clockwise about 3 times.
NOTICE: After installing the oxygen sensor, check that the wire is not twisted.

(e) Tighten the oxygen sensors.
Torque: 44 N·m (450 kgf·cm, 33 ft·lbf)

(f) Connect the oxygen sensor grommets to the floor.

WhereEverybodyKnowsYourName

JOINT ANGLE INSPECTION AND ADJUSTMENT

PR034–02

NOTICE: When performing operations which involve the removal and installation of the propeller shaft, always check the joint.

Make adjustments if necessary.

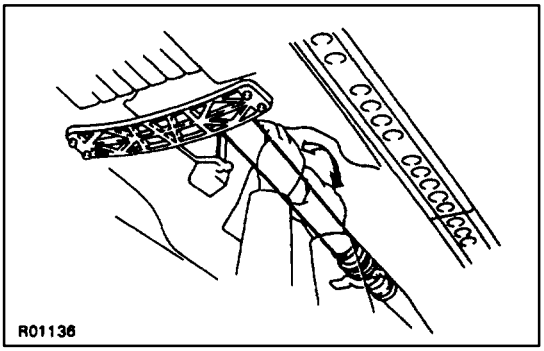

1. STABILIZE PROPELLER SHAFT AND DIFFERENTIAL

(a) Turn the propeller shaft several times by hand to stabilize the center support bearing and flexible couplings.

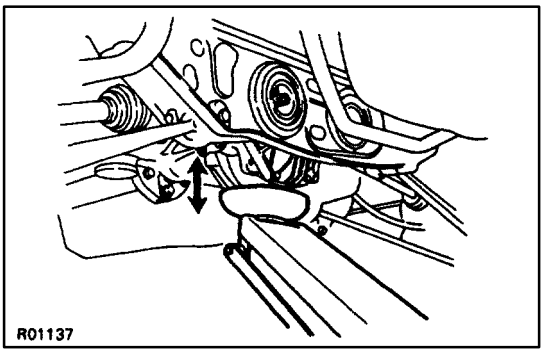

(b) Using a jack, raise and lower the differential to stabilize the differential mounting cushion.

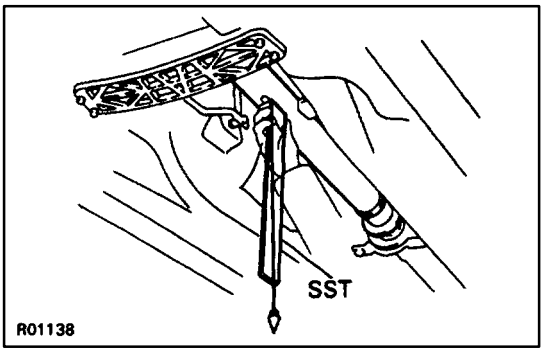

2. CHECK JOINT ANGLE OF NO.2 JOINT AND NO.3 JOINT

(a) Using SST, measure the installation angle of the intermediate shaft and propeller shaft.
SST 09370–50010
HINT: The SST should be directly underneath the tube.

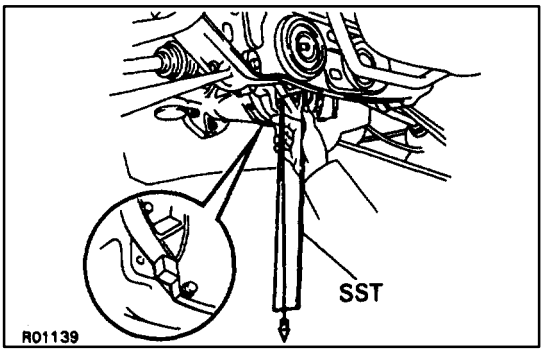

(b) Using SST, measure the installation angle of the differential.
SST 09370–50010
HINT: Measure the installation angle by placing the SST in the position, as shown in the illustration.

(c) Calculate the No.2 joint angle.

WhereEverybodyKnowsYourName

No.2 joint angle:

A – B = – 1° 01′ ± 36′

A: Intermediate shaft installation angle

B: Propeller shaft installation angle

(d) Calculate the No.3 joint angle.

No.3 joint angle:

B – C = 54′ ± 36′

B: Propeller shaft installation angle

C: Differential installation angle

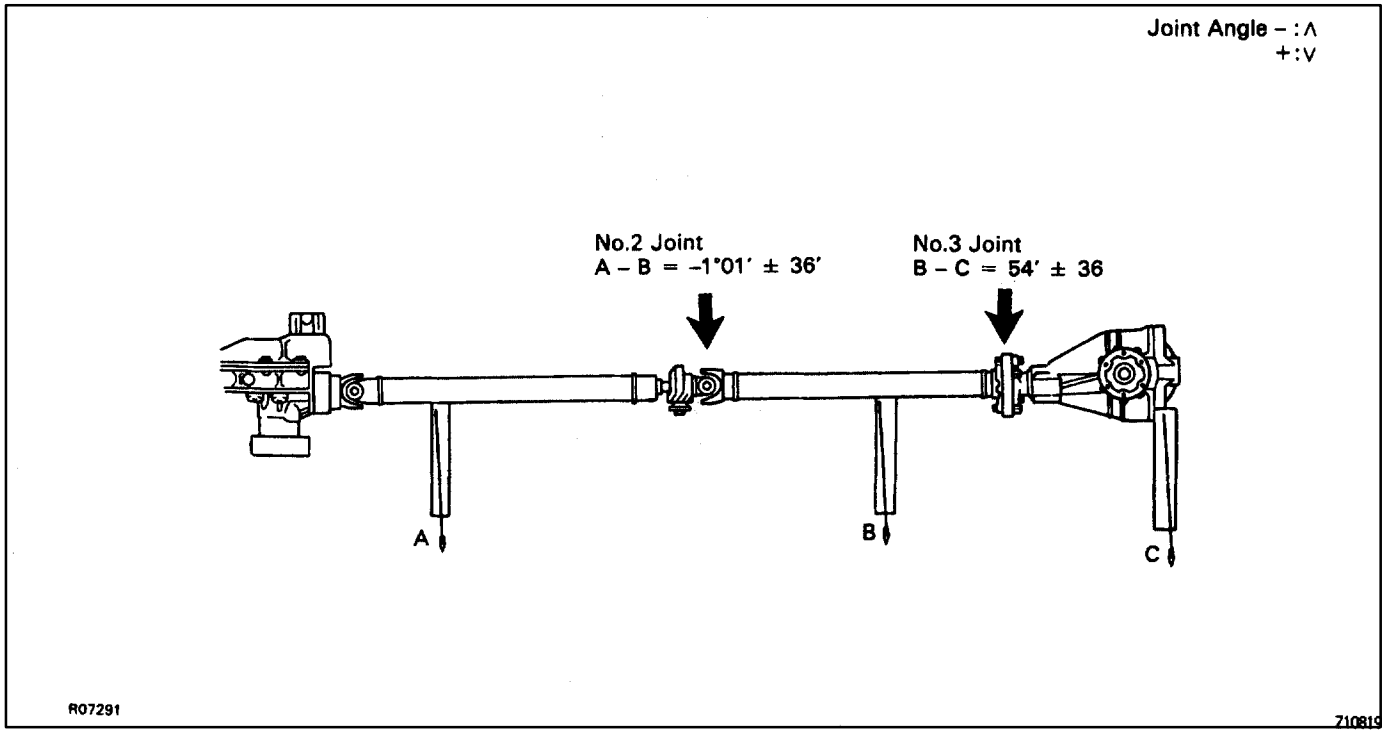

If the measure angle is not within the specification, adjust it with the center support bearing adjusting washer, differential mount upper stopper and adjusting shim.

		Thickness mm (in.)	Remarks
Center support bearing	Adjusting washer	2.0 (0.079) 4.0 (0.157) 6.0 (0.236) 8.5 (0.335)	Left and right washers should be the same thickness. 2 washers should not be assembled together. Standard parts are used 6.0 mm (0.236 in.) washers.
	Set bolt	40.0 (1.575)	
Differential	Mount upper stopper	2.3 (0.091) 2.8 (0.110)	When the vehicle is new a 2.8 mm (0.110 in.) stopper used in assembly.
	Adjusting shim	1.0 (0.039) 1.6 (0.063) 2.0 (0.079)	Left and right washers should be the same thickness. This shim is installed on top of the mount upper stopper and is used for adjustment.

WhereEverybodyKnowsYourName

ADJUSTMENT CHART

PR035–02

HOW TO READ THIS CHART

Take measurements, then calculate the No.2 and No. 3 joint angle.

Mark the calculated values on the chart and read the coordinates.

Replace the adjusting washer, shim and mount upper stopper in accordance with the coordinates read and adjust the joint angles.

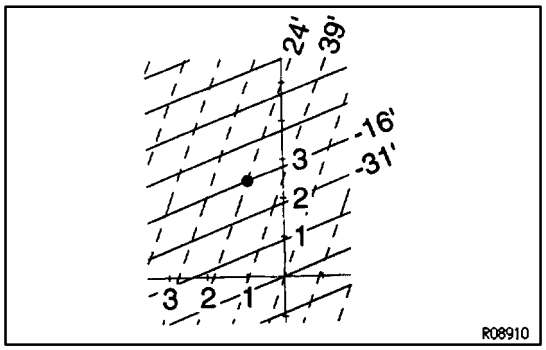

Example

Measurements (Installation angle):

Intermediate shaft 2° 2′

Propeller shaft 2° 36′

Differential 2° 12′

Joint angle:

NO.2 2° 20′ – 2° 36′ = – 16′

NO.3 2° 36′ – 2° 12′ = 24′

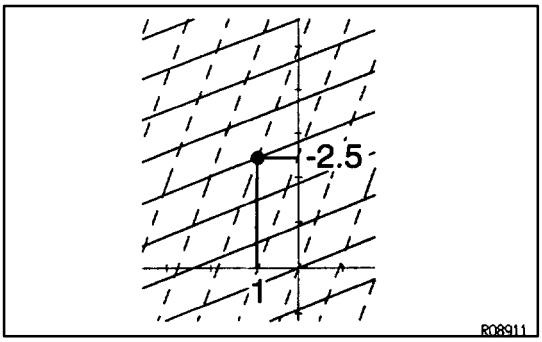

Adjustment:

Center support bearing

Standard parts 6.0 mm (0.236 in.) –2.5 mm (0.098 in) = 3.5 mm (0.138 in.)

Use adjusting washers which are 2.0 mm (0.079 in.) thicker.

Differential

Use adjusting shims which are 1.0 mm (0.039 in.) thicker.

HINT:

- Maintain the same thickness for the adjusting washers and adjusting shims on both the left and right sides.
- If a washer, stopper and shim of the exact thickness are not available, use the parts which are nearest in thickness.

NOTICE: Check the joint angle once again after making the adjustment.

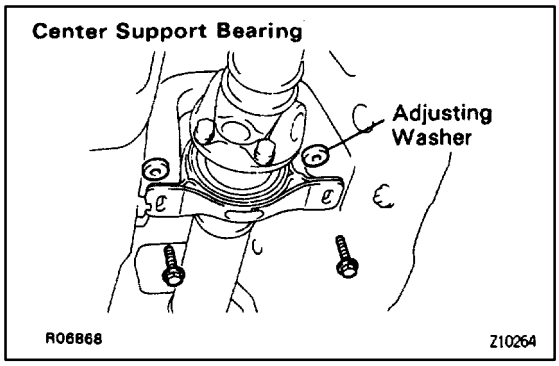

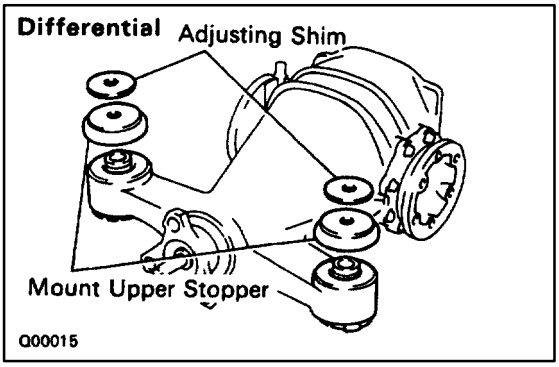

WhereEverybodyKnowsYourName

ADJUSTMENT CHART

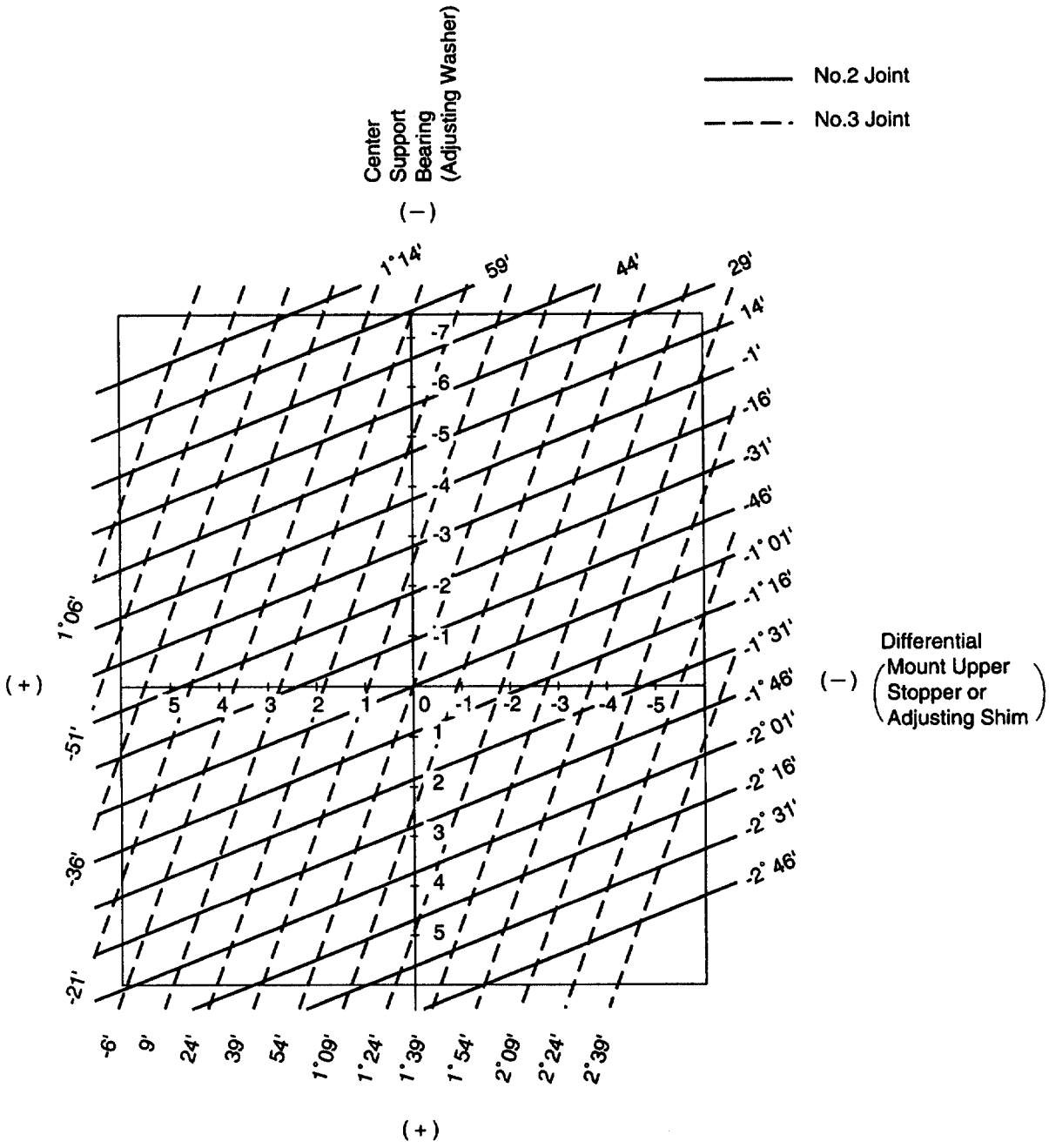

WhereEverybodyKnowsYourName

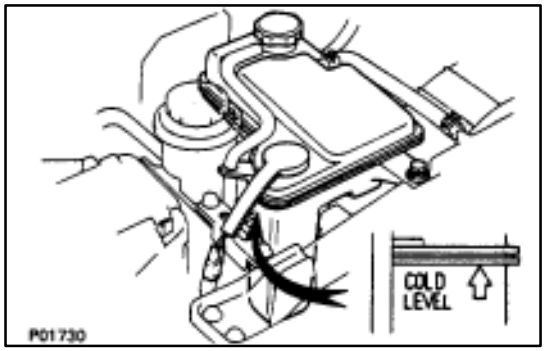

ENGINE TUNE–UP

INSPECTION OF ENGINE COOLANT

1. INSPECT ENGINE COOLANT LEVEL AT RESERVOIR TANK

The coolant level should be above the ”COLD LEVEL” at normal temperature (20°C (68°F)).
If low, check for leaks and add coolant up to the ”COLD LEVEL”.

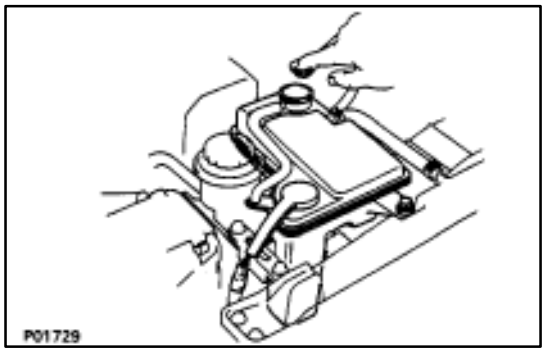

2. INSPECT ENGINE COOLANT QUALITY

There should be any excessive deposits of rust or scales around the radiator cap or reservoir tank filler hole, and the coolant should be free from oil.
If excessively dirty, clean the coolant passages and replace the coolant.

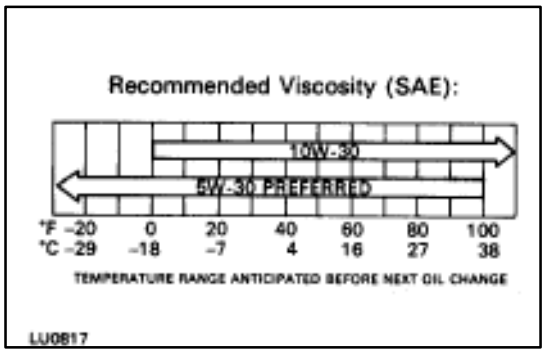

INSPECTION OF ENGINE OIL

1. INSPECT ENGINE OIL QUALITY

Check the oil for deterioration, entry of water, discoloring or thinning.
If the quality is poor, replace the oil.

Oil grade: API grade SG, Energy–Conserving II multigrade. Recommended viscosity is as shown, with SAE 5W–30 being the preferred engine oil.

Drain and refill oil capacity:

w/ oil filter change
4.8 liter (5.1 US qts, 4.2 Imp. qts)

w/o oil filter change
4.5 liter (4.8 US qts, 4.0 Imp. qts)

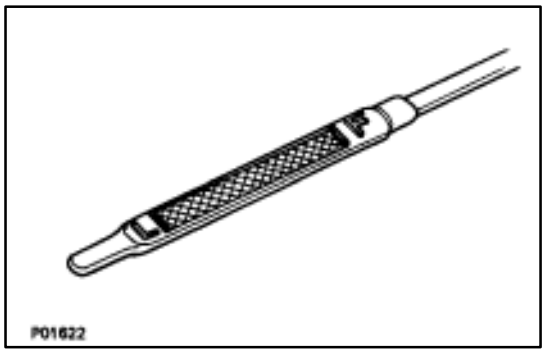

2. INSPECT ENGINE OIL LEVEL

The oil level should be between the ”L” and ”F” marks on the dipstick.
If low, check for leakage and add oil up to ”F” mark.

WhereEverybodyKnowsYourName

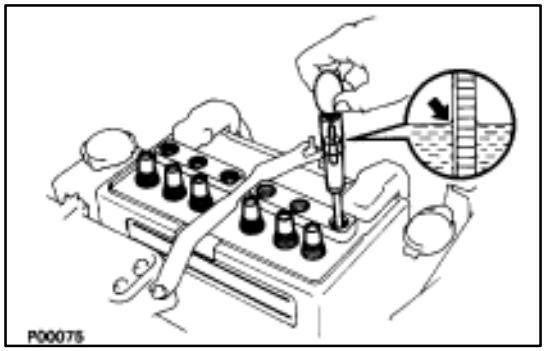

INSPECTION OF BATTERY

1. INSPECT BATTERY SPECIFIC GRAVITY AND ELECTROLYTE LEVEL

(a) Check the specific gravity of each cell.

Standard specific gravity:

1.27–1.29 when fully charged at 20°C(68°F)

If not within specification, charge the battery.

(b) Check the electrolyte quantity of each cell.

If insufficient, refill with distilled (or purified) water.

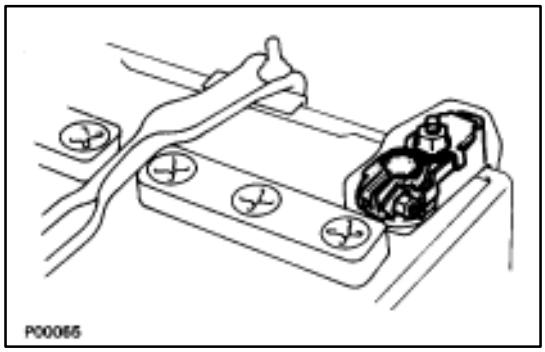

2. CHECK BATTERY TERMINALS

Check that the battery terminals are not loose or corroded.

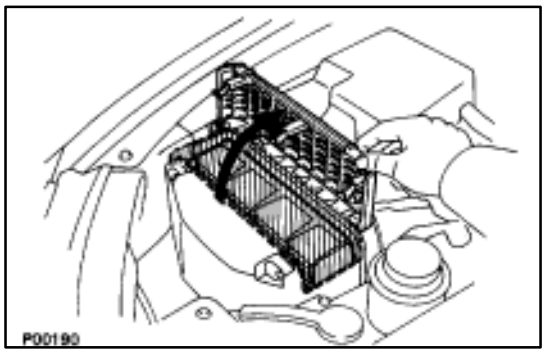

INSPECTION AND CLEANING OF AIR FILTER

1. REMOVE AIR FILTER

(a) Open the air cleaner cap.

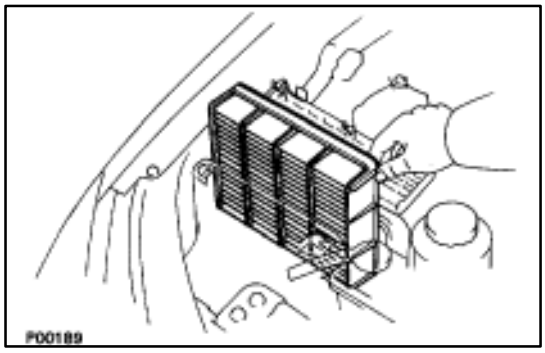

(b) Remove the air filter.

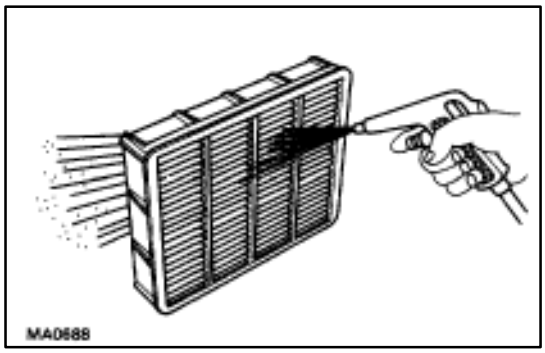

2. INSPECT AIR FILTER

(a) Visually check that the air filter is not excessively damaged or oily.

(b) Clean the air filter with compressed air.

First blow from the inside thoroughly, then blow off the outside of the air filter.

3. REINSTALL AIR FILTER

WhereEverybodyKnowsYourName

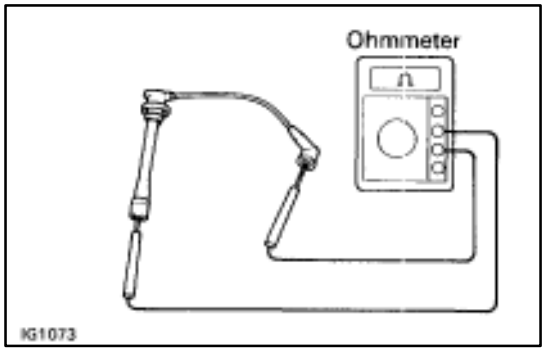

INSPECTION OF HIGH–TENSION CORDS

1. **REMOVE HIGH–TENSION CORDS (See page IG–11)**
2. **INSPECT HIGH–TENSION CORDS**
   (b) Using an ohmmeter, measure the resistance.
   Maximum resistance: 25 k? per cord
   If the resistance is greater than maximum, replace the cord.
3. **REINSTALL HIGH–TENSION CORDS (See page IG–16)**

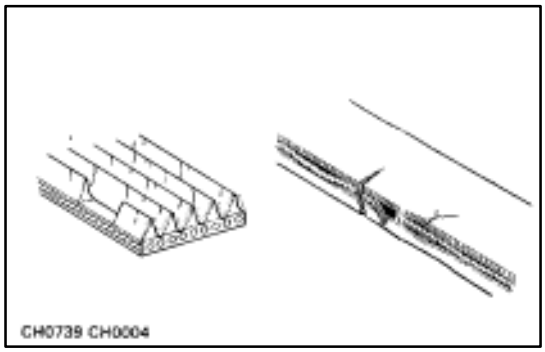

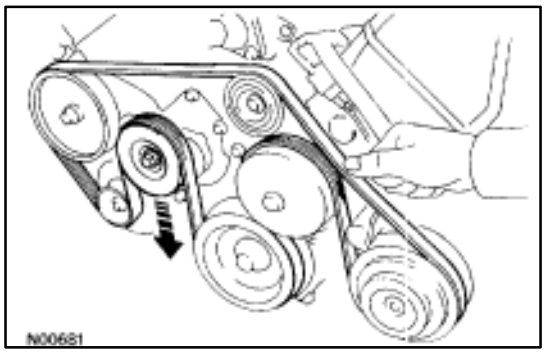

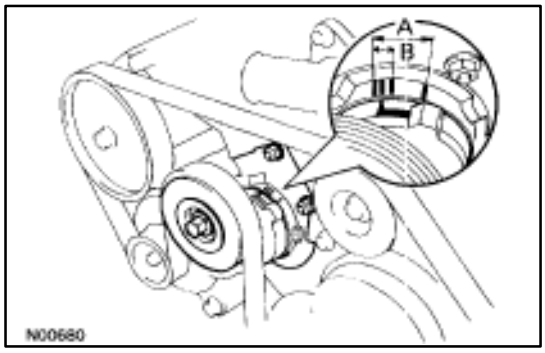

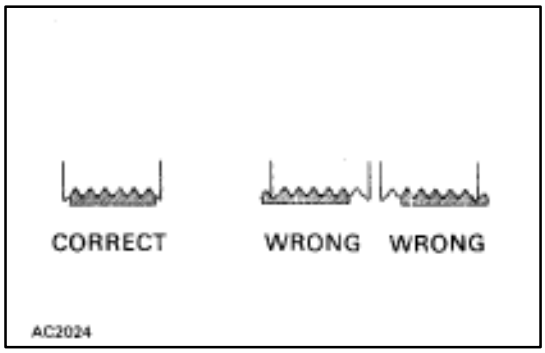

INSPECTION OF DRIVE BELT

INSPECT DRIVE BELT

HINT: A belt tensioner is used, so checking the belt tension is not necessary.

(a) Visually check the drive belt for excessive wear, frayed cords etc.

If necessary, replace the drive belt.

HINT:

- Cracks on rib side of a drive belt are considered acceptable. If the drive belt has chunks missing from the ribs, it should be replaced.
- The drive belt tension can be released by turning the belt tensioner counterclockwise. The pulley bolt for the belt tensioner has a left–hand thread.

(b) Check the belt tensioner operation.
   - Check that the belt tensioner moves downward when the drive belt is pressed down at the points indicated in the illustration with approx. 98 N (10 kgf, 22.0 lbf) of force.
   - Check the alignment of the belt tensioner pulley to make sure the drive belt has not slipped off the pulley.

If necessary, replace the belt tensioner.

- Check that the arrow mark on the belt tensioner falls within area A of the scale.

If it is outside area A, replace the drive belt.

HINT:

- When a new belt is installed, it should lie within area B. If not, the drive belt is not correct.

- After installing a belt, check that it fits properly in the ribbed grooves.
- Check by hand to confirm that the belt has not slipped out of the groove on the bottom of the pulley.

WhereEverybodyKnowsYourName

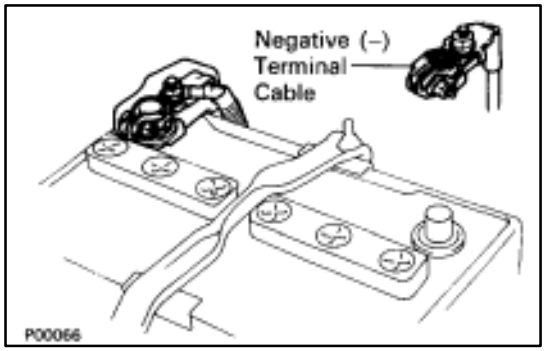

INSPECTION AND ADJUSTMENT OF VALVE CLEARANCE

HINT: Inspect and adjust the valve clearance when the engine is cold.

1. **DISCONNECT CABLE FROM NEGATIVE TERMINAL OF BATTERY**

   CAUTION: Work must be started after approx. 20 seconds or longer from the time the ignition switch is turned to the "LOCK" position and the negative (–) terminal cable is disconnected from the battery.

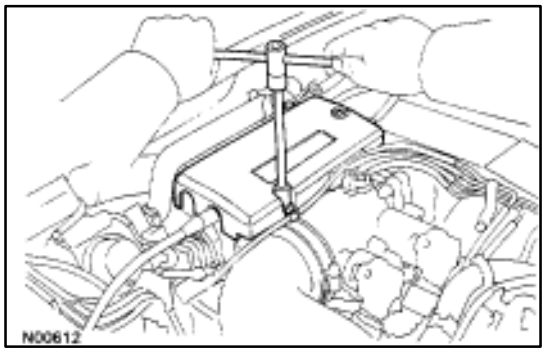

2. **DRAIN ENGINE COOLANT (See page CO–6)**
3. **REMOVE THROTTLE BODY COVER**
   (a) Remove the mounting cap nut.
   (b) Loosen the two bolts, and remove the throttle body cover.

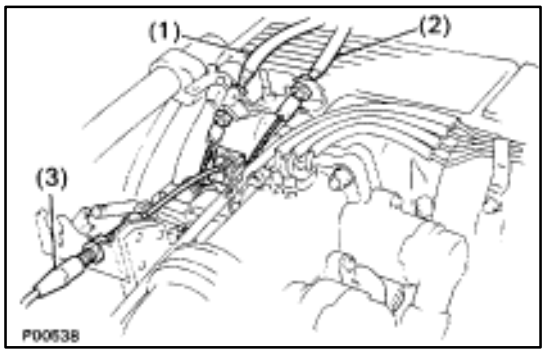

4. **DISCONNECT CONTROL CABLES FROM THROTTLE BODY**

   Disconnect the following cables:
   (1) Accelerator cable
   (2) A/T throttle control cable
   (3) (w/ Cruise Control System)
   Cruise control actuator cable

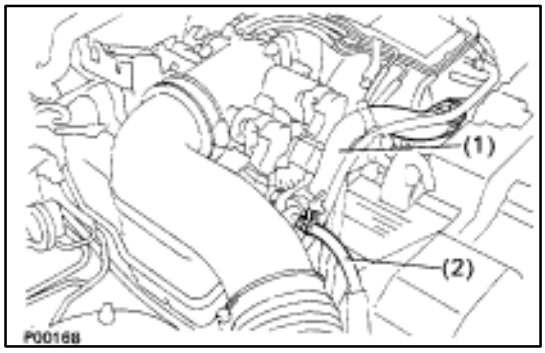

5. **REMOVE INTAKE AIR CONNECTOR**
   (a) Disconnect the following hoses:
   (1) Air hose from ISC valve
   (2) Air hose (from PS air control valve) from intake air connector

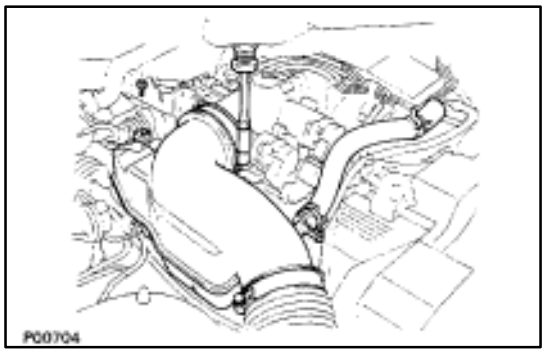

   (b) Remove the bolt holding the intake air connector to the cylinder head cover.
   (c) Loosen the two hose clamps.
   (d) Disconnect the intake air connector from the throttle body and air cleaner hose, and remove the throttle body.

WhereEverybodyKnowsYourName

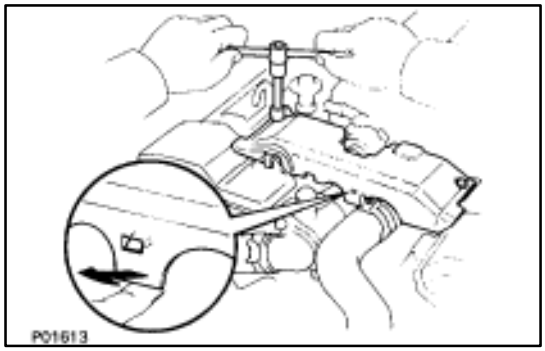

6. REMOVE UPPER HIGH–TENSION CORD COVER

(a) Remove the two mounting bolts.

(b) Disconnect the front side claw groove of the cord cover from the claw of the lower cover, and remove the cord cover.

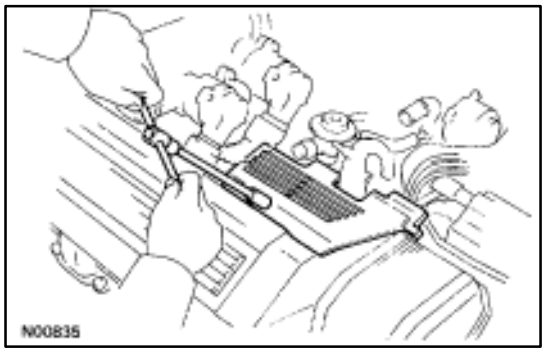

7. REMOVE RH ENGINE WIRE COVER

Remove the bolt and engine wire cover.

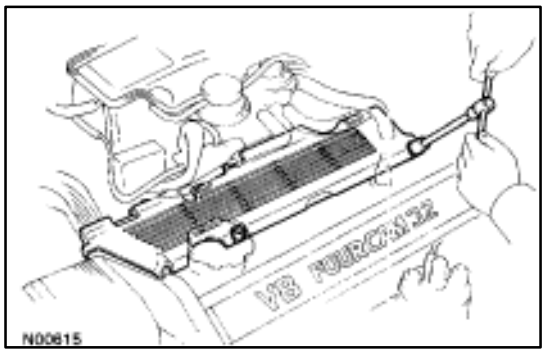

8. REMOVE LH ENGINE WIRE COVER

Remove the two bolts and engine wire cover.

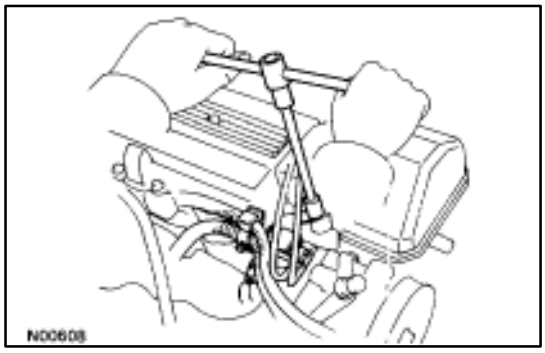

9. REMOVE VSV FOR EVAP SYSTEM

Remove the two bolts, and disconnect the VSV from cylinder head and timing belt cover.

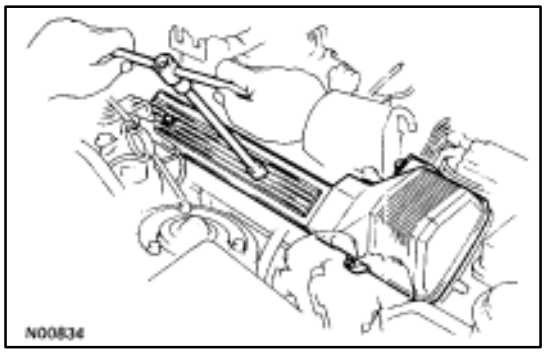

10. REMOVE RH NO.3 TIMING BELT COVER

Remove the three bolts and timing belt cover.

WhereEverybodyKnowsYourName

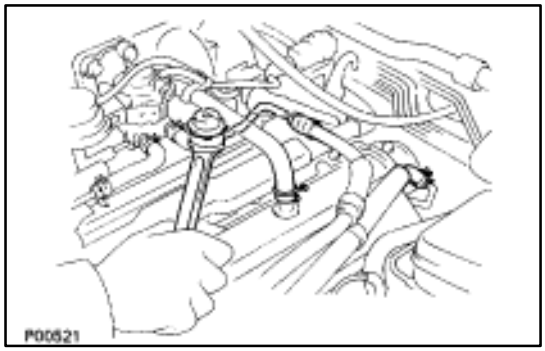

11. DISCONNECT FUEL INLET HOSE FROM LH DELIVERY PIPE

Remove the pulsation damper and two gaskets, and disconnect the inlet hose.

12. DISCONNECT FUEL RETURN HOSE FROM FUEL RETURN PIPE

13. DISCONNECT PCV HOSE FROM LH CYLINDER HEAD

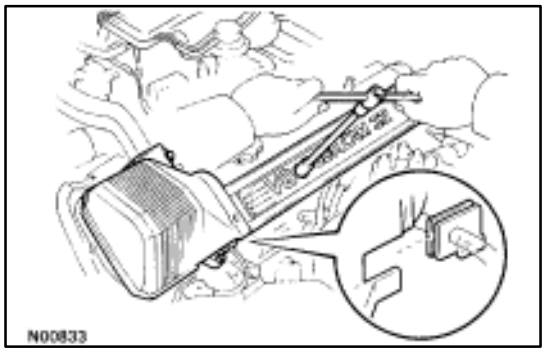

14. REMOVE LH NO.3 TIMING BELT COVER

(a) Remove the four mounting bolts.
(b) Disconnect the cord grommet from the timing belt cover, and remove the timing belt cover.
(c) Remove the cord grommet from the high–tension cord.

15. DISCONNECT HEATER WATER VALVE FROM BODY

(a) Disconnect the VSV connector.
(b) Remove the bolt holding the engine wire clamp to the water valve bracket.
(c) Remove the two bolts, and disconnect the water valve and bracket assembly.

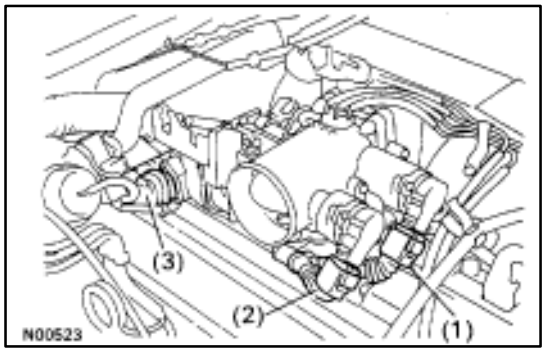

16. REMOVE THROTTLE BODY

(a) Disconnect the following connectors:
  (1) Throttle position sensor connector
  (2) (w/ TRAC)
  Sub–throttle position sensor connector
  (3) (w/ TRAC)
  Sub–throttle actuator connector

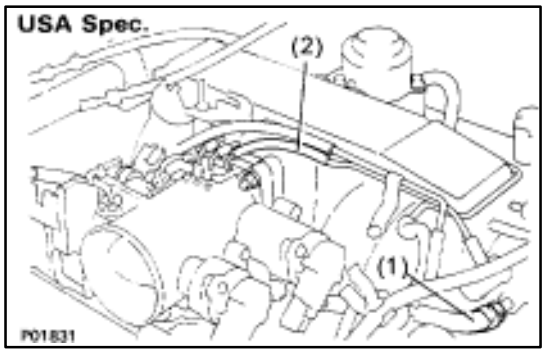

(b) Disconnect the following hoses:
  (1) Water by–pass hose from ISC valve
  (2) (USA Spec.)
  Vacuum hose from throttle body
  (3) (Exc. USA Spec.)
  Three vacuum hoses from throttle body

WhereEverybodyKnowsYourName

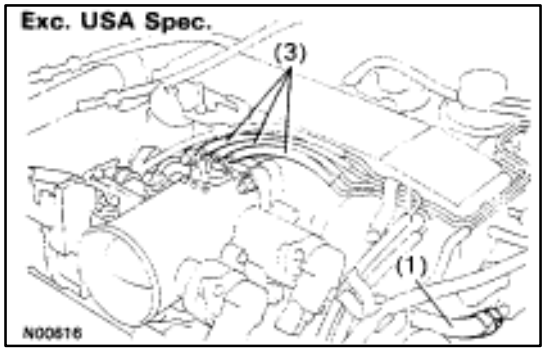

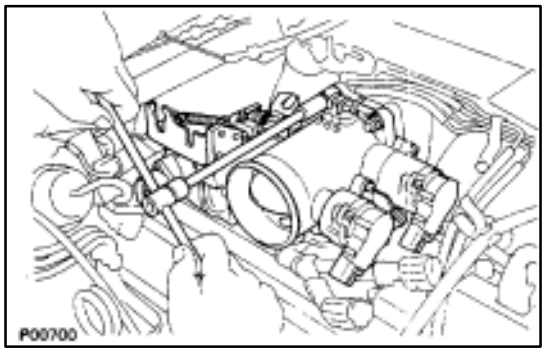

(c) Remove the two bolts and two nuts, disconnect the throttle body from the air intake chamber.

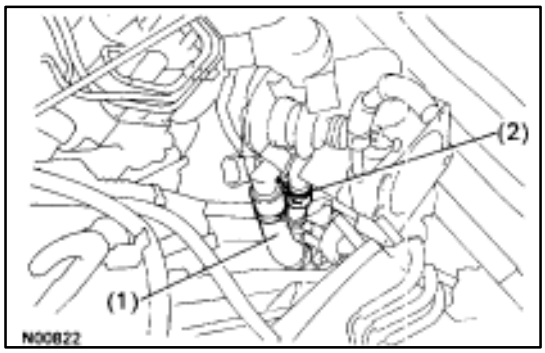

(d) Disconnect the following hoses, and remove the throttle body:
   (1) PCV hose from throttle body
   (2) Water by–pass hose from throttle body
(e) Remove the throttle body gasket.

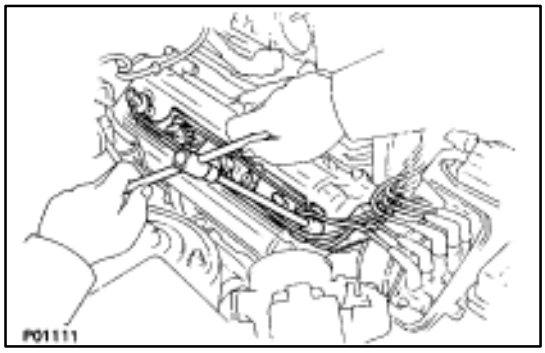

17. REMOVE RH CYLINDER HEAD COVER

(a) Remove the two bolts holding the cord clamp to the cylinder head.
(b) Disconnect the high–tension cords from the spark plugs.
(c) Disconnect the high–tension cords from the front high–tension cord clamp.

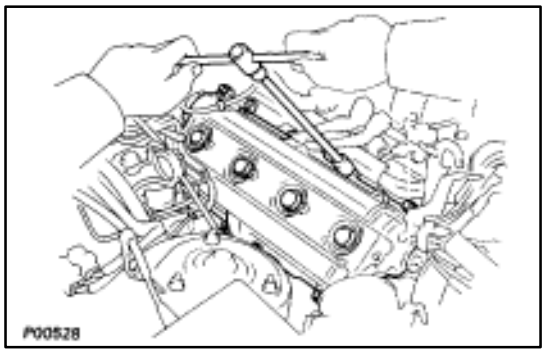

(d) Remove the eight bolts, seal washers, cylinder head cover and gasket.

WhereEverybodyKnowsYourName

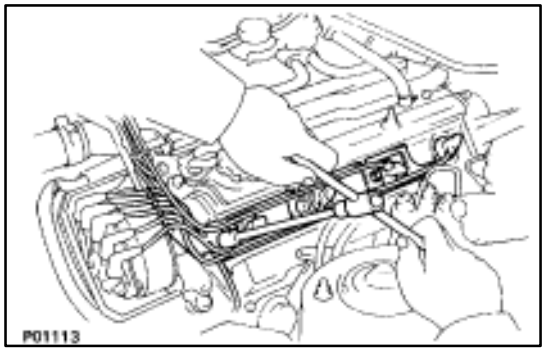

16. REMOVE LH CYLINDER HEAD COVER

(a) Remove the two bolts holding the high–tension cord clamp to the cylinder head.

(b) Disconnect the high–tension cords from the spark plugs.

(c) Disconnect the high–tension cords from the front high–tension cord clamp.

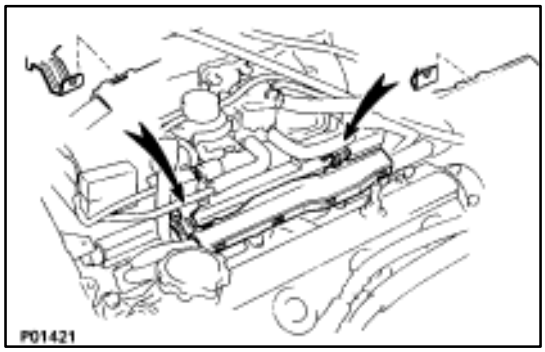

(d) Disconnect the engine wire from the two wire clamps on the LH delivery pipe.

(e) Disconnect the four injector connectors.

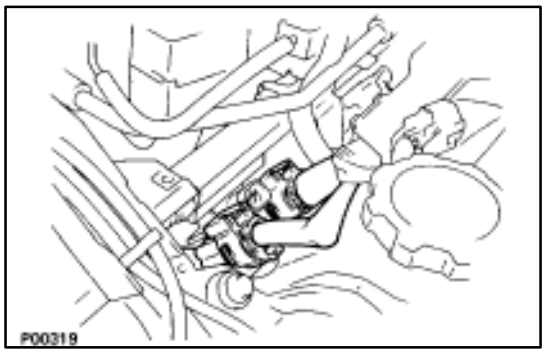

(f) Disconnect the two engine wire connectors.

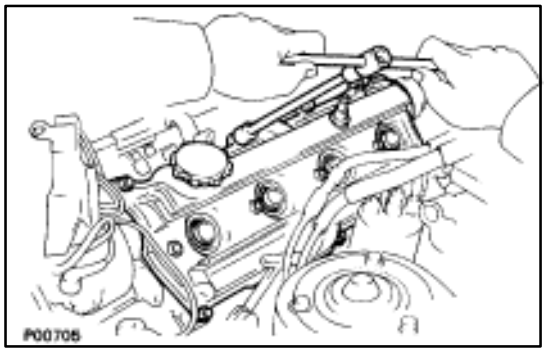

(g) Remove the eight bolts, seal washers, cylinder head cover and gasket.

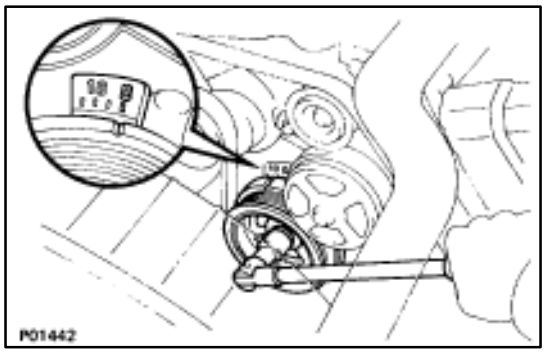

19. SET NO.1 CYLINDER TO TDC/COMPRESSION

(a) Turn the crankshaft pulley, and align its groove with the timing mark ”0” of the No.1 timing belt cover.

WhereEverybodyKnowsYourName

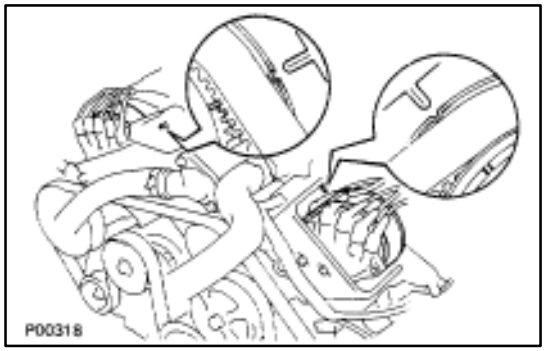

(b) Check that the timing marks of the camshaft timing pulleys and timing belt rear plates aligned.

If not, turn the crankshaft one revolution (360°) and align the mark as above.

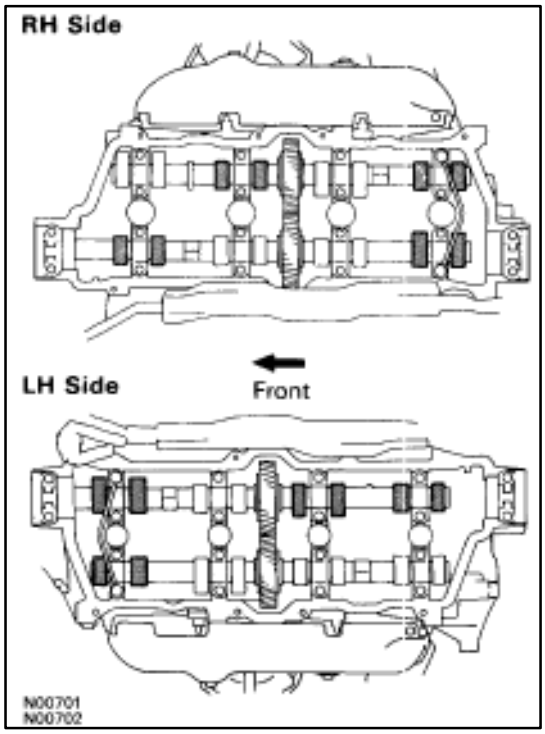

20. INSPECT VALVE CLEARANCE

(a) Check only those valves indicated.

- Using a feeler gauge, measure the clearance between the valve lifter and camshaft.
- Record the out–of–specification valve clearance measurements. They will be used later to determine the required replacement adjusting shim.

Valve clearance (Cold):

Intake 0.15–0.25 mm (0.006–0.010 in.)

Exhaust 0.25–0.35 mm (0.010–0.014 in.)

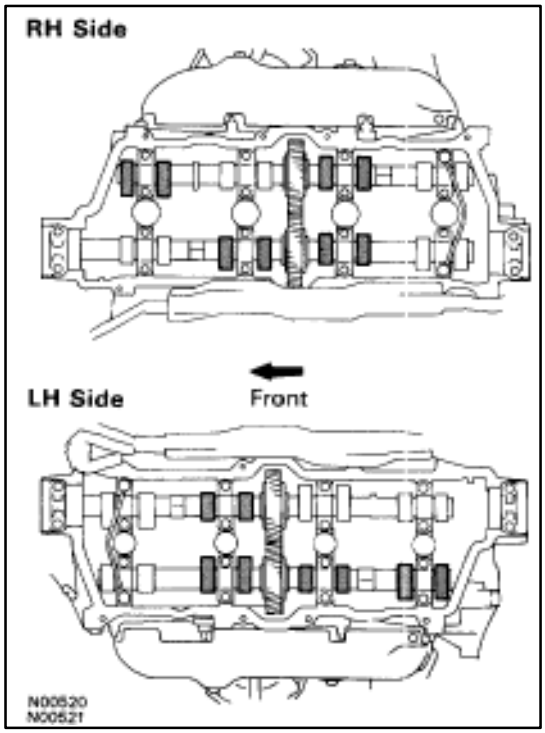

(b) Turn the crankshaft one revolution (360˚), and align the mark as above. (See procedure step in 19 (a))

(c) Check only the valves indicated as shown. Measure the valve clearance.
(See procedure in step (a))

WhereEverybodyKnowsYourName

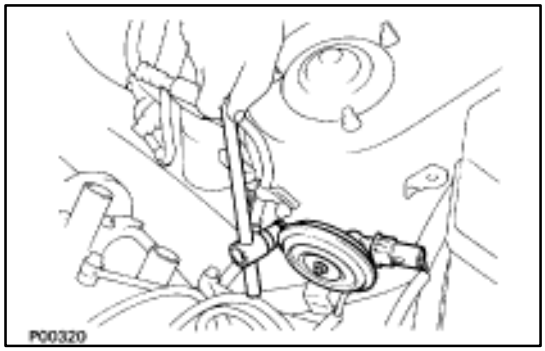

21. REMOVE THEFT DETERRENT HORN

(a) Disconnect the connector.

(b) Remove the bolt and theft deterrent horn.

HINT: Remove the deterrent horn when the valve clearance is adjusted for the front portion of the exhaust camshaft on the LH cylinder head.

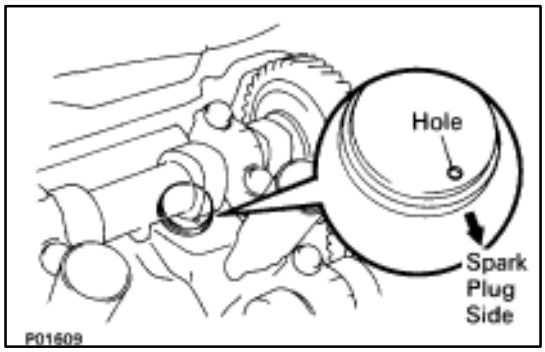

22. ADJUST VALVE CLEARANCE

(a) Remove the adjusting shim.

- Turn the crankshaft, and position the cam lobe of the camshaft on the adjusting valve upward.
- Position the hole of the adjusting shim toward the spark plug side.

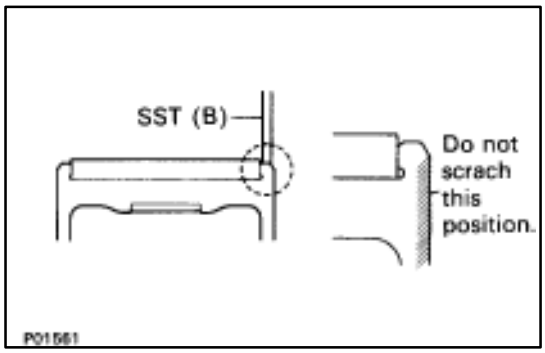

- Press down the valve lifter with SST (A), and place SST (B) between the camshaft and valve lifter flange. Remove SST (A).

SST 09248–55011

(09248–05011 (A), 09248–05021 (B))

NOTICE: The valve lifter is made of aluminum, which is easily scratched. So when setting SST (B), take care not to scratch the face of the valve lifter.

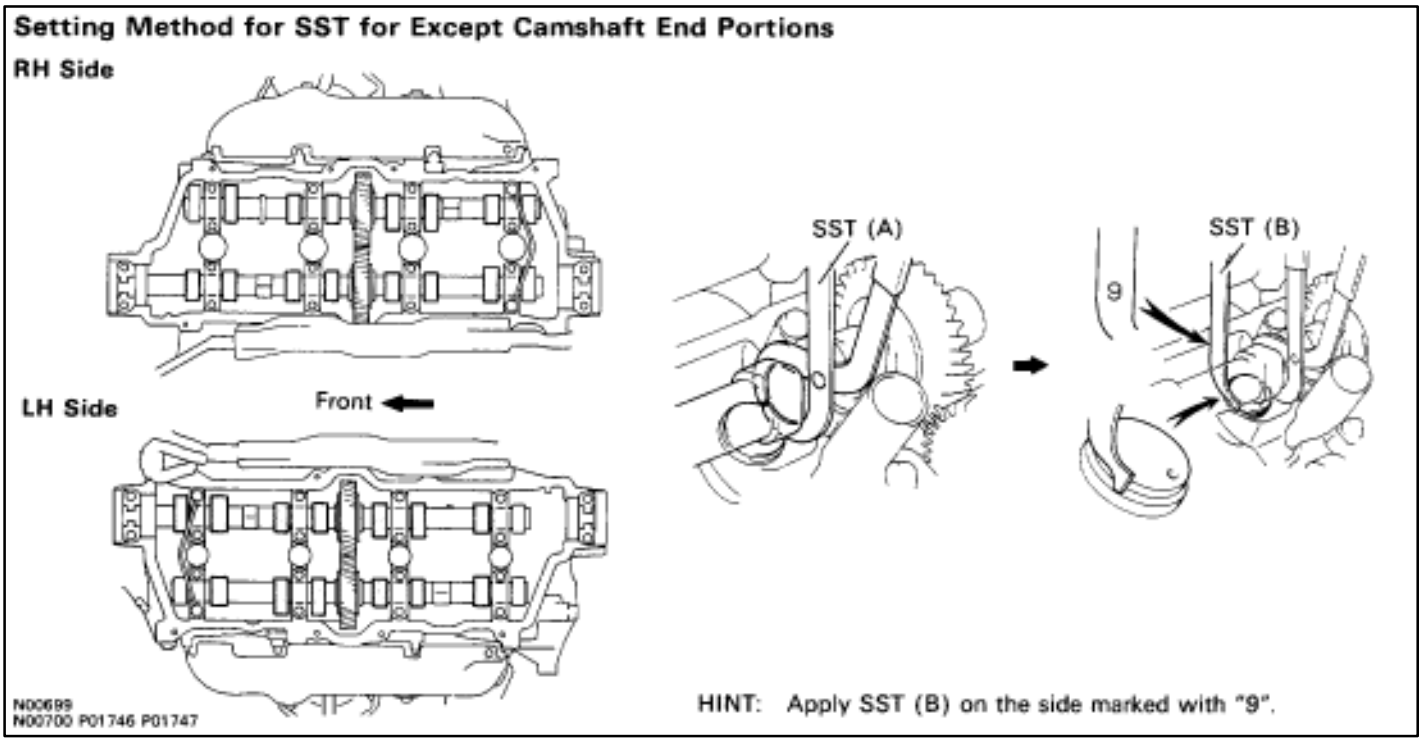

WhereEverybodyKnowsYourName

Setting Method for SST for Camshaft End Portions

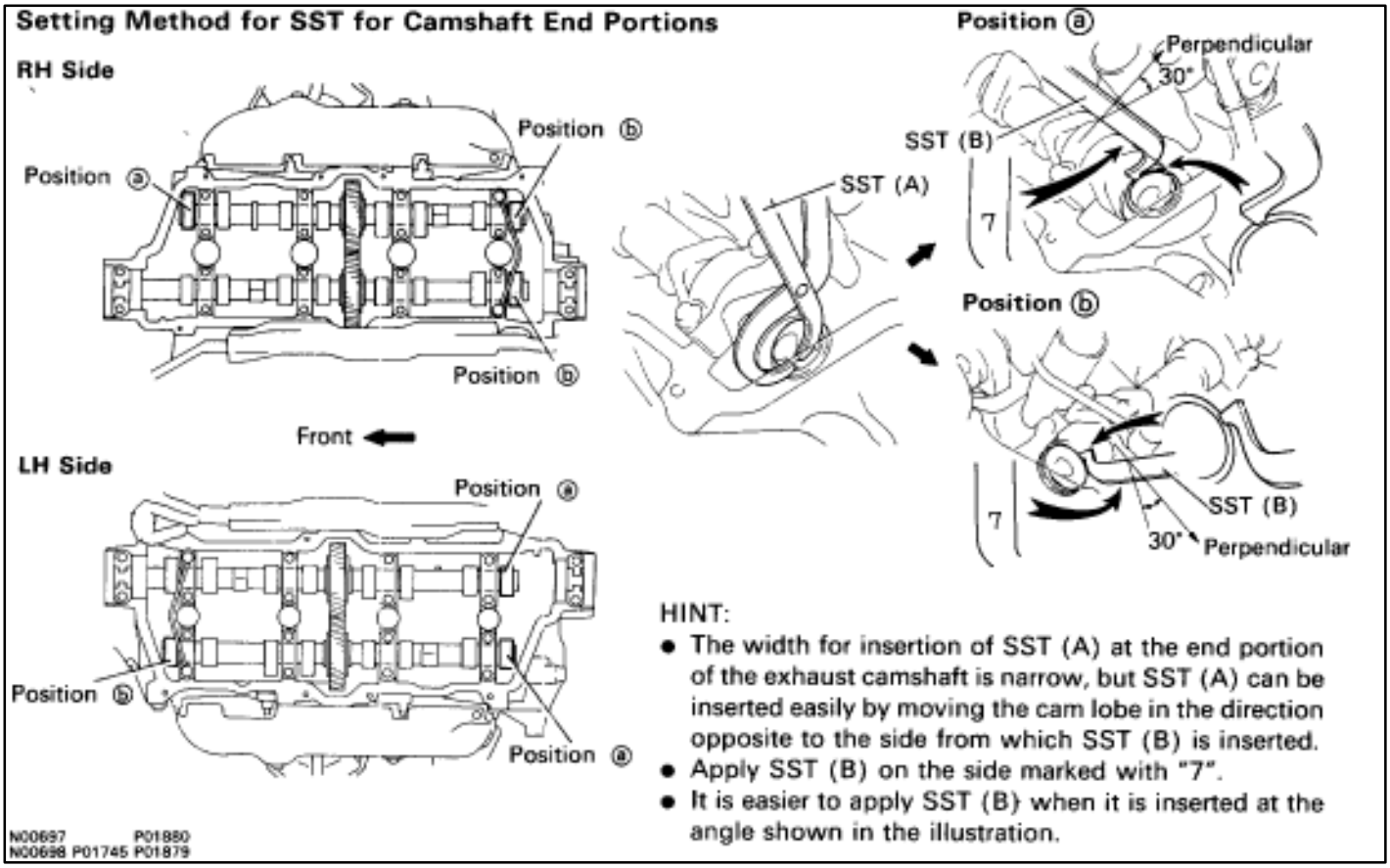

HINT:

- The width for insertion of SST (A) at the end portion of the exhaust camshaft is narrow, but SST (A) can be inserted easily by moving the cam lobe in the direction opposite to the side from which SST (B) is inserted.
- Apply SST (B) on the side marked with "7".
- It is easier to apply SST (B) when it is inserted at the angle shown in the illustration.

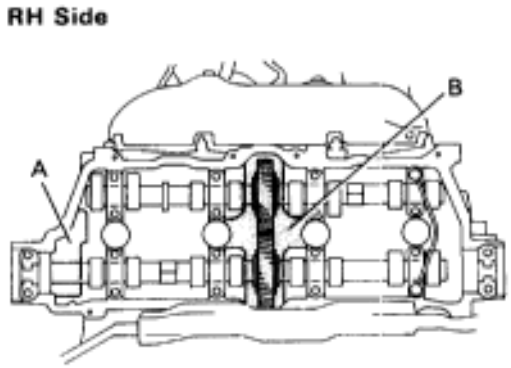

▼Using compressed air and magnetic finger, remove the adjusting shim by blowing air into the shim hole.

HINT: Remove the adjusting shim from the intake manifold side.

NOTICE: Do not drop the adjusting shim into portions A and B. If dropped into portion A, the adjusting shim will pass through the cylinder head and cylinder block into the oil pan. If dropped into portion B, the adjusting shim cannot be recovered without removing the exhaust camshaft.

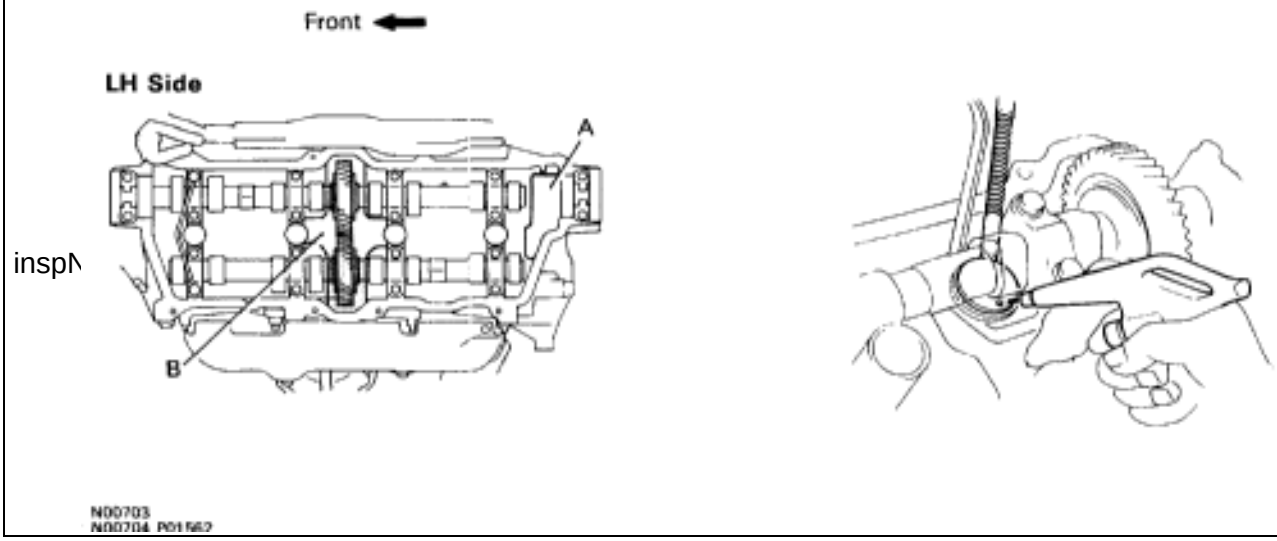

inspN

WhereEverybodyKnowsYourName

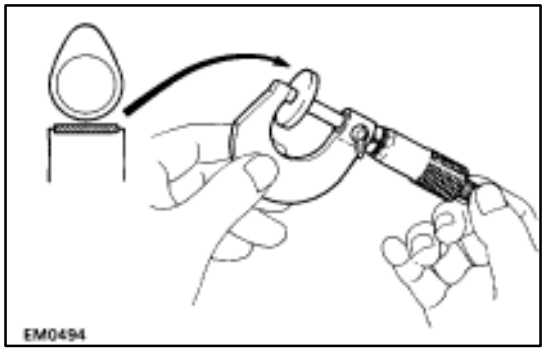

(b) Determine the replacement adjusting shim size following Formula or Charts:

- Using a micrometer, measure the thickness of the removed shim.
- Calculate the thickness of a new shim so the valve clearance comes within specified value.

T _____ Thickness of used shim
A _____ Measured valve clearance
N _____ Thickness of new shim

Intake N = T + (A–0.20 mm (0.008 in.))
Exhaust N = T + (A–0.30 mm (0.012 in.))

- Select a new shim with a thickness as close as possible to the calculated values.

HINT: Shims are available in thirty–three sizes in increments of 0.025 mm (0.0010 in.), from 2.50 mm (0.0984 in.) to 3.30 mm (0.1299 in.).

(c) Install a new adjusting shim.

- Place a new adjusting shim on the valve lifter.

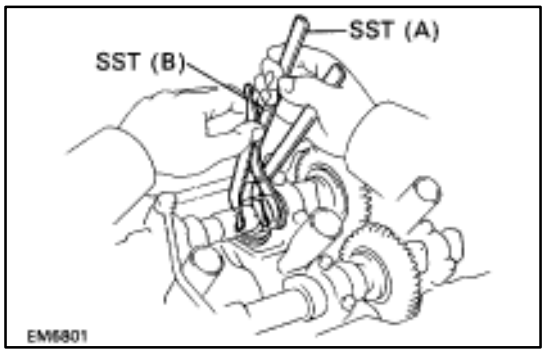

- Press down the valve lifter with SST (A), and remove SST (B).

SST 09248–55011

(d) Recheck the valve clearance.

WhereEverybodyKnowsYourName

Adjusting Shim Selection Chart (Intake)

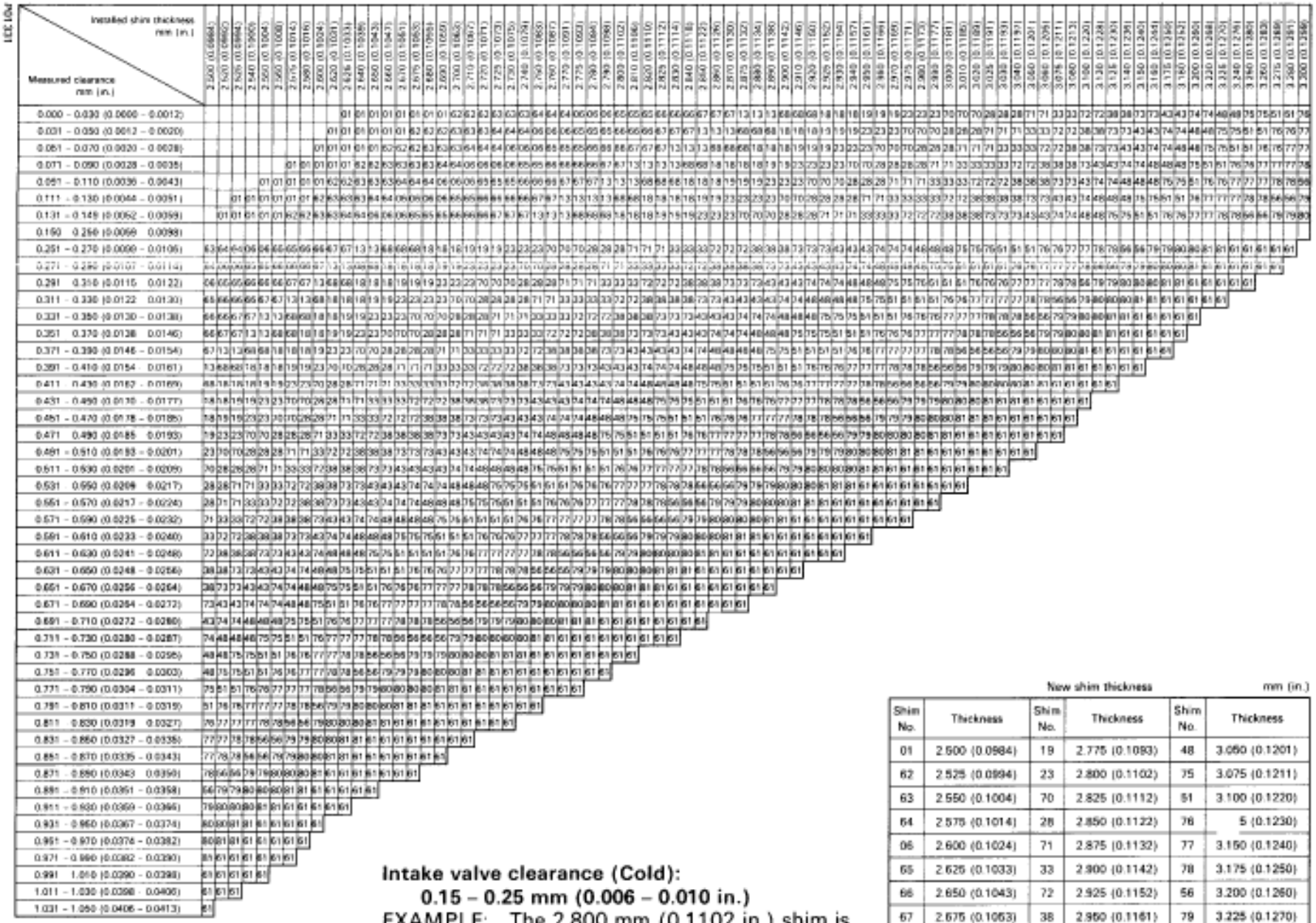

Intake valve clearance (Cold):
0.15 – 0.25 mm (0.006 – 0.010 in.)

EXAMPLE: The 2.800 mm (0.1102 in.) shim is installed, and the measured clearance is 0.440 mm (0.0173 in.). Replace the 2.800 mm (0.1102 in.) shim with a No.48 shim.

New shim thickness — mm (in.)

Shim No.	Thickness	Shim No.	Thickness	Shim No.	Thickness
01	2.500 (0.0984)	19	2.775 (0.1093)	48	3.050 (0.1201)
62	2.525 (0.0994)	23	2.800 (0.1102)	75	3.075 (0.1211)
63	2.550 (0.1004)	70	2.825 (0.1112)	51	3.100 (0.1220)
64	2.575 (0.1014)	28	2.850 (0.1122)	76	5 (0.1230)
06	2.600 (0.1024)	71	2.875 (0.1132)	77	3.150 (0.1240)
65	2.625 (0.1033)	33	2.900 (0.1142)	78	3.175 (0.1250)
66	2.650 (0.1043)	72	2.925 (0.1152)	56	3.200 (0.1260)
67	2.675 (0.1053)	38	2.950 (0.1161)	79	3.225 (0.1270)
13	2.700 (0.1063)	73	2.975 (0.1171)	80	3.250 (0.1280)
68	2.725 (0.1073)	43	3.000 (0.1181)	81	3.275 (0.1289)
18	2.750 (0.1083)	74	3.025 (0.1191)	61	3.300 (0.1299)

WhereEverybodyKnowsYourName

Adjusting Shim Selection Chart (Exhaust)

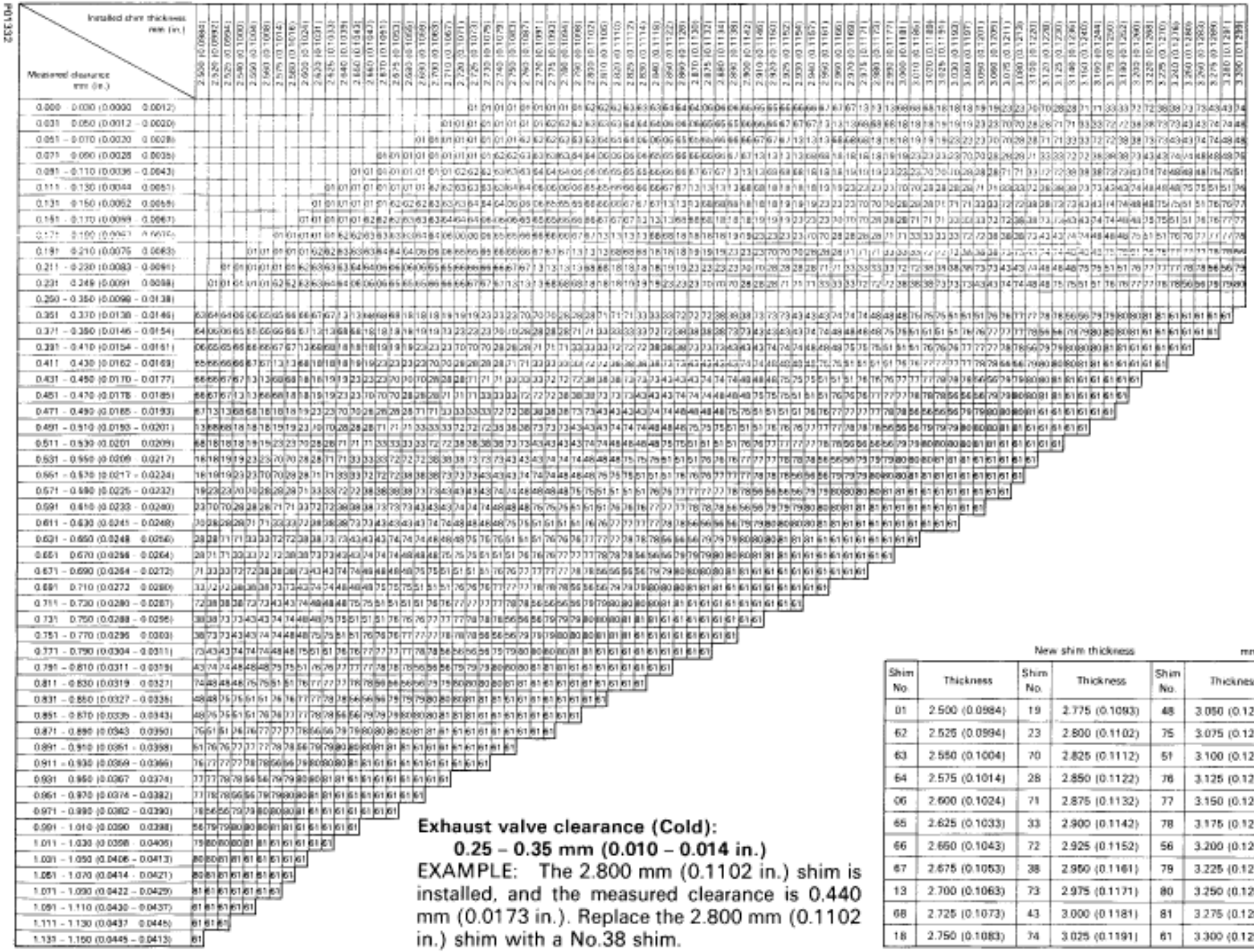

Exhaust valve clearance (Cold):
0.25 – 0.35 mm (0.010 – 0.014 in.)

EXAMPLE: The 2.800 mm (0.1102 in.) shim is installed, and the measured clearance is 0.440 mm (0.0173 in.). Replace the 2.800 mm (0.1102 in.) shim with a No.38 shim.

New shim thickness — mm (in.)

Shim No.	Thickness	Shim No.	Thickness	Shim No.	Thickness
01	2.500 (0.0984)	19	2.775 (0.1093)	48	3.050 (0.1201)
62	2.525 (0.0994)	23	2.800 (0.1102)	75	3.075 (0.1211)
63	2.550 (0.1004)	70	2.825 (0.1112)	51	3.100 (0.1220)
64	2.575 (0.1014)	28	2.850 (0.1122)	76	3.125 (0.1230)
06	2.600 (0.1024)	71	2.875 (0.1132)	77	3.150 (0.1240)
65	2.625 (0.1033)	33	2.900 (0.1142)	78	3.175 (0.1250)
66	2.650 (0.1043)	72	2.925 (0.1152)	56	3.200 (0.1260)
67	2.675 (0.1053)	38	2.950 (0.1161)	79	3.225 (0.1270)
13	2.700 (0.1063)	73	2.975 (0.1171)	80	3.250 (0.1280)
68	2.725 (0.1073)	43	3.000 (0.1181)	81	3.275 (0.1289)
18	2.750 (0.1083)	74	3.025 (0.1191)	61	3.300 (0.1299)

WhereEverybodyKnowsYourName

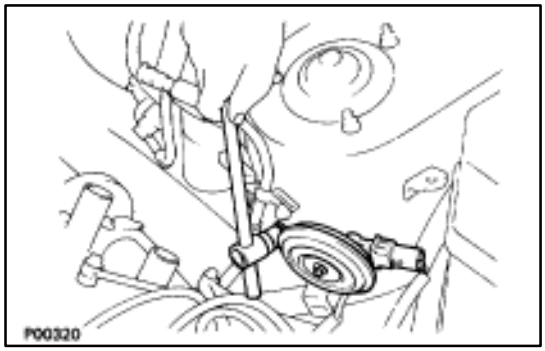

23. REINSTALL THEFT DETERRENT HORN

(a) Install the theft deterrent horn with the bolt.
(b) Connect the connector.

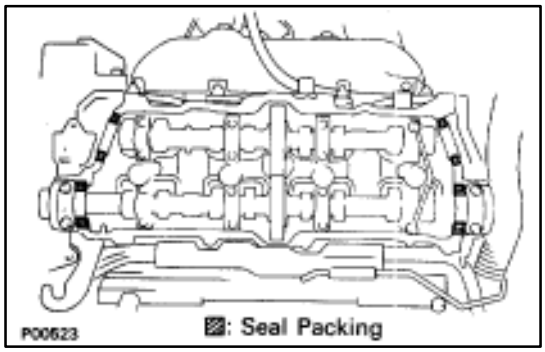

24. REINSTALL RH CYLINDER HEAD COVER

(a) Remove any oil packing (FIPG) material.
(b) Apply seal packing to the cylinder head as shown in the illustration.

Seal packing: Part No. 08826–00080 or equivalent

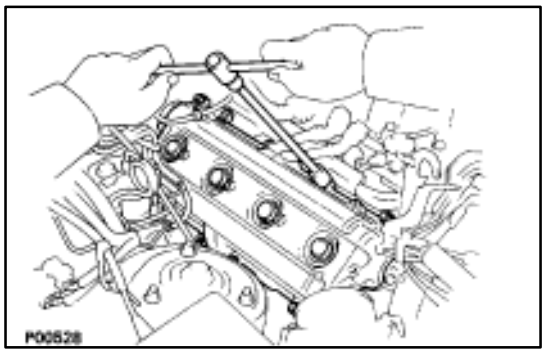

(c) Install the gasket to the cylinder head cover.
(d) Install the seal washer to the mounting bolt.
(e) Install the cylinder head cover with the eight bolts.

Torque: 5.9 N·m (60 kgf·cm, 52 in.·lbf)

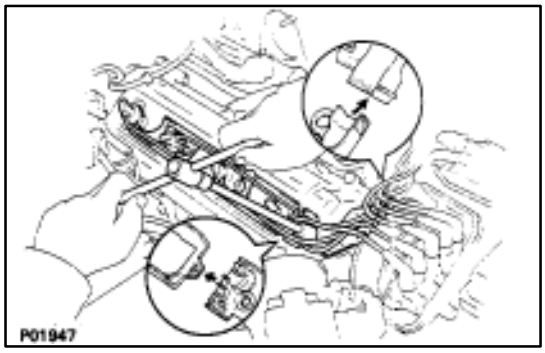

(g) Connect the four high–tension cords to the spark plugs.
(h) Install the rear and front high–tension cord clamps with the two bolts.

HINT: Place the front and rear ends of the front high–tension cord clamp on the rear high–tension cord clamp and lower high–tension cord cover.

(i) Fit the high–tension cords to the high–tension cord clamps. (See page IG–16)

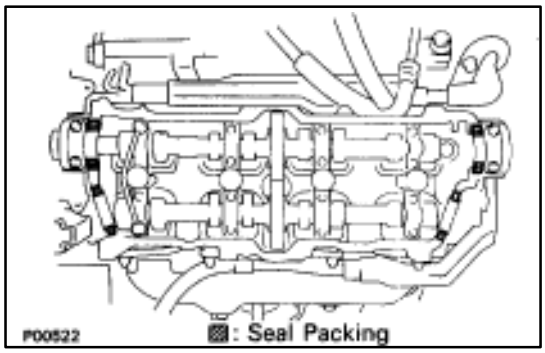

25. REINSTALL LH CYLINDER HEAD COVER

(a) Remove any oil packing (FIPG) material.
(b) Apply seal packing to the cylinder head as shown in the illustration.

Seal packing: Part No. 08826–00080 or equivalent

WhereEverybodyKnowsYourName

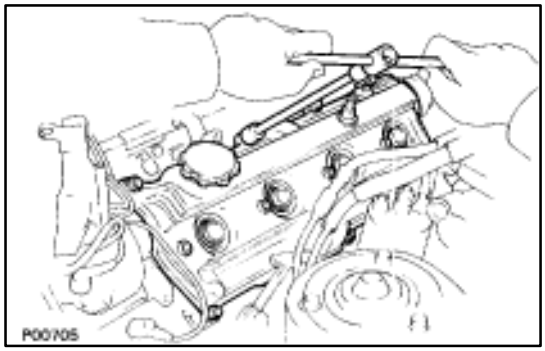

(c) Install the gasket to the cylinder head cover.
(d) Install the seal washer to the mounting bolt.
(e) Install the cylinder head cover with the eight bolts.
Torque: 5.9 N·m (60 kgf·cm, 52 in.·lbf)

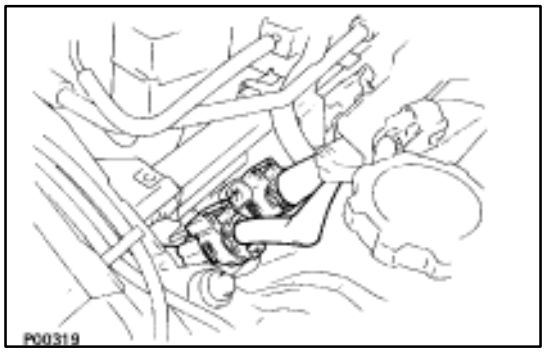

(f) Connect the two engine wire connectors.
(g) Connect the four injector connectors.

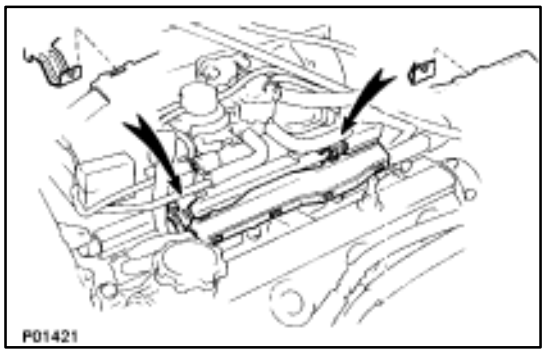

(h) Install the engine wire to the two wire clamps on the delivery pipe.

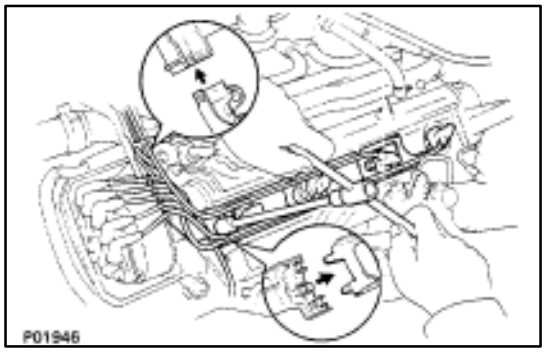

(i) Connect the four high–tension cords to the spark plugs.
(j) Install the rear and front high–tension cord clamps with the two bolts.

HINT: Place the front and rear ends of the front high–tension cord clamp on the rear high–tension cord clamp and lower high–tension cord cover.

(k) Fit the high–tension cords to the high–tension cord clamps. (See page IG–16)

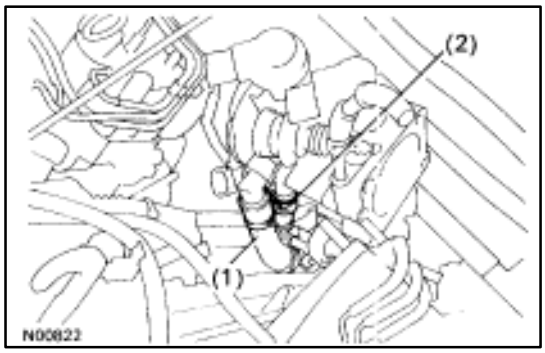

26. REINSTALL THROTTLE BODY

(a) Connect the following hoses:
  (1) PCV hose from throttle body
  (2) Water by–pass hose from throttle body

WhereEverybodyKnowsYourName

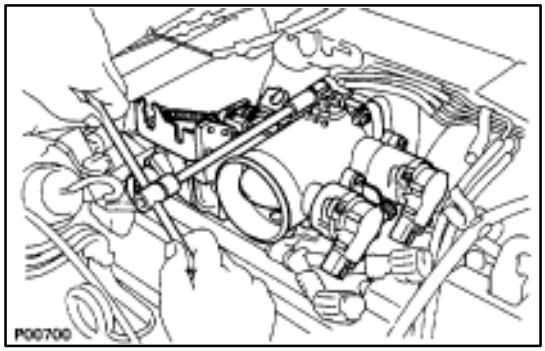

(b) Install a new gasket and throttle body with the two bolts and two nuts.

Torque: 18 N·m (185 kgf·cm, 13 ft·lbf)

HINT: Use bolts 40 mm (1.57 in.) in length.

(c) Install the water by–pass pipe (from rear water by–pass joint) to the clamp on the engine wire cover.

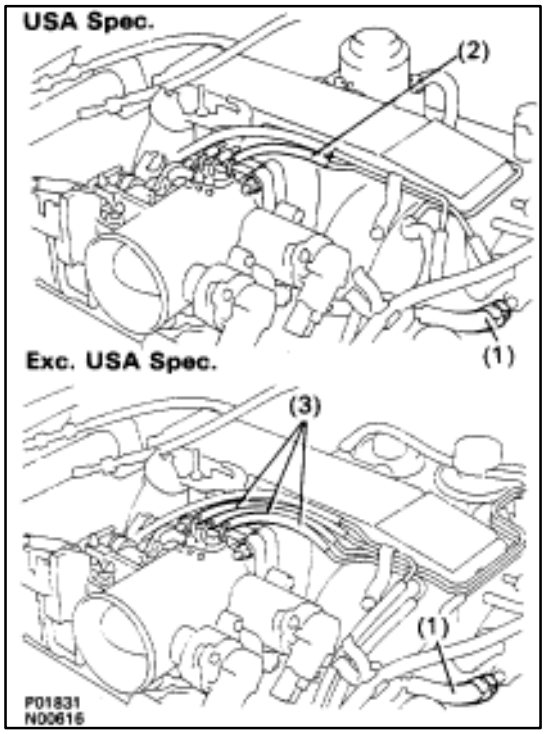

(d) Connect the following hoses:
  (1) Water by–pass hose to the ISC valve
  (2) (USA Spec.)
  Vacuum hose to throttle body
  (3) (Exc. USA Spec.)
  Three vacuum hoses to throttle body

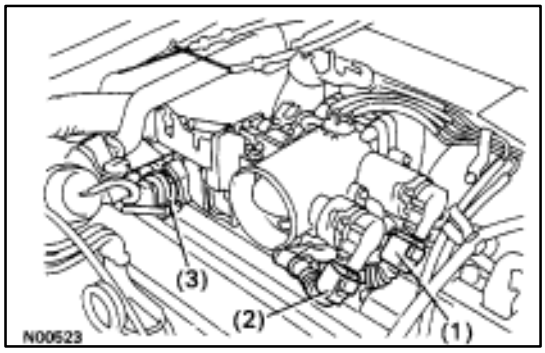

(e) Connect the following connectors:
  (1) Throttle position sensor connector
  (2) (w/ TRAC)
  Sub–throttle position sensor connector
  (3) (w/ TRAC)
  Sub–throttle actuator

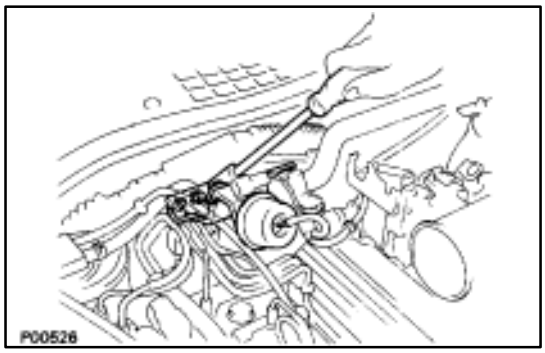

27. REINSTALL HEATER WATER VALVE

(a) Install the water valve and bracket assembly with the two bolts.

(b) Install the engine wire clamp with the bolt.

(c) Connect the VSV connector.

WhereEverybodyKnowsYourName

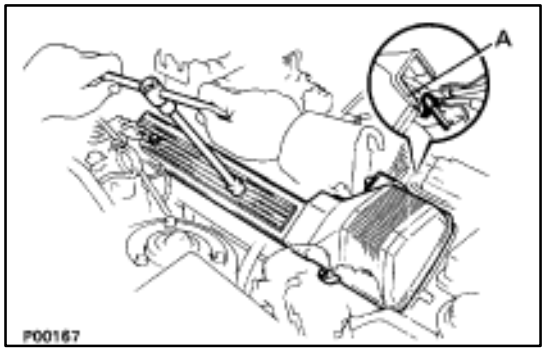

28. REINSTALL RH NO.3 TIMING BELT COVER

(a) Install the three gaskets to the timing belt cover.
(b) Fit portion A of the timing belt cover, matching it with the lower high–tension cord cover.
(c) Install the timing belt cover with the three bolts.

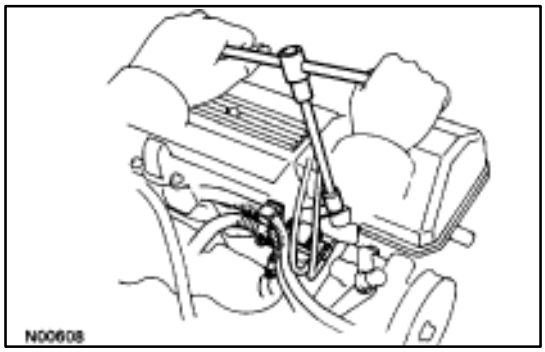

29. REINSTALL VSV FOR EVAP SYSTEM

Install the VSV with the two bolts.

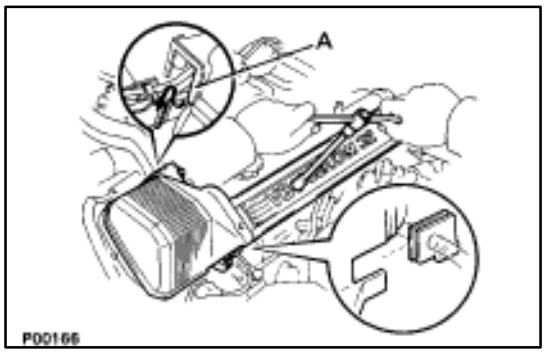

30. REINSTALL LH NO.3 TIMING BELT COVER

(a) Install the three gaskets to the timing belt cover.
(b) Install the cord grommet to the high–tension cord.
(c) Install the cord grommet to the timing belt cover.
(d) Fit portion A of the timing belt cover, matching it with the lower high–tension cord cover.
(e) Install the timing belt cover with the three bolts.

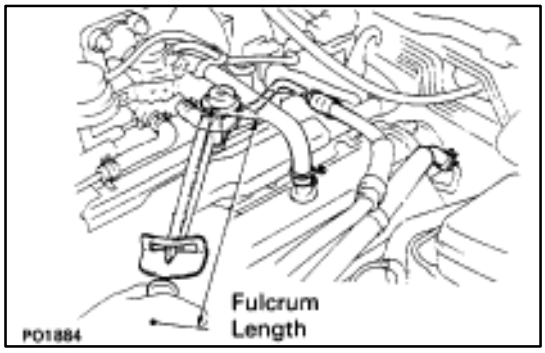

31. RECONNECT PCV HOSE TO LH CYLINDER HEAD

32. RECONNECT FUEL RETURN HOSE TO FUEL RETURN PIPE

33. RECONNECT FUEL INLET HOSE TO LH DELIVERY PIPE

Connect the inlet hose with two new gaskets and the pulsation damper.

SST 09612–24014 (09617–24011)

Torque: 39 N·m (400 kgf·cm, 29 ft·lbf)

33 N·m (340 kgf·cm, 24 ft·lbf) for SST

HINT: Use a torque wrench with a fulcrum length of 30 cm (11.81 in.)

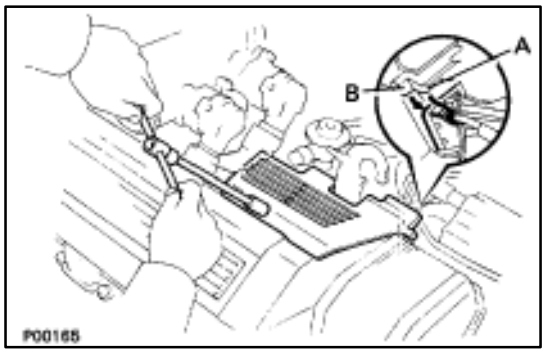

34. REINSTALL RH ENGINE WIRE COVER

(a) Fit portions A and B of the engine wire cover, matching them with the lower high–tension cord cover and No.3 timing belt cover.
(b) Install the engine wire cover with the bolt.

WhereEverybodyKnowsYourName

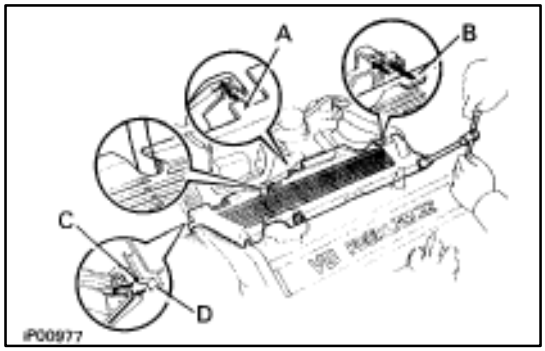

35. REINSTALL LH ENGINE WIRE COVER

(a) Connect portions A and B engine wire cover to the wire brackets.
(b) Set the VSV (for fuel pressure control system) wire in original position.
(c) Fit portions C and D of the engine wire cover, matching them with the lower high–tension cord cover and No.3 timing belt cover.
(d) Install the engine wire cover with the two bolts.

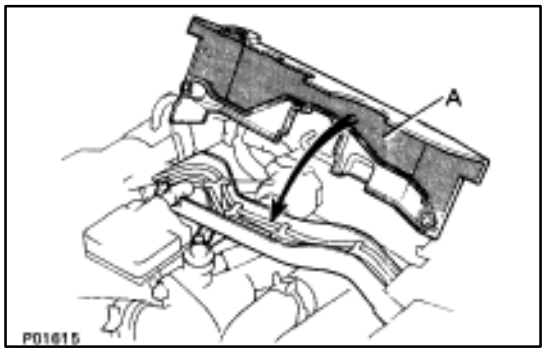

36. REINSTALL UPPER HIGH–TENSION CORD COVER

(a) Fit portion A of the upper high–tension cover, matching the top of the lower high–tension cord cover.

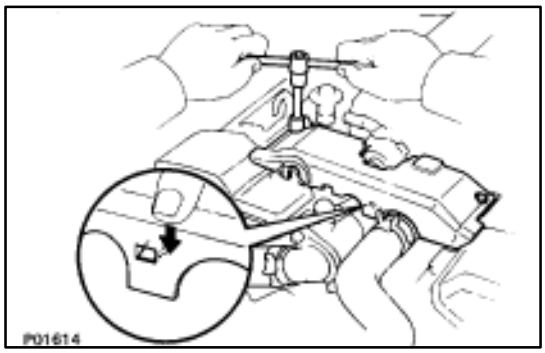

(b) Push the front side of the upper high–tension cord cover, and connect the front side claw groove of the upper high–tension cord cover to the claw of the lower high–tension cord cover.
(c) Install the upper high–tension cord cover with the two bolts.

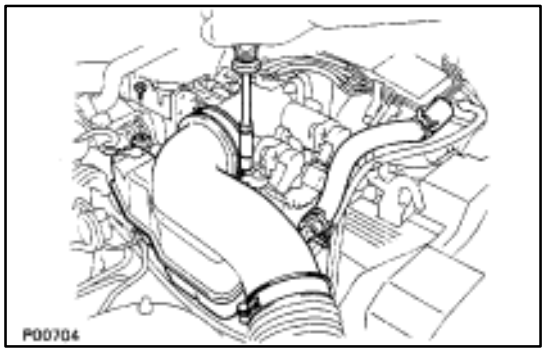

37. REINSTALL INTAKE AIR CONNECTOR

(a) Connect the end portions of the intake air connector to the throttle body and air cleaner hose.
(b) Tighten the two hose clamps.
(c) Install the bolt holding the intake air connector to the cylinder head cover.

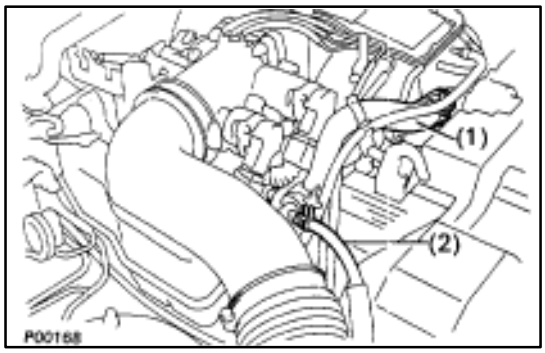

(d) Connect the following hoses:
  (1) Air hose to ISC to ISC valve
  (2) Air hose (from PS air control valve) to intake air connector

WhereEverybodyKnowsYourName

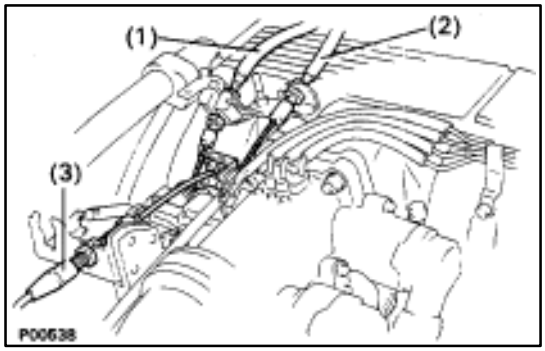

38. RECONNECT CONTROL CABLES TO THROTTLE BODY

Connect the following hoses:

(1) Accelerator cable
(2) A/T throttle control cable
(3) (w/ Cruise Control System)
Cruise control actuator cable

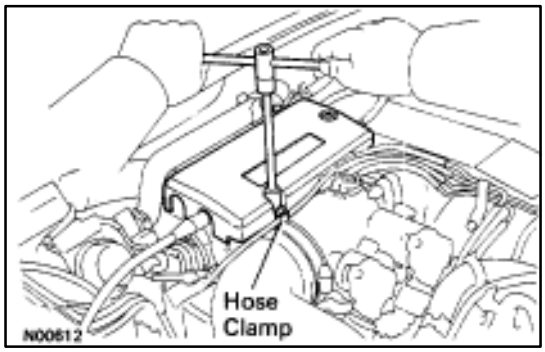

39. REINSTALL THROTTLE BODY COVER

Install the throttle body cover and hose clamp with the two bolts and cap nut.

40. RECONNECT CABLE TO NEGATIVE TERMINAL OF BATTERY

41. FILL WITH ENGINE COOLANT (See page CO–7)

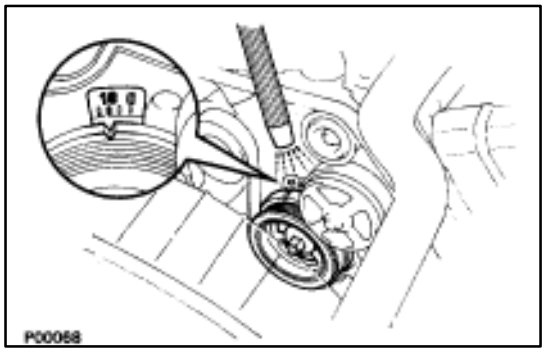

INSPECTION OF IGNITION TIMING

(See page IG–28)

Ignition timing:

8–12° BTDC @ idle

(w/ Terminals TE1 and E1 connected)

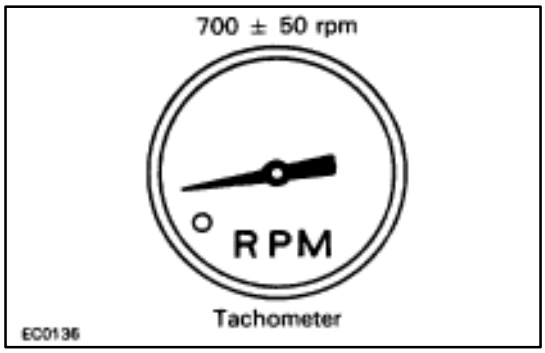

INSPECTION OF IDLE SPEED

HINT:

- Initial conditions (See step 1 on page EM–28)
- Set the tachometer to the 4–cylinder range.

Idle speed: 700 ± 50 rpm

WhereEverybodyKnowsYourName

IDLE AND/OR 2,500 RPM HC/CO CONCENTRATION CHECK METHOD

HINT: This check is used only to determine whether or not the idle HC/CO complies with regulations.

1. INTIAL CONDITIONS

(a) Engine at normal operating temperature.
(b) Air cleaner installed.
(c) All pipes and hoses of air induction system connected.
(d) All accessories switched OFF.
(e) All vacuum lines properly connected.

HINT: All vacuum hoses for EGR systems, etc. should be properly connected.

(f) EFI system wiring connectors fully plugged.
(g) Transmission in neutral range.
(h) Tachometer and HC/CO meter calibrated at hand.

2. START ENGINE

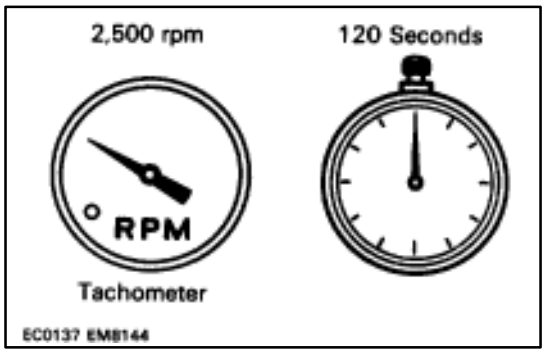

3. RACE ENGINE AT 2,500 PRM FOR APPROX. 120 SECONDS

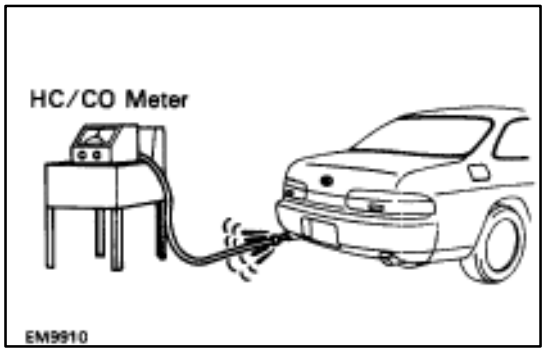

4. INSERT HC/CO METER TESTING PROBE INTO TAILPIPE AT LEAST 40 cm (1.3 ft)

5. CHECK HC/CO CONCENTRATION AT IDLE AND/OR 2,500 PRM

Complete the measuring within three times.

HINT: When performing the 2 mode (2,500 rpm and idle) test, follow the measurement order prescribed by the regulations.

If the HC/CO concentration at 2,500 rpm does not comply with regulations, try the following procedure.

Race the engine again at 2,500 rpm for approx. 1 minute and quickly repeat steps 4 and 5 above.

This may correct the problem.

WhereEverybodyKnowsYourName

Troubleshooting

If the HC/CO concentration does not comply with regulations, perform troubleshooting in the order given below.

(a) Check oxygen sensor operation.
(See page FI–113)

(b) See the table below for possible cause, and then inspect and correct the applicable causes if necessary.

HC	CO	Symptoms	Cause
High	Normal	Rough idle	1. Faulty ignitions: ▼ Incorrect timing ▼ Fouled, shorted or improperly gapped plugs ▼ Open or crossed high–tension cords ▼ Cracked distributor cap 2. Incorrect valve clearance 3. Leaky EGR valve 4. Leaky intake and exhaust valves 5. Leaky cylinders
High	Low	Rough idle (Fluctuating HC reading)	1. Vacuum leaks: ▼ PCV hoses ▼ EGR valve ▼ Intake manifold ▼ Air intake chamber ▼ Throttle body ▼ ISC valve ▼ Brake booster line 2. Lean mixture causing misfire
High	High	Rough idle (Black smoke from exhaust)	1. Clogged air filter 2. Faulty EFI systems: ▼ Faulty pressure regulator ▼ Clogged fuel return line ▼ Defective water temp. sensor ▼ Defective air temp. sensor ▼ Faulty ECU ▼ Faulty injectors ▼ Faulty cold start injector ▼ Faulty throttle position sensor ▼ Faulty air flow meter

WhereEverybodyKnowsYourName

COMPRESSION CHECK

HINT: If there is lack of power, excessive oil consumption or poor fuel economy, measure the compression pressure.

1. **WARM UP AND STOP ENGINE**
   Allow the engine to warm up to normal operating temperature.
2. **REMOVE NO.3 TIMING BELT COVERS**
   (See steps 1, 5 to 10 and 14 on pages EM–11 to 13)

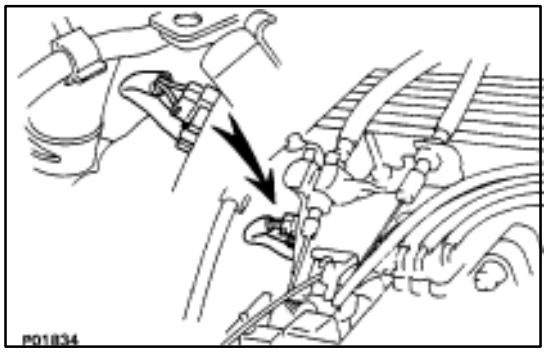

3. **DISCONNECT COLD START INJECTOR CONNECTOR**

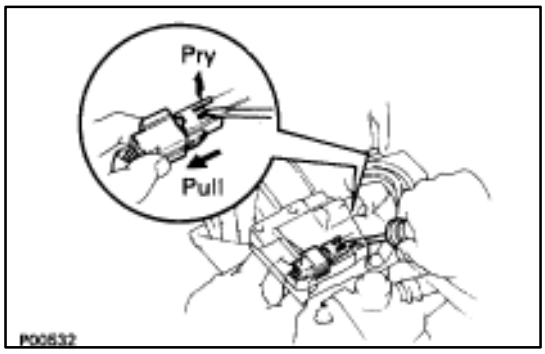

4. **DISCONNECT RH CAM POSITION SENSOR CONNECTOR**
   (a) Disconnect the connector from the ignition coil bracket.
   (b) Disconnect the sensor connector.

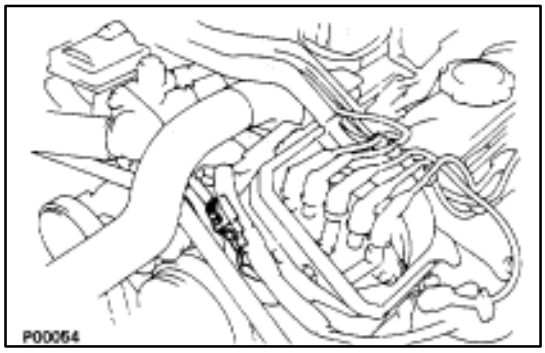

5. **DISCONNECT LH CAM POSITION SENSOR CONNECTOR**

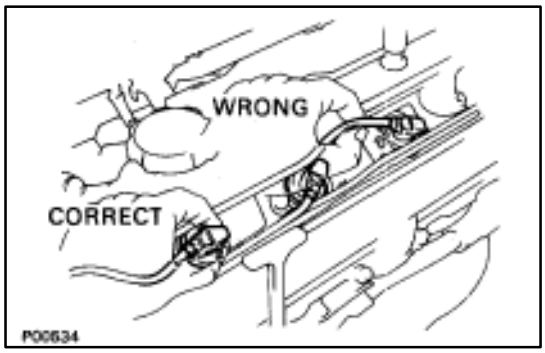

6. **REMOVE SPARK PLUGS**
   (a) Disconnect the eight high–tension cords from the spark plugs.
   Disconnect the high–tension cords at rubber boot. Do not pull on the cords.
   NOTICE: Pulling on or bending the cords may damage the conductor inside.

WhereEverybodyKnowsYourName

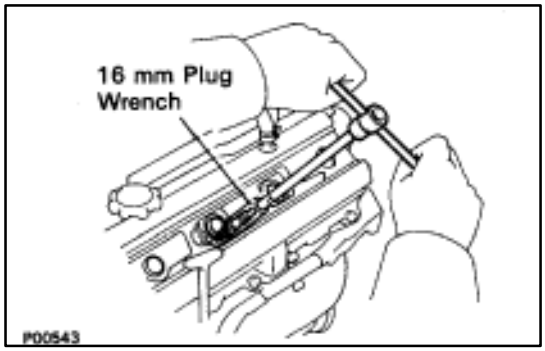

(b) Using a 16 mm spark plug wrench, remove the eight spark plugs.

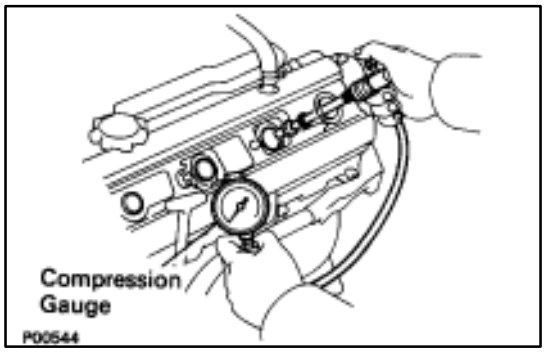

7. CHECK CYLINDER COMPRESSION PRESSURE

(a) Insert a compression tester into the spark plug hole.

(b) Fully open the throttle.

(c) While cranking the engine, measure the compression pressure.

HINT: Always use a fully charged battery to obtain engine revolution of 250 rpm or more.

(d) Repeat steps (a) through (c) for each cylinder.

NOTICE: This measurement must be done in as short time as possible.

Compression pressure:

1,226 kPa (12.5 kgf/cm, 178 psi) or more

Minimum pressure:

981 kPa (10.0 kgf/cm, 142 psi)

Difference between each cylinder:

98 kPa (1.0 kgf/cm, 14 psi) or less

(e) If the cylinder compression in one or more cylinders is low, pour a small amount of engine oil into the cylinder through the spark plug hole and repeat steps (a) through (c) for the cylinder with low compression.

- If adding oil helps the compression the piston rings and/or cylinder bore are probably worn or damaged.
- If pressure stays low, a valve may be sticking or seating improper, or there may be leakage past the gasket.

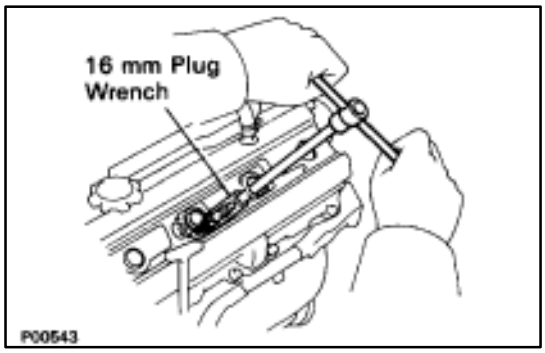

8. REINSTALL SPARK PLUGS

(a) Using a 16 mm plug wrench, install the eight spark plugs.

Torque: 18 N·m (180 kgf·cm, 13 ft·lbf)

(b) Connect the eight high–tension cords to the spark plugs.

(c) Fit the high–tension cords to the cord clamps.
(See page IG–16)

WhereEverybodyKnowsYourName

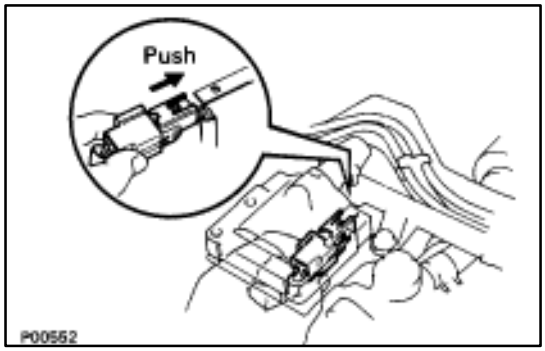

9. RECONNECT RH CAM POSITION SENSOR CONNECTOR

(a) Connect the sensor connector.

(b) Connect the connector to the ignition coil bracket.

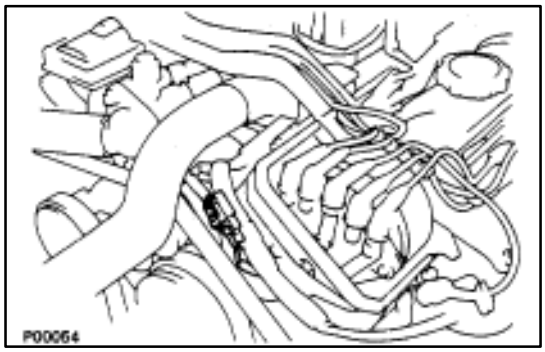

10. RECONNECT LH CAM POSITION SENSOR CONNECTOR

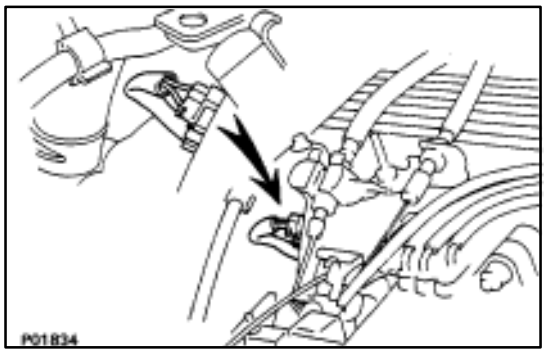

11. RECONNECT COLD START INJECTOR CONNECTOR

12. REINSTALL NO.3 TIMING BELT COVERS
(See steps 28 to 30, 34 to 37, 40 and 41 on pages EM–25 to 27)

WhereEverybodyKnowsYourName

TIMING BELT

COMPONENTS FOR REMOVAL AND INSTALLATION

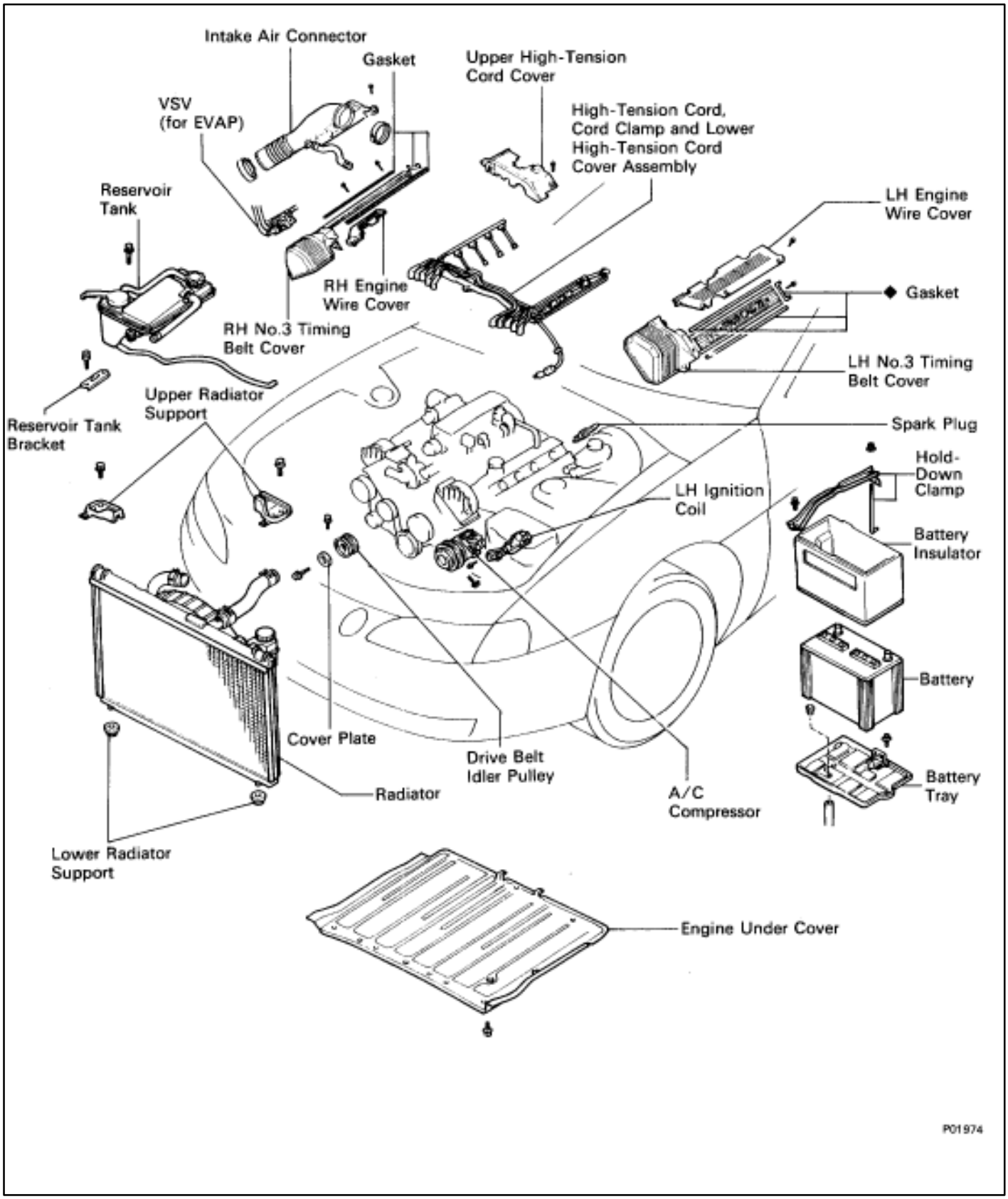

WhereEverybodyKnowsYourName

COMPONENTS FOR REMOVAL AND INSTALLATION (Cont'd)

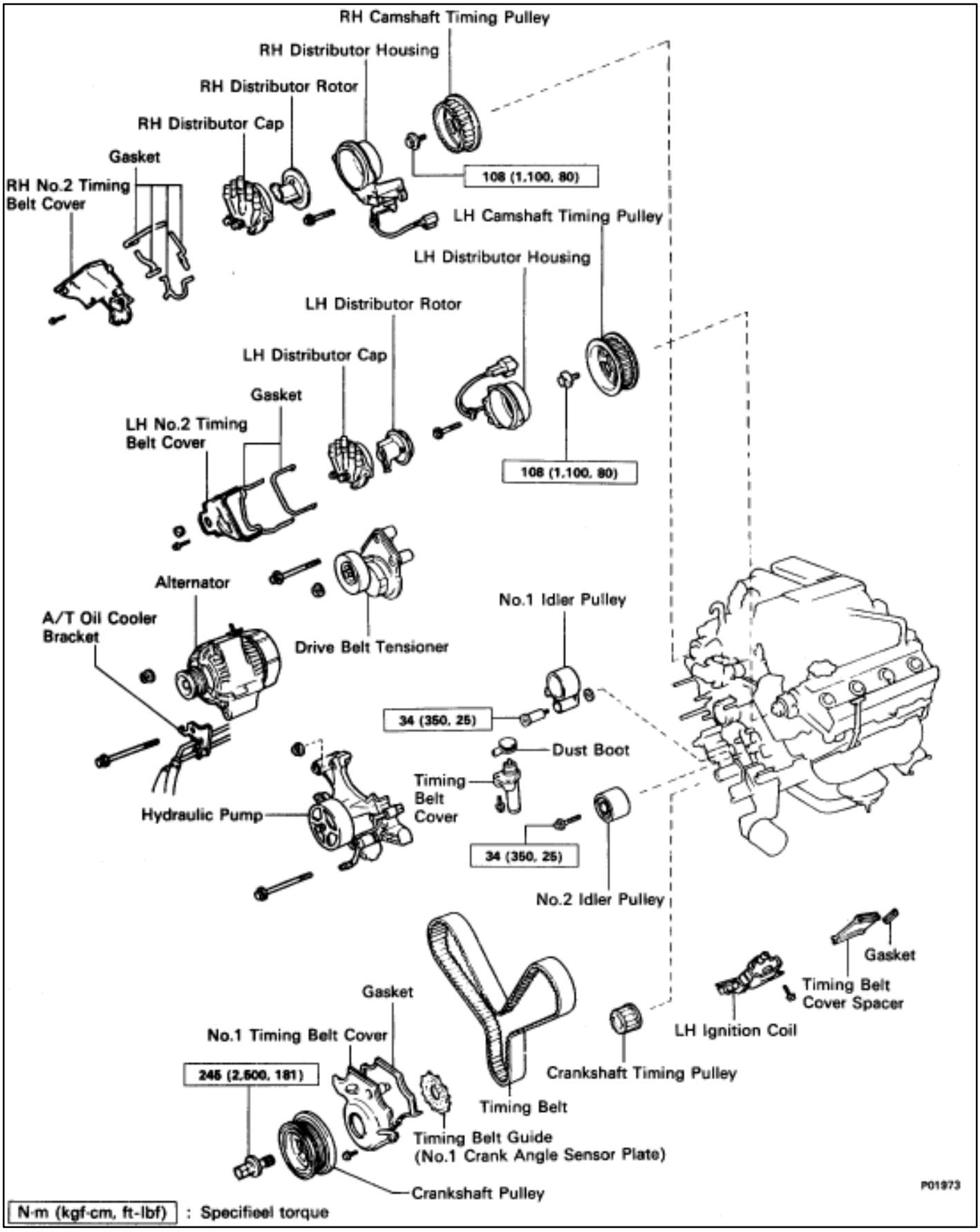

WhereEverybodyKnowsYourName

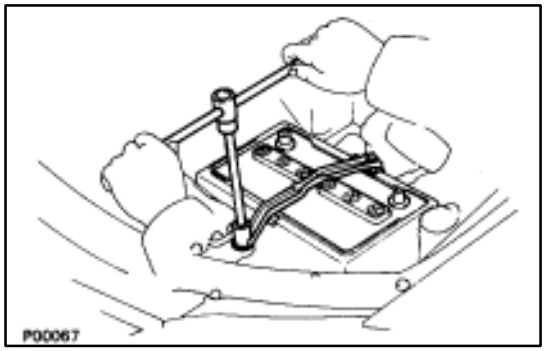

REMOVAL OF TIMING BELT

(See Components on pages EM–33 and 34)

1. **REMOVE BATTERY**
   CAUTION: Work must be started after approx. 20 seconds or longer from the time the ignition switch is turned to the "LOCK" position and the negative (–) terminal cable is disconnected from the battery.
2. **REMOVE ENGINE UNDER COVER**
3. **DRAIN ENGINE COOLANT (See page CO–6)**

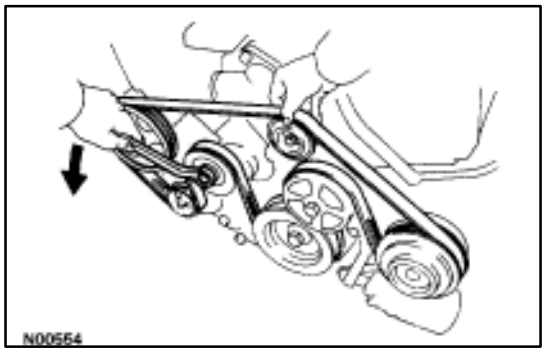

4. **REMOVE DRIVE BELT**
   Loosen the drive belt tension by turning the drive belt tensioner counterclockwise, and remove the drive belt.
   HINT: The pulley bolt for the belt tensioner has a left–hand thread.

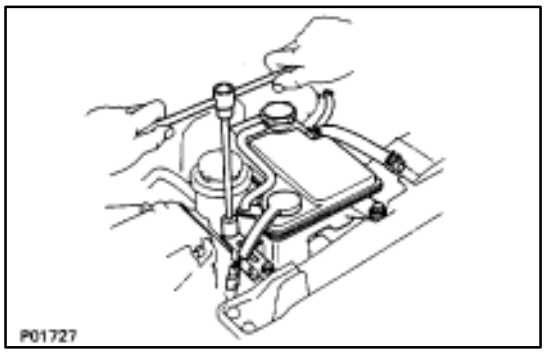

5. **REMOVE RESERVOIR TANK RADIATOR**
   (See steps 12 and 13 on pages EM–120 and 121)

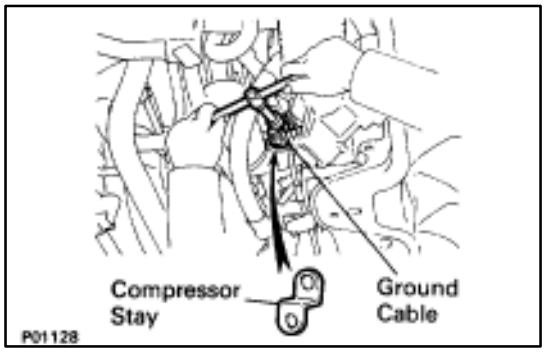

6. **REMOVE A/C COMPRESSOR WITHOUT DISCONNECTING HOSES**
   (a) Disconnect the compressor connector.
   (b) Remove the mounting nut, and disconnect the ground cable.
   (c) Remove the mounting bolt and compressor stay.

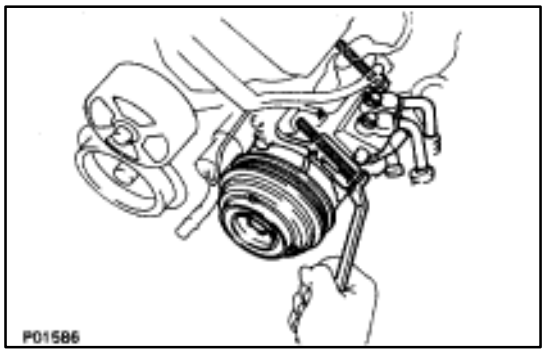

   (d) Remove the two bolts, and disconnect the A/C compressor from the engine.
   HINT: Put aside the compressor, and suspend it.

WhereEverybodyKnowsYourName

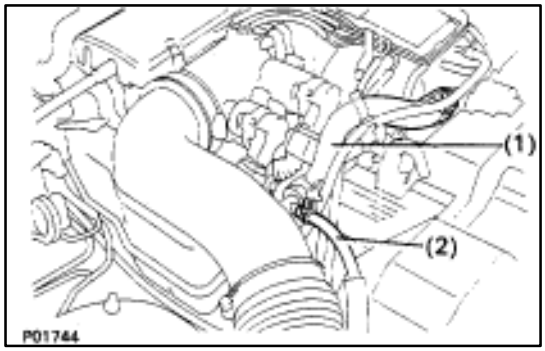

7. REMOVE INTAKE AIR CONNECTOR

(a) Disconnect the following hoses:
  (1) Air hose from ISC valve
  (2) Air hose (from PS air control valve) from intake air connector

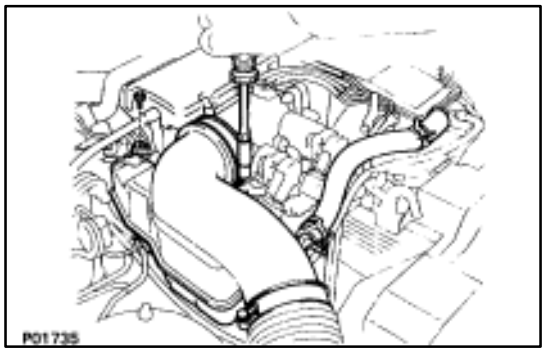

(b) Remove the bolt holding the intake air connector to the cylinder head cover.
(c) Loosen the two hose clamps.
(d) Disconnect the intake air connector from the throttle body and air cleaner hose, and remove the throttle body.

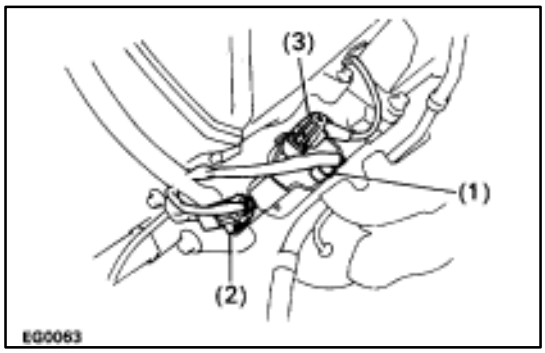

8. REMOVE LH IGNITION COIL

(a) Disconnect the following connectors and cord:
  (1) Ignition coil connector
  (2) Noise filter connector
  (3) High–tension cord

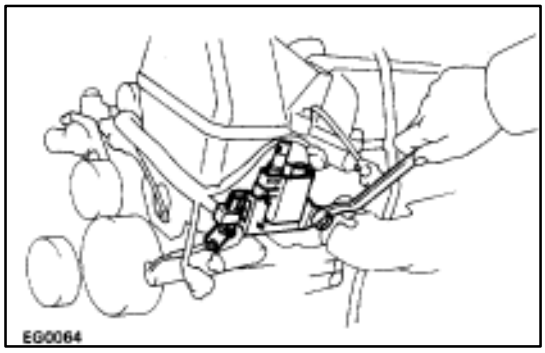

(b) Remove the two bolts and ignition coil.

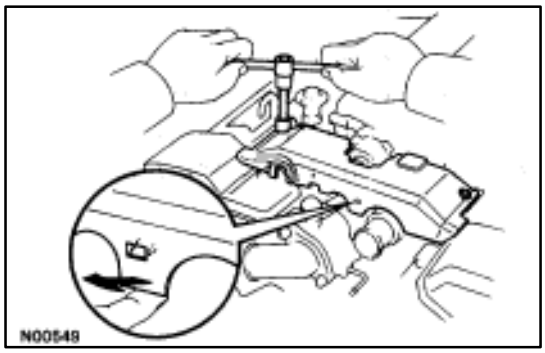

9. REMOVE UPPER HIGH–TENSION CORD COVER

(a) Remove the two mounting bolts.
(b) Disconnect the front side claw groove of the cord cover from the claw of the lower cover, and remove the cord cover.

WhereEverybodyKnowsYourName

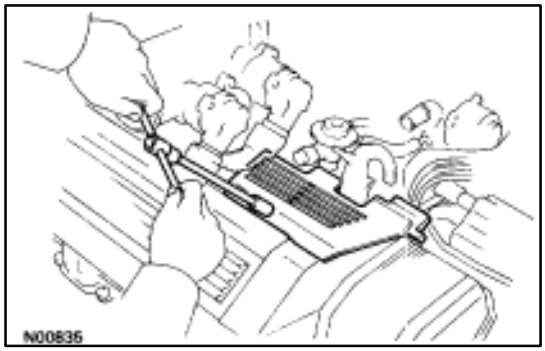

10. REMOVE RH ENGINE WIRE COVER

Remove the bolt and engine wire cover.

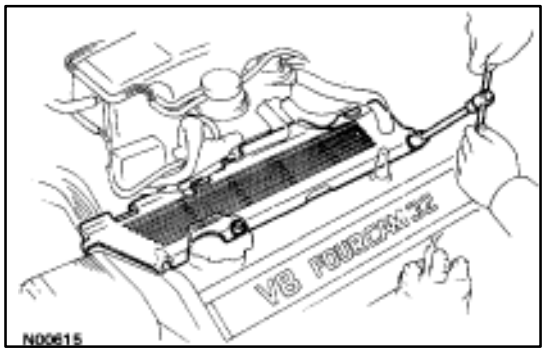

11. REMOVE LH ENGINE WIRE COVER

Remove the two bolts and engine wire cover.

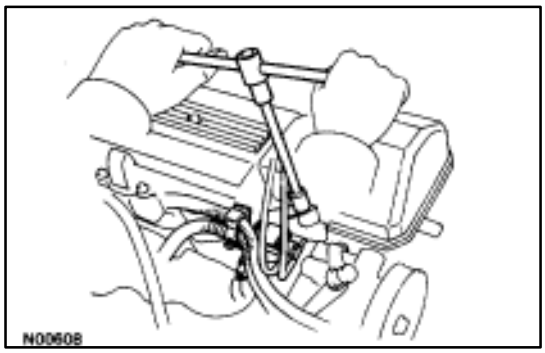

12. REMOVE VSV FOR EVAP SYSTEM

Remove the two bolts, and disconnect the VSV from cylinder head and timing belt cover.

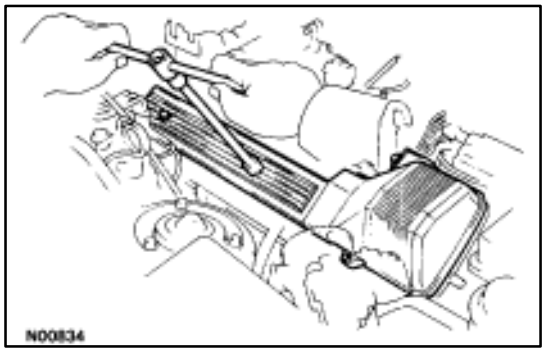

13. REMOVE NO.3 TIMING BELT COVER

Remove the three bolts and timing belt cover.

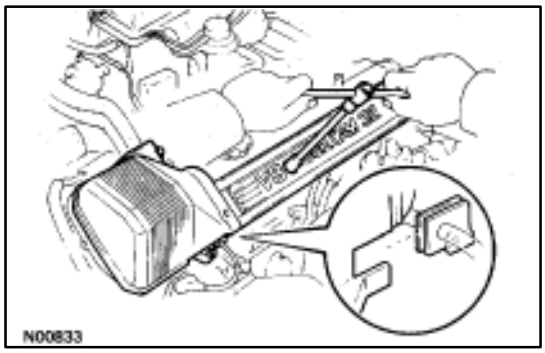

14. REMOVE LH NO.3 TIMING BELT COVER

(a) Remove the four mounting bolts.
(b) Disconnect the cord grommet from the timing belt cover, and remove the timing belt cover.
(c) Remove the cord grommet from the high–tension cord.

WhereEverybodyKnowsYourName

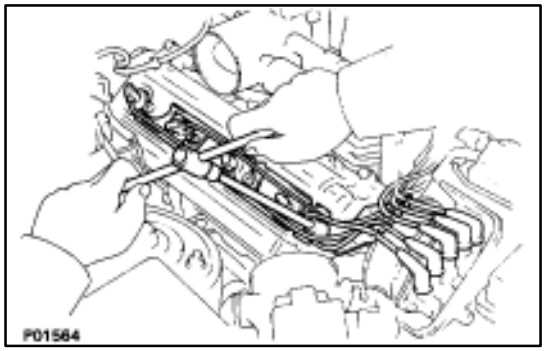

15. REMOVE HIGH–TENSION CORDS, HIGH–TENSION CORD CLAMPS AND LOWER HIGH–TENSION CORD COVER ASSEMBLY

(a) Remove the two bolts holding the RH rear high–tension cord clamp to the cylinder head.

(b) Disconnect the high–tension cords from the RH spark plugs and distributor cap.

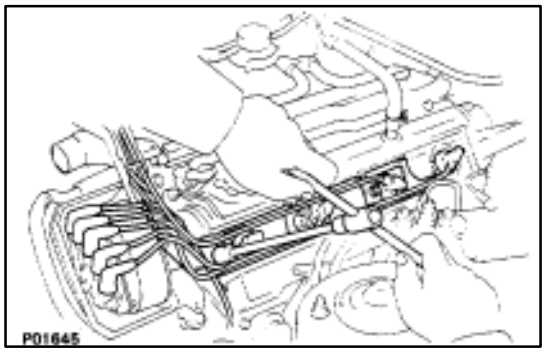

(c) Remove the two bolts holding the LH rear high–tension cord clamp to the cylinder head.

(d) Disconnect the high–tension cords from the LH spark plugs, distributor cap and LH ignition coil.

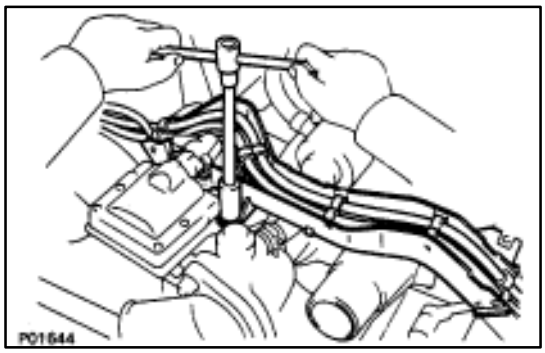

(e) Remove the bolt holding the lower high–tension cord cover to the water inlet housing.

(f) Disconnect the high–tension cord from the RH ignition coil, and remove the high–tension cords, clamps and cover assembly.

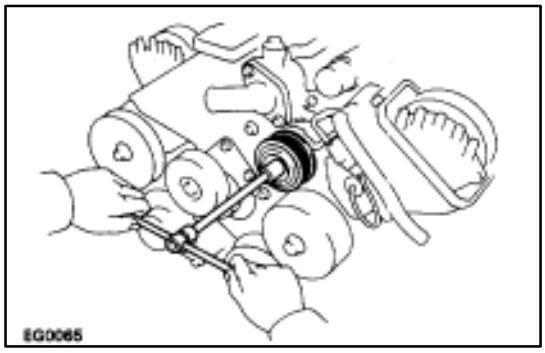

16. REMOVE DRIVE BELT IDLER PULLEY

Remove the pulley bolt, cover plate and idler pulley.

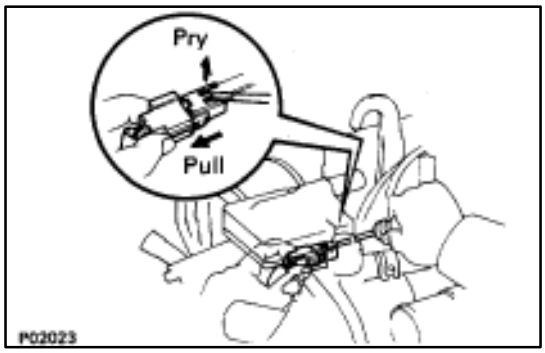

17. REMOVE RH NO.2 TIMING BELT COVER

(a) Disconnect the cam position sensor connector from the ignition coil bracket.

WhereEverybodyKnowsYourName

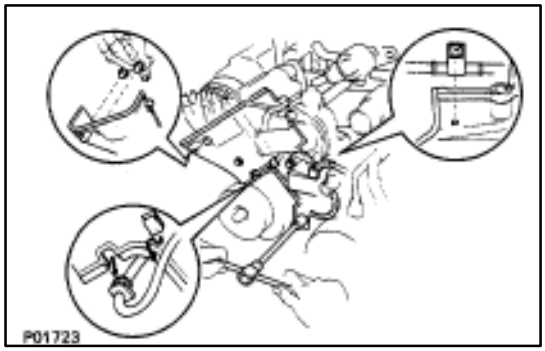

(b) Disconnect the cam position sensor wire from the clamp on the timing belt cover.
(c) Remove the five mounting bolts.
(d) Disconnect the connector grommet from the timing belt cover.
(e) Disconnect the wire clamp from the timing belt cover, and remove the timing belt cover and four gaskets.

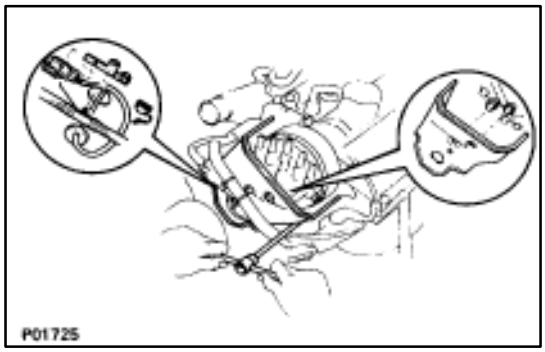

18. REMOVE LH NO.2 TIMING BELT COVER

(a) Disconnect the cam position sensor wire from the clamp on the timing belt cover.
(b) Disconnect the cam position sensor connector.
(c) Remove the three mounting bolts.
(d) Disconnect the connector grommet from the timing belt cover, and remove the timing belt cover and two gaskets.

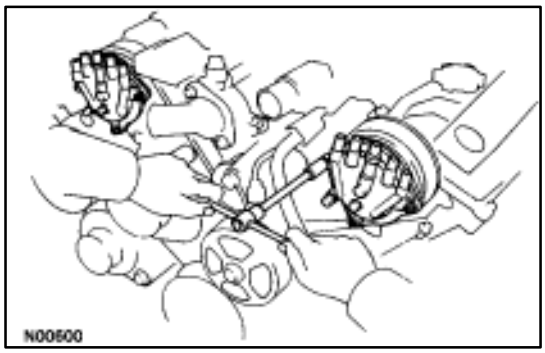

19. REMOVE DISTRIBUTOR CAPS

Loosen the three bolts, and remove the distributor cap. Remove the two distributor caps.
HINT: Arrange the distributor caps (RH side and LH side).

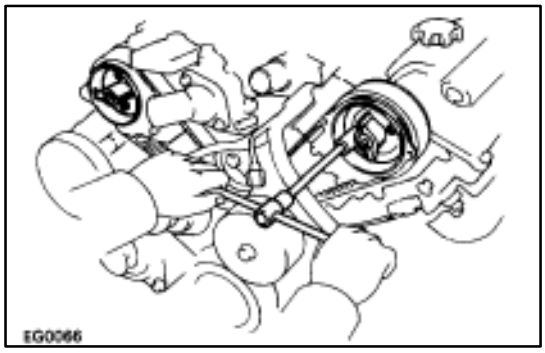

20. REMOVE DISTRIBUTOR ROTORS

Loosen the two bolts, and remove the distributor rotor. Remove the two distributor rotors.
HINT: Arrange the distributor rotors (RH side and LH side).

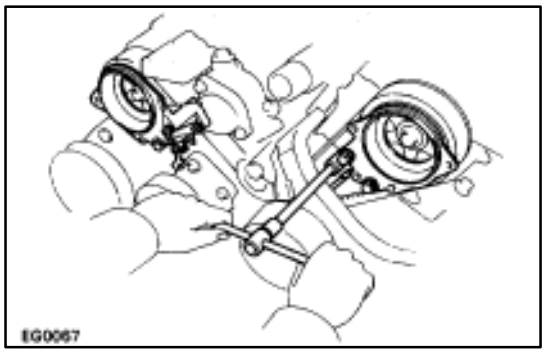

21. REMOVE DISTRIBUTOR HOUSINGS

(a) (RH Distributor Housing)
Disconnect the cam position sensor connector.
(b) Remove the three bolts and distributor housing. Remove the two distributor housings.

WhereEverybodyKnowsYourName

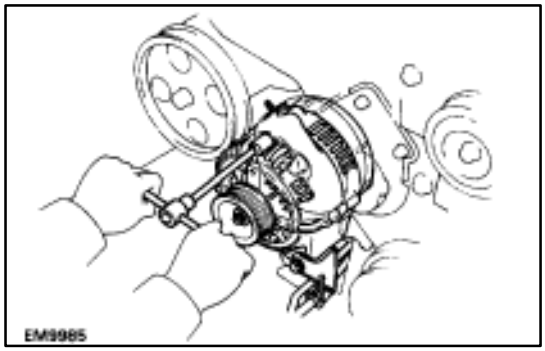

22. REMOVE ALTERNATOR

(a) Disconnect the alternator connector.

(b) Remove the cap and nut, and disconnect the alternator wire.

(c) Remove the bolt, and disconnect the A/T oil cooler pipe bracket.

(d) Remove the nut and alternator.

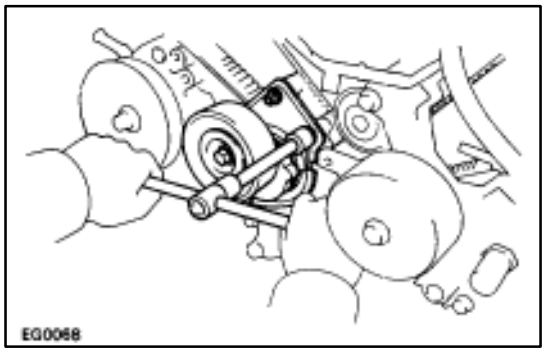

23. REMOVE DRIVE BELT TENSIONER

Remove the bolt, two nuts and tensioner.

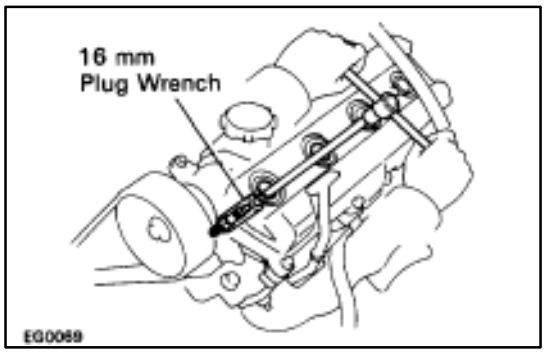

24. REMOVE SPARK PLUGS

Using a 16 mm plug wrench, remove the eight spark plugs.

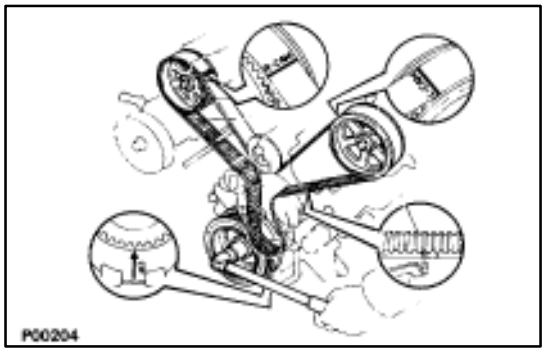

25. IF RE–USING TIMING BELT, CHECK INSTALLATION MARKS ON TIMING BELT

Check that there are four installation marks on the timing belt by turning the crankshaft pulley as shown in the illustration. If the installation marks have disappeared, place a new installation mark on the timing belt before removing each part.

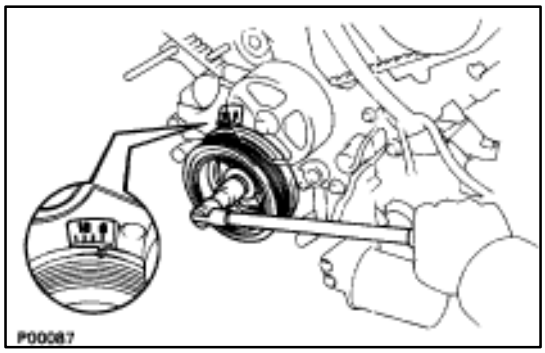

26. SET NO.1 CYLINDER TO TDC/COMPRESSION

(a) Turn the crankshaft pulley and align its groove with the timing mark ”O” of the No.1 timing belt cover.

WhereEverybodyKnowsYourName

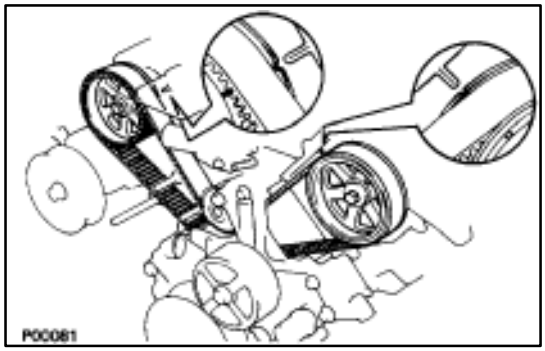

(b) Check that the timing marks of the camshaft timing pulleys and timing belt rear plates aligned.

If not, turn the crankshaft one revolution (360°).

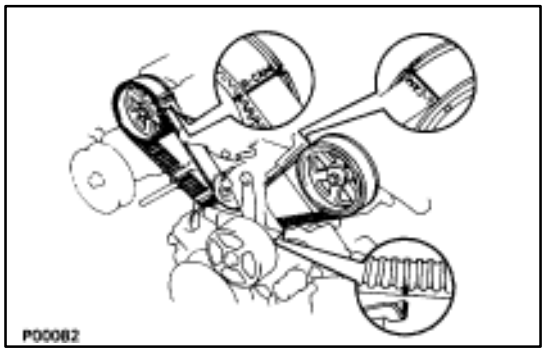

27. REMOVE TIMING BELT TENSIONER

HINT:

- (Re–using timing belt)
  If the installation marks have disappeared, before removing the timing belt, place new installation marks on the timing belt to match the timing marks of the camshaft timing pulleys, and place a new installation mark on the timing belt to match the end of the hydraulic pump.

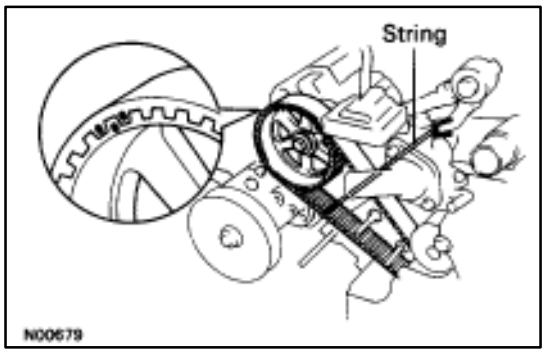

- (When replacing timing belt tensioner only)
  To avoid meshing of the timing pulley and timing belt, secure one of them with string. And place matchmarks on the timing belt and RH camshaft timing pulley.

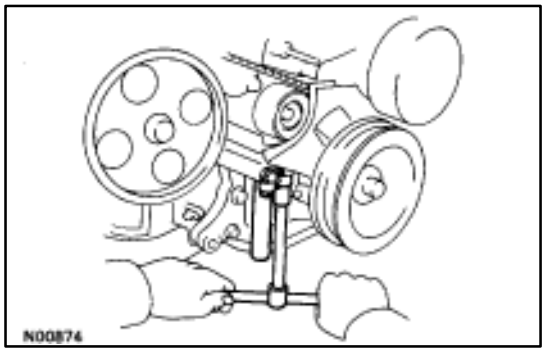

Alternately loosen the two bolts, and remove them, the tensioner and dust boot.

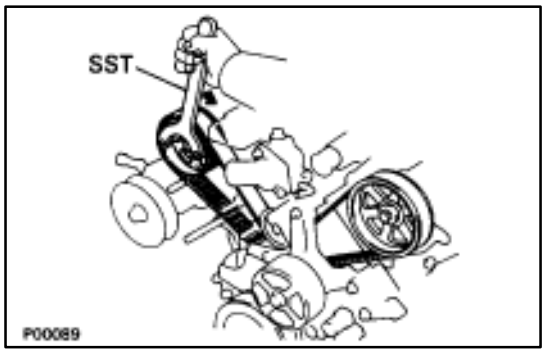

28. DISCONNECT TIMING BELT FROM CAMSHAFT TIMING PULLEYS

(a) Using SST, loosen the tension between the LH and RH camshaft timing pulleys by slightly turning the LH camshaft timing pulley clockwise.

SST 09278–54012

WhereEverybodyKnowsYourName

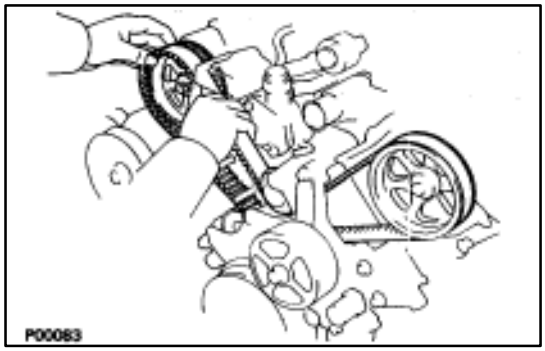

(b) Disconnect the timing belt from the camshaft timing pulleys.

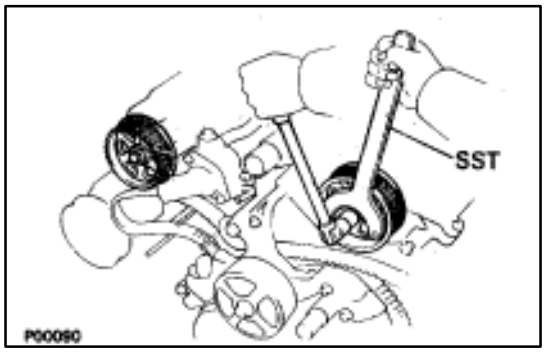

29. REMOVE CAMSHAFT TIMING PULLEYS

Using SST, remove the bolt, timing pulley. Remove the two timing pulleys.
SST 09278–54012

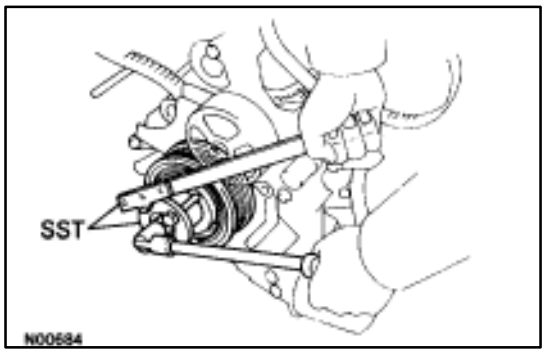

30. REMOVE CRANKSHAFT PULLEY

(a) Using SST, remove the pulley bolt.
SST 90213–70010 and 09330–00021

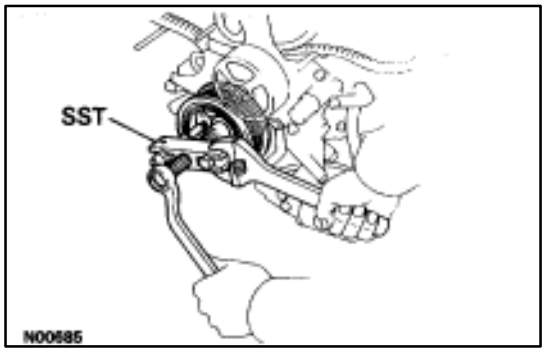

(b) Using SST, remove the pulley.
SST 09213–31021

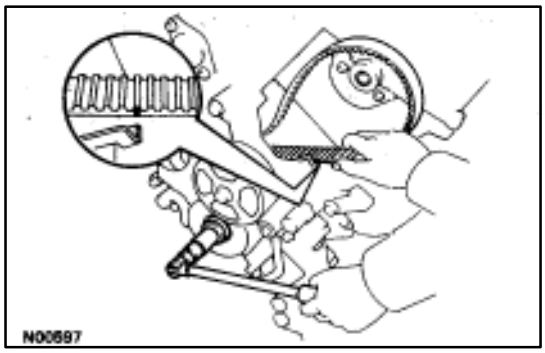

31. REMOVE HYDRAULIC PUMP

HINT (Re–using timing belt): Before removing the hydraulic pump, using the crankshaft pulley bolt, turn the crankshaft pulley and align the installation mark of the timing belt with the end of the hydraulic pump.

WhereEverybodyKnowsYourName

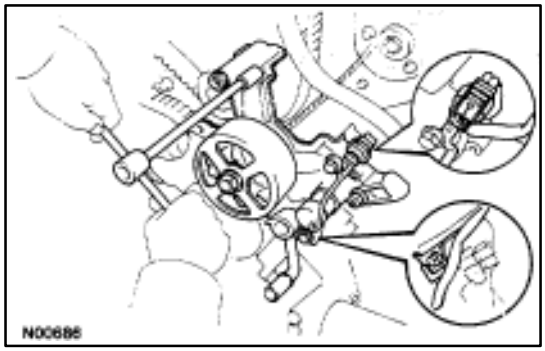

(a) Disconnect the solenoid valve connector.
(b) Remove the two mounting bolts and two mounting nuts.
(c) Disconnect the engine speed sensor wire clamp.
(d) Remove the hydraulic pump.

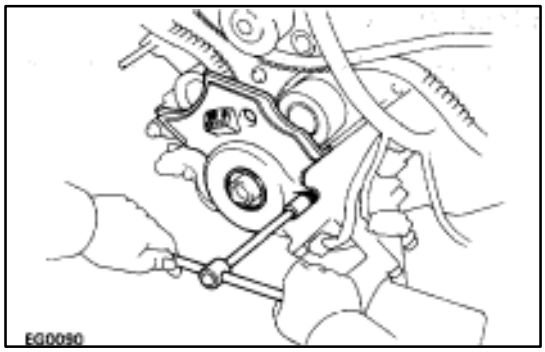

32. REMOVE NO.1 TIMING BELT COVER
Remove the four bolts, timing belt cover and gasket.

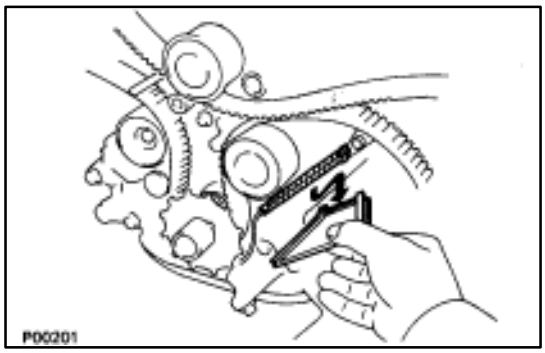

33. REMOVE TIMING BELT COVER SPACER
Remove the cover spacer and gasket.

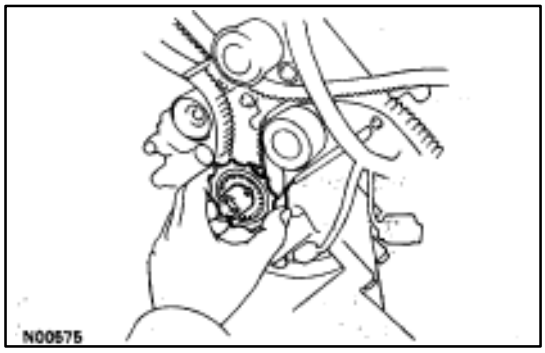

34. REMOVE TIMING BELT GUIDE (NO.1 CRANK ANGLE SENSOR PLATE)

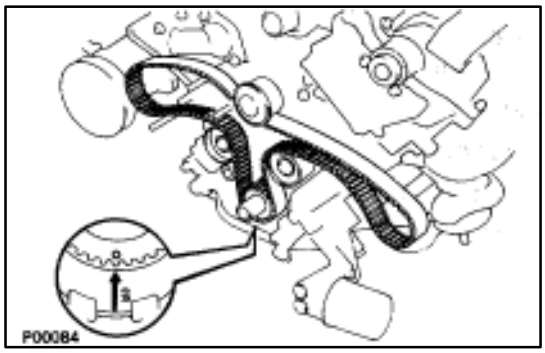

35. REMOVE TIMING BELT
HINT (Re–using timing belt): If the installation marks have disappeared, place a new installation mark on the timing belt to match the dot mark of the crankshaft timing pulley.

WhereEverybodyKnowsYourName

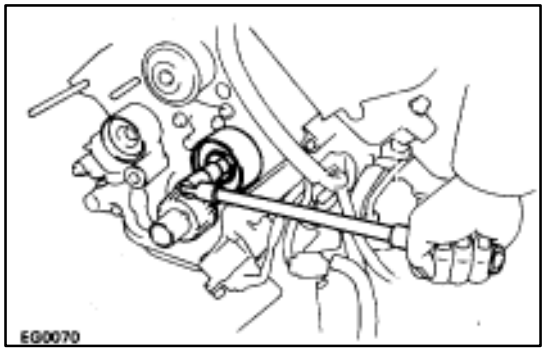

36. REMOVE NO.2 IDLER PULLEY

Remove the pulley bolt and idler pulley.

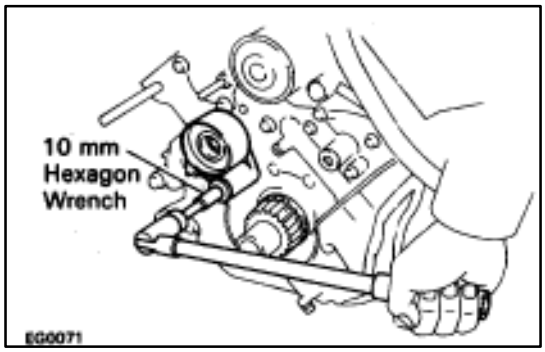

37. REMOVE NO.1 IDLER PULLEY

Using a 10 mm hexagon wrench, remove the bolt, idler pulley and plate washer.

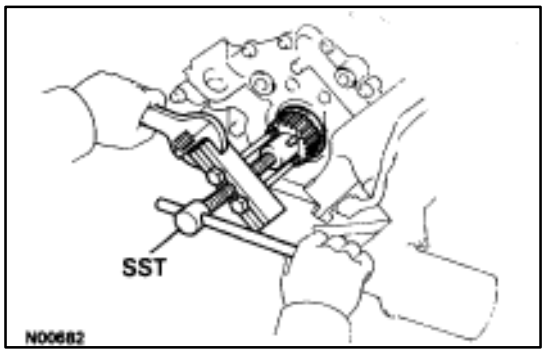

38. REMOVE CRANKSHAFT TIMING PULLEY

Using SST, remove the timing pulley.
SST 09213–60017 (09213–00050)

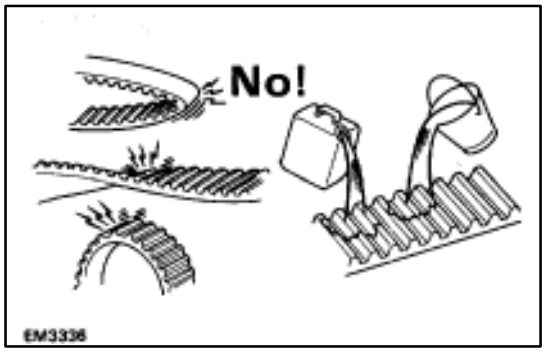

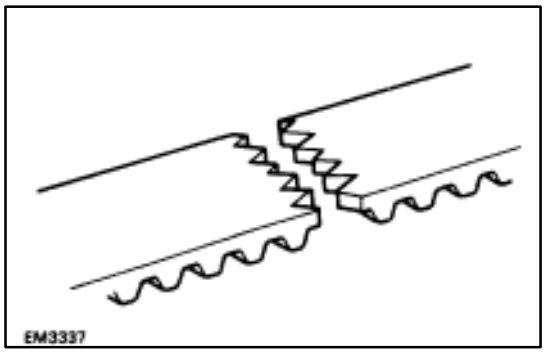

INSPECTION OF TIMING BELT COMPONENTS

1. INSPECT TIMING BELT

NOTICE:

- **Do not bend, twist or turn the timing belt inside out.**
- **Do not allow the timing belt to come into contact with oil, water or steam.**
- **Do not utilize timing belt tension when installing or removing the mounting bolt of the camshaft timing pulley.**

If there are any defects as shown in the illustrations, check the following points:

(a) Premature parting
- Check for proper installation.
- Check the timing cover gasket for damage and proper installation.

WhereEverybodyKnowsYourName

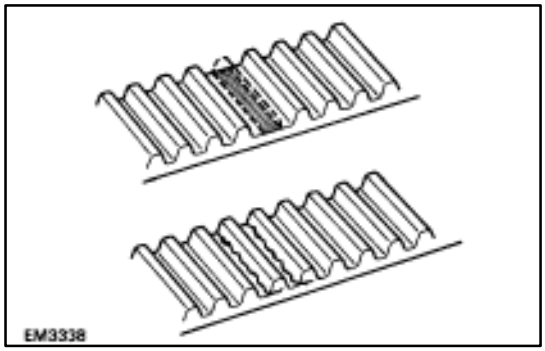

(b) If the belt teeth are cracked or damaged, check to see if either the camshaft is locked.

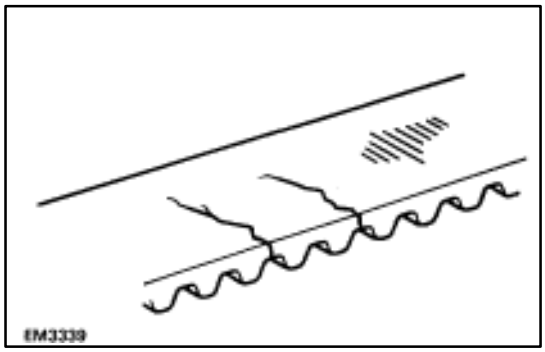

(c) If there is noticeable wear or cracks on the belt face, check to see if there are nicks on the side of the idler pulley lock and water pump.

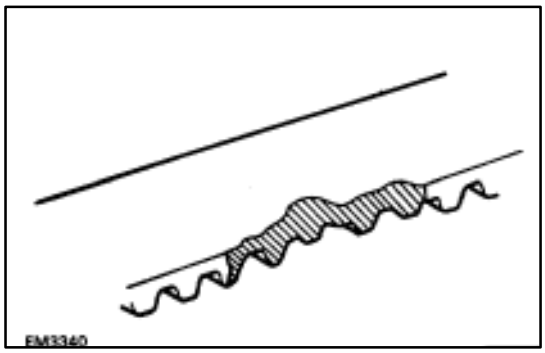

(d) If there is wear or damage on only one side of the belt, check the belt guide and the alignment of the each pulley.

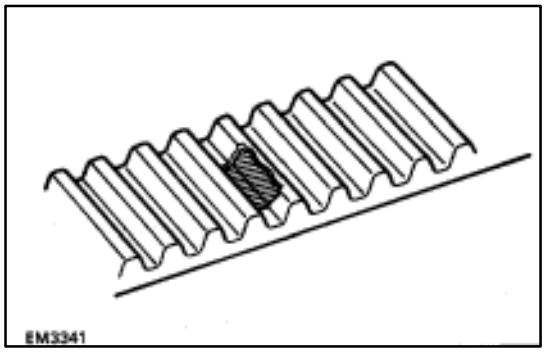

(e) If there is noticeable wear on the belt teeth, check timing belt cover for damage, correct gasket installation. and the foreign material on the pulley teeth.

If necessary, replace the timing belt.

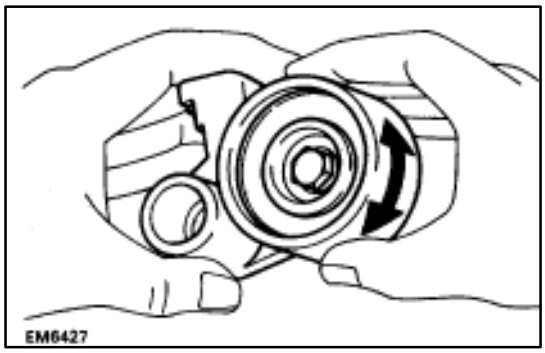

2. INSPECT IDLER PULLEYS

Check the turning smoothness of the idler pulley.

If necessary, replace the idler pulley.

WhereEverybodyKnowsYourName

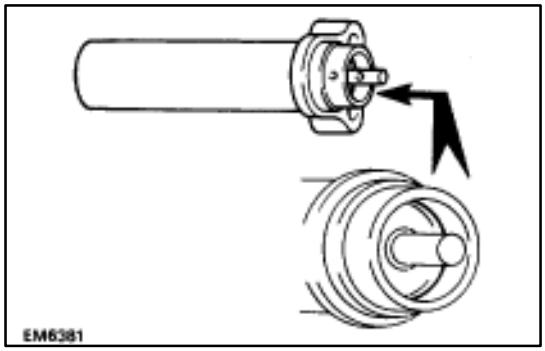

3. INSPECT TIMING BELT TENSIONER

(a) Visually check tensioner for oil leakage.

HINT: If there is only the faintest trace of oil on the seal on the push rod side, the tensioner is all right.

If leakage is found, replace the tensioner.

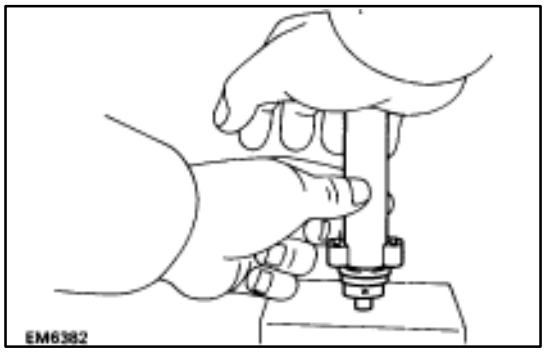

(b) Hold the tensioner in both hands and push the push rod strongly against the floor or wall to check that it doesn't move.

If the push rod moves, replace the tensioner.

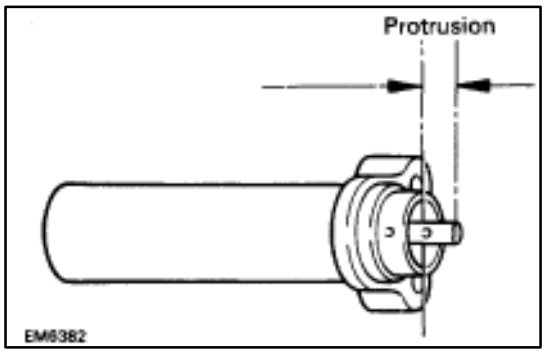

(c) Measure the protrusion of the push rod from the housing end.

Protrusion: 10.5–11.5 mm (0.413–0.453 in.)

If the protrusion is not as specified, replace the tensioner.

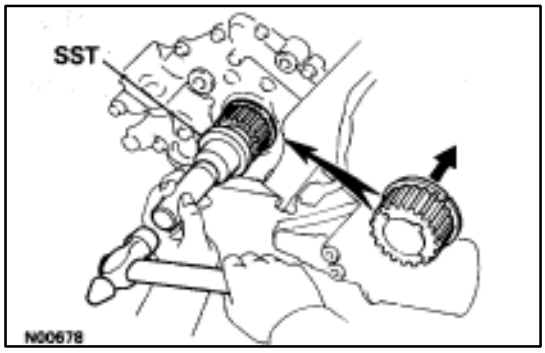

INSTALLATION OF TIMING BELT

(See Components pages EM–33 and 34)

1. INSTALL CRANKSHAFT TIMING PULLEY

(a) Align the pulley set key on the crankshaft with the key groove of the timing pulley.

(b) Using SST and a hammer, tap in the timing pulley, facing the flange side rearward.

SST 09223–46011

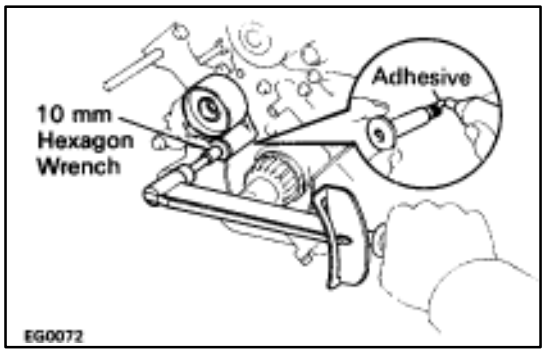

2. INSTALL NO. 1 IDLER PULLEY

(a) Apply adhesive to two or three threads of the pulley bolt end.

Adhesive: Part No. 08833–00080, THREE BOND 1344, LOCTITE 242 OR equivalent

(b) Using a 10 mm hexagon wrench, install the plate washer and idler pulley with the pulley bolt. Torque the pulley bolt.

Torque: 34 N·m (350 kgf·cm, 25 ft·lbf)

(c) Check that the pulley bracket moves smoothly.

WhereEverybodyKnowsYourName

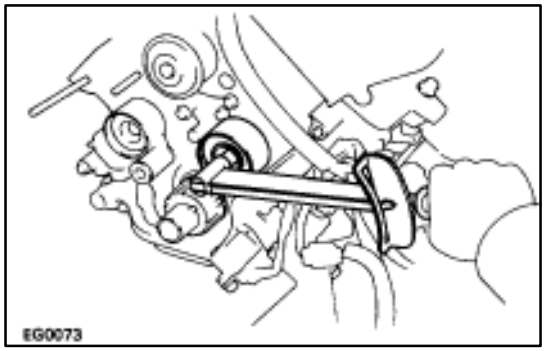

3. INSTALL NO. 2 IDLER PULLEY

(a) Install the idler pulley with the pulley bolt. Torque the pulley bolt.

Torque: 34 N·m (350 kgf·cm, 25 ft·lbf)

(b) Check that the idler pulley moves smoothly.

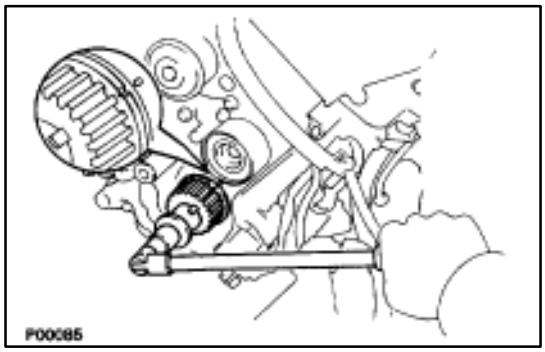

4. TEMPORARILY INSTALL TIMING BELT

NOTICE: The engine should be cold.

(a) Using the crankshaft pulley bolt, turn the crankshaft and align the timing marks of the crankshaft timing pulley and oil pump body.

(b) Remove any oil or water on the crankshaft timing pulley, No. 1 idler pulley and No. 2 idler pulley, and keep them clean.

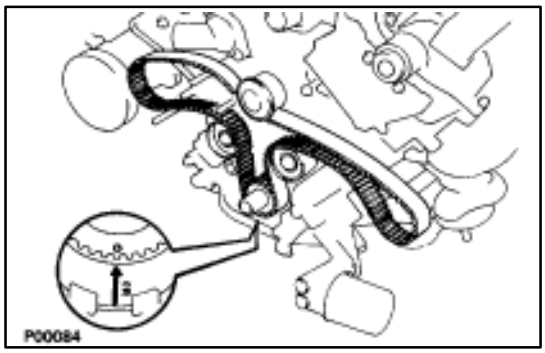

(c) Align the installation mark on the timing belt with the dot mark of the crankshaft timing pulley.

(d) Install the timing belt on the crankshaft timing pulley, No. 1 idler pulley and No. 2 idler pulley.

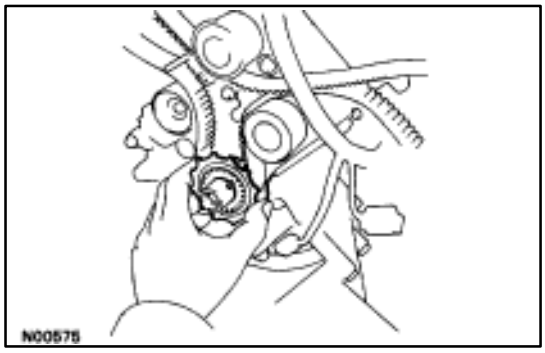

5. INSTALL TIMING BELT GUIDE (NO. 1 CRANK ANGLE SENSOR PLATE)

Install the belt guide, facing the cup side forward.

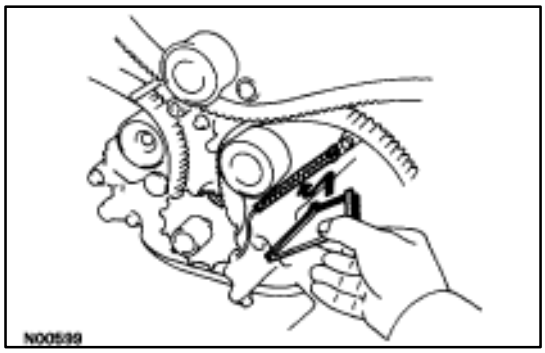

6. INSTALL TIMING BELT COVER SPACER

(a) Install the gasket to the spacer.

(b) Install the spacer.

WhereEverybodyKnowsYourName

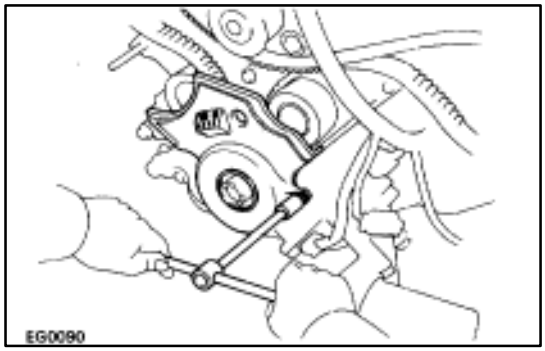

7. INSTALL NO.1 TIMING BELT COVER

(a) Install the gasket to the timing belt cover.

(b) Install the timing belt cover with the four bolts.

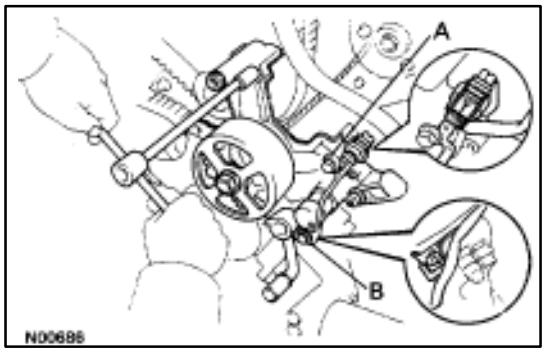

8. INSTALL HYDRAULIC PUMP

(a) Install the hydraulic pump and solenoid valve connector clamp and engine speed sensor wire clamp with the two bolts and two nuts.

Torque:

12 mm heads 16 N·m (160 kgf·cm, 12 ft·lbf)

Others 30 N·m (310 kgf·cm, 22 ft·lbf)

HINT: Each bolt length is indicated in the illustration.

Bolt length:

A 106 mm (4.17 in.) for 12 mm head

B 114 mm (4.49 in.) for 14 mm head

(b) Connect the solenoid valve connector.

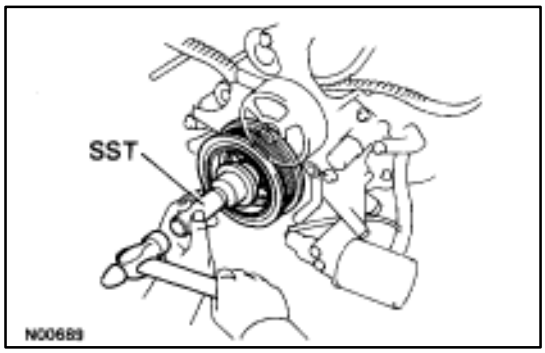

9. INSTALL CRANKSHAFT PULLEY

(a) Align the pulley set key on the crankshaft with the key groove of the pulley.

(b) Using SST and a hammer, tap in the pulley.

SST 09223–46011

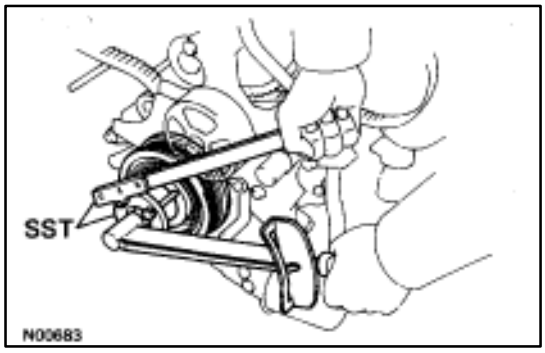

(c) Using SST, install and torque the pulley bolt.

SST 09213–70010 and 09330–00021

Torque: 245 N·m (2,500 kgf·cm, 181 ft·lbf)

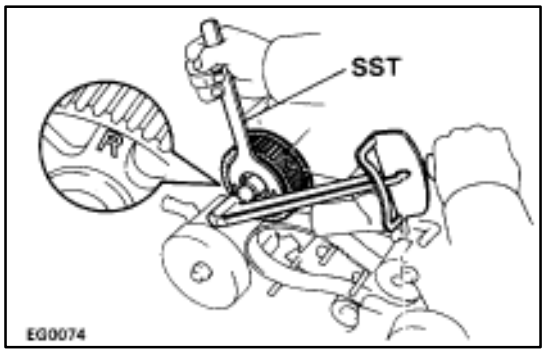

10. INSTALL RH CAMSHAFT TIMING PULLEY

(a) Align the knock pin on the camshaft with the knock pin groove of the timing pulley.

(b) Slide the timing pulley, facing the ”R” mark forward.

(c) Using SST, install and torque the pulley bolt.

SST 09278–54012

Torque: 108 N·m (1,100 kgf·cm, 80 ft·lbf)

WhereEverybodyKnowsYourName

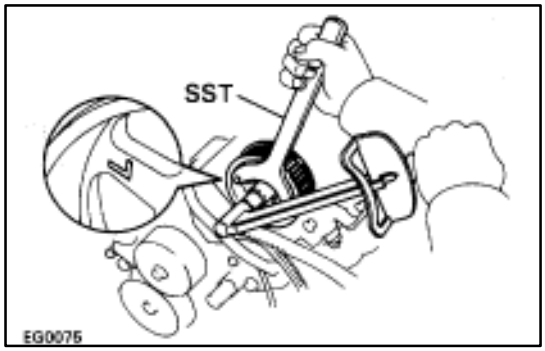

11. INSTALL LH CAMSHAFT TIMING PULLEY

(a) Align the knock pin on the camshaft with the knock pin groove of the timing pulley.

(b) Slide the timing pulley, facing the ”L” mark forward.

(c) Using SST, install and torque the pulley bolt.

SST 09278–54012

Torque: 108 N·m (1,100 kgf·cm, 80 ft·lbf)

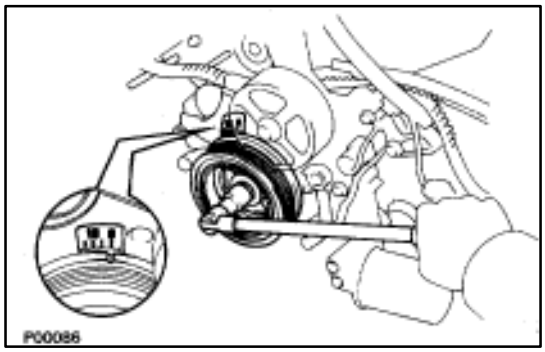

12. SET NO.1 CYLINDER TO TDC/COMPRESSION

(a) (Crankshaft Pulley Position)
Turn the crankshaft pulley, and align its groove with the ”O” timing mark of the No.1 timing belt cover.

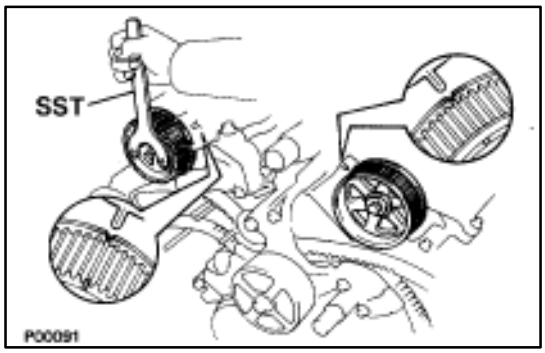

(b) (Camshaft Timing Pulley Position)
Using SST, turn the camshaft timing pulley, and align the timing marks of the camshaft timing pulley and timing belt rear plate.

SST 09278–54012

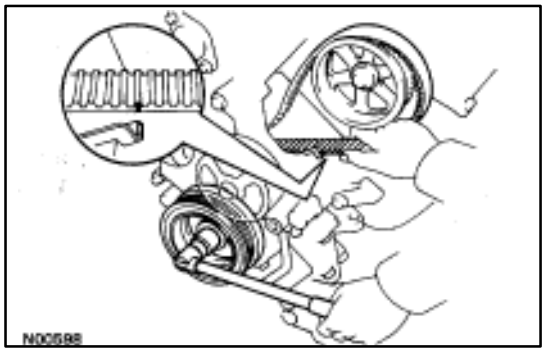

13. INSTALL TIMING BELT TO LH CAMSHAFT TIMING PULLEY

(a) Align the installation mark on the timing belt with the end of the hydraulic pump.

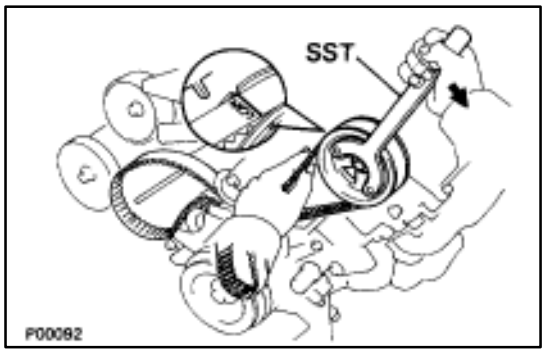

(b) Remove any oil or water on the LH camshaft timing pulley, and keep it clean.

(c) Using SST, slightly turn the LH camshaft timing pulley clockwise. Align the installation mark on the timing belt with the timing mark of the camshaft timing pulley, and hang the timing belt on the LH camshaft timing pulley.

SST 09278–54012

WhereEverybodyKnowsYourName

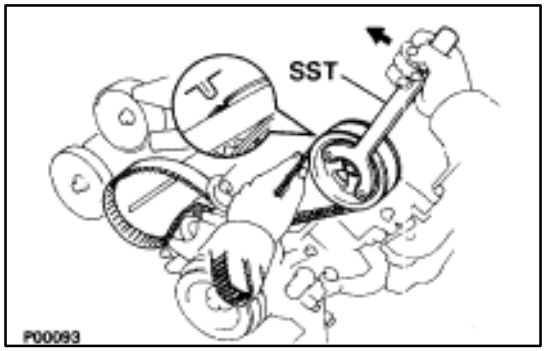

(d) Using SST, align the timing marks of the LH camshaft pulley and timing belt rear plate.
SST 09278–54012
(e) Check that the timing belt has tension between the crankshaft timing pulley and LH camshaft timing pulley.

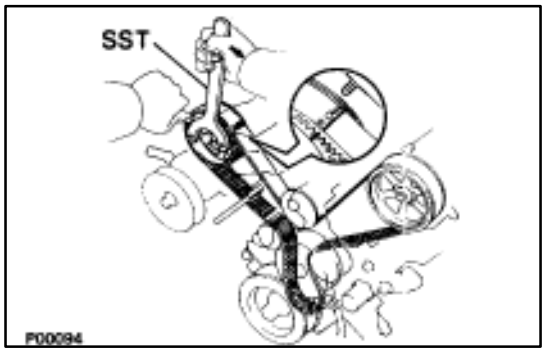

14. INSTALL TIMING BELT TO RH CAMSHAFT TIMING PULLEY

(a) Remove any oil or water on the RH camshaft timing and water pump pulley, and keep them clean.
(b) Using SST, slightly turn the RH camshaft timing pulley clockwise. Align the installation mark on the timing belt with the timing mark of the camshaft timing pulley, and hang the timing belt on the RH camshaft timing pulley.
SST 09278–54012

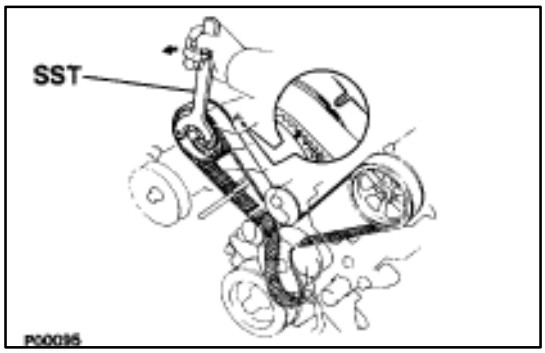

(c) Using SST, align the timing marks of the RH camshaft pulley and timing belt rear plate.
SST 09278–54012
(d) Check that the timing belt has tension between the RH camshaft timing pulley and LH camshaft pulley.

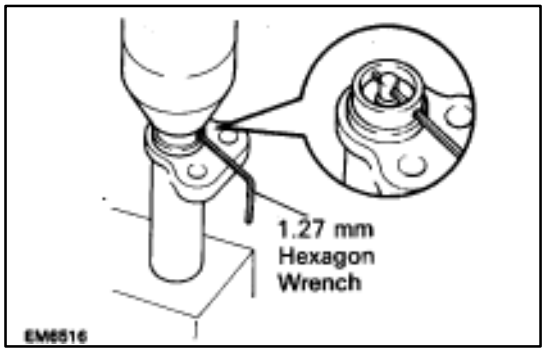

15. SET TIMING BELT TENSIONER

(a) Using a press, slowly press in the push rod using 981–9,807 N (100–1,000 kgf, 220–2,205 lbf) of pressure.
(b) Align the holes of the push rod and housing, pass a 1.27 mm hexagon wrench through the holes to keep the setting position of the push rod.
(c) Release the press.

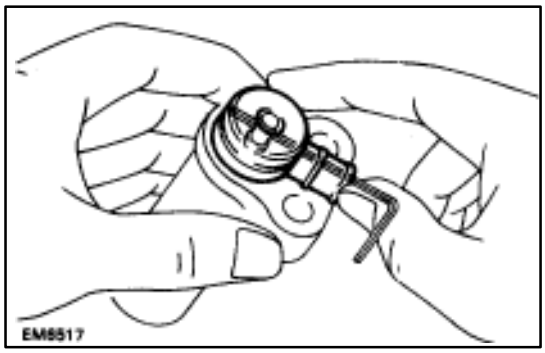

(d) Install the dust boot to the tensioner.

WhereEverybodyKnowsYourName

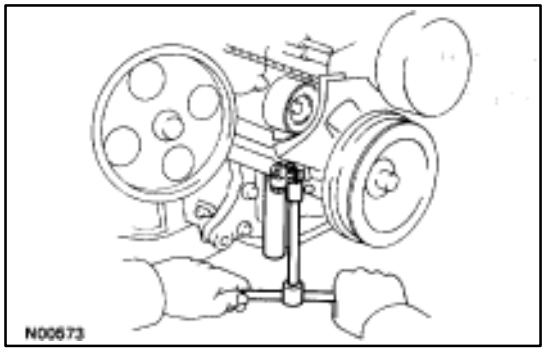

16. INSTALL TIMING BELT TENSIONER

(a) Temporarily install the tensioner with the two bolts.

(b) Alternately tighten the two bolts.

Torque: 26 N·m (270 kgf·cm, 20 ft·lbf)

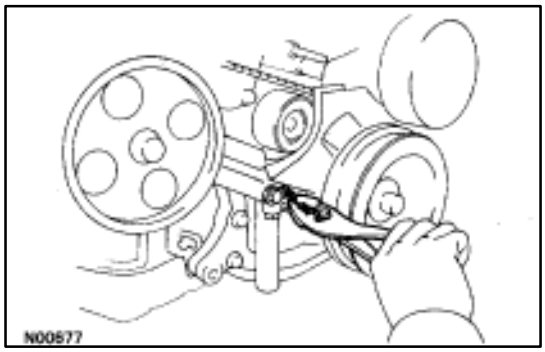

(c) Using pliers, remove the 1.27 mm hexagon wrench from the tensioner.

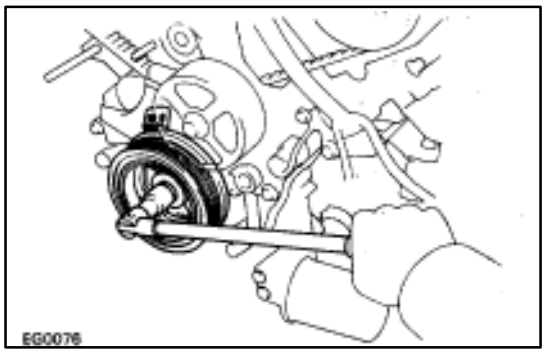

17. CHECK VALVE TIMING

(a) Turn the crankshaft pulley two revolutions from TDC to TDC.

NOTICE: Always turn the crankshaft clockwise.

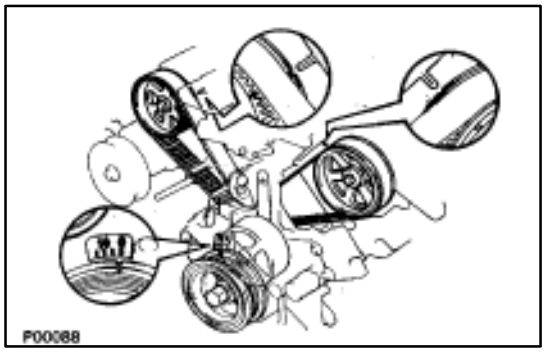

(b) Check that each pulley aligns with the timing marks as shown in the figure.

If the marks do not align, remove the timing belt and reinstall it.

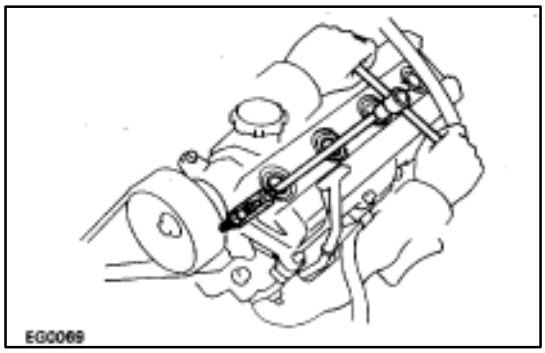

18. INSTALL SPARK PLUGS

Using a 16 mm plug wrench, install the eight spark plugs.

Torque: 18 N·m (180 kgf·cm, 13 ft·lbf)

WhereEverybodyKnowsYourName

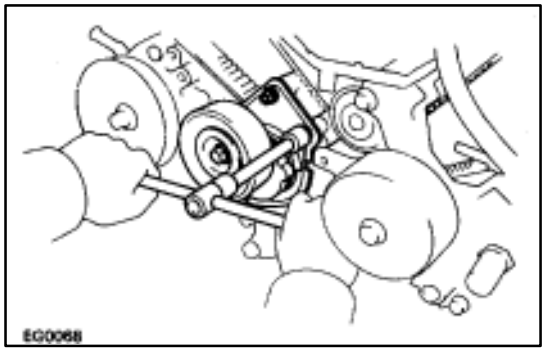

19. INSTALL DRIVE BELT TENSIONER

Install the tensioner with the bolt and two nuts.

Torque: 16 N·m (160 kgf·cm, 12 ft·lbf)

HINT: Use bolt 106 mm (4.17 in.) in length.

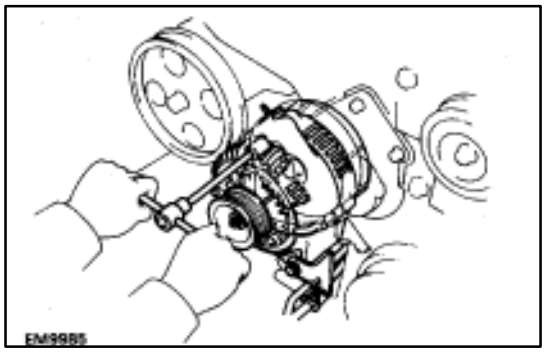

20. INSTALL ALTERNATOR

(a) Install the alternator and A/T oil cooler pipe bracket with the bolt and nut.

Torque: 37 N·m (380 kgf·cm, 27 ft·lbf)

(b) Connect the alternator connector.

(c) Connect the alternator wire with the nut and cap.

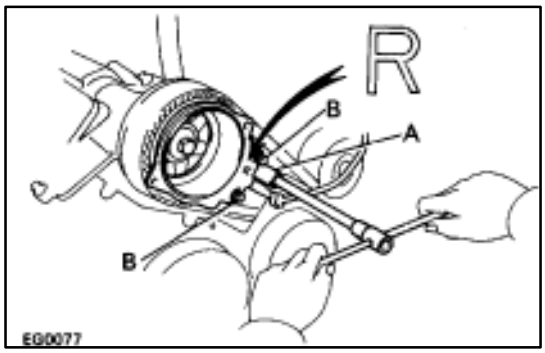

21. INSTALL RH DISTRIBUTOR HOUSING

(a) Install the distributor housing with the three bolts.

Torque: 18 N·m (185 kgf·cm, 13 ft·lbf)

HINT:

- The RH distributor housing is marked with ”R”.
- Each bolt length is indicated in the illustration.

Bolt length: A 38 mm (1.50 in.)
B 96 mm (3.78 in.)

(b) Connect the cam position sensor connector.

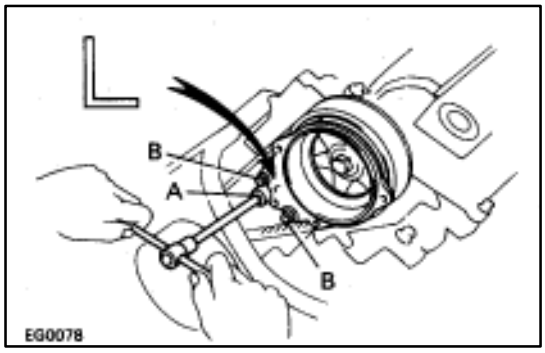

22. INSTALL LH DISTRIBUTOR HOUSING

(a) Install the distributor housing with the three bolts.

Torque: 18 N·m (185 kgf·cm, 13 ft·lbf)

HINT:

- The LH distributor housing is marked with ”L”.
- Each bolt length is indicated in the illustration.

Bolt length: A 38 mm (1.50 in.)
B 80 mm (3.15 in.)

23. INSTALL DISTRIBUTOR ROTORS

(a) Align the protrusion of the distributor rotor with the groove of the camshaft timing pulley.

(b) Install the distributor rotor with the two bolts. Install the two distributor rotors.

Torque: 3.8 N·m (39 kgf·cm, 34 in.·lbf)

WhereEverybodyKnowsYourName

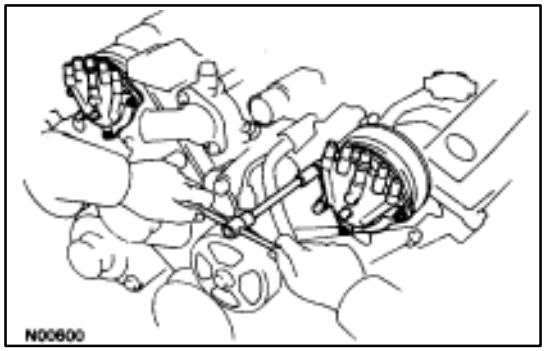

24. INSTALL DISTRIBUTOR CAPS

Install the distributor cap with the three bolts. Install the two distributor caps.

Torque: 3.8 N·m (39 kgf·cm, 34 in.·lbf)

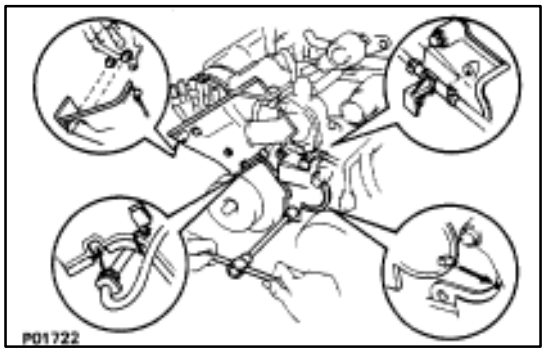

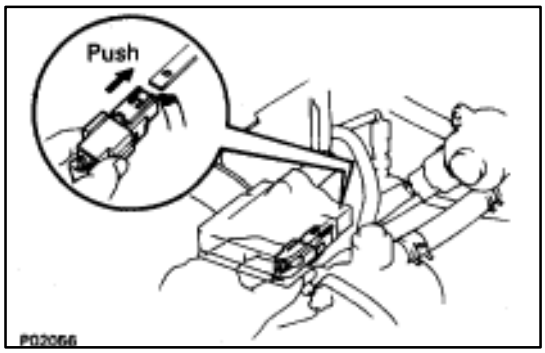

25. INSTALL RH NO.2 TIMING BELT COVER

(a) Install the four gaskets to the timing belt cover.
(b) Install the connector grommet to the timing belt cover.
(c) Install the timing belt cover with the five bolts.

Torque (12 mm head bolt):

16 N·m (160 kgf·cm, 12 ft·lbf)

HINT (12 mm head bolt): Use bolts 106 mm (4.17 in.) in length.

(d) Install the wire clamp to the timing belt cover.
(e) Install the cam position sensor connector to the ignition coil bracket.

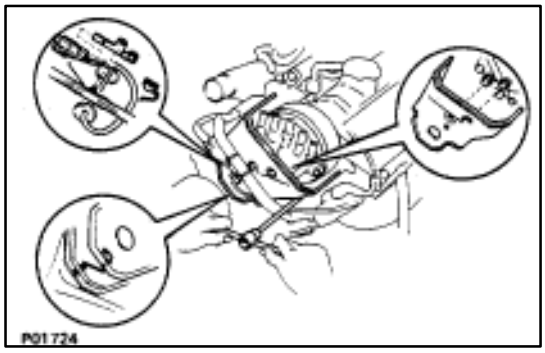

26. INSTALL LH NO.2 TIMING BELT COVER

(a) Install the two gaskets to the timing belt cover.
(b) Run the cam position sensor wire through the timing belt cover hole.
(c) Install the timing belt cover and connector bracket with the three bolts.
(d) Connect the cam position sensor connector.
(e) Install cam position sensor connector to connector bracket.
(f) Install the connector grommet to the timing belt cover hole.

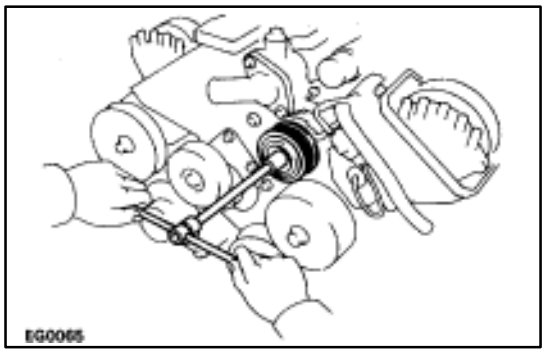

27. INSTALL DRIVE BELT IDLER PULLEY

Install the idler pulley and cover plate with the pulley bolt.

Torque: 37 N·m (380 kgf·cm, 27 ft·lbf)

WhereEverybodyKnowsYourName

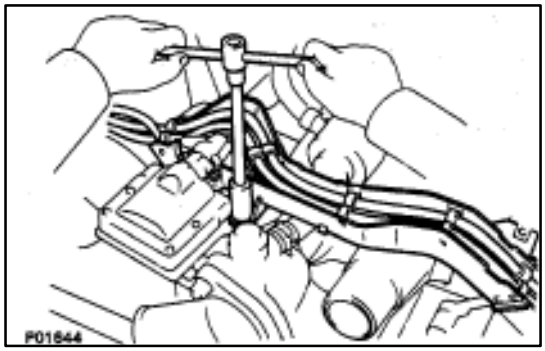

28. INSTALL HIGH–TENSION CORDS, HIGH–TENSION CORD CLAMP AND LOWER HIGH–TENSION CORD COVER ASSEMBLY

(a) Install the lower high–tension cord cover with the bolt.
(b) Connect the high–tension cord to RH ignition coil.

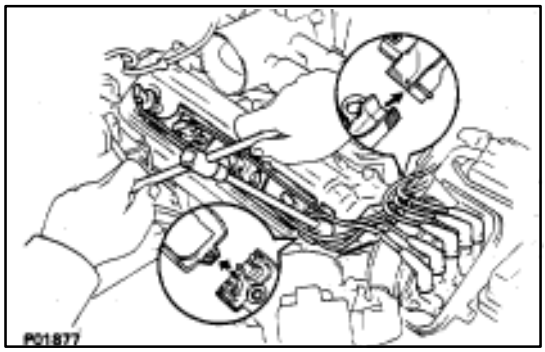

(c) Connect the four high–tension cord to the RH spark plugs.
(d) Install the RH rear and front high–tension cord clamps with the two bolts.

HINT: Place the front and rear ends of the front hightension cord clamp on the rear high–tension cord clamp and lower high–tension cord cover.

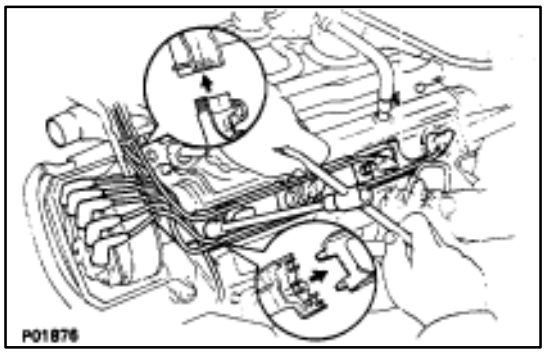

(e) Connect the four high–tension cord to the LH spark plugs.
(f) Install the LH rear and front high–tension cord clamps with the two bolts.

HINT: Place the front and rear ends of the front hightension cord clamp on the rear high–tension cord clamp and lower high–tension cord cover.

(g) Fit the high–tension cords to the high–tension cord clamp. (See page IG–16)

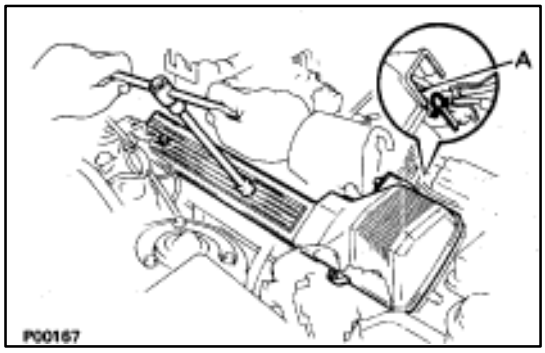

29. INSTALL RH NO.3 TIMING BELT COVER

(a) Install the three gaskets to the timing belt cover.
(b) Fit portion A of the timing belt cover, matching it with the lower high–tension cord cover.
(c) Install the timing belt cover with the three bolts.

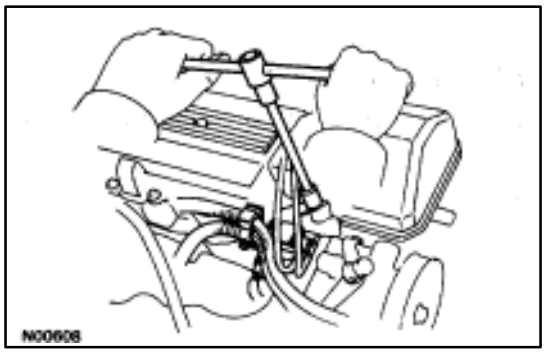

30. INSTALL VSV FOR EVAP SYSTEM

Install the VSV with the two bolts.

WhereEverybodyKnowsYourName

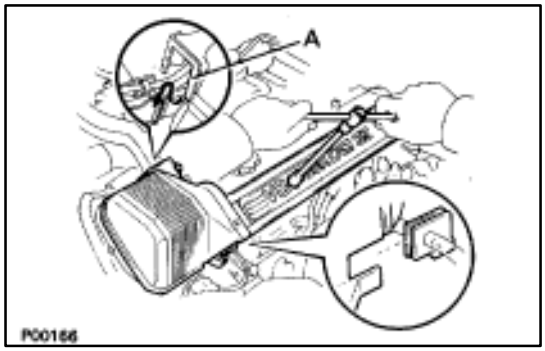

31. INSTALL LH NO.3 TIMING BELT COVER

(a) Install the three gaskets to the timing belt cover.
(b) Install the cord grommet to the high–tension cord.
(c) Install the cord grommet to the timing belt cover.
(d) Fit portion A of the timing belt cover, matching it with the lower high–tension cord cover.
(e) Install the timing belt cover with the four bolts.

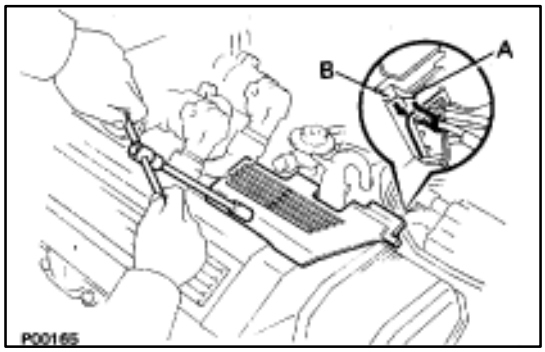

32. INSTALL RH ENGINE WIRE COVER

(a) Fit portions A and B of the engine wire cover, matching them with the lower high–tension cord cover and No. 3 timing belt cover.
(b) Install the engine wire cover with the bolt.

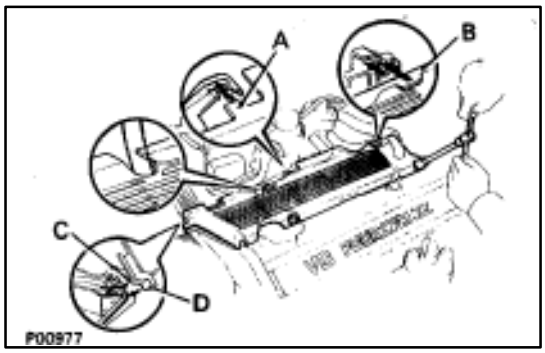

33. INSTALL LH ENGINE WIRE COVER

(a) Connect portions A and B of the engine wire cover to the wire cover brackets.
(b) Set the VSV (for Fuel pressure control system) wire in original position.
(c) Fit portions C and D of the engine wire cover, matching them with the lower high–tension cord cover and No.3 timing belt cover.
(b) Install the engine wire cover with the two bolts.

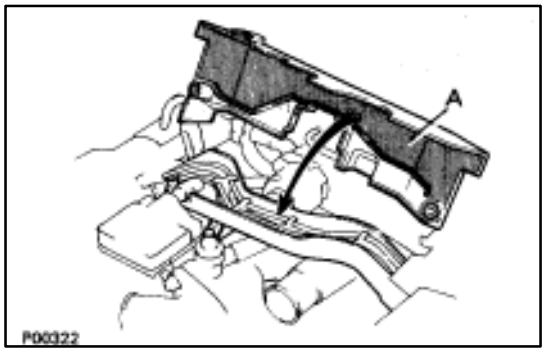

34. INSTALL UPPER HIGH–TENSION CORD COVER

(a) Fit portion A of the upper high–tension cover, matching it with the top of the lower high–tension cord cover.

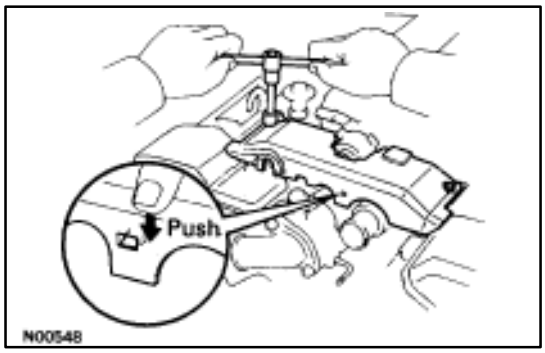

(b) Push the front side of the high–tension cord cover, and connect the front side claw groove of the upper high–tension cord cover to the claw of the lower high–tension cord cover.
(c) Install the upper high–tension cord cover with the two bolts.

WhereEverybodyKnowsYourName

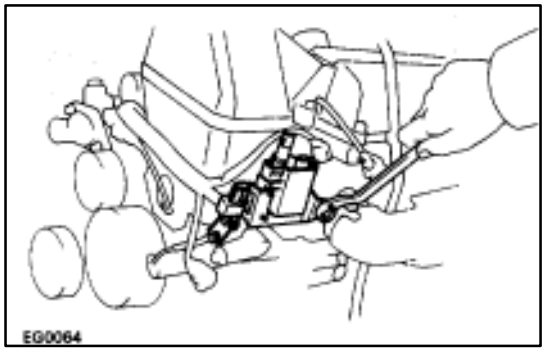

35. INSTALL LH IGNITION COIL

(a) Install the ignition coil with the two bolts.

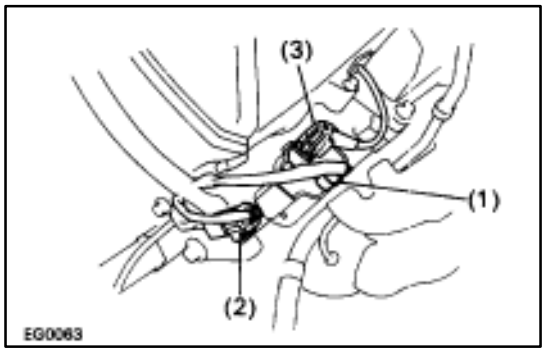

(b) Connect the following connectors and cord:
  (1) Ignition coil connector
  (2) Noise filter connector
  (3) High–tension cord

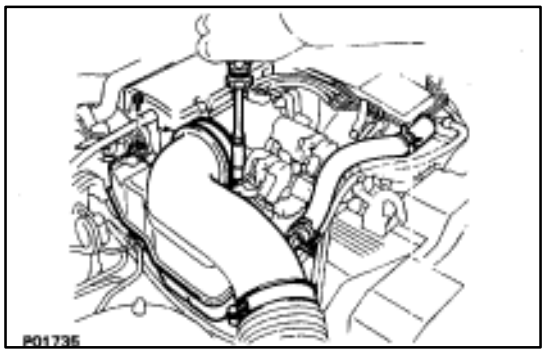

36. INSTALL INTAKE AIR CONNECTOR

(a) Connect the end portions of the intake air connector to the throttle body and air cleaner hose.
(b) Tighten the two hose clamps.
(c) Install the bolt holding the intake air connector to the cylinder head cover.

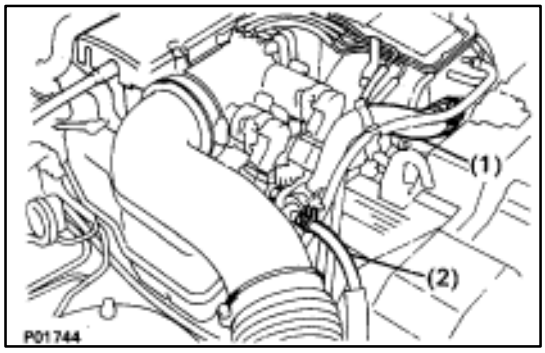

(d) Connect the following hoses:
  (1) Air hose to ISC valve
  (2) Air hose (from PS air control valve) to intake air connector

WhereEverybodyKnowsYourName

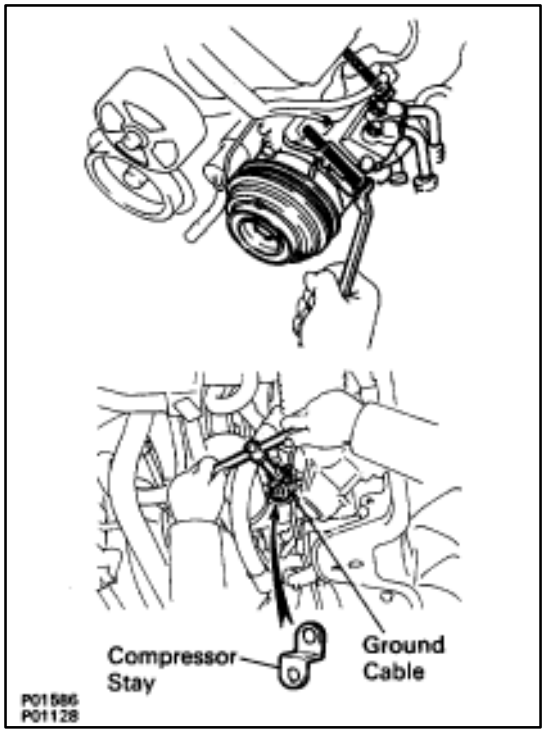

37. INSTALL A/C COMPRESSOR

(a) Install the A/C compressor, compressor stay and ground cable with the three bolts and nut.

Torque: Bolt 49 N·m (500 kgf·cm, 36 ft·lbf)
Nut 29 N·m (300 kgf·cm, 22 ft·lbf)

(b) Connect the A/C compressor connector.

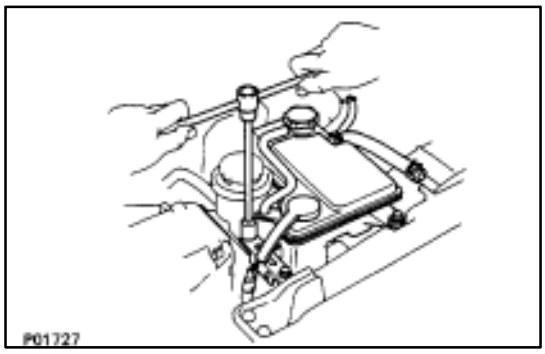

38. INSTALL RADIATOR AND RESERVOIR TANK
(See steps 25 and 26 on pages EM–174 to 175)

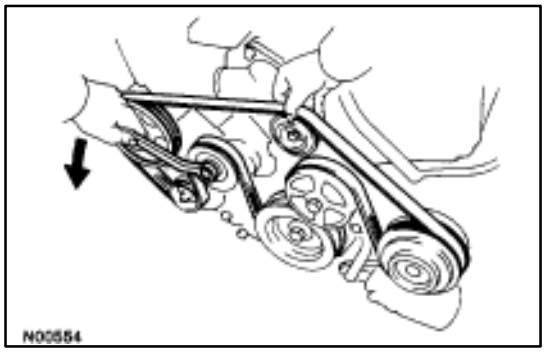

39. INSTALL DRIVE BELT

Install the drive belt by turning the drive belt tensioner counterclockwise.

HINT: The pully bolt for the belt tensioner has a lefthand thread.

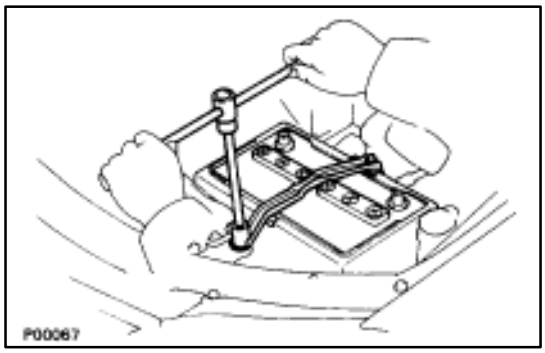

40. INSTALL BATTERY

41. FILL WITH ENGINE COOLANT (See page CO–7)

42. CHECK IGNITION TIMING (See page IG–28)

Ignition timing:
8–12° BTDC @ idle
(w/ Terminals TE1 and E1 connected)

43. INSTALL ENGINE UNDER COVER

WhereEverybodyKnowsYourName

CYLINDER HEADS

COMPONENTS FOR REMOVAL AND INSTALLATION

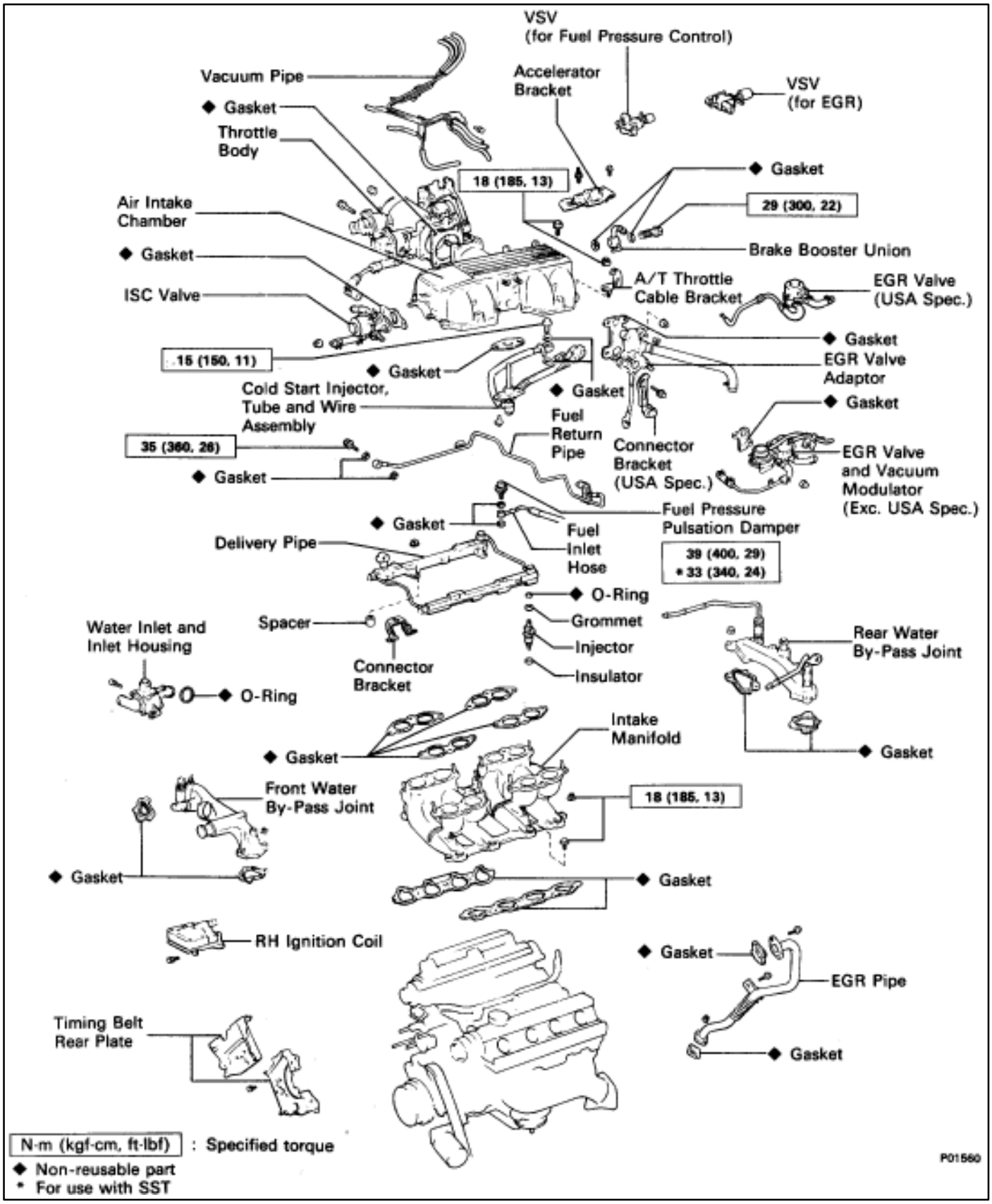

WhereEverybodyKnowsYourName

COMPONENTS FOR REMOVAL AND INSTALLATION (Cont'd)

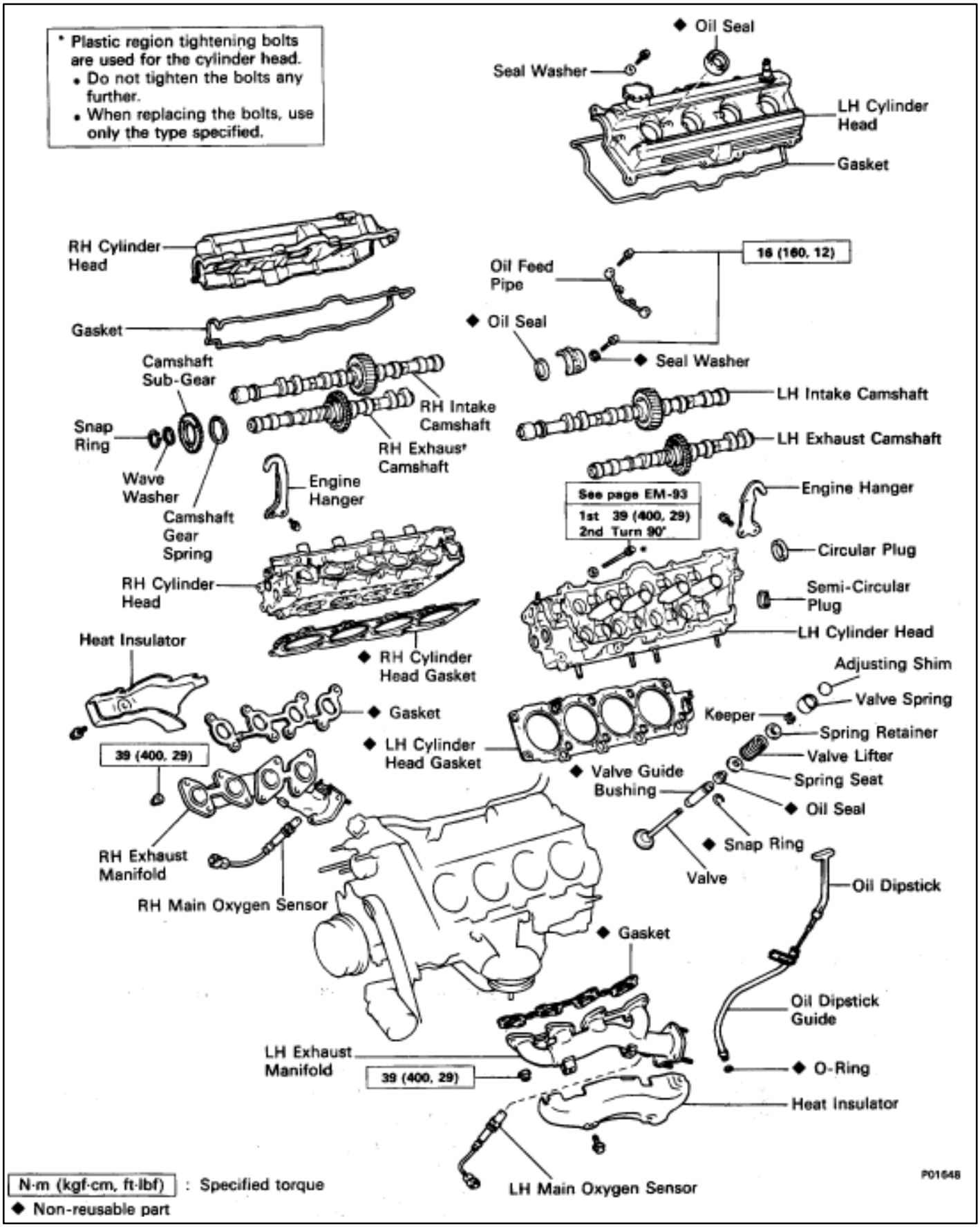

WhereEverybodyKnowsYourName

REMOVAL OF CYLINDER HEADS

(See Components on pages EM–58 and 59)

1. DISCONNECT TIMING BELT FROM CAMSHAFT TIMING PULLEYS
(See steps 1 to 28 on pages EM–35 to 42)

2. REMOVE CAMSHAFT TIMING PULLEYS AND HYDRAULIC PUMP
(See steps 29 and 31 on pages EM–42 and 43)

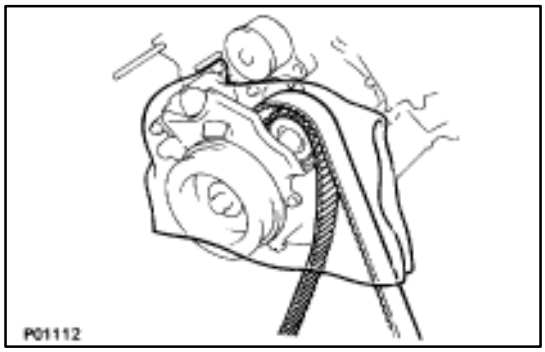

HINT:
- Be careful not to drop anything inside the timing belt cover.
- Do not allow the timing belt to come into contact with oil, water or dust.

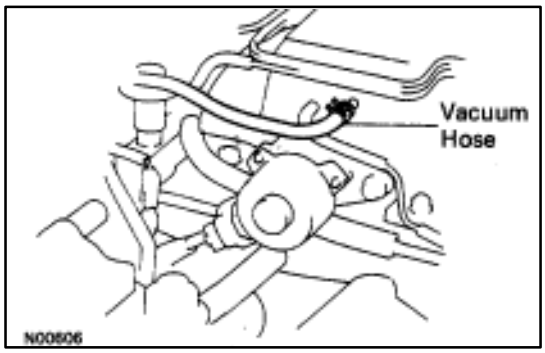

3. DISCONNECT PS PUMP FROM LH CYLINDER HEAD

(a) Disconnect the vacuum hose from the air intake chamber.

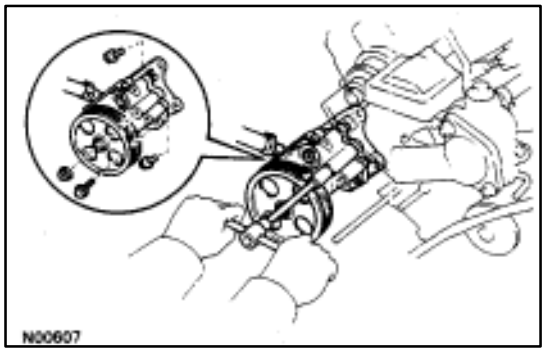

(b) Remove the three bolts and nut, and disconnect the PS pump.

HINT: Put aside the PS pump, and suspend it.

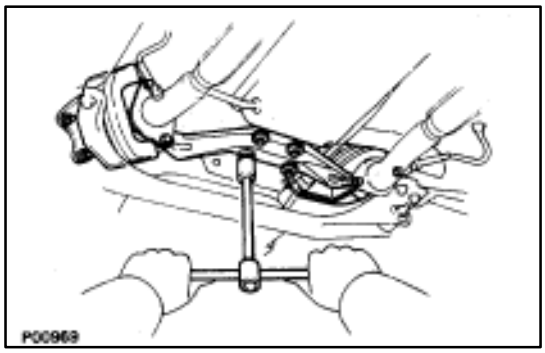

4. REMOVE CATALYTIC CONVERTERS (MAIN)

(a) Remove the four bolts holding the pipe support bracket to the transmission.

(b) Remove the four bolts and nuts holding the catalytic converters to the front exhaust pipe. Remove the pipe support bracket.

(c) Disconnect the front exhaust pipe from the catalytic converter, and remove the two gaskets.

(d) Remove the three nuts, catalytic converter and gasket. Remove the two catalytic converters.

WhereEverybodyKnowsYourName

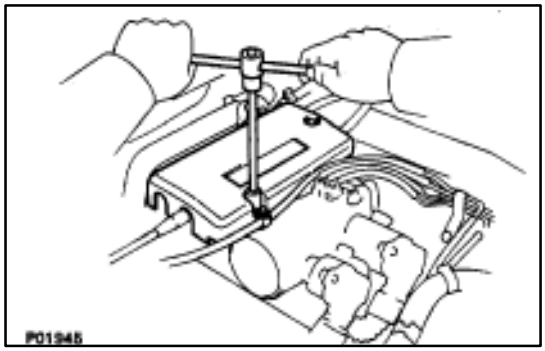

5. REMOVE THROTTLE BODY COVER

(a) Remove the mounting cap nut.

(b) Loosen the two bolts, and remove the throttle body cover.

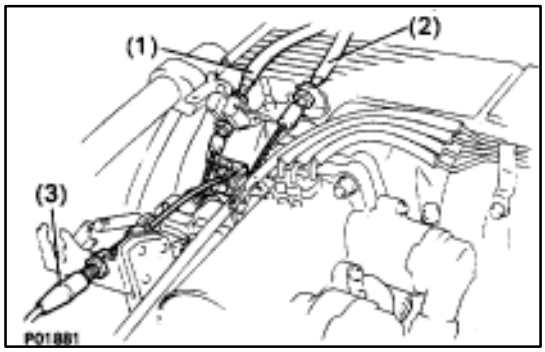

6. DISCONNECT CONTROL CABLES FROM THROTTLE BODY

Disconnect the following cables:

(1) Accelerator cable

(2) A/T throttle control cable

(3) (w/ Cruise Control System)
Cruise control actuator cable

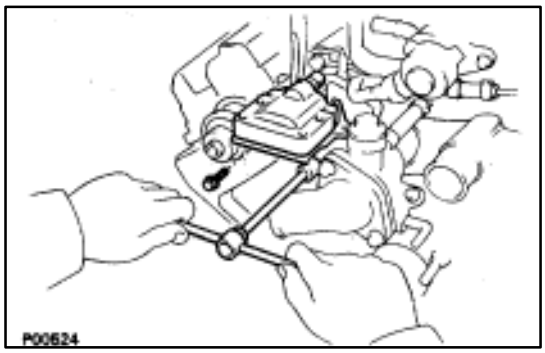

7. REMOVE RH IGNITION COIL

Remove the two bolts and ignition coil.

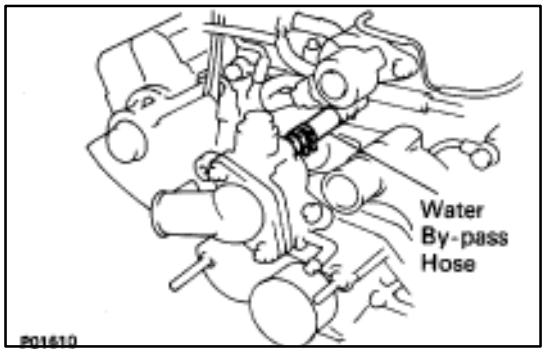

8. REMOVE WATER INLET AND INLET HOUSING

(a) Disconnect the water by–pass hose from the ISC valve.

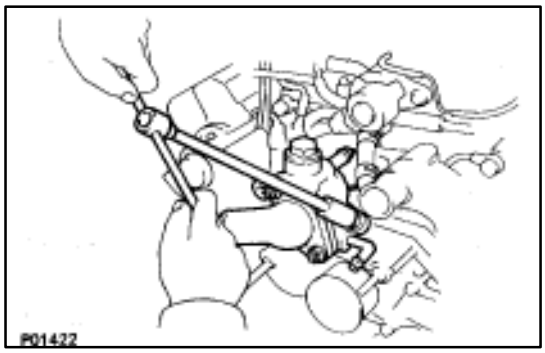

(b) Remove the two bolts holding the water inlet housing to the water pump.

(c) Pull out the water inlet and inlet housing assembly.

(d) Remove the O–ring from the water inlet housing.

WhereEverybodyKnowsYourName

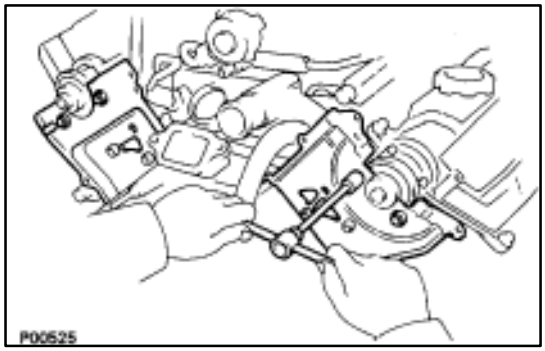

9. REMOVE TIMING BELT REAR PLATES

Remove the two bolts and rear plate. Remove the two rear plates.

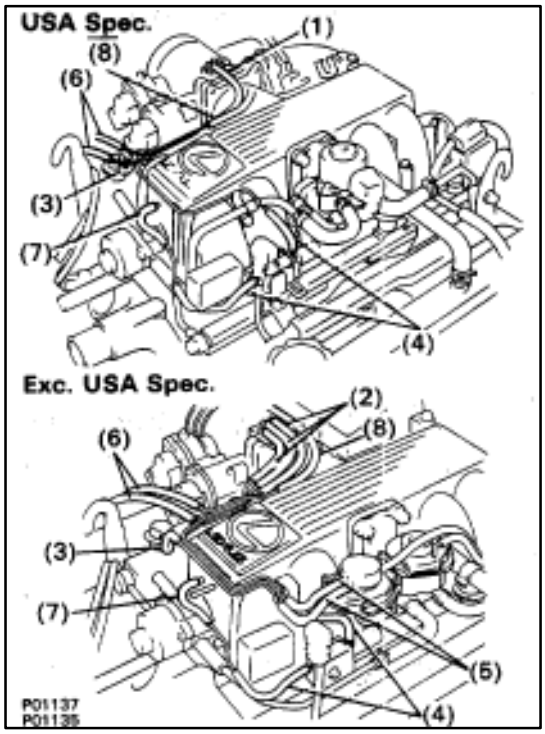

10. REMOVE VACUUM PIPE

(a) Disconnect the following hoses:
- (1) (USA Spec.)
  Vacuum hose from throttle body
- (2) (Exc. USA Spec.)
  Three vacuum hoses from throttle body
- (3) Vacuum hose from fuel pressure regulator
- (4) Two vacuum hoses from VSV for fuel pressure control system
- (5) (Exc. USA Spec.)
  Two vacuum hoses from EGR vacuum modulator
- (6) Two vacuum hoses (from VSV for EVAP system) from vacuum pipe
- (7) Vacuum hose (from VSV for fuel pressure control system) from air intake chamber
- (8) Vacuum hose (from charcoal canister) from vacuum pipe.

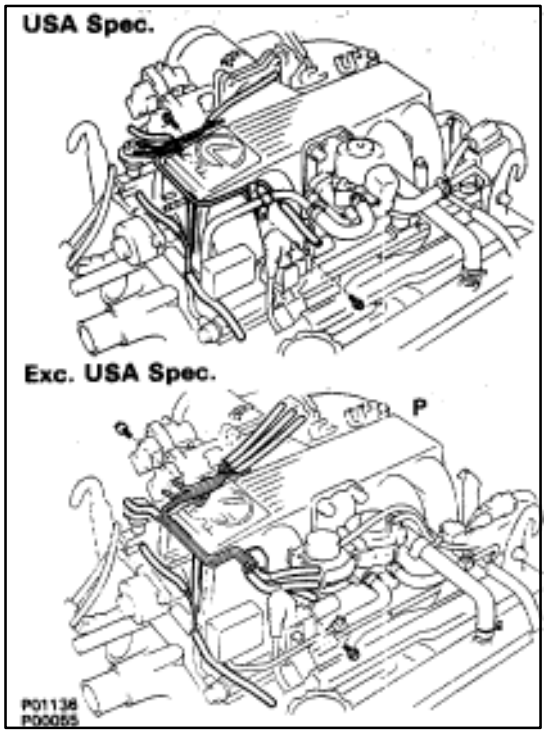

(b) Remove the two bolts, the vacuum pipe and vacuum hoses assembly.

WhereEverybodyKnowsYourName

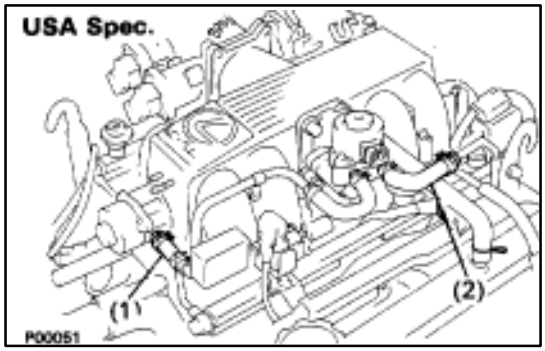

11. (USA Spec.)
REMOVE EGR VALVE
(a) Disconnect the EGR valve connector.
(b) Disconnect the following hoses:
(1) Water by–pass pipe hose from ISC valve
(2) Water by–pass hose from water by–pass pipe (from rear water by–pass joint)

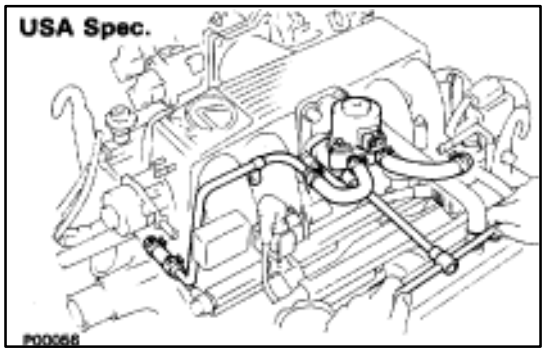

(c) Remove the two nuts, EGR valve and gasket.

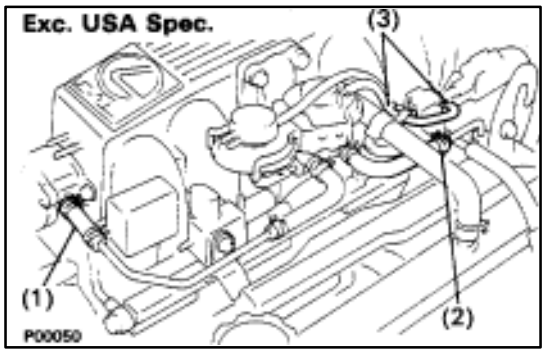

12. (Exc. USA Spec.)
REMOVE EGR VALVE AND VACUUM MODULATOR
(a) Disconnect the hose clamp (A) from the PCV hose.
(b) Disconnect the following hoses:
(1) Water by–pass pipe hose from ISC valve
(2) Water by–pass hose from water by–pass pipe (from rear water by–pass joint)
(3) Two vacuum hoses from VSV for EGR system

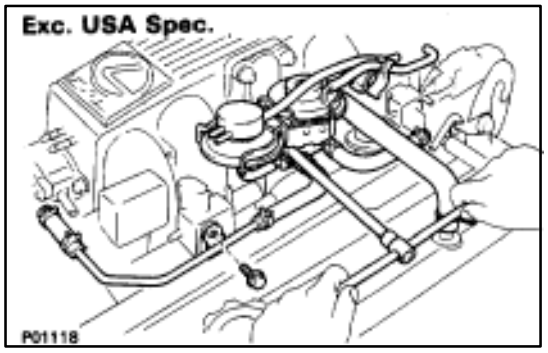

(c) Remove the bolt, two nuts, the EGR valve, vacuum modulator assembly and gasket.

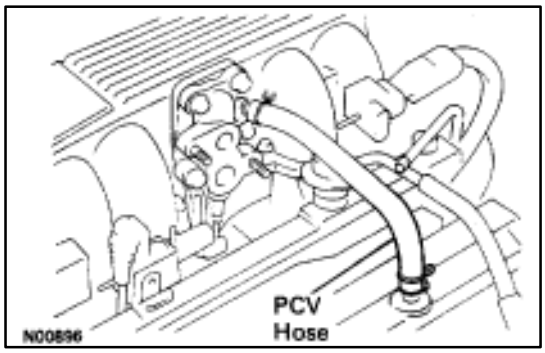

13. REMOVE EGR VALVE ADAPTOR
(a) Disconnect the PCV hose from the cylinder head.

WhereEverybodyKnowsYourName

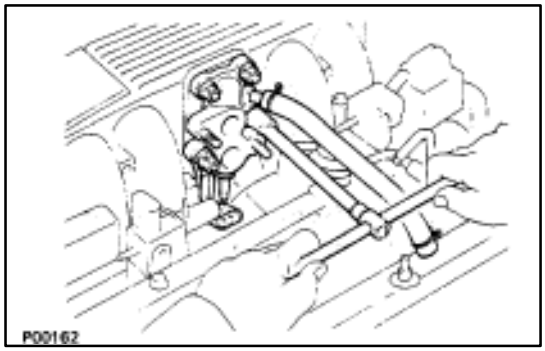

(b) Remove the two bolts, two nuts, adaptor and gasket.
(c) (USA Spec. only)
Disconnect the EGR gas temperature sensor connector.

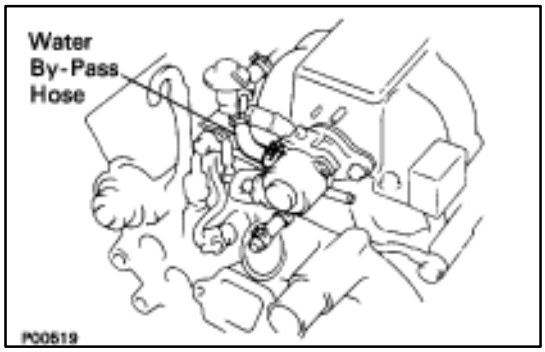

14. REMOVE ISC VALVE
(a) Disconnect the ISC valve connector.
(b) Disconnect the water by–pass hose from the ISC valve.

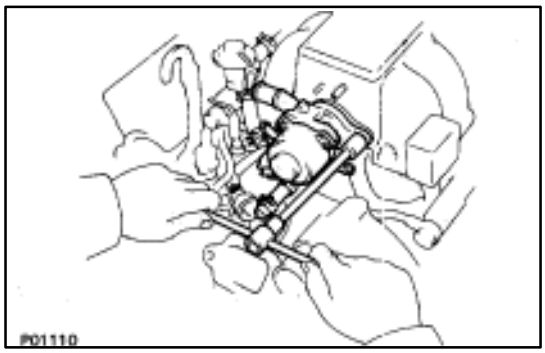

(c) Remove the two nuts, ISC valve and gasket.

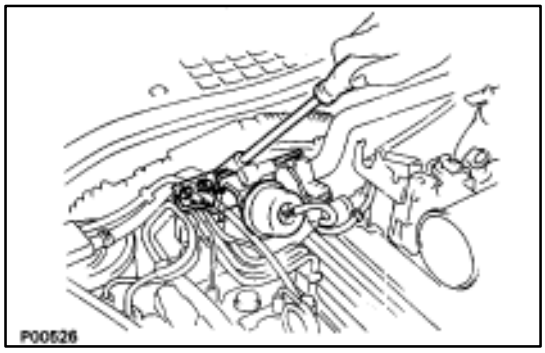

15. DISCONNECT HEATER WATER VALVE FROM BODY
(a) Disconnect the VSV connector.
(b) Remove the bolt holding the engine wire clamp to the water valve bracket.
(c) Remove the two bolts, and disconnect the water valve and bracket assembly.

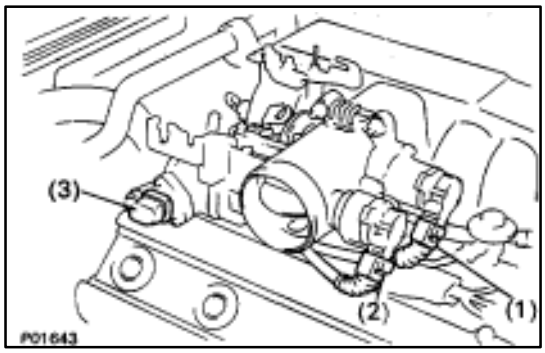

16. REMOVE THROTTLE BODY
(a) Disconnect the following connectors:
(1) Throttle position sensor connector
(2) (w/ TRAC)
Sub–throttle position sensor connector
(3) (w/ TRAC)
Sub–throttle actuator connector

WhereEverybodyKnowsYourName

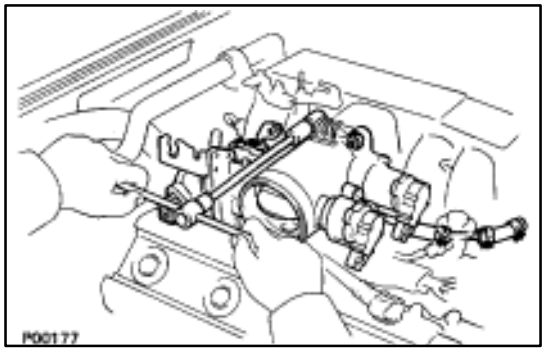

(b) Remove the two mounting bolts and two mounting nuts, and disconnect the throttle body from the air intake chamber.

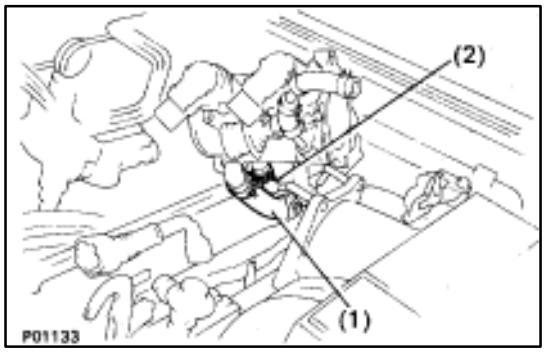

(c) Disconnect the following hoses, and remove the throttle body:
  (1) PCV hose from throttle body
  (2) Water by–pass hose from throttle body
(d) Remove the throttle body gasket.

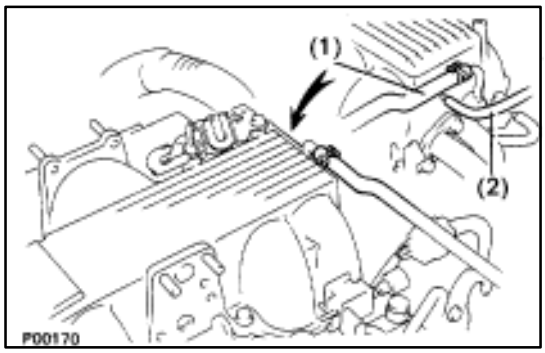

17. DISCONNECT VACUUM HOSES

Disconnect the following hoses:
  (1) Vacuum hose from brake booster union
  (2) Vacuum hose (from VSV for heater water valve) from air intake chamber

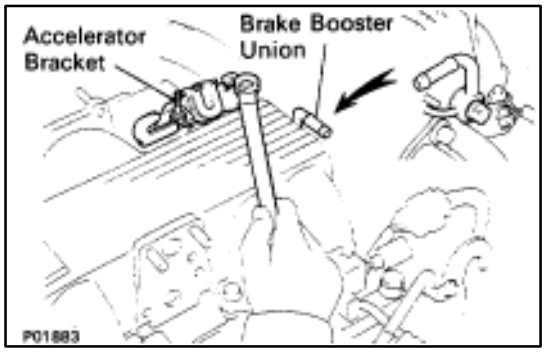

18. REMOVE ACCELERATOR BRACKET

Remove the bolt, stud bolt and bracket.

19. REMOVE BRAKE BOOSTER UNION

Remove the union bolt, union and two gaskets.

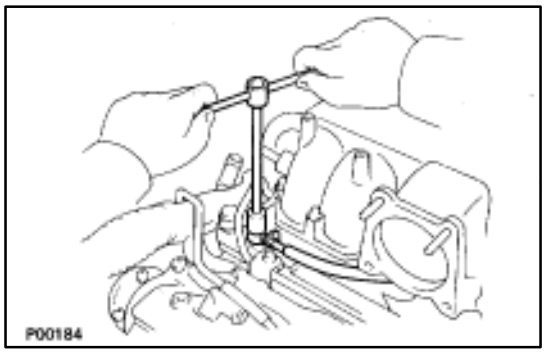

20. REMOVE AIR INTAKE CHAMBER

(a) Disconnect the following connectors:
  - Cold start injector connector
  - VSV connector for fuel pressure control system
  - (Exc. USA Spec.)
  VSV connector for EGR system
(b) Remove the union bolt and two gaskets, and disconnect the cold start injector tube from the RH delivery pipe.

WhereEverybodyKnowsYourName

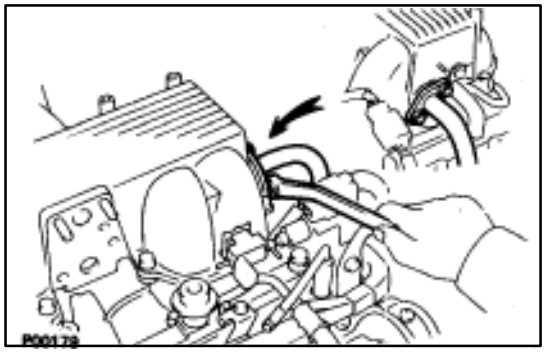

(c) Remove the two bolts and gaskets, and disconnect the EGR pipe from the air intake chamber.

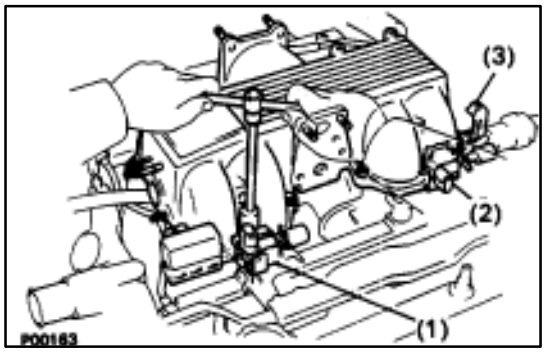

(d) Remove the four mounting bolts, eight mounting nuts and following parts:
   (1) VSV for fuel pressure control system
   (2) (Exc. USA Spec.)
   VSV for EGR system
   (3) A/T throttle cable bracket
(e) Disconnect the check (”DIAGNOSIS”) connector from the intake chamber.
(f) Remove the air intake chamber and four gaskets.

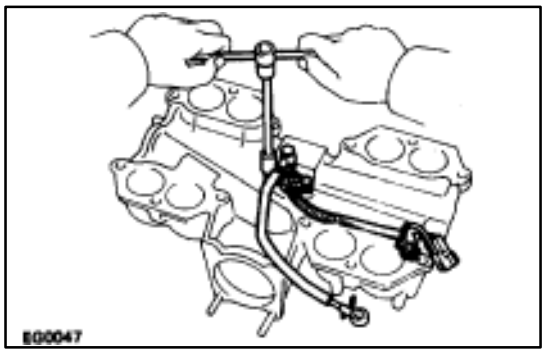

(g) Remove the three bolts, the cold start injector, tube, lead wire assembly and gasket.

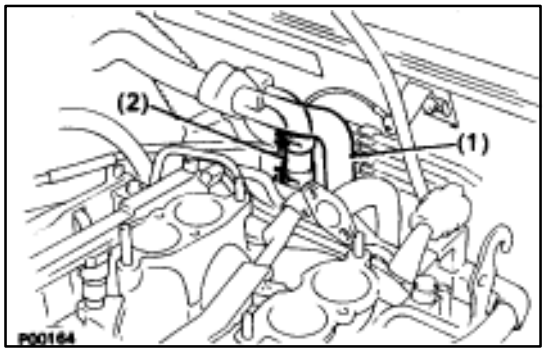

21. DISCONNECT HEATER WATER HOSES

Disconnect the following hoses:
   (1) Water hose from water by–pass pipe
   (2) Water hose from rear water by–pass joint

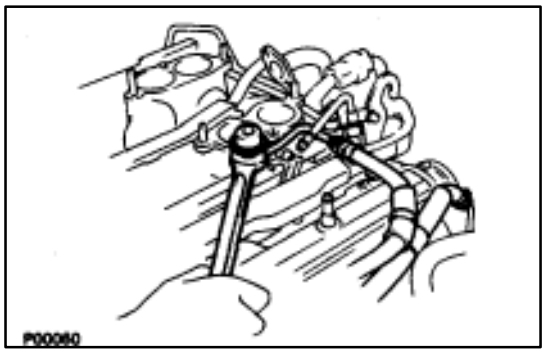

22. DISCONNECT FUEL INLET HOSE FROM LH DELIVERY PIPE

Remove the pulsation damper and two gaskets, and disconnect the inlet hose.

23. DISCONNECT FUEL RETURN HOSE FROM FUEL RETURN PIPE

WhereEverybodyKnowsYourName

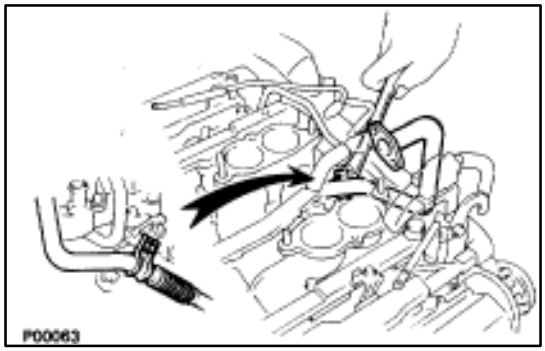

24. DISCONNECT EGR PIPE FROM RH CYLINDER HEAD

Remove the bolt holding the EGR pipe to the RH cylinder head, and disconnect the EGR pipe.

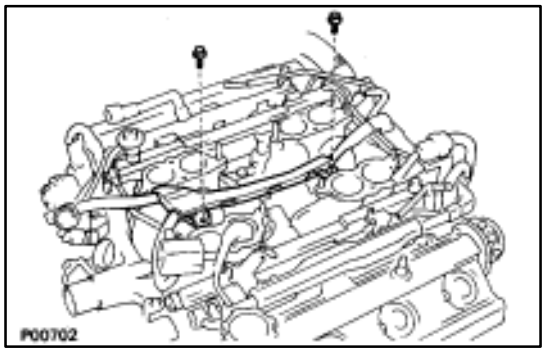

25. DISCONNECT ENGINE WIRE FROM INTAKE MANIFOLD

Remove the two bolts, and disconnect the engine wire.

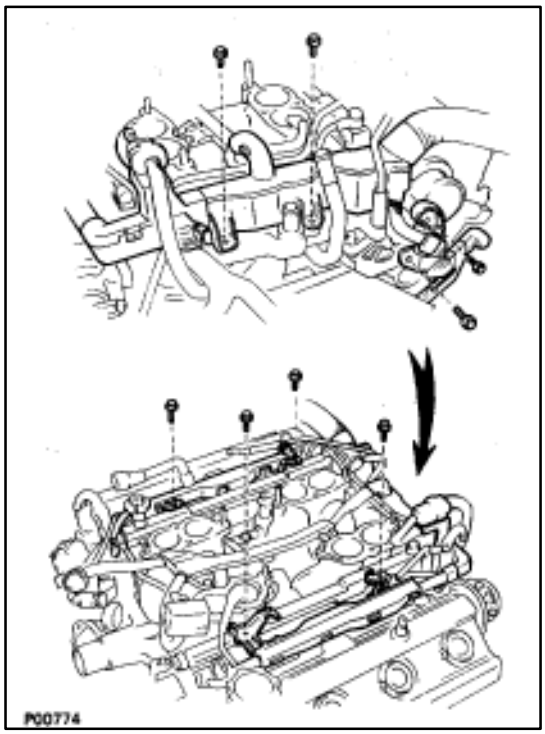

26. DISCONNECT ENGINE WIRE FROM DELIVERY PIPES, REAR WATER BY–PASS JOINT AND RH CYLINDER HEAD

(a) Remove the four bolts holding the engine wire to the delivery pipes, and disconnect the engine wire from the delivery pipes.

(b) Remove the two bolts holding the engine wire to the rear water by–pass joint, and disconnect the engine wire from the rear water by–pass joint.

(c) Remove the two bolts holding the engine wire to the rear side of the RH cylinder head, and disconnect the engine wire from the engine wire RH cylinder head.

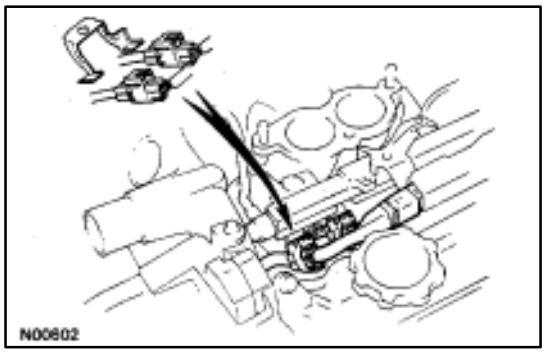

(d) Disconnect the two engine wire connectors from the connector bracket on the front side of the LH delivery pipe.

(e) Disconnect the eight injector connectors.

WhereEverybodyKnowsYourName

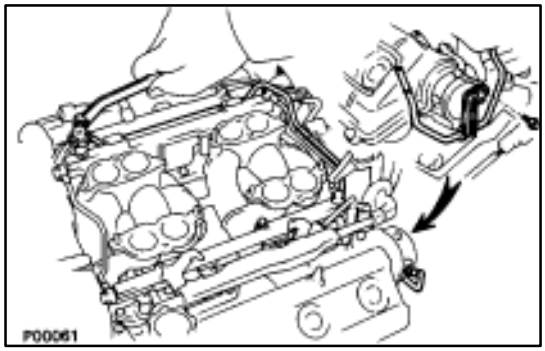

27. REMOVE FUEL RETURN PIPE

(a) Remove the bolt holding the fuel return pipe to the rear side of the LH cylinder head.

(b) Remove the union bolt, two gaskets and return pipe.

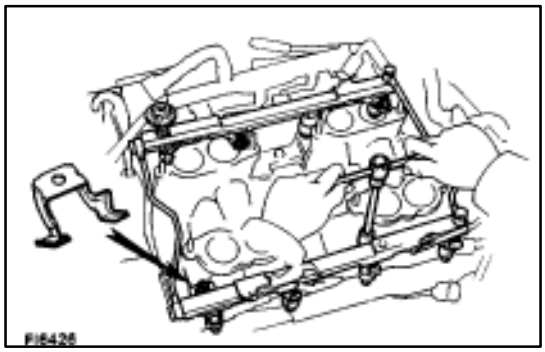

28. REMOVE DELIVERY PIPES AND INJECTORS

(a) Remove the four nuts holding the delivery pipe to the intake manifold.

(b) Remove the connector bracket, the two delivery pipes, eight injectors assembly, four spacers and eight insulators.

NOTICE: Be careful not to drop the injectors.

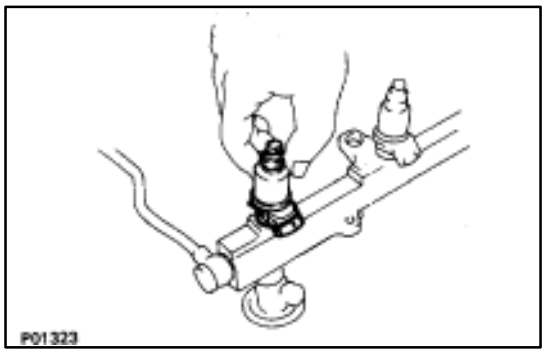

(c) Remove the eight injectors from the delivery pipes.

(d) Remove the O–ring and grommet from each injector.

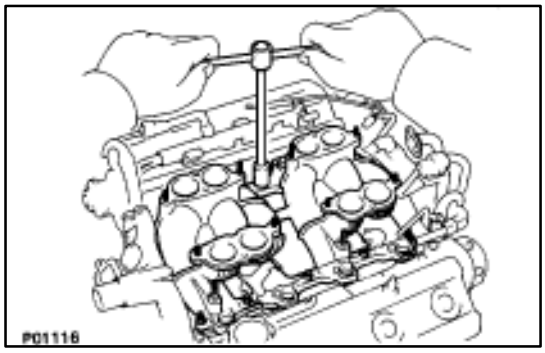

29. REMOVE INTAKE MANIFOLD

Remove the six bolts, four nuts, intake manifold and two gaskets.

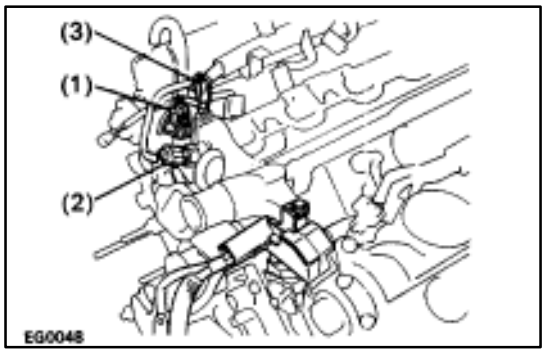

30. REMOVE FRONT WATER BY–PASS JOINT

(a) Disconnect the following connectors:

(1) Water temperature sensor connector

(2) Cold start injector time switch connector

(3) Water temperature sender gauge connector

(b) Remove the bolt, and disconnect the engine wire clamp from the water by–pass joint.

WhereEverybodyKnowsYourName

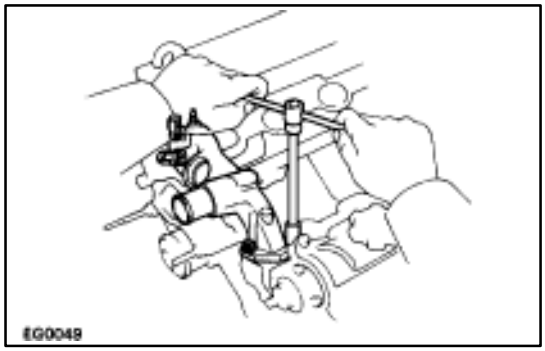

(c) Remove the four nuts, water by–pass joint and two gaskets.

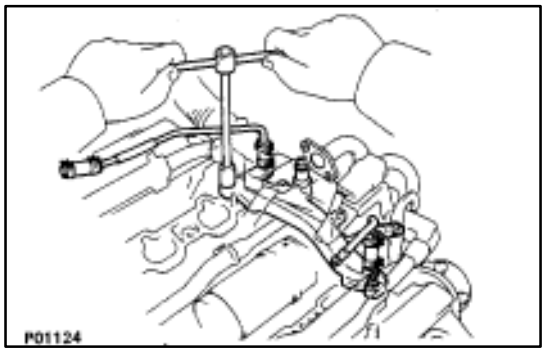

31. REMOVE REAR WATER BY–PASS JOINT

(a) Remove the bolt holding the water by–pass pipe to the engine hanger.

(b) Remove the four nuts, water by–pass joint and two gaskets.

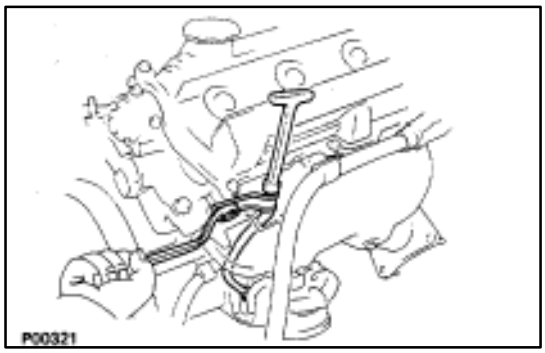

32. REMOVE OIL DIPSTICK AND GUIDE FOR ENGINE

(a) Remove the mounting bolt.

(b) Pull out the dipstick guide together with the dipstick.

(c) Remove the O–ring from the dipstick guide.

33. REMOVE OIL DIPSTICK AND GUIDE FOR A/T

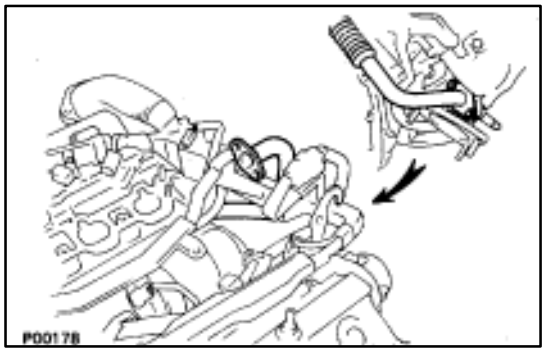

34. REMOVE EGR PIPE

(a) Remove the two nuts holding the EGR pipe to the RH exhaust pipe.

(b) Remove the EGR pipe and gasket.

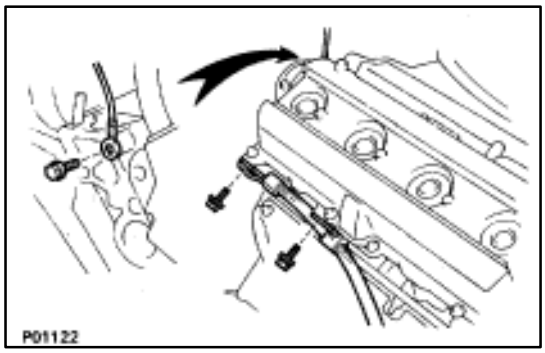

35. DISCONNECT GROUND STRAP FROM RH CYLINDER HEAD

36. DISCONNECT ENGINE WIRE FROM RH CYLINDER HEAD

Remove the two bolts, and disconnect the engine wire.

WhereEverybodyKnowsYourName

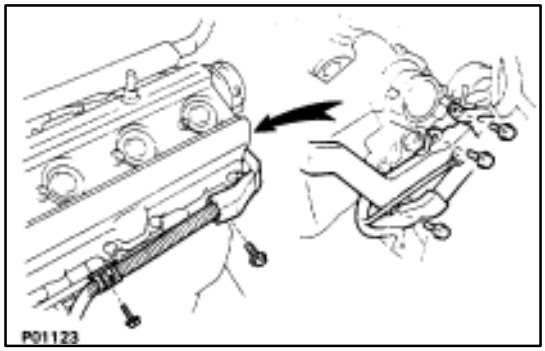

37. DISCONNECT ENGINE WIRE FROM LH CYLINDER HEAD

Remove the five bolts, and disconnect the engine wire.

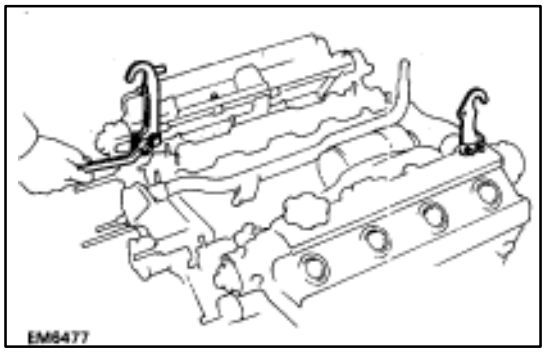

38. REMOVE ENGINE HANGERS

Remove the two bolts and engine hanger. Remove the two engine hangers.

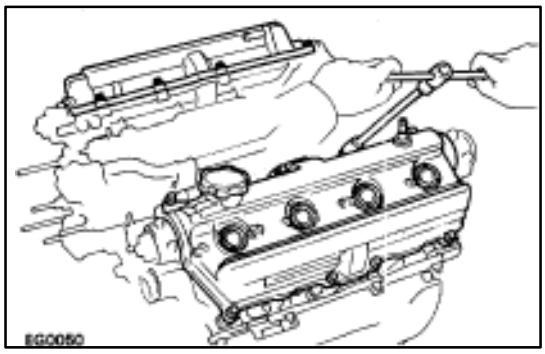

39. REMOVE CYLINDER HEAD COVERS

Remove the eight bolts, seal washers, cylinder head cover and gasket. Remove the two cylinder head covers.

40. IF NECESSARY, REMOVE SEMI–CIRCULAR PLUGS

41. REMOVE CAMSHAFTS

NOTICE: Since the thrust clearance of the camshaft is small, the camshaft must be held level while it is being removed. If the camshaft is not kept level, the portion of the cylinder head receiving the shaft thrust may crack or be damaged, causing due the camshaft to seize or break. To avoid this, the following steps should be carried out.

A. Remove exhaust camshaft from RH cylinder head

(a) Bring the service bolt hole of the driven sub–gear upward by turning the hexagon wrench head portion of the exhaust camshaft with a wrench.

(b) Secure the exhaust camshaft sub–gear to the driven gear with a service bolt.

Recommended service bolt:

Thread diameter 6 mm
Thread pitch 1.0 mm
Bolt length 16–20 mm (0.63–0.79 in.)

HINT: When removing the camshaft, make certain that the torsional spring force of the sub–gear has been eliminated by the above operation.

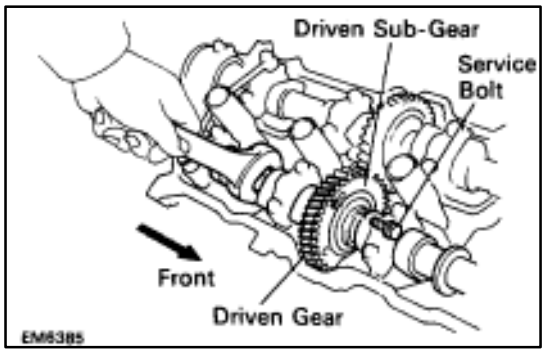

WhereEverybodyKnowsYourName

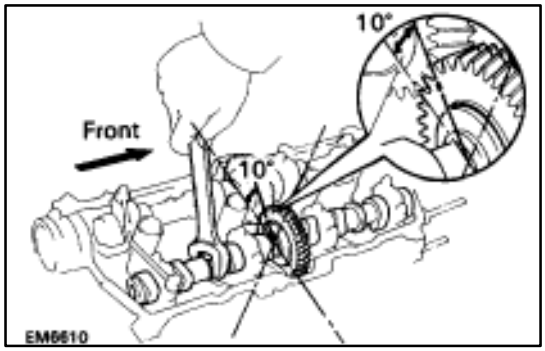

(c) Set the timing mark (one dot mark) of the camshaft driven gear at approx. 105 angle by turning the hexagon wrench head portion of the exhaust camshaft with a wrench.

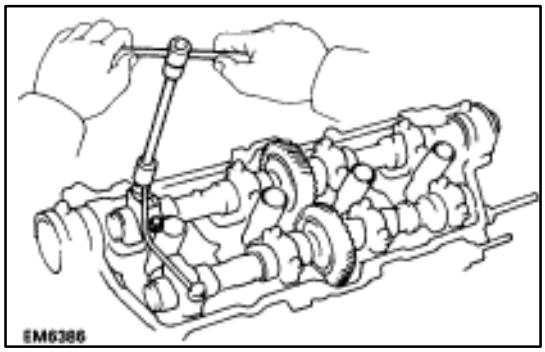

(d) Alternately loosen and remove the two bearing cap bolts holding the intake camshaft side of the oil feed pipe to the cylinder head.

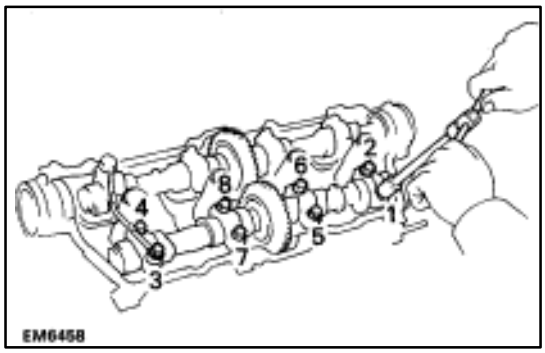

(e) Uniformly loosen and remove the eight bearing cap bolts in several passes in the sequence shown.
(f) Remove the oil feed pipe, four bearing caps and exhaust camshaft.

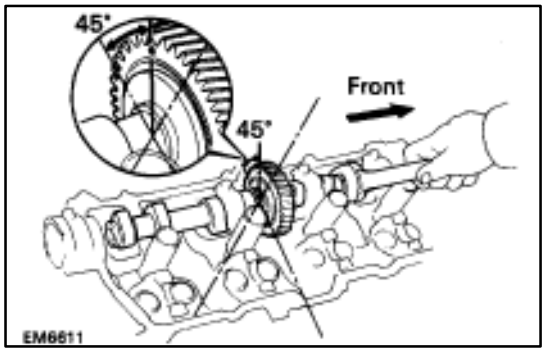

B. Remove intake camshaft from RH cylinder head

(a) Remove the rear bearing cap.
(b) Set the timing mark (one dot mark) of the camshaft drive gear at approx. 455 angle by turning the hexagon wrench head portion of the intake camshaft with a wrench.

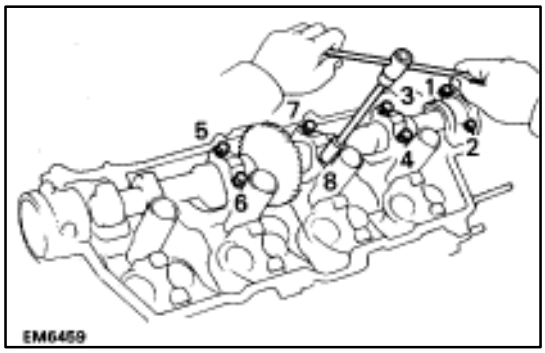

(c) Uniformly loosen and remove the eight bearing cap bolts in several passes in the sequence shown.
(d) Remove the four bearing caps, oil seal and intake camshaft.

WhereEverybodyKnowsYourName

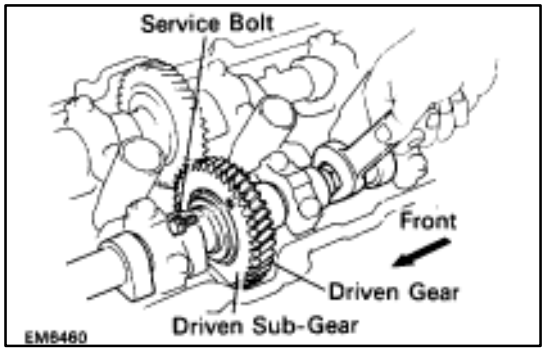

C. Remove exhaust camshaft from LH cylinder head

(a) Bring the service bolt hole of the driven sub–gear upward by turning the hexagon wrench head portion of the exhaust camshaft with a wrench.

(b) Secure the exhaust camshaft sub–gear to the driven gear with a service bolt.

Recommended service bolt:

Thread diameter 6 mm
Thread pitch 1.0 mm
Bolt length 16–20 mm (0.63–0.79 in.)

HINT: When removing the camshaft, make certain that the torsional spring force of the sub–gear has been eliminated by the above operation.

(c) Set the timing mark (two dot marks) of the camshaft driven gear at approx. 155 angle by turning the hexagon wrench head portion of the exhaust camshaft with a wrench.

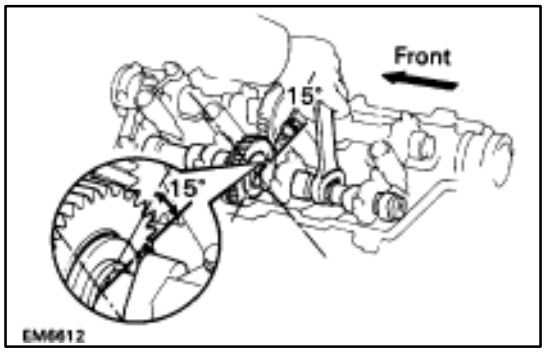

(d) Alternately loosen and remove the two bearing cap bolts holding the intake camshaft side of the oil feed pipe to the cylinder head.

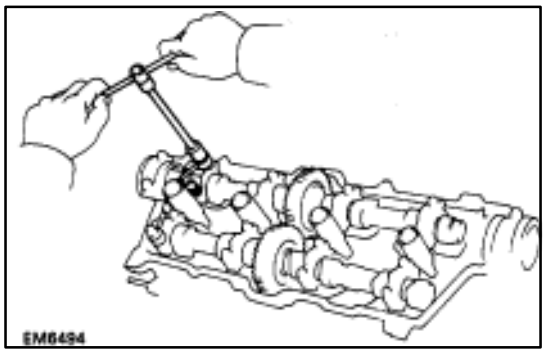

(e) Uniformly loosen and remove the eight bearing cap bolts in several passes in the sequence shown.

(f) Remove the oil feed pipe, four bearing caps and exhaust camshaft.

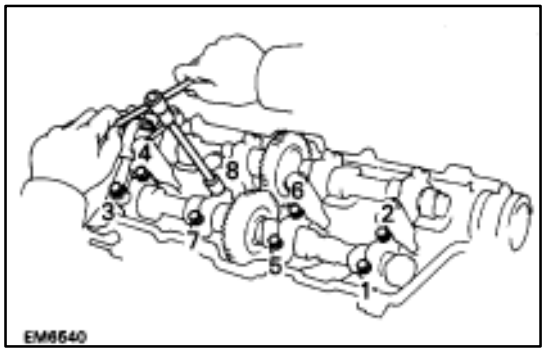

D. Remove intake camshaft from LH cylinder head

(a) Remove the front bearing cap.

(b) Set the timing mark (one dot mark) of the camshaft drive gear at approx. 605 angle by turning the hexagon wrench head portion of the intake camshaft with a wrench.

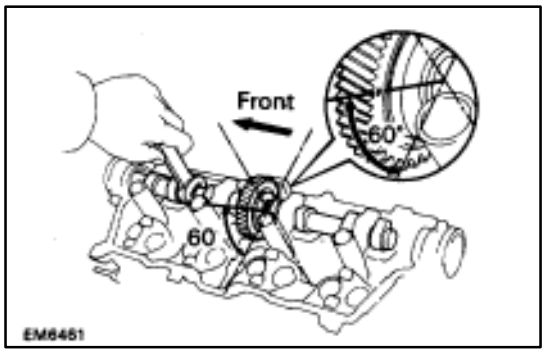

WhereEverybodyKnowsYourName

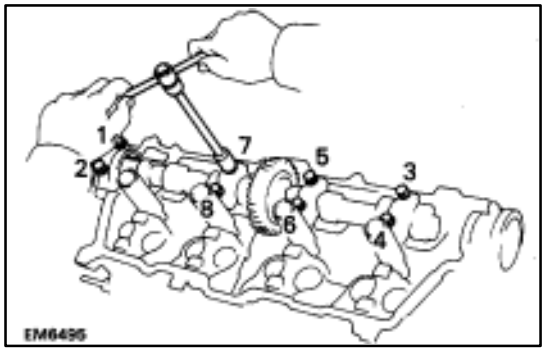

(c) Uniformly loosen and remove the eight bearing cap bolts in several passes in the sequence shown.
(d) Remove the four bearing caps, oil seal and intake camshaft.

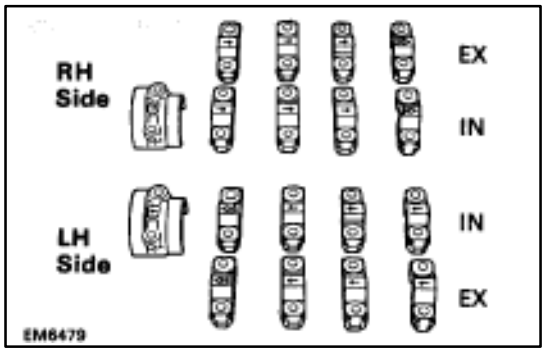

HINT: Arrange the bearing caps in correct order.

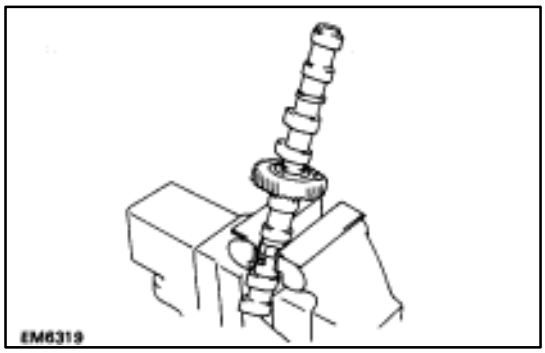

42. DISASSEMBLE EXHAUST CAMSHAFTS

(a) Mount the hexagon wrench head portion of the camshaft in a vise.

NOTICE: Be careful not to damage the camshaft.

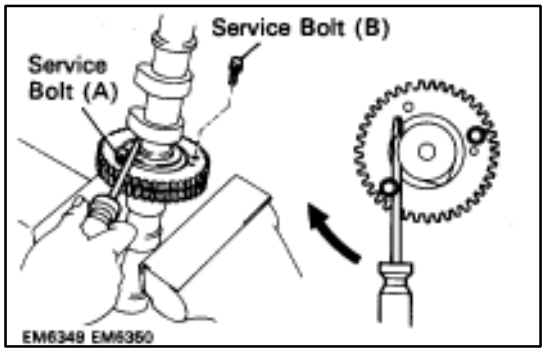

(b) Insert a service bolt (A) into the service hole of the camshaft sub–gear.
(c) Using a screwdriver, turn the sub–gear clockwise, and remove the service bolt (B).

NOTICE: Be careful not to damage the camshaft.

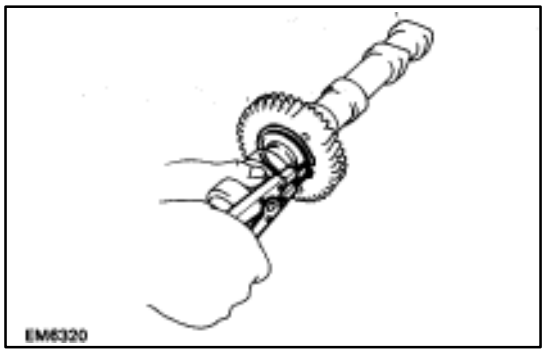

(d) Using snap ring pliers, remove the snap ring.

WhereEverybodyKnowsYourName

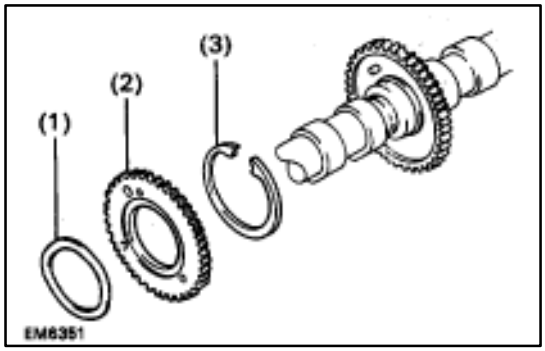

(e) Remove the following parts:
(1) Wave washer
(2) Camshaft sub–gear
(3) Camshaft gear spring

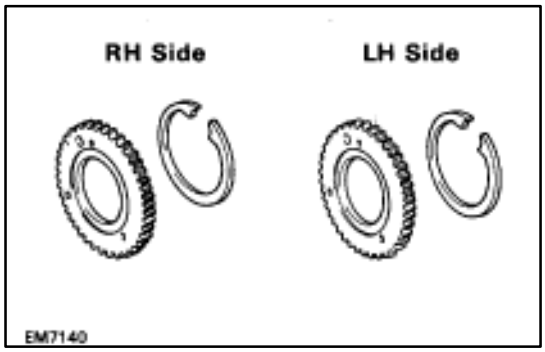

HINT: Arrange the camshaft sub–gears and gear springs (RH side and LH side).

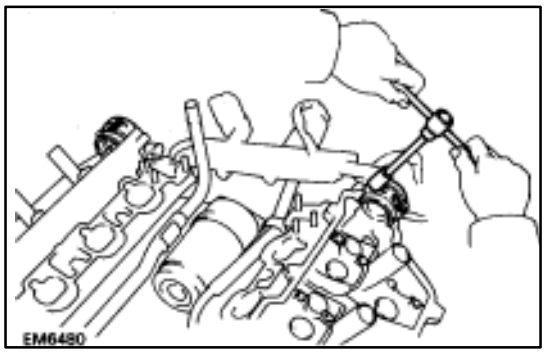

43. REMOVE CIRCULAR PLUGS

Remove the two bolts, seal washers, bearing cap and circular plug. Remove the two circular plugs.

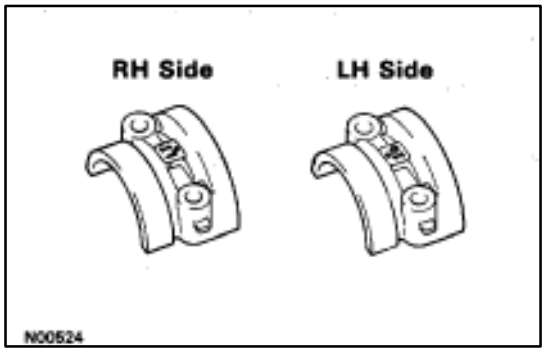

HINT: Arrange the bearing caps (RH side and LH side).

44. DISCONNECT MAIN OXYGEN SENSOR CONNECTORS

Disconnect the RH and LH oxygen sensor connector.

WhereEverybodyKnowsYourName

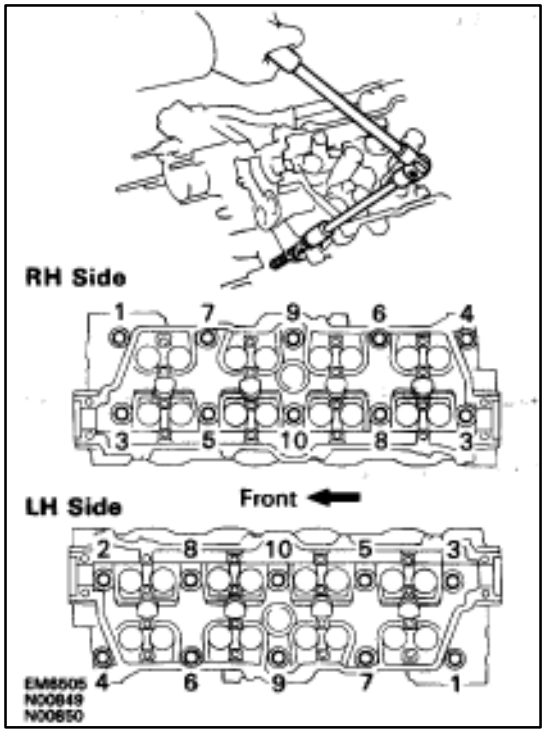

45. REMOVE CYLINDER HEADS

(a) Uniformly loosen the ten cylinder head bolts on one side of each cylinder head in several passes in the sequence shown, then do the other side as shown. Remove the twenty cylinder head bolts and plate washers.

NOTICE: Head warpage or cracking could result from removing bolts in an incorrect order.

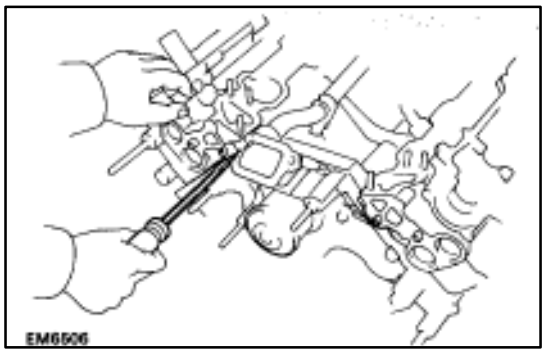

(b) Lift the cylinder heads from the dowels on the cylinder block, and place the two cylinder heads on wooden blocks on a bench.

HINT: If the cylinder head is difficult to lift off, pry between the cylinder head and cylinder block with a screwdriver.

NOTICE: Be careful not to damage the contact surfaces of the cylinder head and cylinder block.

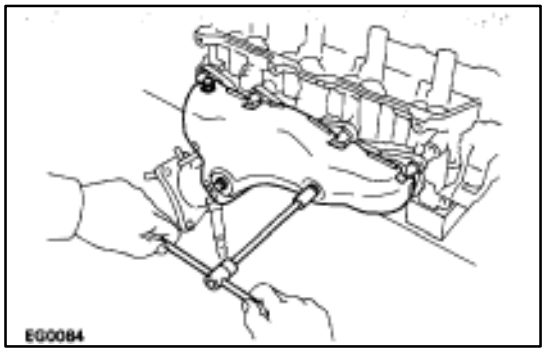

46. REMOVE EXHAUST MANIFOLD FROM RH CYLINDER HEAD

(a) Remove the three bolts and heat insulator.

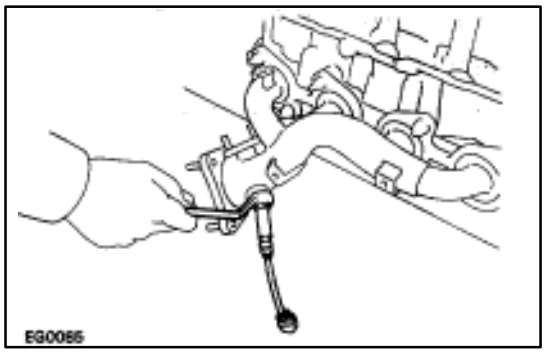

(b) Remove the main oxygen sensor.

WhereEverybodyKnowsYourName

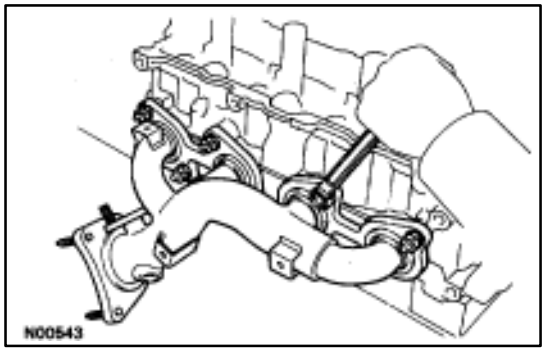

(c) Remove the eight nuts, exhaust manifold and gasket.

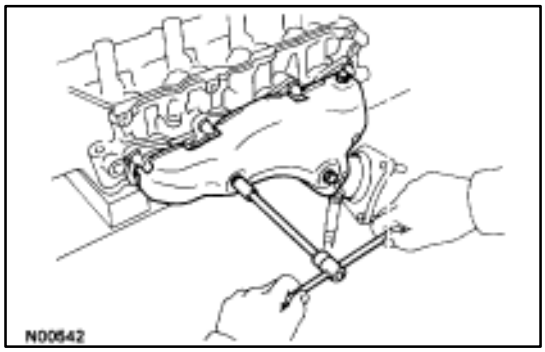

47. REMOVE EXHAUST MANIFOLD FROM LH CYLINDER HEAD

(a) Remove the three bolts and heat insulator.

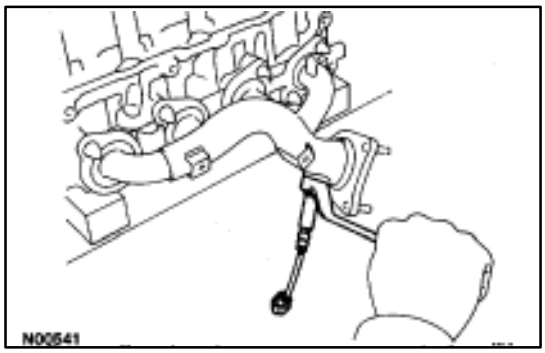

(b) Remove the main oxygen sensor.

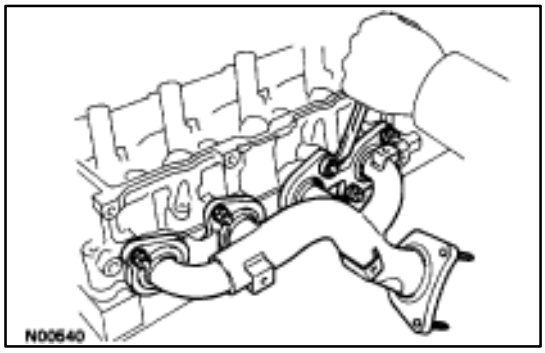

(c) Remove the eight nuts, exhaust manifold and gasket.

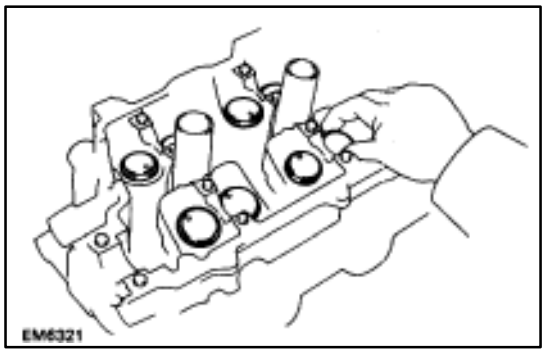

DISASSEMBLY OF CYLINDER HEADS

(See Components on page EM–59)

1. REMOVE VALVE LIFTERS AND ADJUSTING SHIMS

WhereEverybodyKnowsYourName

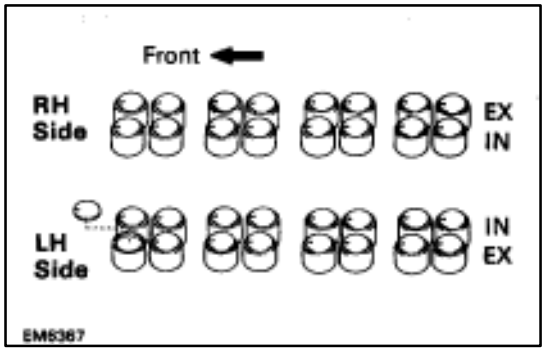

HINT: Arrange the valve lifters and adjusting shims in correct order.

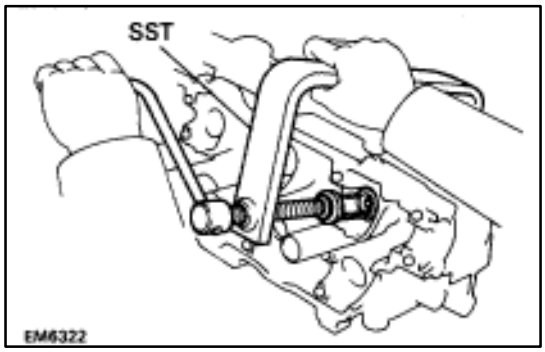

2. REMOVE VALVES

(a) Using SST, compress the valve spring and remove the two keepers.

SST 09202–70010

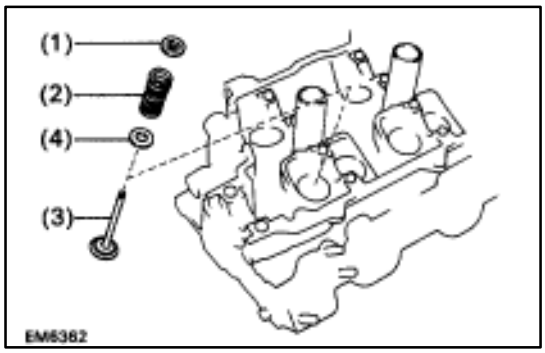

(b) Remove the following parts:
   (1) Spring retainer
   (2) Valve spring
   (3) Valve
   (4) Spring seat

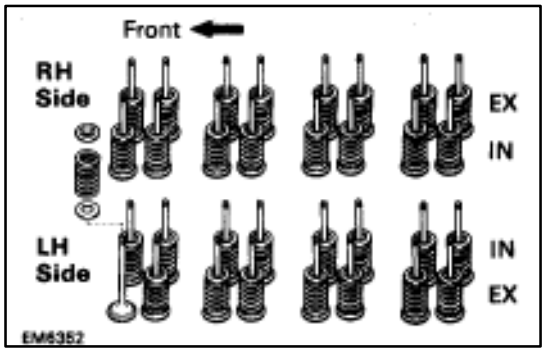

HINT: Arrange the valves, valve springs, spring seats and spring retainers in correct order.

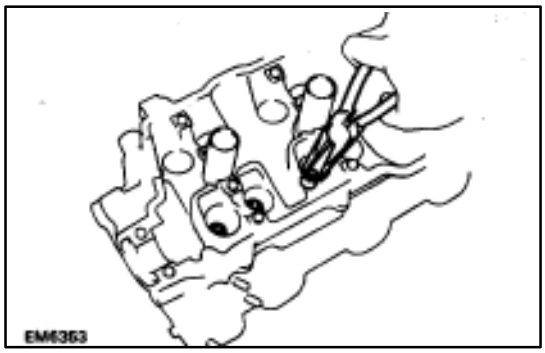

(c) Using needle–nose pliers, remove the oil seal.

WhereEverybodyKnowsYourName

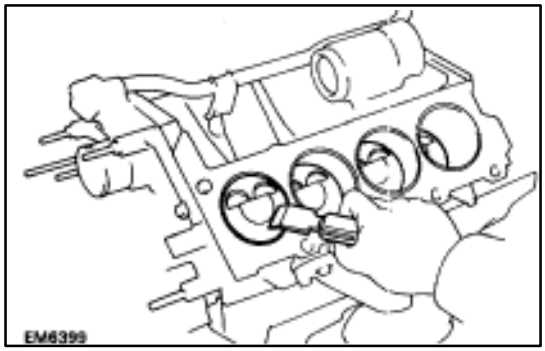

INSPECTION, CLEANING AND REPAIR OF CYLINDER HEAD COMPONENTS

1. CLEAN TOP SURFACES OF PISTONS AND CYLINDER BLOCK

(a) Turn the crankshaft and bring each piston to top dead center (TDC). Using a gasket scraper, remove all the carbon from the piston top surfaces.

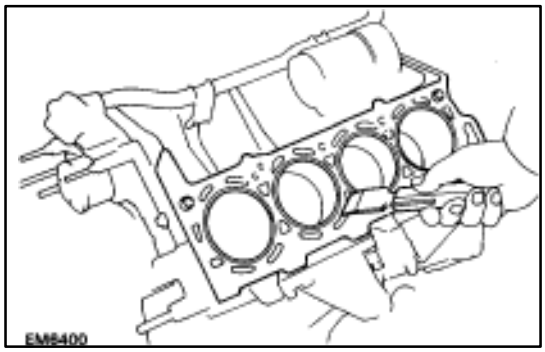

(b) Using a gasket scraper, remove all the gasket material from the top surfaces of the cylinder block.

(c) Using compressed air, blow carbon and oil from the bolt holes.

CAUTION: Protect your eyes when using high–pressure compressed air.

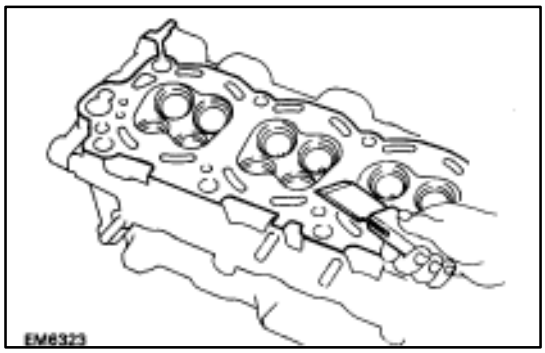

2. CLEAN CYLINDER HEADS

A. Remove gasket material Using a gasket scraper, remove all the gasket material from the cylinder block surface.

NOTICE: Be careful not to scratch the cylinder block contact surface.

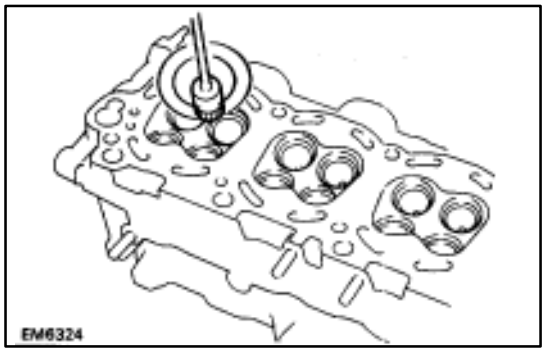

B. Clean combustion chambers

Using a wire brush, remove all the carbon from the combustion chambers.

NOTICE: Be careful not to scratch the cylinder block contact surface.

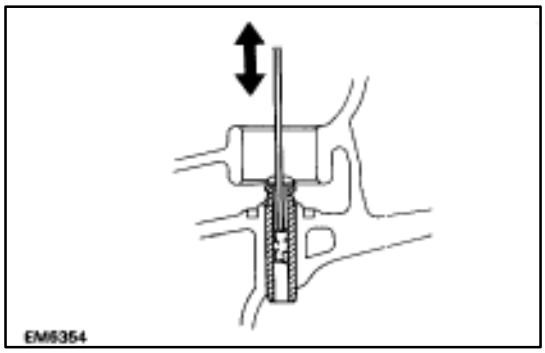

C. Clean valve guide bushings

Using a valve guide bushing brush and solvent, clean all the guide bushings.

WhereEverybodyKnowsYourName

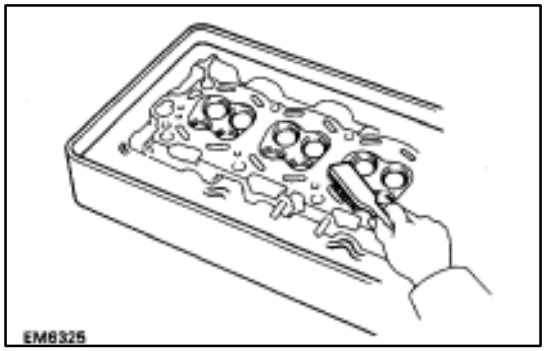

D. Clean cylinder heads

Using a soft brush and solvent, thoroughly clean the cylinder heads.

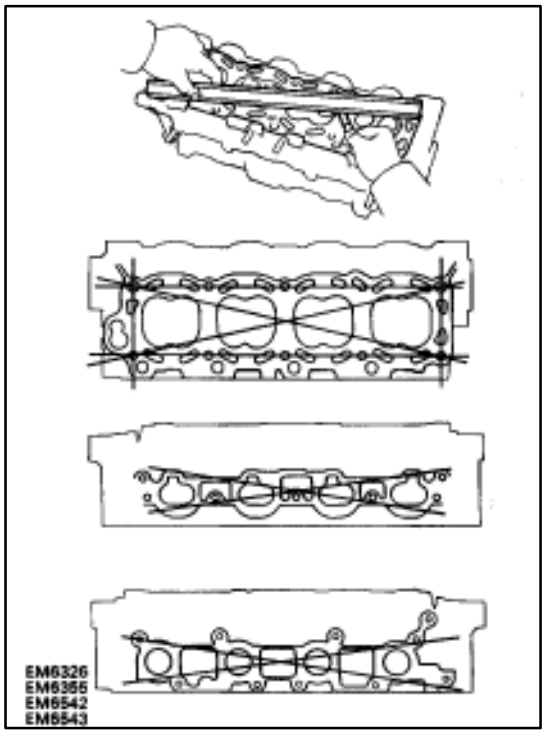

3. INSPECT CYLINDER HEADS

A. Inspect for flatness

Using a precision straight edge and feeler gauge, measure the surfaces contacting the cylinder block and manifolds for warpage.

Maximum warpage: 0.10 mm (0.0039 in.)

If warpage is greater than maximum, replace the cylinder head.

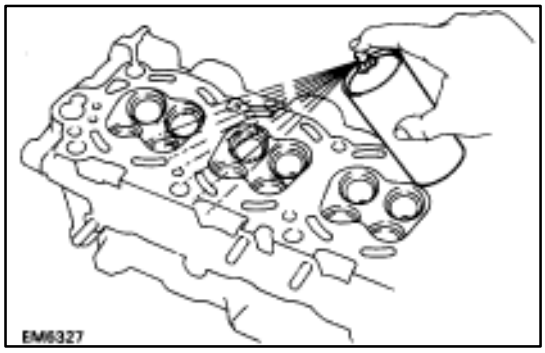

B. Inspect for cracks

Using a dye penetrant, check the combustion chamber, intake ports, exhaust ports and cylinder block surface for cracks.

If cracked, replace the cylinder head.

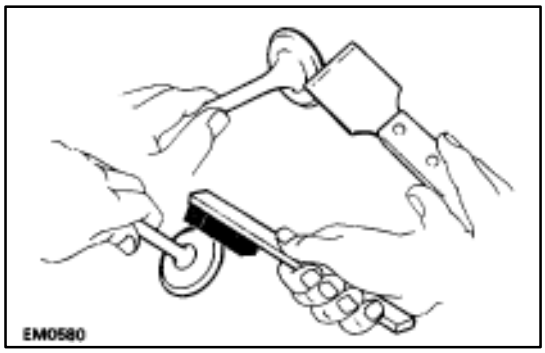

4. CLEAN VALVES

(a) Using a gasket scraper, chip any carbon from the valve head.

(b) Using a wire brush, thoroughly clean the valve.

WhereEverybodyKnowsYourName

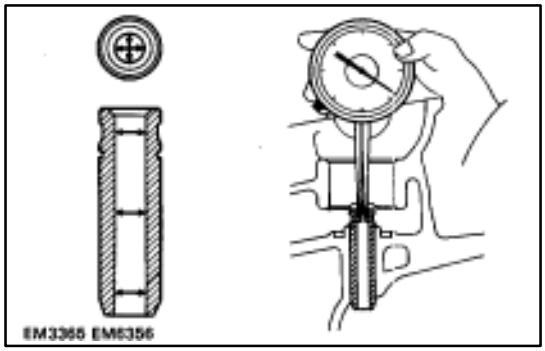

5. INSPECT VALVE STEMS AND GUIDE BUSHINGS

(a) Using a caliper gauge, measure the inside diameter of the guide bushing.

Bushing inside diameter:

6.010–6.030 mm (0.2366–0.2374 in.)

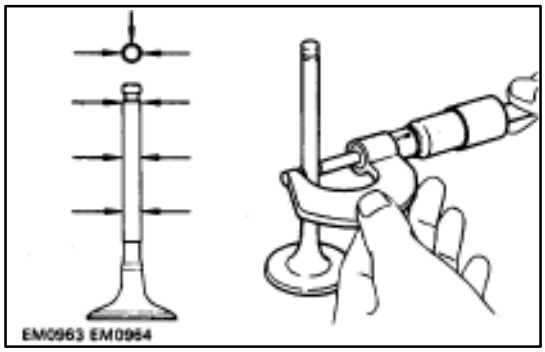

(b) Using a micrometer, measure the diameter of the valve stem.

Valve stem diameter:

Intake 5.970–5.985 mm (0.2350–0.2356 in.)

Exhaust 5.965–5.980 mm (0.2348–0.2354 in.)

(c) Subtract the diameter measurement of the valve stem from the inside diameter measurement of the guide bushing.

Standard oil clearance:

Intake 0.025–0.060 mm (0.0010–0.0024 in.)

Exhaust 0.030–0.065 mm (0.0012–0.0026 in.)

Maximum oil clearance:

Intake 0.08 mm (0.0031 in.)

Exhaust 0.10 mm (0.0039 in.)

If the clearance is greater than maximum, replace the valve and guide bushing.

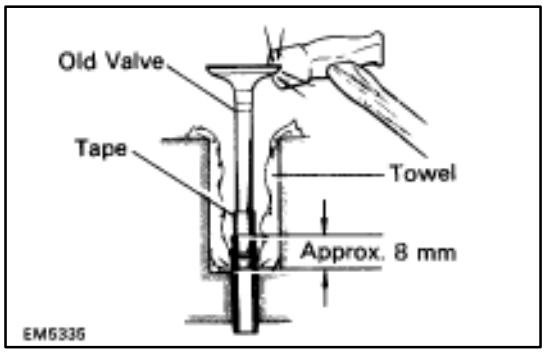

6. IF NECESSARY, REPLACE VALVE GUIDE BUSHINGS

(a) Insert an old valve wrapped with tape into the valve guide bushing, and break off the valve guide bushing by hitting it with a hammer. Remove the snap ring.

HINT: Wrap the tape approx. 8 mm (0.31 in.) from the stem end.

NOTICE: Be careful not to damage the valve lifter hole.

WhereEverybodyKnowsYourName

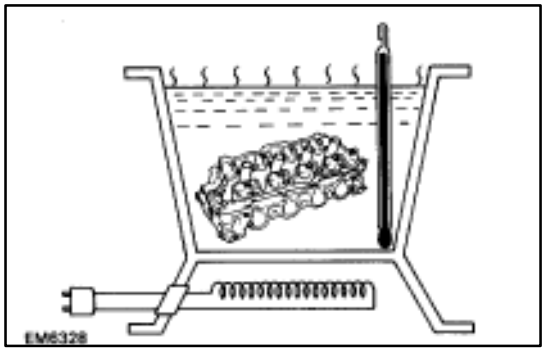

(b) Gradually heat the cylinder head to 80–1005C (176 –2125F).

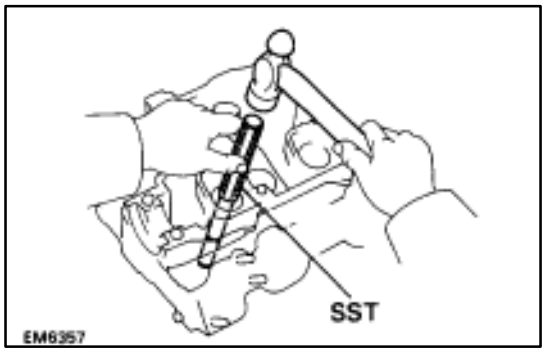

(c) Using SST and a hammer, tap out the guide bushing.
SST 09201–70010

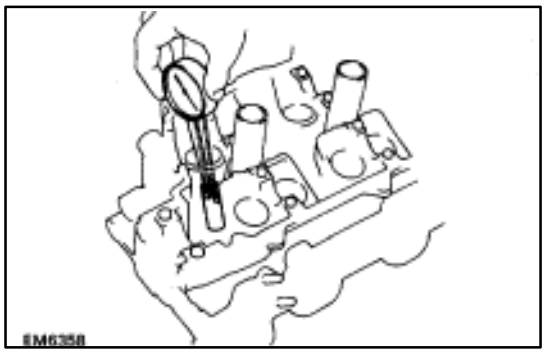

(d) Using a caliper gauge, measure the bushing bore diameter of the cylinder head.

Both intake and exhaust

Bushing bore diameter mm (in.)	Bushing size
11.000–11.027 (0.4331–0.4342)	Use STD
11.050–11.077 (0.4350–0.4361)	Use O/S 0.05

(e) Select a new guide bushing (STD size or O/S 0.05).
If the bushing bore diameter of the cylinder head is greater than 11.027 mm (0.4341 in.), grind the bushing bore to the following dimension:
11.050–11.077 mm (0.4350–0.4361 in.)
If the bushing bore diameter of the cylinder head is greater than 11.077 mm (0.4361 in.), replace the cylinder head.

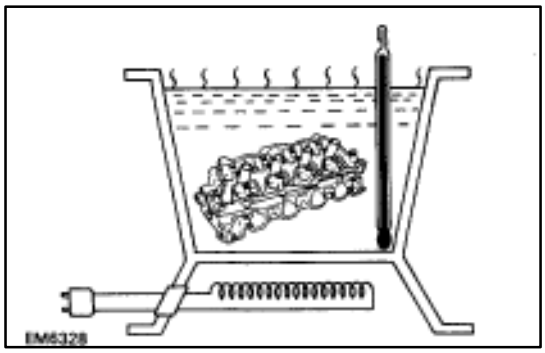

(f) Gradually heat the cylinder head to 80–1005C (176 –2125F).

WhereEverybodyKnowsYourName

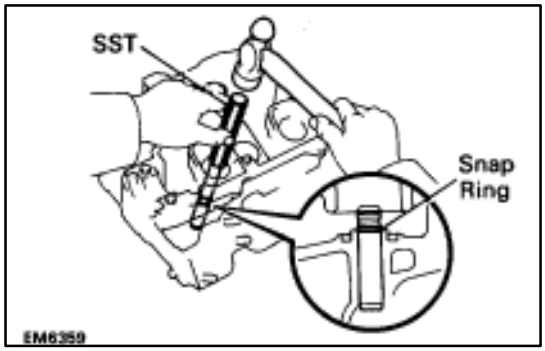

(g) Using SST and a hammer, tap in a new guide bushing until the snap ring makes contact with the cylinder head.

SST 09201–70010

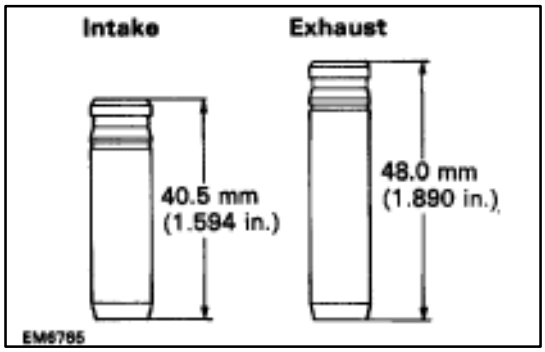

HINT: Different the bushings are used for the intake and exhaust.

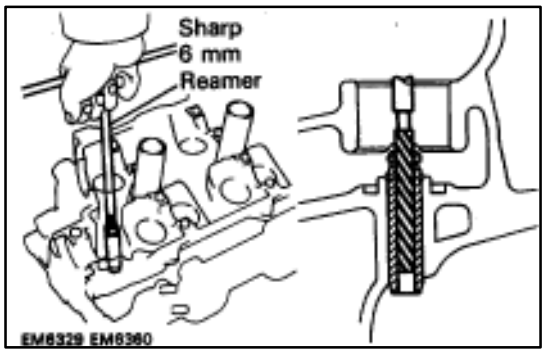

(h) Using a sharp 6 mm reamer, ream the guide bushing to obtain the standard specified clearance (See page EM–80) between the guide bushing and valve stem.

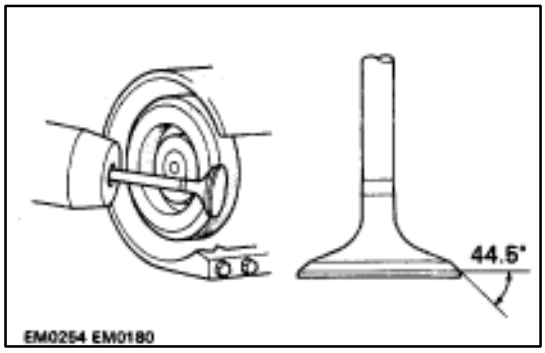

7. INSPECT AND GRIND VALVES

(a) Grind the valve enough to remove pits and carbon.

(b) Check that the valve is ground to the correct valve face angle.

Valve face angle: 44.5°

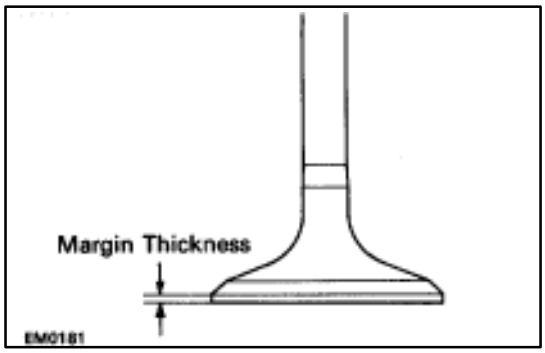

(c) Check the valve head margin thickness.

Standard margin thickness: 1.0 mm (0.039 in.)

Minimum margin thickness: 0.5 mm (0.020 in.)

If the margin thickness is less than minimum, replace the valve.

WhereEverybodyKnowsYourName

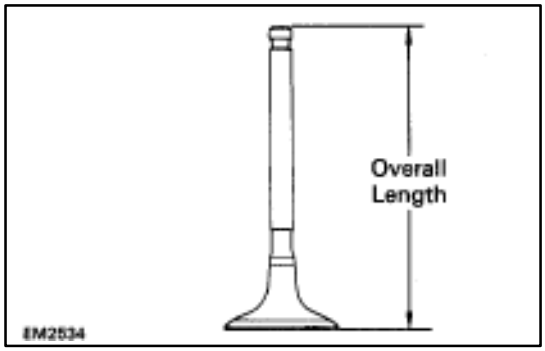

(d) Check the valve overall length.

Standard overall length:

Intake 94.95 mm (3.7382 in.)

Exhaust 96.90 mm (3.8150 in.)

Minimum overall length:

Intake 94.45 mm (3.7185 in.)

Exhaust 96.40 mm (3.7953 in.)

If the overall length is less than minimum, replace the valve.

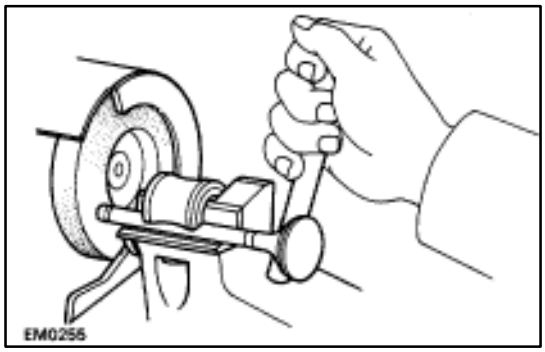

(e) Check the surface of the valve stem tip for wear.

If the valve stem tip is worn, resurface the tip with a grinder or replace the valve.

NOTICE: Do not grind off more than the minimum overall length.

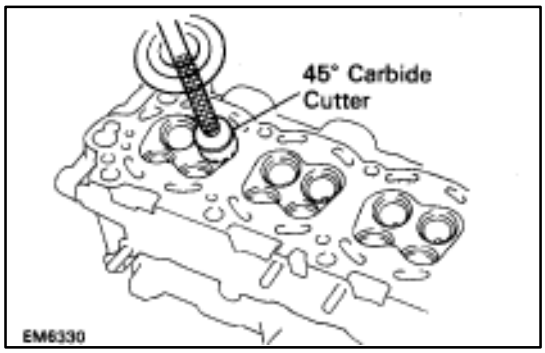

8. INSPECT AND CLEAN VALVE SEATS

(a) Using a 455 carbide cutter, resurface the valve seats. Remove only enough metal to clean the seats.

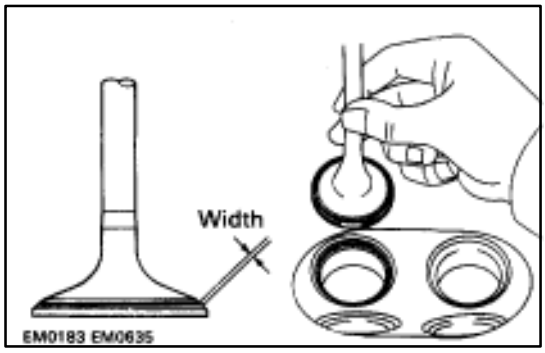

(b) Check the valve seating position.

Apply a thin coat of prussian blue (or white lead) to the valve face. Lightly press the valve against the seat. Do not rotate the valve.

(c) Check the valve face and seat for the following:

- If blue appears 3605 around the face, the valve is concentric. If not, replace the valve.
- If blue appears 3605 around the valve seat, the guide and face are concentric. If not, resurface the seat.
- Check that the seat contact is on the middle of the valve face with the following width:

  1.0–1.4 mm (0.039–0.055 in.)

  If not, correct the valve seats as follows:

  (1) If the seating is too high on the valve face, use 30° and 45° cutters to correct the seat.

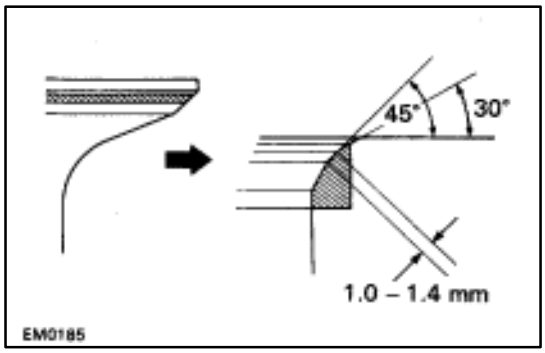

WhereEverybodyKnowsYourName

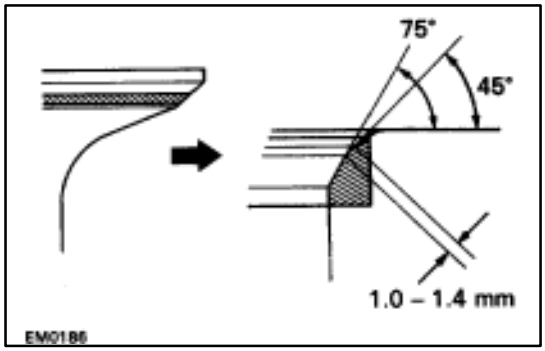

(2) If the seating is too low on the valve face, use 75° and 45° cutters to correct the seat.

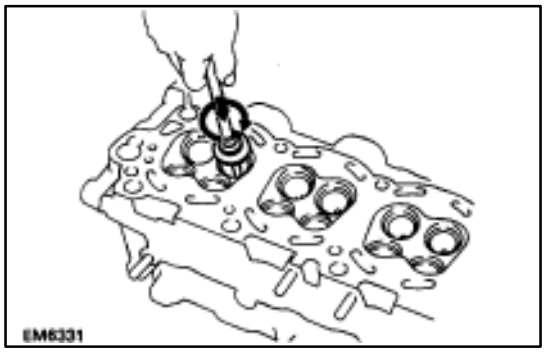

(d) Hand–lap the valve and valve seat with an abrasive compound.
(e) After hand–lapping, clean the valve and valve seat.

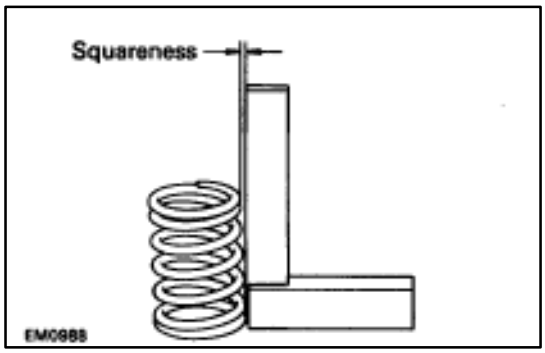

9. INSPECT VALVE SPRINGS

(a) Using a steel square, measure the squareness of the valve spring.

Maximum squareness: 2.0 mm (0.079 in.)

If squareness is greater than maximum, replace the valve spring.

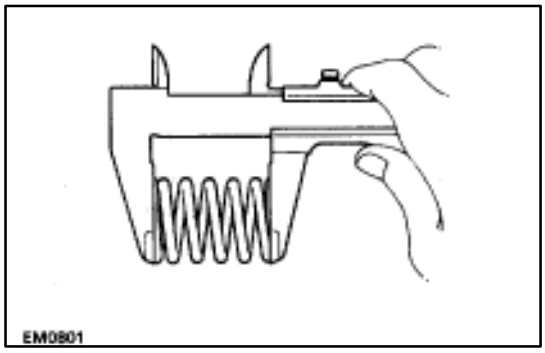

(b) Using a vernier caliper, measure the free length of the valve spring.

Free length: 43.6 mm (1.717 in.)

If the free length is not as specified, replace the valve spring.

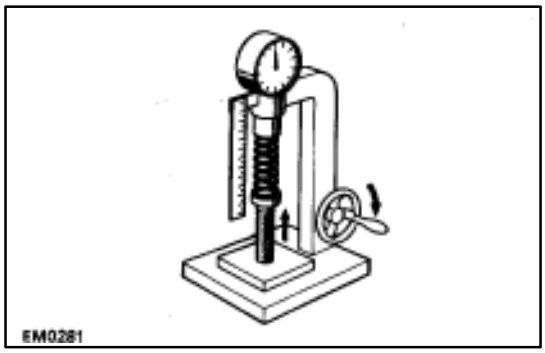

(c) Using a spring tester, measure the tension of the valve spring at the specified installed length.

Installed tension (at 32.9 mm (1.295 in.):
186–206 N (19.0–21.0 kgf, 41.9–46.3 lbf)

If the installed tension is not as specified, replace the valve spring.

WhereEverybodyKnowsYourName

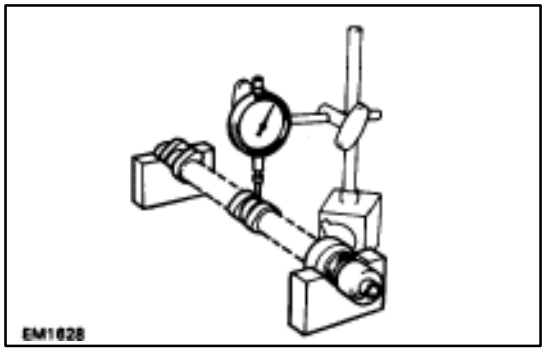

10. INSPECT CAMSHAFTS AND BEARINGS

A. Inspect camshaft for runout

(a) Place the camshaft on V–blocks.

(b) Using a dial indicator, measure the circle runout at the center journal.

Maximum circle runout: 0.08 mm (0.0031 in.)

If the circle runout is greater than maximum, replace the camshaft.

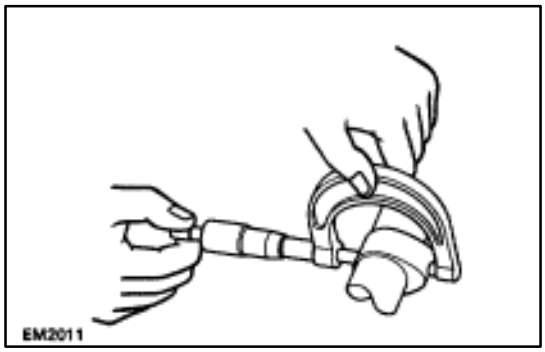

B. Inspect cam lobes

Using a micrometer, measure the cam lobe height.

Standard cam lobe height:

Intake 41.710–41.810 mm
(1.6421–1.6461 in.)

Exhaust 41.910–42.010 mm
(1.6500–1.6539 in.)

Minimum cam lobe height:

Intake 41.56 mm (1.6362 in.)

Exhaust 41.76 mm (1.6441 in.)

If the cam lobe height is less than minimum, replace the camshaft.

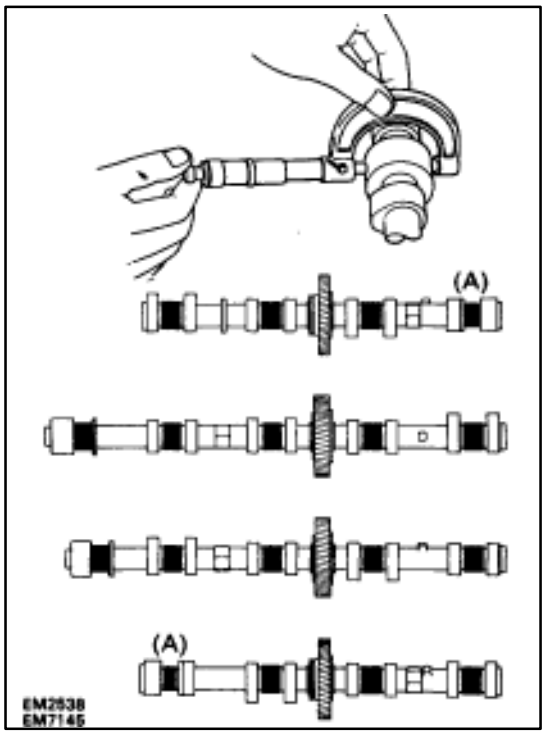

C. Inspect camshaft journals

Using a micrometer, measure the journal diameter.

Journal diameter:

Exhaust camshaft thrust portion (A)
23.959–23.975 mm
(0.9433–0.9439 in.)

Others 26.954–26.970 mm
(1.0612–1.0618 in.)

If the journal diameter is not as specified, check the oil clearance.

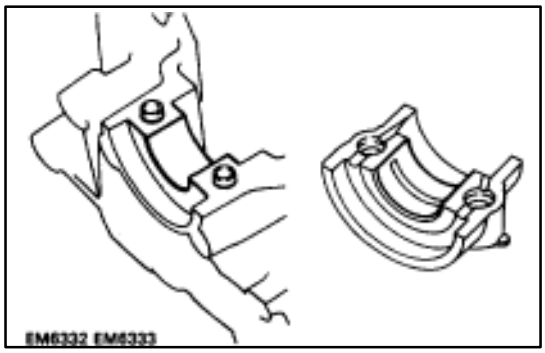

D. Inspect camshaft bearings

Check the bearings for flaking and scoring.

If the bearings are damaged, replace the bearing caps and cylinder head as a set.

WhereEverybodyKnowsYourName

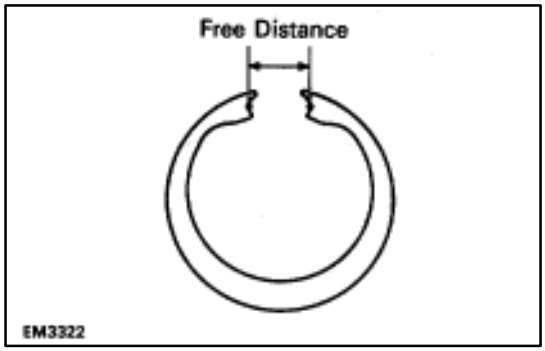

E. Inspect camshaft gear spring

Using a vernier caliper, measure the free distance between the spring ends.

Free distance: 18.2–18.8 mm (0.712–0.740 in.)

If the free distance is not as specified, replace the gear spring.

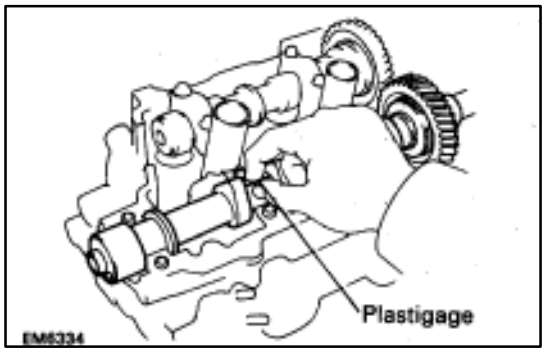

F. Inspect camshaft journal oil clearance

(a) Clean the bearing caps and camshaft journals.

(b) Place the camshafts on the cylinder head.

(c) Lay a strip of Plastigage across each of the camshaft journals.

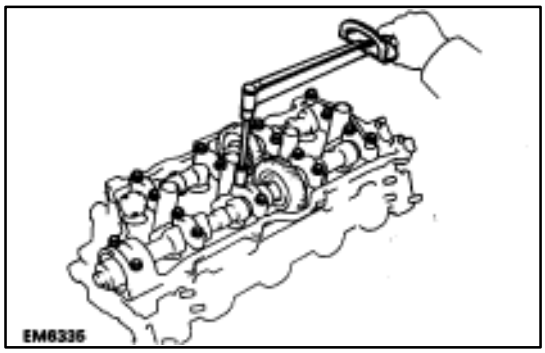

(d) Install the bearing caps.
(See step 7 on pages EM–95 to 101)

Torque: 16 N·m (160 kgf·cm, 12 ft·lbf)

NOTICE: Do not turn the camshaft.

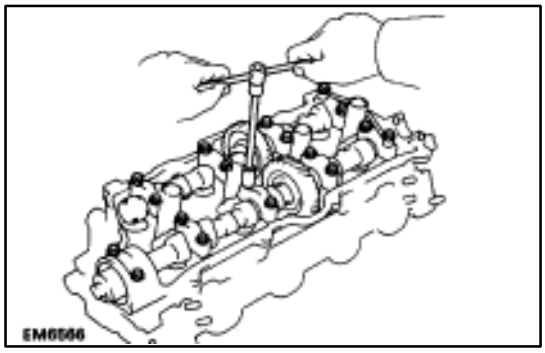

(e) Remove the bearing caps.

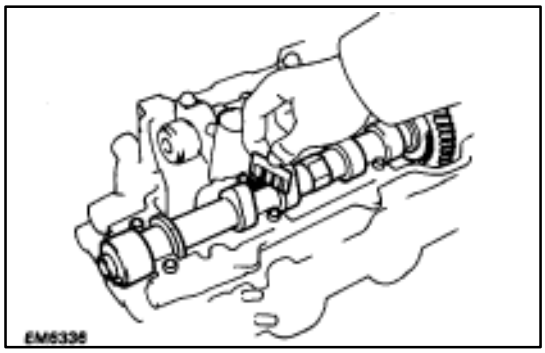

(f) Measure the Plastigage at its widest point.

Standard oil clearance:

Exhaust camshaft thrust portion
0.025–0.061 mm
(0.0010–0.0024 in.)

Others 0.030–0.067 mm
(0.0012–0.0026 in.)

Maximum oil clearance: 0.10 mm (0.0039 in.)

If the oil clearance is greater than maximum, replace the camshaft. If necessary, replace the bearing caps and cylinder head as a set.

(g) Completely remove the Plastigage.

WhereEverybodyKnowsYourName

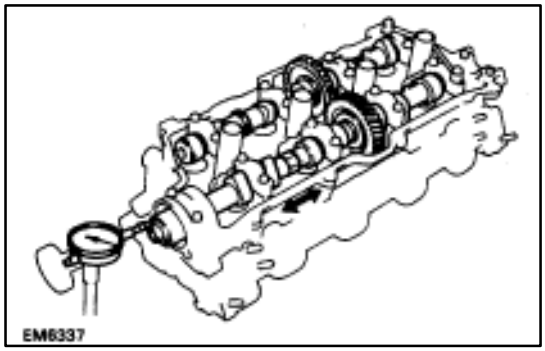

G. Inspect camshaft thrust clearance

(a) Install the camshafts.
(See step 7 on pages EM–95 to 101)

(b) Using a dial indicator, measure the thrust clearance while moving the camshaft back and forth.

Standard thrust clearance: 0.040–0.090 mm (0.0016–0.0035 in.)

Maximum thrust clearance: 0.12 mm (0.0047 in.)

If the thrust clearance is greater than maximum, replace the camshaft. If necessary, replace the bearing caps and cylinder head as a set.

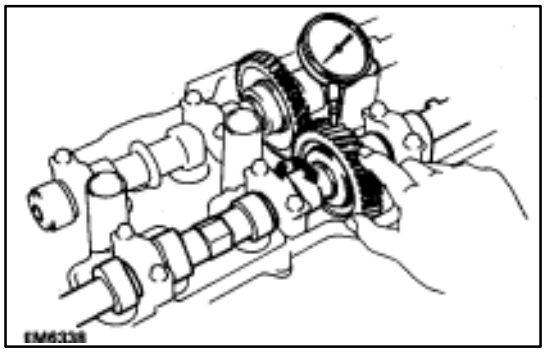

H. Inspect camshaft gear backlash

(a) Install the camshafts without installing the exhaust camshaft sub–gear.
(See step 7 on pages EM–95 to 101)

(b) Using a dial indicator, measure the backlash.

Standard backlash: 0.020–0.200 mm (0.0008–0.0079 in.)

Maximum backlash: 0.30 mm (0.0188 in.)

If the backlash is greater than maximum, replace the camshafts.

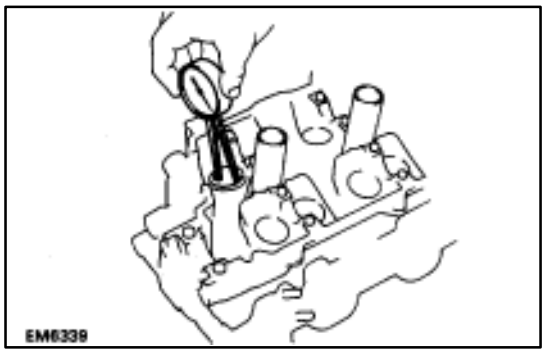

11. INSPECT VALVE LIFTERS AND LIFTER BORES

(a) Using a caliper gauge, measure the lifter bore diameter of the cylinder head.

Lifter bore diameter: 31.000–31.016 mm (1.2205–1.2211 in.)

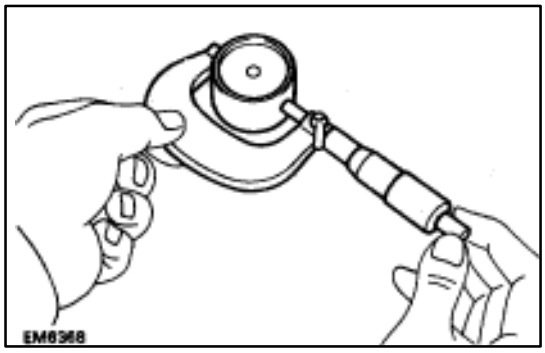

(b) Using a micrometer, measure the lifter diameter.

Lifter diameter: 30.966–30.976 mm (1.2191–1.2195 in.)

(c) Subtract the lifter diameter measurement from the lifter bore diameter measurement.

Standard oil clearance: 0.024–0.050 mm (0.0009–0.0020 in.)

Maximum oil clearance: 0.07 mm (0.0028 in.)

If the oil clearance is greater than maximum, replace the lifter. If necessary, replace the cylinder head.

WhereEverybodyKnowsYourName

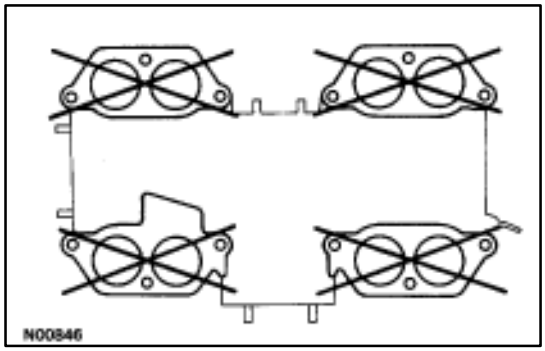

12. INSPECT AIR INTAKE CHAMBER

Using a precision straight edge and feeler gauge, measure the surfaces contacting the intake manifold for warpage.

Maximum warpage: 0.15 mm (0.0059 in.)

If warpage is greater than maximum, replace the chamber.

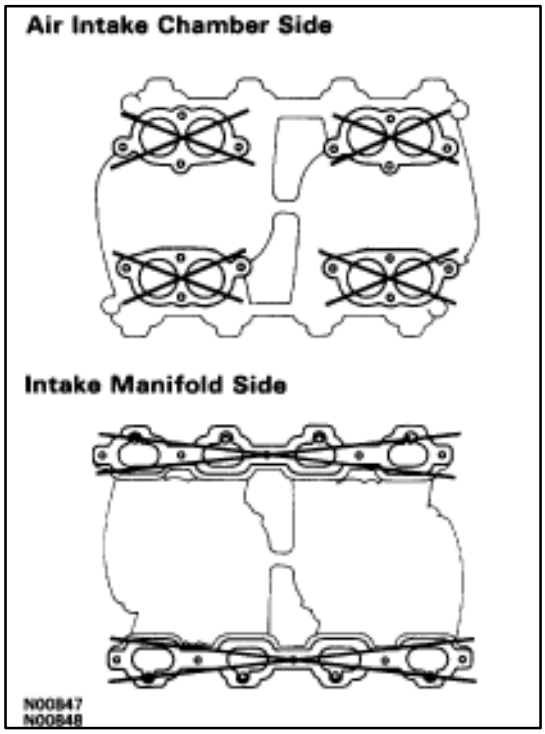

13. INSPECT INTAKE MANIFOLD

Using a precision straight edge and feeler gauge, measure the surfaces contacting the cylinder head and air intake chamber for warpage.

Maximum warpage: 0.15 mm (0.0059 in.)

If warpage is greater than maximum, replace the manifold.

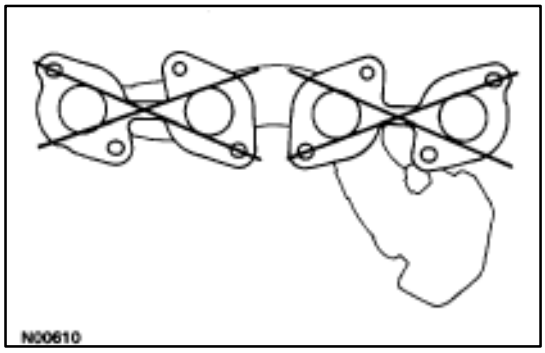

14. INSPECT EXHAUST MANIFOLD

Using a precision straight edge and feeler gauge, measure the surfaces contacting the cylinder head for warpage.

Maximum warpage: 1.00 mm (0.0394 in.)

If warpage is greater than maximum, replace the manifold.

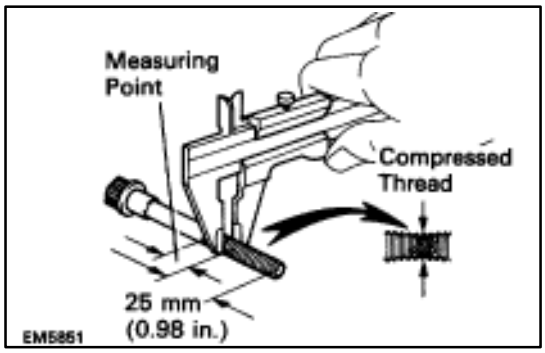

15. INSPECT CYLINDER HEAD BOLTS

Using a vernier caliper, measure the thread outside diameter of the bolt.

Standard outside diameter: 9.770–9.960 mm (0.3846–0.3921 in.)

Minimum outside diameter: 9.60 mm (0.3780 in.)

If the diameter is less than minimum, replace the bolt.

WhereEverybodyKnowsYourName

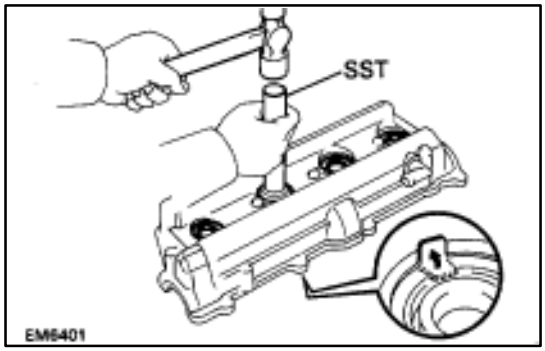

16. IF NECESSARY, REPLACE SPARK PLUG TUBE GASKETS

(a) Bend the ventilation case claw installed on the cylinder head cover to an angle of 905 or more.

(b) Using SST and a hammer, tap out the gasket.

SST 09550–10012 (09552–10010, 09560–10010)

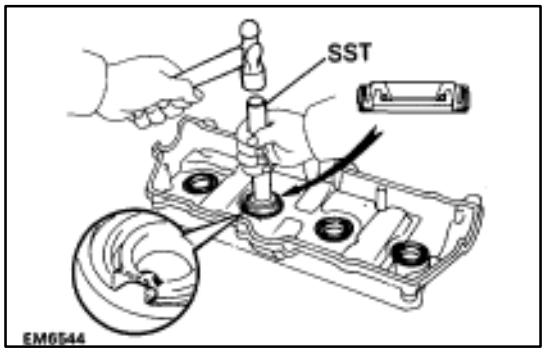

(c) Using SST and a hammer, tap in a new gasket until its surface is flush with the upper edge of the cylinder head cover.

SST 09550–10012 (09552–10010, 09560–10010)

(d) Apply a light coat of MP grease to the gasket lip.

(e) Return the ventilation case claw to its original position.

ASSEMBLY OF CYLINDER HEADS

(See Components on page EM–59)

HINT:

- Thoroughly clean all parts to be assembled.
- Before installing the parts, apply new engine oil to all sliding and rotating surfaces.
- Replace all gaskets and oil seals with new ones.

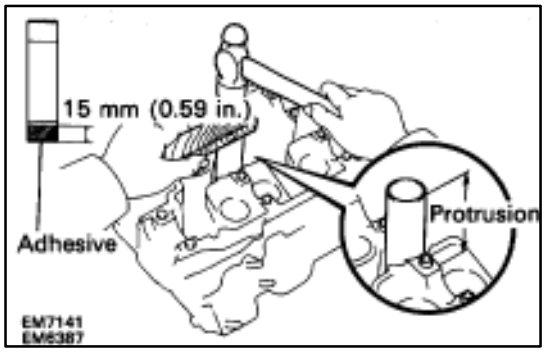

1. INSTALL SPARK PLUG TUBES

HINT: When using a new cylinder head, spark plug tubes must be installed.

(a) Apply adhesive to the end of the spark plug tube.

Adhesive: Part No.08833–00070, THREE BOND 1324 or equivalent

(b) Using a wooden block and hammer, tap in a new spark plug tube until there is 48.7–49.3 mm (1.917 –1.941 in.) protruding from the camshaft bearing cap installation surface of the cylinder head.

NOTICE: Avoid tapping a new spark plug tube in too far by measuring the amount of protrusion while tapping.

WhereEverybodyKnowsYourName

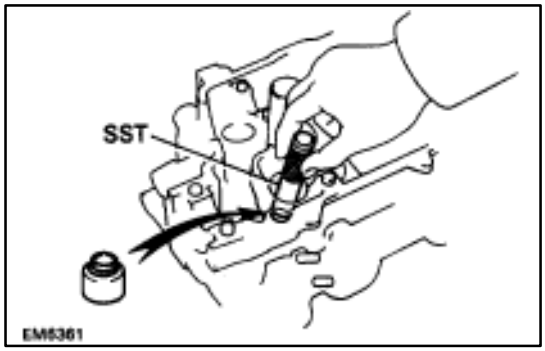

2. INSTALL VALVES

(a) Using SST, push in a new oil seal.

SST 09201–41020

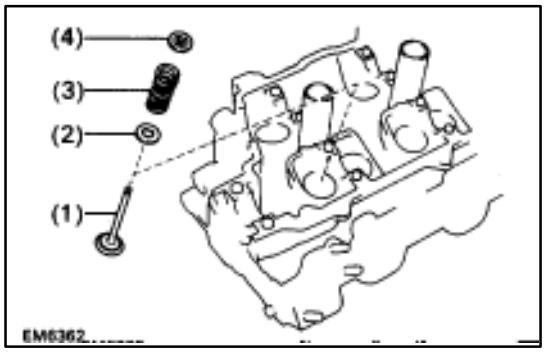

(b) Install the following parts:
- (1) Valve
- (2) Spring seat
- (3) Valve spring
- (4) Spring retainer

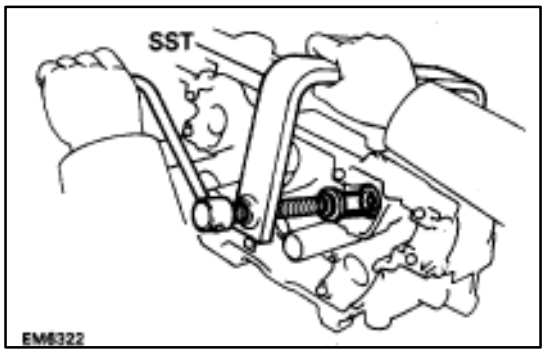

(c) Using SST, compress the valve spring and place the two keepers around the valve stem.

SST 09202–70010

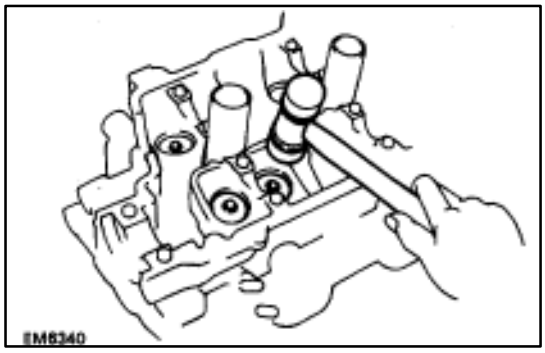

(d) Using a plastic–faced hammer, lightly tap the valve stem tip to assure proper fit.

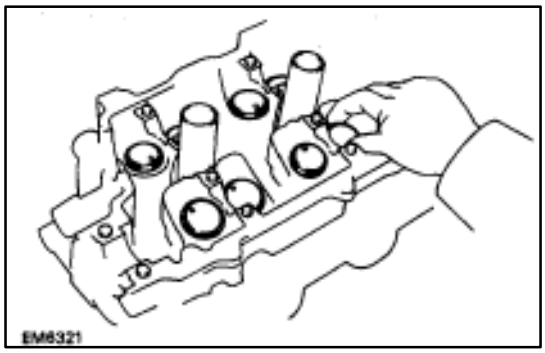

3. INSTALL VALVE LIFTERS AND SHIMS

Check the valve lifter rotates smoothly by hand.

WhereEverybodyKnowsYourName

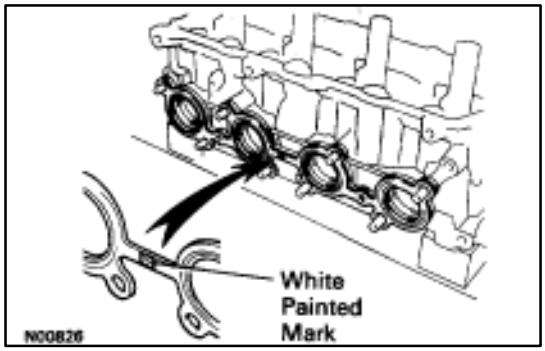

INSTALLATION OF CYLINDER HEADS

(See Components on pages EM–58 and 59)

1. INSTALL RH EXHAUST MANIFOLD TO RH CYLINDER HEAD

(a) Place a new gasket on the cylinder head with the white painted marks facing the manifold side.

NOTICE: Be careful of the installation direction.

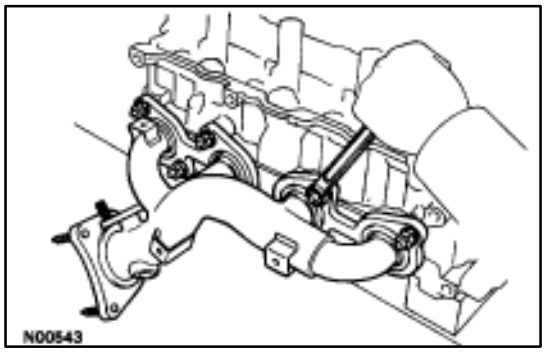

(b) Install the exhaust manifold with the eight new nuts. Uniformly tighten the nuts in several passes.

Torque: 39 N·m (400 kgf·cm, 29 ft·lbf)

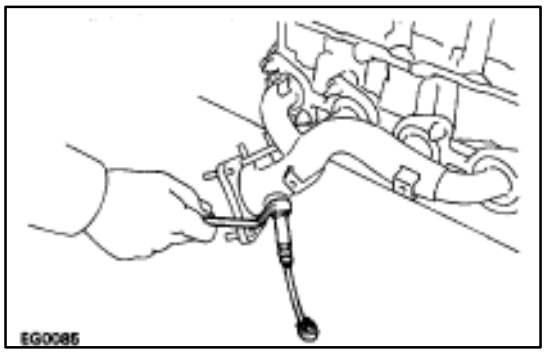

(c) Install the main oxygen sensor.

Torque: 44 N·m (450 kgf·cm, 33 ft·lbf)

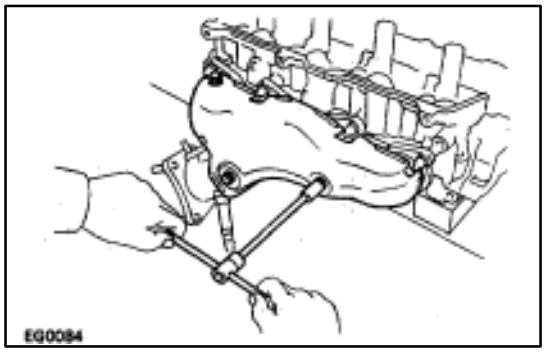

(d) Install the heat insulator with the three bolts.

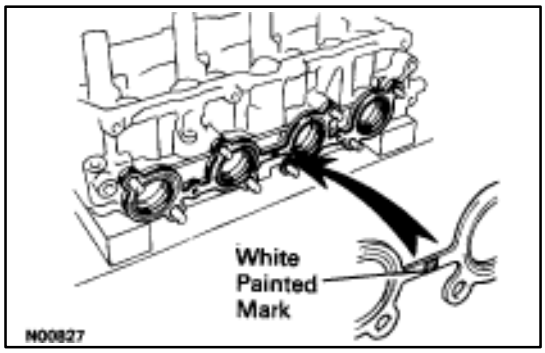

2. INSTALL LH EXHAUST MANIFOLD TO LH CYLINDER HEAD

(a) Place a new gasket on the cylinder head with the white painted marks facing the manifold side.

NOTICE: Be careful of the installation direction.

WhereEverybodyKnowsYourName

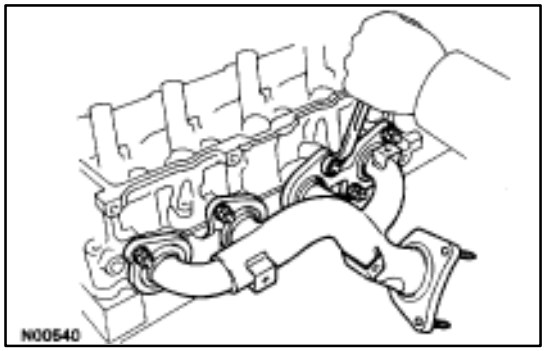

(b) Install the exhaust manifold with the eight new nuts. Uniformly tighten the nuts in several passes.
Torque: 39 N·m (400 kgf·cm, 29 ft·lbf)

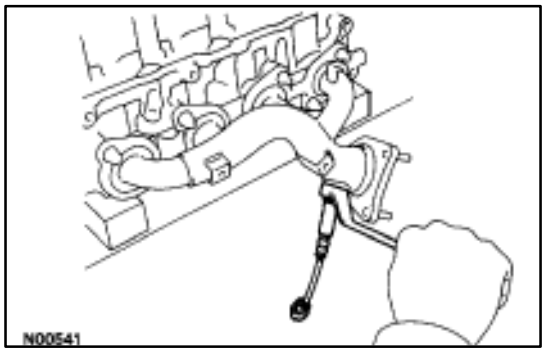

(c) Install the main oxygen sensor.
Torque: 44 N·m (450 kgf·cm, 33 ft·lbf)

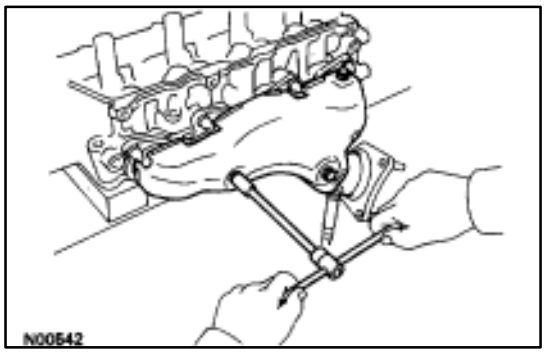

(d) Install the heat insulator with the three bolts.

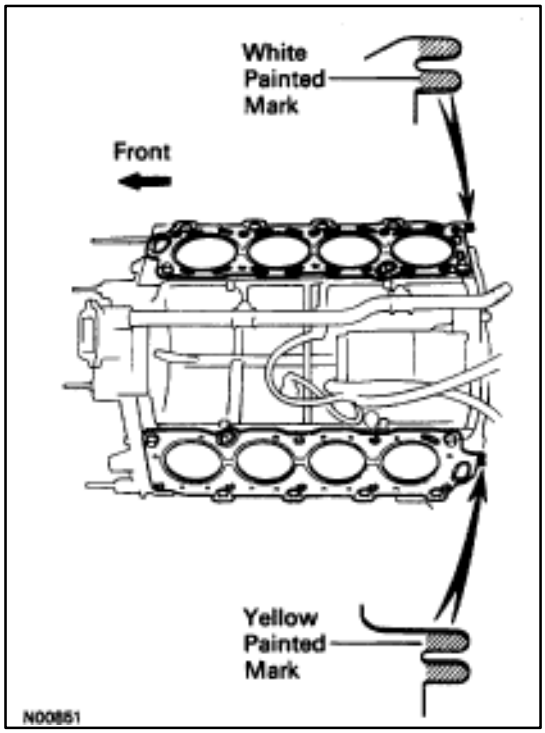

3. INSTALL CYLINDER HEADS

A. Place cylinder heads on cylinder block

(a) Place two new cylinder head gaskets in position on the cylinder block.

HINT: On the rear side of the cylinder head gasket are painted marks to distinguish the LH and RH banks, a white painted mark for the RH bank and a yellow painted mark for the LH bank.

NOTICE: Be careful of the installation direction.

(b) Place the two cylinder heads in position on the cylinder head gaskets.

WhereEverybodyKnowsYourName

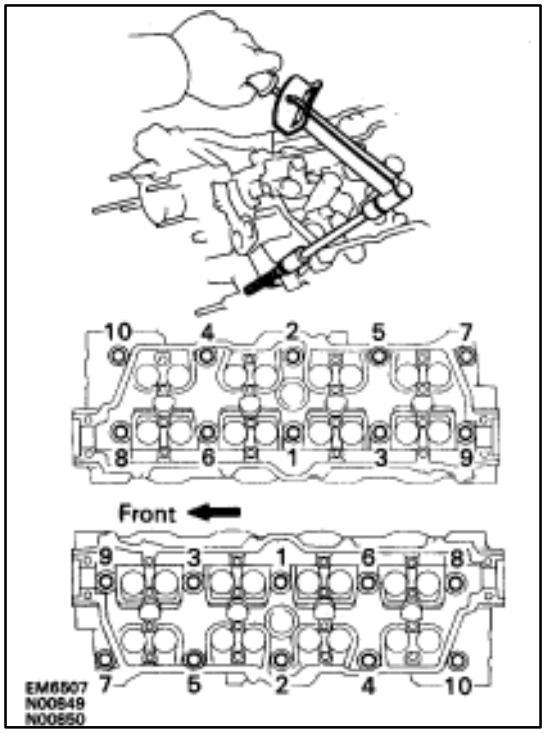

B. Install cylinder head bolts

HINT:

- The cylinder head bolts are tighten in two progressive steps (steps (c) and (e)).
- If any one of the cylinder head bolts broken or deformed, replace it.

(a) Apply a light coat of engine oil on the threads and under the heads of the cylinder head bolts.

(b) Temporarily install the twenty plate washers and cylinder head bolts.

(c) Uniformly tighten the ten cylinder head bolts on one side of the cylinder head in several passes in the sequence shown, then do the other side as shown.

Torque: 39 N·m (400 kgf·cm, 29 ft·lbf)

If any one of the bolts does not meet the torque specification, replace the bolt.

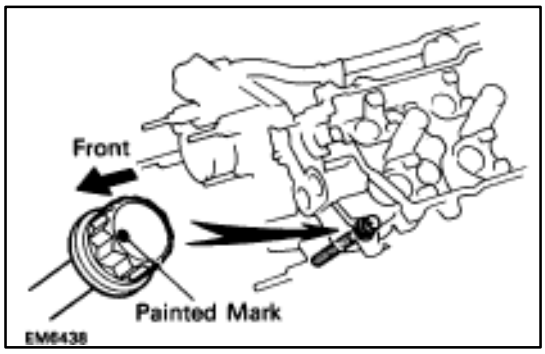

(d) Mark the front of the cylinder head bolt head with paint.

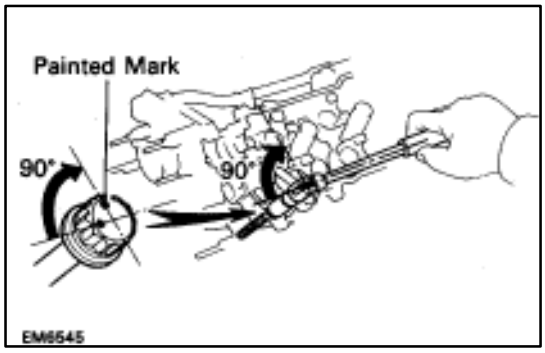

(e) Retighten the cylinder head bolts 90° in the numerical order shown.

(f) Check that the painted mark is now at a 90° angle to front.

4. CONNECT MAIN OXYGEN SENSOR CONNECTORS

Connect the RH and LH oxygen sensor connector.

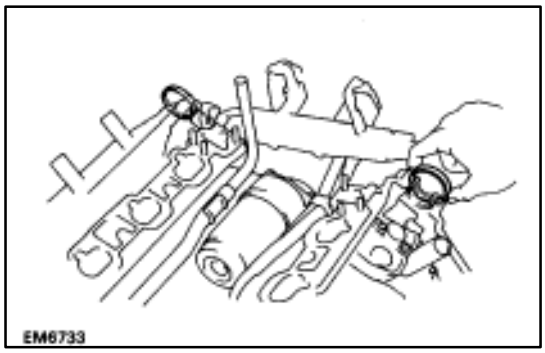

5. INSTALL CIRCULAR PLUGS

(a) Place two new circular plugs in position on the cylinder heads, facing the cup side forward.

WhereEverybodyKnowsYourName

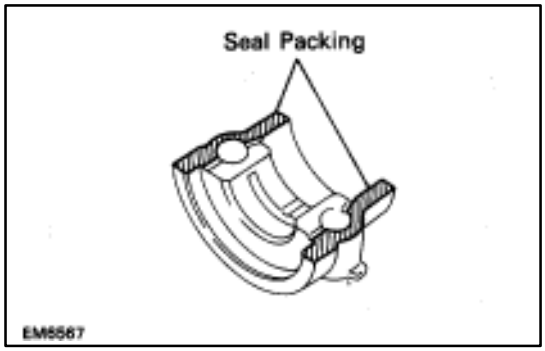

(b) Remove any old packing (FIPG) material.
(c) Apply seal packing to the bearing caps as shown.
Seal packing: Part No. 08826–00080 or equivalent

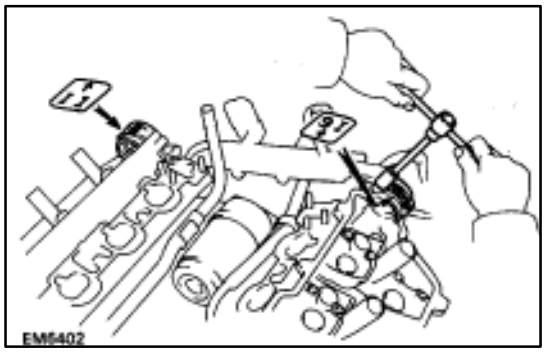

(d) (RH Cylinder Head)
Install the bearing cap (mark ”I1”) in position with the arrow mark facing rearward.
(e) (LH Cylinder Head)
Install the bearing cap (mark ”I6”) in position with the arrow mark facing forward.
(f) Install a new seal washer to the bearing cap bolt.
(g) Apply a light of engine oil on the threads of the bearing cap bolt.
(h) Install the four bearing cap bolts.
Torque: 16 N·m (160 kgf·cm, 12 ft·lbf)
HINT: Use silver colored bolts 38 mm (1.50 in.) in length.

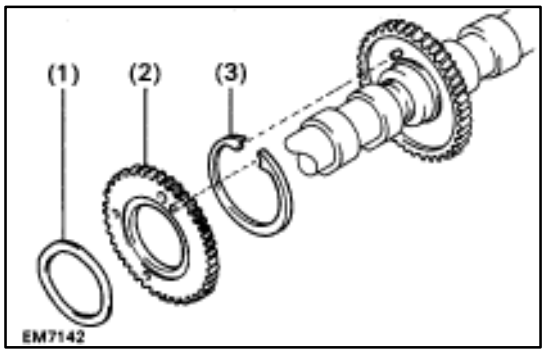

6. ASSEMBLE EXHAUST CAMSHAFTS
(a) Install the following parts:
(1) Camshaft gear spring
(2) Camshaft sub–gear
(3) Wave washer

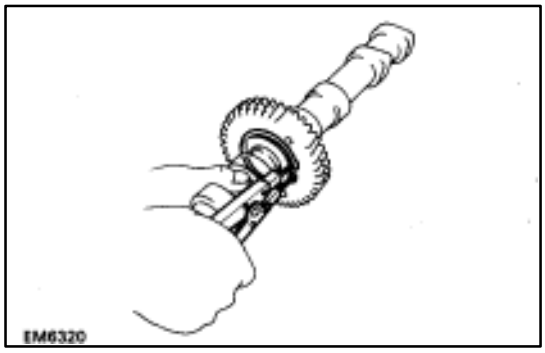

(b) Using snap ring pliers, install the snap ring.

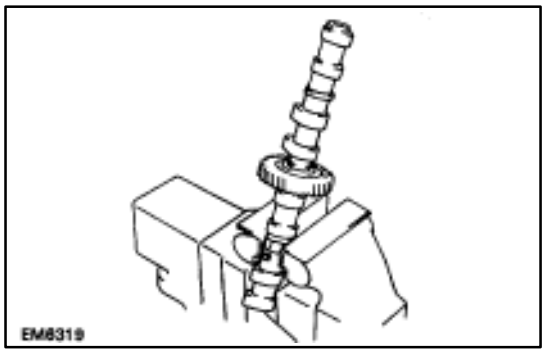

(c) Mount the hexagon wrench head portion of the camshaft in a vice.

WhereEverybodyKnowsYourName

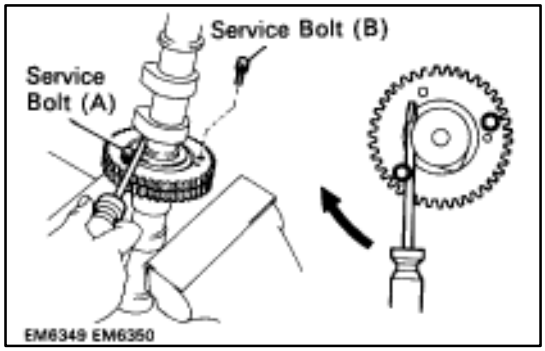

(d) Insert a service bolt (A) into the service hole of the camshaft sub–gear.
(e) Using a screwdriver, align the service holes and teeth of the camshaft driven gear and sub–gear by turning camshaft sub–gear clockwise, and install a service bolt (B).

NOTICE: Be careful not to damage the camshaft.

(f) Remove the service bolt (A).

7. INSTALL CAMSHAFTS

NOTICE: Since the thrust clearance of the camshaft is small, the camshaft must be held level while it is being installed. If the camshaft is not kept level, the portion of the cylinder head receiving the shaft thrust may crack or be damaged causing the camshaft to seize or break. To avoid this, the following steps should be carried out.

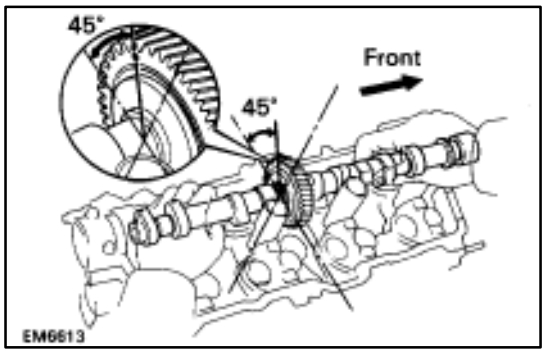

A. Install intake camshaft to RH cylinder head

(a) Apply MP grease to the thrust portion of the camshaft.
(b) Place the intake camshaft at 45° angle of the timing mark (one dot mark) on the cylinder head.

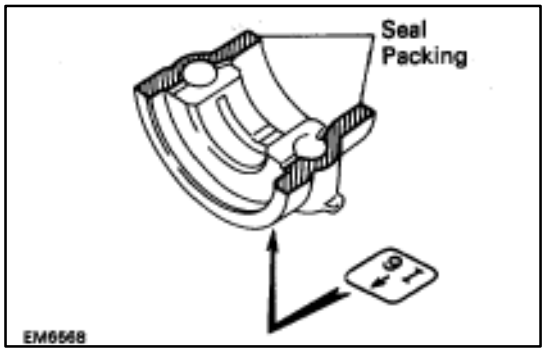

(c) Remove any old packing (FIPG) material.
(d) Apply seal packing to the bearing cap (mark ”I6”) as shown.

Seal packing: Part No. 08826–00080 or equivalent

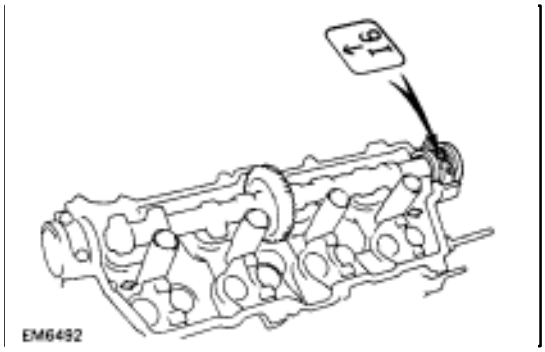

(e) Install the front bearing cap (mark ”I6”) with the arrow mark facing rearward.

HINT:

- Installing the front bearing cap will determine the thrust position of the camshaft.
- Align the arrow marks at front and rear of the cylinder head with the mark on the bearing cap.

WhereEverybodyKnowsYourName

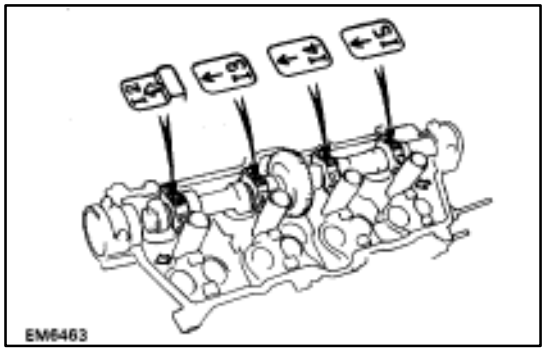

(f) Install the other bearing caps in the sequence shown with the arrow mark facing rearward.

HINT: Align the arrow marks at front and rear of the cylinder head with the mark on the bearing cap.

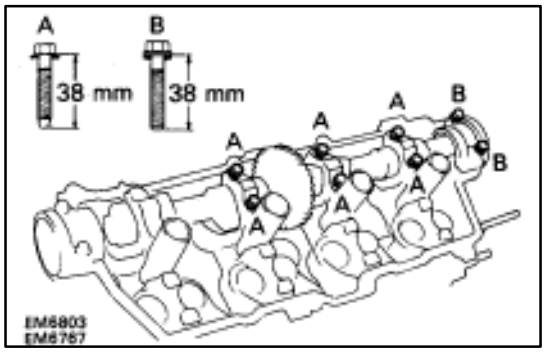

(g) Apply a light coat of engine oil on the threads and under the heads (A only) of the bearing cap bolts.

HINT: Do not apply engine oil under the heads of the bearing cap bolts (B).

(h) Install a new seal washer to the bearing cap bolt (B). Install the eight bearing cap bolts as shown.

HINT:

- Use bearing cap bolts 38 mm (1.50 in.) in length. The bolts are black (A) or silver (B) in color. Install the two silver bolts to the front bearing cap. Install the six black bolts to the other positions.
- After installing the oil feed pipe, install the two bolts to the rear bearing cap as directed in step B (i).

(i) Uniformly tighten the eight bearing cap bolts in several passes in the sequence shown.

Torque: 16 N·m (160 kgf·cm, 12 ft·lbf)

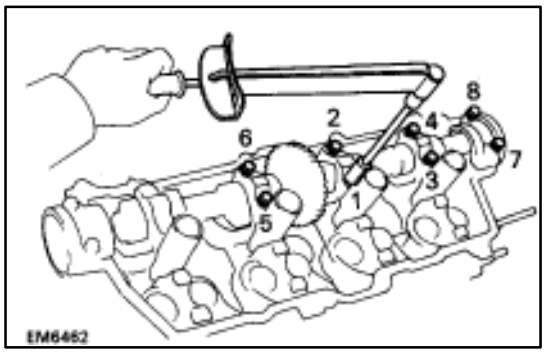

B. Install exhaust camshaft to RH cylinder head

(a) Set the timing mark (one dot mark) of the camshaft drive gear at 105 angle by turning the hexagon wrench head portion of the intake camshaft with a wrench.

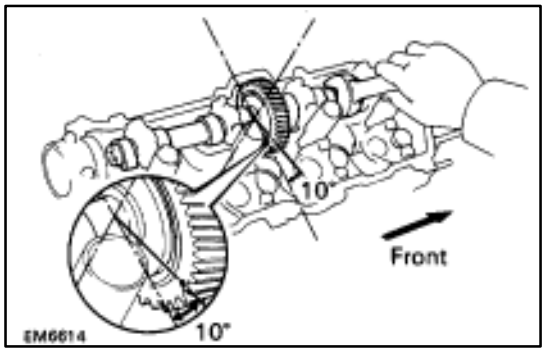

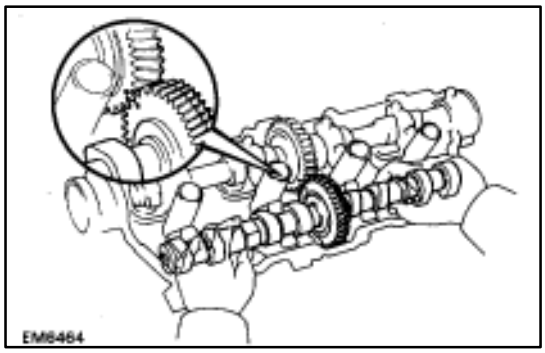

(b) Apply MP grease to the thrust portion of the exhaust camshaft.

(c) Align the timing marks (one dot mark) of the camshaft drive and driven gears.

(d) Place the exhaust camshaft on the cylinder head.

WhereEverybodyKnowsYourName

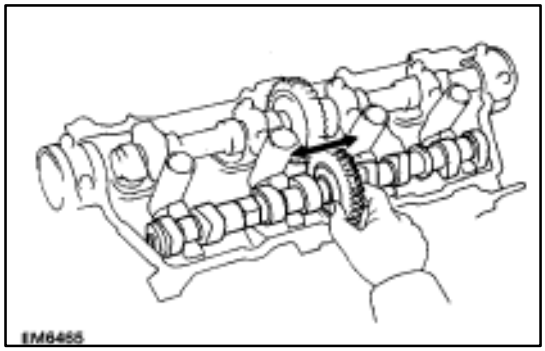

(e) Check that the exhaust camshaft moves smoothly in the thrust direction.

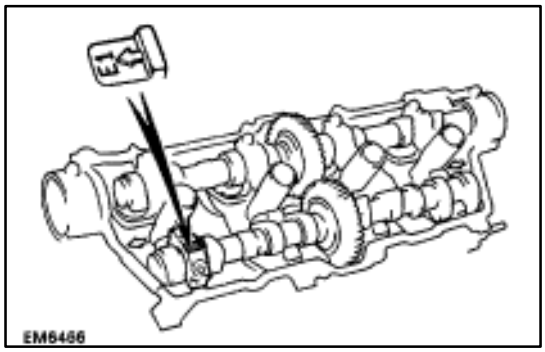

(f) Install the rear bearing cap with the arrow mark facing rearward.

HINT:

- Installing the rear bearing cap will determine the thrust position of the camshaft.
- Align the arrow marks at front and rear of the cylinder head with the mark on the bearing cap.

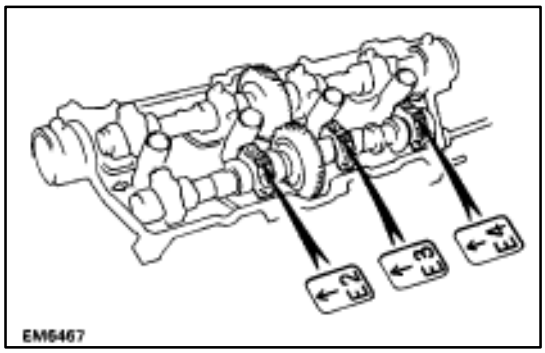

(g) Install the other bearing caps in the sequence shown with the arrow mark facing rearward.

HINT: Align the arrow marks at front and rear of the cylinder head with the mark on the bearing cap.

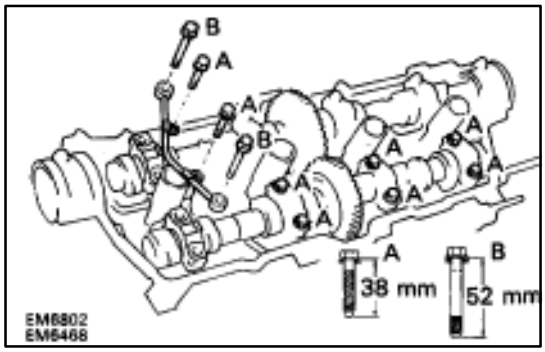

(h) Apply a light coat of engine oil on the threads and under the heads of the bearing cap bolts.

(i) Install the oil feed pipe and ten bolts.

HINT: Use bearing cap bolts 38 mm (1.50 in.) and 52 mm (2.05 in.) in length. Use black colored 38 mm (1.50 in.) bolts. Install the two 52 mm (2.05 in.) bolts in outside positions of the oil pipe. Install the eight 38 mm (1.50 in.) bolts in the other positions.

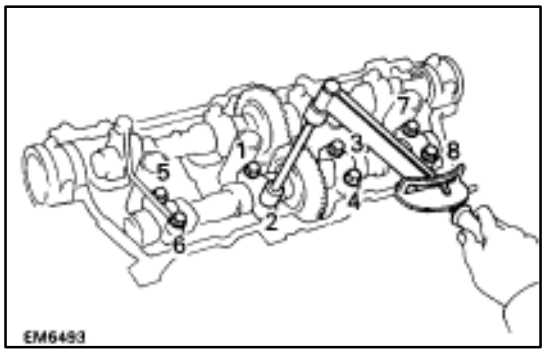

(j) Uniformly tighten the eight bearing cap bolts on the bearing caps of the exhaust camshaft in several passes in the sequence shown.

Torque: 16 N·m (160 kgf·cm, 12 ft·lbf)

WhereEverybodyKnowsYourName

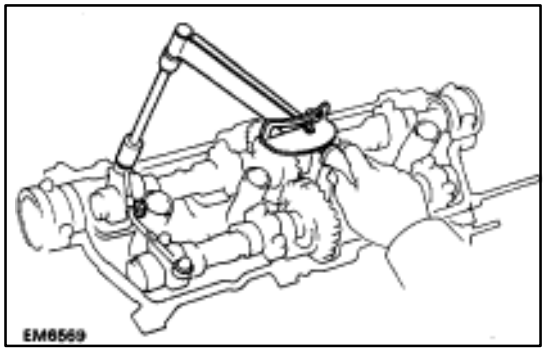

(k) Alternately tighten the two bearing cap bolts on the rear bearing cap of the intake camshaft in several passes.

Torque: 16 N·m (160 kgf·cm, 12 ft·lbf)

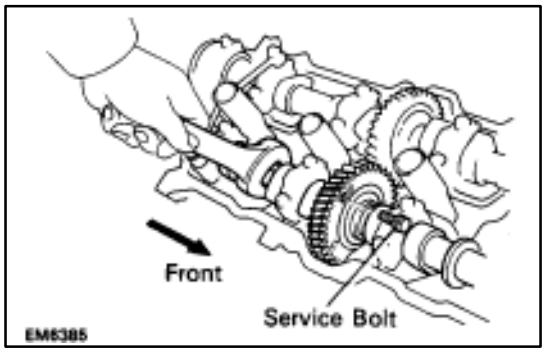

(l) Bring the service bolt installed in the driven subgear upward by turning the hexagon wrench head portion of the camshaft with a wrench.

(m) Remove the service bolt.

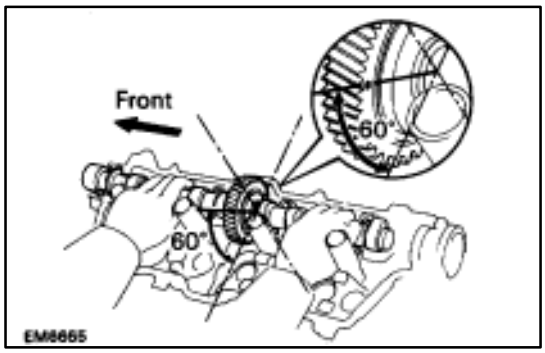

C. Install intake camshaft to LH cylinder head

(a) Apply MP grease to the thrust portion of the camshaft.

(b) Place the intake camshaft at 60° angle of the timing mark (one dot mark) on the cylinder head.

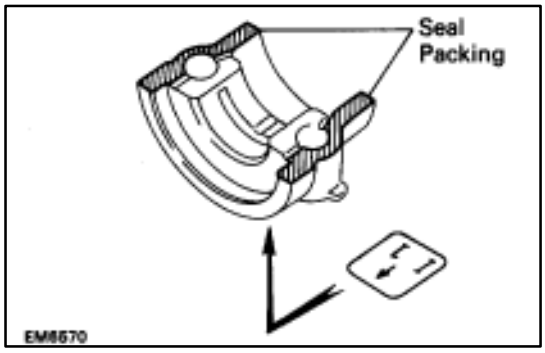

(c) Remove any old packing (FIPG) material.

(d) Apply seal packing to the bearing cap (mark ”I1”) as shown.

Seal packing: Part No. 08826–00080 or equivalent

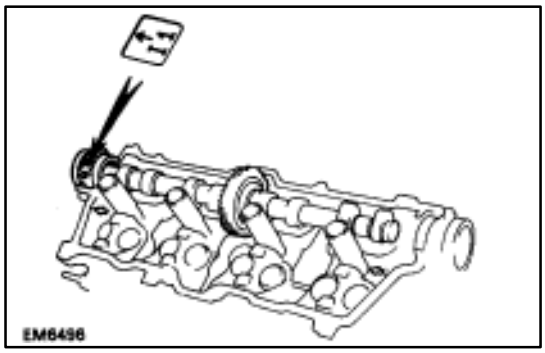

(e) Install the front bearing cap (mark ”I1”) with the arrow mark facing forward.

HINT:

- Installing the front bearing cap will determine the thrust position of the camshaft.
- Align the arrow marks at front and rear of the cylinder head with the mark on the bearing cap.

WhereEverybodyKnowsYourName

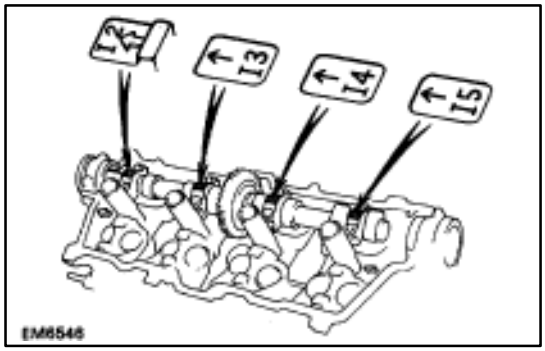

(f) Install the other bearing caps in the sequence shown with the arrow mark facing forward.

HINT: Align the arrow marks at front and rear of the cylinder head with the mark on the bearing cap.

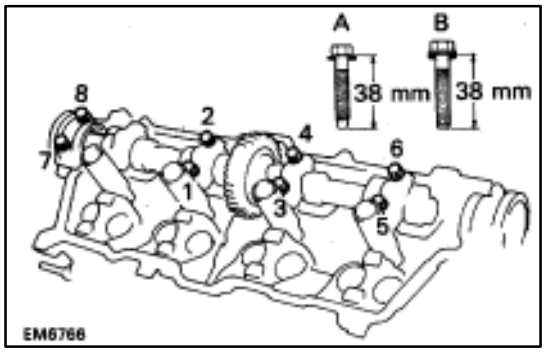

(g) Apply a light coat of engine oil on the threads and under the heads (A only) of the bearing cap bolts.

HINT: Do not apply engine oil under the heads of the bearing cap bolts (B).

(h) Install a new seal washer to the bearing cap bolt (B). Install the eight bearing cap bolts as shown.

HINT:

- Use bearing cap bolts 38 mm (1.50 in.) in length. The bolts are black (A) or silver (B) in color. Install the two silver bolts to the front bearing cap. Install the six black bolts to the other positions.
- After installing the oil feed pipe, install the two bolts to the bearing cap second from the front as directed in step D (i).

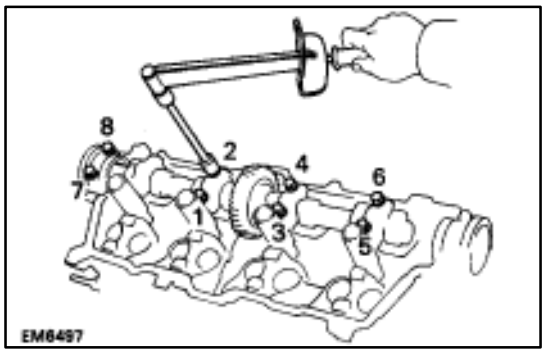

(i) Uniformly tighten the eight bearing cap bolts in several passes in the sequence shown.

Torque: 16 N·m (160 kgf·cm, 12 ft·lbf)

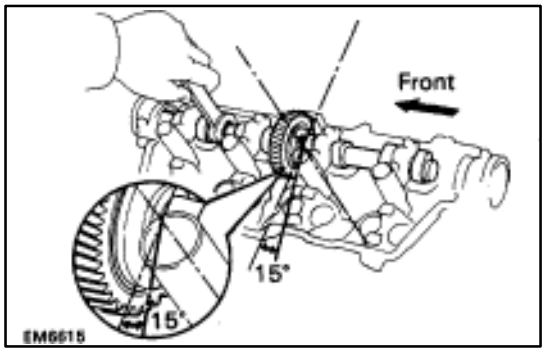

D. Install exhaust camshaft to LH cylinder head

(a) Set the timing mark (two dot marks) of the camshaft drive gear at 15° angle by turning the hexagon wrench head portion of the intake camshaft with a wrench.

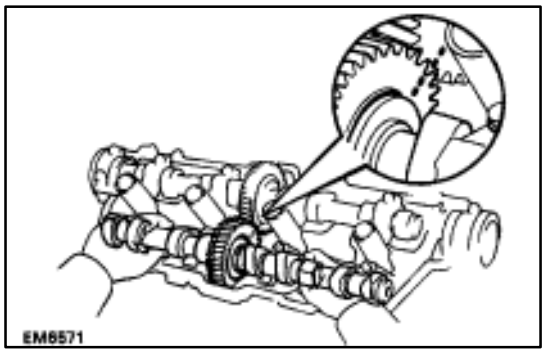

(b) Apply MP grease to the thrust portion of the exhaust camshaft.

(c) Align the timing marks (two dot marks) of the camshaft drive and driven gears.

(d) Place the exhaust camshaft on the cylinder head.

WhereEverybodyKnowsYourName

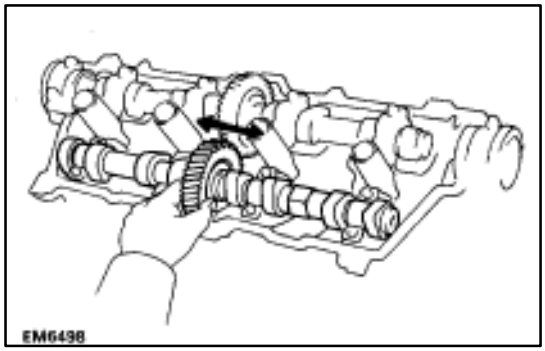

(e) Check that the exhaust camshaft moves smoothly in the thrust direction.

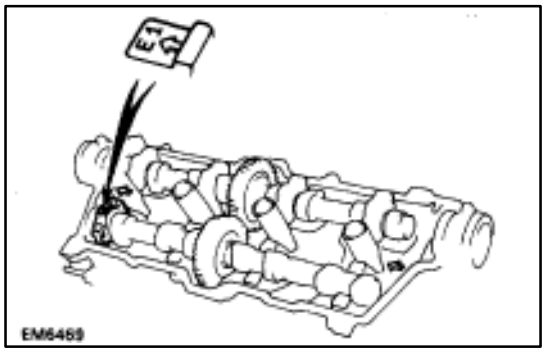

(f) Install the front bearing cap with the arrow mark facing forward.

HINT:

- Installing the front bearing cap will determine the thrust position of the camshaft.
- Align the arrow marks at front and rear of the cylinder head with the mark on the bearing cap.

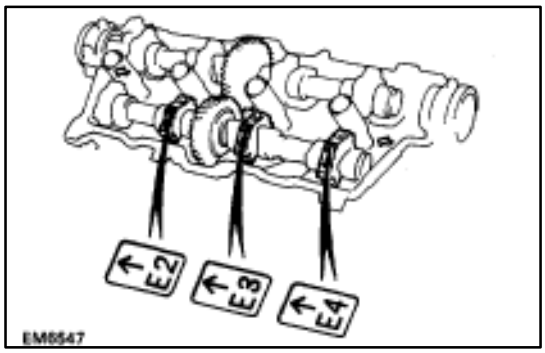

(g) Install the other bearing caps in the sequence shown with the arrow mark facing forward.

HINT: Align the arrow marks at front and rear of the cylinder head with the mark on the bearing cap.

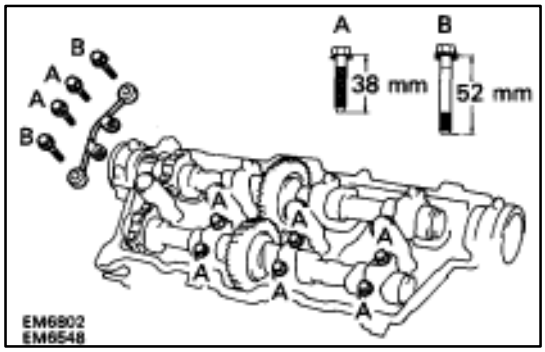

(h) Apply a light coat of engine oil on the threads and under the heads of the bearing cap bolts.

(i) Install the oil feed pipe and ten bolts.

HINT: Use bearing cap bolts 38 mm (1.50 in.) and 52 mm (2.05 in.) in length. Use black colored 38 mm (1.50 in.) bolts. Install the two 52 mm (2.05 in.) bolts in outside positions of the oil pipe. Install the eight 38 mm (1.50 in.) bolts in the other positions.

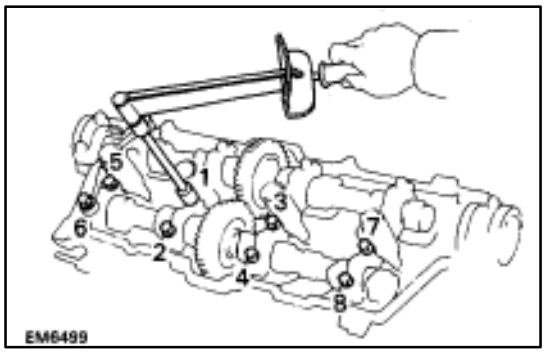

(j) Uniformly tighten the eight bearing cap bolts on the bearing caps of the exhaust camshaft in several passes in the sequence shown.

Torque: 16 N·m (160 kgf·cm, 12 ft·lbf)

WhereEverybodyKnowsYourName

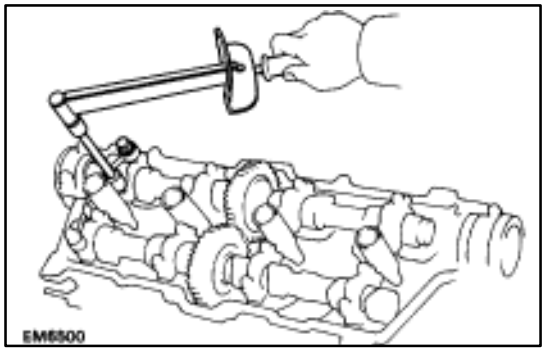

(k) Alternately tighten the two bearing cap bolts on the bearing cap of the intake camshaft second from the front in several passes.

Torque: 16 N·m (160 kgf·cm, 12 ft·lbf)

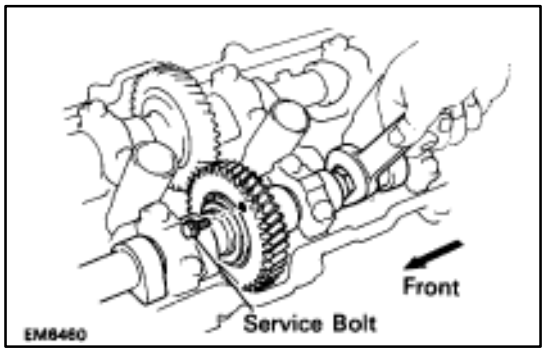

(l) Bring the service bolt installed in the driven subgear upward by turning the hexagon wrench head portion of the camshaft with a wrench.

(m) Remove the service bolt.

8. CHECK AND ADJUST VALVE CLEARANCE

(See steps 19 to 23 on pages EM–15 to 22)

Turn the camshaft, and position the cam lobe upward, check and adjust the valve clearance.

Valve clearance:

Intake 0.15–0.25 mm (0.006–0.010 in.)

Exhaust 0.25–0.35 mm (0.010–0.014 in.)

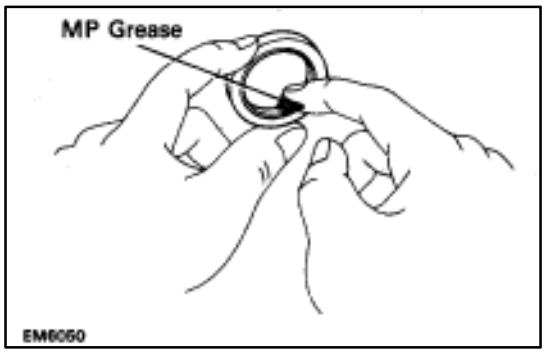

9. INSTALL CAMSHAFT OIL SEALS

(a) Apply MP grease to a new oil seal lip.

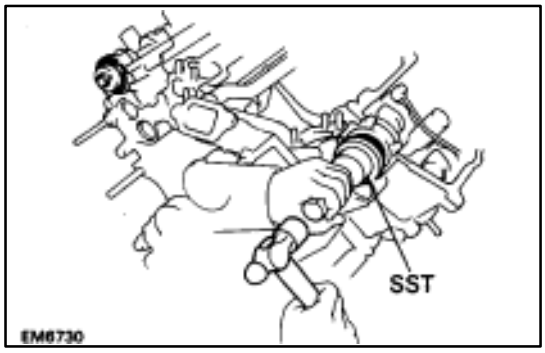

(b) Using SST and a hammer, tap in the two oil seals.

SST 09223–46011

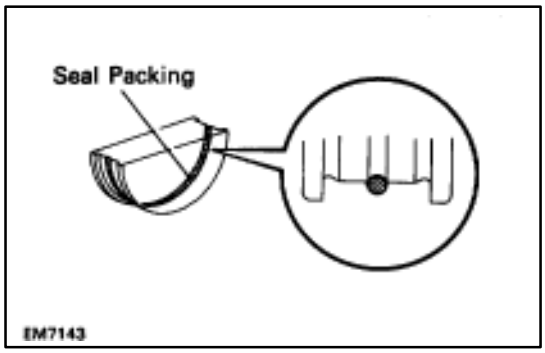

10. INSTALL SEMI–CIRCULAR PLUGS

(a) Remove any oil packing (FIPG) material.

(b) Apply seal packing to the semi–circular plug groove.

Seal packing: Part No. 08826–00080 or equivalent

WhereEverybodyKnowsYourName

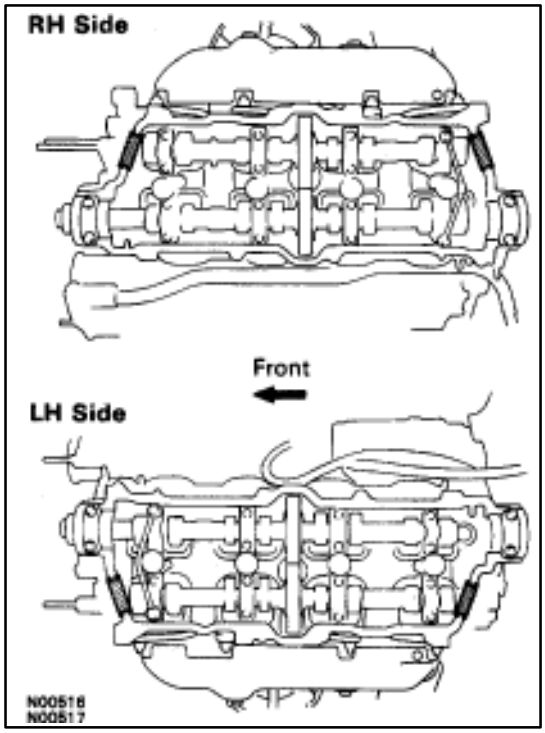

(c) Install the four semi–circular plugs.

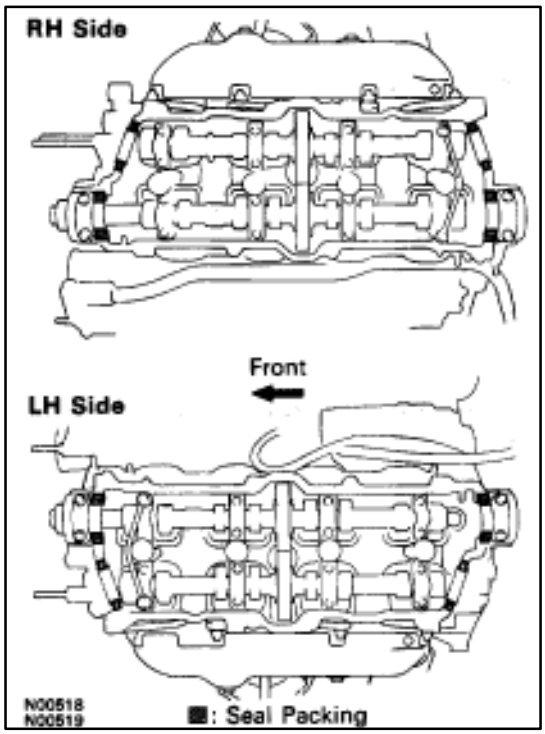

11. INSTALL CYLINDER HEAD COVERS

(a) Remove any oil packing (FIPG) material.

(b) Apply seal packing to the cylinder heads as shown in the figure.

Seal packing: Part No.08826–00080 or equivalent

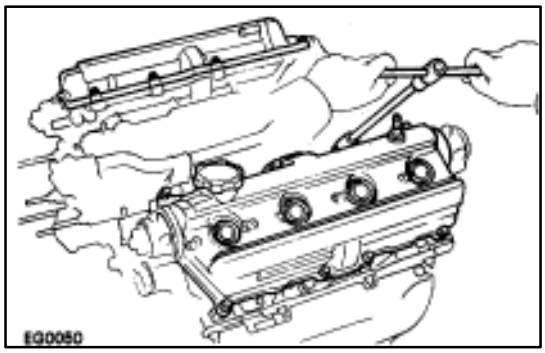

(c) Install the gasket to the cylinder head cover.

(d) Install the seal washer to the bolt. Install the cylinder head cover with the eight bolts. Uniformly tighten the bolts. Install the two cylinder head covers

Torque: 5.9 N·m (60 kgf·cm, 52 in.·lbf)

WhereEverybodyKnowsYourName

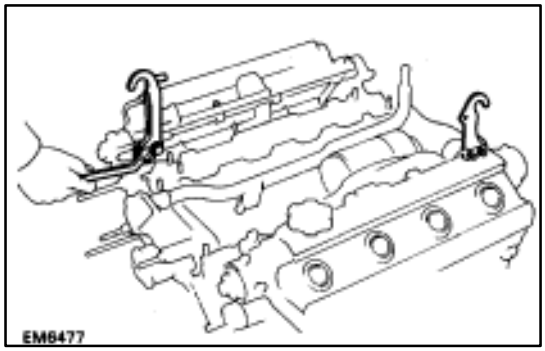

12. INSTALL ENGINE HANGERS

Install the engine hanger with the two bolts.

Install the two engine hangers.

Torque: 37 N·m (380 kgf·cm, 27 ft·lbf)

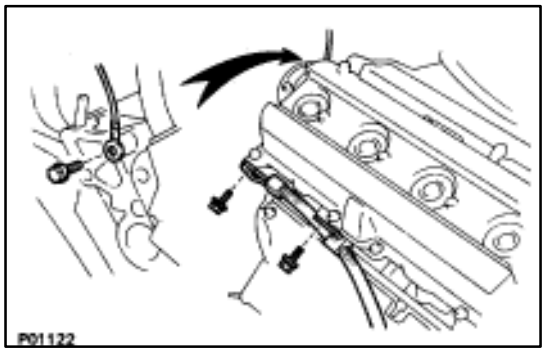

13. CONNECT GROUND STRAP TO RH CYLINDER HEAD

14. INSTALL ENGINE WIRE TO RH CYLINDER HEAD

Install the engine wire with the two bolts.

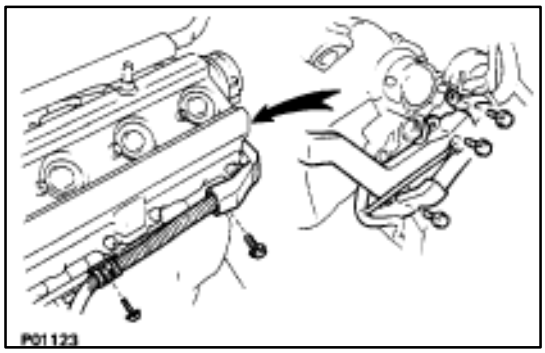

15. INSTALL ENGINE WIRE TO LH CYLINDER HEAD

Install the engine wire with the five bolts.

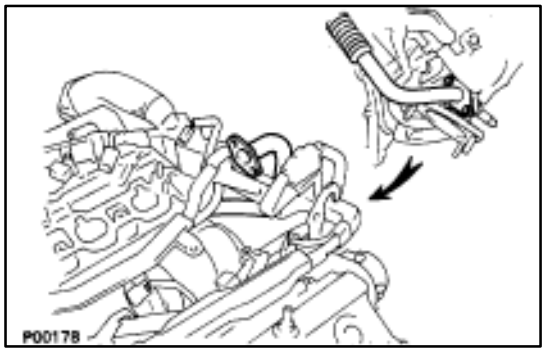

16. INSTALL EGR PIPE TO RH EXHAUST MANIFOLD

Install a new gasket and the EGR pipe with the two new nuts.

Torque: 18 N·m (185 kgf·cm, 13 ft·lbf)

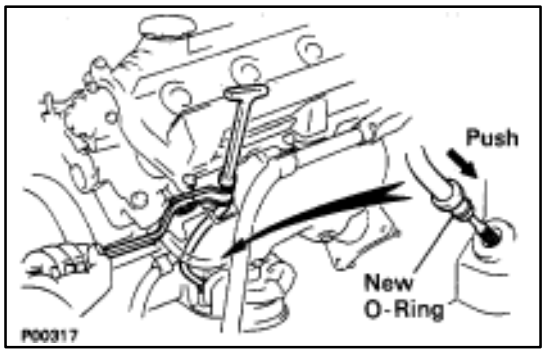

17. INSTALL OIL DIPSTICK AND GUIDE FOR ENGINE

(a) Install a new O–ring to the dipstick guide.
(b) Apply a light of engine oil on the O–ring.
(c) Push in the dipstick guide into the guide hole of the No.1 oil pan.
(d) Install the dipstick guide with the bolt.
(e) Install the oil dipstick.

18. INSTALL OIL DIPSTICK AND GUIDE FOR A/T

WhereEverybodyKnowsYourName

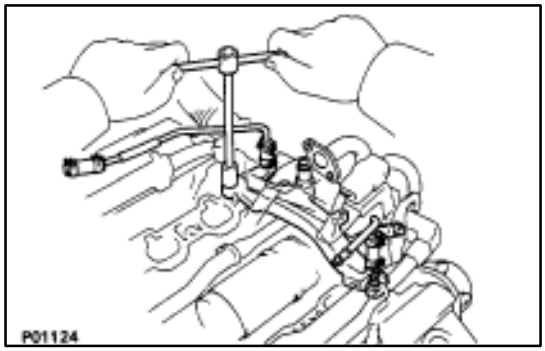

19. INSTALL REAR WATER BY–PASS JOINT

(a) Install two new gaskets and the water by–pass joint with the four nuts. Alternately tighten the nuts.

Torque: 18 N·m (185 kgf·cm, 13 ft·lbf)

(b) Install the bolt holding the water by–pass pipe to the engine hanger.

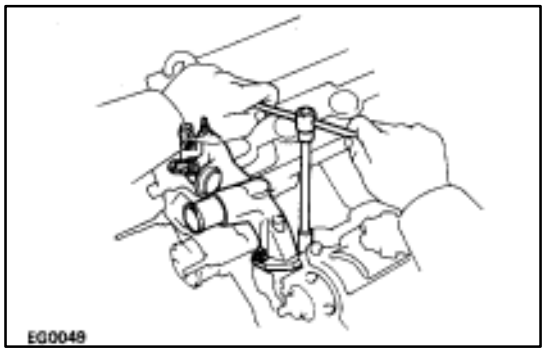

20. INSTALL FRONT WATER BY–PASS JOINT

(a) Install two new gaskets and the water by–pass joint with the four nuts. Alternately tighten the nuts.

Torque: 18 N·m (185 kgf·cm, 13 ft·lbf)

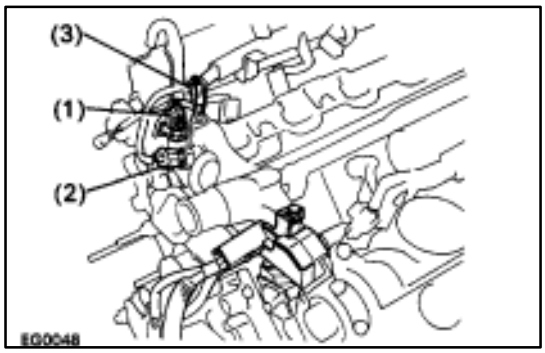

(b) Install the engine wire clamp with the bolt.

(c) Connect the following connectors:

(1) Water temperature sensor connector

(2) Cold start injector time switch connector

(3) Water temperature sender gauge connector

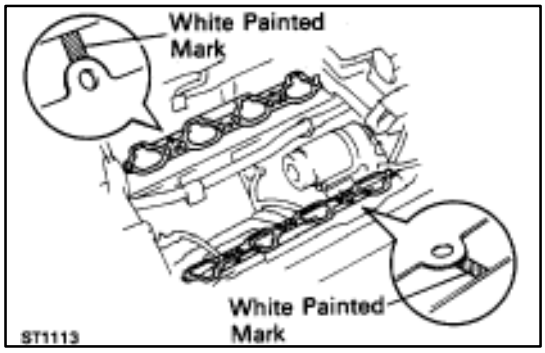

21. INSTALL INTAKE MANIFOLD

(a) Place two new gaskets on the cylinder heads with the white painted mark facing upward.

NOTICE: Align the port holes of the gasket and cylinder head. Be careful of the installation direction.

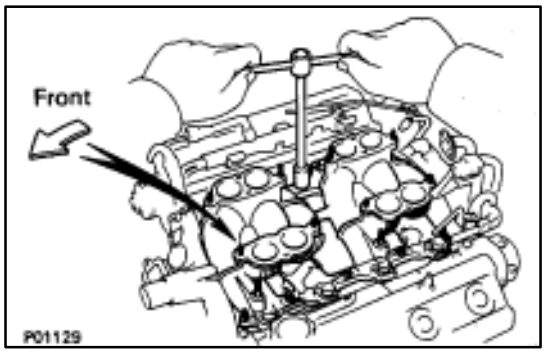

(b) Place the intake manifold in position on the cylinder head with the arrow mark facing forward.

NOTICE: Be careful of the installation direction.

(c) Install and uniformly tighten the six mounting bolts and four mounting nuts.

Torque: 18 N·m (185 kgf·cm, 13 ft·lbf)

HINT: Use bolts 30 mm (1.18 in.) in length.

WhereEverybodyKnowsYourName

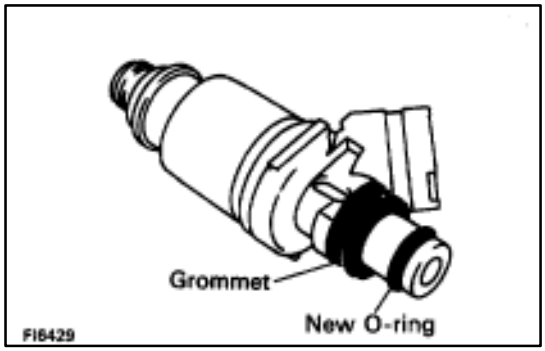

22. INSTALL DELIVERY PIPES AND INJECTORS

(a) Install the grommet and a new O–ring to each injector.

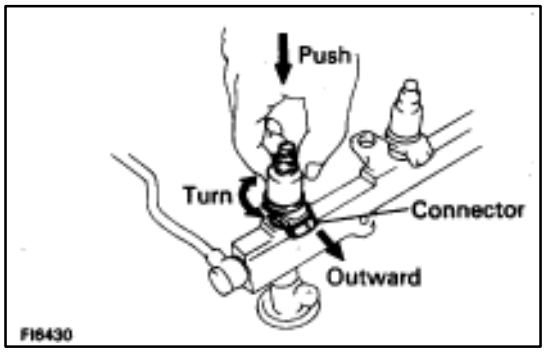

(b) While turning the Injector clockwise and counterclockwise, push it to delivery pipe. Install the eight injectors.

(c) Position the injector connector outward.

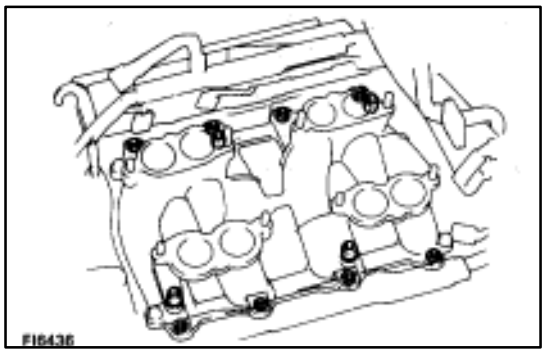

(d) Place the eight insulators and four spacers in positions on the intake manifold.

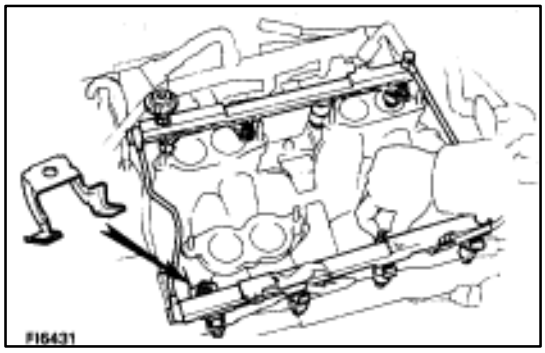

(e) Place the eight injectors and two delivery pipes assembly in position on the intake manifold.

(f) Temporarily install the connector bracket and four mounting nuts.

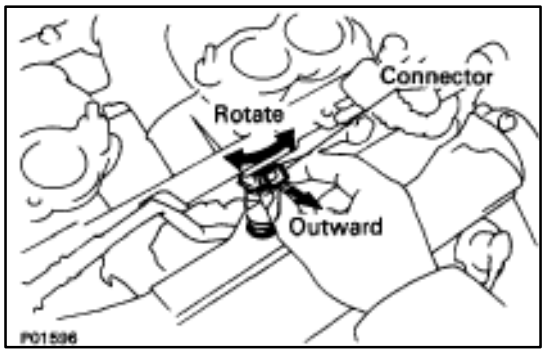

(g) Check that the injectors rotates smoothly.

(h) Position the injector connectors outward.

WhereEverybodyKnowsYourName

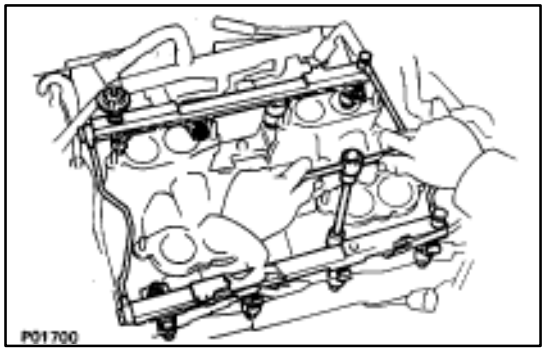

(i) Tighten the four mounting nuts.
Torque: 18 N·m (185 kgf·cm, 13 ft·lbf)

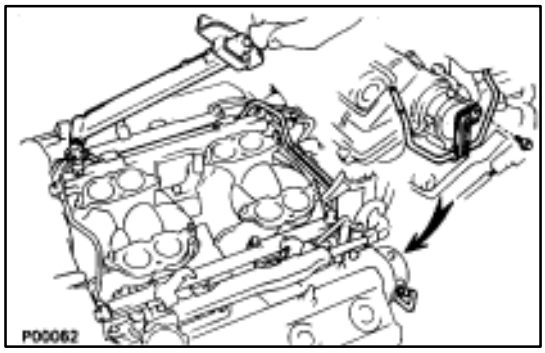

23. INSTALL FUEL RETURN PIPE

(a) Temporarily install the return pipe with the bolt, two new gaskets and union bolt.
(b) Tighten the union bolt holding the return pipe to the fuel pressure regulator.
Torque: 35 N·m (360 kgf·cm, 26 ft·lbf)
(c) Tighten the bolt holding the return pipe to the LH cylinder head.

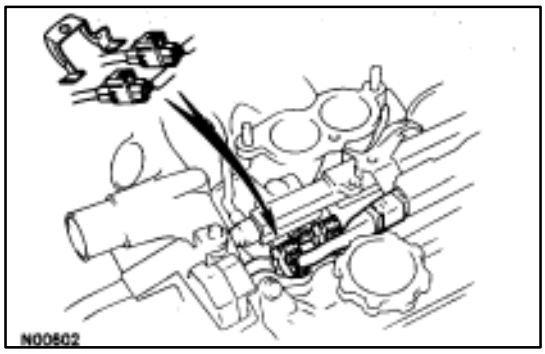

24. INSTALL ENGINE WIRE TO DELIVERY PIPES, REAR WATER BY–PASS JOINT AND RH CYLINDER HEAD

(a) Connect the eight injector connectors.
(b) Install the two engine wire connectors to connectors bracket on the LH delivery pipe.

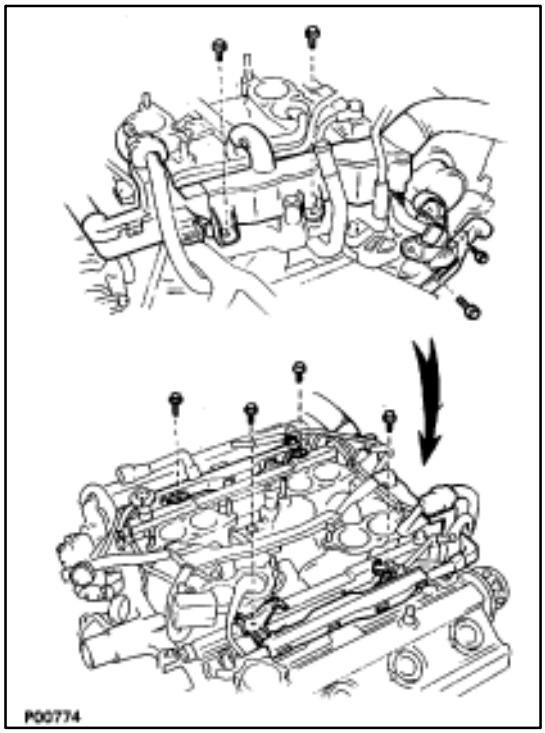

(c) Install the engine wire to the RH cylinder head with the two bolts.
(d) Install the engine wire to the rear water by–pass joint with the two bolts.
(e) Install the engine wire to the delivery pipes with the four bolts.

WhereEverybodyKnowsYourName

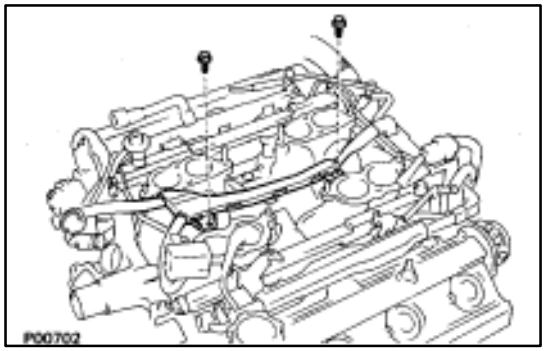

25. INSTALL ENGINE WIRE TO INTAKE MANIFOLD

Install the engine wire with the two bolts.

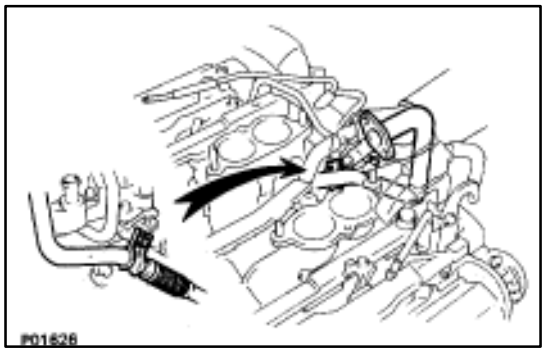

26. TEMPORARILY INSTALL EGR PIPE TO RH CYLINDER HEAD

Temporarily install a new gasket and the EGR pipe with the two bolts.

HINT: Use bolt 25 mm (0.98 in.) in length.

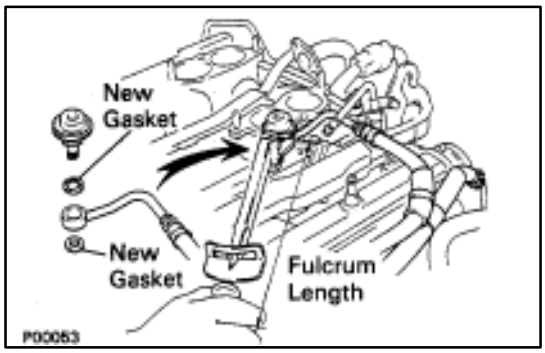

27. CONNECT FUEL RETURN HOSE TO FUEL RETURN PIPE

28. CONNECT FUEL INLET HOSE TO LH DELIVERY PIPE

Connect the inlet hose with two new gaskets and the pulsation damper.

SST 09612–24012 (09617–24011)

Torque: 39 N·m (400 kgf·cm, 29 ft·lbf)

33 N·m (340 kgf·cm, 24 ft·lbf) for SST

HINT: Use a torque wrench with a fulcrum length of 30 cm (11.81 in.).

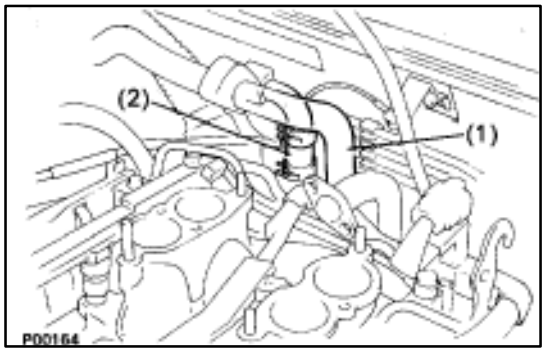

29. CONNECT HEATER WATER HOSES

Connect the following hoses:

(1) Water hose to water by–pass pipe

(2) Water hose to rear water by–pass joint

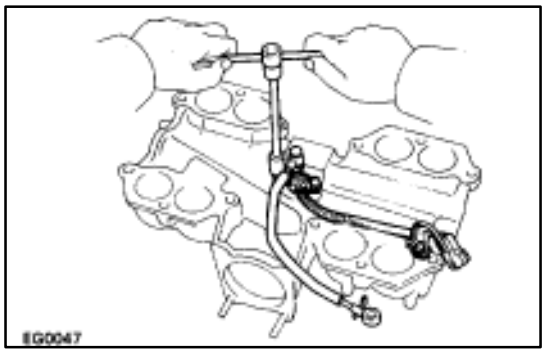

30. INSTALL AIR INTAKE CHAMBER

(a) Install the cold start injector, tube and wire assembly with the three bolts.

Torque: 7.8 N·m (80 kgf·cm, 69 in.·lbf)

WhereEverybodyKnowsYourName

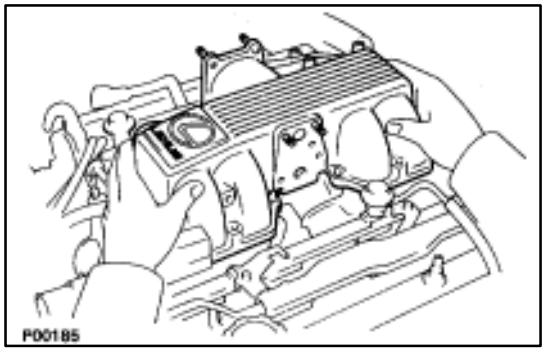

(b) Place four new gaskets on the intake manifold.

HINT: Gaskets can only be used twice before being replaced.

(c) Place the air intake chamber on the intake manifold.

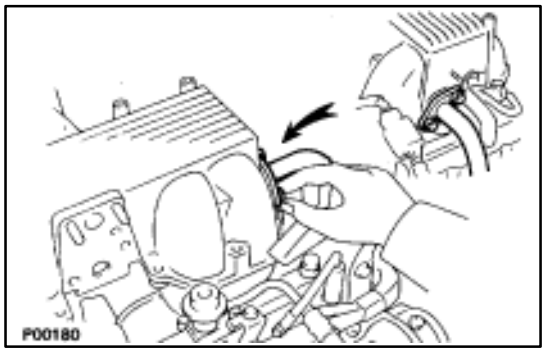

(d) Temporarily connect the EGR pipe to the air intake chamber with a new gasket and the two bolts.

HINT: Use bolts 20 mm (0.79 in.) in length.

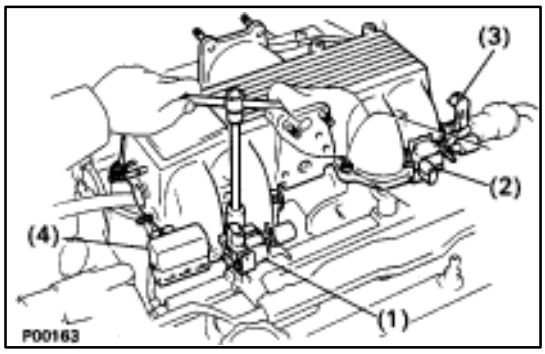

(e) Temporarily install the air intake chamber and following parts with the four bolts and eight nuts:
   (1) VSV for fuel pressure control system
   (2) (Exc. USA Spec.)
       VSV for EGR system
   (3) A/T throttle cable bracket
   (4) Check connector (”DIAGNOSIS”) connector

(f) Uniformly tighten the bolts and nuts in several passes.

Torque: 18 N·m (185 kgf·cm, 13 ft·lbf)

HINT: Use bolts 40 mm (1.57 in.) in length.

(g) Tighten the two bolts holding the EGR pipe to the air intake chamber.

Torque: 18 N·m (185 kgf·cm, 13 ft·lbf)

(h) Tighten the two bolts holding the EGR pipe to the RH cylinder head.

Torque: 18 N·m (185 kgf·cm, 13 ft·lbf)

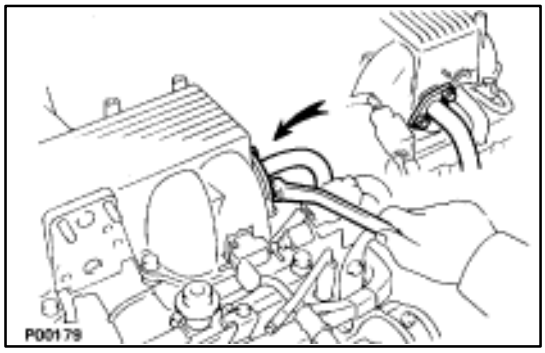

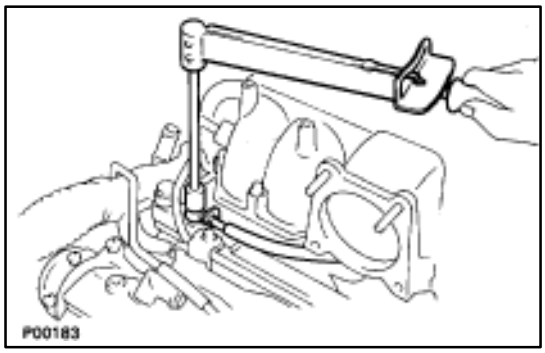

(i) Connect the cold start injector tube to the RH delivery pipe with the two new gaskets and the union bolt.

Torque: 15 N·m (150 kgf·cm, 11 ft·lbf)

(j) Connect the following connectors:
   - Cold start injector connector
   - SV connector for fuel pressure control system
   - (Exc. USA Spec.)
     VSV connector for EGR system

WhereEverybodyKnowsYourName

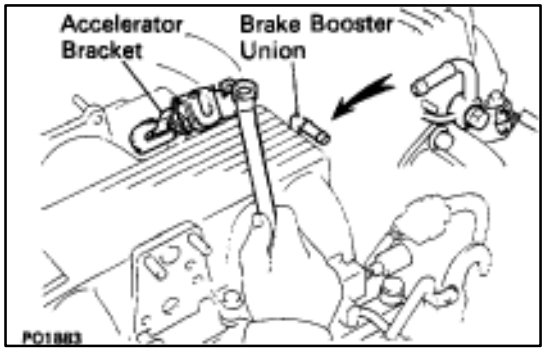

31. INSTALL ACCELERATOR BRACKET

Install the bracket with the bolt and stud bolt.

32. INSTALL BRAKE BOOSTER UNION

Install the union with two new gaskets and the union bolt.

Torque: 29 N·m (300 kgf·cm, 22 ft·lbf)

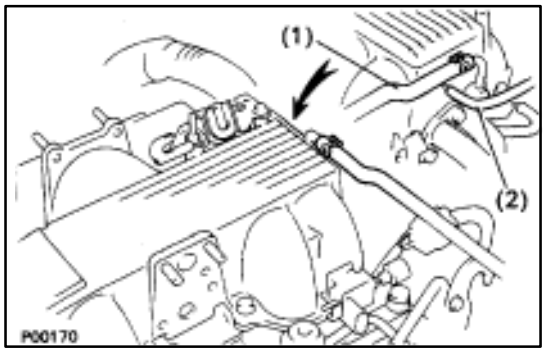

33. CONNECT VACUUM HOSES

Connect the following hoses:

(1) Vacuum hose to brake booster union

(2) Vacuum hose (from VSV for heater water valve) to air intake chamber

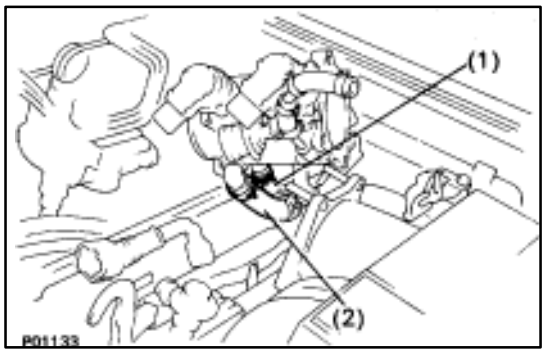

34. INSTALL THROTTLE BODY

(a) Connect the following hoses:

(1) Water by–pass hose to throttle body

(2) PCV hose to throttle body

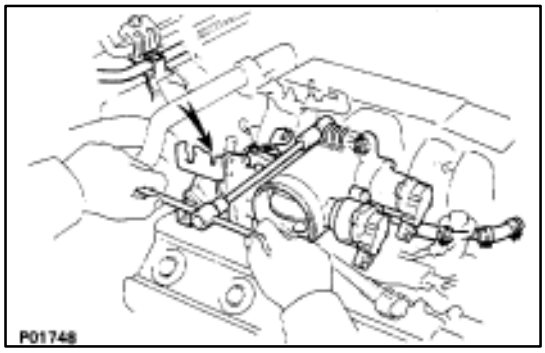

(b) Install a new gasket and throttle body with the two bolts and two nuts.

Torque: 18 N·m (185 kgf·cm, 13 ft·lbf)

HINT: Use bolts 40 mm (1.57 in.) in length.

(c) Install the water by–pass pipe (from rear water bypass joint) to the clamp on the engine wire cover.

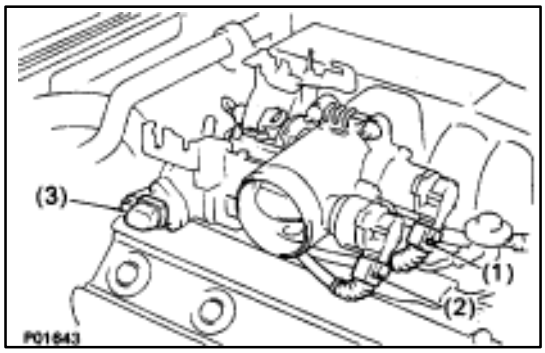

(d) Connect the following connectors:

(1) Throttle position sensor connector

(2) (w/ TRAC)
Sub–throttle position sensor connector

(3) (w/ TRAC)
Sub–throttle actuator connector

WhereEverybodyKnowsYourName

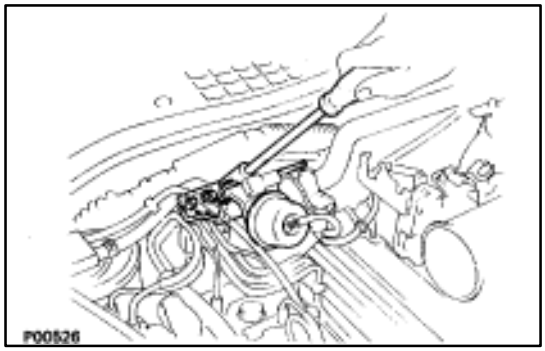

35. INSTALL HEATER WATER VALVE

(a) Install the water valve and bracket assembly with the two bolts.
(b) Install the engine wire clamp with the bolt.
(c) Connect the VSV connector.

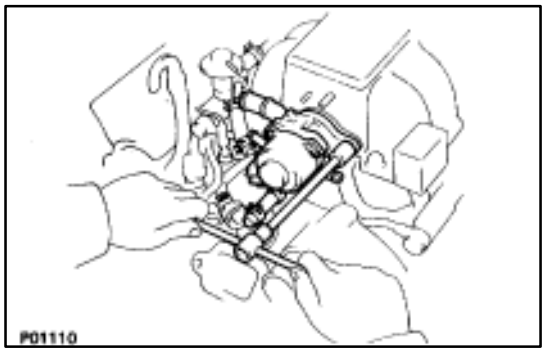

36. INSTALL ISC VALVE

(a) Install a new gasket and the ISC valve with the two nuts.
Torque: 18 N·m (185 kgf·cm, 13 ft·lbf)

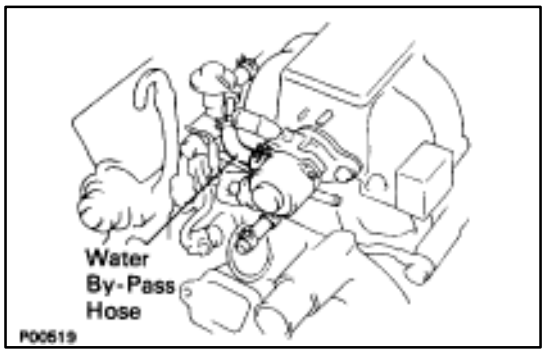

(b) Connect the water by–pass hose (from throttle body) to the ISC valve.
(c) Connect the ISC valve connector.

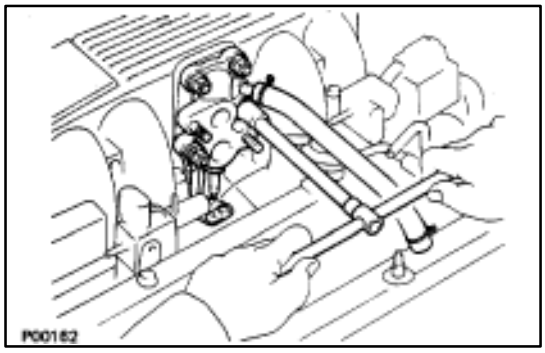

37. INSTALL EGR VALVE ADAPTOR

(a) Install a new gasket, the adaptor and connector bracket (USA spec. only) with the two bolts and two nuts.
Torque: 18 N·m (185 kgf·cm, 13 ft·lbf)
HINT: Use bolts 20 mm (1.79 in.) in length.
NOTICE: Do not touch the air intake chamber and adaptor surfaces of the gasket with your hand.

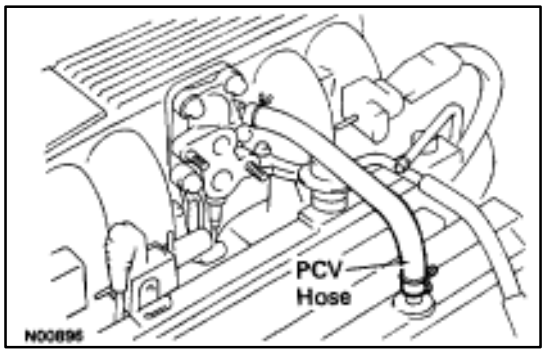

(b) Connect the PCV hose to cylinder head.
(c) (USA Spec. only)
Connect the EGR gas temperature sensor connector.

WhereEverybodyKnowsYourName

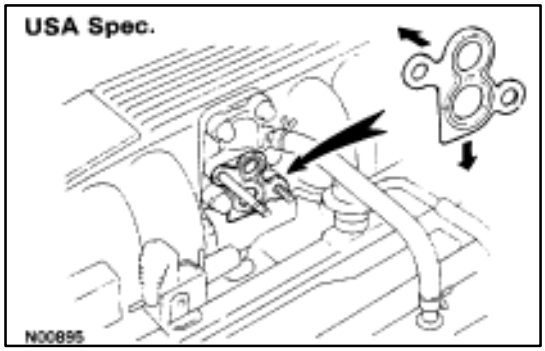

38. (USA Spec.)
INSTALL EGR VALVE

(a) Place a new gasket on the EGR valve adaptor.

NOTICE:

- **Do not touch the adapter and EGR valve surfaces of the gasket with your hand.**
- **Align the port holes of the gasket and adaptor. Be careful of the installation direction.**

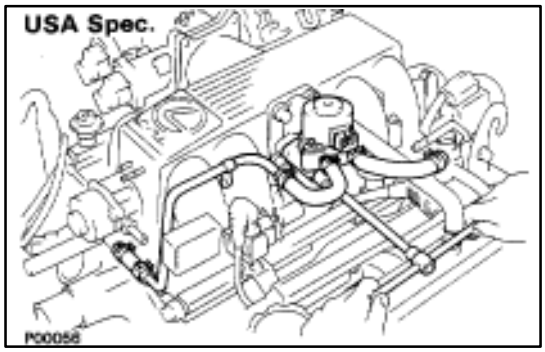

(b) Install the EGR valve with the two nuts.

Torque: 18 N·m (185 kgf·cm, 13 ft·lbf)

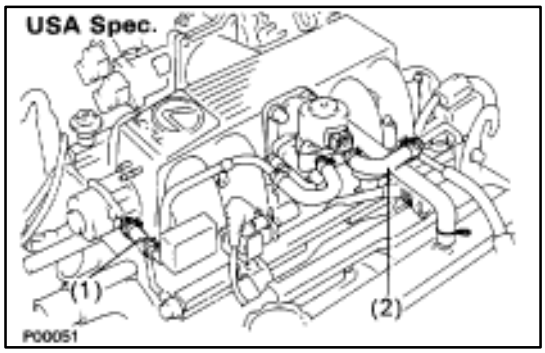

(c) Connect the following hoses:
  (1) Water by–pass pipe hose to ISC valve
  (2) Water by–pass pipe hose to water by–pass pipe (from rear water by–pass joint)

(d) Connect the EGR valve connector.

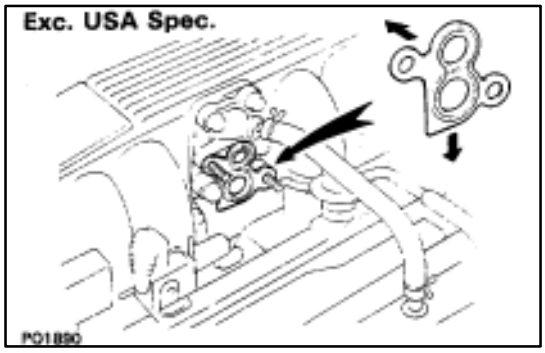

39. (Exc. USA Spec.)
INSTALL EGR VALVE AND VACUUM MODULATOR

(a) Place a new gasket on the EGR valve adaptor.

NOTICE:

- **Do not touch the adapter and EGR valve surfaces of the gasket with your hand.**
- **Align the port holes of the gasket and adaptor. Be careful of the installation direction.**

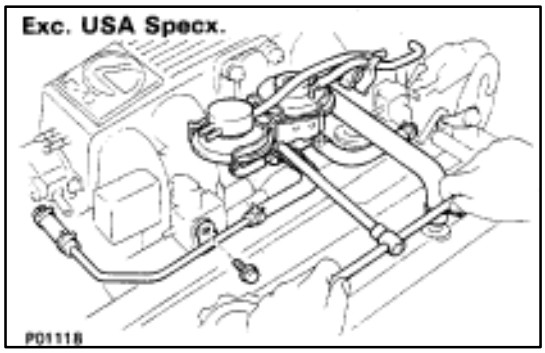

(b) Install the EGR valve and vacuum and modulator assembly with the two nuts and bolt.

Torque (Nut): 18 N·m (185 kgf·cm, 13 ft·lbf)

WhereEverybodyKnowsYourName

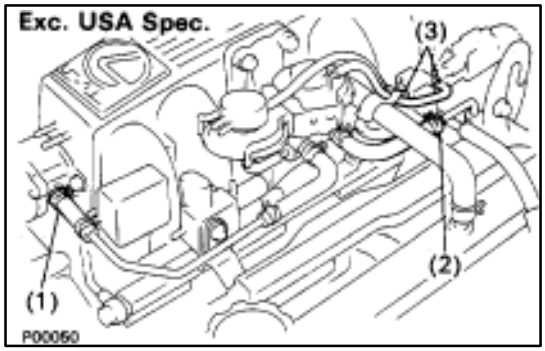

(c) Connect the following hoses:
  (1) Water by–pass pipe hose to ISC valve
  (2) Water by–pass pipe hose to water by–pass pipe (from rear water by–pass joint)
  (3) Two vacuum hoses to VSV for EGR system

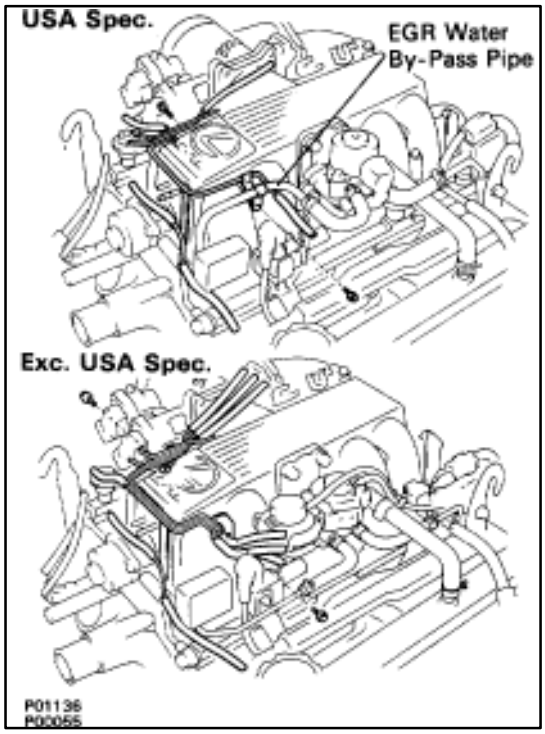

40. INSTALL VACUUM PIPE

(a) Install the vacuum pipe, vacuum hoses assembly and EGR water by–pass pipe (USA spec. only) with the two bolts.

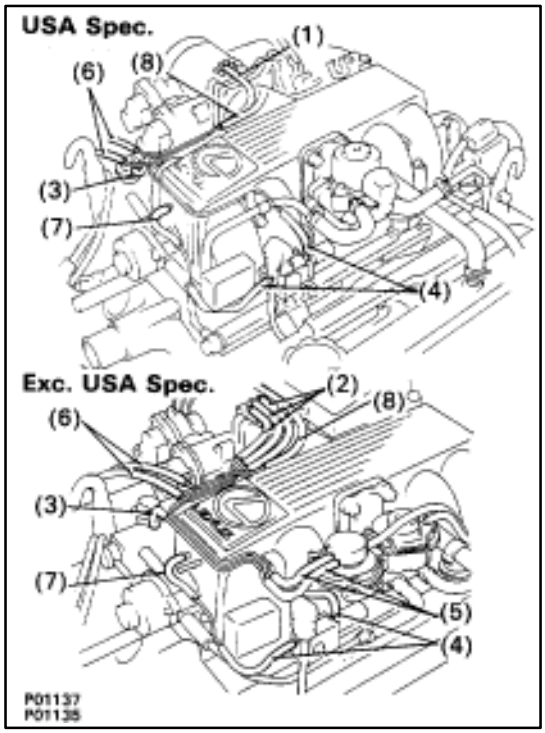

(b) Connect the following hoses:
  (1) (USA Spec.)
  Vacuum hose to throttle body
  (2) (Exc. USA Spec.)
  Three vacuum hoses to throttle body
  (3) Vacuum hose to fuel pressure regulator
  (4) Two vacuum hoses to VSV for fuel pressure control system
  (5) (Exc. USA Spec.)
  Two vacuum hoses to EGR vacuum modulator
  (6) Two vacuum hoses (from VSV for EVAP system) to vacuum pipe
  (7) Vacuum hose (from VSV for fuel pressure control system) to air intake chamber
  (8) Vacuum hose (from charcoal canister) to vacuum pipe

WhereEverybodyKnowsYourName

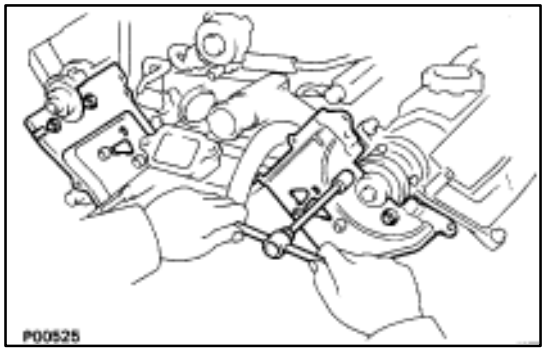

41. INSTALL TIMING BELT REAR PLATES

Install the rear plate with the two bolts. Install the two rear plates.

Torque: 7.8 N·m (80 kgf·cm, 69 in.·lbf)

42. INSTALL WATER INLET AND INLET HOUSING

(a) Remove any old packing (FIPG) material.
- Using a razor blade and gasket scraper, remove all the old packing (FIPG) materials from the gasket surfaces and sealing groove.
- Thoroughly clean all components to remove all the loose materials.
- Using a non–residue solvent, clean both sealing surfaces.

(b) Apply seal packing to the sealing groove of the water inlet housing as shown in the illustration.

Seal packing: Part No.08826–00100 or equivalent

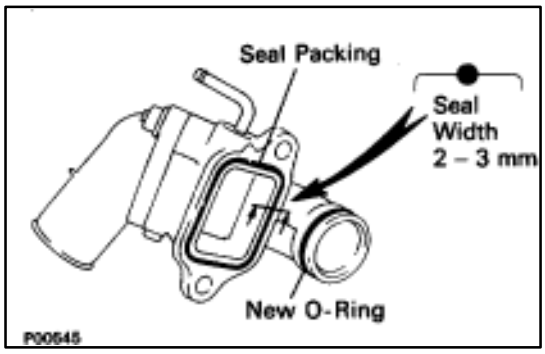

- Install a nozzle that has been cut to a 2–3 mm (0.08–0.12 in.) opening.
- Parts must be assembled within 5 minutes of application. Otherwise the material must be removed and reapplied.
- Immediately remove nozzle from the tube and reinstall cap.

(c) Install a new O–ring to the water inlet housing.

(d) Apply soapy water to the O–ring.

(e) Push the water inlet housing end into the water pump hole.

(f) Install the water inlet and housing assembly with the two bolts. Alternately tighten the bolts.

Torque: 18 N·m (185 kgf·cm, 13 ft·lbf)

HINT: Use bolts 25 mm (0.98 in.) in length.

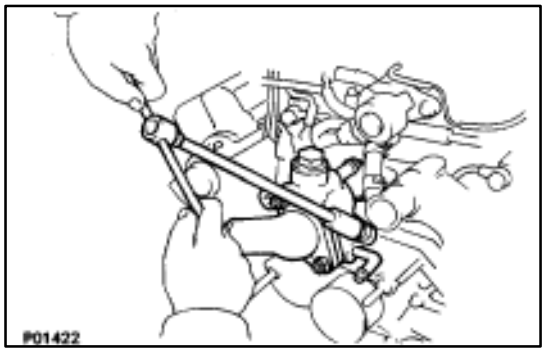

(g) Connect the water by–pass hose to the ISC valve.

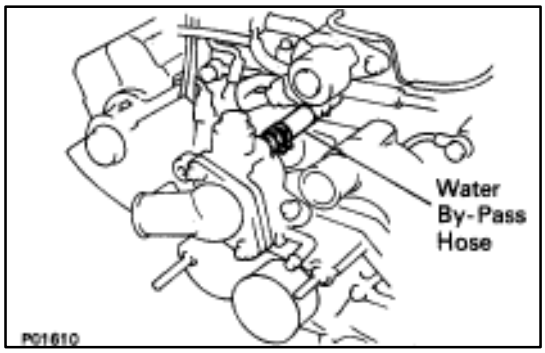

WhereEverybodyKnowsYourName

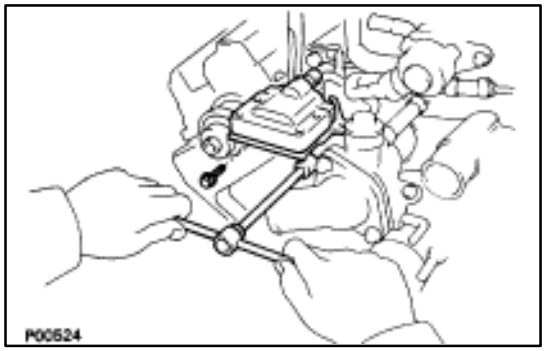

43. INSTALL RH IGNITION COIL

Install the ignition coil with the two bolts.

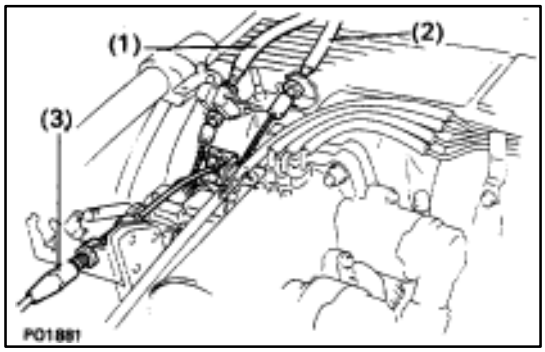

44. CONNECT CONTROL CABLES TO THROTTLE BODY

Connect the following cables:

(1) Accelerator cable
(2) A/T throttle cable
(3) (w/ Cruise Control System)

Cruise control actuator cable

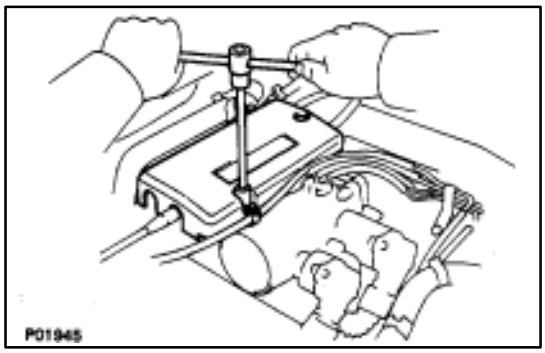

45. INSTALL THROTTLE BODY COVER

Install the throttle body cover and hose clamp with the two bolts and cap nut.

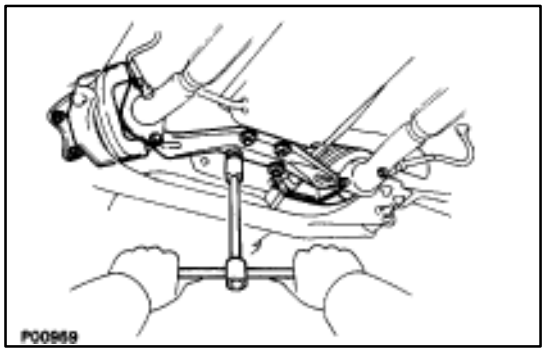

46. INSTALL CATALYTIC CONVERTERS (MAIN)

(a) Install a new gasket and the catalytic converter to the exhaust manifold with the three new bolts. Install the two catalytic converters.

Torque: 62 N·m (630 kgf·cm, 46 ft·lbf)

(b) Install a new gasket to each front end of the front exhaust pipe.

(c) Connect the front exhaust pipe to the catalytic converters.

(d) Temporarily install the four bolts holding the pipe support bracket to the transmission.

(e) Install the four bolts and nuts holding the catalytic converters to the front exhaust pipe.

Torque: 43 N·m (440 kgf·cm, 32 ft·lbf)

(f) Tighten the four bolts holding the pipe support bracket to the transmission.

Torque: 43 N·m (440 kgf·cm, 32 ft·lbf)

WhereEverybodyKnowsYourName

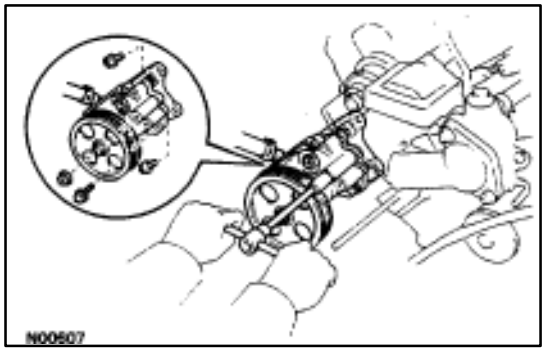

47. INSTALL PS PUMP

(a) Install the PS pump with the three bolts and nut. Alternately tighten the bolts and nut.

Torque:

Bolt 39 N·m (400 kgf·cm, 29 ft·lbf)
Nut 43 N·m (440 kgf·cm, 32 ft·lbf)

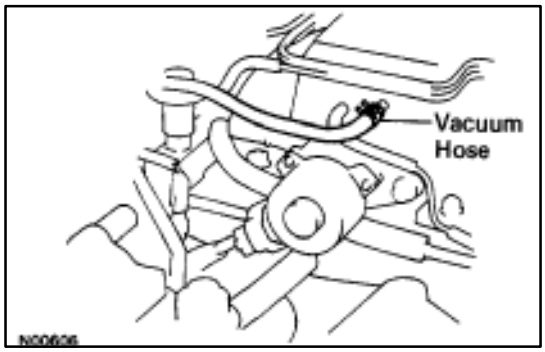

(b) Connect the vacuum hose to the vacuum pipe.

48. INSTALL HYDRAULIC PUMP AND CAMSHAFT TIMING PULLEYS
(See steps 8, 10 and 11 on pages EM–48 to 49)

49. INSTALL HYDRAULIC PUMP AND CAMSHAFT TIMING PULLEYS
(See steps 12 to 43 on pages EM–49 to 57)

50. PERFORM ROAD TEST

Check for abnormal noise, shock, slippage, correct shift points and smooth operation.

WhereEverybodyKnowsYourName

CYLINDER BLOCK

COMPONENTS FOR REMOVAL AND INSTALLATION OF ENGINE WITH TRANSMISSION

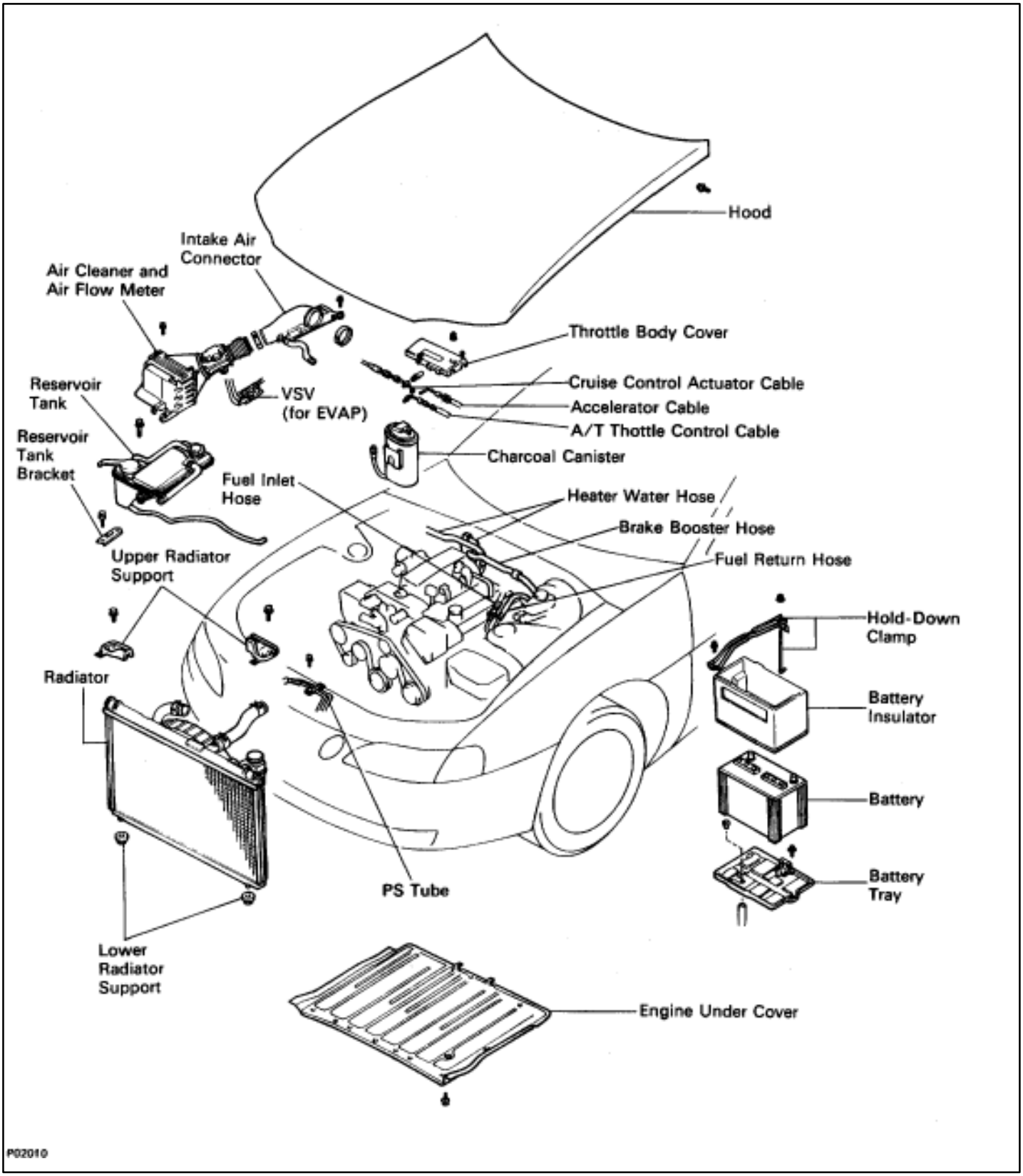

WhereEverybodyKnowsYourName

COMPONENTS FOR REMOVAL AND INSTALLATION OF ENGINE WITH TRANSMISSION (Cont'd)

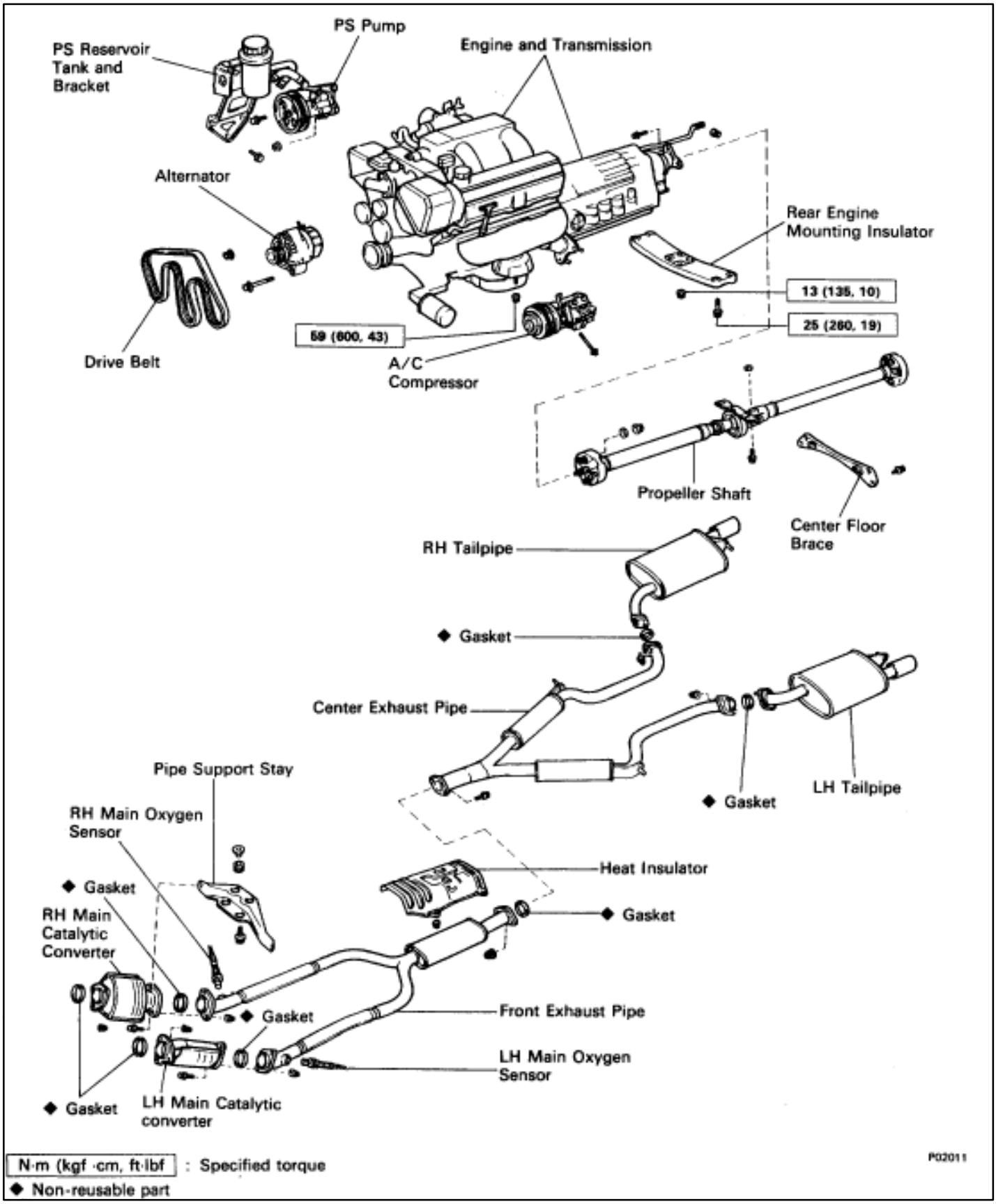

WhereEverybodyKnowsYourName

COMPONENTS FOR REMOVAL AND INSTALLATION OF ENGINE WITH TRANSMISSION (Cont'd)

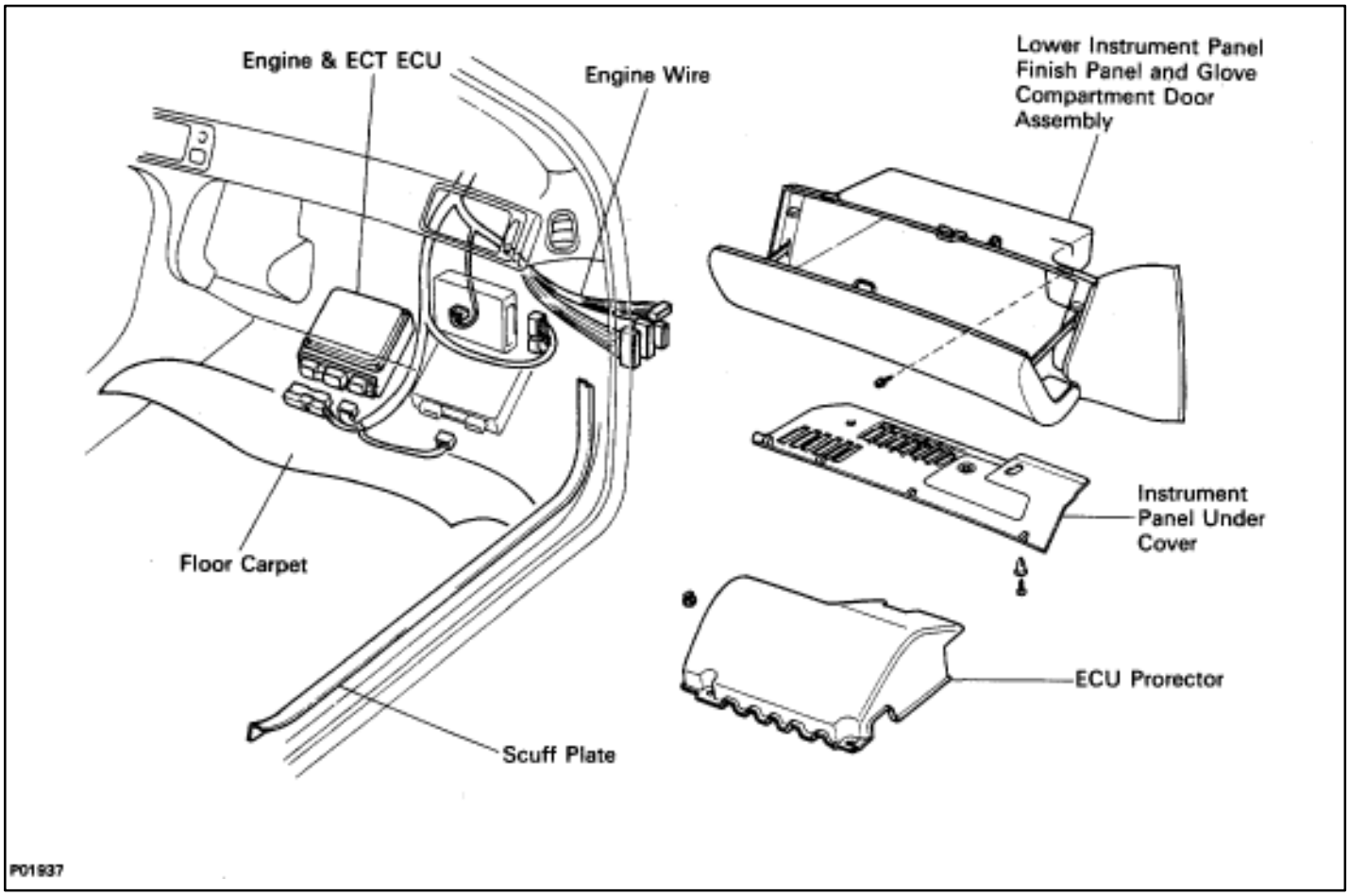

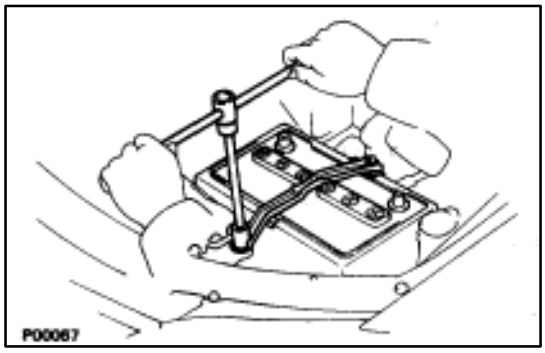

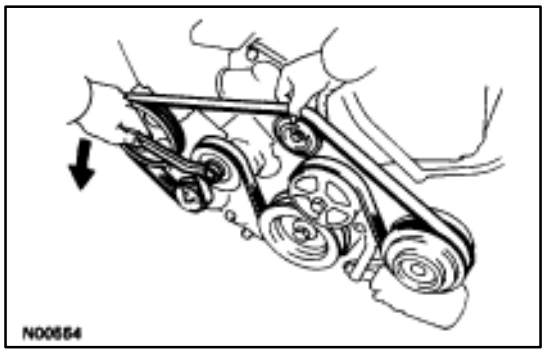

REMOVAL OF ENGINE WITH TRANSMISSION

1. **REMOVE BATTERY**
   CAUTION: Work must be started after approx. 20 seconds or longer from the time the ignition switch is turned to the "LOCK" position and the negative (–) terminal cable is disconnected from the battery.
2. **REMOVE ENGINE UNDER COVER**
3. **DRAIN ENGINE COOLANT (See page CO–6)**
4. **DRAIN ENGINE OIL**
5. **REMOVE HOOD**
6. **REMOVE DRIVE BELT**
   Loosen the drive belt tension by turning the drive belt tensioner counterclockwise, and remove the drive belt.
   HINT: The pulley bolt for the belt tensioner has a left–hand thread.

WhereEverybodyKnowsYourName

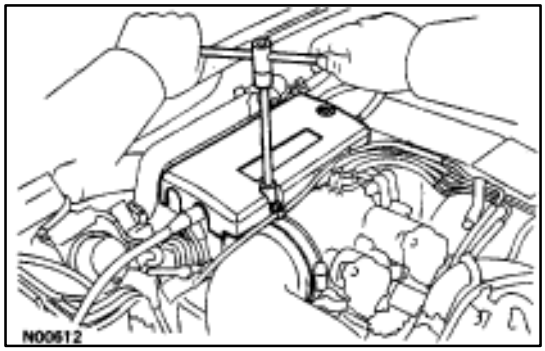

7. REMOVE THROTTLE BODY COVER

(a) Remove the mounting cap nut.

(b) Loosen the two bolts, and remove the throttle body cover.

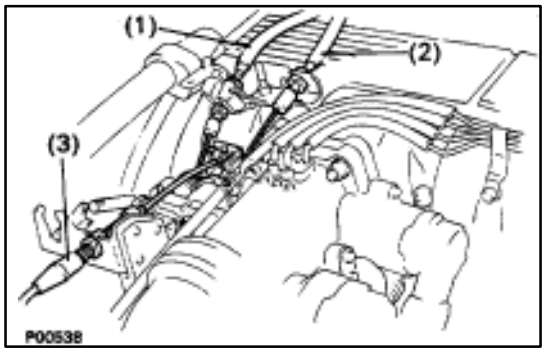

8. DISCONNECT CONTROL CABLES FROM THROTTLE BODY

Disconnect the following cables:

(1) Accelerator cable

(2) A/T throttle cable

(3) (w/ Cruise Control System)
Cruise control actuator cable

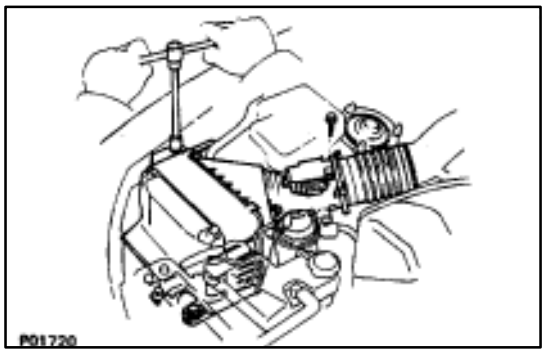

9. REMOVE AIR CLEANER AND AIR FLOW METER

(a) Disconnect the air flow meter connector.

(b) Loosen the hose clamp holding the air cleaner hose to the intake air connector.

(c) Remove the four mounting bolts.

(d) Disconnect the air cleaner hose from the intake air connector.

(e) Disconnect the air duct from the air cleaner case, and remove the air cleaner and air flow meter assembly.

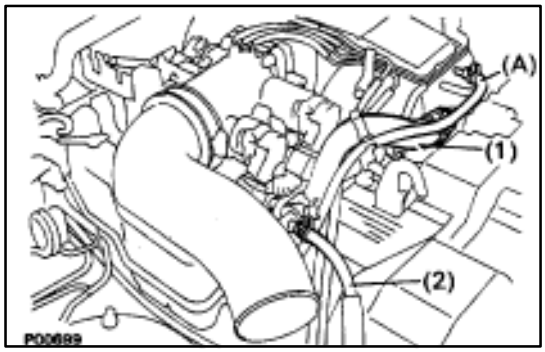

10. DISCONNECT VACUUM HOSE (A) (FROM PS AIR CONTROL VALVE) FROM AIR INTAKE CHAMBER

11. REMOVE INTAKE AIR CONNECTOR

(a) Disconnect the following hose:

(1) Air hose from ISC valve

(2) Air hose (from PS air control valve) from intake air connector

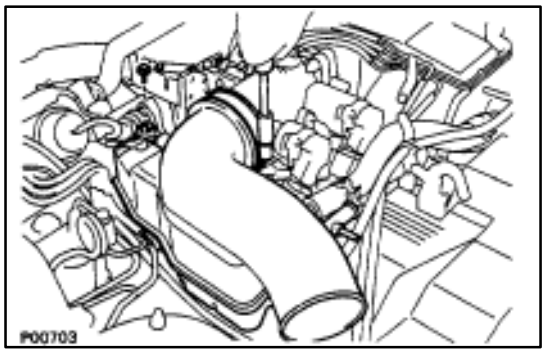

(b) Remove the bolt holding the intake air connector to the cylinder head cover.

(c) Loosen the hose clamp.

(d) Disconnect the intake air connector from the throttle body, and remove the intake air connector.

WhereEverybodyKnowsYourName

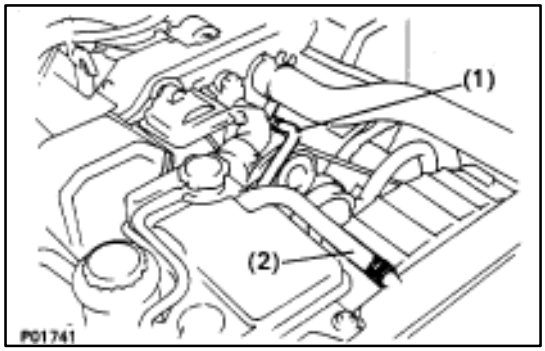

12. REMOVE RADIATOR RESERVOIR TANK

(a) Disconnect the coolant level sensor connector.

(b) Disconnect the following hoses:

(1) Reservoir hose to water inlet housing

(2) Reservoir hose to radiator

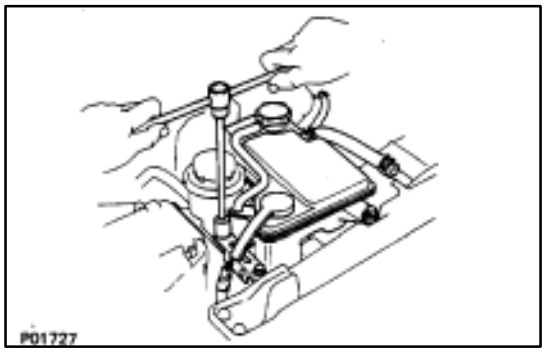

(c) Remove the two bolts and reservoir tank bracket.

(d) Disconnect the reservoir tank from the reservoir tank bracket, and remove the reservoir tank.

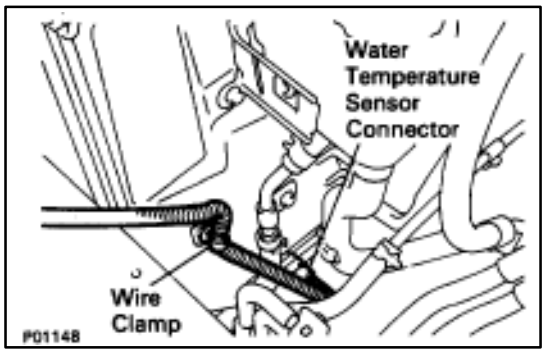

13. REMOVE RADIATOR

(a) Disconnect the water temperature sensor connector.

(b) Disconnect the wire clamp (for water temperature sensor) from the radiator fan shrould.

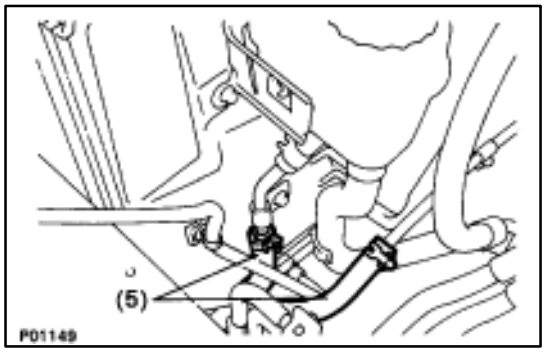

(c) Disconnect the following hoses:

(1) Two oil cooler hoses (for cooling fan) from pipes

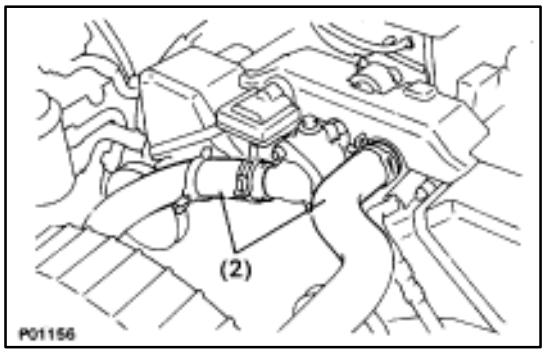

(2) Two radiator hoses

WhereEverybodyKnowsYourName

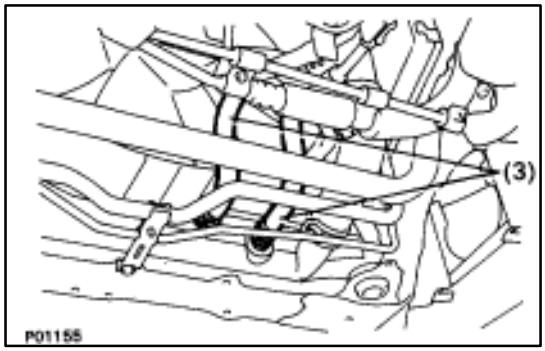

(3) Two oil cooler hoses (for A/T) from radiator Plug the hose ends.

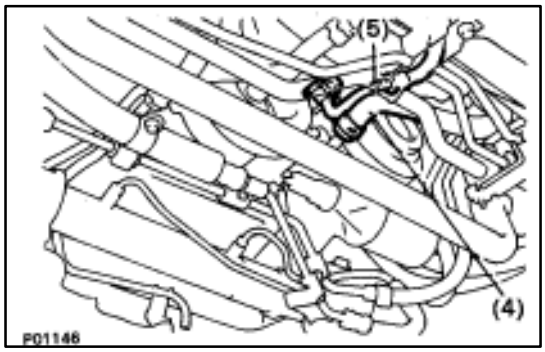

(4) Suction hose from hydraulic pump
(5) Pressure hose from hydraulic pump

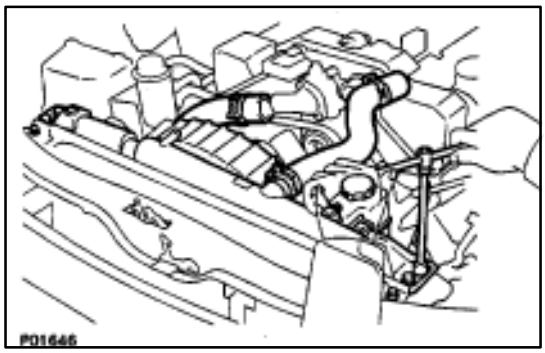

(c) Remove the two bolts, screw and upper radiator support. Remove the two upper radiator supports.

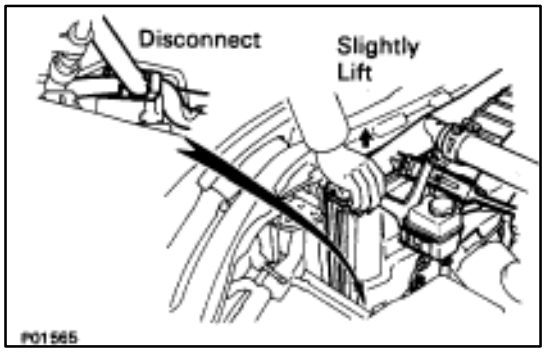

(d) Slightly lift the radiator, and disconnect the two oil cooler hoses (for cooling fan) from the hose clamp on the radiator fan shrould.
(e) Remove the radiator.

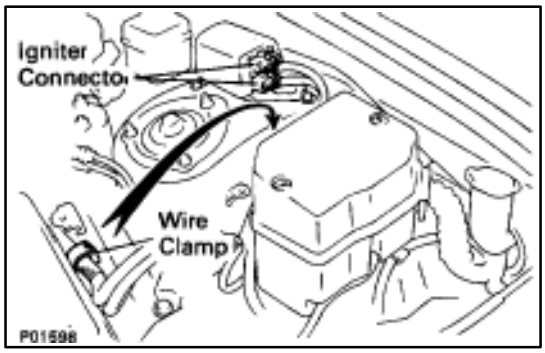

14. DISCONNECT IGNITER CONNECTORS

(a) Disconnect the two igniter connectors.
(b) Disconnect the wire clamp from the body.

WhereEverybodyKnowsYourName

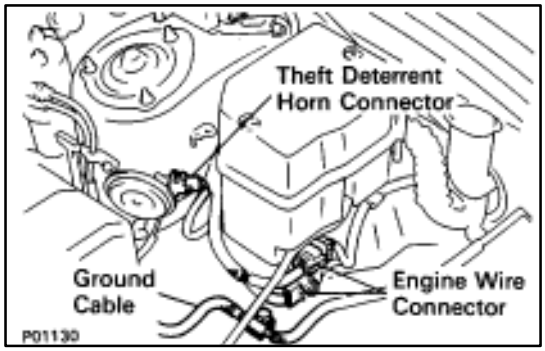

15. DISCONNECT ENGINE WIRE CONNECTORS

16. DISCONNECT THEFT DETERRENT HORN CONNECTOR

17. DISCONNECT GROUND CABLE FROM BODY

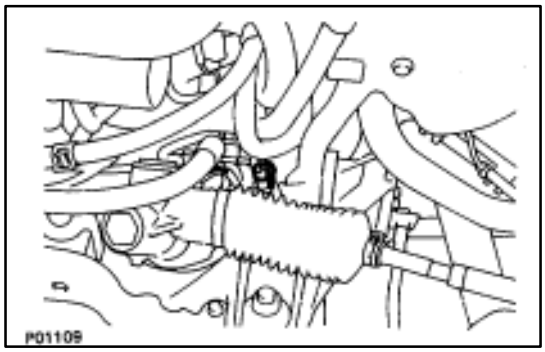

18. DISCONNECT PS SOLENOID VALVE CONNECTOR

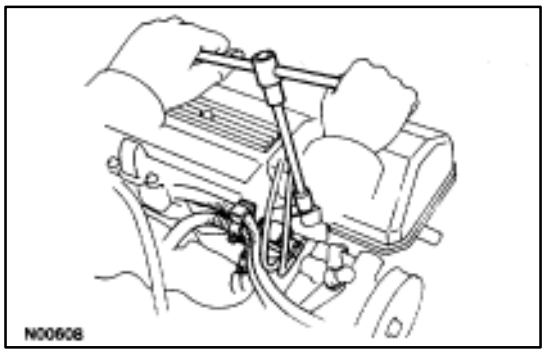

19. DISCONNECT WIRE CLAMP (FOR ALTERNATOR) FROM VSV (FOR EVAP SYSTEM)

(a) Remove the two bolts, and disconnect the VSV from the RH cylinder head.
(b) Disconnect the wire clamp from the VSV bracket.

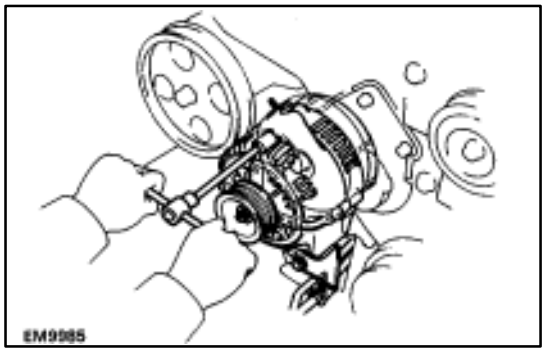

20. REMOVE ALTERNATOR

(a) Disconnect the alternator connector.
(b) Remove the cap and nut, and disconnect the alternator wire.
(c) Remove the mounting bolt and nut.
(d) Disconnect the A/T oil cooler pipe bracket.
(e) Remove the alternator.

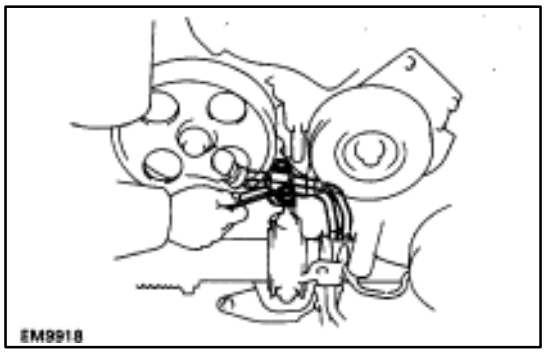

21. DISCONNECT PS TUBES FROM SUSPENSION CROSSMEMBER

Remove the clamp bolt, and disconnect the PS tubes.

WhereEverybodyKnowsYourName

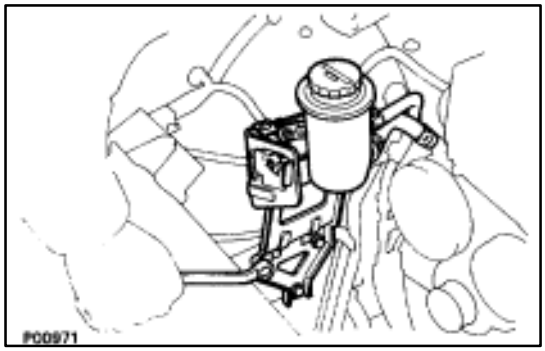

22. DISCONNECT PS RESERVOIR TANK AND BRACKET FROM BODY

Remove the three bolts, and disconnect the reservoir tank and bracket assembly.

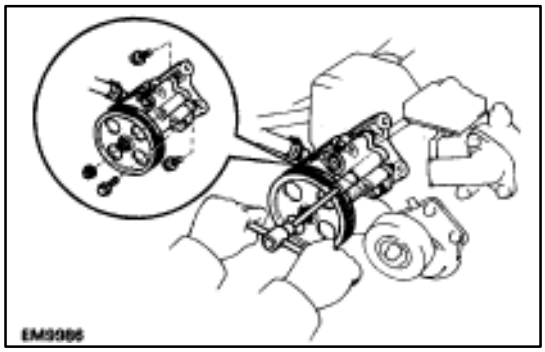

23. DISCONNECT PS PUMP FROM ENGINE

Remove the three pump bolts and nut, and disconnect the PS pump.

HINT: Put aside the PS pump, and suspend it.

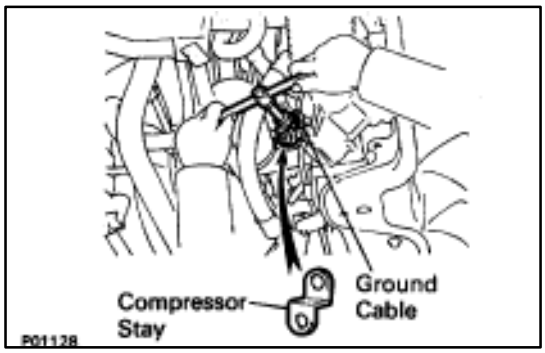

24. DISCONNECT A/C COMPRESSOR

(a) Disconnect the compressor connector.

(b) Remove the mounting nut, and disconnect the ground cable.

(c) Remove the mounting bolt and compressor stay.

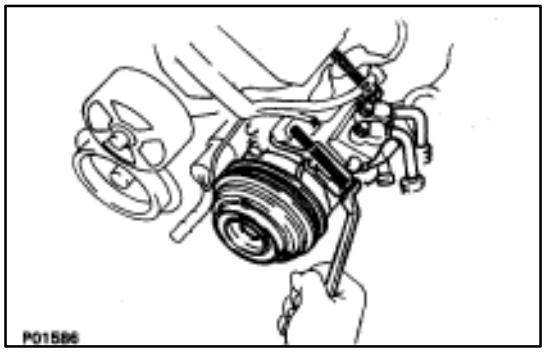

(d) Remove the two mounting bolts, and disconnect the compressor from the engine.

HINT: Put aside the compressor, and suspend it.

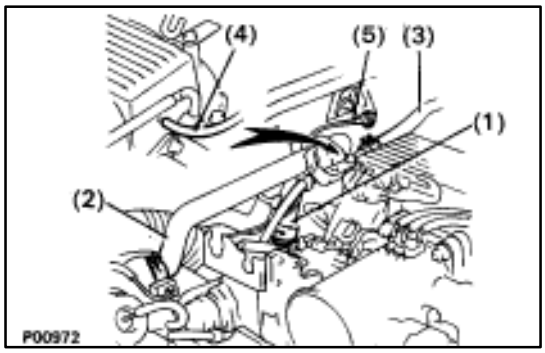

25. DISCONNECT HOSES AND GROUND STRAP

Disconnect the following hose and ground strap:

(1) Heater water hose from water by–pass pipe

(2) Heater water hose from heater water valve

(3) Vacuum hose from brake booster union on air intake chamber

(4) Vacuum hose (from VSV for heater water valve) from air intake chamber

(5) Ground strap from bracket on body

WhereEverybodyKnowsYourName

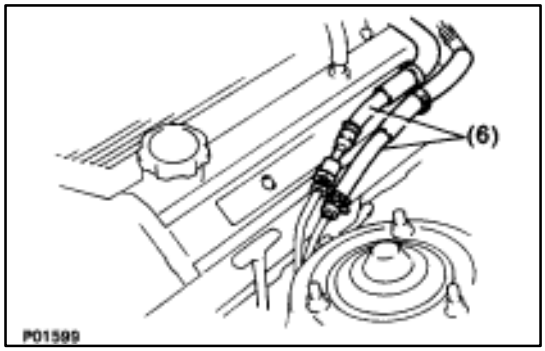

(6) Two fuel hoses from fuel tubes.
Plug the hose end.

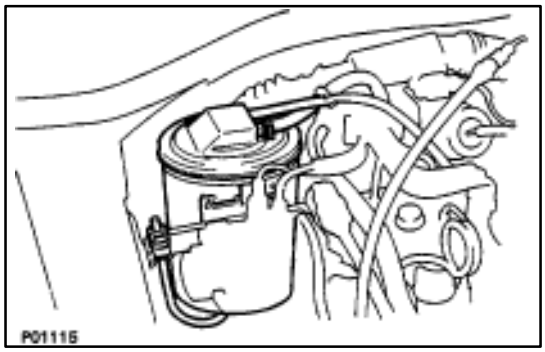

26. REMOVE CHARCOAL CANISTER

(a) Disconnect the vacuum hose and air hose from the charcoal canister.
(b) Remove the charcoal canister.

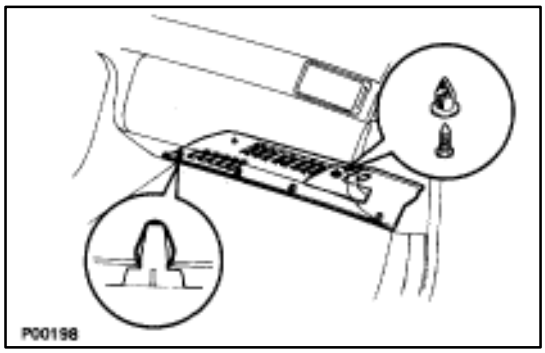

27. DISCONNECT ENGINE WIRE FROM CABIN

(a) Remove the two clips, and pull out the instrument panel under cover.

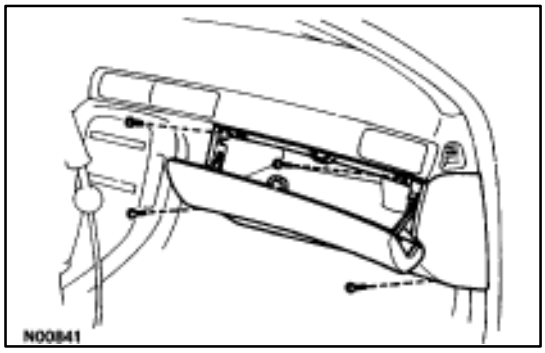

(b) Remove the four mounting screws.
(c) Disconnect the connectors, and remove the lower instrument panel finish panel and glove compartment door assembly.

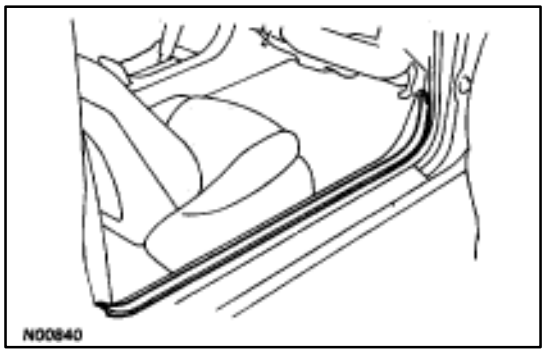

(d) Pull out the scuff plate.

WhereEverybodyKnowsYourName

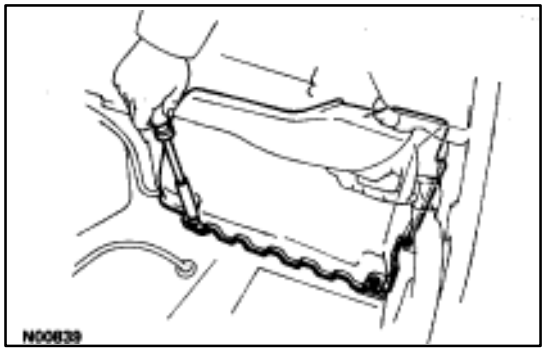

(e) Take out the front side of the floor carpet.
(f) Remove the two nuts and ECU protector.

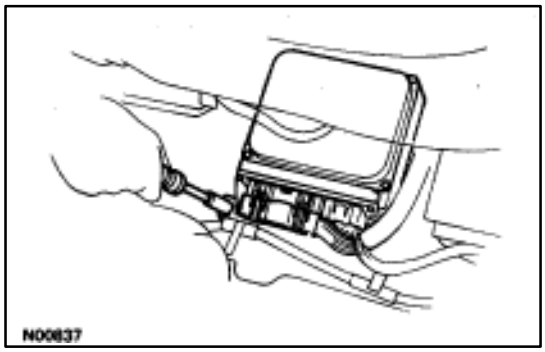

(g) Remove the nut, and disconnect the engine & ECT ECU from the floor panel.

(h) Disconnect the following connectors:
  (1) Two connectors from engine & ECT ECU
  (2) Connector from ABS & TRAC ECU
  (3) Two connectors from TRAC ECU
  (4) Four connectors from connector cassette
  (5) Connector from A/C control assembly

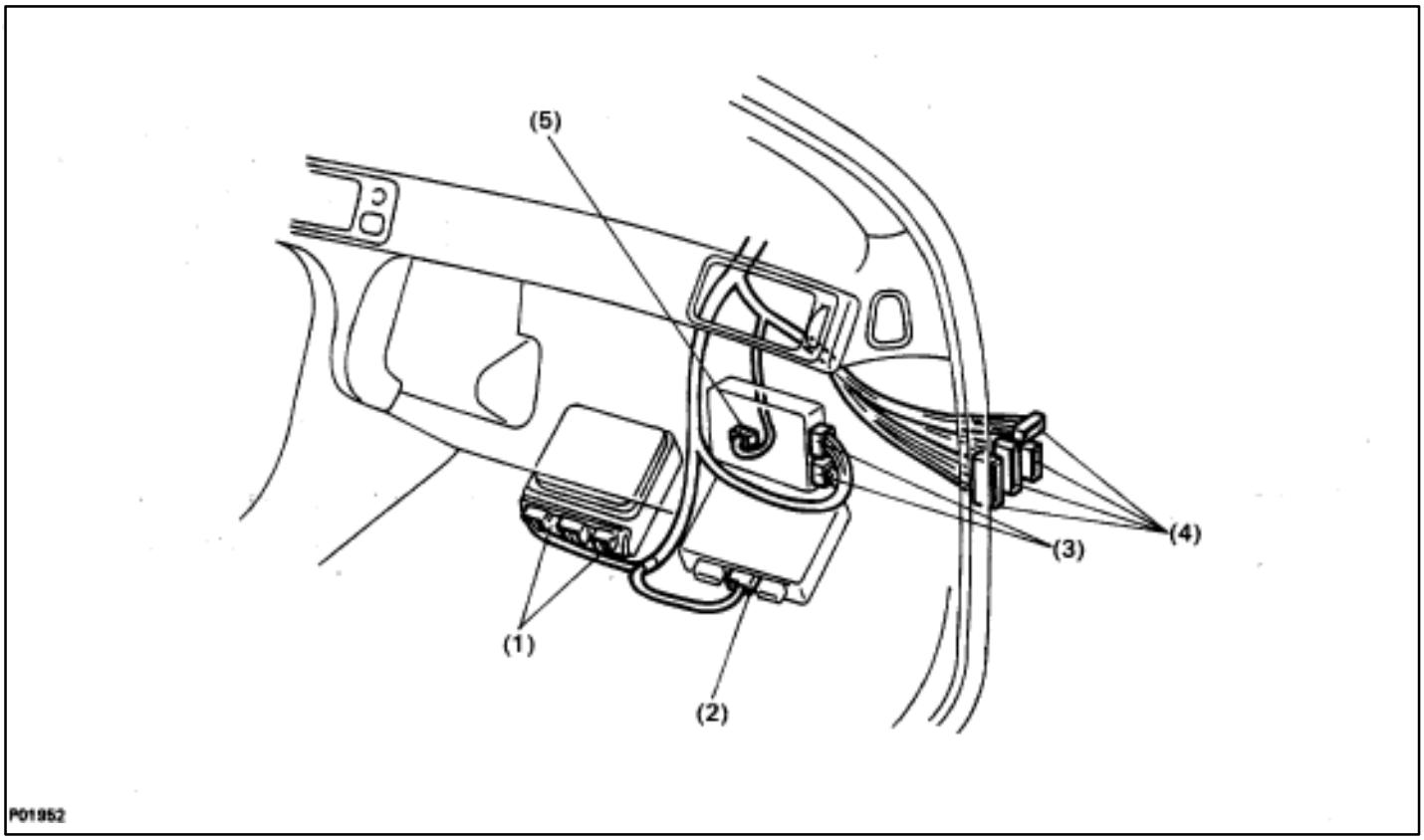

WhereEverybodyKnowsYourName

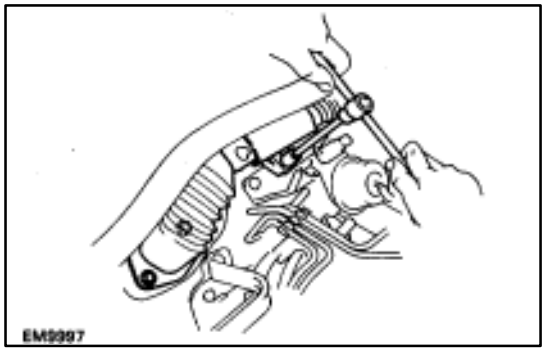

(i) Remove the bolt holding the engine wire clamp to the heater water valve bracket.
(j) Remove the two bolts holding the engine wire clamp to the body.

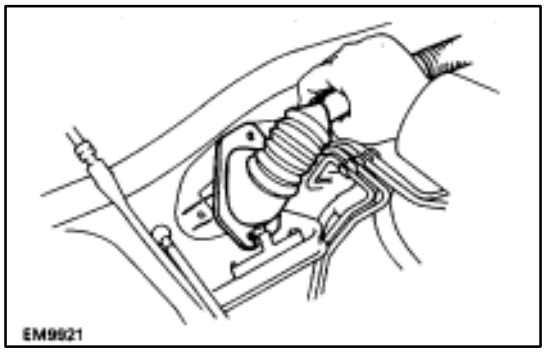

(k) Pull out the engine wire from the cabin.

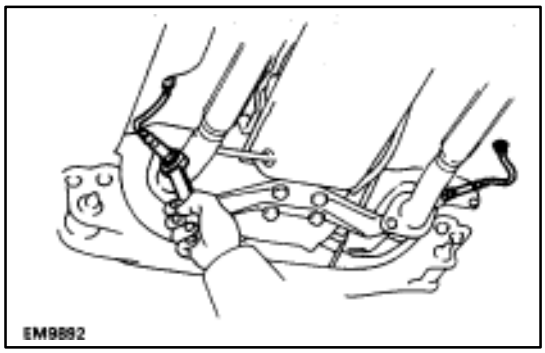

28. REMOVE FRONT EXHAUST PIPE

(a) Disconnect the grommet from the floor, and disconnect the sub–oxygen sensor from the exhaust pipe. Disconnect the two sub–oxygen sensors.
(b) Remove the four bolts holding the front exhaust pipe to the transmission.

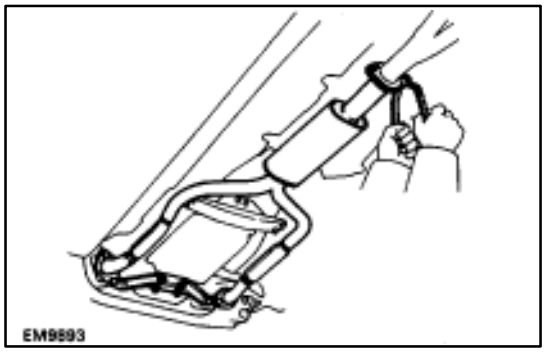

(c) Remove the two bolts and nuts holding the front exhaust pipe to the center exhaust pipe.
(d) Remove the four bolts and nuts holding the front exhaust pipe to the catalytic converter. Remove the pipe support stay, front exhaust pipe and three gaskets.

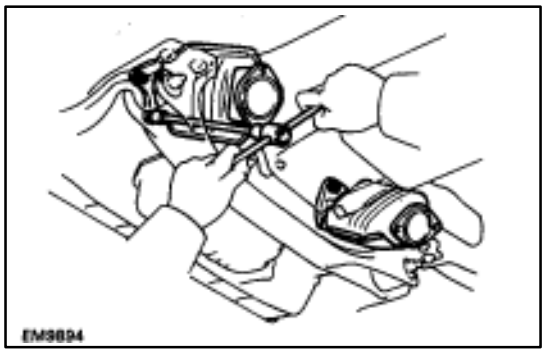

29. REMOVE CATALYTIC CONVERTERS (MAIN)

Remove the three nuts, catalytic converter and gasket. Remove the two catalytic converters.

WhereEverybodyKnowsYourName

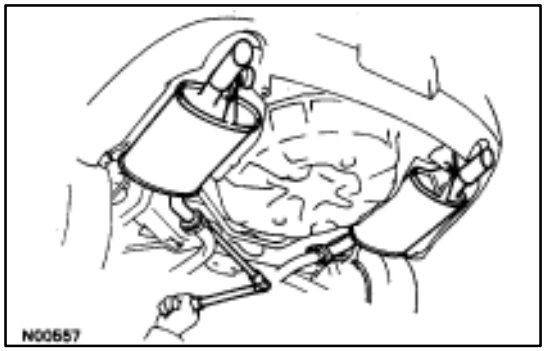

30. REMOVE TAILPIPES

(a) Remove the four bolts holding the tailpipes to the center exhaust pipe.

(b) Disconnect the tailpipe hook from the ring on tailpipe bracket, and remove the tailpipe and gasket. Remove the two tailpipes.

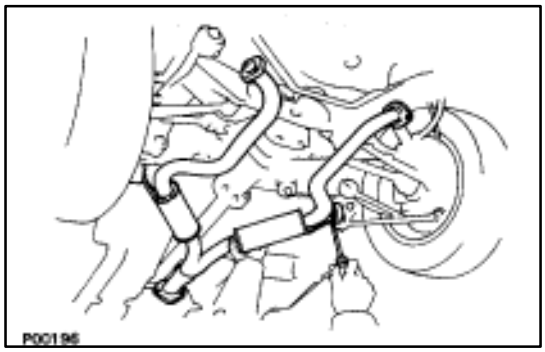

31. REMOVE CENTER EXHAUST PIPE

Disconnect the two hooks of the exhaust pipe from the rings on exhaust pipe brackets, and remove the center exhaust pipe.

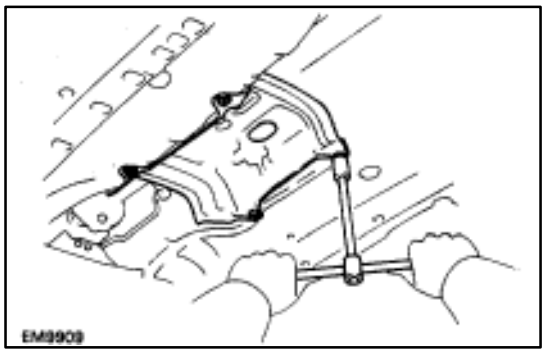

32. REMOVE EXHAUST PIPE HEAT INSULATOR

Remove the four nuts and heat insulator.

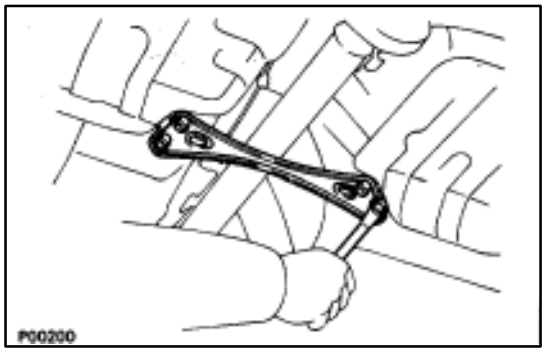

33. REMOVE CENTER FLOOR BRACE

Remove the four bolts and brace.

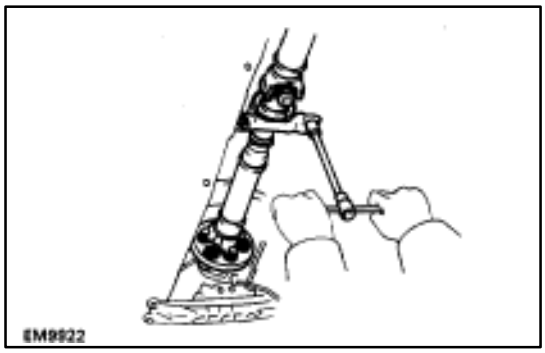

34. REMOVE PROPELLER SHAFT (See PR section)

WhereEverybodyKnowsYourName

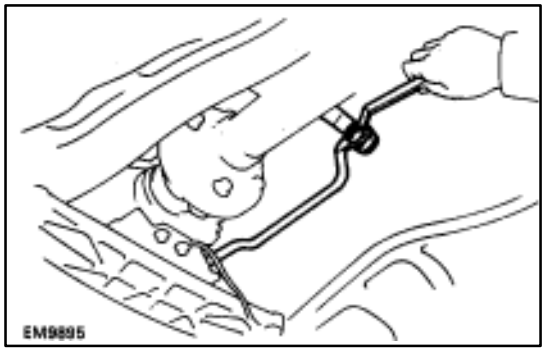

35. DISCONNECT TRANSMISSION CONTROL ROD

Remove the nut, and disconnect the control rod from the shift lever.

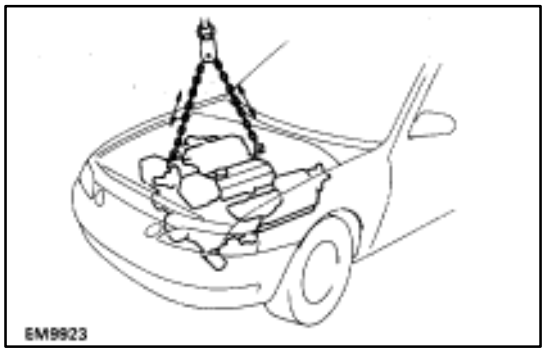

36. REMOVE ENGINE AND TRANSMISSION ASSEMBLY FROM VEHICLE

(a) Attach the engine hoist chain to the engine hangers.

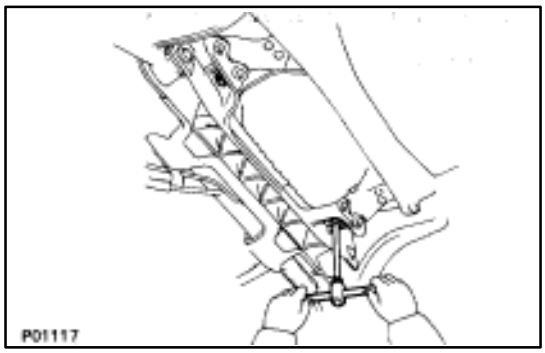

(b) Remove the two nuts holding the engine mounting insulators to the front suspension crossmember.

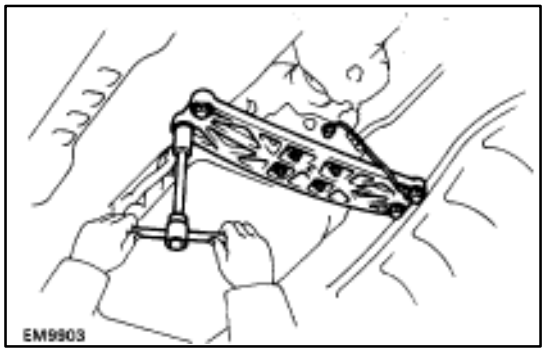

(c) Remove the four bolts, four nuts and rear engine mounting member. Disconnect the ground strap.

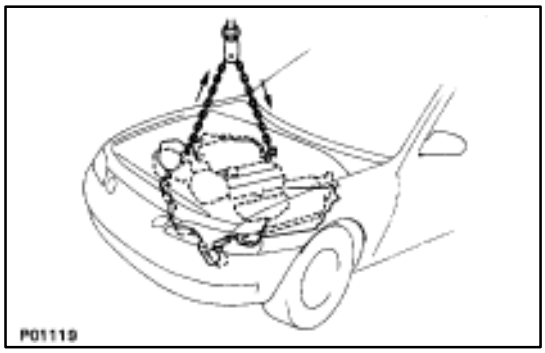

(d) Lift the engine out of the vehicle slowly and carefully.

NOTICE: Be careful not to hit the PS gear housing, neutral start switch and ABS actuator.

(e) Make sure the engine is clear of all wiring, hoses and cables.

(f) Place the engine and transmission assembly onto the stand.

WhereEverybodyKnowsYourName

COMPONENTS FOR SEPARATION AND ASSEMBLY OF ENGINE AND TRANSMISSION

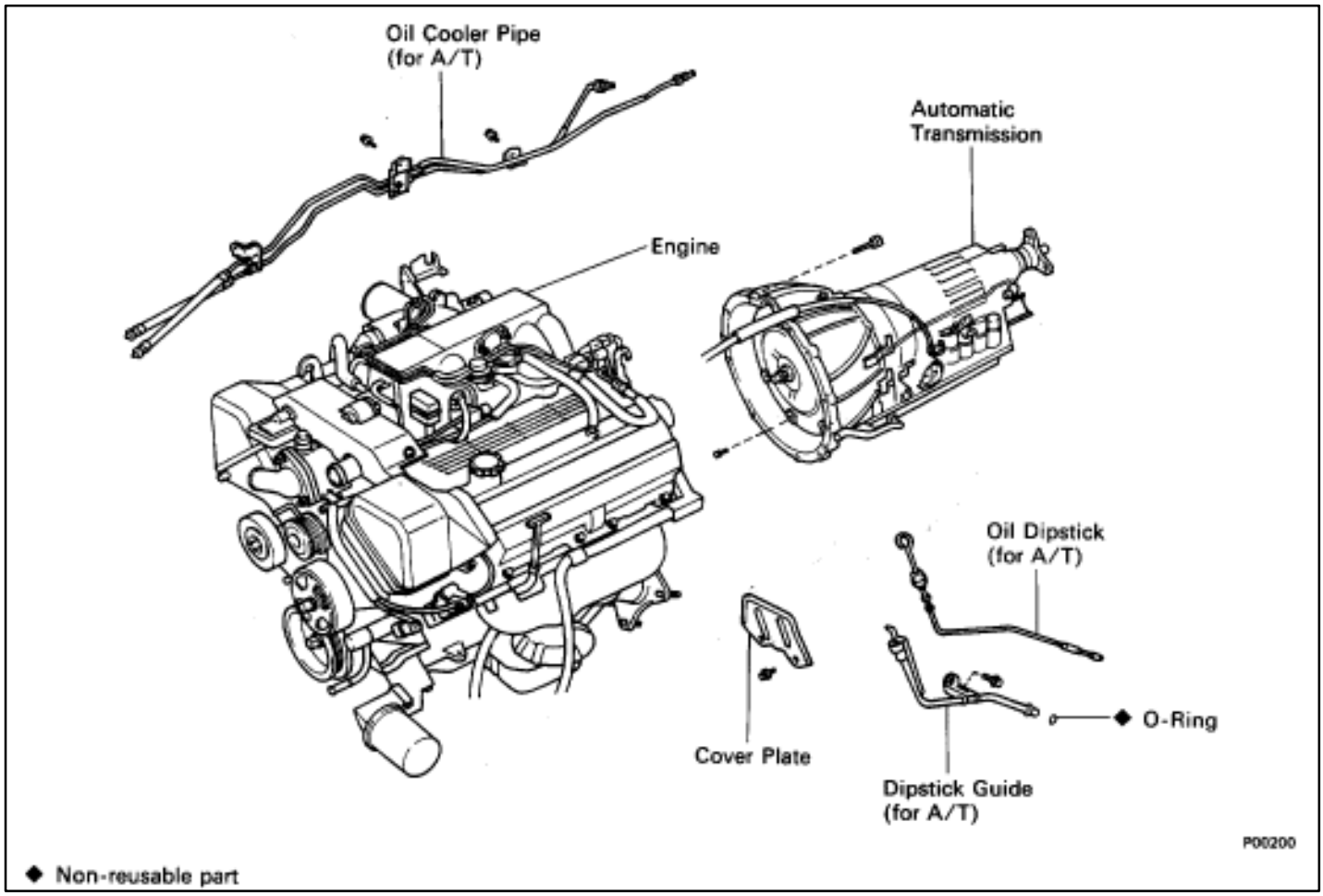

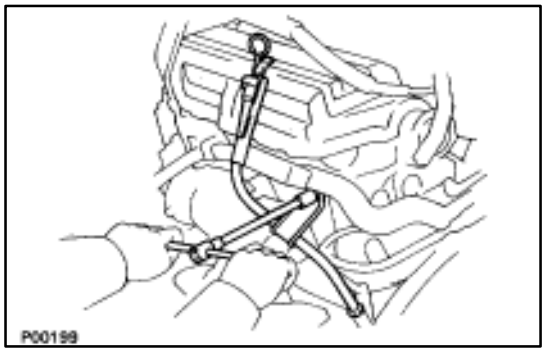

SEPARATION OF ENGINE AND TRANSMISSION

1. REMOVE OIL DIPSTICK GUIDE FOR TRANSMISSION

(a) Remove the mounting bolt.

(b) Pull out the dipstick guide and dipstick from the transmission.

(c) Remove the O–ring from the dipstick guide.

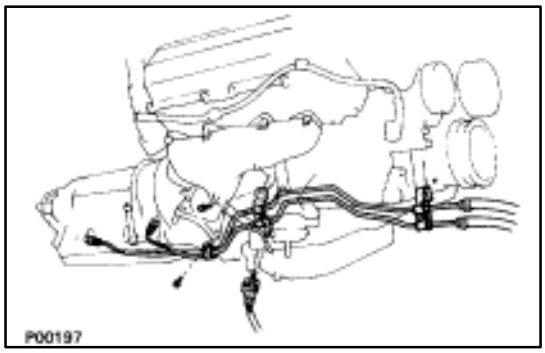

2. REMOVE OIL COOLER PIPES FOR TRANSMISSION

(a) Remove the two mounting bolts.

(b) Loosen the two union nuts, and remove the oil cooler pipes.

WhereEverybodyKnowsYourName

3. DISCONNECT ENGINE WIRE FROM TRANSMISSION

(a) Disconnect the following connectors:

(1) O/D direct clutch speed sensor connector

(2) No.1 speed sensor connector

(3) No.2 speed sensor connector

(4) Neutral start switch connector

(b) Disconnect the five wire clamps from the brackets on the transmission.

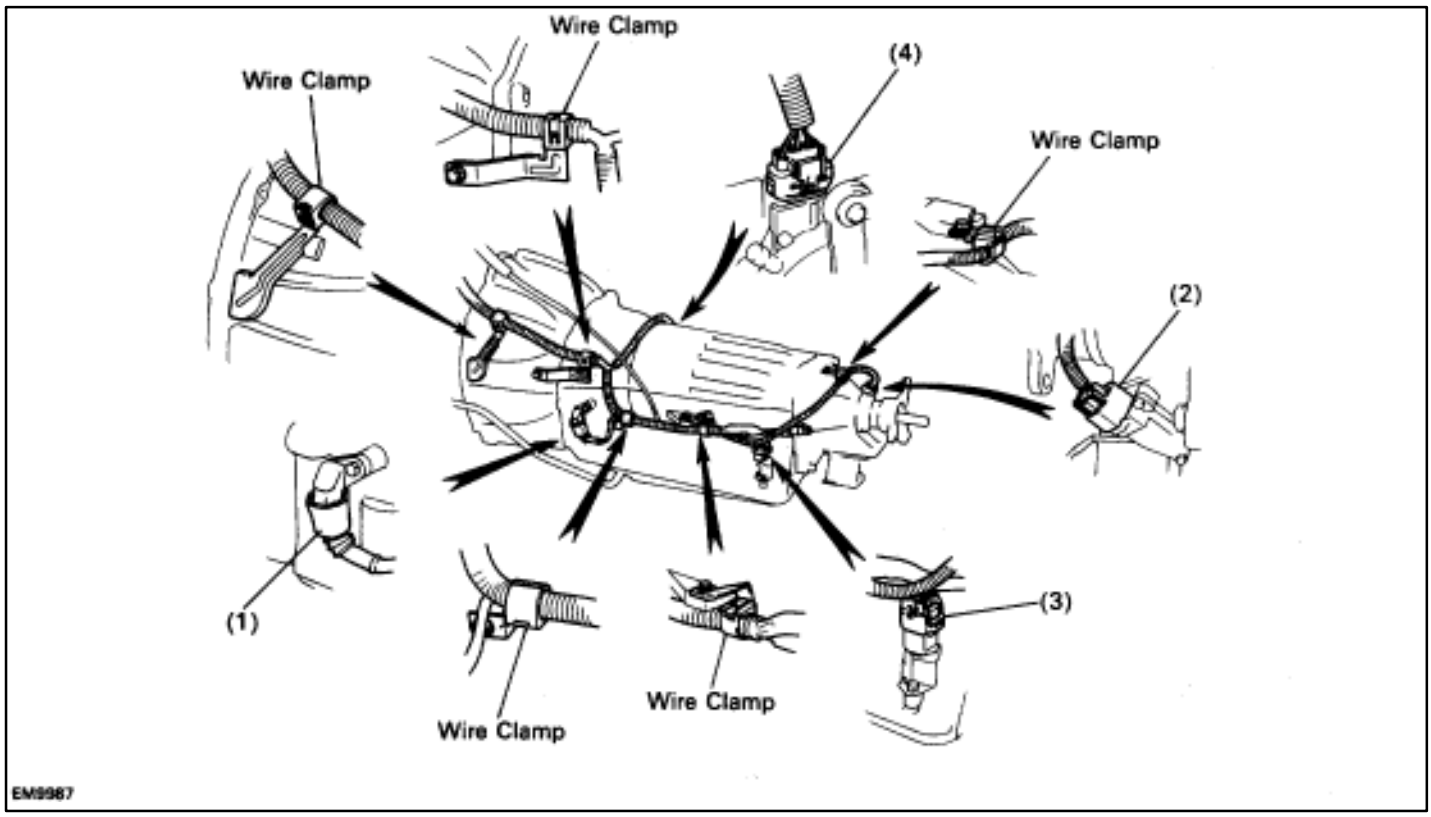

4. SEPARATE ENGINE AND TRANSMISSION (See AT section)

WhereEverybodyKnowsYourName

COMPONENTS FOR DISASSEMBLY AND ASSEMBLY OF CYLINDER BLOCK

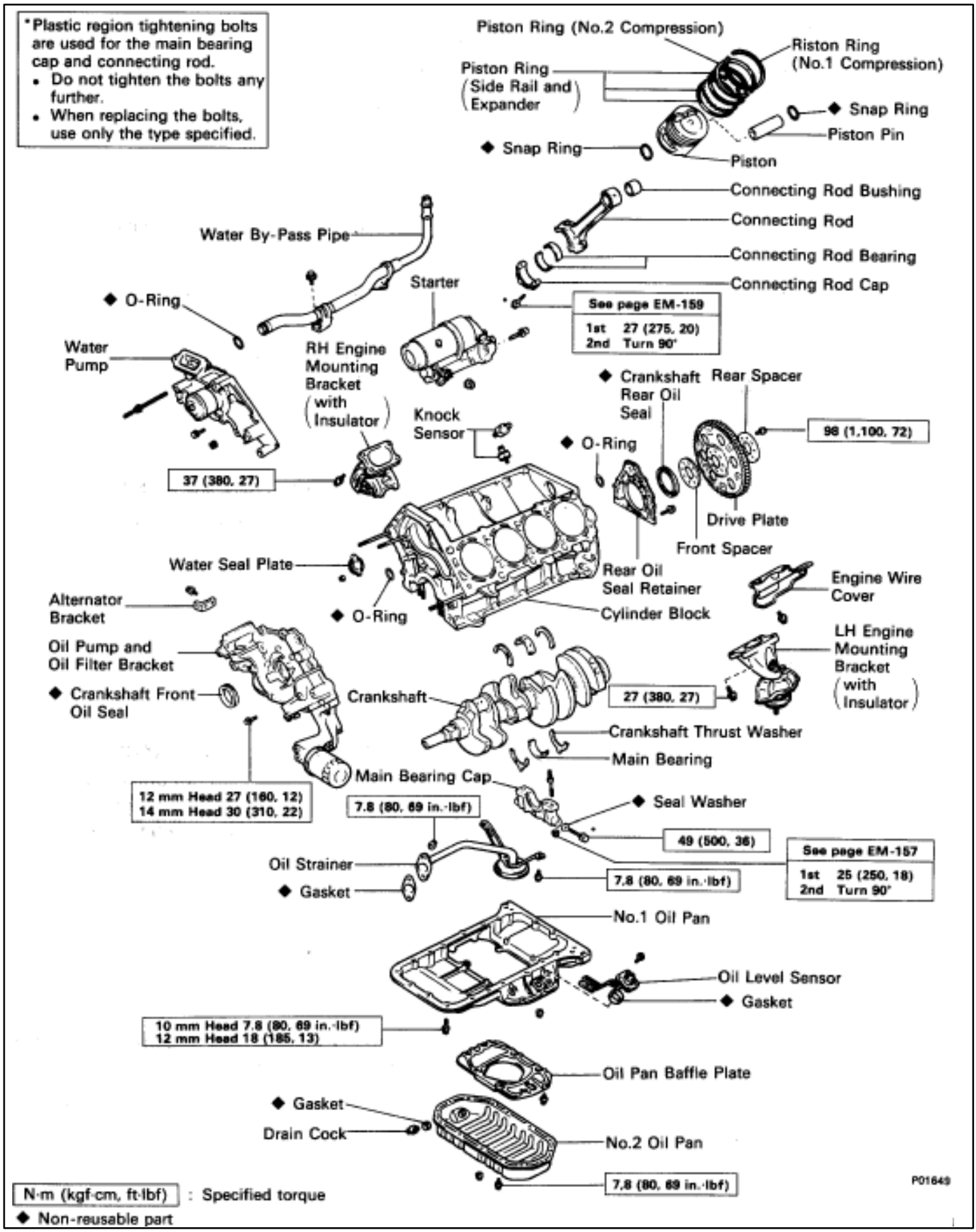

WhereEverybodyKnowsYourName

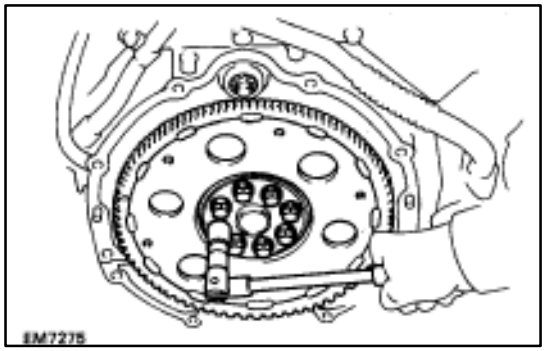

PREPARATION FOR DISASSEMBLY

(See Components on page EM–131)

1. **REMOVE DRIVE PLATE**
   Remove the eight bolts, two spacers and drive plate.

2. **INSTALL ENGINE TO ENGINE STAND FOR DISASSEMBLY**
3. **REMOVE TIMING BELT AND PULLEYS**
   (See pages EM–36 to 44)
4. **REMOVE Cylinder Block**
   (See pages EM–61 to 75)

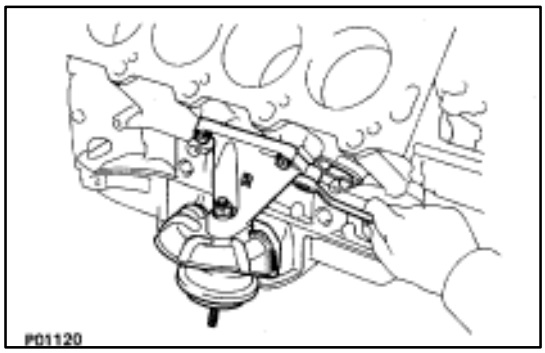

5. **REMOVE RH ENGINE MOUNTING BRACKET**
   Remove the four bolts and mounting bracket.

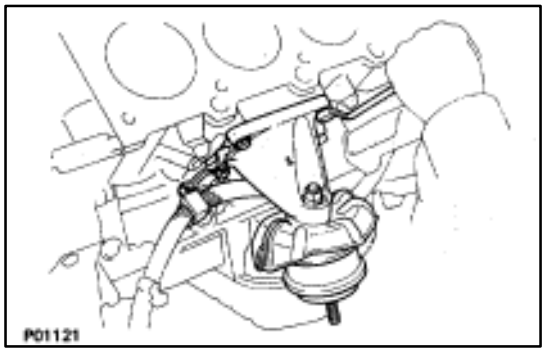

6. **REMOVE LH ENGINE MOUNTING BRACKET**
   (a) Remove the clamp bolt, and disconnect the engine wire from the engine mounting bracket.
   (b) Remove the four bolts and mounting bracket.

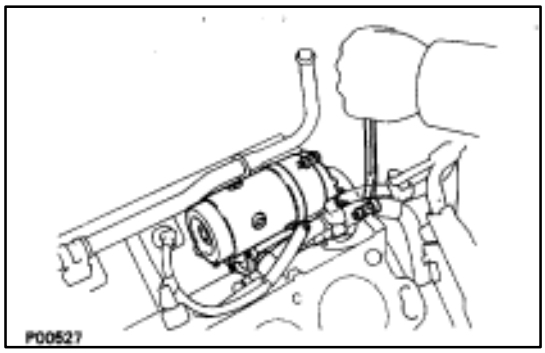

7. **REMOVE STARTER**
   (a) Remove the two bolts, and disconnect the starter from the cylinder block.

WhereEverybodyKnowsYourName

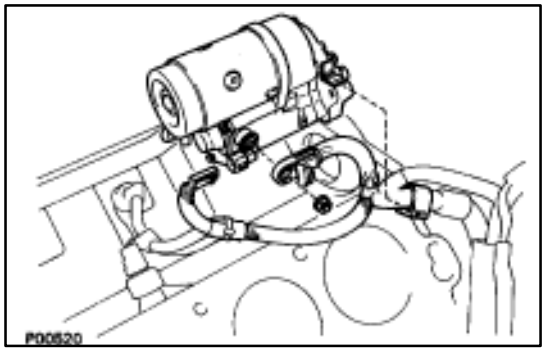

(b) Disconnect the wire clamp from the bracket on the starter.
(c) Remove the nut, and disconnect the wire.
(d) Disconnect the connector, and remove the starter.

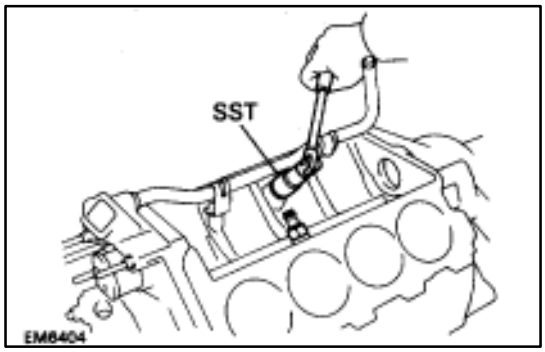

8. REMOVE KNOCK SENSORS

(a) Disconnect the two knock sensor connectors.
(b) Using SST, remove the two knock sensors.

SST 09816–30010

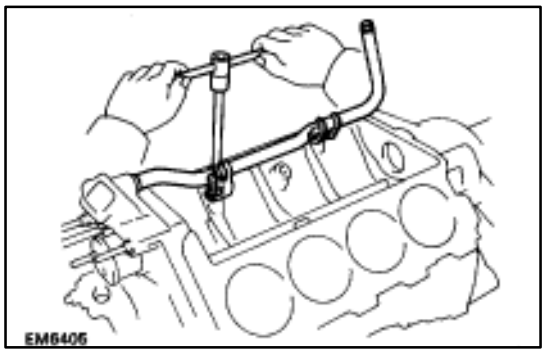

9. REMOVE WATER BY–PASS PIPE

(a) Remove the two bolts.
(b) Pull out the by–pass pipe from the water pump.
(c) Remove the O–ring from the by–pass pipe.

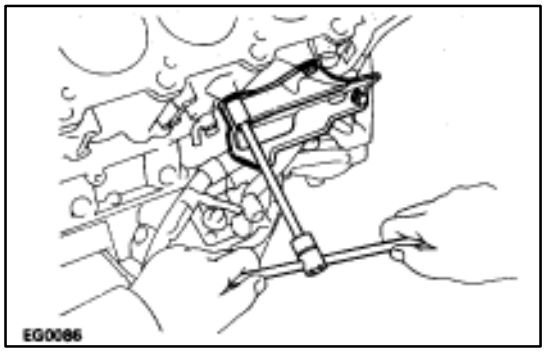

10. REMOVE ENGINE WIRE

(a) Disconnect the following connectors:
  (1) Oil level sensor connector
  (2) Oil pressure switch connector
(b) Remove the three bolts and wire cover from the LH side of the cylinder block.

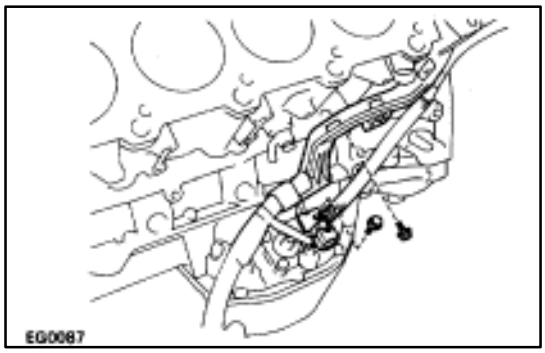

(c) Remove the two bolts and engine wire.

WhereEverybodyKnowsYourName

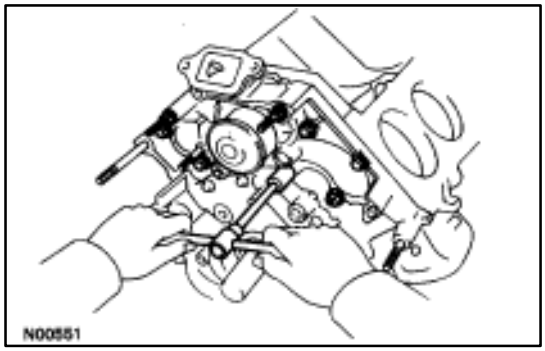

11. REMOVE WATER PUMP

(a) Remove the five mounting bolt, two mounting stud bolts and mounting nut.

(b) Remove the water pump by prying the portions between the water pump and cylinder block with a screwdriver.

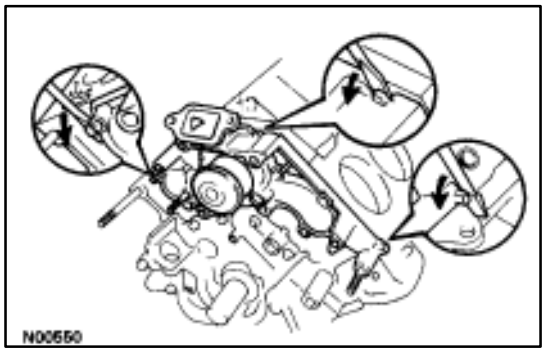

12. REMOVE NO.2 AND NO.1 OIL PANS
(See steps 7 to 12 on pages LU–9 to 11)

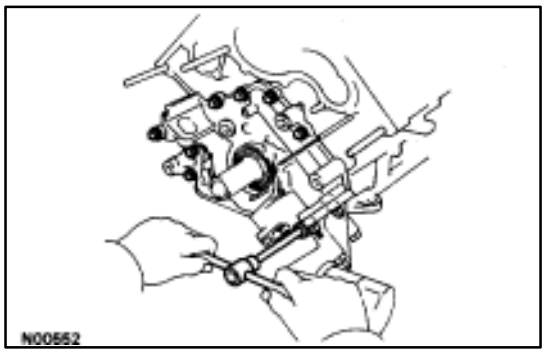

13. REMOVE OIL PUMP

(a) Remove the eight mounting bolts.

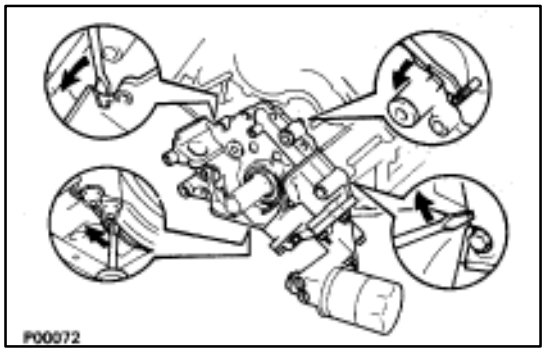

(b) Remove the oil pump by prying the portions between the oil pump and cylinder block with a screwdriver.

(c) Remove the O–ring from the cylinder block.

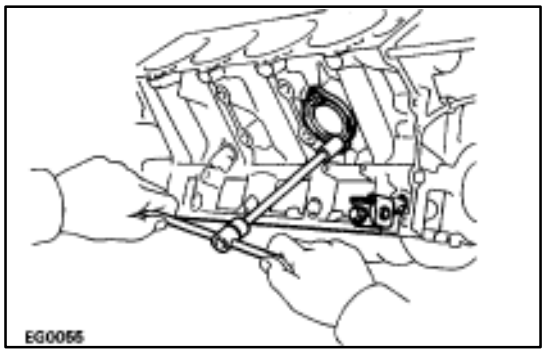

14. REMOVE ALTERNATOR BRACKET

Remove the bolt and bracket.

15. REMOVE WATER SEAL PLATE

Remove the two nuts and seal plate.

WhereEverybodyKnowsYourName

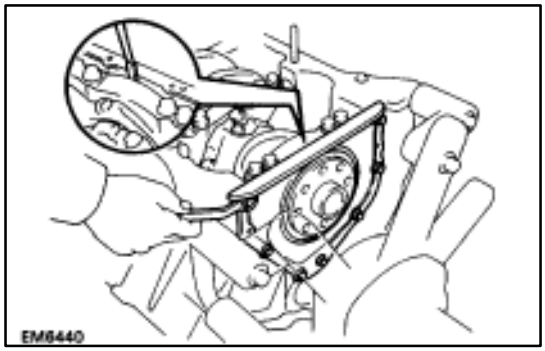

DISASSEMBLY OF CYLINDER BLOCK

(See Components on page EM–131)

1. REMOVE REAR OIL SEAL RETAINER

(a) Remove the seven bolts.

(b) Remove the oil seal retainer by prying the portions between the oil seal retainer and main bearing cap with a screwdriver.

(c) Remove the O–ring.

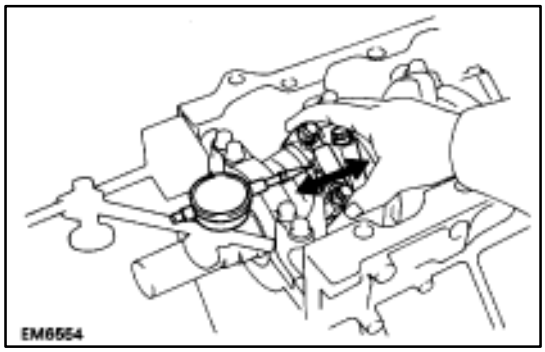

2. CHECK CONNECTING ROD THRUST CLEARANCE

Using a dial indicator, measure the thrust clearance while moving the two connecting rods back and forth.

Standard thrust clearance: 0.160–0.290 mm (0.0063–0.0114 in.)

Maximum thrust clearance: 0.35 mm (0.0138 in.)

If the thrust clearance is greater than maximum, replace the connecting rod assembly(s). If necessary, replace the crankshaft.

Connecting rod thickness: 22.880–22.920 mm (0.9008–0.9024 in.)

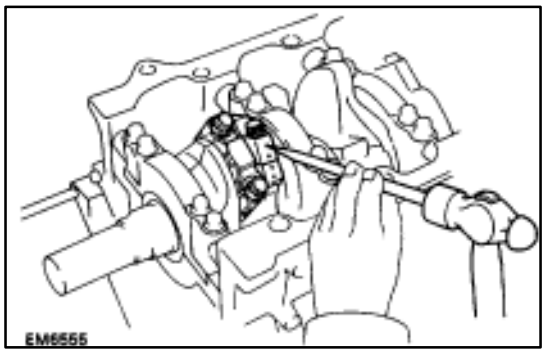

3. REMOVE CONNECTING ROD CAPS AND CHECK OIL CLEARANCE

(a) Using a punch or numbering stamp, place the matchmarks on the connecting rod and cap to ensure correct reassembly.

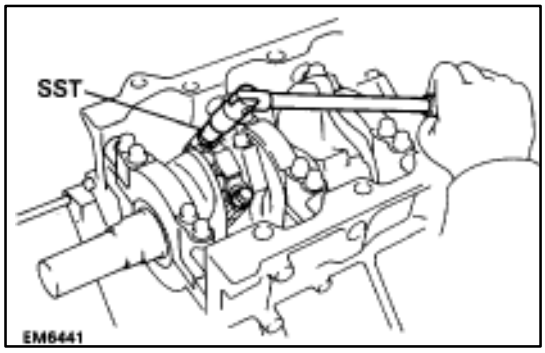

(b) Using SST, remove the two connecting rod bolts.

SST 09011–38121

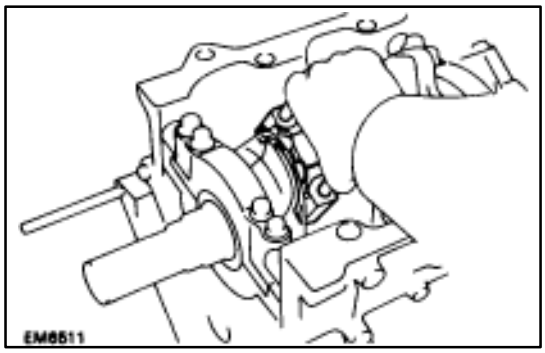

(c) Using the two removed connecting rod bolts, remove the connecting rod cap and lower bearing by wiggling the connecting rod cap right and left.

HINT: Keep the lower bearing inserted with the connecting rod cap.

WhereEverybodyKnowsYourName

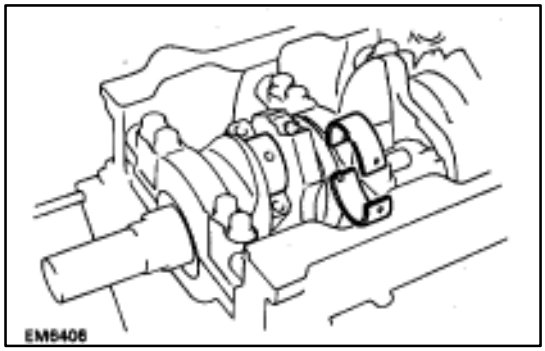

(d) Clean the crank pin and bearings.
(e) Check the crank pin and bearing for pitting and scratches.

If the crank pin or bearing are damaged, replace the bearings. If necessary, replace the crankshaft.

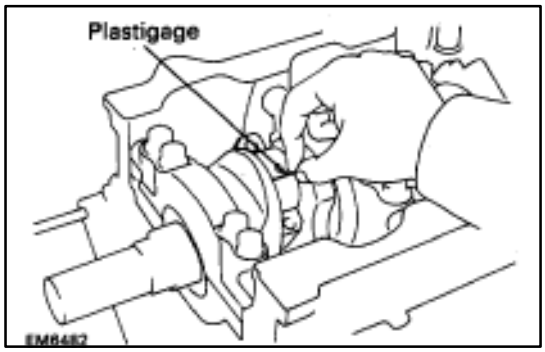

(f) Lay a strip of Plastigage across the crank pin.

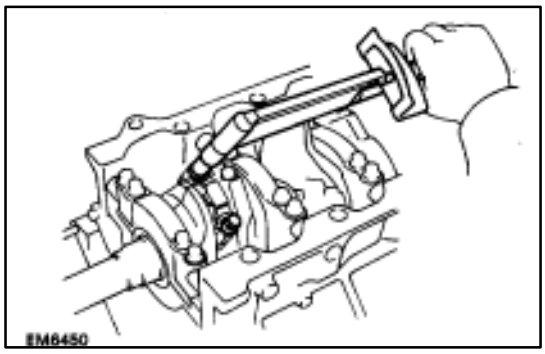

(g) Install the connecting rod cap with the two bolts. (See step 6 on pages EM–159 and 160)

Torque: 1st 25 N·m (250 kgf·cm, 18 ft·lbf)
2nd Turn 90°

NOTICE: Do not turn the crankshaft.

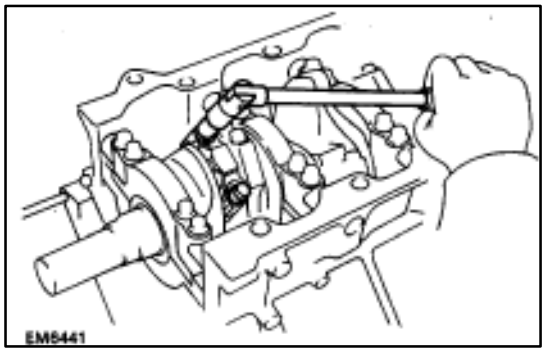

(h) Remove the two bolts, connecting rod cap and lower bearing. (See procedure (b) and (c) above)

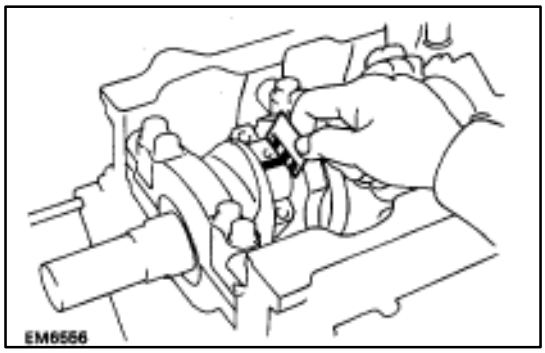

(i) Measure the Plastigage at widest point.

Standard oil clearance: 0.027–0.053 mm (0.0011–0.0021 in.)
Maximum oil clearance: 0.065 mm (0.0026 in.)

If the oil clearance is greater than maximum, replace the bearings. If necessary, replace the crankshaft.

WhereEverybodyKnowsYourName

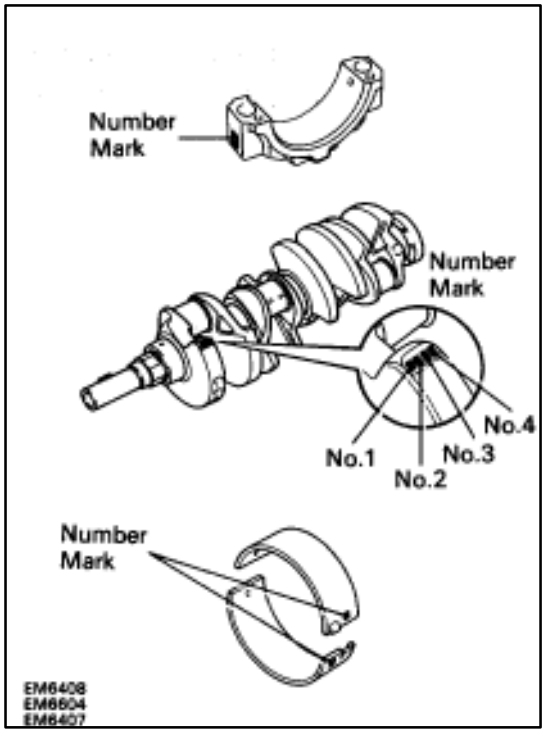

HINT: If using a standard bearing, replace with one having the same number. If the number of the bearing cannot be determined, select the correct bearing by adding together the numbers imprinted on the connecting rod cap and crankshaft, then selecting the bearing with the same number as the total. There are six sizes of standard bearings, marked ”2”, ”3”, ”4”, ”5”, ”6” and ”7” accordingly.

	Number mark											
Connecting rod cap	1	1	2	1	2	3	2	3	4	3	4	4
Crakshaft	1	2	1	3	2	1	3	2	1	3	2	3
Use bearing	2	3		4			5			6		7

EXAMPLE: Connecting rod cap ”3” + Crankshaft ”1”
= Total number 4 (Use bearing ”4”)

(Reference)

Connecting rod big end inside diameter:

Mark ”1” 55.000–55.006 mm (2.1654–2.1656 in.)
Mark ”2” 55.006–55.012 mm (2.1656–2.1658 in.)
Mark ”3” 55.012–55.018 mm (2.1658–2.1661 in.)
Mark ”4” 55.018–55.024 mm (2.1661–2.1663 in.)

Crankshaft crank pin diameter:

Mark ”1” 51.994–52.000 mm (2.0470–2.0472 in.)
Mark ”2” 51.988–51.994 mm (2.0468–2.0470 in.)
Mark ”3” 51.982–51.988 mm (2.0465–2.0468 in.)

Standard sized bearing center wall thickness:

Mark ”2” 1.484–1.487 mm (0.0584–0.0585 in.)
Mark ”3” 1.487–1.490 mm (0.0585–0.0587 in.)
Mark ”4” 1.490–1.493 mm (0.0587–0.0588 in.)
Mark ”5” 1.493–1.496 mm (0.0588–0.0589 in.)
Mark ”6” 1.496–1.499 mm (0.0589–0.0590 in.)
Mark ”7” 1.499–1.502 mm (0.0590–0.0591 in.)

(j) Completely remove the Plastigage.

4. REMOVE PISTON AND CONNECTING ROD ASSEMBLIES

(a) Using a ridge reamer, remove all the carbon from the top of the cylinder.

(b) Push the piston, connecting rod assembly and upper bearing through the top of the cylinder block.

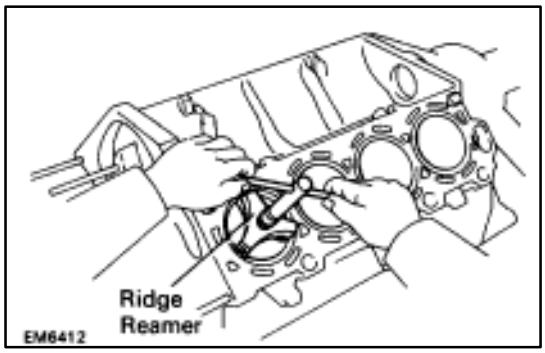

WhereEverybodyKnowsYourName

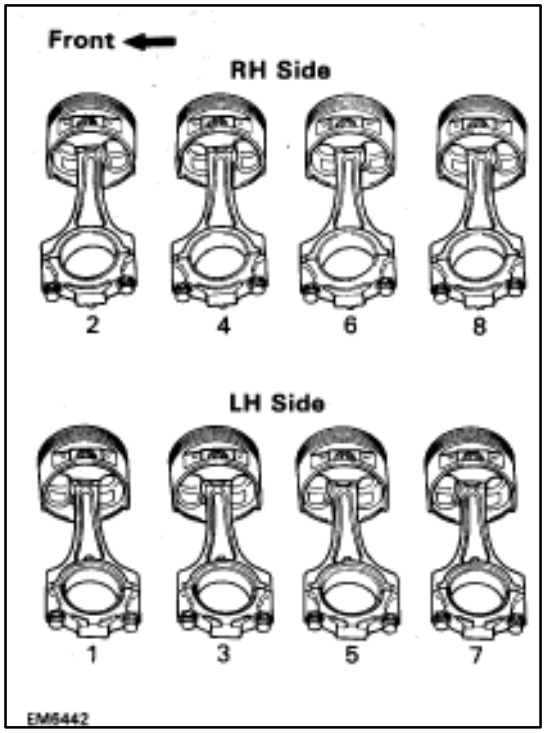

HINT:

- Keep the bearings, connecting rod and cap together.
- Arrange the piston and connecting rod assemblies in correct order.

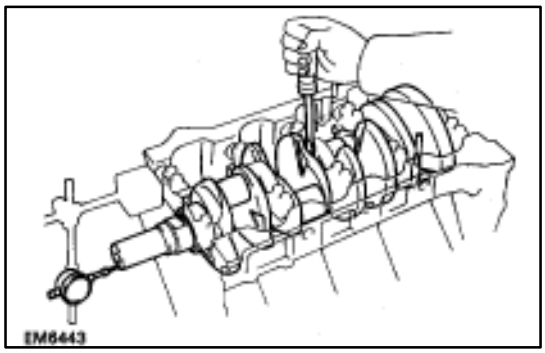

5. CHECK CRANKSHAFT THRUST CLEARANCE

Using a dial indicator, measure the thrust clearance while prying the crankshaft back and forth with a screwdriver.

Standard thrust clearance: 0.020–0.220 mm (0.0008–0.0087 in.)

Maximum thrust clearance: 0.30 mm (0.0118 in.)

If the thrust clearance is greater than maximum, replace the thrust washers as a set.

Thrust washer thickness: 2.440–2.490 mm (0.0961–0.0980 in.)

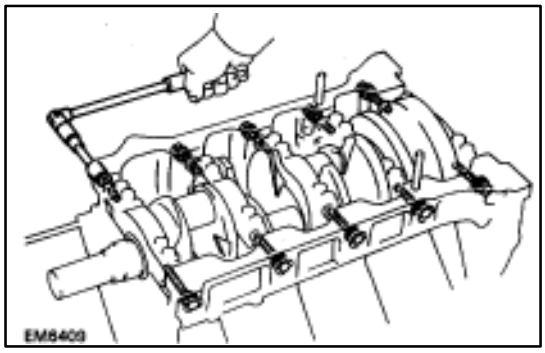

6. REMOVE MAIN BEARING CAP AND CHECK OIL CLEARANCE

(a) Remove the ten main bearing cap bolts.

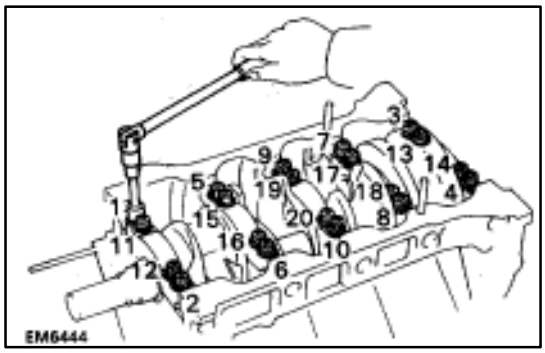

(b) Uniformly loosen and remove the twenty main bearing cap nuts in several passes in the sequence shown.

WhereEverybodyKnowsYourName

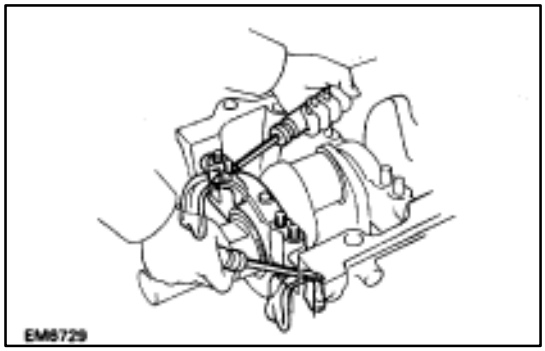

(c) Using two screwdrivers, pry out the main bearing cap, and remove the five main bearing cap, lower main bearings and two lower thrust washers (No.3 main bearing cap only).

NOTICE: Be careful not to damage the cylinder block.

HINT:

- Keep the lower main bearing and main bearing cap together.
- Arrange the main bearing caps and lower thrust washers in correct order.

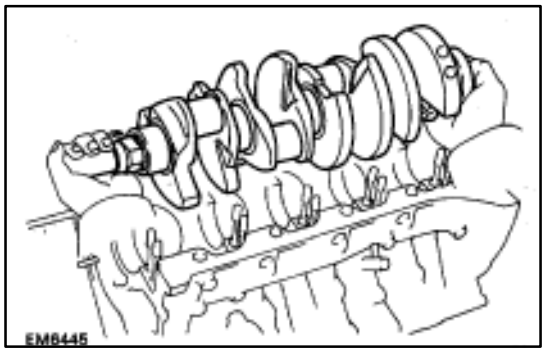

(d) Lift out the crankshaft.

(e) Remove the two upper thrust washers.

HINT:

- Arrange the upper thrust washers in correct order.
- Keep the upper main bearings together with the cylinder block.

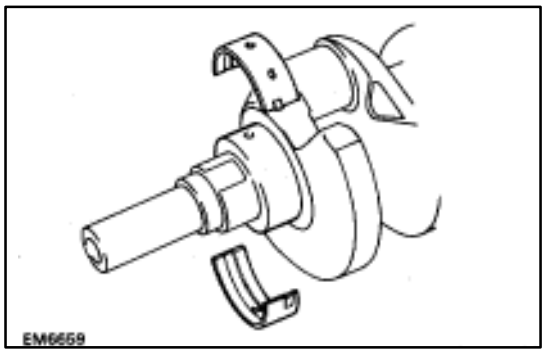

(f) Clean each main journal and bearing.

(g) Check each main journal and bearing for pitting and scratches.

If the journal or bearing are damaged, replace the bearings. If necessary, replace the crankshaft.

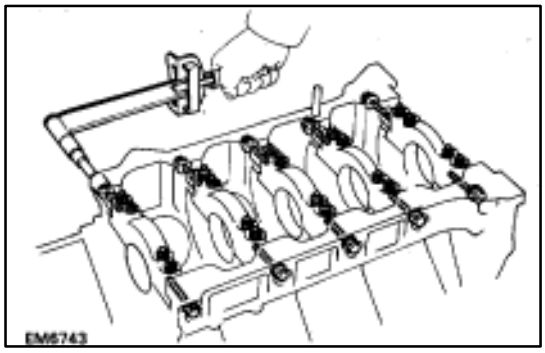

(h) Install the five main bearing caps with the twenty nuts and ten bolts. Do not install the crankshaft.
(See step 4 on pages EM–157 and 158)

Torque:

Nut 1st 27 N·m (275 kgf·cm, 20 ft·lbf)
2nd Turn 90°
Bolt 49 N·m (500 kgf·cm, 36 ft·lbf)

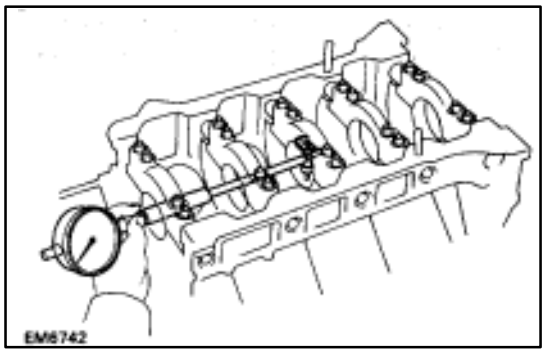

(i) Using a cylinder gauge, measure the inside diameter of the main bearing.

Bearing inside diameter: 67.026–67.033 mm
(2.6388–2.6391 in.)

WhereEverybodyKnowsYourName

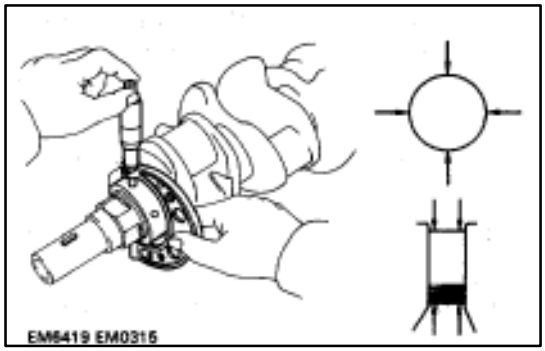

(j) Using a micrometer, measure the diameter of the main journal.

Main journal diameter: 66.988–67.000 mm (2.6373–2.6378 in.)

(k) Subtract the main journal diameter measurement from the main bearing inside diameter measurement.

Standard oil clearance: 0.026–0.045 mm (0.0010–0.0018 in.)

Maximum clearance: 0.055 mm (0.0022 in.)

If the oil clearance is greater than maximum, replace the bearings. If necessary, replace the crankshaft.

HINT: If using a standard bearing, replace with one having the same number. If the number of the bearing cannot be determined, select the correct bearing by adding together the numbers imprinted on the cylinder block and crankshaft, then refer to the table below for the appropriate bearing number. There are five sizes of standard bearings, marked ”1”, ”2”, ”3”, ”4” and ”5” accordingly.

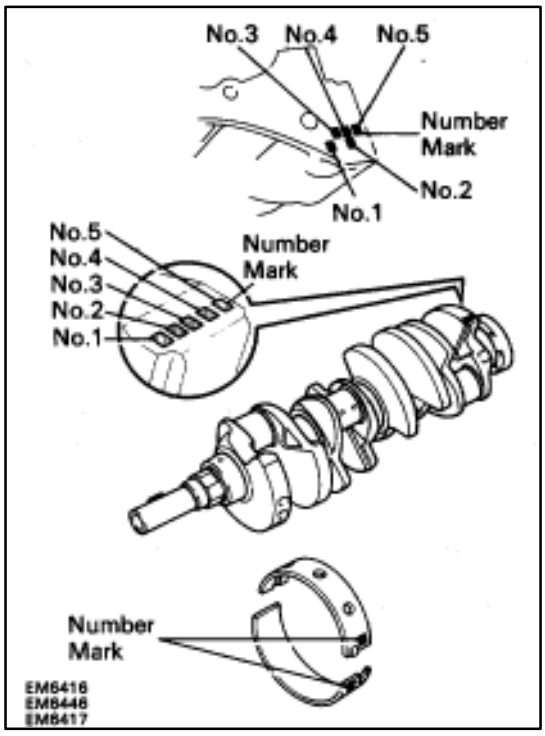

	Total number		” ”: Number mark		
Cylinder block (A) + Crankshaft (B) =	0–5	6–11	12–17	18–23	24–28
Use bearing	”1”	”2”	”3”	”4”	”5”

EXAMPLE: Cylinder block ”06” (A)
+ Crankshaft ”08” (B)
= Total number 14 (Use bearing ”3”)

(Reference)

Cylinder block main journal bore diameter (A):

Mark ”00” 72.000 mm (2.8346 in.)
Mark ”01” 72.001 mm (2.8347 in.)
Mark ”02” 72.002 mm (2.8347 in.)
Mark ”03” 72.003 mm (2.8348 in.)
Mark ”04” 72.004 mm (2.8348 in.)
Mark ”05” 72.005 mm (2.8348 in.)
Mark ”06” 72.006 mm (2.8349 in.)
Mark ”07” 72.007 mm (2.8349 in.)
Mark ”08” 72.008 mm (2.8350 in.)
Mark ”09” 72.009 mm (2.8350 in.)
Mark ”10” 72.010 mm (2.8350 in.)
Mark ”11” 72.011 mm (2.8351 in.)
Mark ”12” 72.012 mm (2.8351 in.)
Mark ”13” 72.013 mm (2.8352 in.)
Mark ”14” 72.014 mm (2.8352 in.)
Mark ”15” 72.015 mm (2.8352 in.)
Mark ”16” 72.016 mm (2.8353 in.)

WhereEverybodyKnowsYourName

Crankshaft main journal diameter (B):

Mark ”00” 67.000 mm (2.6378 in.)
Mark ”01” 66.999 mm (2.6378 in.)
Mark ”02” 66.998 mm (2.6377 in.)
Mark ”03” 66.997 mm (2.6377 in.)
Mark ”04” 66.996 mm (2.6376 in.)
Mark ”05” 66.995 mm (2.6376 in.)
Mark ”06” 66.994 mm (2.6376 in.)
Mark ”07” 66.993 mm (2.6375 in.)
Mark ”08” 66.992 mm (2.6375 in.)
Mark ”09” 66.991 mm (2.6374 in.)
Mark ”10” 66.990 mm (2.6374 in.)
Mark ”11” 66.989 mm (2.6374 in.)
Mark ”12” 66.988 mm (2.6373 in.)

Standard sized bearing center wall thickness:

Mark ”1” 2.486–2.489 mm (0.0979–0.0980 in.)
Mark ”2” 2.489–2.492 mm (0.0980–0.0981 in.)
Mark ”3” 2.492–2.495 mm (0.0981–0.0982 in.)
Mark ”4” 2.495–2.498 mm (0.0982–0.0983 in.)
Mark ”5” 2.498–2.501 mm (0.0983–0.0985 in.)

Standard sized Bearing Selection Chart

Crankshaft number mark	Cylinder block number mark																
	00	01	02	03	04	05	06	07	08	09	10	11	12	13	14	15	16
00	1	1	1	1	1	1	2	2	2	2	2	2	3	3	3	3	3
01	1	1	1	1	1	2	2	2	2	2	2	3	3	3	3	3	3
02	1	1	1	1	2	2	2	2	2	2	3	3	3	3	3	3	4
03	1	1	1	2	2	2	2	2	2	3	3	3	3	3	3	4	4
04	1	1	2	2	2	2	2	2	3	3	3	3	3	3	4	4	4
05	1	2	2	2	2	2	2	3	3	3	3	3	3	4	4	4	4
06	2	2	2	2	2	2	3	3	3	3	3	3	4	4	4	4	4
07	2	2	2	2	2	3	3	3	3	3	3	4	4	4	4	4	4
08	2	2	2	2	3	3	3	3	3	3	4	4	4	4	4	4	5
09	2	2	2	3	3	3	3	3	3	4	4	4	4	4	4	5	5
10	2	2	3	3	3	3	3	3	4	4	4	4	4	4	5	5	5
11	2	3	3	3	3	3	3	4	4	4	4	4	4	5	5	5	5
12	3	3	3	3	3	3	4	4	4	4	4	4	5	5	5	5	5

EXAMPLE: Cylinder block ”06”, Crankshaft ”08” = Use bearing ”3”

WhereEverybodyKnowsYourName

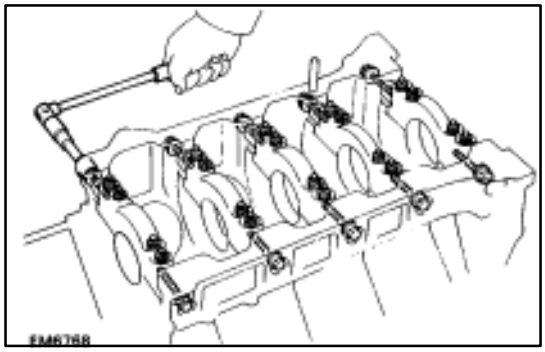

(k) Remove the ten bolts, twenty nuts and five main bearing caps. (See procedure (a) to (c) above)

(l) Remove the five upper main bearings from the cylinder block.

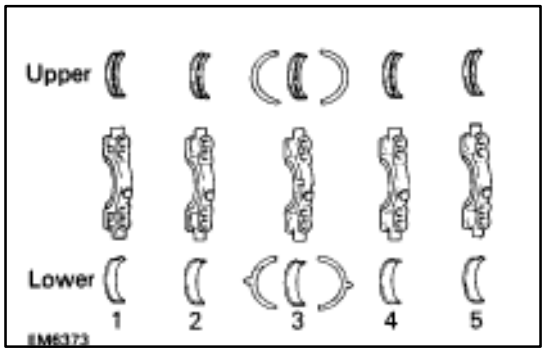

HINT: Arrange the main bearing caps, bearings and thrust washers in correct order.

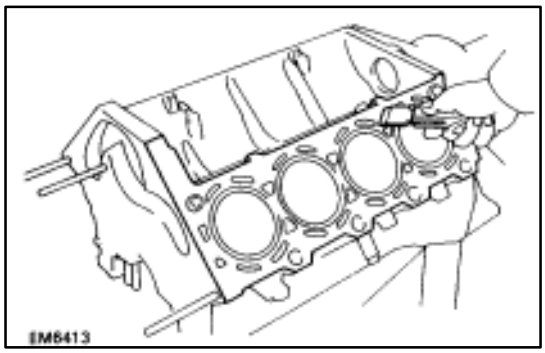

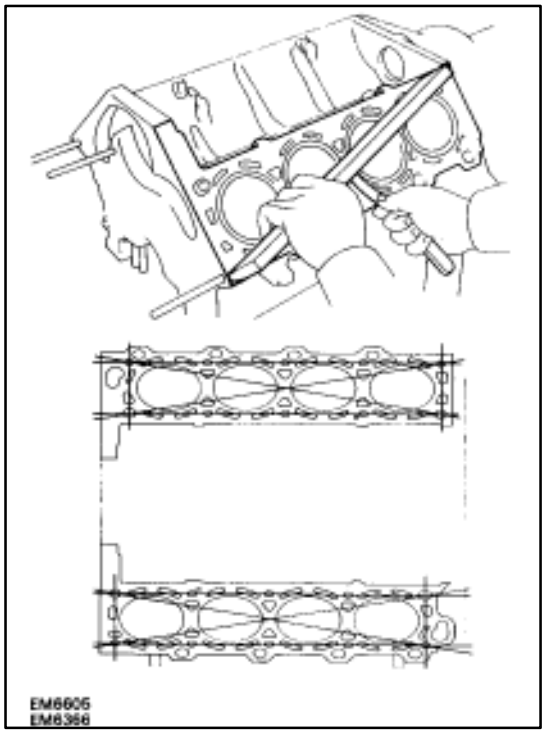

INSPECTION AND REPAIR OF CYLINDER BLOCK

1. CLEAN CYLINDER BLOCK

A. Remove gasket material

Using a gasket scraper, remove all the gasket material from the top surfaces of the cylinder block.

B. Clean cylinder block

Using a soft brush and solvent, thoroughly clean the cylinder block.

NOTICE: If the cylinder is washed at high temperatures, the cylinder liner sticks out beyond the cylinder block, so always wash the cylinder block at temperature of 45° or less.

2. INSPECT TOP SURFACES OF CYLINDER BLOCK FOR FLATNESS

Using precision straight edge and feeler gauge, measure the top surfaces of the cylinder block for warpage.

Maximum warpage: 0.07 mm (0.0028 in.)

If warpage is greater than maximum, replace the cylinder block.

WhereEverybodyKnowsYourName

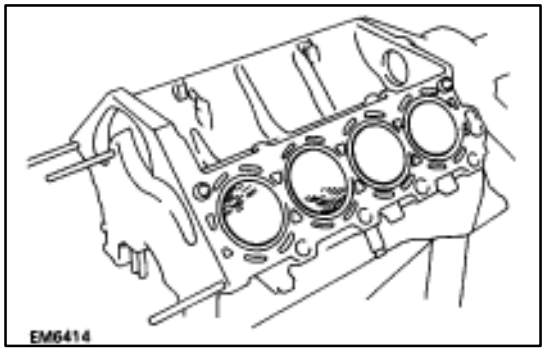

3. INSPECT CYLINDER FOR VERTICAL SCRATCHES

Visually check the cylinder for vertical scratches.
If deep scratches are present, replace the cylinder block.

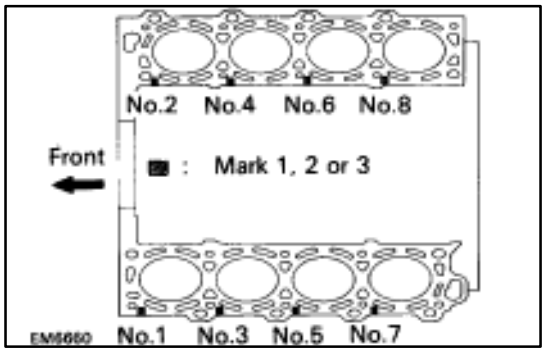

4. INSPECT CYLINDER BORE DIAMETER

HINT: There are three sizes of the standard cylinder bore diameter, marked ”1”, ”2” and ”3” accordingly. The marked is stamped on the top of the cylinder block.

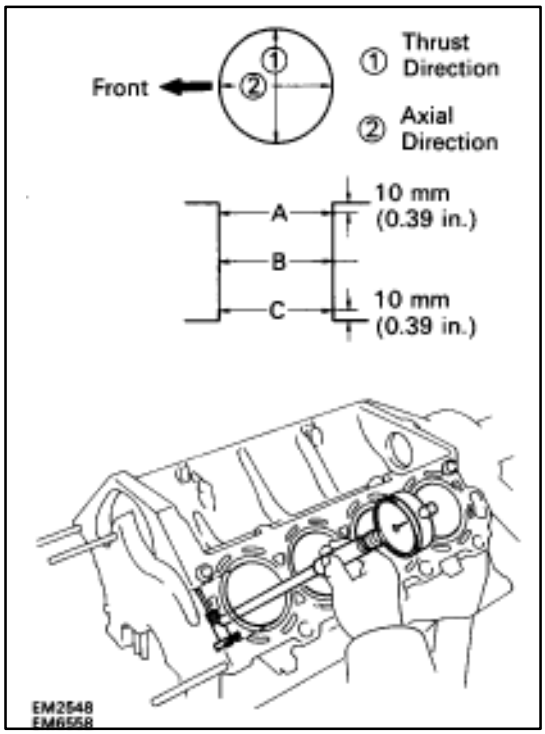

Using a cylinder gauge, measure the cylinder bore diameter at positions A, B and C in the thrust and axial directions.

Standard diameter:

Mark ”1” 87.500–87.510 mm (3.4449–3.4453 in.)
Mark ”2” 87.510–87.520 mm (3.4453–3.4457 in.)
Mark ”3” 87.520–87.530 mm (3.4457–3.4461 in.)

Maximum diameter: 87.73 mm (3.4539 in.)

If the diameter is greater than maximum, replace the cylinder block.

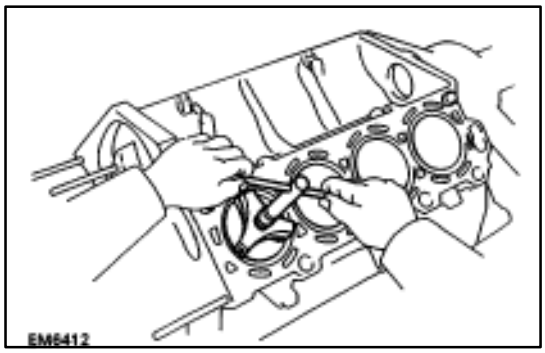

5. REMOVE CYLINDER RIDGE

If the wear is less than 0.2 mm (0.008 in.), using a ridge reamer, grind the top of the cylinder.

WhereEverybodyKnowsYourName

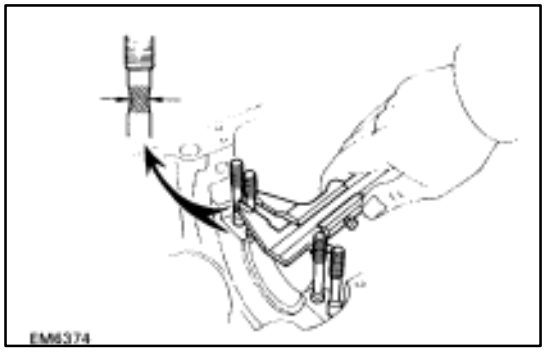

6. INSPECT MAIN BEARING CAP STUD BOLTS

Using a vernier caliper, measure the tension portion diameter of the stud bolt.

Standard diameter: 7.500–7.600 mm (0.2953–0.2992 in.)

Minimum diameter: 7.40 mm (0.2913 in.)

If the diameter is less than minimum, replace the stud bolt.

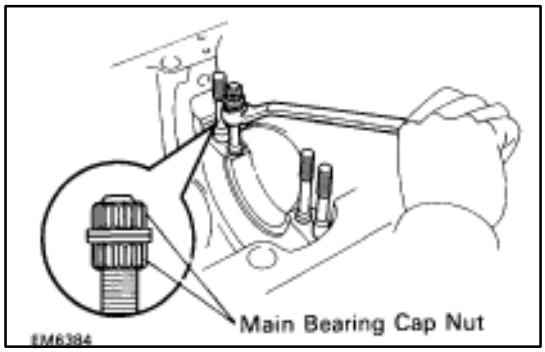

7. IF NECESSARY, REPLACE MAIN BEARING CAP STUD BOLTS

(a) Using the two main bearing cap nuts, remove the stud bolt.

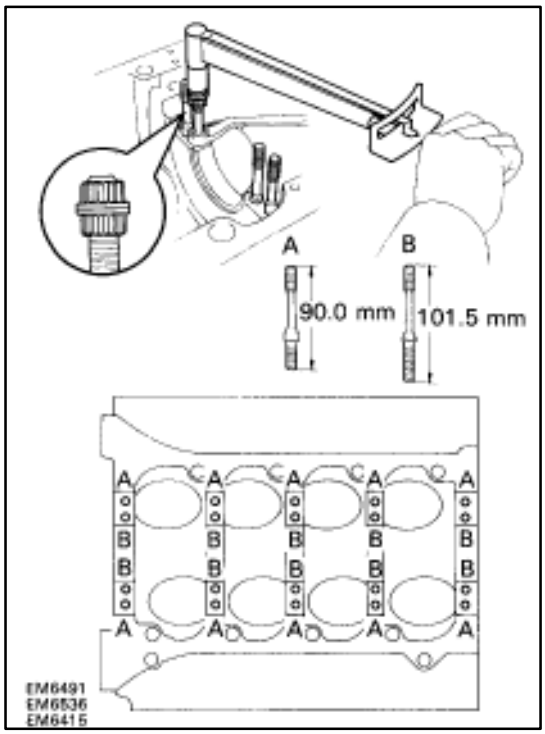

(b) Apply a light coat of engine oil on the threads and under the flange of the stud bolt.

(c) Using the two main bearing cap nuts, install and torque the stud bolt.

Torque: 10 N·m (100 kgf·cm, 7 ft·lbf)

HINT: Stud bolts come in lengths of 90.0 mm (3.543 in.) and 101.5 mm (3.996 in.). Install the 101.5 mm (3.996 in.) bolts in inside positions. Install the 90.0 mm (3.543 in.) bolts in outside positions.

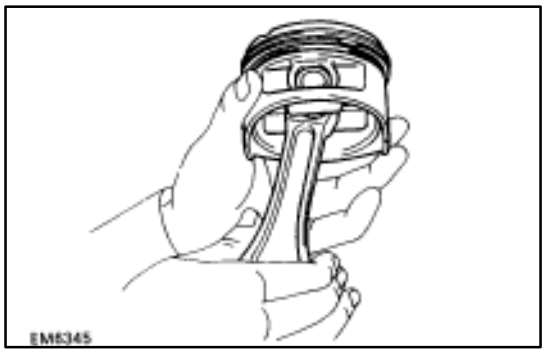

DISASSEMBLY OF PISTON AND CONNECTING ROD ASSEMBLIES

1. CHECK FIT BETWEEN PISTON AND PISTON PIN

Try to move the piston back and forth on the piston pin.

If any movement is felt, replace the piston and pin as a set.

WhereEverybodyKnowsYourName

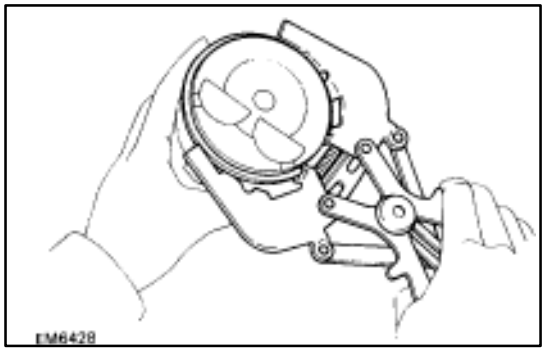

2. REMOVE PISTON RINGS

(a) Using a piston ring expander, remove the two compression rings.

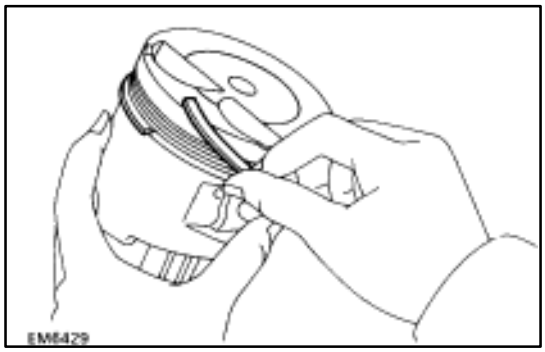

(b) Remove the two side rails and oil ring expander by hand.

HINT: Arrange the piston rings in correct order only.

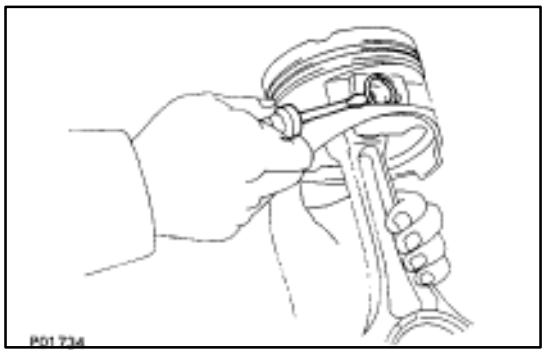

3. DISCONNECT CONNECTING ROD FROM PISTON

(a) Using a small screwdriver, pry out the two snap rings.

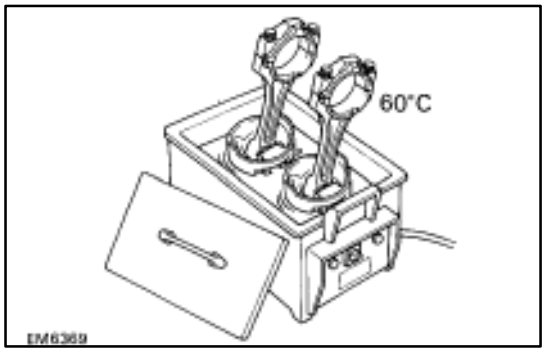

(b) Gradually heat the piston to approx. 60˚C (140˚F).

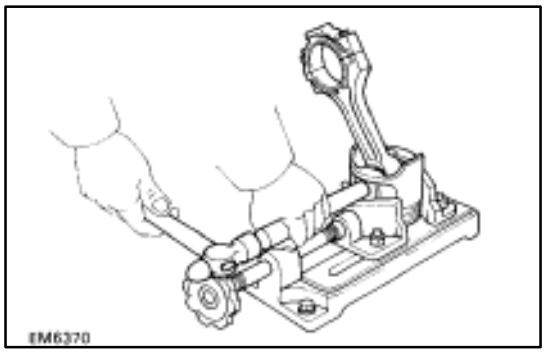

(c) Using a plastic–face hammer and brass bar, lightly tap out the piston pin and remove the connecting rod.

WhereEverybodyKnowsYourName

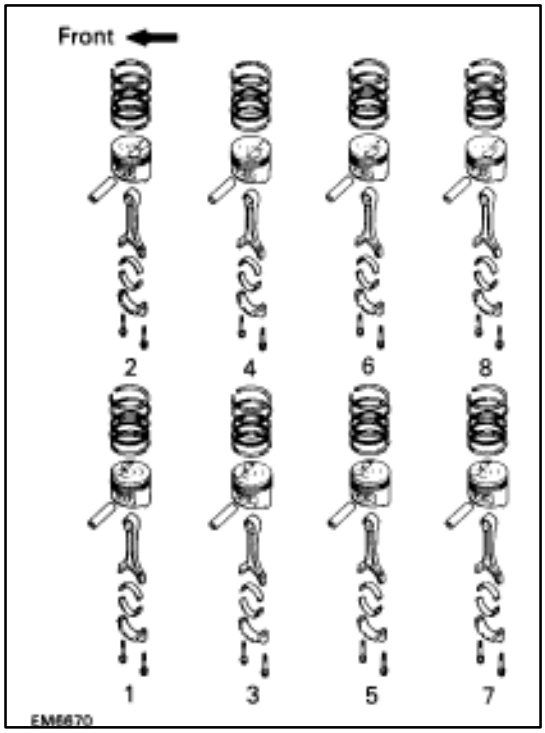

HINT:

- The piston and pin are a matched set.
- Arrange the pistons, pins, rings, connecting rods and bearings in correct order.

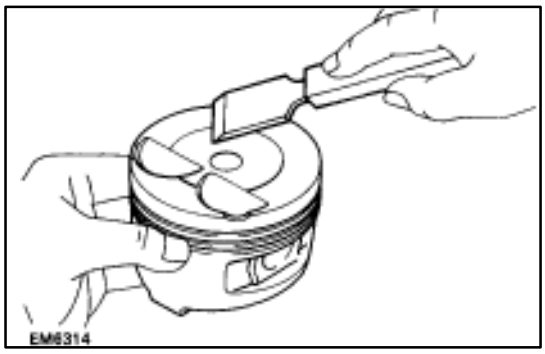

INSPECTION OF PISTON AND CONNECTING ROD ASSEMBLIES

1. CLEAN PISTON

(a) Using a gasket scraper, remove the carbon from the piston top.

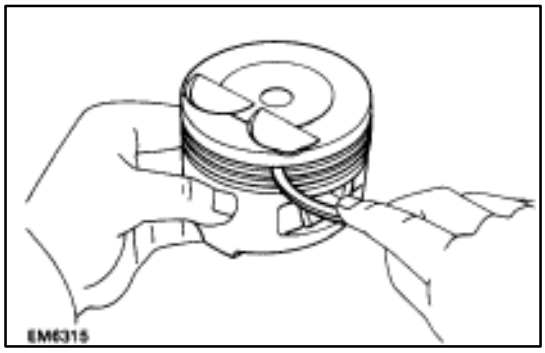

(b) Using a groove cleaning tool or broken ring, clean the piston ring grooves.

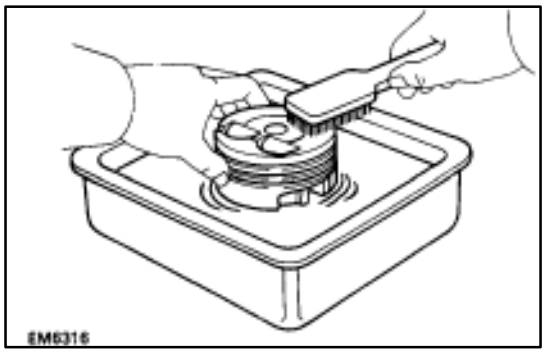

(c) Using solvent and a brush, thoroughly clean the piston.

NOTICE: Do not use a wire brush.

WhereEverybodyKnowsYourName

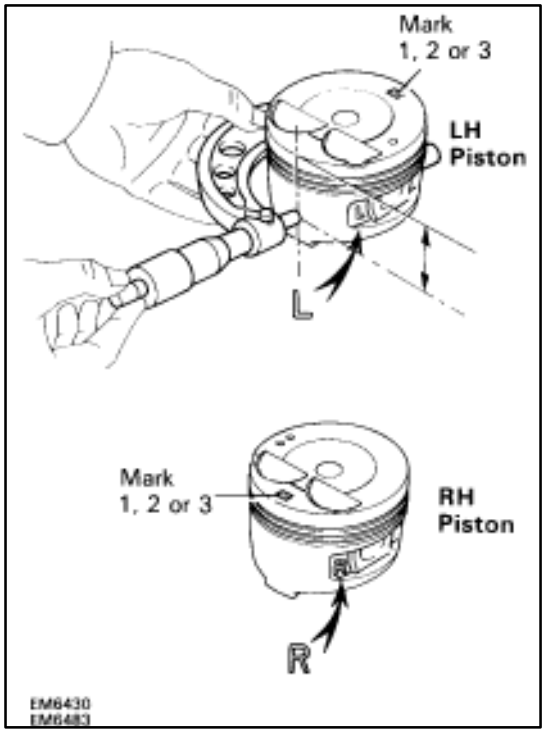

2. INSPECT PISTON

A. Inspect piston oil clearance

HINT: There are three sizes of the standard piston, marked ”1”, ”2” and ”3” accordingly. The mark is stamped on the top of the piston.

(a) Using a micrometer, measure the piston diameter at right angles to the piston pin center line, 49 mm (1.93 in.) from the piston head.

Piston diameter:

Mark ”1” 87.470–87.480 mm (3.4437–3.4441 in.)
Mark ”2” 87.480–87.490 mm (3.4441–3.4445 in.)
Mark ”3” 87.490–87.500 mm (3.4445–3.4449 in.)

(b) Measure the cylinder bore diameter in the thrust directions. (See step 4 on page EM–143)

(c) Subtract the piston diameter measurement from the cylinder bore diameter measurement.

Standard oil clearance: 0.020–0.040 mm (0.0008–0.0016 in.)

Maximum oil clearance: 0.06 mm (0.0024 in.)

If the oil clearance is greater than maximum, replace all the eight pistons. If necessary, replace the cylinder block.

HINT (Use new cylinder block):

- Use a piston with the same size mark as the cylinder bore diameter size mark on the cylinder block.
- The shape of the piston varies for the RH and LH banks. The RH piston is marked with ”R”, the LH piston with ”L”.

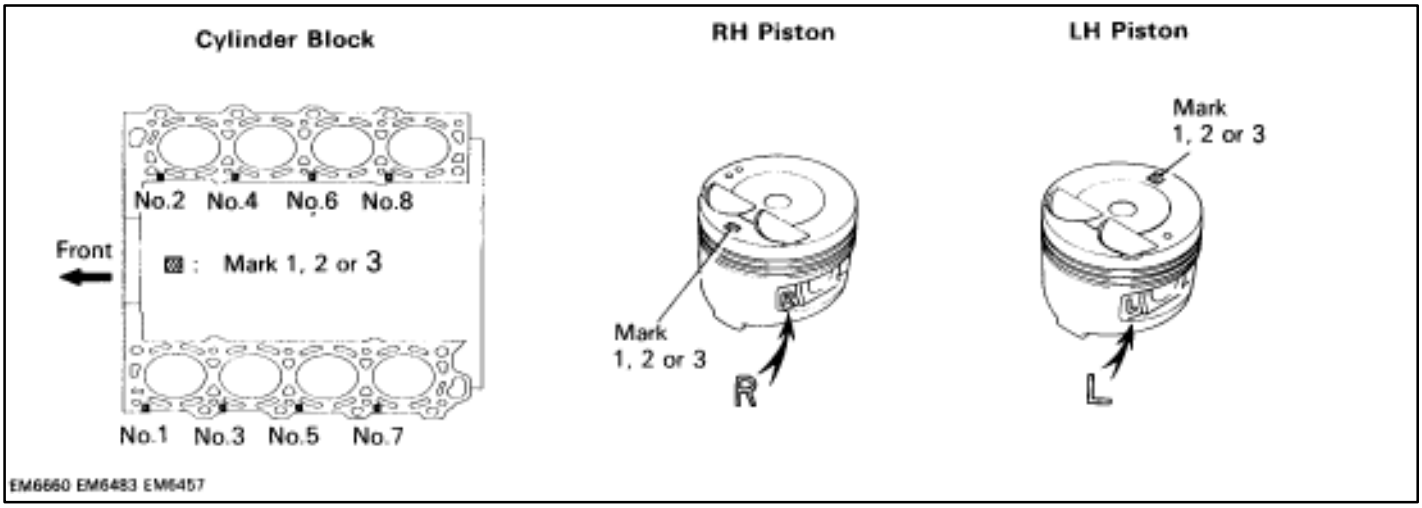

WhereEverybodyKnowsYourName

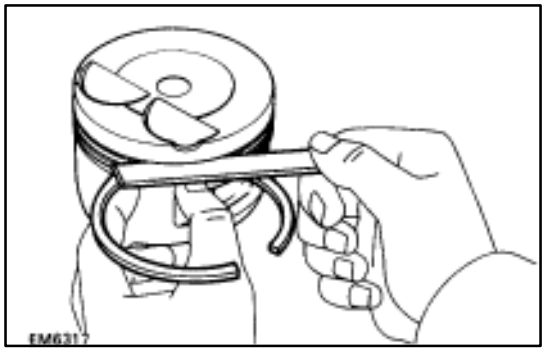

B. Inspect piston ring groove clearance

Using a feeler gauge, measure the clearance between new piston ring and the wall of the piston ring groove.

Ring groove clearance:

No.1 0.020–0.060 mm (0.0008–0.0024 in.)

No.2 0.015–0.055 mm (0.0006–0.0022 in.)

If the clearance is greater than maximum, replace the piston.

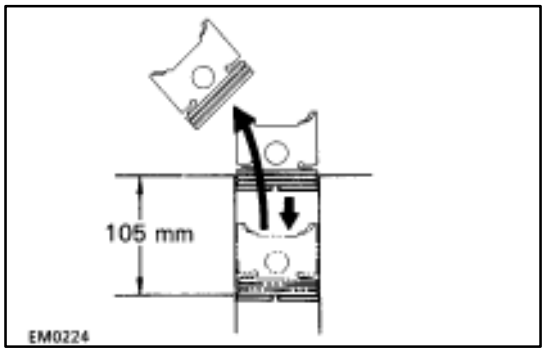

C. Inspect piston ring end gap

(a) Insert the piston ring into the cylinder bore.

(b) Using a piston, push the piston ring a little beyond the bottom of the ring travel, 105 mm (4.13 in.) from the top of the cylinder block.

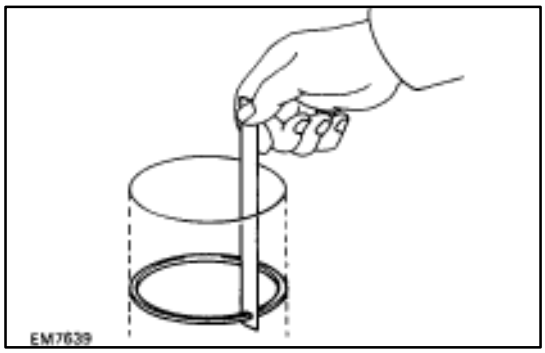

(c) Using a feeler gauge, measure the ring end gap.

Standard ring end gap:

No.1 0.250–0.450 mm (0.0098–0.0177 in.)

No.2 0.350–0.600 mm (0.0138–0.0236 in.)

Oil (Side rail) 0.150–0.500 mm (0.0059–0.0197 in.)

Maximum ring end gap:

No.1 1.05 mm (0.0413 in.)

No.2 1.20 mm (0.0472 in.)

Oil (Side rail) 1.10 mm (0.0433 in.)

If the end gap is greater than maximum, replace the piston ring. If the end gap is greater than maximum, even with a new piston ring, replace the cylinder block.

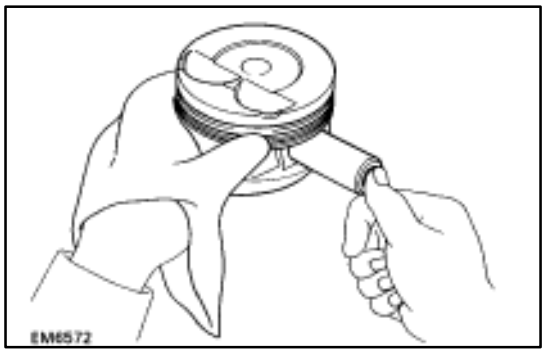

D. Inspect piston pin fit

At 60°C (140°F), you should be able to push the piston pin into the piston pin hole with your thumb.

WhereEverybodyKnowsYourName

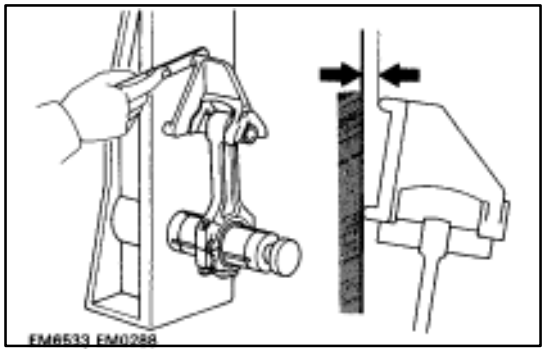

3. INSPECT CONNECTING ROD

A. Inspect connecting rod alignment

Using a feeler gauge and rod aligner, check the connecting rod alignment.

- Check for bending.

Maximum bending:

0.05 mm (0.0020 in.) per 100 mm (3.94 in.)

If bent is greater than maximum, replace the connecting rod assembly.

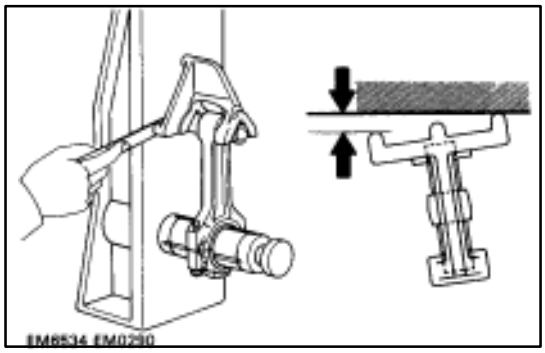

- Check for twist.

Maximum twist:

0.15 mm (0.0059 in.) per 100 mm (3.94 in.)

If twist is greater than maximum, replace the connecting rod assembly.

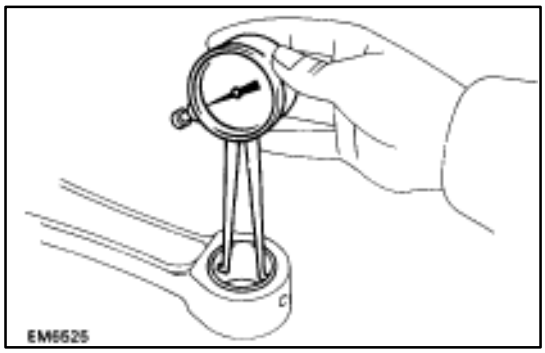

B. Inspect connecting rod bushings

(a) Using a caliper gauge, measure the inside diameter of the connecting rod bushing.

Bushing inside diameter: 22.005–22.017 mm (0.8663–0.8668 in.)

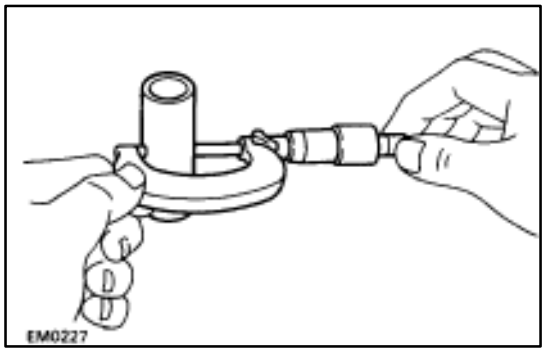

(b) Using a micrometer, measure the piston pin diameter.

Piston pin diameter: 21.997–22.009 mm (0.8660–0.8665 in.)

(c) Subtract the piston pin diameter measurement from the bushing inside diameter measurement.

Standard oil clearance: 0.005–0.011 mm (0.0002–0.0004 in.)

Maximum oil clearance: 0.05 mm (0.0020 in.)

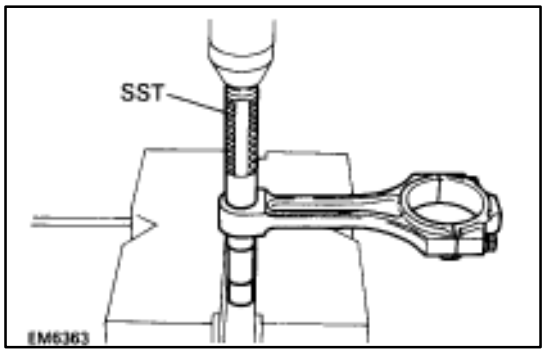

C. If necessary, replace connecting rod bushings

(a) Using SST and a press, press out the bushing.

SST 09222–30010

WhereEverybodyKnowsYourName

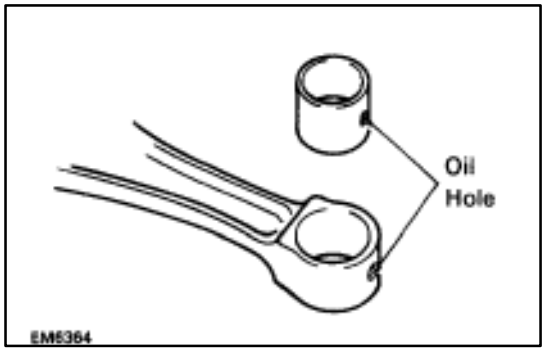

(b) Align the oil holes of the connecting rod and a new bushing.

(c) Using SST and a press, press in the bushing.

SST 09222–30010

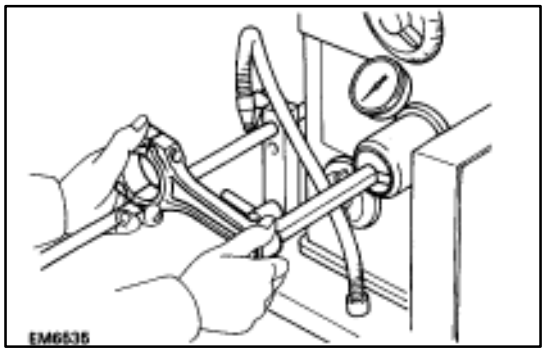

(d) Using a pin hole grinder, hole the bushing to obtain the standard specified clearance (see step B above) between the bushing and piston pin.

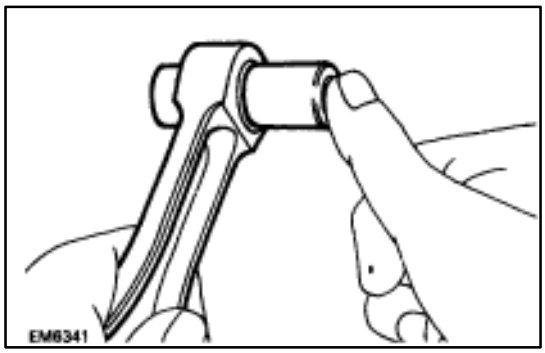

(e) Check the piston pin fit at normal room temperature.

Coat the piston pin with engine oil, and push it into the connecting rod with your thumb.

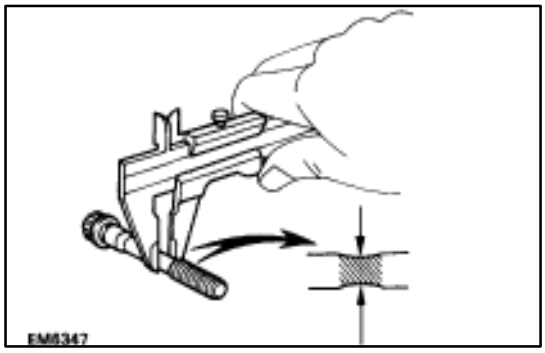

D. Inspect connecting rod bolts

Using a vernier caliper, measure the tension portion diameter of the bolt.

Standard diameter: 7.200–7.300 mm (0.2835–0.2874 in.)

Minimum diameter: 7.00 mm (0.2756 in.)

If the outside diameter is less than minimum, replace the bolt.

WhereEverybodyKnowsYourName

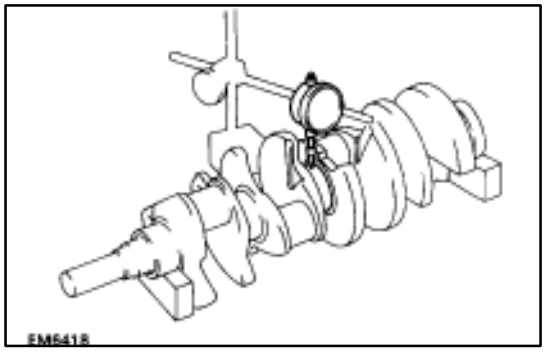

INSPECTION OF CRANKSHAFT

1. INSPECT CRANKSHAFT FOR RUNOUT

(a) Place the crankshaft on V–blocks.

(b) Using a dial indicator, measure the circle runout at the center journal.

Maximum circle runout: 0.08 mm (0.0031 in.)

If the circle runout is greater than maximum, replace the crankshaft.

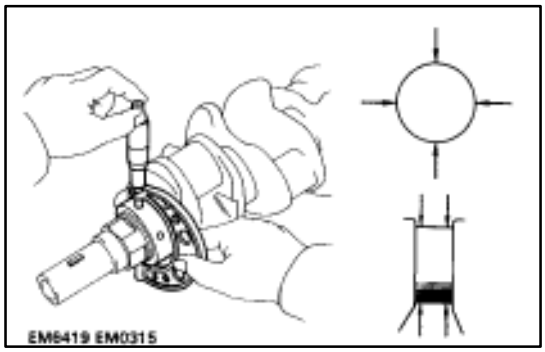

2. INSPECT MAIN JOURNALS AND CRANK PINS

(a) Using a micrometer, measure the diameter of each main journal and crank pin.

Main journal diameter: 66.988–67.000 mm (2.6373–2.6378 in.)

Crank pin diameter: 51.982–52.000 mm (2.0465–2.0472 in.)

If the diameter is not as specified, check the oil clearance (See page EM–136 or 139).

(b) Check each main journal and crank pin for taper and out–of–round as shown.

Maximum taper and out–of–round: 0.02 mm (0.0008 in.)

If the taper or out–of–round is greater than maximum, replace the crankshaft.

WhereEverybodyKnowsYourName

REPLACEMENT OF CRANKSHAFT OIL SEALS

HINT: There are two methods (A and B) to replace the oil seal which are as follows:

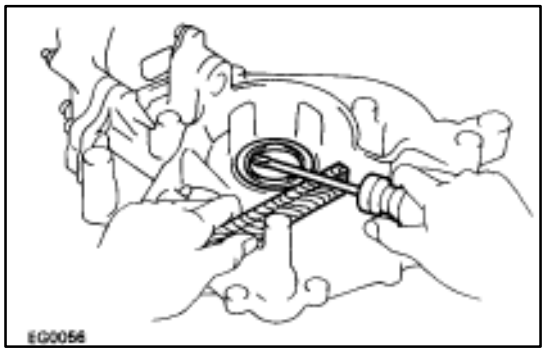

1. REPLACE CRANKSHAFT FRONT OIL SEAL

A. If oil pump is removed from cylinder block:

(a) Using a screwdriver, pry out the oil seal.

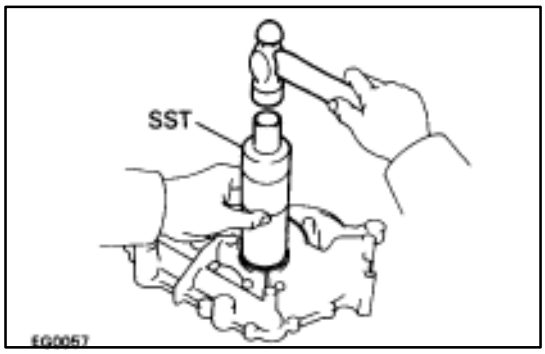

(b) Using SST and a hammer, tap in a new oil seal until its surface is flush with the oil pump body edge.

SST 09316–60010 (09316–00010)

(c) Apply MP grease to the oil seal lip.

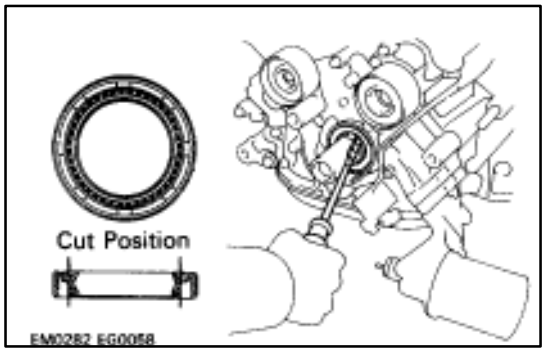

B. If oil pump is installed to the cylinder block:

(a) Using a knife, cut off the oil seal lip.

(b) Using a screwdriver, pry out the oil seal.

NOTICE: Be careful not to damage the crankshaft. Tape the screwdriver tip.

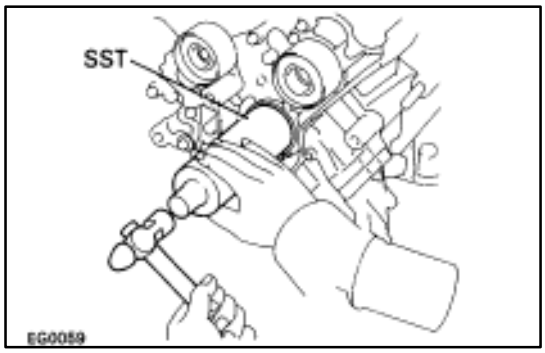

(c) Apply MP grease to a new oil seal lip.

(d) Using SST and a hammer, tap in the oil seal until its surface is flush with the oil pump body edge.

SST 09316–60010 (09316–00010)

WhereEverybodyKnowsYourName

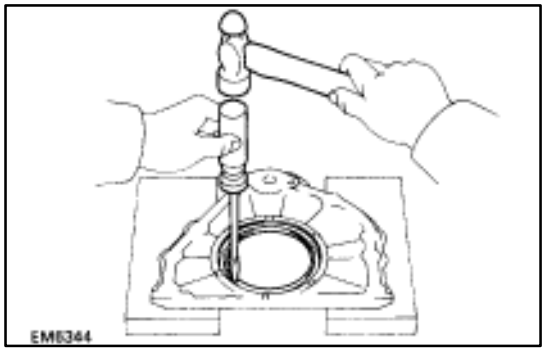

2. REPLACE CRANKSHAFT REAR OIL SEAL

A. If rear oil seal retainer is removed from cylinder block:

(a) Using a screwdriver and hammer, tap out the oil seal.

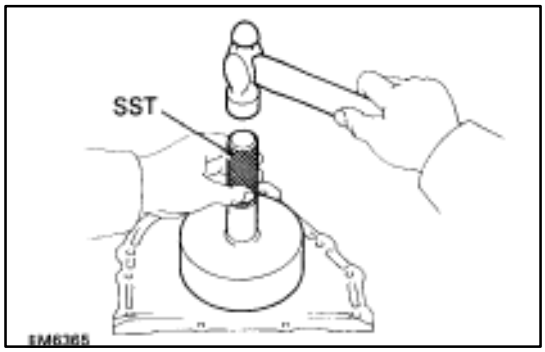

(b) Using SST and a hammer, tap in a new oil seal until its surface is flush with the rear oil seal retainer edge.

SST 09223–56010

(c) Apply MP grease to the oil seal lip.

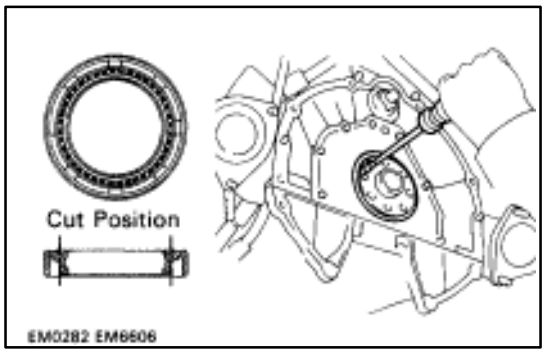

B. If rear oil seal retainer is installed to cylinder block:

(a) Using a knife, cut off the oil seal lip.

(b) Using a screwdriver, pry out the oil seal.

NOTICE: Be careful not to damage the crankshaft.

Tape the screwdriver tip.

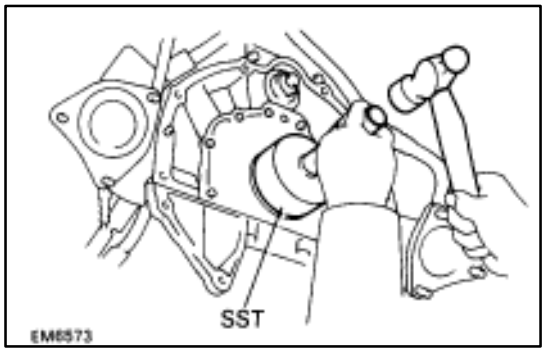

(c) Apply MP grease to a new oil seal lip.

(d) Using SST and a hammer, tap in the oil seal until its surface is flush with the rear oil seal retainer edge.

SST 09223–56010

WhereEverybodyKnowsYourName

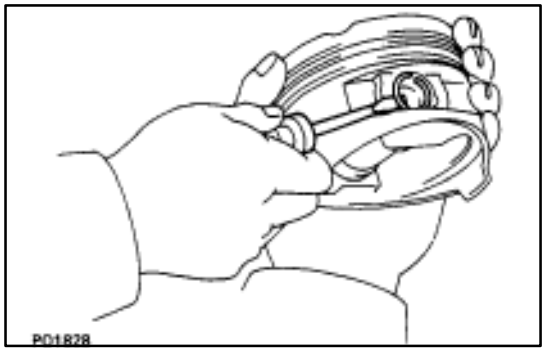

ASSEMBLY OF PISTON AND CONNECTING ROD ASSEMBLIES

1. ASSEMBLE PISTON AND CONNECTING ROD

(a) Using a small screwdriver, install a new snap ring on one side of the piston pin hole.

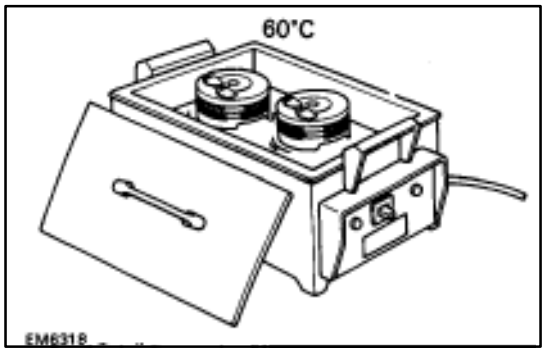

(b) Gradually heat the piston to about 60˚C (140˚F).

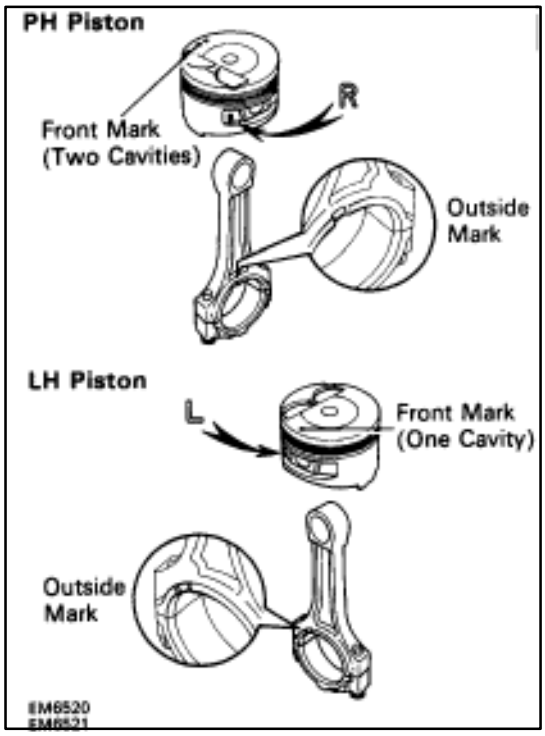

(c) Position the piston front mark with respect to the outside mark on the connecting rod as shown in the diagram.

NOTICE: The installation direction of the piston and connecting rod are different for the RH and LH banks. The RH piston is marked with ”R”, the LH piston with ”L”.

(d) Align the piston pin holes of the piston and connecting rod, and push in the piston pin with your thumb.

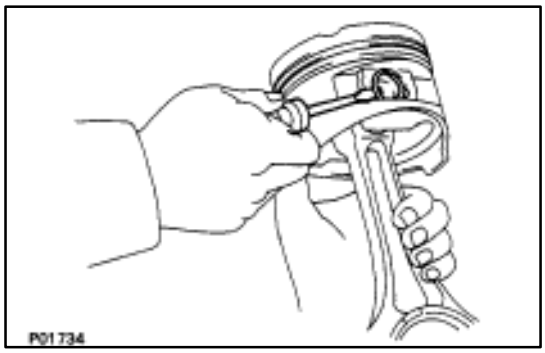

(e) Using a small screwdriver, install a new snap ring on the other side of the piston pin hole.

WhereEverybodyKnowsYourName

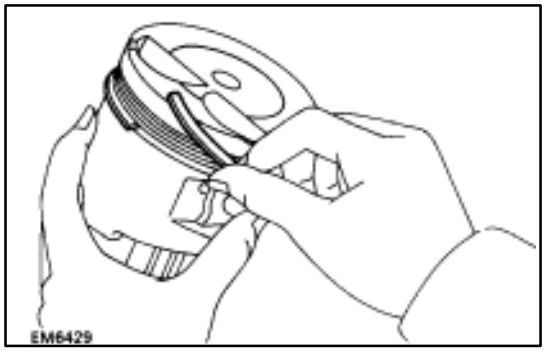

2. INSTALL PISTON RINGS

(a) Install the oil ring expander and two side rails by hand.

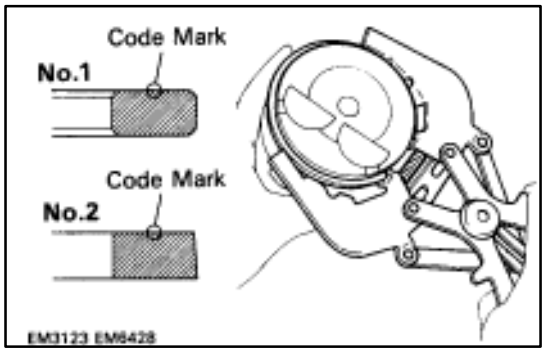

(b) Using a piston ring expander, install the two compression rings with the code mark facing upward.

Code mark: No.1 1R or T
No.2 2R or 2T

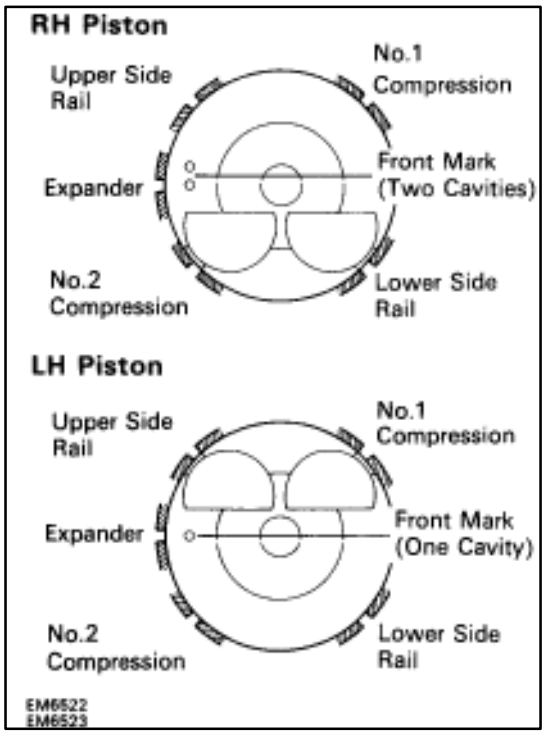

(c) Position the piston rings so that the ring ends are as shown.

NOTICE: Do not align the piston ring ends.

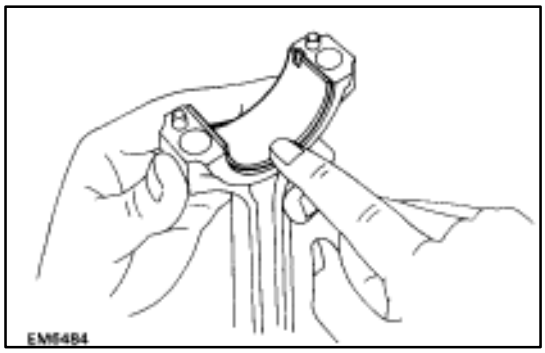

3. INSTALL BEARINGS

(a) Align the bearing claw with the groove of the connecting rod or connecting cap.

(b) Install the bearings in the connecting rod and connecting rod cap.

WhereEverybodyKnowsYourName

ASSEMBLY OF CYLINDER BLOCK

(See Components on page EM–131)

HINT:

- Thoroughly clean all parts to be assembled.
- Before installing the parts, apply new engine oil to all sliding and rotating surfaces.
- Replace all gaskets, O–rings and oil seals with new parts.

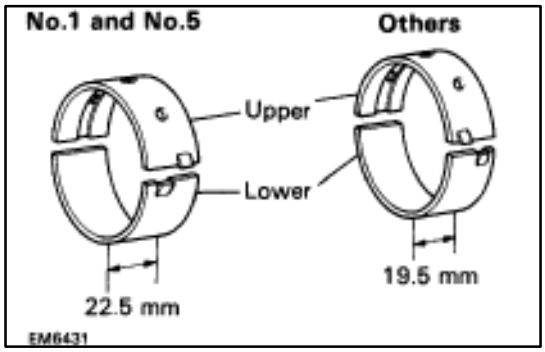

1. INSTALL MAIN BEARINGS

HINT:

- Main bearings come in widths of 19.5 mm (0.768 in.) and 22.5 mm (0.886 in.). Install the 22.5 mm (0.886 in.) bearings in the No.1 and No.5 cylinder block journal positions with the main bearing caps. Install the 19.5 mm (0.768 in.) bearings in the other positions.
- Upper bearings have an oil groove and oil holes; lower bearings do not.

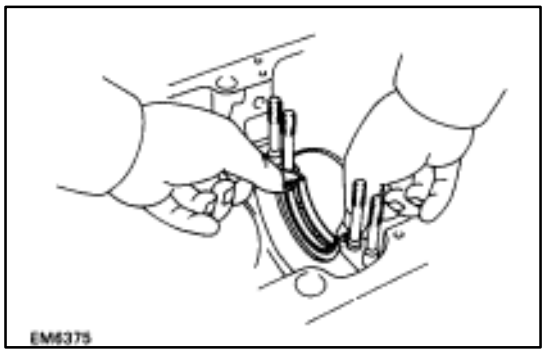

(a) Align the bearing claw with the claw groove of the cylinder block, and push in the five upper bearings.

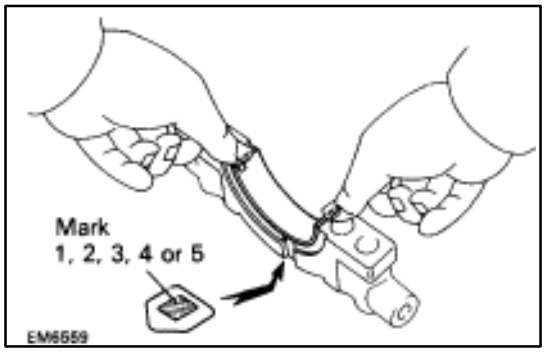

(b) Align the bearing claw with the claw groove of the main bearing cap, and push in the five lower bearings.

HINT: A number is marked on each main bearing cap indicating the installation position.

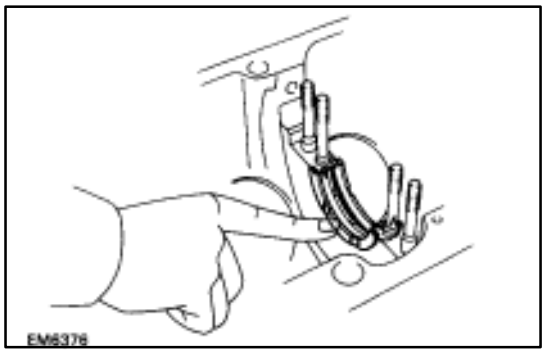

2. INSTALL UPPER THRUST WASHERS

Install the two thrust washers under the No.3 journal position of the block with the oil grooves facing outward.

WhereEverybodyKnowsYourName

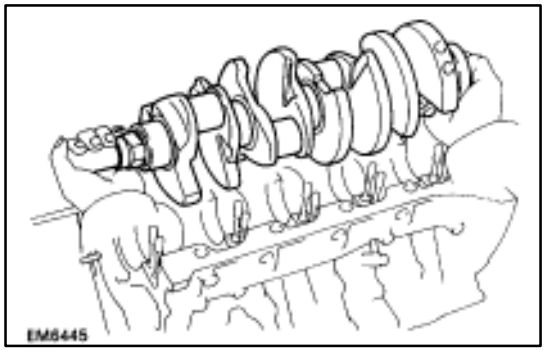

3. PLACE CRANKSHAFT ON CYLINDER BLOCK

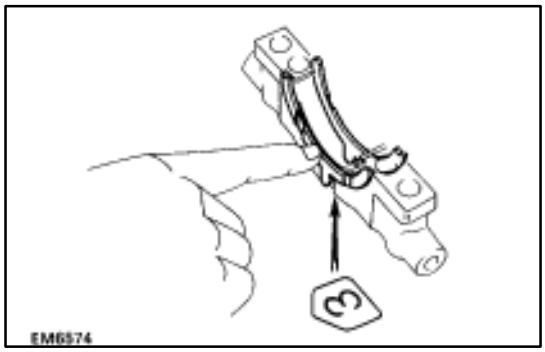

4. INSTALL MAIN BEARING CAP AND LOWER THRUST WASHERS

A. Place main bearing cap and lower thrust washers on cylinder block

(a) Install the two thrust washers on the No.3 main bearing cap with the grooves facing outward.

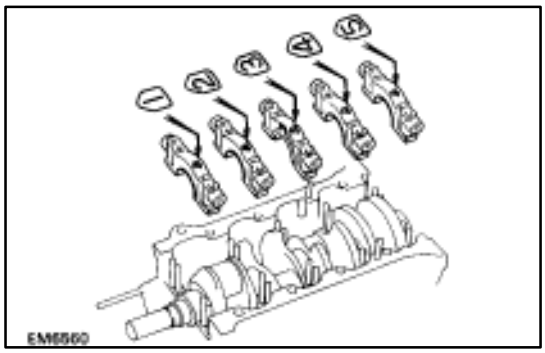

(b) Install the main bearing caps in their proper location.

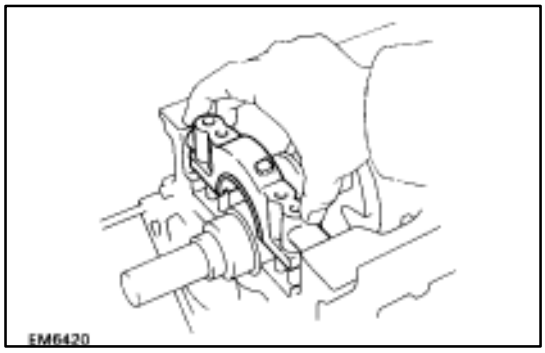

(c) Place the five bearing caps in position on cylinder block.

HINT: Place the bearing caps level and let them return to their original position by their own weight.

NOTICE: Do not install the main bearing cap by tapping it.

B. Install main bearing cap nuts

HINT:

- The main bearing cap nuts are tightened in two progressive steps (steps (b) and (d)).
- If any one of the main bearing cap stud bolts is broken or deformed, replace it.

(a) Apply a light coat of engine oil on the threads and under the nuts of the main bearing caps.

(b) Install and uniformly tighten the twenty main bearing cap nuts in several passes in the sequence shown.

Torque: 27 N·m (275 kgf·cm, 20 ft·lbf)

If any one of the main bearing cap nuts does not meet the torque specification, replace the main bearing cap stud bolt.

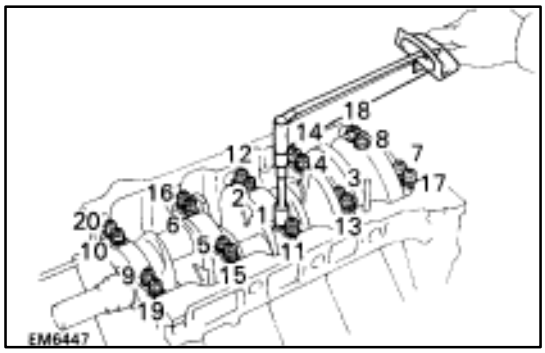

WhereEverybodyKnowsYourName

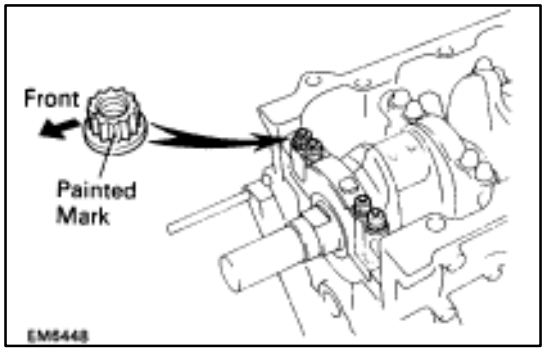

(c) Mark the front of the main bearing cap nut with paint.

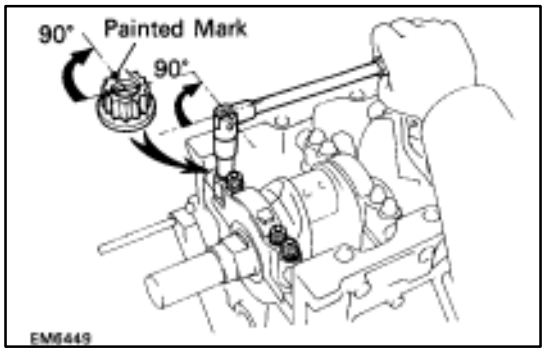

(d) Retighten the main bearing cap nuts 905 in the numerical order shown.
(e) Check that the painted mark is now at a 905 angle to the front.
(f) Check that the crankshaft turns smoothly.
(g) Check the crankshaft thrust clearance.
(See step 5 on page EM–138)

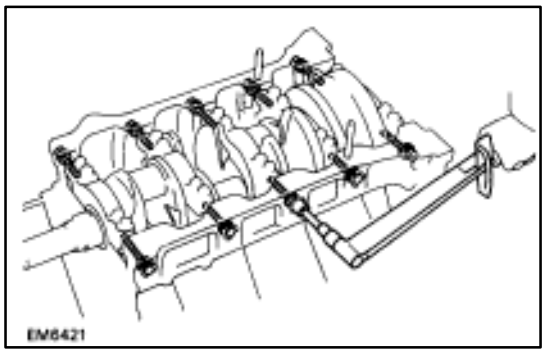

C. Install main bearing cap bolts
(a) Install a new seal washer to the main bearing cap bolt.
(b) Install the ten main bearing cap bolts.
Torque: 49 N·m (500 kgf·cm, 36 ft·lbf)

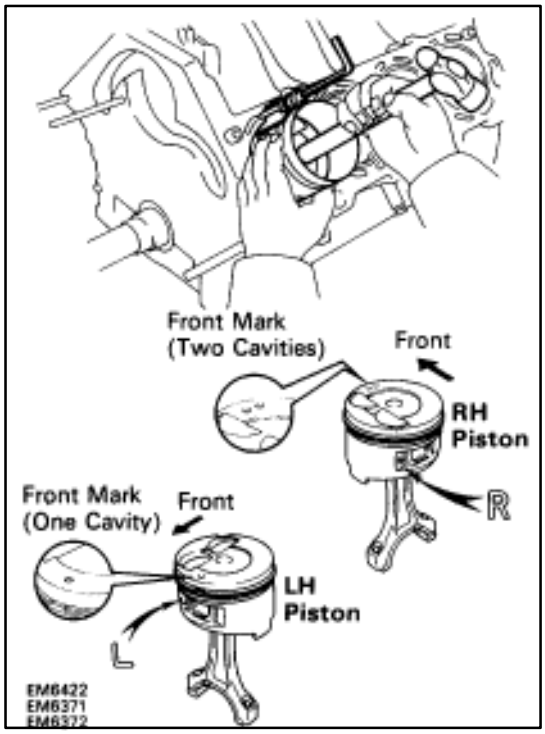

5. INSTALL PISTON AND CONNECTING ROD ASSEMBLIES
Using a piston ring compressor, push the correctly numbered piston and connecting rod assemblies into each cylinder with the front mark of the piston facing forward.
NOTICE: The shape of the piston varies for the RH and LH banks. The RH piston is marked with ”R”, the LH piston with ”L”.

WhereEverybodyKnowsYourName

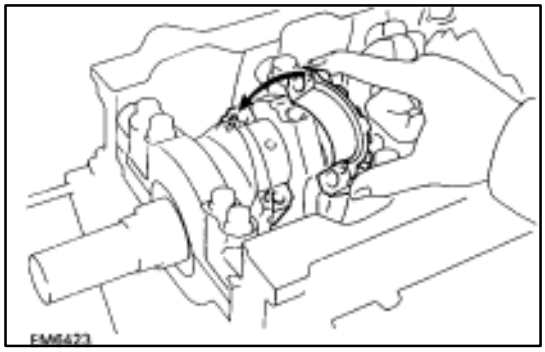

6. INSTALL CONNECTING ROD CAPS

A. Place connecting rod cap on connecting rod

(a) Match the numbered connecting rod cap with the connecting rod.

(b) Align the pin groove of the connecting rod cap with the pins of the connecting rod, and install the connecting rod cap.

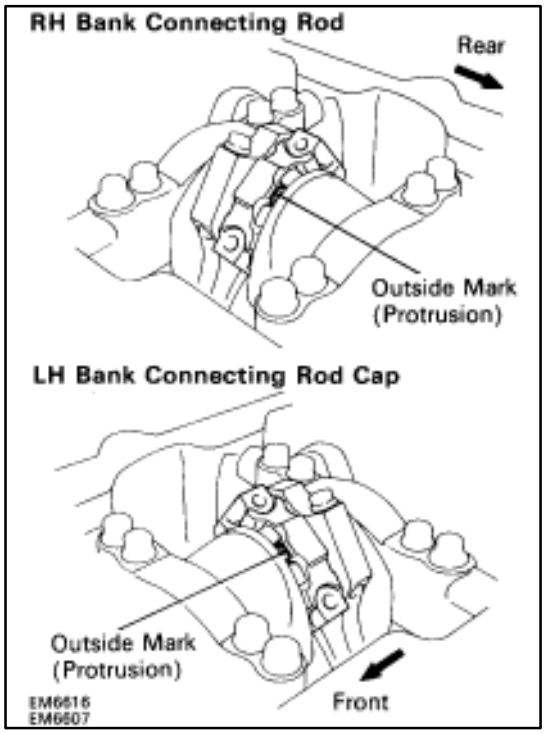

(c) Check that the outside mark on the connecting rod cap is facing in correct direction.

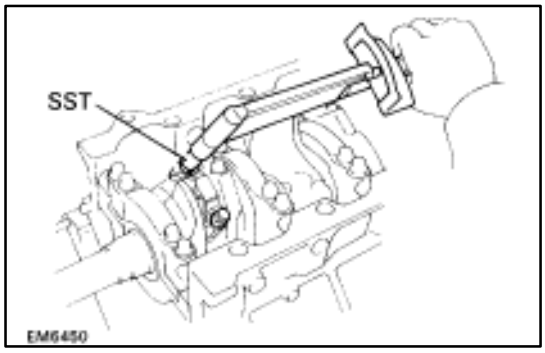

B. Install connecting rod cap bolts

HINT:

- The connecting rod cap bolts are tightened in two progressive steps (steps (b) and (d)).
- If any one of the connecting rod bolts is broken or deformed, replace it.

(a) Apply a light of engine oil on the threads and under the heads of the connecting rod cap bolts.

(b) Using SST, install and alternately tighten the two connecting rod cap bolts in several passes.

SST 09011–38121

Torque: 25 N·m (250 kgf·cm, 18 ft·lbf)

If any one of the connecting rod cap bolts does not meet the torque specification, replace the connecting rod cap bolt.

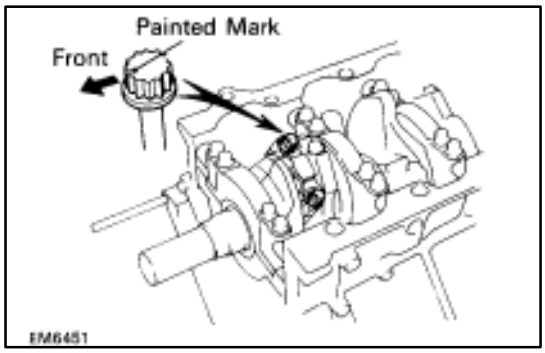

(c) Mark the front of the connecting rod cap bolt with paint.

WhereEverybodyKnowsYourName

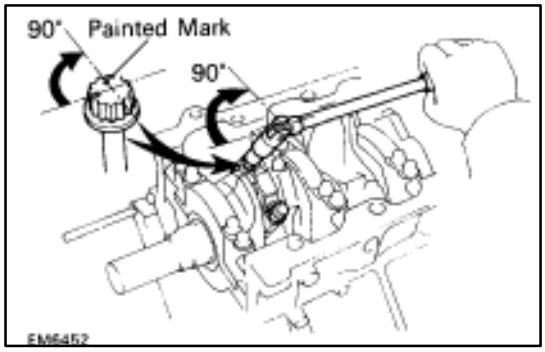

(d) Retighten the connecting rod cap bolts 905 in the numerical order shown.
(e) Check that the painted mark is now at a 905 angle to the front.
(f) Check that the crankshaft turns smoothly.
(g) Check the connecting rod thrust clearance.
(See step 2 on page EM–135)

7. INSTALL REAR OIL SEAL RETAINER

(a) Remove any old packing (FIPG) material and be careful not to drop any oil on the contact surfaces of the retainer and cylinder block.

- Using a razor blade and gasket scraper, remove all the old packing (FIPG) material from the gasket surfaces and sealing groove.
- Thoroughly clean all components to remove all the loose material.
- Using a non–residue solvent, clean both sealing surfaces.

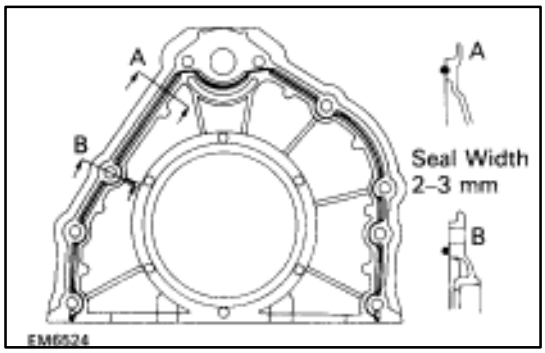

(b) Apply seal packing to the retainer as shown in the illustration.

Seal packing: Part No.08826–00080 or equivalent

- Install a nozzle that has been cut to a 2–3 mm (0.08–0.12 in.) opening.
- Parts must be assembled within 3 minutes of application. Otherwise the material must be removed and reapplied.
- Immediately remove nozzle from the tube and reinstall cap.

(c) Place a new O–ring in position on the cylinder block.

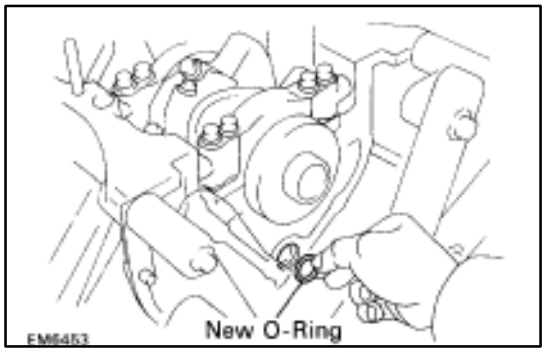

(d) Install the retainer with the seven bolts.

Torque: 7.8 N·m (80 kgf·cm, 69 in.·lbf)

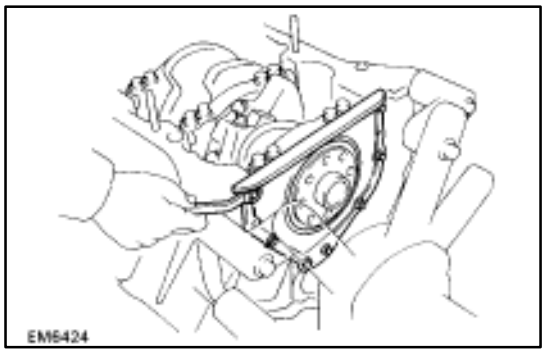

WhereEverybodyKnowsYourName

POST ASSEMBLY

(See Components on page EM–131)

1. INSTALL WATER SEAL PLATE

(a) Remove any old packing (FIPG) material and be careful not to drop any oil on the contact surfaces of the seal plate and cylinder block.

- Using a razor blade and gasket scraper, remove all the old packing (FIPG) material from the gasket surfaces and sealing groove.
- Thoroughly clean all components to remove all the loose material.
- Using a non–residue solvent, clean both sealing surfaces.

(b) Apply seal packing to the seal plate as shown in the illustration.

Seal packing: Part No.08826–00100 or equivalent

- Install a nozzle that has been cut to a 2–3 mm (0.08–0.12 in.) opening.
- Parts must be assembled within 5 minutes of application. Otherwise the material must be removed and reapplied.
- Immediately remove nozzle from the tube and reinstall cap.

(c) Install the seal plate with the two nuts.

Torque: 14 N·m (145 kgf·cm, 10 ft·lbf)

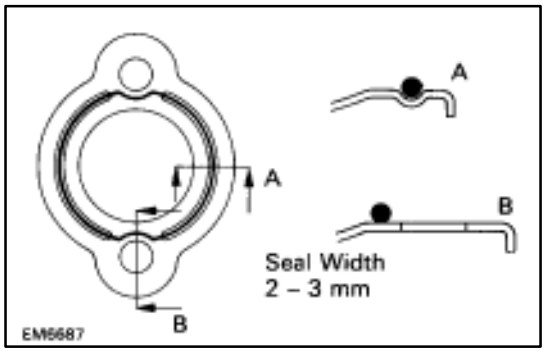

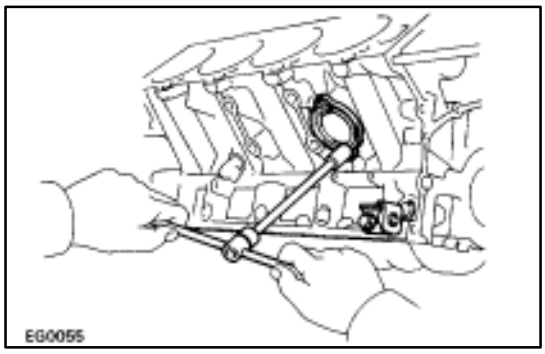

2. INSTALL ALTERNATOR BRACKET

Install the bracket with the bolt.

Torque: 18 N·m (185 kgf·cm, 13 ft·lbf)

3. INSTALL OIL PUMP

(a) Remove any old packing (FIPG) material and be careful not to drop any oil on the contact surfaces of the oil pump and cylinder block.

- Using a razor blade and gasket scraper, remove all the old packing (FIPG) material from the gasket surfaces and sealing groove.
- Thoroughly clean all components to remove all the loose material.
- Using a non–residue solvent, clean both sealing surfaces.

(b) Apply seal packing to the oil pump as shown in the illustration.

Seal packing: Part No.08826–00080 or equivalent

- Install a nozzle that has been cut to a 2–3 mm (0.08–0.12 in.) opening.
- Parts must be assembled within 3 minutes of application. Otherwise the material must be removed and reapplied.
- Immediately remove nozzle from the tube and reinstall cap.

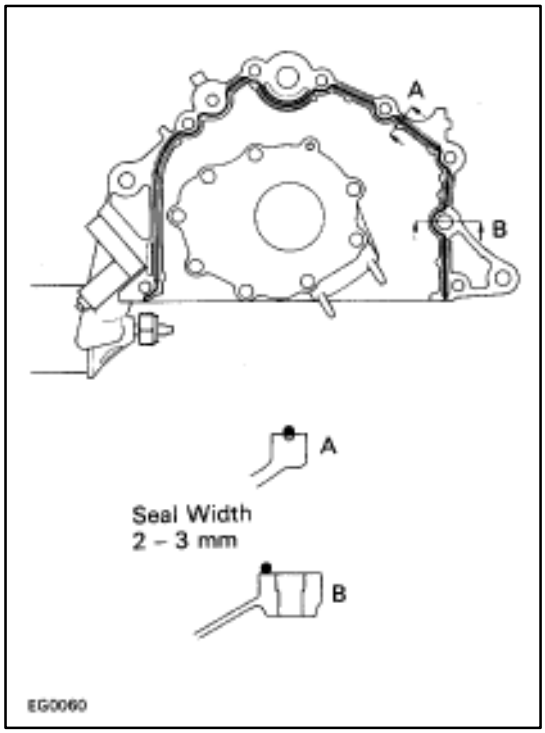

WhereEverybodyKnowsYourName

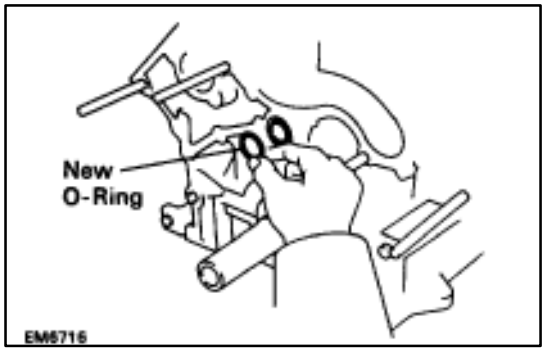

(c) Place a new O–ring in position on the cylinder block.

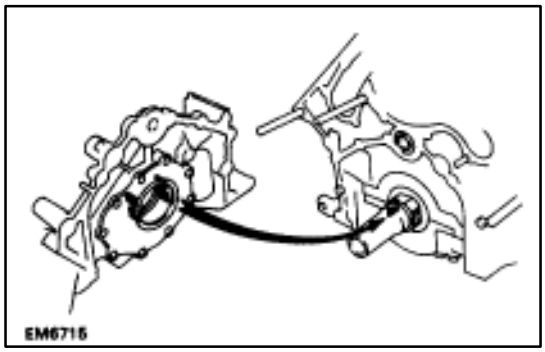

(d) Engage the spline teeth of the oil pump drive gear with the large teeth of the crankshaft, and slide the oil pump.

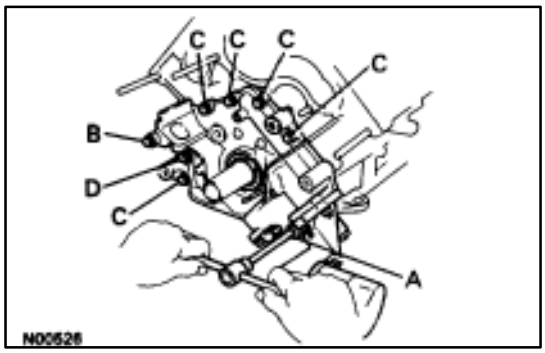

(e) Install the oil pump with the eight bolts.

Torque:

12 mm head 16 N·m (160 kgf·cm, 12 ft·lbf)

14 mm head 30 N·m (310 kgf·cm, 22 ft·lbf)

HINT: Each bolt length is indicated in the illustration.

Bolt length:

A 50 mm (1.97 in.) for 12 mm head

B 106 mm (4.17 in.) for 12 mm head

C 30 mm (1.18 in.) for 12 mm head

D 40 mm (1.57 in.) for 14 mm head

4. INSTALL NO. 1 OIL PAN AND NO. 2 OIL PANS

(See steps 4 to 9 on pages LU–16 to 19)

5. INSTALL WATER PUMP

(a) Remove any old packing (FIPG) material and be careful not to drop any oil on the contact surfaces of the water pump and cylinder block.

- Using a razor blade and gasket scraper, remove all the old packing (FIPG) material from the gasket surfaces and sealing groove.
- Thoroughly clean all components to remove all the loose material.
- Using a non–residue solvent, clean both sealing surfaces.

WhereEverybodyKnowsYourName

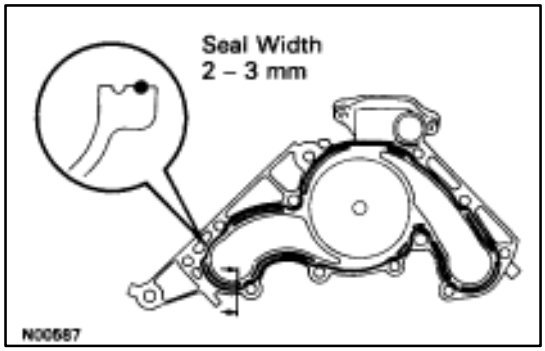

(b) Apply seal packing to the sealing groove of the water pump as shown in the illustration.

Seal packing: Part No.08826–00100 or equivalent

- Install a nozzle that has been cut to a 2–3 mm (0.08–0.12 in.) opening.
- Parts must be assembled within 5 minutes of application. Otherwise the material must be removed and reapplied.
- Immediately remove nozzle from the tube and reinstall cap.

(c) Install the water pump with the five bolts, two stud bolts and nut.

Torque: 18 N·m (185 kgf·cm, 13 ft·lbf)

HINT: Use bolts 30 mm (1.18 in.) in length.

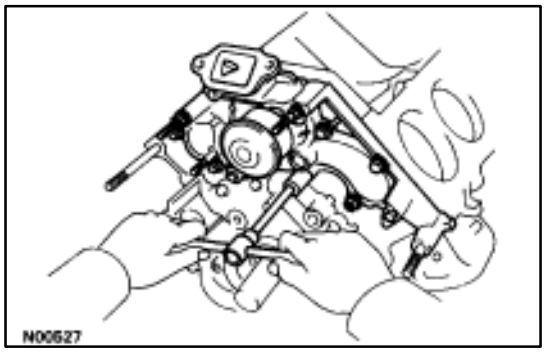

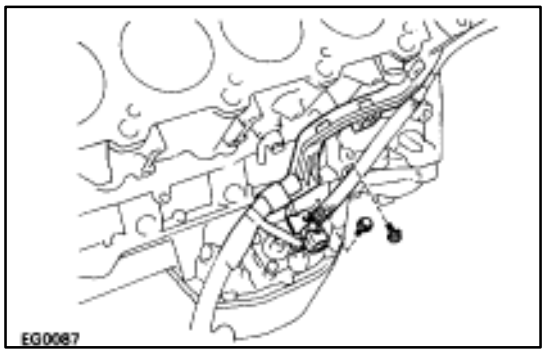

6. INSTALL ENGINE WIRE

(a) Install the engine wire to the LH side of the cylinder block with the two bolts.

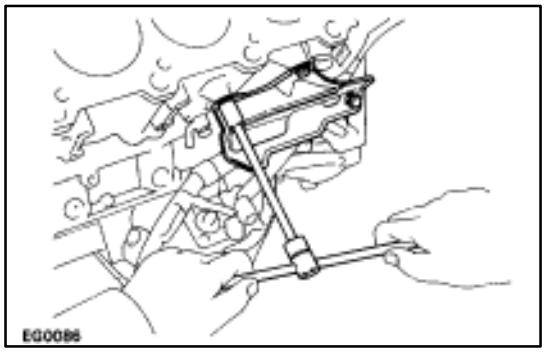

(b) Install the wire cover with the three bolts.

(c) Connect the following connectors:

(1) Oil level sensor connector

(2) Oil pressure switch connector

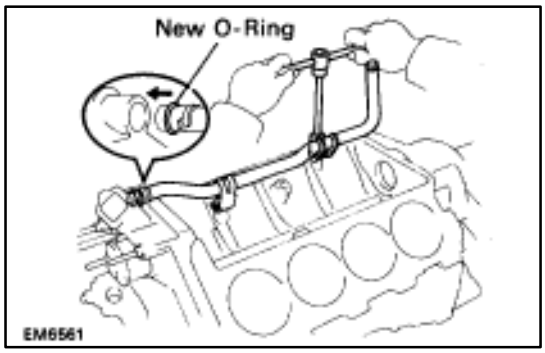

7. INSTALL WATER BY–PASS PIPE

(a) Install a new O–ring to the by–pass pipe.

(b) Apply soapy water to the O–ring.

(c) Pull in the by–pass pipe end into the pipe hole of the water pump.

(d) Install the water by–pass pipe with the two bolts.

Torque: 18 N·m (185 kgf·cm, 13 ft·lbf)

WhereEverybodyKnowsYourName

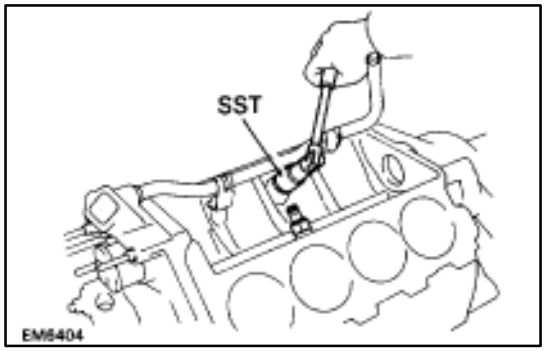

8. INSTALL KNOCK SENSORS

(a) Using SST, install the two knock sensors.

SST 09816–30010

Torque: 44 N·m (450 kgf·cm, 33 ft·lbf)

(b) Connect the two knock sensor connectors.

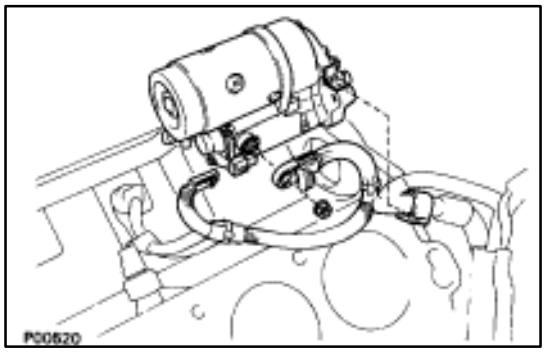

9. INSTALL STARTER

(a) Install the wire clamp to the bracket on the starter.

(b) Connect the wire to the starter with the nut.

(c) Connect the connector to the starter.

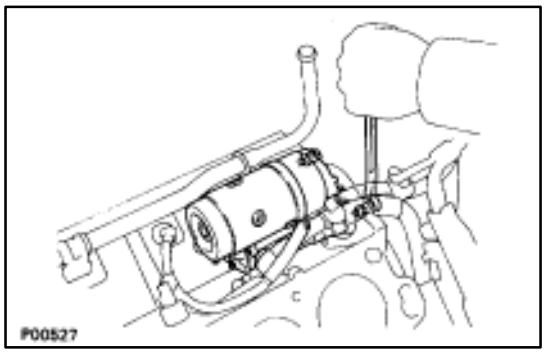

(d) Install the starter with the two bolts.

Torque: 39 N·m (400 kgf·cm, 29 ft·lbf)

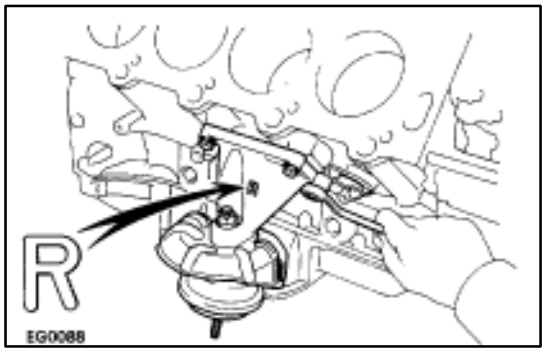

10. INSTALL RH ENGINE MOUNTING BRACKET

Install the mounting bracket with the four bolts.

Torque: 37 N·m (380 kgf·cm, 27 ft·lbf)

HINT: The RH mounting bracket is marked with ”R”.

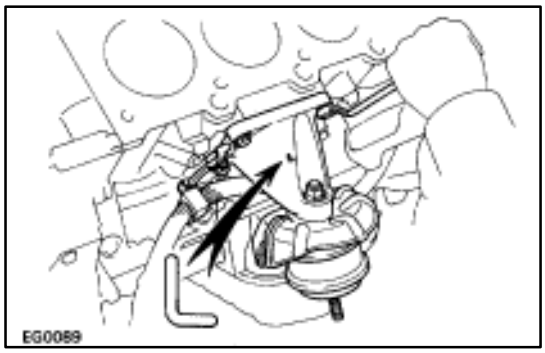

11. INSTALL LH ENGINE MOUNTING BRACKET

(a) Install the mounting bracket with the four bolts.

Torque: 37 N·m (380 kgf·cm, 27 ft·lbf)

HINT: The LH mounting bracket is marked with ”L”.

(b) Install the engine wire to the mounting bracket with the bolt.

WhereEverybodyKnowsYourName

12. INSTALL CYLINDER HEADS
(See pages EM–92 to 115)

13. INSTALL TIMING PULLEYS AND BELT
(See pages EM–48 to 57)

14. REMOVE ENGINE STAND FROM ENGINE

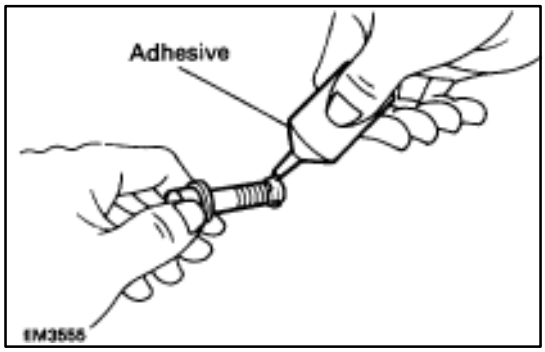

15. INSTALL DRIVE PLATE

(a) Apply adhesive to two or three threads of the mounting bolt end.

Adhesive: Part No.08833–00070, THREE BOND 1324 or equivalent

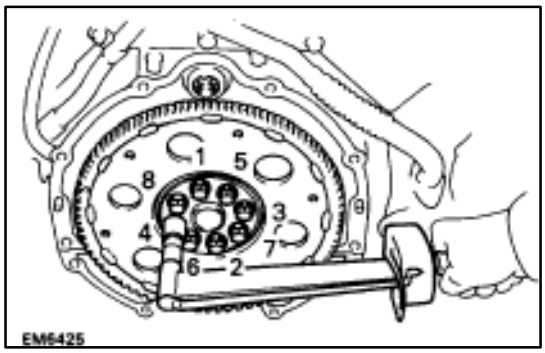

(b) Install the front spacer, drive plate and rear spacer on the crankshaft.

(c) Install and uniformly tighten the eight mounting bolts in several passes in the sequence shown.

Torque: 98 N·m (1,000 kgf·cm, 72 ft·lbf)

ASSEMBLY OF ENGINE AND TRANSMISSION

(See Components on page EM–129)

1. ASSEMBLE ENGINE AND TRANSMISSION
(See AT section)

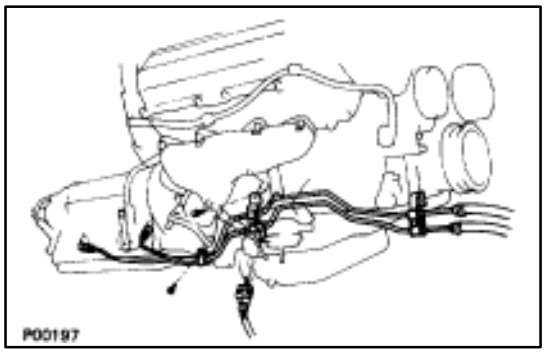

2. INSTALL OIL COOLER PIPE

(a) Temporarily install the two mounting bolts.

(b) Connect the two oil cooler pipes to the unions on the transmission. Tighten the union nuts.

Torque: 34 N·m (350 kgf·cm, 25 ft·lbf)

WhereEverybodyKnowsYourName

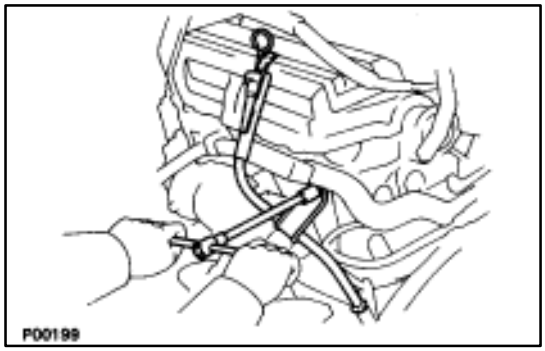

3. INSTALL DIPSTICK GUIDE FOR TRANSMISSION

(a) Install a new O–ring to the dipstick guide.
(b) Apply soapy water to the O–ring.
(c) Connect the dipstick guide end to the tube of the oil pan, and install the dipstick guide with the bolt.
(d) Install the dipstick.

4. CONNECT ENGINE WIRE TO TRANSMISSION

(a) Connect the following connectors:
  (1) O/D direct clutch speed sensor connector
  (2) No.1 speed sensor connector
  (3) No.2 speed sensor connector
  (4) Neutral start switch connector
(b) Install the five wire clamps to the brackets on the transmission.

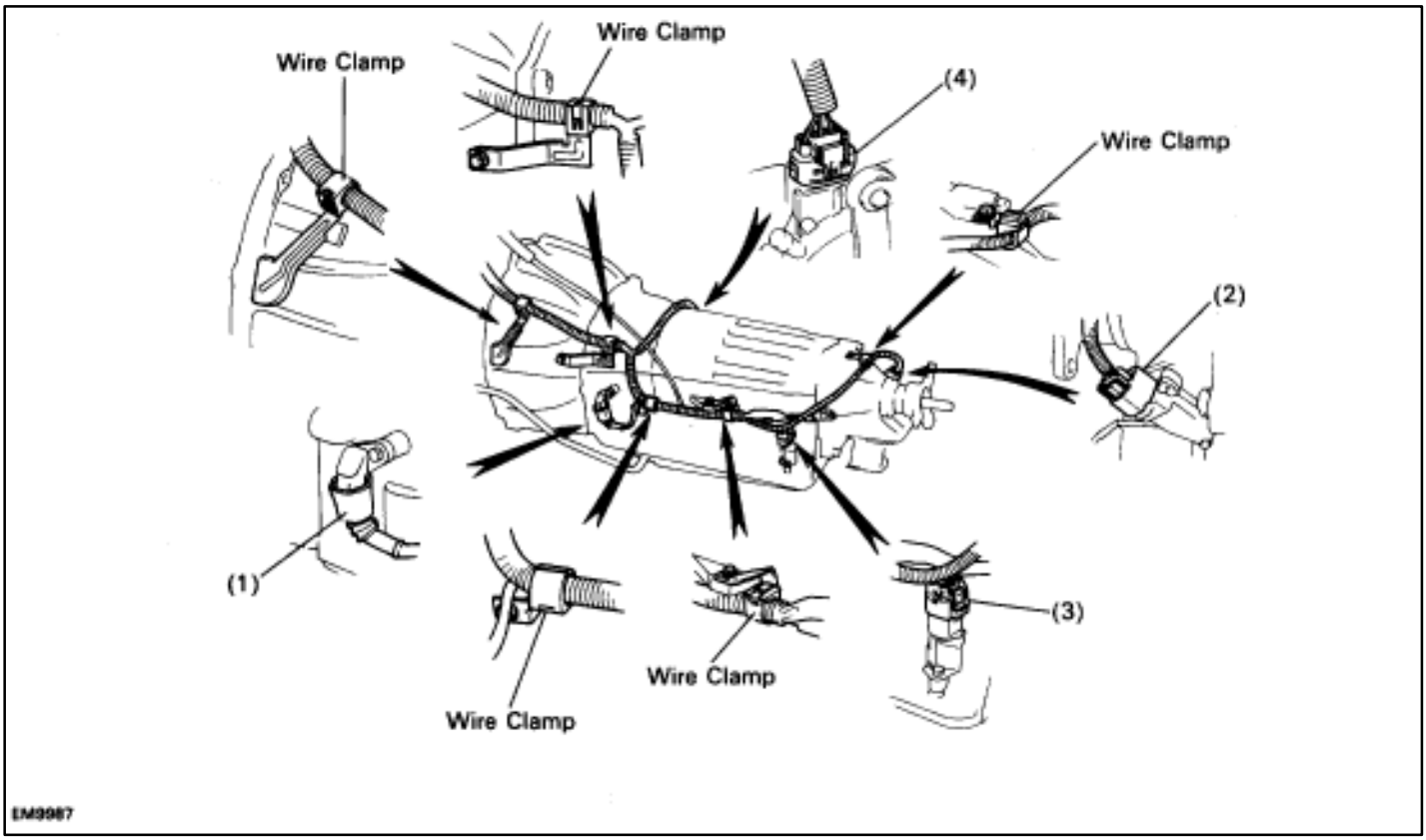

WhereEverybodyKnowsYourName

INSTALLATION OF ENGINE

(See Components on pages EM–116 to 118)

1. INSTALL ENGINE AND TRANSMISSION ASSEMBLY IN VEHICLE

(a) Attach the engine hoist chain to the engine hangers.

(b) Lower the engine and transmission assembly into the engine compartment.

CAUTION: Be careful not to hit the PS gear housing or neutral start switch.

(c) Insert the stud bolts of the front engine mounting brackets into the stud bolt holes of the front suspension crossmember.

(d) Keep the engine level.

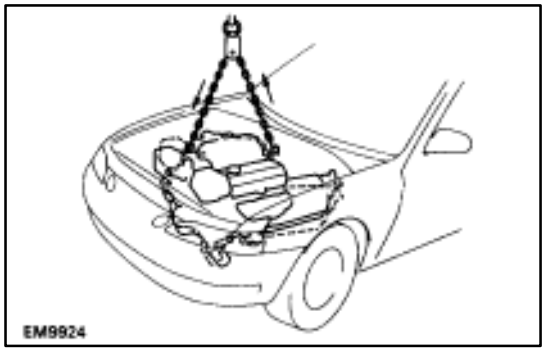

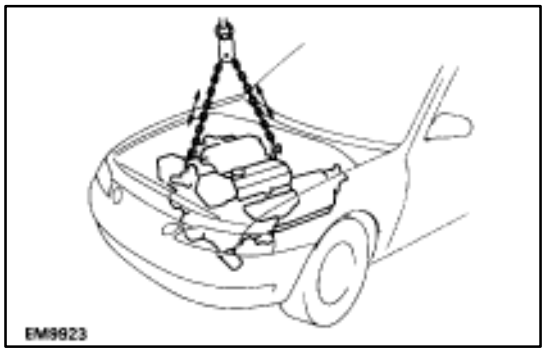

(e) Install the rear engine mounting member with the four bolts and four nuts with the front mark facing forward. Install the ground strap.

Torque: Nut 13 N·m (135 kgf·cm, 10 ft·lbf)
Bolt 25 N·m (260 kgf·cm, 19 ft·lbf)

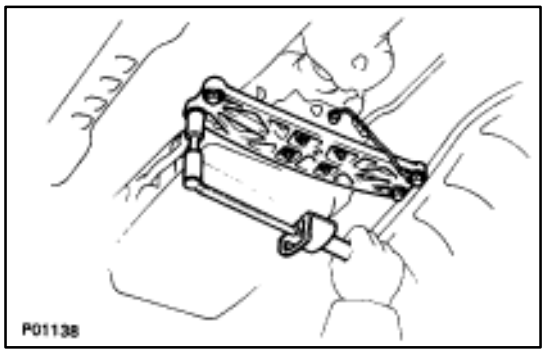

(f) Install the two nuts holding the engine mounting brackets to the front suspension crossmember.

Torque: 59 N·m (600 kgf·cm, 43 ft·lbf)

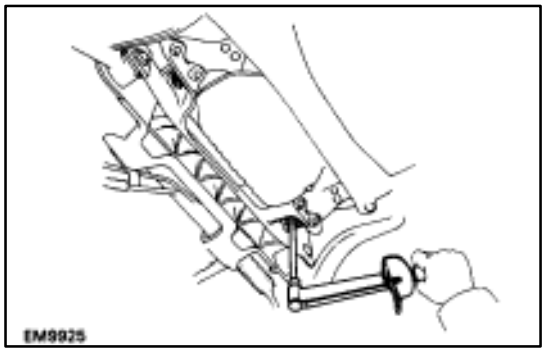

3. CONNECT TRANSMISSION CONTROL ROD

Connect the control rod to the shift lever with the nut.

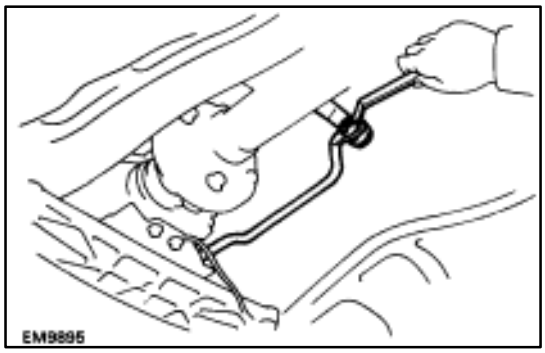

WhereEverybodyKnowsYourName

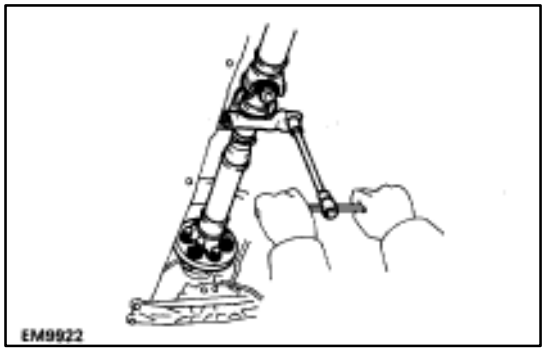

4. INSTALL PROPELLER SHAFT
(See PR section)

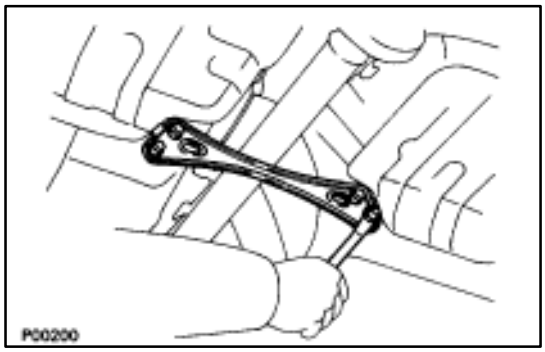

5. INSTALL CENTER FLOOR BRACE
Install the brace with the four nuts.
Torque: 13 N·m (130 kgf·cm, 9 ft·lbf)

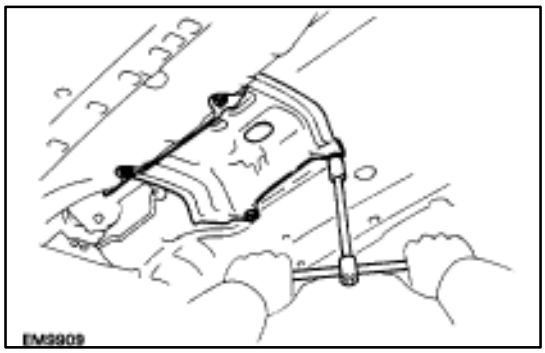

6. INSTALL EXHAUST PIPE HEAT INSULATOR
Install the heat insulator with the four nuts.

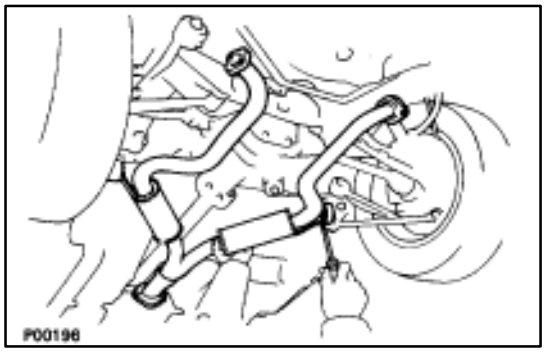

7. INSTALL CENTER EXHAUST PIPE
Install the two hooks of the exhaust pipe to the rings on the exhaust pipe brackets.

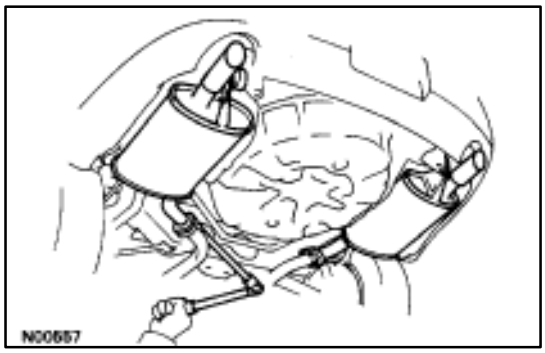

8. INSTALL TAILPIPE
(a) Install the tailpipe hook to the ring on the tailpipe brackets.
(b) Install a new gasket and the tailpipe to the center exhaust pipe with the two bolts. Install the two tailpipe.
Torque: 19 N·m (195 kgf·cm, 14 ft·lbf)

WhereEverybodyKnowsYourName

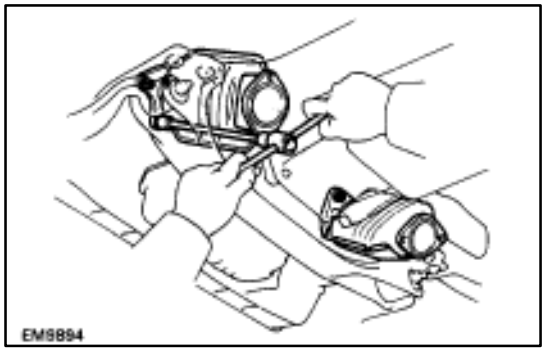

9. INSTALL CATALYTIC CONVERTERS (MAIN)

Install a new gasket and the catalytic converter with three new nuts. Install the two catalytic converters.

Torque: 62 N·m (630 kgf·cm, 46 ft·lbf)

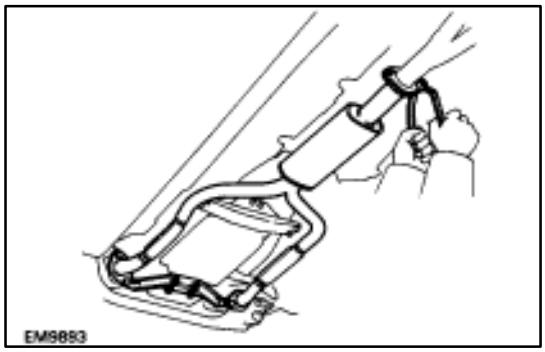

10. INSTALL FRONT EXHAUST PIPE

(a) Temporarily install the pipe support stay with the four bolts.

(b) Install three new gaskets, the exhaust pipe and pipe support stay with the six bolts and nuts.

Torque: 43 N·m (440 kgf·cm, 32 ft·lbf)

(c) Tighten the four bolts holding the pipe support bracket to the transmission.

Torque: 43 N·m (440 kgf·cm, 32 ft·lbf)

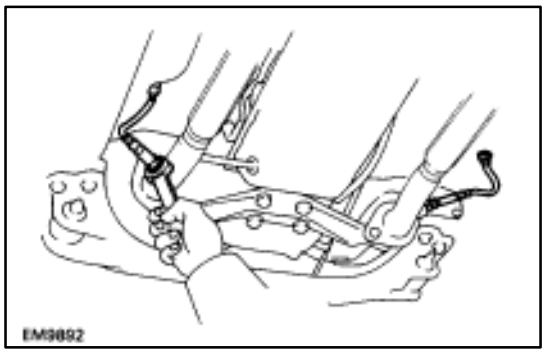

(d) Install the two sub–oxygen sensors to the exhaust pipe.

Torque: 44 N·m (450 kgf·cm, 33 ft·lbf)

HINT:

- Before installing the sub–oxygen sensor, twist the sensor wire counterclockwise 3 1/2 turns.
- After installing the sub–oxygen sensor, check that the sensor wire is not twisted. If it is twisted, remove the sub–oxygen sensor and reinstall it.

(e) Install the wire grommets to the floor.

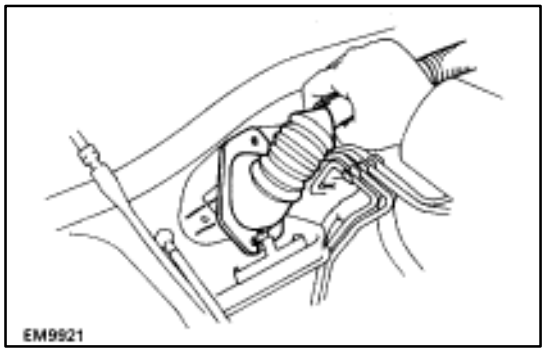

11. CONNECT ENGINE WIRE TO CABIN

(a) Push in the engine wire through the cowl panel.

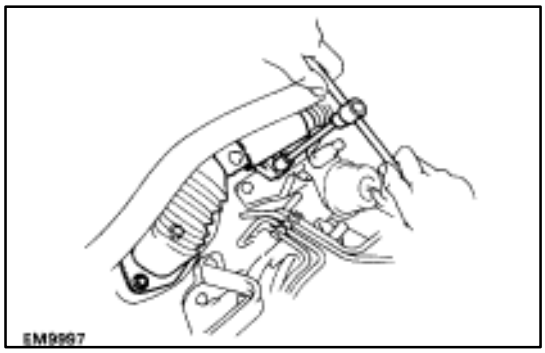

(b) Install the engine wire clamp with the three bolts.

WhereEverybodyKnowsYourName

(c) Connect the following connectors:
  (1) Two connectors to engine & ECT ECU
  (2) Connectors to ABS & TRAC ECU
  (3) Two connectors to TRAC ECU
  (4) Four connectors to connector cassette
  (5) Connector to A/C control assembly

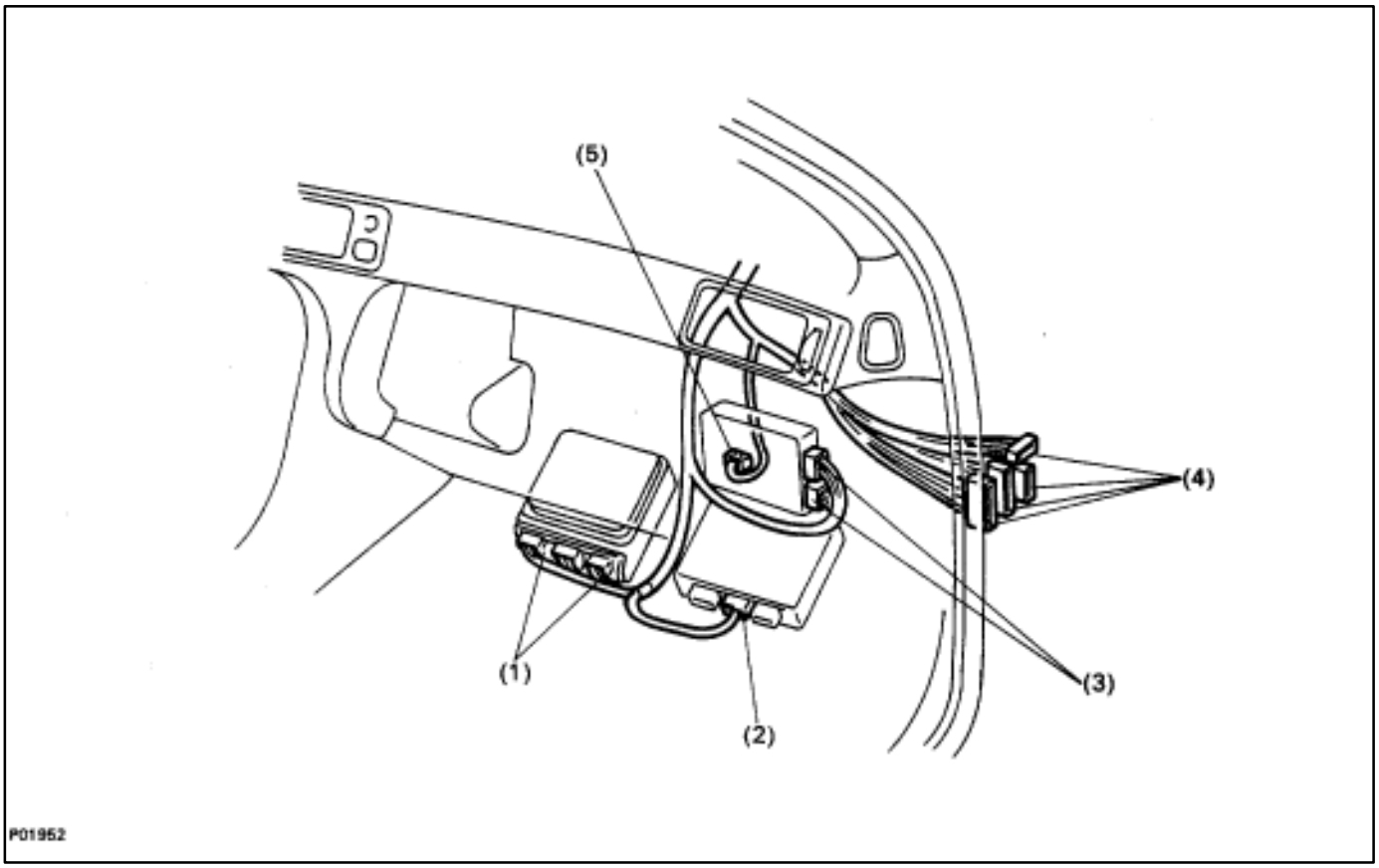

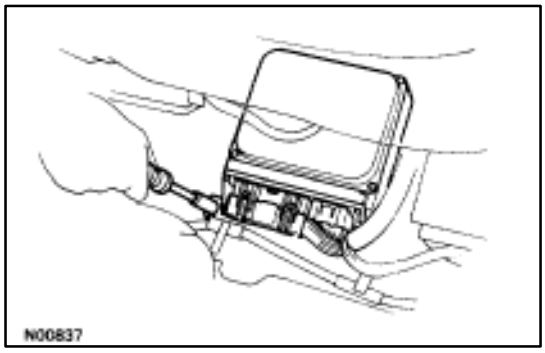

(d) Install the engine & ECT ECU with the nut.

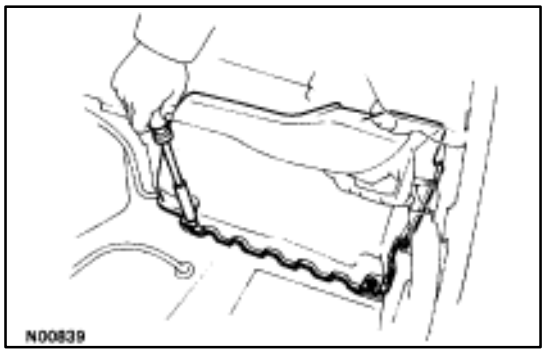

(e) Install the ECU protector with the two nuts.
(f) Install the floor carpet.

WhereEverybodyKnowsYourName

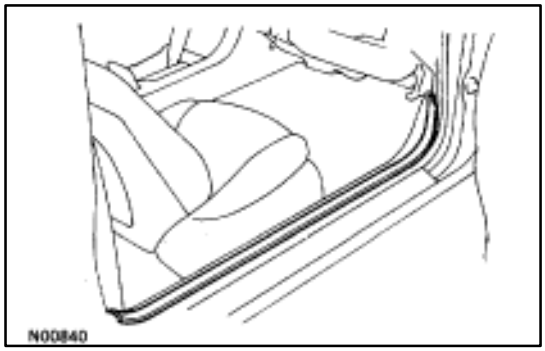

(g) Install the scuff plate.

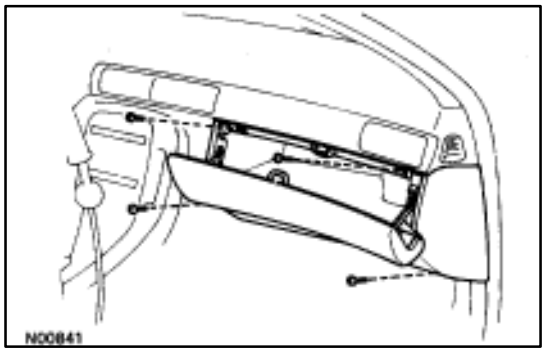

(h) Connect the connectors.
(i) Install the lower instrument panel finish panel and glove compartment door assembly with the four screws.

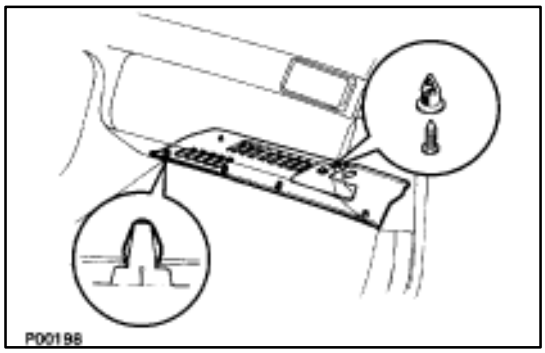

(j) Install the instrument panel under cover with the two clips.

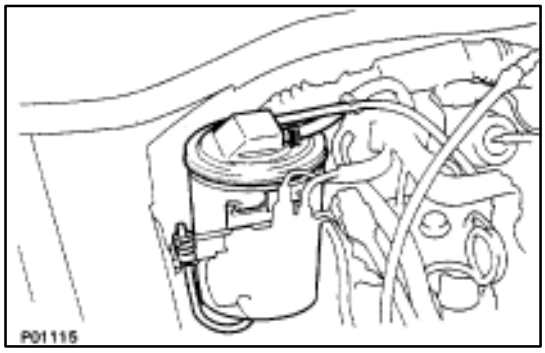

12. INSTALL CHARCOAL CANISTER

(a) Install the charcoal canister.
(b) Connect the vacuum hose and air hose to the charcoal canister.

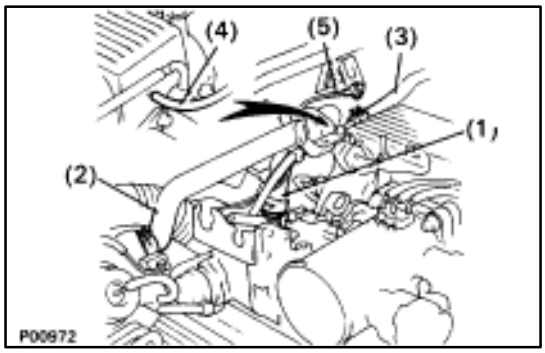

13. CONNECT HOSES

Connect the following hose and ground strap:

(1) Heater water hose to water by–pass pipe
(2) Heater water hose to heater water valve
(3) Vacuum hose to brake booster union on air intake chamber
(4) Vacuum hose (from VSV for heater water valve) to air intake chamber
(5) Ground strap to bracket on body

WhereEverybodyKnowsYourName

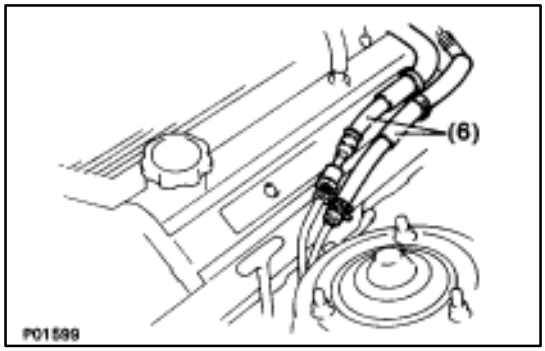

(6) Two fuel hoses to fuel tubes

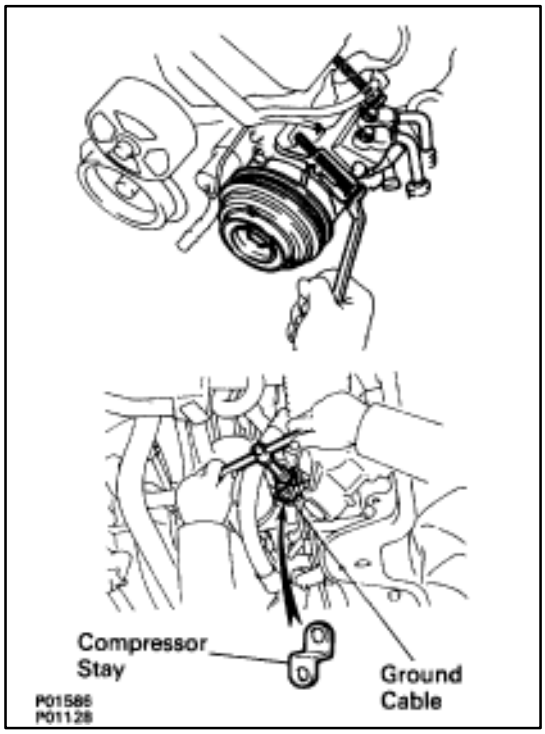

14. INSTALL A/C COMPRESSOR

(a) Install the A/C compressor, compressor stay and ground cable with the nut and three bolts.

Torque: Bolt 49 N·m (500 kgf·cm, 36 ft·lbf)
Nut 29 N·m (300 kgf·cm, 22 ft·lbf)

(b) Connect the A/C compressor connector.

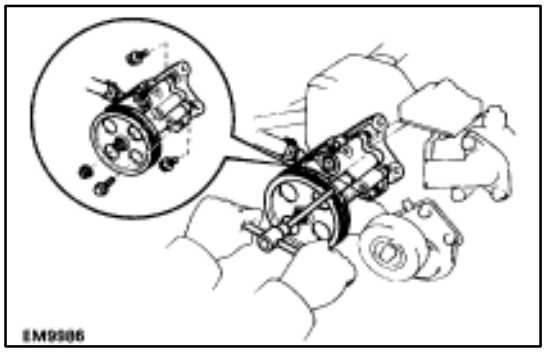

15. INSTALL PS PUMP

Install the PS pump with the three bolts and nut. Alternately tighten the bolts and nut.

Torque: Bolt 39 N·m (400 kgf·cm, 29 ft·lbf)
Nut 43 N·m (440 kgf·cm, 32 ft·lbf)

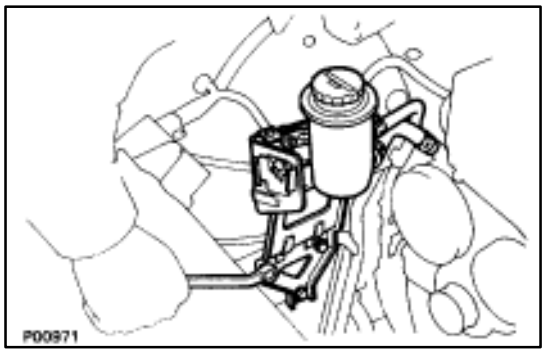

16. INSTALL PS RESERVOIR TANK AND BRACKET

Install the reservoir tank and bracket assembly with the three bolts.

WhereEverybodyKnowsYourName

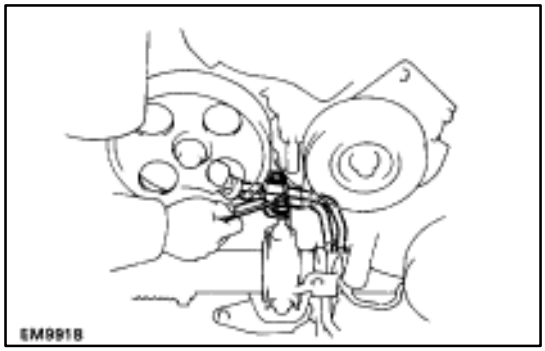

17. INSTALL PS TUBES

Install the PS tube clamp with the bolt.

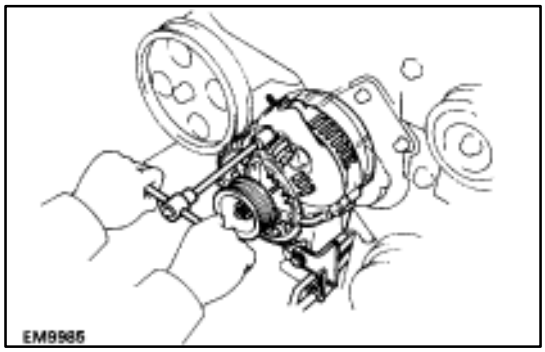

18. INSTALL ALTERNATOR

(a) Install the alternator and A/T oil cooler pipe bracket with the bolt and nut.

Torque: 37 N·m (380 kgf·cm, 27 ft·lbf)

(b) Connect the alternator connector.

(c) Connect the alternator wire with the nut and cap.

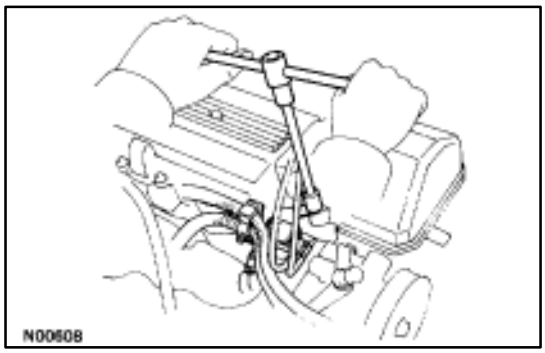

19. INSTALL WIRE CLAMP (FOR ALTERNATOR) AND VSV (FOR EVAP SYSTEM)

(a) Install the wire clamp to the VSV bracket.

(b) Install the VSV with the two bolts.

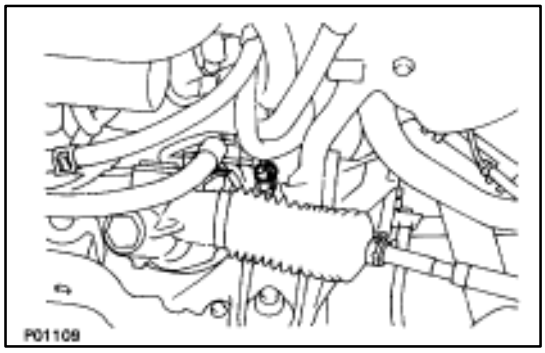

20. CONNECT PS SOLENOID VALVE CONNECTOR

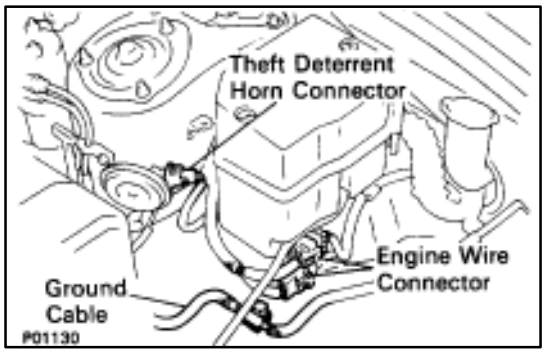

21. CONNECT ENGINE WIRE CONNECTORS

22. CONNECT THEFT DETERRENT HORN CONNECTOR

23. INSTALL GROUND CABLE TO BODY

WhereEverybodyKnowsYourName

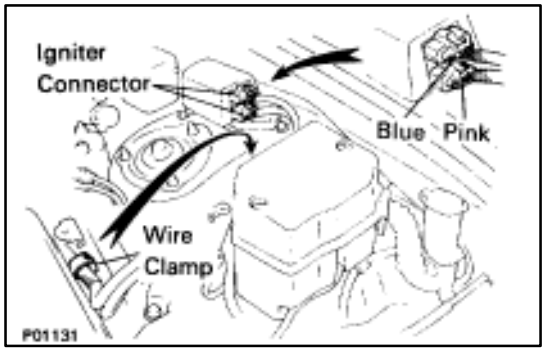

24. CONNECT IGNITER CONNECTOR

(a) Connect the two igniter connectors.

(b) Install the wire clamp.

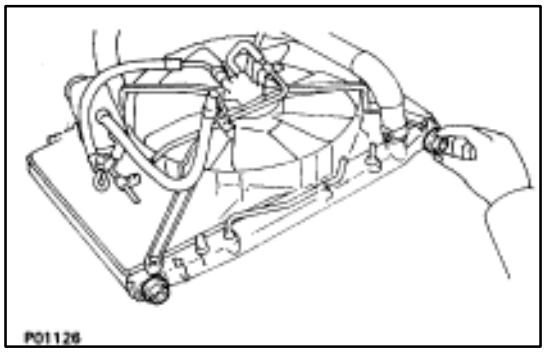

25. INSTALL RADIATOR

(a) Install the two lower radiator supports to the radiator.

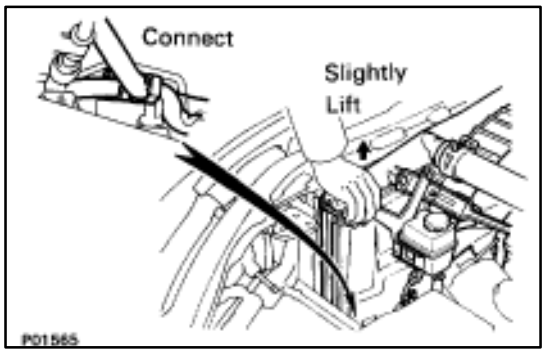

(b) Place the radiator on the body bracket.

(c) Slightly lift the radiator, and connect the two cooler hose (for cooling fan) to the hose clamp on the radiator fan shrould.

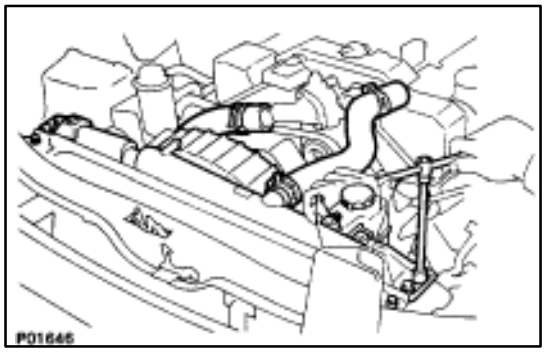

(d) Install the upper radiator support with the two bolts and screw. Install the two upper radiator supports.

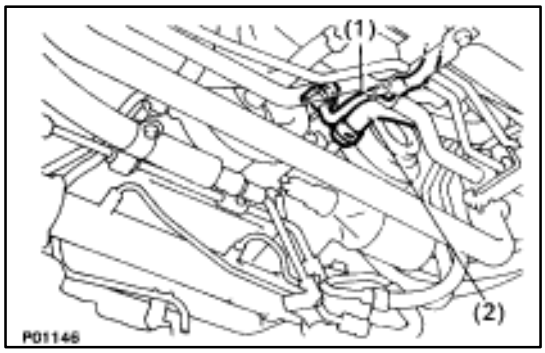

(e) Connect the following hoses:

(1) Pressure hose to hydraulic pump

(2) Suction hose to hydraulic pump

WhereEverybodyKnowsYourName

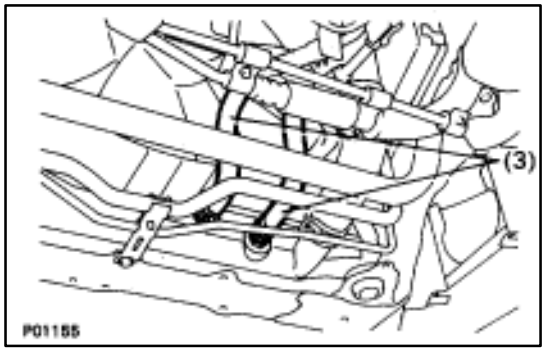

(3) Two oil cooler hoses (for A/T) to radiator

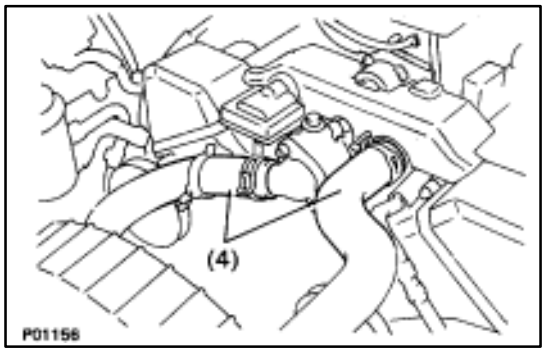

(4) Two radiator hoses

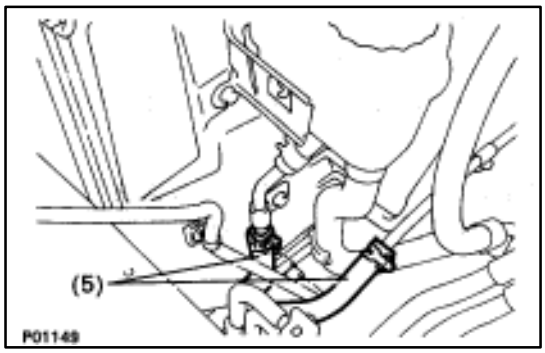

(5) Two oil cooler hoses (for cooling fan) to pipes

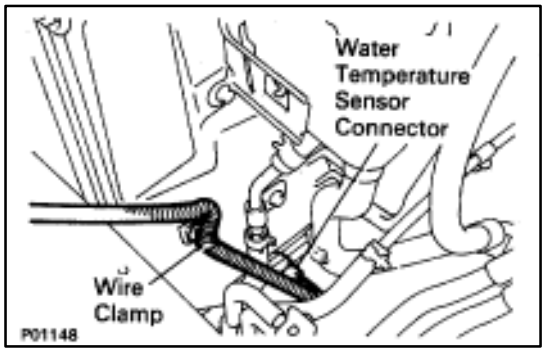

(f) Connect the water temperature sensor connector.
(g) Install the wire clamp (for water temperature sensor) to the radiator fan shrould.

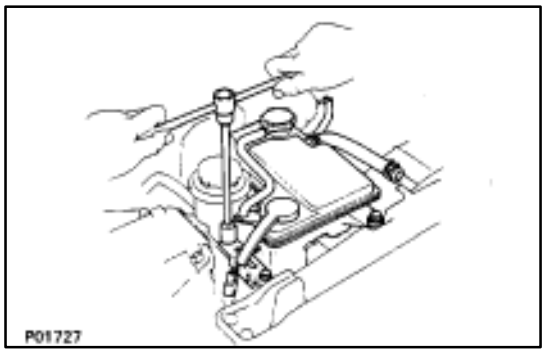

26. INSTALL RADIATOR RESERVOIR TANK

(a) Install the reservoir tank to the reservoir tank bracket.
(b) Install the reservoir tank bracket with the two bolts.

WhereEverybodyKnowsYourName

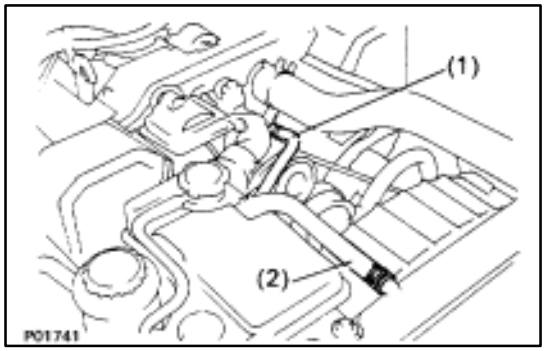

(c) Connect the following hoses:
  (1) Reservoir hose to water inlet housing
  (2) Reservoir hose to radiator
(d) Connect the coolant level sensor connector.

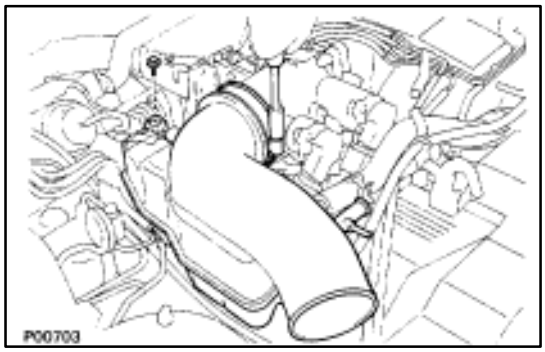

27. INSTALL INTAKE AIR CONNECTOR
(a) Connect the intake air connector to the throttle body.
(b) Install the hose clamp and mounting bolt.

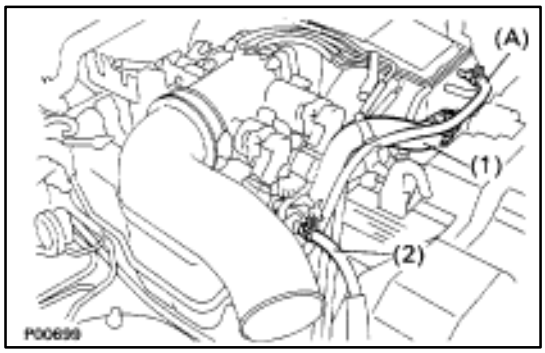

(c) Connect the following hoses:
  (1) Air hose to ISC valve
  (2) Air hose (from PS air control valve) to air intake chamber

28. CONNECT VACUUM HOSE (A) (FROM PS AIR CONTROL VALVE) TO AIR INTAKE CHAMBER

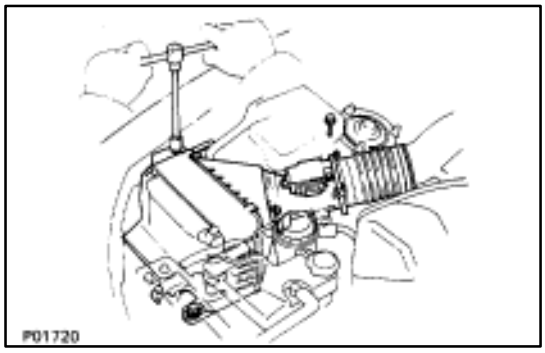

29. INSTALL AIR CLEANER AND AIR FLOW METER
(a) Connect the air cleaner case to the air duct.
(b) Connect the air cleaner hose to the intake air connector.
(c) Install the four mounting bolts and hose clamp.
(d) Connect the air flow meter connector.

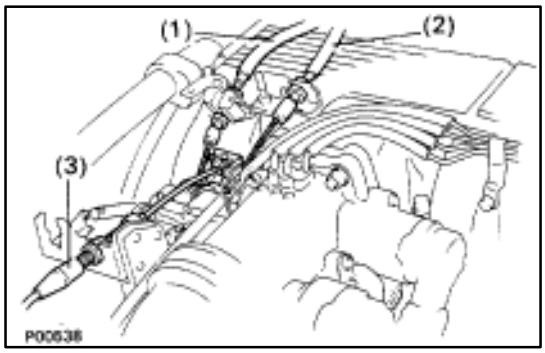

30. CONNECT CONTROL CABLES TO THROTTLE BODY
Connect the following cables:
  (1) Accelerator cable
  (2) A/T throttle cable
  (3) (w/ Cruise Control System)
  Cruise control actuator cable

WhereEverybodyKnowsYourName

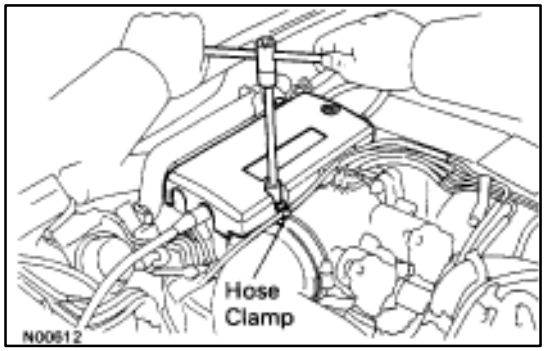

31. INSTALL THROTTLE BODY COVER

Install the throttle body cover and hose clamp with the two bolts and cap nut.

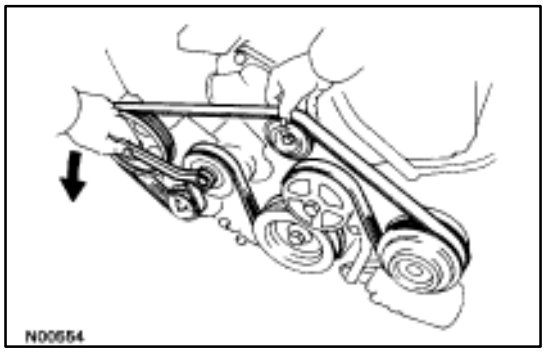

32. INSTALL DRIVE BELT

Install the drive belt by turning the drive belt tensioner counterclockwise.

HINT: The pulley bolt for the belt tensioner has a left–hand thread.

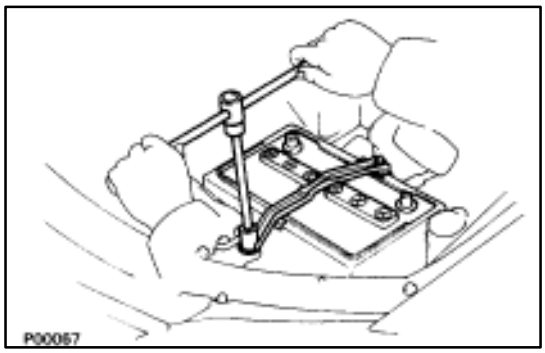

33. INSTALL BATTERY

34. FILL WITH ENGINE COOLANT (See page CO–7)

35. FILL COOLING FAN RESERVOIR TANK WITH FLUID (See page CO–23)

36. FILL WITH ENGINE OIL (See page LU–7)

Capacity:

Drain and refill

w/Oil filter change

4.8 liters (5.1 US qts, 4.2 Imp. qts)

w/o Oil filter change

4.5 liters (4.8 US qts, 4.0 Imp. qts)

Dry fill 6.0 liters (6.3 US qts, 5.3 Imp. qts)

37. START ENGINE AND CHECK FOR LEAKS

38. CHECK AUTOMATIC TRANSMISSION FLUID LEVEL

39. CHECK IGNITION TIMING (See page IG–28)

Ignition timing:

8–12° BTDC @ idle

(w/ Terminals TE1 and E1 connected)

40. INSTALL ENGINE UNDER COVER

41. INSTALL HOOD

42. PERFORM ROAD TEST

Check for abnormal noise, shock, slippage, correct shift points and smooth operation.

32. RECHECK ENGINE COOLANT AND ENGINE OIL LEVELS

WhereEverybodyKnowsYourName

SERVICE SPECIFICATIONS

SERVICE DATA

Engine tune–up	Battery specific gravity		1.27–1.29 (when fully charged at 20°C (68°F))	
	High–tension cord resistance	Limit	25 k? per cord	
	Valve clearance	Intake	0.15 – 0.25 mm	0.006 – 0.010 in.
		Exhaust	0.25 – 0.35 mm	0.010 – 0.014 in.
	Ignition timing		8–12° BTDC @ idle (w/ Terminals TE1 and E1 connected)	
	Idle speed		700 ± 50 rpm	
Intake manifold vacuum	at Idle speed		60 kPa 450 mmHg	17.7 in.Hg
Compression pressure	at 250 rpm	STD	1,226 kPa (12.5 kgf/cm, 178 psi) or more	
		Limit	981 kPa 10.0 kgf/cm	142 psi
	Difference of pressure between each cylinder		98 kPa (1.0 kgf/cm, 14 psi) or less	
Timing belt tensioner	Protrusion from housing end		10.5 – 11.5 mm	0.413 – 0.453 in.
Cylinder head	Warpage Cylinder block side	Limit	0.10 mm	0.0039 in.
	Manifold side	Limit	0.10 mm	0.0039 in.
	Valve seat Refacing angle		30°, 45°, 75°	
	Contacting angle		45°	
	Contacting width		1.0 – 1.4 mm	0.039 – 0.055 in.
	Cylinder head bolt thread outside diam4eter			
		STD	9.770 – 9.960 mm	0.3846 – 0.3921 in.
		Limit	9.60 mm	0.3780 in.
Valve guide bushing	Inside diameter		6.010 – 6.030 mm	0.2366 – 0.2374 in.
	Outside diameter (for repair part)	STD	11.048 – 11.059 mm	0.4350 – 0.4354 in.
		O/S 0.05	11.098 – 11.109 mm	0.4369 – 0.4374 in.
Valve	Valve overall length STD	Intake	94.95 mm	3.7382 in.
		Exhaust	96.90 mm	3.8150 in.
	Limit	Intake	94.45 mm	3.7185 in.
		Exhaust	96.40 mm	3.7953 in.
	Valve face angle		44.5°	
	Stem diameter	Intake	5.970 – 5.985 mm	0.2350 – 0.2356 in.
		Exhaust	5.965 – 5.980 mm	0.2356 – 0.2354 in.
	Stem oil clearance STD	Intake	0.025 – 0.060 mm	0.0010 – 0.0024 in.
		Exhaust	0.030 – 0.065 mm	0.0012 – 0.0026 in.
	Limit	Intake	0.08 mm	0.0031 in.
		Exhaust	0.10 mm	0.0039 in.
	Margin thickness	STD	1.0 mm	0.039 in.
		Limit	0.5 mm	0.020 in.
Valve spring	Squareness	Limit	2.0 mm	0.079 in.
	Free length		43.6 mm	1.717 in.
	Installed tension at 32.9 mm (1.295 in.)		186–206 N (19.0 – 21.0 kgf, 41.9 – 46.3 lbf)	
Valve lifter	Lifter diameter		30.966–30.976 mm	1.2191–1.2195 in.
	Lifter bore diameter		31.000–31.016 mm	1.2205–1.2211 in.
	Oil clearance	STD	0.024–0.050 mm	0.0009–0.0020 in.
		Limit	0.07 mm	0.0028 in.

WhereEverybodyKnowsYourName

SERVICE DATA (Cont'd)

Camshaft	Thrust clearance		STD	0.040–0.090 mm	0.0016–0.0035 in.
			Limit	0.12 mm	0.0047 in.
	Journal oil clearance				
	STD Exhaust camshaft thrust portion			0.025–0.061 mm	0.0010–0.0024 in.
	Others			0.030–0.067 mm	0.0012–0.0026 in.
	Limit			0.10 mm	0.0039 in.
	Journal diameter				
	Exhaust camshaft thrust portion			23.959–23.975 mm	0.9433–0.9439 in.
	Others			26.954–26.970 mm	1.0612–1.0618 in.
	Circle runout		Limit	0.08 mm	0.0031 in.
	Cam lobe height	STD	Intake	41.710–41.810 mm	1.6421–1.6461 in.
			Exhaust	41.910–42.010 mm	1.6500–1.6539 in.
		Limit	Intake	41.56 mm	1.6362 in.
			Exhaust	41.76 mm	1.6441 in.
	Camshaft gear backlash		STD	0.020–0.200 mm	0.0008–0.0079 in.
			Limit	0.30 mm	0.0188 in.
	Camshaft gear spring end free distance			18.2–18.8 mm	0.712–0.740 in.
Manifold	Warpage	Limit	Intake	0.15 mm	0.0059 in.
			Exhaust	1.00 mm	0.0394 in.
Air intake chamber	Warpage		Limit	0.15 mm	0.0059 in.
Cylinder block	Cylinder head surface warpage		Limit	0.07 mm	0.0028 in.
	Cylinder bore diameter	STD	Mark 1	87.500–87.510 mm	3.4449–3.4453 in.
			Mark 2	87.510–87.520 mm	3.4453–3.4457 in.
			Mark 3	87.520–87.530 mm	3.4457–3.4461 in.
		Limit		87.73 mm	3.4539 in.
	Main bearing cap stud bolt				
	tension portion diameter		STD	7.500–7.600 mm	0.2953–0.2992 in.
			Limit	7.40 mm	0.2913 in.
Piston and piston ring	Piston diameter		Mark 1	87.470–87.480 mm	3.4437–3.4441 in.
			Mark 2	87.480–87.490 mm	3.4441–3.4445 in.
			Mark 3	87.490–87.500 mm	3.4445–3.4449 in.
	Piston oil clearance		STD	0.020–0.040 mm	0.0008–0.0016 in.
			Limit	0.06 mm	0.0024 in.
	Piston ring groove clearance		No.1	0.020–0.060 mm	0.0008–0.0024 in.
			No.2	0.015–0.055 mm	0.0006–0.0022 in.
	Piston ring end gap	STD	No.1	0.250–0.450 mm	0.0098–0.0177 in.
			No.2	0.350–0.600 mm	0.0138–0.0236 in.
			Oil	0.150–0.500 mm	0.0059–0.0197 in.
		Limit	No.1	1.05 mm	0.0413 in.
			No.2	1.20 mm	0.0472 in.
			Oil	1.10 mm	0.0433 in.

WhereEverybodyKnowsYourName

SERVICE DATA (Cont'd)

Connecting rod	Thrust clearance	STD	0.160–0.330 mm	0.0063–0.0114 in.
		Limit	0.35 mm	0.138 in.
	Connecting rod thickness		22.880–22.920 mm	0.9008–0.9024 in.
	Connecting rod bearing center wall thickness			
		Mark 2	1.484–1.487 mm	0.0584–0.0585 in.
		Mark 3	1.487–1.490 mm	0.0585–0.0587 in.
		Mark 4	1.490–1.493 mm	0.0587–0.0588 in.
		Mark 5	1.493–1.496 mm	0.0588–0.0589 in.
		Mark 6	1.496–1.499 mm	0.0589–0.0590 in.
		Mark 7	1.499–1.502 mm	0.0590–0.0591 in.
	Connecting rod oil clearance	STD	0.027–0.053 mm	0.0011–0.0021 in.
		Limit	0.065 mm	0.0026 in.
	Rod bending Limit per 100 mm (3.94 in.)		0.05 mm	0.0020 in.
	Rod twist Limit per 100 mm (3.94 in.)		0.15 mm	0.0059 in.
	Connecting rod bushing inside diameter		22.005–22.017 mm	0.8663–0.8668 in.
	Piston pin diameter		21.997–22.009 mm	0.8660–0.8665 in.
	Connecting rod bushing oil clearance	STD	0.005–0.011 mm	0.0002–0.0004 in.
		Limit	0.05 mm	0.0020 in.
	Connecting rod tension portion diameter			
		STD	7.200–7.300 mm	0.2835–0.2874 in.
		Limit	7.00 mm	0.2756 in.
Crankshaft	Thrust clearance	STD	0.020–0.220 mm	0.0008–0.0087 in.
		Limit	0.30 mm	0.0118 in.
	Thrust washer thickness	STD	2.440–2.490 mm	0.0961–0.0980 in.
	Main journal bore diameter on cylinder block (with main bearing)		67.026–67.033 mm	2.6388–2.6391 in.
	Main journal oil clearance	STD	0.026–0.045 mm	0.0010–0.0018 in.
		Limit	0.055 mm	0.0022 in.
	Main journal diameter		66.988–67.000 mm	2.6373–2.6378 in.
	Main bearing center wall thickness	Mark 1	2.486–2.489 mm	0.0979–0.0980 in.
		Mark 2	2.489–2.492 mm	0.0980–0.0981 in.
		Mark 3	2.492–2.495 mm	0.0981–0.0982 in.
		Mark 4	2.495–2.498 mm	0.0982–0.0983 in.
		Mark 5	2.498–2.501 mm	0.0983–0.0985 in.
	Crank pin diameter		51.982–52.000 mm	2.0465–2.0472 in.
	Circle runout	Limit	0.08 mm	0.0031 in.
	Main journal taper and out–of–round	Limit	0.02 mm	0.0008 in.
	Crank pin taper and out–of–round	Limit	0.02 mm	0.0008 in.

WhereEverybodyKnowsYourName

TORQUE SPECIFICATIONS

Part tightened		N·m	kgf·cm	ft·lbf
No.1 idler pulley X Cylinder block		34	350	25
No.2 idler pulley X Cylinder block		34	350	25
Hydraulic pump X Cylinder block	12 mm head	16	160	12
	14 mm head	30	310	22
Crankshaft pulley X Crankshaft		245	2,500	181
Camshaft timing pulley X Camshaft		108	1,100	80
Timing belt tensioner X Oil pump		26	270	20
Spark plug X Cylinder head		18	180	13
Drive belt tensioner X Cylinder block		16	160	12
Alternator X Alternator bracket		37	380	27
Alternator X Cylinder block		37	380	27
Distributor housing X Cylinder head		18	185	13
Distributor rotor X Distributor housing		3.8	39	34 in.·lbf
Distributor cap X Camshaft timing pulley		3.8	39	34 in.·lbf
RH No.2 timing belt cover X Cylinder block (for 12 mm head)		16	160	12
Drive belt idler pulley X Hydraulic pump		37	380	27
A/C compressor X Hydraulic pump		49	500	36
A/C compressor X Cylinder block	49	500	36	
A/C compressor stay X Oil filter bracket		29	300	22
Exhaust manifold X Cylinder head		39	400	29
Main oxygen sensor X Exhaust manifold		44	450	33
Cylinder head X Cylinder block	1st	39	400	29
	2nd	Turn 90°		
Camshaft bearing cap X Cylinder head		16	160	12
Cylinder head cover X Cylinder head		5.9	60	52 in.·lbf
Engine hanger X Cylinder head		37	380	27
EGR pipe X Exhaust manifold		18	185	13
Rear water by–pass joint X Cylinder head		18	185	13
Front water by–pass joint X Cylinder head		18	185	13
Intake manifold X Cylinder head		18	185	13
Delivery pipe X Intake manifold		18	185	13
Fuel return pipe X RH delivery pipe(for union bolt)		35	360	26
Fuel inlet hose X LH delivery pipe		39	400	29
	for SST	33	340	24
Cold start injector X Air intake chamber		7.8	80	69 in.·lbf
Air intake chamber X Intake manifold		18	185	13
EGR pipe X Air intake chamber		18	185	13
EGR pipe X RH cylinder head		18	185	13
Cold start injector tube X RH delivery pipe		15	150	11
Brake booster union X Air intake chamber		29	300	22
Throttle body X Air intake chamber		18	185	13
ISC valve X Air intake chamber		18	185	13
EGR valve adapter X Air intake chamber		18	185	13
EGR valve X EGR valve adapter		18	185	13
Timing belt rear plate X Cylinder head		7.8	80	69 in.·lbf
Water inlet housing X Water pump		18	185	13
Catalytic converter (main) X Exhaust manifold		62	630	46
Catalytic converter (main) X Front exhaust pipe		43	440	32
Front exhaust pipe support bracket X Transmission		43	440	32
PS pump X RH cylinder head	Bolt	39	400	29
	Nut	43	440	32
Main bearing cap X Cylinder block	Nut 1st	27	275	20
	2nd	Turn 90°		
	Bolt	49	500	36

WhereEverybodyKnowsYourName

TORQUE SPECIFICATIONS (Cont'd)

Part tightened		N·m	kgf·cm	ft·lbf
Connecting rod cap X Connecting rod	1st	25	250	18
	2nd	Turn 90°		
Rear oil seal retainer X Cylinder block		7.8	80	69 in.·lbf
Water seal plate X Cylinder block		14	145	10
Alternator bracket X Cylinder block		18	185	13
Oil pump X Cylinder block	12 mm head	16	160	12
	14 mm head	30	310	22
Water pump X Cylinder block		18	185	13
Water by–pass pipe X Cylinder block		18	185	13
Knock sensor X Cylinder block		44	450	33
Starter X Cylinder block		39	400	29
Engine mounting bracket X Cylinder block		37	380	27
Drive plate X Crankshaft		98	1,000	72
A/T oil cooler pipe X Transmission		34	350	25
Rear engine mounting member X Body		25	260	19
Rear engine mounting member X Engine mounting insulator		13	135	10
Front engine mounting insulator X Suspension crossmember		59	600	43
Center floor brace X Body		13	130	9
Tailpipe X Center exhaust pipe		43	440	32
Front exhaust pipe X Center exhaust pipe		43	440	32
Sub–oxygen sensor X Front exhaust pipe		44	450	33

WhereEverybodyKnowsYourName

EXHAUST SYSTEM

NOTE: The specification descriptions ”**USA Spec.**” and ”**Exc. USA Spec.**” used in this section indicate the following specifications.
USA Spec.: USA (50 States) Specifications.
Exc. USA Spec.: USA (except California) and Canadian Specifications.

WhereEverybodyKnowsYourName

COMPONENTS
EXHAUST PIPES AND HEAT INSULATORS

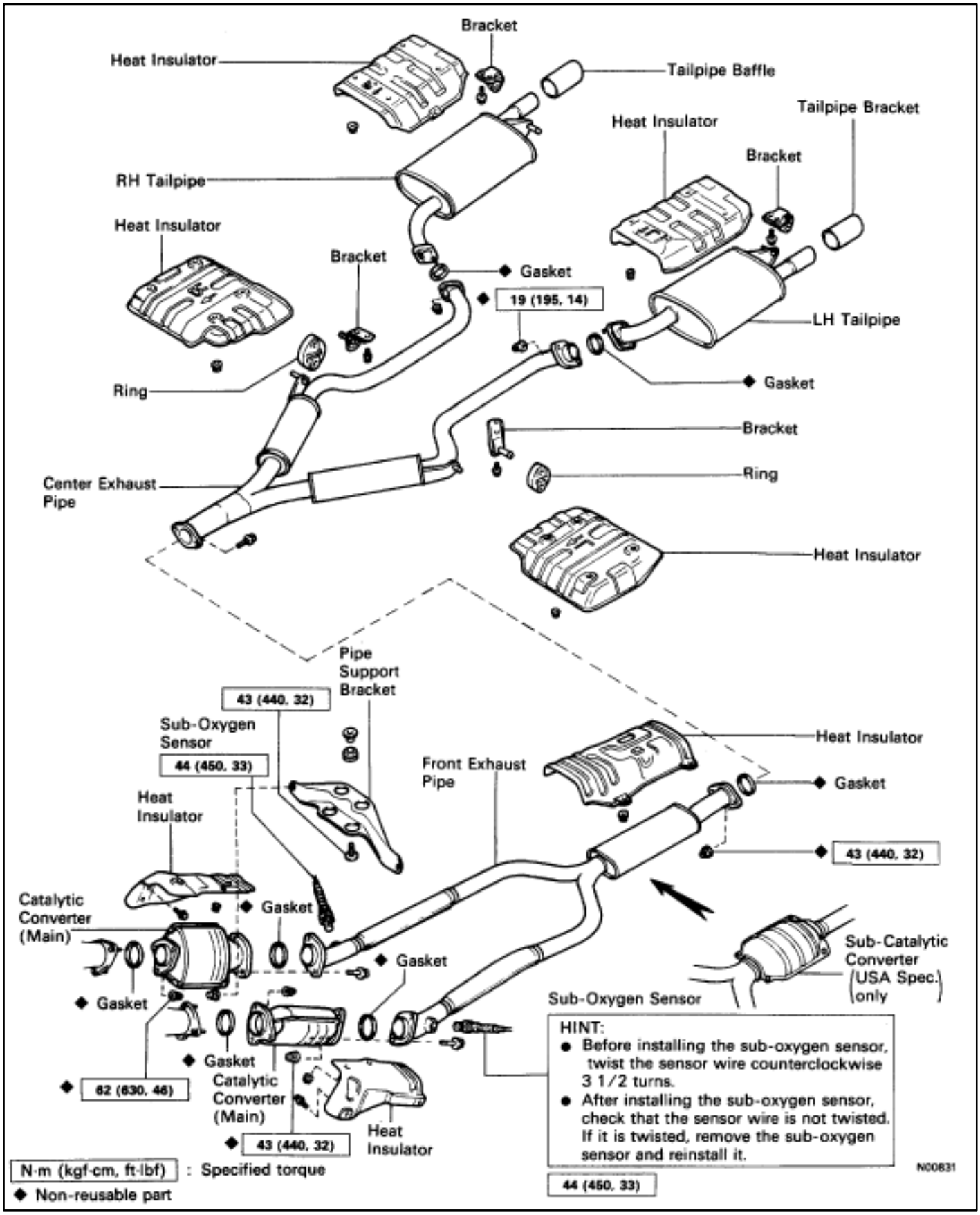

WhereEverybodyKnowsYourName

EFI SYSTEM

NOTE: The specification descriptions "**USA Spec.**" and "**Exc. USA Spec.**" used in this section indicate the following specifications.
USA Spec.: USA (50 States) Specifications
Exc. USA Spec.: USA (except California) and Canadian Specifications.

WhereEverybodyKnowsYourName

DESCRIPTION

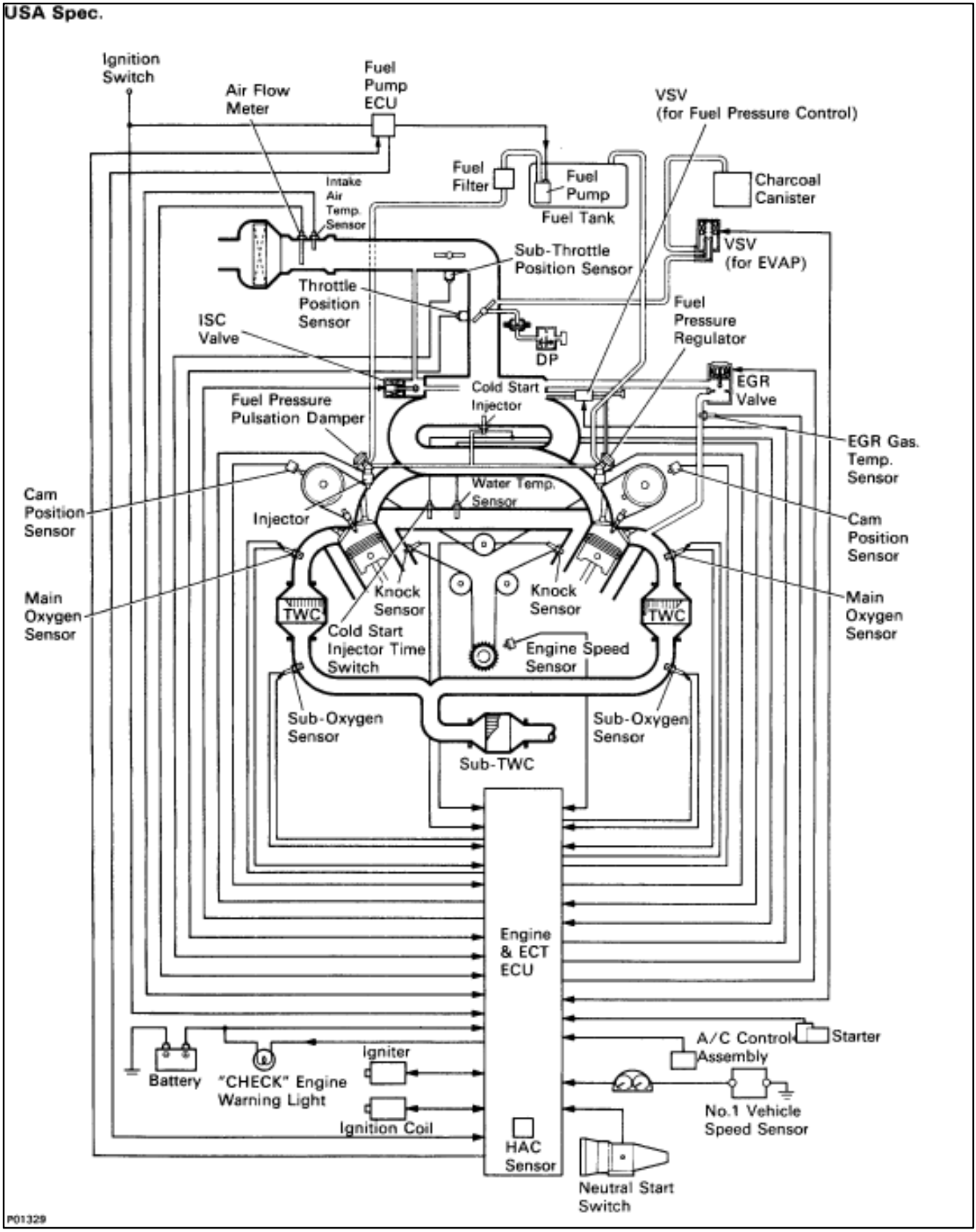

WhereEverybodyKnowsYourName

Exc. USA Spec.

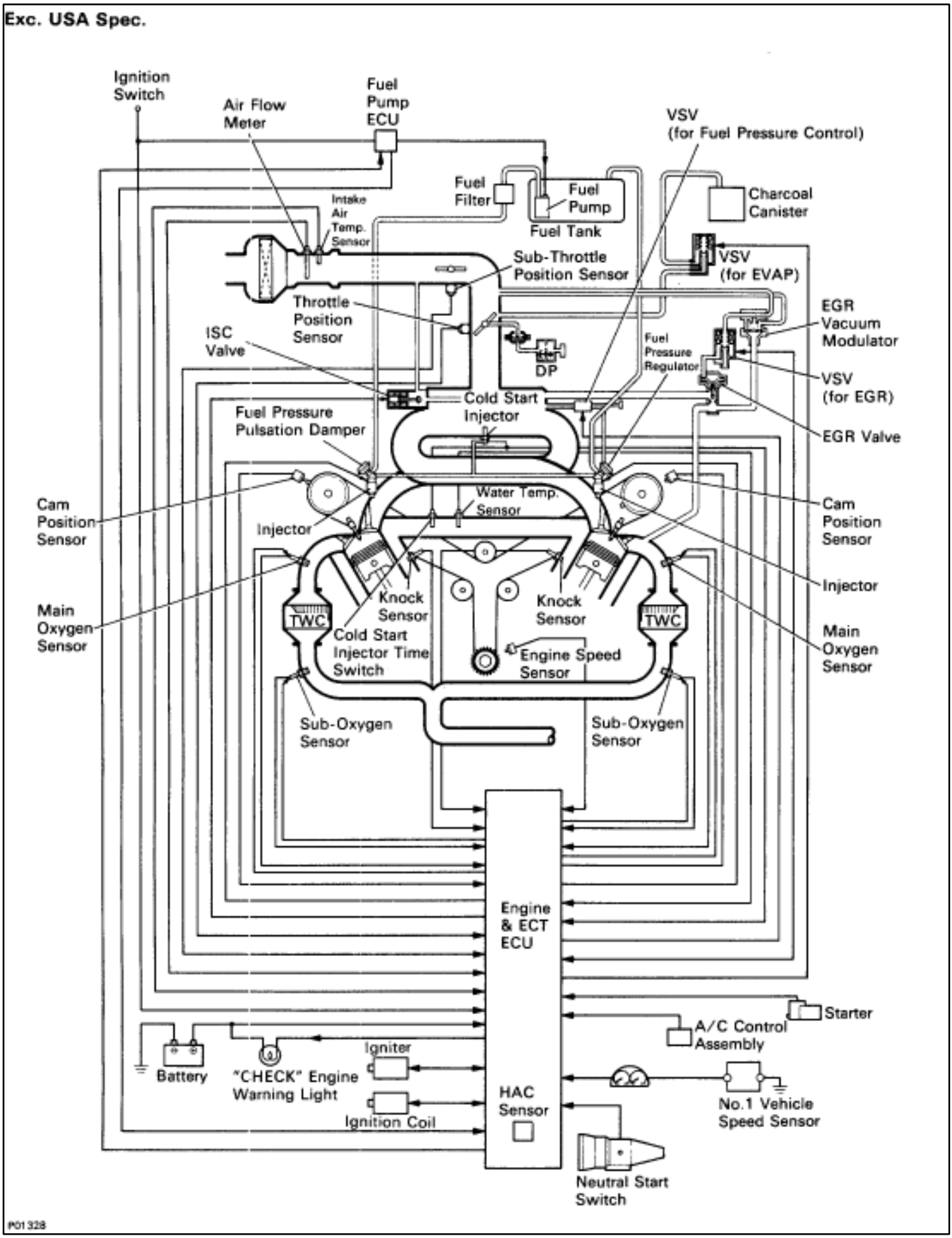

WhereEverybodyKnowsYourName

The EFI system is composed of three basic sub–systems: Fuel, Air Induction and Electronic Control Systems.

FUEL SYSTEM

An electric pump fuel pressure supplies sufficient fuel, under a constant pressure, to the EFI injectors. In accordance with signals from the ECU (Electronic Control Unit), these injectors inject the quantity of fuel most appropriate for the engine condition into the intake manifold.

AIR INDUCTION SYSTEM

The air induction system provides sufficient air for engine operation.

ELECTRONIC CONTROL SYSTEM

The 1UZ–FE engine (ECU–formerly EFI computer) with a microcomputer centrally controls the EFI, ESA, ISC and Diagnosis system, etc.

The ECU controls the following functions:

1. Electronic Fuel Injection (EFI)

   The ECU receives signals from various sensors indicating changing engine operation conditions such as:
   - Intake air volume
   - Intake air temperature
   - Coolant temperature
   - Engine rpm
   - Acceleration/deceleration
   - Exhaust oxygen content etc.

   The signals are utilized by the ECU to determine the injection duration necessary for an optimum air–fuel ratio.
2. Electronic Spark Advance (ESA)

   The ECU is programmed with data for optimum ignition timing under any and all operating conditions. Using data provided by sensors which monitor various engine functions (rpm, coolant temperature, etc.), the Electronic Control Unit (ECU) triggers the spark at precisely right instant. (See IG section)
3. Idle Speed Control (ISC)

   The ECU is programmed with idle speed data for various engine conditions (coolant temperature, air conditioner ON/OFF, etc.).

   The air volume flowing through the throttle valve by–pass passage is adjusted according to the signal from each sensor and the idle speed is kept at the set value.
4. Diagnosis Function

   When the ECU detects any malfunctions or abnormalities in the sensor network, it lights the ”CHECK” engine warning light in the combination meter. At the same time, the trouble is identified and a diagnostic code is recorded by the ECU. The diagnostic code can be read by the number of blinks of the ”CHECK” engine warning light when terminals TE1 and E1 are connected. The diagnostic codes are refer to the later page. (See TR section)
5. Self–Correction Function

   If any sensor malfunctions, an average value recorded in the back–up circuit is substituted to make driving possible.

   If danger is predicted, the engine is stopped and the ”CHECK” engine warning light will light up.
6. Fail–Safe Function

   Even if an abnormality occurs in the ECU, the back–up circuit uses a specified fuel injection and ignition timing to provide vehicle driveability, and also lightsup the ”CHECK” engine warning light.

WhereEverybodyKnowsYourName

OPERATION

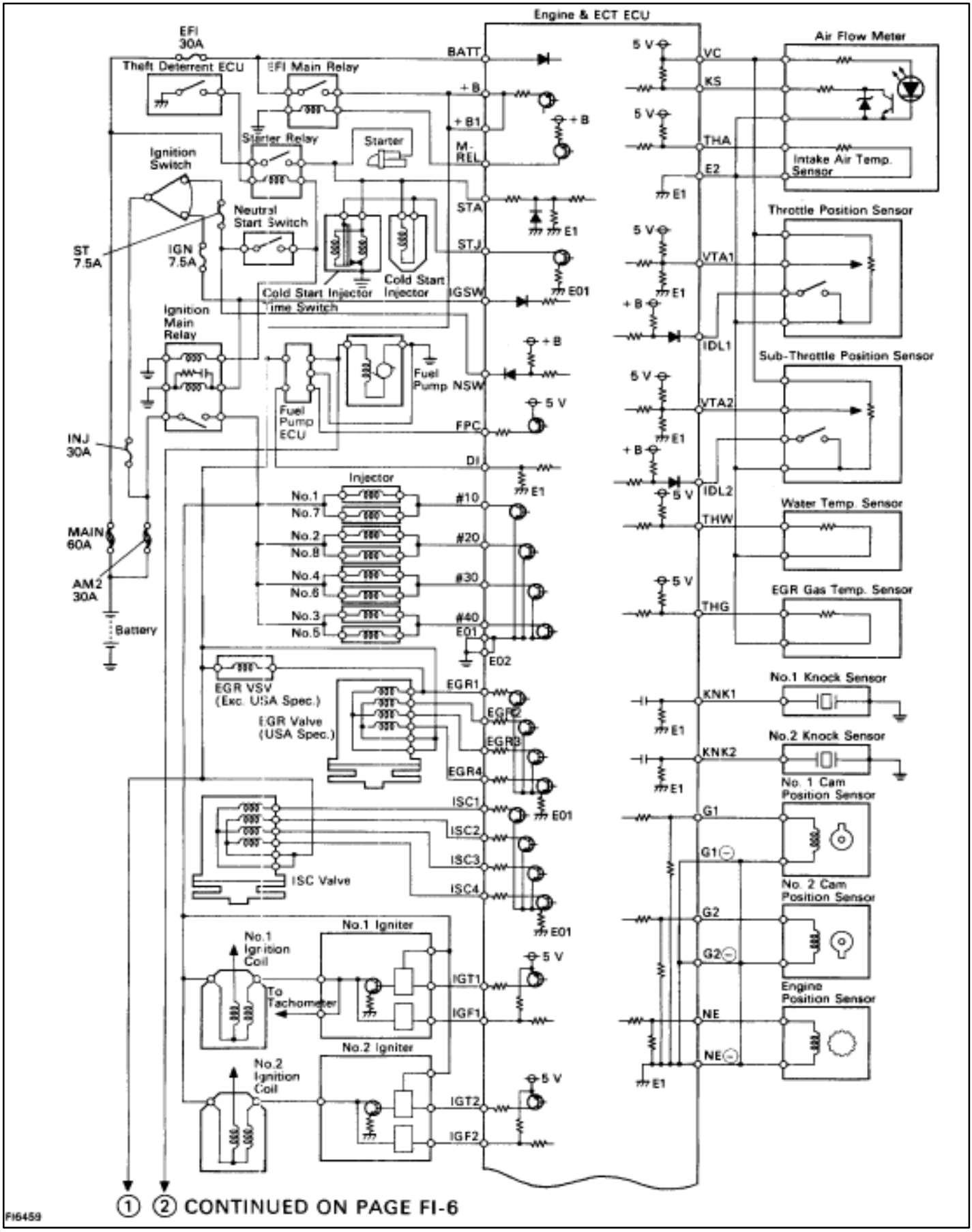

① ② CONTINUED ON PAGE FI-6

WhereEverybodyKnowsYourName

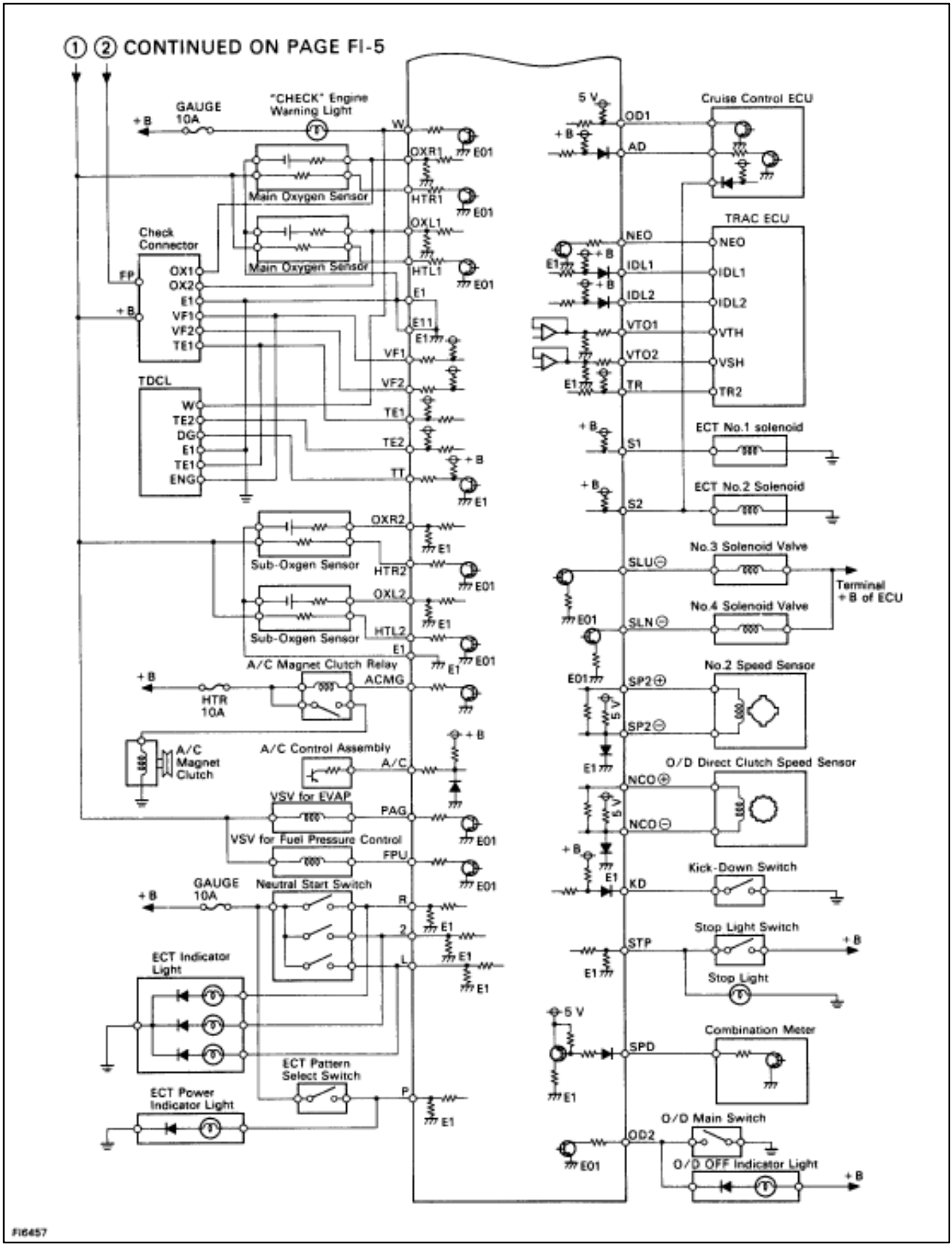

WhereEverybodyKnowsYourName

FUEL SYSTEM

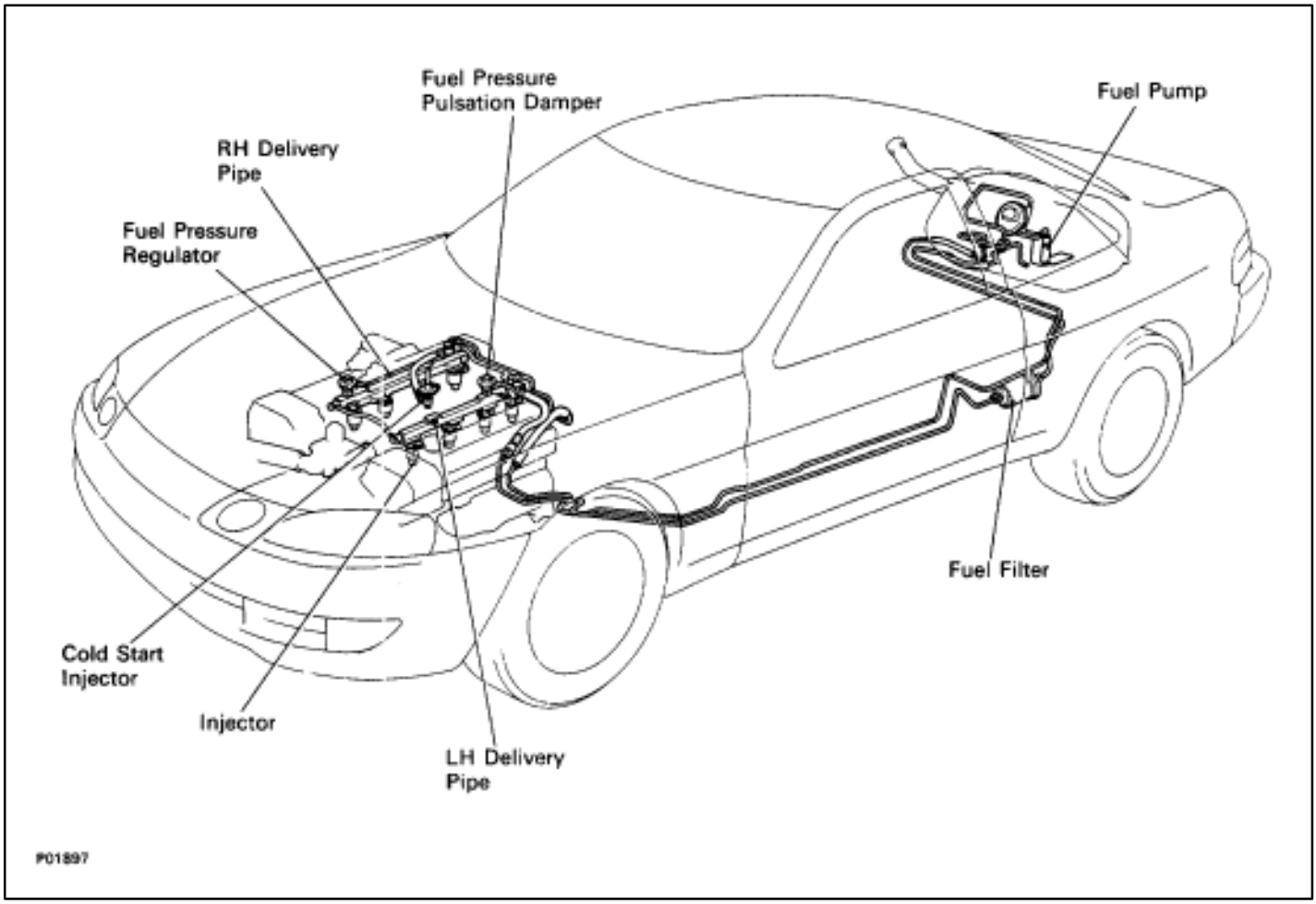

Fuel is pumped up by the fuel pump, which flows through the fuel filter under pressure through the fuel pipe to the delivery pipe where it is distributed to each injector and the cold start injector.

The fuel pressure regulator adjusts the pressure of the fuel from the fuel line (high pressure side) to a pressure 284 kPa (2.9 kgf/cm^2, 41 psi) higher than the pressure inside the intake manifold, and excess fuel is returned to the fuel tank through the return pipe.

When the engine is hot, the fuel pressure is increased to control percolation in the fuel system and improve restartability and idling stability.

The pulsation damper absorbs the slight fluctuations in fuel pressure caused by the injector.

The injectors operate on input of injection signals from the ECU and inject fuel into the intake manifold.

The cold start injector operates when starting with low coolant temperature or at normal temperature ranges, injecting fuel into the air intake chamber to improve startability.

WhereEverybodyKnowsYourName

AIR INDUCTION SYSTEM

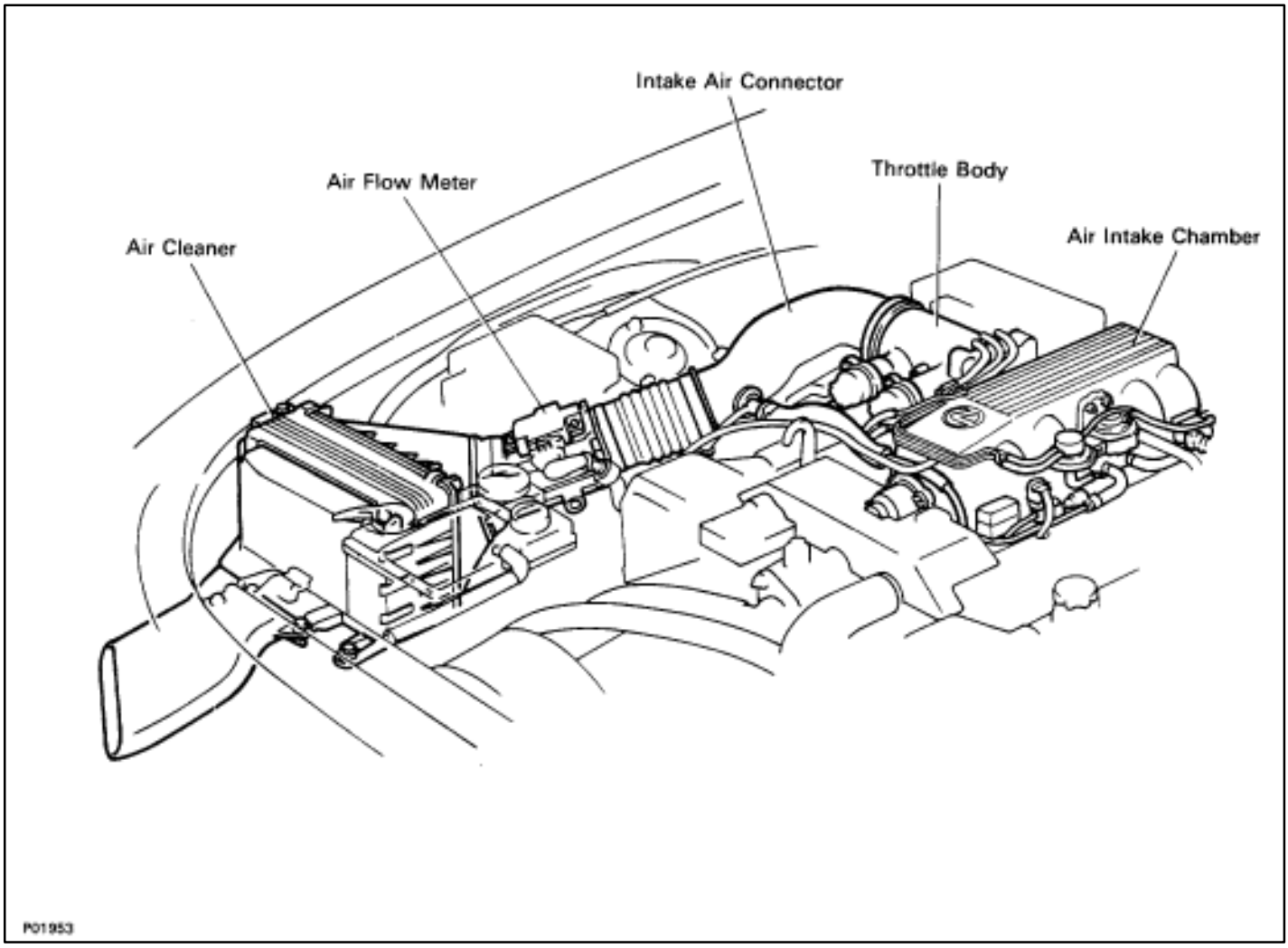

Air filtered through the air cleaner passes through the air flow meter and the amount flowing to the air intake chamber is determined according to the throttle valve opening in the throttle body and the engine rpm.

Air flow meter measures the air intake flow to the engine by the swirl frequency.

Located in the throttle body is the throttle valve, which regulates the volume of air intake to the engine. Air intake controlled by the throttle valve opening is distributed from the intake chamber to the manifold of each cylinder and is drain into the combustion chamber.

At air low temperature the ISC valve opens and the air flows through the ISC valve, as well as the throttle body, into the air intake chamber. During engine warming up, even if the throttle valve is completely closed, air flows to the air intake chamber, thereby increasing the idle speed (first idle operation).

The air intake chamber prevents pulsation of the intake air, reduces the influence on the air flow meter and increases the air intake volume. It also prevents intake air interference in each cylinder.

WhereEverybodyKnowsYourName

ELECTRONIC CONTROL SYSTEM

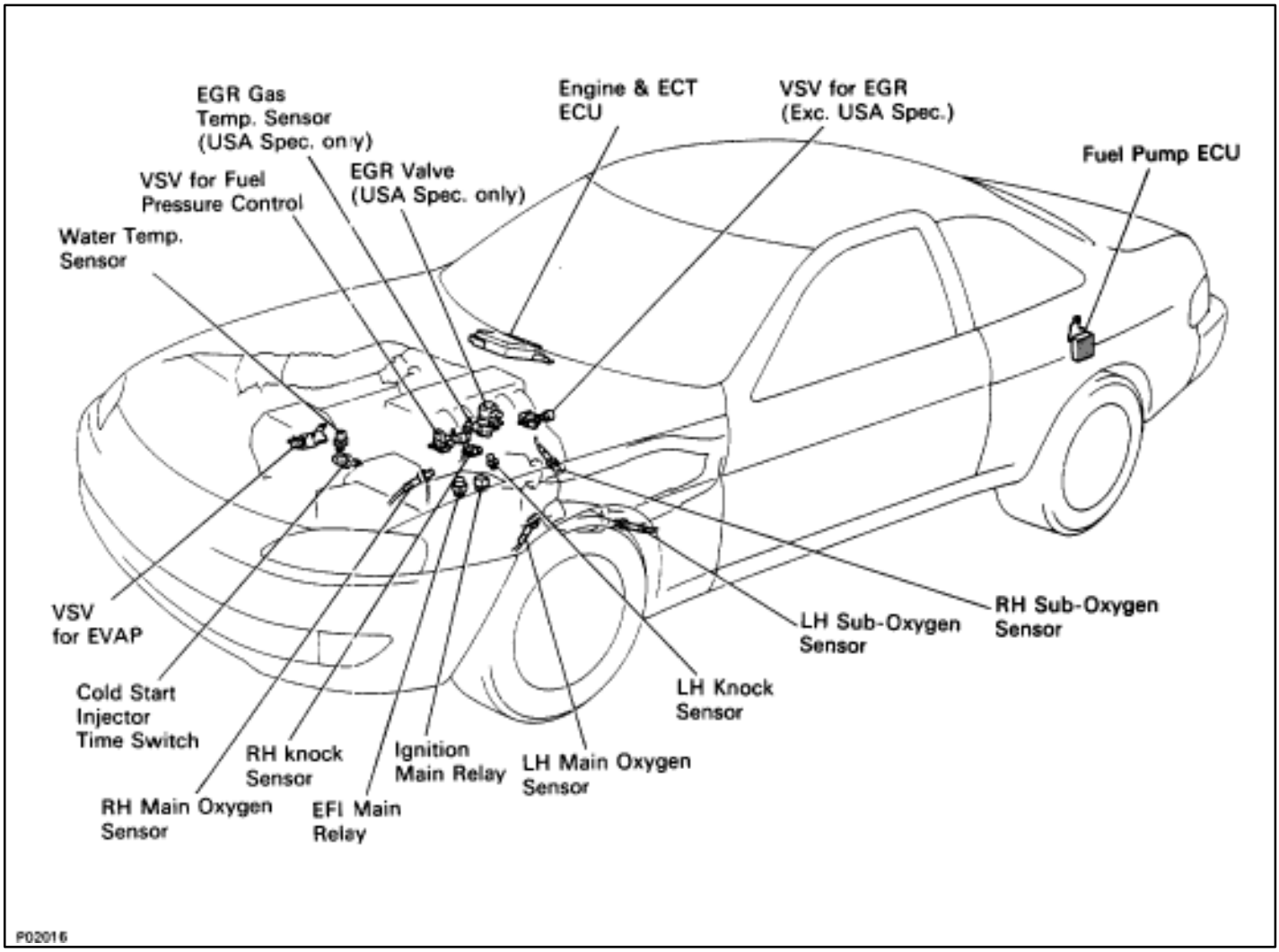

The control system consists of sensors which detect various engine conditions, and a ECU which determines the injection volume (timing) based on the signals from the sensors.

The various sensors detect the air intake volume, engine rpm, oxygen density in the exhaust gas, coolant temperature, air intake temperature and atmospheric pressure etc. and convert the information into an electrical signal which is sent to the ECU. Based on these signals, the ECU calculates the optimum ignition timing for the current conditions and operates the injectors.

The ECU not only controls the fuel injection timing, but also the self diagnostic function which records the occurrence of a malfunction, ignition timing control, idle rpm control, EGR control, EVAP control, fuel pressure control and fuel pump control.

WhereEverybodyKnowsYourName

Preparation

SST (SPECIAL SERVICE TOOLS)

Illustration	Part No.	Part Name	Note
	09268–41045	Injection Measuring Tool Set	
	(90268–41070)	No. 4 Union	Injector
	(09268–41080)	No. 6 Union	Cold start Injector
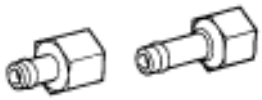	**(09268–52010)**	Injection Measuring Attachment	Injector
	09268–45012	EFI Fuel Pressure Gauge	
	09612–24014	Steering Gear Housing Overhaul Tool Set	
	(09617–24011)	Steering Rack Wrench	Fuel pressure pulsation damper
	09631–22020	Power Steering Hose Nut 14 X 17 mm Wrench Set	Fuel line flare nut
	09816–30010	Oil Pressure Switch Socket	Knock sensor
	09842–30055	Wire “G” EFI Inspection	Cold start Injector
	09842–30070	Wire “F” EFI Inspection	Injector
	09843–18020	Diagnosis Check Wire	
	0990–01000	Engine Control Computer Check Harness “A”	

WhereEverybodyKnowsYourName

RECOMMENDED TOOLS

Illustration	Part No.	Part Name	Note
	09082–0015	TOYOTA Electrical Tester	
	09200–00010	Engine Adjust Kit	
	09258–00030	Hose Plug Set	Plug for the Vacuum hose, fuel hose ect.

EQUIPMENT

Part Name	Note
Graduated cylinder	Injector
Tachometer	
Torque wrench	

SSM (SERVICE SPECIAL MATERIALS)

Part Name	Part No.	Use etc.
Seal packing 1282B, Three bond 1282B or equivalent	08826–00100	Water inlet housing

WhereEverybodyKnowsYourName

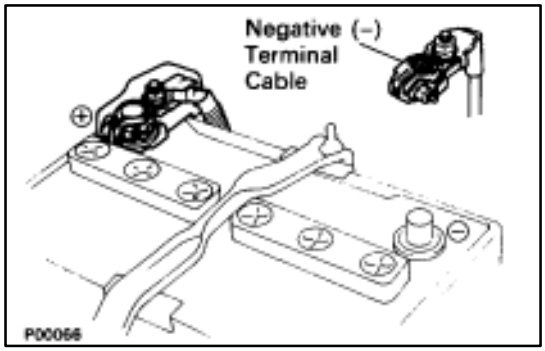

PRECAUTIONS

1. **Before working on the fuel system, disconnect the cable from negative (–) terminal of the battery.**
   HINT: Any diagnostic code retained by the computer will be erased when the battery terminal is removed. Therefore, if necessary, read the diagnosis before removing the battery terminal.

   CAUTION: Work must be started after approx. 20 seconds or longer from the time the ignition switch is turned to the "LOCK" position and negative (–) terminal cable is disconnected from the battery.

2. **Do not smoke or work on open flame when working on the fuel system.**

3. **Keep gasoline away from rubber or leather parts.**

INSPECTION PRECAUTIONS

MAINTENANCE PRECAUTIONS

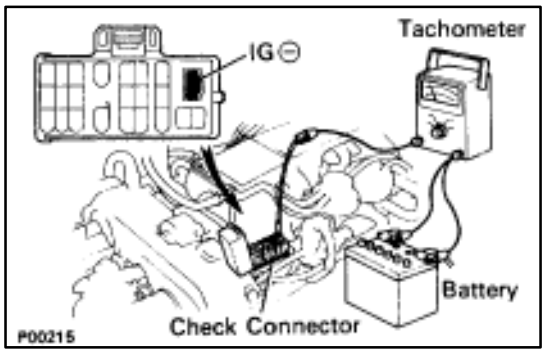

1. **CHECK CORRECT ENGINE TUNE–UP**
   (See page EM–8)

2. **PRECAUTIONS WHEN CONNECTING GAUGE**
   (a) Use the battery as the power source for the timing light, tachometer, etc.
   (b) Connect the test probe of a tachometer to the terminal IG of the check connector.

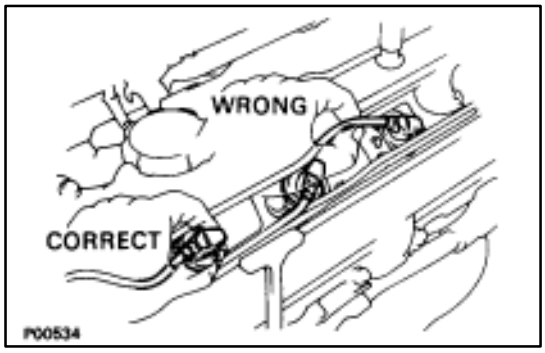

3. **IN EVENT OF ENGINE MISFIRE, FOLLOWING PRECAUTIONS SHOULD BE TAKEN**
   (a) Check proper connection of battery terminals, etc.
   (b) Handle high–tension cords carefully.
   (c) After repair work, check that the ignition coil terminals and all other ignition system lines are reconnected securely.
   (d) When cleaning the engine compartment, be especially careful to protect the electrical system from water.

4. **PRECAUTIONS WHEN HANDLING OXYGEN SENSOR**
   (a) Do not allow oxygen sensor to drop or hit against an object.
   (b) Do not allow the sensor to come into contact with water.

WhereEverybodyKnowsYourName

FUEL SYSTEM
Fuel Pump

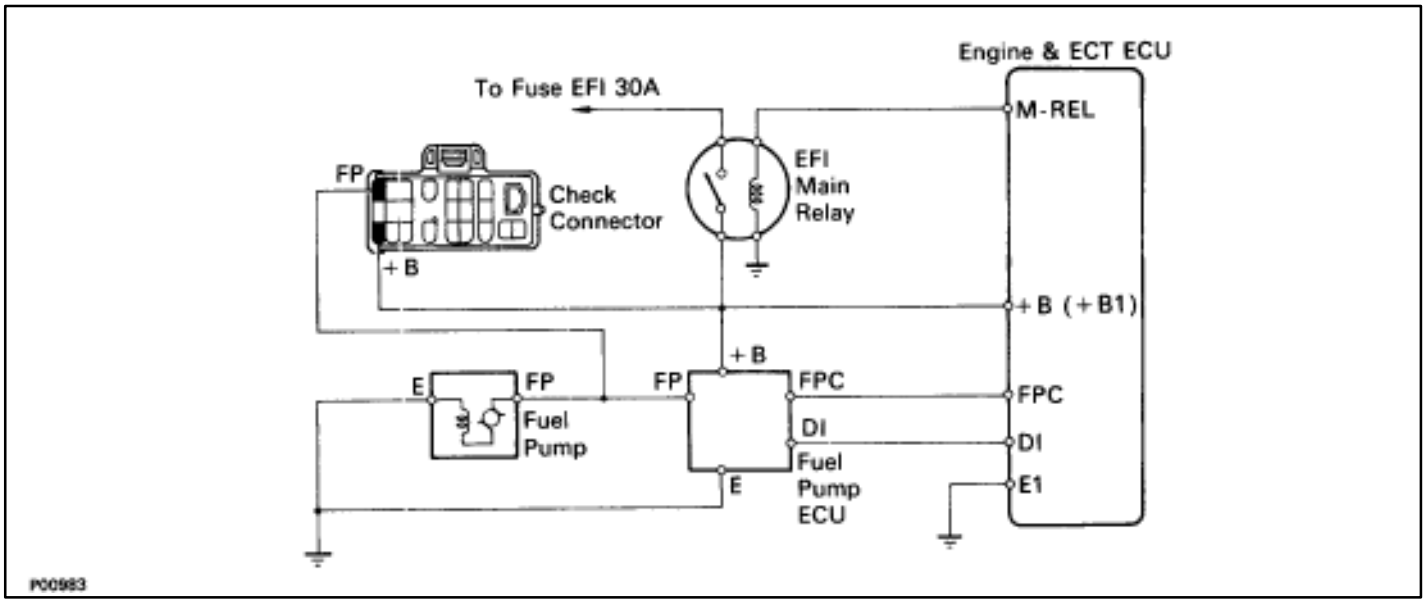

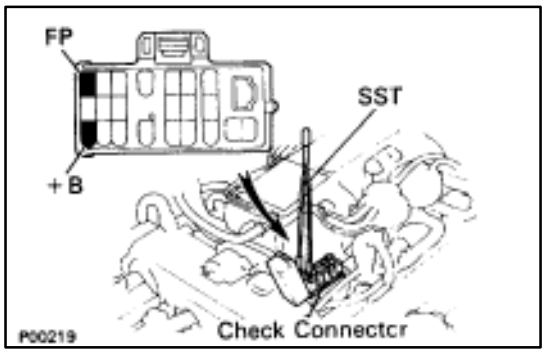

ON–VEHICLE INSPECTION

1. CHECK FUEL PUMP OPERATION

(a) Using SST, connect terminals +B and FP of the check (”DIAGNOSIS”) connector.

SST 09843–18020

(b) Turn the ignition switch ON.

NOTICE: Do not start the engine.

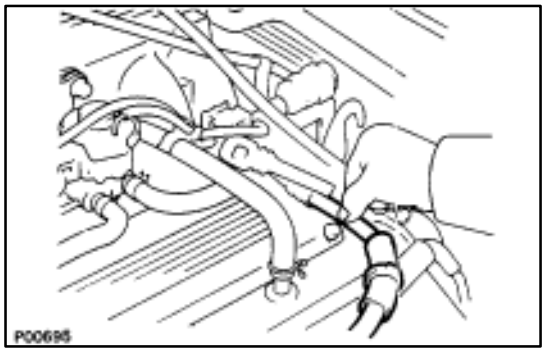

(c) Check that there is pressure in the fuel inlet hose from the fuel filter.

HINT: At this time, you will hear fuel return noise.

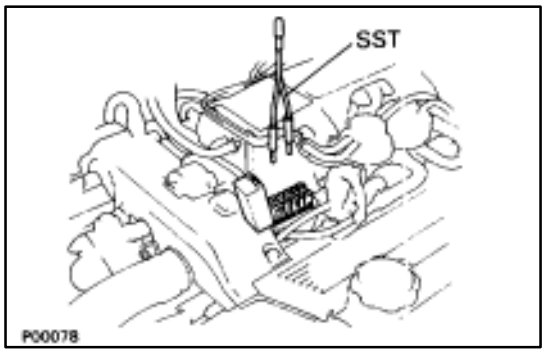

(d) Turn the ignition switch OFF.

(e) Remove SST from the check connector.

SST 09843–18020

WhereEverybodyKnowsYourName

If there is no pressure, check the following parts:

- Fuses
- EFI main relay
- Fuel pump ECU
- Fuel pump
- Engine & ECT ECU
- Wiring connections

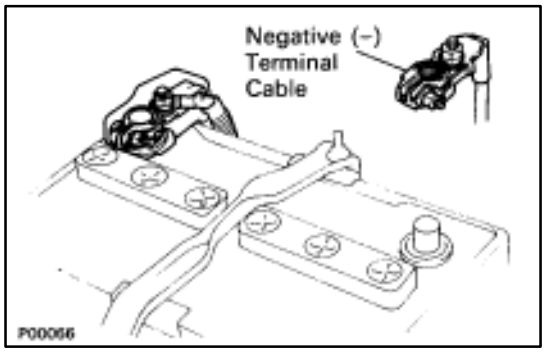

2. CHECK FUEL PRESSURE

(a) Check the battery voltage above 12 volts.

(b) Disconnect the cable from the negative (–) terminal of the battery.

CAUTION: Work must be started after approx. 20 seconds or longer from the time the ignition switch is turned to the "LOCK" position and negative (–) terminal cable is disconnected from the battery.

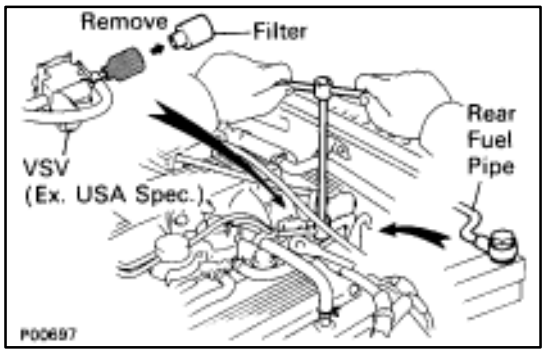

(c) (Exc. USA Spec.)
Remove the filter from the VSV (for EGR system).

(d) Remove the union bolt holding the LH deliver pipe to the rear fuel pipe. Remove the two gaskets.

HINT:

- Put a suitable container or shop towel under the cold start injector pipe.
- Slowly loosen the union bolt.

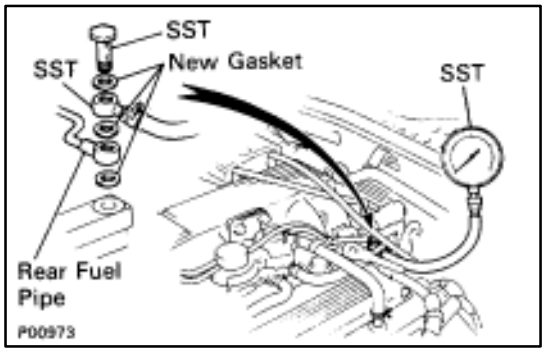

(e) Install the rear fuel pipe and SST (pressure gauge) to the LH delivery pipe with three new gaskets and the union bolt.

SST 09268–45012

Torque: 39 N·m (400 kgf·cm, 29 ft·lbf)

(f) Wipe off any splattered gasoline.

(g) (Exc. USA Spec.)
Reinstall the filter to the VSV.

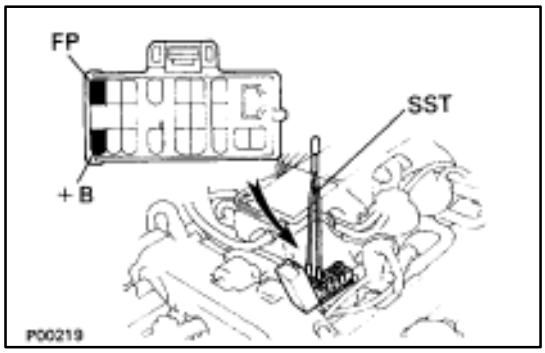

(h) Using SST, connect terminals B and FP of the check ("DIAGNOSIS") connector.

SST 09843–18020

(i) Reconnect the cable to the negative (–) terminal of the battery.

WhereEverybodyKnowsYourName

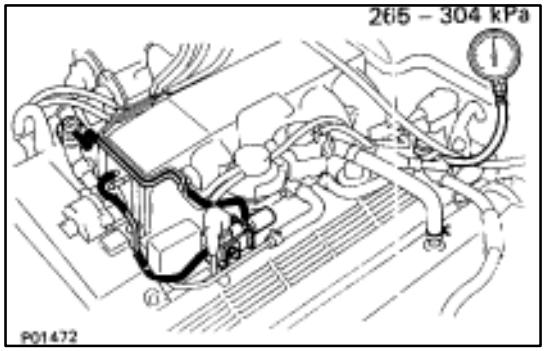

(j) Turn the ignition switch ON.

(k) Measure the fuel pressure.

Fuel pressure: 265–304 kPa

(2.7–3.1 kgf/cm^2, 38–44 psi)

If pressure is high, replace the fuel pressure regulator.

If pressure is low, check the following parts:

- Fuel hoses and connections
- Fuel pump
- Fuel filter
- Fuel pressure regulator

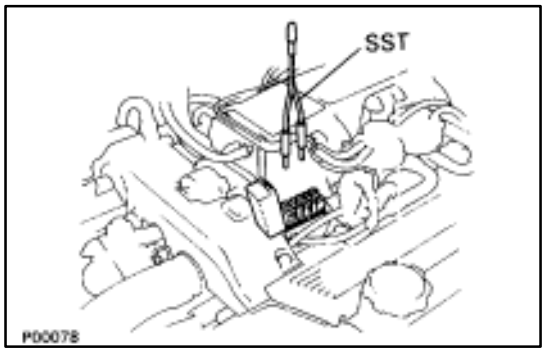

(l) Remove SST from the check connector.

SST 09843–18020

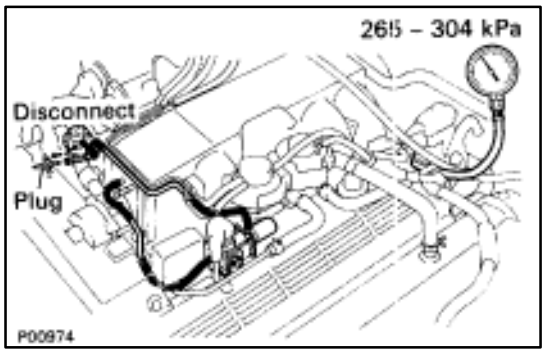

(m) Start the engine.

(n) Disconnect the vacuum sensing hose from the fuel pressure regulator, and plug the hose end.

(o) Measure the fuel pressure at idling.

Fuel pressure: 265–304 kPa

(2.7–3.1 kgf/cm^2, 38–44 psi)

(p) Reconnect the vacuum sensing hose to the fuel pressure regulator.

(q) Measure the fuel pressure at idling.

Fuel pressure: 196–235 kPa

(2.0–2.4 kgf/cm^2, 28–34 psi)

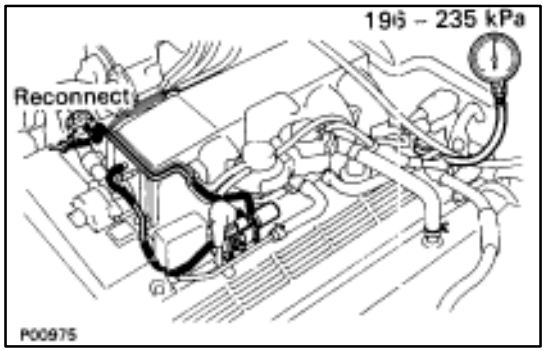

If pressure is not as specified, check the vacuum sensing hose and fuel pressure regulator.

(r) Stop the engine. Check that the fuel pressure remains 147 kPa (1.5 kgf/cm^2, 21 psi) or more for 5 minutes after the engine is turned off.

If pressure is not as specified, check the fuel pump, pressure regulator and/or injectors.

(s) After checking fuel pressure, disconnect the battery negative (–) cable and carefully remove the SST to prevent gasoline from splashing.

SST 09268–45012

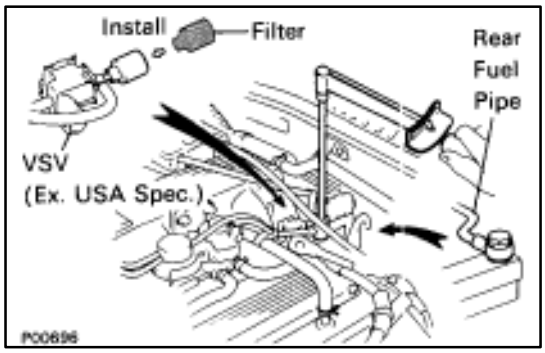

(t) Connect the rear fuel pipe to the delivery pipe with two new gaskets and the union bolt.

Torque: 39 N·m (400 kgf·cm, 29 ft·lbf)

(u) (Exc. USA spec.)
Reinstall the filter to the VSV.

(v) Reconnect the cable to the negative (–) terminal of the battery.

(w) Check for fuel leaks. (See page FI–16)

WhereEverybodyKnowsYourName

COMPONENTS FOR REMOVAL AND INSTALLATION

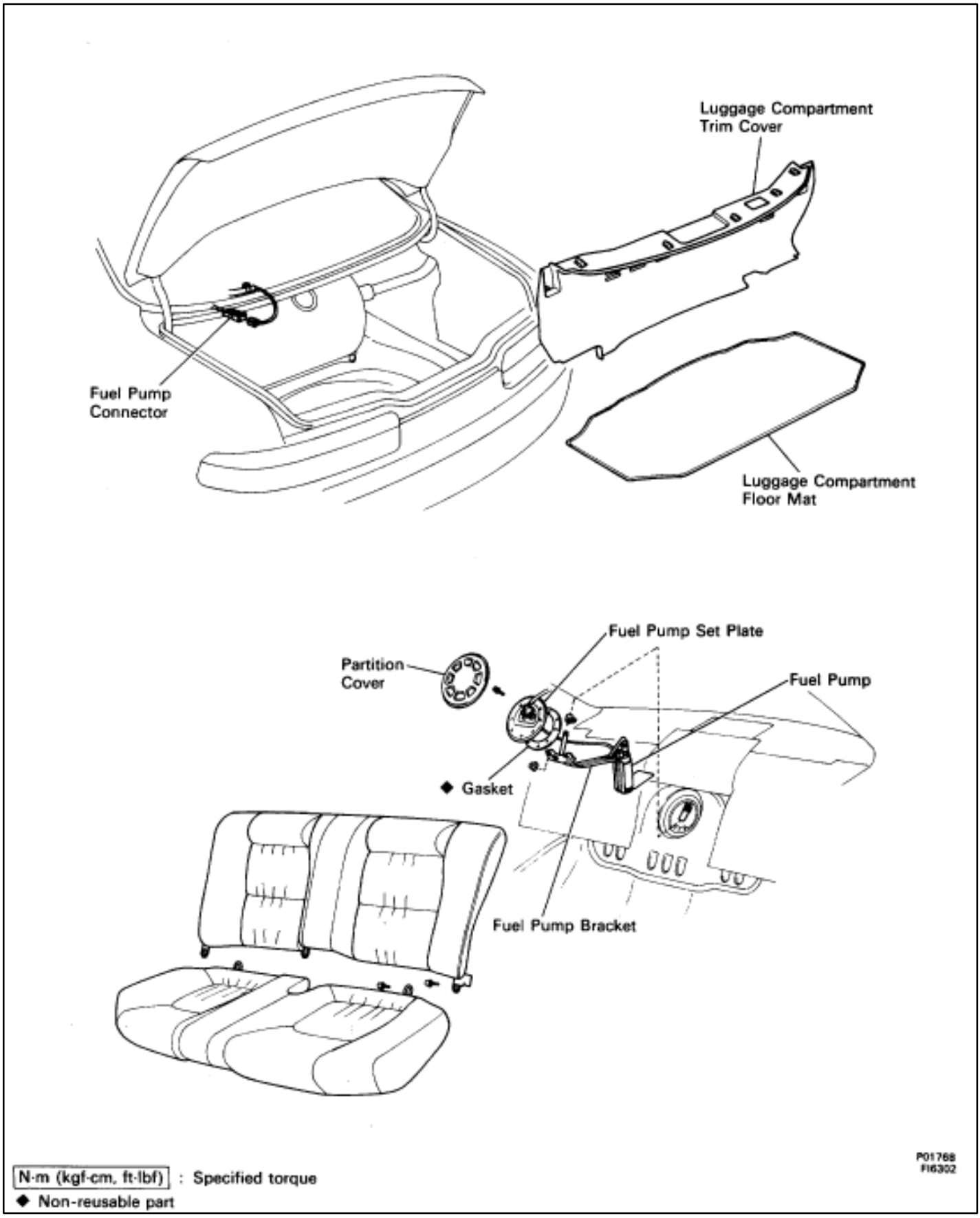

WhereEverybodyKnowsYourName

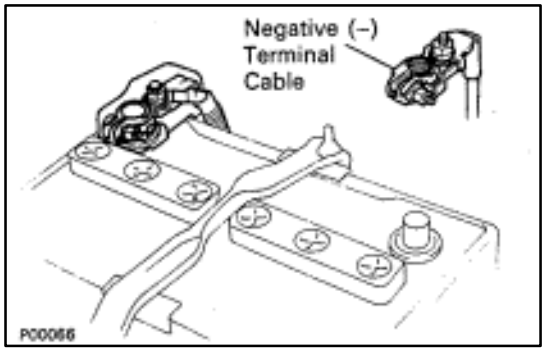

REMOVAL OF FUEL PUMP

(See Components on page FI–20)

CAUTION: Do not smoke or work near an open flame when working on the fuel pump.

1. **DISCONNECT CABLE FROM NEGATIVE TERMINAL OF BATTERY**
   CAUTION: Work must be started after approx. 20 seconds or longer from the time the ignition switch is turned to the "LOCK" position and negative (–) terminal cable is disconnected from the battery.

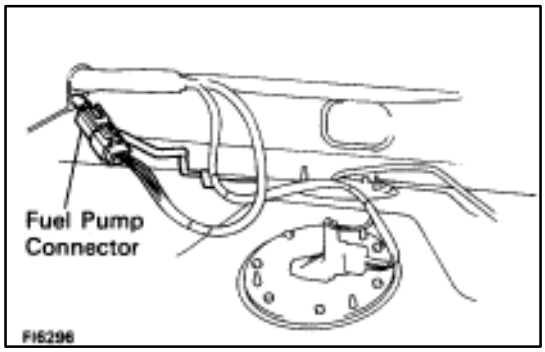

2. **REMOVE LUGGAGE COMPARTMENT FLOOR MAT**
3. **REMOVE SPARE TIRE**
4. **REMOVE LUGGAGE COMPARTMENT TRIM COVER**
5. **DISCONNECT FUEL PUMP CONNECTOR**
6. **REMOVE SEAT CUSHION AND BACK**

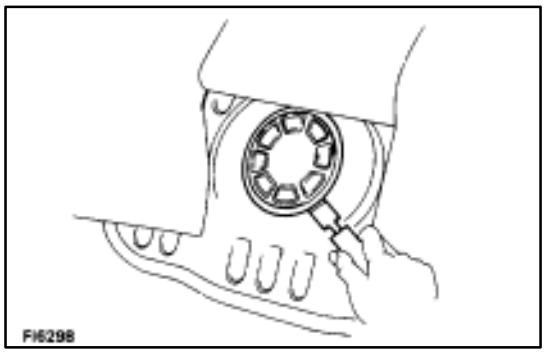

7. **REMOVE PARTITION COVER**
   Using a scraper, pry out the partition cover.

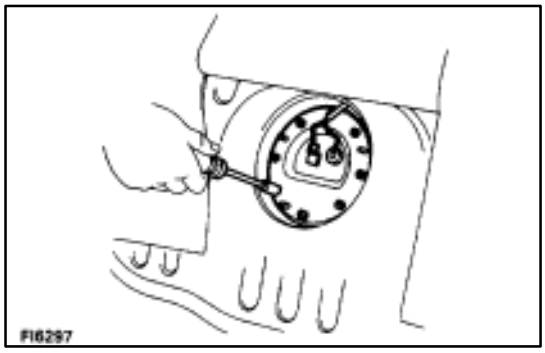

8. **REMOVE FUEL PUMP**
   (a) Remove the eight bolts, and disconnect the fuel pump set plate from the fuel tank.

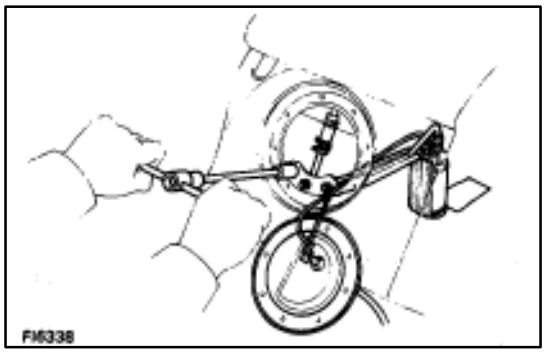

   (b) Remove the three nuts, and disconnect the fuel pump bracket from the fuel tank.
   (c) Disconnect the fuel hose from the fuel pump bracket, and remove the fuel pump, bracket and set plate assembly.

WhereEverybodyKnowsYourName

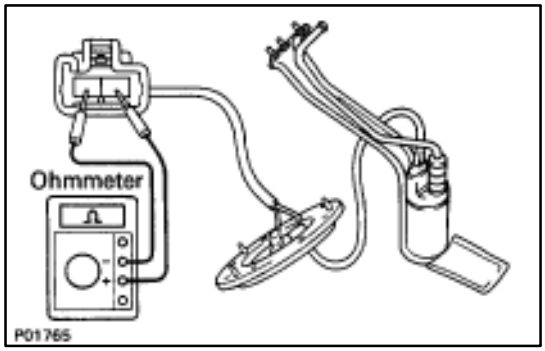

INSPECTION OF FUEL PUMP

1. INSPECT FUEL PUMP RESISTANCE

Using an ohmmeter, measure the resistance between the terminals.

Resistance: 0.2–3.0 ?

If the resistance is not as specified, replace the fuel pump and/or set plate.

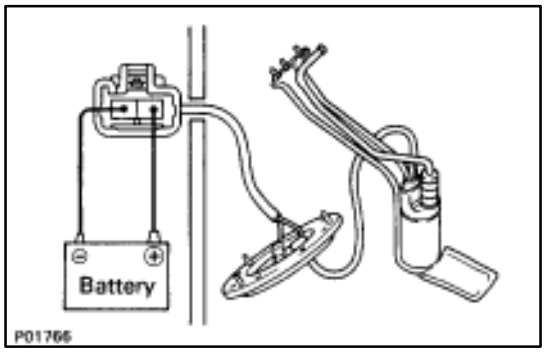

2. INSPECT FUEL PUMP OPERATION

Connect the positive (+) lead from the battery to terminal 1 of the connector, and the negative (–) lead to terminal 2. Check that the fuel pump operates.

NOTICE:

- **These tests must be performed quickly (within 10 seconds) to prevent the coil from burning out.**
- **Keep the fuel pump as far away from the battery as possible.**
- **Always perform switching at the battery side.**

If operation is not as specified, replace the fuel pump and/or set plate.

COMPONENTS FOR DISASSEMBLY AND ASSEMBLY

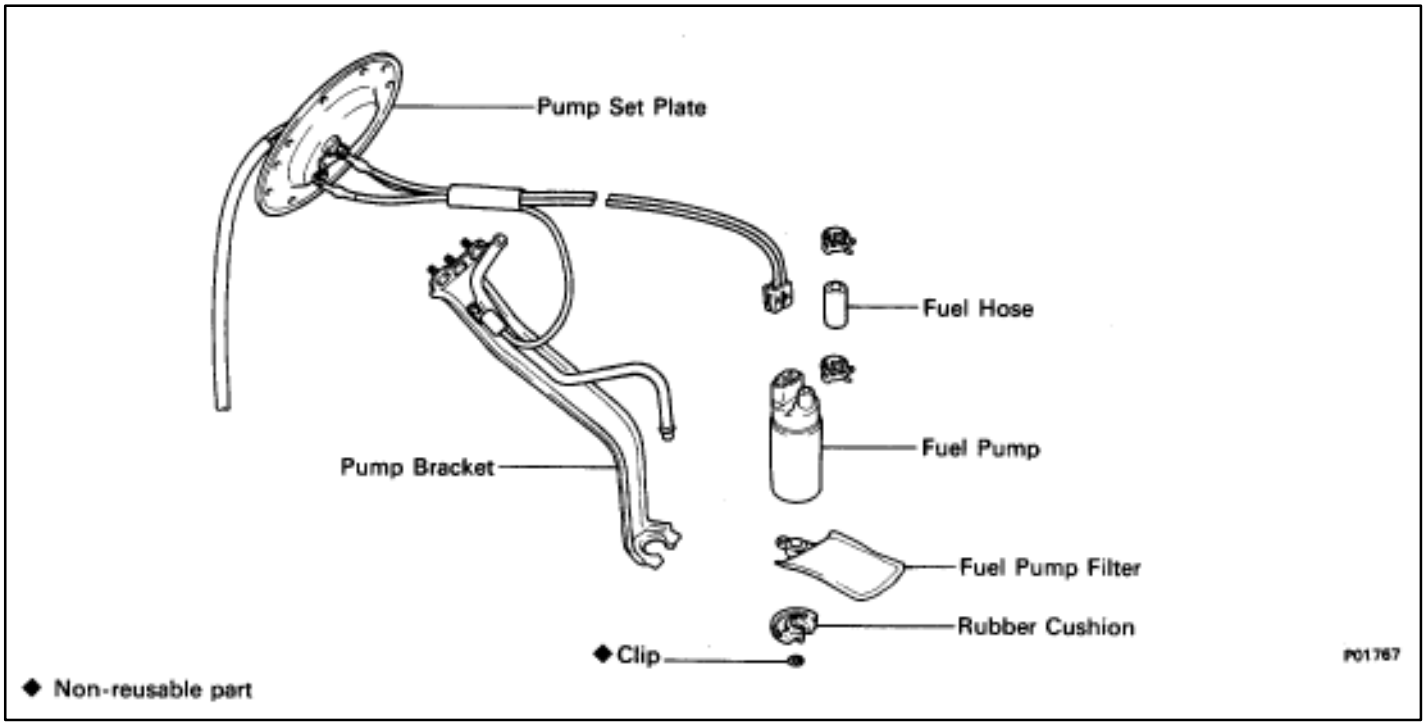

WhereEverybodyKnowsYourName

DISASSEMBLY OF FUEL PUMP

(See Components on page FI–22)

1. REMOVE PUMP SET PLATE FROM FUEL PUMP

Disconnect the lead connector from the fuel pump, and remove the set plate.

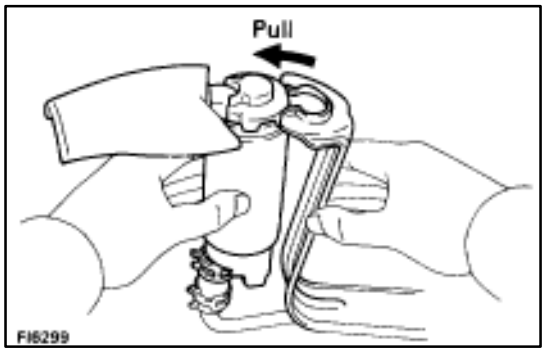

2. REMOVE FUEL PUMP FROM PUMP BRACKET

(a) Pull out the lower side of the fuel pump from the pump bracket.
(b) Remove the rubber cushion from the fuel pump.
(c) Disconnect the fuel hose from the fuel pump, and remove the fuel pump.

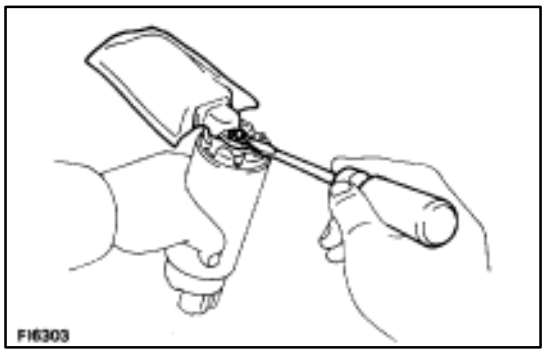

3. REMOVE FUEL PUMP FILTER FROM FUEL PUMP

(a) Using a small screwdriver, remove the clip.
(b) Pull out the pump filter.

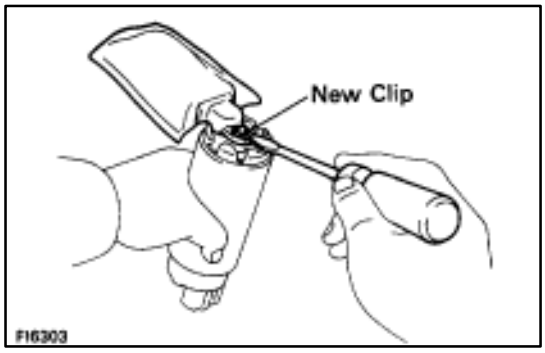

ASSEMBLY OF FUEL PUMP

(See Components on page FI–22)

1. INSTALL FUEL PUMP FILTER TO FUEL PUMP

Install the pump filter with a new clip.

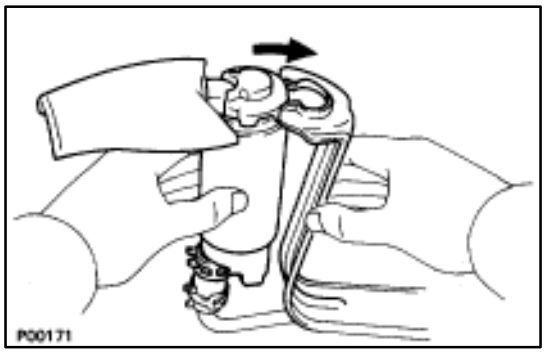

2. INSTALL FUEL PUMP TO FUEL PUMP BRACKET

(a) Connect the fuel hose to the outlet port of the fuel pump.
(b) Install the rubber cushion to the fuel pump.
(c) Install the fuel pump by pushing the lower side of the fuel pump.

3. INSTALL PUMP SET PLATE TO FUEL PUMP

Connect the lead connector on the set plate to the fuel pump.

WhereEverybodyKnowsYourName

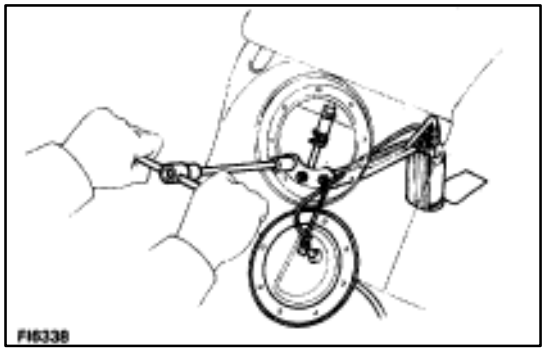

INSTALLATION OF FUEL PUMP

(See Components on page FI–20)

1. INSTALL FUEL PUMP

(a) Install a new gasket to the pump set plate.

(b) Connect the fuel hose to the fuel pump bracket, and install the fuel pump and bracket assembly with the three nuts.

Torque: 5.4 N·m (55 kgf·cm, 48 in.·lbf)

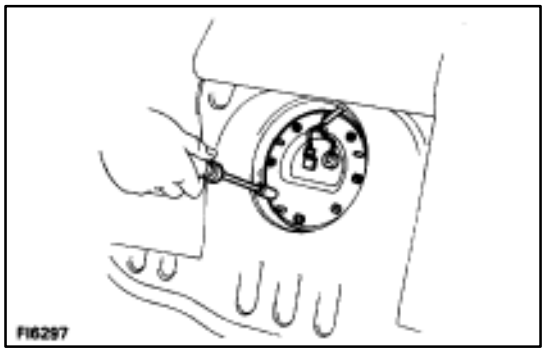

(b) Install the fuel pump set plate with the eight bolts.

Torque: 3.9 N·m (40 kgf·cm, 35 in.·lbf)

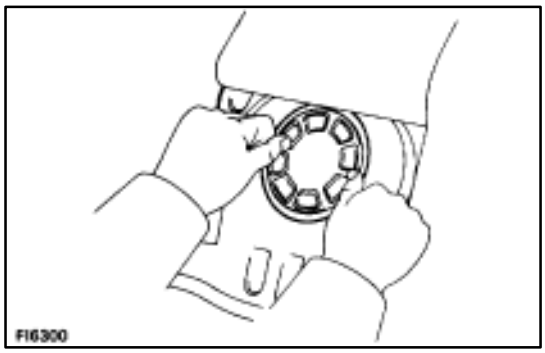

2. INSTALL PARTITION COVER

Install the partition cover with butyl tape.

3. INSTALL SEAT BACK AND CUSHION

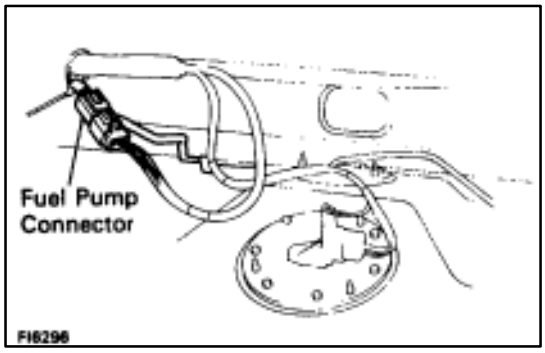

4. CONNECT FUEL PUMP CONNECTOR

5. INSTALL LUGGAGE COMPARTMENT TRIM COVER

6. INSTALL SPARE TIRE

7. INSTALL LUGGAGE COMPARTMENT FLOOR MAT

8. CONNECT CABLE TO NEGATIVE TERMINAL OF BATTERY

9. START ENGINE, AND CHECK FOR FUEL LEAKS

WhereEverybodyKnowsYourName

Cold Start Injector

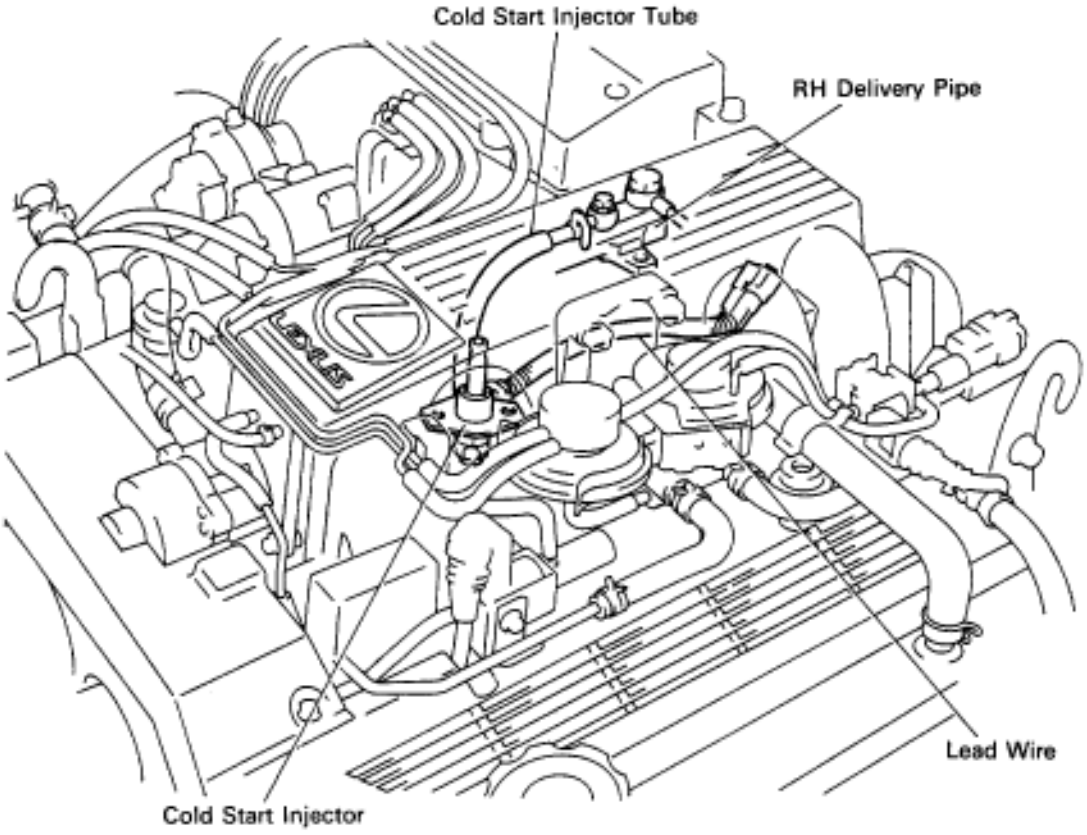

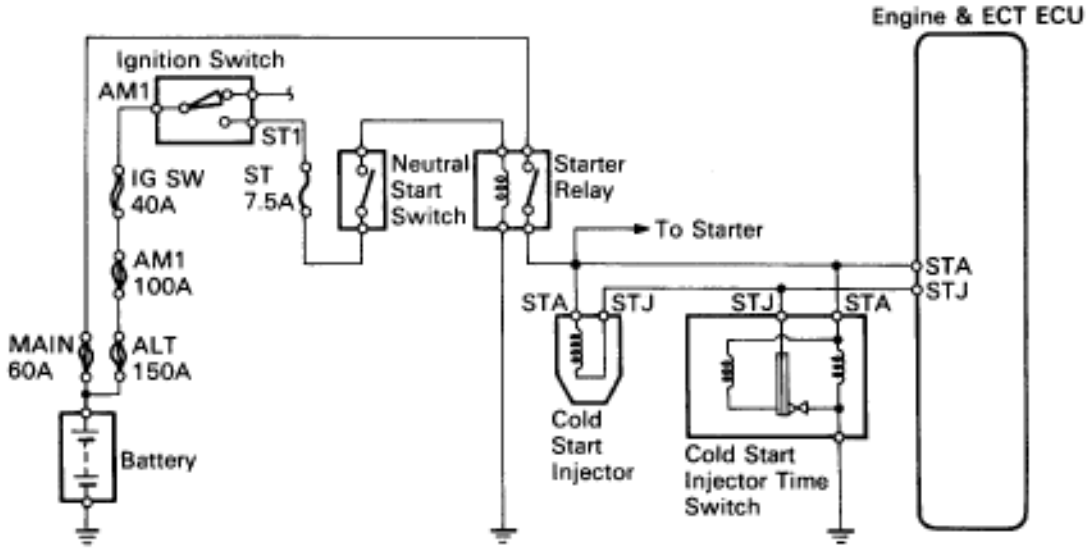

P01906
P01318

WhereEverybodyKnowsYourName

COMPONENTS FOR REMOVAL AND INSTALLATION

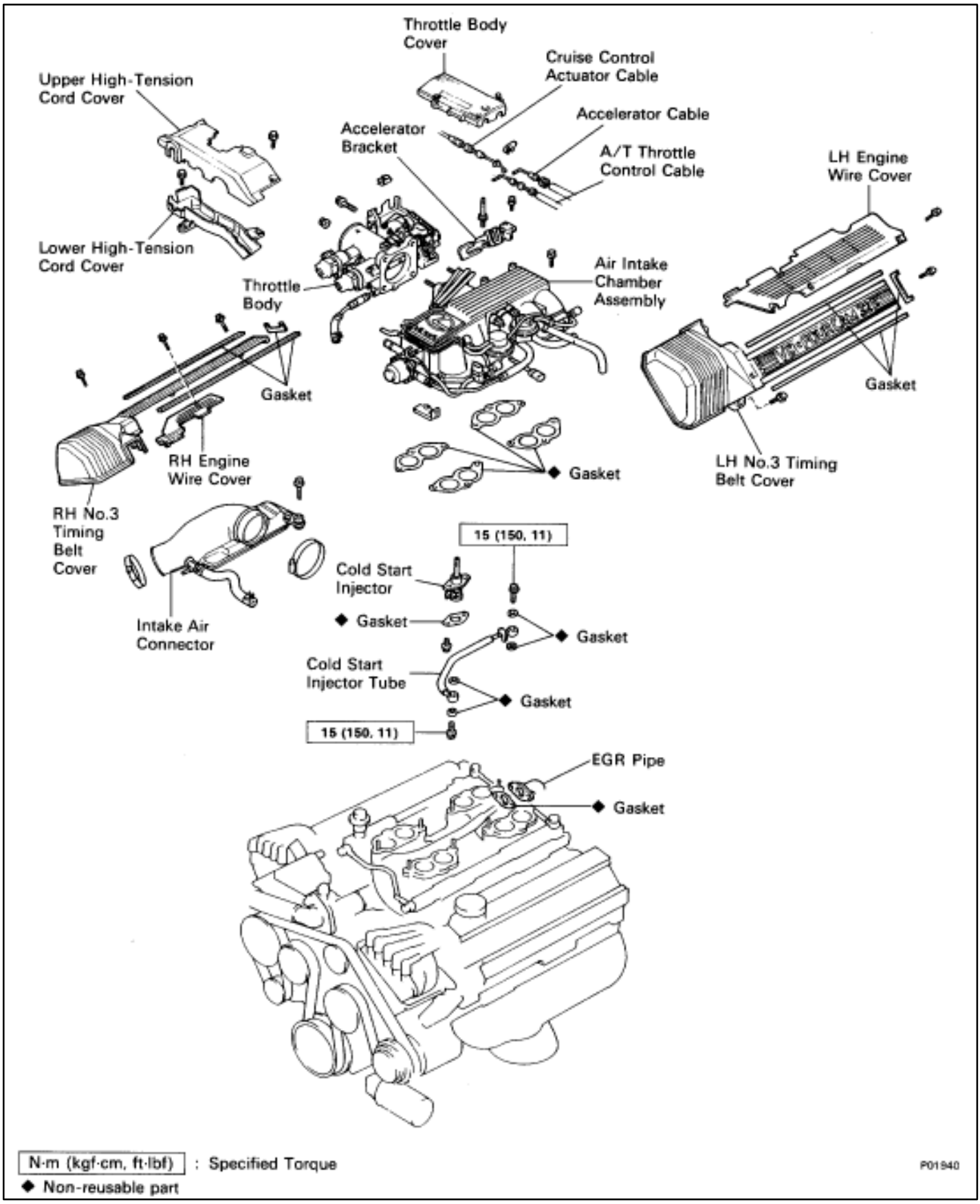

WhereEverybodyKnowsYourName

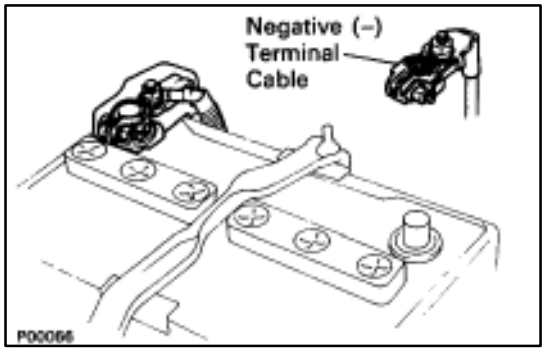

REMOVAL OF COLD START INJECTOR

(See Components on page FI–26)

1. **DISCONNECT CABLE FROM NEGATIVE TERMINAL OF BATTERY**
   CAUTION: Work must be started after approx. 20 seconds or longer from the time the ignition switch is turned to the "LOCK" position and the negative (–) terminal cable is disconnected from the battery.
2. **DRAIN ENGINE COOLANT (See page CO–6)**

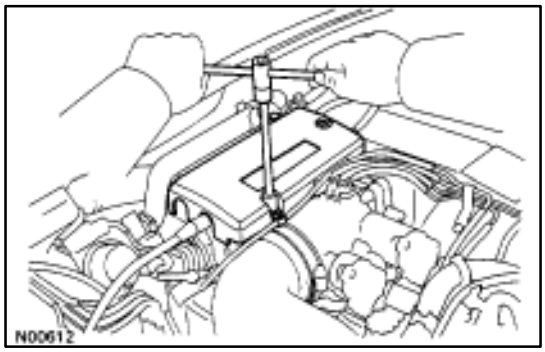

3. **REMOVE THROTTLE BODY COVER**
   (a) Remove the mounting cap nut.
   (b) Loosen the two bolts, and remove the throttle body cover.

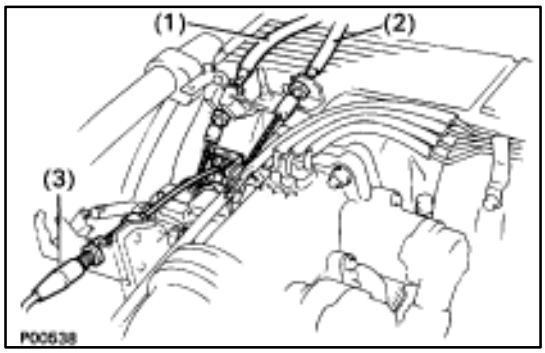

4. **DISCONNECT CONTROL CABLES FROM THROTTLE BODY**
   Disconnect the following cables:
   (1) Accelerator cable
   (2) A/T throttle control cable
   (3) (w/ Cruise Control System)
   Cruise control actuator cable

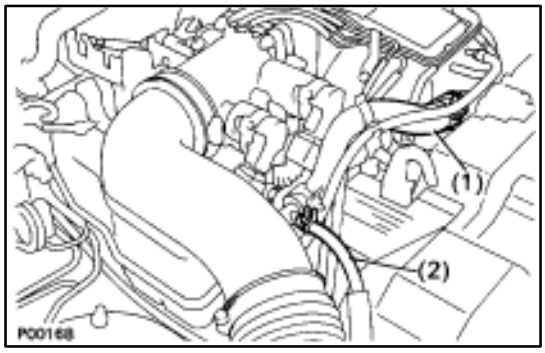

5. **REMOVE INTAKE AIR CONNECTOR**
   (a) Disconnect the following hoses:
   (1) Air hose from ISC valve
   (2) Air hose (from PS air control valve) from intake air connector

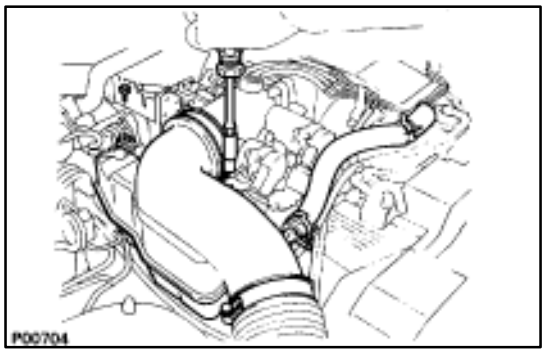

   (b) Remove the bolt holding the intake air connector to the cylinder head cover.
   (c) Loosen the two hose clamps.
   (d) Disconnect the intake air connector from the throttle body and air cleaner hose, and remove the intake air connector.

WhereEverybodyKnowsYourName

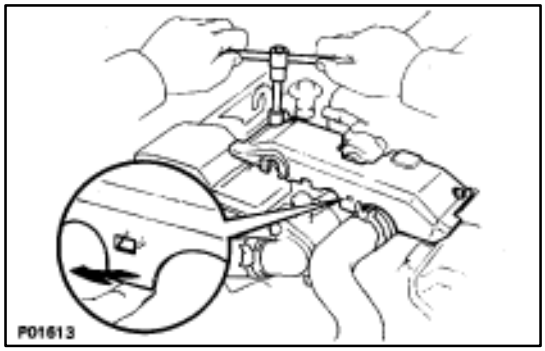

6. REMOVE UPPER HIGH–TENSION CORD COVER

(a) Remove the two mounting bolts.

(b) Disconnect the front side claw groove of the cord cover from the claw of the lower cover, and remove the cord cover.

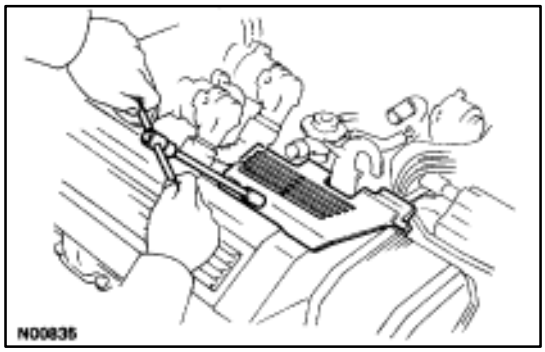

7. REMOVE RH ENGINE WIRE COVER

Remove the bolt and wire cover.

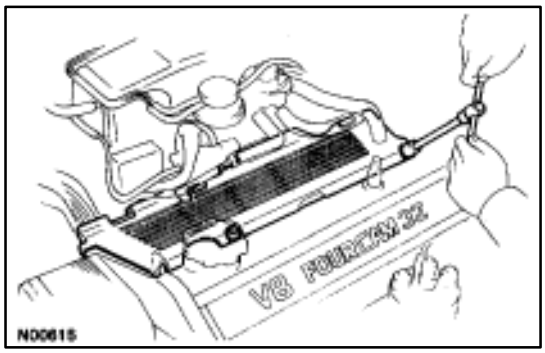

8. REMOVE LH ENGINE WIRE COVER

Remove the two bolts and wire cover.

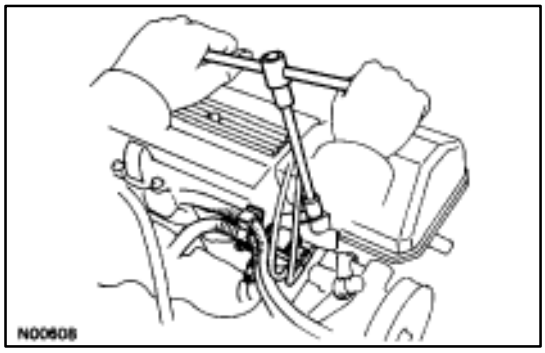

9. REMOVE VSV FOR EVAP SYSTEM

Remove the two bolts, and disconnect the VSV from cylinder head and timing belt cover.

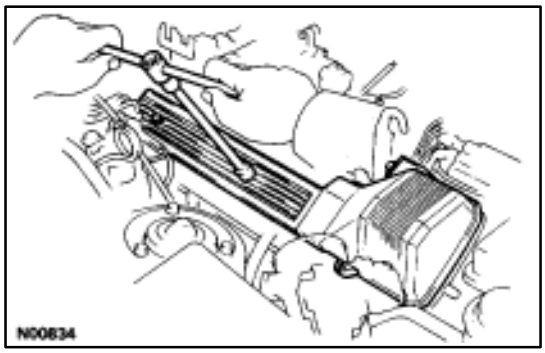

10. REMOVE RH NO.3 TIMING BELT COVER

Remove the three bolts and timing belt cover.

WhereEverybodyKnowsYourName

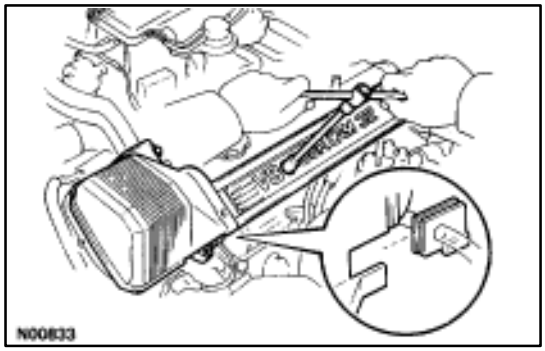

11. REMOVE LH NO.3 TIMING BELT COVER

(a) Remove the four mounting bolts.

(b) Disconnect the cord grommet from the timing belt cover, and remove the timing belt cover.

(c) Remove the cord grommet from the high–tension cord.

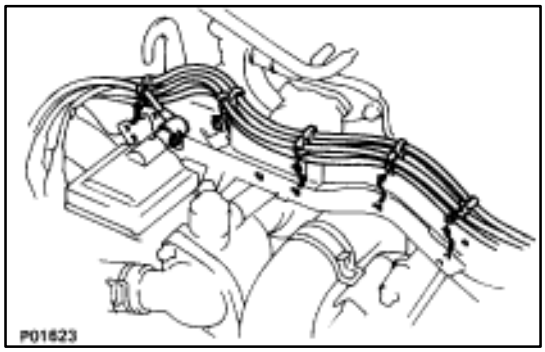

12. REMOVE LOWER HIGH–TENSION CORD COVER

(a) Disconnect the high–tension cord from the RH ignition coil.

(b) Disconnect the high–tension cords from the high–tension cord cover.

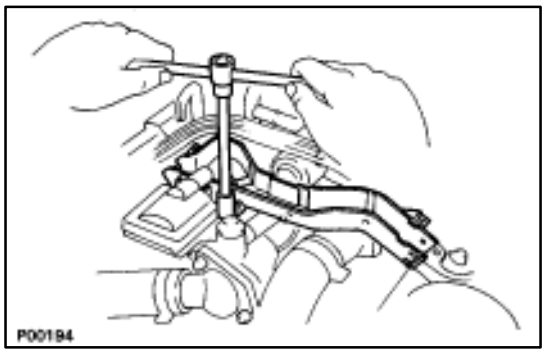

(c) Remove the bolt and cord cover.

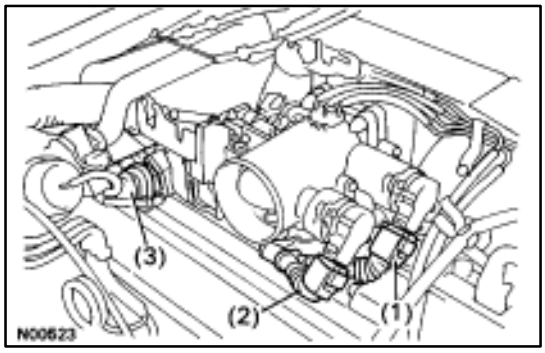

13. REMOVE THROTTLE BODY

(a) Disconnect the following connectors:

(1) Throttle position sensor connector

(2) (w/ TRAC)
Sub–throttle position sensor connector

(3) (w/ TRAC)
Sub–throttle actuator connector

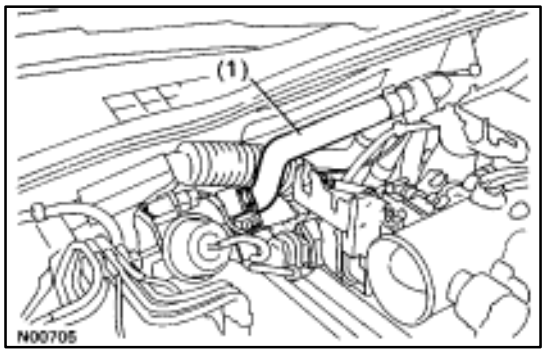

(b) Disconnect the following hoses:

(1) Heater water hose from heater water valve

WhereEverybodyKnowsYourName

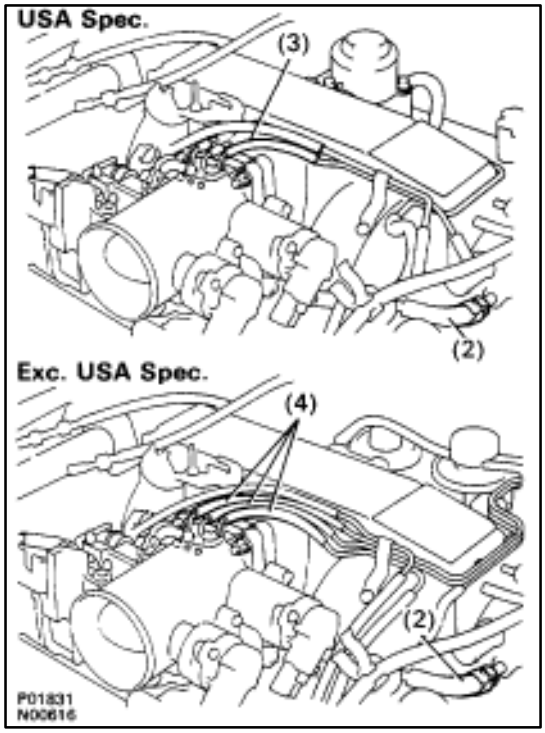

(2) Water by–pass hose from ISC valve
(3) (USA Spec.)
Vacuum hose
(4) (Exc. USA Spec.)
Three vacuum hoses

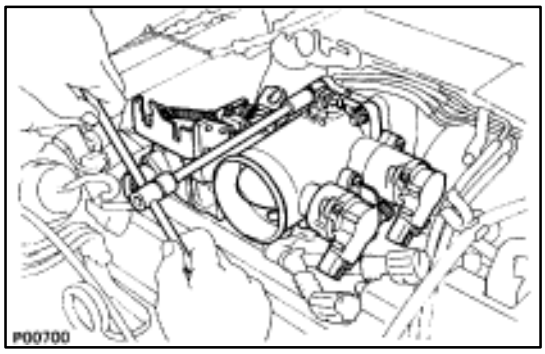

(c) Remove the two bolts and two nuts, disconnect the throttle body from the air intake chamber.

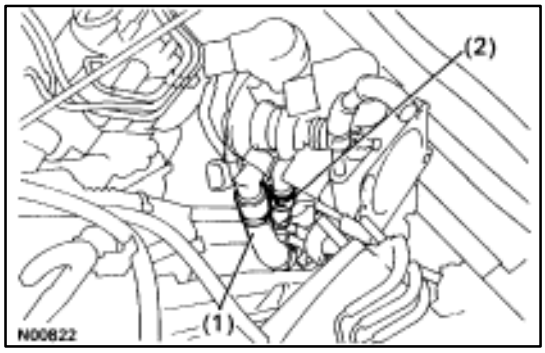

(d) Disconnect the following hoses, and remove the throttle body:
(1) PCV hose from throttle body
(2) Water by–pass hose from throttle body
(e) Remove the throttle body gasket.

14. DISCONNECT CONNECTORS

Disconnect the following connectors:

- Cold start injector connector
- ISC valve connector
- (USA Spec.)
  EGR valve connector for EGR system
- (Exc. USA Spec.)
  VSV connector for EGR
- VSV connector for fuel pressure control system

WhereEverybodyKnowsYourName

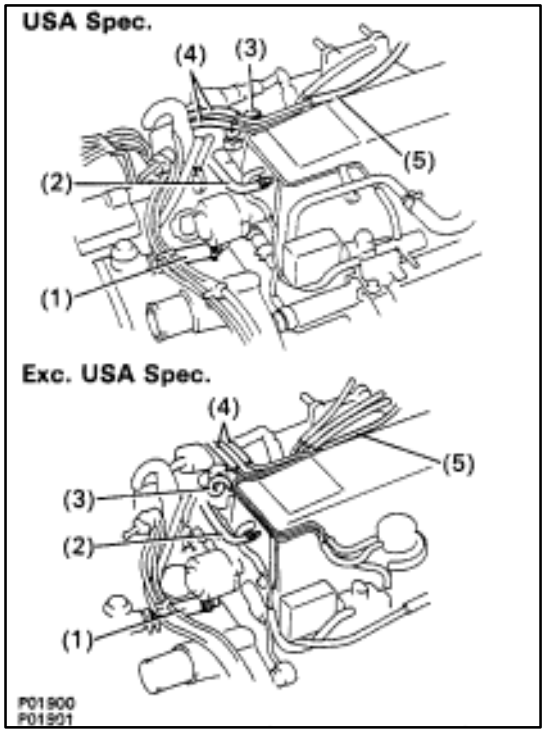

15. DISCONNECT HOSES

Disconnect the following hoses:

(1) Water by–pass hose (from water inlet housing) from ISC valve
(2) Vacuum hose (from PS air control valve) from air intake chamber
(3) Vacuum sensing hose (from fuel pressure regulator) from vacuum pipe
(4) Two vacuum hoses (from VSV for EVAP system) from vacuum pipe
(5) Vacuum hose (from charcoal canister) from vacuum pipe

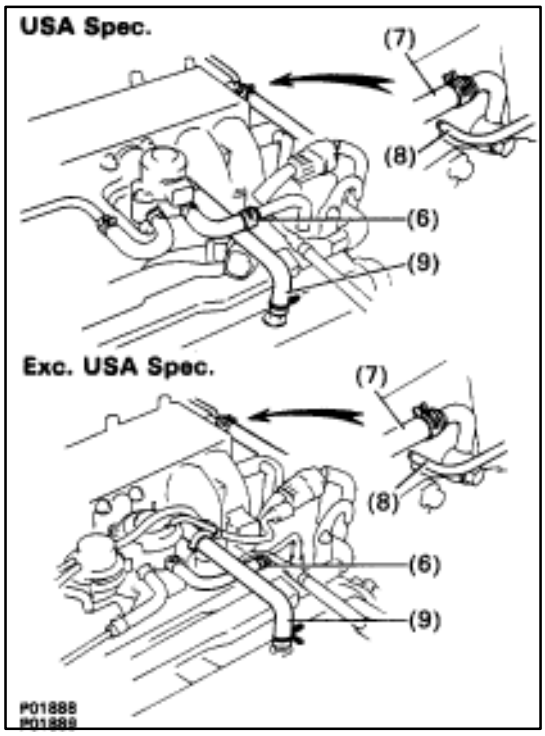

(6) Water by–pass hose (from EGR valve) from water by–pass pipe
(7) Vacuum hose (from brake booster) from air intake chamber
(8) Vacuum hose (from VSV for heater water valve) from air intake chamber
(9) PCV hose from LH cylinder head cover

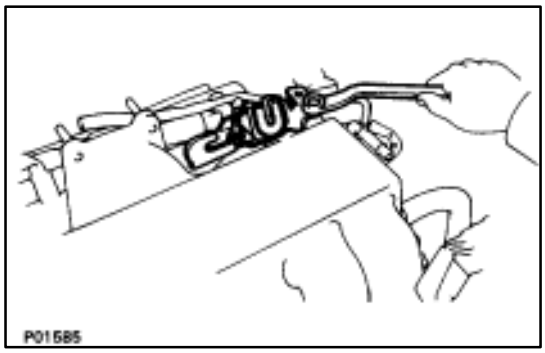

16. REMOVE AIR INTAKE CHAMBER

(a) Remove the bolt, stud bolt and accelerator bracket.

WhereEverybodyKnowsYourName

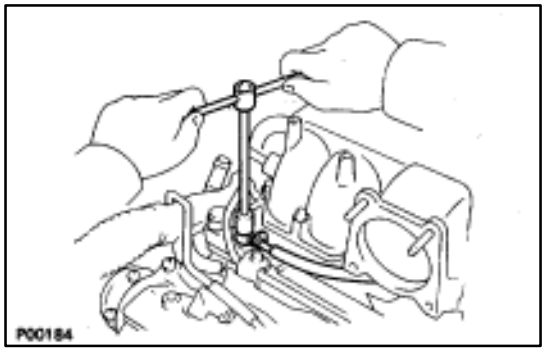

(b) Remove the union bolt and two gaskets, and disconnect the cold start injector tube from the RH delivery pipe.

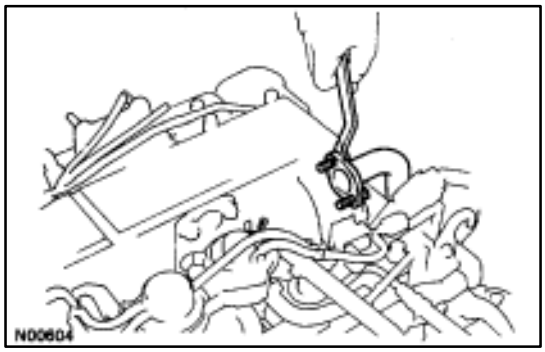

(c) Remove the two bolts and gasket, and disconnect the EGR pipe from the air intake chamber.

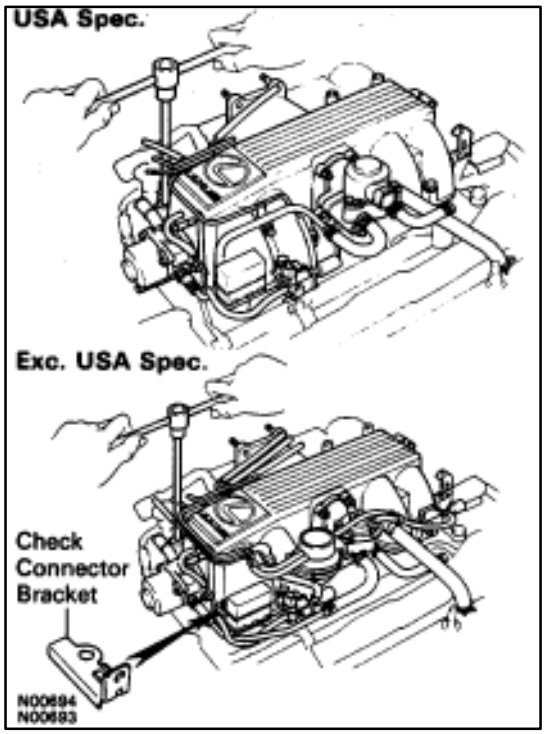

(d) Remove the four bolts, eight nuts and A/T throttle cable bracket.
(e) (USA Spec.)
Disconnect the check (”DIAGNOSIS”) connector bracket from the air intake chamber.
(f) (Exc. USA Spec.)
Remove the connector bracket from the check (DIAGNOSIS”) connector
(g) Remove the air intake chamber assembly and four gaskets.

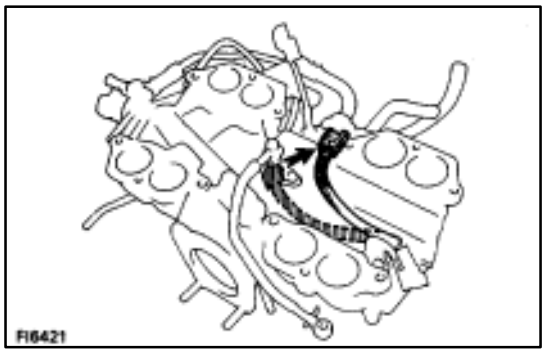

17. REMOVE COLD START INJECTOR FROM AIR INTAKE CHAMBER

(a) Disconnect the cold start injector connector.

WhereEverybodyKnowsYourName

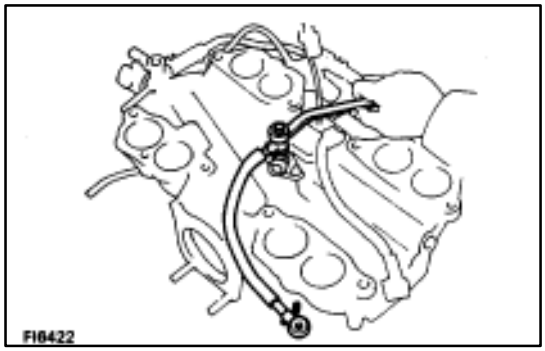

(b) Remove the union bolt, two gasket, and cold start injector tube.

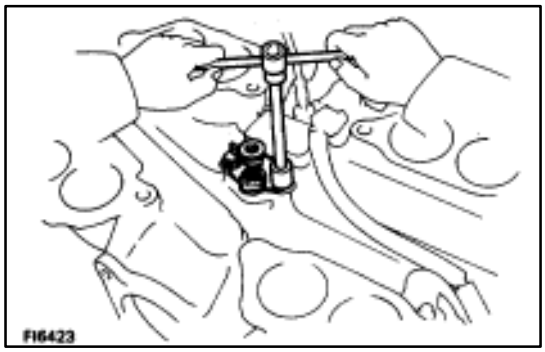

(c) Remove the two bolts, cold start injector and gasket.

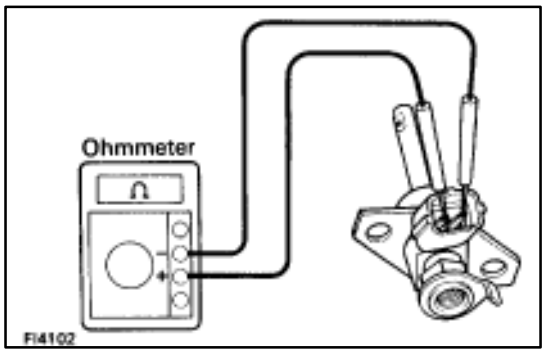

INSPECTION OF COLD START INJECTOR

1. INSPECT RESISTANCE OF COLD START INJECTOR

(a) Disconnect the cold start injector connector.

(b) Using an ohmmeter, measure the resistance between the terminals.

Resistance: 2–4 ?

If the resistance is not as specified, replace the cold start injector.

(c) Reconnect the cold start injector connector.

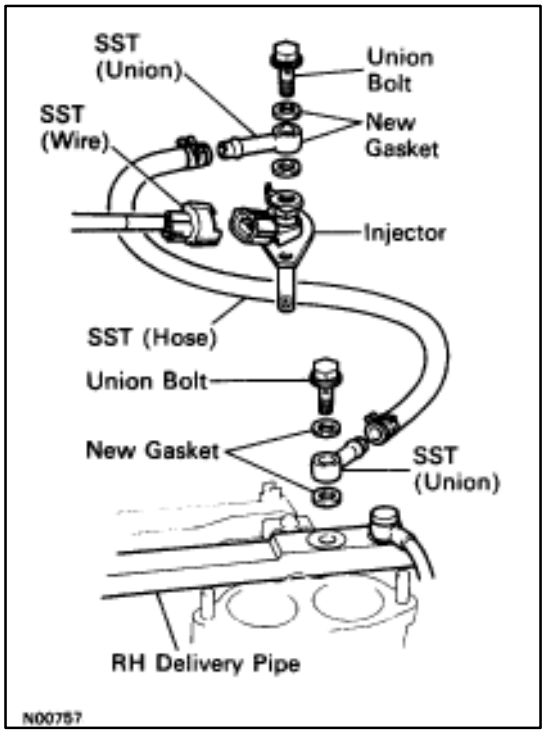

2. INSPECT INJECTION OF COLD START INJECTOR

CAUTION: Keep clear of sparks during the test.

(a) Install SST (two unions) to the injector and delivery pipe with four new gaskets and the union bolts.

SST 09268–41045 (09268–41080)

Torque: 180 kg–cm (13 ft–lb, 18 N·m)

(b) Connect SST (hose) to the unions.

SST 09268–41045

(c) Connect SST (wire) to the injector.

SST 09842–30055

(d) Put a container under the injector.

WhereEverybodyKnowsYourName

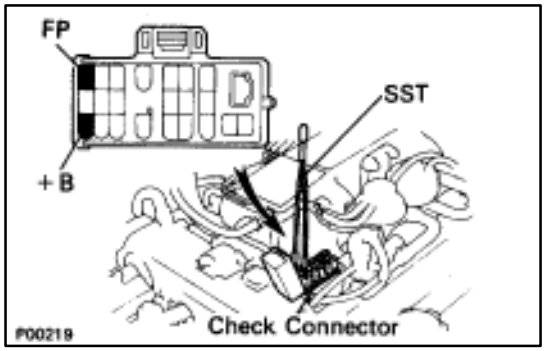

(e) Using SST, connect terminals +B and FP of the check (”DIAGNOSIS”) connector.

SST 09843–18020

(f) Reconnect the cable to the negative (–) terminal of the battery.

(g) Turn the ignition switch ON.

NOTICE: Do not start the engine.

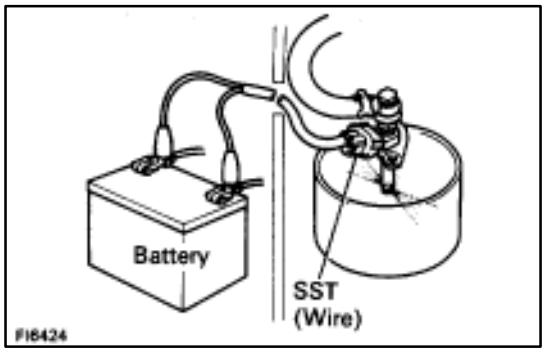

(h) Connect the test probes of the SST (wire) to the battery, and check that the fuel spray is as shown.

SST 09842–30055

NOTICE: Perform this check within the shortest possible time.

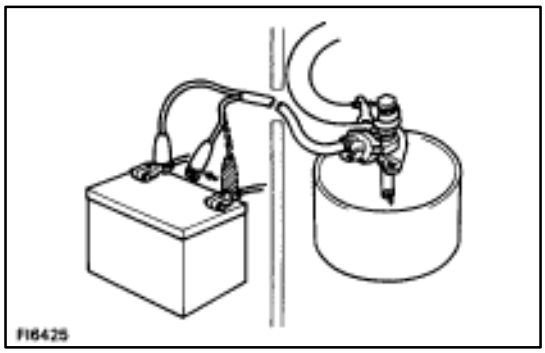

3. INSPECT LEAKAGE

(a) In the condition above, disconnect the test probes of SST (wire) from the battery and check fuel leakage from the injector.

SST 09842–30055

Fuel drop: One drop or less per minute

(b) Disconnect the cable from the negative (–) terminal of the battery.

(c) Remove SST.

SST 09268–41045, 09842–30050 and 09843–18020

WhereEverybodyKnowsYourName

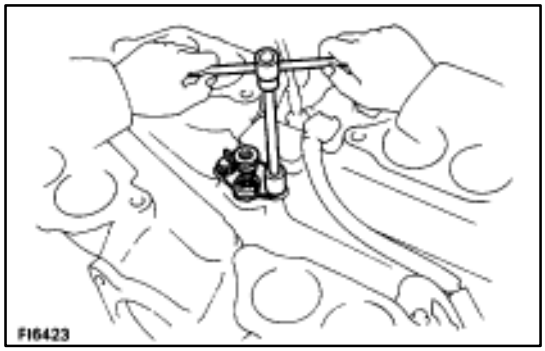

INSTALLATION OF COLD START INJECTOR

(See Components on page FI–26)

1. INSTALL COLD START INJECTOR

(a) Install a new gasket and the injector with the two bolts.

Torque: 7.8 N·m (80 kgf·cm, 69 in.·lbf)

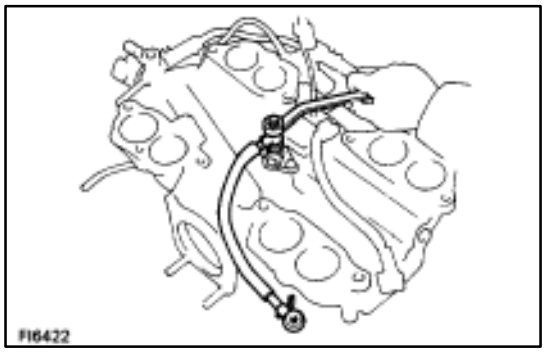

(b) Install the cold start injector tube with a new gasket and the union bolt.

Torque: 15 N·m (150 kgf·cm, 11 ft·lbf)

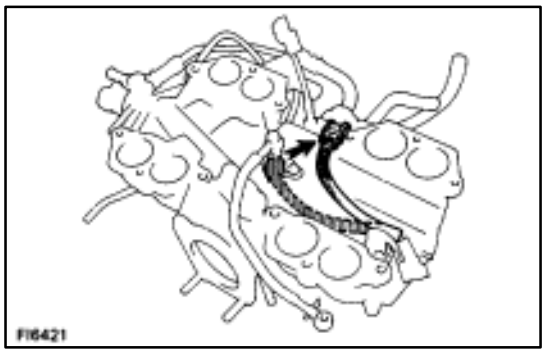

(c) Connect the cold start injector connector.

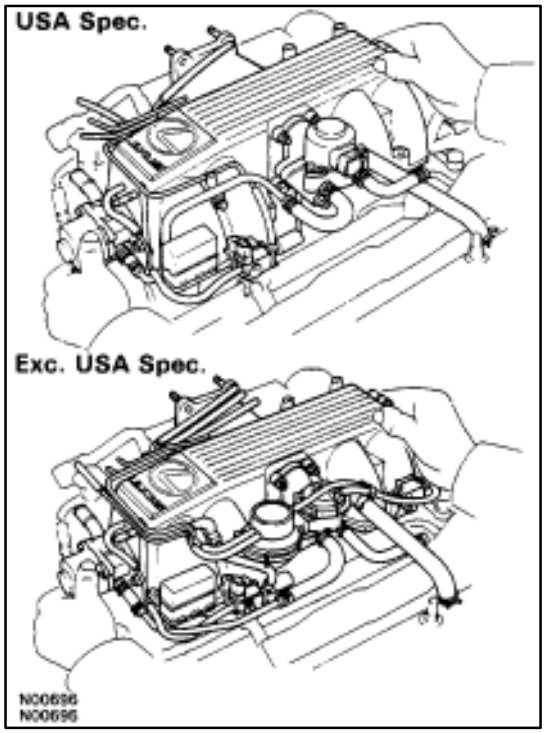

2. INSTALL AIR INTAKE CHAMBER

(a) Place four new gaskets and the air intake chamber on the intake manifold.

WhereEverybodyKnowsYourName

(b) Temporarily install a new gasket and the EGR pipe to air intake chamber with the two bolt.

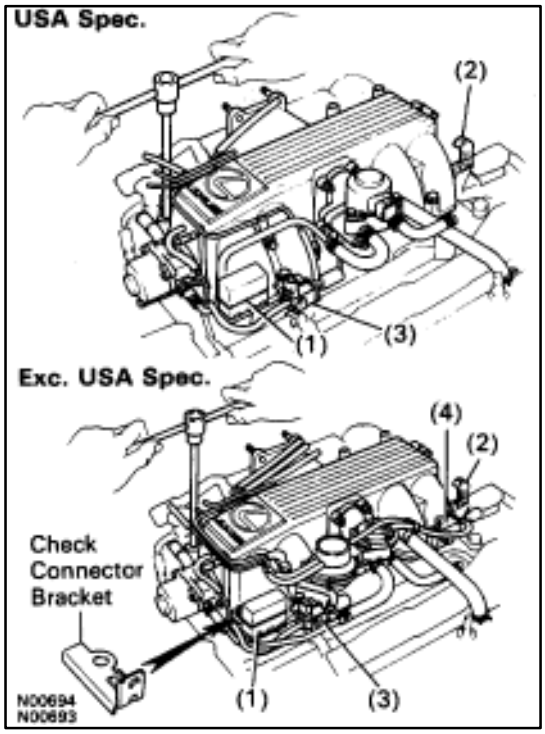

(c) (Exc. USA Spec.)
Install the connector bracket to check (”DIAGNOSIS”) connector.

(d) Install the air intake chamber and following parts with the four bolts and eight nuts:
(1) Check (”DIAGNOSIS”) connector
(2) A/T throttle cable bracket
(3) VSV for fuel pressure control system
(4) VSV for EGR system

Torque: 18 N·m (185 kgf·cm, 13 ft·lbf)

HINT: Use bolts 40 mm (1.57 in.) of length.

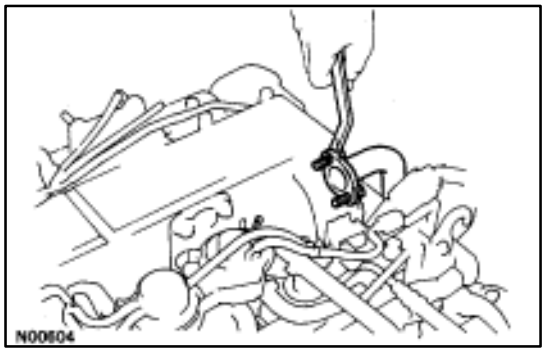

(e) Tighten the bolt holding the EGR pipe to the air intake chamber.

Torque: 18 N·m (185 kgf·cm, 13 ft·lbf)

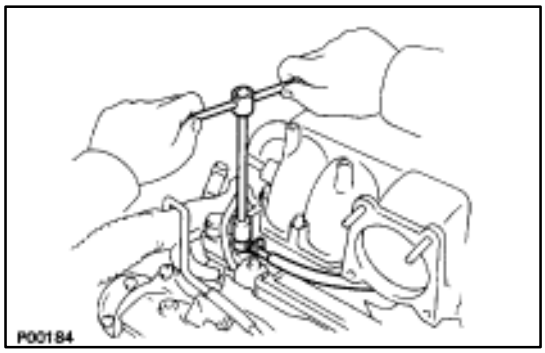

(f) Connect the cold start injector tube to the RH delivery pipe with two new gaskets and union bolt.

Torque: 15 N·m (150 kgf·cm, 11 ft·lbf)

WhereEverybodyKnowsYourName

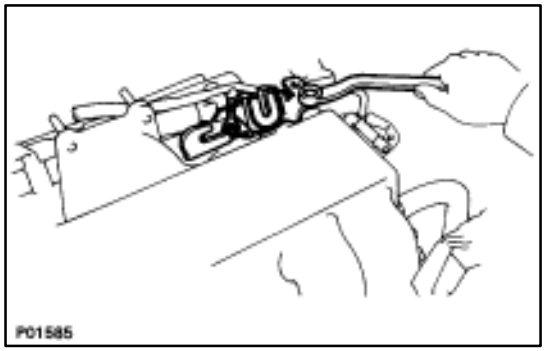

(g) Install the accelerator bracket with the bolt and stud bolt.

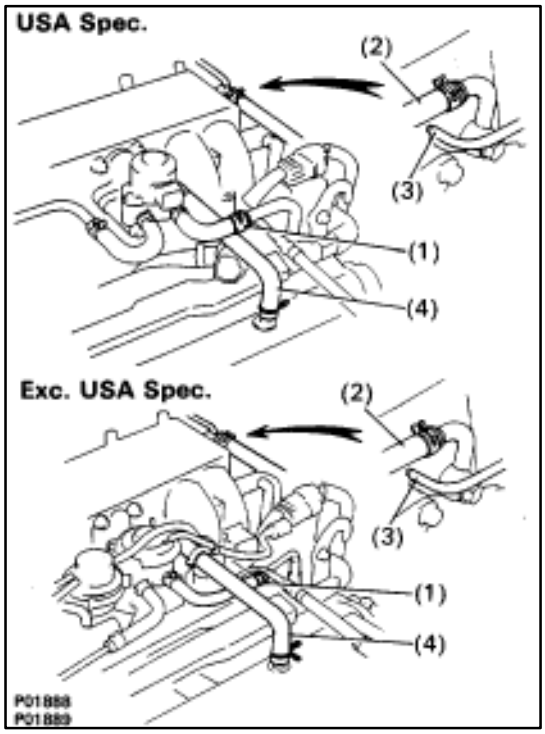

3. CONNECT HOSES

Connect the following hoses:

(1) Water by–pass hose (from EGR valve) to water by–pass pipe
(2) Vacuum hose (from brake booster) to air intake chamber
(3) Vacuum hose (from VSV for heater water valve) to air intake chamber
(4) PCV hose to LH cylinder head cover

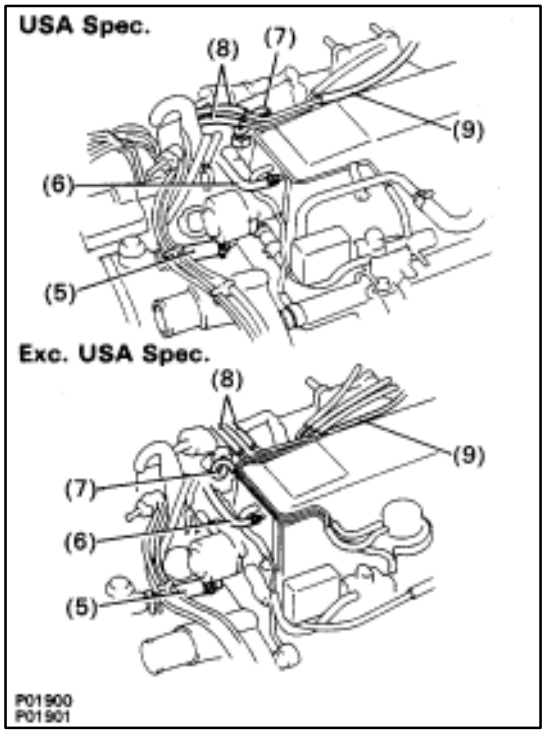

(5) Water by–pass hose (from water inlet housing) to ISC valve
(6) Vacuum hose (from PS air control valve) to air intake chamber
(7) Vacuum sensing hose (from fuel pressure regulator) to vacuum pipe
(8) Two vacuum hoses (from VSV for EVAP system) to vacuum pipe
(9) Vacuum hose (from charcoal canister) to vacuum pipe

WhereEverybodyKnowsYourName

4. CONNECT CONNECTORS

Connect the following connectors:

- Cold start injector connector
- ISC valve connector
- (USA Spec.)
  EGR valve connector
- (Exc. USA Spec.)
  VSV connector for EGR system
- SV connector for fuel pressure control system

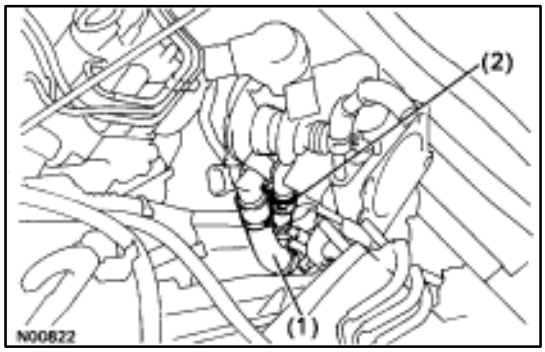

5. INSTALL THROTTLE BODY

(a) Connect the following hoses:
  (1) PCV hose to throttle body
  (2) Water by–pass hose to throttle body

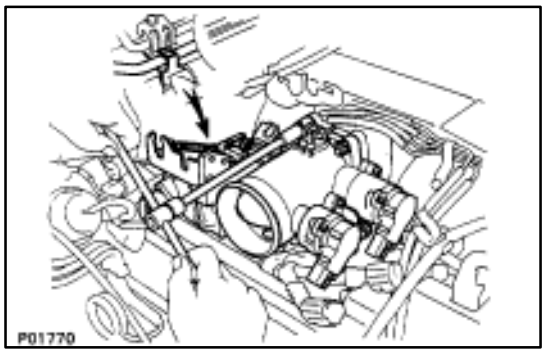

(b) Install a new gasket and throttle body with the two bolts and two nuts.

Torque: 18 N·m (185 kgf·cm, 13 ft·lbf)

HINT: Use bolts 40 mm (1.57 in.) in length.

(c) Install the water by–pass pipe (from rear water bypass joint) to the clamp on the engine wire cover.

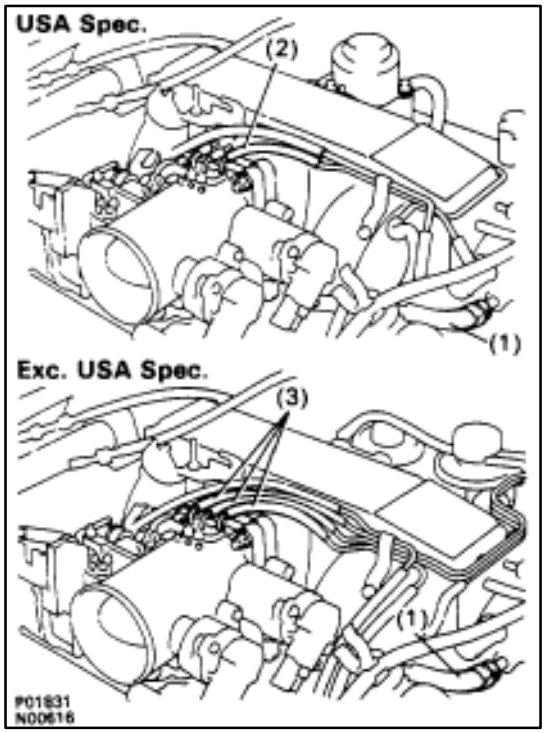

(d) Connect the following hoses:
  (1) Water by–pass hose to the ISC valve
  (2) (USA Spec.)
  Vacuum hose to throttle body
  (3) (Exc. USA Spec.)
  Three vacuum hoses to throttle body

WhereEverybodyKnowsYourName

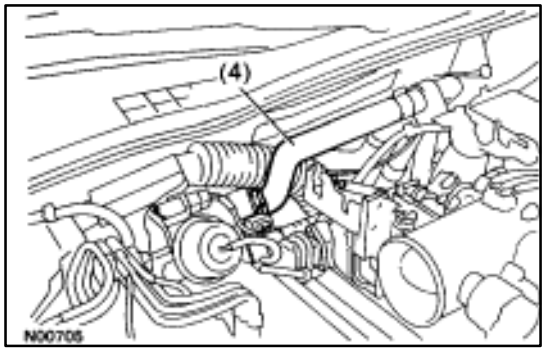

(4) Heater water hose to heater water valve

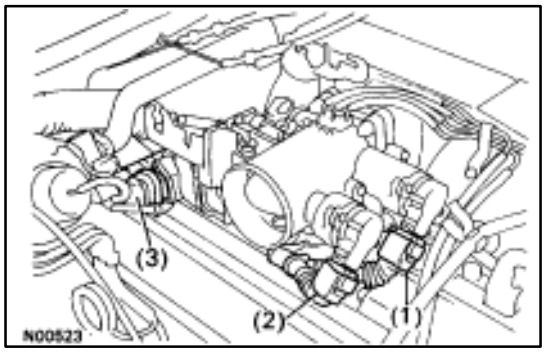

(e) Connect the following connectors:
  (1) Throttle position sensor connector
  (2) (w/ TRAC)
  Sub–throttle position sensor connector
  (3) (w/ TRAC)
  Sub–throttle actuator connector

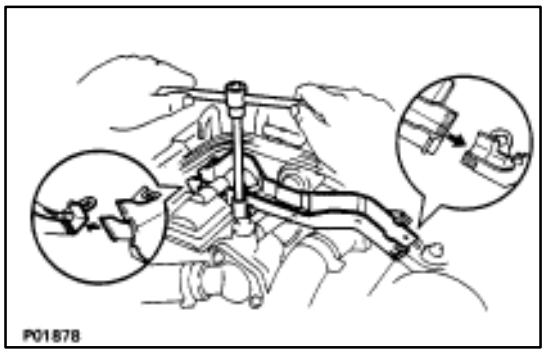

5. INSTALL LOWER HIGH–TENSION CORD COVER

(a) Connect the end portions of the high–tension cord to the cord clamps
(b) Install the high–tension cord cover with the bolt.

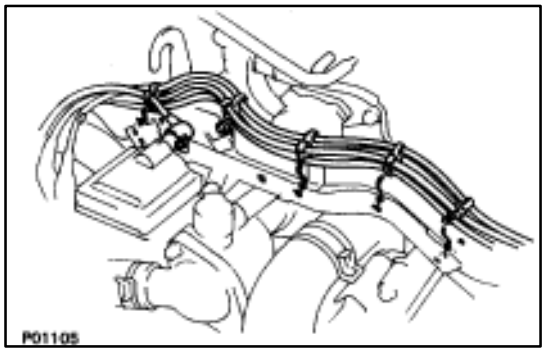

(c) Install the clamps on the high–tension cords to the high–tension cord cover.
(d) Connect the high–tension cord to the RH ignition coil.

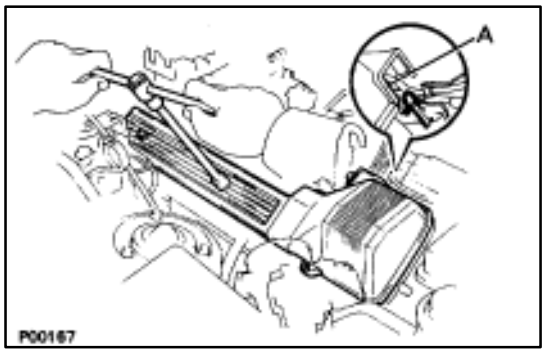

7. INSTALL RH NO.3 TIMING BELT COVER

(a) Install the three gaskets to the timing belt cover.
(b) Fit portion A of the timing belt cover, matching it with the lower high–tension cord cover.
(c) Install the timing belt cover with the three bolts.

WhereEverybodyKnowsYourName

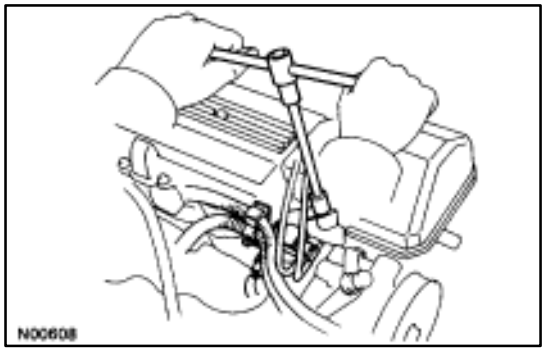

8. INSTALL VSV FOR EVAP SYSTEM

Install the VSV with the two bolts.

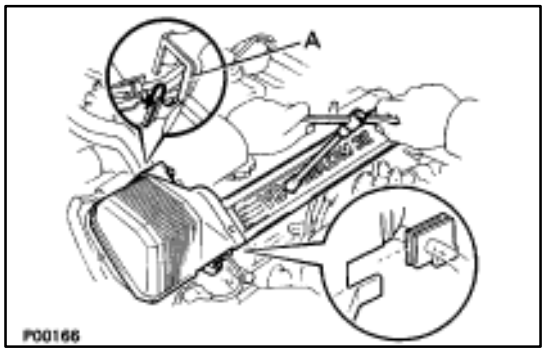

9. INSTALL LH NO.3 TIMING BELT COVER

(a) Install the three gaskets to the timing belt cover.
(b) Install the cord grommet to the high–tension cord.
(c) Install the cord grommet to the timing belt cover.
(d) Fit portion A of the timing belt cover, matching it with the lower high–tension cord cover.
(e) Install the timing belt cover with the four bolts.

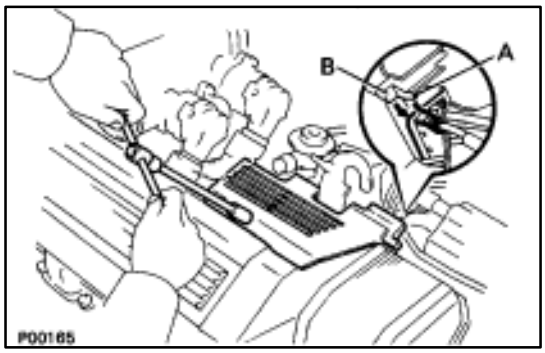

10. INSTALL RH ENGINE WIRE COVER

(a) Fit portions A and B of the engine wire cover, matching them with the lower high–tension cord cover and No.3 timing belt cover.
(d) Install the engine wire cover with the bolt.

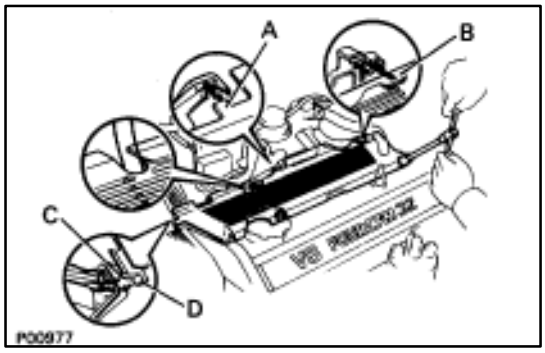

11. INSTALL LH ENGINE WIRE COVER

(a) Connect portions A and B engine wire cover to the wire brackets.
(b) Set the VSV (for fuel pressure control system) wire in original position.
(c) Fit portions C and D of the engine wire cover, matching them with the lower high–tension cord cover and No.3 timing belt cover.
(d) Install the engine wire cover with the two bolts.

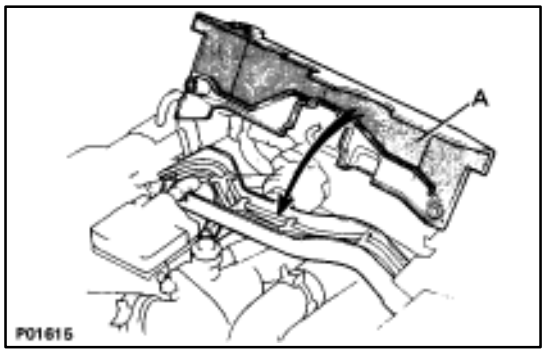

12. INSTALL UPPER HIGH–TENSION CORD COVER

(a) Fit portion A of the upper high–tension cover, matching it with the top of the lower high–tension cord cover.

WhereEverybodyKnowsYourName

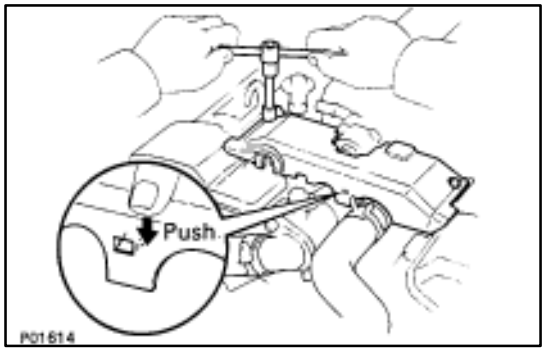

(b) Push the front side of the high–tension cord cover, and connect the front side claw groove of the upper high–tension cord cover to the claw of the lower high–tension cord cover.
(c) Install the upper high–tension cord cover with the two bolts.

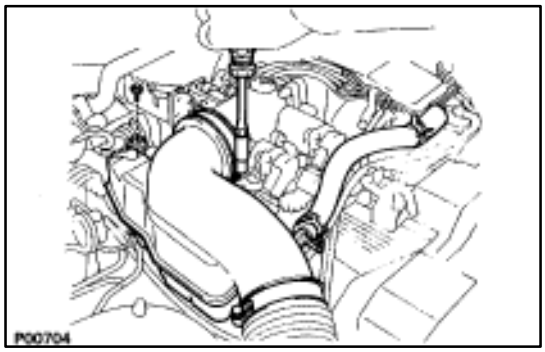

13. INSTALL INTAKE AIR CONNECTOR
(a) Connect the end portions of the intake air connector to the throttle body and air cleaner hose.
(b) Tighten the two hose clamps.
(c) Install the bolt holding the intake air connector to the cylinder head cover.

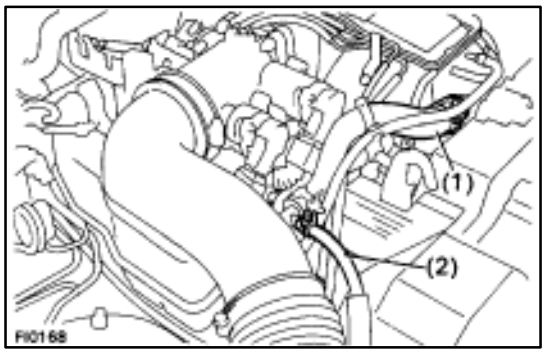

(d) Connect the following hoses:
(1) Air hose to ISC valve
(2) Air hose (from PS air control valve) to intake air connector

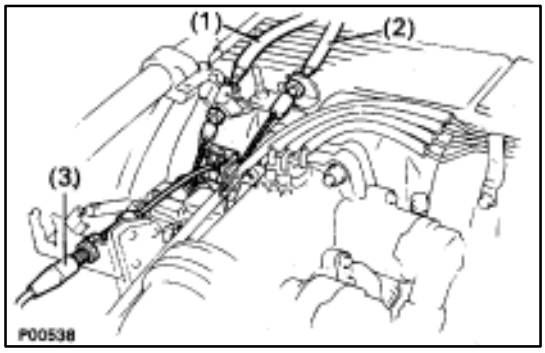

14. CONNECT CONTROL CABLES TO THROTTLE BODY
Connect the following cables:
(1) Accelerator cable
(2) A/T throttle control cable
(3) (w/ Cruise Control System)
Cruise control actuator cable

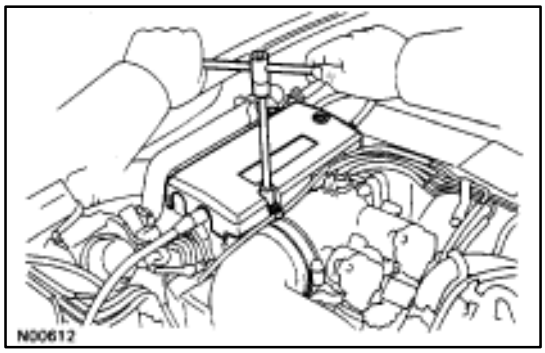

15. INSTALL THROTTLE BODY COVER
Install the throttle body cover and hose clamp with the two bolts and cap nut.

16. CONNECT CABLE TO NEGATIVE TERMINAL OF BATTERY

17. FILL WITH ENGINE COOLANT (See page CO–7)

18. CHECK FOR FUEL LEAKS (See page FI–16)

WhereEverybodyKnowsYourName

Fuel Pressure Regulator

USA Spec.

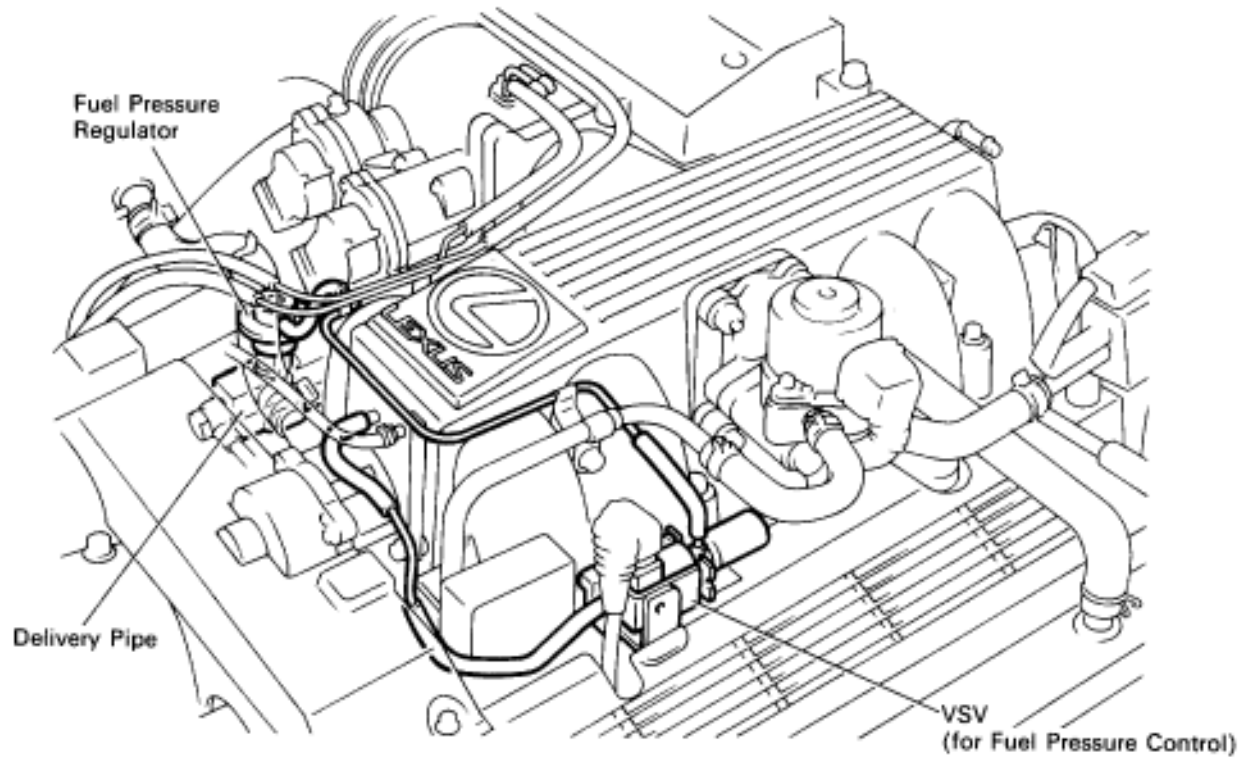

P01467

Exc. USA Spec.

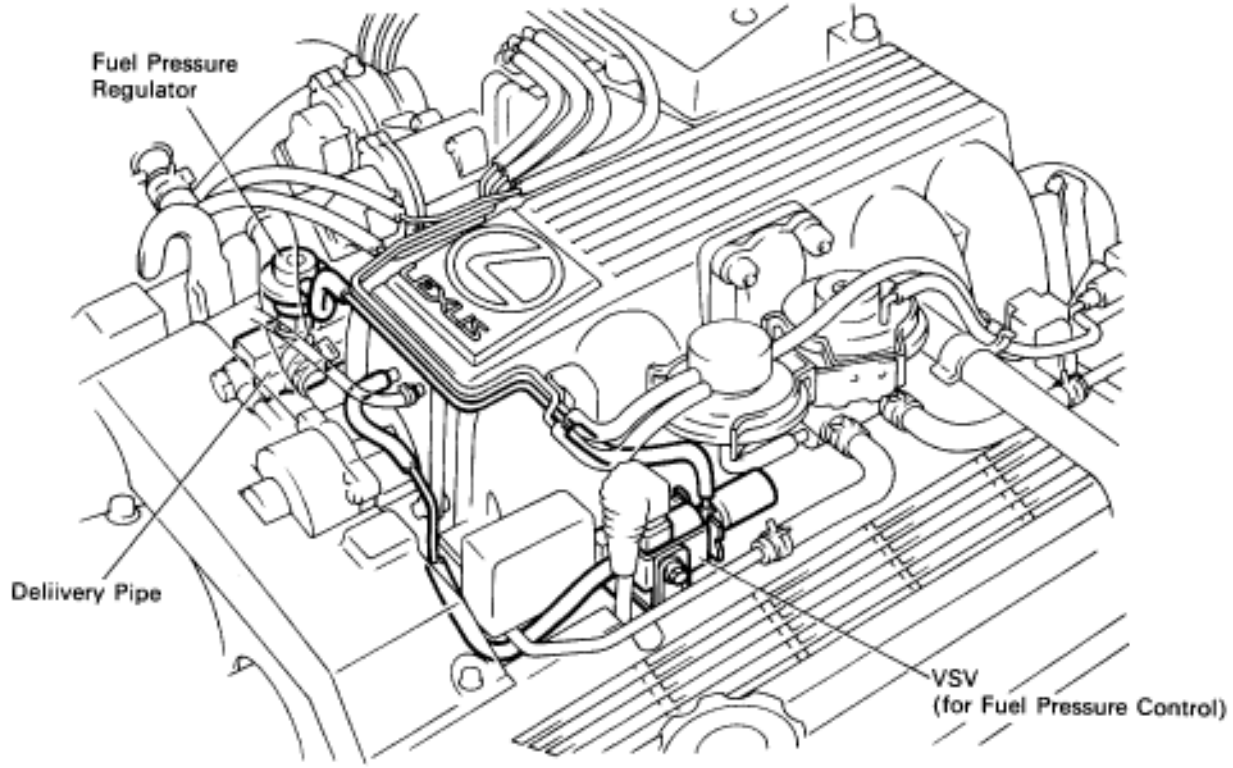

P01468

ON–VEHICLE INSPECTION

INSPECT FUEL PRESSURE (See page FI–18)

WhereEverybodyKnowsYourName

COMPONENTS FOR REMOVAL AND INSTALLATION

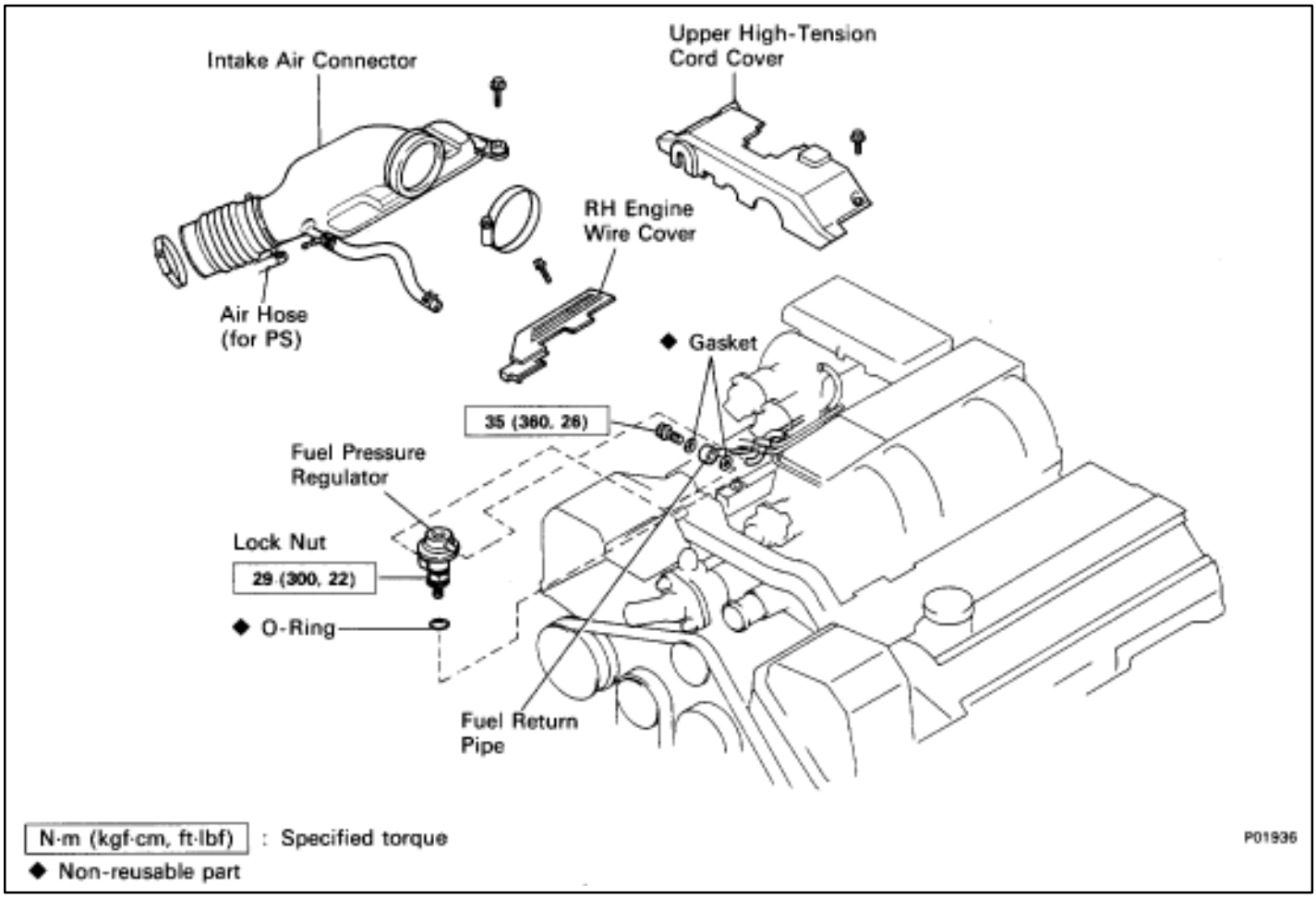

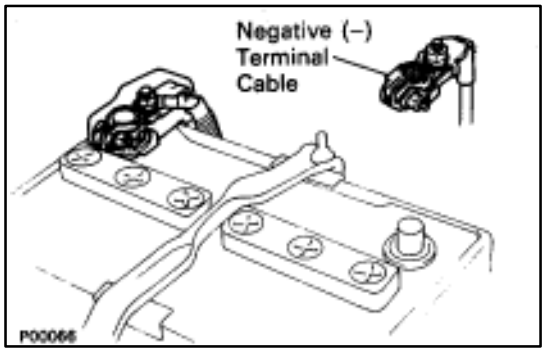

REMOVAL OF FUEL PRESSURE REGULATOR

1. **DISCONNECT CABLE FROM NEGATIVE TERMINAL OF BATTERY**

   CAUTION: Work must be started after approx. 20 seconds or longer from the time the ignition switch is turned to the "LOCK" position and the negative (–) terminal cable is disconnected from the battery.

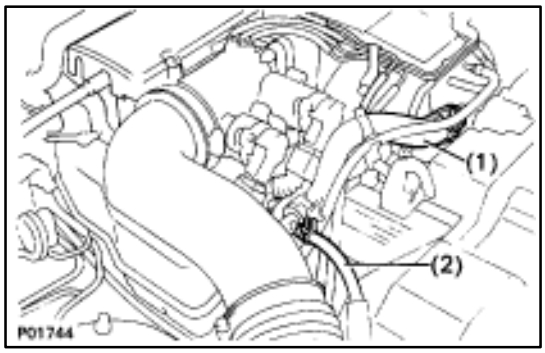

2. **REMOVE INTAKE AIR CONNECTOR**
   (a) Disconnect the following hoses:
      (1) Air hose from ISC valve
      (2) Air hose (from PS air control valve) from intake air connector

WhereEverybodyKnowsYourName

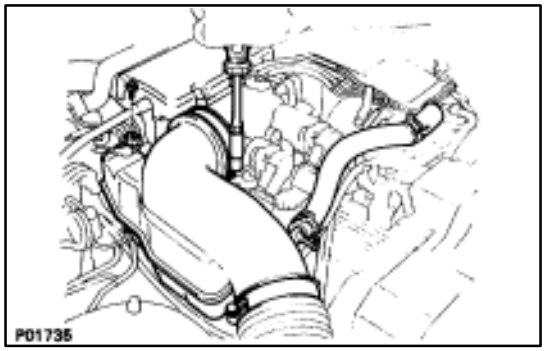

(b) Remove the bolt holding the intake air connector to the cylinder head cover.
(c) Loosen the two hose clamps.
(d) Disconnect the intake air connector from the throttle body and air cleaner hose, and remove the intake air connector.

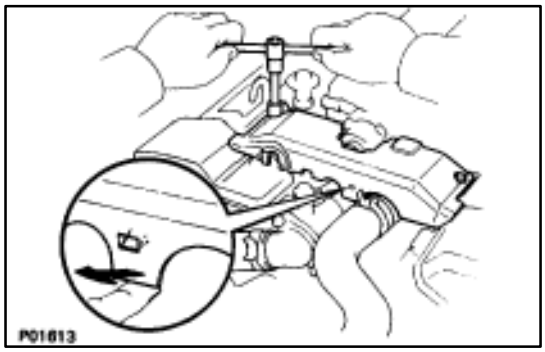

3. REMOVE UPPER HIGH–TENSION CORD COVER
(a) Remove the two mounting bolts.
(b) Disconnect the front side claw groove of the cord cover from the claw of the lower cover, and remove the cord cover.

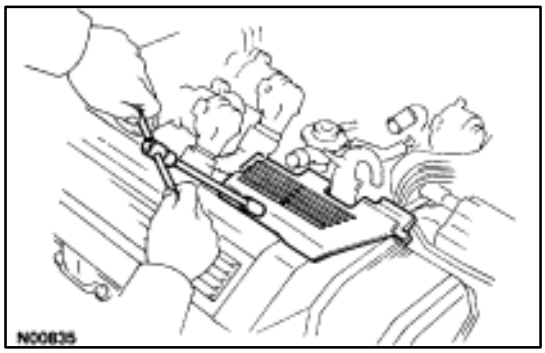

4. REMOVE RH ENGINE WIRE COVER
Remove the bolt and wire cover.

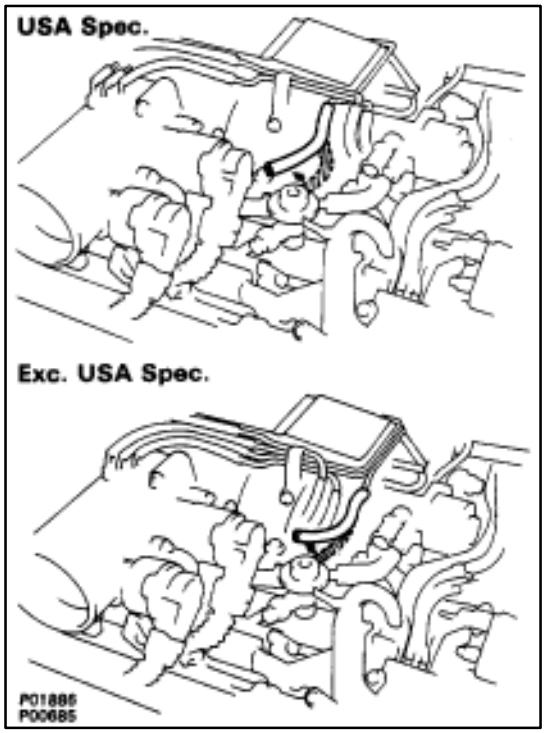

5. DISCONNECT VACUUM SENSING HOSE FROM FUEL PRESSURE REGULATOR

WhereEverybodyKnowsYourName

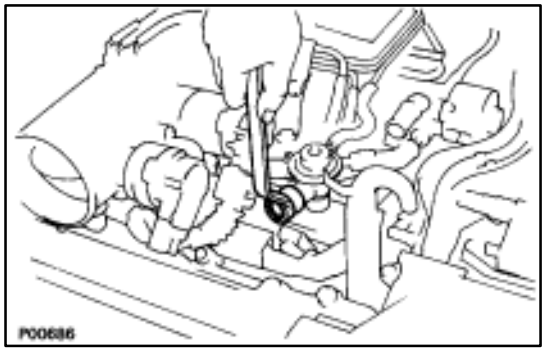

6. DISCONNECT FUEL RETURN PIPE FROM FUEL PRESSURE REGULATOR

Remove the union bolt and two gasket, and disconnect the return pipe from the pressure regulator.

HINT:

- Put a suitable container or shop towel under the pressure regulator.
- Slowly loosen the union bolt.

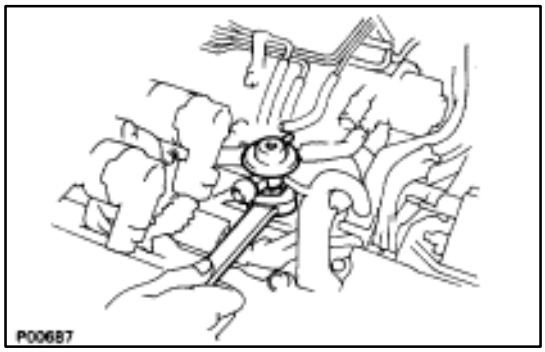

7. REMOVE FUEL PRESSURE REGULATOR

(a) Loosen the lock nut.

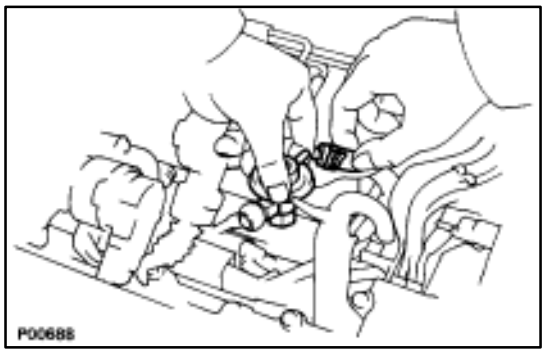

(b) Lift up the water by–pass hose between the ISC valve and throttle body, and remove the pressure regulator.

(c) Remove the O–ring from the pressure regulator.

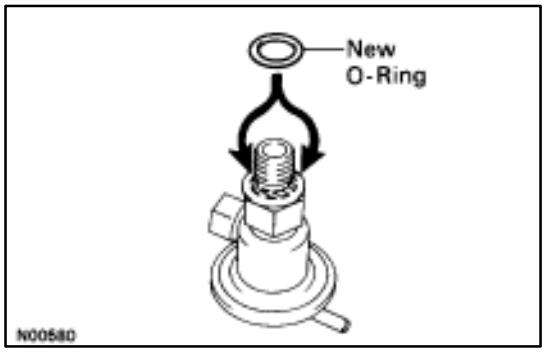

INSTALLATION OF FUEL PRESSURE REGULATOR

(See components on page FI–43)

1. INSTALL FUEL PRESSURE REGULATOR AND FUEL RETURN PIPE

(a) Fully loosen the lock nut on the pressure regulator.

(b) Apply a light coat of gasoline to a new O–ring, and install it to the pressure regulator.

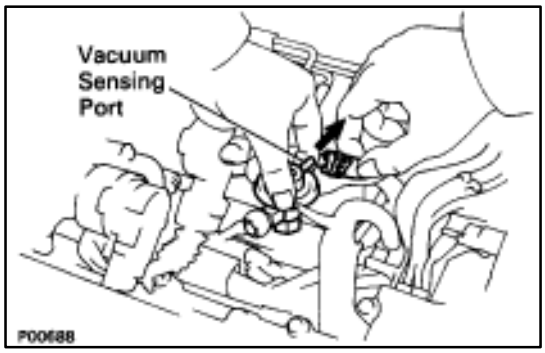

(c) Lift up the water by–pass hose between the ISC valve and throttle body, and completely insert the pressure regulator into the delivery pipe by hand.

(d) Turn the pressure regulator counterclockwise until the vacuum sensing port faces in the direction indicated in the illustration.

WhereEverybodyKnowsYourName

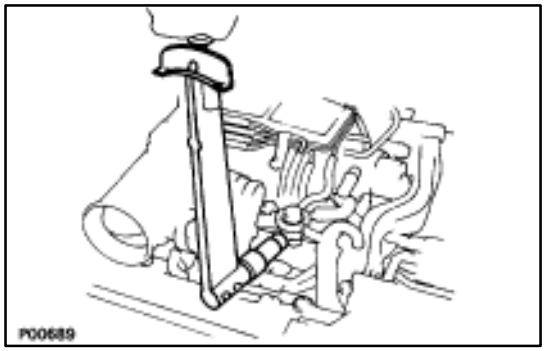

(e) Connect the fuel return pipe to the pressure regulator with new two gaskets and the union bolt.
Torque: 35 N·m (360 kgf·cm, 26 ft·lbf)

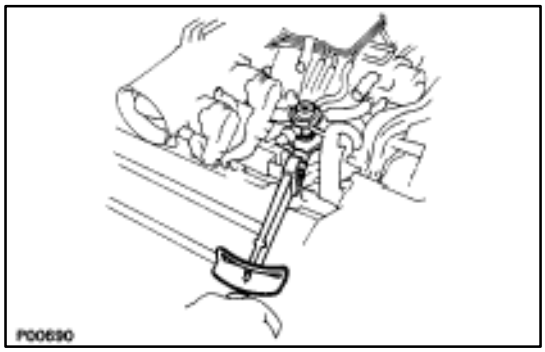

(f) Tighten the lock nut.
Torque: 29 N·m (300 kgf·cm, 22 ft·lb)

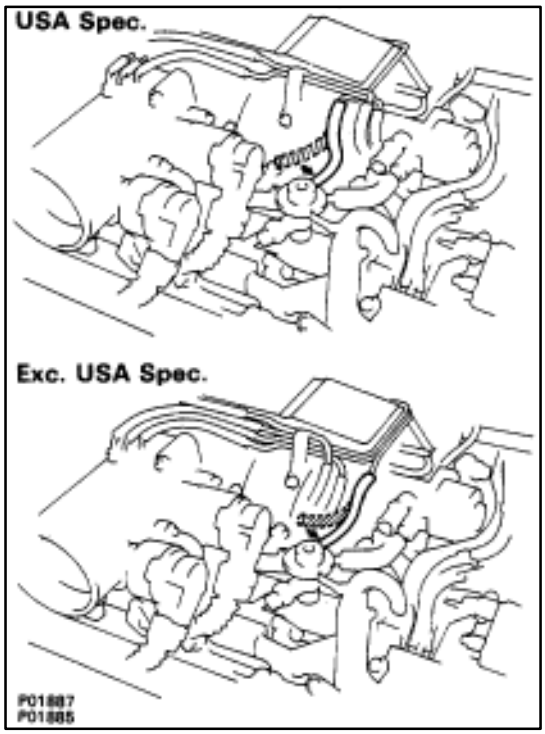

2. CONNECT VACUUM SENSING HOSE TO FUEL PRESSURE REGULATOR

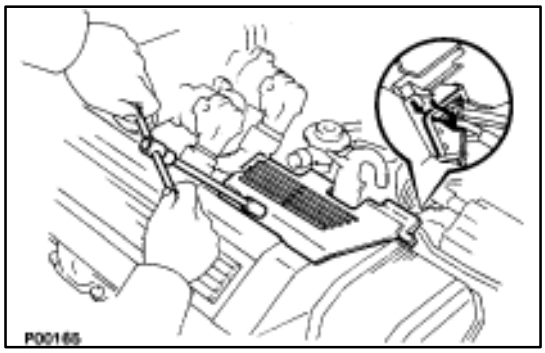

3. INSTALL RH ENGINE WIRE COVER

(a) Fit portions A and B of the engine wire cover, matching them with the lower high–tension cord cover and No.3 timing belt cover.

(d) Install the engine wire cover with the bolt.

WhereEverybodyKnowsYourName

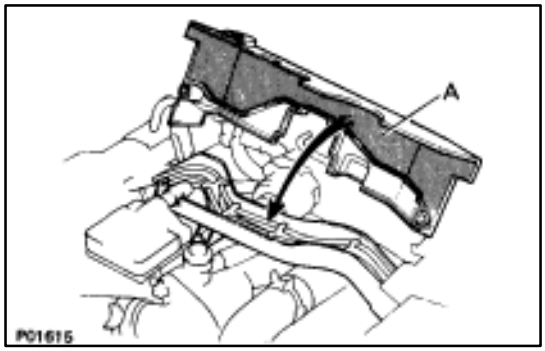

4. INSTALL UPPER HIGH–TENSION CORD COVER

(a) Fit portion A of the upper high–tension cover, matching it with the top of the lower high–tension cord cover.

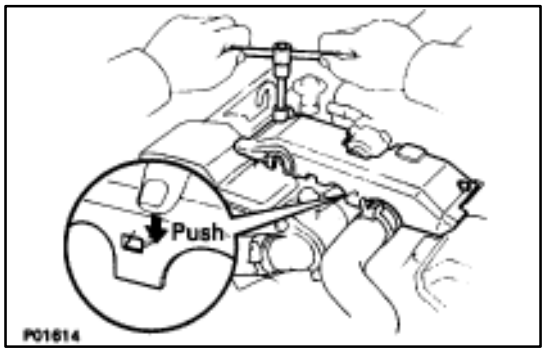

(b) Push the front side of the high–tension cord cover, and connect the front side claw groove of the upper high–tension cord cover to the claw of the lower high–tension cord cover.

(c) Install the upper high–tension cord cover with the two bolts.

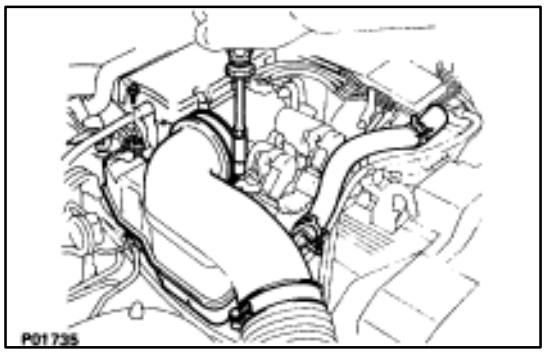

5. INSTALL INTAKE AIR CONNECTOR

(a) Connect the end portions of the intake air connector to the throttle body and air cleaner hose.

(b) Tighten the two hose clamps.

(c) Install the bolt holding the intake air connector to the cylinder head cover.

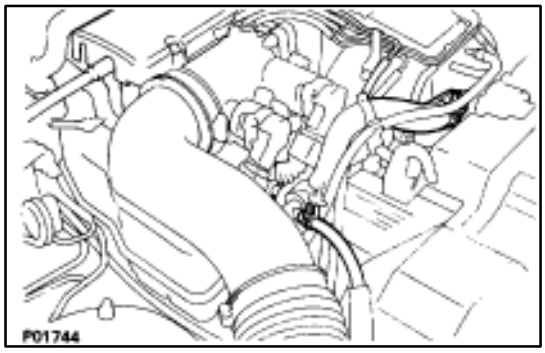

(d) Connect the following hoses:

(1) Air hose to ISC valve

(2) Air hose (from PS air control valve) to intake air connector

6. CONNECT CABLE TO NEGATIVE TERMINAL OF BATTERY

7. CHECK FOR FUEL LEAKS (See page FI–16)

WhereEverybodyKnowsYourName

Injectors

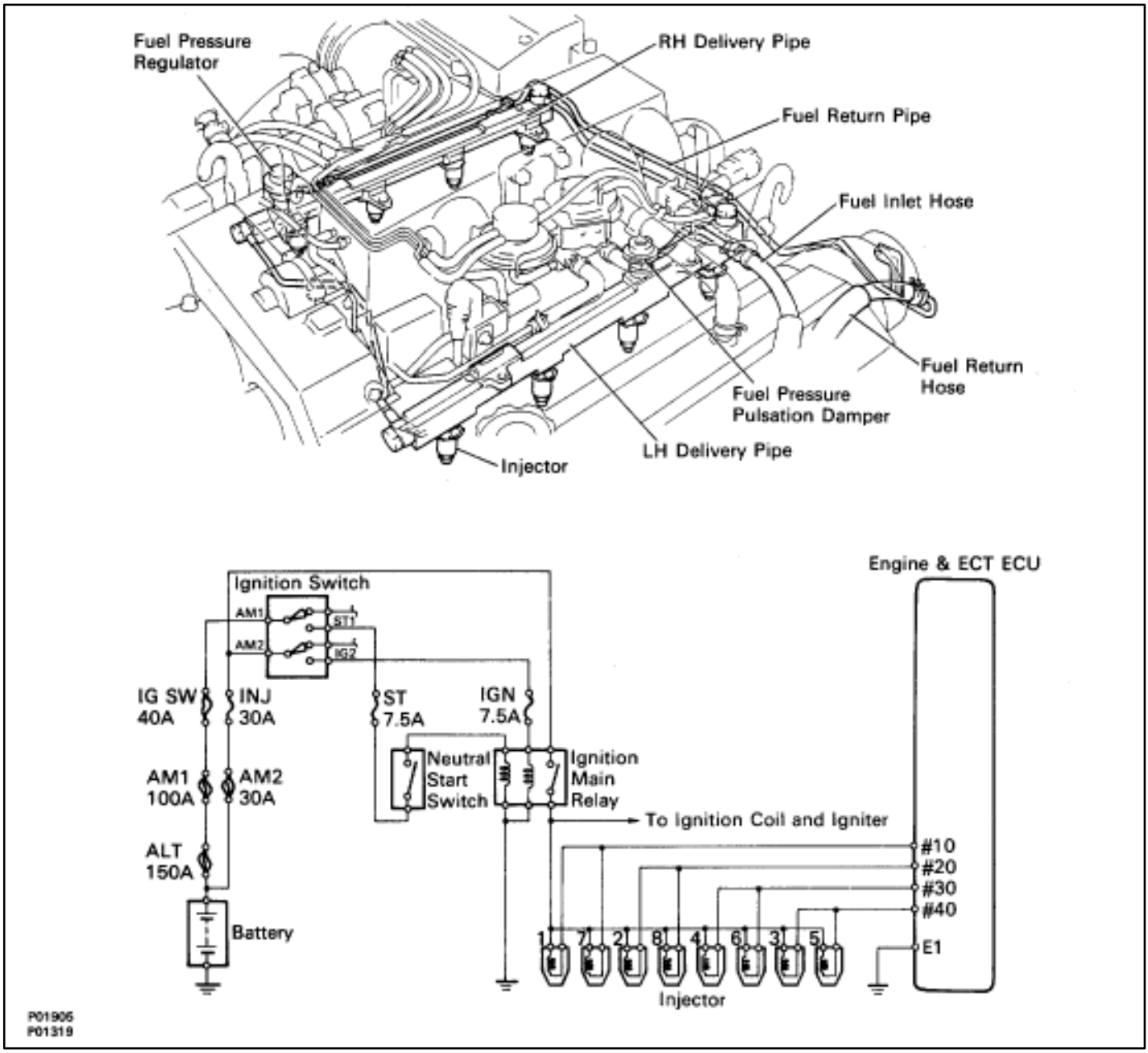

ON–VEHICLE INSPECTION

INSPECT INJECTOR RESISTANCE

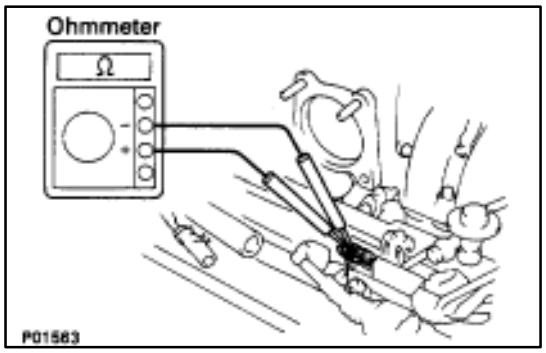

(a) Remove the engine wire covers and throttle body. (See steps 1 to 8 and 13 on pages FI–27 to 30)

(b) Disconnect the injector connectors.

(c) Using an ohmmeter, measure the resistance between the terminals.

Resistance: 13.4–14.2 ?

If the resistance is not as specified, replace the injector.

(d) Reconnect the injector connectors.

(e) Reinstall the throttle body and engine wire covers. (See steps 5 and 10 to 18 on pages FI–38 to 41)

WhereEverybodyKnowsYourName

COMPONENTS FOR REMOVAL AND INSTALLATION

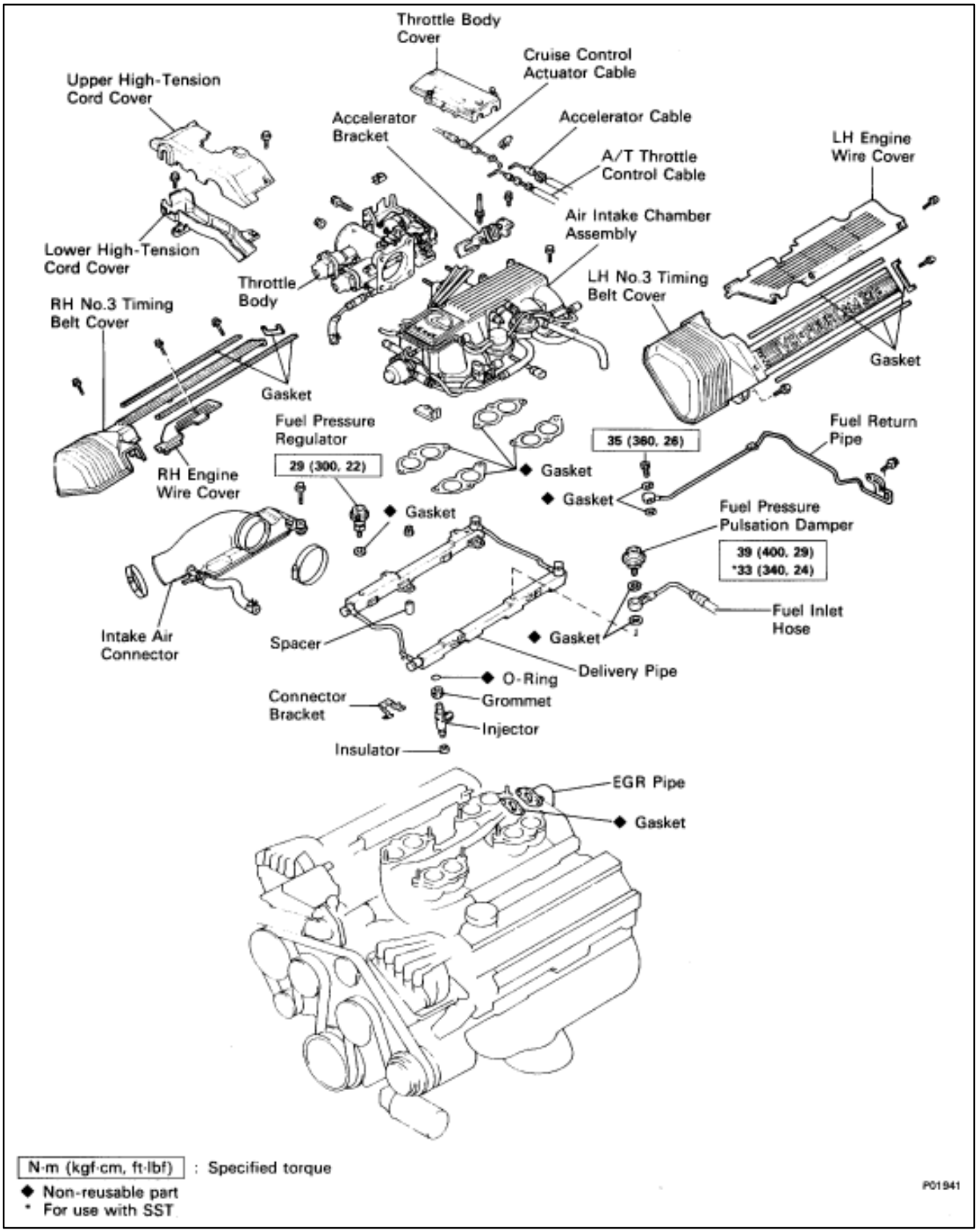

WhereEverybodyKnowsYourName

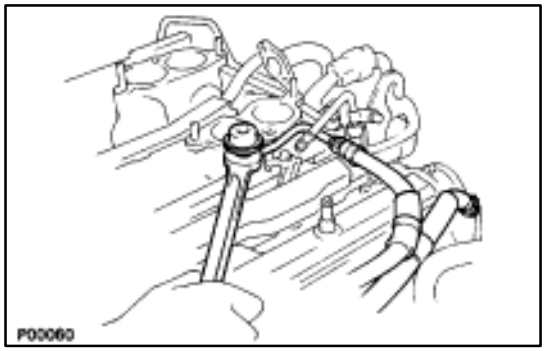

REMOVAL OF INJECTORS

(See Components on page FI–49)

1. **REMOVE AIR INTAKE CHAMBER**
   (See steps 1 to 16 on pages FI–27 to 32)
2. **DISCONNECT FUEL INLET HOSE FROM LH DELIVERY PIPE**
   Remove the pulsation damper and two gaskets, and disconnect the inlet hose.

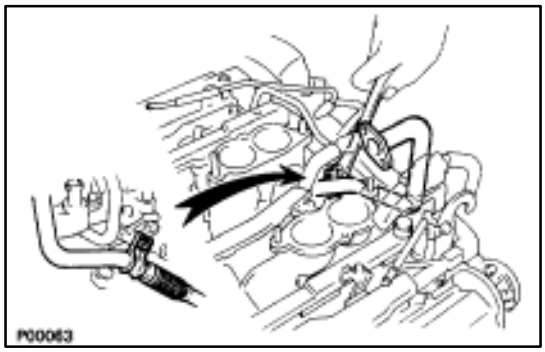

3. **DISCONNECT FUEL RETURN HOSE FROM FUEL RETURN PIPE**
4. **DISCONNECT EGR PIPE FROM RH CYLINDER HEAD**
   Remove the bolt holding the EGR pipe to the cylinder head, and disconnect the EGR pipe.

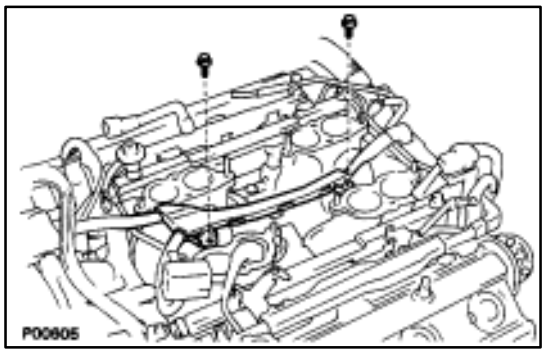

5. **DISCONNECT ENGINE WIRE FROM INTAKE MANIFOLD**
   Remove the two bolts, and disconnect the engine wire.

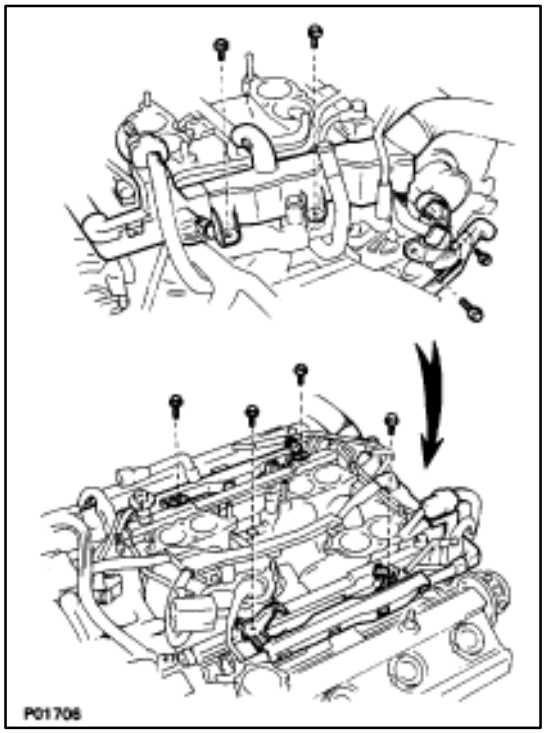

6. **DISCONNECT ENGINE WIRE FROM DELIVERY PIPES AND REAR WATER BY–PASS JOINT**
   (a) Remove the four bolts holding the engine wire to the delivery pipes, and disconnect the engine wire from the delivery pipes.
   (b) Remove the two bolts holding the engine wire to the rear water by–pass joint, and disconnect the engine wire from the rear water by–pass joint.
   (c) Remove the two bolts holding the engine wire to the rear side of the RH cylinder head, and disconnect the engine wire from the RH cylinder head.

WhereEverybodyKnowsYourName

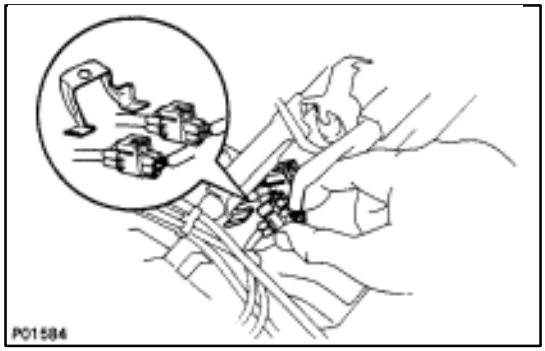

(d) Disconnect the two engine wire connectors from the connector bracket on the front side of the LH delivery pipe.
(e) Disconnect the eight injector connector.

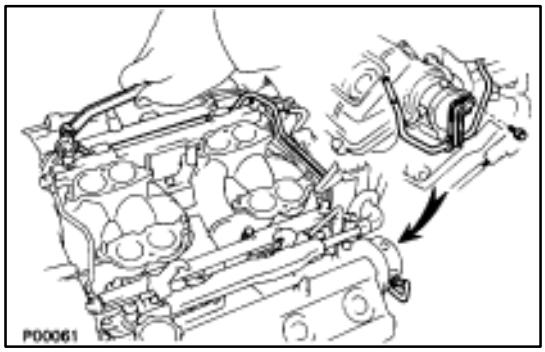

7. REMOVE FUEL RETURN PIPE

(a) Remove the bolt holding the return pipe to the LH cylinder head.
(b) Remove the union bolt and two gaskets and return pipe.

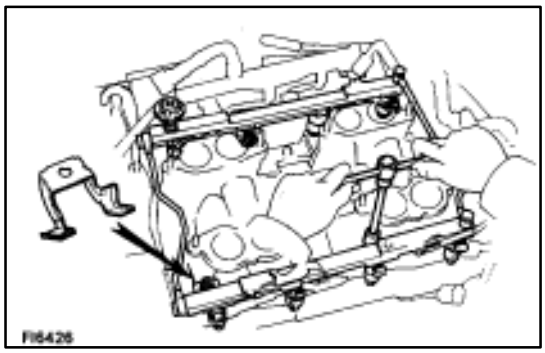

8. REMOVE DELIVERY PIPES AND INJECTORS

(a) Remove the four nuts holding the delivery pipe to the intake manifold.
(b) Remove the connector bracket, the two delivery pipes and eight injector assembly, four spacers and eight insulators.

NOTICE: Be careful not to drop the injectors, when removing the delivery pipe.

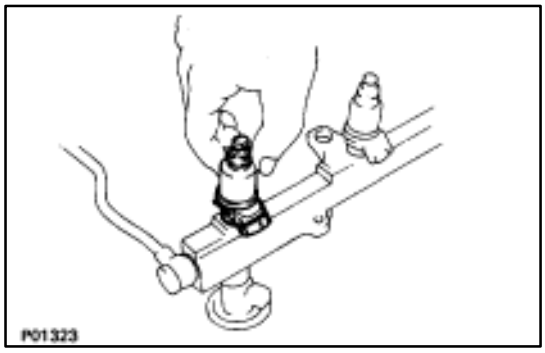

(c) Pull out the eight injectors from the delivery pipes.
(d) Remove the O–ring and grommet from each injector.

WhereEverybodyKnowsYourName

INSPECTION OF INJECTORS

1. INSPECT INJECTOR INJECTION

CAUTION: Keep injector clear of sparks during the test.

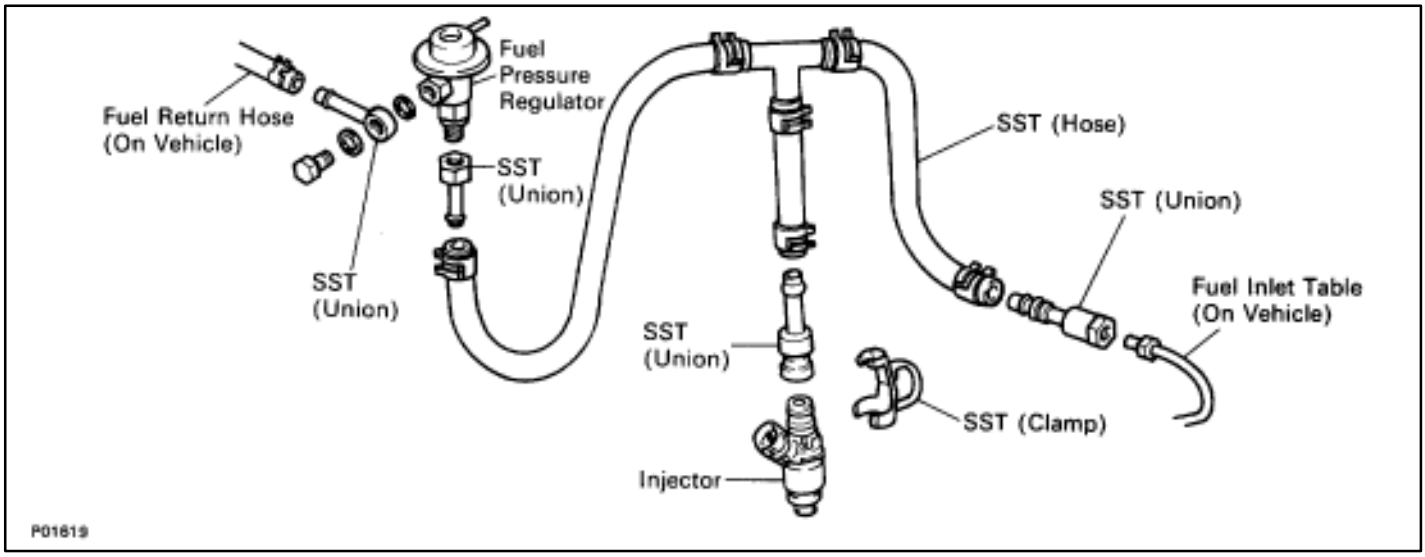

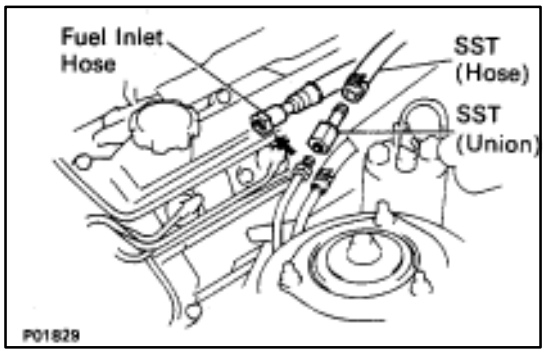

(a) Disconnect the fuel inlet hose from the fuel tube.

(b) Connect SST (hose) to the fuel inlet tube with SST (union). Tighten the flare nut on the fuel tube.

SST 09268–41045 (90405–52010)

Torque: 30 N·m (310 kgf·cm, 22 ft·lbf)

HINT: Use SST. (See page FI–15)

SST 09631–22020

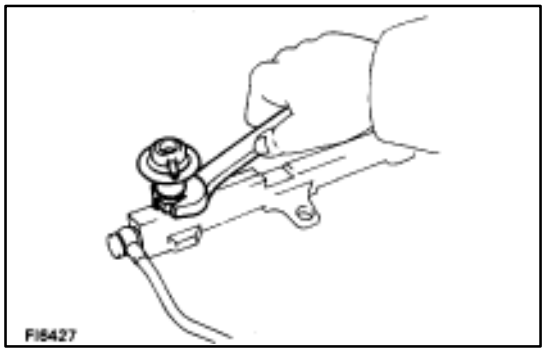

(c) Loosen the lock nut, and remove the pressure regulator from the RH delivery pipe. Remove the O–ring from the pressure regulator.

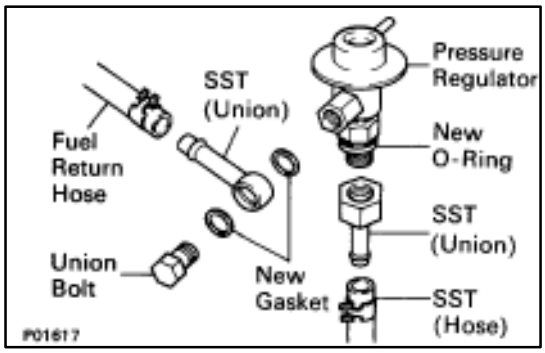

(d) Install a new O–ring to the fuel inlet of the pressure regulator.

(e) Connect SST (hose) to the pressure regulator with SST (union). Tighten the lock nut on the pressure regulator.

SST 09268–41045 (09268–52010)

Torque: 29 N·m (300 kgf·cm, 22 ft·lbf)

(f) Connect the fuel return hose to the fuel outlet of the pressure regulator with SST (union), two new gaskets and union bolt.

SST 09268–41045 (09268–41070)

WhereEverybodyKnowsYourName

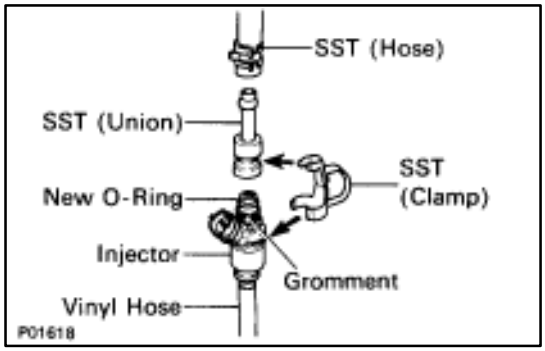

(g) Install the grommet and a new O–ring to the injector.

(h) Connect SST (hose) to the injector with SST (union), and hold the injector and union with SST (clamp).

SST 09268–41045

(i) Put the injector into the graduated cylinder.

HINT: Install a suitable vinyl hose onto the injector to prevent gasoline from splashing out.

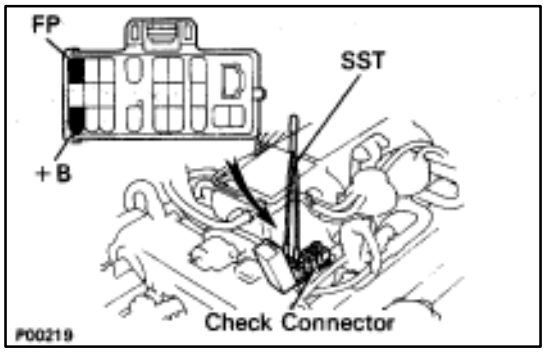

(j) Using SST, connect terminals +B and FP of the check (”DIAGNOSIS”) connector.

SST 09843–18020

(k) Reconnect the cable to negative (–) terminal of battery.

(l) Turn the ignition switch ON.

NOTICE: Do not start the engine.

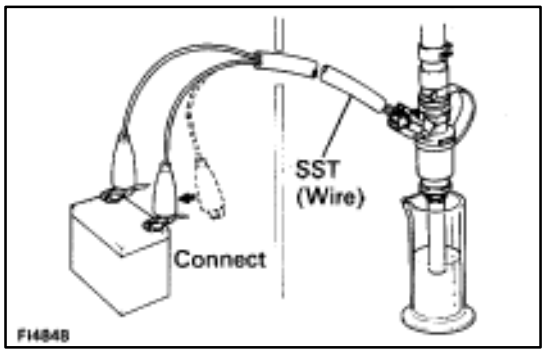

(m) Connect SST (wire) to the injector and battery for 15 seconds, and measure the injection volume with a graduated cylinder. Test each injector two or three times.

SST 09842–30070

Volume: 55–70 cc (3.4–4.3 cu in.) per 15 sec.

Difference between each injector:

10 cc (0.6 cu in.) or less

If the injection volume is not as specified, replace the injector.

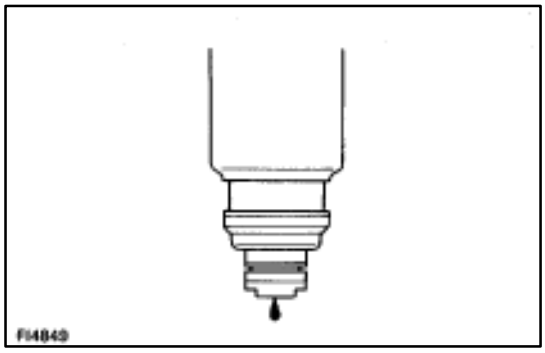

2. INSPECT LEAKAGE

(a) In the condition above, disconnect the test probes of SST (wire) from the battery and check the fuel leakage from the injector.

SST 09842–30070

Fuel drop: One drop or less per minute

(b) Disconnect the battery negative (–) cable.

(c) Remove SST.

SST 09268–41045 and 09843–18020

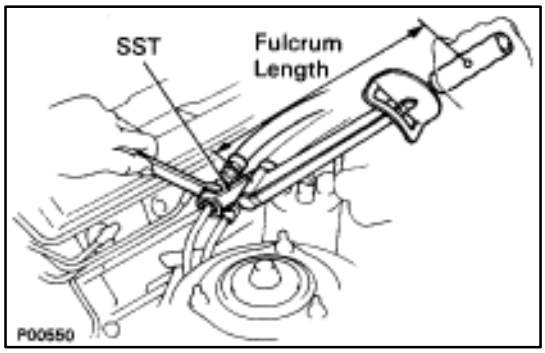

(d) Reconnect the fuel inlet hose to the fuel tube.

SST 09631–22020

Torque: 30 N·m (310 kgf·cm, 22 ft·lbf)

HINT: Use a torque wrench with a fulerum length of 30 cm (11.81 in.).

WhereEverybodyKnowsYourName

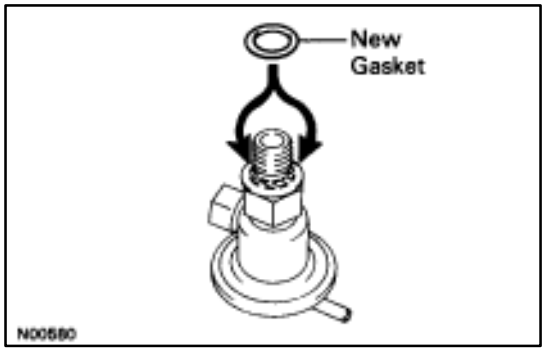

(e) Reinstall the fuel pressure regulator to the RH delivery pipe.
- Fully loosen the lock nut on the pressure regulator.
- Apply a light coat of gasoline to a new O–ring, and install it to the pressure regulator.

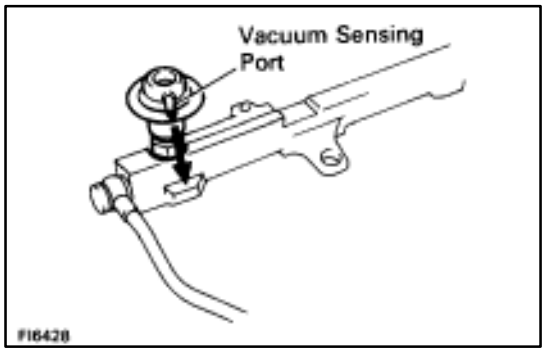

- Completely insert the pressure regulator into the delivery pipe by hand.
- Turn the pressure regulator counterclockwise until the vacuum sensing port faces in the direction indicated in the illustration.

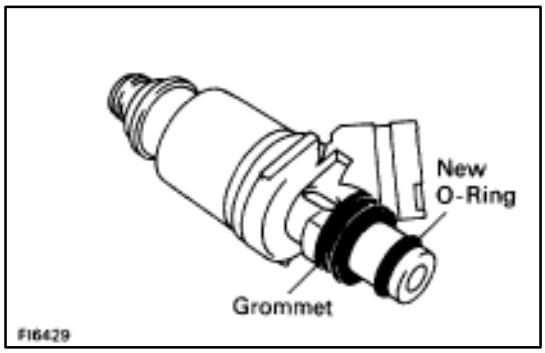

INSTALLATION OF INJECTORS

(See Components on page FI–49)

1. INSTALL INJECTORS AND DELIVERY PIPE

(a) Install the grommet to each injector.

(b) Apply a light coat of gasoline to a new O–ring and install it to each injector.

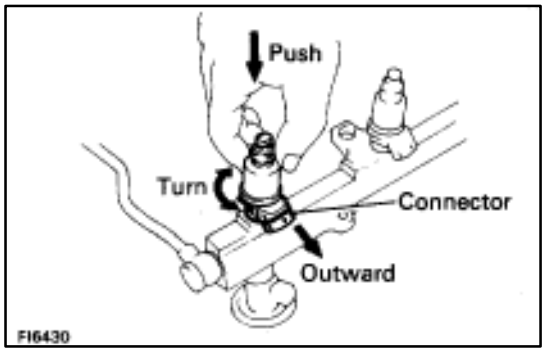

(c) While turning the injector clockwise and counterclockwise, push it to the delivery pipes. Install the eight injectors.

(d) Position the injector connector outward.

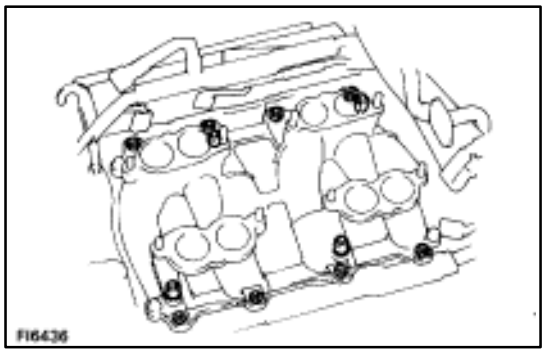

(e) Place the eight insulators and four spacers in position on the intake manifold.

WhereEverybodyKnowsYourName

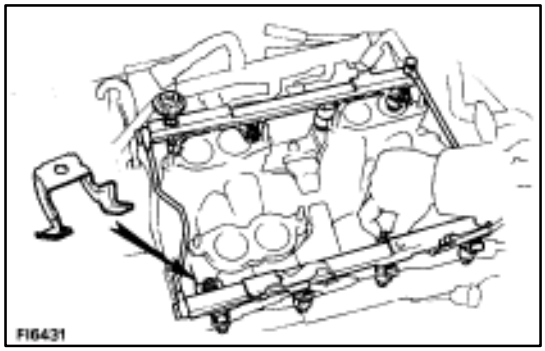

(f) Place the eight injectors and two delivery pipes assembly in position on the intake manifold.
(g) Temporarily install the connector bracket and four mounting bolts.

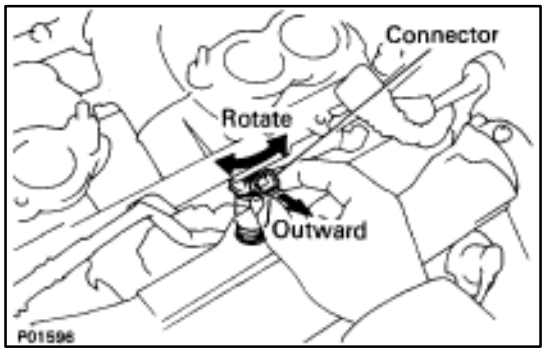

(h) Check that the injectors rotate smoothly.
HINT: If injectors do not rotate smoothly, the probable cause is incorrect installation of O–rings. Replace the O–rings.
(i) Position the injector connector outward.

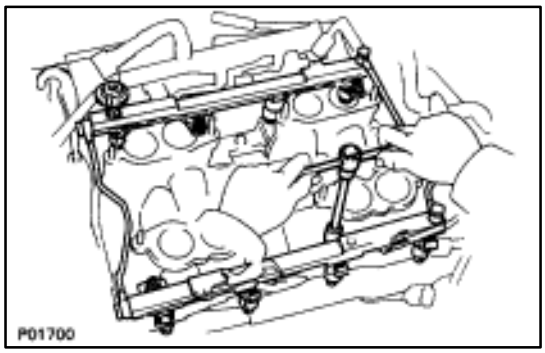

(j) Tighten the four bolts holding the delivery pipes to the intake manifold.

Torque: 18 N·m (185 kgf·cm, 13 ft·lbf)

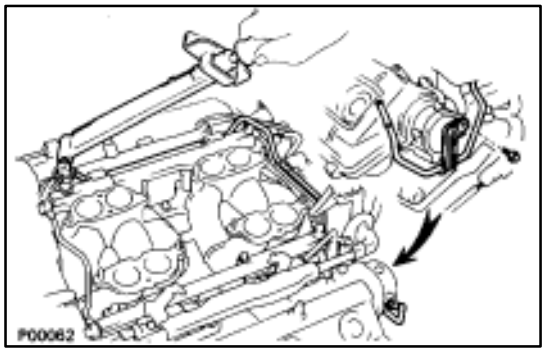

2. INSTALL FUEL RETURN PIPE

(a) Temporarily install the return pipe with the bolt, two gaskets and union bolt.
(b) Tighten the union bolt holding the return pipe to the pressure regulator.

Torque: 35 N·m (360 kgf·cm, 26 ft·lbf)

(c) Tighten the bolt holding the return pipe to the LH cylinder head.

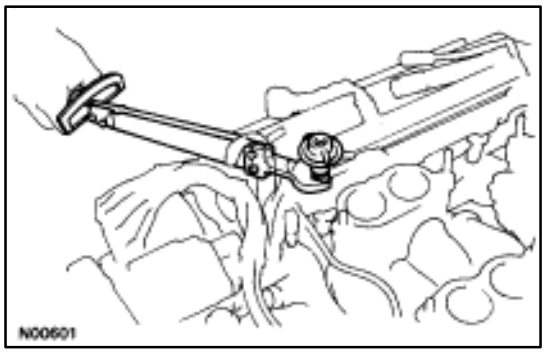

3. TIGHTEN LOCK NUT ON FUEL PRESSURE REGULATOR

Torque: 29 N·m (300 kgf·cm, 22 ft·lbf)

WhereEverybodyKnowsYourName

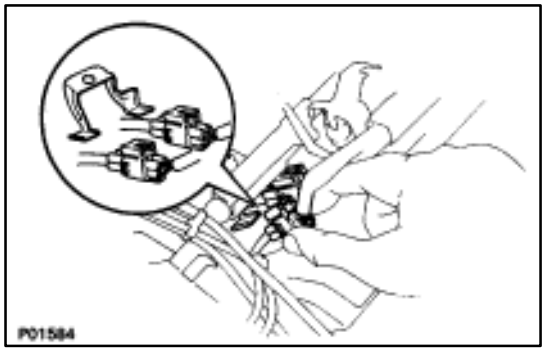

4. INSTALL ENGINE WIRE TO DELIVERY PIPES, REAR WATER BY–PASS JOINT AND RH CYLINDER HEAD

(a) Connect the eight injector connectors.

(b) Connect the two engine wire connectors to the connector bracket on the LH delivery pipe.

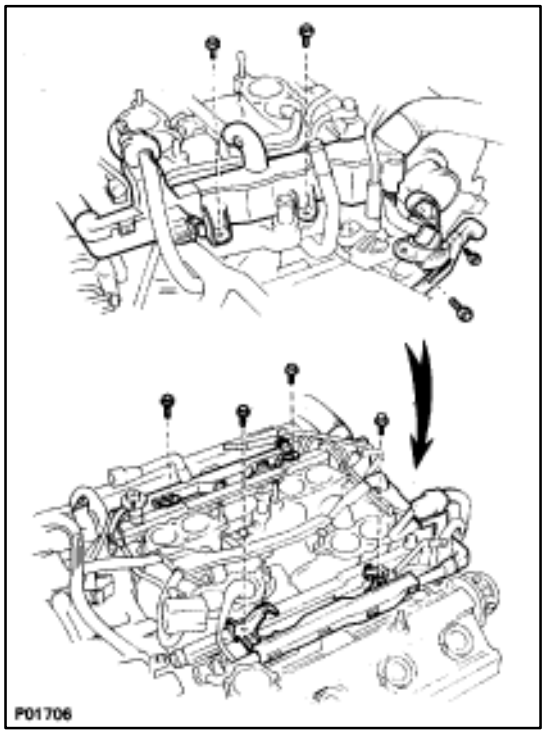

(c) Install the engine wire to the RH cylinder head with the two bolts.

(d) Install the engine wire to the rear water by–pass joint with the two bolts.

(e) Install the engine wire to the delivery pipes with the four bolts.

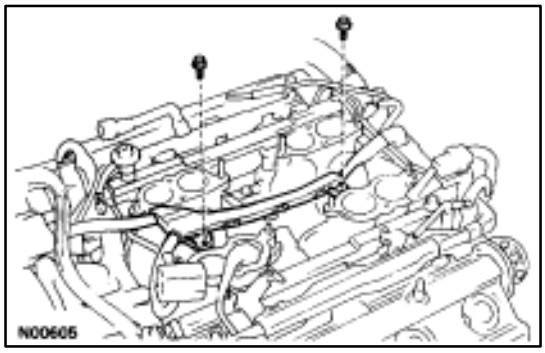

5. INSTALL ENGINE WIRE TO INTAKE MANIFOLD

Install the engine wire with the two bolts.

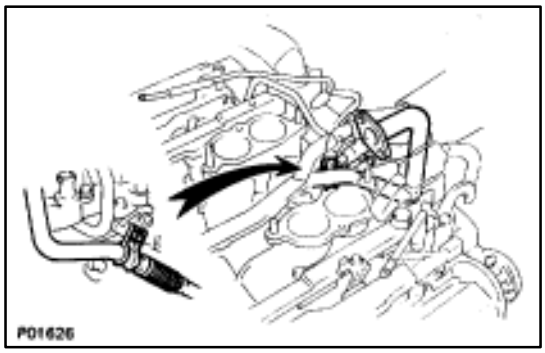

6. TEMPORARILY INSTALL EGR PIPE TO RH CYLINDER HEAD

Temporarily Install the EGR pipe with the bolt.

WhereEverybodyKnowsYourName

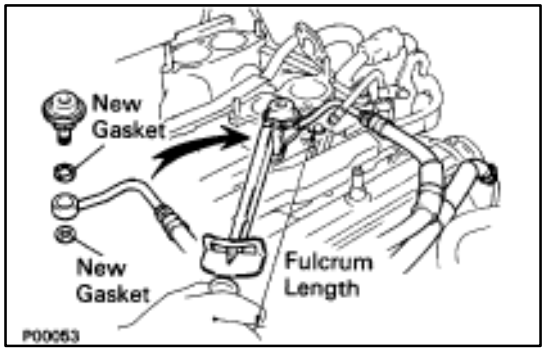

7. CONNECT FUEL RETURN HOSE TO FUEL RETURN PIPE

8. CONNECT FUEL INLET HOSE TO LH DELIVERY PIPE

Using SST, connect the inlet hose with two new gaskets and pulsation damper.

SST 09612–24014 (09617–24011)

Torque: 39 N·m (400 kgf·cm, 29 ft·lbf)
33 N·m (340 kgf·cm, 24 ft·lbf) for SST

HINT: Use a torque wrench with a fulcrum length of 30 cm (11.81 in.).

9. INSTALL AIR INTAKE CHAMBER

(See steps 2 to 18 on pages FI–35 to 41)

HINT: After the air intake chamber installed, tighten the bolt holding to the EGR pipe to the RH cylinder head.

WhereEverybodyKnowsYourName

Fuel Pressure Pulsation Damper

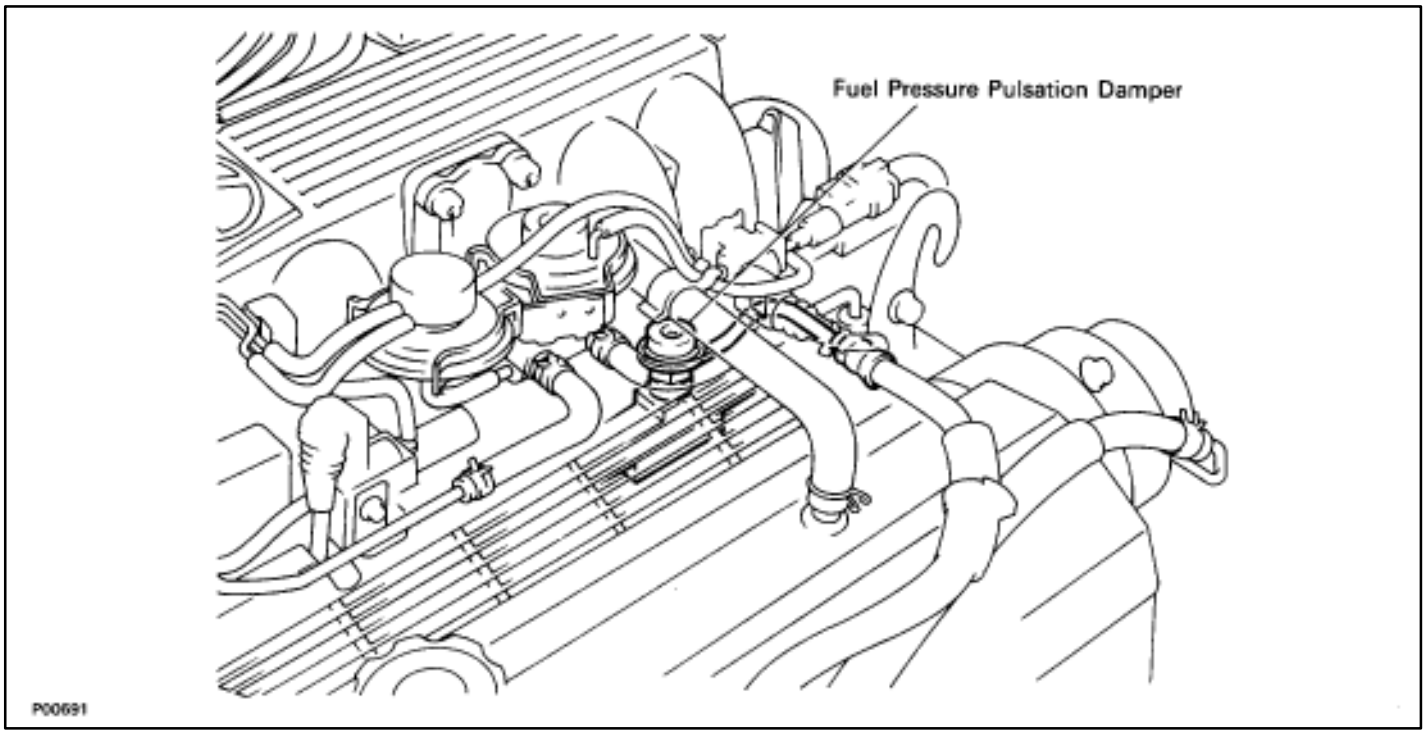

COMPONENTS FOR REMOVAL AND INSTALLATION

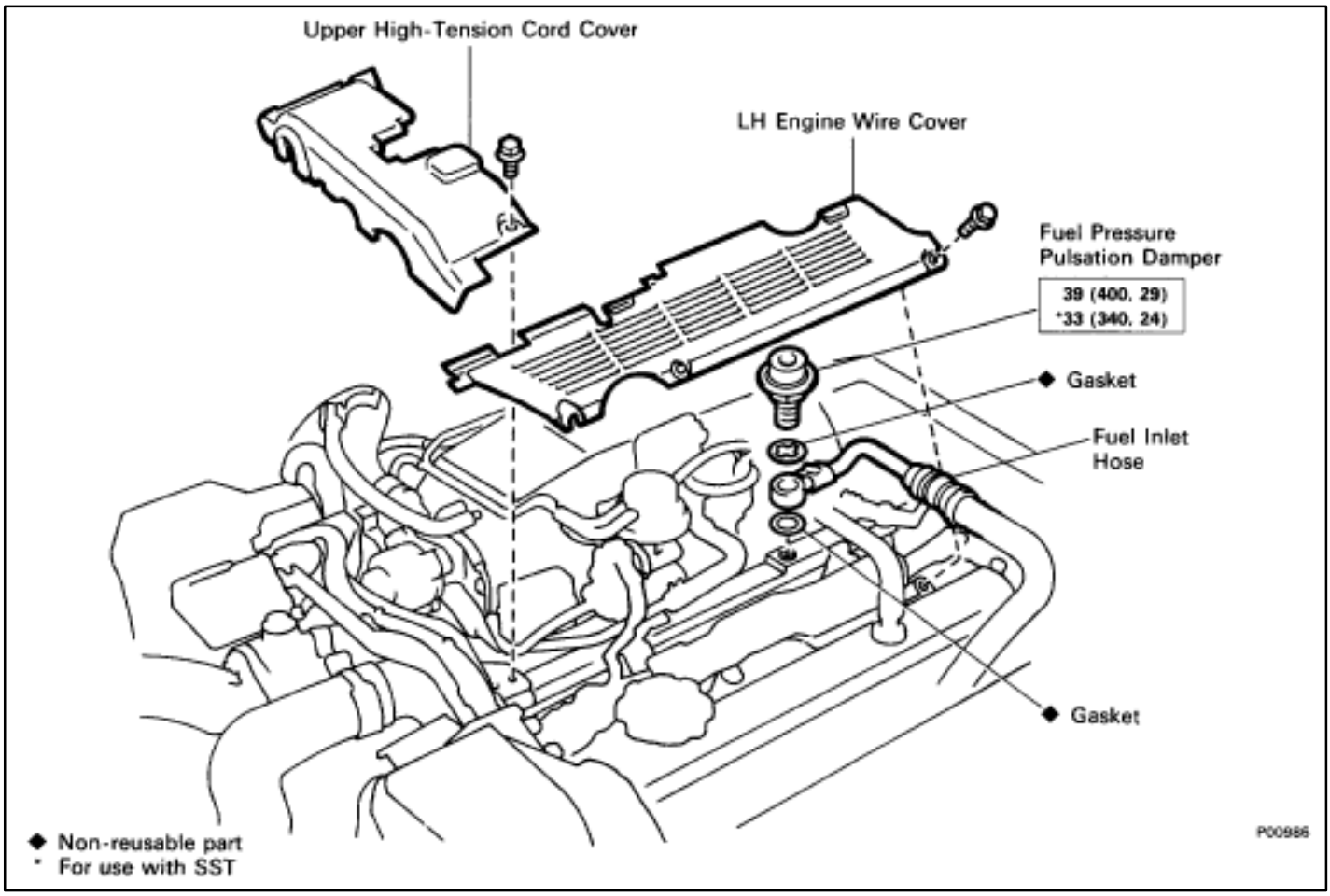

WhereEverybodyKnowsYourName

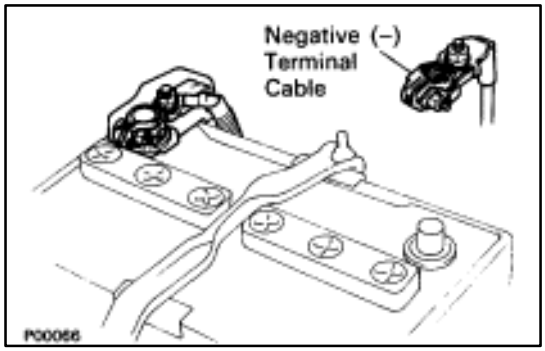

REMOVAL OF FUEL PRESSURE PULSATION DAMPER

(See Component on page FI–58)

1. DISCONNECT CABLE FROM NEGATIVE TERMINAL OF BATTERY

CAUTION: Work must be started after approx. 20 seconds or longer from the time the ignition switch is turned to the "LOCK" position and the negative (–) terminal cable is disconnected from the battery.

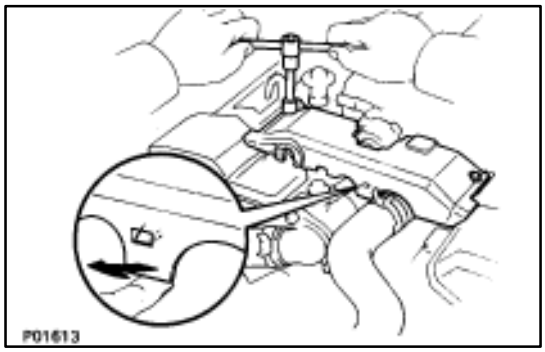

2. REMOVE UPPER HIGH–TENSION CORD COVER

(a) Remove the two mounting bolts.

(b) Disconnect the front side claw groove of the cord cover from the claw of the lower cover, and remove the cord cover.

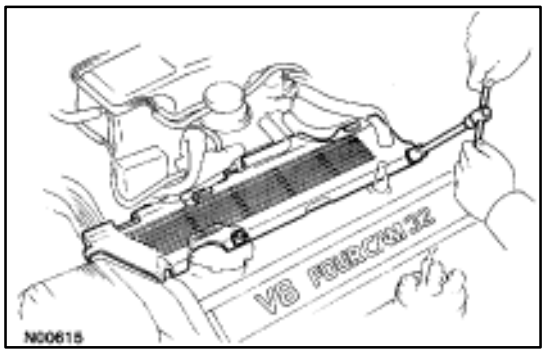

3. REMOVE LH ENGINE WIRE COVER

Remove the two bolts and engine wire cover.

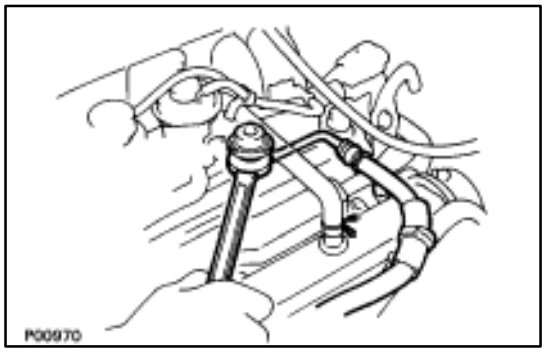

4. REMOVE FUEL PRESSURE PULSATION DAMPER

(a) Remove the pulsation damper and upper gasket.

(b) Disconnect the fuel inlet hose from the delivery pipe, and remove the lower gasket.

WhereEverybodyKnowsYourName

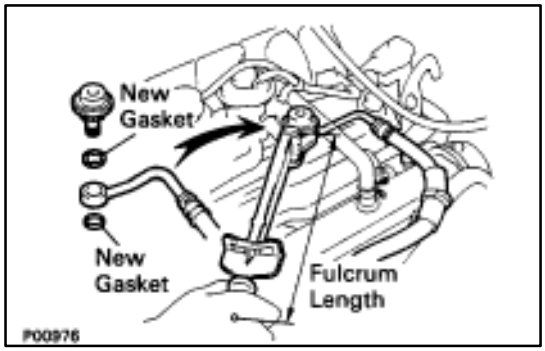

INSTALLATION OF FUEL PRESSURE PULSATION DAMPER

(See Components on page FI–58)

1. INSTALL FUEL PRESSURE PULSATION DAMPER

Using SST, install two new gaskets, the inlet hose and pulsation damper.

SST 09612–24014 (09617–24011)

Torque: 39 N·m (400 kgf·cm, 29 ft·lbf)
33 N·m (340 kgf·cm, 24 ft·lbf) for SST

HINT: Use a torque wrench with a fulcrum length of 30 cm (11.81 in.)

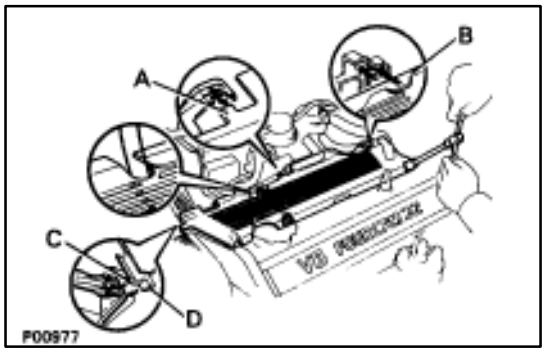

2. INSTALL LH ENGINE WIRE COVER

(a) Connect portions A and B engine wire cover to the wire brackets.

(b) Set the VSV (for fuel pressure control system) wire in original position.

(c) Fit portions C and D of the engine wire cover, matching them with the lower high–tension cord cover and No.3 timing belt cover.

(d) Install the engine wire cover with the two bolts.

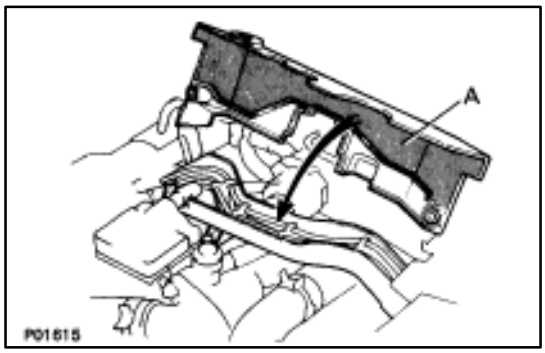

3. INSTALL UPPER HIGH–TENSION CORD COVER

(a) Fit portion A of the upper high–tension cover, matching it with the top of the lower high–tension cord cover.

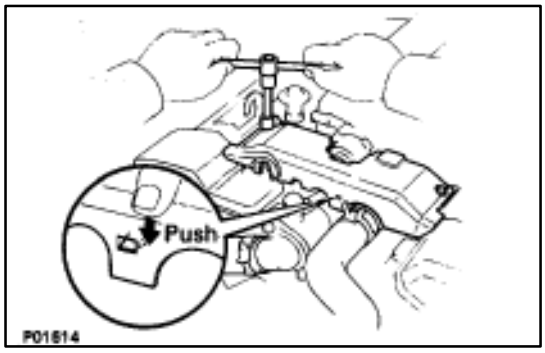

(b) Push the front side of the high–tension cord cover, and connect the front side claw groove of the upper high–tension cord cover to the claw of the lower high–tension cord cover.

(c) Install the upper high–tension cord cover with the two bolts.

4. CONNECT CABLE TO NEGATIVE TERMINAL OF BATTERY

5. CHECK FOR FUEL LEAKS (See page FI–16)

WhereEverybodyKnowsYourName

Fuel Tank and Lines

COMPONENTS

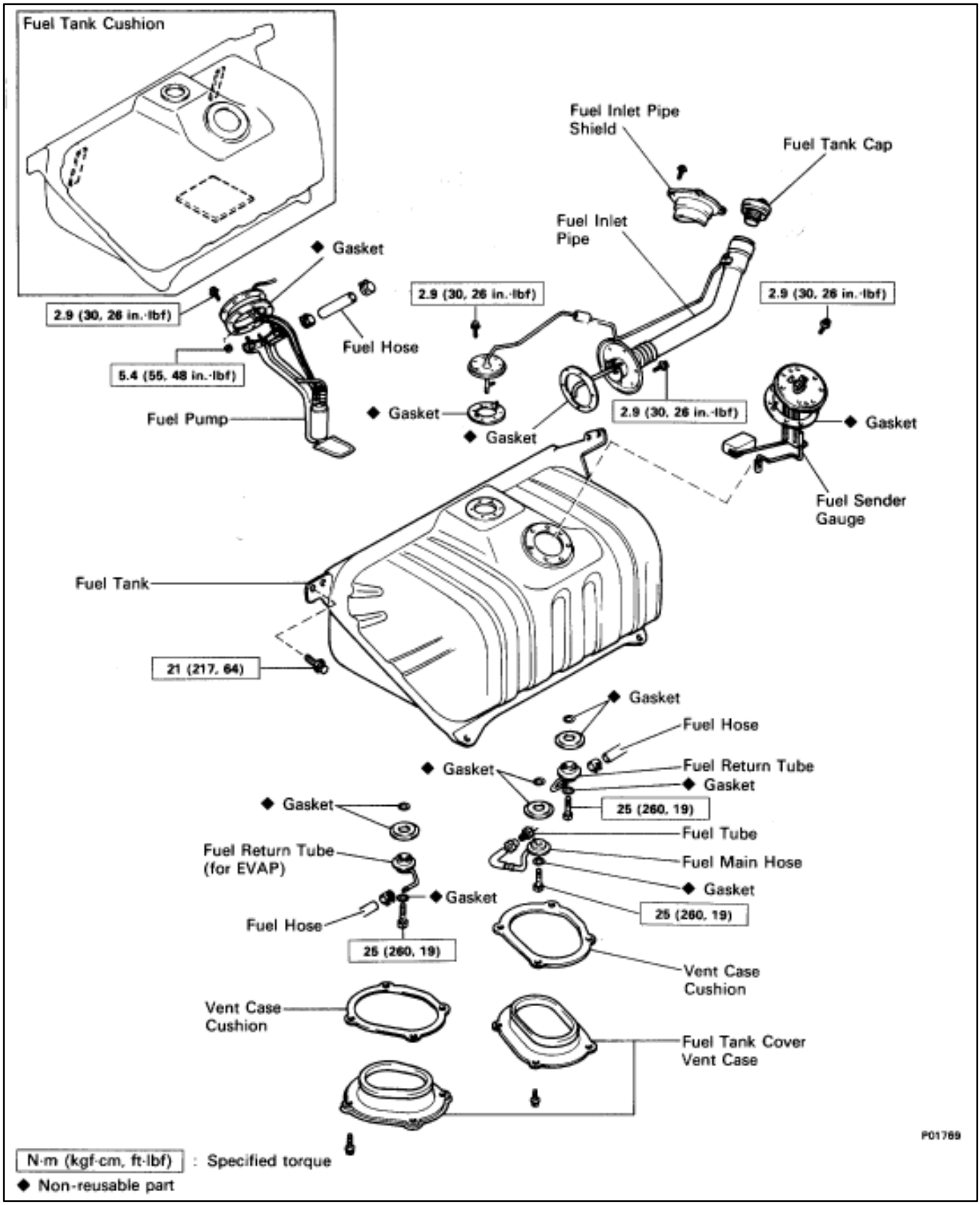

WhereEverybodyKnowsYourName

PRECAUTIONS

1. **Always use new gaskets when replacing the fuel tank or component part.**
2. **Apply the proper torque to all parts tightened.**

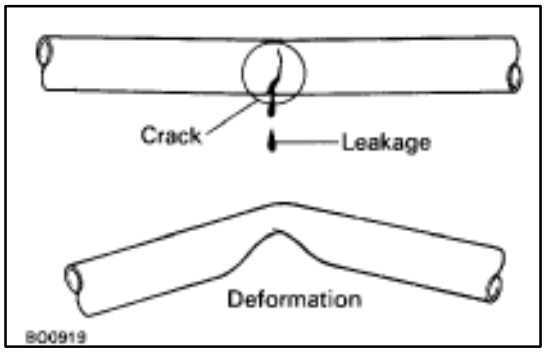

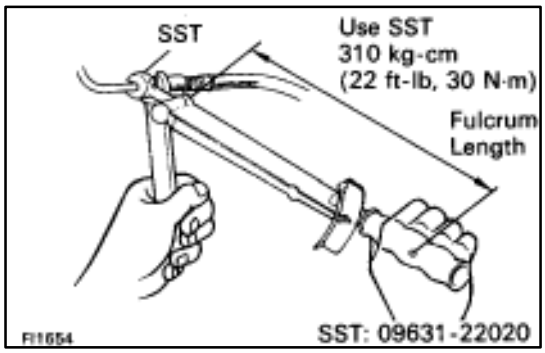

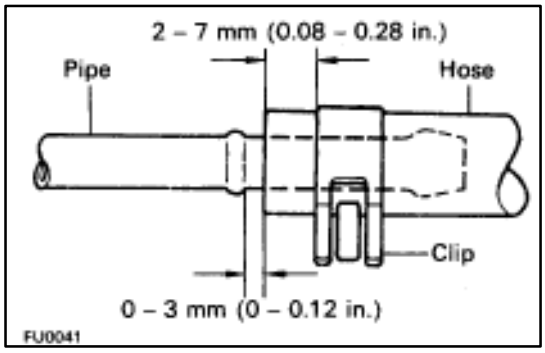

INSPECTION OF FUEL LINES AND CONNECTIONS

(a) Inspect the fuel lines and connections for cracks, leakage or deformation.

(b) Inspect the fuel tank vapor vent system hoses and connections for looseness, kinks or damage.

(c) Inspect the fuel tank for deformation, cracks, fuel leakage or tank band looseness.

(d) Check the filter neck for damage or fuel leakage.

(e) Hose and tube connections are as shown in the illustration.

If a problem is found, repair or replace the parts as necessary.

WhereEverybodyKnowsYourName

AIR INDUCTION SYSTEM
Air Flow Meter

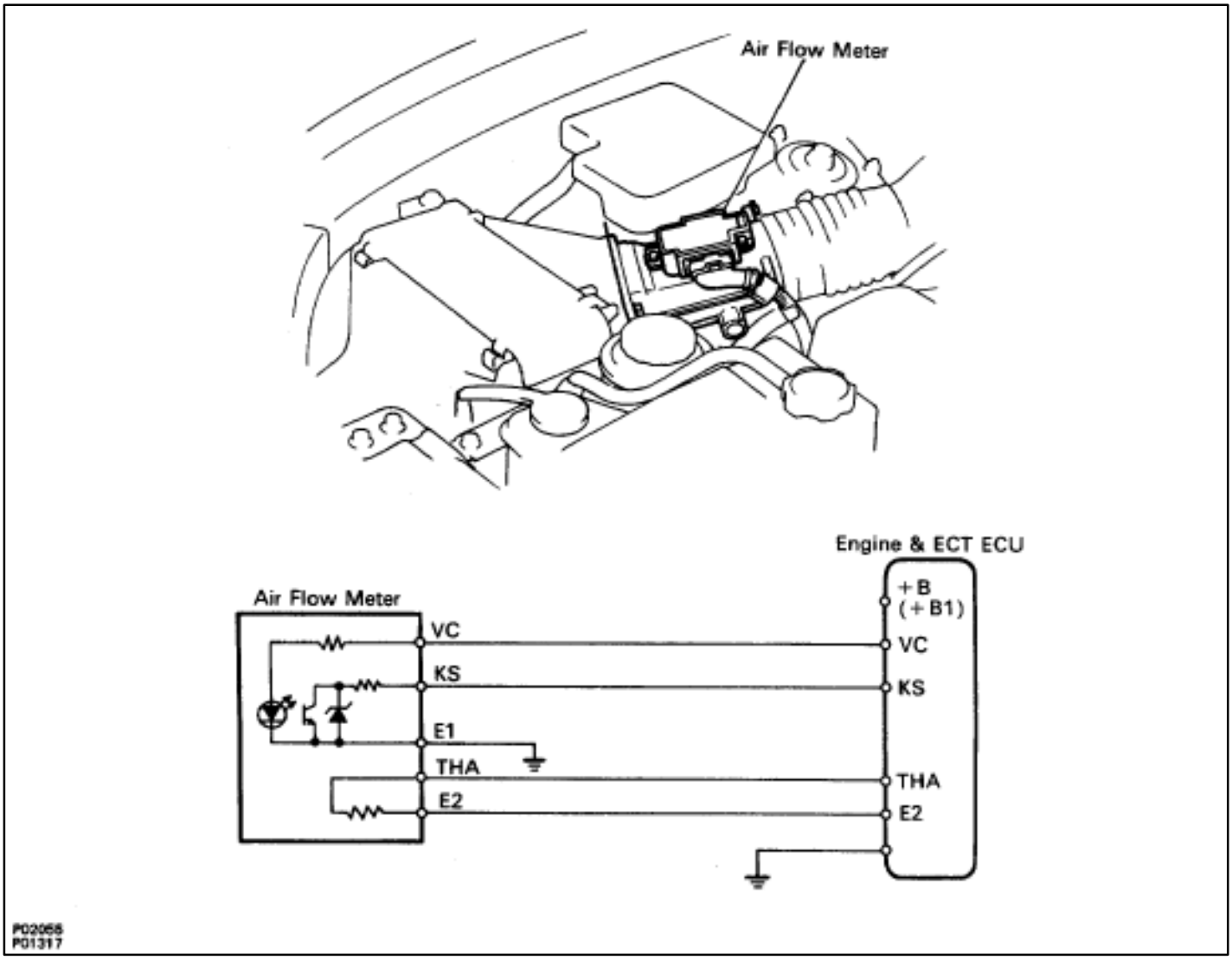

ON–VEHICLE INSPECTION

INSPECT RESISTANCE OF AIR FLOW METER

(a) Disconnect the air flow meter connector.

(b) Using an ohmmeter, measure the resistance between terminals THA and E2.

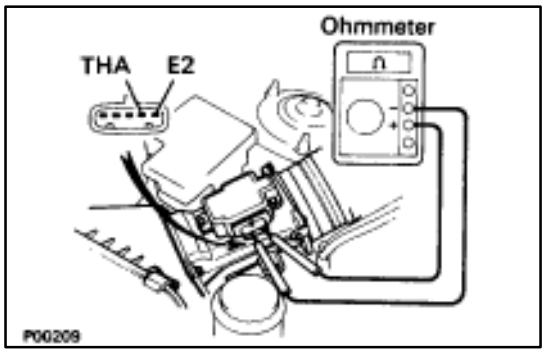

Between terminals	Resistance	Temperature
THA–E2	10–20 k?	–20˚C (–4˚F)
	4–7 k?	9˚C (32˚F)
	2–3 k?	20˚C (68˚F)
	0.9–1.3 k?	40˚C (104˚F)
	0.4–0.7 k?	60˚C (140˚F)

If the resistance is not as specified, replace the air flow meter.

(c) Reconnect the air flow meter connector.

WhereEverybodyKnowsYourName

COMPONENTS

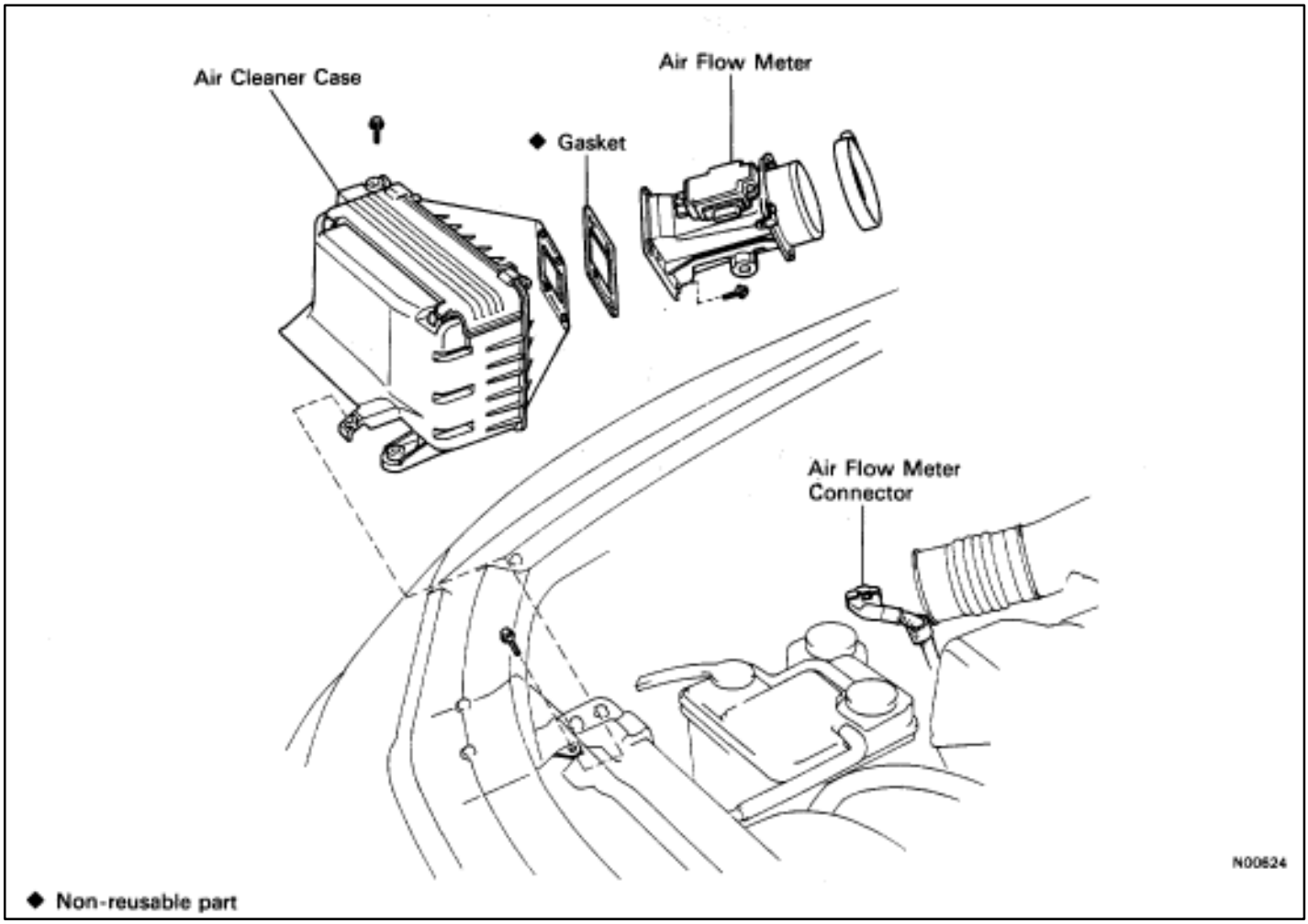

REMOVAL OF AIR FLOW METER

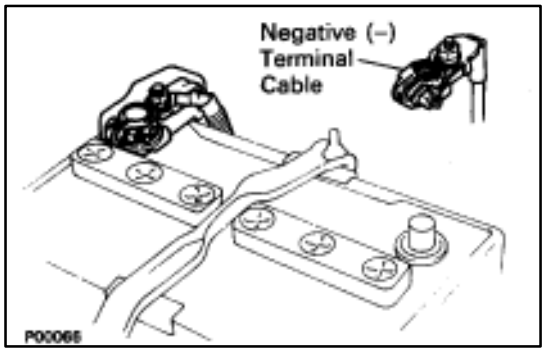

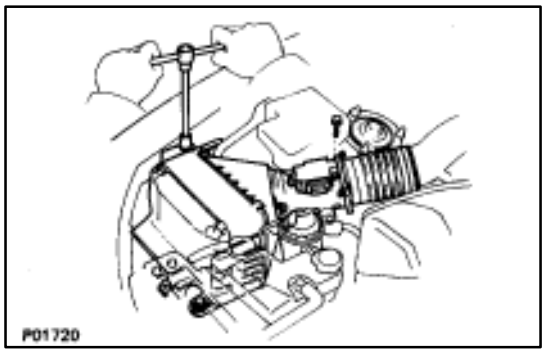

1. **DISCONNECT CABLE FROM NEGATIVE TERMINAL OF BATTERY**
   CAUTION: Work must be started after approx. 20 seconds or longer from the time the ignition switch is turned to the "LOCK" position and the negative (–) terminal cable is disconnected from the battery.
2. **DISCONNECT AIR FLOW METER CONNECTOR**
   (a) Disconnect the air flow meter connector.
   (b) Disconnect the wire clamp from the clamp bracket on the air flow meter.
3. **REMOVE AIR CLEANER CASE AND AIR FLOW METER ASSEMBLY**
   (a) Loosen the hose clamp.
   (b) Remove the four mounting bolts.
   (c) Disconnect the air cleaner hose from the air flow meter.
   (d) Disconnect the air duct from the air cleaner case, and remove the air cleaner case and air flow meter assembly.

WhereEverybodyKnowsYourName

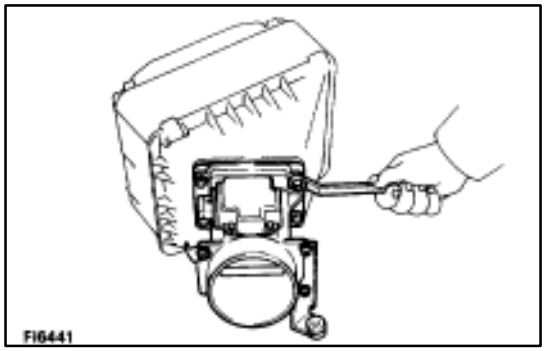

4. REMOVE AIR FLOW METER FROM AIR CLEANER CASE

Remove the four bolts and air flow meter and gasket.

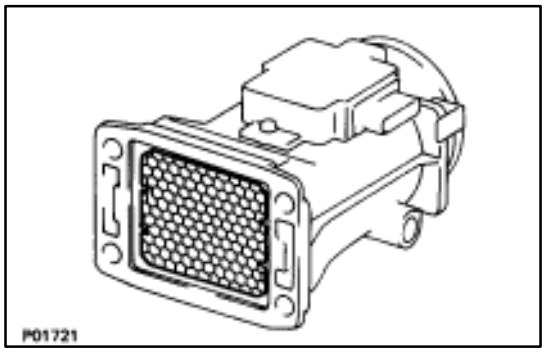

INSPECTION OF AIR FLOW METER

INSPECT AIR FLOW METER

Check that the honey–combed is neither deformed nor damaged.

If necessary, replace the air flow meter.

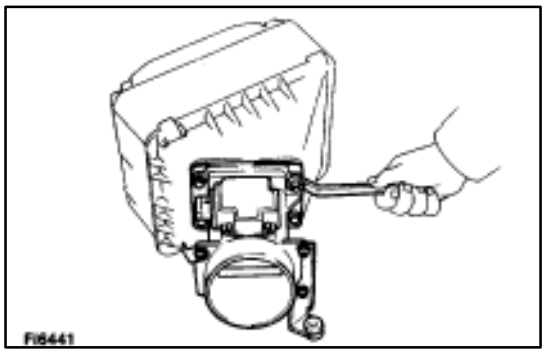

INSTALLATION OF AIR FLOW METER

(See Components on page FI–64)

1. INSTALL AIR FLOW METER FROM AIR CLEANER CASE

Install a new gasket and the air flow meter with the four bolts.

Torque: 10 N·m (100 kgf·cm, 7 ft·lbf)

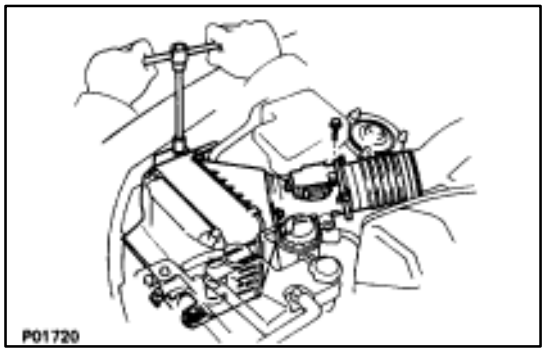

2. INSTALL AIR CLEANER CAP AND AIR FLOW METER ASSEMBLY

(a) Connect the air cleaner case to the air duct.
(b) Connect the air flow meter to the air cleaner hose.
(c) Install the air cleaner and air flow meter assembly with the four bolts.
(d) Tighten the hose clamp.

3. CONNECT AIR FLOW METER CONNECTOR

(a) Connect the air flow meter connector.
(b) Install the wire clamp to the clamp bracket on the air flow meter.

4. CONNECT CABLE FROM NEGATIVE TERMINAL OF BATTERY

WhereEverybodyKnowsYourName

Throttle Body

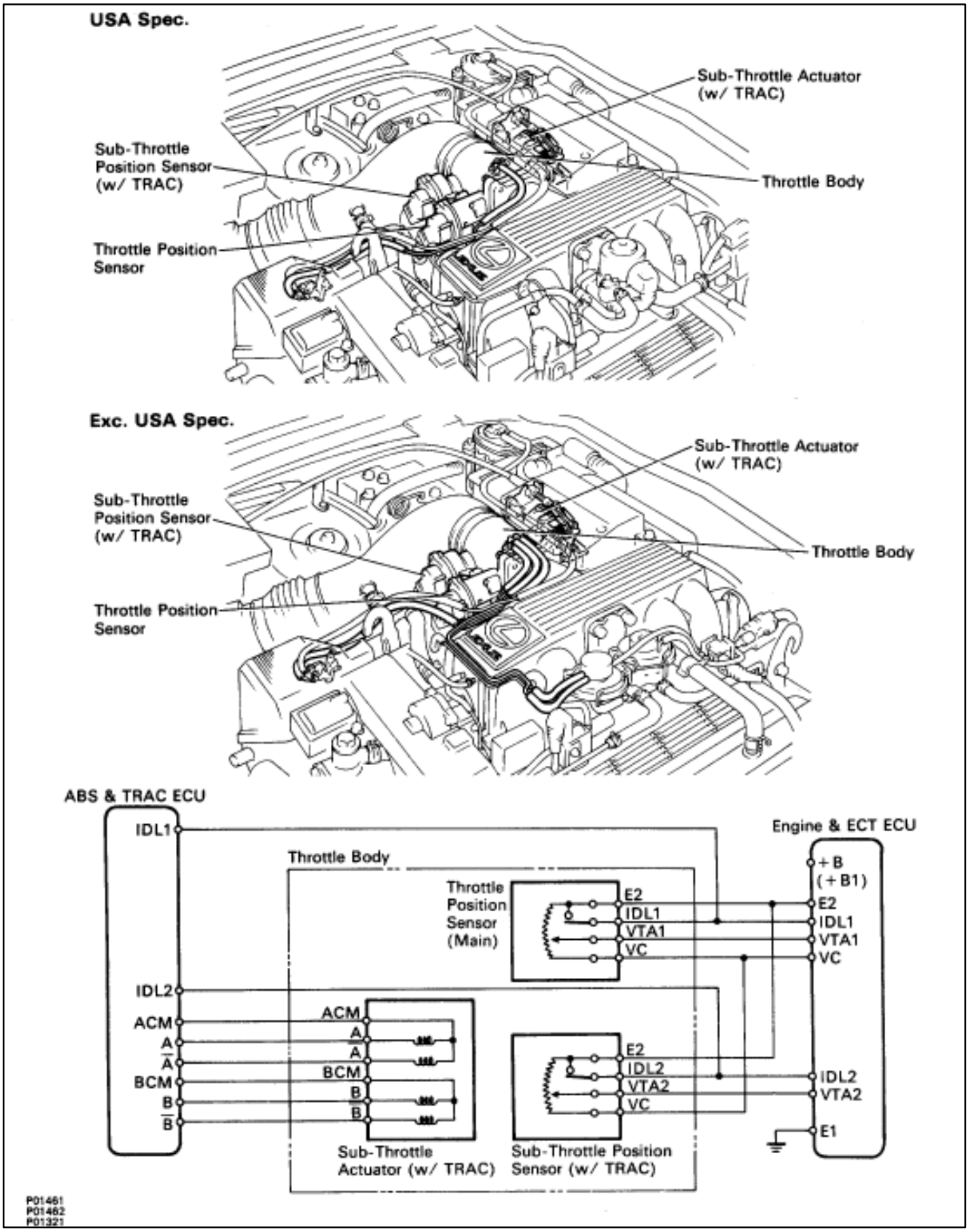

WhereEverybodyKnowsYourName

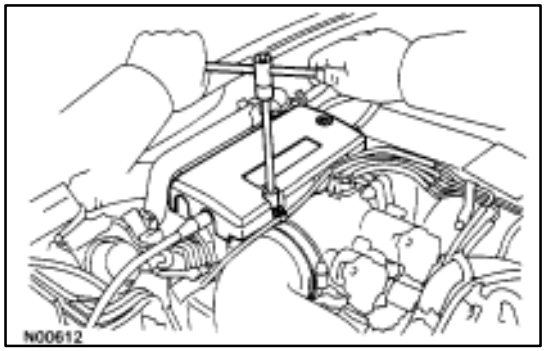

ON–VEHICLE INSPECTION

1. INSPECT THROTTLE BODY

(a) Remove the throttle body cover.
- Remove the mounting cap nut.
- Loosen the two bolts, and remove the throttle body cover.

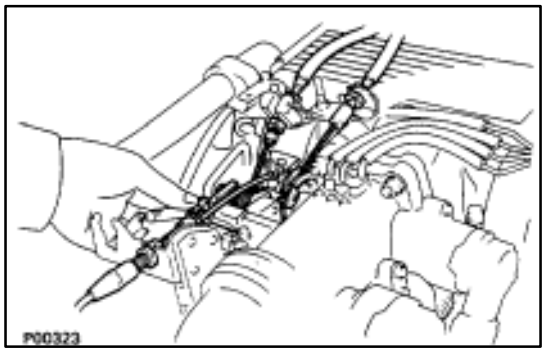

(b) Check that the throttle linkage moves smoothly.

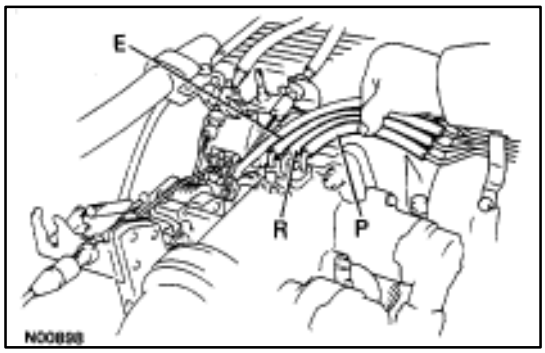

(c) Check the vacuum at each port.
- Start the engine.
- Check the vacuum with your finger.

Port name	At idling	At 3,000 rpm
P	No vacuum	Vacuum
*E	No vacuum	Vacuum
*R	No vacuum	Vacuum

* Exc. USA Spec.

(d) Reinstall the throttle body cover.

3. INSPECT AND ADJUST DASH POT (DP)

A. Warm up engine

Allow the engine to warm up to normal operating temperature.

B. Check idle speed

Idle speed: 700 ± 50 rpm

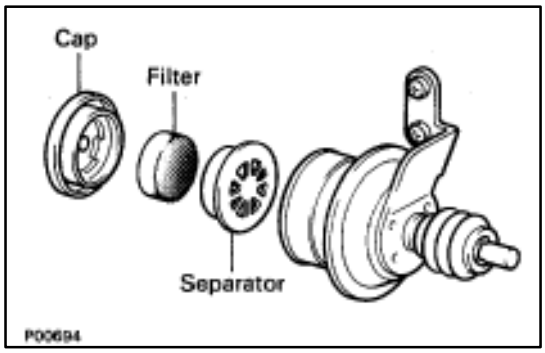

C. Remove cap, filter and separator from DP

WhereEverybodyKnowsYourName

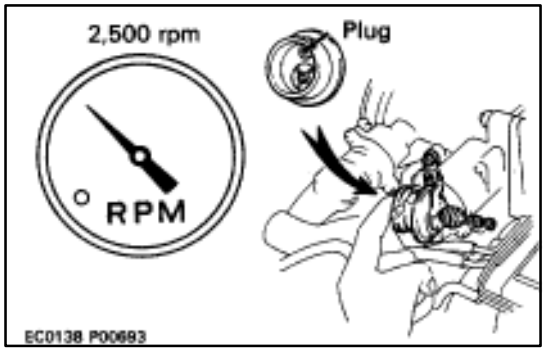

D. Check and adjust DP setting speed

(a) Maintain the engine at 2,500 rpm.

(b) Plug the VTV hole with your finger.

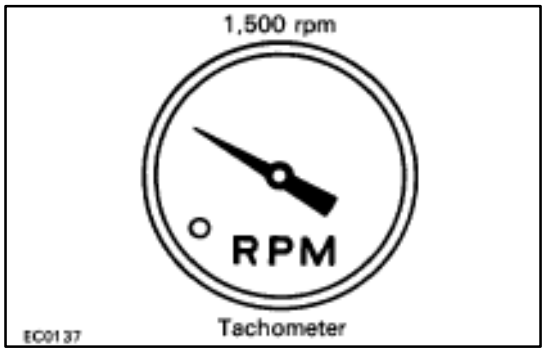

(c) Release the throttle valve.

(d) Check that the DP is set.

DP setting speed: 1,500 rpm

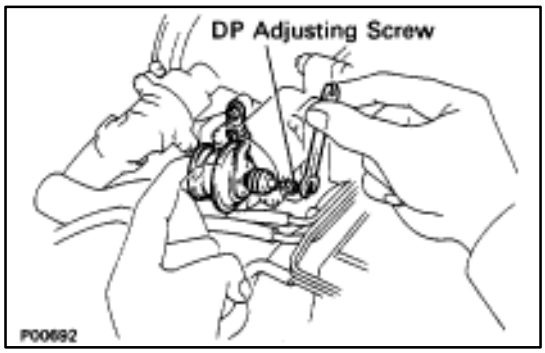

(e) Adjust the DP setting speed by turning the DP adjusting screw.

(f) Repeat steps from (a) to (c), and recheck the DP setting speed.

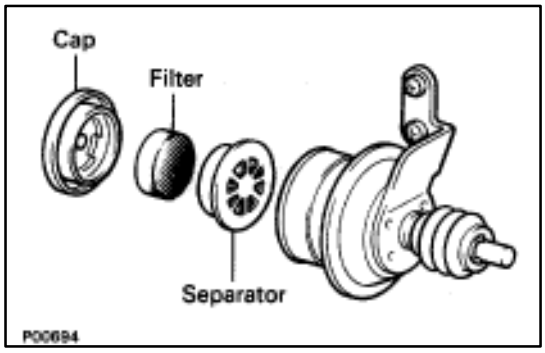

E. Reinstall separator, filter and cap to DP

HINT: Install the filter with the coarser surface facing the atmospheric side (outward).

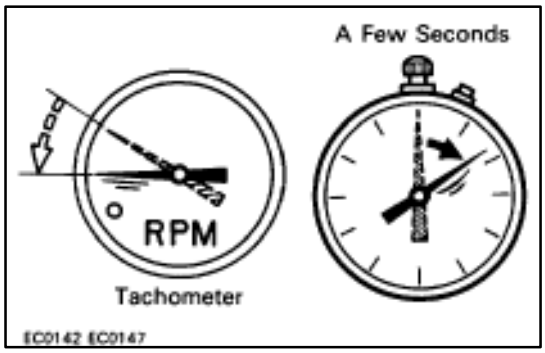

F. Check VTV operation

(a) Maintain the engine at 2,500 rpm.

(b) Release the throttle valve, and check that the engine returns to idle in a few seconds.

WhereEverybodyKnowsYourName

COMPONENTS

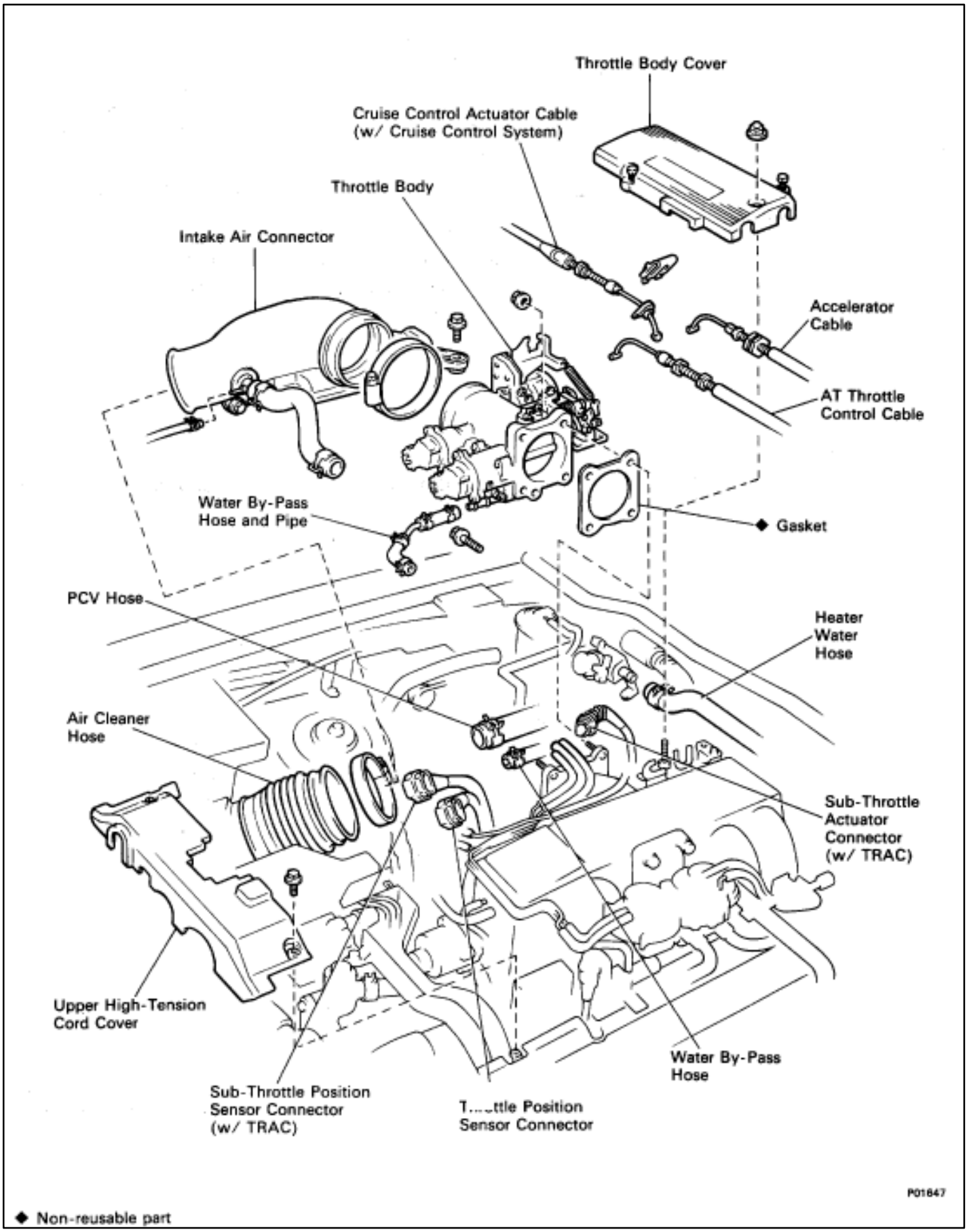

◆ Non-reusable part

WhereEverybodyKnowsYourName

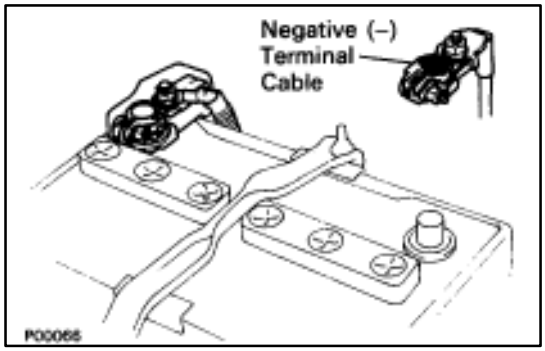

REMOVAL OF THROTTLE BODY

(See Components on page FI–69)

1. **DISCONNECT CABLE FROM NEGATIVE TERMINAL OF BATTERY**
   CAUTION: Work must be started after approx. 20 seconds or longer from the time the ignition switch is turned to the "LOCK" position and the negative (–) terminal cable is disconnected from the battery.
2. **DRAIN ENGINE COOLANT (See page CO–6)**

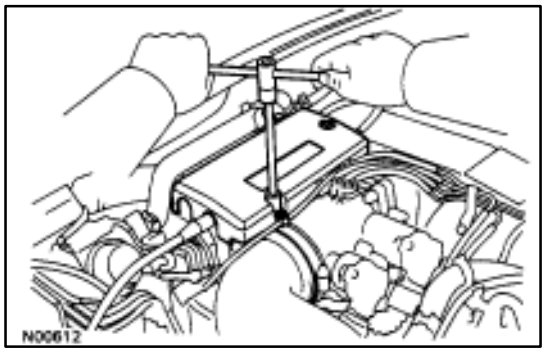

3. **REMOVE THROTTLE BODY COVER**
   (a) Remove the mounting cap nut.
   (b) Loosen the two bolts, and remove the throttle body cover.

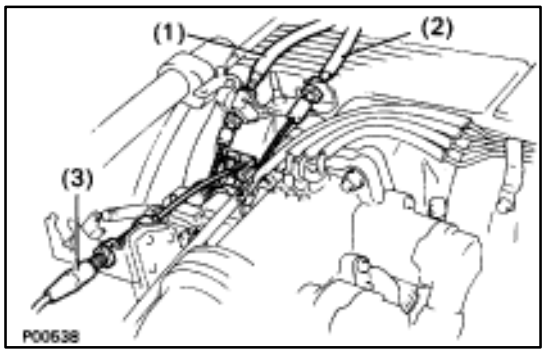

4. **DISCONNECT CONTROL CABLES FROM THROTTLE BODY**
   Disconnect the following cables:
   (1) Accelerator cable
   (2) A/T throttle control cable
   (3) (w/ Cruise Control System)
   Cruise control actuator cable

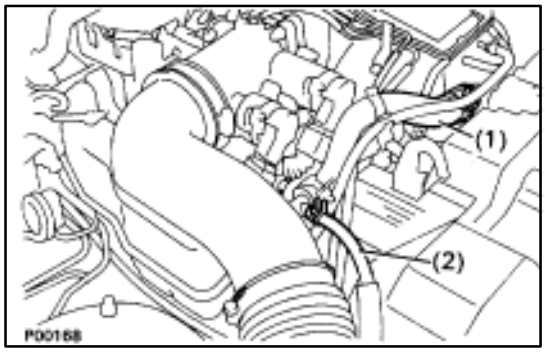

5. **REMOVE INTAKE AIR CONNECTOR**
   (a) Disconnect the following hoses:
   (1) Air hose from ISC valve
   (2) Air hose (from PS air control valve) from intake air connector

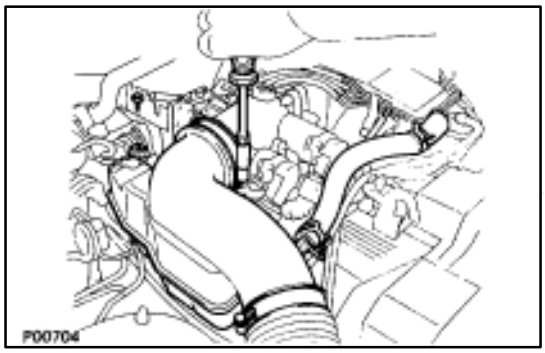

   (b) Remove the bolt holding the intake air connector to the cylinder head cover.
   (c) Loosen the two hose clamps.
   (d) Disconnect the intake air connector from the throttle body and air cleaner hose, and remove the intake air connector.

WhereEverybodyKnowsYourName

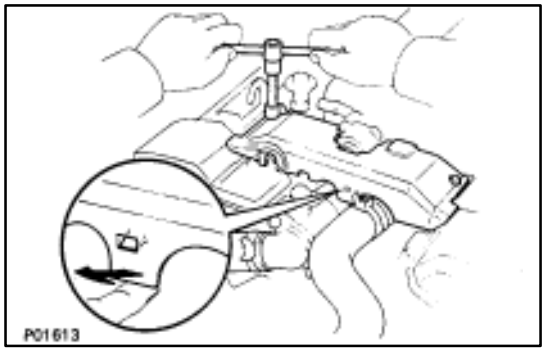

6. REMOVE UPPER HIGH–TENSION CORD COVER

(a) Remove the two mounting bolts.

(b) Disconnect the front side claw groove of the cord cover from the claw of the lower cover, and remove the cord cover.

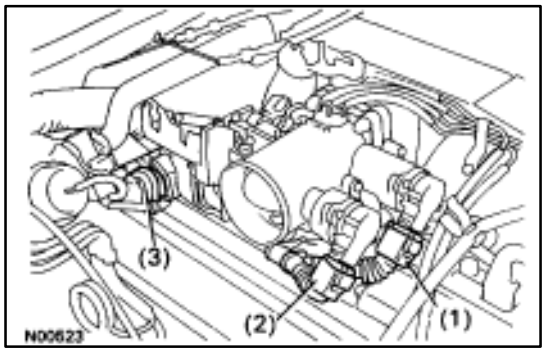

7. REMOVE THROTTLE BODY

(a) Disconnect the following connectors:

(1) Throttle position sensor connector

(2) (w/ TRAC)
Sub–throttle position sensor connector

(3) (w/ TRAC)
Sub–throttle actuator connector

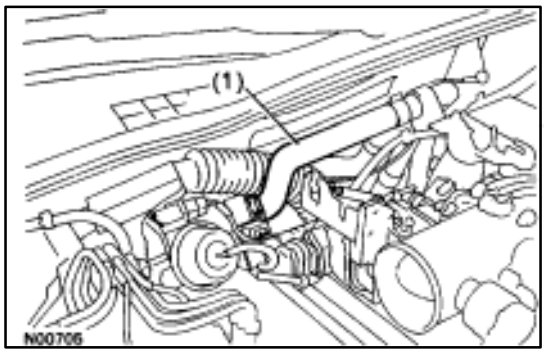

(b) Disconnect the following hoses:

(1) Heater water hose from heater water valve

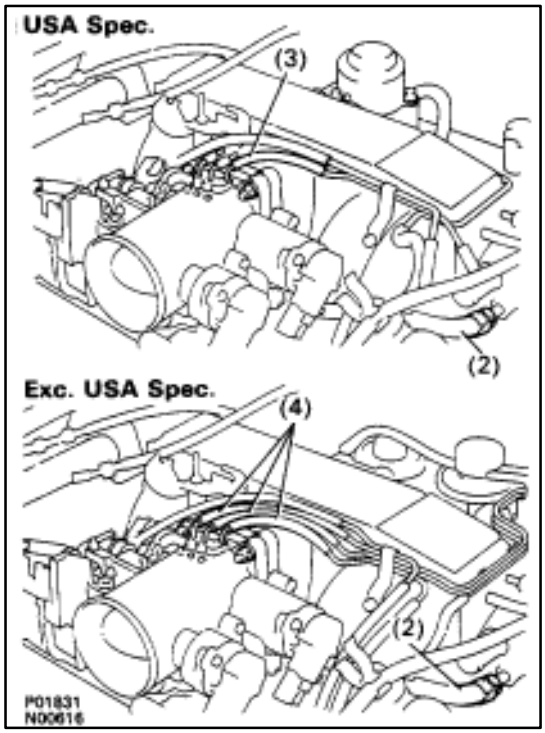

(2) Water by–pass hose from ISC valve

(3) (USA Spec.)
Vacuum hose from throttle body

(4) (Exc. USA Spec.)
Three vacuum hoses from throttle body

WhereEverybodyKnowsYourName

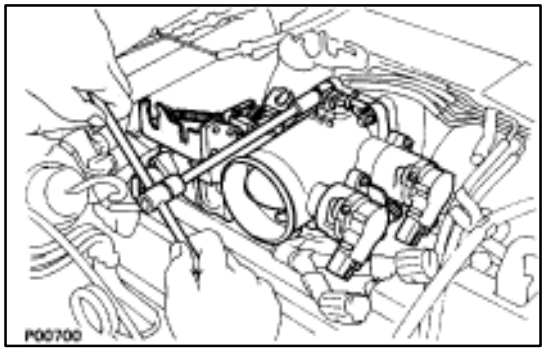

(c) Remove the two bolts and two nuts, disconnect the throttle body from the air intake chamber.

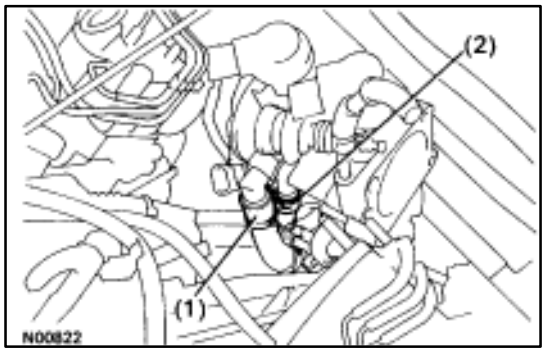

(d) Disconnect the following hoses, and remove the throttle body:
   (1) PCV hose from throttle body
   (2) Water by–pass hose from throttle body

(e) Remove the throttle body gasket.

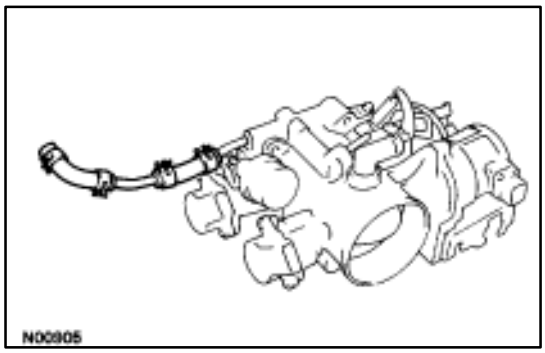

(f) Remove the two water by–pass hoses and pipe assembly.

WhereEverybodyKnowsYourName

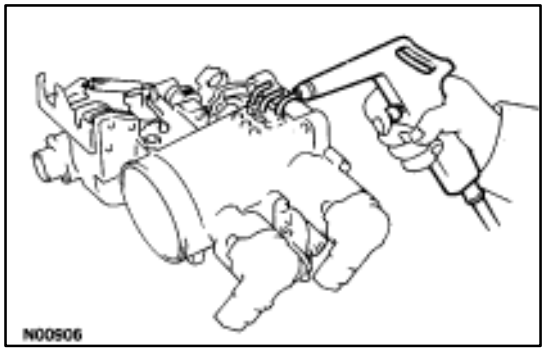

INSPECTION OF THROTTLE BODY

1. CLEAN THROTTLE BODY

(a) Using a soft brush and carburetor cleaner, clean the cast parts.

(b) Using compressed air, clean all the passages and apertures.

NOTICE: To prevent deterioration, do not clean the throttle position sensor and DP.

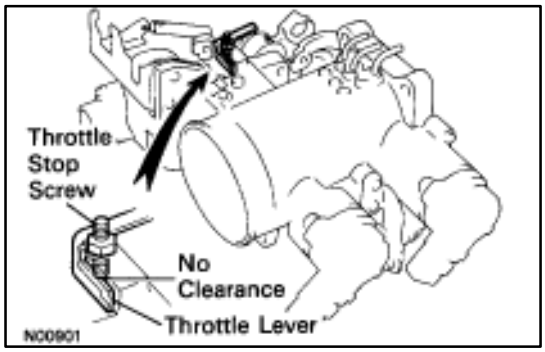

2. INSPECT THROTTLE VALVE AND THROTTLE POSI TION SENSOR

A. Inspect throttle valve

Check that there is no clearance between the throttle stop screw and throttle lever when the throttle valve is fully closed.

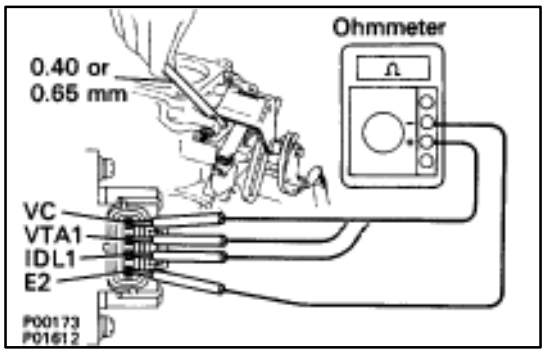

B. Inspect throttle position sensor

(a) Insert a 40 mm (0.016 in.) or 0.65 mm (0.026 in.) feeler gauge between the throttle stop screw and stop lever.

(b) Using an ohmmeter, measure the resistance between each terminal.

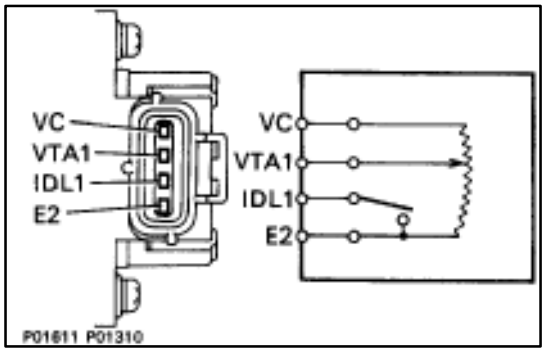

Clearance between lever and stop screw	Between terminals	Resistance
0 mm (0 in.)	VTA1–E2	0.2–0.8 ?
0.40 mm (0.016 in.)	IDL1–E2	2.3 k? or less
0.65 mm (0.026 in.)	IDL1–E2	Infinity
Throttle valve fully open	VTA1–E2	3.3–10.0 k?
–	VC–E2	4.0–9.0 k?

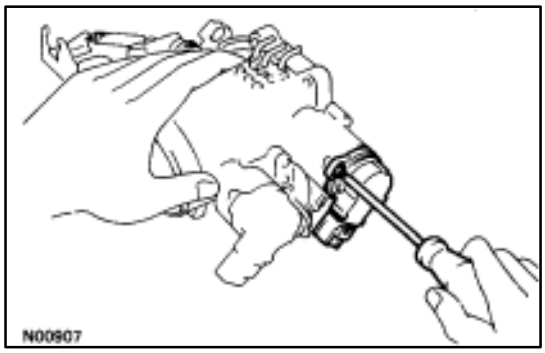

C. If necessary, adjust throttle position sensor

(a) Loosen the two set screws of the sensor.

WhereEverybodyKnowsYourName

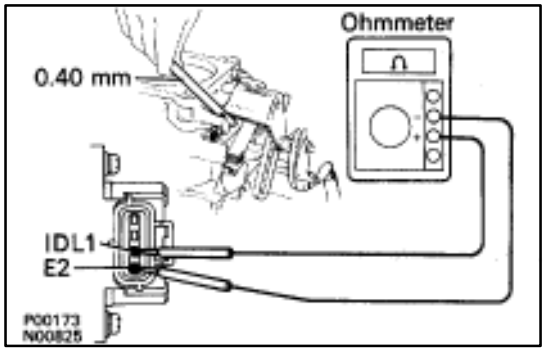

(b) Insert a 0.40 mm (0.016 in.) feeler gauge, between the throttle stop screw and stop lever.

(c) Connect the test probe of an ohmmeter to the terminals IDL1 and E2 of the sensor.

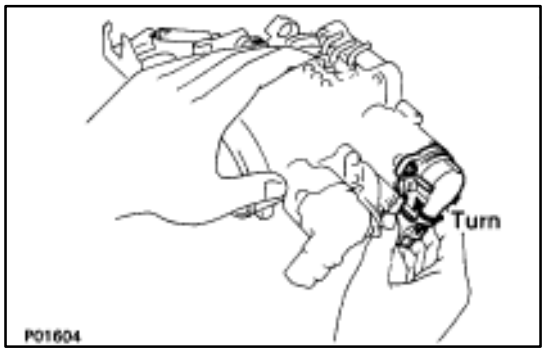

(d) Gradually turn the sensor clockwise until the ohmmeter deflects, and secure it with the two set screws.

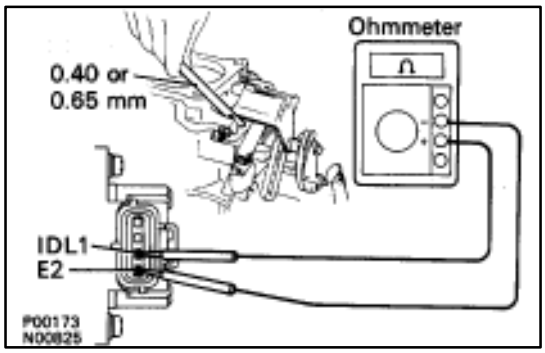

(e) Recheck the continuity between terminals IDL1 and E2.

Clearance between lever and stop screw	Continuity (IDL1–E2)
0.40 mm (0.016 in.)	Continuity
0.65 mm (0.026 in.)	No continuity

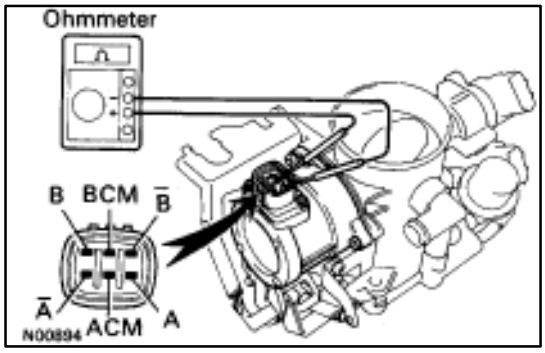

3. (w/ TRAC)
INSPECT SUB–THROTTLE ACTUATOR, SUBTHROTTLE VALVE AND SUB–THROTTLE POSITION SENSOR

A. Inspect sub–throttle actuator

Using an ohmmeter, measure the resistance between the terminals (ACM–A and Å, BCM–B and B).

Resistance: 0.5–1.0 ?

If the resistance is not as specified, replace the actuator valve.

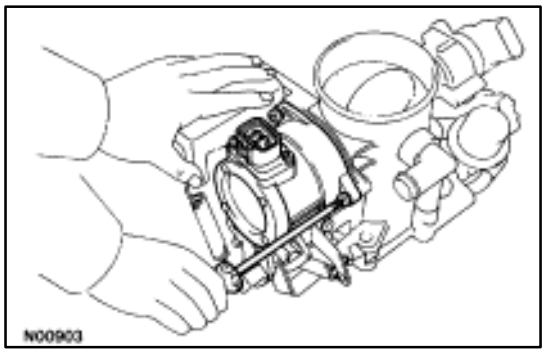

B. Inspect sub–throttle actuator

Remove the three screws and sub–throttle actuator.

WhereEverybodyKnowsYourName

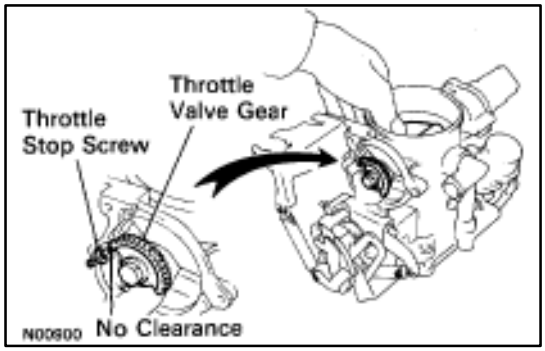

C. Inspect sub–throttle valve

Check that there is no clearance between the throttle stop screw and throttle valve gear when the sub–throttle valve is fully closed.

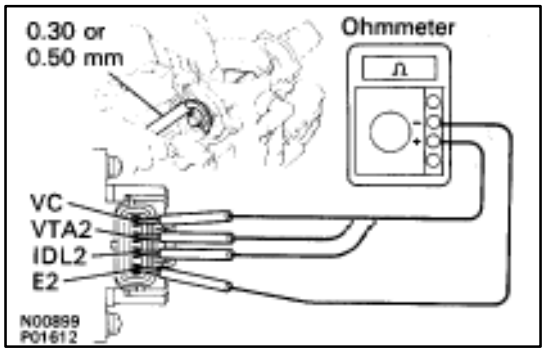

D. Inspect sub–throttle position sensor

(a) Insert a 0.30 mm (0.012 in.) or 0.50 mm (0.020 in.) feeler gauge between the throttle stop screw and throttle valve gear.

(b) Using an ohmmeter, measure the resistance between each terminal.

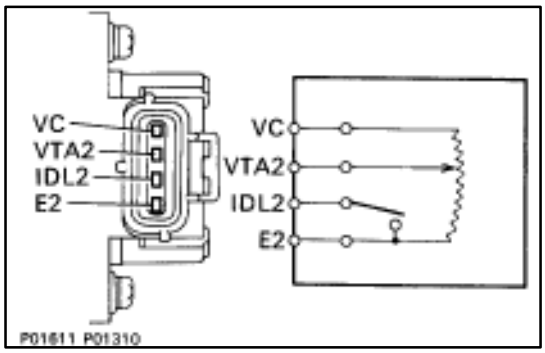

Clearance between lever and stop screw	Between terminals	Resistance
0 mm (0 in.)	VTA2–E2	0.2–0.8 ?
0.30 mm (0.012 in.)	IDL2–E2	2.3 k? or less
0.50 mm (0.020 in.)	IDL2–E2	Infinity
Throttle valve fully open	VTA2–E2	3.3–10.0 k?
–	VC–E2	4.0–9.0 k?

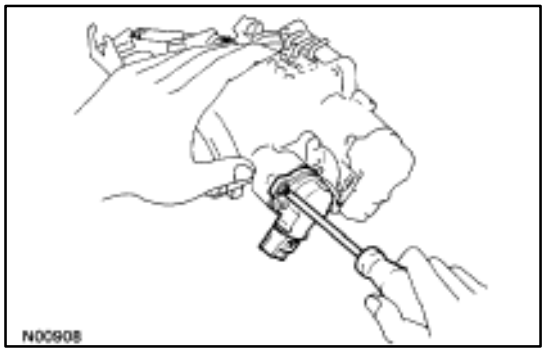

E. If necessary, adjust sub–throttle position sensor

(a) Loosen the two set screws of the sensor.

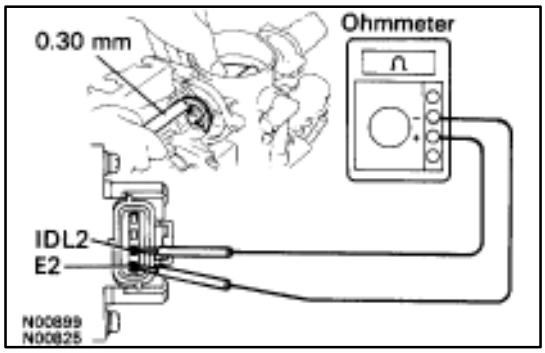

(b) Insert a 0.30 mm (0.012 in.) feeler gauge, between the throttle stop screw and throttle valve gear.

(c) Connect the test probe of an ohmmeter to the terminals IDL2 and E2 of the sensor.

WhereEverybodyKnowsYourName

(d) Gradually turn the sensor clockwise until the ohmmeter deflects, and secure it with the two set screws.

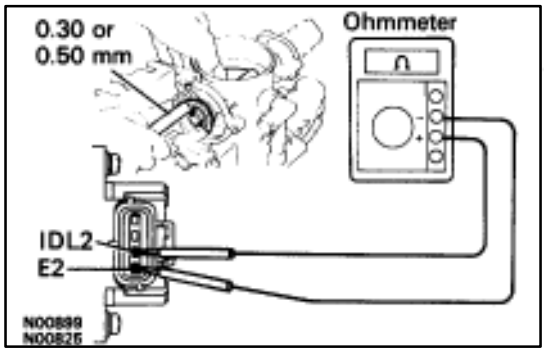

(e) Recheck the continuity between terminals IDL2 and E2.

Clearance between lever and stop screw	Continuity (IDL2–E2)
0.30 mm (0.012 in.)	Continuity
0.50 mm (0.020 in.)	No continuity

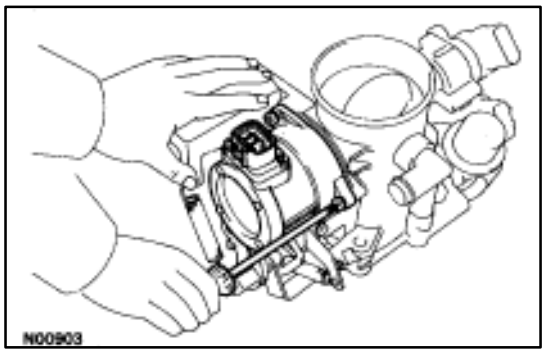

E. Reinstall sub–throttle actuator

Install the sub–throttle actuator with the three screws.

WhereEverybodyKnowsYourName

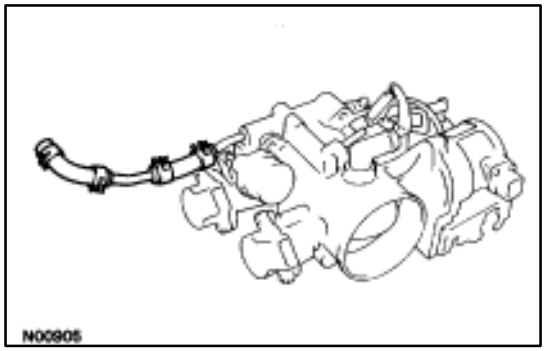

INSTALLATION OF THROTTLE BODY

(See Components o page FI–69)

1. INSTALL THROTTLE BODY

(a) Install the two water by–pass hoses and pipe to the throttle body.

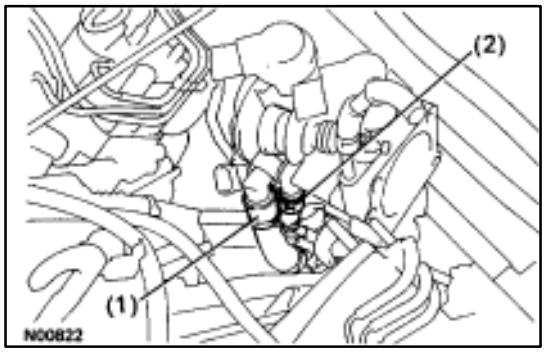

(b) Connect the following hoses:
   (1) PCV hose to throttle body
   (2) Water by–pass hose to throttle body

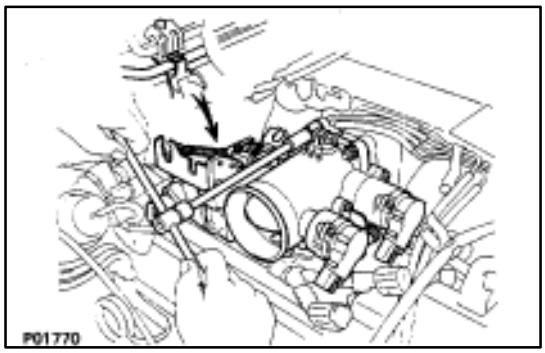

(c) Install a new gasket and throttle body with the two bolts and two nuts.

Torque: 18 N·m (185 kgf·cm, 13 ft·lbf)

HINT: Use bolts 40 mm (1.57 in.) in length.

(d) Install the water by–pass pipe (from rear water by–pass joint) to the clamp on the engine wire cover.

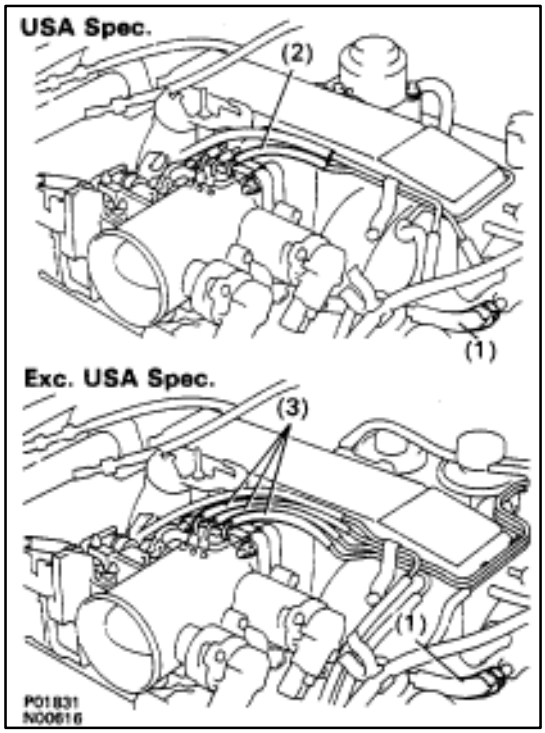

(e) Connect the following hoses:
   (1) Water by–pass hose to the ISC valve
   (2) (USA Spec.)
   Vacuum hose to throttle body
   (3) (Exc. USA Spec.)
   Three vacuum hoses to throttle body

WhereEverybodyKnowsYourName

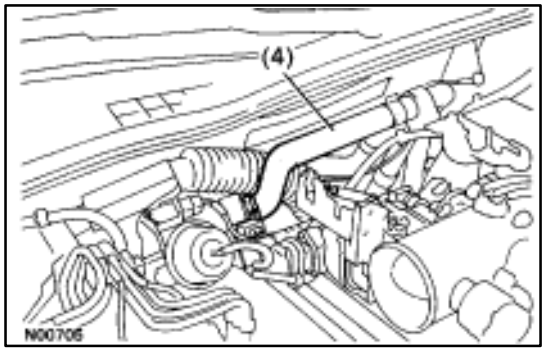

(4) Heater water hose to heater water valve

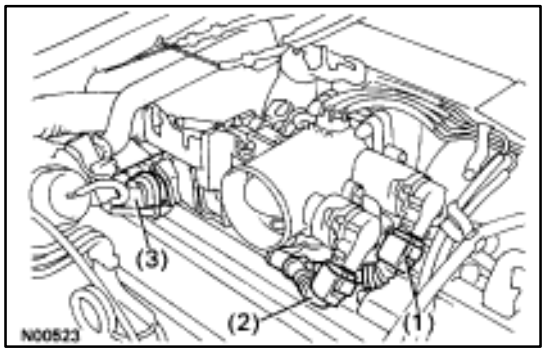

(f) Connect the following connectors:
  (1) Throttle position sensor connector
  (2) (w/ TRAC)
      Sub–throttle position sensor connector
  (3) (w/ TRAC)
      Sub–throttle actuator connector

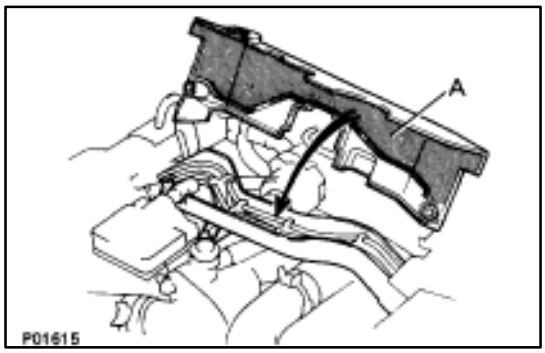

2. INSTALL UPPER HIGH–TENSION CORD COVER

(a) Fit portion A of the upper high–tension cover, matching it with the top of the lower high–tension cord cover.

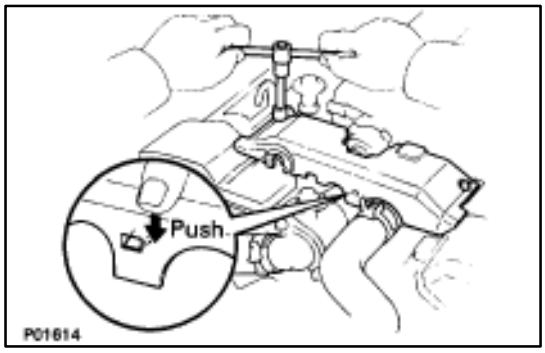

(b) Push the front side of the high–tension cord cover, and connect the front side claw groove of the upper high–tension cord cover to the claw of the lower high–tension cord cover.

(c) Install the upper high–tension cord cover with the two bolts.

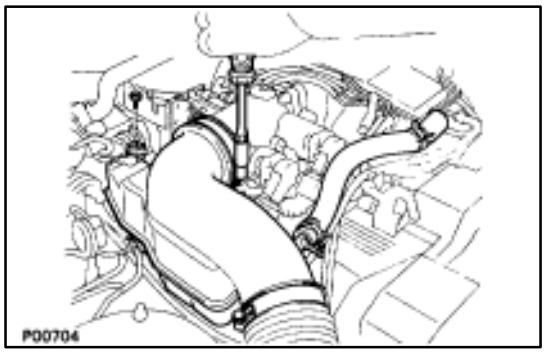

3. INSTALL INTAKE AIR CONNECTOR

(a) Connect the end portions of the intake air connector to the throttle body and air cleaner hose.

(b) Tighten the two hose clamps.

(c) Install the bolt holding the intake air connector to the cylinder head cover.

WhereEverybodyKnowsYourName

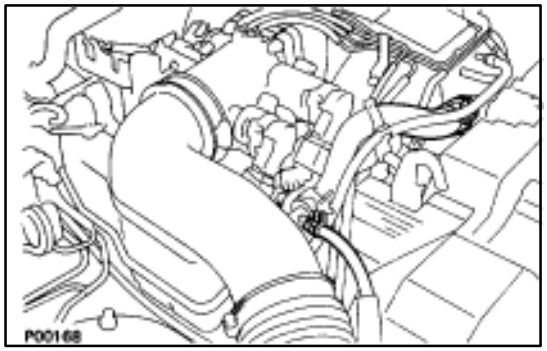

(d) Connect the following hoses:
  (1) Air hose to ISC valve
  (2) Air hose (from PS air control valve) to intake air connector

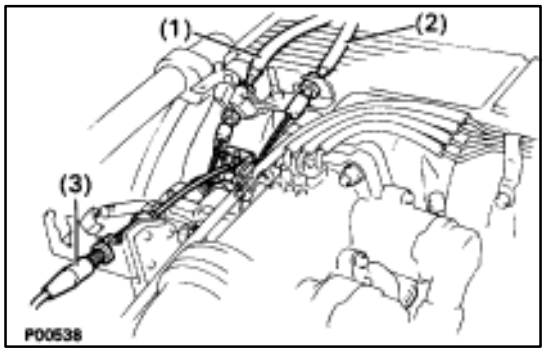

4. CONNECT CONTROL CABLES TO THROTTLE BODY

Connect the following cables:
  (1) Accelerator cable
  (2) A/T throttle control cable
  (3) (w/ Cruise Control System)
  Cruise control actuator cable

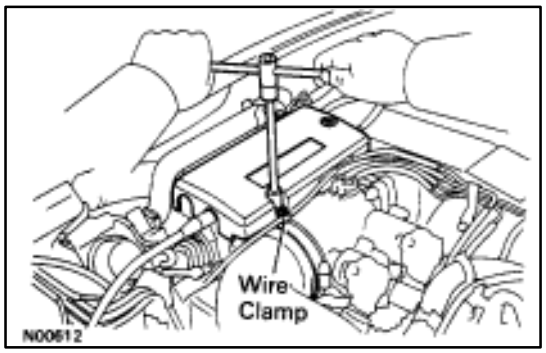

5. INSTALL THROTTLE BODY COVER

Install the throttle body cover and hose clamp with the two bolts and cap nut.

6. CONNECT CABLE TO NEGATIVE TERMINAL OF BATTERY

7. FILL WITH ENGINE COOLANT (See page CO–7)

WhereEverybodyKnowsYourName

Idle Speed Control (ISC) Valve

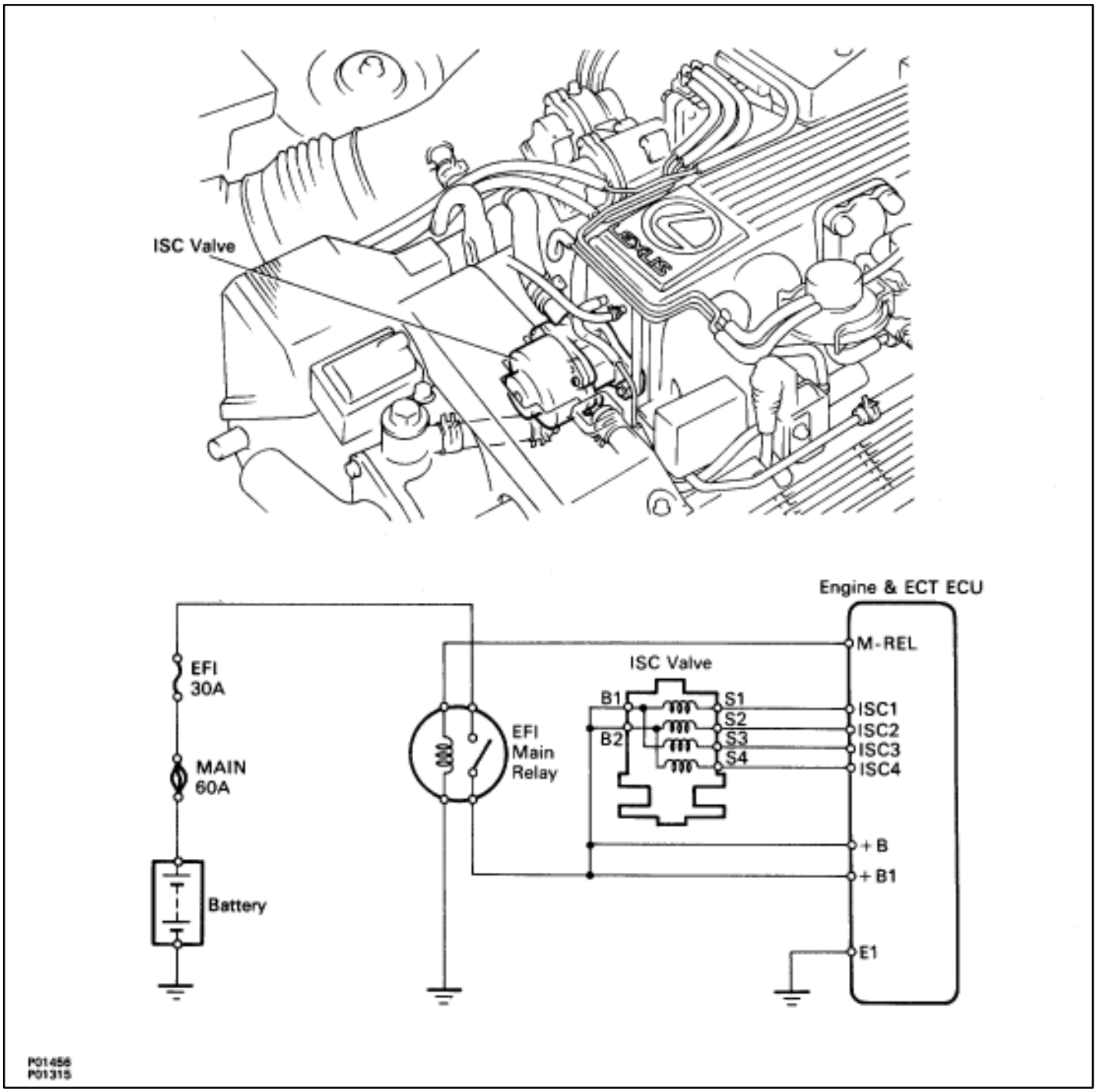

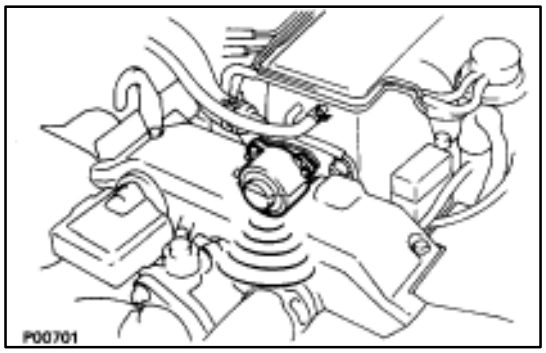

ON–VEHICLE INSPECTION

INSPECT ISC VALVE FOR OPERATING SOUND

Check that there is a clicking sound immediately after stopping the engine.

If the rpm operation is not as specified, check the ISC valve, wiring and ECU.

WhereEverybodyKnowsYourName

COMPONENTS

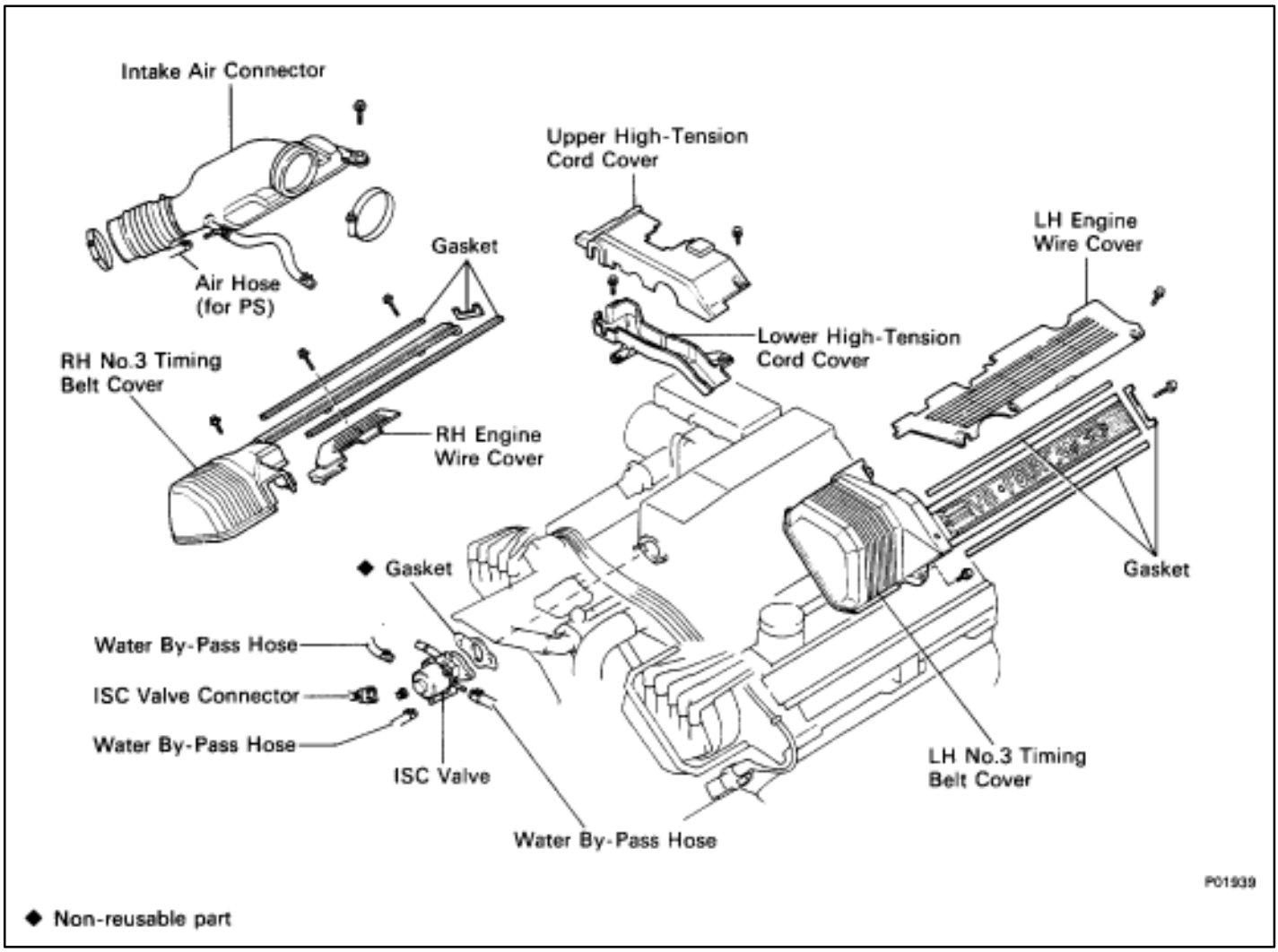

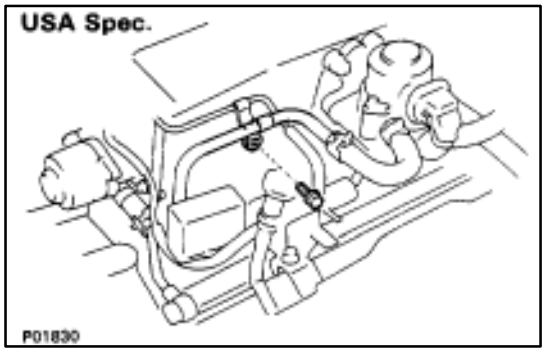

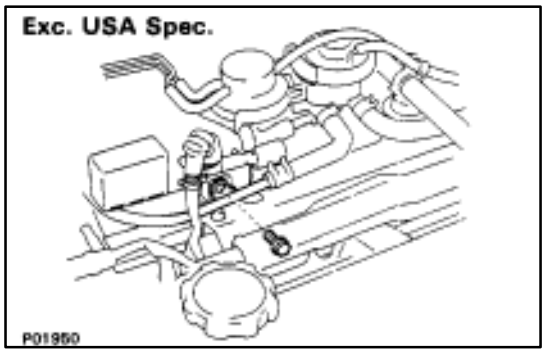

REMOVAL OF ISC VALVE

1. **REMOVE LOWER HIGH–TENSION CORD COVER**
   (See steps 1, 2 and 5 to 12 on pages FI–27 to 29)
2. **REMOVE ISC VALVE**
   (a) Disconnect the ISC valve connector.
   (b) (USA Spec.)
   Remove the bolt holding the water by–pass pipe (between ISC valve and EGR valve) to the air intake chamber.

   (c) (Exc. USA Spec.)
   Remove the bolt holding the water by–pass pipe (between ISC valve and EGR valve) to the VSV (for fuel pressure control).

WhereEverybodyKnowsYourName

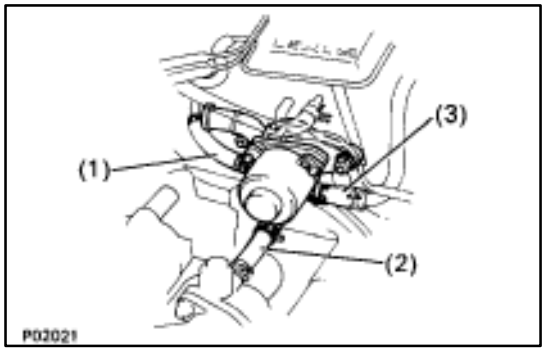

(d) Disconnect the following hoses from the ISC valve:
  (1) Water by–pass hose (from throttle valve)
  (2) Water by–pass hose (from water inlet housing)
  (3) Water by–pass hose (from EGR valve)

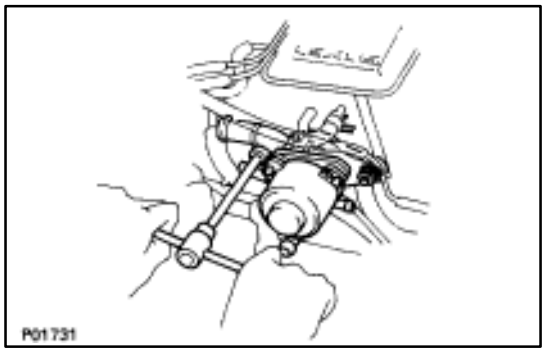

(e) Remove the two nuts, ISC valve and gasket.

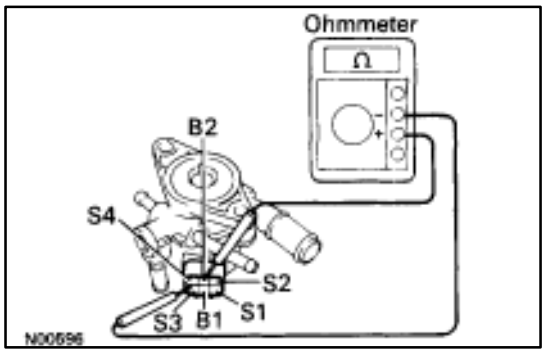

INSPECTION OF ISC VALVE

1. INSPECT ISC VALVE RESISTANCE

Using an ohmmeter, measure the resistance between the terminals (B1–S1 and S3, B2–S2 and S4).

Resistance: 10–30 ?

If resistance is not as specified, replace the ISC valve.

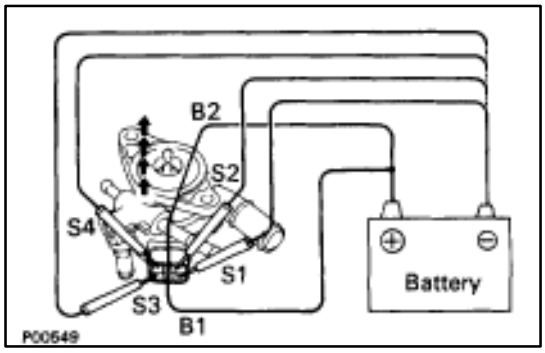

2. INSPECT ISC VALVE OPERATION

(a) Apply battery voltage to terminals B1 and B2, and while repeatedly grounding S1–S2–S3–S4–S1 in sequence, and check that the valve moves toward the closed position.

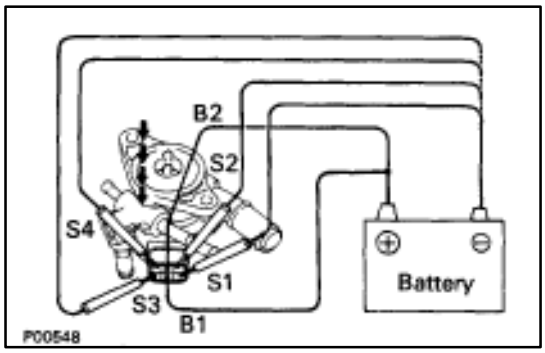

(b) Apply battery voltage to terminals B1 and B2, and while repeatedly grounding S4–S3–S2–S1–S4 in sequence, and check that the valve moves toward the open position.

If operation is not as specified, replace the ISC valve.

WhereEverybodyKnowsYourName

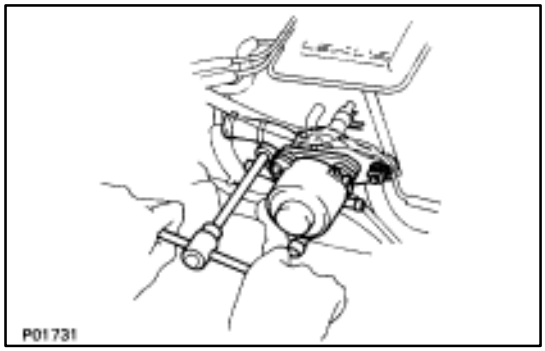

INSTALLATION OF ISC VALVE

(See Components on page FI–81)

1. INSTALL ISC VALVE

(a) Install a new gasket and the ISC valve with the two nuts.
Torque: 18 N·m (185 kgf·cm, 13 ft·lbf)

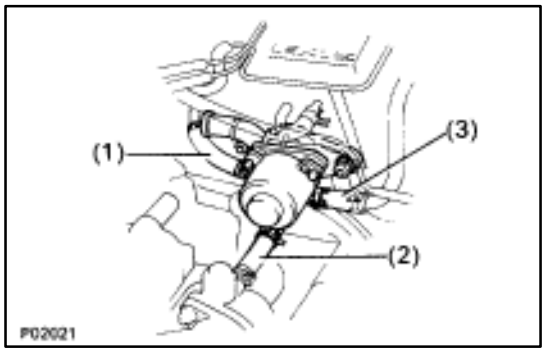

(b) Connect the following hoses to the ISC valve:
(1) Water by–pass hose (from throttle valve)
(2) Water by–pass hose (from water inlet housing)
(3) Water by–pass hose (from EGR valve)

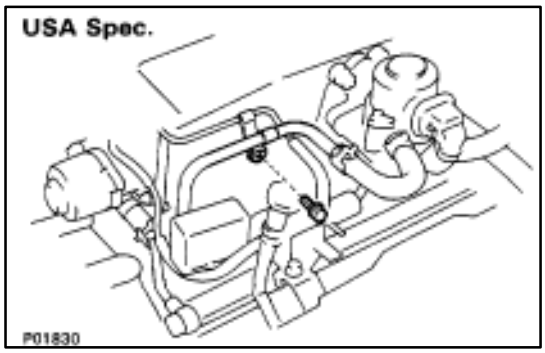

(c) (USA Spec.)
Install the vacuum pipe and water by–pass pipe (between ISC valve and EGR valve) to the air intake chamber with the bolt.

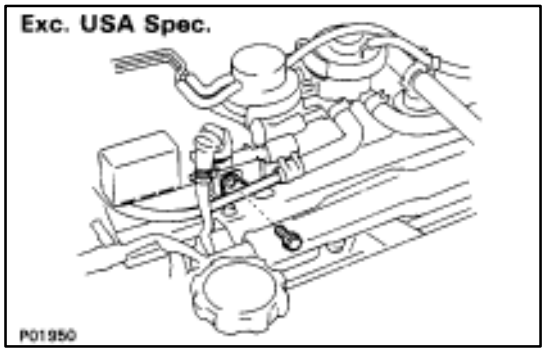

(d) (Exc. USA Spec.)
Install the water by–pass pipe (between ISC valve and EGR valve) to the VSV (for fuel pressure control) with the bolt.

(e) Connect the ISC valve connector.

1. INSTALL LOWER HIGH–TENSION CORD COVER
(See steps 5 to 13 and 16 to 18 on pages FI–39 to 41)

WhereEverybodyKnowsYourName

ELECTRONIC CONTROL SYSTEM
Location of Electronic Control Parts

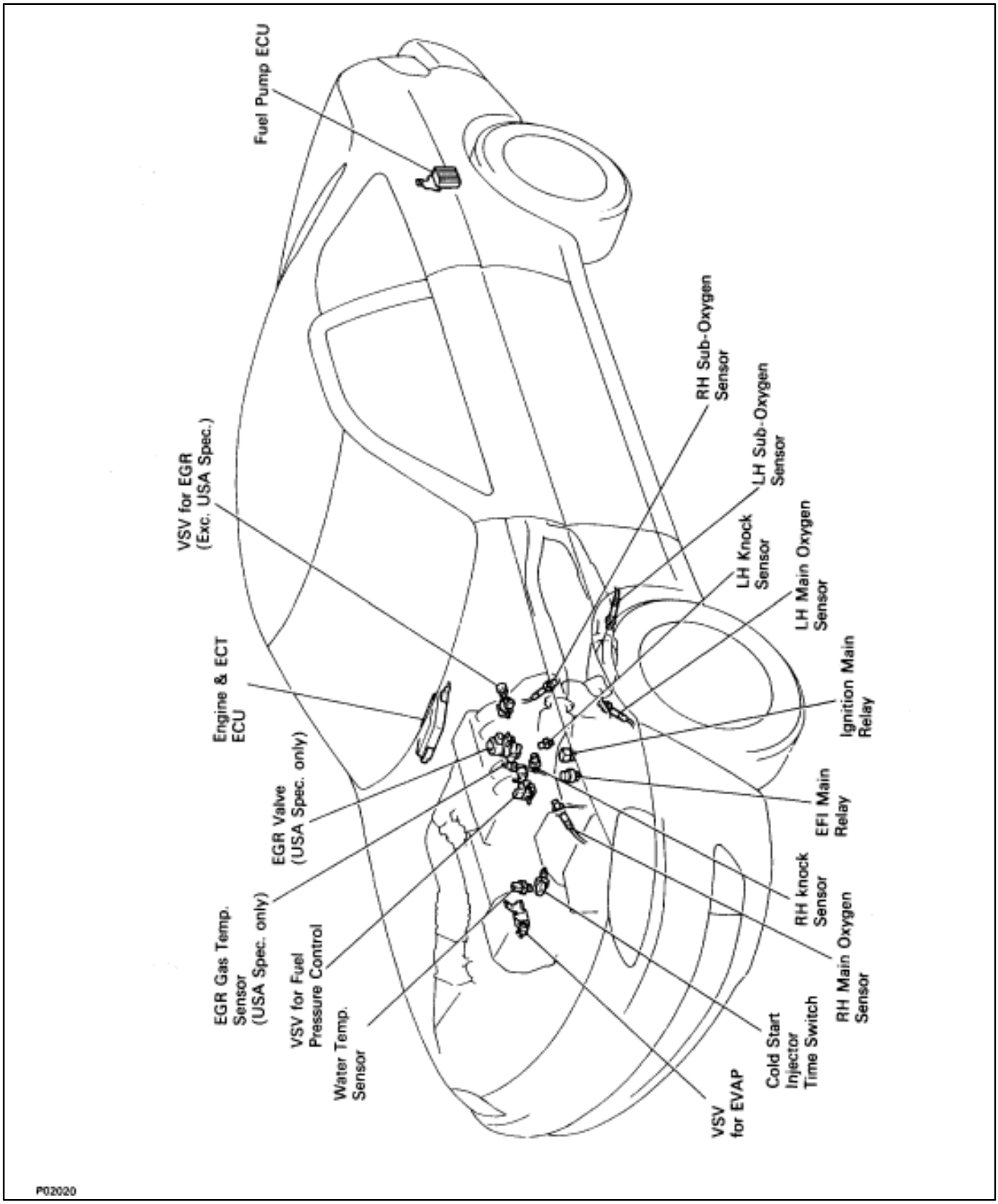

WhereEverybodyKnowsYourName

EFI Main Relay

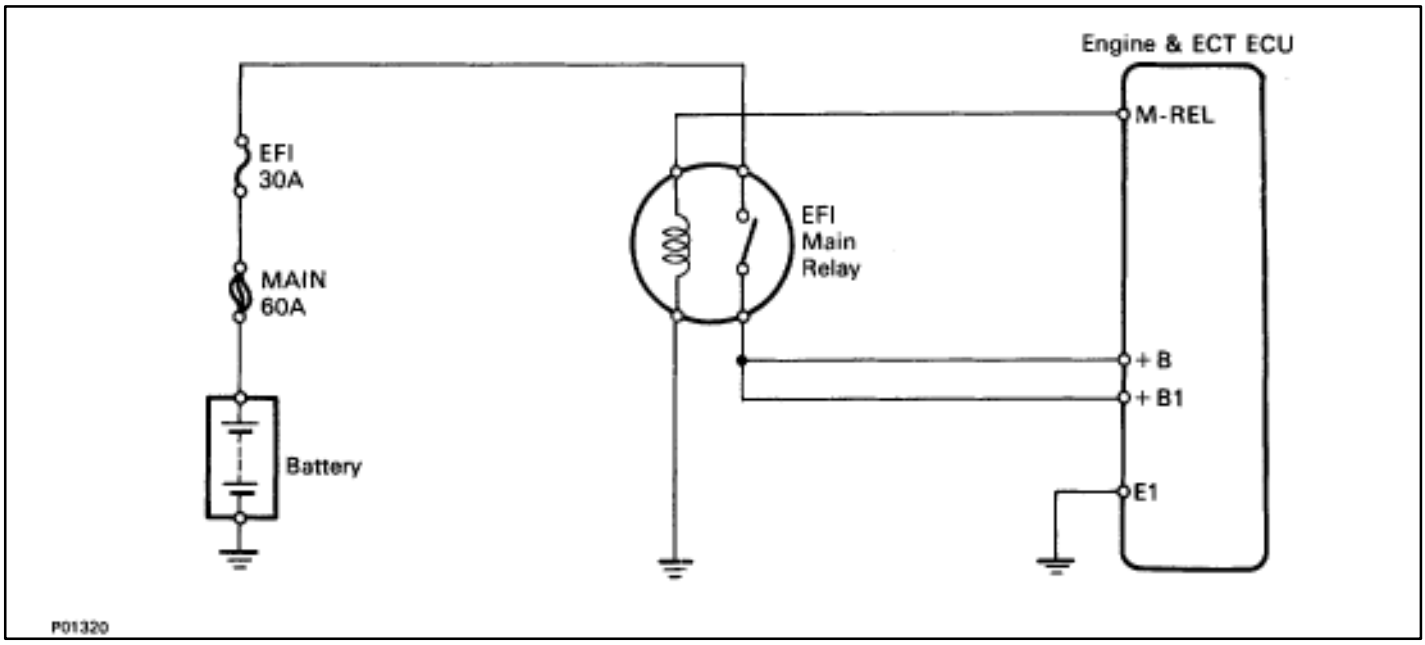

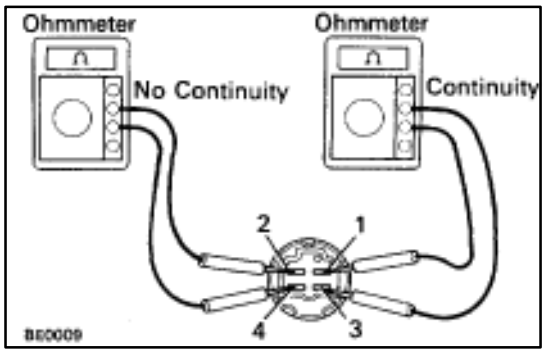

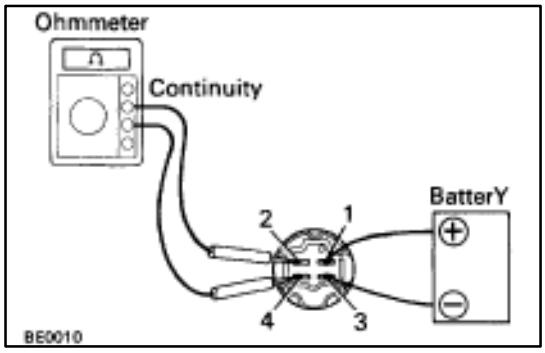

INSPECTION OF EFI MAIN RELAY

1. REMOVE EFI MAIN RELAY FROM RELAY BOX IN ENGINE COMPARTMENT

2. INSPECT EFI MAIN RELAY

A. Inspect relay continuity

(a) Using an ohmmeter, check that there is continuity between terminals 1 and 3.

(b) Check that there is no continuity between terminals 2 and 4.

If continuity is not as specified, replace the relay.

B. Inspect relay operation

(a) Apply battery voltage across terminals 1 and 3.

(b) Using an ohmmeter, check that there is continuity between terminals 2 and 4.

If operation is not as specified, replace the relay.

3. REINSTALL EFI MAIN RELAY

WhereEverybodyKnowsYourName

Ignition Main Relay

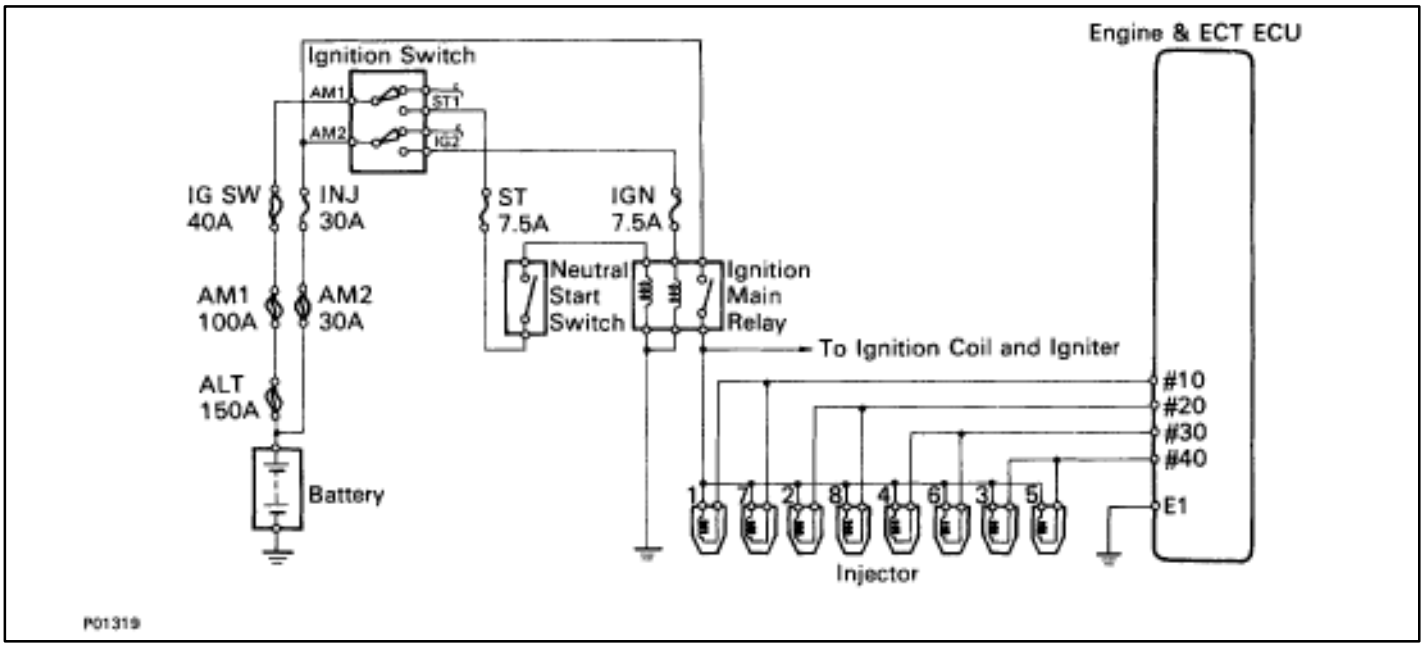

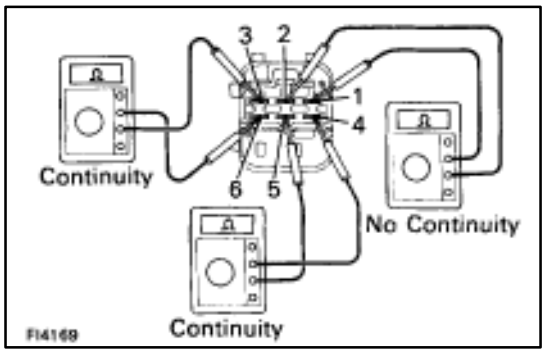

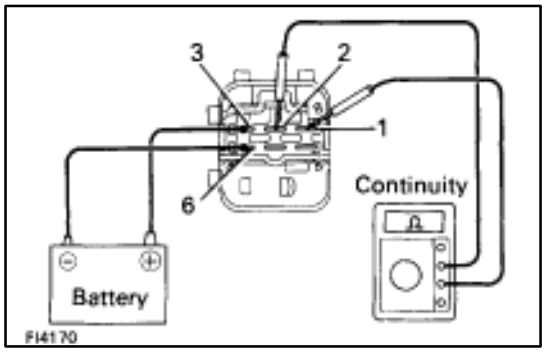

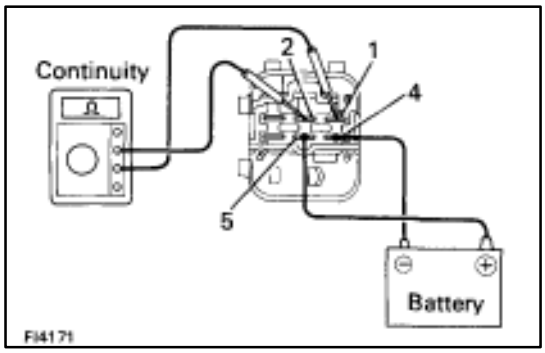

INSPECTION OF IGNITION MAIN RELAY

1. REMOVE IGNITION MAIN RELAY FROM RELAY BOX IN ENGINE COMPARTMENT

2. INSPECT IGNITION MAIN RELAY

A. Inspect relay continuity

(a) Using an ohmmeter, check that there is continuity between terminals 3 and 6.

(b) Check that there is continuity between terminals 4 and 5.

(c) Check that there is no continuity between terminals 1 and 2.

If continuity is not as specified, replace the relay.

B. Inspect relay operation

(a) Apply battery voltage across terminals 3 and 6.

(b) Using an ohmmeter, check that there is continuity between terminals 1 and 2.

(c) Apply battery voltage across terminals 4 and 5.

(d) Check that there is continuity between terminals 1 and 2.

If operation is not as specified, replace the relay.

3. REINSTALL IGNITION MAIN RELAY

WhereEverybodyKnowsYourName

Cold Start Injector Time Switch

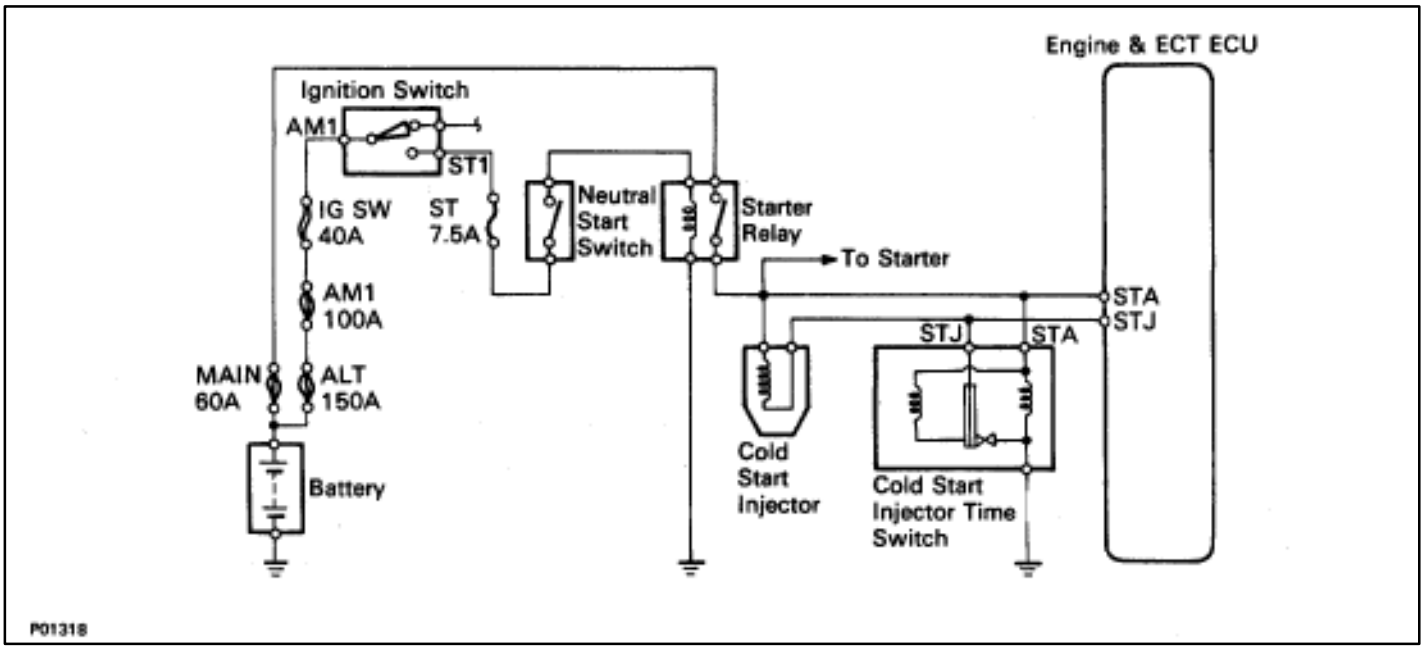

COMPONENTS FOR REMOVAL AND INSTALLATION

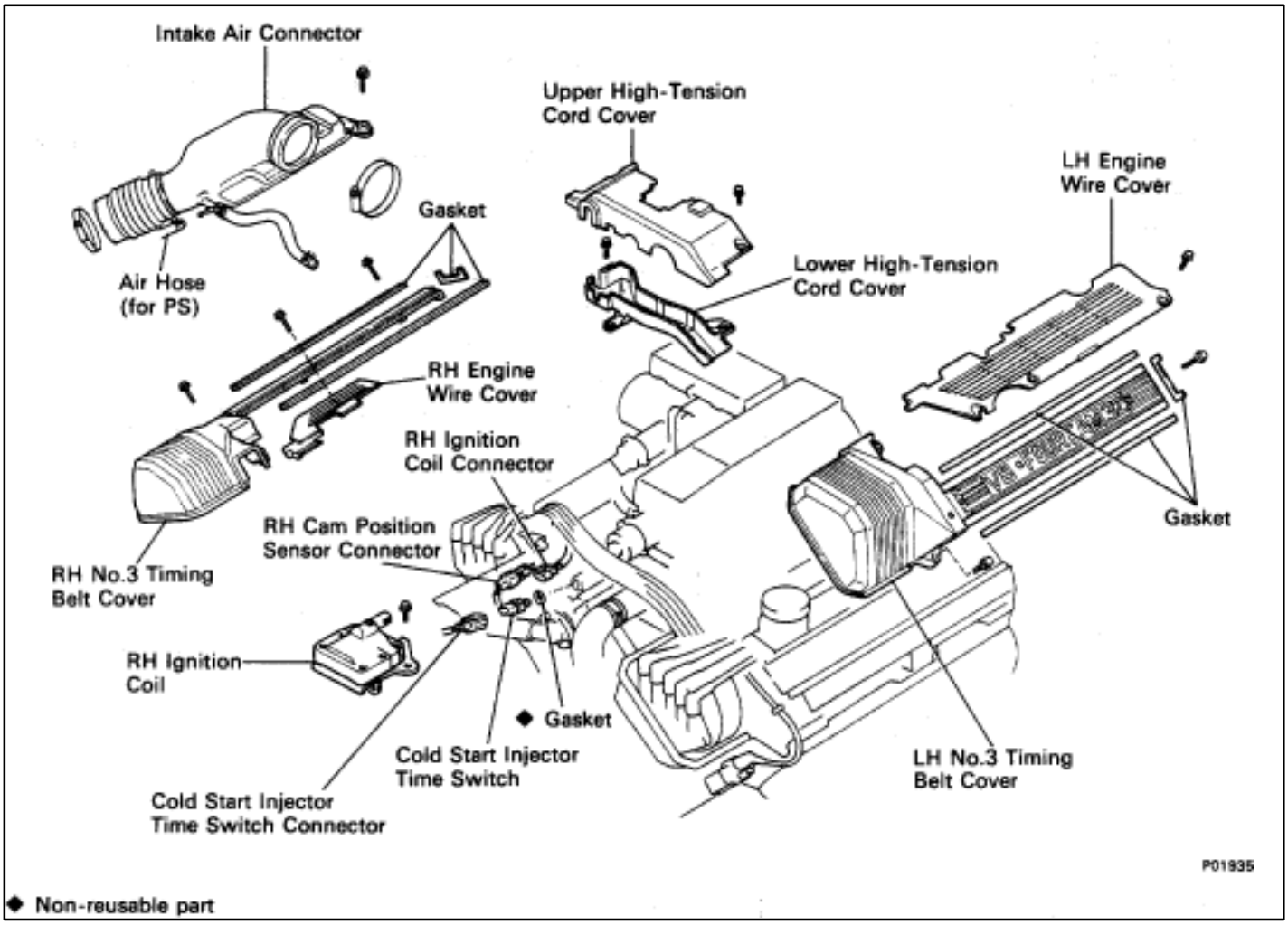

WhereEverybodyKnowsYourName

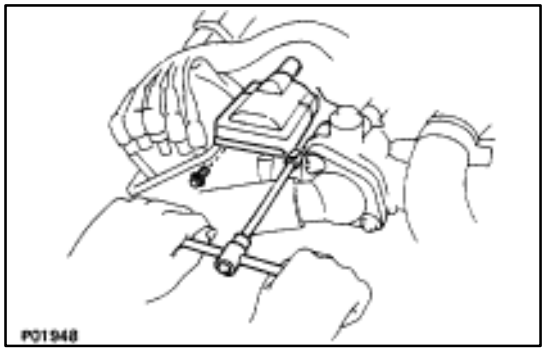

INSPECTION OF COLD START INJECTOR TIME SWITCH

1. REMOVE LOWER HIGH–TENSION CORD COVER (See steps 1, 2 and 5 to 12 on pages FI–27 to 29)

2. REMOVE RH IGNITION COIL

(a) Disconnect the ignition coil connector.

(b) Remove the two bolts, and disconnect the ignition coil.

(c) Disconnect the cam position sensor connector from the ignition coil bracket, and remove the ignition coil.

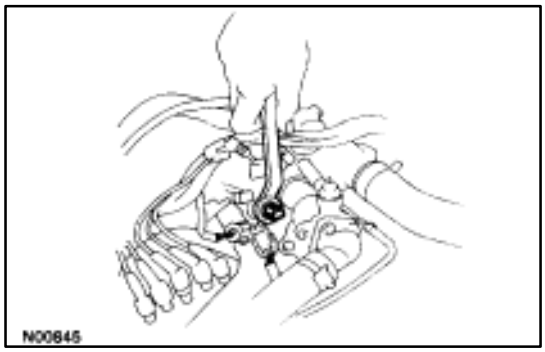

3. REMOVE COLD START INJECTOR TIME SWITCH

(a) Disconnect the injector time switch connector.

(b) Remove the injector time switch and gasket.

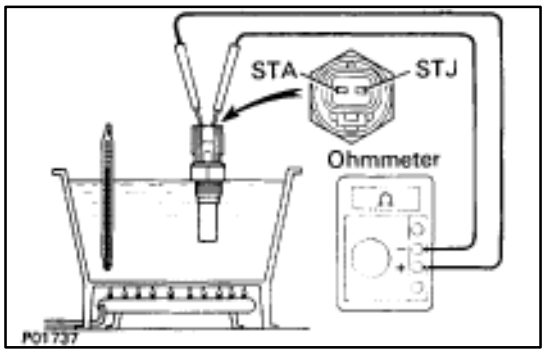

4. INSPECT COLD START INJECTOR TIME SWITCH

Using an ohmmeter, measure the resistance between each terminal.

Resistance:

STA–STJ	**25–45 ? below 15˚C (59˚F)**	
	65–85 ? above 30˚C (86˚F)	
STA–Ground	**25–85 ?**	

If the resistance is not as specified, replace the switch.

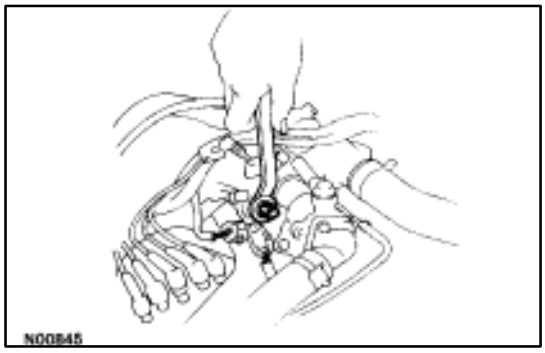

5. REINSTALL COLD START INJECTOR TIME SWITCH

(a) Install a new gasket to the injector time switch.

(b) Install the injector time switch.

Torque: 34 N·m (350 kgf·cm, 25 ft·lbf)

(c) Connect the injector time switch connector.

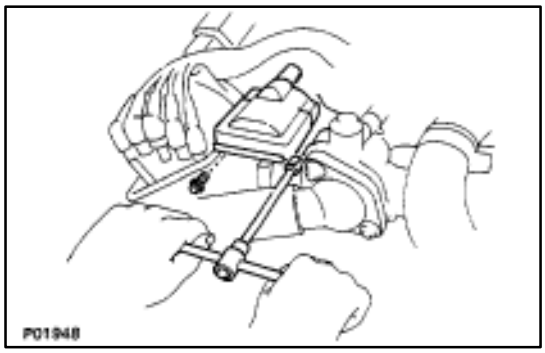

6. REINSTALL RH IGNITION COIL

(a) Install the ignition coil with the two bolts.

WhereEverybodyKnowsYourName

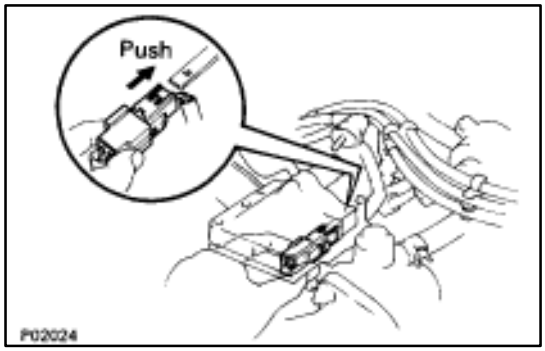

(b) Install the cam position sensor connector to the ignition coil bracket.

(c) Connect the ignition coil connector.

7. REINSTALL LOWER HIGH–TENSION CORD COVER (See steps 1 to 13 and 16 to 18 on pages FI–39 to 41)

WhereEverybodyKnowsYourName

VSV for Fuel Pressure Control

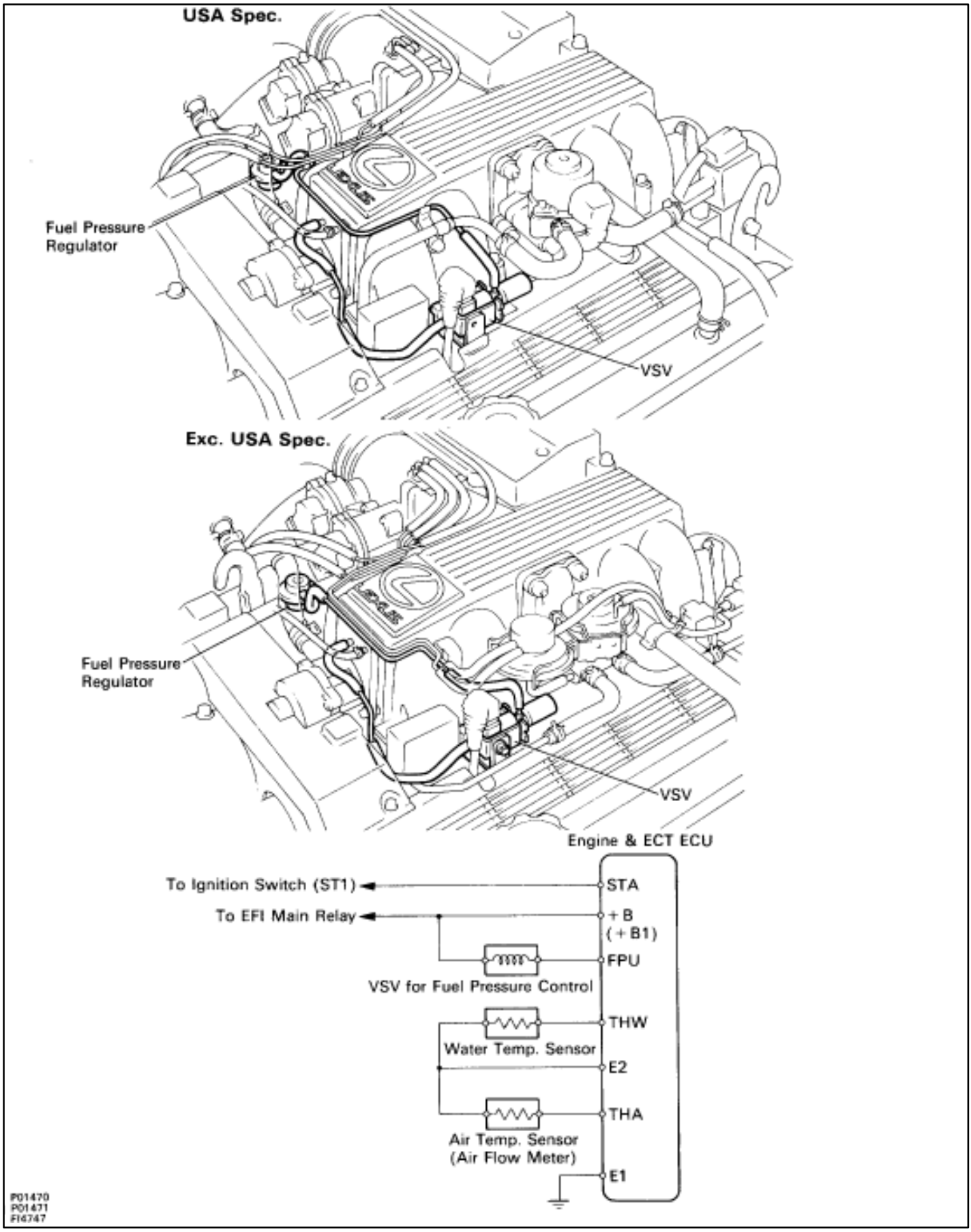

WhereEverybodyKnowsYourName

COMPONENTS FOR REMOVAL AND INSTALLATION

Exc. USA Spec.

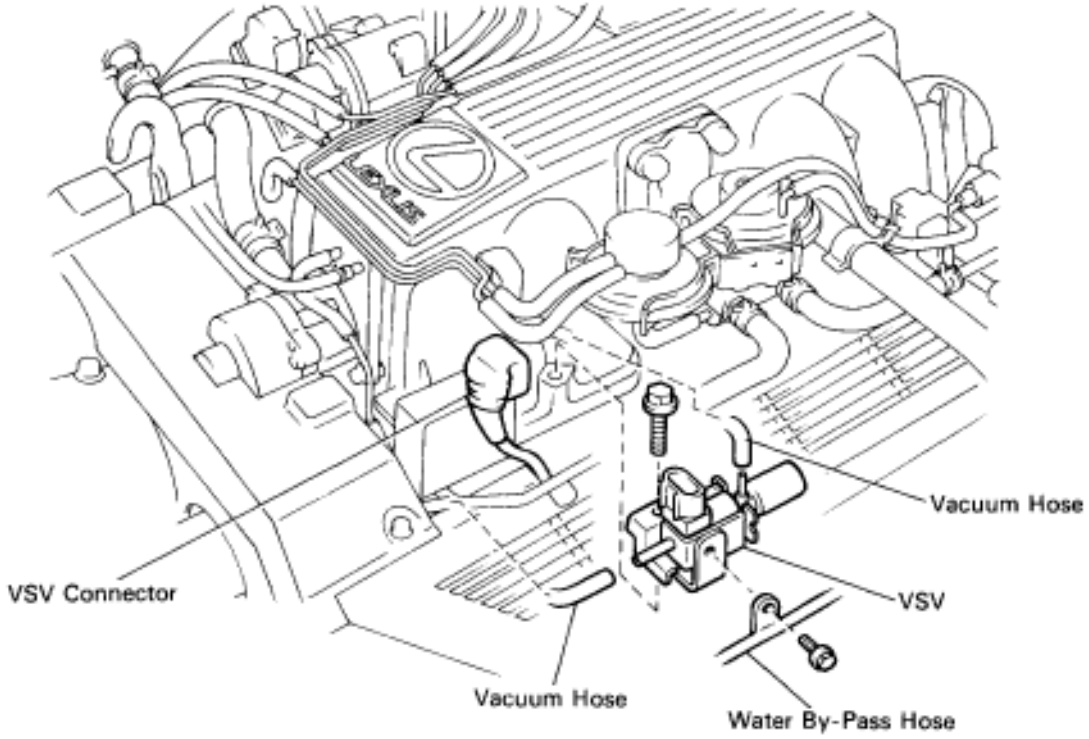

P01460

USA Spec.

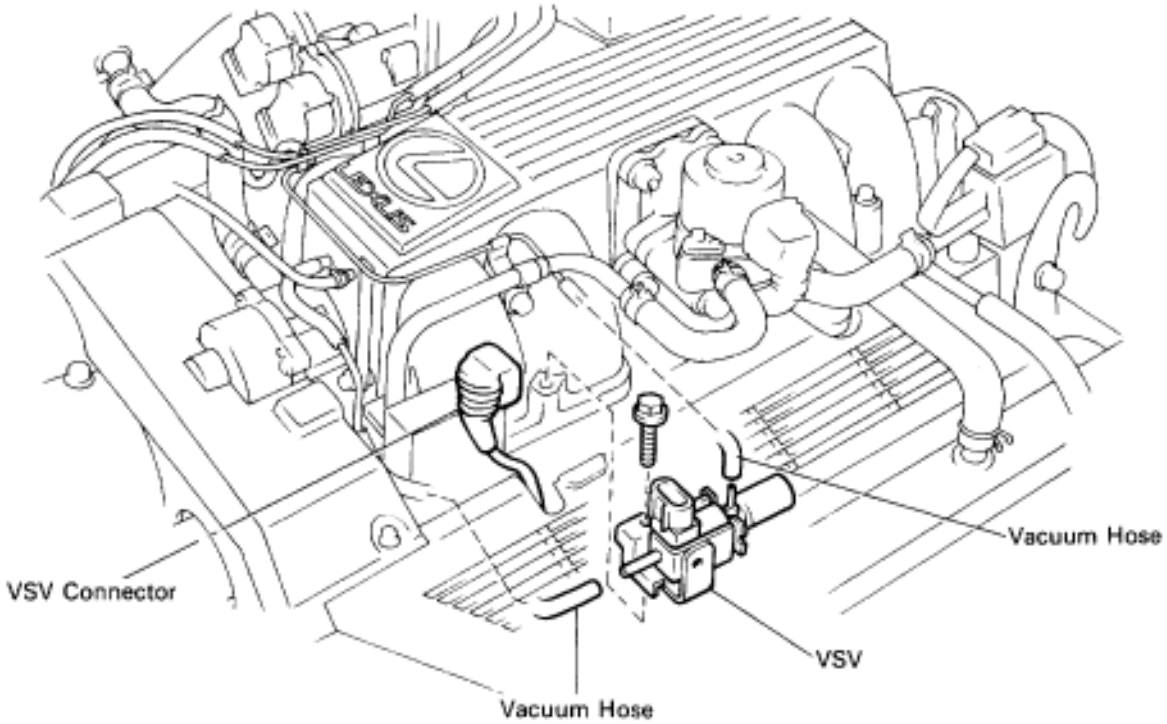

P01459

WhereEverybodyKnowsYourName

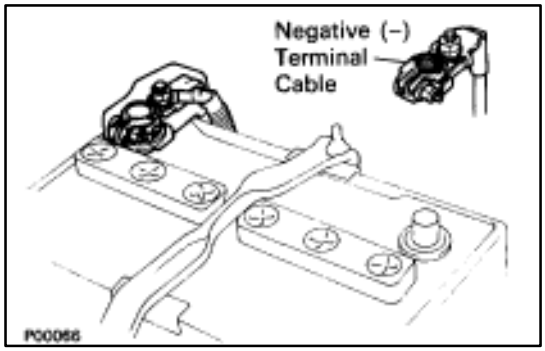

INSPECTION OF VSV FOR FUEL PRESSURE CONTROL

1. DISCONNECT CABLE FROM NEGATIVE TERMINAL OF BATTERY

CAUTION: Work must be started after approx. 20 seconds or longer from the time the ignition switch is turned to the "LOCK" position and the negative (–) terminal cable is disconnected from the battery.

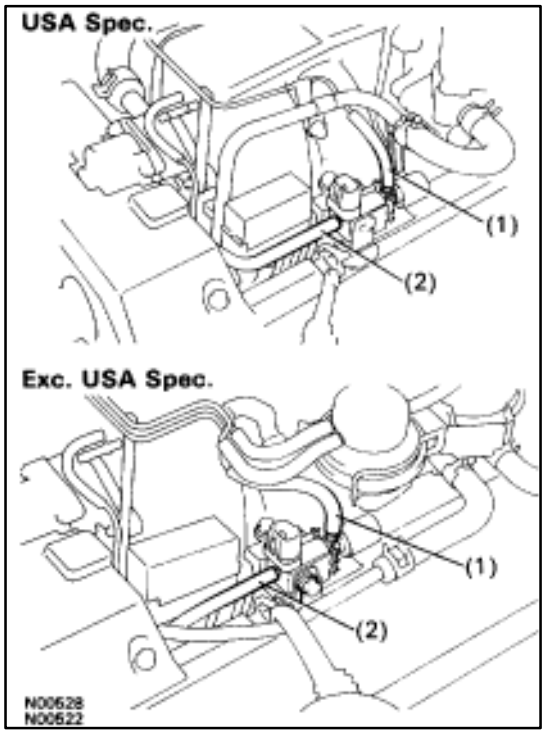

2. REMOVE VSV

(a) Disconnect the VSV connector.

(b) Disconnect the following hoses from VSV:

(1) Vacuum hose (from fuel pressure regulator)

(2) Vacuum hose (from air intake chamber)

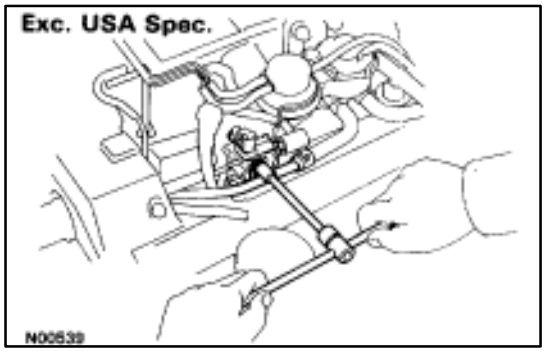

(c) (Exc. USA Spec.)
Remove the bolt holding the water by–pass pipe to the VSV.

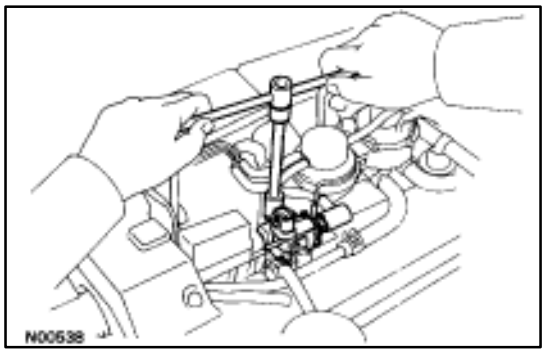

(d) Remove the bolt and VSV.

WhereEverybodyKnowsYourName

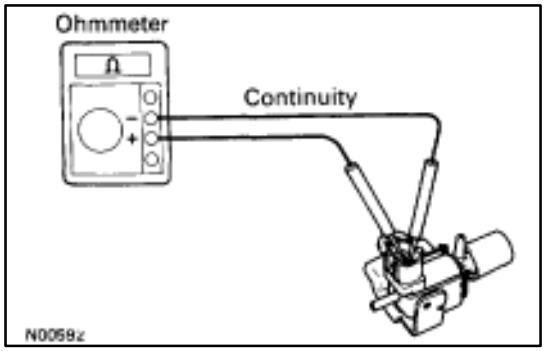

3. INSPECT VSV

A. Inspect VSV for open circuit

Using an ohmmeter, check that there is continuity between the terminals.

Resistance (Cold): 37–44 ?

If there is no continuity, replace the VSV.

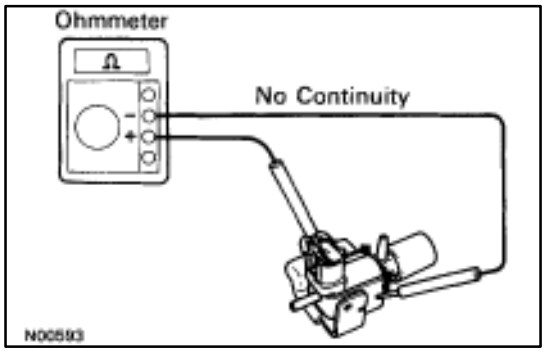

B. Inspect VSV for ground

Using an ohmmeter, check that there is no continuity between each terminal and the body.

If there is continuity, replace the VSV.

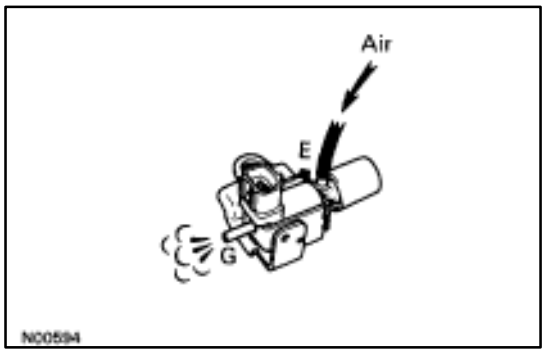

C. Inspect VSV operation

(a) Check that air flows from ports E to G.

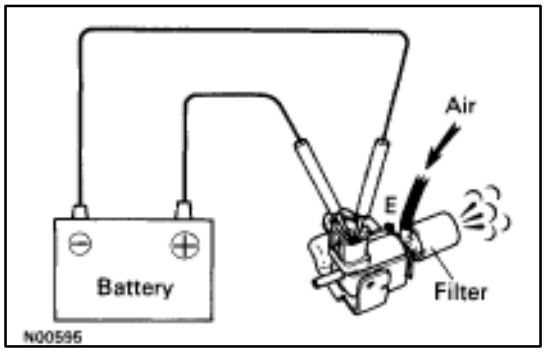

(b) Apply battery voltage across the terminals.

(c) Check that air flows from ports E to the filter.

If operation is not as specified, replace the VSV.

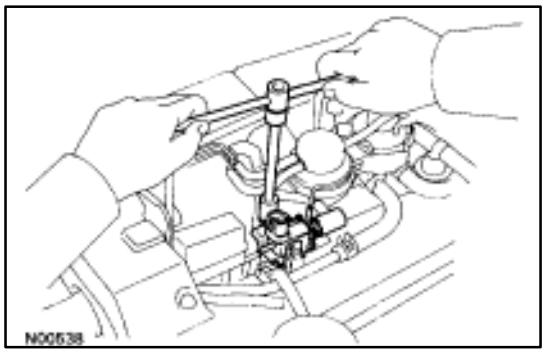

4. REINSTALL VSV

(a) Install the VSV with the bolt.

Torque: 18 N·m (185 kgf·cm, 13 ft·lbf)

WhereEverybodyKnowsYourName

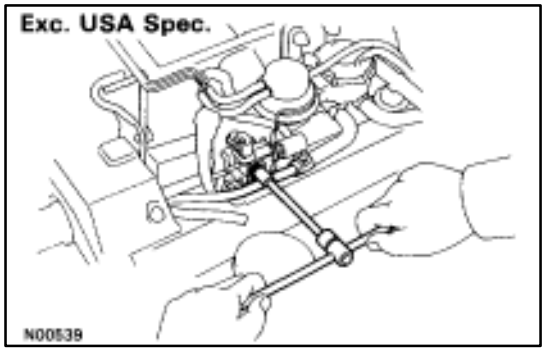

(b) (Exc. USA Spec.)
Install the water by–pass pipe to the VSV with the bolt.

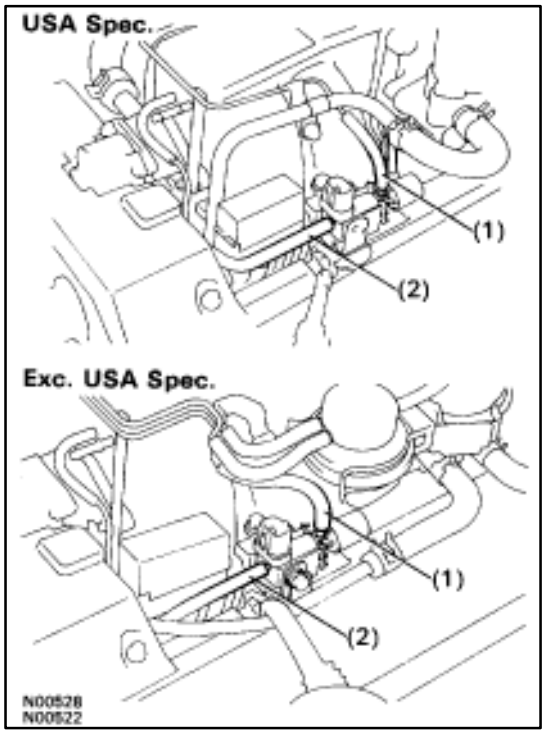

(c) Connect the following hoses to VSV:
(1) Vacuum hose (from fuel pressure regulator)
(2) Vacuum hose (from air intake chamber)

(d) Connect the VSV connector.

5. RECONNECT CABLE TO NEGATIVE TERMINAL OF BATTERY

WhereEverybodyKnowsYourName

VSV for EVAP

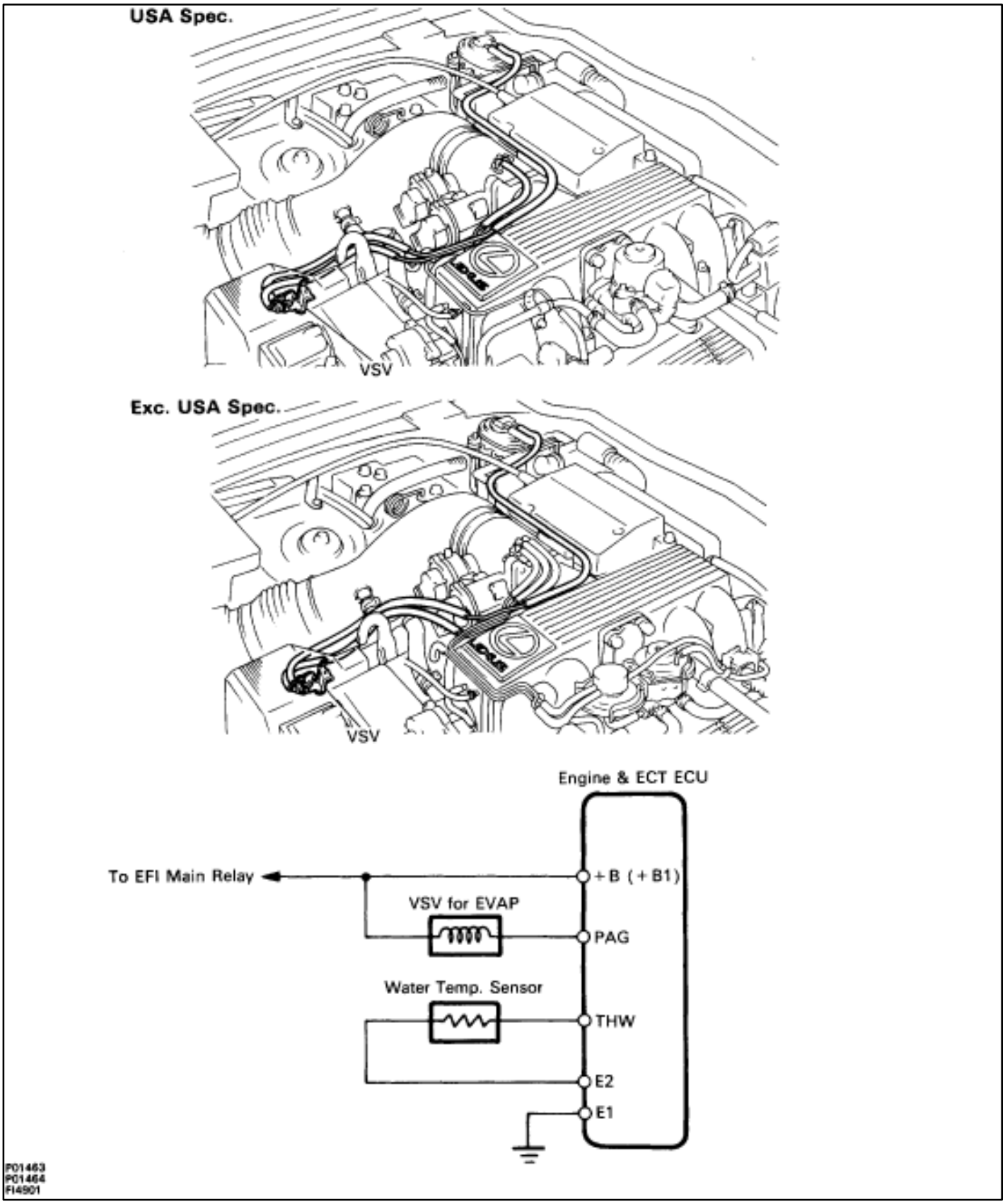

INSPECTION OF VSV FOR EVAP

(See Emission Control System on page EC–11)

WhereEverybodyKnowsYourName

VSV for EGR (Exc. USA Spec.)

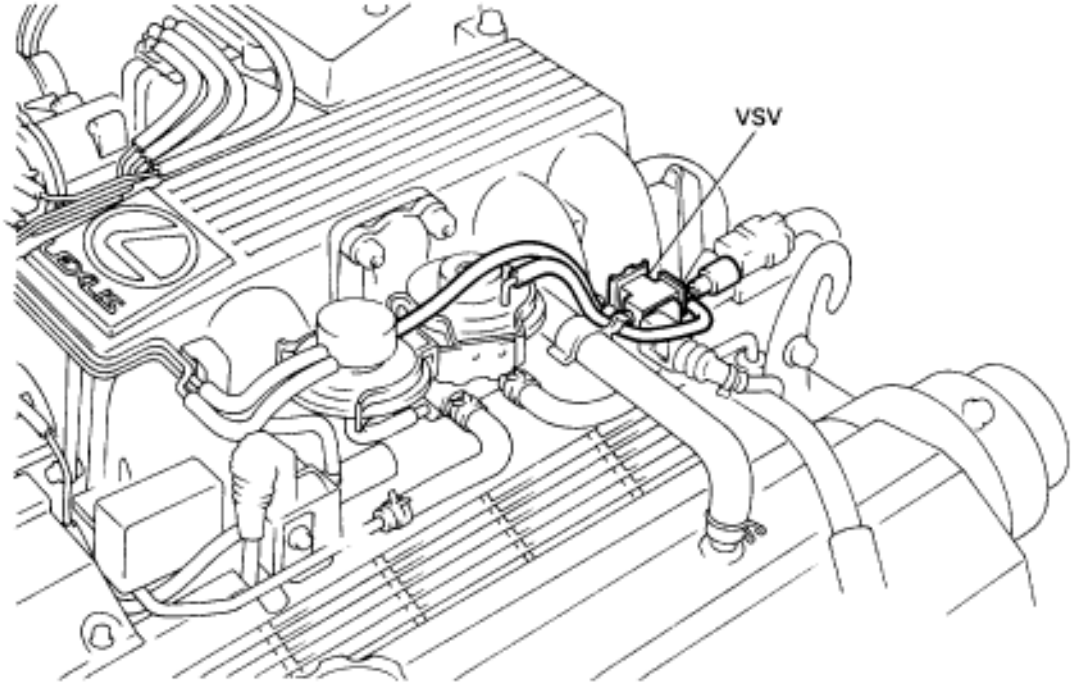

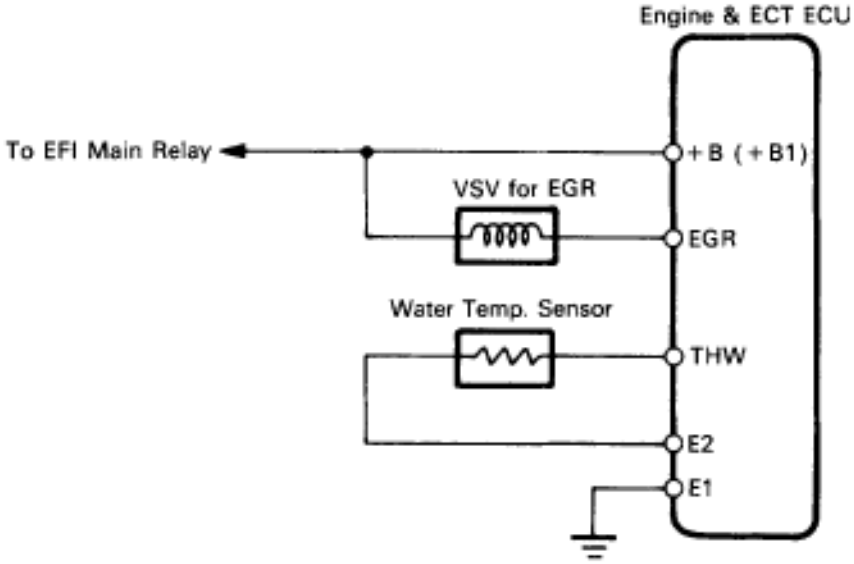

P01455
FI4901

INSPECTION OF VSV FOR EGR

(See Emission Control Systems on page EC–18)

WhereEverybodyKnowsYourName

EGR Valve (USA Spec. only)

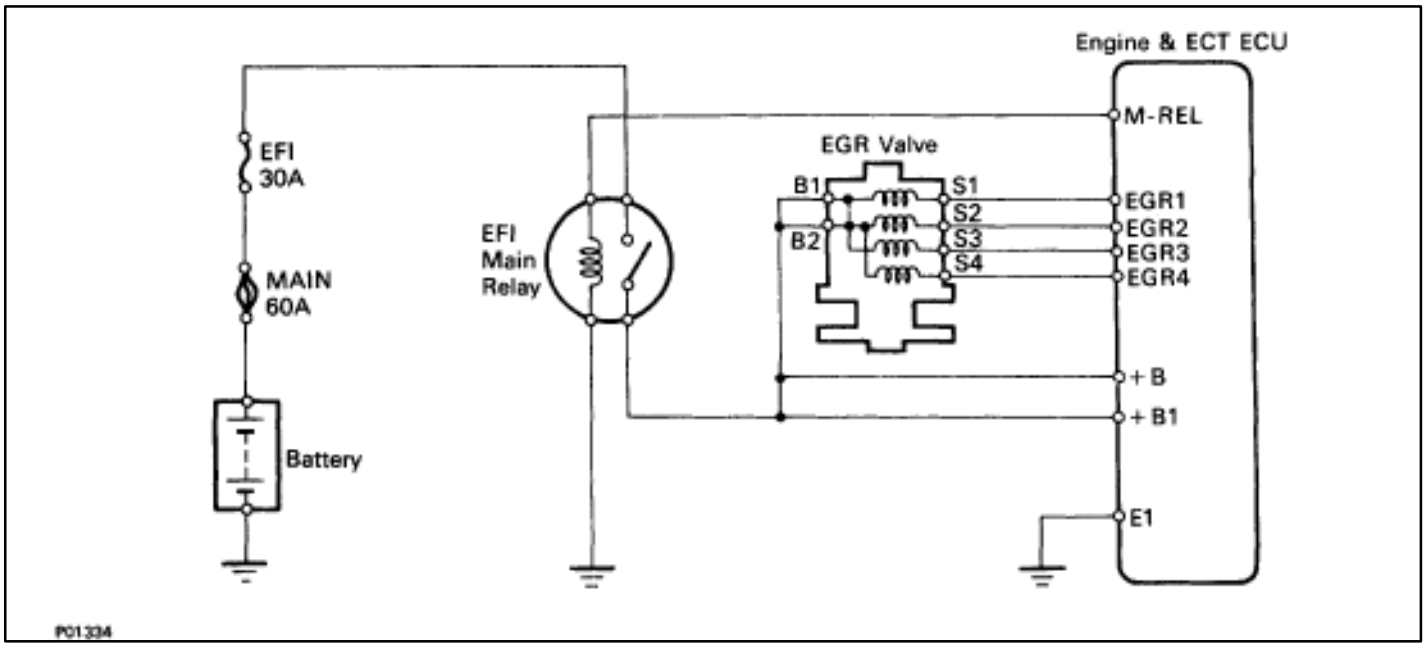

INSPECTION OF VSV FOR EGR

(See Emission Control Systems on page EC–21)

WhereEverybodyKnowsYourName

Water Temperature Sensor

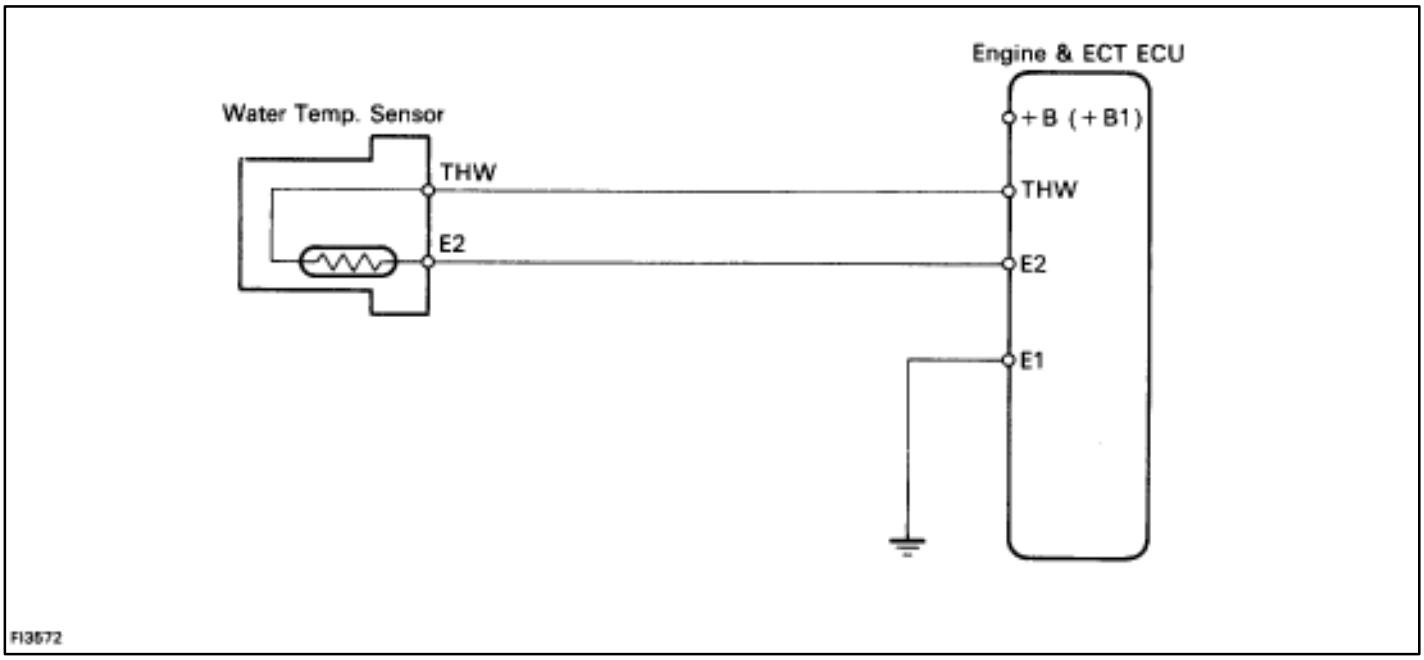

COMPONENTS FOR REMOVAL AND INSTALLATION

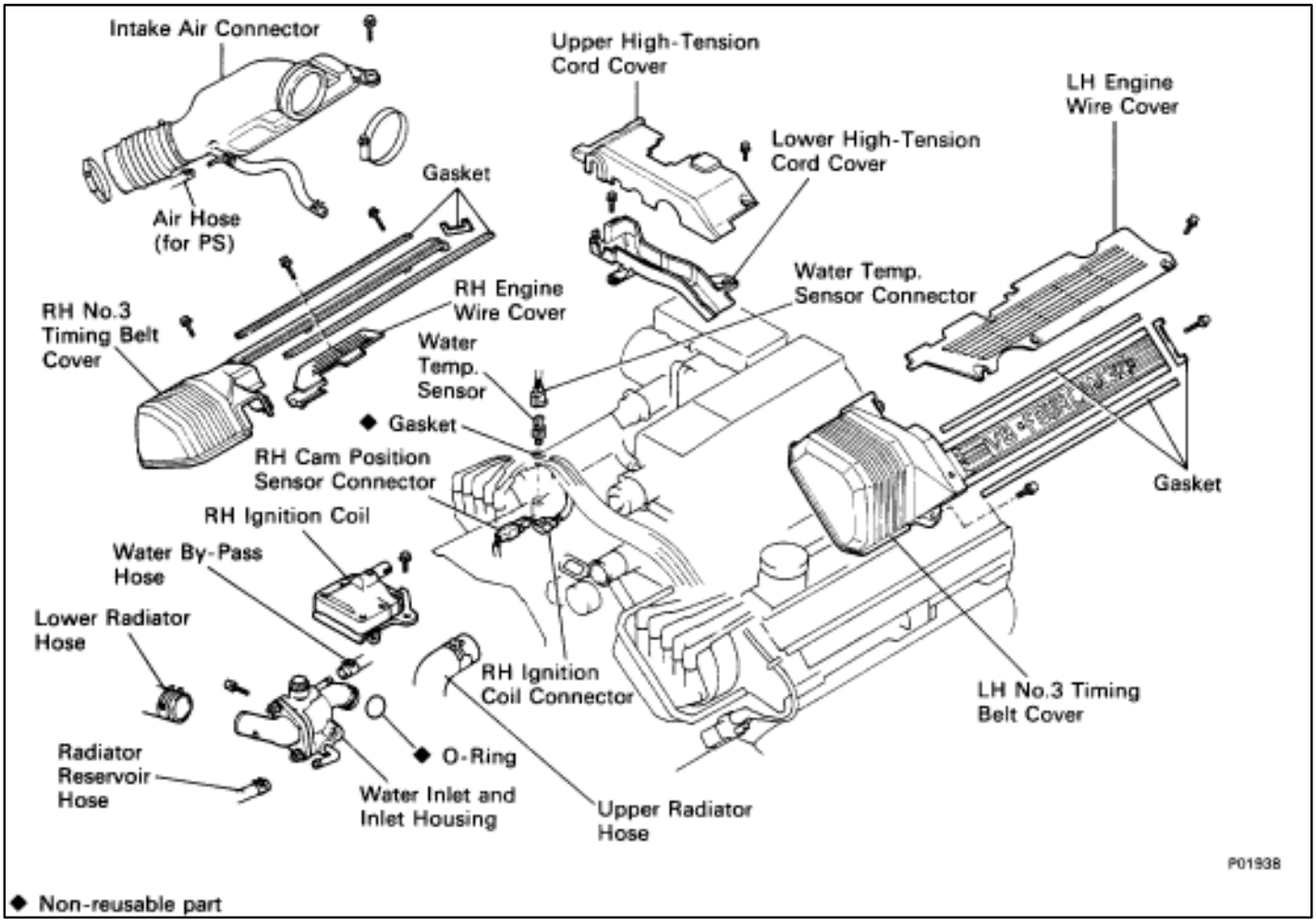

WhereEverybodyKnowsYourName

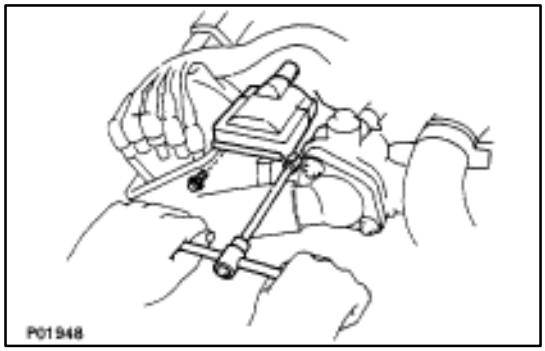

INSPECTION OF WATER TEMPERATURE SENSOR

1. REMOVE LOWER HIGH–TENSION CORD COVER
(See steps 1, 2 and 5 to 12 on pages FI–27 to 29)

2. REMOVE RH IGNITION COIL

(a) Disconnect the ignition coil connector.
(b) Remove the two bolts, and disconnect the ignition coil.
(c) Disconnect the cam position sensor connector from the ignition coil bracket, and remove the ignition coil.

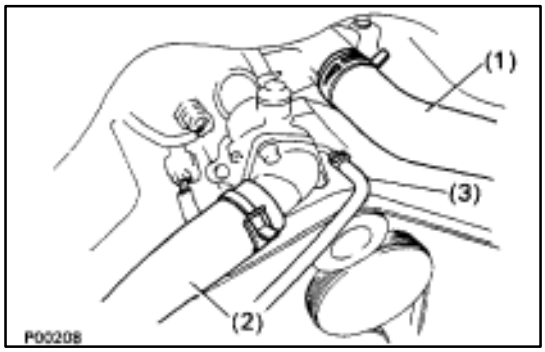

3. DISCONNECT HOSES

Disconnect the following hoses:
(1) Upper radiator hose from front water by–pass joint
(2) Lower radiator hose from water inlet
(3) Radiator reservoir hose from front water inlet housing

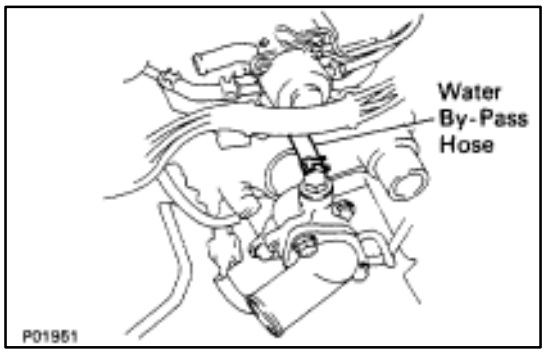

4. REMOVE WATER INLET AND INLET HOUSING

(a) Disconnect the water by–pass hose from the water inlet housing.

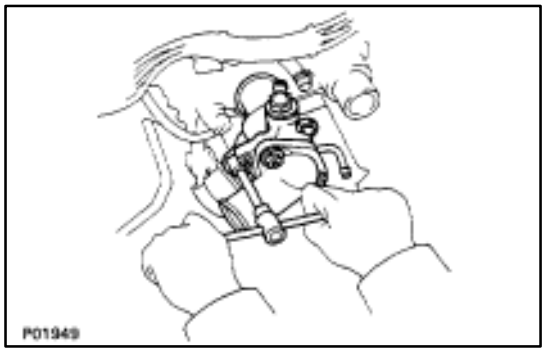

(b) Remove the two bolts holding the water inlet housing to the water pump.
(c) Pull out the water inlet and inlet housing assembly.
(d) Remove the O–ring from the water inlet housing.

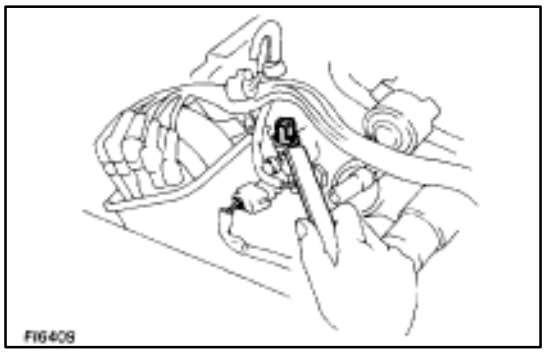

5. REMOVE WATER TEMPERATURE SENSOR

(a) Disconnect the water temperature sensor connector.
(b) Remove the water temperature sensor and gasket.

WhereEverybodyKnowsYourName

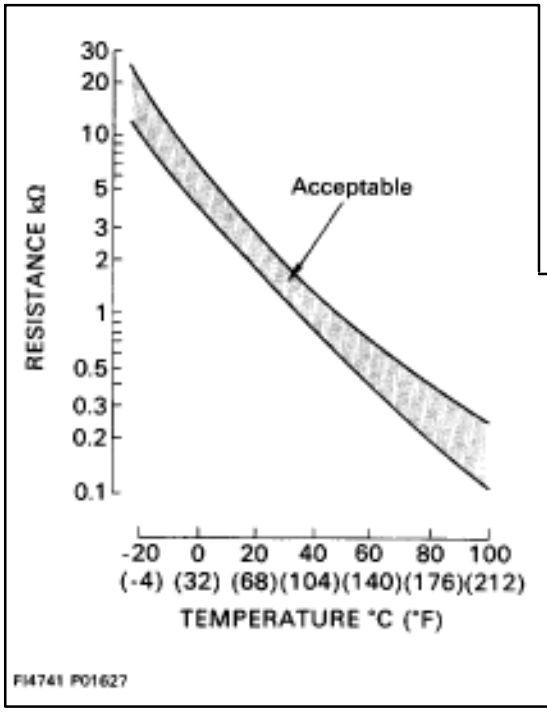

6. INSPECT WATER TEMPERATURE SENSOR

Using an ohmmeter, measure the resistance between the terminals.

Resistance: Refer to the chart graph

If the resistance is not as specified, replace the sensor.

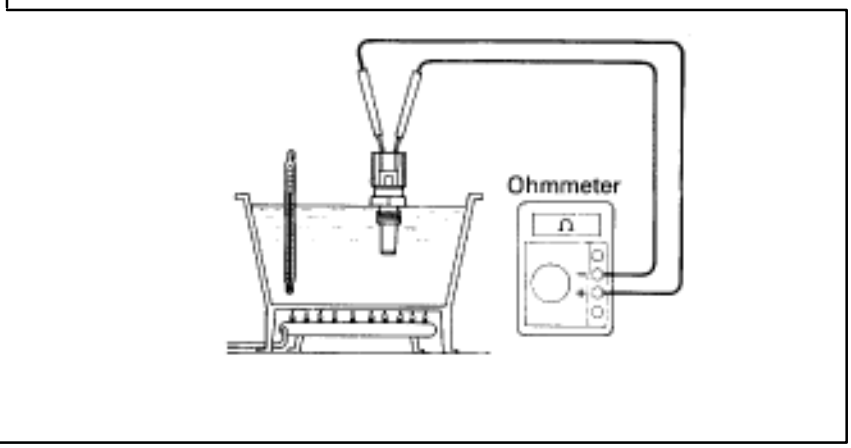

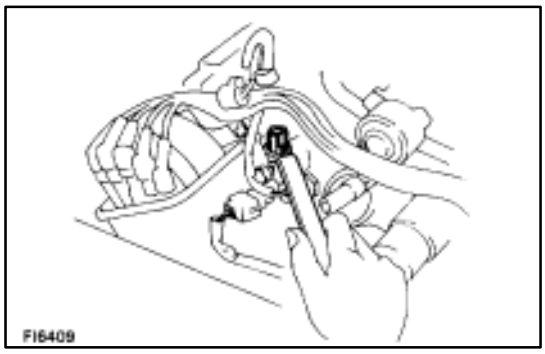

7. REINSTALL WATER TEMPERATURE SENSOR

(a) Install a new gasket to the water temperature sensor.

(b) Install the water temperature sensor.

Torque: 20 N·m (200 kgf·cm, 14 ft·lbf)

(c) Connect the water temperature sensor connector.

8. REINSTALL WATER INLET AND INLET HOUSING

(a) Remove any old packing (FIPG) material and be careful not to drop any oil on the contact surfaces of the water inlet housing and water pump.

- Using a razor blade and gasket scraper, remove all the old packing (FIPG) material from the gasket surfaces and sealing groove.
- Thoroughly clean all components to remove all the loose material.
- Using a non–residue solvent, clean both sealing surfaces.

(b) Apply seal packing to the sealing groove of the water inlet housing as shown in the illustration.

Seal packing: Part No. 08826–00100 or equivalent

- Install a nozzle that has been cut to a 2–3 mm (0.08–0.12 in.) opening.

HINT: Avoid applying an excessive amount to the surface.

- Parts must be assembled within 5 minutes of application. Otherwise the material must be removed and reapplied.
- Immediately remove nozzle from the tube and reinstall cap.

(c) Install a new O–ring to the water inlet housing.

(d) Apply soapy water to the O–ring.

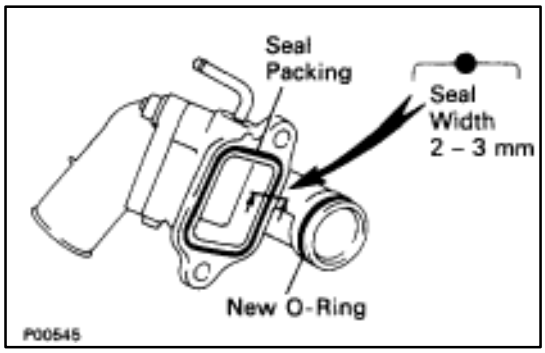

WhereEverybodyKnowsYourName

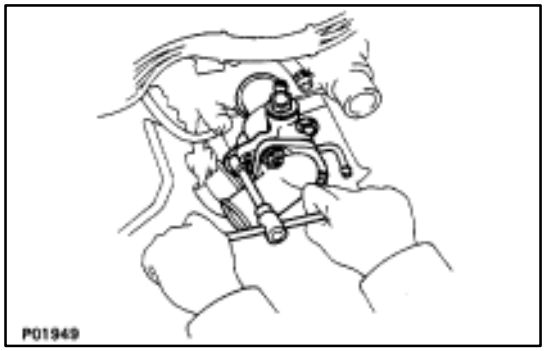

(e) Push in the water inlet housing end into the water pump hole.

(f) Install the water inlet and inlet housing assembly with the two bolts. Alternately tighten the bolts.

Torque: 18 N·m (185 kgf·cm, 13 ft·lbf)

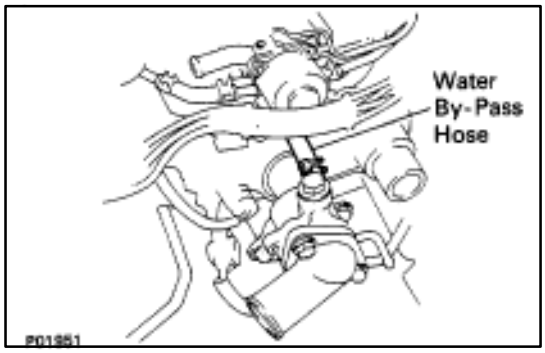

(g) Connect the water by–pass hose to the water inlet housing.

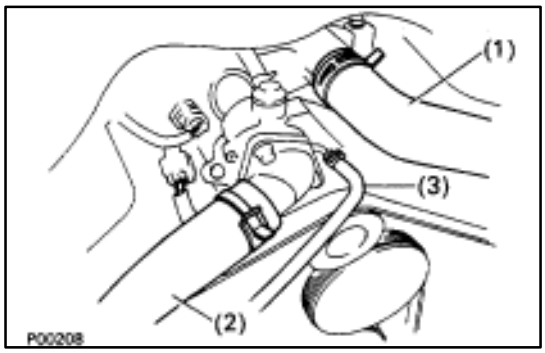

9. RECONNECT HOSES

Connect the following hoses:

(1) Upper radiator hose to front water by–pass joint
(2) Lower radiator hose to water inlet
(3) Radiator reservoir hose to front water inlet housing

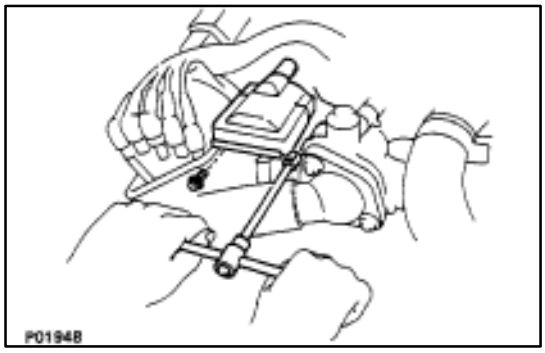

10. REINSTALL RH IGNITION COIL

(a) Install the ignition coil with the two bolts.

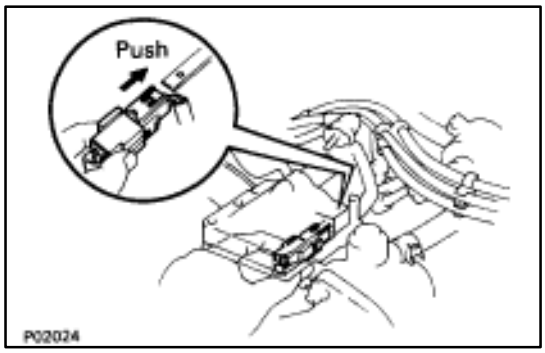

(b) Install the cam position sensor connector to the ignition coil bracket.

(c) Connect the ignition coil connector.

11. REINSTALL LOWER HIGH–TENSION CORD COVER

(See steps 1 to 13 and 16 to 18 on pages FI–39 to 41)

WhereEverybodyKnowsYourName

EGR Gas Temperature Sensor (USA Spec. only)

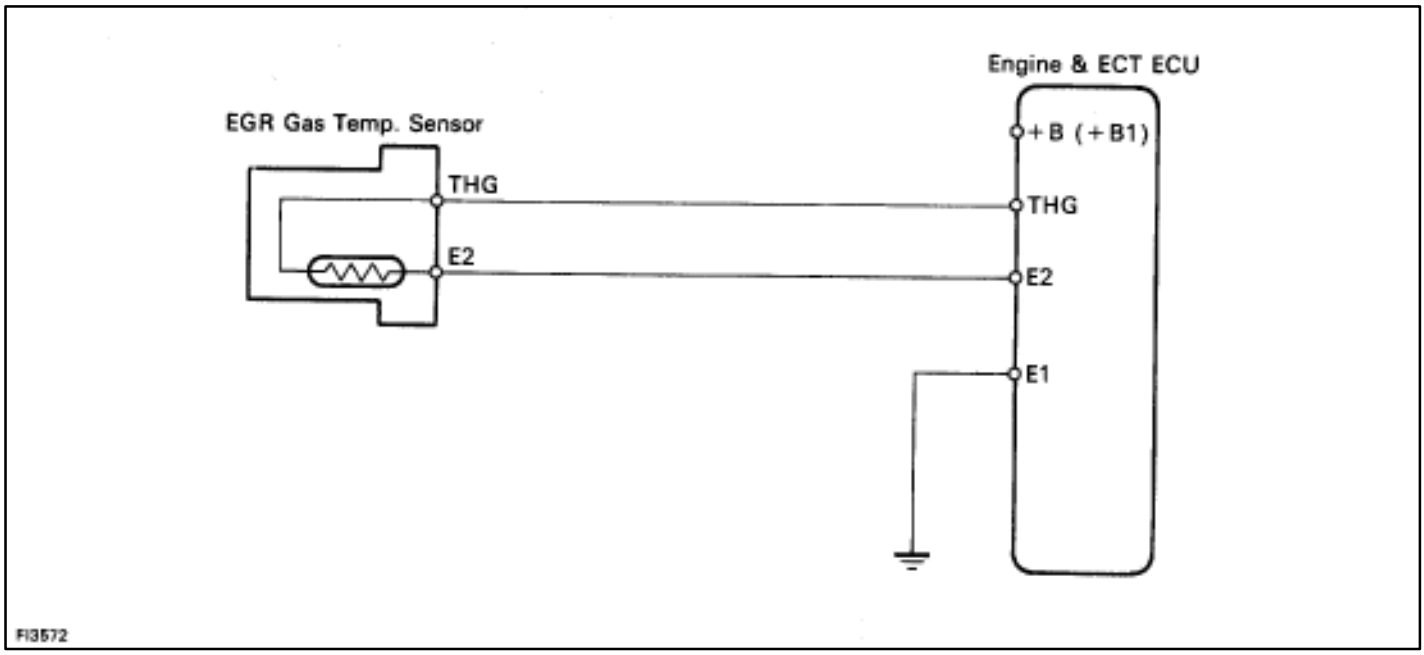

COMPONENTS FOR REMOVAL AND INSTALLATION

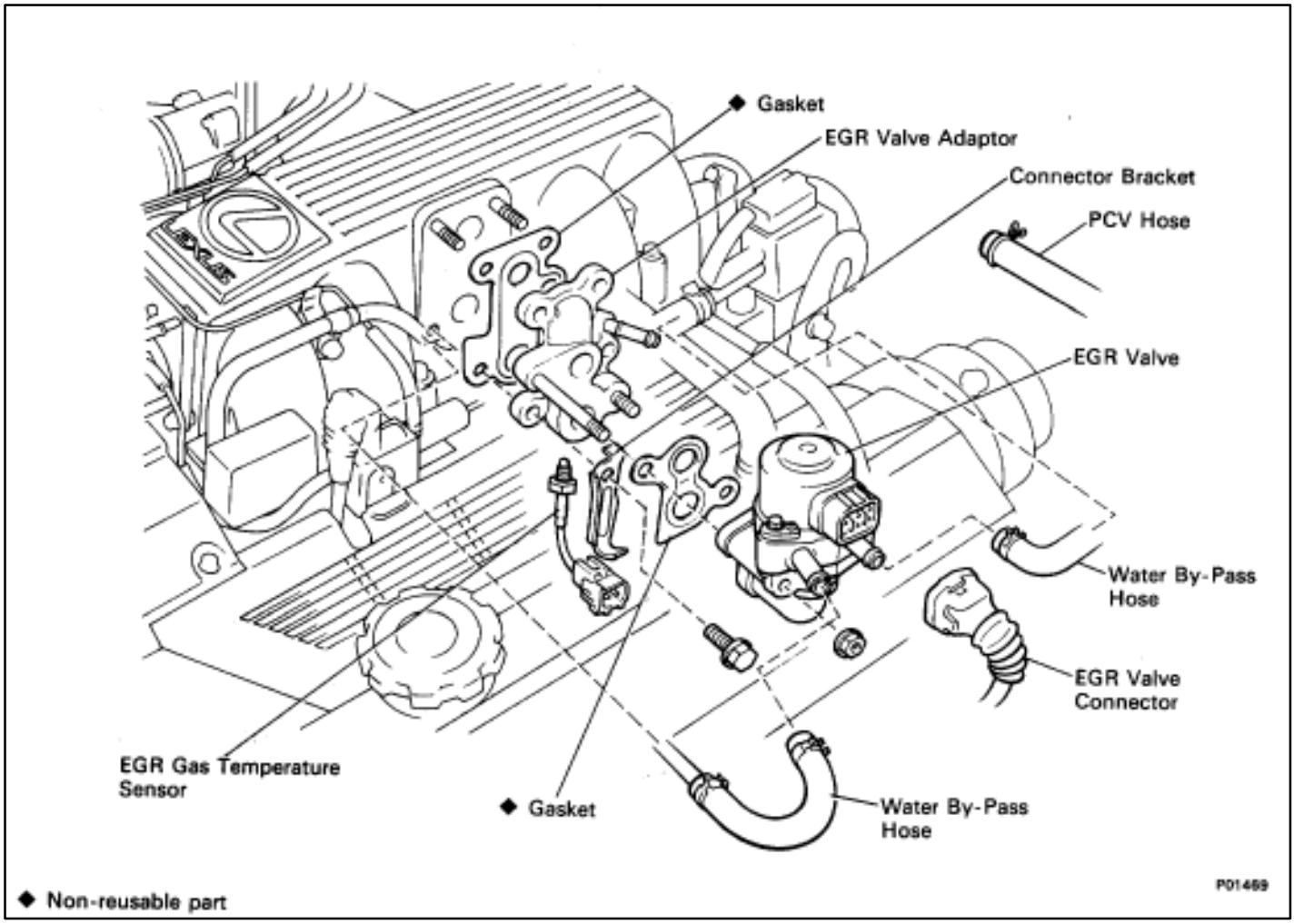

WhereEverybodyKnowsYourName

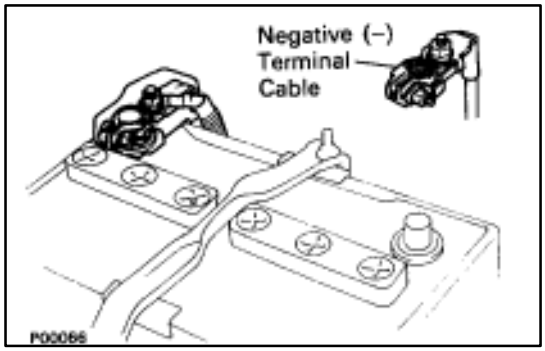

INSPECTION OF EGR GAS TEMPERATURE SENSOR

1. **DISCONNECT CABLE FROM NEGATIVE TERMINAL OF BATTERY**
   CAUTION: Work must be started after approx. 20 seconds or longer from the time the ignition switch is turned to the "LOCK" position and the negative (–) terminal cable is disconnected from the battery.
2. **DRAIN ENGINE COOLANT**
3. **REMOVE EGR VALVE**
   (a) Disconnect the EGR gas temperature sensor.
   (b) Disconnect the following hoses from the EGR valve:
      (1) Water by–pass hose (from ISC valve)
      (2) Water by–pass hose (from rear water by–pass joint)

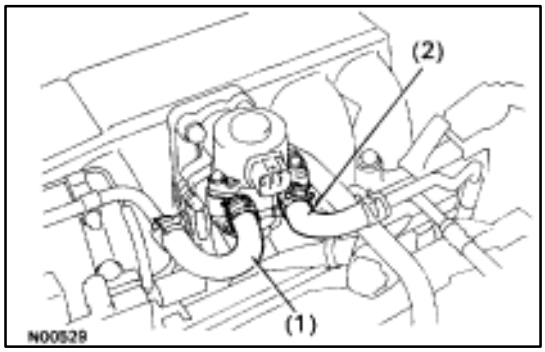

   (c) Remove the two nuts, EGR valve and gasket.

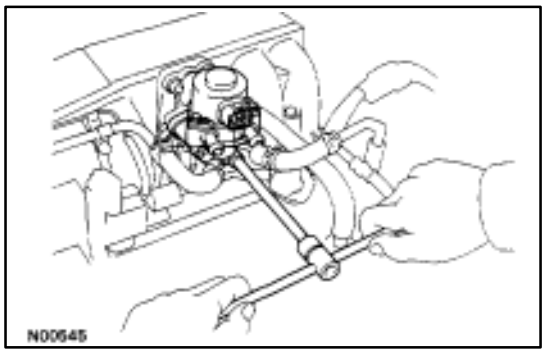

4. **REMOVE EGR VALVE ADAPTOR**
   (a) Disconnect the EGR gas temperature sensor.
   (b) Disconnect the PCV hose from the EGR valve adaptor.

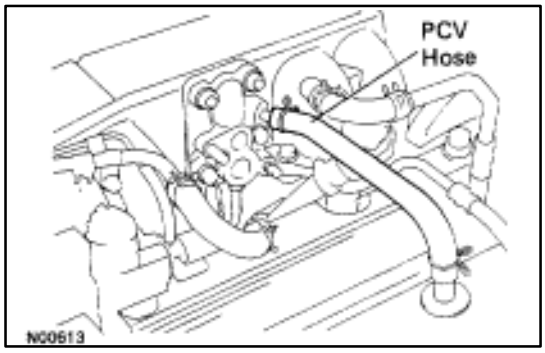

   (c) Remove the two bolts, two nuts, EGR valve adaptor and gasket.

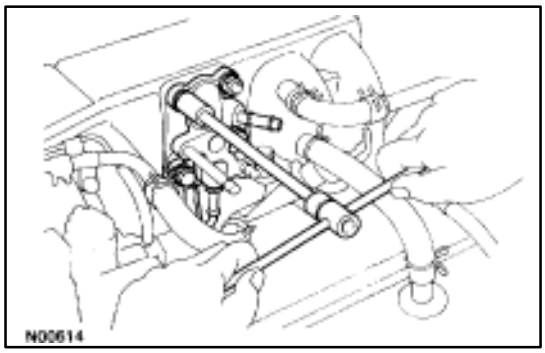

WhereEverybodyKnowsYourName

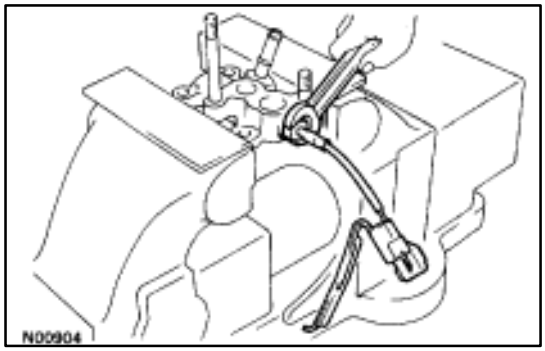

5. REMOVE EGR GAS TEMPERATURE SENSOR FROM EGR VALVE ADAPTOR

(a) Mount the EGR valve adaptor in a vise.
(b) Remove the EGR valve adaptor.
(c) Remove the connector bracket from the sensor connector.

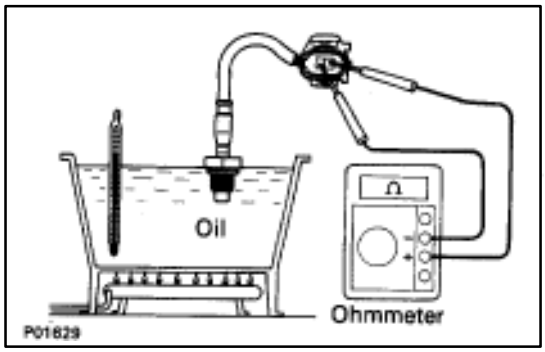

6. INSPECT EGR GAS TEMPERATURE SENSOR

Using an ohmmeter, measure the resistance between the terminals.

Resistance: 69–89 k? at 50˚C (112˚F)
12–15 k? at 100˚C (212˚F)
2–4 k? at 150˚C (302˚F)

If the resistance is not as specified, replace the sensor.

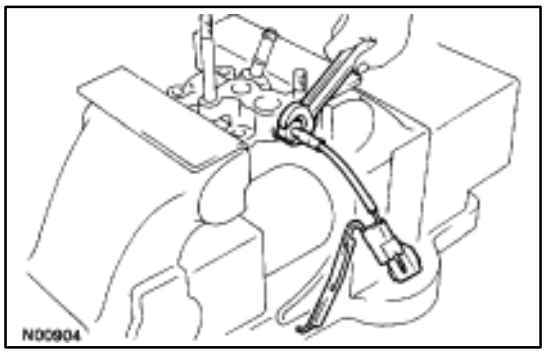

7. REINSTALL EGR GAS TEMPERATURE SENSOR TO EGR VALVE ADAPTOR

(a) Mount the EGR valve adaptor in a vise.
(b) Install the EGR gas temperature to the adaptor.
Torque: 20 N·m (200 kgf·cm, 14 ft·lbf)
(c) Install the connector bracket to the sensor connector.

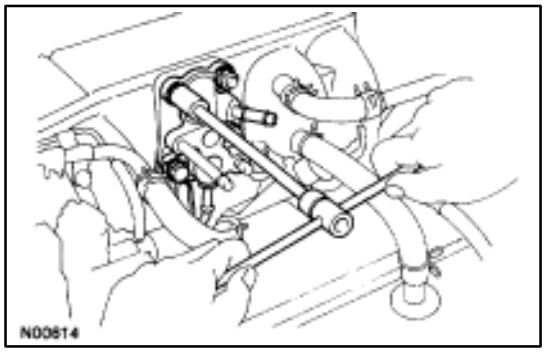

8. REINSTALL EGR VALVE ADAPTOR

(a) Install a new gasket, the adaptor and connector bracket with the two bolts, two nuts, EGR valve adaptor and gasket.
Torque: 18 N·m (185 kgf·cm, 13 ft·lbf)

NOTICE: Do not touch the air intake chamber and adaptor surfaces of the gasket with your hand.

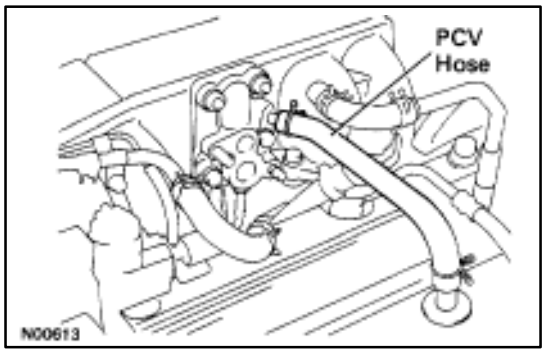

(b) Connect the PCV hose to the EGR valve adaptor.
(c) Connect the EGR gas temperature sensor.

WhereEverybodyKnowsYourName

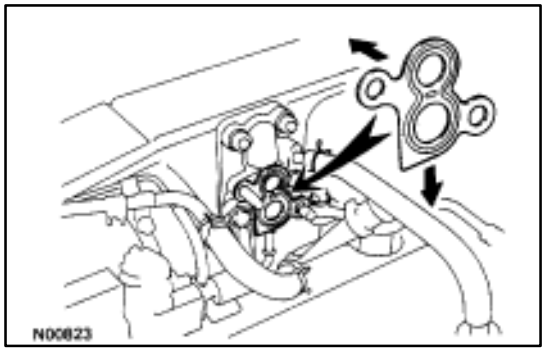

9. REINSTALL EGR VALVE

(a) Place a new gasket on the EGR valve adaptor.

NOTICE:

- **Do not touch the adaptor and EGR valve surfaces of the gasket with your hand.**
- **Align the port holes of the gasket and adaptor. Be careful of the installation direction.**

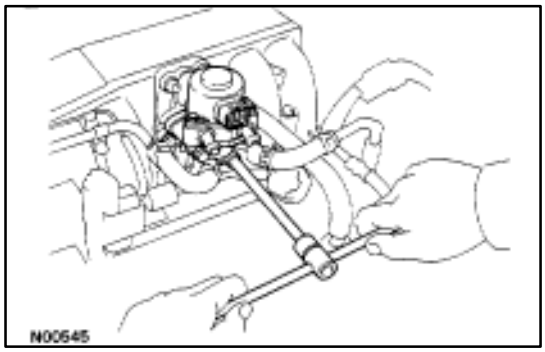

(b) Install the EGR valve with the two nuts.

Torque: 18 N·m (185 kgf·cm, 13 ft·lbf)

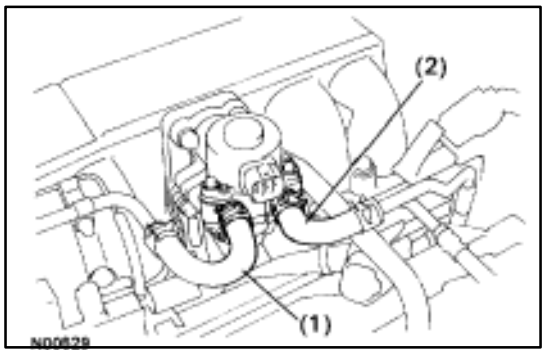

(c) Connect the following hoses to the EGR valve:
  (1) Water by–pass hose (from ISC valve)
  (2) Water by–pass hose (from rear water by–pass joint)

(d) Connect the EGR gas temperature sensor.

10. RECONNECT CABLE FROM NEGATIVE TERMINAL OF BATTERY

11. REFILL WITH ENGINE COOLANT

WhereEverybodyKnowsYourName

Knock Sensors

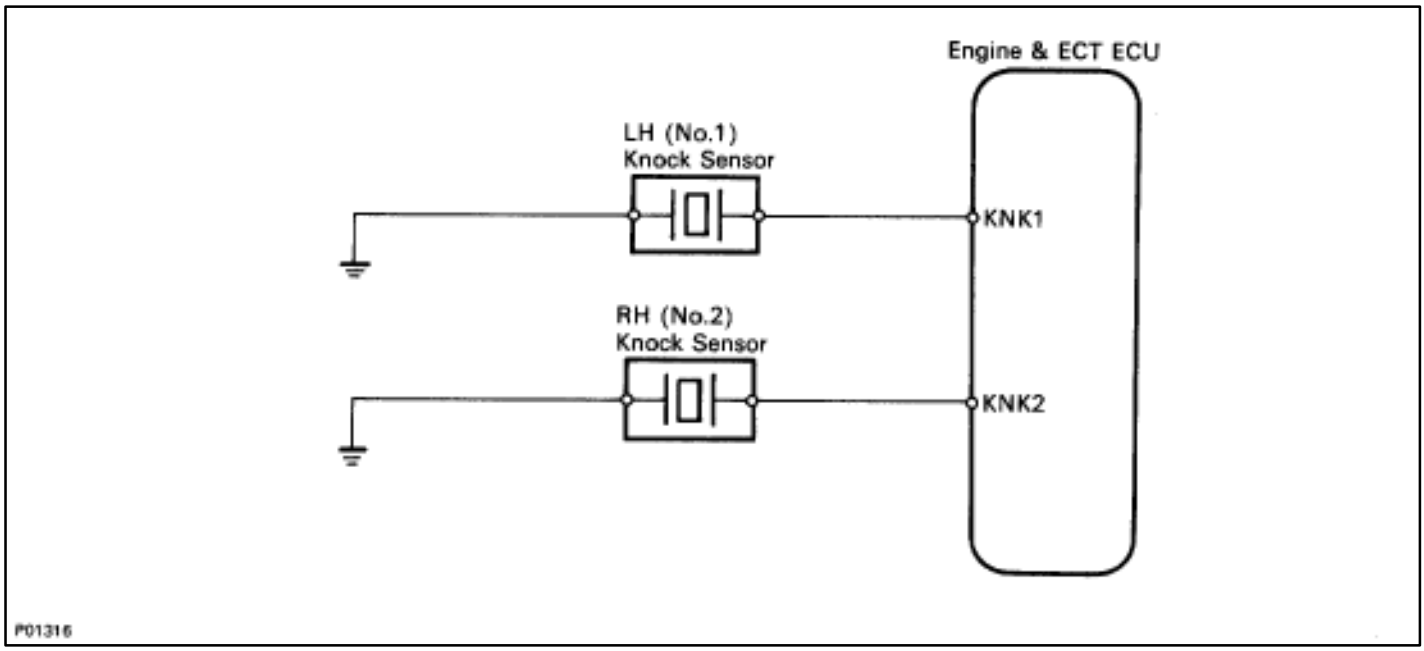

WhereEverybodyKnowsYourName

COMPONENTS FOR REMOVAL AND INSTALLATION

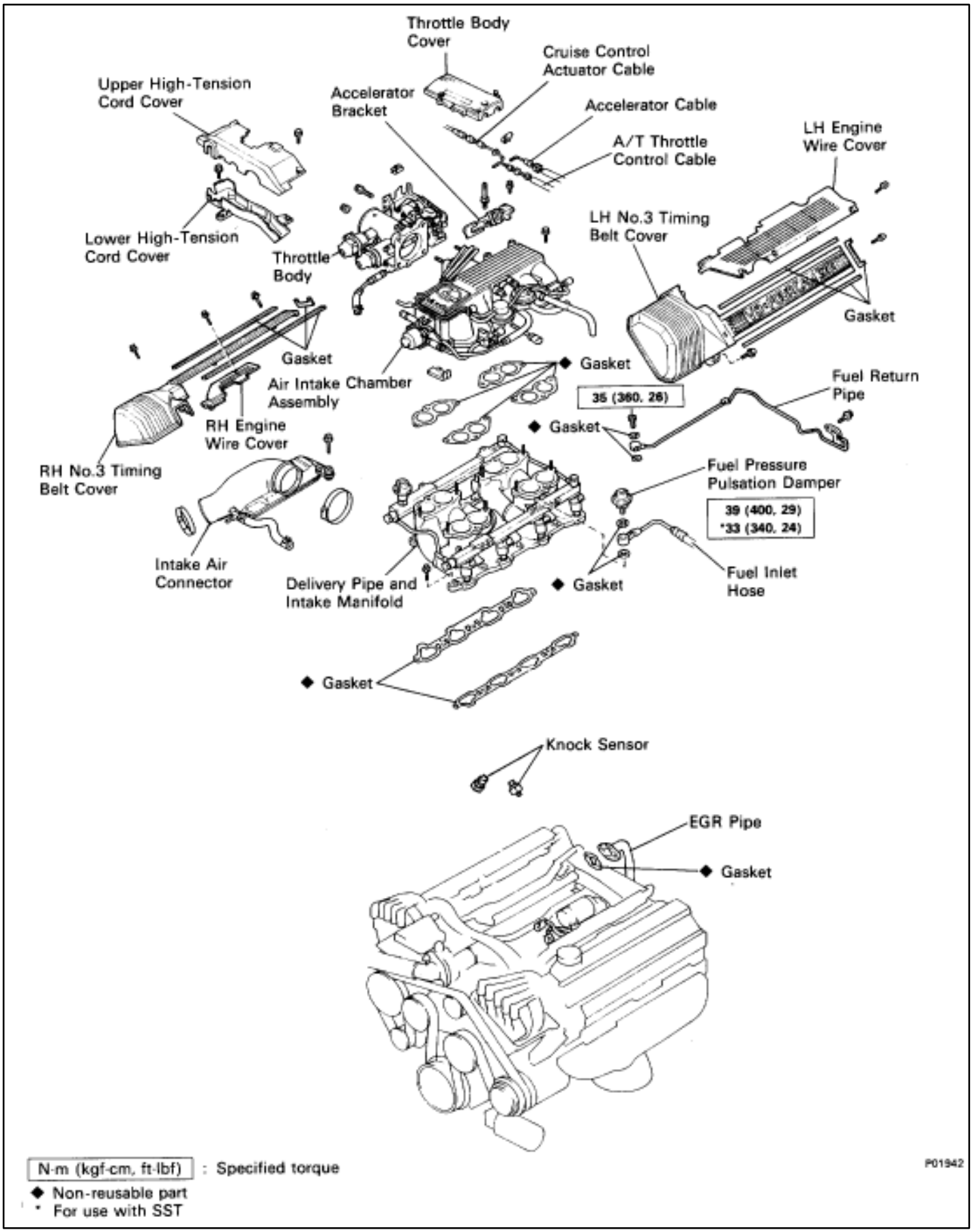

N·m (kgf·cm, ft·lbf) : Specified torque

◆ Non-reusable part

* For use with SST

WhereEverybodyKnowsYourName

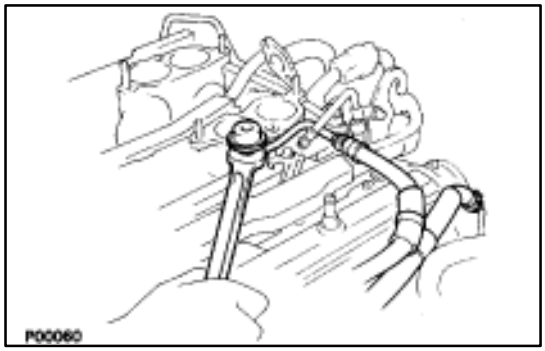

INSPECTION OF KNOCK SENSORS

1. **REMOVE AIR INTAKE CHAMBER**
   (See steps 1 to 16 on pages FI–27 to 32)
2. **DISCONNECT FUEL INLET HOSE FROM LH DELIVERY PIPE**
   Remove the pulsation damper and two gaskets, and disconnect the inlet hose.
3. **DISCONNECT FUEL RETURN HOSE FROM FUEL RETURN PIPE**

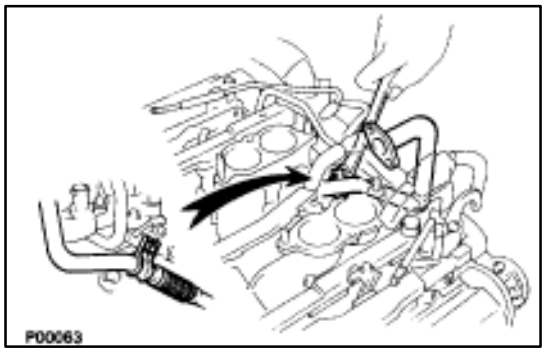

4. **DISCONNECT EGR PIPE FROM RH CYLINDER HEAD**
   Remove the bolt holding the EGR pipe to the cylinder head, and disconnect the EGR pipe.

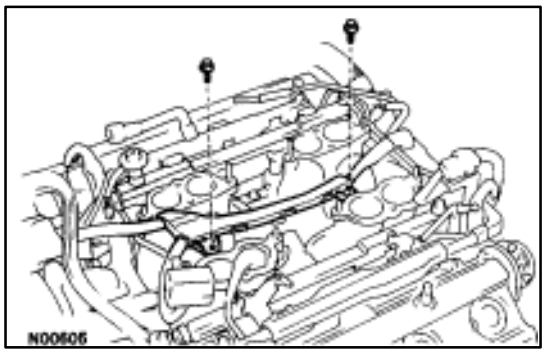

5. **DISCONNECT ENGINE WIRE FROM INTAKE MANIFOLD**
   Remove the two bolts, and disconnect the engine wire.

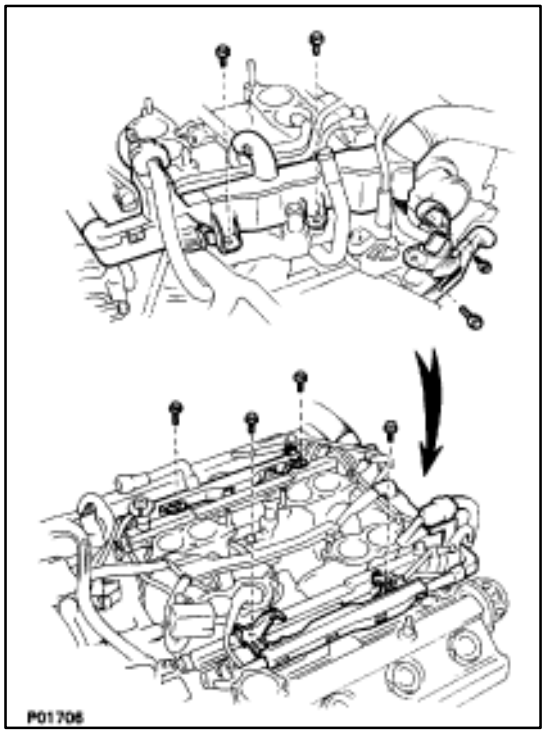

6. **DISCONNECT ENGINE WIRE FROM DELIVERY PIPES, REAR WATER BY–PASS JOINT AND RH CYLINDER HEAD**
   (a) Remove the four bolts holding the engine wire to the delivery pipes, and disconnect the engine wire from the delivery pipe.
   (b) Remove the two bolts holding the engine wire to the rear water by–pass joint, and disconnect the engine wire from the rear water by–pass joint.
   (c) Remove the two bolts holding the engine wire to the rear side of the RH cylinder head, and disconnect the engine wire from the RH cylinder head.

WhereEverybodyKnowsYourName

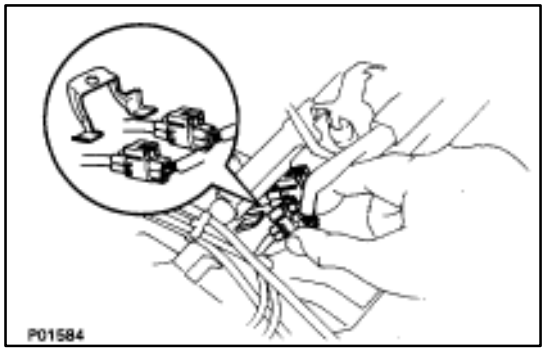

(d) Disconnect the two engine wire connectors from the connector bracket on the front side of the LH delivery pipe.
(e) Disconnect the eight injector connectors.

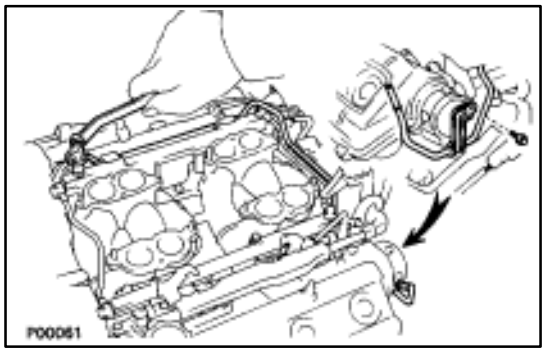

7. REMOVE FUEL RETURN PIPE
(a) Remove the bolt holding the return pipe to the LH cylinder head.
(b) Remove the union bolt, two gaskets and return pipe.

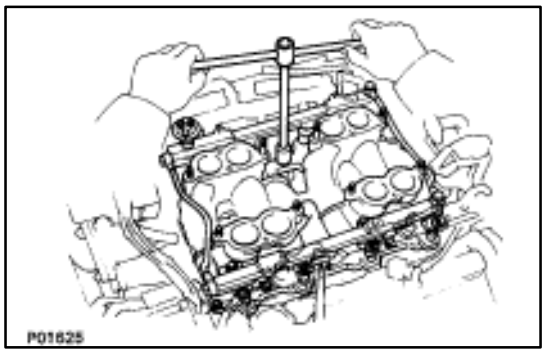

8. REMOVE DELIVERY PIPES AND INTAKE MANIFOLD ASSEMBLY
(a) Remove the six bolts and four nuts holding the intake manifold to the cylinder heads.
(b) Remove the two delivery pipes and intake manifold assembly.
(c) Remove the two intake manifold gaskets.

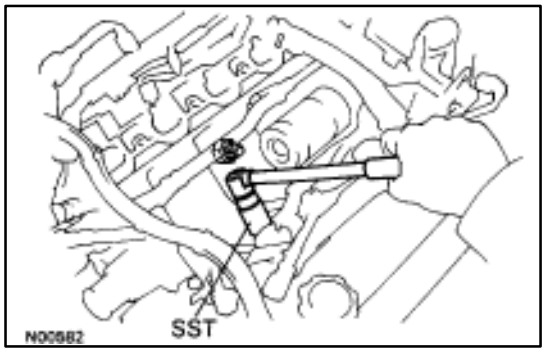

9. REMOVE KNOCK SENSOR
(a) Disconnect the knock sensor connectors
(b) Using SST, remove the two knock sensors.
SST 09816–30010

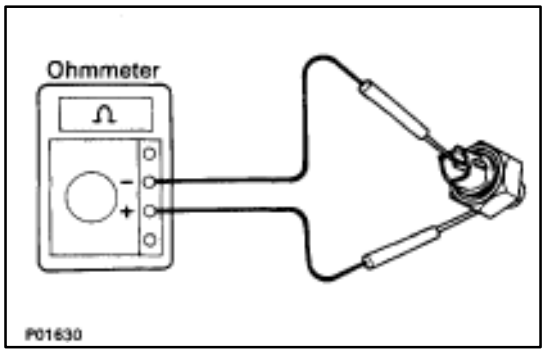

10. INSPECT KNOCK SENSOR
Using an ohmmeter, check that there is no continuity between the terminal and body.
If there is continuity, replace the sensor.

WhereEverybodyKnowsYourName

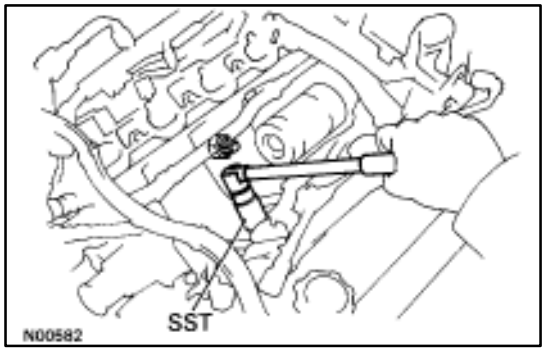

11. REINSTALL KNOCK SENSOR

(a) Using SST, remove the two knock sensors.

SST 09816–30010

Torque: 44 N·m (450 kgf·cm, 33 ft·lbf)

(b) Connect the knock sensor connectors.

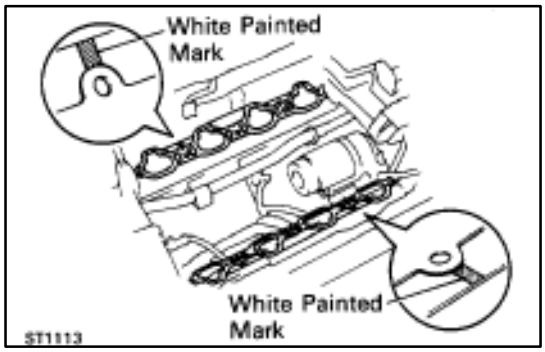

12. REINSTALL DELIVERY PIPES AND INTAKE MANIFOLD ASSEMBLY

(a) Place two new gaskets on the cylinder heads with the white painted mark facing upward.

NOTICE: Align the port holes of the gasket and cylinder head. Be careful of the installation direction.

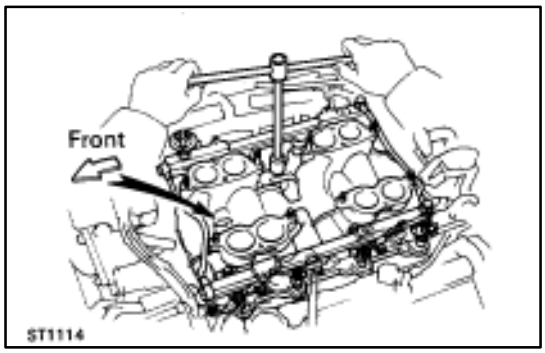

(b) Place the delivery pipes and intake manifold assembly in position on the cylinder heads with the arrow mark on the intake manifold facing forward.

NOTICE: Be careful of the installation direction.

(c) Install the six mounting bolts and four mounting nuts.

Torque: 18 N·m (185 kgf·cm, 13 ft·lbf)

HINT: Use bolts 30 mm (1.18 in.) in length.

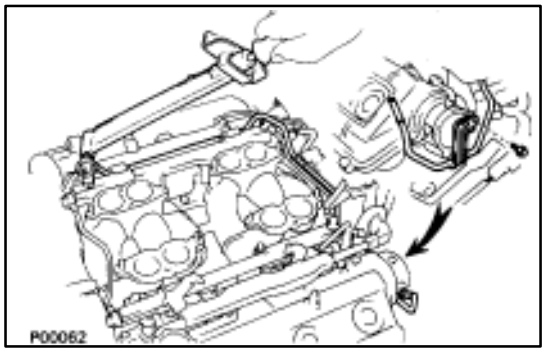

13. REINSTALL FUEL RETURN PIPE

Install the return pipe with two new gaskets, union bolt and bolt.

Torque (Union bolt):

35 N·m (360 kgf·cm, 26 ft·lbf)

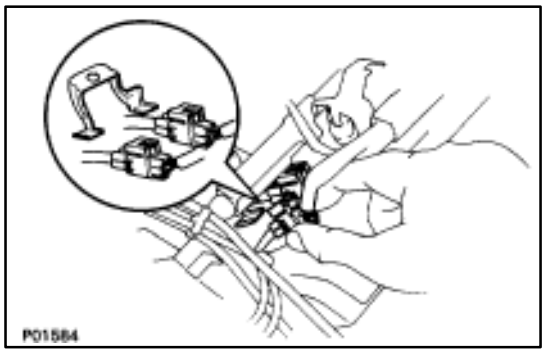

14. REINSTALL ENGINE WIRE TO DELIVERY PIPES, REAR WATER BY–PASS JOINT AND RH CYLINDER HEAD

(a) Connect the eight injector connectors.

(b) Connect the two engine wire connectors to the connector bracket on the LH delivery pipe.

WhereEverybodyKnowsYourName

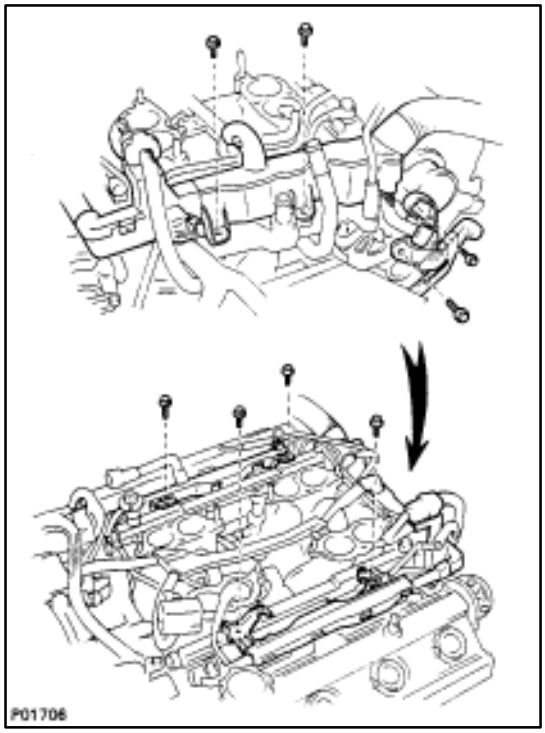

(c) Install the engine wire to the RH cylinder head with the two bolts.
(d) Install the engine wire to the rear water by–pass joint with the two bolts.
(e) Install the engine wire to the delivery pipes with the four bolts.

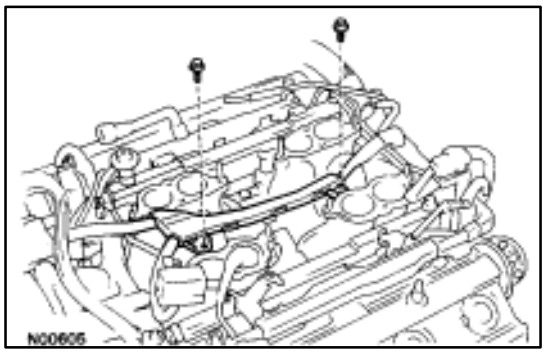

15. REINSTALL ENGINE WIRE TO INTAKE MANIFOLD
Install the engine wire with the two bolts.

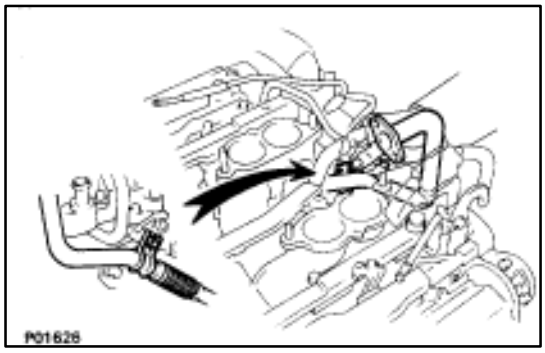

16. TEMPORARILY REINSTALL EGR PIPE TO RH CYLINDER HEAD
Temporarily Install the EGR pipe with the bolt.

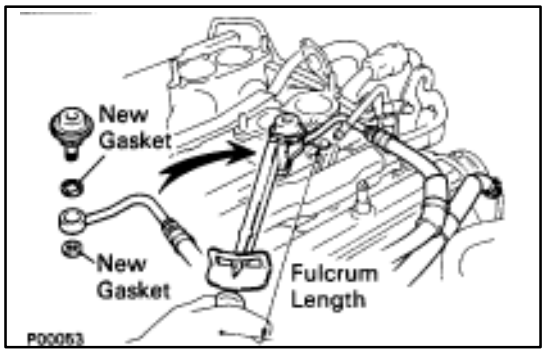

17. RECONNECT FUEL RETURN HOSE TO FUEL RETURN PIPE
18. RECONNECT FUEL INLET HOSE TO LH DELIVERY PIPE
Using SST, connect the inlet hose with two new gaskets and pulsation damper.
SST 09612–24014 (09617–24011)
Torque: 39 N·m (400 kgf·cm, 29 ft·lbf)
33 N·m (340 kgf·cm, 24 ft·lbf) for SST
HINT: Use a torque wrench with a fulcrum length of 30 cm (11.81 in.).

WhereEverybodyKnowsYourName

19. INSTALL AIR INTAKE CHAMBER
(See steps 2 to 18 on pages FI–35 to 41)
HINT: After the air intake chamber is installed, tighten the bolt holding the EGR pipe to the RH cylinder head.

WhereEverybodyKnowsYourName

Main Oxygen Sensors

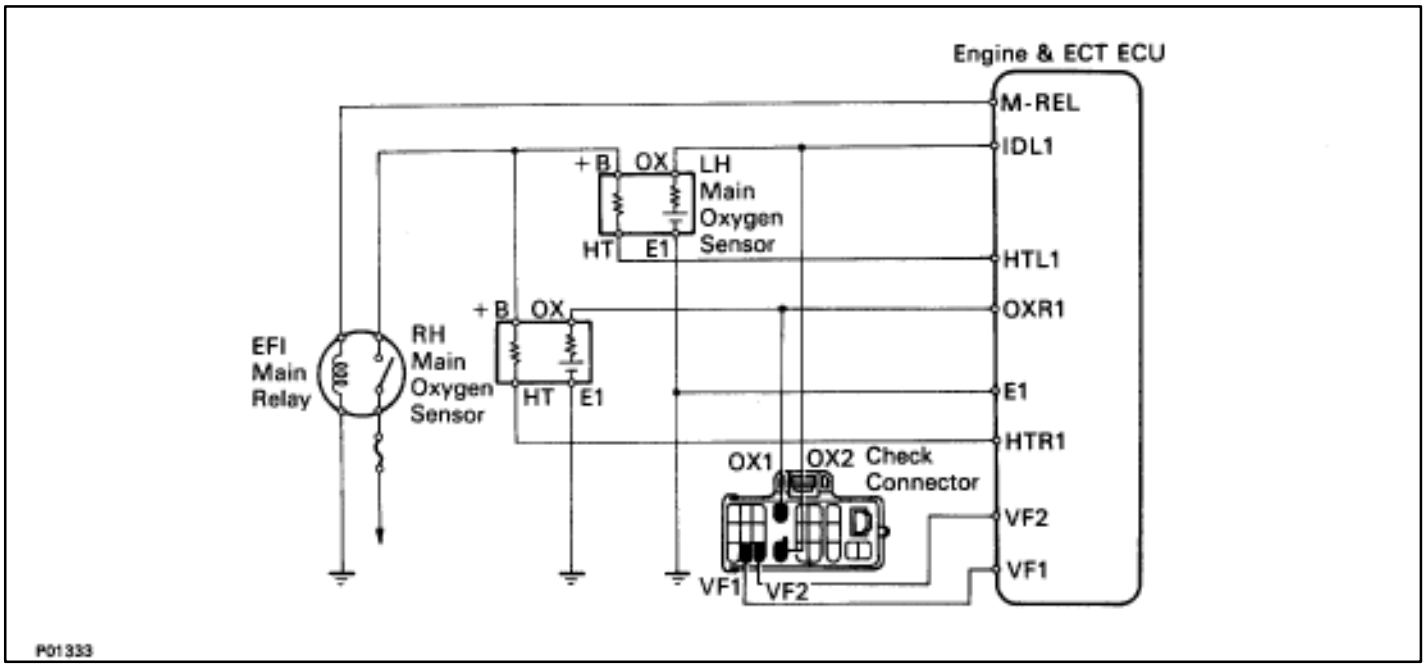

INSPECTION OF MAIN OXYGEN SENSORS

1. WARM UP ENGINE

Allow the engine to warm up to normal operating temperature.

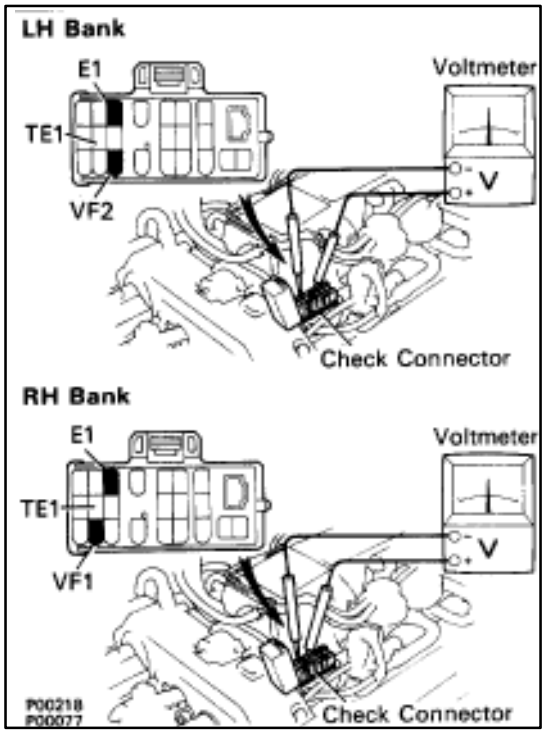

2. INSPECT FEEDBACK VOLTAGE

Connect the positive (+) probe of a voltmeter to terminal VF1 (for LH bank) or VF2 (for RH bank) of the check (”DIAGNOSIS”) connector, and negative (–) probe to terminal E1. Perform the test as follows described on the next page.

HINT: Use SST when connecting between terminals TE1 and E1 of the check connector.

SST 09843–18020

WhereEverybodyKnowsYourName

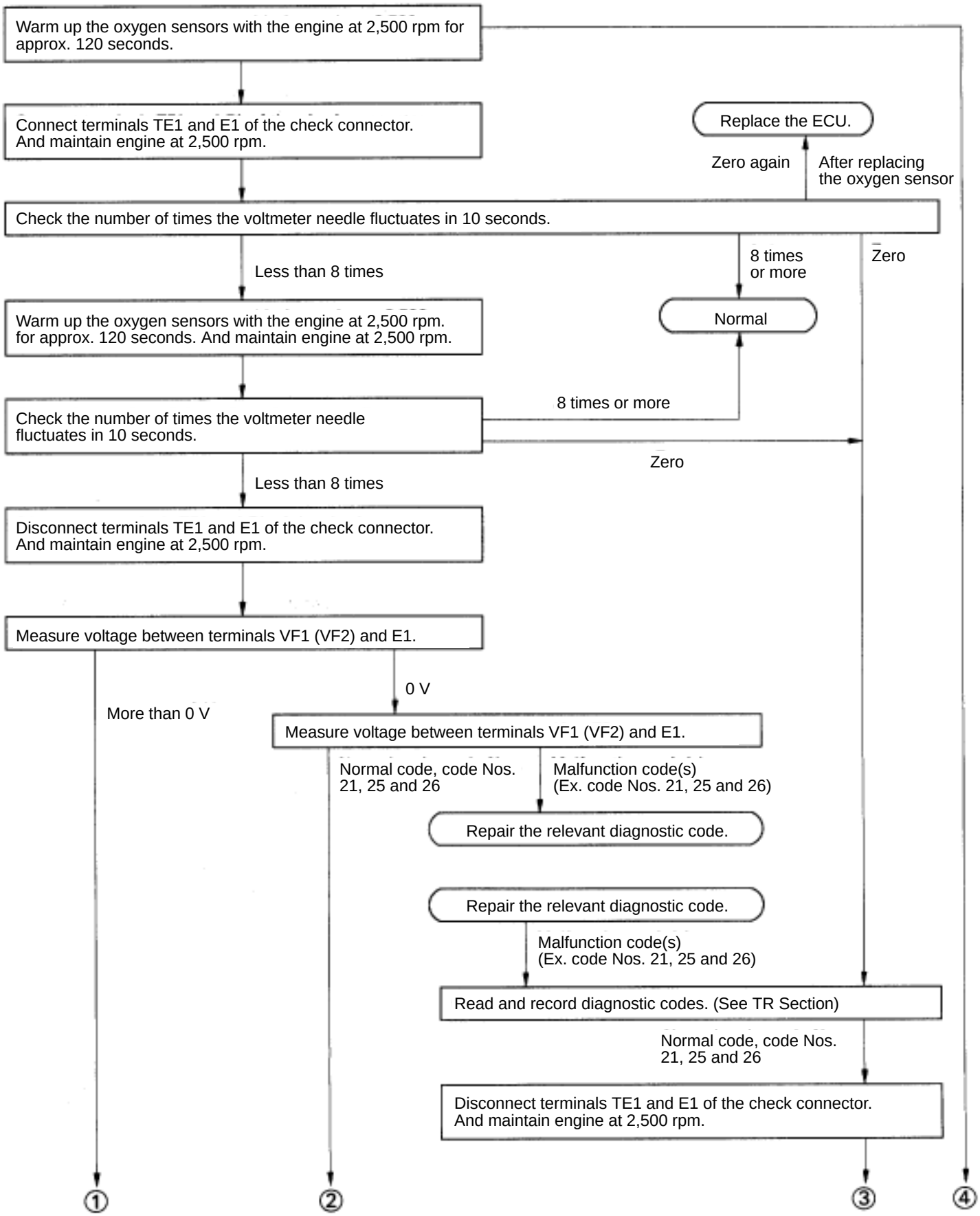

CONTINUED ON PAGE FI–115

WhereEverybodyKnowsYourName

CONTINUED FROM PAGE FI–114

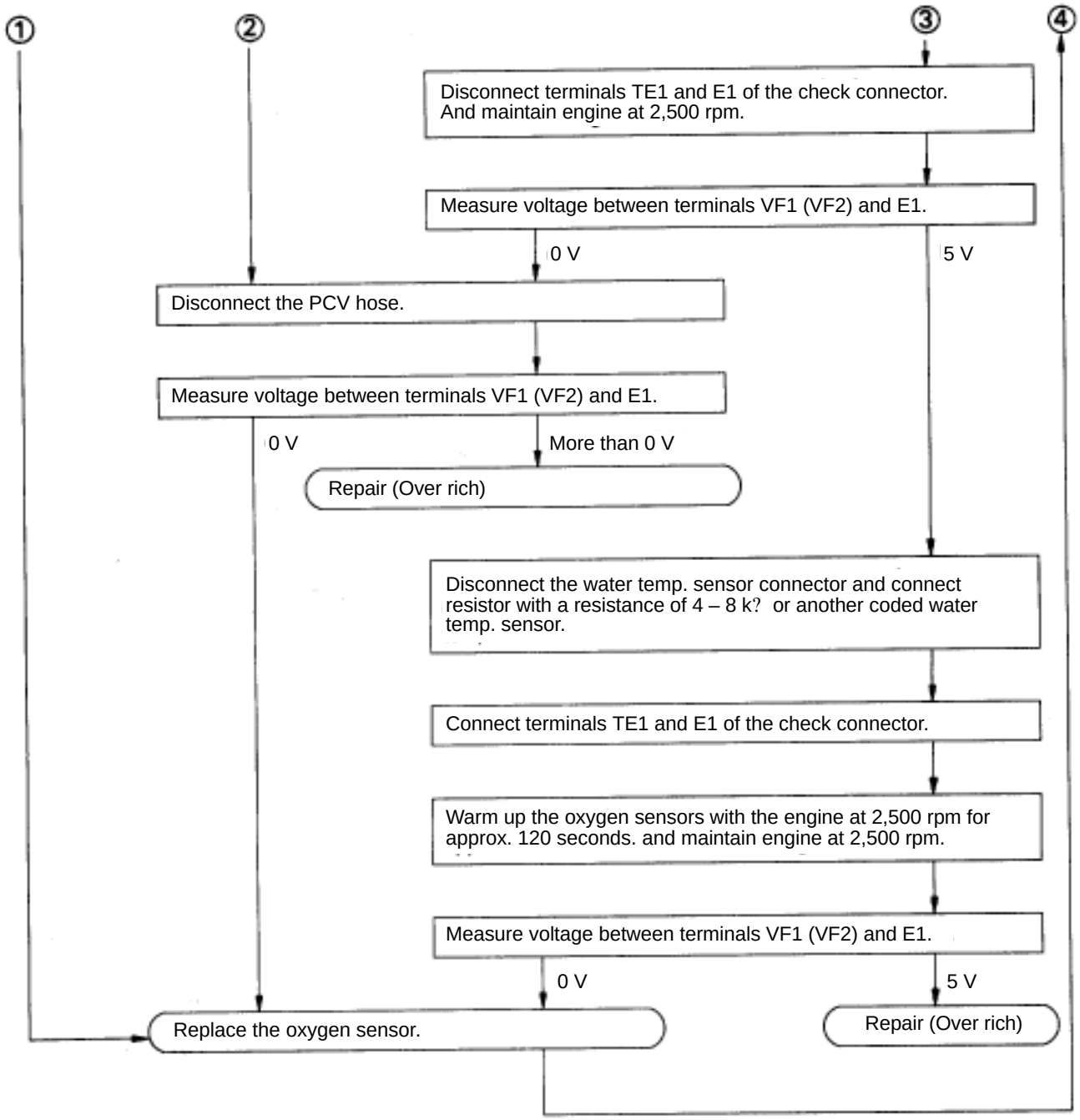

WhereEverybodyKnowsYourName

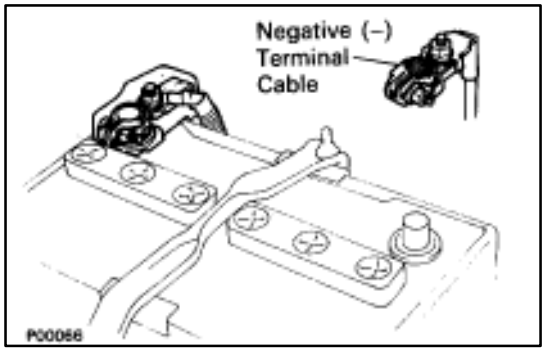

3. DISCONNECT CABLE FROM NEGATIVE TERMINAL OF BATTERY

CAUTION: Work must be started after approx. 20 seconds or longer from the time the ignition switch is turned to the "LOCK" position and the negative (–) terminal cable is disconnected from the battery.

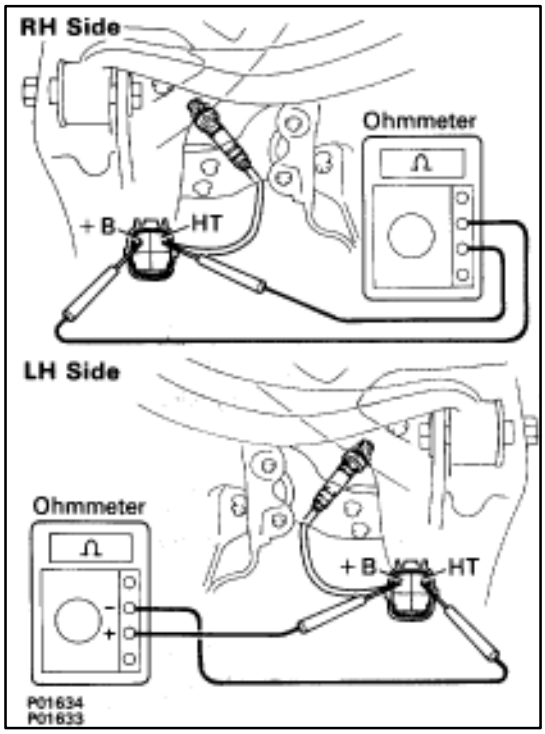

4. INSPECT HEATER RESISTANCE OF MAIN OXYGEN SENSORS

(a) Disconnect the oxygen sensor connectors.

(b) Using an ohmmeter, measure the resistance between the terminals +B and HT.

Resistance: 5.1–6.3 ? at 20˚C (68˚F)

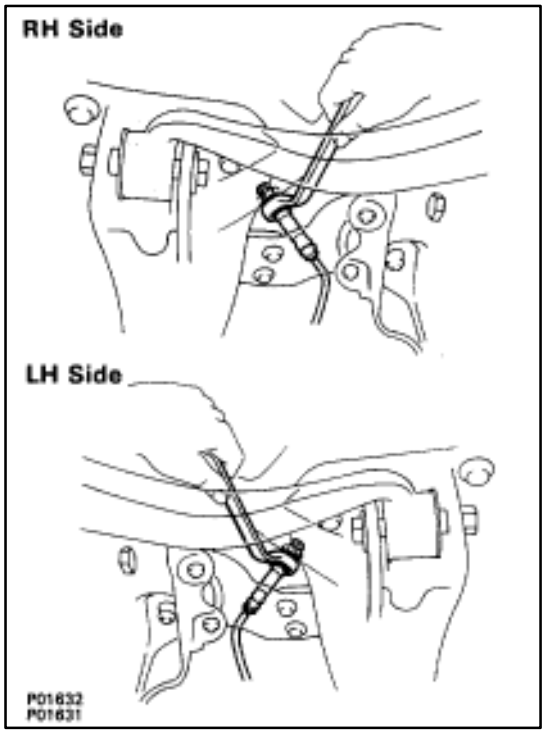

If the resistance is not as specified, replace the sensor.

Torque: 44 N·m (450 kgf·cm, 33 ft·lbf)

(c) Reconnect the oxygen sensor connectors.

5. RECONNECT CABLE TO NEGATIVE TERMINAL OF BATTERY

WhereEverybodyKnowsYourName

Sub–Oxygen Sensors

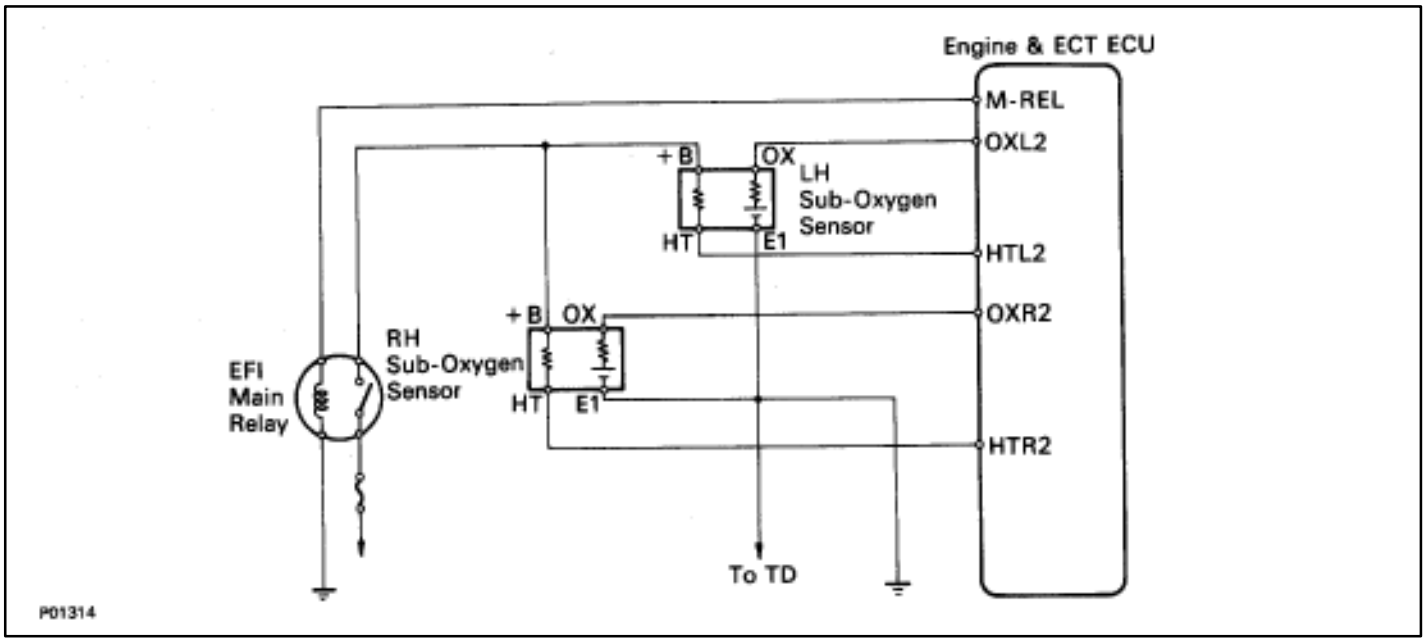

COMPONENTS FOR REMOVAL AND INSTALLATION

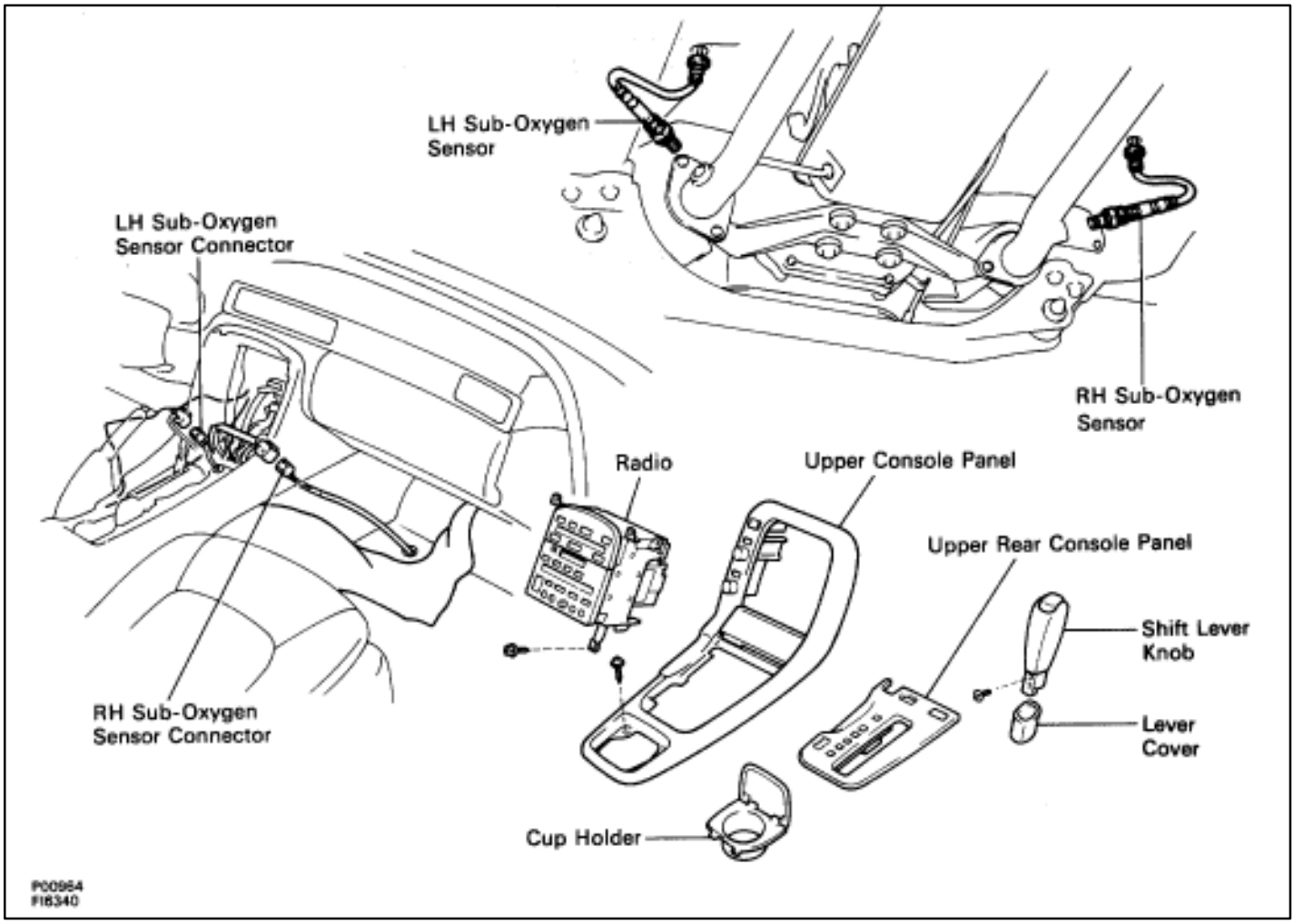

WhereEverybodyKnowsYourName

INSPECTION OF SUB–OXYGEN SENSORS

1. INSPECT SUB–OXYGEN SENSORS

(a) Cancel diagnostic code. (See TR section)

(b) Allow the engine to warm up to normal operating temperature.

(c) Drive for 5 minutes or more between 80km/h (50 mph) and 100 km/h (62 mph) in ”D” range.

(d) Following the conditions in step (c), press fully on the accelerator pedal for 2 seconds or more.

HINT: Do not exceed 100 km/h (62 mph), or diagnostic code will be cancelled.

(e) Stop the vehicle, and turn the ignition switch to OFF.

(f) Carry out steps (b), (c) and (d) again to test acceleration.

If code No.27 reappears again, check the sub–oxygen sensor circuit. If the circuit is normal, replace the sub–oxygen sensor.

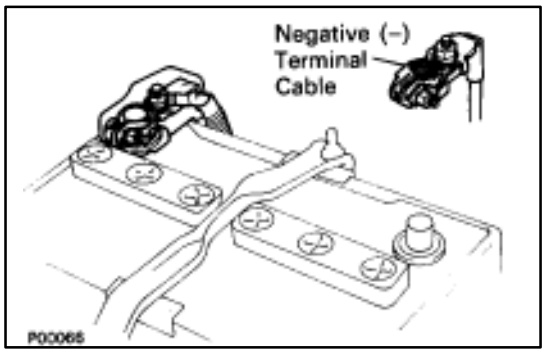

2. DISCONNECT CABLE FROM NEGATIVE TERMINAL OF BATTERY

CAUTION: Work must be started after approx. 20 seconds or longer from the time the ignition switch is turned to the ”LOCK” position and the negative (–) terminal cable is disconnected from the battery.

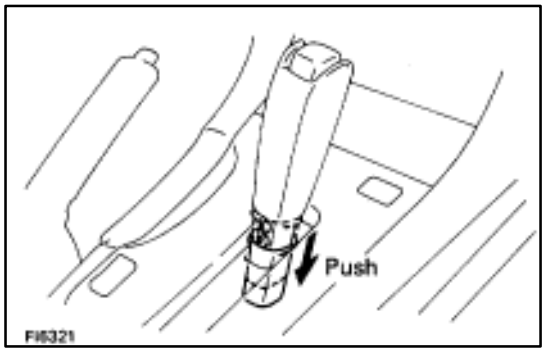

3. REMOVE TRANSMISSION SHIFT LEVER KNOB

(a) Push down the lever cover.

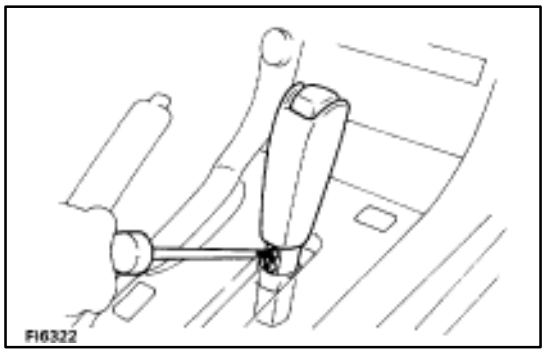

(b) Remove the two screws and shift lever knob.

(c) Remove the lever cover.

WhereEverybodyKnowsYourName

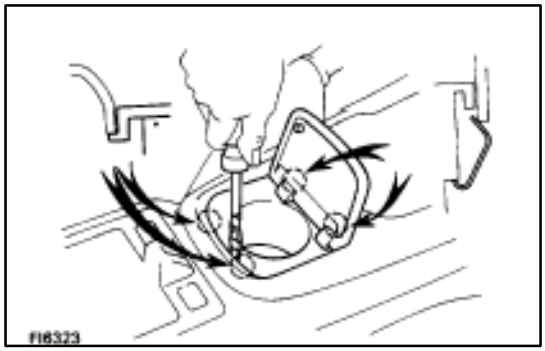

4. REMOVE CUP HOLDER

Using a screwdriver, pry out the rear side of the cup holder. Remove the cup holder.

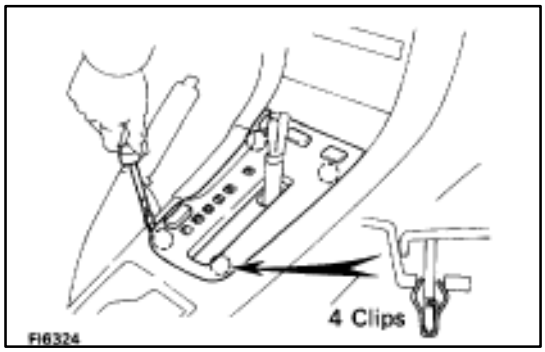

5. REMOVE UPPER REAR CONSOLE PANEL

Using a screwdriver, pry out the console panel.

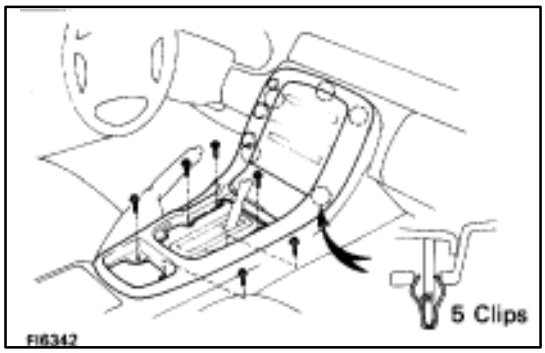

6. REMOVE UPPER CONSOLE PANEL

(a) Remove the six mounting screws.
(b) Using a screwdriver, pry out the console panel.

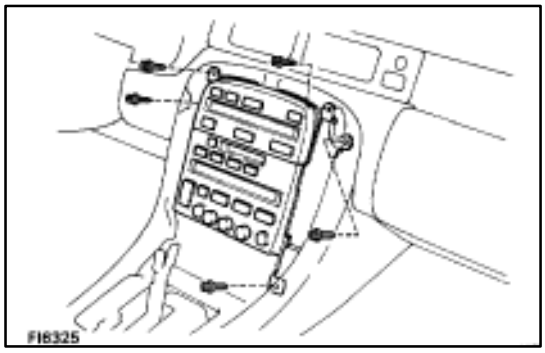

7. REMOVE RADIO

(a) Remove the five mounting bolts.
(b) Disconnect the wiring connectors and antenna cable, and remove the radio.

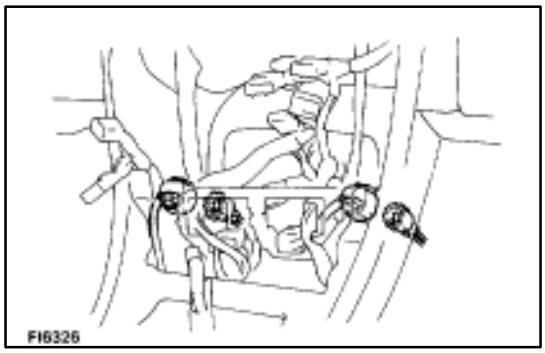

8. DISCONNECT SUB–OXYGEN SENSOR CONNECTORS

WhereEverybodyKnowsYourName

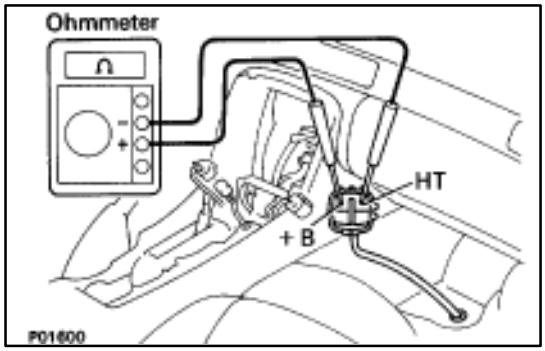

9. INSPECT HEATER RESISTANCE OF SUB–OXYGEN SENSORS

Using an ohmmeter, measure the resistance between the terminals +B and HT.

Resistance: 5.1–6.3 ? at 20˚C (68˚F)

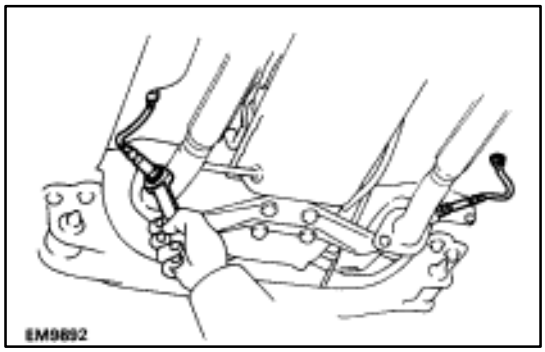

If the resistance is not as specified, replace the sensor as follows:

- Disconnect the grommet from the floor panel, and pull out the wire of the sub–oxygen sensor from the floor panel.
- Remove the sub–oxygen sensor.
- Install a new sub–oxygen sensor.

Torque: 44 N·m (450 kgf·cm, 33 ft·lbf)

- Run the wire of the sub–oxygen sensor through the hole in the floor panel.

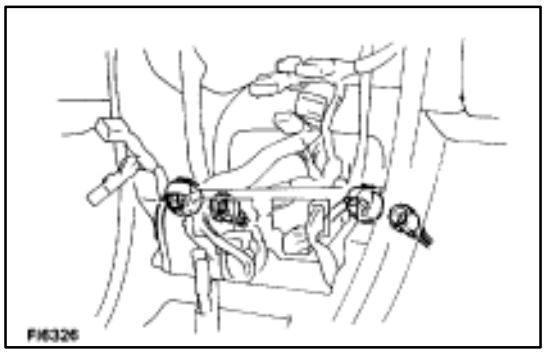

10. RECONNECT SUB–OXYGEN SENSOR CONNECTORS

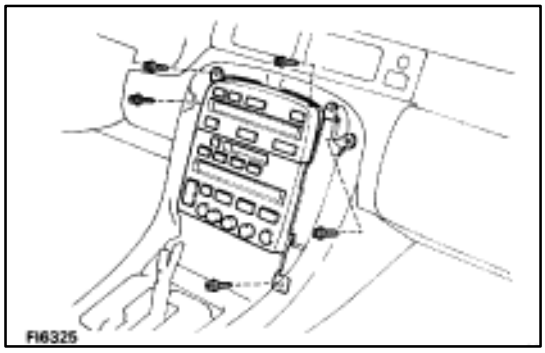

11. REINSTALL RADIO

(a) Connect the wiring connectors and antenna cable.
(b) Install the radio with the five bolts.

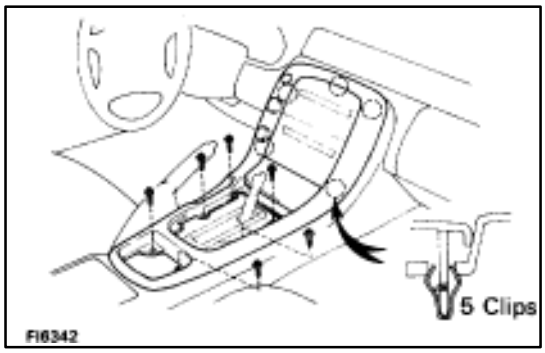

12. REINSTALL UPPER REAR CONSOLE PANEL

(a) Fit the console panel to the console box with five clips.
(b) Install the console panel with the six screws.

WhereEverybodyKnowsYourName

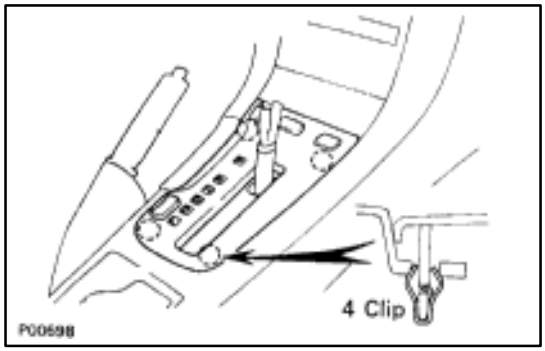

13. REINSTALL UPPER CONSOLE PANEL

Fit the console panel to the console box with the four clips.

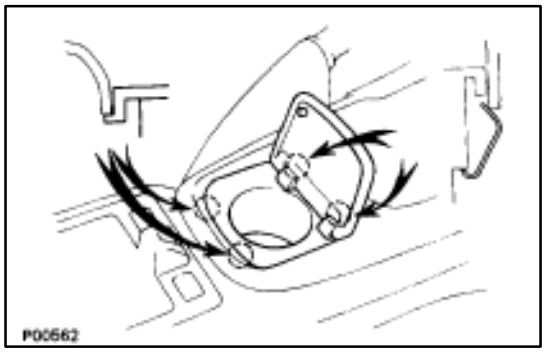

14. REINSTALL CUP HOLDER

Fit the cup holder to the console box.

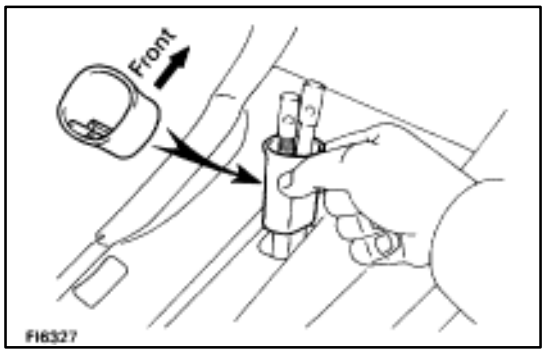

15. REINSTALL TRANSMISSION SHIFT LEVER KNOB

(a) Slide the lever cover on the lever shaft.

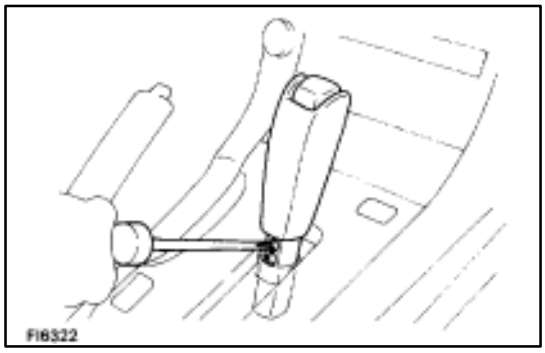

(b) Install the shift lever knob with the two screws.

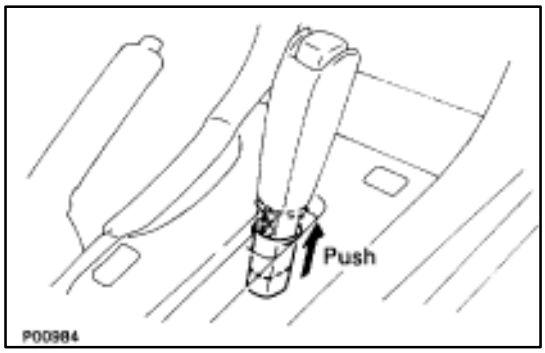

(c) Attach the lever cover to the lower side of the lever knob.

16. RECONNECT CABLE TO NEGATIVE TERMINAL OF BATTERY

WhereEverybodyKnowsYourName

Fuel pump ECU

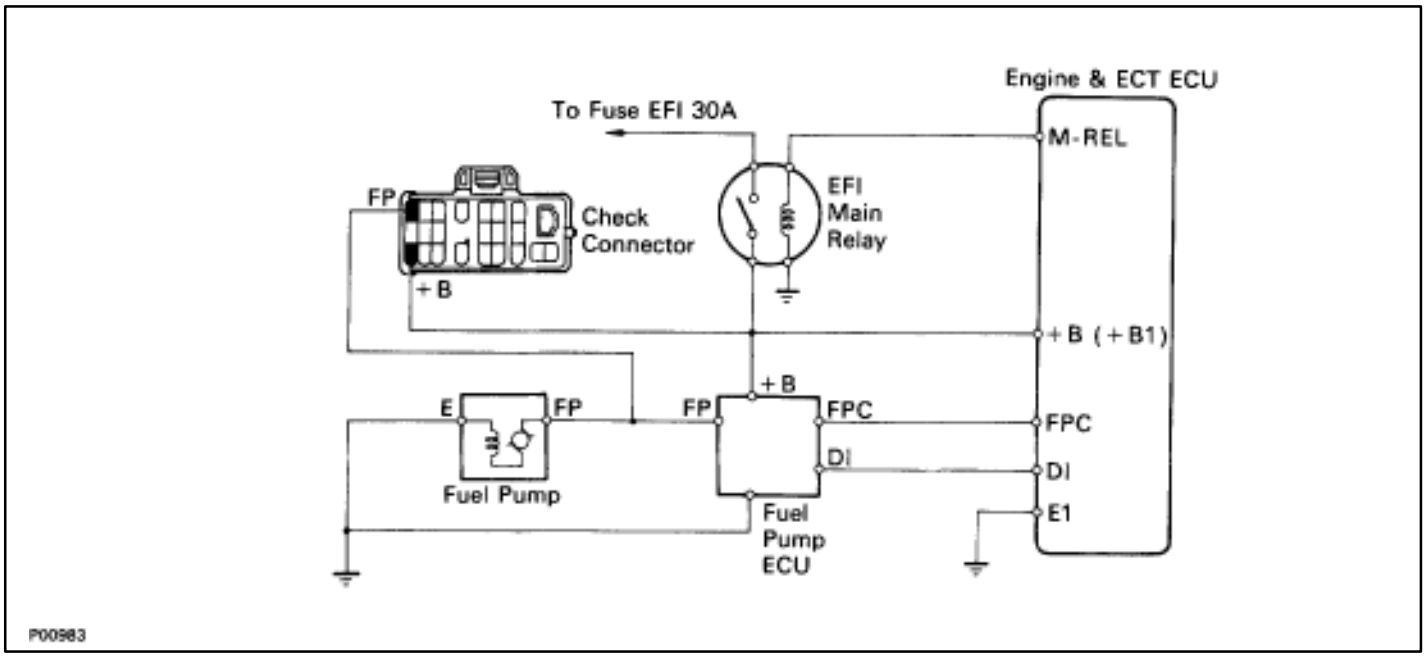

COMPONENTS FOR REMOVAL AND INSTALLATION

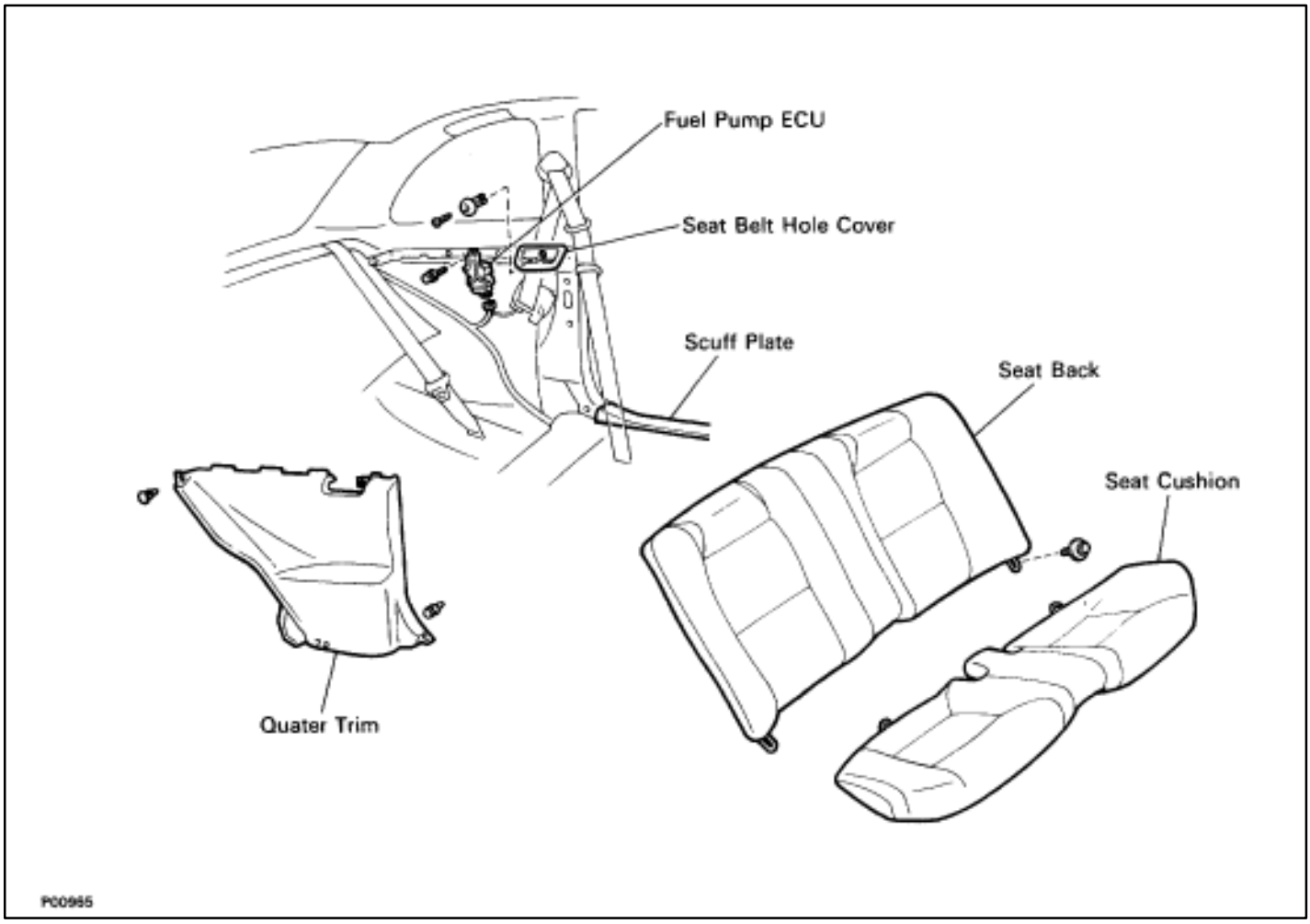

WhereEverybodyKnowsYourName

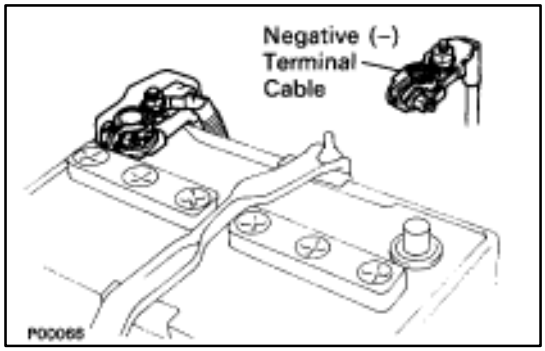

INSPECTION OF FUEL PUMP ECU

1. **DISCONNECT CABLE FROM NEGATIVE TERMINAL OF BATTERY**
   CAUTION: Work must be started after approx. 20 seconds or longer from the time the ignition switch is turned to the "LOCK" position and the negative (–) terminal cable is disconnected from the battery.
2. **REMOVE SEAT CUSHION AND BACK**

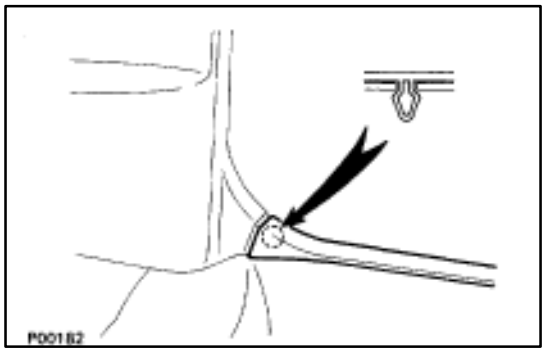

3. **REMOVE QUARTER TRIM**
   (a) Disconnect the rear side of the scuff plate by pulling it.

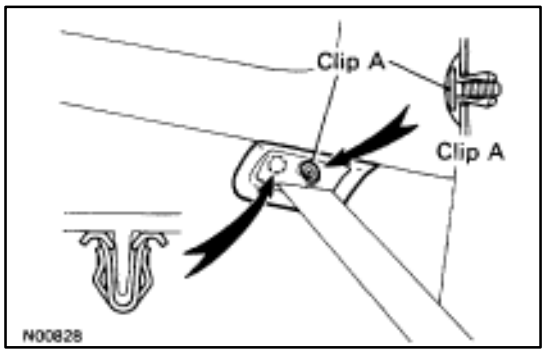

   (b) Remove clip A.
   (c) Remove the belt hole cover by pulling it.

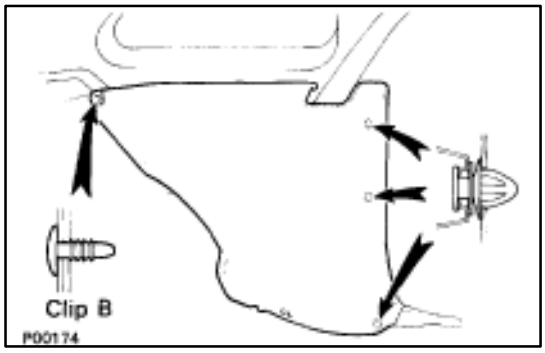

   (d) Remove clip B.
   (e) Remove the quarter trim by pulling it.

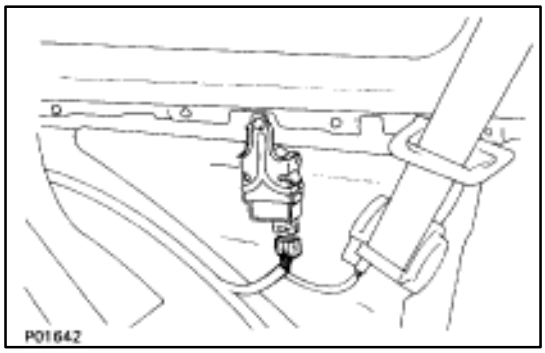

4. **DISCONNECT FUEL PUMP ECU CONNECTOR**

WhereEverybodyKnowsYourName

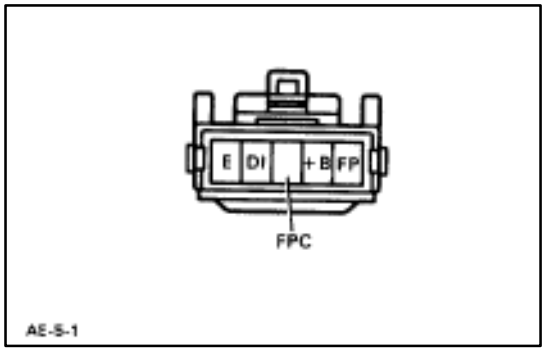

5. INSPECT FUEL PUMP ECU

(a) Connect the cable to the negative (–) terminal of the battery.

(b) Check the connector on the wiring harness side as shown in the chart.

Check for	Tester connection	Condition	Specified value
Continuity	E – Ground	–	Continuity
Continuity	DI – Ground	–	Continuity
Voltage	FP – Ground	Sudden racing	12 – 14 V
		Idling	8 – 10 V
Voltage	+ B – Ground	IG SW ON	10 – 14 V
Voltage	FPC – Ground	Sudden racing (1,600 rpm or more)	4 – 6 V
		Idling	2.5 V

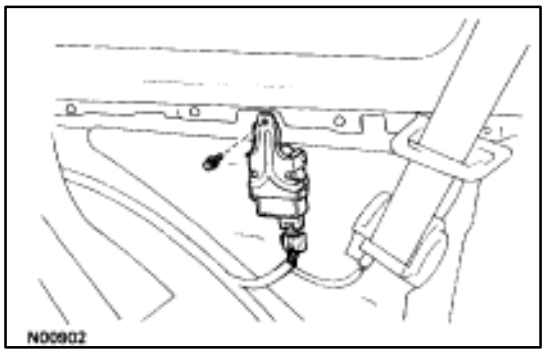

If circuit is as specified, replace the fuel pump ECU.

(c) Disconnect the cable from the negative (–) terminal of the battery.

6. RECONNECT FUEL PUMP ECU CONNECTOR

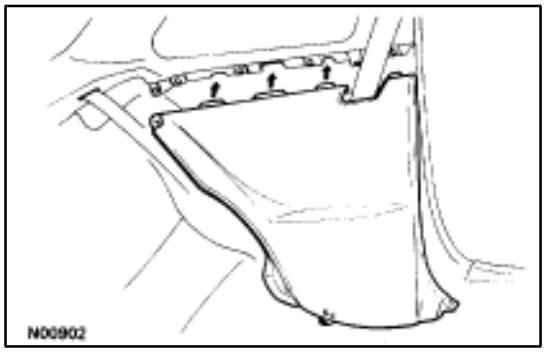

7. INSTALL QUARTER TRIM

(a) Attach the upper side of the quarter trim to the quarter panel.

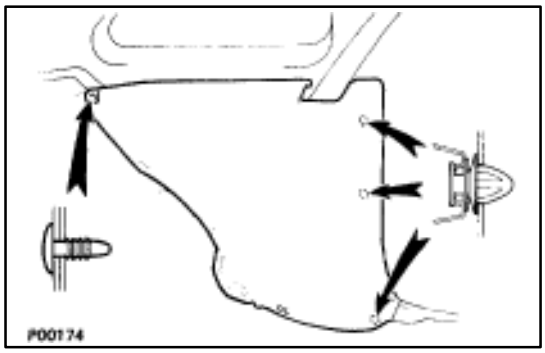

(b) Install the quarter trim with the four clips.

WhereEverybodyKnowsYourName

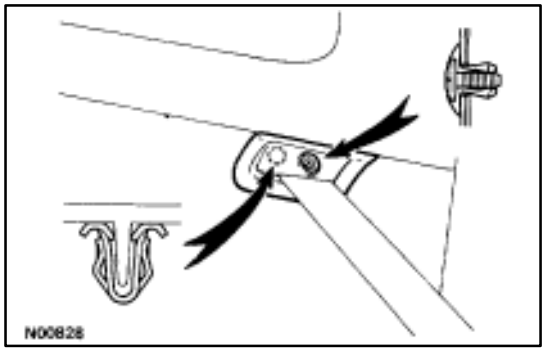

(c) Install the belt hole cover with the two clips.

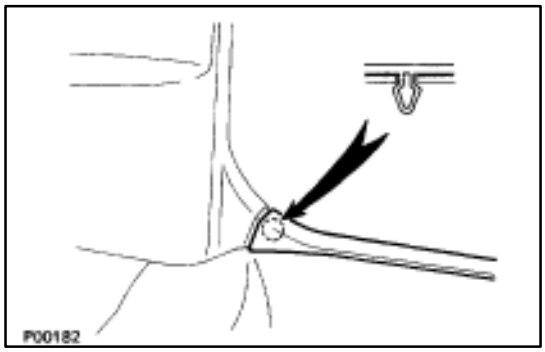

(d) Install the rear side of the scuff.

8. REINSTALL SEAT BACK AND CUSHION

9. RECONNECT CABLE FROM NEGATIVE TERMINAL OF BATTERY

WhereEverybodyKnowsYourName

Engine & ECT ECU

TERMINALS OF ENGINE & ECT ECU

Terminal No.	Symbol	Connection	Terminal No.	Symbol	Connection
E9 – 1	IGSW	Ignition Switch	E9 – 31	+ B	EFI Main Relay
2	SPD	No. 1 Speed Sensor	32	+ B1	EFI Main Relay
3	KD	Kick–Down Switch	33	BATT	Battery
4	STP	Stop light Switch	34	A/C	A/C Control Assembly
5		–	35		–
6	W	“CHECK” Engine Warning Light	36		–
7	R	Neutral Start Switch	37	TR	TRAC ECU
8		–	38	NEO	TRAC ECU
9	2	Neutral Start Switch	39	VTO2	TRAC ECU
10	L	Neutral Start Switch	40	VTO1	TRAC ECU
11	AD	CC ECU	E10 – 1	NCO↔	T/M Input Speed Sensor
12	OD1	CC ECU	2		–
13		–	3	SP2↔	No. 2 Speed Sensor for ECT
14		–	4	E11	ECU Ground
15		–	5	G2↔	Cam position Sensor
16		–	6	G1↔	Cam position Sensor
17	TT	TDCL	7	NF↔	Engine Speed Sensor
18	P	ECT Pattern Select Switch	8		–
19	TE2	Check Connector	9	S2	ECT Solenoid Value
20	TE1	Check Connector	10	S1	ECT Solenoid Value
21	D1	Fuel Pump ECU	11		–
22	FPC	Fuel Pump ECU	12		–
23	ACMG	A/C Magnet Clutch Relay	13	SLN≦	No.3 ECT Solenoid Valve
24	M–REL	EFI Main Relay	14	SLU↔	No.4 ECT Solenoid Valve
25		–	15		–
26		–	16		–
27		–	17	#10	No.3 and No.5 Injectors
28	OD2	O/D Main Relay	18	#20	No.4 and No.6 Injectors
29		–	19	#20	No.2 and No.8 Injectors
30		–	20	#40	No.1 and No.7 Injectors

Engine & ECT ECU Terminals

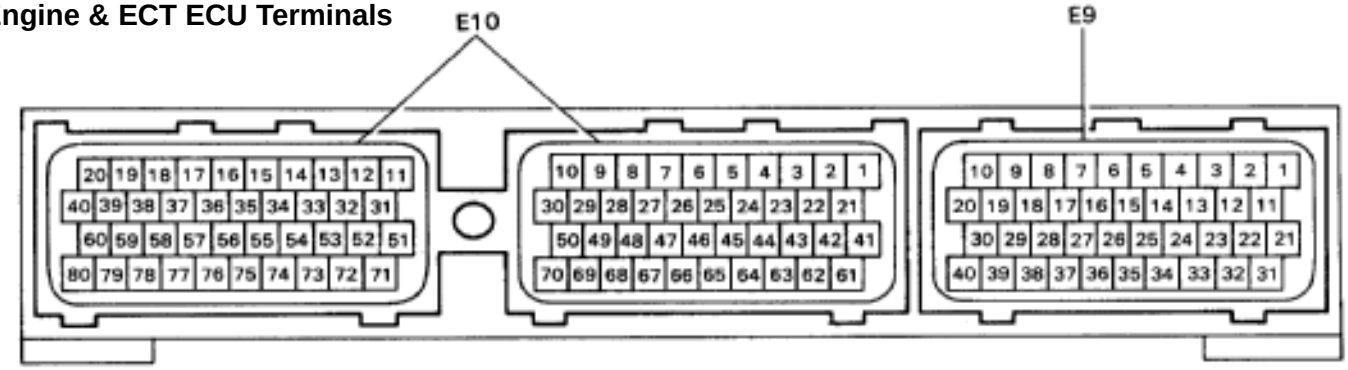

WhereEverybodyKnowsYourName

TERMINALS OF ENGINE & ECT ECU (Cont'd)

Terminal No.	Symbol	Connection	Terminal No.	Symbol	Connection
E10– 21	NCO	T/M Input Speed Sensor	E10 – 51		–
22		–	52	HTL2	LH Sub–Oxygen Sensor Heater
23	SP2	No.2 Speed Sensor for ECT	53	HTR2	RH Sub–Oxygen Sensor Heater
24		–	54		–
25	G2	LH (No.2) Cam Position Sensor	55		–
26	G1	RH (No.1) Cam Position Sensor	56	IGT2	No.2 Igniter for RH Bank
27	NE	Engine Speed Sensor	57	IGT1	No.1 Igniter for LH Bank
28	VF2	Check Connector	58	IGF1	No.1 Igniter for LH Bank
29	VF1	Check Connector	59	IGF2	No.2 Igniter for RH Bank
30		–	60		–
31		–	61		–
32	ISC4	ISC Valve	62		–
33	ISC3	ISC Valve	63	IDL2	Sub–Throttle Position Sensor
34	ISC2	ISC Valve	64	IDL1	Throttle Position Sensor
35	ISC1	ISC Valve	65	E2	Sensor Ground
36	*2EGR4	EGR Valve	66	KS	Air Flow Meter
37	*2EGR3	EGR Valve	67	OXR2	
38	*2EGR2	EGR Valve	68	OXL2	LH Sub–Oxygen Sensor
39	*2EGR1	EGR Valve	69	E1	ECU Ground
	*10EGR	VSV for EGR			
40		–	70		–
41	VC	Throttle Position Sensor Air Flow Meter	71	HTL1	LH Main Oxygen Sensor
42	VTA2	Fuel Pump ECU	72	HTR1	RH Main Oxygen Sensor
43	VTA1	A/C Magnet Clutch Relay	73	FPU	VSV for Fuel Pressure Control Value
44	THW	Water Temp. Sensor	74	*10PAG	VSV for EVAP
45	THA	Intake Air Temp. Sensor	75		–
46	THG	EGR Gas Temp. Sensor	76	NSW	Neutral Start Switch
47	OXR1	RH Main Oxygen Sensor	77	STA	Starter Relay
48	OXL1	LH Main Oxygen Sensor	78	STJ	Cold Start Injector
49	KNK2	RH (No.2) Knock Sensor	79	E02	Power Ground
50	KNK1	LH (No.1) Knock Sensor	80	E01	Power Ground

Engine & ECT ECU Terminals

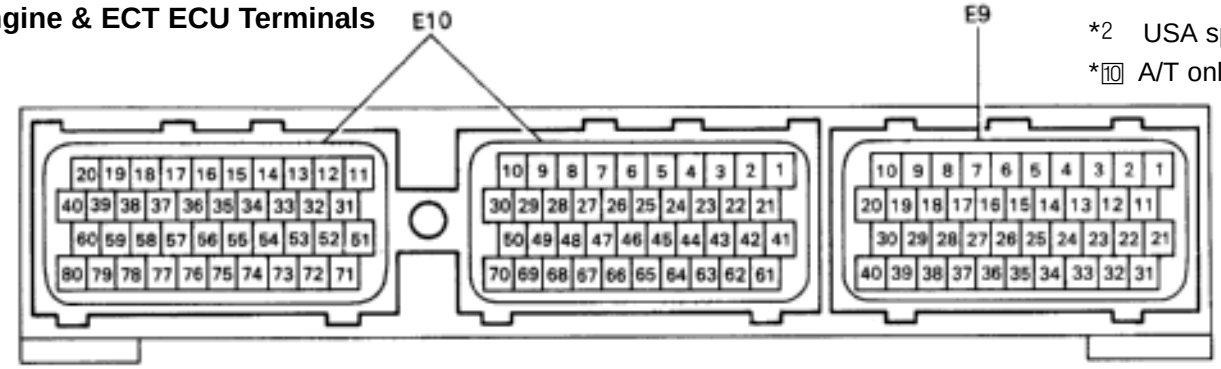

*2 USA spec. only
*10 A/T only

WhereEverybodyKnowsYourName

COMPONENTS FOR REMOVAL AND INSTALLATION

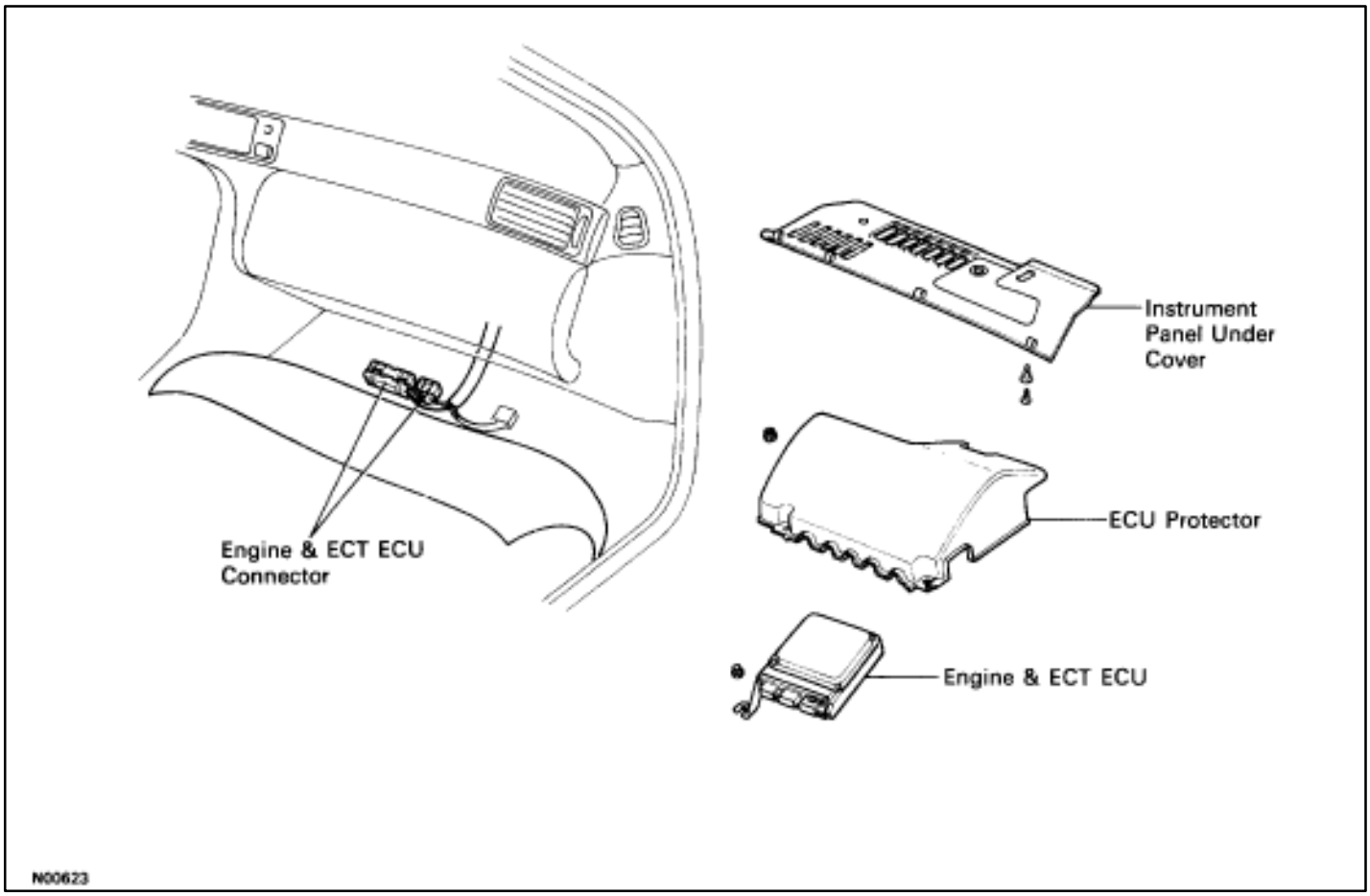

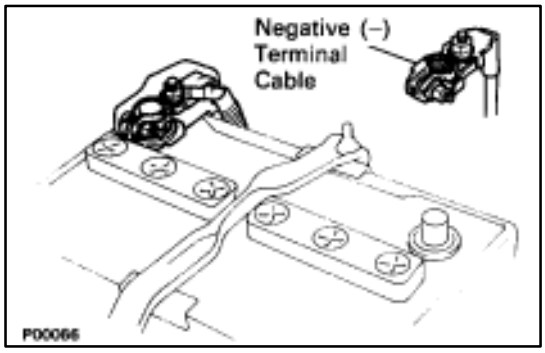

INSPECTION OF ENGINE & ECT ECU

1. **DISCONNECT CABLE FROM NEGATIVE TERMINAL OF BATTERY**
   CAUTION: Work must be started after approx. 20 seconds or longer from the time the ignition switch is turned to the "LOCK" position and the negative (–) terminal cable is disconnected from the battery.

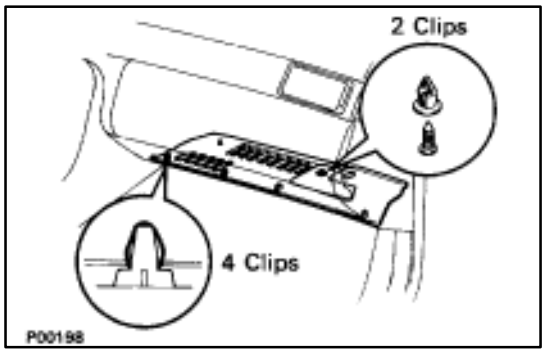

2. **DISCONNECT ENGINE & ECT ECU FROM FLOOR PANEL**
   (a) Remove the two clips, and pull out the instrument panel under cover.

WhereEverybodyKnowsYourName

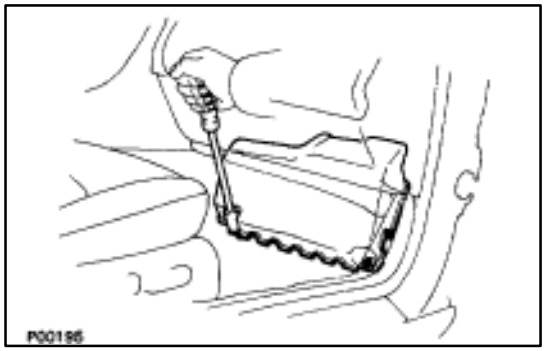

(b) Take out the front side of the floor carpet.
(c) Remove the two nuts and protector.

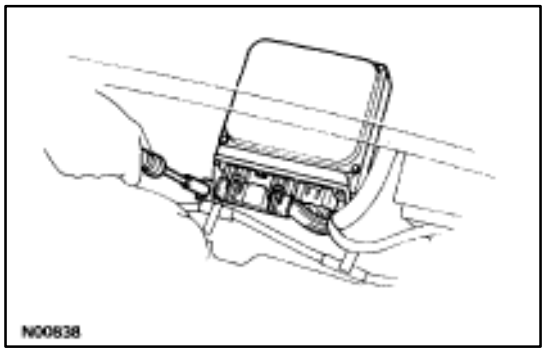

(d) Remove the nut, and disconnect the engine & ECT ECU from the floor panel.

3. INSPECT ENGINE & ECT ECU

A. Install SST (check harness) between engine & ECT ECU and wiring connectors

HINT:

- ECU connectors are water–proof and are the bolt type.
- For water–proof type connectors, in order to measure the voltage of ECU terminals and the resistance of connected parts, connect a check harness (SST 09990–01000) between the ECU and wiring connectors, then perform the inspection.
- Avoid inserting a tester probe from the other side of connector as this noticeably reduces the water–proof ability.
- Disconnect the ECU connectors by fully loosening the bolt.

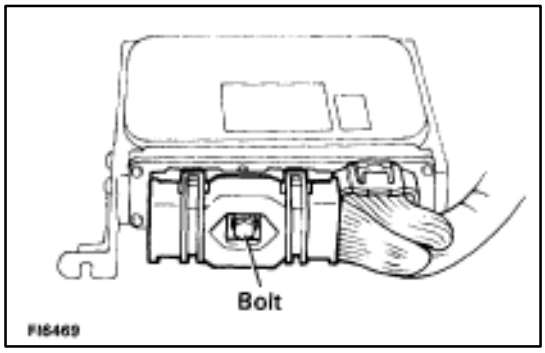

(a) Remove the bolt, and disconnect the two ECU connectors.

NOTICE:

- **Do not pull the wiring harness when disconnecting the connectors.**
- **When disconnecting the connector, the ECU's back–up power source is cut off, so the malfunction codes, etc. recorded in the ECU memory are cancelled.**
- **Never insert a tester probe or male terminal used for inspection purposes into the female terminal of the vehicle wire harness. Otherwise, the female terminal may be widened, which can reselt in faulty connection.**

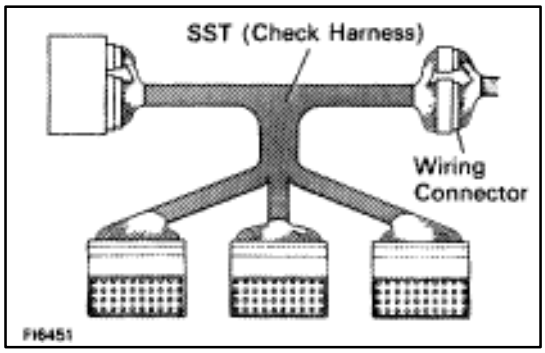

(b) Connect SST (check harness) between ECU and wiring connectors.

SST 09990–01000

HINT: SST (check harness) connector terminals are arranged the same as those of the ECU.

WhereEverybodyKnowsYourName

B. Inspect voltage of engine & ECT ECU

Check the voltage between each terminal.

- Turn the ignition switch ON.
- Measure the voltage at each terminal.

HINT:

- Perform all voltage measurements with the connectors connected.
- Verify that the battery voltage is 11 V or more when the ignition switch is ON.

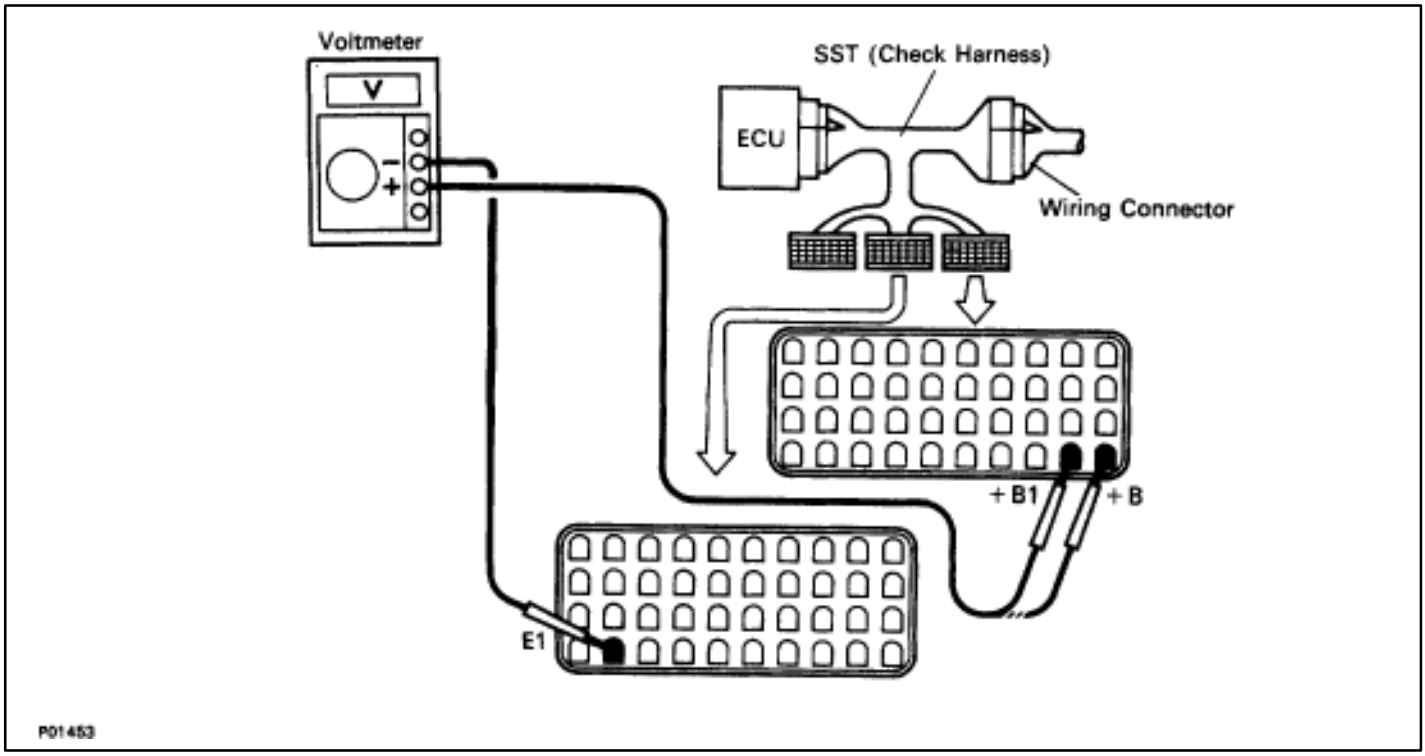

WhereEverybodyKnowsYourName

Voltage at Engine (& ECT) ECU Wiring Connectors

Terminals			Condition		STD voltage (V)
BATT (E9 – 33)	–	E1 (E10 – 69)	–		10 – 14
IGSW (E9 – 1) +B (E9 – 31) +B1 (E9 – 32)	–	E1 (E10 – 69)	IG SW ON		10 – 14
VC (E10 – 41)	–	E2 (E10 – 65)	IG SW ON	–	4.0 – 6.0
IDL1 (E10 – 64) IDL2 (E10 – 63)	–	E2 (E10 – 65)		Throttle (or sub–throttle) valve fully closed	1.0 or less
				Throttle (or sub–throttle) valve fully open	10 – 14
VTA1 (E10 – 43) VTA1 (E10 – 42)	–	E2 (E10 – 65)		Throttle (or sub–throttle) valve fully closed	0.1 – 1.0
				Throttle (or sub–throttle) valve fully open	3.0 – 6.0
KS (E10 – 66)	–	E1 (E10 – 69)	Idling		Pulse generation
THA (E10 – 45)	–	E2 (E10 – 65)	Idling	Intake air temp. 20˚C (68˚F)	1.0 – 3.0
THW (E10 – 44)	–	E2 (E10 – 65)		Engine Coolant temp. 80˚C (176˚F)	0.1 – 1.0
STA (E10 – 77)	–	E1 (E10 – 69)	Cranking		6.0 or more
#10 (E10 – 20) #20 (E10 – 19) #30 (E10 – 18) #40 (E10 – 17)	–	E01 (E10 – 80) E02 (E10 – 79)	IG SW ON		10 – 14
			Idling		Pulse generation
IGT1 (E10 – 57) IGT2 (E10 – 56)	–	E1 (E10 – 69)	Idling		Pulse generation
IGF1 (E10 – 58) IGF2 (E10 – 59)	–	E1 (E10 – 69)	Idling		Pulse generation
G1 (E10 – 26) G2 (E10 – 25)	–	G1↔ – (E10–6) G2↔ – (E10–5)	Idling		Pulse generation
NE (E10 – 27)	–	G – (E10 – 7)	Idling		Pulse generation
M – REL (E9 – 24)	–	E1 (E10 – 69)	IG SW ON		10 – 14
FPC (E9 – 22)	–	E1 (E10 – 69)	Cranking, Sudden racing (6,000 rpm)		4.2 – 6.0
			Idling		Pulse generation
D1 (E9 – 21)	–	E1 (E10 – 69)	Idling		7.5 or more
FPU (E10 – 73)	–	E1 (E10 – 69)	IG SW ON		10 – 14
			Restarting high temp.		2.0 or less
PAG (E10 – 74)	–	E01 (E10 – 69)	IG SW ON		10 – 14

Engine & ECT ECU Terminals

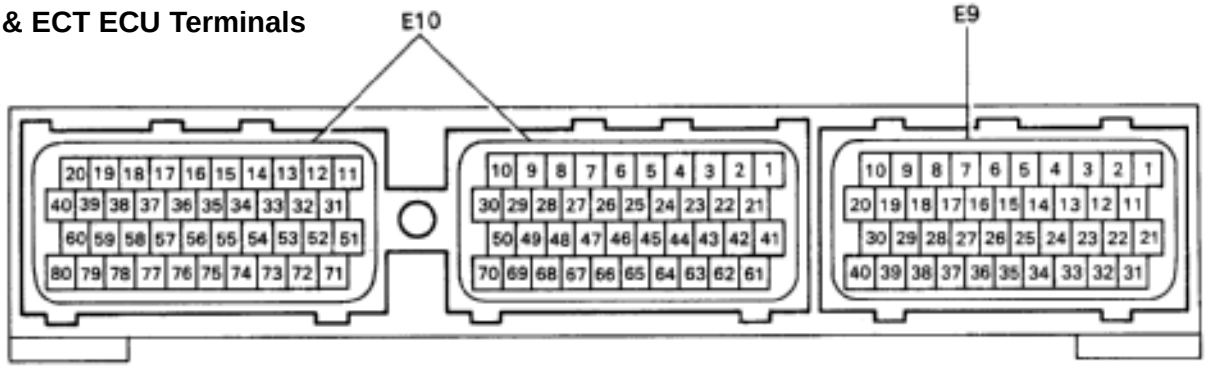

WhereEverybodyKnowsYourName

Voltage at Engine (& ECT) ECU Wiring Connectors (Cont'd)

Terminals		Condition		STD voltage (V)
ISC1 (E10 – 35) ISC2 (E10 – 34) ISC3 (E10 – 33) ISC4 (E10 – 32)	– E1 (E10 – 69)	IG SW ON		10 – 14
VF1 (E10 – 29) VF2 (E10 – 28)	– E1 (E10 – 69)	Maintain engine speed at 2,500 rpm for 120 seconds after warming up then return to idling		1.0 – 4.0
OX1 (E10 – 48) OX2 (E10 – 47)	– E1 (E10 – 69)	Maintain engine speed at 2,500 rpm for 120 seconds after warming up		Pulse generation (0 – 1.0)
HT (E10 – 71)	– E01 (E10 – 80)	Idle		2.0 or less
KNK1 (E10 – 50) KNK2 (E10 – 49)	– E1 (E10 – 69)	Idle		Pulse generation
NSW (E10 – 76)	– E1 (E10 – 69)	IG SW ON	Shift position "P" or "N" range	1.0 or less
			Ex. shift position "P" or "N" range	10 – 14
SP1 (E9 – 2)	– E1 (E10 – 69)	IG SW ON	Rotate driving wheel slowly.	4 or more
TE1 (E9 – 20) TE2 (E9 – 19)	– E1 (E10 – 69)	IG SW ON		10 – 14
W (E9 – 6)	– E1 (E10 – 69)	IG SW ON		2.0 or less
		Idle		10 – 14
OD1 (E9 – 12)	– E1 (E10 – 69)	IG SW ON		4.0 – 6.0
A/C (E9 – 34)	– E1 (E10 – 69)	A/C SW ON (at idle)		2.0 or less
		A/C SW OFF		10 – 14
ACMG (E9 – 23)	– E1 (E10 – 69)	A/C SW ON (at idle)		2.0 or less
		A/C SW OFF		10 – 14
TR (E9 – 37)	– E1 (E10 – 69)	IG SW ON		10 – 14
VT01 (E9 – 40)	– E2 (E10 – 65)	IG SW ON	Throttle (or sub–throttle) valve fully closed	1.0 or less
VT02 (E9 – 39)			Throttle (or sub–throttle) valve fully open	3.0 – 5.5
NEO (E9 – 38)	– E1 – (E10 – 69)	IG SW ON		4.0 – 6.0

Engine & ECT ECU Terminals

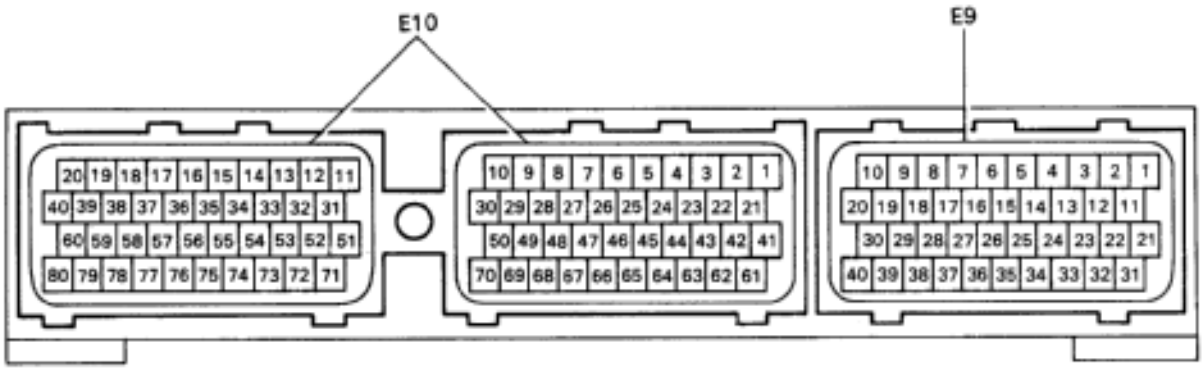

WhereEverybodyKnowsYourName

B. Inspect resistance of engine & ECT ECU wiring connectors

NOTICE: Do not touch the ECU terminals.

Check the resistance between each terminal of the wiring connectors.

- Disconnect the SST (check harness) connectors from the ECU.
- Measure the resistance at each terminal.

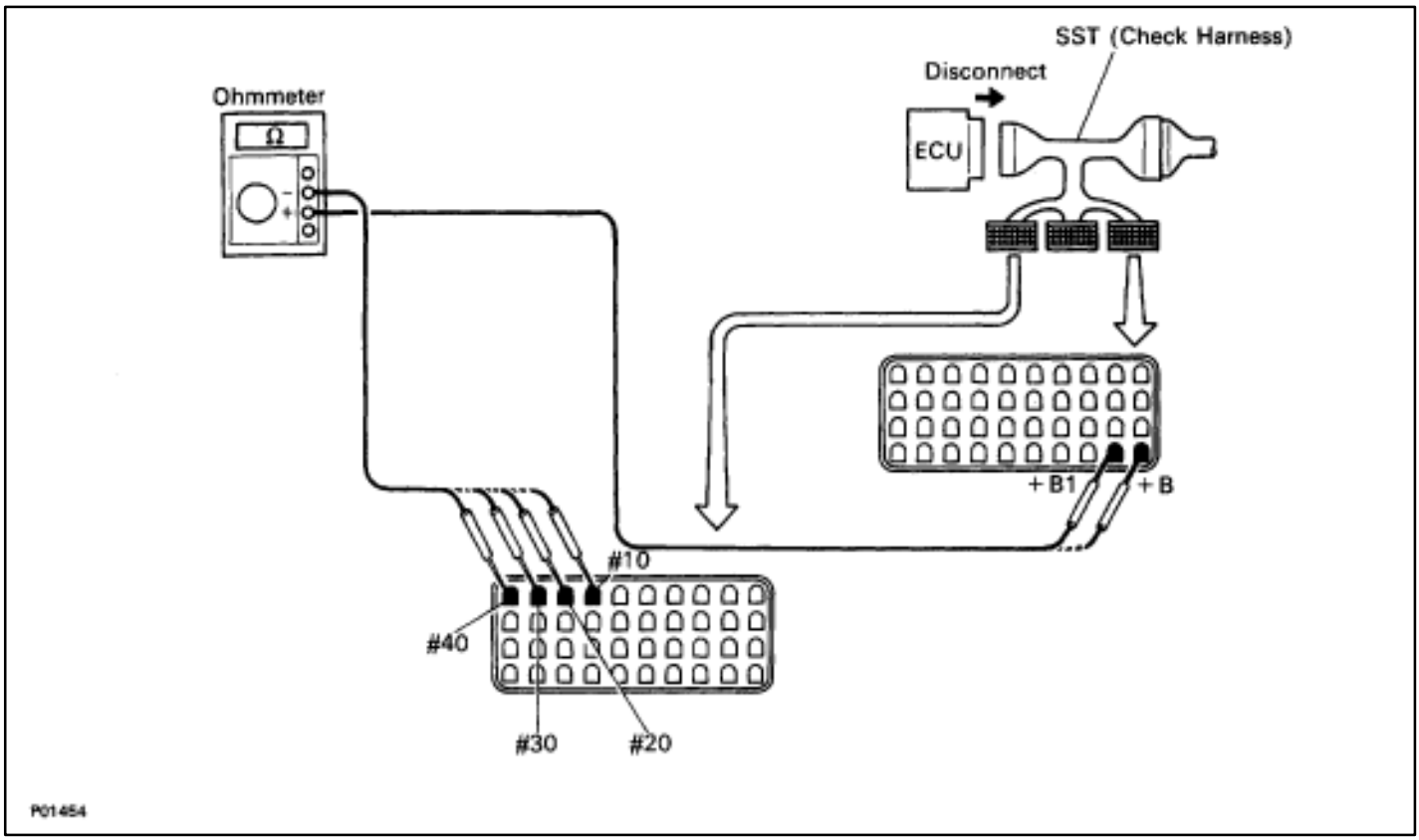

WhereEverybodyKnowsYourName

Resistance of ECU Wiring Connectors

Terminals			Condition	STD voltage (V)
#10 (E10 – 20) #20 (E10 – 19) #30 (E10 – 18) #40 (E10 – 17) #50 (E10 – 16) #60 (E10 – 15)	–	+ B (E9 – 31) + B1 (E9 – 32)	–	13.2 – 14.2
ISC1 (E10 – 35) ISC2 (E10 – 34) ISC3 (E10 – 33) ISC4 (E10 – 32)	–	+ B (E9 – 31) + B1 (E9 – 32)	–	10 – 30
ACIS (E10 – 39)	–	+ B (E9 – 31) + B1 (E9 – 32)	–	38.5 – 44.5
HT (E10 – 71)	–	+ B (E9 – 31) + B1 (E9 – 32)	–	5.1 – 6.3
EVAP (E10 – 74)	–	+ B (E9 – 31) + B1 (E9 – 32)	–	30 – 34
ERG (E10 – 75)	–	+ B (E9 – 31) + B1 (E9 – 32)	–	33 – 39
IDL1 (E10 – 64) IDL2 (E10 – 63)	–	E2 – (E10 – 65)	Throttle valve open	Infinity
			Throttle valve fully closed	2,300 or less
VTA1 (E10 – 43) VTA2 (E10 – 42)	–	E2 – (E10 – 65)	Throttle valve open	3,300 – 10,000
			Throttle valve fully closed	200 – 800
VC (E10 – 41)	–	E2 – (E10 – 65)	–	4,000 – 9,000
THA (E10 – 45)	–	E2 – (E10 – 65)	Intake air temp. 20˚C (68˚F)	2,000 – 3,000
THW (E10 – 44)	–	E2 – (E10 – 65)	Coolant temp. 80˚C (176˚F)	200 – 400
THG (E10 – 46)	–	E2 – (E10 – 65)	EGR gas temp. 50˚C (112˚F)	69,400 – 88,500
G1 (E10 – 26) G2 (E10 – 25)	–	G (E10 – 7)	Cam position sensor – 10 – + 40˚C (14 – 104˚F)	125 – 190
NE (E10 – 27)	–	G (E10 – 7)	Cam position sensor – 10 – + 40˚C (14 – 104˚F)	155 – 240

Engine & ECT ECU Terminals

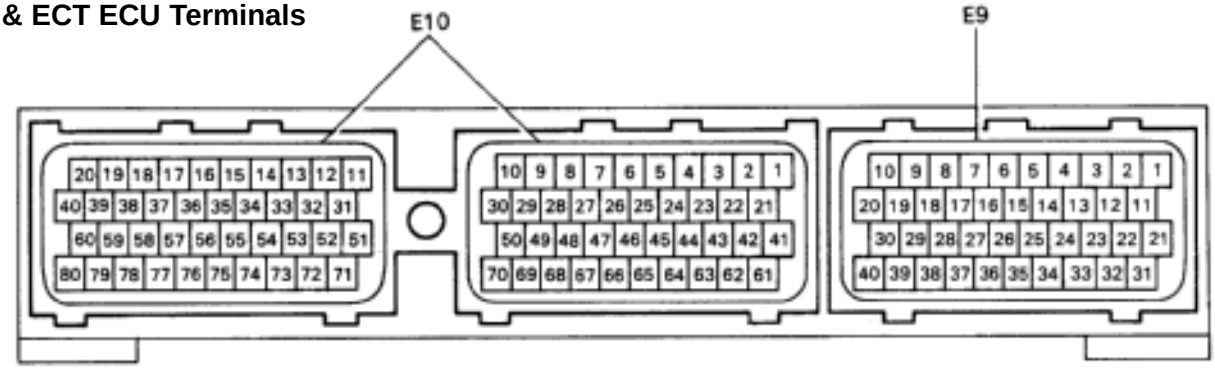

WhereEverybodyKnowsYourName

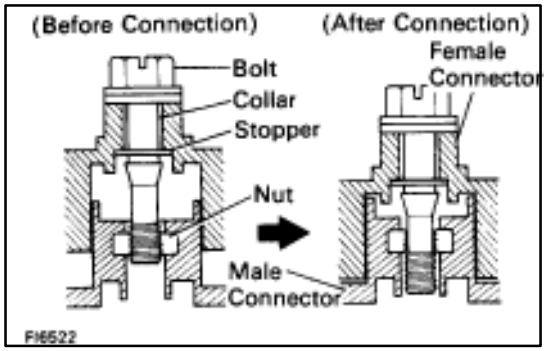

- Disconnect the SST from the wiring connectors.

SST 09990–01000

4. REINSTALL ENGINE & ECT ECU TO FLOOR PANEL

(a) Connect the two ECU connectors.

- Match the male connector correctly with the female connector, then press them together.
- Tighten the bolt.

Make sure the connector is completely connected, by tightening the bolt until there is a clearance of less than 1 mm (0.04 in.) between bottom of the male connector and end of the female connector.

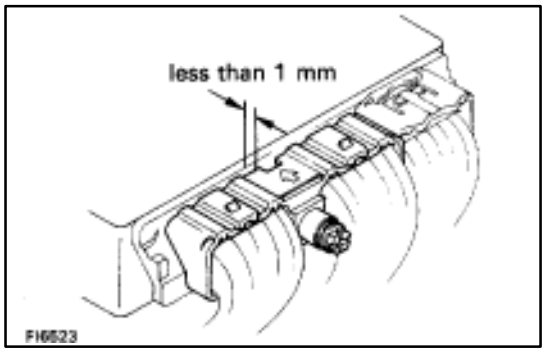

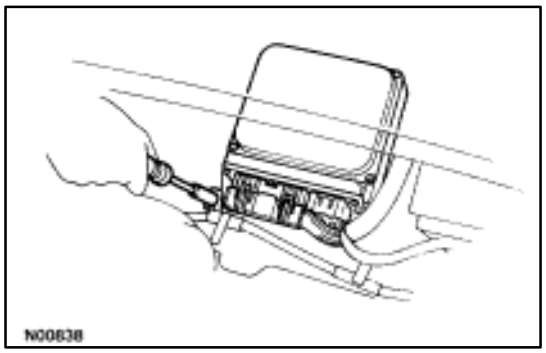

(b) Install the ECU with the bolt.

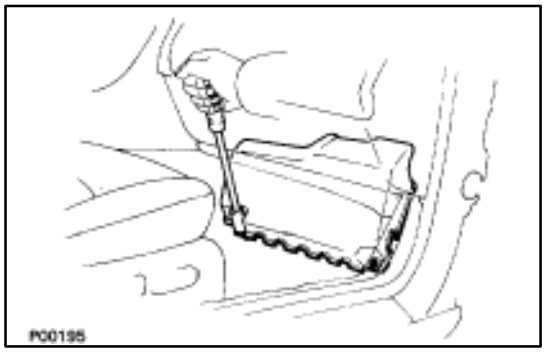

(c) Install the ECU protector with the two nuts.

(d) Install the floor carpet.

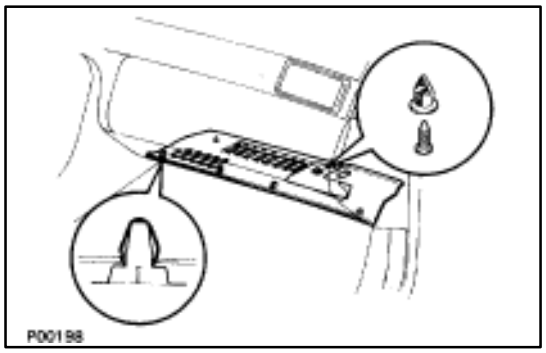

(e) Install the instrument panel under cover with the two clips.

5. RECONNECT CABLE TO NEGATIVE TERMINAL OF BATTERY

WhereEverybodyKnowsYourName

Fuel Cut RPM

INSPECTION OF FUEL CUT RPM

1. WARM UP ENGINE

Allow the engine to warm up to normal operating temperature.

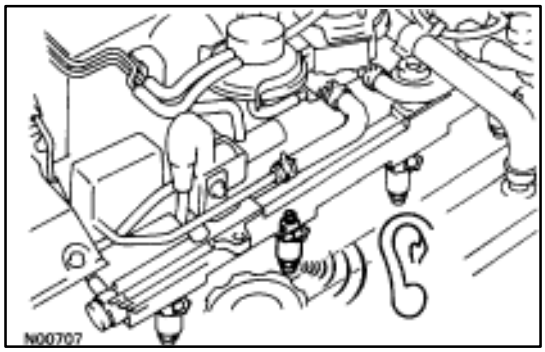

2. CONNECT TACHOMETER

Connect the test probe of a tachometer to terminal IG of the check connector.

NOTICE

- **Never allow the tachometer terminal to touch ground as it could result in damage to the igniter and/or ignition coil.**
- **As some tachometers are not compatible with this ignition system, we recommend that you confirm the compatibility of yours before use.**

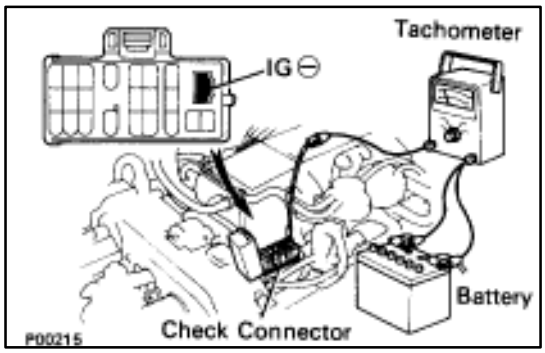

3. INSPECT FUEL CUT OPERATION

(a) Increase the engine speed to at least 2,500 rpm.
(b) Check for injector operating noise.
(c) Check that when the throttle lever is released, injector operation noise stops momentarily and then resumes.

HINT:

- The vehicle should be stopped.
- Measure with the A/C OFF.

Fuel return rpm: 1,400 rpm

4. REMOVE TACHOMETER

WhereEverybodyKnowsYourName

SERVICE SPECIFICATIONS

SERVICE DATA

Fuel pump	Resistance	0.2 – 3.0 ?	
Cold start injector	Resistance Fuel leakage	2 – 4 ? One drop or less per minute	
Fuel pressure regulator	Fuel pressure at no vacuum	265 – 304 kPa (2.7 – 3.1 kgf/cm^2, 38 – 44 psi)	
Injector	Resistance Injection volume Difference between each cylinder Fuel leakage	13.4 – 14.2 ? 55 – 70 cc (3.4 – 4.3 cu in.) per 15 sec. 10 cc (0.6 cu in.) or less One drop or less per minute	
Air flow meter	Resistance (THA – E2) at–20˚C (–4˚F) at 0˚C (32˚F) at 20˚C (68˚F) at 40˚C (104˚F) at 60˚C (140˚F) at 80˚C (176˚F)	10 – 20 k? 4 – 7 k? 2 – 7 k? 0.9 – 1.3 k? 0.4 – 0.7 k? 0.2 – 0.4 k?	
Throttle body	Throttle body fully closed angle	6˚	
Throttle position sensor (main)	Clearance between stop screw and lever	Between terminals	Resistance
	0 mm 0 in. 0.40 mm 0.016 in. 0.65 mm 0.026 in. Throttle valve fully opened position –	VTA1 – E2 IDL1 – E2 IDL1 – E2 VTA1 – E2 VC – E2	0.2 – 0.8 k? 2.3 k? or less Infinity 3.3 – 10.0 k? 4.0 – 9.0 k?
Sub–throttle position sensor (w/ TRAC)	Clearance between stop screw and lever	Between terminals	Resistance
	0 mm 0 in. 0.30 mm 0.012 in. 0.50 mm 0.020 in. Throttle valve fully opened position –	VTA2 – E2 IDL2 – E2 IDL2 – E2 VTA2 – E2 VC – E2	0.2 – 0.8 k? 2.3 k? or less Infinity 3.3 – 10.0 k? 4.0 – 9.0 k?
Sub–throttle actuator (w/ TRAC)	Resistance (ACM – A and A, BCM – B and B)	0.5 – 1.0 ?	
ISC valve	Resistance (B1 – S1 and S3, B2 – S2 and S4)	10 – 30 ?	
Cold start injector time switch	Resistance STA – STJ below 15˚C (59˚F) above 30˚C (86˚F) STA – Ground	25 – 45 ? 65 – 85 25 – 85 ?	
VSV for fuel pressure control	Resistance	37 – 44 ?	

WhereEverybodyKnowsYourName

SERVICE DATA (Cont'd)

Water temp. sensor	Resistance	at –20˚C (–4˚F) at 0˚C (32˚F) at 20˚C (68˚F) at 40˚C (104˚F) at 60˚C (140˚F) at 80˚C (176˚F)	10 – 20 k? 4 – 7 k? 2 – 7 k? 0.9 – 1.3 k? 0.4 – 0.7 k? 0.2 – 0.4 k?
EGR gas temp. sensor	Resistance	at 50˚C (112˚F) at 100˚C (212˚F) at 150˚C (302˚F)	69 – 89 k? 12 – 15 k? 2 – 4 k?
Main oxygen sensor	Heater coil resistance		5.1 – 6.3 ?
Sub–oxygen sensor	Heater coil resistance		5.1 – 6.3 ?

ECU

HINT:
▼Perform all voltage and resistance measurements with the ECU connected.
▼Verify that the battery voltage in 11 V or above with the ignition switch is ON.

Voltage

Terminals	Condition		STD voltage (V)
BATT – E1	–		10 – 14
IGSW +B – E1 +B1	IG SW ON		10 – 14
VC – E2	IG SW ON	–	4.0 – 6.0
IDL1 IDL2 – E2	IG SW ON	Throttle (or sub–throttle) valve fully closed	1 or less
	IG SW ON	Throttle (or sub–throttle) valve fully open	10 – 14
VTA1 VTA 2 – E2	IG SW ON	Throttle (or sub–throttle) valve fully closed	0.1 or less
	IG SW ON	Throttle (or sub–throttle) valve fully open	3.0 – 6.0
KS – E1	Idling		Pulse generation
THA – E2 THW – E2	Idling	Intake air temp. 20˚C (68˚F)	1.0 – 3.0
	Idling	Engine coolant temp. 80˚C (176˚F)	0.1 – 1.0
STA – E1	Cranking		6.0 or more
#10 #20 #30 #40 – E01 E02	IG SW ON		10 – 14
	Idling		Pulse generation
IGT1 IGT2 – E1	Idling		Pulse generation

WhereEverybodyKnowsYourName

SERVICE DATA (Cont'd)

ECU (cont'd)	Voltage (cont'd)			
	Terminals	Condition		STD voltage (V)
	IGF1 IGF2 – E1	IG SW ON		1.0 or less
		Idling		Pulse generation
	G1 G2 – G1 (–) G2 (–)	Idling		Pulse generation
	NE – NE (+)	Idling		Pulse generation
	M–REL – E1	IG SW ON		10 – 14
	FPC – E1	Cracking, Sudden racing (6,000 rpm)		4.2 – 6.0
		Idling		Pulse generation
	DI – E1	Idling		7.5 or more
	FPU – E1	IG SW ON		10 – 14
		Restarting high temp.		2.0 or less
	PAG – E1	IG SW ON		10 – 14
	ISC1 ISC2 ISC3 ISC4 – E1	IG SW ON		10 – 14
	VF1 VF2 – E1	Maintain engine speed at 2,500 rpm for 120 seconds after warming up then return to idling.		1.0 – 4.0
	OXR1 OXL1 – E1	Maintain engine speed at 2,500 rpm for 120 seconds after warming up		Pulse generation (0 – 1.0)
	HTR1 HTR2 HTL1 HTL2 – E01 E02	IG SW ON		10 – 14
		Idling		2.0 or less
	EGR1 EGR2 EGR3 EGR4 – E1	IG SW ON		10 – 14
	EGR – E1	Idling		10 – 14
	KNK1 KNK2 – E1	Idling		Pulse generation
	NSW – E1	IG SW ON	Shift position "P" or "N" range	1.0 or less
			Ex. shift position "P" or "N" range	10 – 14

WhereEverybodyKnowsYourName

SERVICE DATA (Cont'd)

ECU (cont'd)	Voltage (cont'd)			
	Terminals	Condition		STD voltage (V)
	SPD – E1	IG SW ON	Rotate driving wheel slowly.	4 or more
	TE1 TE2 – E1	IG SW ON		10 – 14
	W – E1	IG SW ON		2.0 or less
		Idling		10 – 14
	AD – E1	Idling		10 – 14
	OD1 – E1	IG SW ON		4.0 – 6.0
	A/C – E1	A/C SW ON (at idling)		2.0 or less
		A/C SW OFF		10 – 14
	ACMG – E1	A/C SW ON (at idling)		2.0 or less
		A/C SW OFF		10 – 14
	TR – E1	IG SW ON		10 – 14
	VT01 VT02 – E2	IG SW ON	Throttle (or sub–throttle) valve fully closed	1.0 or less
			IG SW ON Throttle (or sub–throttle) valve fully open	3.0 – 5.5
	NE0 – E1	IG SW ON		4.0 – 6.0
	Resistance of wiring connector side			
	Terminals	Condition		STD voltage (?)
	#10 #20 #30 #40 – +B +B1	–		13.2 – 14.2
	STJ – +B +B1	–		2 – 4
	ISC1 ISC2 ISC3 ISC4 – +B +B1	–		10 – 30
	FPU – +B +B1	–		37 – 44
	EGR1 EGR2 EGR3 EGR4 – +B +B1	–		19.9 – 23.4
	EGR – +B +B1	–		33 – 39

WhereEverybodyKnowsYourName

SERVICE DATA (Cont'd)

ECU (cont'd)	Resistance of wiring connector side (cont'd)		
	Terminals	Condition	STD voltage (?)
	HTR1 HTR2 HTL1 HTL2 – +B +B1	–	5.1 – 6.3
	PAG – +B +B1	–	30 – 34
	IDL1 IDL2 – +B +B1	Throttle valve fully open	Infinity
		Throttle valve fully closed	2,300 or less
	VTA1 VTA2 – E2	Throttle valve fully open	3,300 – 10,000
		Throttle valve fully closed	200 – 800
	VC – E2	–	4,000 – 9,000
	THS – E2	Intake air temp, 20˚C (68˚F)	2,000 – 3,000
	THW – E2	Coolant temp. 80˚C (176˚F)	200 – 400
	THG – E2	EGR gas temp. 50˚C (112˚F)	69,400 – 88,500
	G1 G2 – G1 (–) G2 (–)	Cam position sensor – 10 – +40˚C (14 – 104˚F)	835 – 1,350
	NE – NE (–)	engine speed sensor – 10 – +40˚C (14 – 104˚F)	835 – 1,350
Fuel cut rpm	w/ Vehicle speed 0 km/h and coolant temp. 80˚C (176˚F)	Fuel cut rpm Fuel return rpm	1,800 rpm 1,400 rpm

WhereEverybodyKnowsYourName

TORQUE SPECIFICATIONS

Part tightened		N·m	kgf·cm	ft·lbf
Fuel line	Union bolt type Flare nut type	29	300	22
Fuel pipe X Delivery pipe		39	400	29
Fuel pump bracket X Fuel tank		5.4	55	48 in.·lbf
Fuel pump set plate X Fuel tank		3.9	40	35 in.·lbf
Fuel tank X Body		25	250	18
Fuel sender gauge X Fuel tank		2.9	30	26 in.·lbf
Fuel inlet pipe X Fuel tank		2.9	30	26 in.·lbf
Fuel tank main tube X Fuel tank		29	300	22
Fuel tank return tube X Fuel tank		29	300	22
Fuel tank evaporation vent tube X Fuel tank		29	300	22
Air flow meter X Air cleaner case		10	100	7
Cold start injector X Air intake chamber		7.8	80	69 in.·lbf
Cold start injector tube X Cold start injector		15	150	11
Air intake chamber X Intake manifold		18	185	13
EGR pipe X Air intake chamber		18	185	13
EGR pipe X RH cylinder head		18	185	13
Cold start injector tube X RH Delivery pipe		15	150	11
Throttle body X Air intake chamber		18	185	13
Fuel return pipe X Fuel pressure regulator		35	360	26
Fuel pressure regulator X RH delivery pipe		29	300	22
Delivery pipe X Intake manifold		18	185	13
Fuel inlet hose X LH delivery pipe		39	400	29
	for SST	33	340	24
ISC valve X Air intake chamber		18	185	13
Cold start injector time switch X Front water by–pass joint		34	350	25
Water temperature sensor X Front water by–pass joint		20	200	14
Water inlet housing X Water pump		18	185	13
EGR gas temperature sensor X EGR valve adaptor		20	200	14
EGR valve adaptor X Air intake chamber		18	185	13
EGR valve X EGR valve adaptor		18	185	13
Knock sensor X Cylinder block		44	450	33
Intake manifold X Cylinder head		18	185	13
Main oxygen sensor X Exhaust manifold		44	450	33
Sub–oxygen sensor X Exhaust manifold		44	450	33

WhereEverybodyKnowsYourName

IGNITION SYSTEM

WhereEverybodyKnowsYourName

DESCRIPTION

The ECU is programmed with data for optimum ignition timing under any and all operating conditions. Using data provided by sensors which monitor various engine functions (rpm, intake air volume, engine temperature, etc.) the microcomputer (ECU) triggers the spark at precisely the right instant.

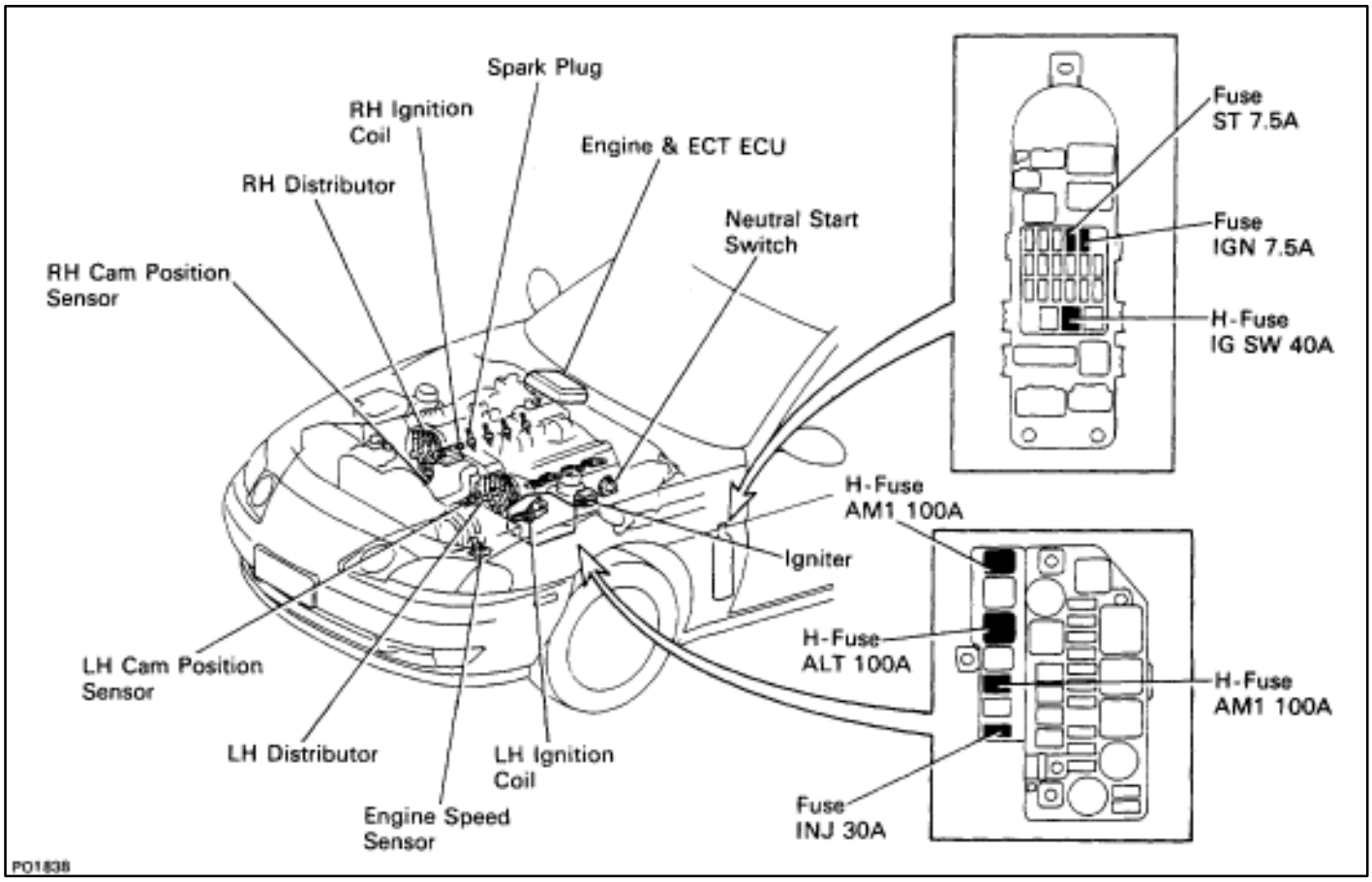

The ECU monitors the engine condition by signals from each sensor, calculates the ignition timing and sends an ignition signal to the igniter. High voltage from the ignition is distributed to each spark plug in the appropriate order to generate a spark between the electrodes, which ignites the air–fuel mixture.

IGNITERS

The igniter temporarily interrupts the primary current with the ignition signal (IGT signal) from the ECU and generates sparks at the spark plug. Also, as a fail–safe measure, when ignition occurs, an ignition confirmation signal (IGF signal) is sent to the ECU.

IGNITION COIL

The ignition coil uses a closed core coil with the primary coil wrapped around the core and the secondary coil wrapped around the primary coil. This allows the generation of a high voltage sufficient to cause a spark to jump across the spark plug gap.

DISTRIBUTORS

This correctly distributes high voltage to the spark plug of each cylinder in the specified ignition order.

ENGINE SPEED SENSOR

The engine speed sensor detects the crank angle.

CAM POSITION SENSORS

The RH and LH cam position sensors detect the cam angle.

WhereEverybodyKnowsYourName

PRECAUTIONS

1. **Do not leave the ignition switch on for more than 10 minutes if the engine will not start.**

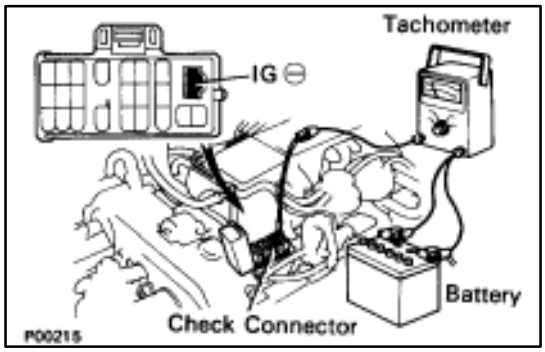

2. **With a tachometer connected to the system, connect the tester probe of the tachometer to terminal IG È of the check (”DIAGNOSIS”) connector.**
   HINT:
   - Allow the engine to warm up to normal operation temperature.
   - Set the tachometer to the 4–cylinder range.
3. **As some tachometers are not compatible with this ignition system, we recommend that you confirm the compatibility of your unit before use.**
4. **Never allow the tachometer terminal to touch ground as this could damage the igniter and/or ignition coil.**
5. **Do not disconnect the battery when the engine is running.**
6. **Check that the igniter is properly grounded to the body.**

WhereEverybodyKnowsYourName

SYSTEM CIRCUIT

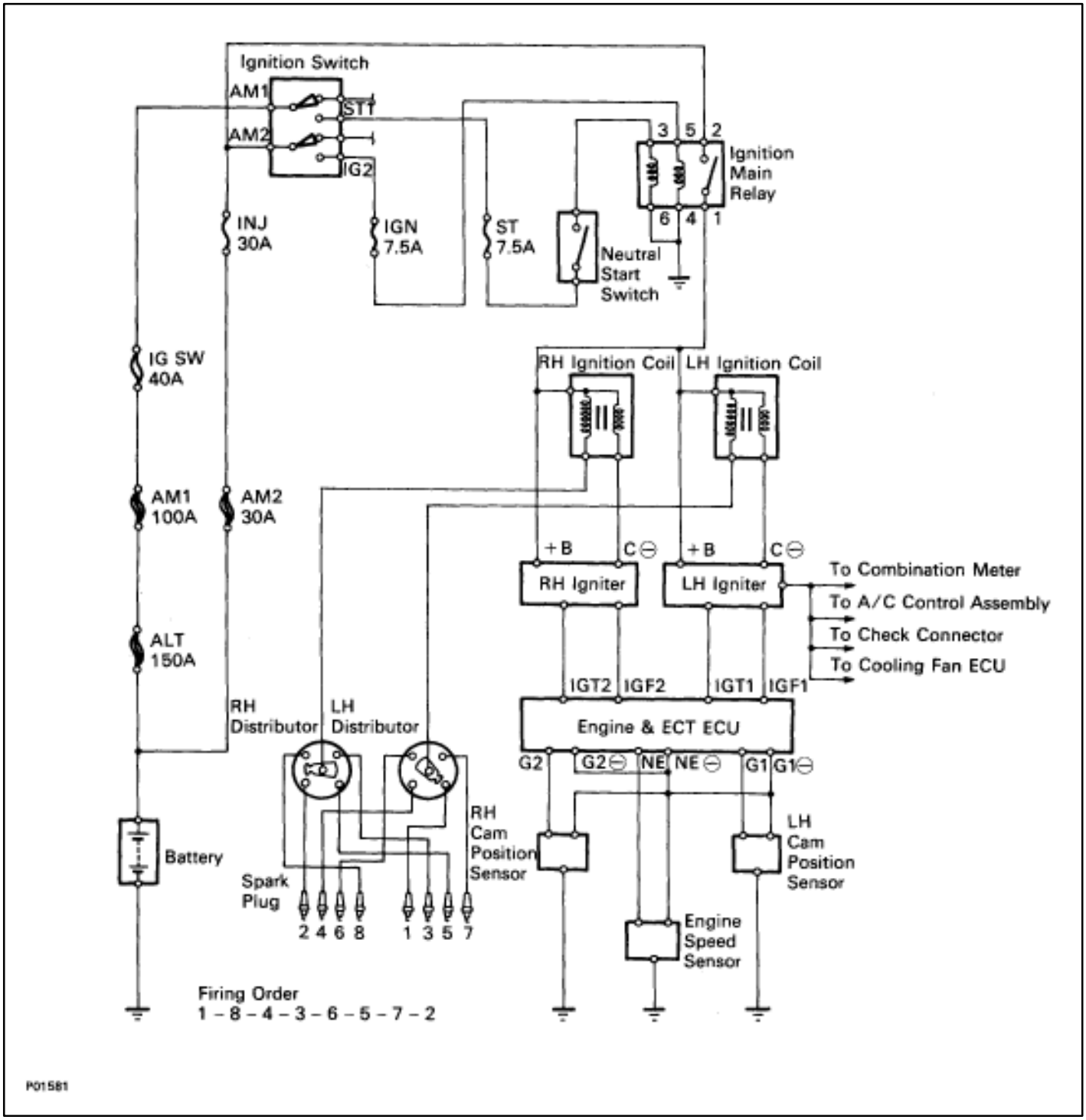

OPERATION

To maintain the most appropriate ignition timing, the ECU sends a control signal so that the igniter sends current to the ignition coil and the spark plugs produce a spark.

WhereEverybodyKnowsYourName

PREPARATION

SST (SPECIAL SERVICE TOOLS)

Illustration	Part No.	Part Name	Note
	09843-18020	Diagnosis Check Wire	

RECOMMENDED TOOLS

Illustration	Part No.	Part Name	Note
	09082-00015	TOYOTA Electrical Tester	
	09200-00010	Engine Adjust Kit	

EQUIPMENT

Part Name	Note
Engine tune–up tester	Ignition timing
Megger (Insulation resistance meter)	Spark plug
Spark plug cleaner	
Torque wrench	
16 mm plug wrench	

WhereEverybodyKnowsYourName

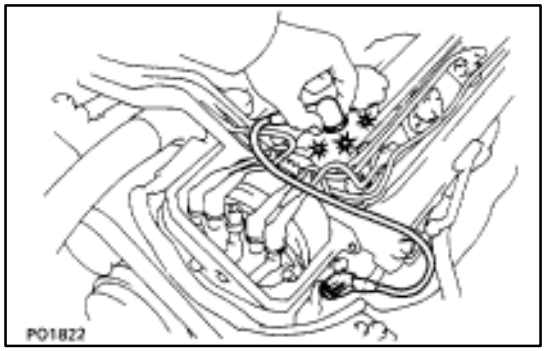

ON–VEHICLE INSPECTION

SPARK TEST

CHECK THAT SPARK OCCURS

(a) Remove the No.3 timing belt covers.
(See steps 2 to 8 on pages IG–11 to 13)

(b) Disconnect the high–tension cords (from the ignition coils) from the distributor caps.

(c) Hold the end about 12.5 mm (0.50 in.) from the body ground.

(d) Check if spark occurs while engine is being cranked.

HINT: To prevent gasoline from being injected from injectors during this test, crank the engine for no more than 1–2 seconds at a time.

If the spark does not occur, perform the test as follows:

SPARK TEST

↓ NO

CHECK CONNECTION OF IGNITION COIL, IGNITER AND DISTRIBUTOR CONNECTORS → BAD → Connect securely.

↓ OK

CHECK RESISTANCE OF HIGH-TENSION CORDS (See page IG-7)
Maximum resistance: 25 kΩ per cord → BAD → Replace the cord(s).

↓ OK

CHECK POWER SUPPLY TO IGNITION COILS
1. Ignition switch is turned to ON.
2. Check that there is battery voltage at ignition coil positive (+) terminal.

→ BAD → Check wiring between ignition switch and ignition coil(s)

↓ OK

CHECK RESISTANCE OF IGNITION COILS (See pages IG-9)
Resistance (Cold):
Primary 0.40 – 0.50 Ω
Secondary 10.0 – 14.0 kΩ

→ BAD → Replace the ignition coil(s).

↓ OK

CHECK RESISTANCE OF CAM POSITION AND ENGINE SPEED SENSORS (See page IG-10)
Resistance (Cold): 835 – 1,350 Ω
at –10 – +40°C (14 – 104°F)

→ BAD → Replace the sensor(s).

↓ OK

CHECK IGT SIGNAL FROM ECU (See TR section) → BAD → Check wiring between ECU and distributor, and then try another ECU.

↓ OK

TRY ANOTHER IGNITER

(e) Reconnect the high–tension cords to the distributor caps.

(f) Reinstall the No.3 timing belt covers.
(See steps 5 to 11 on pages IG–17 to 19)

WhereEverybodyKnowsYourName

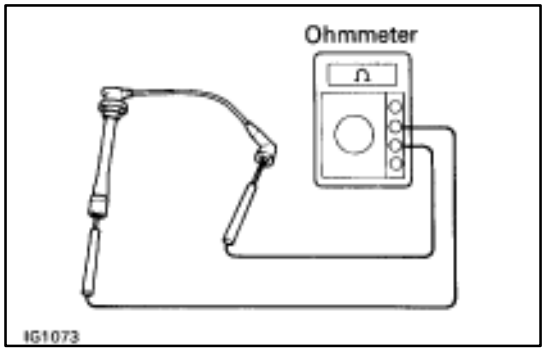

INSPECTION OF HIGH–TENSION CORDS

1. REMOVE HIGH–TENSION CORDS
(See steps 1 to 9 on pages IG–11 to 14)

2. INSPECT HIGH–TENSION CORD RESISTANCE
Using an ohmmeter, measure the resistance.
Maximum resistance: 25 k? per cord
If the resistance is greater than maximum, replace the high–tension cord.

3. REINSTALL HIGH–TENSION CORDS
(See steps 4 to 13 on pages IG–11 to 19)

INSPECTION OF SPARK PLUGS

NOTICE:
- **Never use a wire brush for cleaning.**
- **Never attempt to adjust the electrode gap on used spark plug.**
- **Spark plug should be replaced every 100,000 km (60,000 miles).**

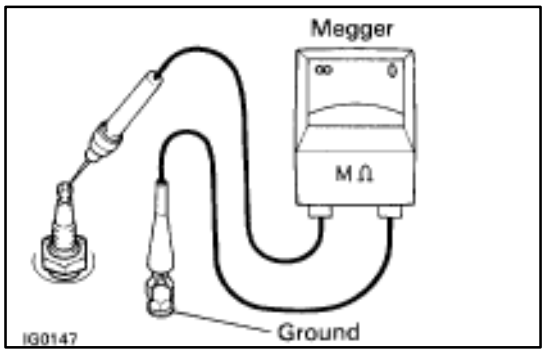

1. DISCONNECT HIGH–TENSION CORDS FROM SPARK PLUGS (See steps 1 to 9 on pages IG–11 to 13)

2. INSPECT ELECTRODE
Using a megger (insulation resistance meter), measure the insulation resistance.
Correct insulation resistance: 10 M? or more
If the resistance is less than specified, proceed to step 4.
HINT: If a megger is not available, the following simple method of inspection provides fairy accurate results.

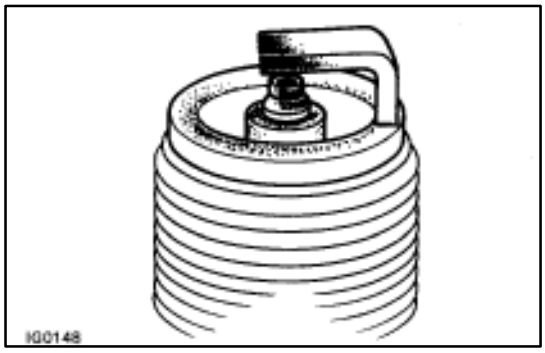

(Simple Method)
(a) Quickly race the engine to 4,000 rpm five times.
(b) Remove the spark plug. (See step 3)
(c) Visually check the spark plug.
If the electrode is dry. . . . . Okay
If the electrode is wet . . . . . Proceed to step 4
(d) Reinstall the spark plug.
(See step 7 on page IG–8)

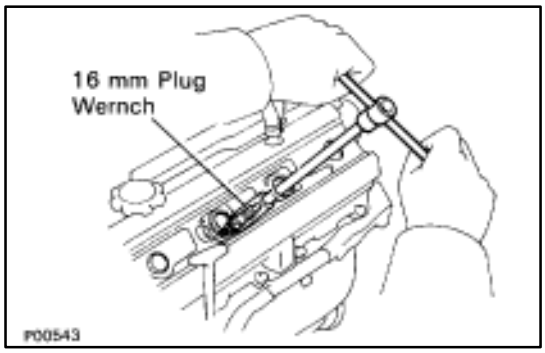

3. REMOVE SPARK PLUGS
Using a 16 mm plug wrench, remove the spark plugs.

WhereEverybodyKnowsYourName

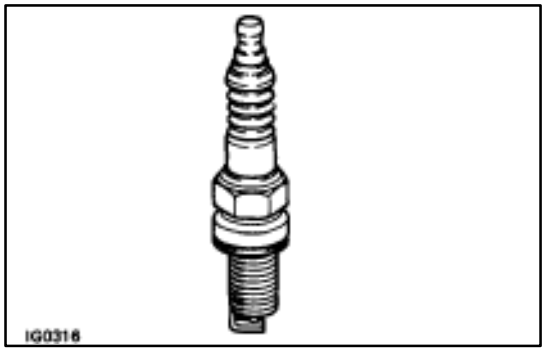

4. VISUALLY INSPECT SPARK PLUGS

Check the spark plug for thread damage and insulator damage.

If abnormal, replace the spark plug.

Recommended spark plug: ND PK20R11
NGK BKR6EP11

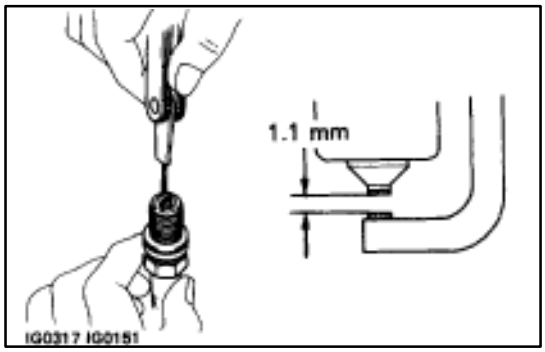

5. INSPECT ELECTRODE GAP

Maximum electrode gap: 1.3 mm (0.051 in.)

If the gap is greater than maximum, replace the spark plug.

Correct electrode gap of new spark plug:
1.1 mm (0.043 in.)

NOTICE: If adjusting the gap of a new spark plug, bent only the base of the ground electrode. Do not touch the tip. Never attempt to adjust the gap on the used plug.

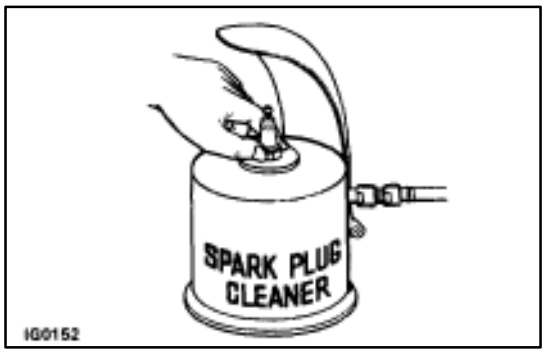

6. CLEAN SPARK PLUGS

If the electrode has traces of wet carbon, allow it to dry and then clean with a spark plug cleaner.

Air pressure: Below 588 kPa (6 kgf/cm2, 85 psi)
Duration: 20 seconds or less

HINT: If there are traces of oil, remove it with gasoline before using the spark plug cleaner.

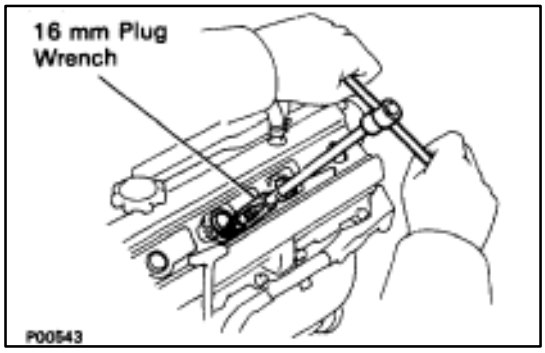

7. REINSTALL SPARK PLUGS

Using a 16 mm plug wrench, install the spark plug.

Torque: 18 N·m (180 kgf·cm, 13 ft·lbf)

8. RECONNECT HIGH–TENSION CORDS TO SPARK PLUGS

(See steps 4 to 13 on pages IG–16 to 19)

WhereEverybodyKnowsYourName

INSPECTION OF IGNITION COIL

1. **(RH IGNITION COIL)**
   REMOVE IGNITION COIL (See page IG–21)
2. **(LH IGNITION COIL)**
   DISCONNECT IGNITION COIL CONNECTOR AND HIGH–TENSION CORD FROM IGNITION COIL

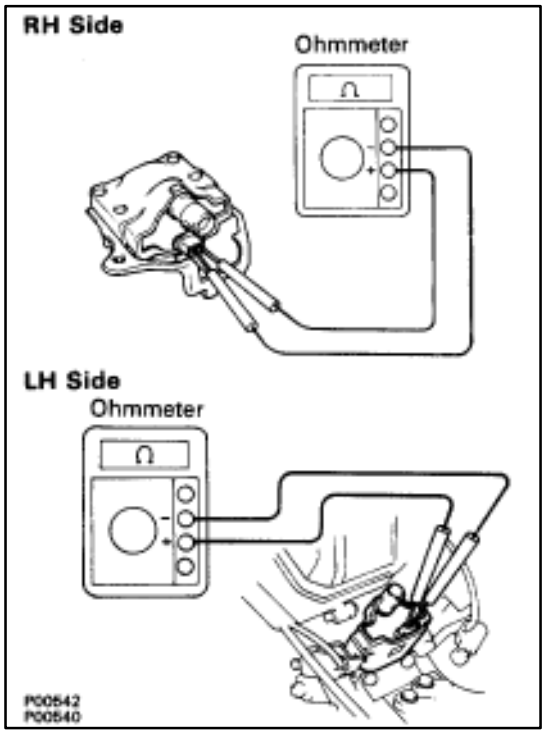

3. **INSPECT PRIMARY COIL RESISTANCE**
   Using an ohmmeter, measure the resistance between positive (+) and negative (–) terminals.
   Primary coil resistance (Cold): 0.40–0.50 ?
   If the resistance is not as specified, replace the ignition coil.

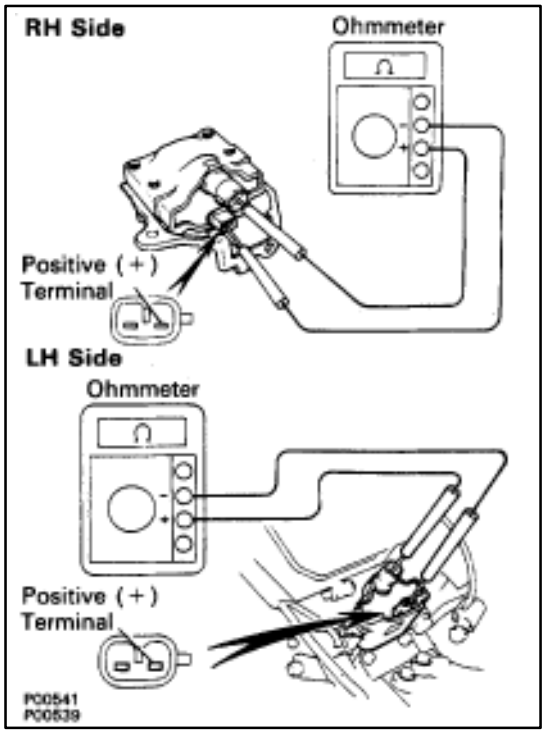

4. **INSPECT SECONDARY COIL RESISTANCE**
   Using an ohmmeter, measure the resistance between positive (+) and high–tension terminals.
   Secondary coil resistance (Cold): 10.0–14.0 k?
   If the resistance is not as specified, replace the ignition coil.
5. **(RH IGNITION COIL)**
   REINSTALL IGNITION COIL (See page IG–22)
6. **(LH IGNITION COIL)**
   RECONNECT IGNITION COIL CONNECTOR AND HIGH–TENSION CORD FROM IGNITION COIL

WhereEverybodyKnowsYourName

INSPECTION OF CAM POSITION SENSORS

1. **DISCONNECT CAM POSITION SENSOR CONNECTORS**
   (a) (RH Cam Position Sensor)
   Disconnect the cam position sensor connector from the ignition coil bracket.
   (See steps 5 (a) on page IG–24)
   (b) Disconnect the cam position sensor connectors.

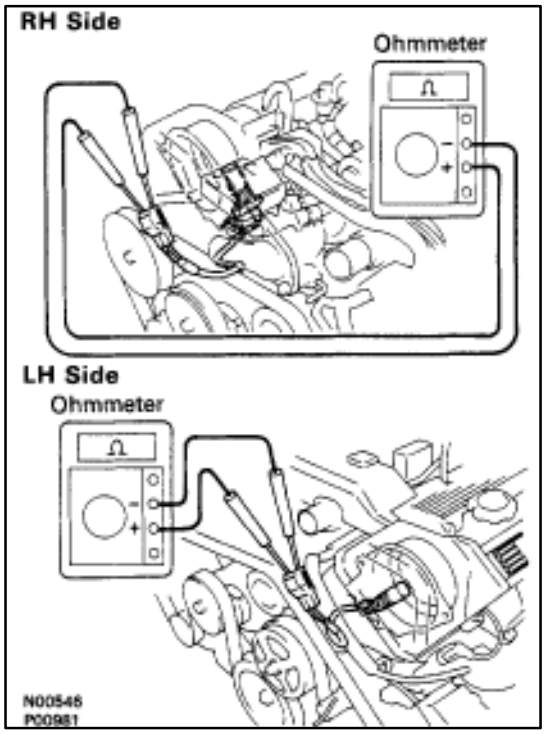

2. **INSPECT CAM POSITION SENSOR RESISTANCE**
   Using an ohmmeter, measure the resistance between terminals.
   Resistance (Cold):
   835–1,350 ? at –10– +40°C (14–104°F)
   If the resistance is not as specified, replace the cam position sensor.
3. **RECONNECT CAM POSITION SENSOR CONNECTORS**

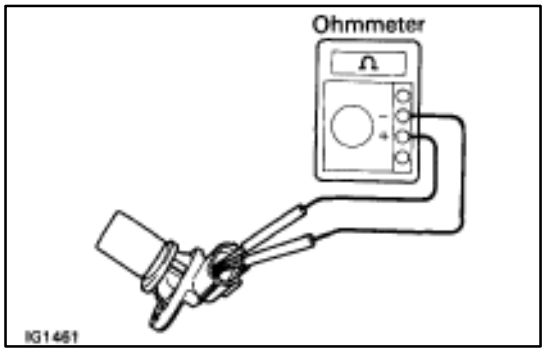

INSPECTION OF ENGINE SPEED SENSOR

1. **REMOVE ENGINE SPEED SENSOR**
   (See page IG–30)
2. **INSPECT ENGINE SPEED SENSOR RESISTANCE**
   Using an ohmmeter, measure the resistance between terminals.
   Resistance (Cold):
   835–1,350 ? at –10– +40°C (14–104°F)
   If the resistance is not as specified, replace the engine speed sensor.
3. **REINSTALL ENGINE SPEED SENSOR**
   (See page IG–30)

INSPECTION OF ENGINE SPEED SENSOR

(See procedure Spark Test on page IG–6)

WhereEverybodyKnowsYourName

HIGH–TENSION CORDS AND CORD CLAMPS

COMPONENTS FOR REMOVAL AND INSTALLATION

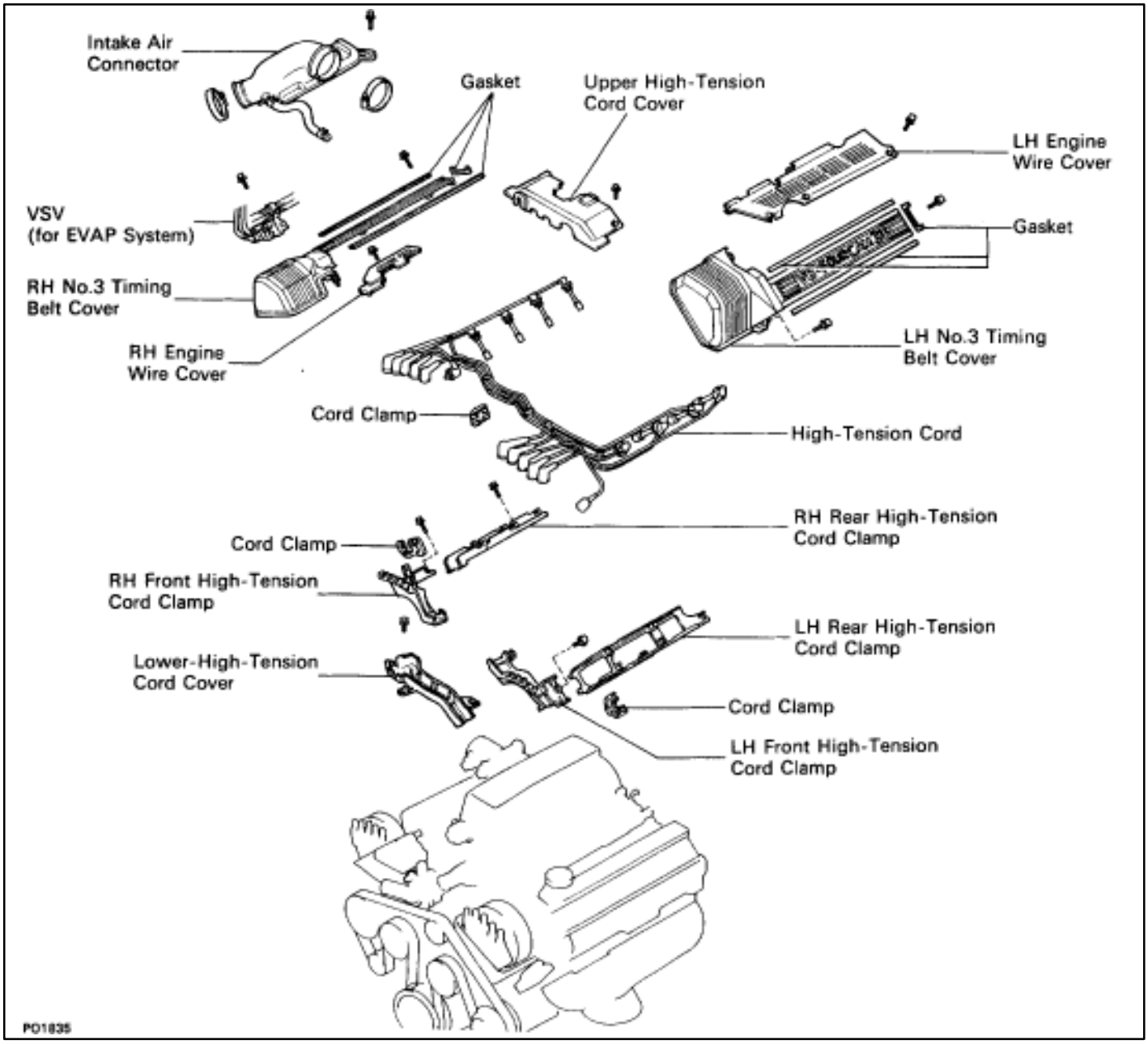

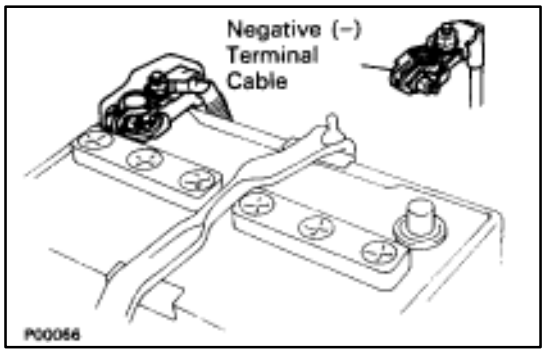

REMOVAL OF HIGH–TENSION CORDS

1. **DISCONNECT CABLE FROM NEGATIVE TERMINAL OF BATTERY**

   CAUTION: Work must be started after approx. 20 seconds or longer from the time the ignition switch is turned to the "LOCK" position and the negative (–) terminal cable is disconnected from the battery.

WhereEverybodyKnowsYourName

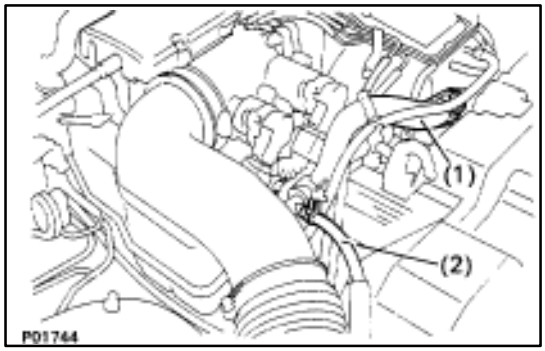

2. REMOVE INTAKE AIR CONNECTOR

(a) Disconnect the following hoses:
  (1) Air hose from ISC valve
  (2) Air hose (from PS air control valve) from intake air connector

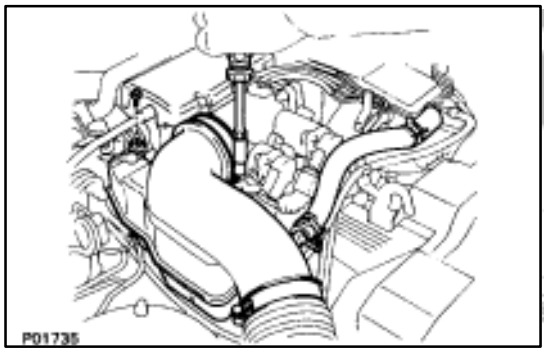

(b) Remove the bolt holding the intake air connector to the cylinder head cover.
(c) Loosen the two hose clamps.
(d) Disconnect the intake air connector from the throttle body and air cleaner hose, and remove the throttle body.

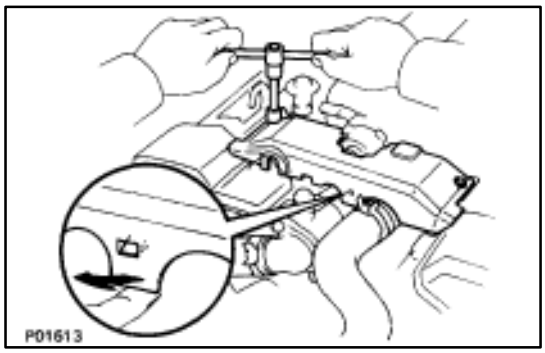

3. REMOVE UPPER HIGH–TENSION CORD COVER

(a) Remove the two mounting bolts.
(b) Disconnect the front side claw groove of the cord cover from the claw of the lower cover, and remove the cord cover.

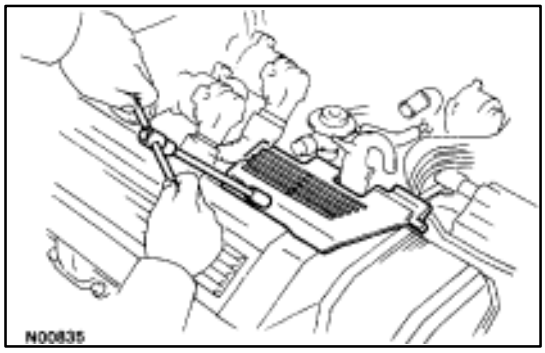

4. REMOVE RH ENGINE WIRE COVER

Remove the bolt and engine wire cover.

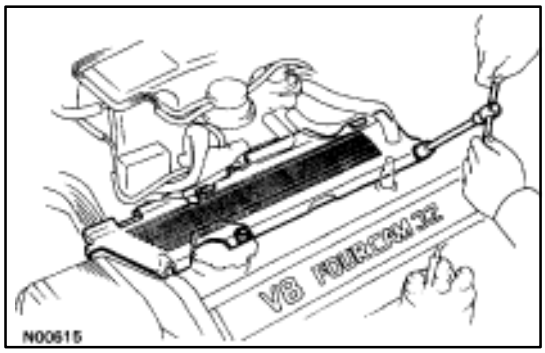

5. REMOVE LH ENGINE WIRE COVER

Remove the two bolts and engine wire cover.

WhereEverybodyKnowsYourName

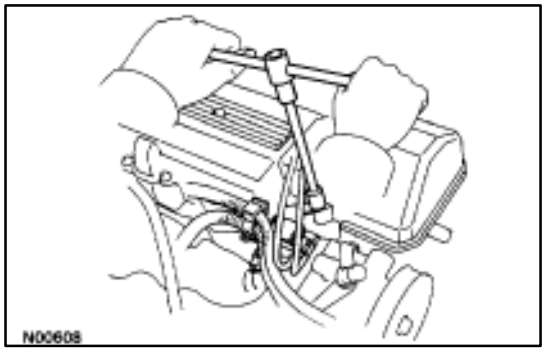

6. REMOVE VSV FOR EVAP SYSTEM

Remove the two bolts, and disconnect the VSV from cylinder head and timing belt cover.

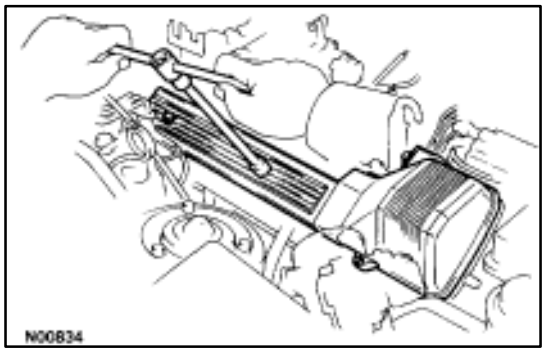

7. REMOVE RH NO.3 TIMING BELT COVER

Remove the three bolts and timing belt cover.

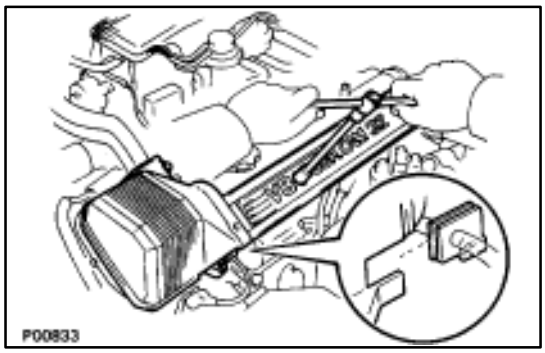

8. REMOVE LH NO.3 TIMING BELT COVER

(a) Remove the four mounting bolts.
(b) Disconnect the cord grommet from the timing belt cover, and remove the timing belt cover.
(c) Remove the cord grommet from the high–tension cord.

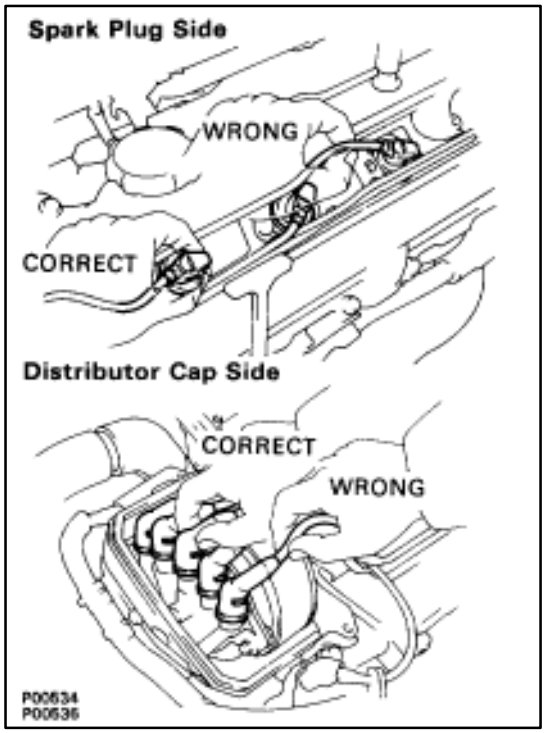

9. REMOVE HIGH–TENSION CORDS

(a) Disconnect the high–tension cords from the spark plugs and distributor caps. Disconnect the high–tension cords at the rubber boot. Do not pull on the cords.

NOTICE: Pulling on or bending the cords may damage the conductor inside.

WhereEverybodyKnowsYourName

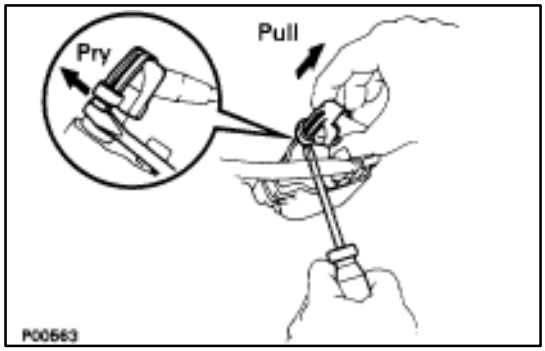

(b) Disconnect the high–tension cords from the ignition coils.
- Using a screwdriver, lift up the lock claw and disconnect the holder from the ignition coil.

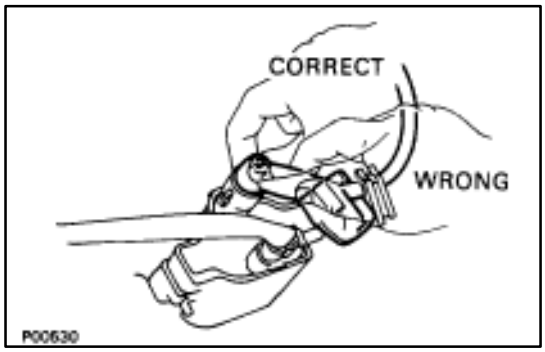

- Disconnect the high–tension cord at the grommet. Do not pull on the cord.

NOTICE: Pulling on or bending the cords may damage the conductor inside.

(c) Disconnect the high–tension cords from the cord clamps and lower high–tension cord cover, and remove the ten high–tension cords.

(d) Remove the five cords clamp from the high–tension cords.

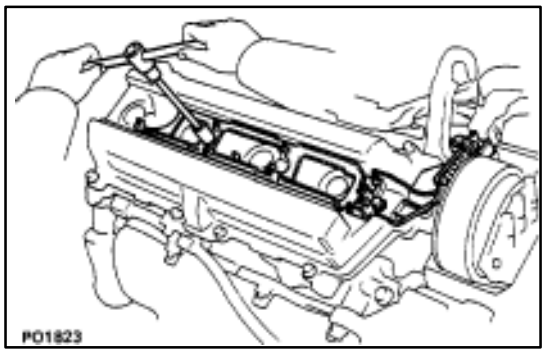

10. REMOVE RH HIGH–TENSION CORD CLAMPS

(a) Remove the two bolts and two high–tension cord clamps.

(b) Remove the cord clamp from the front high–tension cord clamp.

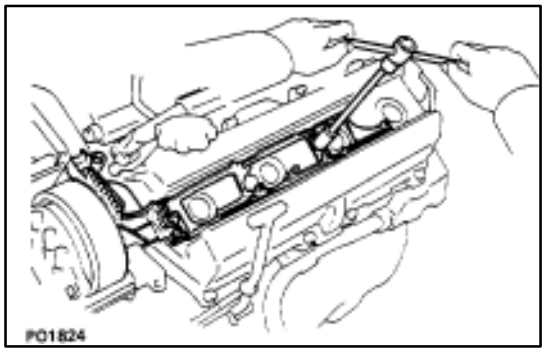

11. REMOVE LH HIGH–TENSION CORD CLAMPS

(a) Remove the two bolts and two high–tension cord clamps.

(b) Remove the cord clamp from the front high–tension cord clamp.

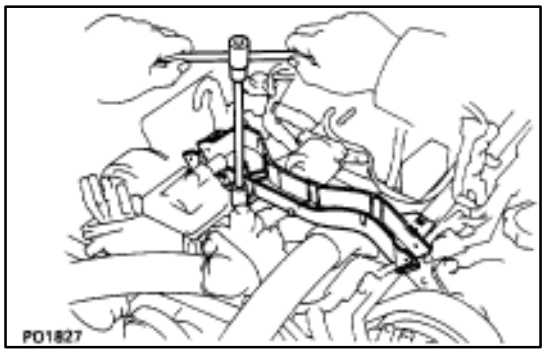

12. REMOVE LOWER HIGH–TENSION CORD COVER

Remove the bolt and high–tension cord cover.

WhereEverybodyKnowsYourName

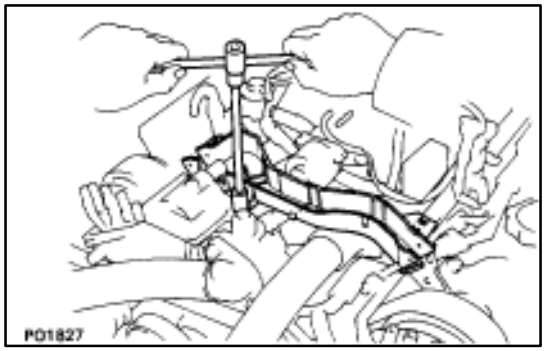

INSTALLATION OF HIGH–TENSION CORDS AND CORD CLAMPS

(See Components on page IG–11)

1. INSTALL LOWER HIGH–TENSION CORD COVER

Install the high–tension cord cover with the bolt.

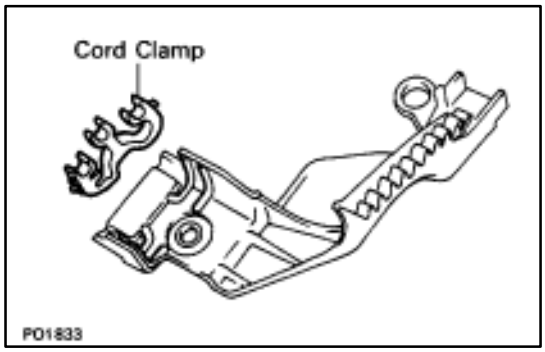

2. INSTALL RH HIGH–TENSION CORD CLAMPS

(a) Install the cord clamp to the front high–tension cord clamp.

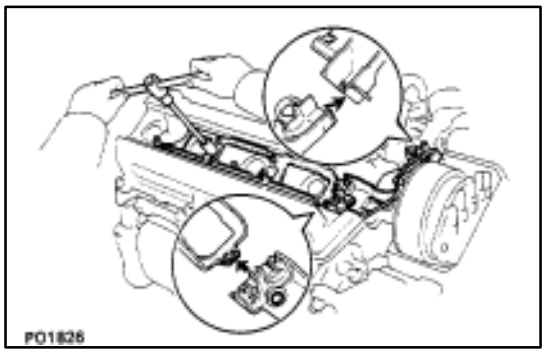

(b) Install front and rear high–tension cord clamps with the two bolts.

HINT: Place the front and rear ends of the front high–tension cord clamp on the rear high–tension cord clamp and lower high–tension cord cover.

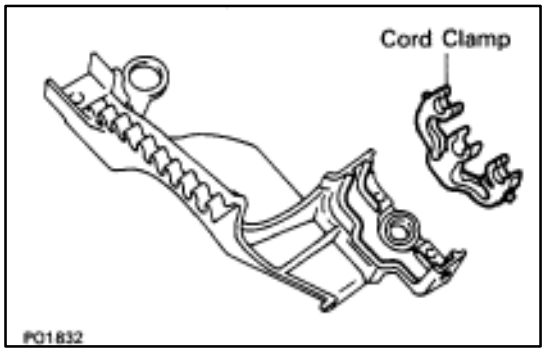

3. INSTALL LH HIGH–TENSION CORD CLAMPS

(a) Install the cord clamp to the front high–tension cord clamp.

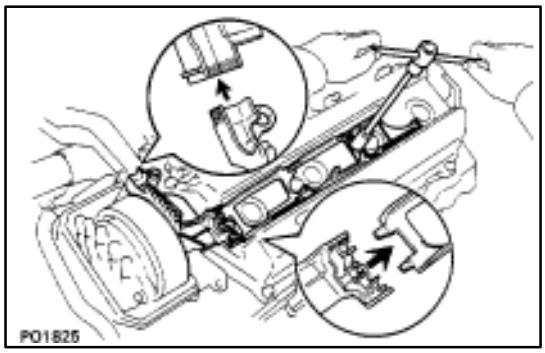

(b) Install front and rear high–tension cord clamps with the two bolts.

HINT: Place the front and rear ends of the front high–tension cord clamp on the rear high–tension cord clamp and lower high–tension cord cover.

WhereEverybodyKnowsYourName

4. INSTALL HIGH–TENSION CORDS

(a) Connect the high–tension cords to the spark plugs and distributor caps.

(b) Secure the high–tension cords with the cord clamps as shown in the illustration.

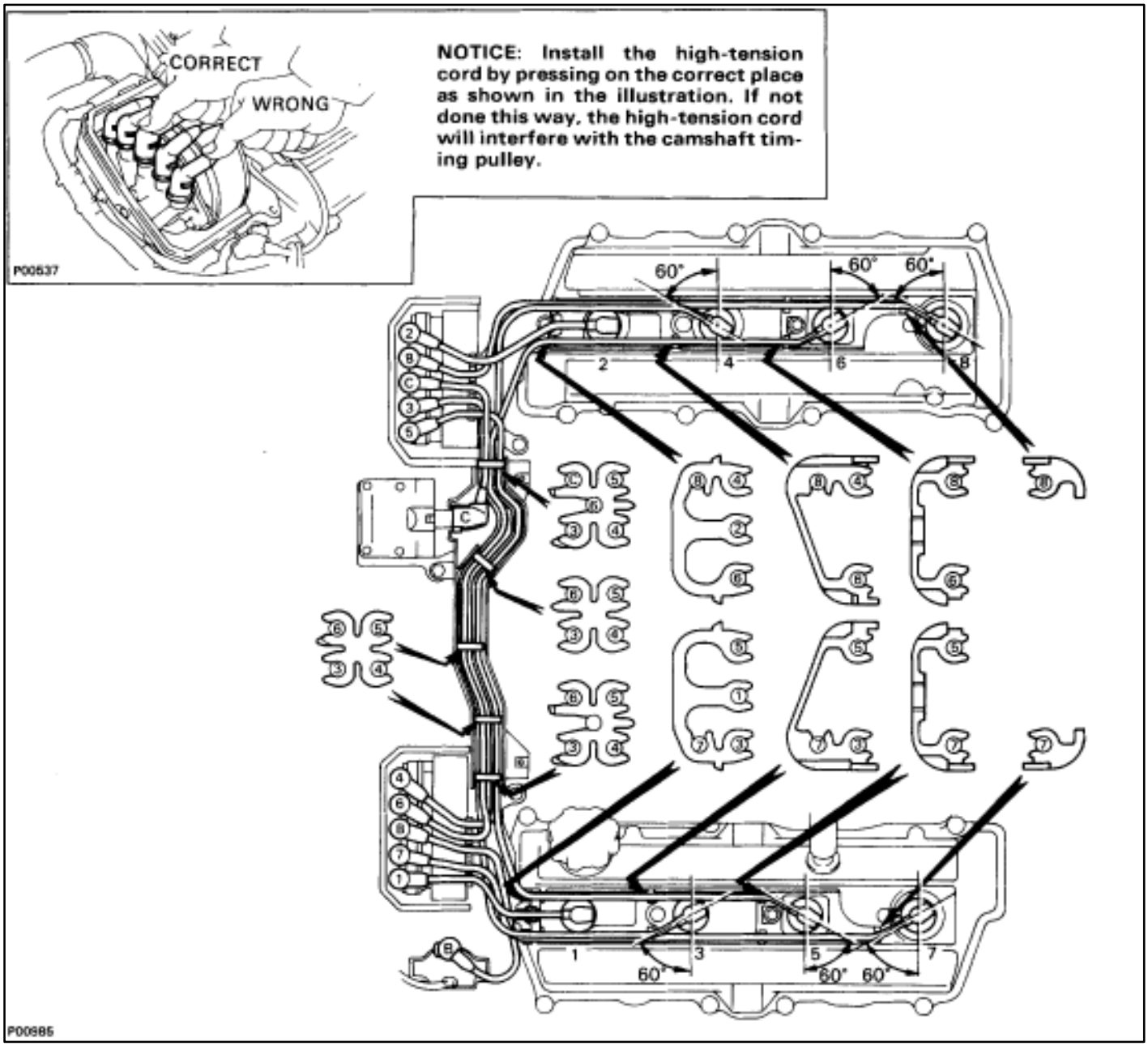

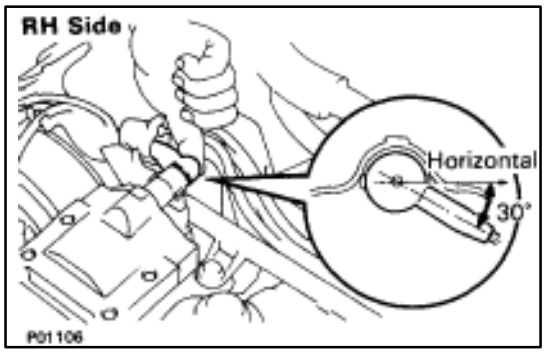

(b) Connect the high–tension cords to the ignition coils.

- Insert the grommet portion into the terminal hole of the ignition coil.

WhereEverybodyKnowsYourName

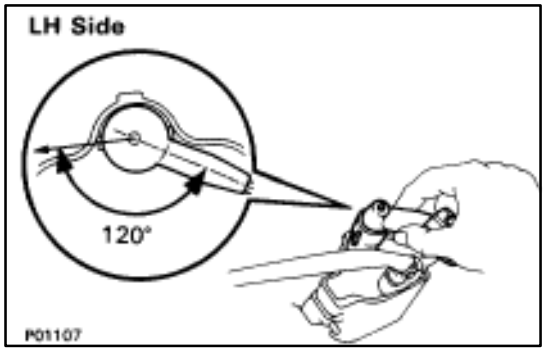

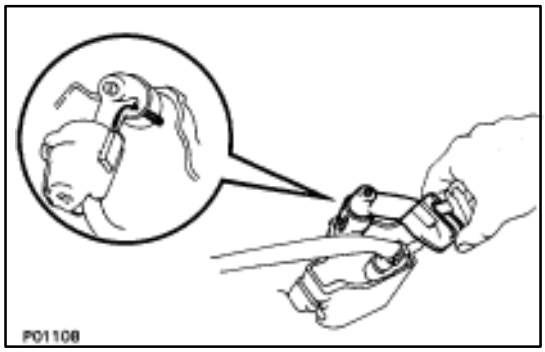

- Align the spline of the ignition coil with the spline of the holder, and slide on the holder.

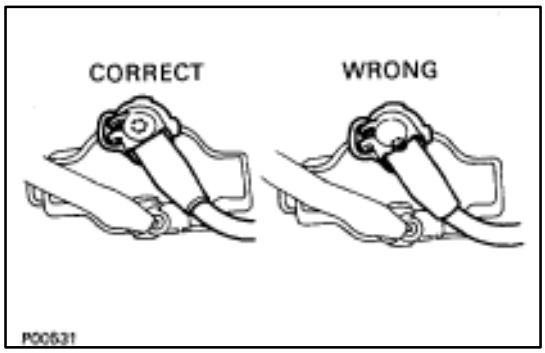

NOTICE: Check that holder is correctly installed to the grommet and ignition coil as shown in the illustration.

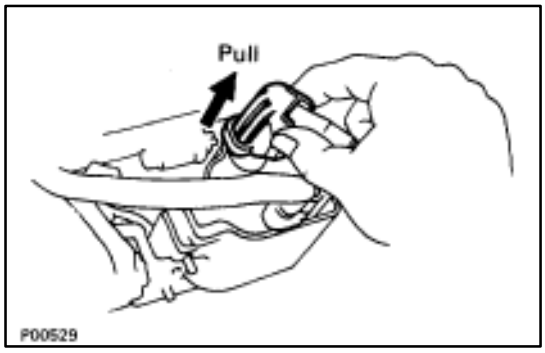

- Check that the lock claw of the holder is engaged by lightly pulling the holder.

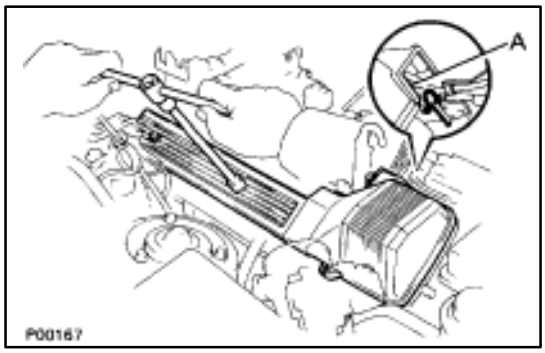

5. INSTALL RH NO.3 TIMING BELT COVER

(a) Install the three gaskets to the timing belt cover.
(b) Fit portion A of the timing belt cover, matching it with the lower high–tension cord cover.
(c) Install the timing belt cover with the three bolts.

WhereEverybodyKnowsYourName

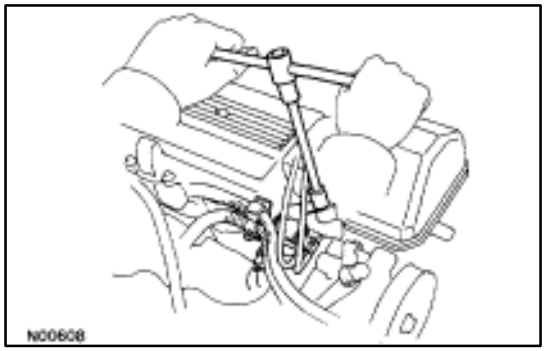

6. INSTALL VSV FOR EVAP SYSTEM

Install the VSV with the two bolts.

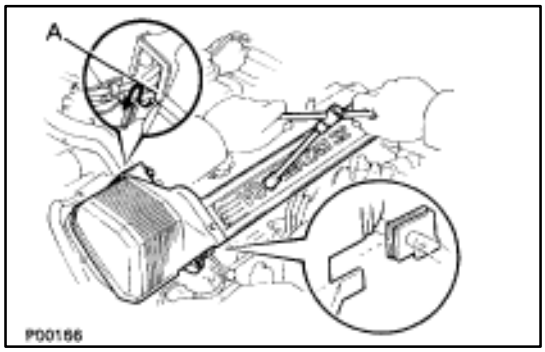

7. INSTALL LH NO.3 TIMING BELT COVER

(a) Install the three gaskets to the timing belt cover.
(b) Install the cord grommet to the high–tension cord.
(c) Install the cord grommet to the timing belt cover.
(d) Fit portion A of the timing belt cover, matching it with the lower high–tension cord cover.
(e) Install the timing belt cover with the four bolts.

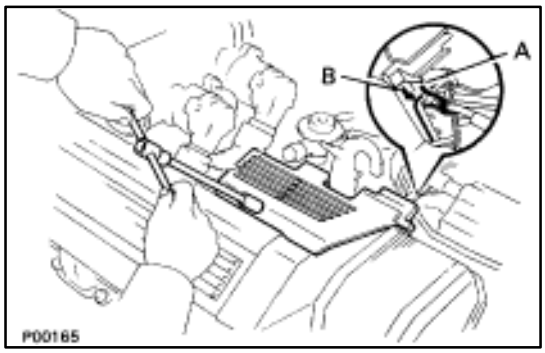

8. INSTALL RH ENGINE WIRE COVER

(a) Fit portions A and B of the engine wire cover, matching them with the lower high–tension cord cover and No.3 timing belt cover.
(d) Install the engine wire cover with the bolt.

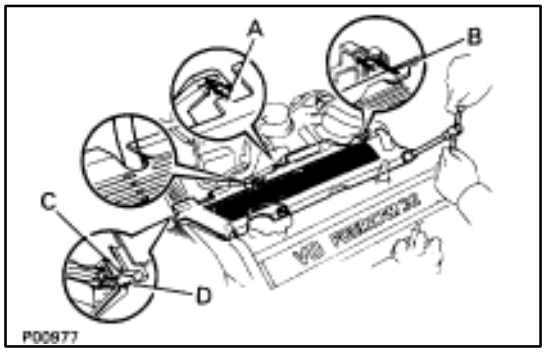

9. INSTALL LH ENGINE WIRE COVER

(a) Connect portions A and B engine wire cover to the wire brackets.
(b) Set the VSV (for fuel pressure control system) wire in original position.
(c) Fit portions C and D of the engine wire cover, matching them with the lower high–tension cord cover and No.3 timing belt cover.
(d) Install the engine wire cover with the two bolts.

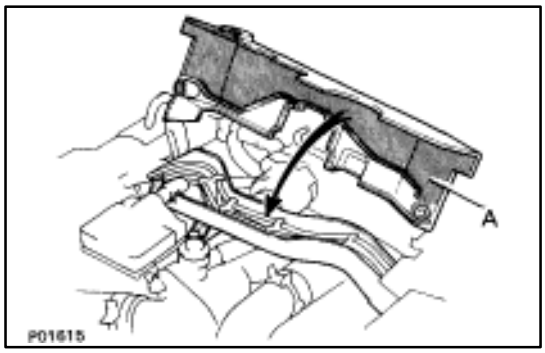

10. INSTALL UPPER HIGH–TENSION CORD COVER

(a) Fit portion A of the upper high–tension cover, matching it with the top of the lower high–tension cord cover.

WhereEverybodyKnowsYourName

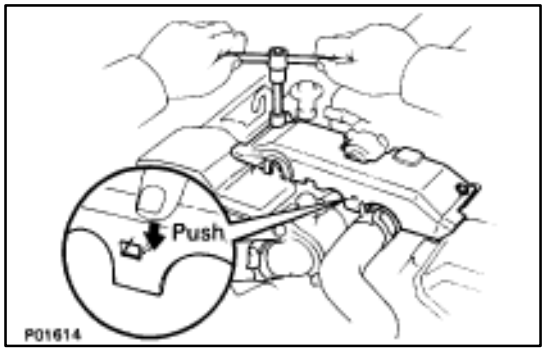

(b) Push the front side of the high–tension cord cover, and connect the front side claw groove of the upper high–tension cord cover to the claw of the lower high–tension cord cover.
(c) Install the upper high–tension cord cover with the two bolts.

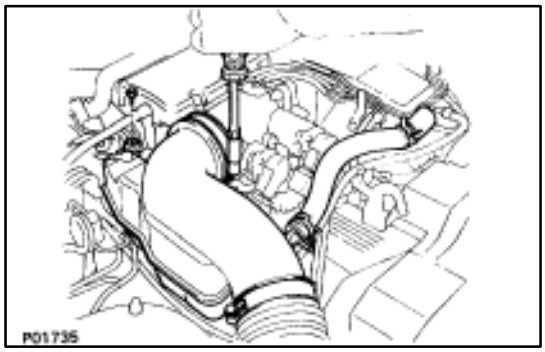

11. INSTALL INTAKE AIR CONNECTOR

(a) Connect the end portions of the intake air connector to the throttle body and air cleaner hose.
(b) Tighten the two hose clamps.
(c) Install the bolt holding the intake air connector to the cylinder head cover.

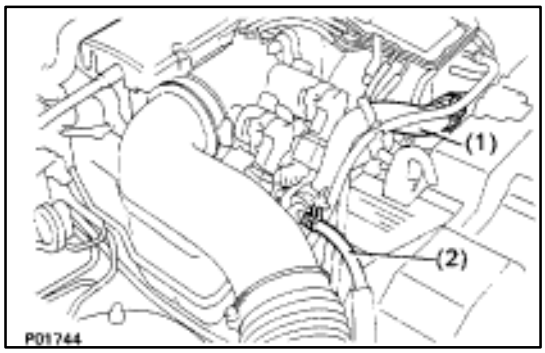

(d) Connect the following hoses:
  (1) Air hose to ISC valve
  (2) Air hose (from PS air control valve) to intake air connector

12. CONNECT CABLE TO NEGATIVE TERMINAL OF BATTERY

13. CHECK THAT ENGINE STARTS

WhereEverybodyKnowsYourName

IGNITION COILS

COMPONENTS FOR REMOVAL AND INSTALLATION

RH Ignition Coil

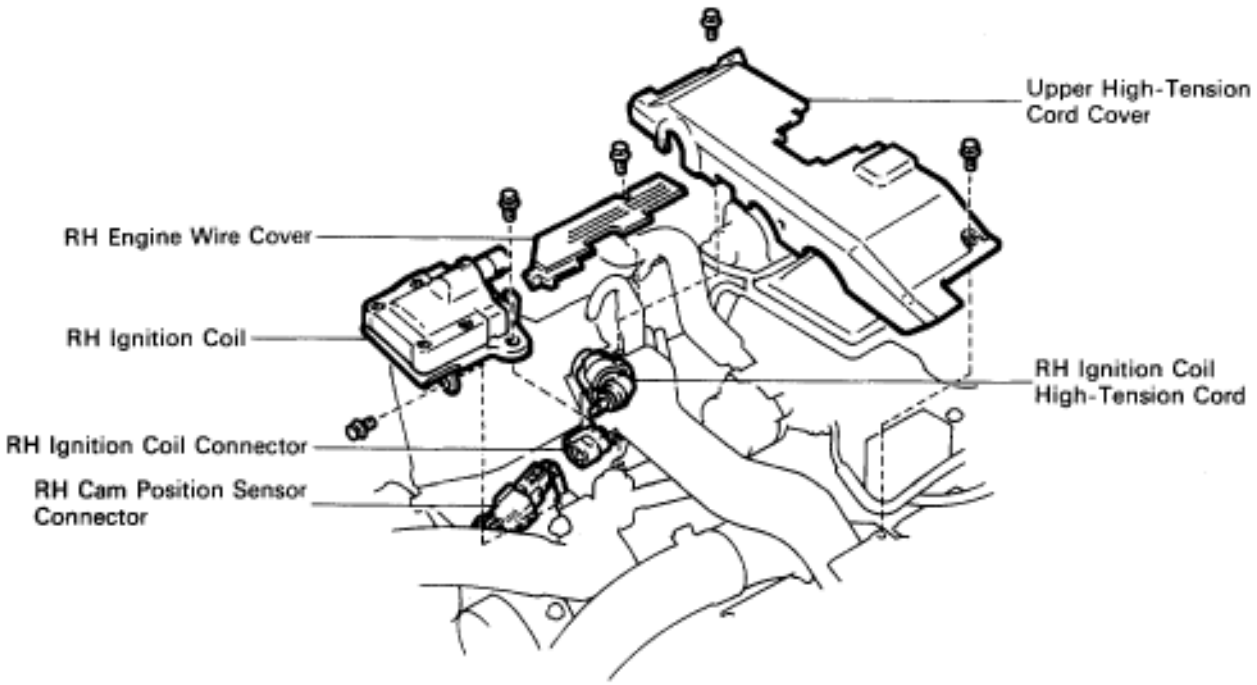

P01327

LH Ignition Coil

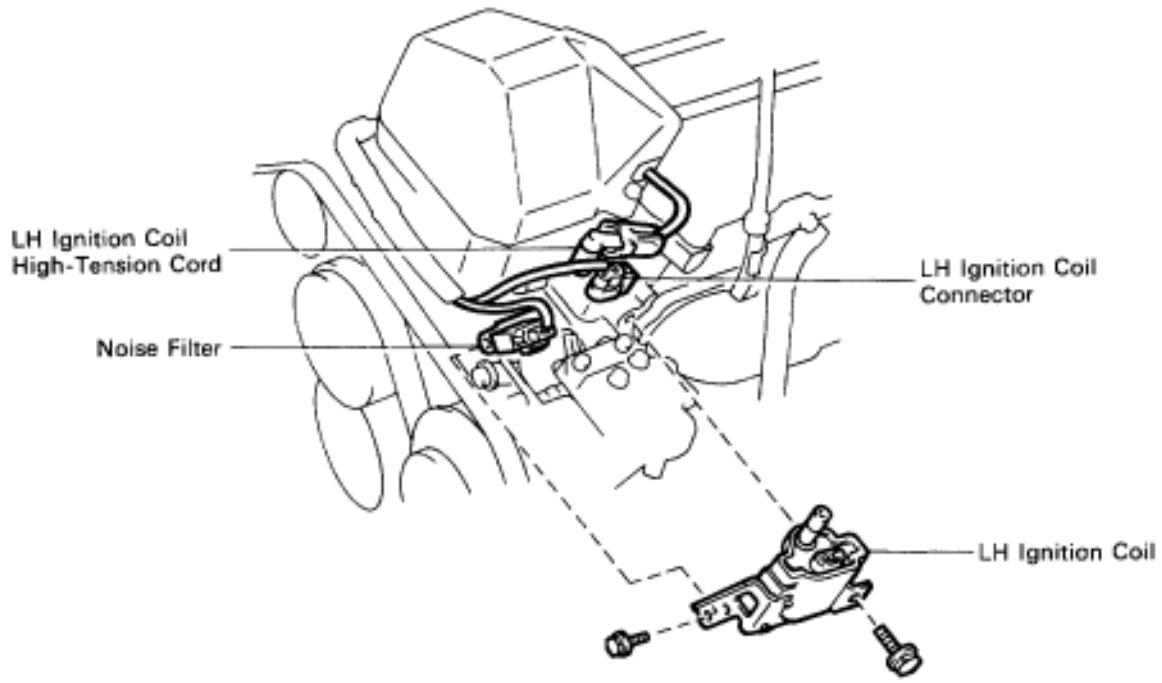

P01423

WhereEverybodyKnowsYourName

REMOVAL OF RH IGNITION COIL

(See Components on page IG–20)

1. **REMOVE RH ENGINE WIRE COVER**
   (See steps 1, 3 and 4 on pages IG–11 and 12)
2. **DISCONNECT HIGH–TENSION CORD**
   (See step 9 on pages IG–13 and 14)
3. **DISCONNECT IGNITION COIL CONNECTOR**

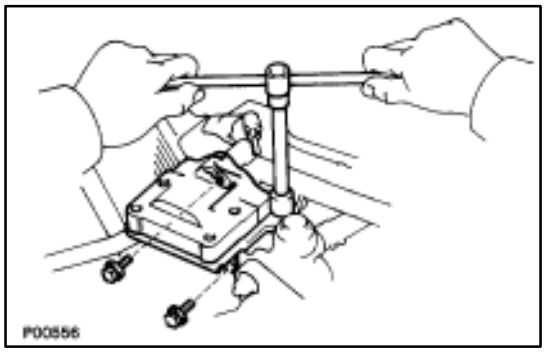

4. **REMOVE IGNITION COIL**
   (a) Remove the three bolts, and disconnect the ignition coil.
   (b) Disconnect the cam position sensor connector, and remove the ignition coil.

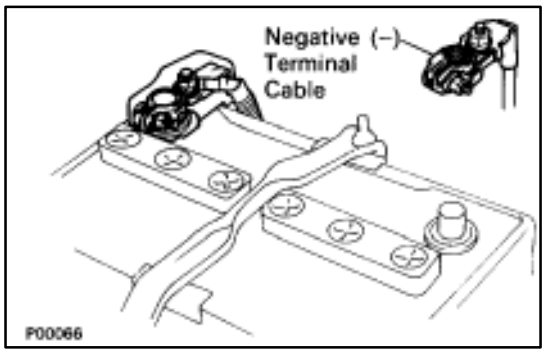

REMOVAL OF LH IGNITION COIL

(See Components on page IG–20)

1. **DISCONNECT CABLE FROM NEGATIVE TERMINAL OF BATTERY**
   CAUTION: Work must be started after approx. 20 seconds or longer from the time the ignition switch is turned to the "LOCK" position and the negative (–) terminal cable is disconnected from the battery.

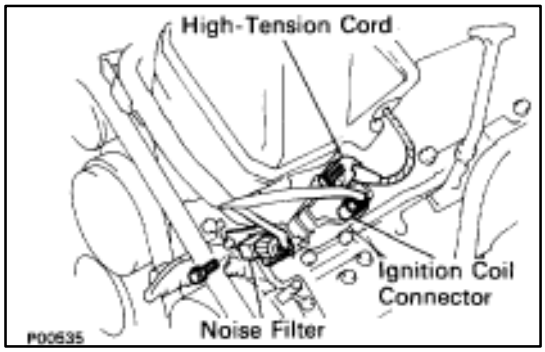

2. **DISCONNECT IGNITION COIL CONNECTOR**
3. **DISCONNECT HIGH–TENSION CORD**
   (See step 9 on pages IG–13 and 14)
4. **DISCONNECT NOISE FILTER FROM IGNITION COIL**
   Remove the bolt, and disconnect the noise filter.

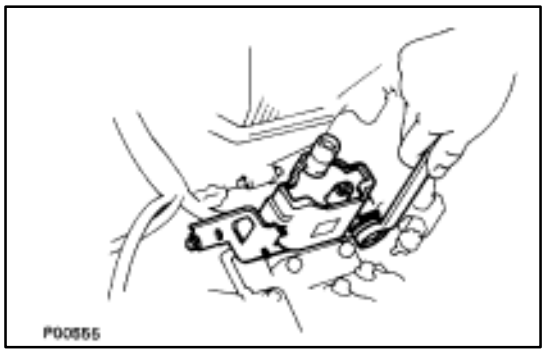

5. **REMOVE IGNITION COIL**
   Remove the two bolts and ignition coil.

WhereEverybodyKnowsYourName

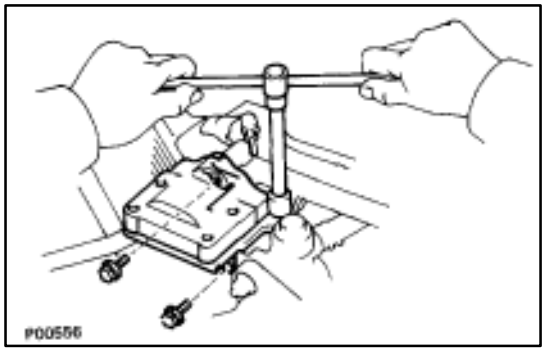

INSTALLATION OF RH IGNITION COIL

(See Components on page IG–20)

1. **INSTALL IGNITION COIL**
   (a) Install the ignition coil with the three bolts.

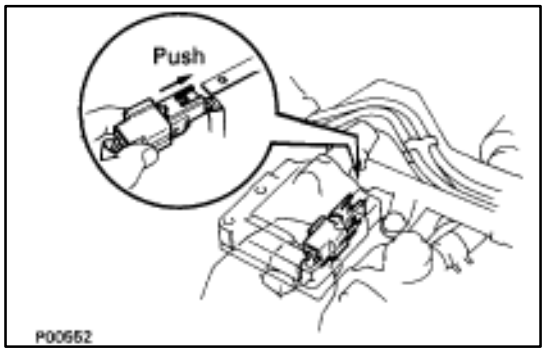

   (b) Install the cam position sensor connector to the ignition coil bracket.
2. **CONNECT IGNITION COIL CONNECTOR**
3. **CONNECT HIGH–TENSION CORD**
   (See step 4 on pages IG–16 and 17)
4. **INSTALL RH ENGINE WIRE COVER**
   (See steps 8, 10, 12 and 13 on pages IG–11 and 12)

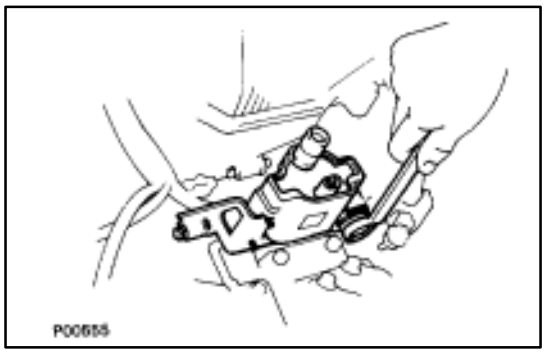

INSTALLATION OF LH IGNITION COIL

(See Components on page IG–20)

1. **INSTALL IGNITION COIL**
   Install the ignition coil with the two bolts.

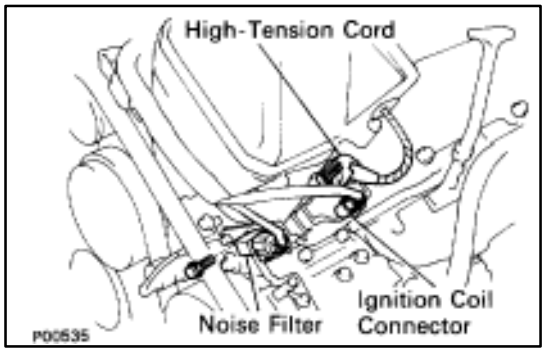

2. **INSTALL NOISE FILTER TO IGNITION COIL**
   Install the noise filter with the bolt.
3. **CONNECT HIGH–TENSION CORD**
   (See step 4 on pages IG–16 and 17)
4. **CONNECT IGNITION COIL CONNECTOR**
5. **CONNECT CABLE TO NEGATIVE TERMINAL OF BATTERY**

WhereEverybodyKnowsYourName

DISTRIBUTOR

COMPONENTS FOR REMOVAL AND INSTALLATION

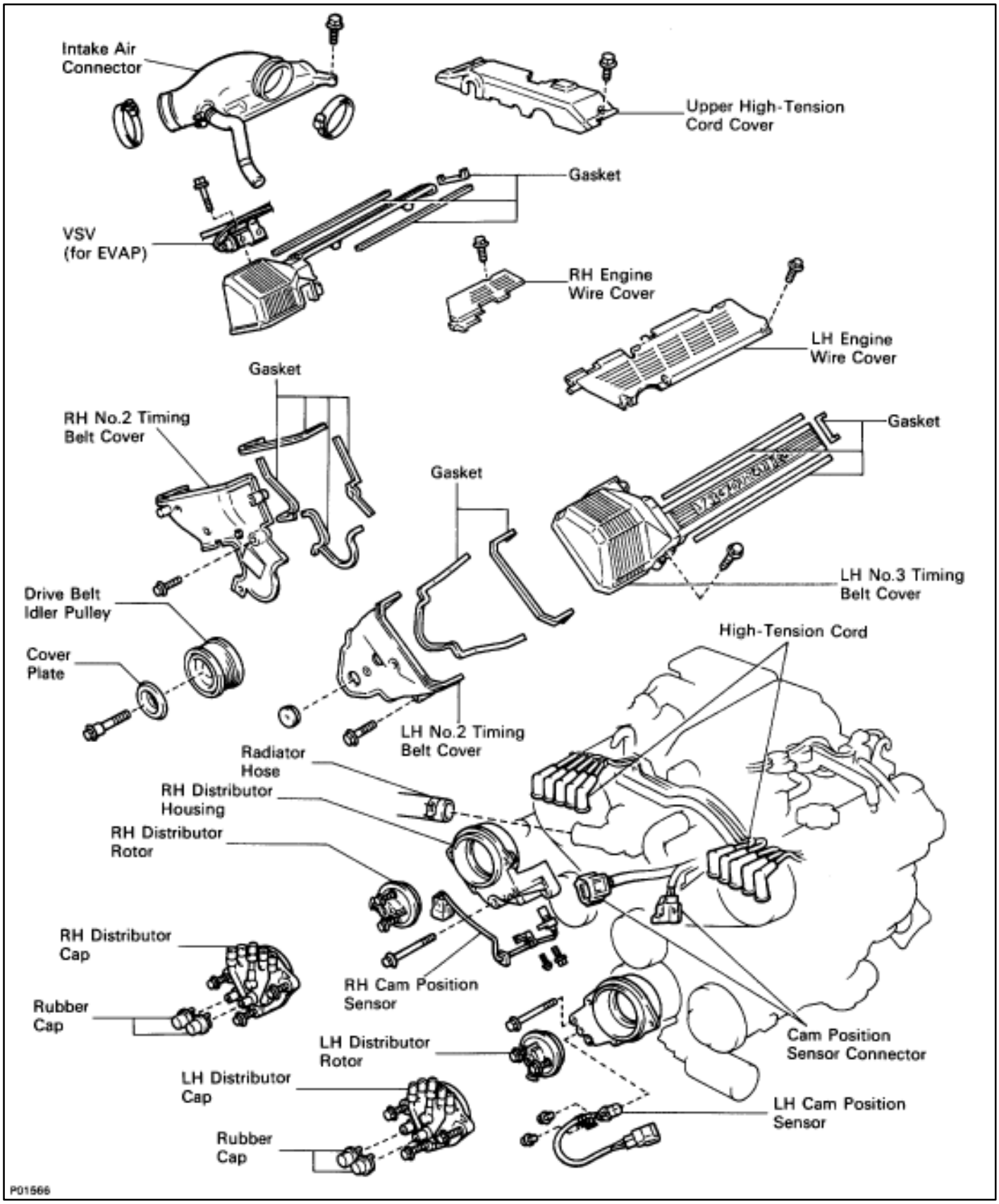

WhereEverybodyKnowsYourName

REMOVAL OF DISTRIBUTOR

(See Components on page IG–23)

1. **DRAIN ENGINE COOLANT (See page CO–6)**
2. **DISCONNECT RADIATOR HOSE FROM WATER INLET**
3. **REMOVE NO.3 TIMING BELT COVERS**
   (See steps 1 to 8 on pages IG–11 to 13)

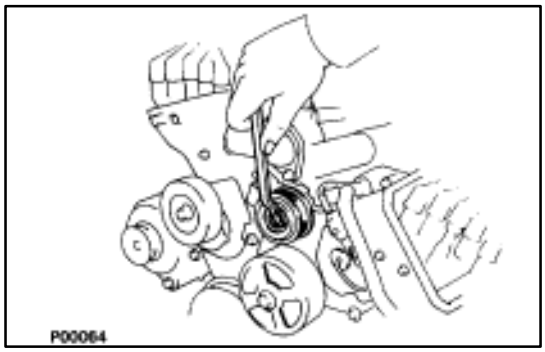

4. **REMOVE DRIVE BELT IDLER PULLEY**
   Remove the pulley bolt, cover plate and idler pulley.

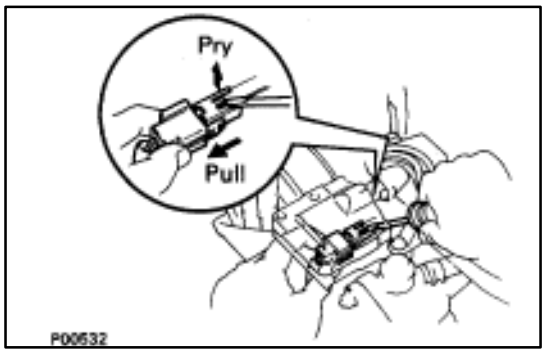

5. **REMOVE RH NO.2 TIMING BELT COVER**
   (a) Disconnect the cam position sensor connector from the ignition coil bracket.

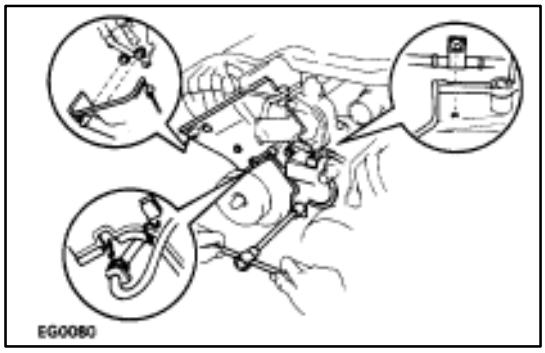

   (b) Disconnect the cam position sensor wire from the clamp on the timing belt cover.
   (c) Remove the five mounting bolts.
   (d) Disconnect the connector grommet from the timing belt cover.
   (e) Disconnect the wire clamp from the timing belt cover, and remove the timing belt cover and four gaskets.

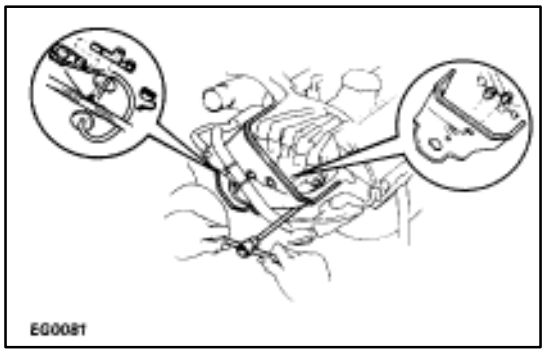

6. **REMOVE LH NO.2 TIMING BELT COVER**
   (a) Disconnect the cam position sensor wire from the clamp on the timing belt cover.
   (b) Disconnect the cam position sensor connector.
   (c) Remove the three mounting bolts.
   (d) Disconnect the connector grommet from the timing belt cover, and remove the timing belt cover and two gaskets.

WhereEverybodyKnowsYourName

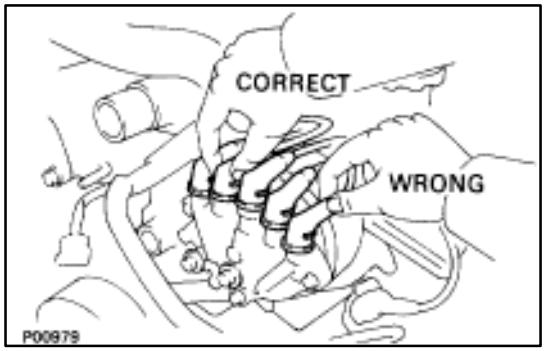

7. DISCONNECT HIGH–TENSION CORDS FROM DISTRIBUTOR CAPS

Disconnect the high–tension cords at the rubber boot. Do not pull on the cord.

NOTICE: Pulling or bending the cords may damage the conductor inside.

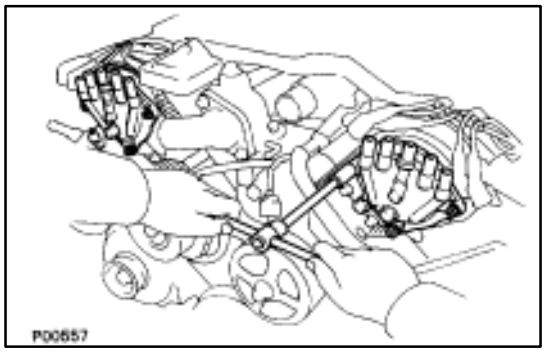

8. REMOVE DISTRIBUTOR CAPS

Loosen the three bolts, and remove the distributor cap. Remove the two distributor caps.

HINT: Arrange the distributor caps (RH side and LH side).

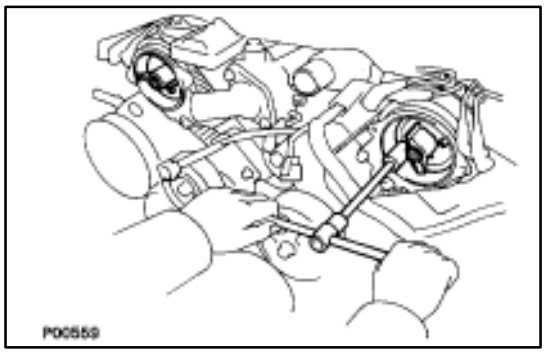

9. REMOVE DISTRIBUTOR ROTORS

Loosen the two bolts, and remove the distributor rotor. Remove the two distributor rotors.

HINT: Arrange the distributor rotors (RH side and LH side).

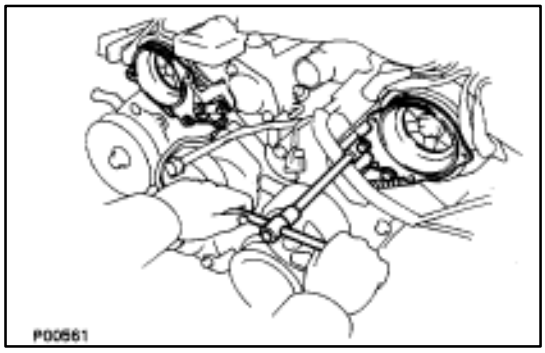

10. REMOVE DISTRIBUTOR HOUSINGS

(a) (RH Distributor Housing)
Disconnect the cam position sensor connector.

(b) Remove the three bolts and distributor housing. Remove the two distributor housings.

11. REMOVE CAM POSITION SENSORS FROM DISTRIBUTOR HOUSINGS

Remove the bolt, screw and cam position sensor.

Remove the two cam position sensors.

WhereEverybodyKnowsYourName

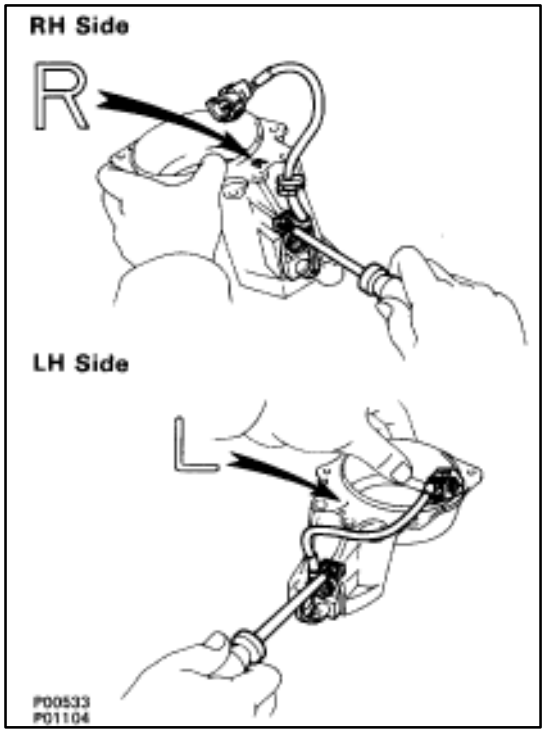

INSTALLATION OF DISTRIBUTOR

(See Components on page IG–23)

1. INSTALL CAM POSITION SENSORS TO DISTRIBUTOR HOUSINGS

Install the cam position sensor with the bolt and screw. Install the two cam position sensors.

Torque: 6.4 N·m (65 kgf·cm, 56 in.·lbf)

HINT:

- The RH distributor housing is marked with ”R”.
- The LH distributor housing is marked with ”L”.

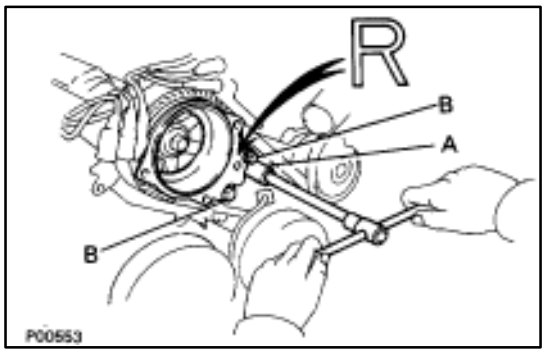

2. INSTALL RH DISTRIBUTOR HOUSING

(a) Install the distributor housing with the three bolts.

Torque: 18 N·m (185 kgf·cm, 13 ft·lbf)

HINT:

- The RH distributor housing is marked with ”R”.
- Each bolt length is indicated in the illustration.

Bolt length: A 38 mm (1.50 in.)
B 96 mm (3.78 in.)

(b) Connect the cam position sensor connector.

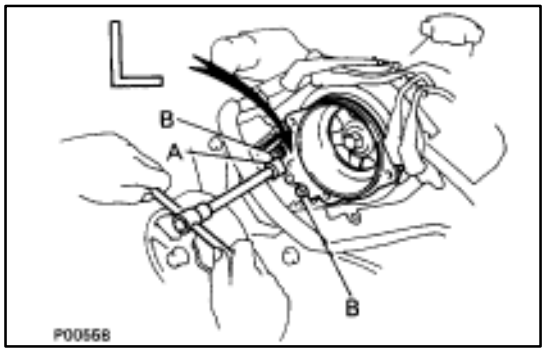

3. INSTALL LH DISTRIBUTOR HOUSING

(a) Install the distributor housing with the three bolts.

Torque: 18 N·m (185 kgf·cm, 13 ft·lbf)

HINT:

- The LH distributor housing is marked with ”L”.
- Each bolt length is indicated in the illustration.

Bolt length: A 38 mm (1.50 in.)
B 80 mm (3.15 in.)

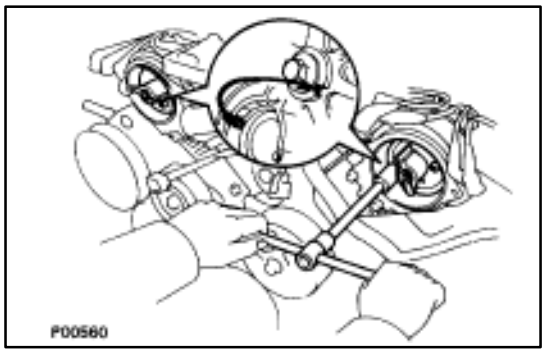

4. INSTALL DISTRIBUTOR ROTORS

(a) Align the protrusion of the distributor rotor with the groove of the camshaft timing pulley.

(b) Install the distributor rotor with the two bolts. Install the two distributor rotors.

Torque: 3.8 N·m (39 kgf·cm, 34 in.·lbf)

WhereEverybodyKnowsYourName

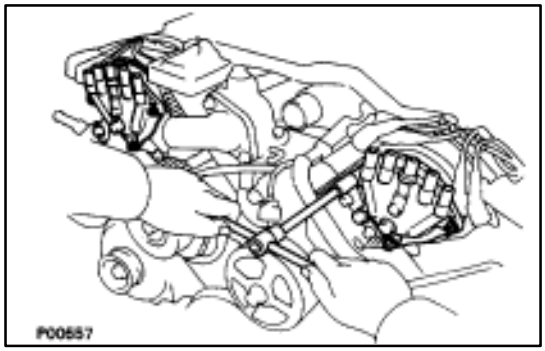

5. INSTALL DISTRIBUTOR CAPS

Install the distributor cap with the three bolts. Install the two distributor caps.

Torque: 3.8 N·m (39 kgf·cm, 34 in.·lbf)

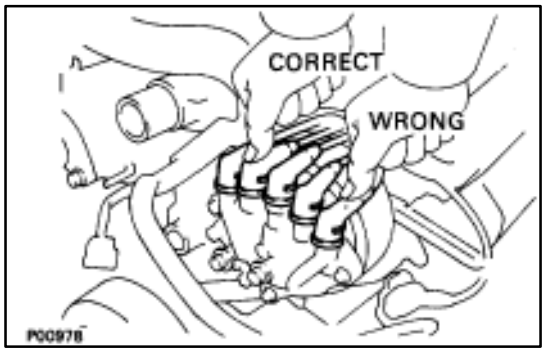

6. CONNECT HIGH–TENSION CORDS TO DISTRIBUTOR CAPS

Connect the ten high–tension cords.

NOTICE: Connect the high–tension cord by pressing on the correct place as shown in the illustration.

If not done this way, the high–tension cord will interfere with the camshaft timing pulley.

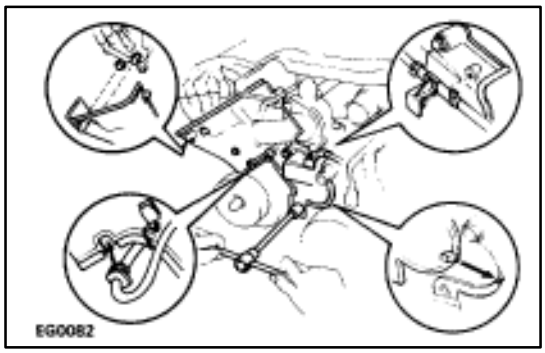

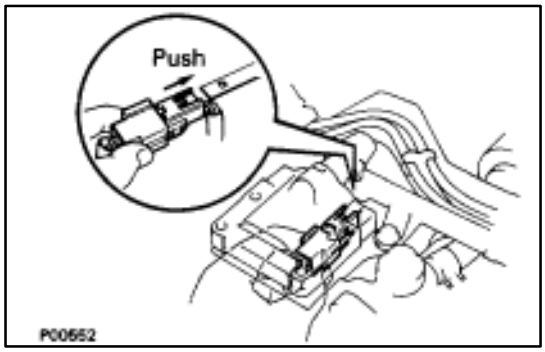

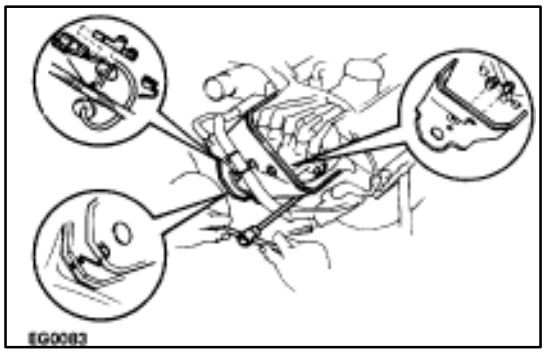

7. INSTALL RH NO.2 TIMING BELT COVER

(a) Install the four gaskets to the timing belt cover.
(b) Install the connector grommet to the timing belt cover.
(c) Install the timing belt cover with the five bolts.

Torque: 16 N·m (160 kgf·cm, 12 ft·lbf)

HINT (12 mm head bolt): Use bolts 106 mm (4.17 in.) in length.

(d) Install the wire clamp to the timing belt cover.
(e) Install the cam position sensor wire to the wire clamp on the timing belt cover.
(f) Install the cam position sensor connector to the ignition coil bracket.

8. INSTALL LH NO.2 TIMING BELT COVER

(a) Install the two gaskets to the timing belt cover.
(b) Run the cam position sensor wire through the timing belt cover hole.
(c) Install the timing belt cover and connector bracket with the three bolts.
(d) Connect the cam position sensor connector.
(e) Install the cam position sensor connector to the connector bracket.
(f) Install the cam position sensor wire to the wire clamp on the timing belt cover.
(g) Install the connector grommet to the timing belt cover.

WhereEverybodyKnowsYourName

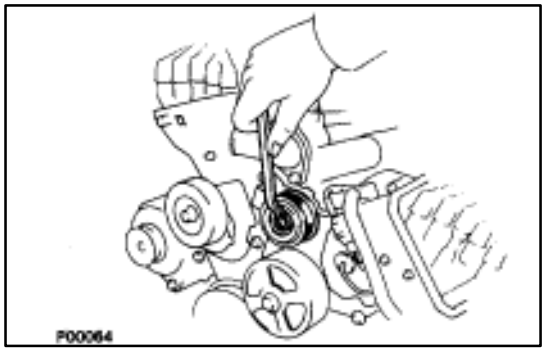

9. INSTALL DRIVE BELT IDLER PULLEY

Install the idler pulley and cover plate with the pulley bolt.

Torque: 37 N·m (380 kgf·cm, 27 ft·lbf)

10. INSTALL NO.3 TIMING BELT COVERS

(See steps 5 to 9 and 11 on pages IG–17 to 19)

11. CONNECT RADIATOR HOSE TO WATER INLET

12. CONNECT CABLE TO NEGATIVE TERMINAL OF BATTERY

13. FILL ENGINE WITH COOLANT (See page CO–6)

14. WARM UP ENGINE

Allow the engine to warm up to normal operating temperature.

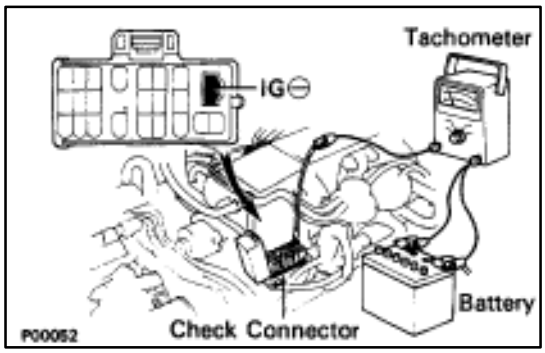

15. CONNECT TACHOMETER

Connect the tester probe of a tachometer to terminal IG± of the check (”DIAGNOSIS”) connector.

HINT: Set the tachometer to the 4–cylinder range.

NOTICE:

- **Never allow the tachometer tester probe to touch ground as it could result in damage to the igniter and/or ignition coil.**
- **As some tachometers are not compatible with this ignition system, we recommend that you confirm the compatibility of your unit before use.**

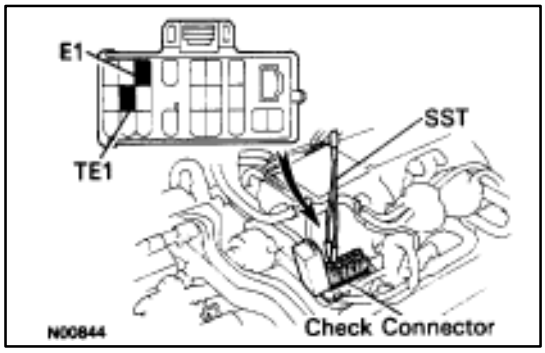

16. CHECK IGNITION TIMING

(a) Using SST, connect terminals TE1 and E1 of the check (”DIAGNOSIS”) connector.

SST 09843–18020

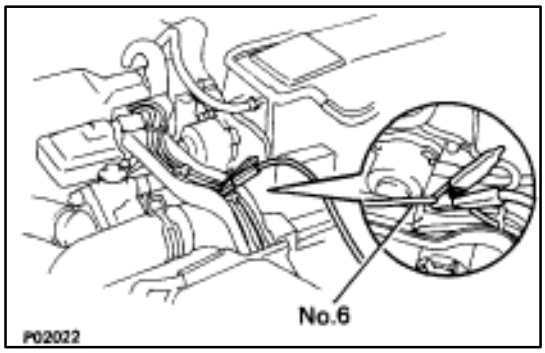

(b) Connect the tester probe of a timing light to the high–tension cord for No.6 cylinder.

WhereEverybodyKnowsYourName

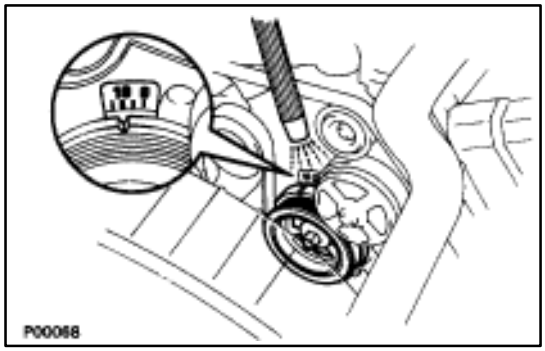

(c) Check the ignition timing.

Ignition timing: 8–12° BTDC @ idle

(Transmission in neutral range)

If the ignition timing is not as specified, check that following conditions are normal:

- Throttle valve fully closed
- Continuity between terminals IDL1 and E2 of the throttle position sensor (See page FI–73)
- Valve timing (See page EM–51)

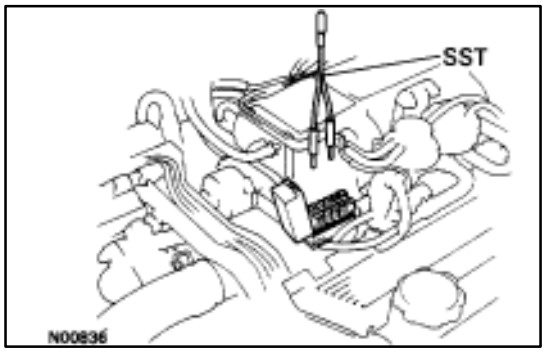

(e) Remove the SST from the check connector.

SST 09843–18020

17. DISCONNECT TACHOMETER AND TIMING LIGHT FROM ENGINE

18. INSTALL UPPER HIGH–TENSION CORD COVER (See step 10 on pages IG–18 and 19)

WhereEverybodyKnowsYourName

ENGINE SPEED SENSOR

COMPONENTS FOR REMOVAL AND INSTALLATION

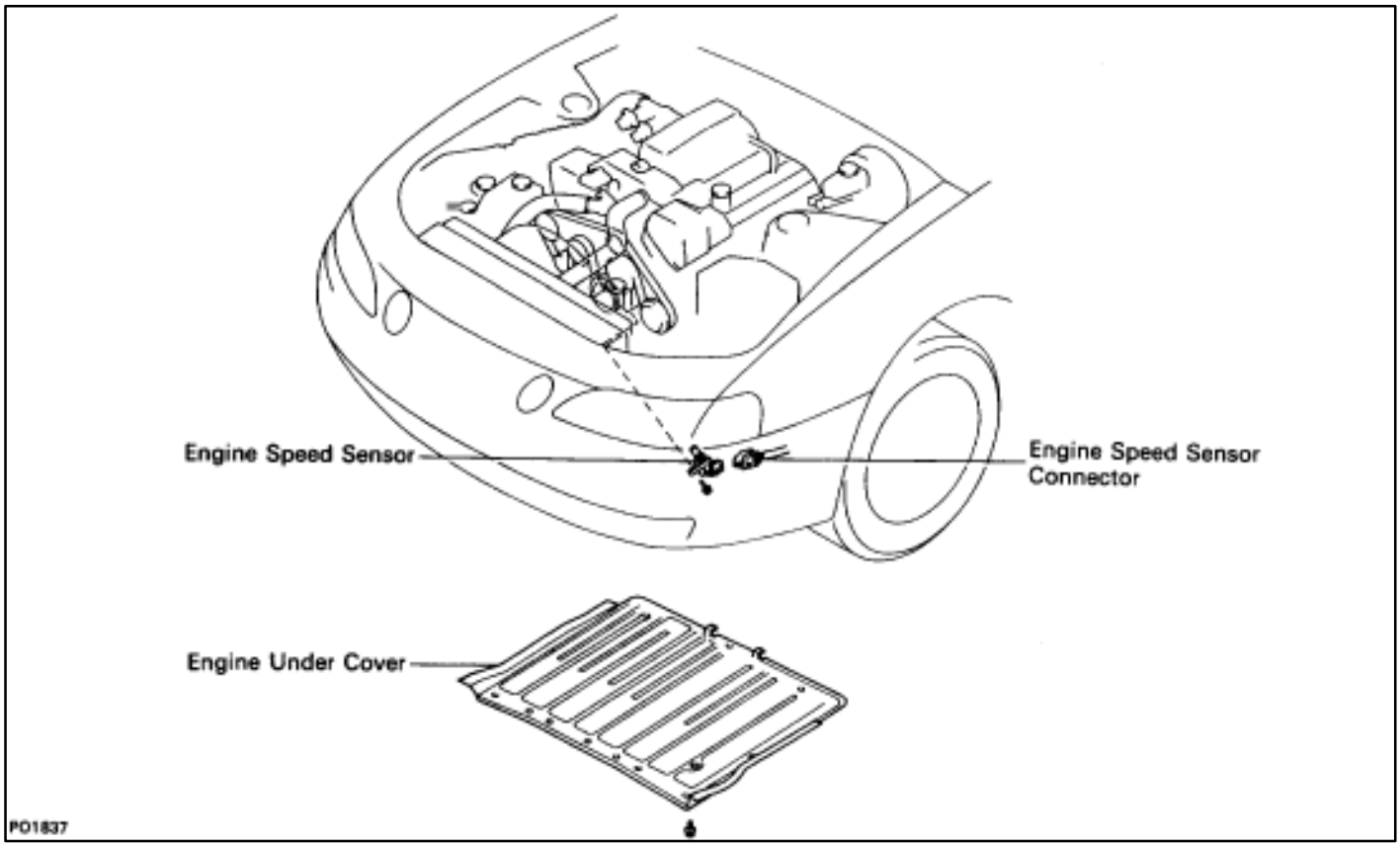

REMOVAL OF ENGINE SPEED SENSOR

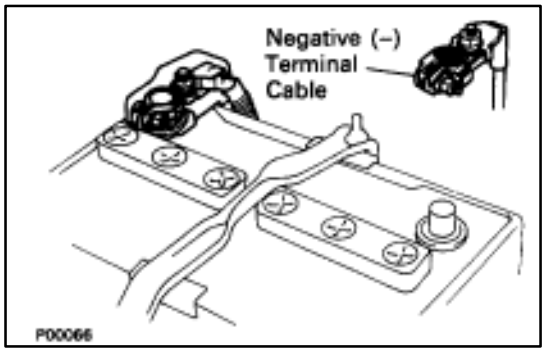

1. **DISCONNECT CABLE FROM NEGATIVE TERMINAL OF BATTERY**
   CAUTION: Work must be started after approx. 20 seconds or longer from the time the ignition switch is turned to the "LOCK" position and the negative (–) terminal cable is disconnected from the battery.
2. **REMOVE ENGINE UNDER COVER**
3. **DISCONNECT ENGINE SPEED SENSOR CONNECTOR**
4. **REMOVE ENGINE SPEED SENSOR**
   Remove the bolt and engine speed sensor.

INSTALLATION OF ENGINE SPEED SENSOR

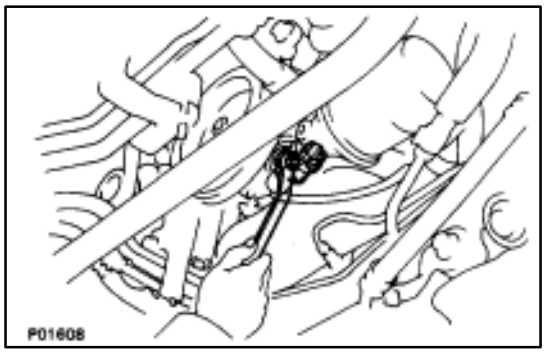

1. **INSTALL ENGINE SPEED SENSOR**
   Torque: 6.4 N·m (65 kgf·cm, 56 in.·lbf)
2. **CONNECT ENGINE SPEED SENSOR CONNECTOR**
3. **INSTALL ENGINE UNDER COVER**
4. **CONNECT CABLE TO NEGATIVE TERMINAL OF BATTERY**

WhereEverybodyKnowsYourName

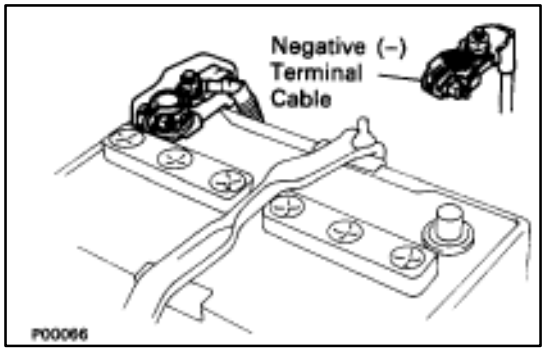

IGNITION MAIN RELAY

INSPECTION OF IGNITION MAIN RELAY

1. **DISCONNECT CABLE FROM NEGATIVE TERMINAL OF BATTERY**
   CAUTION: Work must be started after approx. 20 seconds or longer from the time the ignition switch is turned to the "LOCK" position and the negative (–) terminal cable is disconnected from the battery.

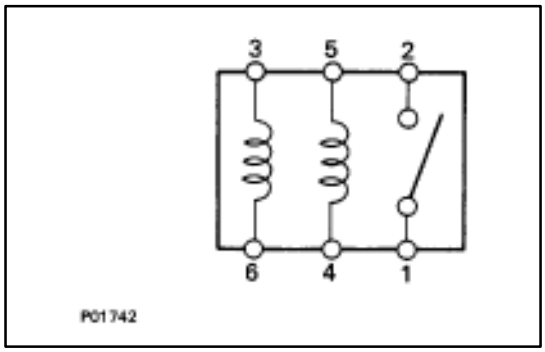

2. **REMOVE IGNITION MAIN RELAY**
   LOCATION: In the engine compartment relay box.
3. **INSPECT IGNITION MAIN RELAY**

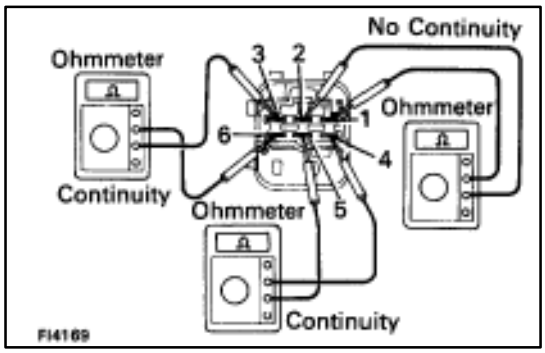

A. Inspect relay continuity
   (a) Using an ohmmeter, check that there is continuity between terminals 3 and 6.
   (b) Check that there is continuity between terminals 4 and 5.
   (c) Check that there is no continuity between terminals 1 and 2.
   If continuity is not as specified, replace the relay.

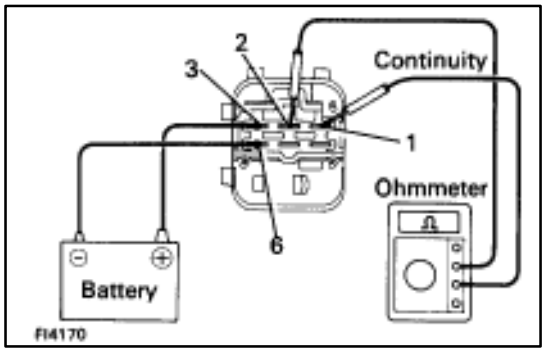

B. Inspect relay operation
   (a) Apply battery voltage across terminals 3 and 6.
   (b) Using an ohmmeter, check that there is continuity between terminals 1 and 2.

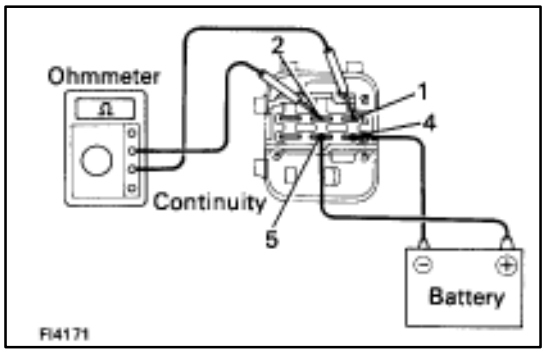

   (c) Apply battery voltage across terminals 4 and 5.
   (d) Using an ohmmeter, check that there is continuity between terminals 1 and 2.
   If operation is not as specified, replace the relay.
4. **REINSTALL IGNITION MAIN RELAY**
5. **RECONNECT CABLE TO NEGATIVE TERMINAL OF BATTERY**

WhereEverybodyKnowsYourName

SERVICE SPECIFICATIONS

SERVICE DATA

Ignition timing				8–12° BTDC @ idle (w/ Terminals TE1 and E1 connected)	
Firing order				1–8–4–3–6–5–7–2	
Spark plug	Type		ND	PK20R11	
			NGK	BKR6EP11	
	Electrode gap	New plug	STD	1.1 mm	0.043 in.
		Used plug	Limit	1.3 mm	0.051 in.
High–tension cord	Resistance			25 k? per cord	
Ignition coil	Primary coil resistance Secondary coil resistance			0.40–0.50 ? 10.0–14.0 k?	
Cam position sensor	Resistance	at –10– +40°C (14–104°F)		835–1,350 ?	
Engine speed sensor	Resistance	at –10– +40°C (14–104°F)		835–1,350 ?	

TORQUE SPECIFICATIONS

Part tightened	N·m	kgf·cm	ft·lbf
Spark plug X Cylinder head	18	180	13
Cam position sensor X Distributor housing	18	185	13
Distributor cap X Distributor housing	3.8	39	34 in.·lbf
Distributor rotor X Camshaft timing pulley	3.8	39	34 in.·lbf
RH No.2 timing belt cover X Cylinder block (for 12 mm head)	16	160	12
Drive belt idler pulley X Hydraulic pump	37	380	27
Engine speed sensor X Oil pump	6.4	65	56 in.·lbf

WhereEverybodyKnowsYourName

LUBRICATION SYSTEM

WhereEverybodyKnowsYourName

DESCRIPTION

A fully pressurized, fully filtered lubrication system has been adopted for this engine.

OPERATION

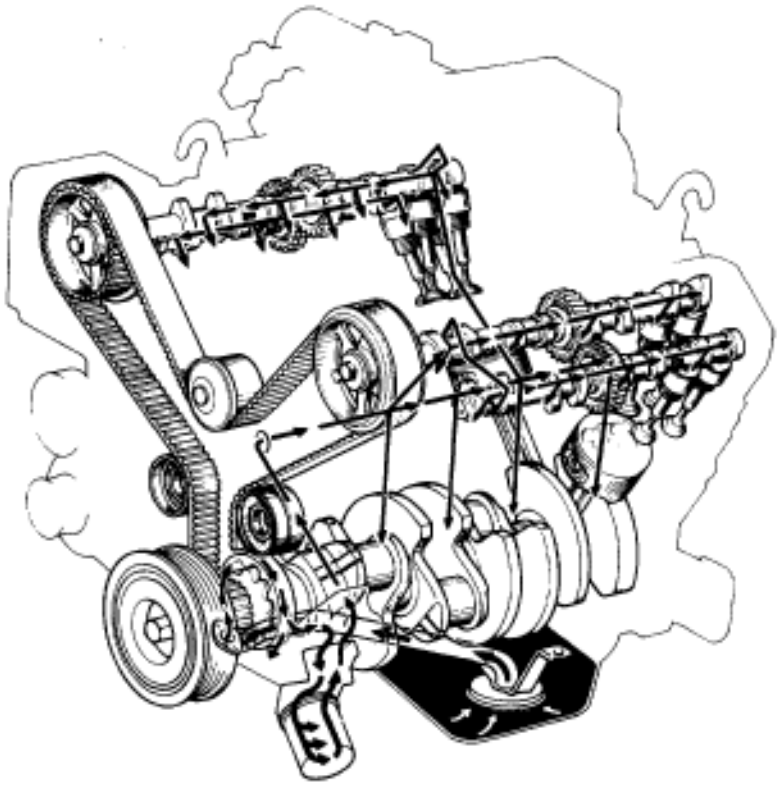

P01708

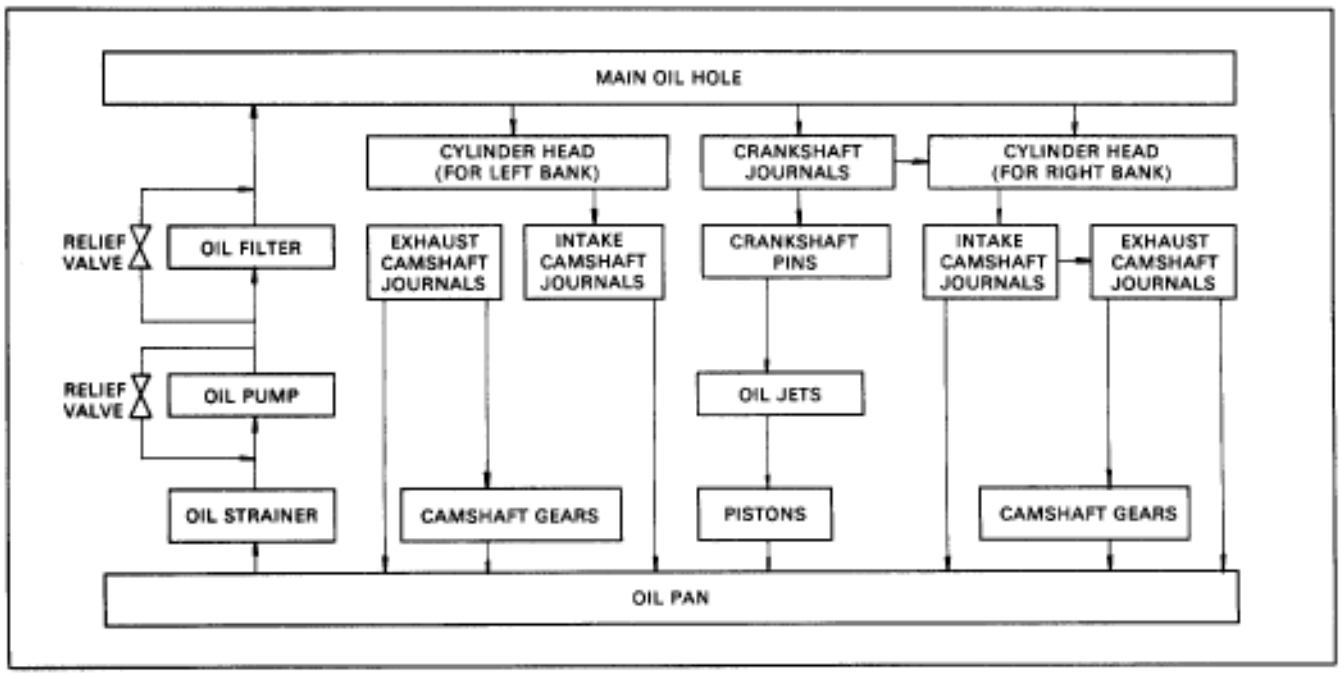

WhereEverybodyKnowsYourName

DESCRIPTION

A fully pressurized, fully filtered lubrication system has been adopted for this engine.

OPERATION

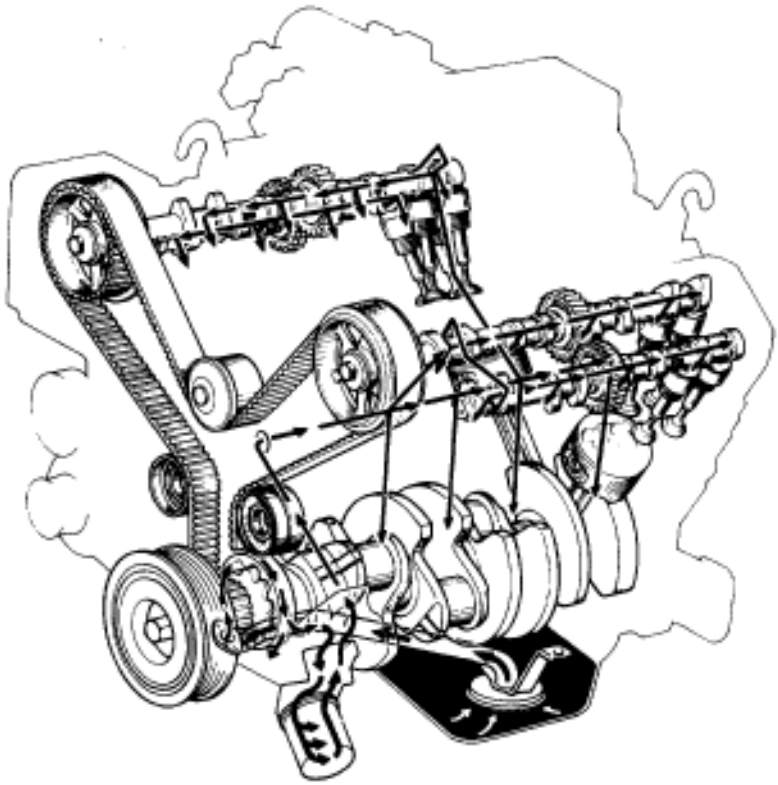

P01708

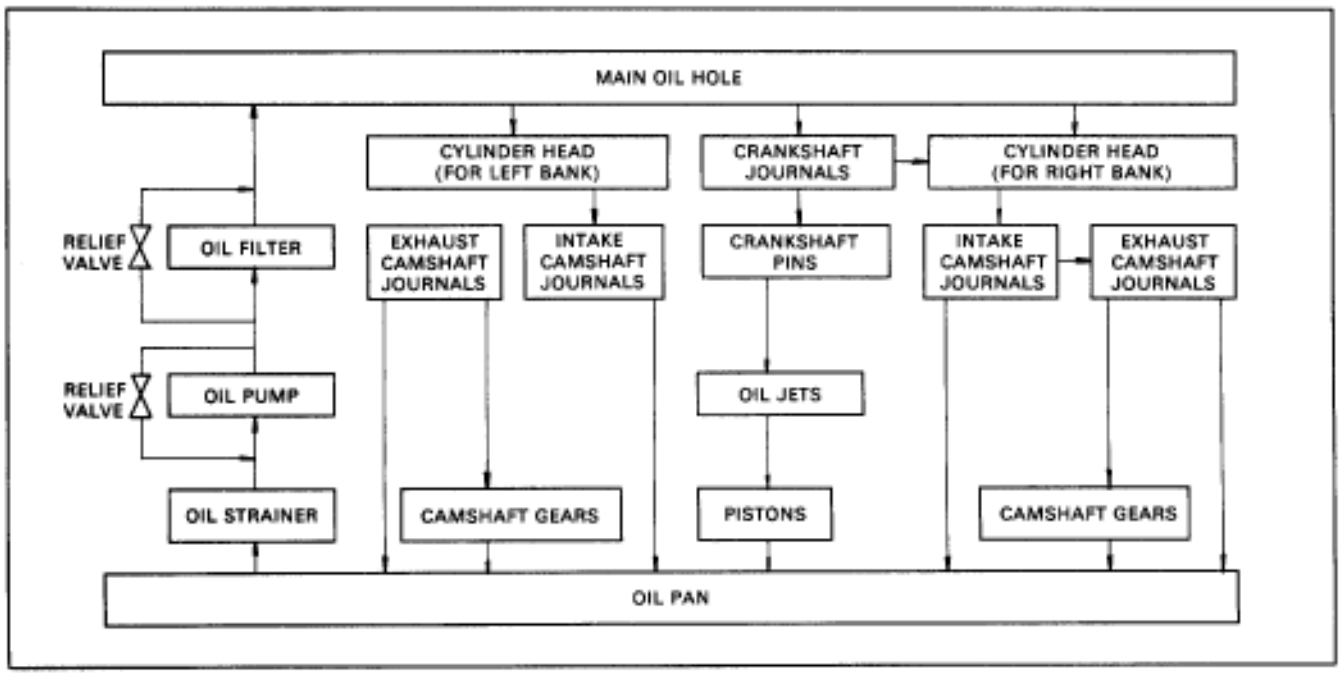

WhereEverybodyKnowsYourName

A pressure feeding lubrication system has been adopted to supply oil to the moving parts of this engine. The lubrication system consists of an oil pan, oil pump, oil filter and other external parts which supply oil to the moving parts in the engine block. The oil circuit is shown in the illustration at the top of the previous page. Oil from the oil pan is pumped up by the oil pump. After it passes through the oil filter, it is fed through the various oil holes in the crankshaft and cylinder block. After passing through the cylinder block and performing its lubricating function, the oil is returned by gravity to the oil pan. A dipstick on the center left side of the cylinder block is provided to check the oil level.

OIL PUMP

The oil pump pumps up oil from the oil pan and sends it under pressure to the various parts of the engine. An oil strainer is mounted in front of the inlet to the oil pump. The oil pump itself is a trochoid type pump, inside of which there is a drive rotor and a driven rotor. When the drive rotor rotates, the driven rotor rotates in the same direction, and since the axis of the driven rotor shaft is different from the center of the driven rotor, the space between the two rotors is changed as they rotate. Oil is drawn in when the space is wide and is discharged when the space in narrow.

OIL PRESSURE REGULATOR

At high engine speeds, the engine oil supplied by the oil pump exceeds the capacity of the engine to utilize it. For that reason, the oil pressure regulator works to prevent an oversupply of oil. During normal oil supply, a coil spring and valve keep the bypass closed, but when too much oil is being fed, the pressure become extremely high, overpowering the force of the spring and opening the valves. This allows the excess oil to flow through the valve and return to the oil pump inlet.

OIL FILTER

The oil filter is a full flow type filter with a built–in paper filter element. Particles of metal from wear, airborne dirt, carbon and other impurities can get into the oil during use and could cause accelerated wear or seizing if allowed to circulate through the engine. The oil filter, integrated into the oil line, removes these impurities as the oil passes through it. The filter is mounted outside the engine to simplify replacement of the filter element. A relief valve is also included ahead of the filter element to relieve the high oil pressure in case the filter element becomes clogged with impurities. The relief valve opens when the oil pressure overpowers the force of the spring. Oil passing through the relief valve by–passes the oil filter and flows directly into the main oil hole in the engine.

WhereEverybodyKnowsYourName

PREPARATION

SST (SPECIAL SERVICE TOOLS)

Illustration	Part No.	Part Name	Note
	09032-00100	Oil Pan Seal Cutter	No.2 oil pan
	09228-07500	Oil Filter Wrench	

RECOMMENDED TOOLS

Illustration	Part No.	Part Name	Note
	09200-00010	Engine Adjust Kit	

EQUIPMENT

Part Name	Note
Oil pressure gauge	
Precision straight edge	Oil pump
Torque wrench	

LUBRICANT

Item	Capacity			Classification
	Liters	US qts	Imp. qts	
Engine oil				API grade SG, Energy–Conserving II multigrade. Recommended viscosity is as shown, with SAE 5W–30 being the preferred engine oil.
Dry fill				
Drain and refill	6.0	6.3	5.3	
w/ Oil filter change	4.8	5.1	4.2	
w/o Oil filter change	4.5	4.8	5.3	

SSM (SPECIAL SERVICE MATERIALS)

Part Name	Part No.	Use etc.
Seal packing or equivalent	08826–00080	Oil pump, Oil pan
Adhesive 1344, Three bond 1344, Loctite 242 or equivalent	08833–00080	Oil pressure switch

WhereEverybodyKnowsYourName

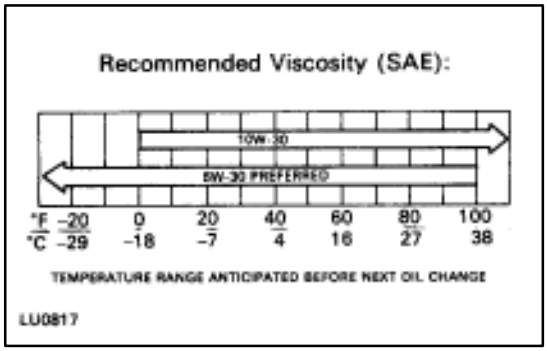

OIL PRESSURE CHECK

1. CHECK ENGINE OIL QUALITY

Check the oil for deterioration, entry of water, discoloring or thinning.

If the quality is poor, replace the oil.

Oil grade: API grade SG, Energy–Conserving II multi-grade. Recommended viscosity is as shown, with SAE 5W–30 being the preferred engine oil.

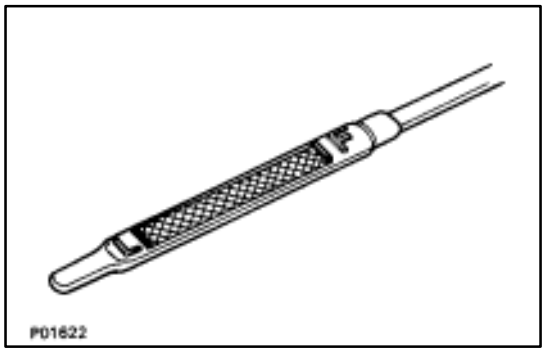

2. CHECK ENGINE OIL LEVEL

The oil level should be between the ”L” and ”F” marks on the dipstick.

If low, check for the leakage and add oil up to ”F” mark.

3. REMOVE ENGINE UNDER COVER

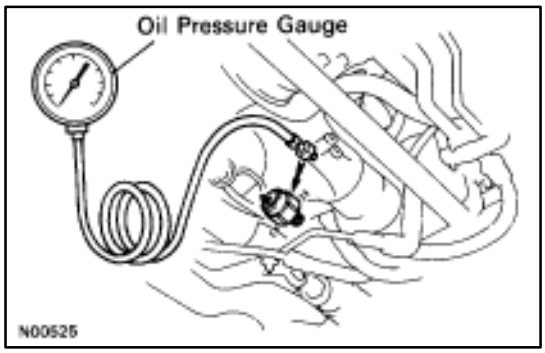

4. REMOVE OIL PRESSURE SWITCH, AND INSTALL OIL PRESSURE GAUGE

5. WARM UP ENGINE

Allow the engine to warm up to normal operating temperature.

6. CHECK OIL PRESSURE

Oil pressure:

At idling 29 kPa (0.3 kgf/cm^2, 4.3 psi) or more

At 3,000 rpm 294–588 kPa (3.0–6.0 kg/cm^2, 43–85 psi)

7. REMOVE OIL PRESSURE GAUGE AND REINSTALL OIL PRESSURE SWITCH

Apply adhesive to two or three threads of the oil pressure switch.

Adhesive: Part No. 08833–00080, THREE BOND 1344, LOCTITE 242 or equivalent

8. START ENGINE AND CHECK FOR LEAKS

9. REINSTALL ENGINE UNDER COVER

WhereEverybodyKnowsYourName

REPLACEMENT OF ENGINE OIL AND OIL FILTER

CAUTION:

- **Prolonged and repeated contact with mineral oil will result in the removal of natural fats from the skin, leading to dryness, irritation and dermatitis. In addition, used engine oil contains potentially harmful contaminants which may cause skin cancer.**
- **Care should be taken, therefore, when changing engine, oil to minimize the frequency and length of time your skin is exposed to used engine oil. Protective clothing and gloves, that cannot be penetrated by oil, should be worn. The skin should be thoroughly washed with soap and water, or use waterless hand cleaner, to remove any used engine oil. Do not use gasoline, thinners, or solvents.**
- **In order to preserve the environment, used oil and used oil filter must be disposed of only at designated disposal sites.**

1. DRAIN ENGINE OIL

(a) Remove the oil filler cap.

(b) Remove the oil drain plug, and drain the oil into a container.

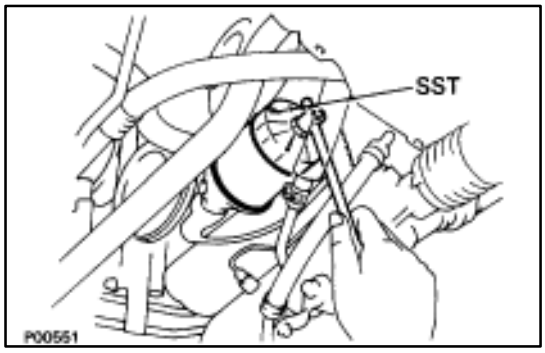

2. REPLACE OIL FILTER

(a) Using SST, remove the oil filter.

SST 09228–07500

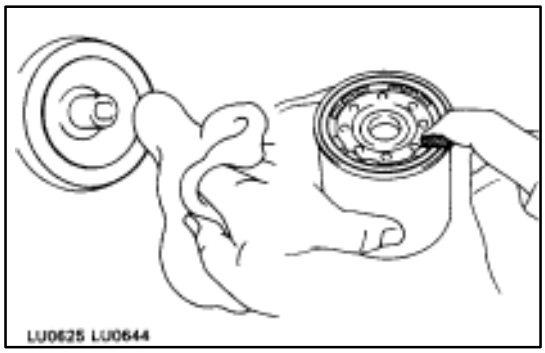

(b) Clean the filter contact surface on the oil filter mounting.

(c) Lubricate the filter rubber gasket with clean engine oil.

WhereEverybodyKnowsYourName

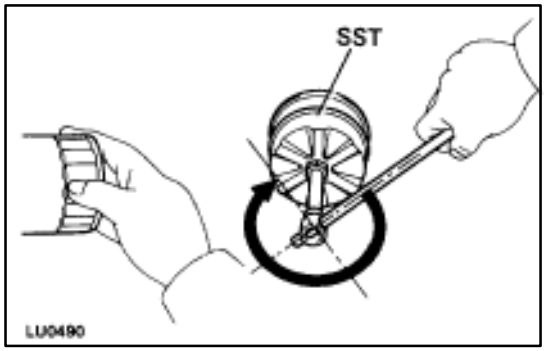

(d) Tighten the oil filter by hand until the rubber gasket contacts the seat of the filter mounting. Then using SST, give it an additional 3/4 turn to seat the oil filter.

SST 09228–07500

3. FILL WITH ENGINE OIL

(a) Clean and install the oil drain plug with a new gasket.

Torque: 25 N·m (250 kgf·cm, 18 ft·lbf)

(b) Fill with new engine oil.

Oil grade: See page LU–5

Capacity:

Drain and refill

w/ Oil filter change

4.8 liters (5.1 US qts, 4.2 Imp. qts)

w/o Oil filter change

4.5 liters (4.8 US qts, 4.0 Imp.qts)

Dry fill 6.0 liters (6.3 US qts, 5.3 Imp. qts)

(c) Reinstall the oil filler cap.

4. START ENGINE AND CHECK FOR LEAKS

5. RECHECK ENGINE OIL LEVEL (See page LU–5)

WhereEverybodyKnowsYourName

OIL PUMP

COMPONENTS FOR REMOVAL AND INSTALLATION

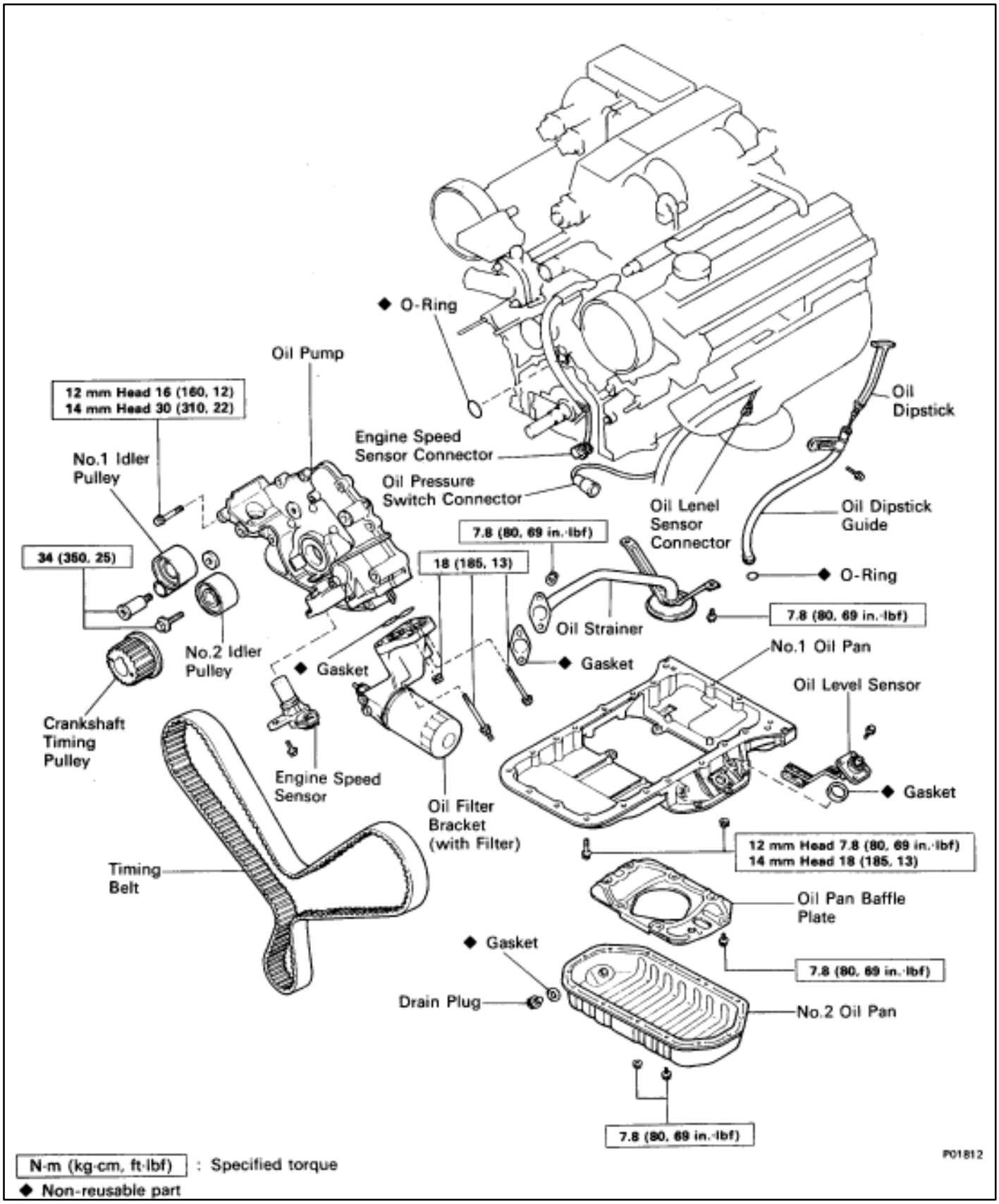

WhereEverybodyKnowsYourName

REMOVAL OF OIL PUMP

(See Components on page LU–8)

HINT: When repairing the oil pump, the oil pan and strainer should be removed and cleaned.

1. **REMOVE ENGINE WITH TRANSMISSION**
   (See pages EM–118 to 128)
2. **SEPARATE ENGINE AND TRANSMISSION**
   (See pages EM–129 to 130)
3. **INSTALL ENGINE TO ENGINE STAND FOR REMOVAL**
4. **REMOVE TIMING BELT**
   (See steps 8 to 35 on pages EM–36 to 43)
5. **REMOVE NO.2 IDLER PULLEY, NO.1 IDLER PULLEY AND CRANKSHAFT TIMING PULLEY**
   (See steps 36 to 38 on page EM–44)

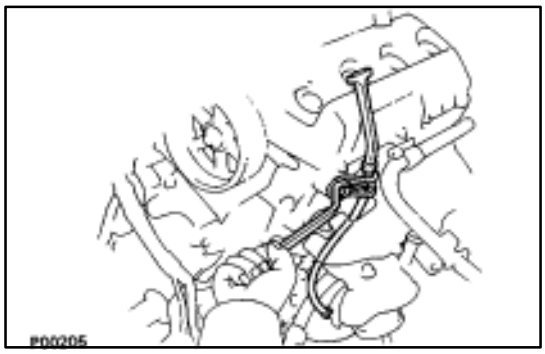

6. **REMOVE OIL DIPSTICK AND GUIDE**
   (a) Remove the mounting bolt.
   (b) Pull out the dipstick guide together with dipstick guide.
   (c) Remove the O–ring from the dipstick guide.

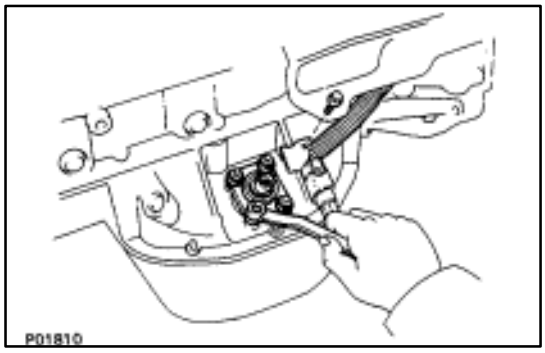

7. **REMOVE BRACKET OF MAIN OXYGEN SENSOR CONNECTOR FROM NO.1 OIL PAN**
   Remove the bolt, and disconnect the connector bracket.
8. **REMOVE OIL LEVEL SENSOR**
   (a) Disconnect the level sensor connector.
   (b) Remove the four mounting bolts, and disconnect the engine wire bracket.
   (c) Remove the level sensor.
   (d) Remove the gasket from the level sensor.

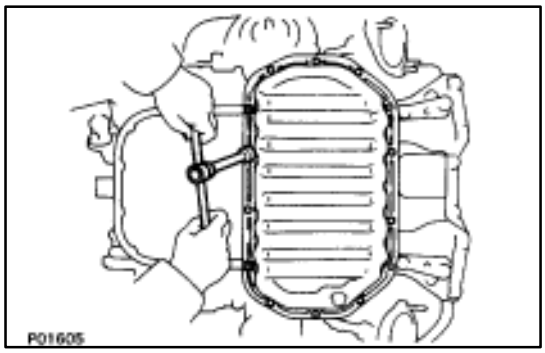

9. **REMOVE NO.2 OIL PAN**
   (a) Remove the twelve mounting bolts and two nuts.

WhereEverybodyKnowsYourName

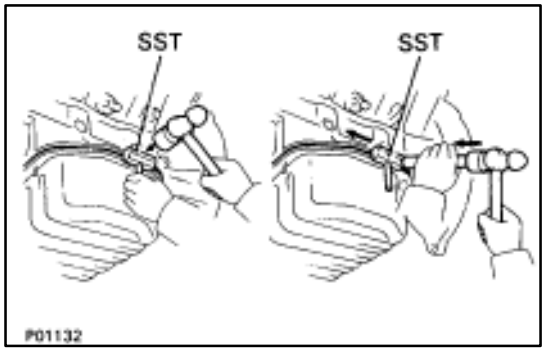

(b) Insert the blade of SST between the No.1 and No.2 oil pan, cut off applied sealer and remove the No.1 oil pan.

SST 09032–00100

NOTICE:

- **Be careful not to damage the No.2 oil pan contact surface of the No.1 oil pan.**
- **Be careful not to damage the oil pan flange.**

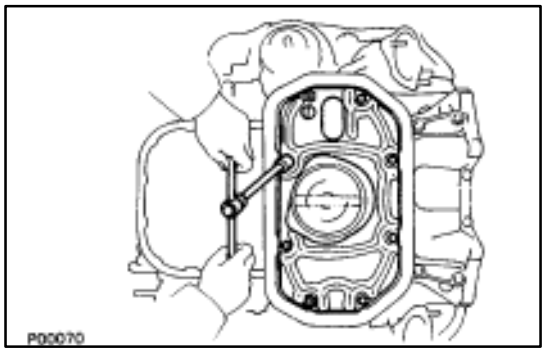

10. REMOVE OIL PAN BAFFLE PLATE

Remove the six bolts, two nuts and baffle plate.

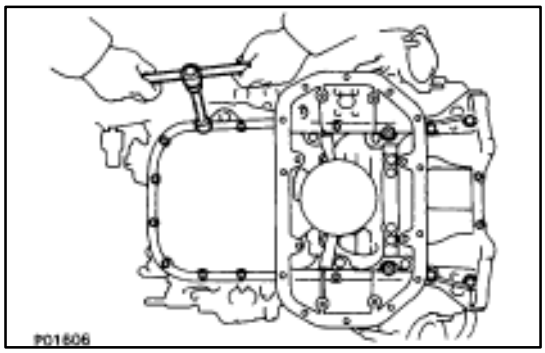

11. REMOVE NO.1 OIL PAN

(a) Remove the sixteen mounting bolts and two nuts.

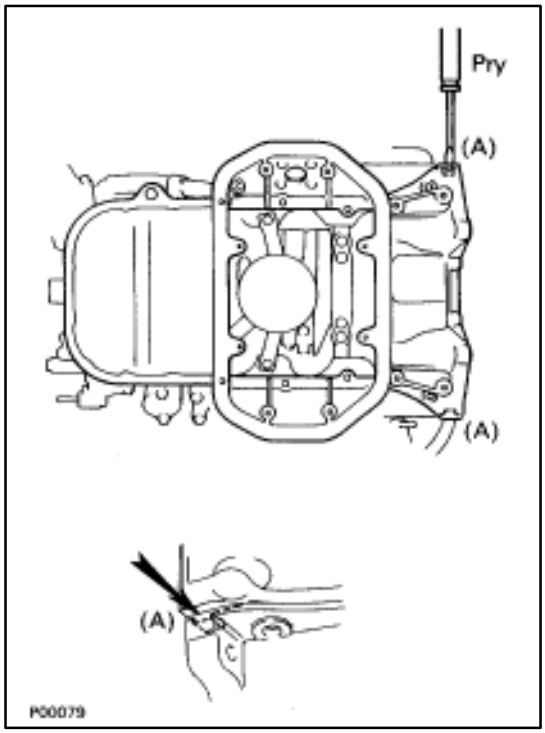

(b) Remove the No.1 oil pan by prying the portions (A) between the cylinder block and No.1 oil pan with a screwdriver.

NOTICE: Be careful not to damage the contact surfaces of the cylinder block and No.1 oil pan.

WhereEverybodyKnowsYourName

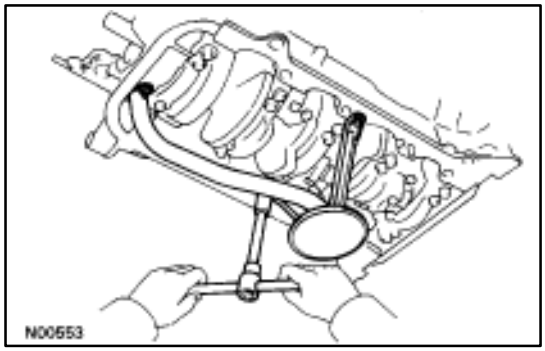

12. REMOVE OIL STRAINER

Remove the two bolts, two nuts, oil strainer and gasket.

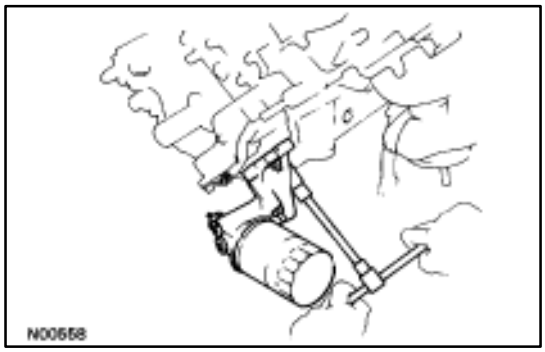

13. REMOVE OIL FILTER BRACKET

(a) Disconnect the oil pressure switch connector.
(b) Remove the two bolts, stud bolt, the filter bracket and oil filter assembly.
(c) Remove the gasket from the filter bracket.

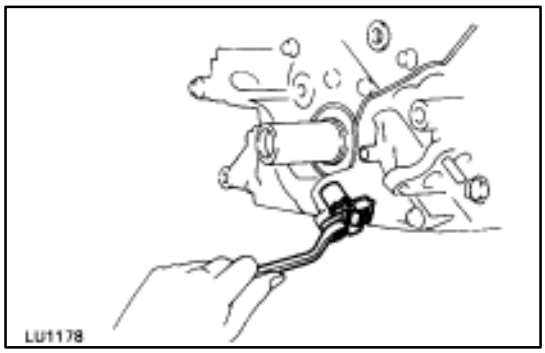

14. REMOVE ENGINE SPEED SENSOR

(a) Disconnect the speed sensor connector.
(b) Remove the bolt and speed sensor.

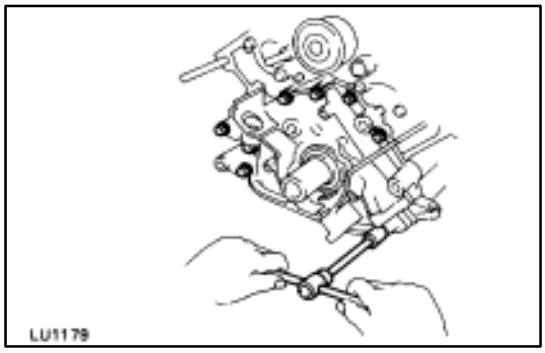

15. REMOVE OIL PUMP

(a) Remove the eight mounting bolts.

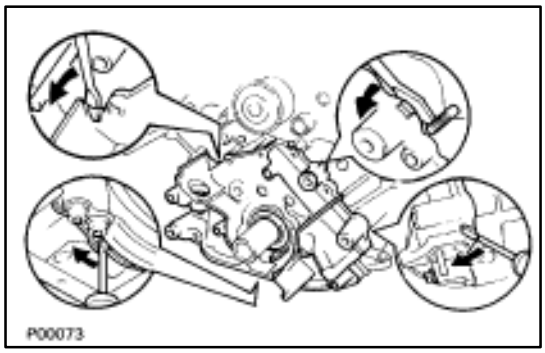

(b) Remove the oil pump by prying the portions between the cylinder block and oil pump with a screwdriver.

NOTICE: Be careful not to damage the contact surfaces of the cylinder block and oil pump.

(c) Remove the O–ring from the cylinder block.

WhereEverybodyKnowsYourName

COMPONENTS FOR DISASSEMBLY AND ASSEMBLY OF OIL PUMP

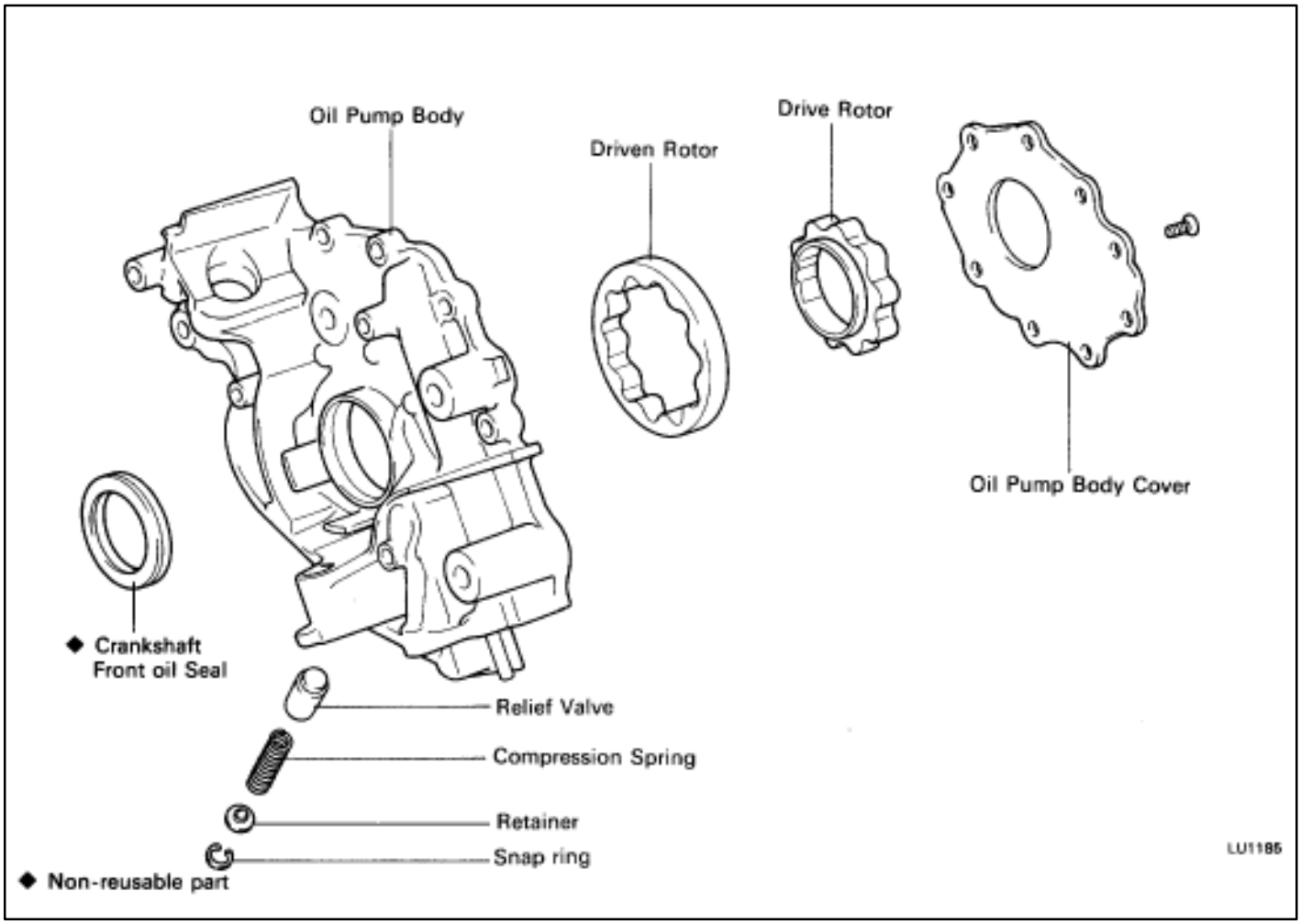

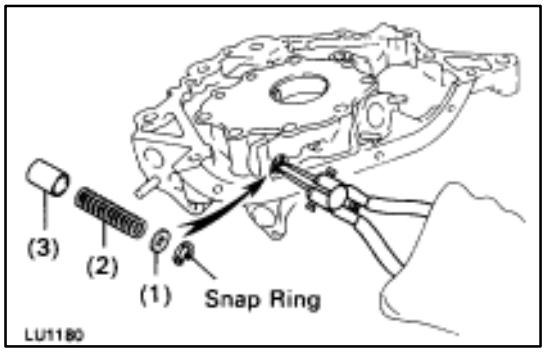

DISASSEMBLY OF OIL PUMP

1. REMOVE RELIEF VALVE

Using snap ring pliers, remove the snap ring and following parts:

(1) Retainer
(2) Compression spring
(3) Relief valve.

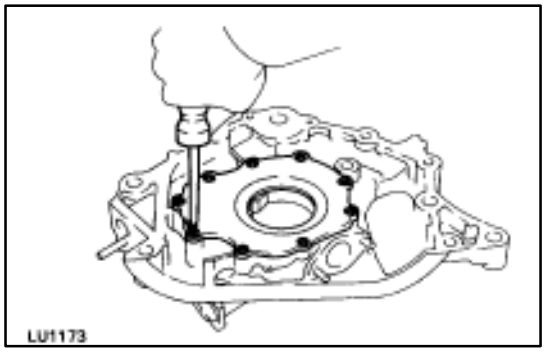

2. REMOVE DRIVE AND DRIVEN ROTORS

Remove the nine screws, pump body cover, the drive and driven rotors.

WhereEverybodyKnowsYourName

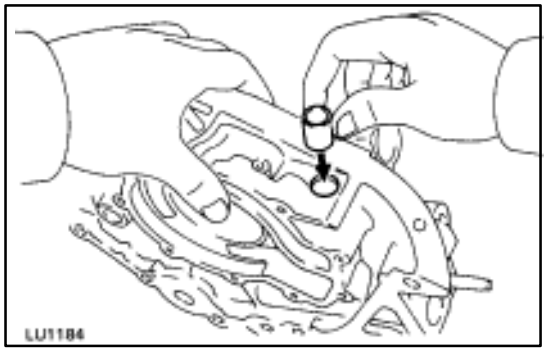

INSPECTION OF OIL PUMP

1. INSPECT RELIEF VALVE

Coat the valve with engine oil and check that it falls smoothly into the valve hole by its own weight.

If it doesn't, replace the relief valve. If necessary, replace the oil pump assembly.

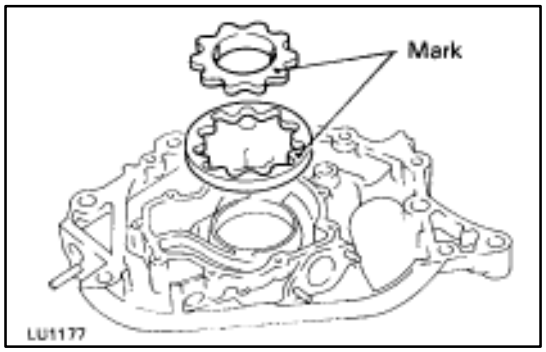

2. INSPECT DRIVE AND DRIVEN ROTORS

A. Place drive and driven rotors into oil pump body

Face the mark of the rotors upward.

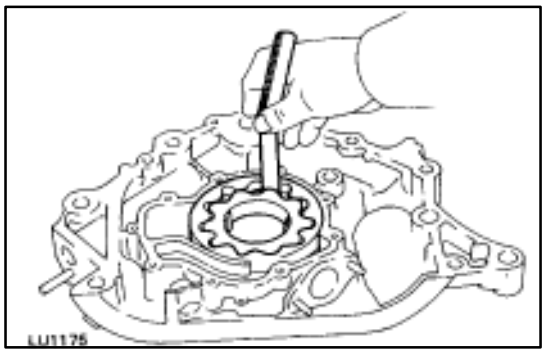

B. Inspect rotor tip clearance

Using a feeler gauge, measure the clearance between the drive and driven rotors.

Standard tip clearance: 0.110–0.240 mm (0.0043–0.0094 in.)

Maximum tip clearance: 0.35 mm (0.0138 in.)

If the tip clearance is greater than maximum, replace the rotors as a set.

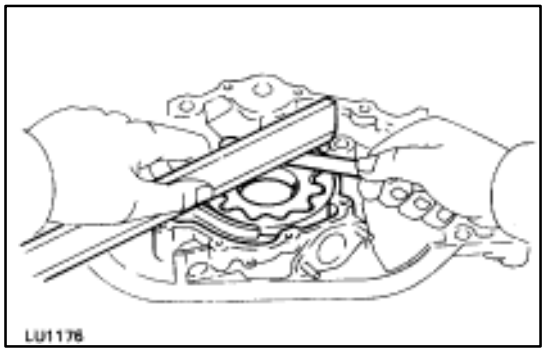

C. Inspect rotor side clearance

Using a feeler gauge and precision straight edge, measure the clearance between the rotors and precision straight edge.

Standard side clearance: 0.030–0.090 mm (0.0012–0.0035 in.)

Maximum side clearance: 0.15 mm (0.0059 in.)

If the side clearance is greater than maximum, replace the rotors as a set. If necessary, replace the oil pump assembly.

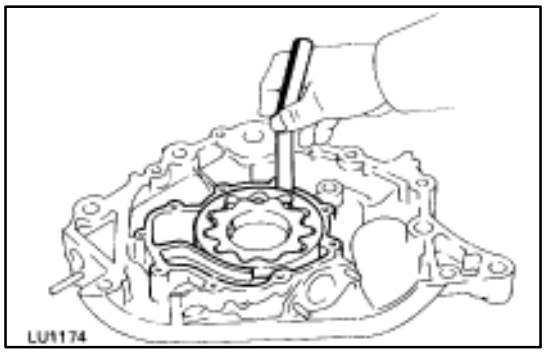

D. Inspect rotor body clearance

Using a feeler gauge, measure the clearance between the driven rotor and pump body.

Standard body clearance: 0.100–0.175 mm (0.0039–0.0069 in.)

Maximum body clearance: 0.30 mm (0.0118 in.)

If the body clearance is greater than maximum, replace the rotors as a set. If necessary, replace the oil pump assembly.

E. Remove drive and driven rotors

WhereEverybodyKnowsYourName

REPLACEMENT OF CRANKSHAFT FRONT OIL SEAL

(See page EM–152)

ASSEMBLY OF OIL PUMP

(See Components on page LU–12)

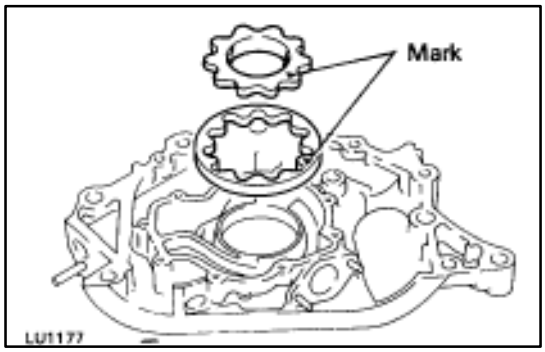

1. INSTALL DRIVE AND DRIVEN ROTORS

(a) Place the drive and driven rotors into oil pump body with the mark facing upward.

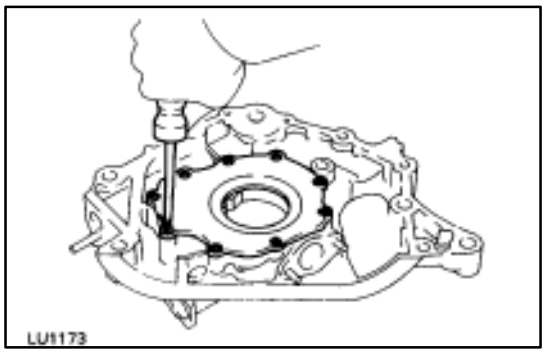

(b) Install the pump body cover with the nine screws.
Torque: 10 N·m (105 kgf·cm, 8 ft·lbf)

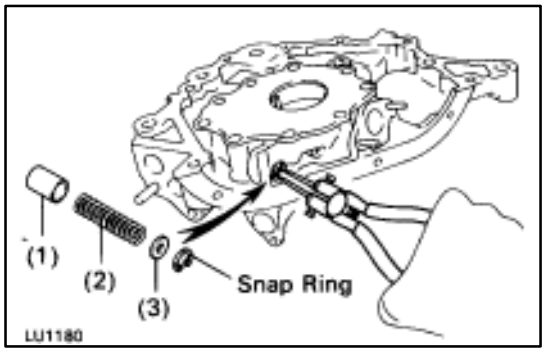

2. INSTALL RELIEF VALVE

(a) Insert the following parts into the oil pump body hole:
(1) Relief valve
(2) Compression spring
(3) Retainer

(b) Using snap ring pliers, install the snap ring.

WhereEverybodyKnowsYourName

INSTALLATION OF OIL PUMP

(See Components on page LU–8)

1. INSTALL OIL PUMP

(a) Remove any old packing (FIPG) material and be careful not to drop any oil on the contact surfaces of the oil pump cylinder block.

- Using a razor blade and gasket scraper, remove all the old packing (FIPG) material from the gasket surfaces and sealing groove.
- Thoroughly clean all components to remove all the loose material.
- Using a non–residue solvent, clean both sealing surfaces.

NOTICE: Do not use a solvent which will affect the painted surfaces.

(b) Apply seal packing to the oil pump as shown in the illustration.

Seal packing: Part No. 08826–00080 or equivalent

- Install a nozzle that has been cut to a 2–3 mm (0.08–0.12 in.) opening.

HINT: Avoid applying an excessive amount to the surface. Be particularly careful near oil passages.

- Parts must be assembled within 5 minutes of application. Otherwise the material must be removed and reapplied.
- Immediately remove nozzle from the tube and reinstall cap.

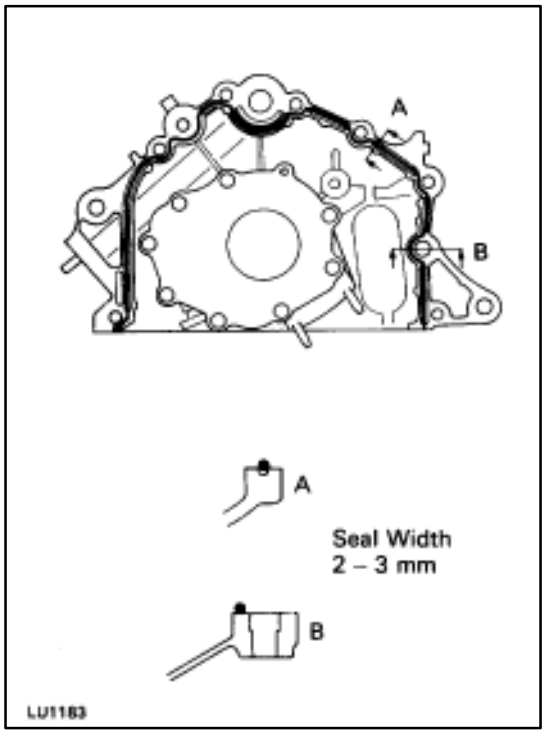

(c) Place a new gasket in position on the cylinder block.

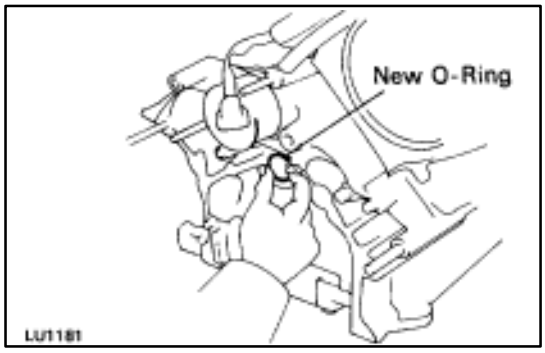

(d) Engage the spline teeth of the oil pump drive rotor with the large teeth of the crankshaft, and slide the oil pump.

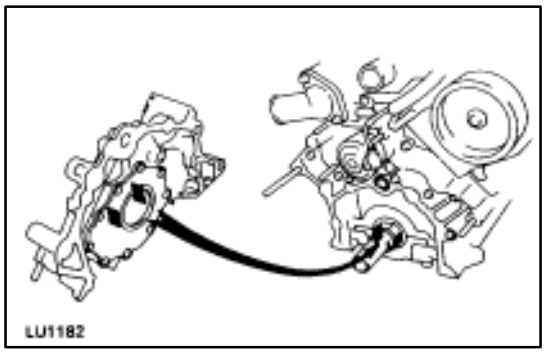

WhereEverybodyKnowsYourName

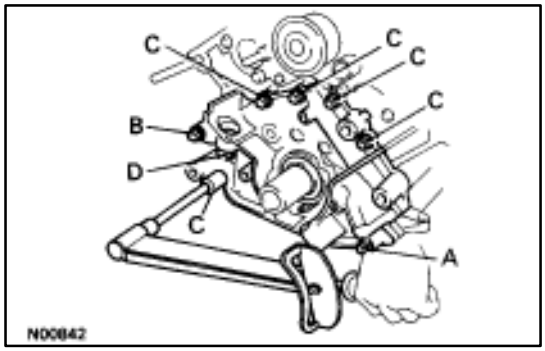

(e) Install the oil pump with the eight bolts.

Torque:

12 mm head 16 N·m (160 kgf·cm, 12 ft·lbf)

14 mm head 30 N·m (310 kgf·cm, 22 ft·lbf)

HINT: Each bolt length is indicated in the illustration.

Bolt length:

A 50 mm (1.97 in.) for 12 mm head
B 106 mm (4.17 in.) for 12 mm head
C 30 mm (1.18 in.) for 12 mm head
D 40 mm (1.57 in.) for 14 mm head

2. INSTALL ENGINE SPEED SENSOR

(a) Install the speed sensor with the bolt.

Torque: 6.4 N·m (65 kgf·cm, 56 in.·lbf)

(b) Connect the speed sensor connector.

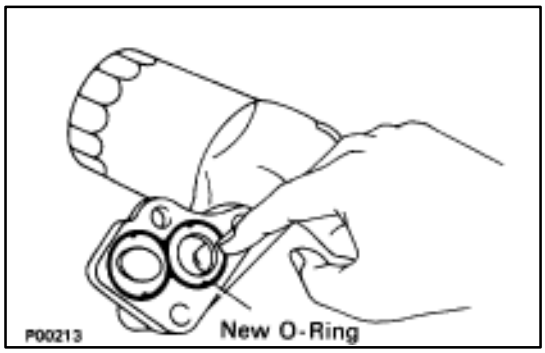

3. INSTALL OIL FILTER BRACKET

(a) Place a new gasket in position on the oil filter bracket.

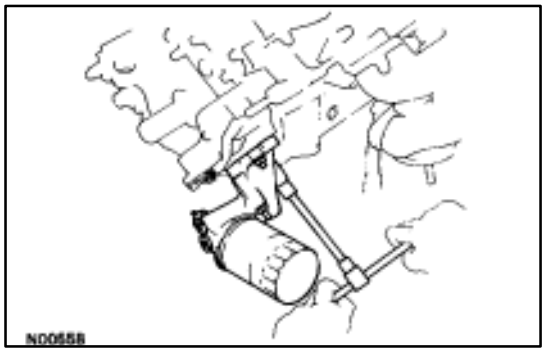

(b) Install the oil filter bracket with the two bolts and stud bolt.

Torque: 18 N·m (185 kgf·cm, 13 ft·lbf)

(c) Connect the oil pressure switch connector.

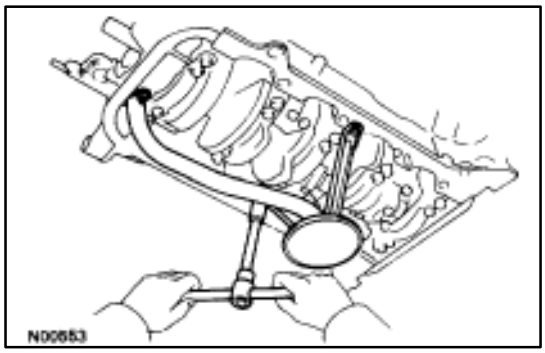

4. INSTALL OIL STRAINER

Install a new gasket and the oil strainer with the two bolts and two nuts.

Torque: 7.8 N·m (80 kgf·cm, 69 in.·lbf)

WhereEverybodyKnowsYourName

5. INSTALL NO.1 OIL PAN

(a) Remove any old packing (FIPG) material and be careful not to drop any oil on the contact surfaces of the No.1 oil pan and cylinder block.

- Using a razor blade and gasket scraper, remove all the old packing (FIPG) material from the gasket surfaces and sealing groove.
- Thoroughly clean all components to remove all the loose material.
- Using a non–residue solvent, clean both sealing surfaces.

NOTICE: Do not use a solvent which will affect the painted surfaces.

(b) Apply seal packing to the No.1 oil pan as shown in the illustration.

Seal packing: Part No. 08826–00080 or equivalent

- Install a nozzle that has been cut to a 2–3 mm (0.08–0.12 in.) opening.

HINT: Avoid applying an excessive amount to the surface.

- Parts must be assembled within 5 minutes of application. Otherwise the material must be removed and reapplied.
- Immediately remove nozzle from the tube and reinstall cap.

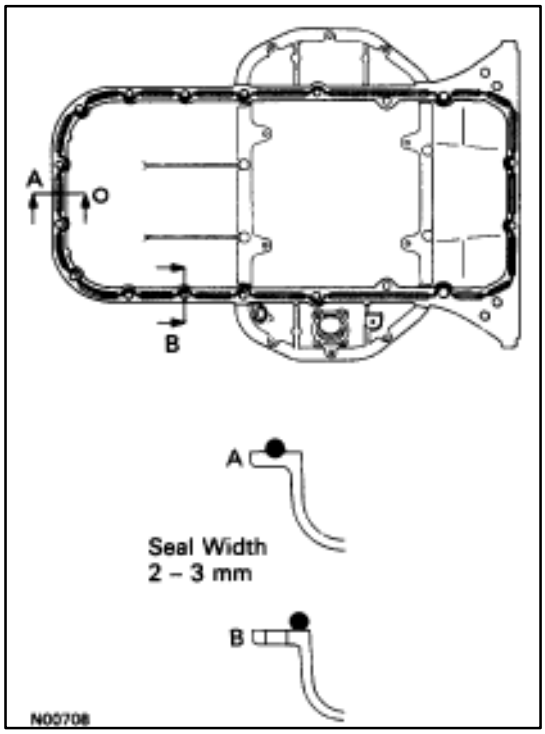

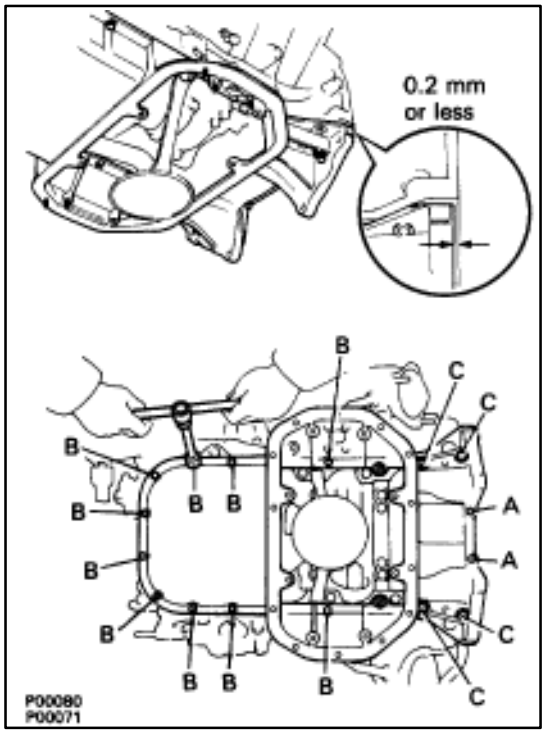

(c) Temporarily install the No.1 oil pan with the sixteen bolts and two nuts.

HINT: Each bolt length is indicated in the illustration.

Bolt length:

A 20 mm (0.78 in.) for 10 mm head
B 35 mm (1.38 in.) for 10 mm head
C 55 mm (2.17 in.) for 12 mm head

(d) Set the No.1 oil pan as shown in the illustration.

NOTICE: Make sure the clearance between the rear ends of the oil pan and cylinder block is 0.2 mm (0.008 in.) or less. If the clearance is more than 0.2 mm (0.008 in.), the oil pan will be stretched.

(e) Tighten the sixteen bolts and two nuts.

Torque:

10 mm head 7.8 N·m (80 kgf·cm, 69 in.·lbf)
12 mm head 18 N·m (185 kgf·cm, 13 ft·lbf)

WhereEverybodyKnowsYourName

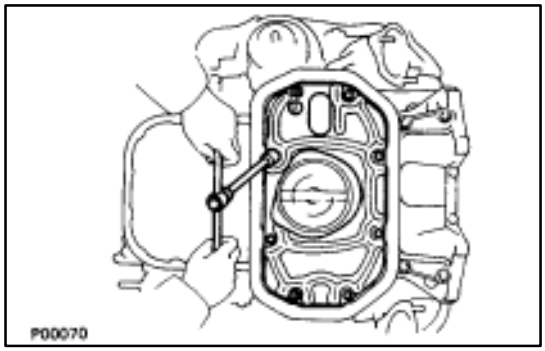

6. INSTALL OIL PAN BAFFLE PLATE

Install the baffle plate with the six bolts and two nuts.

Torque: 7.8 N·m (80 kgf·cm, 69 in.·lbf)

HINT: Use bolts 14 mm (0.55 in.) in length.

7. INSTALL NO.2 OIL PAN

(a) Remove any old packing (FIPG) material and be careful not to drop any oil on the contact surfaces of the No.1 and No.2 oil pans.

- Using a razor blade and gasket scraper, remove all the old packing (FIPG) material from the gasket surfaces and sealing groove.
- Thoroughly clean all components to remove all the loose material.
- Using a non–residue solvent, clean both sealing surfaces.

NOTICE: Do not use a solvent which will affect the painted surfaces.

(b) Apply seal packing to the No.2 oil pan as shown in the illustration.

Seal packing: Part No. 08826–00080 or equivalent

- Install a nozzle that has been cut to a 3–4 mm (0.12–0.16 in.) opening.

HINT: Avoid applying an excessive amount to the surface.

- Parts must be assembled within 5 minutes of application. Otherwise the material must be removed and reapplied.
- Immediately remove nozzle from the tube and reinstall cap.

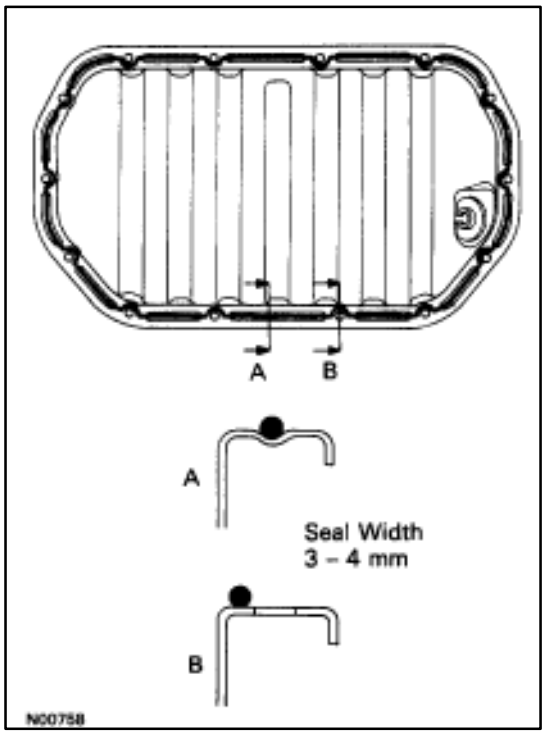

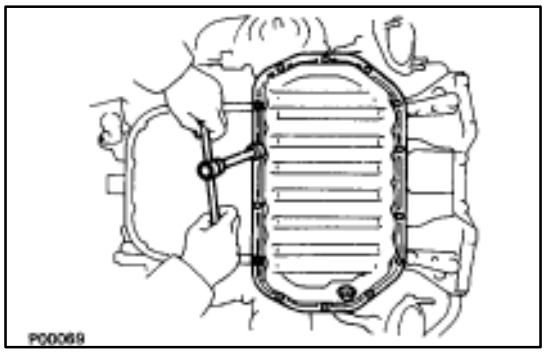

(c) Install the No.2 oil pan with the twelve bolts and two nuts.

Torque: 7.8 N·m (80 kgf·cm, 69 in.·lbf)

HINT: Use bolts 14 mm (0.55 in.) in length.

WhereEverybodyKnowsYourName

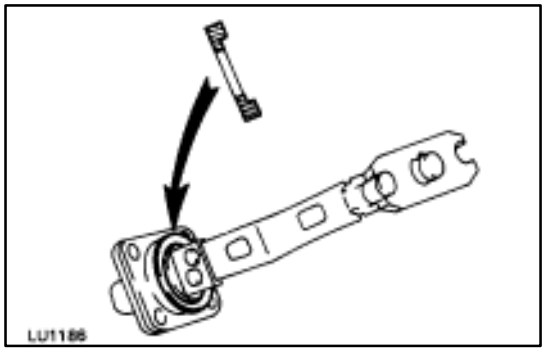

8. INSTALL OIL LEVEL SENSOR

(a) Install a new gasket to the level sensor.

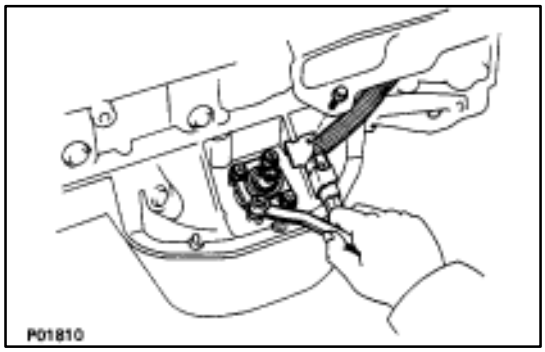

(b) Install the level sensor with the four bolts.

Torque: 5.4 N·m (55 kgf·cm, 48 in.·lbf)

HINT: Use bolts 16 mm (0.63 in.) in length.

(c) Connect the level sensor connector.

9. INSTALL BRACKET OF MAIN OXYGEN SENSOR CONNECTOR TO NO.1 OIL PAN

Install the connector bracket with bolt.

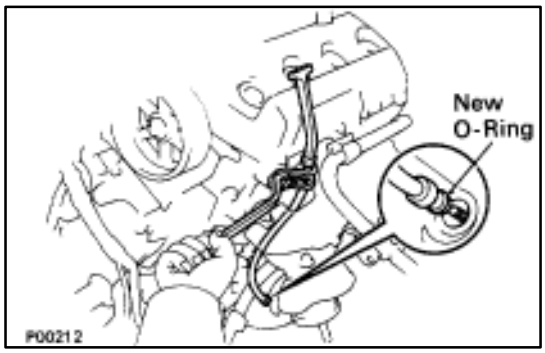

10. INSTALL OIL DIPSTICK GUIDE AND DIPSTICK

(a) Install a new O–ring to the dipstick guide.

(b) Apply soapy water to the O–ring.

(c) Push in the dipstick guide into the guide hole of the No.1 oil pan.

(d) Install the engine wire bracket and dipstick guide with bolt.

(e) Install the oil dipstick.

11. INSTALL CRANKSHAFT TIMING PULLEY, NO.1 IDLER PULLEY AND NO.2 IDLER PULLEY

(See steps 1 to 3 on pages EM–46 and 47)

12. INSTALL TIMING BELT

(See steps 4 to 35 on pages EM–47 to 56)

13. REMOVE ENGINE STAND FROM ENGINE

14. ASSEMBLE ENGINE AND TRANSMISSION

(See pages EM–165 and 166)

15. INSTALL ENGINE WITH TRANSMISSION

(See pages EM–167 to 177)

WhereEverybodyKnowsYourName

SERVICE SPECIFICATIONS

SERVICE DATA

Oil pressure		at idling	29 kPa (0.3 kgf/cm^2, 4.3 psi) or more	
		at 3,000 rpm	294–588 kPa (3.0–6.0 kgf/cm^2, 43–85 psi)	
Oil pump	Tip clearance	STD	0.110–0.240 mm	0.0043–0.0094 in.
		Limit	0.35 mm	0.0138 in.
	Side clearance	STD	0.030–0.090 mm	0.0012–0.0035 in.
		Limit	0.15 mm	0.0059 in.
	Body clearance	STD	0.100–0.175 mm	0.0039–0.0069 in.
		Limit	0.30 mm	0.0118 in.

TORQUE SPECIFICATIONS

Part tightened		N·m	kgf·cm	ft·lbf
Oil oumo body cover X Oil pump body		10	105	8
Oil pump X Cylinder block	12 mm head	16	160	12
	14 mm head	30	310	22
Engine speed sensor X Oil pump		6.4	65	56 in.·lbf
Oil filter bracket X Oil pump		18	185	13
Oil strainer X Oil pump		7.8	80	69 in.·lbf
Oil strainer X Cylinder block		7.8	80	69 in.·lbf
No.2 oil pan X Cylinder block	10 mm head	7.8	80	69 in.·lbf
	12 mm head	18	185	13
Oil pan baffle plate X No.1 oil pan		7.8	80	69 in.·lbf
No.2 oil pan X No.1 oil pan		7.8	80	69 in.·lbf
No.2 oil pan X Cylinder block		7.8	80	69 in.·lbf
Oil level sensor X No.1 oil pan		5.4	55	48 in.·lbf

WhereEverybodyKnowsYourName

STARTING SYSTEM

NOTE: The specification descriptions ”**USA Spec.**” and ”**Exc. USA Spec.**” used in this section indicate the following specifications.
USA Spec.: USA (50 States) Specifications
Exc. USA Spec.: USA (except California) and Canadian Specifications.

WhereEverybodyKnowsYourName

DESCRIPTION

The starter is a reduction type starter with a small, high–speed motor used to drive the pinion gear. It is installed in the center of the V–bank of the cylinder block.

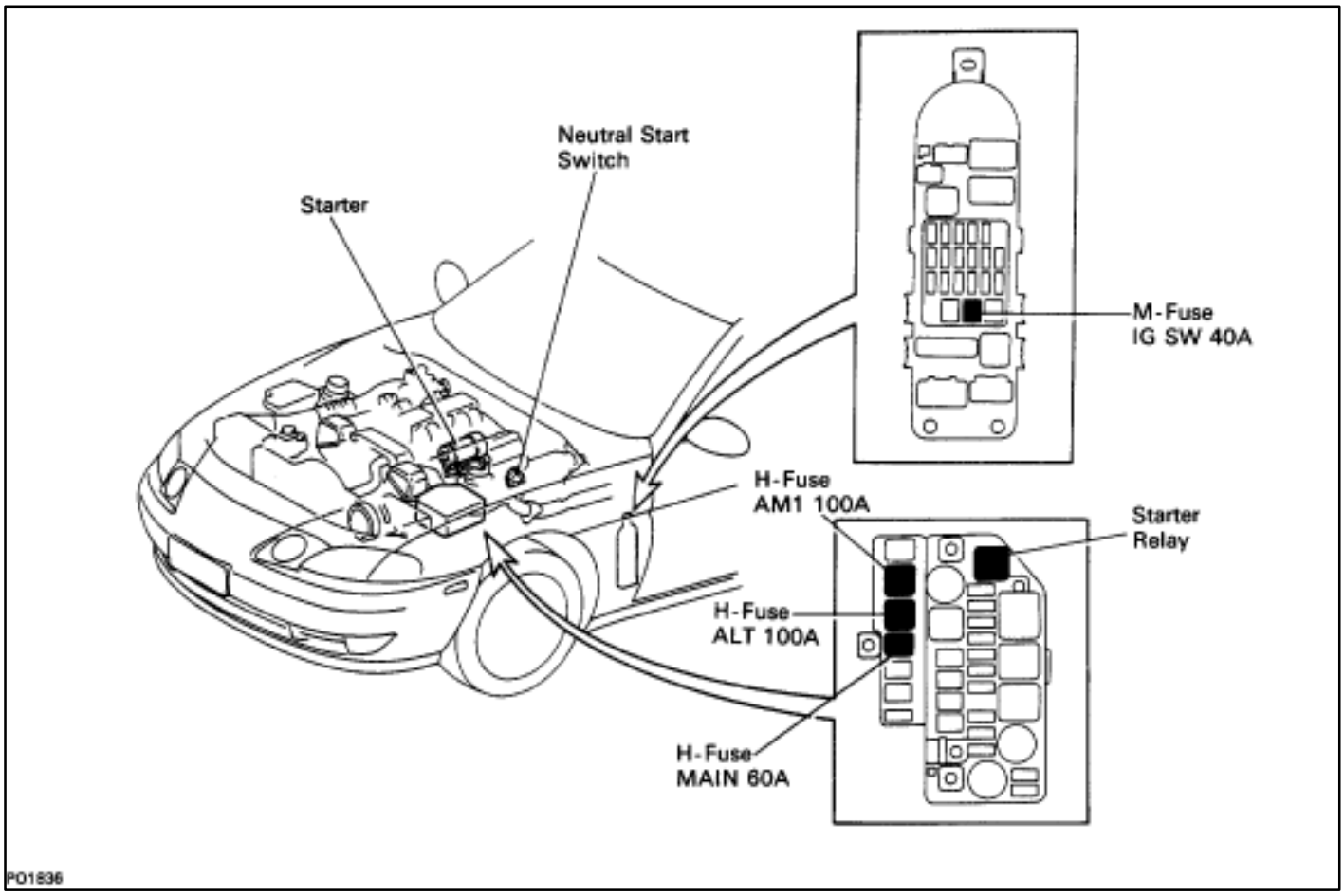

WhereEverybodyKnowsYourName

SYSTEM CIRCUIT

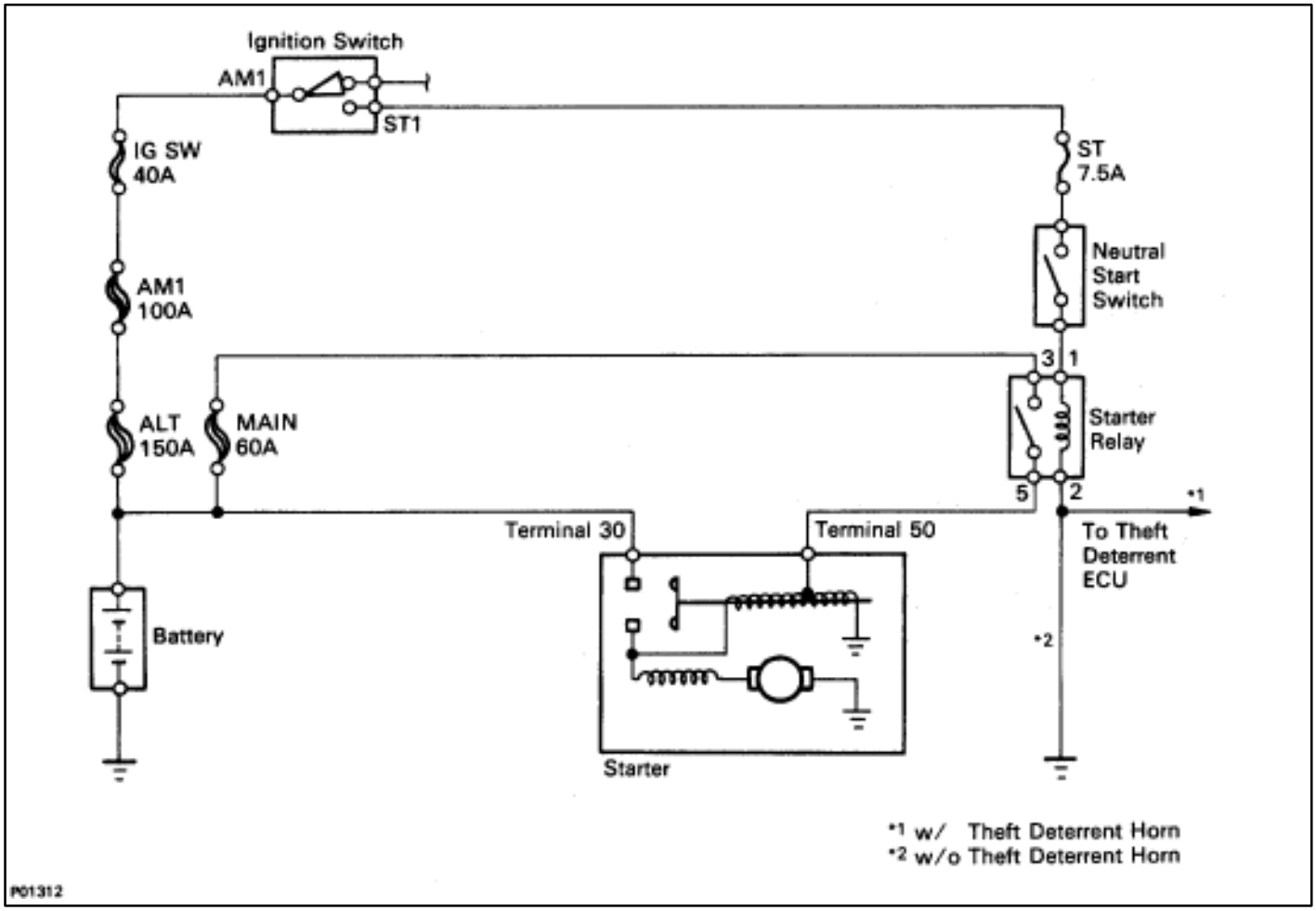

OPERATION

When the ignition switch is turned to START, current flows from terminal 50 to the coil of the solenoid and the plunger is pulled by the magnetic force of the coil. When the plunger is pulled to the left as shown above, the contact plate of the plunger allows current from the battery to flow directly from terminal 30 to the motor, and the starter rotates.

When the engine is running and the ignition switch is returned to ON, the magnetic force of the coil disappears and the contact plate of the plunger is returned to its original position by the return spring. Battery voltage no longer flows from terminal 30, so the motor stops.

WhereEverybodyKnowsYourName

PREPARATION

SST (SPECIAL SERVICE TOOLS)

Illustration	Part No.	Part Name	Note
	09201–41020	Valve Stem Oil Seal Replacer	Armature rear bearing
	09286–46011	Injection Pump Spline Shaft Puller	Armature front bearing
	09612–24014	Steering Gear Housing Overhaul Tool Set	
	(09617–24011)	(Steering Rack Wrench)	Fuel Inlet hose
	09950–00020	Bearing Remover	Armature rear bearing

RECOMMENDED TOOLS

Illustration	Part No.	Part Name	Note
	09082–00015	TOYOTA Electrical Tester	

EQUIPMENT

Part Name	Note
Dial indicator	Commutator
Vernier caliper	Commutator, Brush
Pull scale	Brush spring
Torque wrench	

WhereEverybodyKnowsYourName

STARTER

COMPONENTS FOR REMOVAL AND INSTALLATION

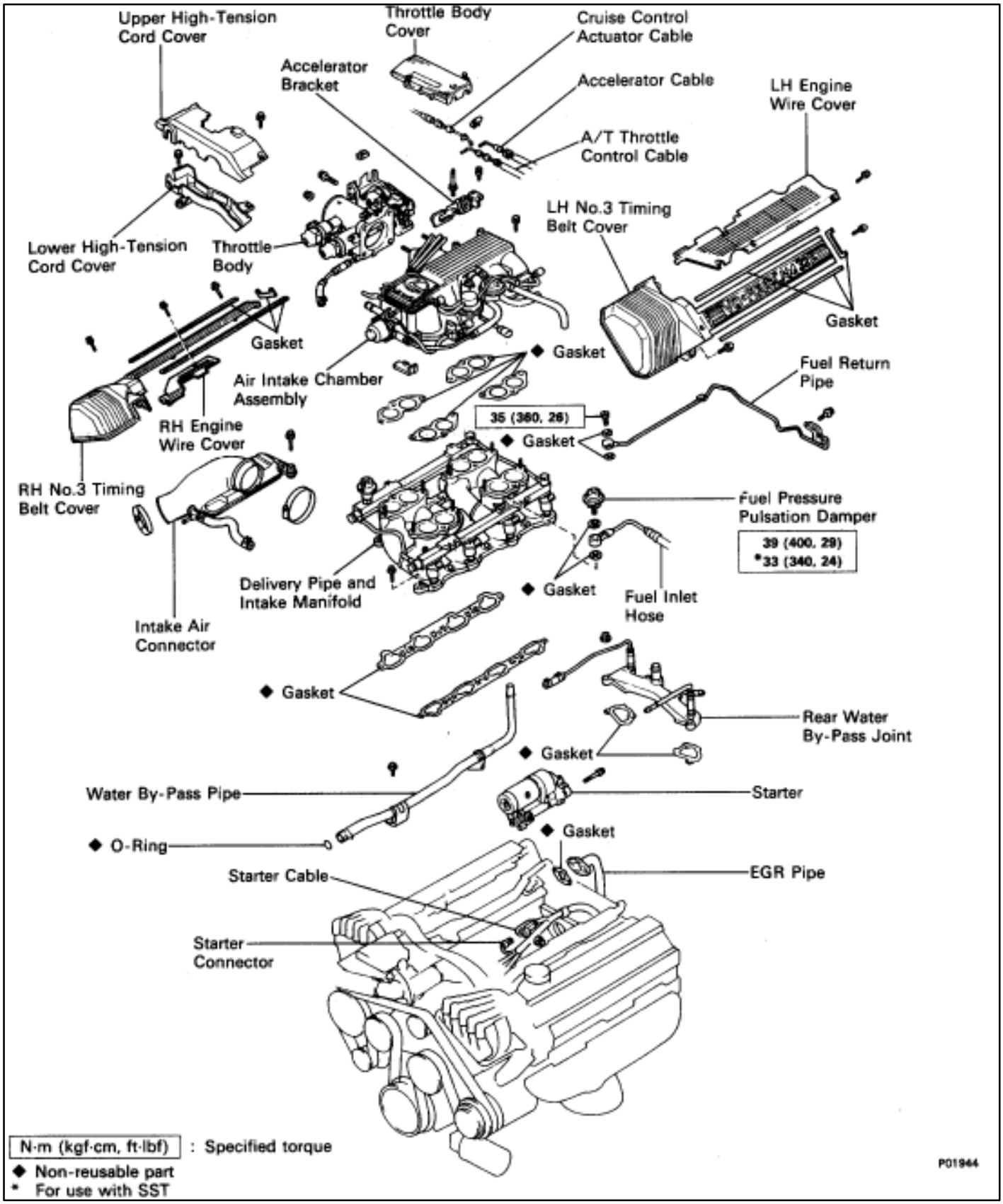

WhereEverybodyKnowsYourName

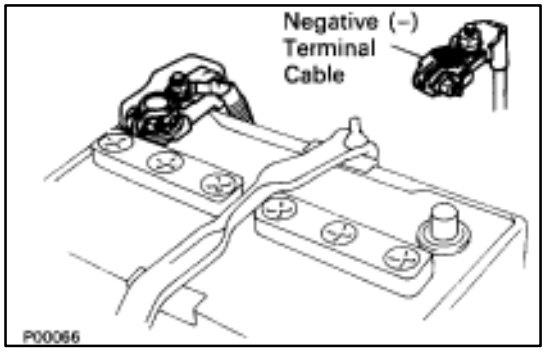

REMOVAL OF STARTER

(See Components on page ST–5)

1. **DISCONNECT CABLE FROM NEGATIVE TERMINAL OF BATTERY**
   CAUTION: Work must be started after approx. 20 seconds or longer from the time the ignition switch is turned to the "LOCK" position and the negative (–) terminal cable is disconnected from the battery.
2. **DRAIN ENGINE COOLANT**

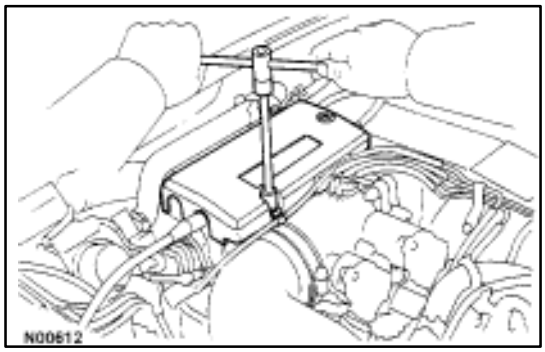

3. **REMOVE THROTTLE BODY COVER**
   (a) Remove the mounting cap nut.
   (b) Loosen the two bolts, and remove the throttle body cover.

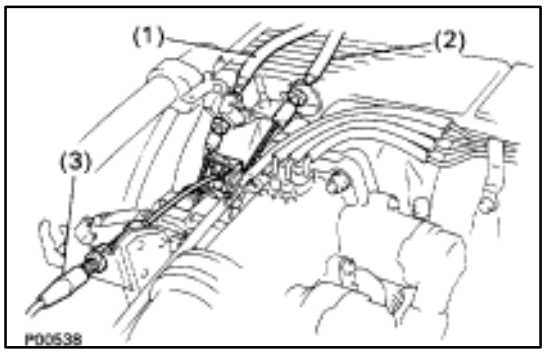

4. **DISCONNECT CONTROL CABLES FROM THROTTLE BODY**
   Disconnect the following cables:
   (1) Accelerator cable
   (2) A/T throttle control cable
   (3) (w/ Cruise Control System)
   Cruise control actuator cable

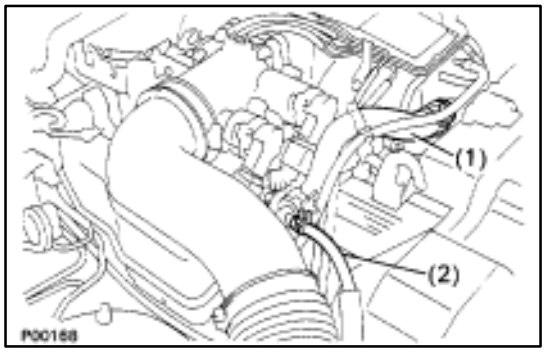

5. **REMOVE INTAKE AIR CONNECTOR**
   (a) Disconnect the following hoses:
   (1) Air hose from ISC valve
   (2) Air hose (from PS air control valve) from intake air connector

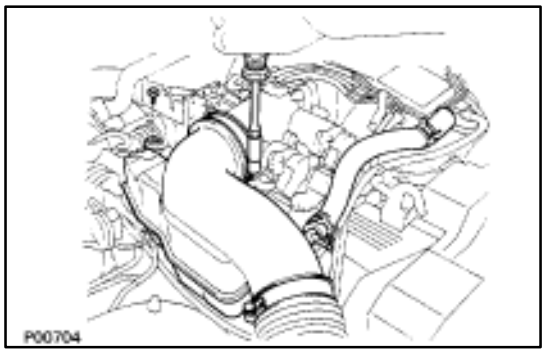

   (b) Remove the bolt holding the intake air connector to the cylinder head cover.
   (c) Loosen the two hose clamps.
   (d) Disconnect the intake air connector from the throttle body and air cleaner hose, and remove the intake air connector.

WhereEverybodyKnowsYourName

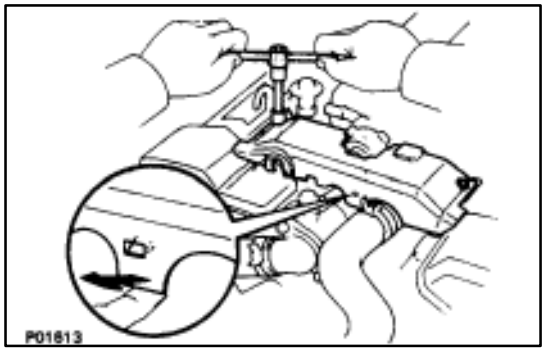

6. REMOVE UPPER HIGH–TENSION CORD COVER

(a) Remove the two mounting bolts.

(b) Disconnect the front side claw groove of the cord cover from the claw of the lower cover, and remove the cord cover.

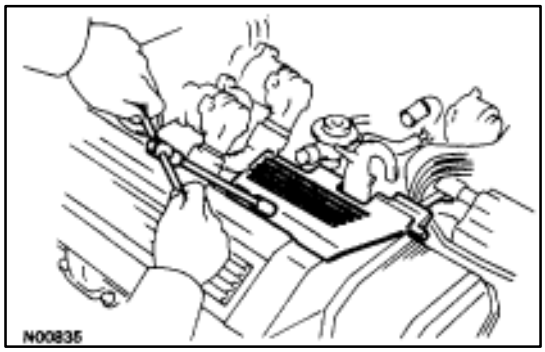

7. REMOVE RH ENGINE WIRE COVER

Remove the bolt and engine wire cover.

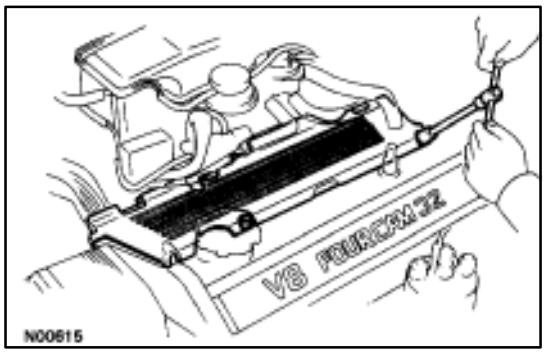

8. REMOVE LH ENGINE WIRE COVER

Remove the two bolts and engine wire cover.

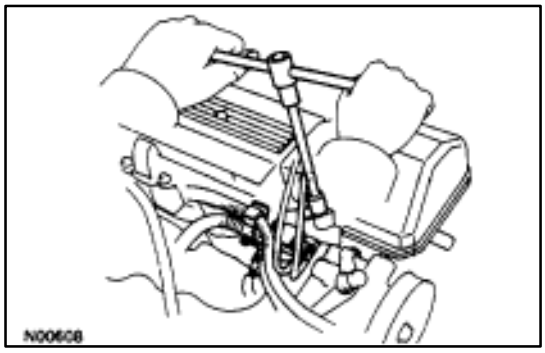

9. REMOVE VSV FOR EVAP SYSTEM

Remove the two bolts, and disconnect the VSV from cylinder head and timing belt cover.

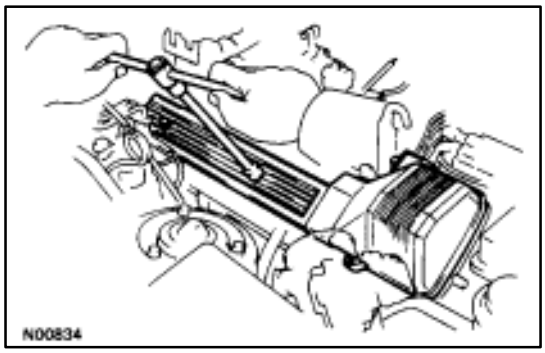

10. REMOVE RH NO.3 TIMING BELT COVER

Remove the three bolts and timing belt cover.

WhereEverybodyKnowsYourName

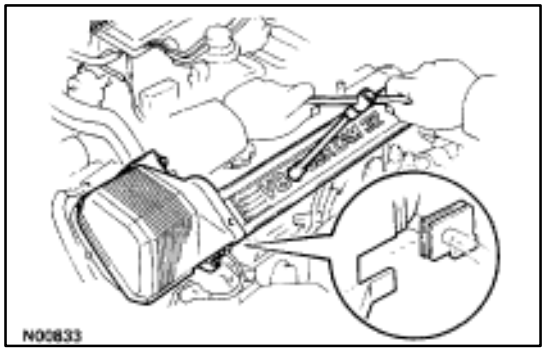

11. REMOVE LH NO.3 TIMING BELT COVER

(a) Remove the four mounting bolts.

(b) Disconnect the cord grommet from the timing belt cover, and remove the timing belt cover.

(c) Remove the cord grommet from the high–tension cord.

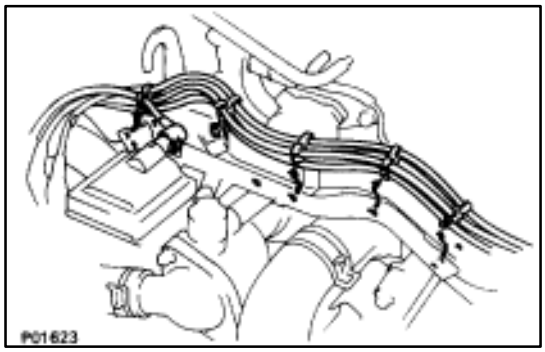

12. REMOVE LOWER HIGH–TENSION CORD COVER

(a) Disconnect the high–tension cord from the RH ignition coil.

(b) Disconnect the high–tension cords from the high–tension cord cover.

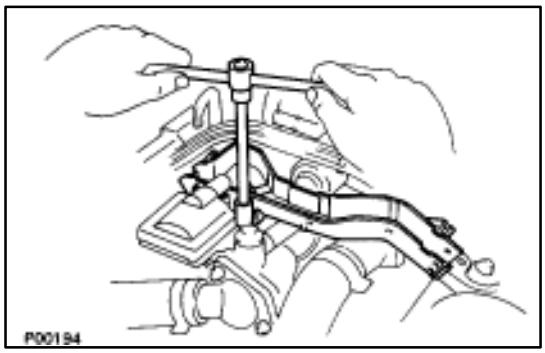

(c) Remove the bolt and cord cover.

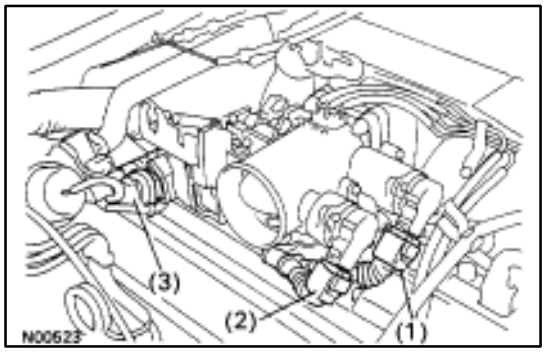

13. REMOVE THROTTLE BODY

(a) Disconnect the following connectors:

(1) Throttle position sensor connector

(2) (w/ TRAC)
Sub–throttle position sensor connector

(3) (w/ TRAC)
Sub–throttle actuator connector

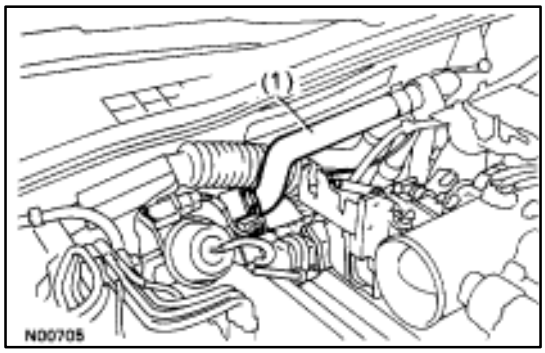

(b) Disconnect the following hoses:

(1) Heat water hose from heater water valve

WhereEverybodyKnowsYourName

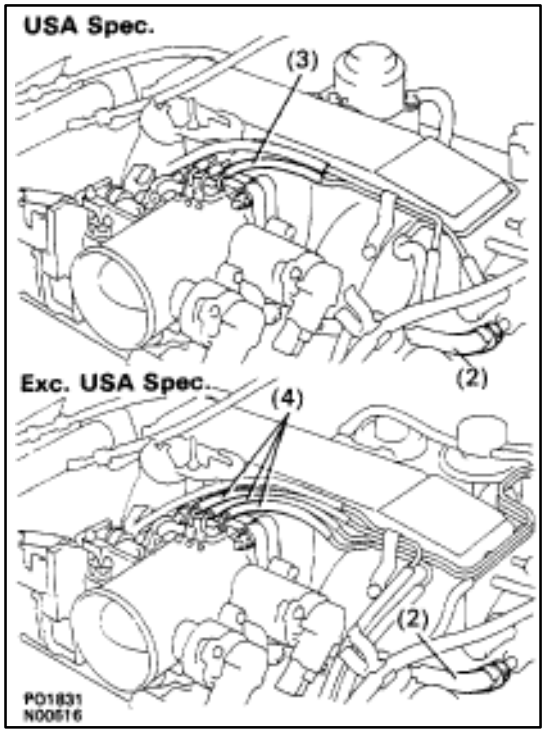

(2) Water by–pass hose from ISC valve
(3) (USA Spec.)
Vacuum hose from throttle body
(4) (Exc. USA Spec.)
Three vacuum hoses from throttle body

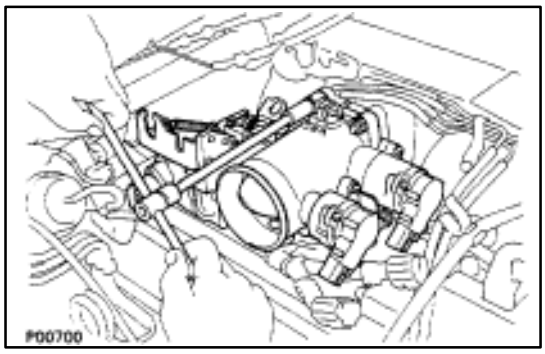

(c) Remove the two bolts and two nuts, disconnect the throttle body from the air intake chamber.

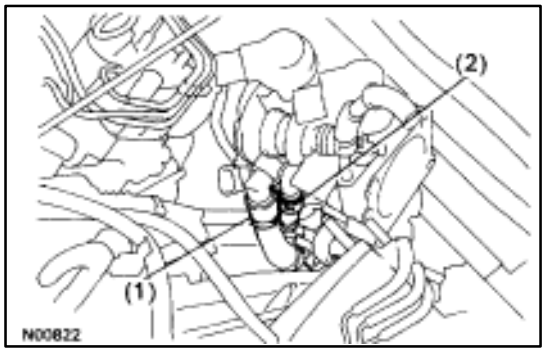

(d) Disconnect the following hoses, and remove the throttle body:
(1) PCV hose from throttle body
(2) Water by–pass hose from throttle body
(e) Remove the throttle body gasket.

14. DISCONNECT CONNECTORS

Disconnect the following connectors:

- Cold start injector connector
- ISC valve connector
- (USA Spec.)
  EGR Valve connector
- (Exc. USA Spec.)
  VSV connector for EGR system
- VSV connector for fuel pressure control system

WhereEverybodyKnowsYourName

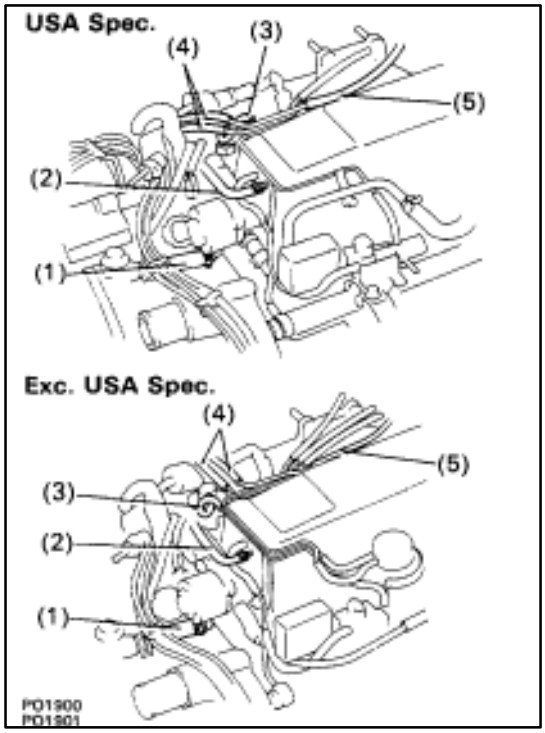

15. DISCONNECT HOSES

Disconnect the following hoses:

(1) Water by–pass hose (from water inlet housing) from ISC valve
(2) Vacuum hose (from PS air control valve) from air intake chamber
(3) Vacuum sensing hose (from fuel pressure regulator) from vacuum pipe
(4) Two vacuum hoses (from VSV for EVAP system) from vacuum pipe
(5) Vacuum hose (from charcoal canister) from vacuum pipe.

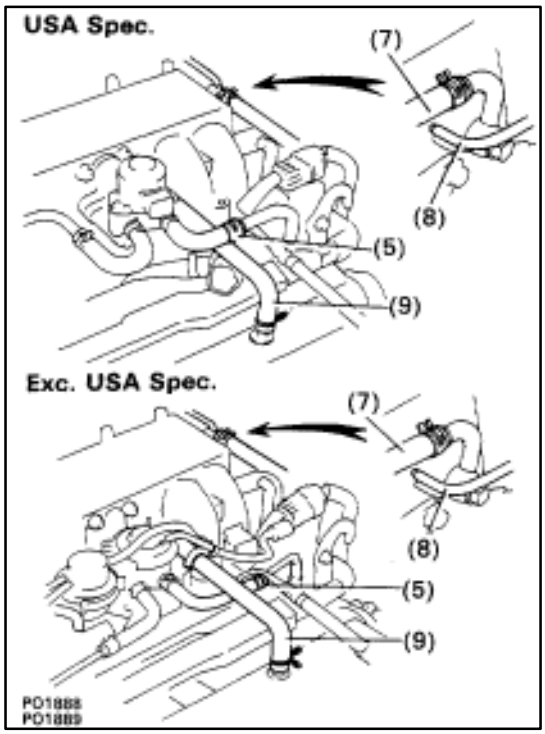

(6) Water by–pass hose (from EGR valve) from water by–pass pipe
(7) Vacuum hose (from brake booster) from air intake chamber
(8) Vacuum hose (from VSV for heater water valve) from air intake chamber
(9) PCV hose from LH cylinder head cover

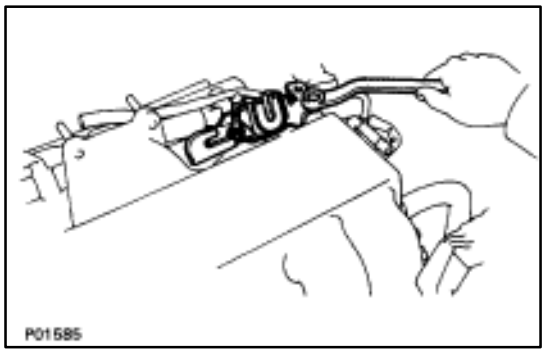

16. REMOVE AIR INTAKE CHAMBER

(a) Remove the bolt, stud bolt and accelerator bracket.

WhereEverybodyKnowsYourName

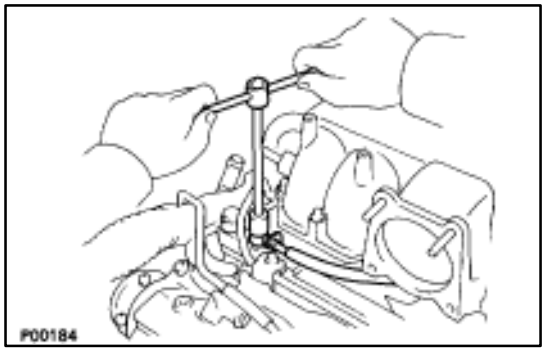

(b) Remove the union bolt and two gaskets, and disconnect the cold start injector tube from the RH delivery pipe.

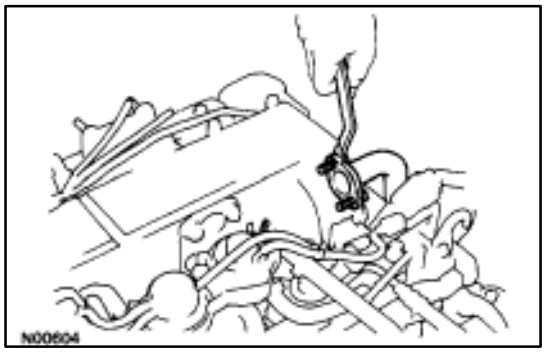

(c) Remove the two bolts and gasket, and disconnect the EGR pipe from the air intake chamber.

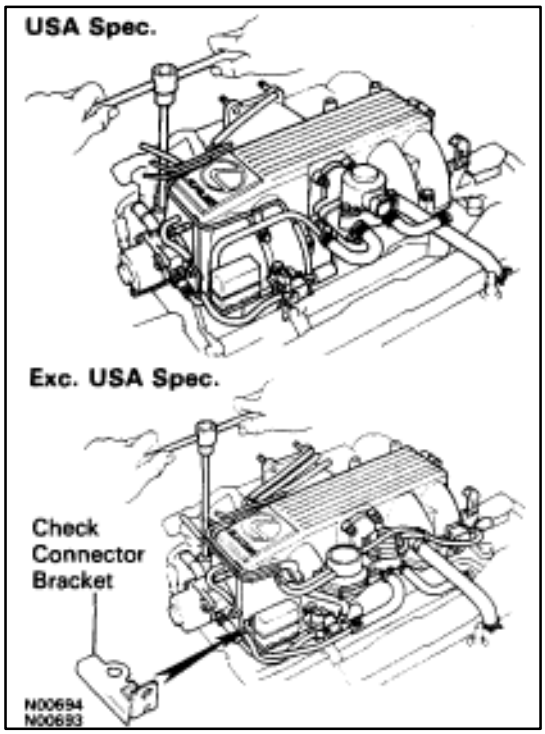

(d) Remove the four bolts, eight nuts and A/T throttle cable bracket.
(e) (USA Spec.)
Disconnect the check (”DIAGNOSIS”) connector bracket from the air intake chamber.
(f) (Exc. USA Spec.)
Remove the connector bracket from the check (”DIAGNOSIS”) connector.
(g) Remove the air intake chamber assembly and four gaskets.

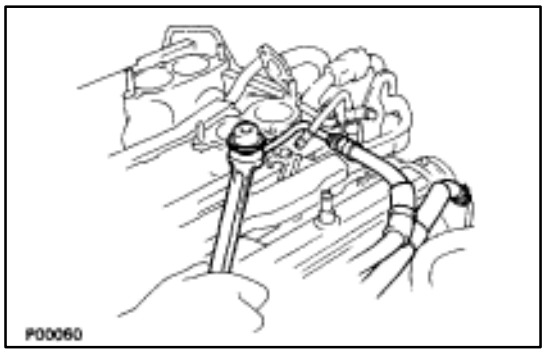

17. DISCONNECT FUEL INLET HOSE FROM LH DELIVERY PIPE

Remove the pulsation damper and two gaskets, and disconnect the inlet hose.

18. DISCONNECT FUEL RETURN HOSE FROM FUEL RETURN PIPE

WhereEverybodyKnowsYourName

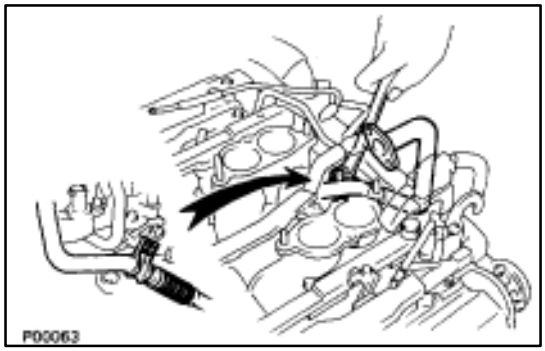

19. DISCONNECT EGR PIPE FROM RH CYLINDER HEAD

Remove the bolt holding the EGR pipe to the cylinder head, and disconnect the EGR pipe.

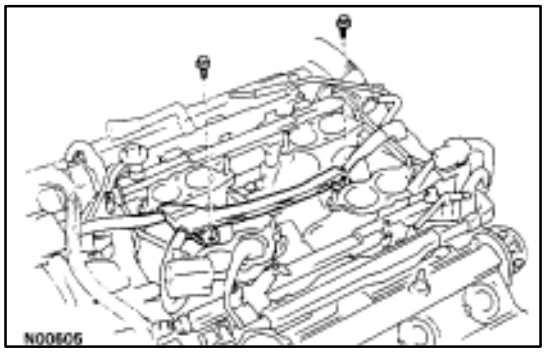

20. DISCONNECT ENGINE WIRE FROM INTAKE MANIFOLD

Remove the two bolts, and disconnect the engine wire.

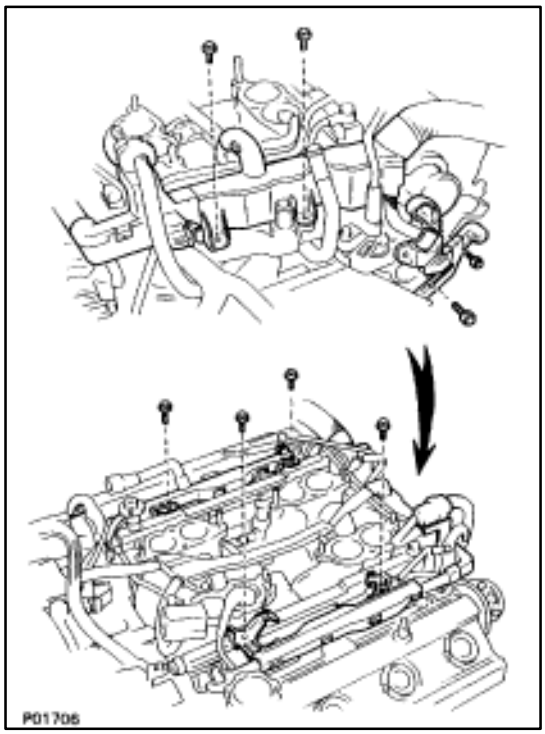

21. DISCONNECT ENGINE WIRE FROM DELIVERY PIPES, REAR WATER BY–PASS JOINT AND RH CYLINDER HEAD

(a) Remove the four bolts holding the engine wire to the delivery pipes, and disconnect the engine wire from the delivery pipe.

(b) Remove the two bolts holding the engine wire to the rear water by–pass joint, and disconnect the engine wire from the rear water by–pass joint.

(c) Remove the two bolts holding the engine wire to the rear side of the RH cylinder head, and disconnect the engine wire from the RH cylinder head.

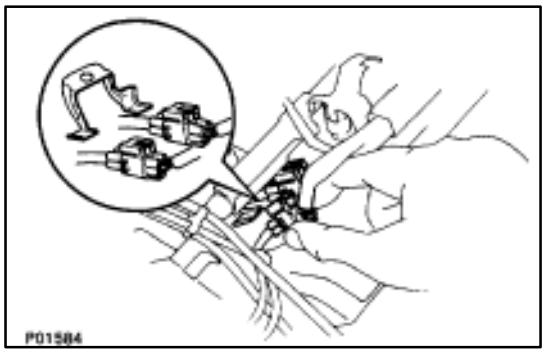

(d) Disconnect the two engine wire connectors from the connector bracket on the front side of the LH delivery pipe.

(e) Disconnect the eight injector connectors.

WhereEverybodyKnowsYourName

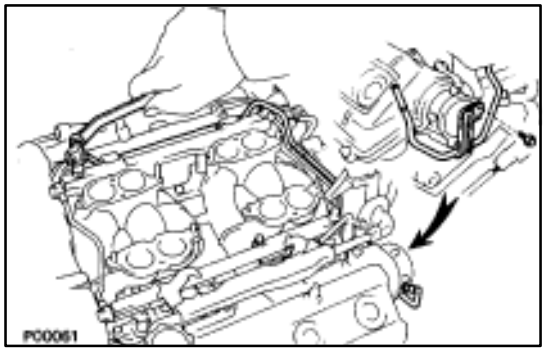

22. REMOVE FUEL RETURN PIPE

(a) Remove the bolt holding the return pipe to the LH cylinder head.

(b) Remove the union bolt, two gaskets and return pipe.

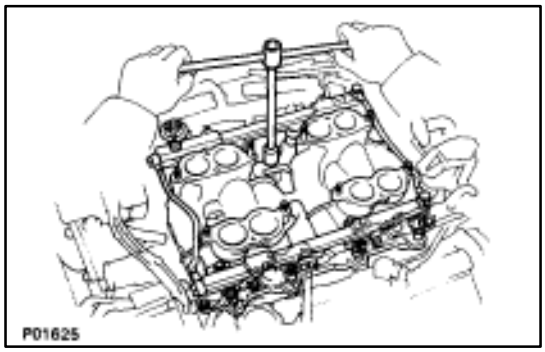

23. REMOVE DELIVERY PIPES AND INTAKE MANIFOLD ASSEMBLY

(a) Remove the six bolts and four nuts holding the intake manifold to the cylinder heads.

(b) Remove the two delivery pipe and intake manifold assembly.

(c) Remove the two intake manifold gaskets.

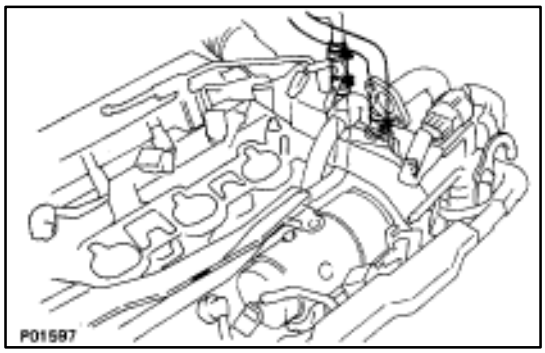

24. DISCONNECT HEATER WATER HOSES FROM WATER BY–PASS PIPE AND REAR WATER BY–PASS JOINT

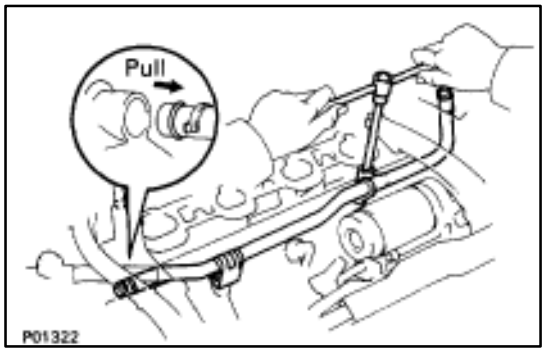

25. REMOVE WATER BY–PASS PIPE

(a) Remove the two mounting bolts.

(b) Pull out the water by–pass pipe from the water pump.

(c) Remove the O–ring from the water by–pass pipe.

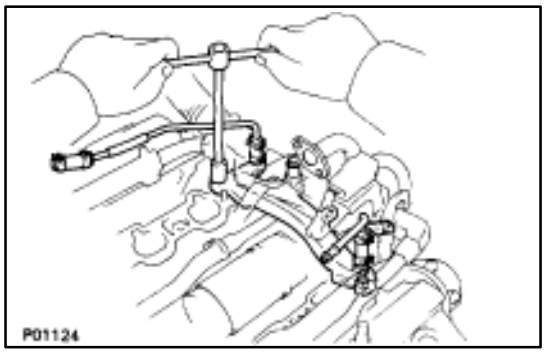

26. REMOVE REAR WATER BY–PASS JOINT

Remove the four nuts, water by–pass joint and two gaskets.

WhereEverybodyKnowsYourName

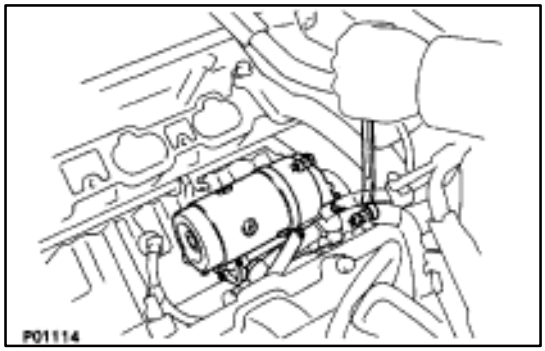

27. REMOVE STARTER

(a) Remove the two bolts holding the starter to the cylinder block.

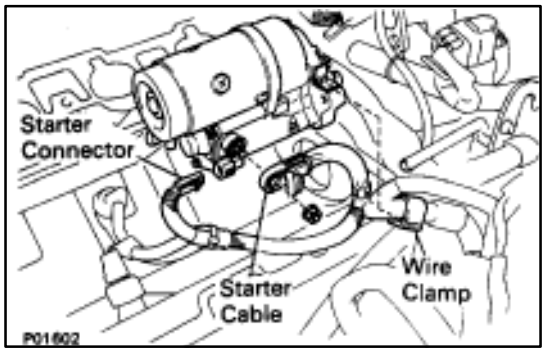

(b) Disconnect the starter connector.
(c) Remove the nut, and disconnect the starter wire.
(d) Disconnect the wire clamp from the wire bracket, and remove the starter.

WhereEverybodyKnowsYourName

COMPONENTS FOR DISASSEMBLY AND ASSEMBLY

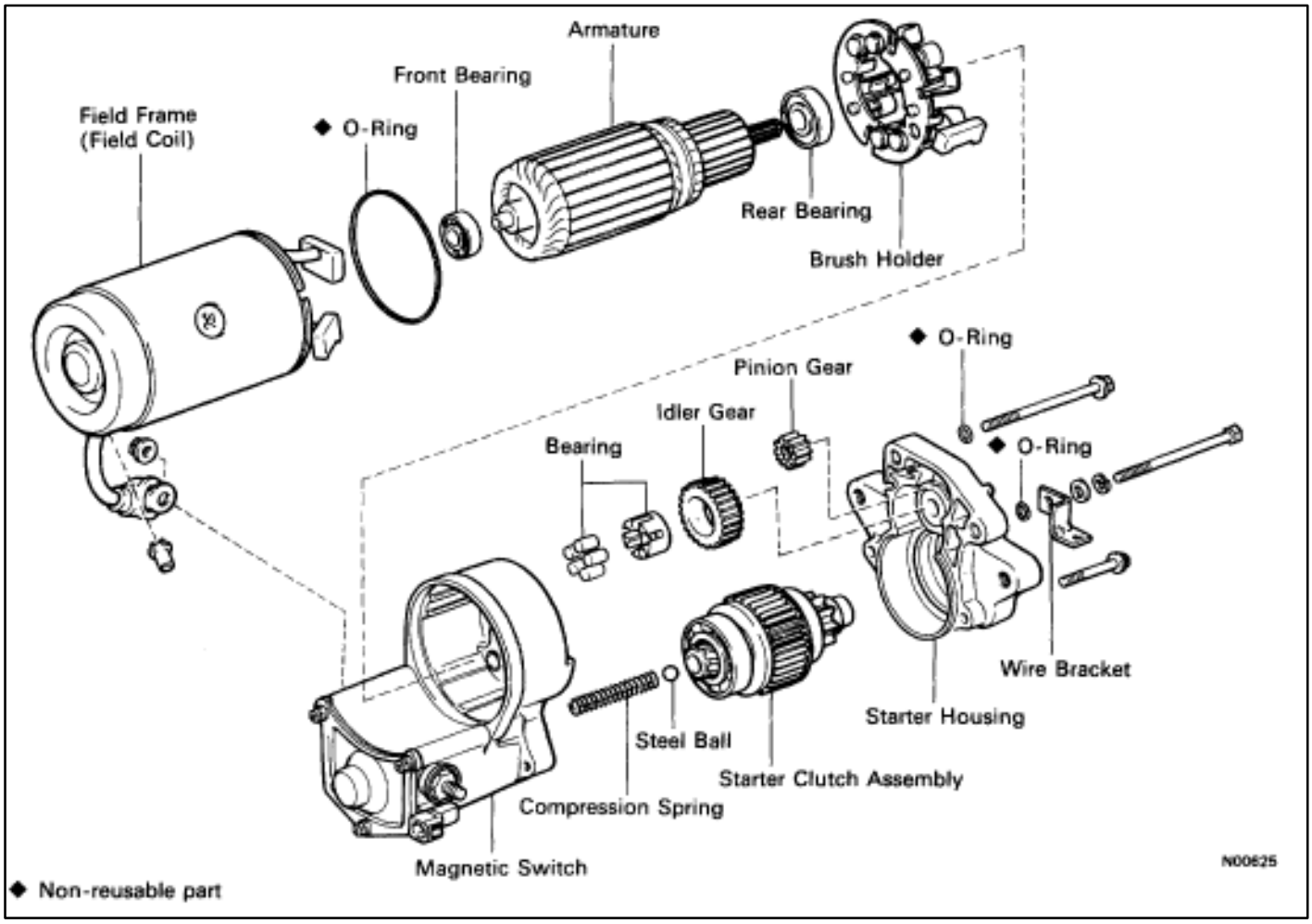

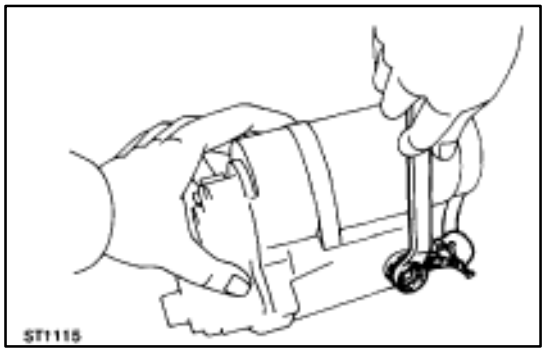

DISASSEMBLY OF STARTER

1. REMOVE FIELD FRAME AND ARMATURE

(a) Remove the nut, and disconnect the lead wire from the magnetic switch terminal.

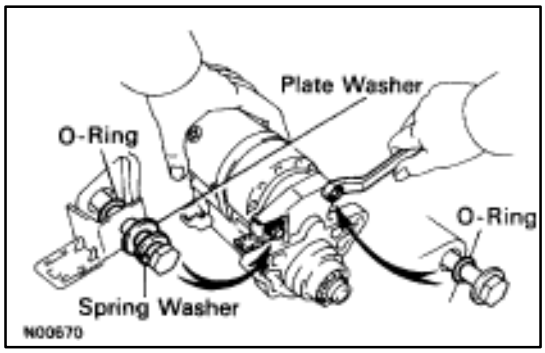

(b) Remove the two through bolts, spring washer, wire bracket and two O–rings.
(c) Pull out the field frame together with the armature.
(d) Remove the O–ring from the field frame.

WhereEverybodyKnowsYourName

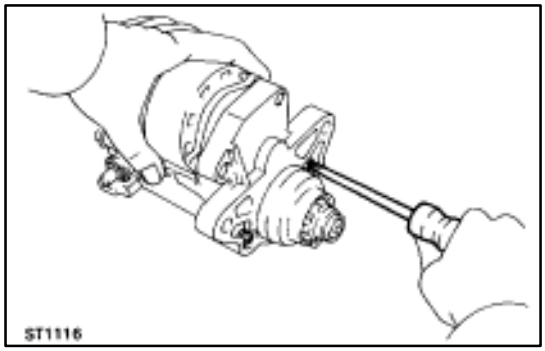

2. REMOVE STARTER HOUSING, CLUTCH ASSEMBLY AND GEARS

(a) Remove the two mounting screws.

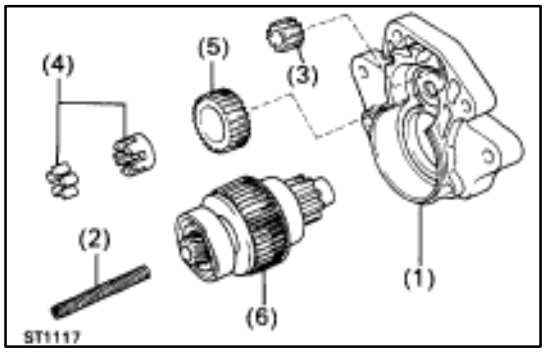

(b) Remove the following parts from the magnetic switch:
- (1) Starter housing
- (2) Return spring
- (3) Pinion gear
- (4) Bearing
- (5) Idler gear
- (6) Clutch assembly

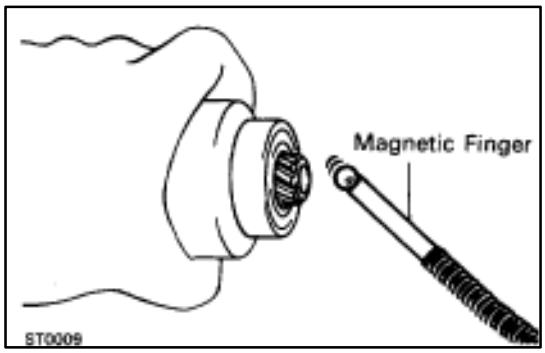

3. REMOVE STEEL BALL

Using a magnetic finger, remove the steel ball from the clutch shaft hole.

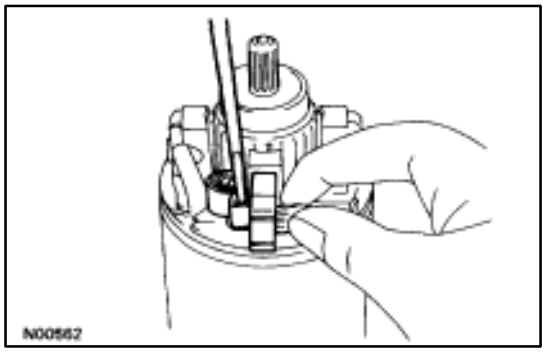

4. REMOVE BRUSH HOLDER

Using a screwdriver, hold the spring back and disconnect the brush from the brush holder. Disconnect the four brushes, and remove the brush holder.

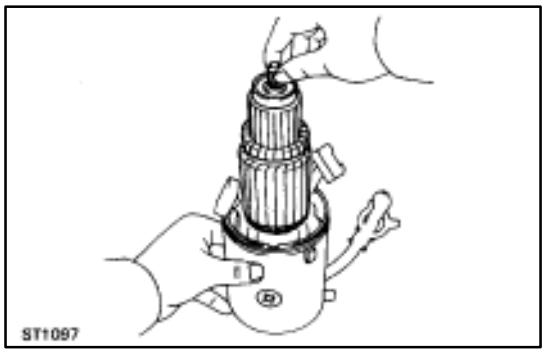

5. REMOVE ARMATURE FROM FIELD FRAME

WhereEverybodyKnowsYourName

INSPECTION AND REPAIR OF STARTER

Armature Coil

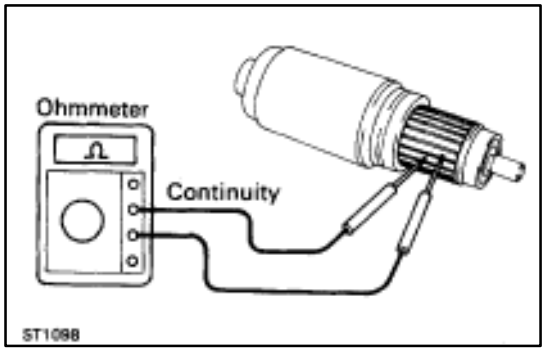

1. INSPECT COMMUTATOR FOR OPEN CIRCUIT

Using an ohmmeter, check that there is continuity between the segments of the commutator.

If there is no continuity, replace the armature.

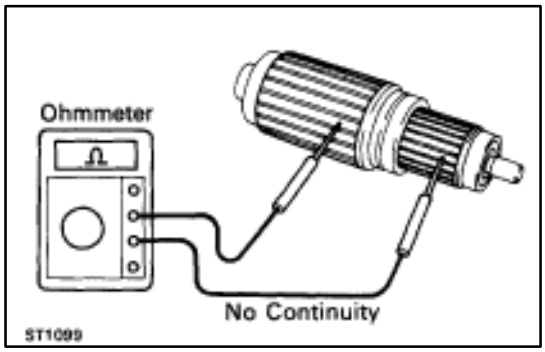

2. INSPECT COMMUTATOR FOR GROUND

Using an ohmmeter, check that there is no continuity between the commutator and armature coil core.

If there is continuity, replace the armature.

Commutator

1. INSPECT COMMUTATOR FOR DIRTY AND BURNT SURFACE

If the surface is dirty or burnt, correct with sandpaper (No.400) or on a lathe.

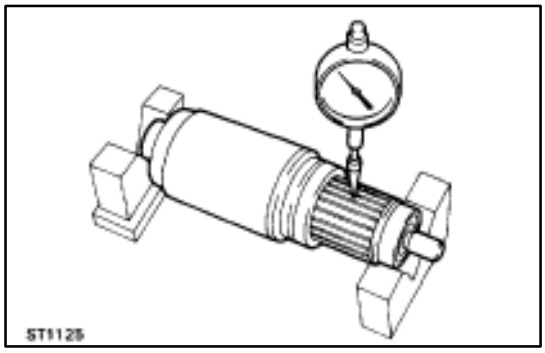

2. INSPECT COMMUTATOR FOR RUNOUT

(a) Place the commutator on V–blocks.

(b) Using a dial indicator, measure the circle runout.

Maximum circle runout: 0.05 mm (0.0020 in.)

If the circle runout is greater than maximum, correct it on a lathe.

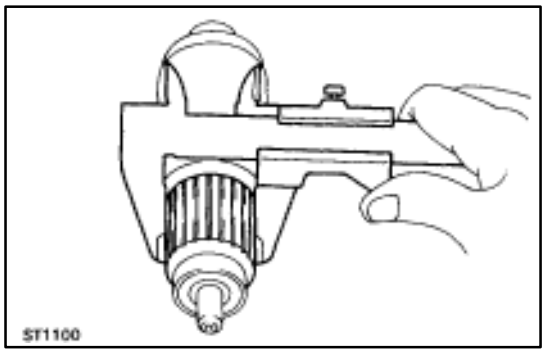

3. INSPECT COMMUTATOR DIAMETER

Using a vernier caliper, measure the diameter.

Standard diameter: 35.0 mm (1.378 in.)

Minimum diameter: 34.0 mm (1.339 in.)

If the diameter is less than minimum, replace the armature.

WhereEverybodyKnowsYourName

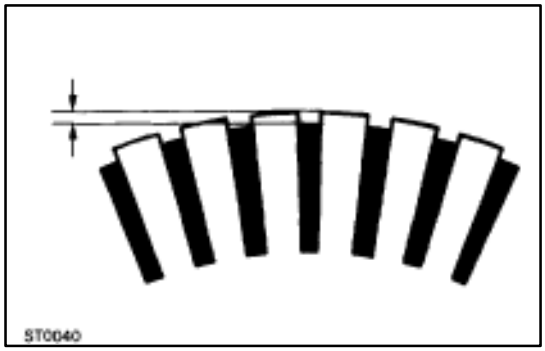

4. INSPECT UNDERCUT DEPTH

Check that the undercut depth is clean and free of foreign material. Smooth out the edge.

Standard undercut depth: 0.7–0.9 mm (0.028–0.035 in.)

Minimum undercut depth: 0.2 mm (0.008 in.)

If the undercut depth is less than minimum, correct it with a hacksaw blade.

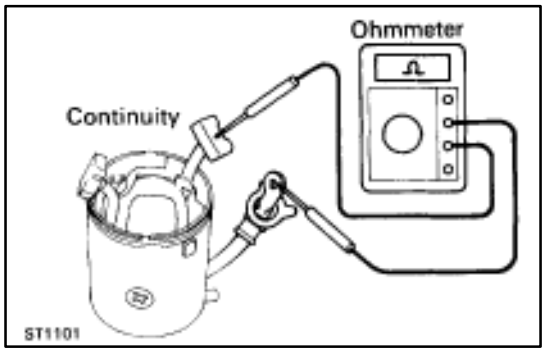

Field Coil (Field Frame)

1. INSPECT FIELD COIL FOR OPEN CIRCUIT

Using an ohmmeter, check that there is continuity between the lead wire and field coil brush lead.

If there is no continuity, replace the field frame.

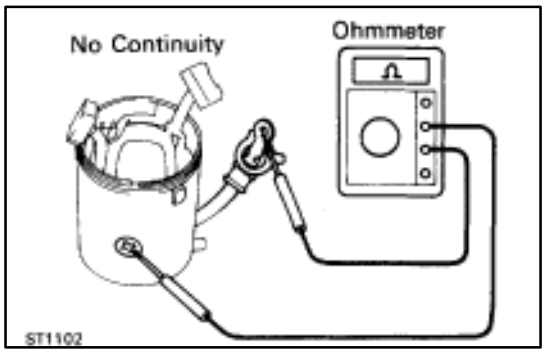

2. INSPECT FIELD COIL FOR GROUND

Using an ohmmeter, check that there is no continuity between the field coil end and field frame.

If there is continuity, replace the field frame.

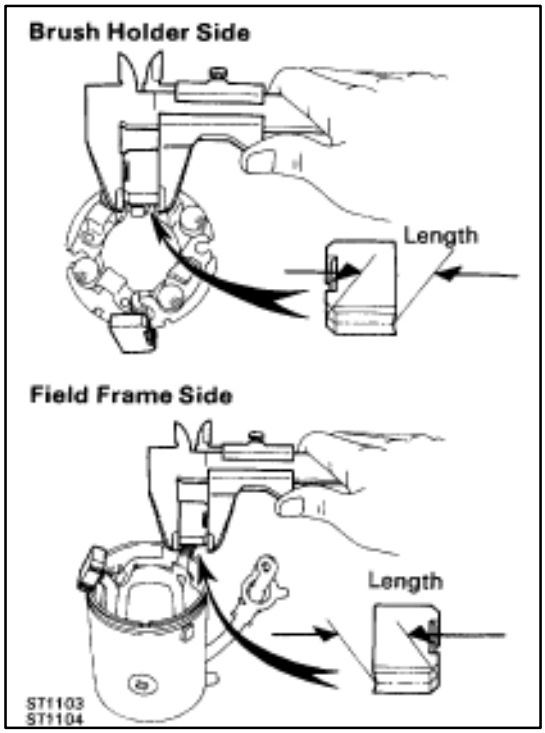

Brushes

INSPECT BRUSH LENGTH

Using a vernier caliper, measure the brush length.

Standard length: 15.0–15.5 mm (0.591–0.610 in.)

Minimum length: 9.5 mm (0.374 in.)

If the length is less than minimum, replace the brush holder and field frame.

WhereEverybodyKnowsYourName

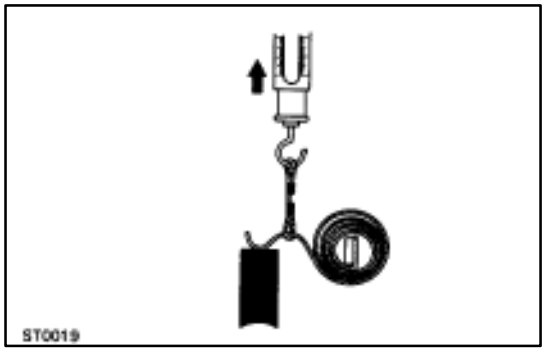

Brush Springs

INSPECT BRUSH SPRING LOAD

Take the pull scale reading the instant the brush spring separates from the brush.

Standard installed load:

26–32 N (2.7–3.3 kgf, 6.0–7.3 lbf)

If the installed load is not as specified, replace the brush springs.

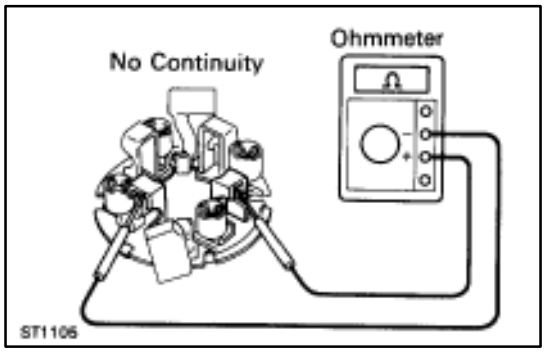

Brush Holder

INSPECT BRUSH HOLDER INSULATION

Using an ohmmeter, check that there is no continuity between the positive (+) and negative (–) brush holders.

If there is continuity, repair or replace the brush holder.

Clutch and Gears

1. INSPECT GEAR TEETH

Check the gear teeth on the pinion gear, idler gear and the clutch assembly for wear or damage.

If damaged, replace the gear or clutch assembly.

If damaged, also check the flywheel ring gear for wear or damage.

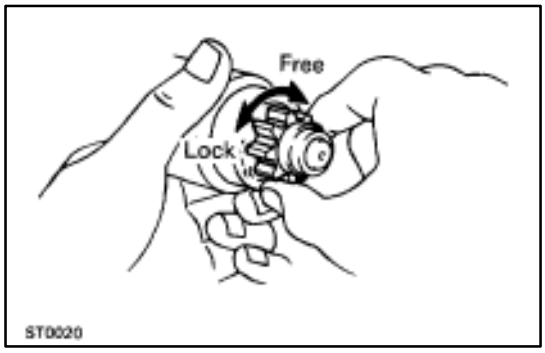

2. INSPECT CLUTCH PINION GEAR

Rotate the pinion gear counterclockwise and check that it turns freely. Try to rotate the pinion gear clockwise and check that it locks.

If necessary, replace the clutch assembly.

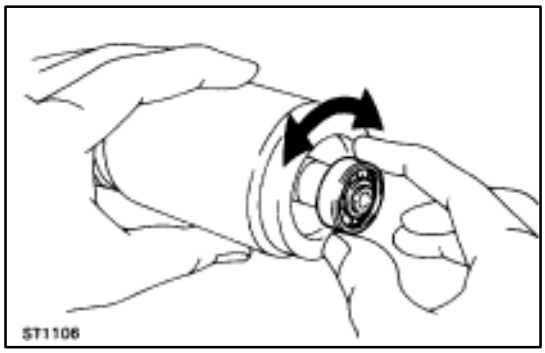

Bearings

1. INSPECT FRONT BEARING

Turn each bearing by hand while applying inward force.

If resistance is felt or the bearing sticks, replace the bearing.

WhereEverybodyKnowsYourName

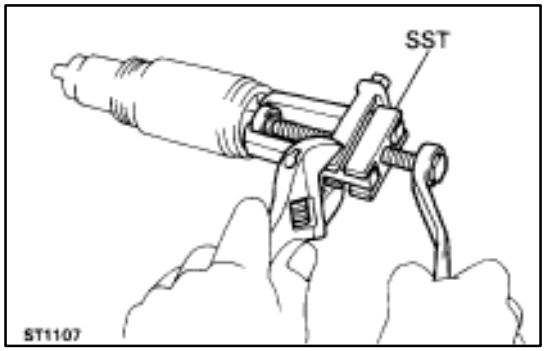

2. IF NECESSARY, REPLACE FRONT BEARING

(a) Using SST, remove the bearing.

SST 09286–46011

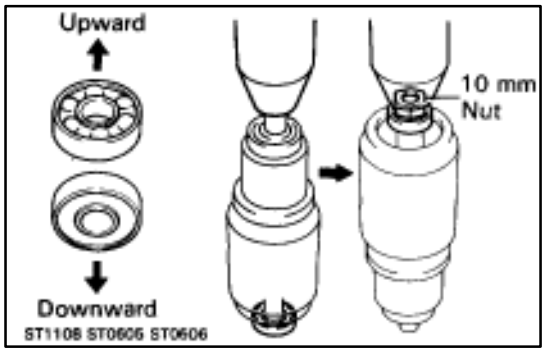

(b) Using a 10 mm nut and press, press in a new front bearing.

NOTICE: Be careful of the bearing installation direction.

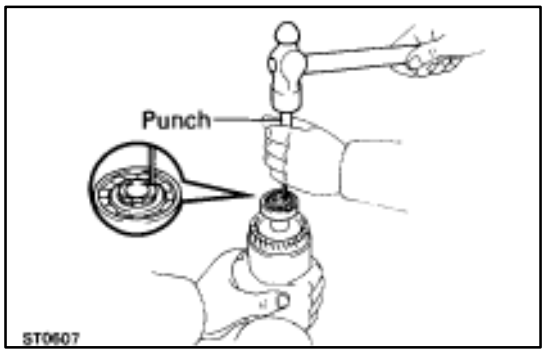

(c) Using a punch, stake the armature shaft.

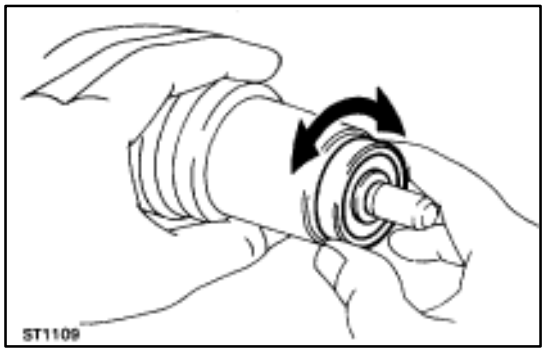

3. INSPECT REAR BEARING

Turn each bearing by hand while applying inward force.

If resistance is felt or the bearing sticks, replace the bearing.

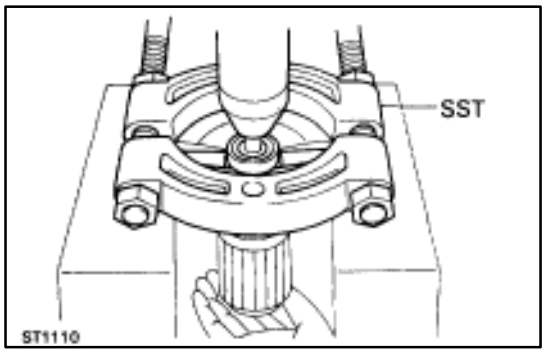

4. IF NECESSARY, REPLACE REAR BEARING

(a) Using SST and a press, press out the bearing.

SST 09950–00020

WhereEverybodyKnowsYourName

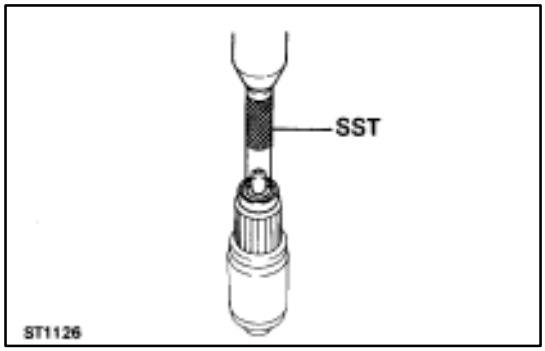

(b) Using SST and a press, press in a new bearing.
SST 09201–41020

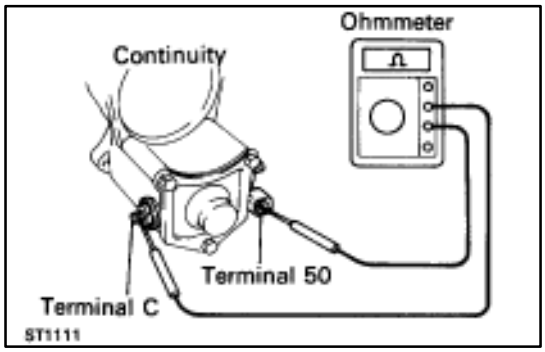

Magnetic Switch

1. PERFORM PULL–IN COIL OPEN CIRCUIT TEST

Using an ohmmeter, check that there is continuity between terminals 50 and C.

If there is no continuity, replace the magnetic switch.

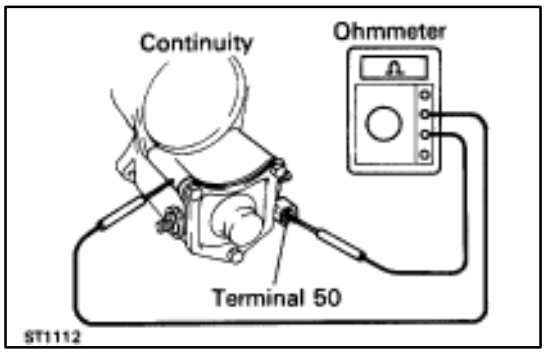

2. PERFORM HOLD–IN COIL OPEN CIRCUIT TEST

Using an ohmmeter, check that there is continuity between terminal 50 and the switch body.

If there is no continuity, replace the magnetic switch.

WhereEverybodyKnowsYourName

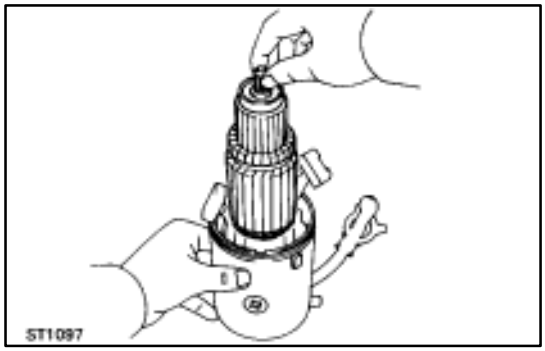

ASSEMBLY OF STARTER

(See Components on page ST–15)

HINT: Use high–temperature grease to lubricate the bearings and gears when assembling the starter.

1. PLACE ARMATURE INTO FIELD FRAME

Apply grease to the armature bearings, and insert the armature into the field frame.

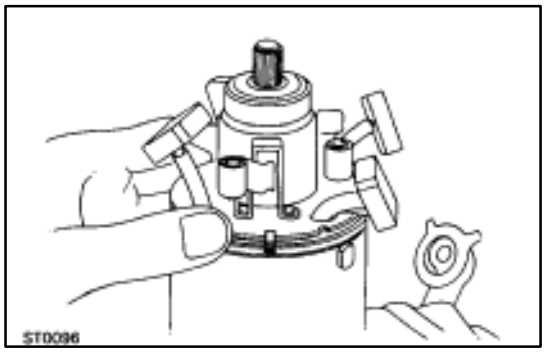

2. INSTALL BRUSH HOLDER

(a) Align the claw of the brush holder with the claw groove of the field frame.

(b) Place the brush holder on the field frame.

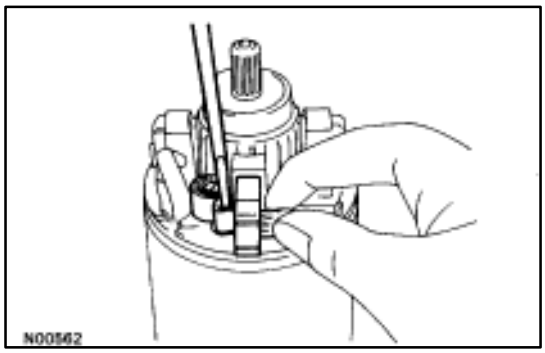

(c) Using a screwdriver, hold the brush spring back, and connect the brush into the brush holder. Connect the four brushes.

NOTICE: Check that the positive (+) lead wires are not grounded.

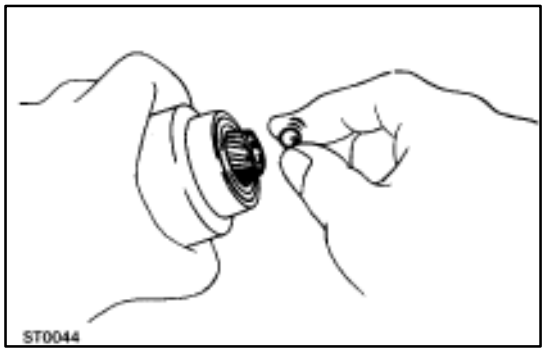

3. INSERT STEEL BALL INTO CLUTCH SHAFT HOLE

(a) Apply grease to the steel ball.

(b) Insert the steel ball into the clutch shaft hole.

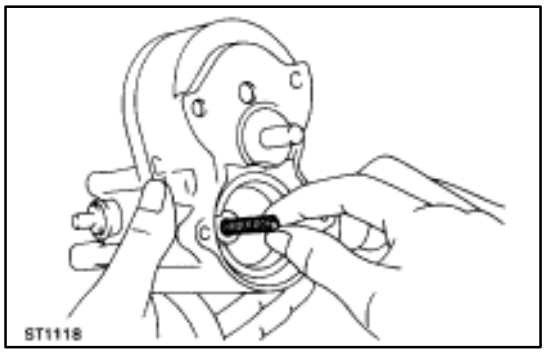

4. INSTALL CLUTCH ASSEMBLY, GEARS AND STARTER HOUSING

(a) Apply grease to the return spring.

(b) Insert the return spring into the magnetic switch hole.

WhereEverybodyKnowsYourName

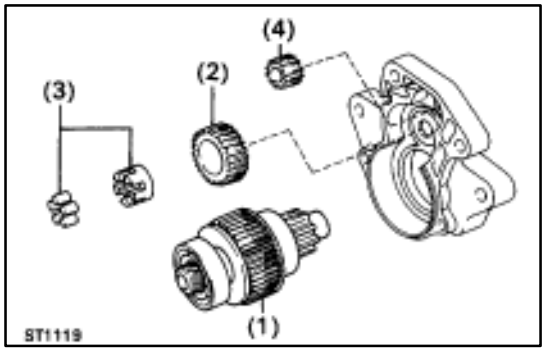

(c) Place the following parts in position on the starter housing:
(1) Clutch assembly
(2) Idler gear
(3) Bearing
(4) Pinion gear

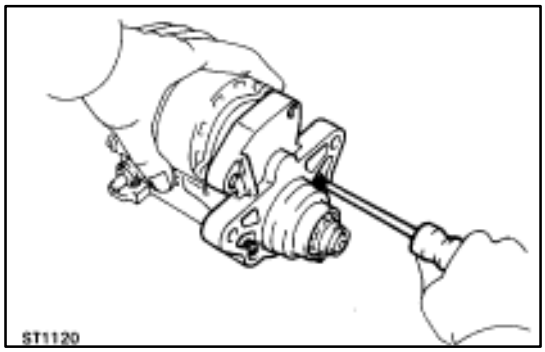

(d) Install the starter housing to magnetic switch with the two screws.

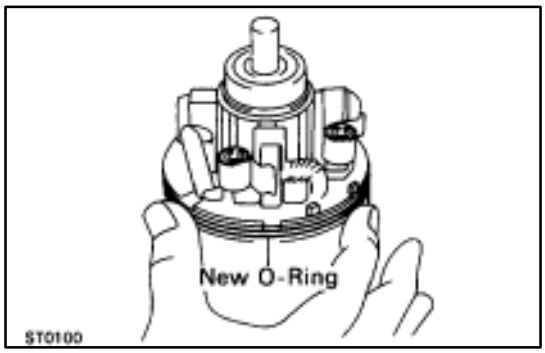

5. INSTALL FIELD FRAME AND ARMATURE ASSEMBLY

(a) Install a new O–ring to groove of the field frame.

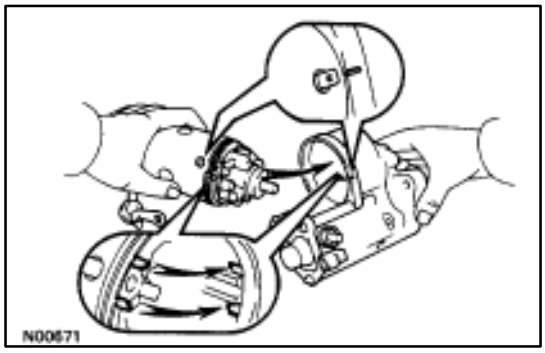

(b) Align the claws of the brush holder with the grooves of the magnetic switch, and install the field frame and armature shaft assembly.
(c) Align the punch mark of the field frame with the line of the magnet switch.

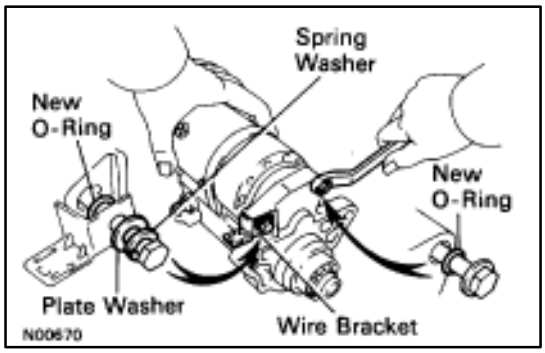

(d) Install a new O–ring to through bolt A.
(e) Install the spring washer, plate washer, wire bracket and a new O–ring to through bolt B.
(f) Install the two through bolts.

WhereEverybodyKnowsYourName

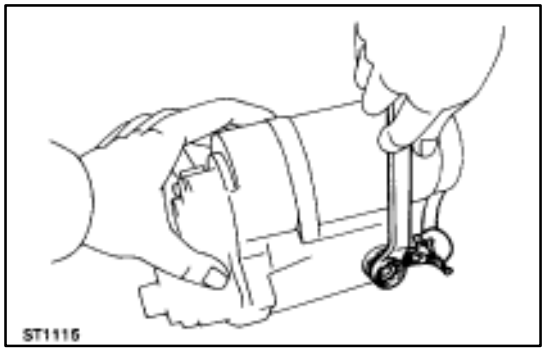

(g) Connect the lead wire to terminal C, and install the nut.

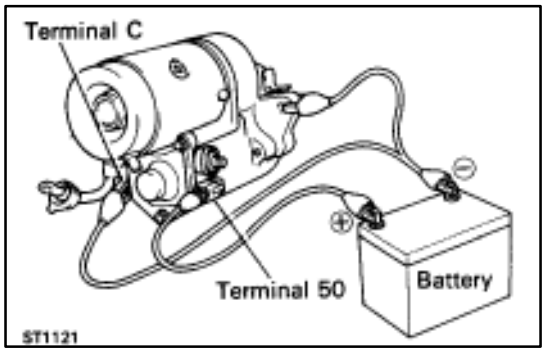

PERFORMANCE TEST OF STARTER

NOTICE: These tests must be performed within 3 to 5 seconds to avoid burning out the coil.

1. PERFORM PULL–IN TEST

(a) Disconnect the field coil lead wire from terminal C.

(b) Connect battery to the magnetic switch as shown. Check that the pinion gear moves outward.

If the pinion gear does not move, replace the magnetic switch.

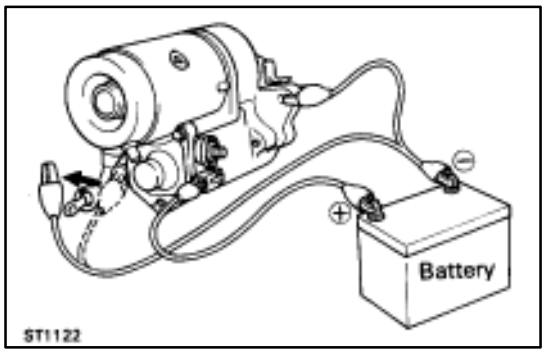

2. PERFORM HOLD–IN TEST

While connected as above with the pinion gear out, disconnect the negative (–) lead from terminal C.

Check that the pinion gear remains out.

If the pinion gear returns inward, replace the magnetic switch.

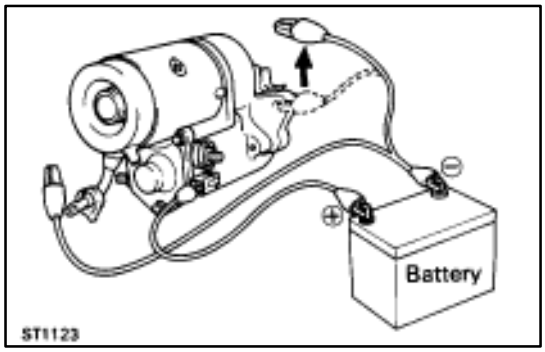

3. INSPECT PLUNGER RETURN

Disconnect the negative (+) lead from the switch body. Check that the pinion gear returns inward.

If the pinion gear does not return, replace the magnetic switch.

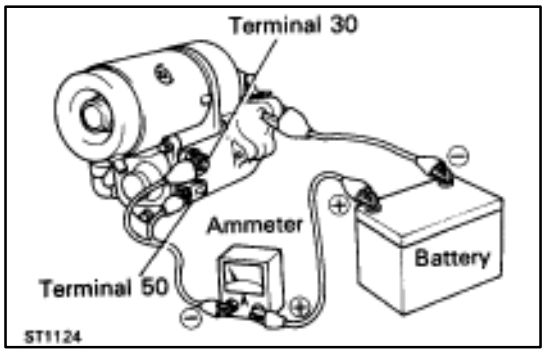

4. PERFORM NO–LOAD PERFORMANCE TEST

(a) Connect battery and ammeter to the starter as shown.

(b) Check that the starter rotates smoothly and steadily with the pinion gear moving out.
Check the reading on the ammeter.

Standard amperage: 120 A or less at 11.5 V

WhereEverybodyKnowsYourName

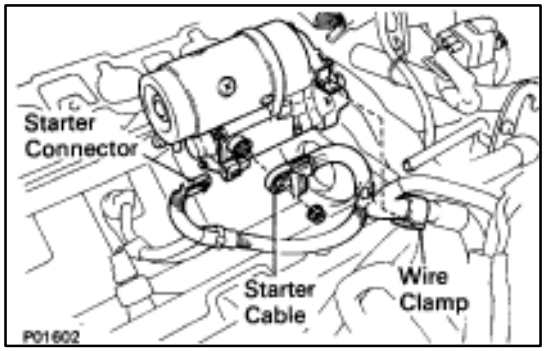

INSTALLATION OF STARTER

(See Components on page ST–5)

1. INSTALL STARTER

(a) Connect the wire clamp to the wire bracket.
(b) Connect the starter wire with the nut.
(c) Connect the starter connector.

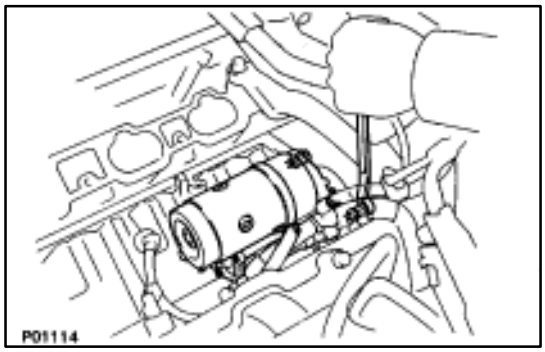

(d) Install the starter with the two bolts.
Torque: 39 N·m (400 kgf·cm, 29 ft·lbf)

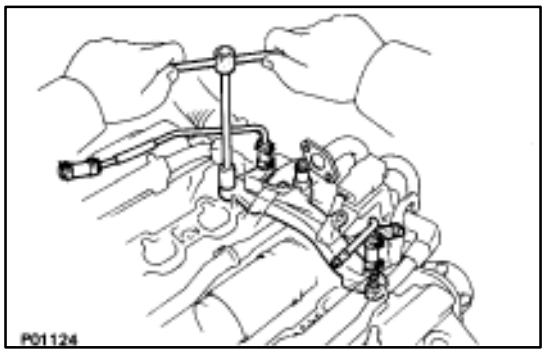

2. INSTALL REAR WATER BY–PASS JOINT

(a) Install four new gaskets and the water by–pass joint with the four nuts.
Torque: 18 N·m (185 kgf·cm, 13 ft·lbf)
(b) Install the bolt holding the water by–pass pipe to the LH engine hanger.

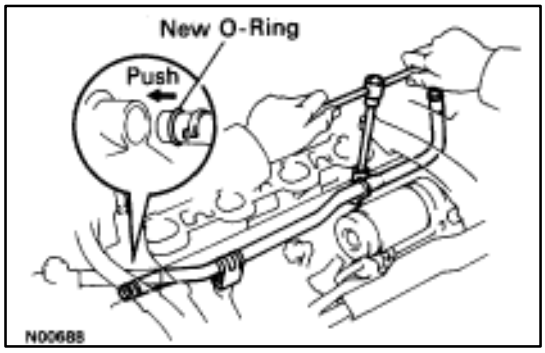

3. INSTALL WATER BY–PASS PIPE

(a) Install a new O–ring to the water by–pass pipe.
(b) Apply soapy water to the O–ring.
(c) Push in the water by–pass pipe end into the pipe hole of the water pump.
(d) Install the water by–pass pipe with the two bolts.
Torque: 18 N·m (185 kgf·cm, 13 ft·lbf)

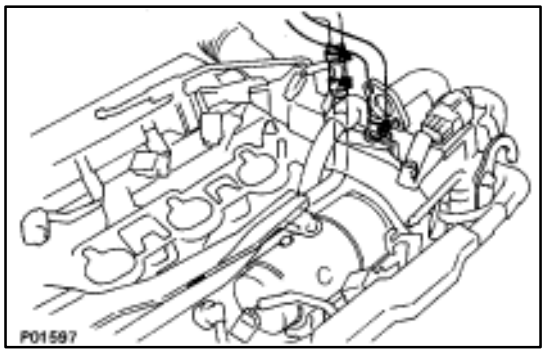

4. CONNECT HEATER WATER HOSES TO WATER BY–PASS PIPE AND REAR WATER BY–PASS JOINT

WhereEverybodyKnowsYourName

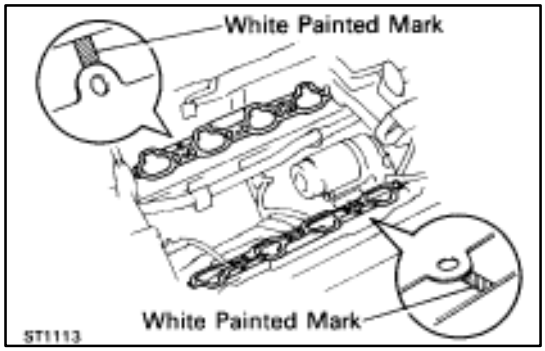

5. INSTALL DELIVERY PIPES AND INTAKE MANIFOLD ASSEMBLY

(a) Place two new gaskets on the cylinder heads with the white painted mark facing upward.

NOTICE: Align the port holes of the gasket and cylinder head. Be careful of the installation direction.

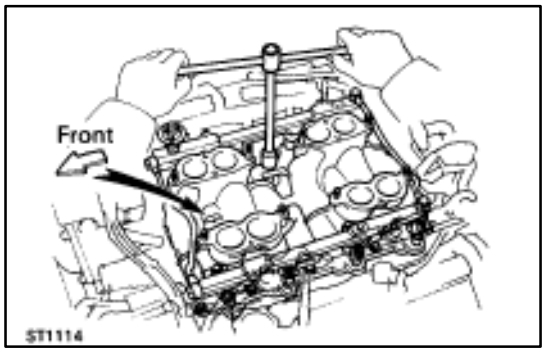

(b) Place the delivery pipes and intake manifold assembly in position on the cylinder heads with the arrow mark on the intake manifold facing forward.

NOTICE: Be careful of the installation direction.

(c) Install the six mounting bolts and four mounting nuts.

Torque: 18 N·m (185 kgf·cm, 13 ft·lbf)

HINT: Use bolts 30 mm (1.18 in.) in length.

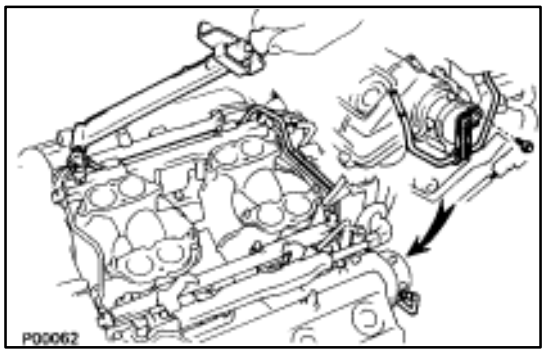

6. INSTALL FUEL RETURN PIPE

Install the return pipe with two new gaskets, union bolt and bolt.

Torque (Union bolt):

35 N·m (360 kgf·cm, 26 ft·lbf)

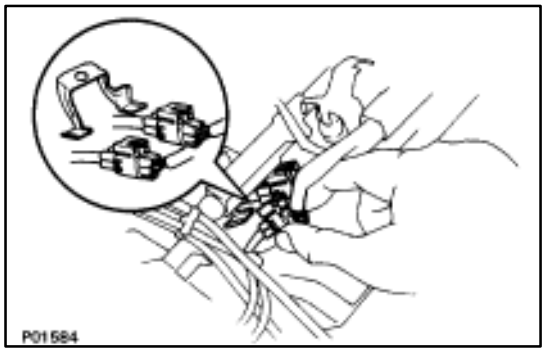

7. INSTALL ENGINE WIRE TO DELIVERY PIPES, REAR WATER BY–PASS JOINT AND RH CYLINDER HEAD

(a) Connect the eight injector connectors.

(b) Connect the two engine wire connectors to the connector bracket on the LH delivery pipe.

WhereEverybodyKnowsYourName

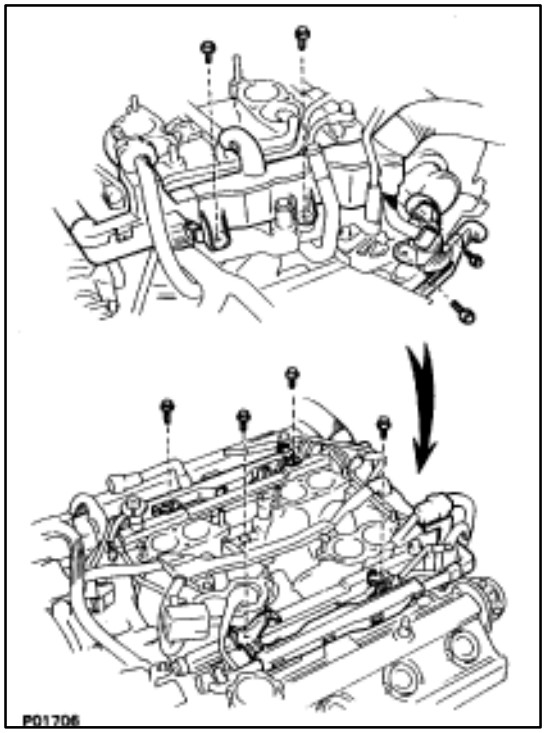

(c) Install the engine wire to the RH cylinder head with the two bolts.
(d) Install the engine wire to the rear water by–pass joint with the two bolts.
(e) Install the engine wire to the delivery pipes with the four bolts.

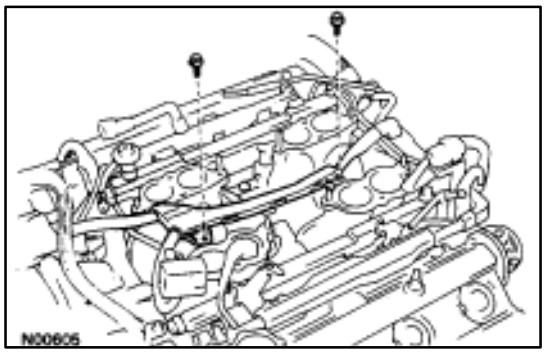

8. INSTALL ENGINE WIRE TO INTAKE MANIFOLD
Install the engine wire with the two bolts.

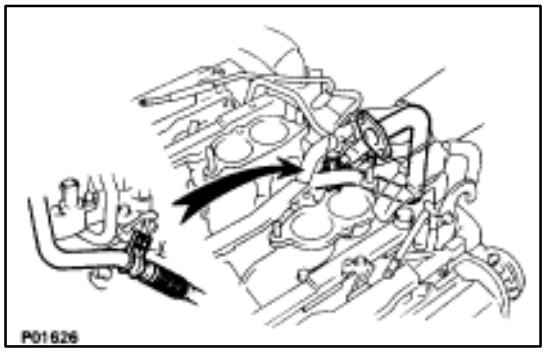

9. TEMPORARILY INSTALL EGR PIPE TO RH CYLINDER HEAD
Temporarily install the EGR pipe with the bolt.

10. CONNECT FUEL RETURN HOSE TO FUEL RETURN PIPE

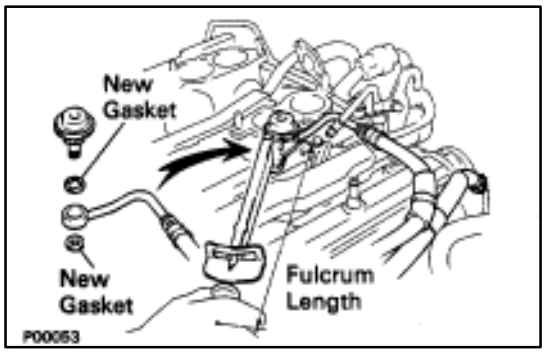

11. CONNECT FUEL INLET HOSE TO LH DELIVERY PIPE
Using SST, connect the inlet hose with two new gaskets and pulsation damper.
SST 09612–24014 (09617–24011)
Torque: 39 N·m (400 kgf·cm, 29 ft·lbf)
33 N·m (340 kgf·cm, 24 ft·lbf) for SST
HINT: Use a torque wrench with a fulcrum length of 30 cm (11.81 in.).

WhereEverybodyKnowsYourName

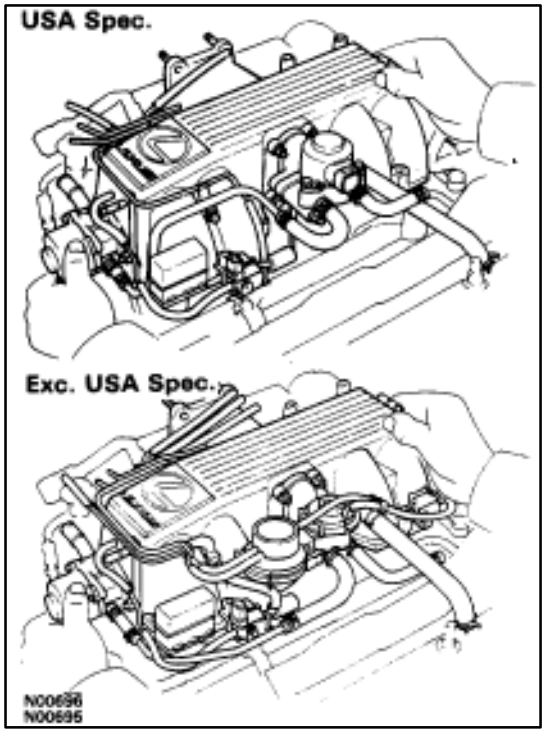

12. INSTALL AIR INTAKE CHAMBER

(a) Place four new gaskets and the air intake chamber on the intake manifold.

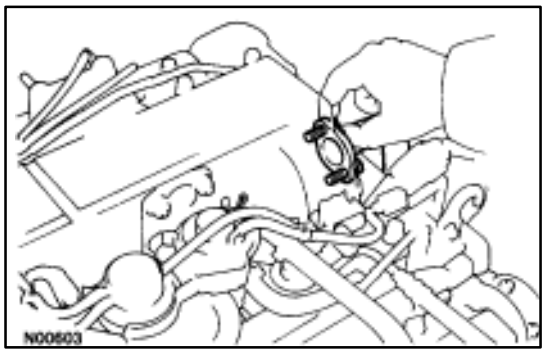

(b) Temporarily install a new gasket and the EGR pipe to air intake chamber with the two bolts.

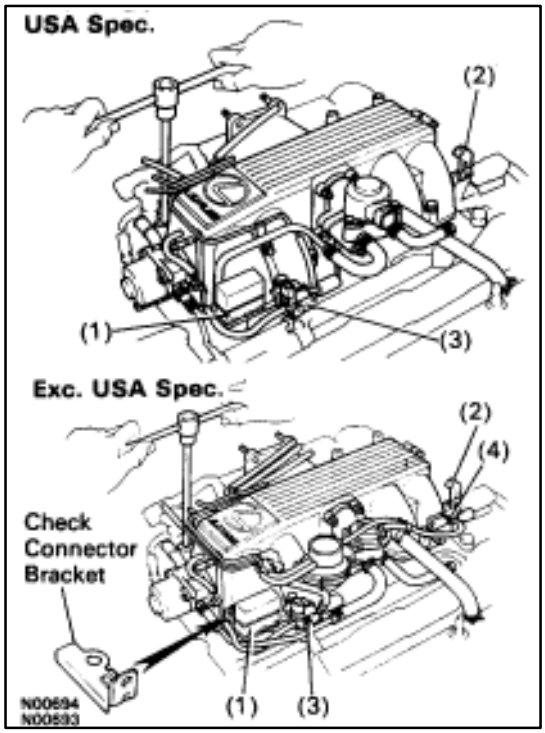

(c) (Exc. USA Spec.)
Install the connector bracket to check (”DIAGNOSIS”) connector.

(d) Install the air intake chamber and following parts with the four bolts and eight nuts:
   (1) Check (”DIAGNOSIS”) connector
   (2) A/T throttle cable bracket
   (3) VSV for fuel pressure control system
   (4) VSV for EGR system

Torque: 18 N·m (185 kgf·cm, 13 ft·lbf)

HINT: Use bolts 40 mm (1.57 in.) of length.

WhereEverybodyKnowsYourName

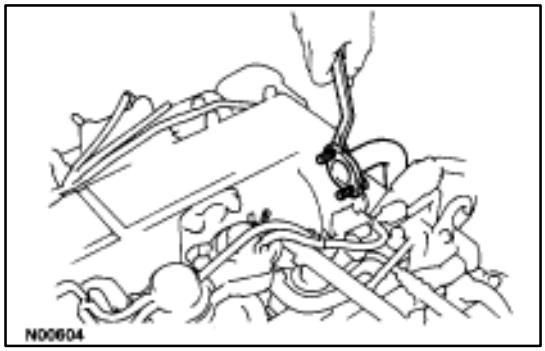

(e) Tighten the bolt holding the EGR pipe to the air intake chamber.

Torque: 18 N·m (185 kgf·cm, 13 ft·lbf)

(f) Tighten the bolt holding the EGR pipe to the RH cylinder head.

Torque: 18 N·m (185 kgf·cm, 13 ft·lbf)

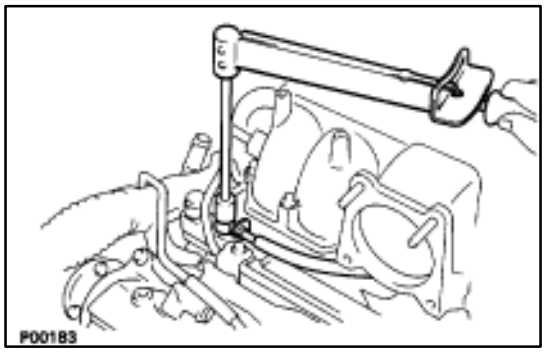

(g) Connect the cold start injector tube to the RH delivery pipe with two new gaskets and union bolt.

Torque: 15 N·m (150 kgf·cm, 11 ft·lbf)

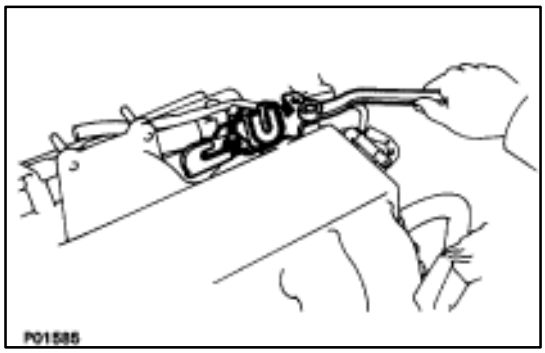

(h) Install the accelerator bracket with the bolt and stud bolt.

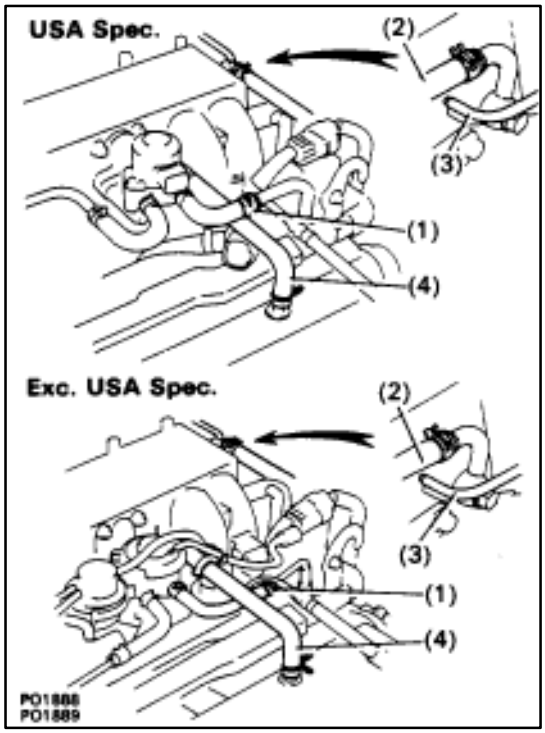

13. CONNECT HOSES

Connect the following hoses:

(1) Water by–pass (from EGR valve) to water bypass pipe
(2) Vacuum hose (from brake booster) to air intake chamber
(3) Vacuum hose (from VSV for heater water valve) to air intake chamber
(4) PCV hose to LH cylinder head cover

WhereEverybodyKnowsYourName

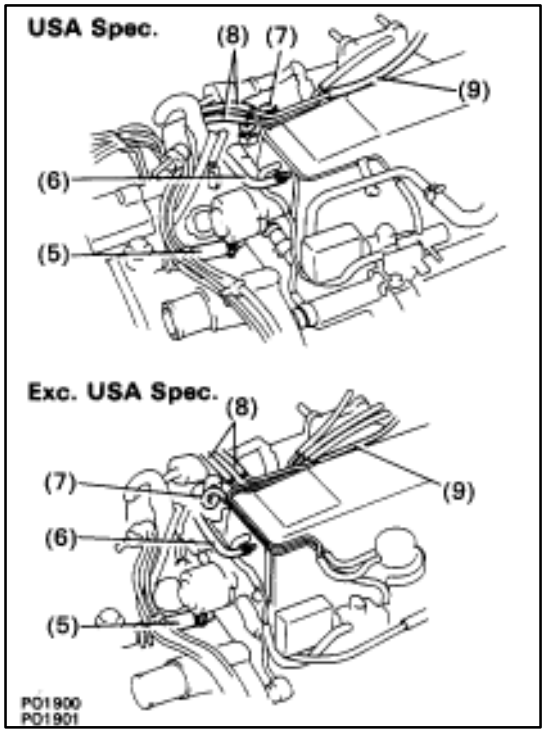

(5) Water by–pass hose (from water inlet housing) to ISC valve
(6) Vacuum hose (from PS air control valve) to air intake chamber
(7) Vacuum sensing hose (from fuel pressure regulator) to vacuum pipe
(8) Two vacuum hoses (from VSV for EVAP system) to vacuum pipe
(9) Vacuum hose (from charcoal canister) to vacuum pipe.

14. CONNECT CONNECTORS

Connect the following connectors:

- Cold start injector connector
- ISC valve connector
- (USA Spec.)
  EGR valve connector
- (Exc. USA Spec.)
  VSV connector for EGR system
- VSV connector for fuel pressure control system

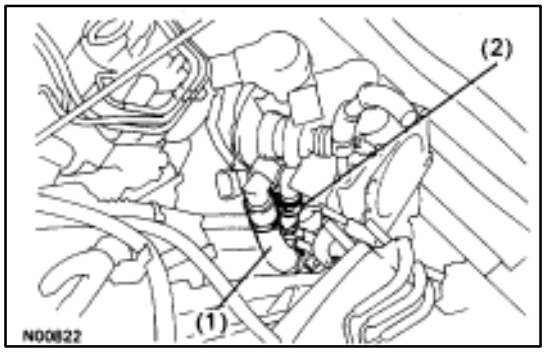

15. INSTALL THROTTLE BODY

(a) Connect the following hoses:
(1) PCV hose to throttle body
(2) Water by–pass hose to throttle body

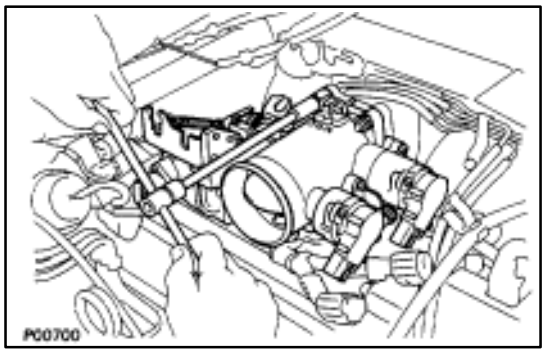

(b) Install a new gasket and throttle body with the two bolts and two nuts.

Torque: 18 N·m (185 kgf·cm, 13 ft·lbf)

HINT: Use bolts 40 mm (1.57 in.) in length.

(c) Install the water by–pass pipe (from rear water bypass joint) to the clamp on the engine wire cover.

WhereEverybodyKnowsYourName

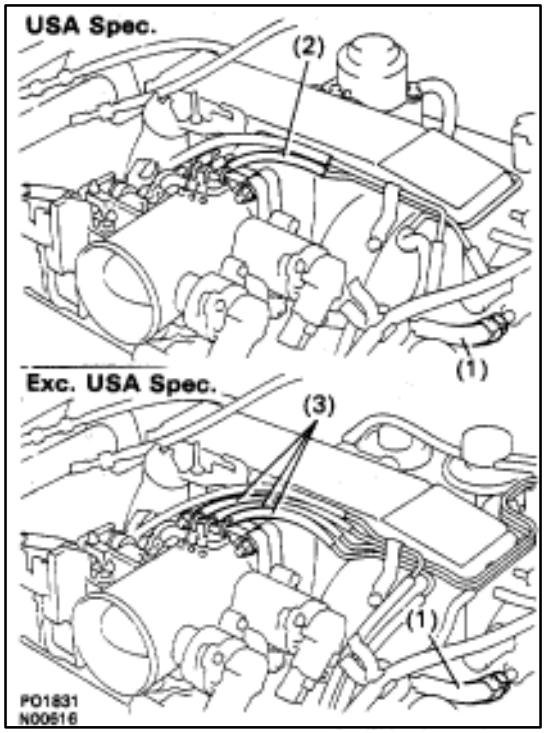

(d) Connect the following hoses:
(1) Water by–pass hose to the ISC valve
(2) (USA Spec.)
Vacuum hose to throttle body
(3) (Exc. USA Spec.)
Three vacuum hoses to throttle body

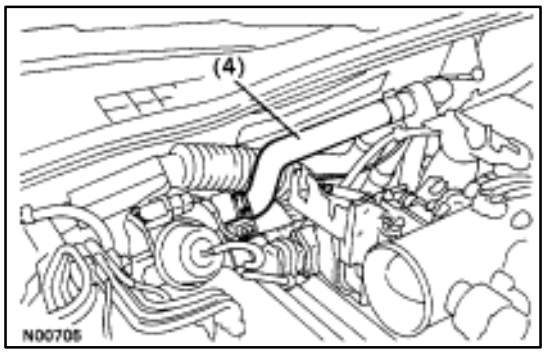

(4) Heater water hose to heater water valve

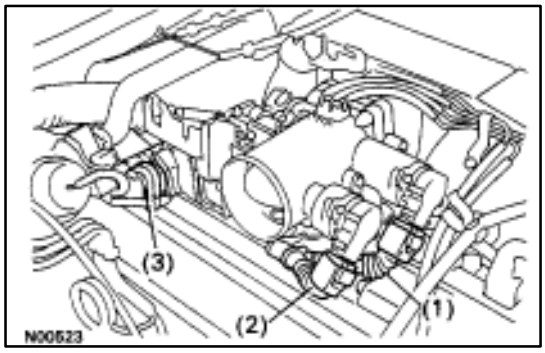

(e) Connect the following connectors:
(1) Throttle position sensor connector
(2) (w/ TRAC)
Sub–throttle position sensor connector
(3) (w/ TRAC)
Sub–throttle actuator connector

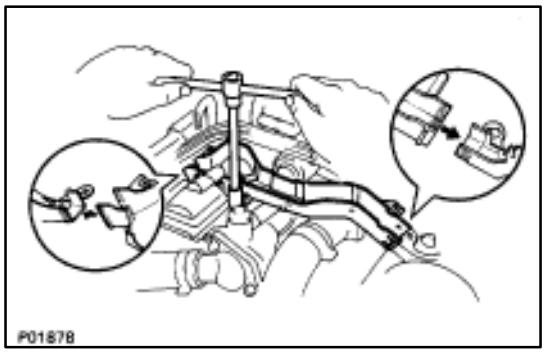

16. INSTALL LOWER HIGH–TENSION CORD COVER

(a) Connect the end portions of the high–tension cord to the cord clamps
(b) Install the high–tension cord cover with the bolt.

WhereEverybodyKnowsYourName

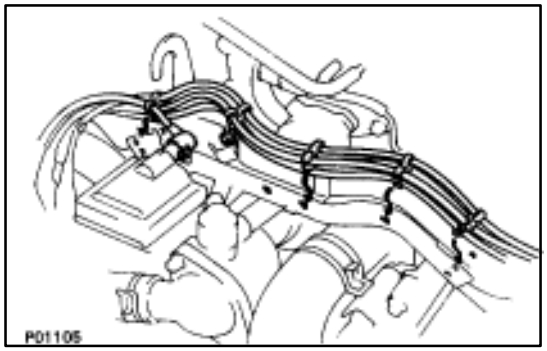

(c) Install the clamps on the high–tension cords to the high–tension cord cover.
(d) Connect the high–tension cord to the RH ignition coil.

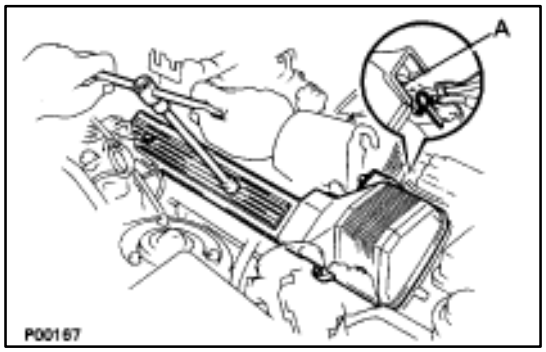

17. INSTALL RH NO.3 TIMING BELT COVER
(a) Install the three gaskets to the timing belt cover.
(b) Fit portion A of the timing belt cover, matching it with the lower high–tension cord cover.
(c) Install the timing belt cover with the three bolts.

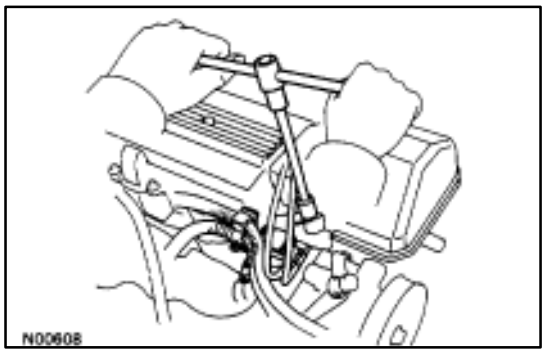

18. INSTALL VSV FOR EVAP SYSTEM
Install the VSV with the two bolts.

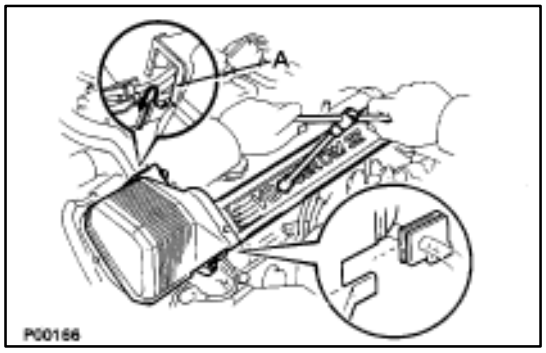

19. INSTALL LH NO.3 TIMING BELT COVER
(a) Install the three gaskets to the timing belt cover.
(b) Install the cord grommet to the high–tension cord.
(c) Install the cord grommet to the timing belt cover.
(d) Fit portion A of the timing belt cover, matching it with the lower high–tension cord cover.
(e) Install the timing belt cover with the four bolts.

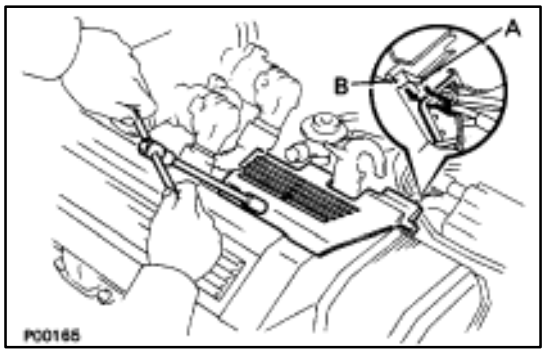

20. INSTALL RH ENGINE WIRE COVER
(a) Fit portions A and B of the engine wire cover, matching them with the lower high–tension cord cover and No.3 timing belt cover.
(d) Install the engine wire cover with the bolt.

WhereEverybodyKnowsYourName

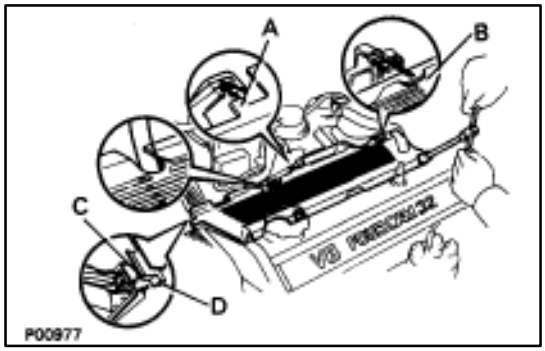

21. INSTALL LH ENGINE WIRE COVER

(a) Connect portions A and B engine wire cover to the wire brackets.
(b) Set the VSV (for fuel pressure control system) wire in original position.
(c) Fit portions C and D of the engine wire cover, matching them with the lower high–tension cord cover and No.3 timing belt cover.
(d) Install the engine wire cover with the two bolts.

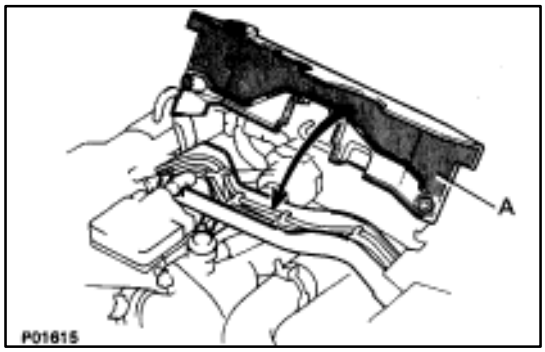

22. INSTALL UPPER HIGH–TENSION CORD COVER

(a) Fit portion A of the upper high–tension cover, matching it with the top of the lower high–tension cord cover.

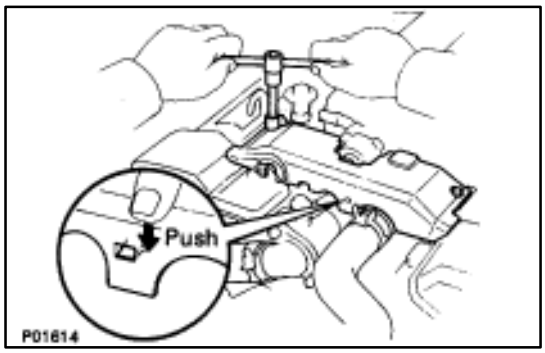

(b) Push the front side of the high–tension cord cover, and connect the front side claw groove of the upper high–tension cord cover to the claw of the lower high–tension cord cover.
(c) Install the upper high–tension cord cover with the two bolts.

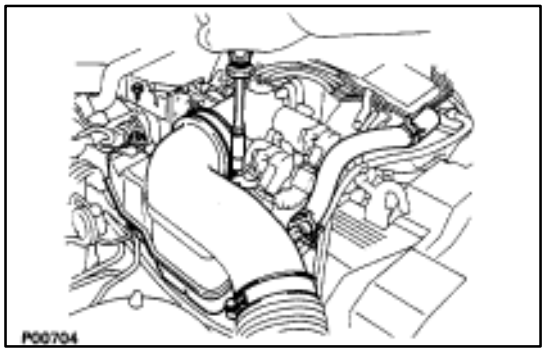

23. INSTALL INTAKE AIR CONNECTOR

(a) Connect the end portions of the intake air connector to the throttle body and air cleaner hose.
(b) Tighten the two hose clamps.
(c) Install the bolt holding the intake air connector to the cylinder head cover.

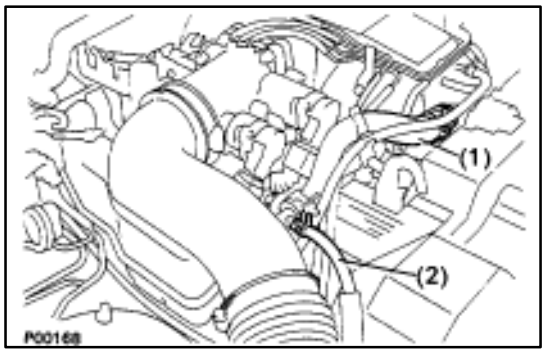

(d) Connect the following hoses:
  (1) Air hose to ISC valve
  (2) Air hose (from PS air control valve) to intake air connector

WhereEverybodyKnowsYourName

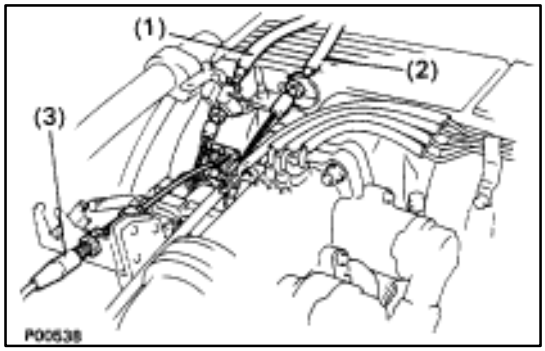

24. CONNECT CONTROL CABLES TO THROTTLE BODY

Connect the following hoses:

(1) Accelerator cable
(2) A/T throttle control cable
(3) (w/ Cruise Control System)
Cruise control actuator cable

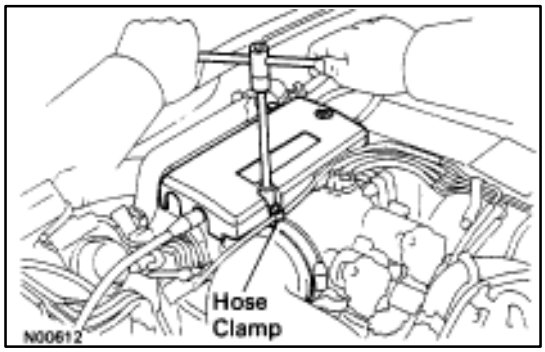

25. INSTALL THROTTLE BODY COVER

Install the throttle body cover and hose clamp with the two bolts and cap nut.

26. CONNECT CABLE TO NEGATIVE TERMINAL OF BATTERY

27. FILL WITH ENGINE COOLANT (See page CO–7)

28. CHECK THAT ENGINE STARTS

WhereEverybodyKnowsYourName

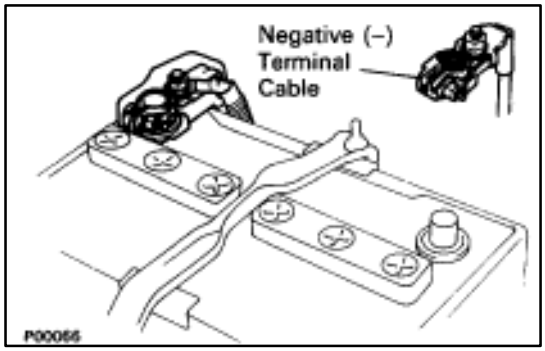

STARTER RELAY

INSPECTION OF STARTER RELAY

1. **DISCONNECT CABLE FROM NEGATIVE TERMINAL OF BATTERY**
   CAUTION: Work must be started after approx. 20 seconds or longer from the time the ignition switch is turned to the ”LOCK” position and the negative (–) terminal cable is disconnected from the battery.

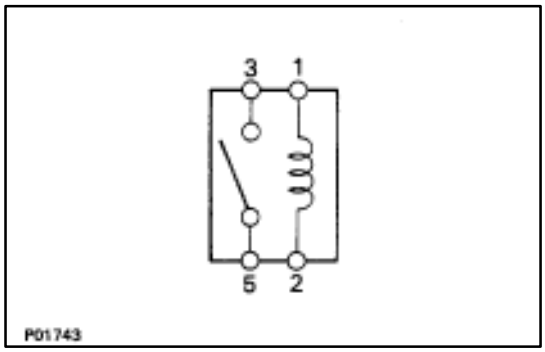

2. **REMOVE STATER RELAY**
   LOCATION: In the engine compartment relay box.
3. **INSPECT STARTER RELAY**

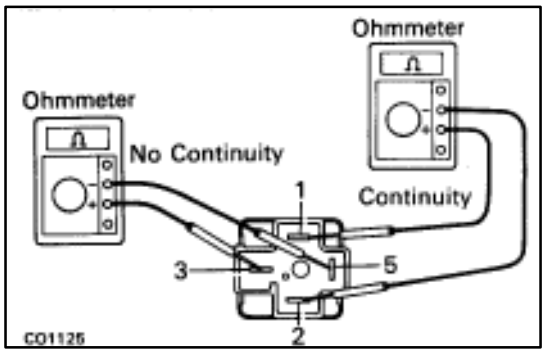

A. Inspect relay continuity

(a) Using an ohmmeter, check that there is continuity between terminals 1 and 2.
(b) Check that there is no continuity between terminals 3 and 5.

If continuity is not as specified, replace the relay.

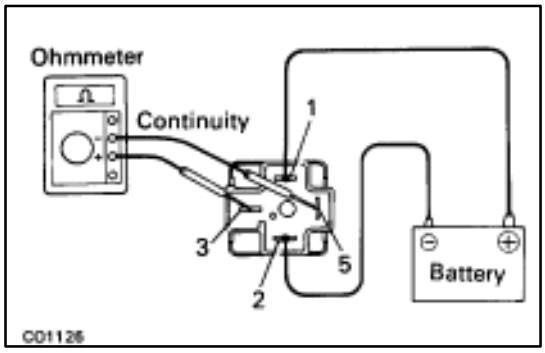

B. Inspect relay operation

(a) Apply battery voltage across terminals 1 and 2.
(b) Using an ohmmeter, check that there is continuity between terminals 3 and 5.

If operation is not as specified, replace the relay.

4. **REINSTALL STARTER RELAY**
5. **RECONNECT CABLE TO NEGATIVE TERMINAL OF BATTERY**

NEUTRAL START SWITCH

(See AT section)

THEFT DETERRENT SYSTEM

(See BE section)

WhereEverybodyKnowsYourName

SERVICE SPECIFICATIONS

SERVICE DATA

Starter	Rated voltage and output power			12 V 2.0 kW	
	No–load characteristic		Current	120 A or less at 11.5 V	
			rpm	3,300 rpm or more at 11.5 V	
	Brush length		STD	15.0–15.5 mm	0.591–0.610 in.
			Limit	9.5 mm	0.374 in.
	Commutator	Outer diameter	STD	35.0 mm	1.378 in.
			Limit	34.0 mm	1.339 in.
		Undercut depth	STD	0.7–0.9 mm	0.028–0.035 in.
			Limit	0.2 mm	0.008 in.
		Circle runout	Limit	0.05 mm	0.0020 in.
	Spring installed load			26–32 N (2.7–3.3 kgf, 6.0–7.3 lbf)	

TORQUE SPECIFICATIONS

Part tightened	N·m	kgf·cm	ft·lbf
Starter X Cylinder block	39	400	29
Rear water by–pass joint X Cylinder head	18	185	13
Water by–pass pipe X Cylinder block	18	185	13
Intake manifold X Cylinder head	18	185	13
Fuel return pipe X Fuel pressure regulator	35	360	26
Fuel inlet hose X LH delivery pipe	39	400	29
for SST	33	340	24
Air intake chamber X Intake manifold	18	185	13
EGR pipe X Air intake chamber	18	185	13
EGR pipe X RH cylinder head	18	185	13
Cold start injector tube X RH delivery pipe	15	150	11
Throttle body X Air intake chamber	18	185	13

WhereEverybodyKnowsYourName

ENGINE TROUBLESHOOTING

WhereEverybodyKnowsYourName

HOW TO PROCEED WITH TROUBLESHOOTING

The Engine Control System broadly consists of the sensors, ECU and actuators. The ECU receives signals from various sensors, judges the operating conditions and determines the optimum injection duration, timing, ignition timing and idle speed.
In general, the Engine Control System is considered to be a very intricate system to troubleshoot. But, the fact is that if you proceed to inspect the circuit one by one following the procedures directed in this manual, troubleshooting of this system is not complex.
This section explains the most ideal method of troubleshooting and tells how to carry out the necessary repairs.

[1] CUSTOMER PROBLEM ANALYSIS
Using the customer problem analysis check sheet for reference, ask the customer in as much details as possible about the problem.

[2] CHECK AND CLEAR DIAGNOSTIC CODE (PRECHECK)
Before confirming the problem symptom, first check the diagnostic code and make a note of any malfunction code which is output, then clear the code.
HINT: Output of the malfunction code indicates that there is a malfunction in the circuit indicated. However, it does not indicate whether the malfunction is still occurring or occurred in the past and returned to normal. In order to determine this, the problem symptoms should be confirmed in 4 first and the diagnostic code be rechecked in **[6]**.
Accordingly, if troubleshooting is begun based on the malfunction code only in diagnostic code check in **[2]**, it could result in a misdiagnosis, leading to troubleshooting of circuits which are normal and making it more difficult to locate the cause of the problem.

[3] SETTING THE TEST MODE DIAGNOSIS, [4] PROBLEM SYMPTOM CONFIRMATION, [5] SYMPTOM SIMULATION
In order to find out the trouble more quickly, set the diagnosis check in test mode and with higher sensing ability of the ECU, confirm the problem symptoms. If the trouble does not reappear, use the symptom simulation method to make sure the trouble is reproduced.

[6] DIAGNOSTIC CODE CHECK IN TEST MODE
Check the diagnostic code in test mode. If the malfunction code is output, proceed to ”step **[8]** Diagnostic Code Chart”. If the normal code is output, proceed to ”step **[7]** Basic Inspection”.

[7] BASIC INSPECTION
Carry out basic inspection such as the spark check and fuel pressure check, etc.

[8] DIAGNOSTIC CODE CHART
If the malfunction code is displayed, proceed to inspect the circuit indicated by the chart for each code.

[9] MATRIX CHART OF PROBLEM SYMPTOMS
If the normal code is displayed in the diagnosis in test mode, perform troubleshooting according to the inspection order in the Matrix Chart of Problem Symptoms.

[10] PARTS INSPECTION
When the Matrix Chart of Problem Symptoms instructs to check the parts, proceed to parts inspection section included in this manual.

[11] CIRCUIT INSPECTION
Determine if the malfunction is the sensor, actuator, wire harness, connector or the ECU.

WhereEverybodyKnowsYourName

[12] CHECK FOR MOMENTARY INTERRUPTION

By performing the check for momentary interruption, the place where momentary interruptions or momentary shorts are occurring due to poor contacts can be isolated.

[13] ADJUSTMENT, REPAIR

After the cause of the problem is located, perform adjustment or repairs by following the inspection and replacement procedures in this manual.

[14] CONFIRMATION TEST

After completing adjustment or repairs, confirm not only that the malfunction is eliminated, but also conduct a test drive, etc., to make sure the entire Engine Control System is operating normally.

WhereEverybodyKnowsYourName

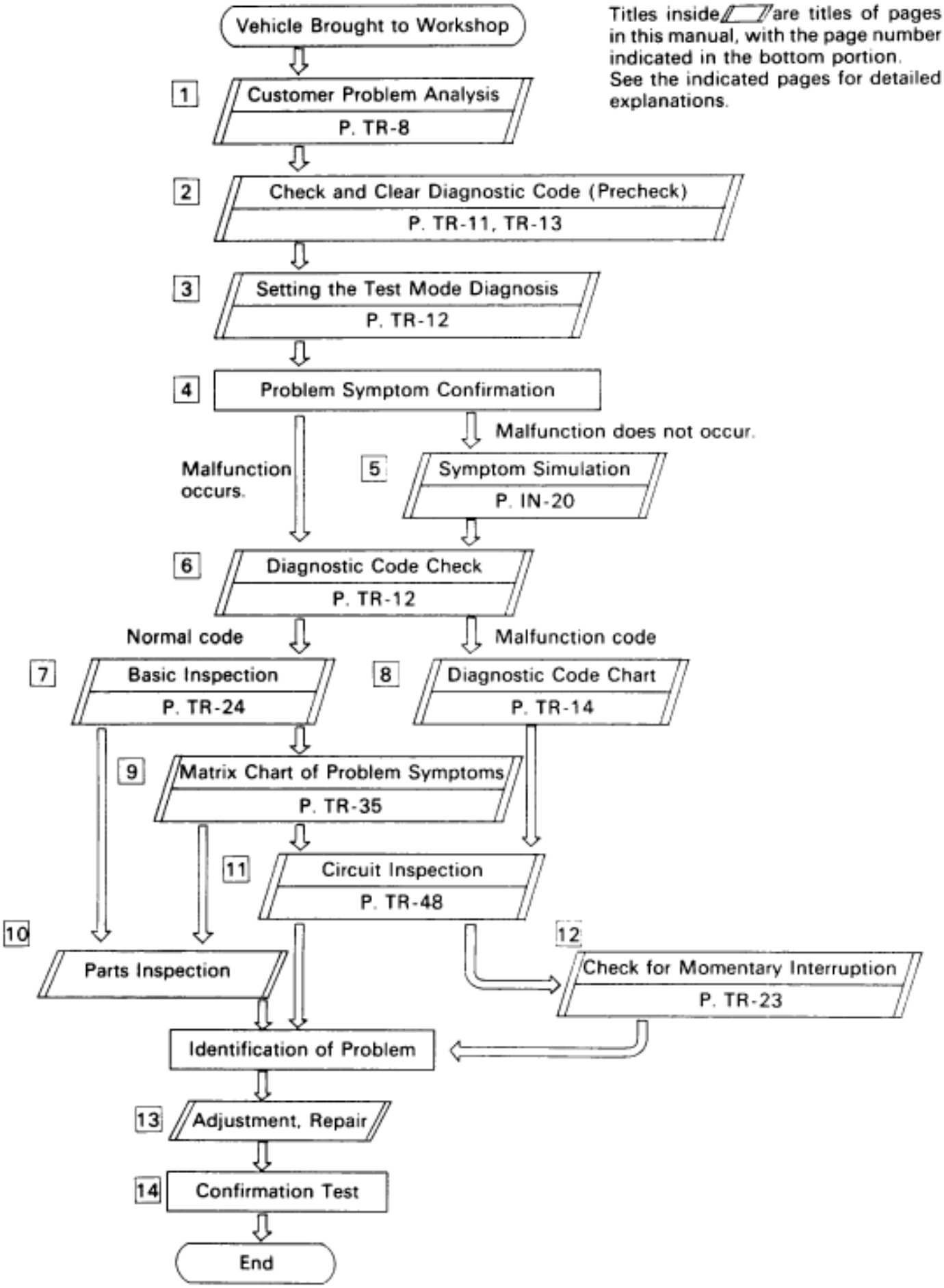

WhereEverybodyKnowsYourName

–MEMO–

WhereEverybodyKnowsYourName

How to Proceed with Troubleshooting Using Volt/Ohm Meter and TCCS Checker

For the explanation of steps [1] ~ [6], [8] and [10] ~ [16], see the explanation of steps with the same title on page TR–2.

[7] [9] CIRCUIT INSPECTION BY CHECKER

If the Normal code is displayed in the diagnostic code check, connect the checker to the vehicle and check all the circuits which can be inspected using the checker.

If a malfunctioning circuit is then detected, proceed to ”Circuit Inspection by Volt/Ohm Meter” and check the applicable circuit using a volt/ohm meter. Determine if the malfunction is in the sensor, actuator, wire harness, connector or the ECU. If the malfunctioning circuit cannot be detected using the checker, proceed to ”Basic Inspection” and perform troubleshooting.

If a malfunction code is displayed in the diagnostic code check, use the checker to inspect the circuit indicated by the diagnostic code chart for the displayed code.

For instructions on how to connect the checker to the vehicle and how to use the checker, please refer to the Instruction Manual for TCCS checker.

WhereEverybodyKnowsYourName

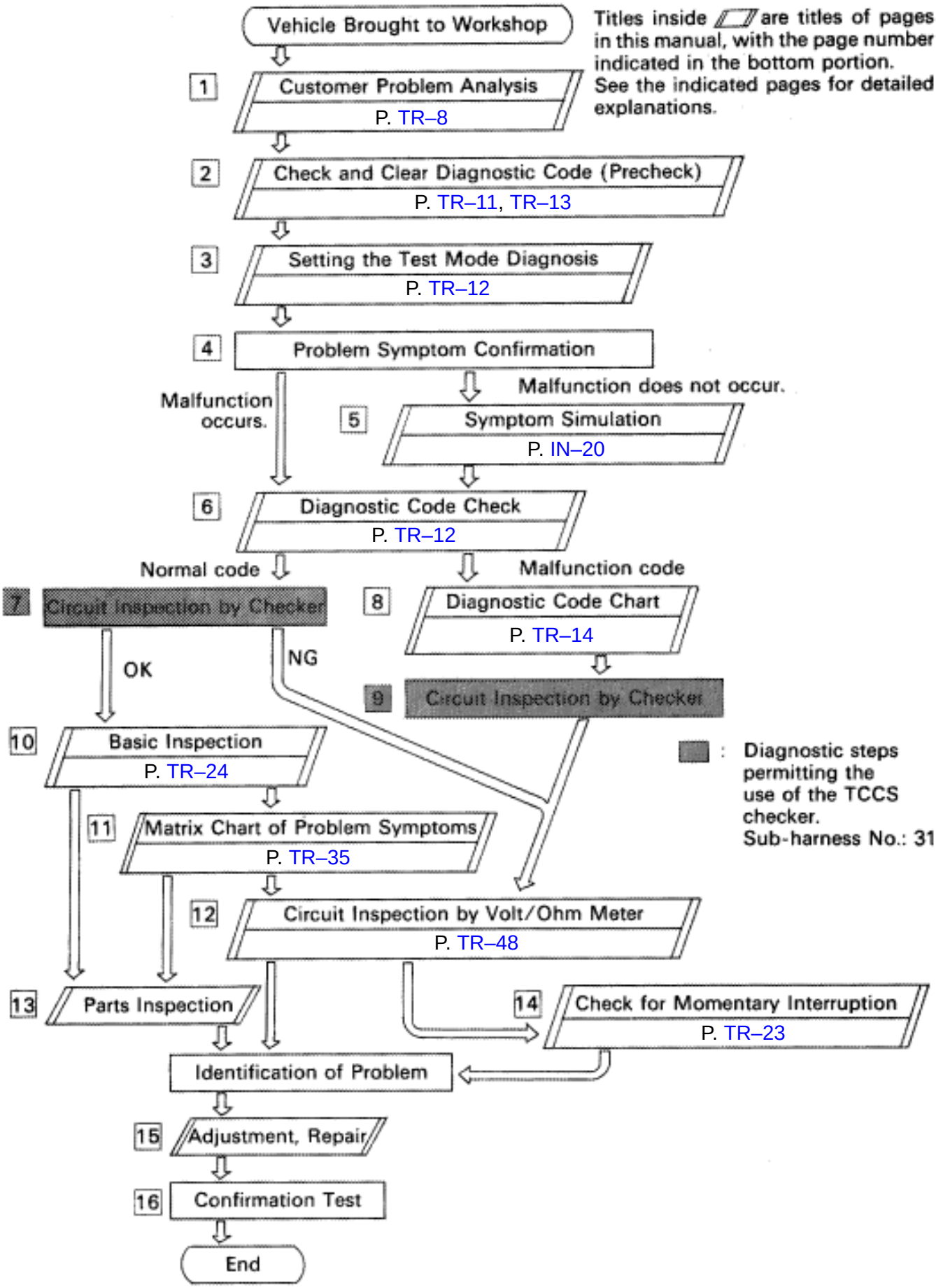

WhereEverybodyKnowsYourName

CUSTOMER PROBLEM ANALYSIS CHECK SHEET

ENGINE CONTROL System Check Sheet

Inspector's Name :

Customer's Name		Registration No.	
		Registration Year	/ /
		Frame No.	
Date Vehicle Brought In		Odometer Reading	km Miles

Date of Problem Occurrence		
Frequency of Problem Occurrence		☐ Constant ☐ Sometime (times per day/month) ☐ Once only ☐ Other ( )
Conditions at Time of Problem Occurrence	Weather	☐ Fine ☐ Cloudy ☐ Rainy ☐ Snowy ☐ Various/Other
	Outdoor Temperature	☐ Hot ☐ Warm ☐ Cool ☐ Cold (Approx. °F (°C))
	Place	☐ Highway ☐ Suburbs ☐ Inner City ☐ Hill (☐ Up, ☐ Down) ☐ Rough road ☐ Other ( )
	Engine Temp.	☐ Cold ☐ Warming up ☐ After warming up ☐ Any temp. ☐ Other
	Engine Operation	☐ Starting ☐ Just after starting ☐ Idling ☐ Racing without load ☐ Driving (☐ Constant speed ☐ Acceleration ☐ Deceleration ☐ Other ( ))

Problem Symptoms	☐ Engine does not Start	☐ Engine does not crank ☐ No initial combustion ☐ No complete combustion
	☐ Difficult to Start	☐ Engine cranks slowly ☐ Other ( )
	☐ Poor Idling	☐ Incorrect first idle ☐ Idling rpm is abnormal [☐ High ☐ Low (rpm)] ☐ Rough idling ☐ Other ( )
	☐ Poor Driveability	☐ Hesitation ☐ Back fire ☐ Muffler explosion (after fire) ☐ Surging ☐ Knocking ☐ Other ( )
	☐ Engine Stall	☐ Engine stall soon after starting ☐ After acceleration pedal depressed ☐ After acceleration pedal released ☐ During A/C operation ☐ When N to D shift ☐ Other ( )
	☐ Others	

Condition of "CHECK" Engine Warning Light		☐ Remains on ☐ Sometimes lights up ☐ Does not light up
Diagnostic Code Inspection	Normal Mode (Precheck)	☐ Normal code ☐ Malfunction code [code]
	Test Mode	☐ Normal code ☐ Malfunction code [code]

WhereEverybodyKnowsYourName

–MEMO–

WhereEverybodyKnowsYourName

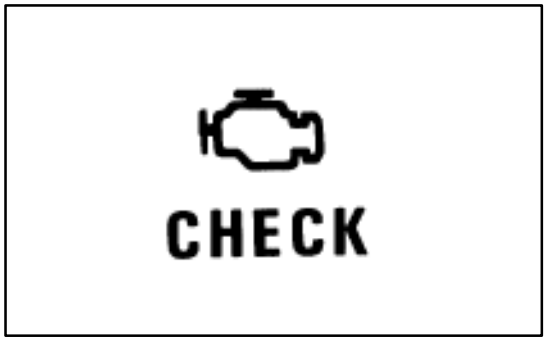

DIAGNOSIS SYSTEM

DESCRIPTION

The ECU contains a built–in self–diagnosis system by which troubles with the engine signal network are detected and a ”CHECK” engine warning light on the instrument panel lights up. By analyzing various signals as shown in the later table (See page TR–14) the Electronic Control Unit (ECU) detects system malfunctions relating to the sensors or actuators.

In the normal mode, the self–diagnosis system monitors 22 (USA specification vehicles with TRAC control) or 21 (USA (except for California) and Canadian specification vehicles with TRAC control) items, indicated by code No. as shown in TR–14. A ”CHECK” engine warning light informs the driver that a malfunction has been detected. The light goes off automatically when the malfunction has been repaired. But the diagnostic code(s) remains stored in the ECU memory (except for code Nos. 16 and 53). The ECU stores the code(s) until it is cleared by removing the EFI fuse with the ignition switch off.

The diagnostic code can be read by the number of blinks of the ”CHECK” engine warning light when TE1 and E1 terminals on the TDCL or check connector are connected. When 2 or more codes are indicated, the lowest number (code) will appear first.

In the test mode, 15 (USA specification vehicles with TRAC control) or 14 (USA (except for California) and Canadian specification vehicles with TRAC control) items, indicated by code No. as shown in TR–14 are monitored. If a malfunction is detected in any one of the systems indicated by code Nos. 13, 21, 22, 24, 25, 26, 27, 28, 29, 35, 41, 42, 47, 71 and 78 (USA specification vehicles) or 13, 21, 22, 24, 25, 26, 27, 28, 29, 35, 41, 42, 47 and 78 (USA (except for California) and Canadian specification vehicles) the ECU lights the ”CHECK” engine warning light to warn the technician that malfunction has been detected. In this case, TE2 and E1 terminals on the TDCL should be connected as shown later. (See page TR–12).

In the test mode, even if the malfunction is corrected, the malfunction code is stored in the ECU memory even when the ignition switch is off (except code Nos. 43 and 51). This also applies in the normal mode. The diagnostic mode (normal or test) and the output of the ”CHECK” engine warning light can be selected by connecting the TE1, TE2 and E1 terminals on the check connector or TDCL, as shown later.

A test mode function has been added to the functions of the self–diagnosis system of the normal mode for the purpose of detecting malfunctions such as poor contact, which are difficult to detect in the normal mode. This function fills up the selfdiagnosis system. The test mode can be implemented by the technician following the appropriate procedures of check terminal connection and operation described later. (See page TR–12)

WhereEverybodyKnowsYourName

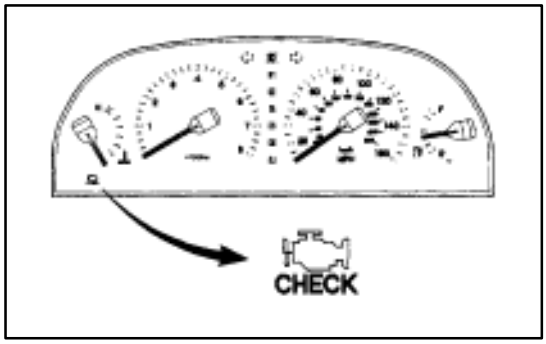

Diagnosis Inspection (Normal Mode) ”CHECK” ENGINE WARNING LIGHT CHECK

1. The ”CHECK” engine warning light will come on when the ignition switch is turned ON and the engine is not running.
   HINT: If the ”CHECK” engine warning light does not light up, proceed to troubleshooting of the combination meter (See page BE–146).
2. When the engine is started, the ”CHECK” engine warning light should go off.
   If the light remains on, the diagnosis system has detected a malfunction or abnormality in the system.

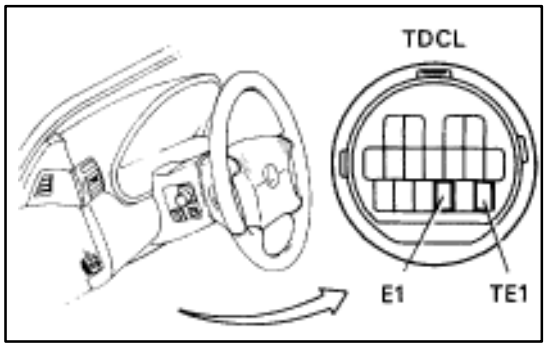

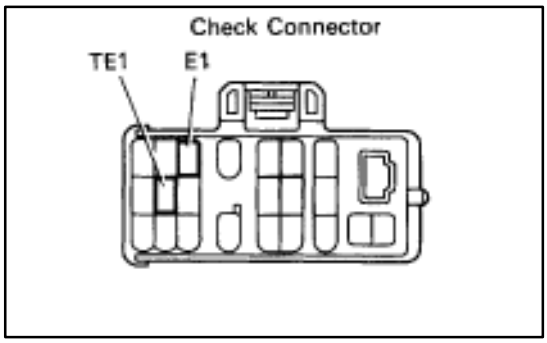

DIAGNOSTIC CODE CHECK

1. Turn ignition switch on.
2. Using SST, connect terminals between TE1 and E1 of TDCL or check connector.
   SST 09843–18020

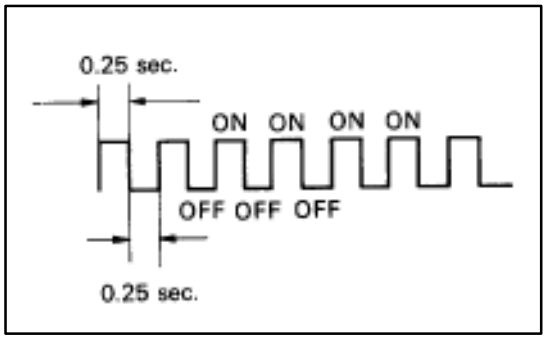

3. Read the diagnostic code from ”CHECK” engine warning light.
   HINT: If a diagnostic code is not output, check the TE1 terminal circuit (See page TR–146).

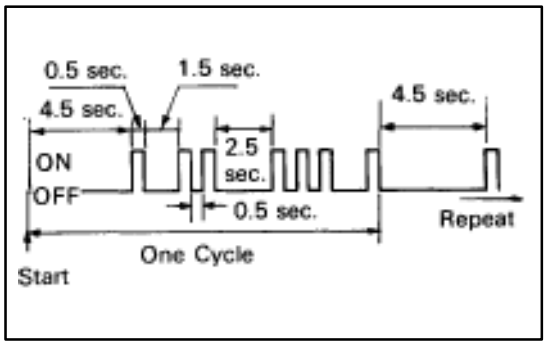

As an example, the blinking patterns for codes;normal, 12 and 31 are as shown on the illustration.

4. Check the details of the malfunction using the diagnostic code table on page TR–14.
5. After completing the check, disconnect terminals TE1 and E1, and turn off the display.
   HINT: In the event of 2 or more malfunction codes, indication will begin from the smaller numbered code and continue in order to the larger.

WhereEverybodyKnowsYourName

Diagnosis Inspection (Test Mode)

Compared to the normal mode, the test mode has high sensing ability to detect malfunctions.
It can also detect malfunctions in the starter signal circuit, the IDL contact signal of the throttle position sensor, air conditioner signal and neutral start switch signal.
Furthermore, the same diagnostic items which are detected in the normal mode can also be detected in the test mode.

DIAGNOSTIC CODE CHECK

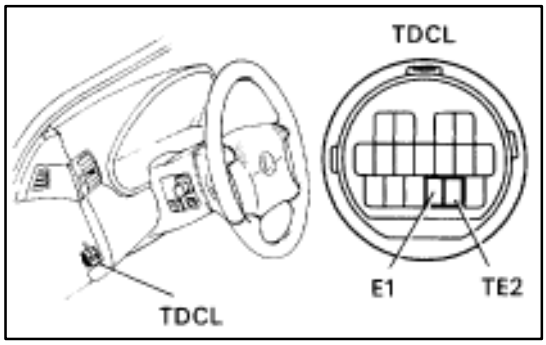

1. Initial conditions.
   (a) Battery voltage 11 V or more.
   (b) Throttle valve fully closed (throttle position sensor IDL points closed).
   (c) Transmission in neutral position.
   (d) Air conditioner switched off.
2. Turn ignition switch off.
3. Using SST, connect terminals TE2 and E1 of TDCL.
   SST 09843–18020

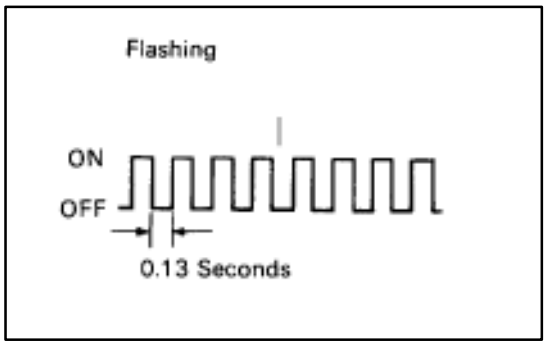

4. Turn ignition switch on.
   HINT:
   - To confirm that the test mode is operating, check that the ”CHECK” engine warning light flashes when the ignition switch is turned to ON.
   - If the ”CHECK” engine warning light does not flash, proceed to troubleshooting of the TE2 terminal circuit on page TR–146.
5. Start the engine.
6. Simulate the conditions of the malfunction described by the customer.

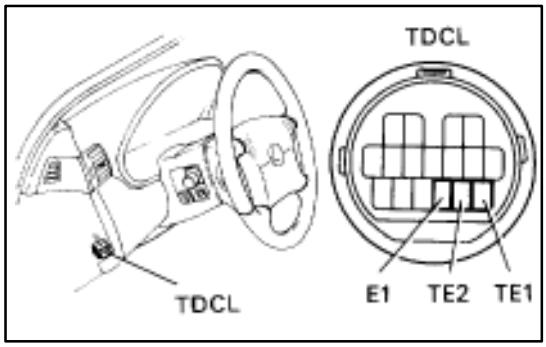

7. After the road test, using SST, connect terminals TE1 and E1 of TDCL or check connector.
   SST 09843–18020
8. Read the diagnostic code on ”CHECK” engine warning light on the combination meter (See page TR–11).
9. After completing the check, disconnect terminals TE1, TE2 and E1, and turn off the display.
   HINT:
   - The test mode will not start if terminals TE2 and E1 are connected after the ignition switch is turned on.
   - When the engine is not cranked, diag. codes ”43” (Starter signal) output, but this is not abnormal.
   - When the automatic transmission shift lever is in the ”D”, ”2”, ”L” or ”R” shift position, or when the air conditioner is on or when the accelerator pedal is depressed, code ”51” (Switch condition signal) is output, but this is not abnormal.

WhereEverybodyKnowsYourName

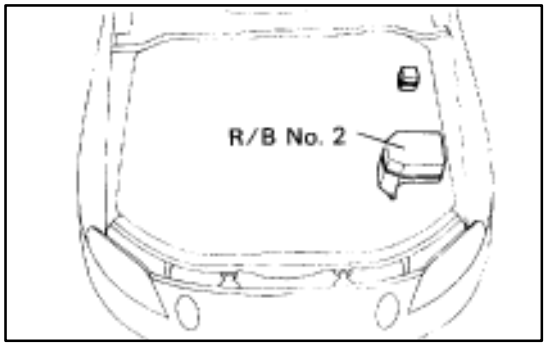

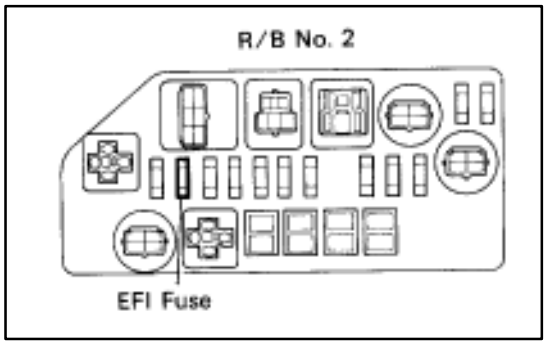

DIAGNOSTIC CODE CLEARANCE

1. After repair of the trouble areas, the diagnostic code retained in the ECU memory must be cleared out by removing the EFI fuse (30A) from R/B No. 2 for 10 seconds or more, with the ignition switch OFF.
   HINT:
   - Cancellation can also be done by removing the battery negative (–) terminal, but in this case, other memory systems (clock, etc.) will also be cancelled out.
   - If it is necessary to work on engine components requiring removal of the battery terminal, a check must first be made to see if a diagnostic code has been recorded.
2. After cancellation, road test the vehicle to check that a normal code is now read on the ”CHECK” engine warning light.
   If the same diagnostic code appears, it indicates that the trouble area has not been repaired thoroughly.

WhereEverybodyKnowsYourName

DIAGNOSTIC CODE CHART

HINT: Parameters listed in the chart may not be exactly same as your reading due to type of the instruments or other factors.

Code No.	Number of Check Engine Blinks	Circuit	Diagnostic Code Detecting Condition
–	BE3931	Normal	No code is recorded.
12	BE3931	RPM Signal	No "NE" or "G1" and "G2" signal to ECU within 2 sec. after cranking.
13	BE3931	RPM Signal	No NE signal to ECU for 0.1 sec. or more at 1,000 rpm or more.
			No 12 pulses of NE to ECU during the interval between G1 and G2 pulses.
			Deviation in G (G1, G2) and NE signal continues for 1 sec. during idling (throttle fully closed) after engine warmed up.
14	BE3931	Ignition No. 1 Signal	No IGF1 signal to ECU for 8-11 consecutive IGT1 signal.
15	BE3931	Ignition No. 2 Signal	No IGF2 signal to ECU for 8-11 consecutive IGT2 signal.
16	BE3931	ECT Control Signal	Fault in communications between the engine CPU and ECT CPU in the ECU.
21	BE3932	Main Oxygen Sensor Signal (on left bank)	(1) Open or short in heater circuit of main oxygen sensor for 0.5 sec. or more.
			(2) Main oxygen sensor signal voltage is reduced to between 0.35 V and 0.70 V for 60 sec. under conditions (a) ~ (d). (2 trip detection logic) *4 (a) Coolant temp. : Between 70°C (158°F) and 95°C (203°F). (b) Engine speed : 1,500 rpm or more. (c) Load driving (EX. ECT in 4th speed, A/C ON, Flat road, 50 mph <80 km/h>) (d) Main oxygen sensor signal voltage : Alternating above and below 0.45 V.

*4: See page TR–21.

WhereEverybodyKnowsYourName

If a malfunction code is displayed during the diagnostic code check in test mode, check the circuit for that code listed in the table below (Proceed to the page given for that circuit).

Trouble Area	"CHECK" Engine Warning Light *▼		Memory*2	See Page
	Normal Mode	Test Mode		
———————	——	——	———	———
• Open or short in engine speed sensor, No. 1, No. 2 cam position sensor circuit. • Engine speed sensor • No. 1, No. 2 cam position sensor • Starter • ECU	ON	N.A.	10	TR–48
• Open or short in engine speed sensor circuit. • Engine speed sensor • ECU	ON	N.A.	10	TR–52
• Open or short in engine speed sensor circuit. • Mechanical system malfunction (skipping teeth of timing • belt, belt stretched) • Engine speed sensor • ECU	N.A.	ON		
• Mechanical system malfunction (skipping teeth of • timing belt, belt stretched) • No. 1, No. 2 cam position sensor • ECU	ON	N.A.		
• Open or short in IGF1 circuit from igniter No. 1–ECU. • Igniter No. 1 • ECU	ON	N.A.	10	TR–54
• Open or short in IGF2 circuit from igniter No. 2–ECU. • Igniter No. 2 • ECU	ON	N.A.	10	TR–54
• ECU	ON	N.A.	X	TR–61
• Open or short in heater circuit of main oxygen sensor. • Main oxygen sensor heater • ECU	ON	N.A.	10	TR–62
• Main oxygen sensor circuit • Main oxygen sensor	ON	ON		

*1, 2: See page TR–20.

WhereEverybodyKnowsYourName

DIAGNOSTIC CODE CHART (Cont'd)

Code No.	Number of Check Engine Blinks	Circuit	Diagnostic Code Detecting Condition
22	BE3932	Water Temp. Sensor Signal	Open or short in water temp. sensor circuit for 0.5 sec. or more.
24	BE3932	Intake Air Temp. Sensor Signal	Open or short in intake air temp. sensor circuit for 0.5 sec. or more.
25 (26)	BE3932	Air-Fuel Ratio Lean (Rich) Malfunction	(1) Main oxygen sensor voltage is 0.45 V or less (lean) for 90 sec. under conditions (a) and (b). (2 trip detection logic)*4 (a) Coolant temp. : 60°C (140°F) or more. (b) Engine speed : 1,500 rpm or more.
			(2)*3 Main oxygen sensor voltage is alternating above and below 0.45 V at 5 times par second or more under conditions (a) and (b). (2 trip detection logic)*4 (a) Engine speed : Idling (b) Coolant temp. : Between 60°C (140°F) and 95°C (203°F).
			(3)*3 Difference of air-fuel ratio feedback compensation value between right and left banks is more than 10 percentage for 30 sec. or more under conditions (a) and (b). (2 trip detection logic)*4 (a) Engine speed : 2,000 rpm or more. (b) Coolant temp. : Between 60°C (140°F) and 95°C (203°F).
27	BE3932	Sub-Oxygen Sensor Signal (on left bank)	(1) Open or short in heater circuit of sub-oxygen sensor for 0.5 sec. or more.
			(2) Main oxygen sensor signal is 0.45 V or more and sub-oxygen sensor signal is 0.45 V or less under conditions (a) and (b). (2 trip detection logic)*4 (a) Coolant temp. : 80°C (176°F) or more. (b) Accel-pedal : Full depressed for 2 sec. or more.
28	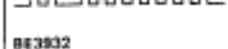 BE3932	Main Oxygen Sensor Signal (on right back)	Same as (1) of Code No. 21
			Same as (2) of Code No. 21
29	BE3932	Sub-Oxygen Sensor Signal (on right bank)	Same as (1) of Code No. 27
			Same as (2) of Code No. 27

* 3, 4: See page TR–20, 21.

WhereEverybodyKnowsYourName

Trouble Area	"CHECK" Engine Warning Light *▼		Memory*2	See Page
	Normal Mode	Test Mode		
• Open or short in water temp. sensor circuit. • Water temp. sensor • ECU	ON	ON	10	TR–68
• Open or short in intake air temp. sensor circuit. • Intake air temp. sensor • ECU	OFF ON*3	ON	10	TR–72
• Open or short in main oxygen sensor circuit. • Main oxygen sensor • Ignition system • Water temp. sensor	ON	ON	10	TR–74
• Open or short in injector circuit. • Fuel line pressure (injector blockage) • Air flow meter (air intake) • Engine ground bolt loose • Foreign object caught in valve				
• Fuel line pressure (injector leak, blockage) • Mechanical system malfunction • (skipping teeth of timing belt) • Ignition system				
• Open or short in heater circuit of sub–oxygen sensor. • Sub–oxygen sensor heater. • ECU	ON	N.A.	10	TR–82
• Open or short in sub–oxygen sensor circuit. • Sub–oxygen sensor • ECU	ON	ON		
• Same as (1) of Code No. 21	ON	N.A.	10	TR–62
• Same as (2) of Code No. 21	ON	ON		
• Same as (1) of Code No. 27	ON	N.A.	10	TR–82
• Same as (2) of Code No. 27	ON	ON		

*1, 2, 3: See page TR–20.

WhereEverybodyKnowsYourName

DIAGNOSTIC CODE CHART (Cont'd)

Code No.	Number of Check Engine Blinks	Circuit	Diagnostic Code Detecting Condition
31	BE3933	Air Flow Meter Signal	All conditions below are detected. (a) No air-flow meter signal to ECU for 2 sec. when engine speed is above 300 rpm. (b) Engine stall.
35	BE3933	HAC Sensor Signal	Open or short in HAC sensor circuit for 0.5 sec. or more.
41	BE3934	Throttle Position Sensor Signal	(1) Open or short in throttle position sensor circuit (VTA1) for 0.5 sec. or more. (2) IDL1 contact is ON and VTA1 output exceeds 1.5 V for 0.5 sec. or more.
42	BE3934	Vehicle Speed Sensor Signal	All conditions below are detected continuously for 8 sec. or more. (a) Vehicle speed signal : 0 mph (b) Engine speed : 1,500 rpm or more (c) Neutral start switch (NSW) : OFF
43	BE3934	Starter Signal	No starter signal to ECU.
47	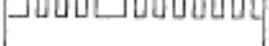 BE3934	Sub-Throttle Position Sensor Signal	(1) Open or short in sub-throttle position sensor circuit (VTA2) for 0.5 sec. or more. (2) IDL2 contact is ON and VTA2 output exceeds 1.5 V for 0.5 sec. or more.
52	BE3935	No. 1 Knock Sensor Signal	No No. 1 knock sensor signal to ECU for 3 crank revolutions with engine speed between 1,600 rpm ~ 5,200 rpm.
53	BE3935	Knock Control Signal	Engine control computer (for knock control) malfunction at engine speed between 650 rpm and 5,200 rpm.
55	BE3935	No. 2 Knock Sensor Signal	No No. 2 knock sensor signal to ECU for 3 crank revolutions with engine speed between 1,600 rpm ~ 5,200 rpm.

WhereEverybodyKnowsYourName

Trouble Area	"CHECK" Engine Warning Light *▼		Memory*2	See Page
	Normal Mode	Test Mode		
• Open or short in air flow meter circuit. • Air flow meter • ECU	ON	N.A.	10	TR–88
• ECU	ON	ON	10	TR–92
• Open or short in throttle position sensor circuit. • Throttle position sensor • ECU	ON	ON	10	TR–94
• No. 1 speed sensor • Combination meter • Open or short in No. 1 speed sensor circuit. • ECU	ON	ON	10	TR–98
• Open or short in starter signal circuit. • Open or short in ignition switch or main relay circuit. • ECU	N.A.	OFF	X	TR–100
• Open or short in sub–throttle position sensor circuit. • Sub–throttle position sensor • ECU	OFF	ON	10	TR–94
• Open or short in No. 1 knock sensor circuit. • No. 1 knock sensor (looseness) • ECU	ON	N.A.	10	TR–102
• ECU	ON	N.A.	X	
• Open or short in No. 2 knock sensor circuit. • No. 2 knock sensor (looseness) • ECU	ON	N.A.	10	

*1, 2: See page TR–20.

WhereEverybodyKnowsYourName

DIAGNOSTIC CODE CHART (Cont'd)

Code No.	Number of Check Engine Blinks	Circuit	Diagnostic Code Detecting Condition
71 *3	BE3937	EGR System Malfunction	(1) Open or short in EGR step motor circuit for 1 sec. or more.
			(2) EGR gas temp. is 65°C (149°F) or below for 1 ~ 4 min. under conditions (a) and (b). (2 trip detection logic)*4 (a) Coolant temp. : 65°C (149°F) or more. (b) EGR operation possible (EX. ECT in 3rd speed, A/C ON, 60 mph <96 km/h>, Flat road).
78	BE3937	Fuel Pump Control Signal	(1) Open or short in fuel pump circuit for 1 sec. or more with engine speed 1,000 rpm or less. (2 trip detection logic)*4
			(2) Open in input circuit of fuel pump ECU (FPC) with engine speed 1,000 rpm or less. (2 trip detection logic)*4
			(3) Open or short in diagnostic signal line (DI) of fuel pump ECU with engine speed 1,000 rpm or less. (2 trip detection logic)*4
51	BE3935	Switch Condition Signal	(1) 3 sec. or more after engine starts, idle switch OFF (IDL1). (2) Neutral start switch OFF (NSW). (Shift position in "R", "D", "2" or "1" ranges). (3) A/C switch ON.

*1: "ON" displayed in the diagnosis mode column indicates that the "CHECK" Engine Warning Light is lighted up when a malfunction is detected. "OFF" indicates that the "CHECK" does not light up during malfunction diagnosis, even if a malfunction is detected. "N.A." indicates that the item is not included in malfunction diagnosis.

*2: "O" in the memory column indicates that a diagnostic code is recorded in the ECU memory when a malfunction occurs. "X" indicates that a diagnostic code is not recorded in the ECU memory even if a malfunction occurs. Accordingly, output of diagnostic results in normal or test mode is performed with the IG switch ON.

*3: Only for USA specification vehicles.

WhereEverybodyKnowsYourName

Trouble Area	"CHECK" Engine Warning Light*▼		Memory*2	See Page
	Normal Mode	Test Mode		
• Open or short in EGR step motor circuit. • ECU	ON	N.A.	10	TR–108
• Open in EGR gas temp. sensor circuit. • ECU	ON	ON		
• Open or short in fuel pump ECU circuit. • Fuel pump ECU • Engine & ECT ECU power source circuit. • Fuel pump • Engine & ECT ECU	ON	ON	10	TR–114
• A/C switch circuit • Throttle position sensor IDL circuit • Neutral start switch circuit. • Accelerator pedal and cable • ECU	N.A.	OFF	X	TR–118

*4: This indicates items for which "2 trip detection logic" is used. With this logic, when a logic malfunction is first detected, the malfunction is temporarily stored in the ECU memory. If the same case is detected again during the second drive test, this second detection causes the "CHECK" Engine Warning Light to light up. The 2 trip repeats the same mode a 2nd time. (However, the IG switch must be turned OFF between the 1st trip and 2nd trip).
In the Test Mode, the "CHECK" Engine Warning Light lights up the 1st trip a malfunction is detected.

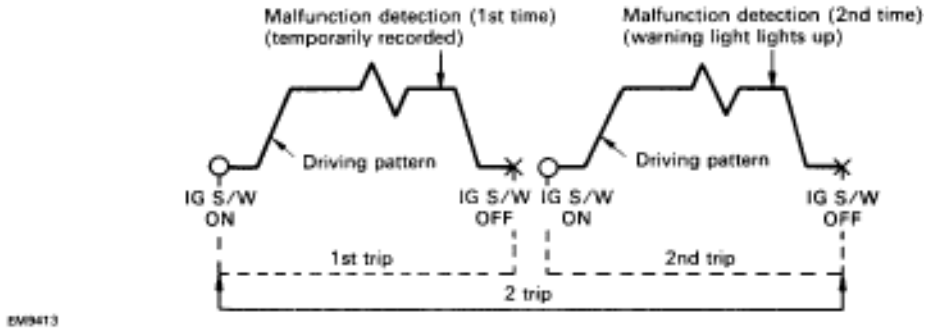

WhereEverybodyKnowsYourName

FAIL–SAFE CHART

If any of the following codes is recorded, the ECU enters fail–safe mode.

Code No.	Fail–Safe Operation	Fail–Safe Deactivation Conditions
14	Fuel cut	1 IGF1 detected in consecutive 8 ignitions.
15	Fuel cut	1 IGF2 detected in consecutive 8 ignitions.
16	Torque control prohibited.	Returned to normal condition.
22	THW is fixed at 80°C (176°F).	Returned to normal condition.
24	THA is fixed at 20°C (68°F).	Returned to normal condition.
31	Ignition timing controlled between 10° ~ 30° BTDC, Injection time controlled between 3 msec. ~ 30 m sec., in relation to: • Engine rpm • Throttle angle • ISC step value	KS input 15 times/sec. or more.
35	Atmospheric pressure is fixed at 760 mmHg.	Returned to normal condition.
41	VTA1 is fixed at 0°	The following 1 or 2 must be repeated at least 2 times consecutively. 1 When IDL is ON 0.25 V ≦ VTA1 ≦ 0.95 V 2 When IDL is OFF 0.25 V ≦ VTA1 ≦ 4.9 V
47	Value of VTA1 is used.	The following 1 or 2 must be repeated at least 2 times consecutively. 1 When IDL2 is ON 0.25 V ≦ VTA2 ≦ 0.95 V 2 When IDL2 is OFF 0.25 V ≦ VTA2 ≦ 4.9 V
52	Max. timeing retardation.	IG switch OFF.
53	Max. timeing retardation.	Returned to normal condition.
55	Max. timeing retardation.	IG switch OFF.

Back–Up Function

If there is trouble with the program in the ECU and the ignition signals (IGT) are not output, the ECU controls fuel injection and ignition timing at predetermined levels as a back–up function to make it possible to continue to operate the vehicle.

Furthermore, the injection duration is calculated from the satrting signal (STA) and the throttle position signal (IDL). Also, the ignition timing is fixed at the initial ignition timing, 5° BTDC, without relation to the engine speed.

HINT: If the engine is controlled by the back–up function, the CHECK ENGINE light lights up to warn the driver of the malfunction but the diagnostic code is not output.

WhereEverybodyKnowsYourName

CHECK FOR MOMENTARY INTERRUPTION

As described in the preceding paragraph, abnormality detection ability in the test mode is increased compared to that in the normal mode, so that when momentary interruptions or momentary shorts occur in the ECU signal circuits (G1, G2, NE, THW, THA, VTA1, VTA2) shown in the table below, the appropriate diagnostic code is output.

Accordingly, when the diagnostic codes shown in the table below (13, 22, 24, 41, 47) are output during the diagnostic code check, and inspection of the appropriate circuits reveals no abnormality, perform the check for momentary interruption as described below. By performing the check for momentary interruption, the place where momentary interruptions or momentary shorts are occurring due to poor contacts can be isolated.

Diag. Code	Circuit
13	RPM signal circuit (No. 2)
22	Water temp. sensor circuit
24	Intake air temp. sensor circuit
41	Throttle position sensor circuit
47	Sub-throttle position sensor circuit

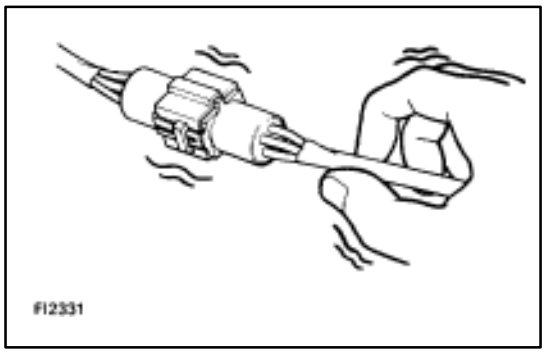

CLEAR DIAGNOSTIC CODES

See page TR–13.

SET TEST MODE

1. With the ignition switch off, using SST, connect the terminals TE2 and E1 of the TDCL.
   SST 09843–18020
2. Start the engine and check to see the ”CHECK” engine warning light to go off.

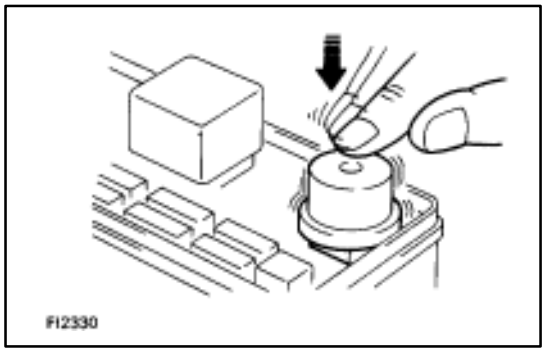

PERFORM A SIMULATION TEST

Using the symptom simulation (See page IN–20), apply vibration to and pull lightly on the wire harness, connector or terminals in the circuit indicated by the malfunction code.

In this test, if the ”CHECK” engine warning light lights up, it indicates that the place where the wire harness, connector or terminals being pulled or vibrated has faulty contact. Check that point for loose connections, dirt on the terminals, poor fit or other problems and repair as necessary.

HINT: After cancelling out the diagnostic code in memory and set the test mode, if the ”CHECK” engine warning light does not go off after the engine is started, check thoroughly for faulty contact, etc., then try the check again. If the ”CHECK” engine warning light still does not go off, check and replace ECU.

WhereEverybodyKnowsYourName

BASIC INSPECTION

When the normal code is displayed in the diagnostic code check, troubleshooting should be performed in the order for all possible circuits to be considered as the causes of the problems.
In many cases, by carrying out the basic engine check shown in the following flow chart, the location causing the problem can be found quickly and efficiently. Therefore, use of this check is essential in engine troubleshooting.

1	**Is battery voltage 11 V or more when engine is stopped?**

YES

NO — **Charge or replace battery.**

2	**Is engine cracnked?**

YES

NO — **Proceed to matrix to matrix chart of problem symptoms on page TR–35.**

3	**Does engine start?**

YES

NO — **Go to step [7]**

4	**Check air filter**

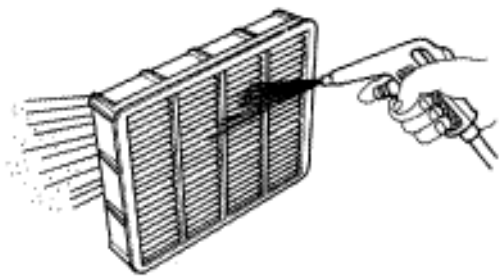

P Remove air filter

C Visially check that the air cleaner element is not excessively damaged or oily.

Hint If necessary, clean element with compressed air. First blow from inside thoroughly, then blow off outside of element.

OK

NG — **Repair or replace**

Go to Step [5].

WhereEverybodyKnowsYourName

5 **Check idle speed.**

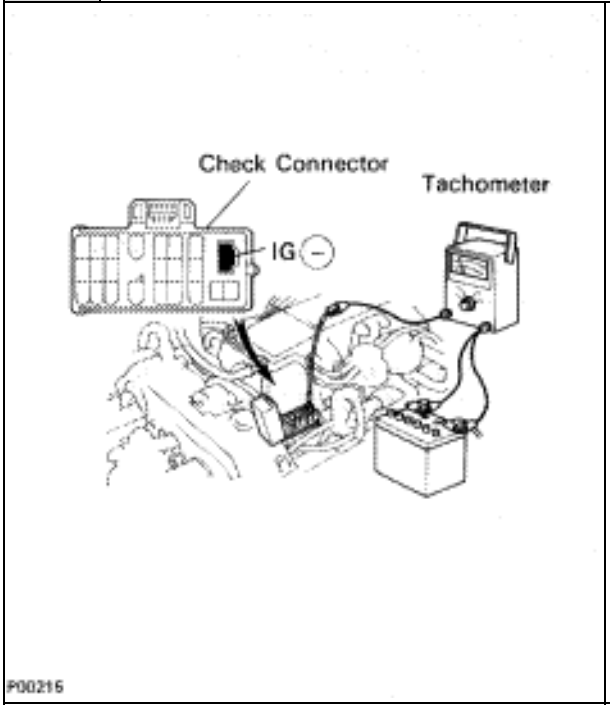

P (1) Warm up engine at normal operating temperature.
(2) Switched off all accessories.
(3) Switched off air conditioner.
(4) Shift transmission into “N” range.
(5) Connect tachometer test probe to terminal IG ± of check connector, and set the tachometer to the 4–cylinder range.

C Check idle speed.

OK **Idle speed: 650 ~ 750 rpm**

Caution:

▼ **NEVER allow tachometer test probe to touch ground as it could result in damage to igniter and/or coil.**

▼ **As some tachometers are not compatible with this ignition system, we recommended that you confirm compatibility of your unit before use.**

OK

NG **Proceed to matrix chart of problem symptoms on page TR–35.**

6 **Check ignition timing.**

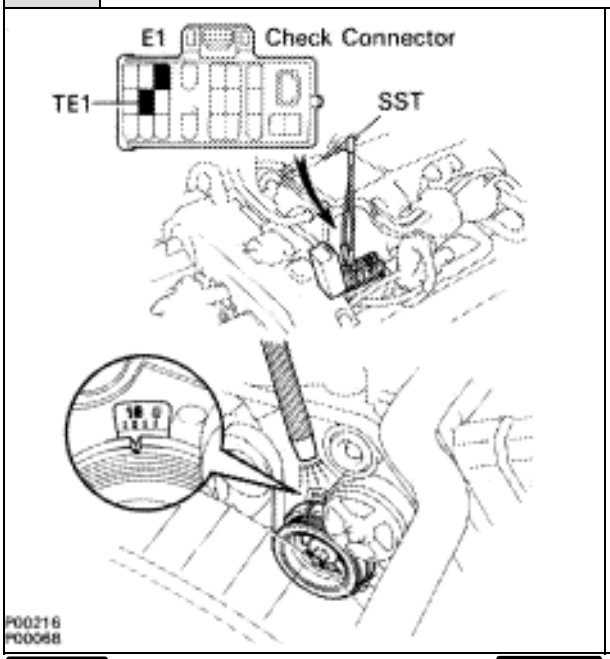

P (1) Warm up engine at normal operating temperture.
(2) Shift transmission into “N” range.
(3) Keep the engine speed at idle.
(4) Using SST, connect terminals TE1 and E1 of check connector.

SST 09843–18020

(5) Using a timing light. connect the tester to No. 6 high–tension cord.

C Check ignition timing.

OK **Ignition Timing: 8–12° BTDC at idle**

OK

NG **Proceed to page IG–28 and continue to troubleshoot.**

Proceed to matix chart of problem symptoms on page TR–35.

WhereEverybodyKnowsYourName

7 **Check fuel pressure.**

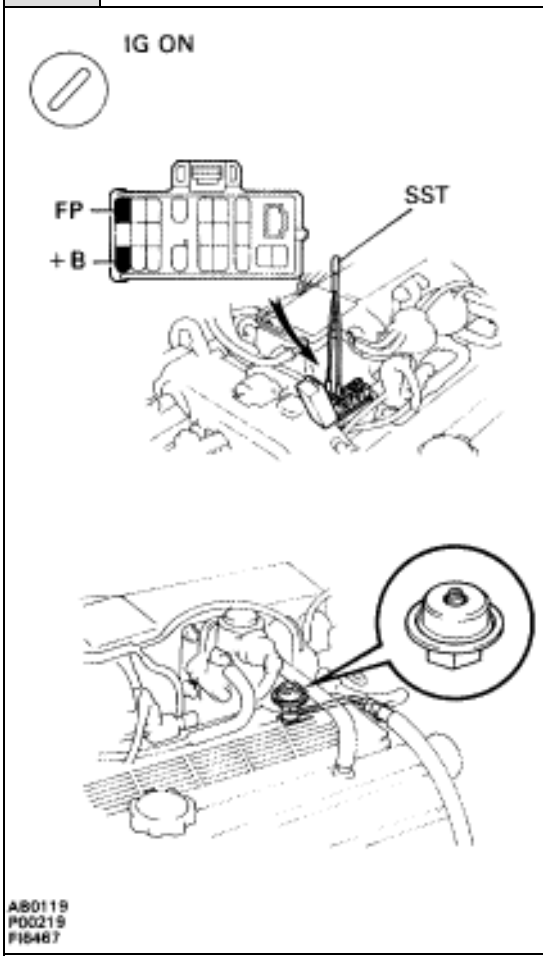

P (1) Be sure that fuel is enough in tank.
(2) Turn ignition switch on.
(3) Using SST, connect terminals FP and + B of check connector.
SST 09843–18020

C Check that pulsation damper screw rises up when terminals are connected.

Caution:

Never make a mistake with the terminal connection position as this will cause a malfunction.

OK

NG **Proceed to page FI–18 and continue to troubleshoot.**

8 **Check for spark.**

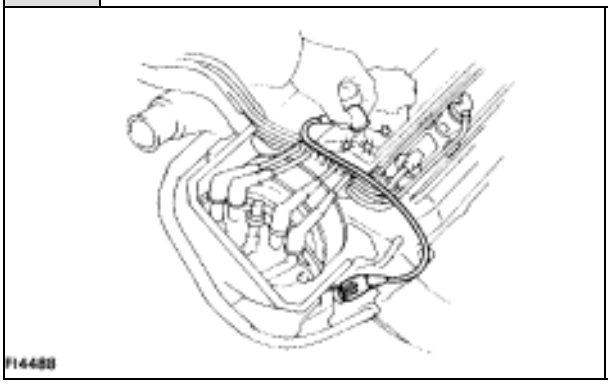

C Disconnect the high–tension cord from the distributor and, hold the end about 12.5 mm (1/2”) from the ground, see if spark occurs while the engine is being cranked.

Hint To prevent excessive fuel injected from the injectors during this test, Don’t crank the engine for more than 1 – 2 seconds at a time.

OK

NG **Proceed to the page IG–6 and continue to troubleshoot.**

Proceed to matix chart of problem systems on page TR–35.

WhereEverybodyKnowsYourName

PARTS LOCATION

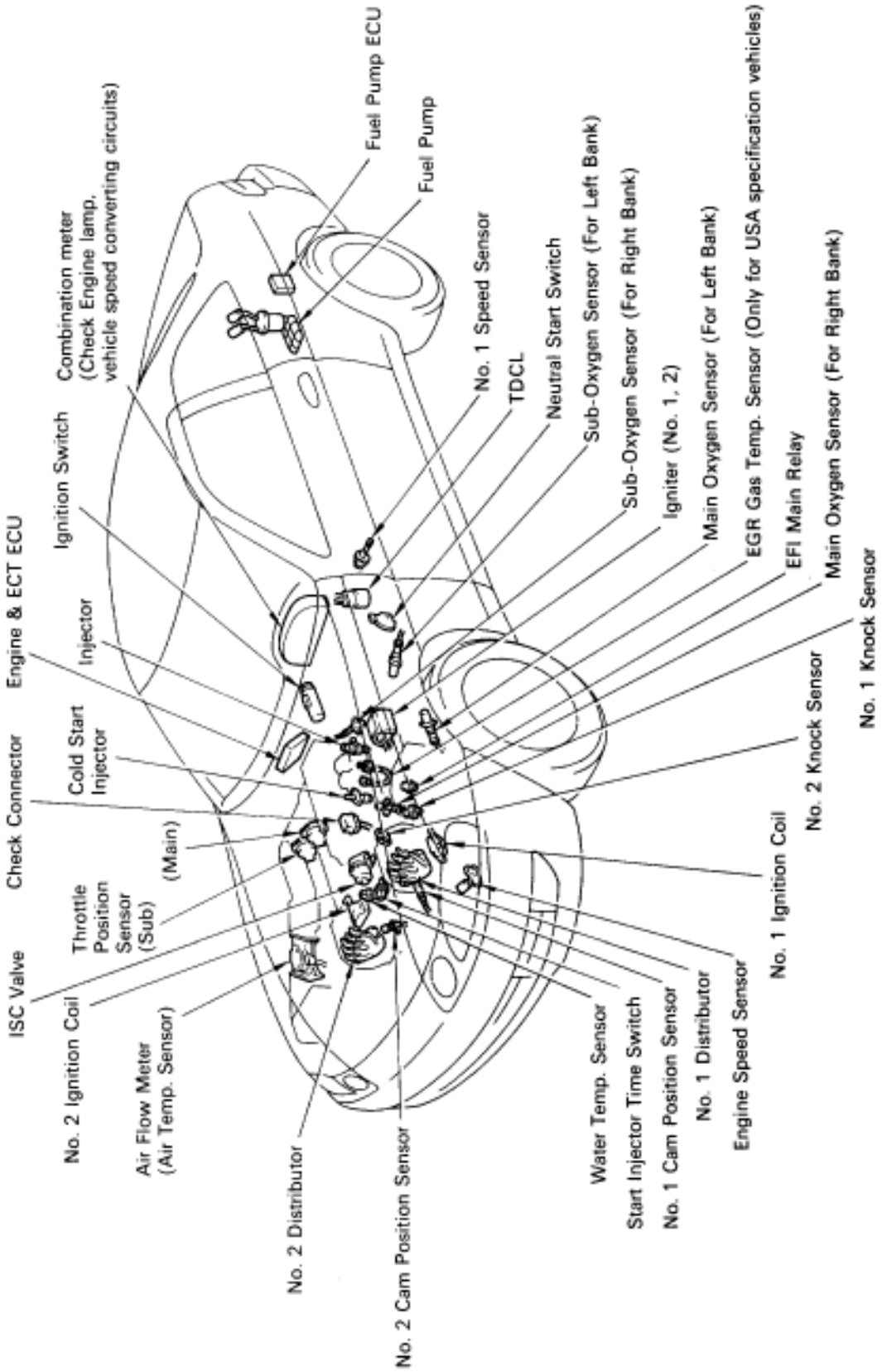

FI6521

WhereEverybodyKnowsYourName

WIRING DIAGRAM

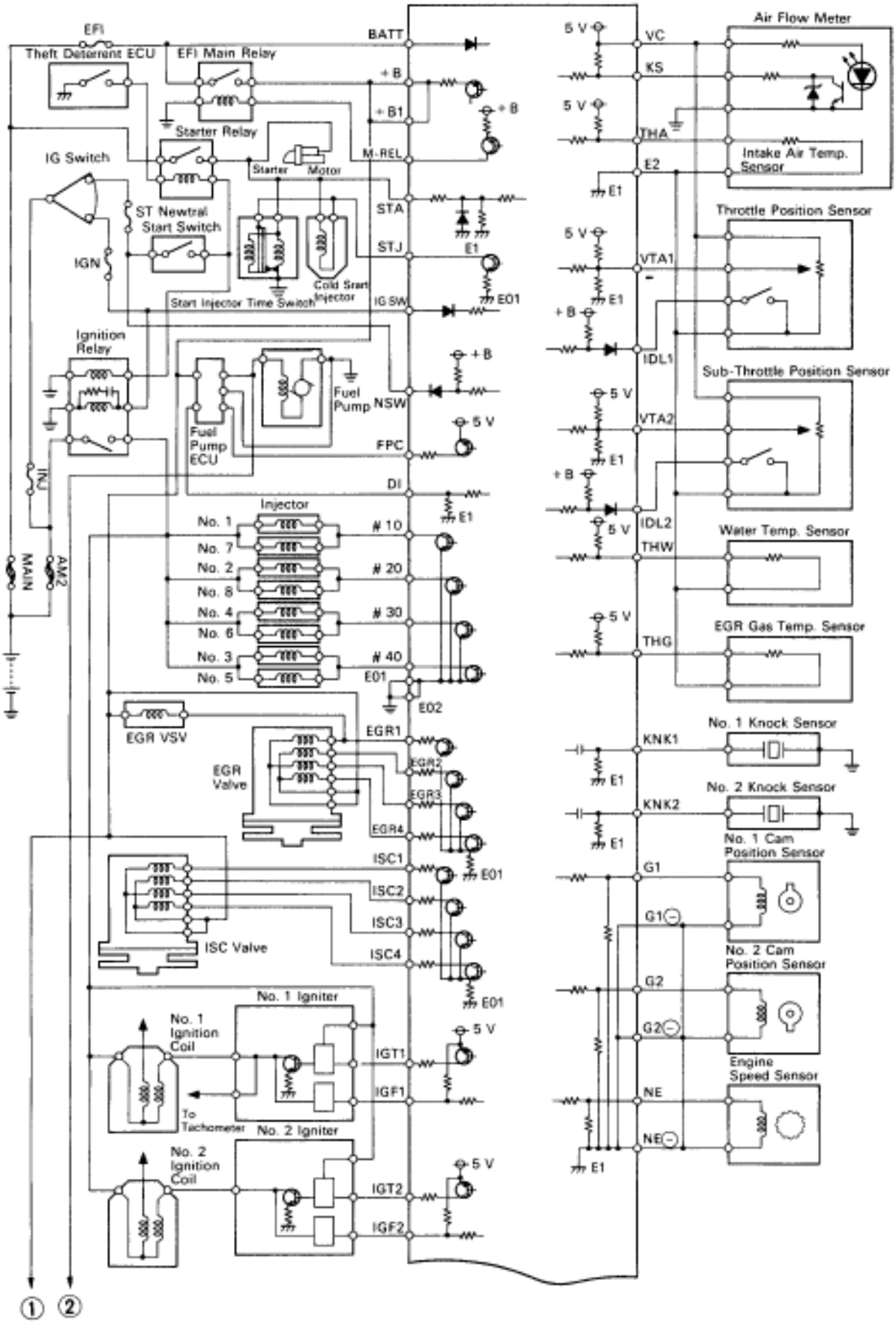

WhereEverybodyKnowsYourName

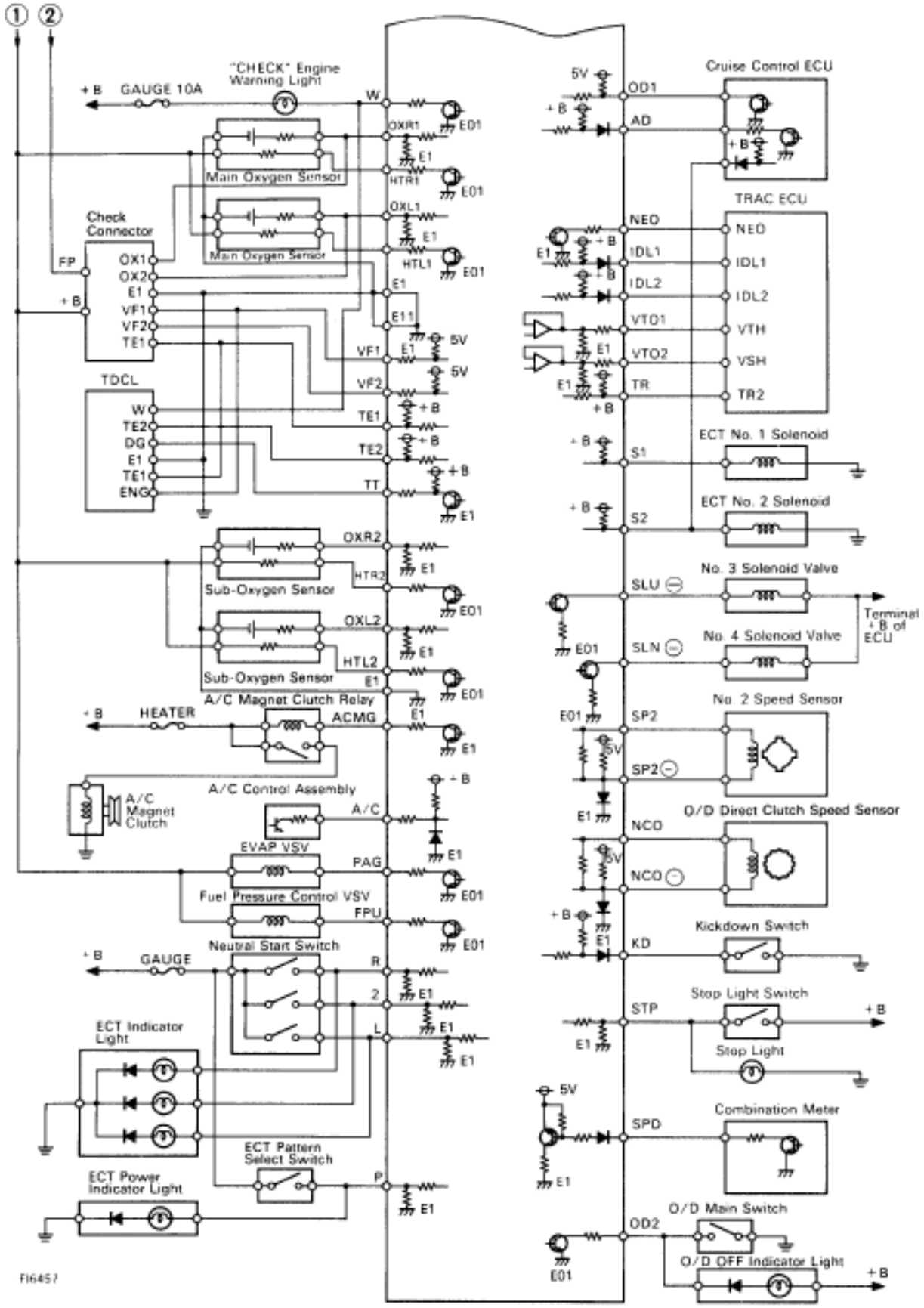

WhereEverybodyKnowsYourName

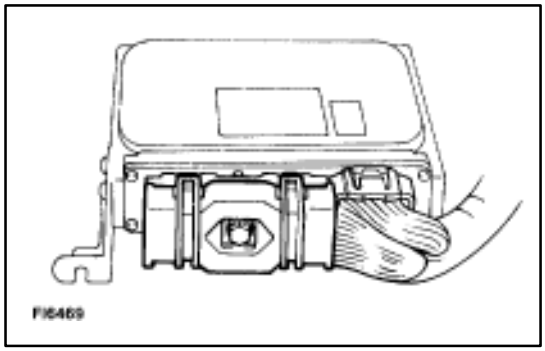

TERMINALS OF ECU

Connectors of the engine & ECT ECU are water–proof and are the bolt type.
For water proof type connectors, in order to measure the voltage of ECU terminals and the resistance of connected parts, connect the inspection sub wire harness between the ECU and vehicle wire harness, then perform the inspection. The inspection method of inserting a tester probe from the other side of connector noticeably reduces the water–proof ability.
Disconnect the connector by fully loosening the bolt.

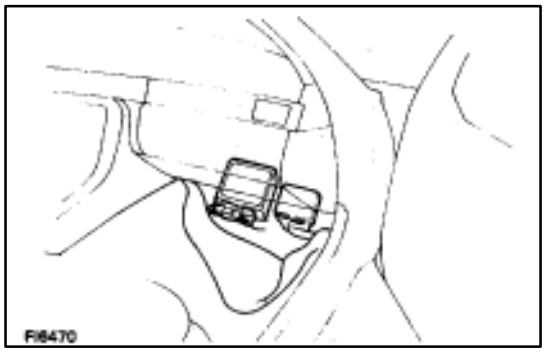

PREPARATION

1. Turn the ignition switch to LOCK position.
2. Turn up the passenger side floor mat.
3. Remove the ECU protector.
4. Disconnect the connector from the ECU.
   After completely loosening the bolt, the two parts of the connector can be separated.
   NOTICE:
   - **Do not pully the wire harness when disconnecting the connector.**
   - **When disconnecting the connector, the ECU's backup power source is cut off, so the malfunction codes, etc. recorded in the ECU memory are cancelled.**
   - **Never insert a tester probe or male terminal used for inspection purposes into the female terminal of the vehicle wire harness. Otherwise, the female terminal may be widened, which can result in faulty connection.**

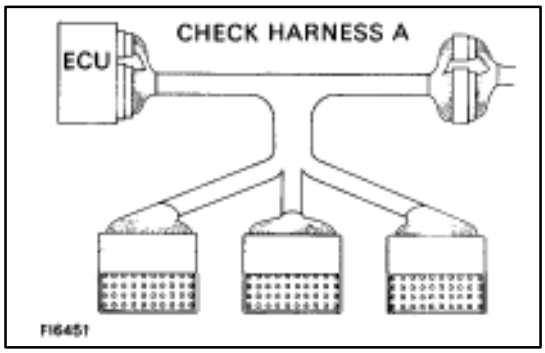

5. Connect the Check Harness A between ECU and connector of vehicle wire harness.
   SST 09990–01000
   HINT: The arrangement of the check connector terminals are the same as those of the ECU.
   See page TR–31
6. Disconnect the Check Harness A.
7. Reconnect the connector to the ECU.
   (a) Match the male connector correctly with the female connector, then press them together.
   (b) Tighten the bolt
   Make sure the connector is completely connected, by tightening the bolt until there is a clearance of less than 1 mm (0.04 in.) between bottom of the male connector and end of the female connector.
8. Install the ECU protector and floor mat.

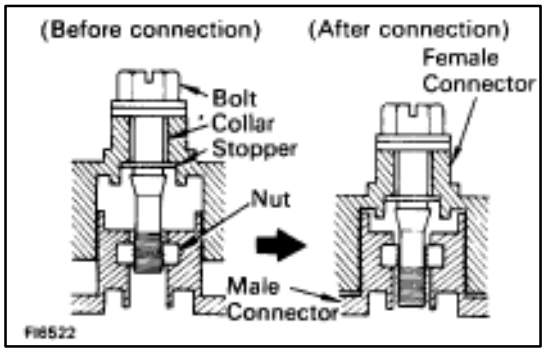

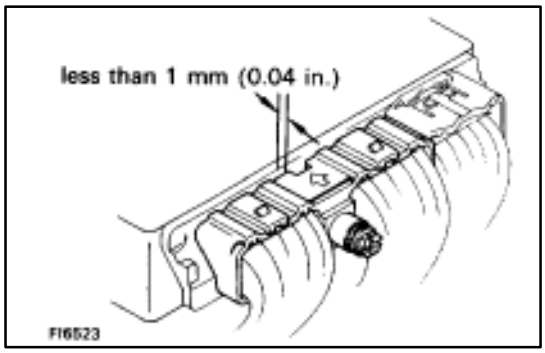

WhereEverybodyKnowsYourName

TERMINALS OF ECU

ECU Terminals

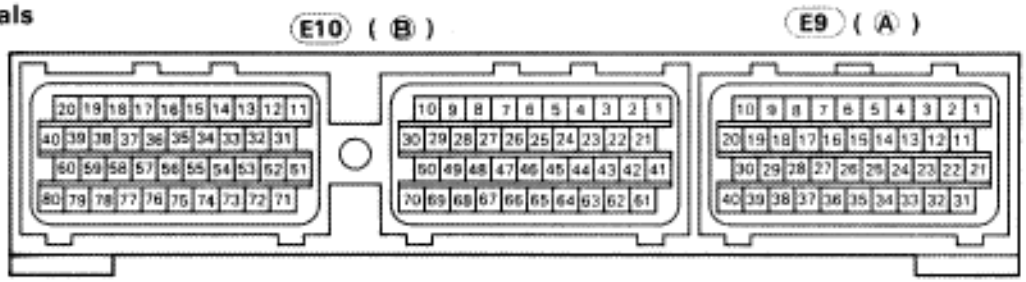

FI8460

Terminal No.	Symbol	Connection	Terminal No.	Symbol	Connection
E9 – 1	IGSW	Ignition switch	E9 – 31	+B	EFI main relay
2	SPD	Speed sensor No. 1	32	+B1	EFI main relay
3	KD	Kick-down switch	33	BATT	Battery
4	STP	Stop light switch	34	A/C	A/C control assembly
5	—	—	35	—	—
6	W	"CHECK" engine warning light	36	—	—
7	R	Neutral start switch	37	TR	TRAC ECU
8	—	—	38	NEO	TRAC ECU
9	2	Neutral start switch	39	VTO2	TRAC ECU
10	L	Neutral start switch	40	VTO1	TRAC ECU
11	AD	Cruise control ECU	E10 – 1	NCO⊖	T/M input speed sensor
12	OD1	Cruise control ECU	2	—	—
13	—	—	3	SP2⊖	Speed sensor No. 2 (for ECT)
14	—	—	4	E11	ECU ground
15	—	—	5	G2⊖	Cam position sensor
16	—	—	6	G1⊖	Cam position sensor
17	TT	TDCL	7	NE⊖	Engine speed sensor
18	P	ECT pattern select switch	8	—	—
19	TE2	Check connector	9	S2	ECT solenoid
20	TE1	Check connector	10	S1	ECT solenoid
21	DI	Fuel pump ECU	11	—	—
22	FPC	Fuel pump ECU	12	—	—
23	ACMG	A/C magnet clutch relay	13	SLN⊖	ECT solenoid No. 4
24	M-REL	EFI main relay	14	SLU⊖	ECT solenoid No. 3
25	—	—	15	—	—
26	—	—	16	—	—
27	—	—	17	# 40	Injectors (No. 3 and No. 5)
28	OD2	O/D main switch	18	# 30	Injectors (No. 4 and No. 6)
29	—	—	19	# 20	Injectors (No. 2 and No. 8)
30	—	—	20	# 10	Injectors (No. 1 and No. 7)

WhereEverybodyKnowsYourName

TERMINALS OF ECU (Cont'd)

ECU Terminals

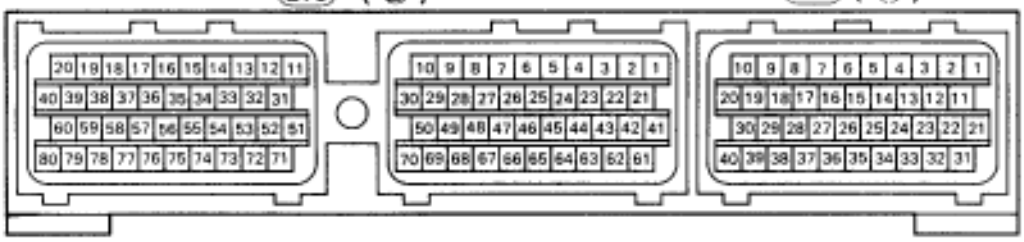

Terminal No.	Symbol	Connection	Terminal No.	Symbol	Connection
E10 – 21	NCO	T/M input speed sensor	E10 – 51	—	———
22	—	———	52	HTL2	Sub-oxygen sensor heater (on left bank)
23	SP2	Speed sensor No. 2 (for ECT)	53	HTR2	Sub-oxygen sensor heater (on right bank)
24	—	———	54	—	———
25	G2	No. 2 cam position sensor	55	—	———
26	G1	No. 1 cam position sensor	56	IGT2	No. 2 igniter
27	NE	Engine speed sensor	57	IGT1	No. 1 igniter
28	VF2	Check connector	58	IGF1	No. 1 igniter
29	VF1	Check connector	59	IGF2	No. 2 igniter
30	—	———	60	—	———
31	—	———	61	—	———
32	ISC4	ISC valve	62	—	———
33	ISC3	ISC valve	63	IDL2	Sub-throttle position sensor
34	ISC2	ISC valve	64	IDL1	Throttle position sensor
35	ISC1	ISC valve	65	E2	Sensor ground
36	EGR4*	EGR valve	66	KS	Air flow meter
37	EGR3*	EGR valve	67	OXR2	Sub-oxygen sensor (on right bank)
38	EGR2*	EGR valve	68	OXL2	Sub-oxygen sensor (on left bank)
39	EGR1	EGR valve (or VSV)	69	E1	ECU ground
40	—	———	70	—	———
41	VC	Throttle position sensor. Air flow meter.	71	HTL1	Main oxygen sensor heater (on left bank)
42	VTA2	Sub-throttle position sensor	72	HTR1	Main oxygen sensor heater (on right bank)
43	VTA1	Throttle position sensor	73	FPU	Fuel pressure up VSV
44	THW	Water temp. sensor	74	PAG	EVAP purge VSV
45	THA	Intake air temp. sensor	75	—	———
46	THG*	EGR gas temp. sensor	76	NSW	Neutral start switch
47	OXR1	Main oxygen sensor (on right bank)	77	STA	Starter relay
48	OXL1	Main oxygen sensor (on left bank)	78	STJ	Cold start injector
49	KNK2	No. 2 knock sensor	79	EO2	Power ground
50	KNK1	No. 1 knock sensor	80	EO1	Power ground

WhereEverybodyKnowsYourName

STANDARD VALUE OF ECU TERMINALS

(※ : A=(E9), B=(E10))

※ Symbols (Terminals No.)	STD Voltage (V)	Condition
BATT (A33) – E1 (B69)	10 ~ 14	Always
IGSW (A1) + B (A31) + B1 (A32) – E1 (B69)	10 ~ 14	IG switch ON
VC (B41)–E2 (B65)	4.0 ~ 6.0	IG switch ON
IDL1 (B64) IDL2 (B63) – E2 (B65)	Below 1.0	IG switch ON Main or sub throttle valve fully closed.
	10 ~ 14	IG switch ON Main or sub throttle valve fully open.
VTA1 (B43) VTA2 (B42) – E2 (B65)	0.1 ~ 1.0	IG switch ON Throttle valve fully closed.
	3.0 ~ 6.0	IG switch ON Throttle valve fully open.
KS (B66) – E1 (B69)	Pulse generation (0 and 4 ~ 6)	Idling
THA (B45) – E2 (B65)	1.0 ~ 3.0	Idling, Intake air temp. 20°C (68°F).
THW (B44) – E2 (B65)	0.1 ~ 1.0	Idling, Water temp. 80°C (176°F).
STA (B77) – E1 (B69)	6.0 or more	Cranking
#10 (B20), #20 (B19) #30 (B18), #40 (B17) – E01 (B80)	10 ~ 14	IG switch ON
	Pulse generation	Idling
IGT1 (B57), IGT2 (B56) – E1 (B69)	Pulse generation (0 and 4 ~ 6)	Idling
IGF1 (B58), IGF2 (B59) – E1 (B69)	Below 1.0	IG switch ON
	Pulse generation (0 and 4 ~ 6)	Idling
G1 (B26), G2 (B25) – G1± (B6)	Pulse generation (–1.0 ~ +1.0 or higher)	Idling
NE (B27) – NE± (B7)	Pulse generation (–0.8 ~ +0.8 or higher)	Idling
MREL (A24) – E1 (B69)	10 ~ 14	IG switch ON
FPC (A22) – E1 (B69)	4.2 ~ 6.0	Cranking, Sudden racing (6,000 rpm)
	Pulse generation (0 and 4 ~ 6)	Idling
DI (A21) – E1 (B69)	7.5 or more	Idling
FPU (B73) – E1 (B69)	10 ~ 14	IG switch ON
	Below 2.0	Restarting high temp.
PAG (B74) – E1 (B69)	10 ~ 14	Idling

WhereEverybodyKnowsYourName

STANDARD VALUE OF ECU TERMINALS (Cont'd)

(※: A=(E9), B=(E10))

※ Symbols (Terminals No.)	STD Voltage (V)	Condition
ISC1 (B35), ISC2 (B34) ISC3 (B33), ISC4 (B32) –E1 (B69)	10 ~ 14	IG switch ON
VF1 (B29), VF2 (B28) – E1 (B69)	1.0 ~ 4.0	Maintain engine speed at 2,500 rpm for two minutes after warming up then return to idling.
OXL1 (B48), OXR1 (B47) – E1 (B69)	Pulse generation (0 ~ 1.0)	Maintain engine speed at 2,500 rpm for two minutes after warming up.
HTL1 (B71), HTR1 (B72) HTL2 (B52), HTR2 (B53) – E01 (B80)	Below 2.0	Idling
	10 ~ 14	IG switch ON
EGR1 (B39), EGR2 (B38) EGR3 (B37), EGR4 (B36) – E1 (B69)*	10 ~ 14	IG switch ON
EGR (B39) – E1 (B69)	10 ~ 14	IG switch ON
KNK1 (B50), KNK2 (B49) – E1 (B69)	Pulse generation (Frequency : 6.6 KHz)	Idling
NSW (B76) – E1 (B69)	10 ~ 14	IG switch ON Other shift position in "P", "N" ranges.
	Below 1.0	IG switch ON Shift position in "P", "N" ranges.
SPD (A2)–E1 (B69)	Pulse generation (0 and 10 ~ 14)	IG switch ON Rotate driving wheel slowly.
TE1 (A20) – E1 (B69)	10 ~ 14	IG switch ON
TE2 (A19) – E1 (B69)	10 ~ 14	IG switch ON
W (A6)–E1 (B69)	10 ~ 14	Idling
	Below 2.0	IG switch ON
AD (A11) – E1 (B69)	10 ~ 14	Idling
ODI (A12) – E1 (B69)	4.0 ~ 6.0	IG switch ON
A/C (A34) – E1 (B69)	Bellow 2.0	A/C switch ON (At idling)
	10 ~ 14	A/C switch OFF
ACMG (A23)–E1 (B69)	Below 2.0	A/C switch ON (At idling)
	10 ~ 14	A/C switch OFF
TR (A37) – E1 (B69)	10 ~ 14	IG switch ON
VTO1 (A40) VTO2 (A39) – E2 (B65)	Below 1.0	IG switch ON Main or sub throttle valve fully closed.
	3.0 ~ 5.5	IG switch ON Main or sub throttle valve fully open.
NEO (A38) – E1 (B69)	4.0 ~ 6.0	IG switch ON

* Only for USA specification vehicles.

WhereEverybodyKnowsYourName

MATRIX CHART OF PROBLEM SYMPTOMS

When the malfunction code is not confirmed in the diagnostic code check and the problem still can not be confirmed in the basic inspection, then proceed to this step and perform troubleshooting according to the numbered order given in the table below.

The circuits indicated by on the matrix chart can be inspected using the TCCS checker.

	See page	TR–88	TR–10	TR–108	TR–11	TR–12	TR–12	TR–13	TR–13	TR–13	TR–14	TR–11	TR–14	AC–84	ST–24	IG–6	IG–7	IG–9	IG–24	EM–30	AT–66	BE–381	IN–32
	Suspect area	※	※			※			※		※												
	Symptom	Air flow meter circuit	Starter signal circuit	EGR System	Switch condition signal circuit	Neutral start switch circuit	ECU power source circuit	Back up power source circuit	Injector circuit	Cold start injector circuit	ISC valve circuit	Fuel pump control circuit	Fuel pressure control VSV circuit	A/C signal circuit (Compressor circuit)	Starter and Starter relay	Ignition signal circuit (Spark test)	Spark plug	Ignition coil	Distributor	Compression	ECT faulty	Theft deterrent ECU	Engine & ECT ECU
Does not start	Engine does not crank					2									1							3	
	No initial combustion						1		5	6		3				2	4						
	No complete combustion								6	7		1				5	4	2	3				
Difficult to start	Difficult to start normally		1						8	9	2	3					6	4	5	7			
	Difficult to start cold		1						5	3	2	4					8	6	7				
	Difficult to start hot		1						5	6	2	4	3				9	7	8				
Poor Idling	Incorrect first idle				1						2												
	High engine idle speed				1	5	4	6			2			3									
	Low engine idle speed	7			3	4		8	6		1	5		2									
	Rough idling	3		5	1			12	4	13	2	8				6	11	9	10	7			
	Hunting	3			1		4				2	5											
Poor Driveability	Hesitation/Poor acceleration	2			1				3			4				5	8	6	7		9		
	Muffler explosion (after fire)				1				5								4	2	3				
	Surging				1				5			2					4		3				
Engine Stall	Engine stalls soon after starting	2								4	3	1											
	After acceleration pedal depressed	2			1					3													
	After acceleration pedal released								1	3	2												4
	During A/C operation										1			2									3
	When N to D shift					1				3	2												

WhereEverybodyKnowsYourName

LOCATION OF CONNECTORS

Location of Connectors in Engine Compartment

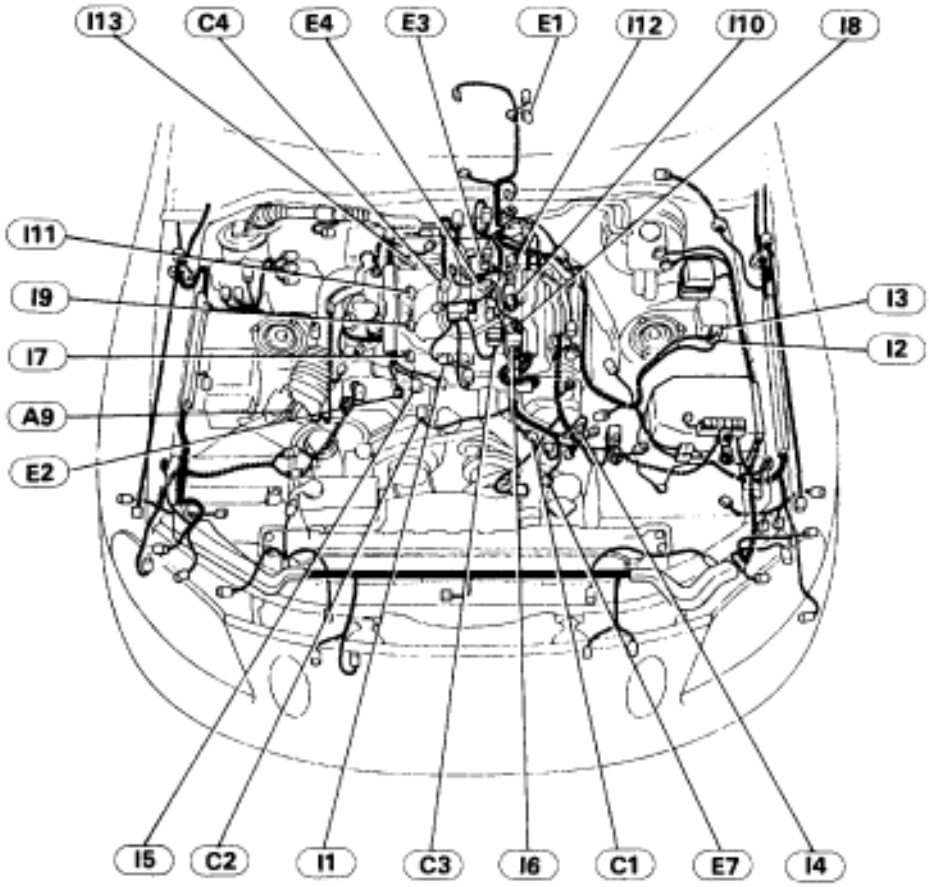

A9
Intake Air Temp. Sensor

IS-5-1

C1
No. 1 Cam Position sensor

Ie-2-1-D

C2
No. 2 Cam Position Sensor

Ie-2-1-E

C3
Check Connector

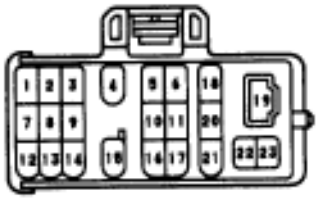

Iej-23-1

C4
Cold Start Injector

IS-2-1-I

E1
ECT No. 1, 2, 3, 4 Solenoid Valve

Ie-6-1

WhereEverybodyKnowsYourName

E2
Water Temp. Sensor

V-2-1-C

E3
EGR Gas Temp. Sensor

Ie-2-1-C

E4
EGR Valve

Ie-6-1-D

E7
Engine Speed Sensor

Ie-2-1-b

I1
ISC Valve

Ie-6-1-D

I2
No. 1 Igniter

Ie-5-1-B

I3
No. 2 Igniter

Ie-5-1-B

I4
No. 1 Ignition Coil

IS-2-1-L

I5
No. 2 Ignition Coil

IS-2-1-L

I6 I7 I8 I9
I10 I11 I12 I13
Injector

Ie-2-1-a

WhereEverybodyKnowsYourName

Location of Connectors in Engine Compartment (Cont'd)

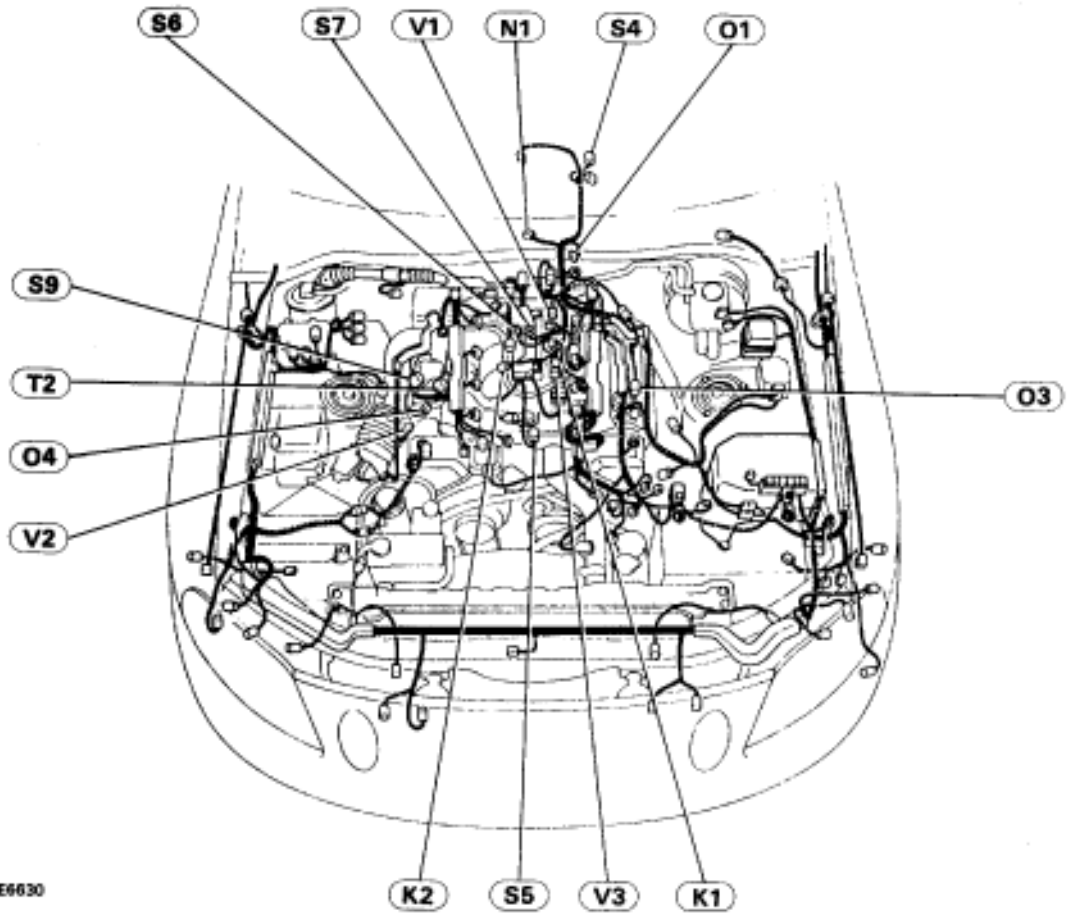

K1 K2
No. 1, 2 Knock Sensor

Ie-1-1-B

N1
Neutral Start Switch

SH-9-1-A

O1
O/D Direct Clutch Speed Sensor

Ie-2-1-X

O3
Main Oxygen Sensor

Ie-4-1-B

O4
Main Oxygen Sensor

Ie-4-1-B

S4
No. 2 Speed Sensor

Ie-2-1-X

WhereEverybodyKnowsYourName

S5

Start Injector Time Switch

V-2-1-A

S6

Starter Motor

H-1-1

S9

Sub-Throttle Position Sensor

IV-4-1

T2

Throttle Position Sensor

IS-4-1-C

S7

Starter Motor

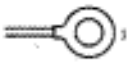

A-A

V1 **V2**

EGR VSV
EVAP VSV

Ie-2-1-X

V3

Fuel Pressure Control VSV

Ie-2-1-W

WhereEverybodyKnowsYourName

Location of Connectors in Engine Compartment (Cont'd)

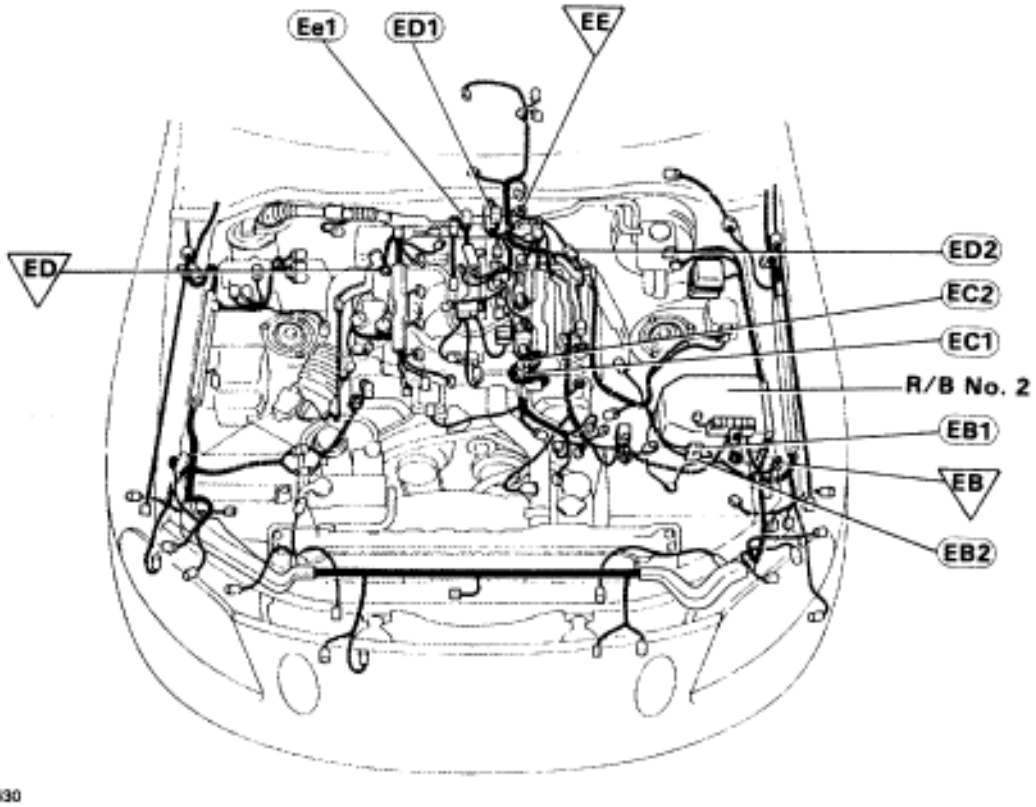

WhereEverybodyKnowsYourName

EB1

Ie-8-1-A

Ie-8-2-A

EB2

Ig-3-1-A

Ig-3-2-A

EC1

Ie-6-1-E

Ie-6-2-E

EC2

Ie-4-1-C

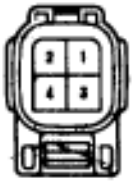

Ie-4-2-C

ED1

Ie-8-1-A

Ie-8-2-A

ED2

Ie-2-1-M

Ie-2-2-M

Ee1

Ie-2-1-K

Ie-2-2-K

R/B No. 2

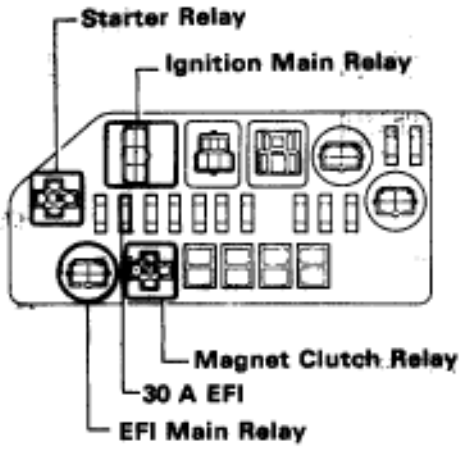

BE6625

WhereEverybodyKnowsYourName

Location of Connectors in Instrument Panel

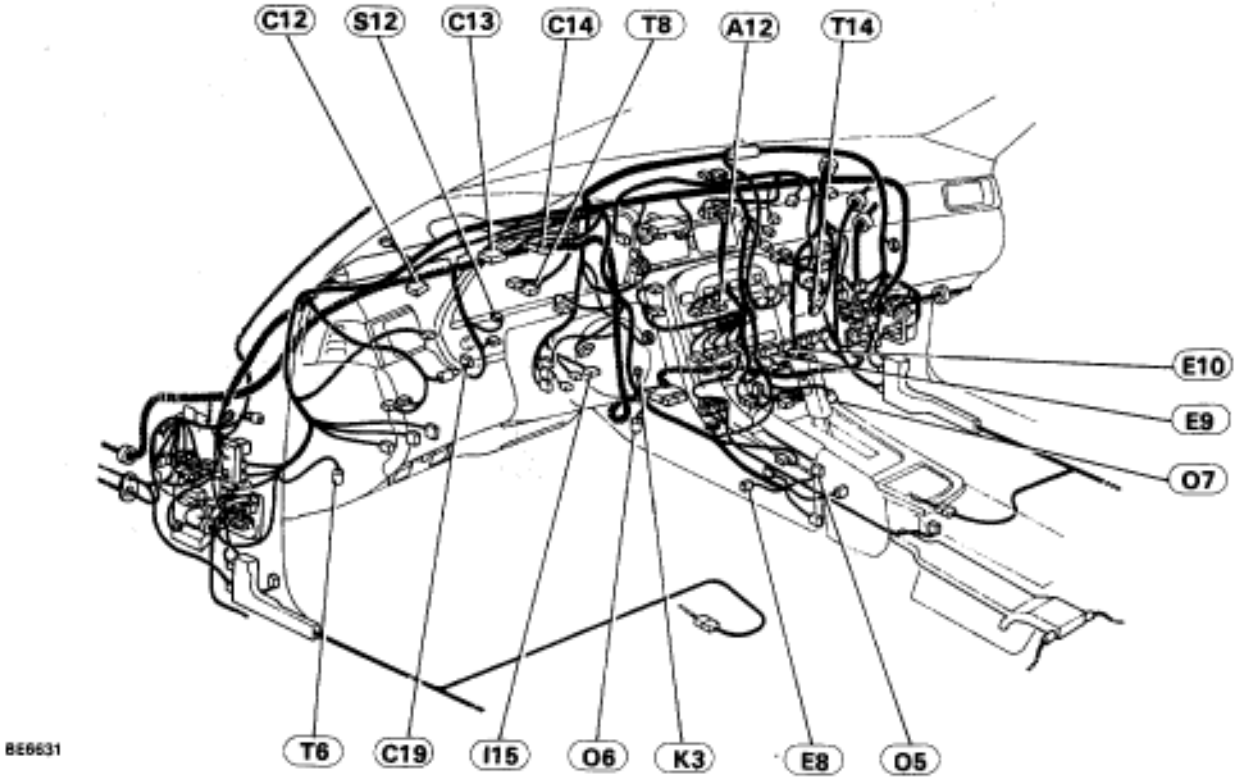

A12

A/C Control Assembly

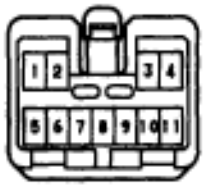

h-11-1

C12

Combination Meter
"CHECK" Engine Warning Light

eh-23-1

C13

"CHECK" Engine Warning Light

e-18-1

C14

ECT Indicator Light

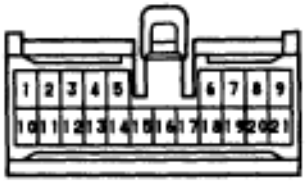

h-21-1

C19

Cruise Control ECU

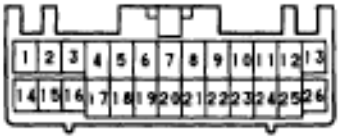

Vd-2b-1-8

E8

ECT Pattern Select Switch

e-4-1

WhereEverybodyKnowsYourName

E9
EFI ECU

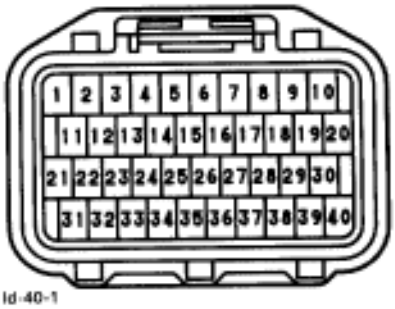

Id-40-1

E10
EFI ECU

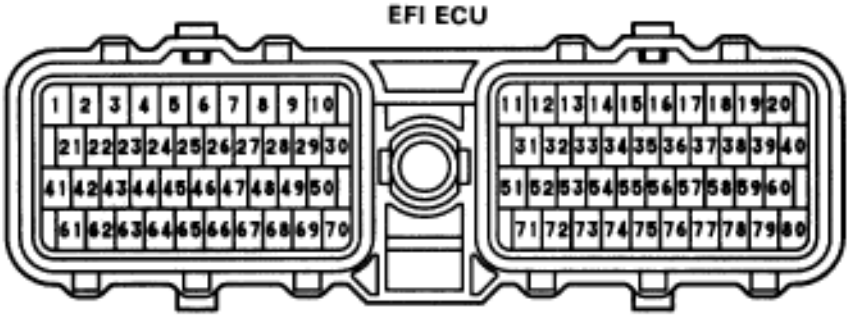

Id-80-1

I15
IG Switch

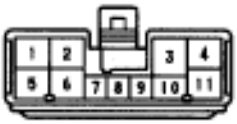

eg-11-1

K3
Kickdown Switch

Ia-2-1-X

O5
O/D Main Switch

e-2-1

O6 O7
Sub-Oxygen Sensor

Ie-4-1-D

S12
Stop Light Switch

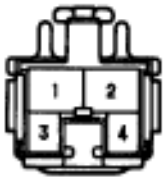

eg-4-1

T6
TDCL

S-17-1

T8
Theft Deterrent ECU

e-20-1

T14
TRAC ECU

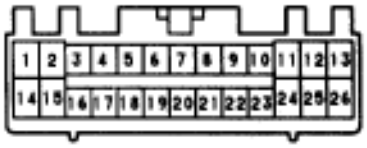

Vd-26-1

WhereEverybodyKnowsYourName

Location of Connectors in Instrument Panel (Cont'd)

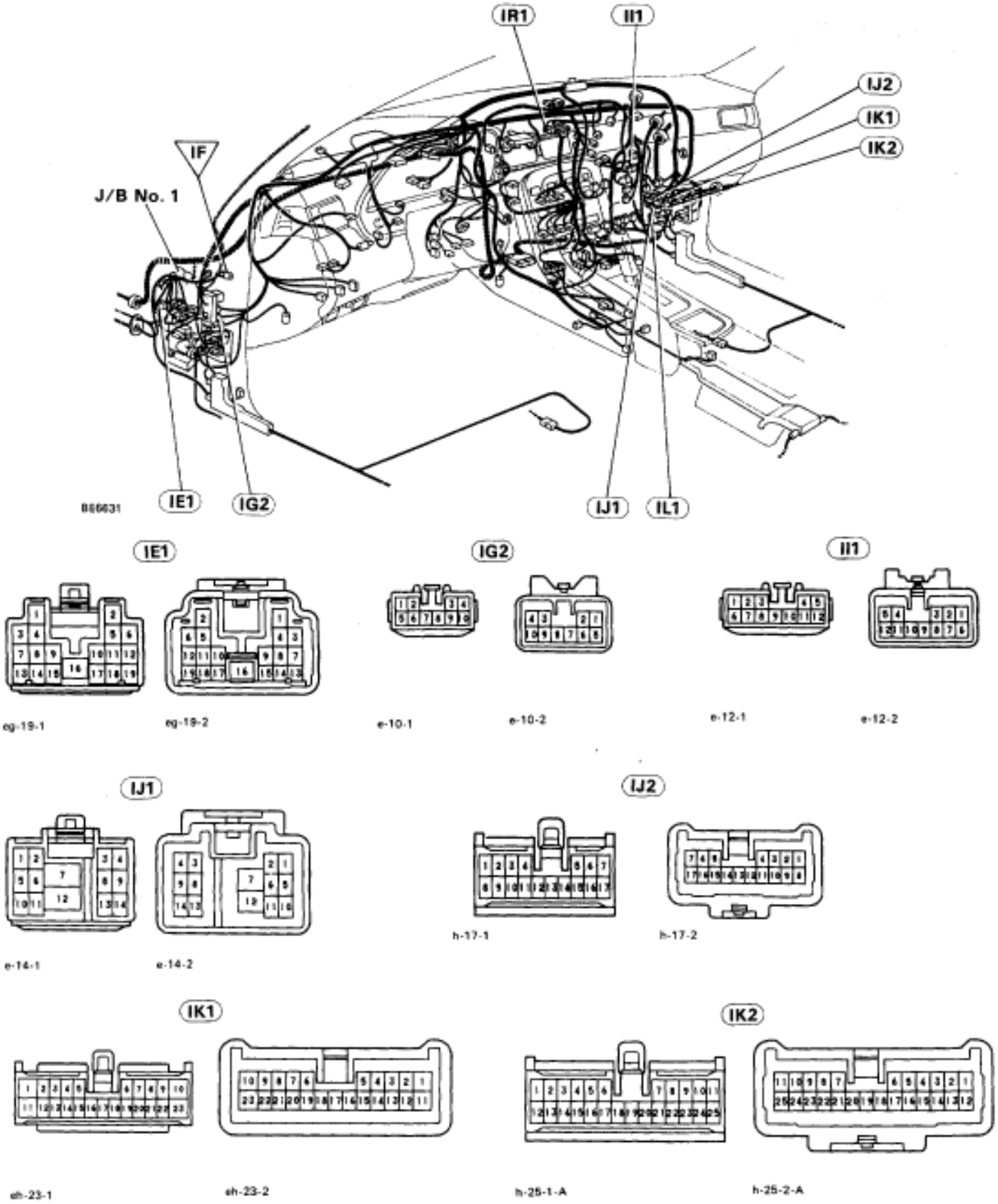

WhereEverybodyKnowsYourName

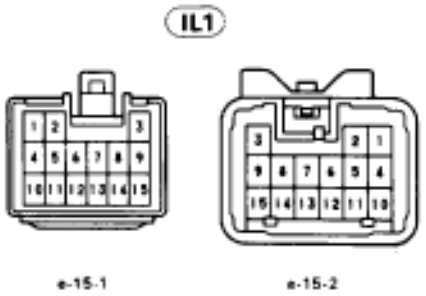

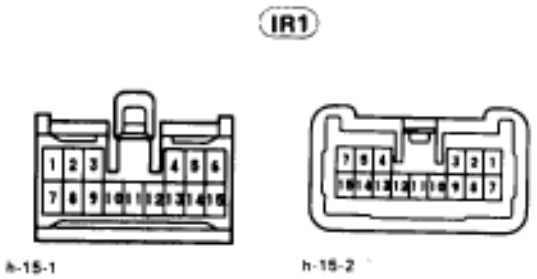

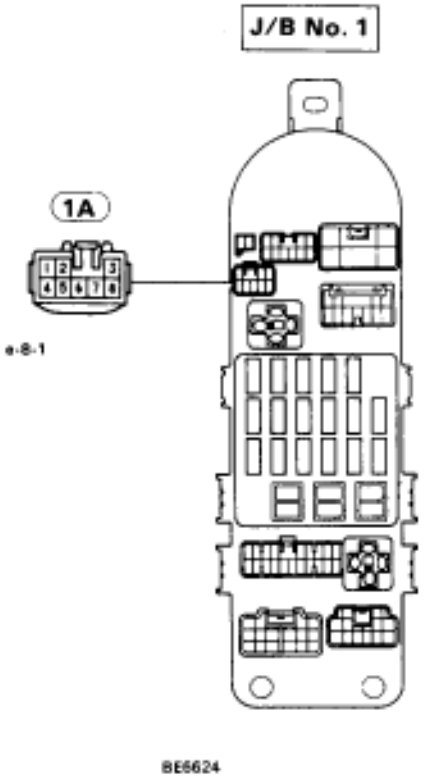

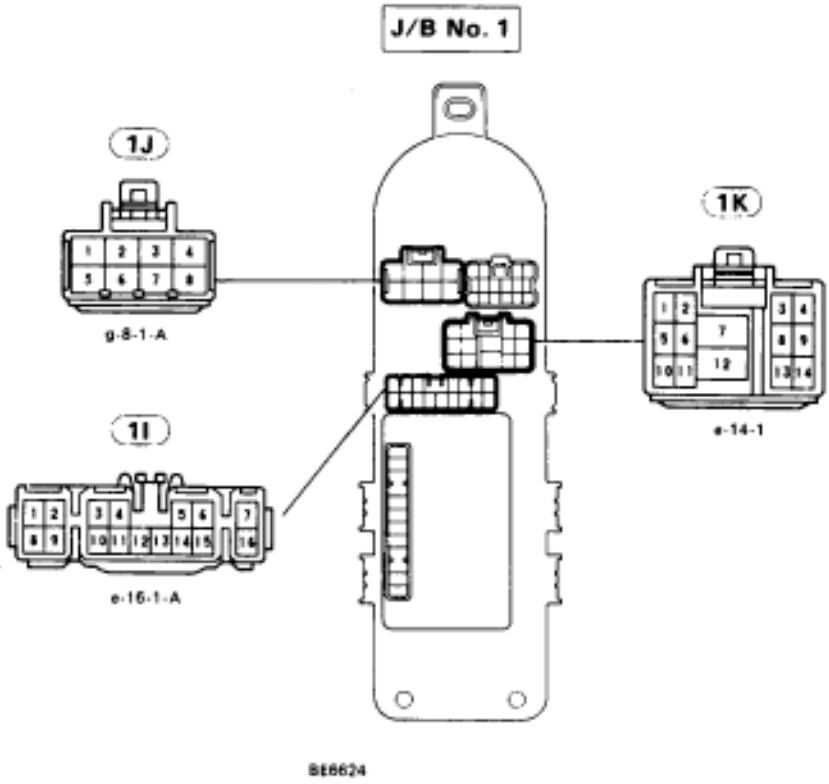

WhereEverybodyKnowsYourName

Location of Connectors in Body

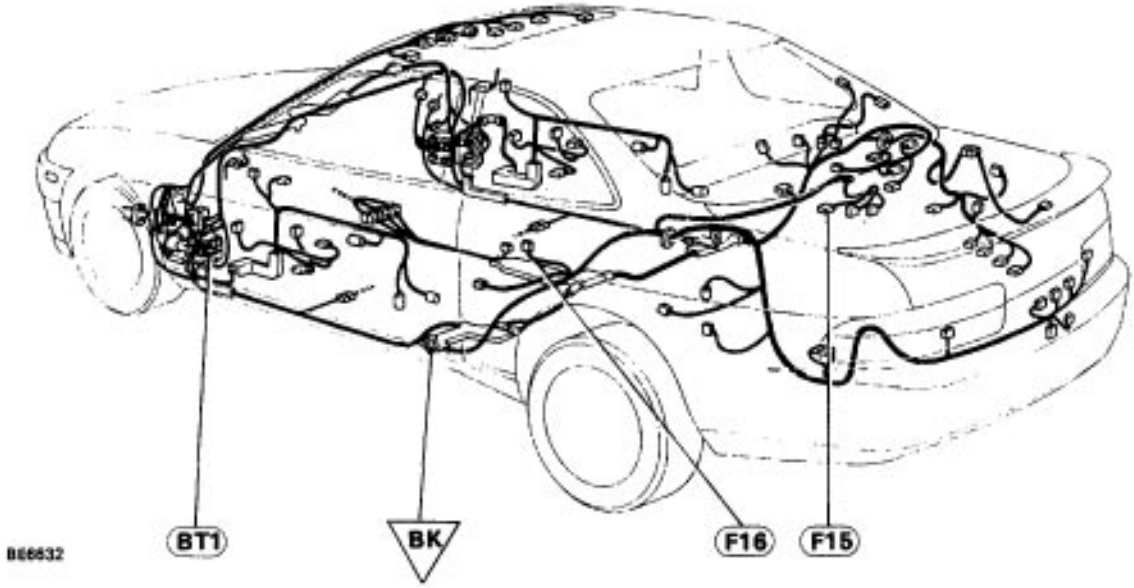

F15
Fuel Pump

g-2-1

F16
Fuel Pump ECU

e-5-1

BT1

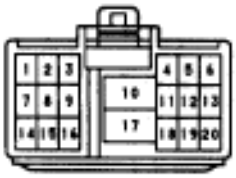

e-20-1-B

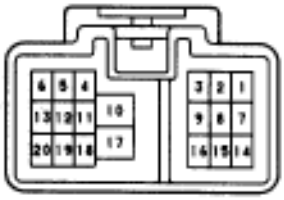

e-20-2-B

WhereEverybodyKnowsYourName

–MEMO –

WhereEverybodyKnowsYourName

CIRCUIT INSPECTION

Diag. Code 12	RPM Signal Circuit (No.1)

— CIRCUIT DESCRIPTION

Cam position sensors (G1 and G2 signals) and engine speed sensor (NE signal) consist of a signal plate and a pick up coil.
The G1, G2 signal plates have one tooth each on its outer circumference and are mounted on the left and right bank camshafts.
When the camshafts rotate, the protrusion on the signal plate and the air gap on the pick up coil change, causing fluctuations in the magnetic field and generating an electromotive force in the pick up coil.
The NE signal plate has 12 teeth and is mounted on the crankshaft. The NE signal sensor generates 12 NE signals per engine revolution. The ECU detects the standard crankshaft angle based on the G1, G2 signals, and the actual crankshaft angle and the engine speed by the NE signals.

Code No.	Diagnostic Code Detecting Condition	Trouble Area
12	No ”NE” or ”G1” and ”G2” signal to ECU within 2 sec. after cranking.	• Open or short in engine speed sensor, No. 1, No. 2 cam position sensor circuit • Engine speed sensor • No. 1, No. 2 cam position sensor • Starter • ECU

WhereEverybodyKnowsYourName

DIAGNOSTIC CHART

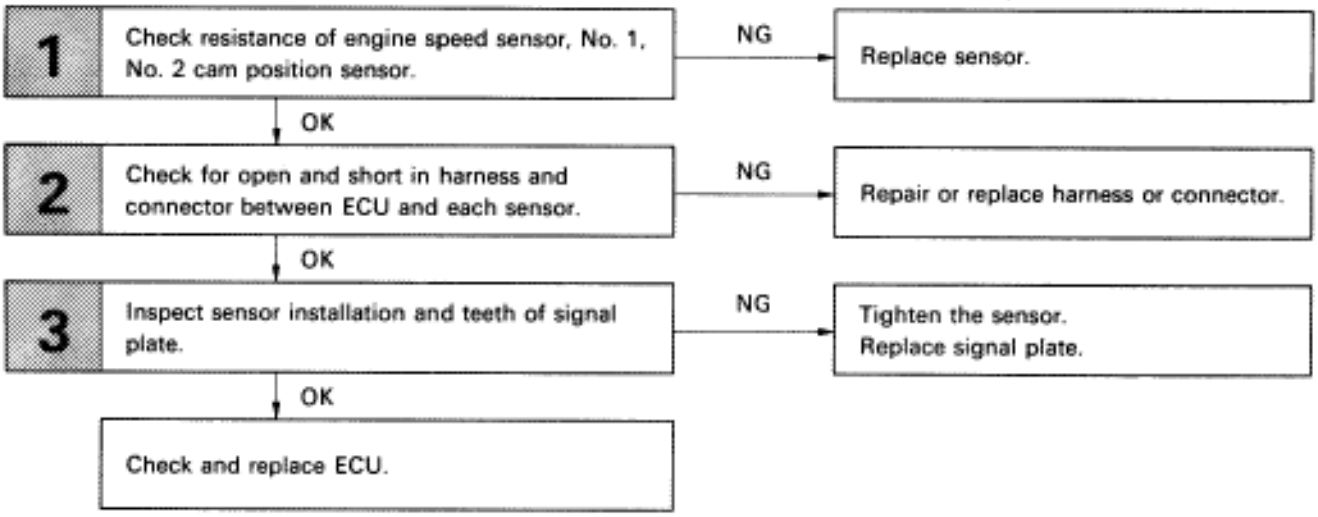

WIRING DIAGRAM

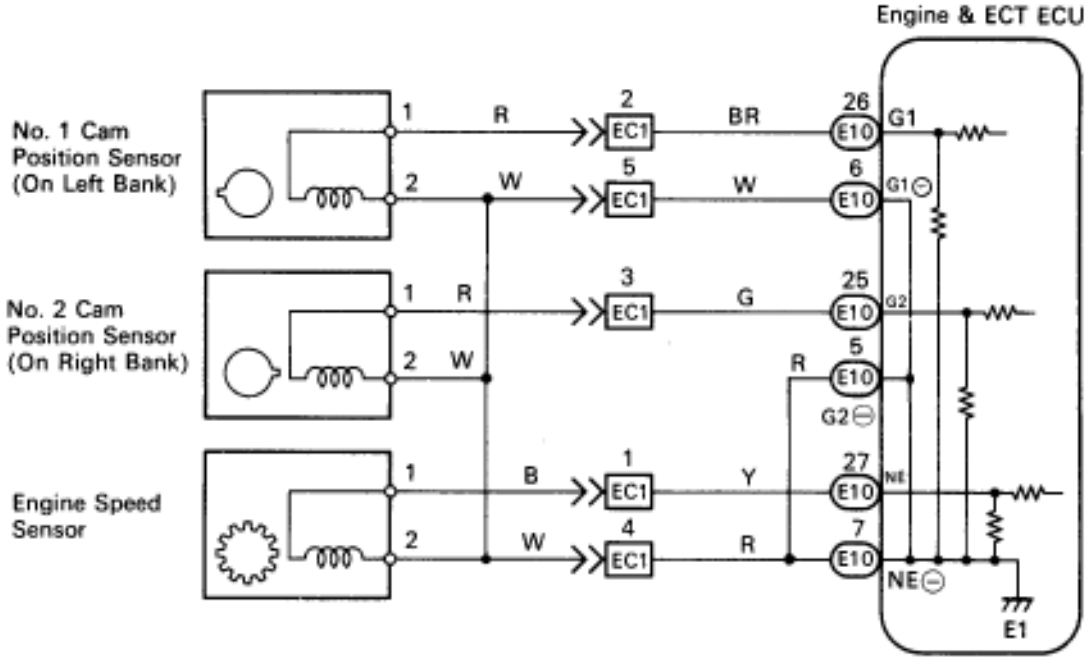

WhereEverybodyKnowsYourName

INSPECTION PROCEDURE

1 Check engine speed sensor, No. 1, No. 2 cam position sensor

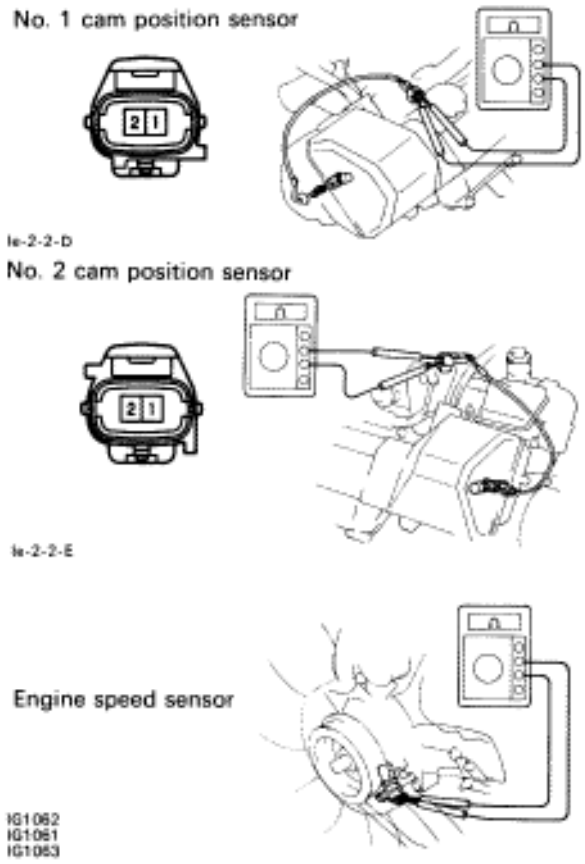

P For engine speed sensor.

(2) Remove engine under cover.

(2) Disconnected engine speed sensor connector.

For No.1, No. 2 cam position sensor,

(2) Disconnect No. 1, No. 2 cam poisition sensor connectors.

C Measure resistance of engine speed sencor, No. 1 and No. 2 cam position sensor.

OK

	Resistance
No. 1 cam position sensor	950 ~ 1,250 Ω
No. 2 cam position sensor	950 ~ 1,250 Ω
Engine speed sensor	950 ~ 1,250 Ω

Reference INSPECTION USING OSCILLOSCOPE

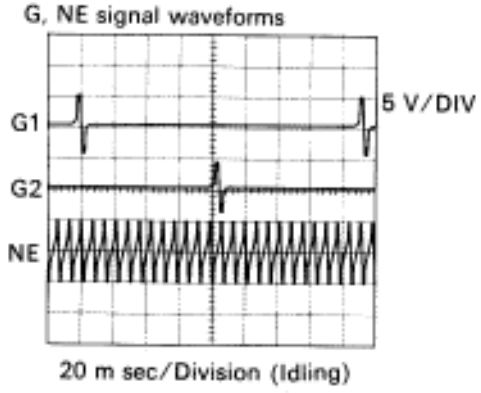

- During cranking or idling, check between terminals G1, G2 and G1⊖, NE and NE⊖ of engine & ECT ECU.

HINT: The correct waveforms appear as shown in the illustration on the left.

OK

NG **Replace engine speed sensor, No. 1, No. 2 cam poistion sensor.**

WhereEverybodyKnowsYourName

2	**Check for open and short in harness and connector between engine & ECT ECU and each sensor (See page IN–27).**

OK

NG → **Repair or replace harness or connector.**

3	**Inspect sensor installation and teeth of signal plate.**

OK

NG → **Tighen the sensor.**
Replace signal plate.

Check and replace engine and ECT ECU.

WhereEverybodyKnowsYourName

Diag. Code 13 | RPM Signal Circuit (No.2)

CIRCUIT DESCRIPTION

Refer to RPM signal circuit (No. 1) on page TR–48.

Code No.	Diagnostic Code Detecting Condition	Trouble Area
13	No NE signal to ECU for 0.1 sec. or more at 1,000 rpm or more.	• Open or short in engine speed sensor circuit. • Engine speed sensor • ECU
	No 12 pulses of NE to ECU during the interval between G1 and G2 pulses.	• Open or short in engine speed sensor circuit. • Mechanical system malfunction (skipping teeth of timing belt, belt stretched) • Engine speed sensor • ECU
	Deviation in G (G1, G2) and NE signal continues for 1 sec. during idling (throttle fully closed) after engine warmed up.	• Mechanical system malfunction (skipping teeth of timing belt, belt stretched) • No. 1, No. 2 cam position sensor • ECU

DIAGNOSTIC CHART

HINT: Perform troubleshooting of diag. code 12 first. If no trouble is found, troubleshoot the following mechanical systems.

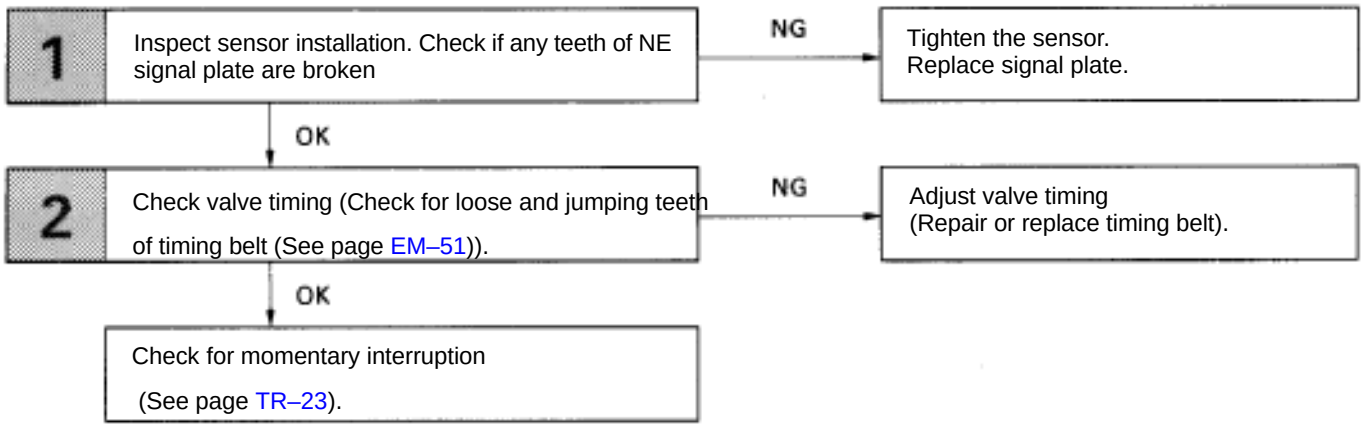

WhereEverybodyKnowsYourName

MEMO –

WhereEverybodyKnowsYourName

Diag. Code 14, 15 | Ignition Signal Circuit

— CIRCUIT DESCRIPTION

The ECU determines the ignition timing, turns on Tr1 at a predetermined angle (°CA) before the desired ignition timing and outputs an ignition signal (IGT) ”1” to the igniter.
Since the width of the IGT signal is constant, the dwell angle control circuit in the igniter determines the time the control circuit starts primary current flow to the ignition coil based on the engine rpm and ignition timing one revolution ago, that is, the time the Tr2 turns on.
When it reaches the ignition timing, the ECU turns Tr1 off and outputs the IGT signal ”O”.
This turns Tr2 off, interrupting the primary current flow and generating a high voltage in the secondary coil which causes the spark plug to spark. Also, by the counter electromotive force generated when the primary current is interrupted, the igniter sends an ignition confirmation signal (IGF) to the ECU.
The ECU stops fuel injection as a fail safe function when the IGF signal is not input to the ECU.

Code No.	Diagnostic Code Detecting Condition	Trouble Area
14	No IGF1 signal to ECU for 8–11 consecutive IGT1 signal.	• Open or short in IGF1 and IGT1 circuit from No. 1 igniter – ECU. • No. 1 igniter • ECU
15	No IGF2 signal to ECU for 8–11 consecutive IGT2 signal.	• Open or short in IGF2 and IGT2 circuit from No. 2 igniter – ECU. • No. 2 igniter • ECU

HINT: No. 1 igniter is for left bank and No. 2 igniter is for right bank.

WIRING DIAGRAM

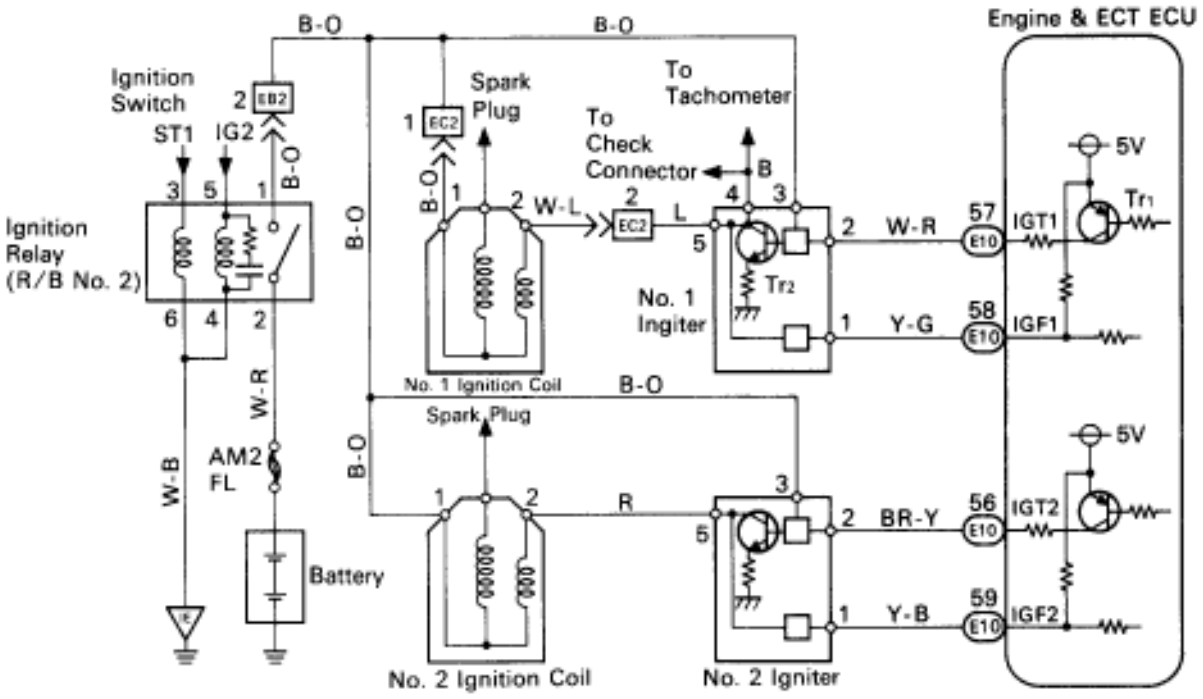

FI6479

WhereEverybodyKnowsYourName

DIAGNOSTIC CHART

Refer to inspection procedure in details.
HINT: If diag. code 14 is displayed, check No. 1 igniter circuit.
If diag. code 15 is displayed, check No. 2 igniter circuit.

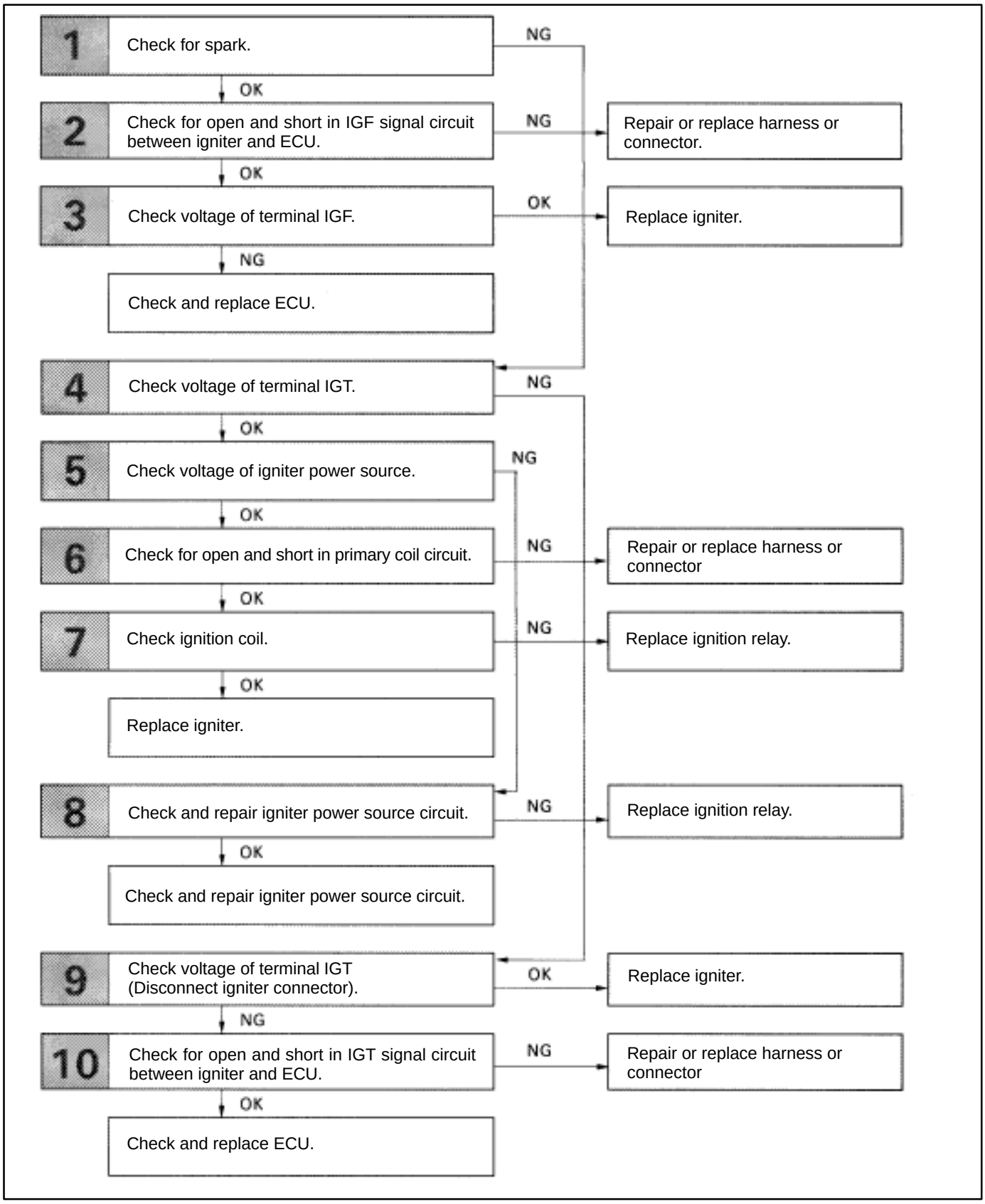

WhereEverybodyKnowsYourName

INSPECTION PROCEDURE

HINT: If diag. code 14 is displayed, check No. 1 igniter circuit.
If diag. code 15 is displayed, check No. 2 igniter circuit.

1	Check for Spark.
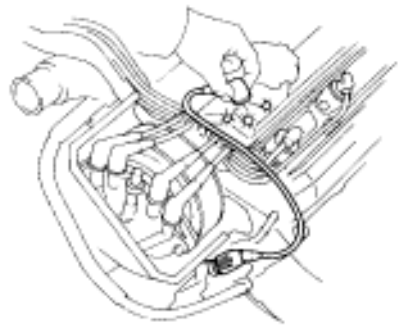	**C** Disconnect the high–tension cord from the distributor, hold its end about 12.5 mm (1/2”) from the ground, see if spark occurs while the engine is being cranked. **OK** **Spark should be generated.** **Hint** To prevent excessive fuel injected from the injectors during the check. Don’t crank the engine for more than 1–2 seconds at a time.

F14488

OK

NG **Go to step [4].**

2	Check for open and short in harness and connector in the IGF and IGT signal circuit between engine & ECT ECU and igniter (See page IN–27)

OK

NG **Repair or replace harness or connector.**

#	Disconnect igniter sonnector and check voltage between terminals IGF1, 2 of engine & ECT ECU connector and body ground.
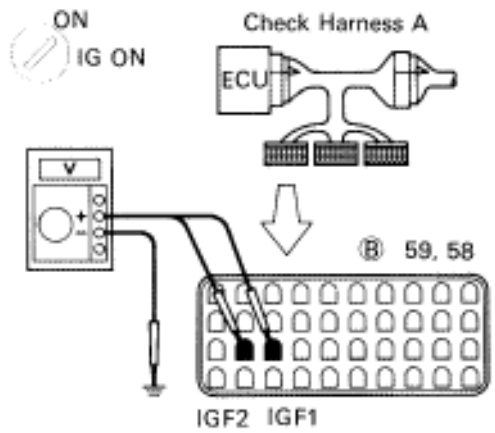	**P** (2) Disconnect igniter connector. (2) Connect the Check Harness A. (See page TR–30). (2) Turn ignition switch on. **C** Measure Voltage between terminals IGF1, 2 or engine & ECT ECU connector and body ground. **OK** **Voltage: 4 – 6 V**

BE6653
FI6501

OK

NG **Replace igniter.*1**

Check and replace engine & ECT ECU.	*1: When dia. code 14 is displayed, replace the igniter with 5 wire harness. (extra wire is for tachometer). When diag. code 15 is displayed, replace the igniter with 4 wire harness.

WhereEverybodyKnowsYourName

4 **Check voltage between terminals IGT1, 2 of engine and & ECT ECU connector and body ground.**

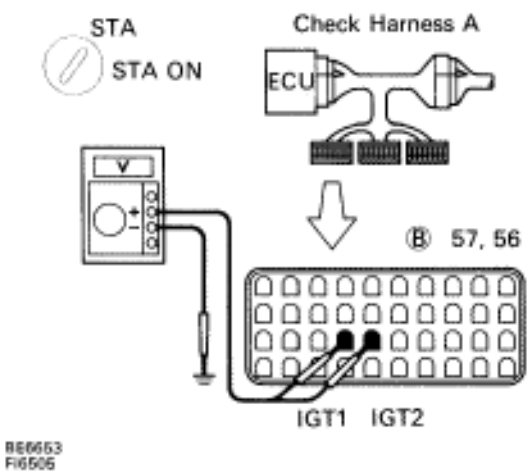

P Connect the Check Harness A.
(See page TR–30).

C Measure voltage between terminals IGT1, 2 of engine & ECT ECU connector and body ground when engine is cranked.

OK **Voltage:** **0.5 – 1.0 V**
(Neither 0 V nor 5 V)

Reference **INSPECTION USING OSCILLOSCOPE**

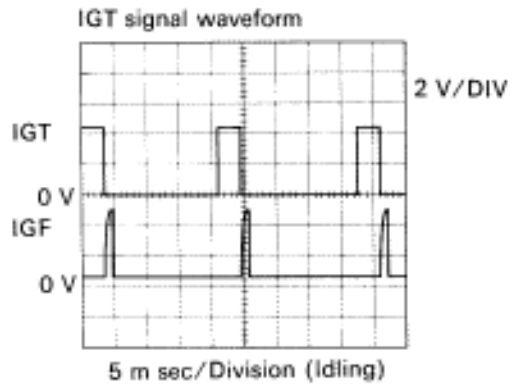

- During cranking or idling, check waveform between terminals IGT1, IGT2 and E1 of engine & ECT ECU.

HINT: The correct waveform appears as shown in the illustration on the left, with rectangle waves.

OK

NG **Go to step [9].**

5 **Check voltage between terminal 3 of No. 1, No. 2 igniter connectors and body ground.**

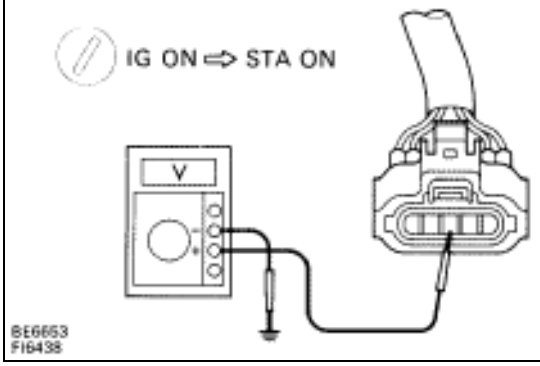

P Disconnect igniter connector.

C Mesure voltage between terminal 3 of No. 1, No. 2 igniter connectors and body ground, when ignitino switch is turned to “ON” and “STA” position.

OK **Voltage:** **10 – 14 V**

OK

NG **Go to step [8].**

WhereEverybodyKnowsYourName

6	**Check for open and short in harness and connector between ignition relay and ignition coil, ignition coil and igniter (See page IN–27).**

OK → **NG** → **Repair or replace harness or connector**

#	**Check ignition coil.**

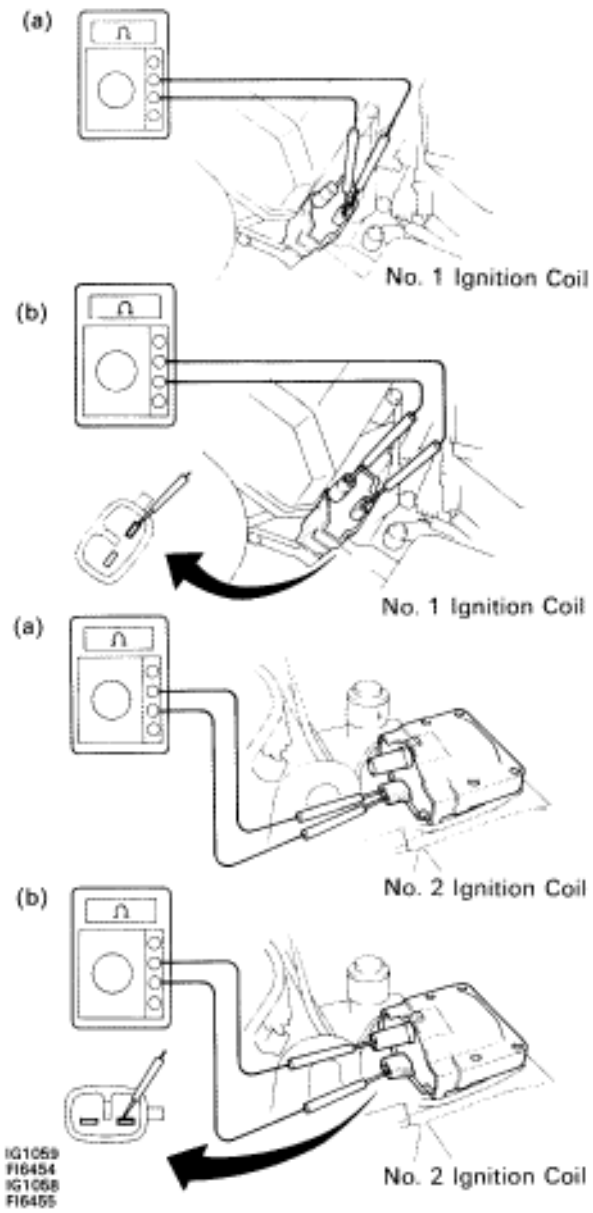

P Disconnect ignition coil connector.
(For No. 1 ignition coil (on left bank), remove the battery)

C (2) Check primary coil.
Measure resistance between terminals of ignition coil connector.

(2) Check secondary coil.
Measure resistance between terminal 1 of ignition coil connector and high–tension terminal.

OK

	Resistance
(a) Primary Coil (Cold)	0.40 – 0.50 Ω
(b) Secondary Coil (Cold)	10.2 – 13.8 kΩ

OK → **NG** → **Replace ignition coil.**

Replace Igniter. *1	*1: When diag. code 14 is displayed, replace the igniter with 5 wire harness. (extra wire is for tachometer). When diag. code 15 is displayed, replace the igniter with 4 wire harness

WhereEverybodyKnowsYourName

8 Check Ignition Relay.

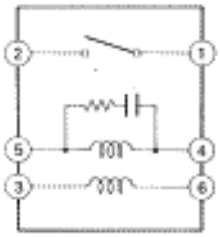

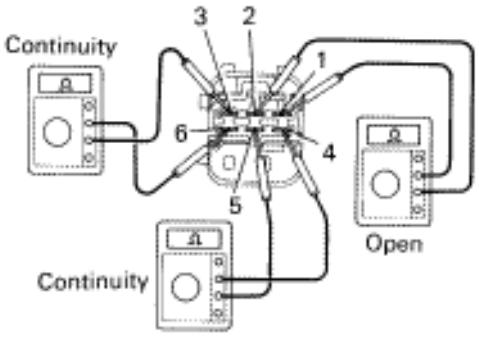

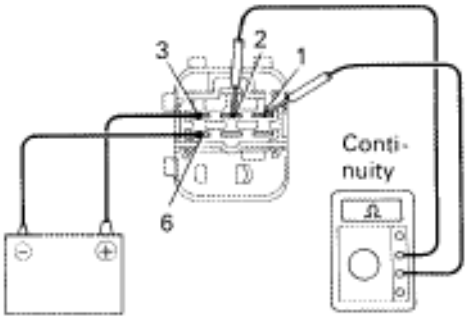

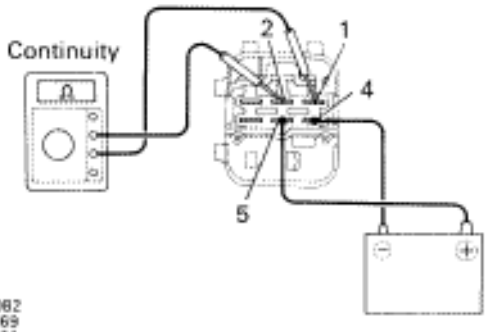

IG1082
FI4169
FI4170
FI4171

P Remove ignition relay.

C Check continuity between terminals of ignition relay shown below.

OK

Terminals 1 and 2	Open
Terminals 3 and 6	Continuity (Reference value 22 Ω)
Terminals 4 and 5	Continuity (Reference value 107 Ω)

C (2) Apply battery voltage between terminals 3 and 6, 4 and 5.

(2) Check continuity between terminals 1 and 2.

OK

Terminals 1 and 2	Continuity

OK

NG **Replace ignition relay.**

Check and repair harness or connector between battery and ignition relay, ignition relay and igniter.

WhereEverybodyKnowsYourName

9	Disconnect igniter connector and check voltage between terminals IGT1, 2 of engine & ECT ECU connector and body ground.

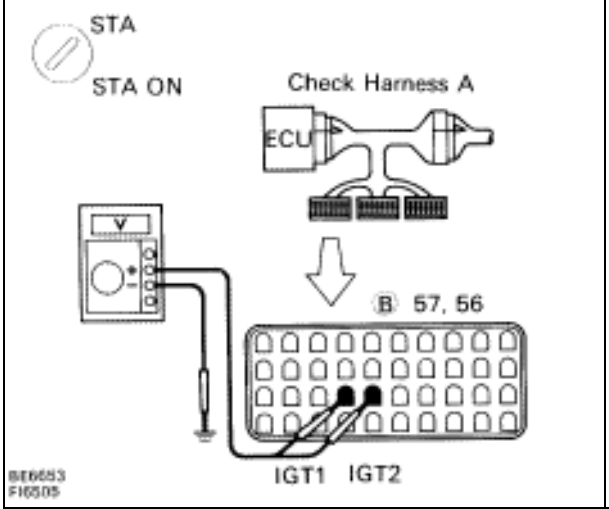

P Disconnect igniter connector.
Connect engine & ECT ECU connector.

C Measure voltage between terminals IGT1, 2 of engine & ECT ECU connector and body ground when engine is cranked.

OK **Voltage:** **0.5 – 1.0 V (Neither 0 V nor 5 V)**

Reference **INSPECTION USING OSCILLOSCOPE**

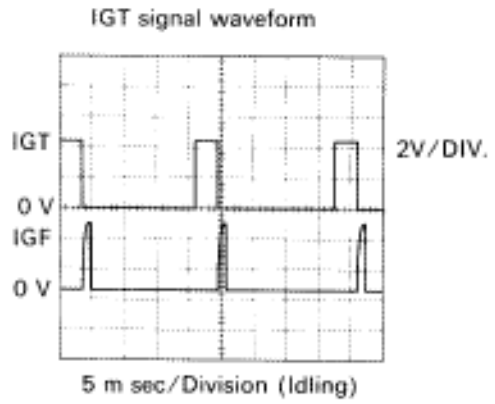

- During cranking or idling, measure between terminals IGT1, IGT2 and E1 of engine & ECT ECU.

HINT: The correct waveform appears as shown in the illustration on the left, with rectangle waves.

NG → **OK** → **Replace igniter .*1**

10	Check for Open and short in harness and connector in IGT signal circuit between engine & ECT ECU and igniter (See page IN–27).

OK → **NG** → **Repair or replace harness or connector.**

Check and replace engine & ECT ECU.	*1: When diag. code 14 is displayed, replace the igniter with 5 wire harness. (extra wire is for tachometer). When diag. code 15 is displayed, replace the igniter with 4 wire harness

WhereEverybodyKnowsYourName

Diag. Code 16 — ECT Control Signal Malfunction

CIRCUIT DESCRIPTION

The signal from the ECT CPU retards the ignition timeing of the engine during ECT gear shifting, thus momentarily reducing torque output of the engine for smooth clutch operation inside the transmission and reduced shift shock.

Code No.	Diagnostic Code Detecting Condition	Trouble Area
16	Fault in communications between the engine CPU and ECT CPU in the ECU.	ECU

If the ECU records the diagnostic code “16” in memory, it prohibits the torque control of the ECT which performs smooth gear shifting.

DIAGNOSTIC CHART

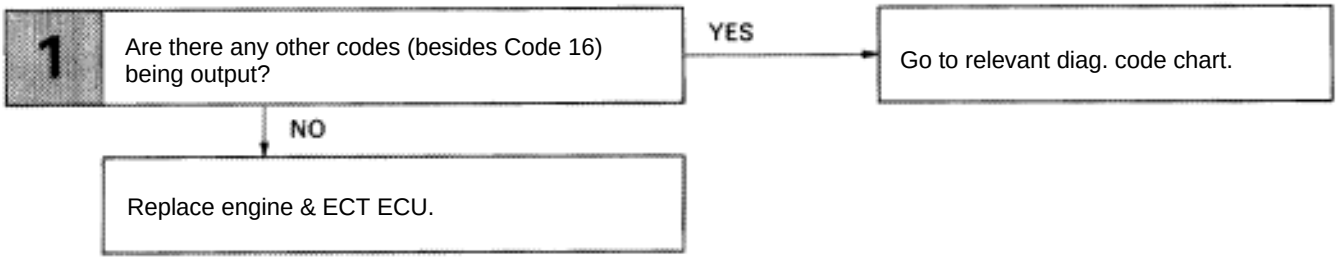

WhereEverybodyKnowsYourName

Diag. Code 21, 28 | Main Oxygen Sensor Circuit

— CIRCUIT DESCRIPTION

To obtain a high purification rate for the CO, HC and NOx components of the exhaust gas, a three–way catalyst is used, but for most efficient use of the three–way catalyst, the air–fuel ratio must be precisely controlled so that it is always close to the stoichiometric air–fuel ratio.
The oxygen sensor has the characteristic whereby its output voltage changes suddenly in the vicinity of the stoichiometric air–fuel ratio. This characteristic is used to detect the oxygen concentration in the exhaust gas and provide feedback to the computer for control of the air–fuel ratio.
When the air–fuel ratio becomes LEAN, the oxygen concentration in the exhaust increases and the oxygen sensor informs the ECU of the LEAN condition (small electromotive force: O V).
When the air–fuel ratio is RICHER than the stoichiometric air–fuel ratio the oxygen concentration in the exhaust gas is reduced and the oxygen sensor informs the ECU of the RICH condition (large electromotive force: 1V).
The ECU judges by the electromotive force from the oxygen sensor whether the air–fuel ratio is RICH or LEAN and controls the injection time accordingly. However, if malfunction of the oxygen sensor causes output of abnormal electromotive force, the ECU is unable to perform accurate air–fuel ratio control.
The main oxygen sensors include a heater which heats the Zirconia element. The heater is controlled by the ECU. When the intake air volume is low (the temperature of the exhaust gas is low) current flows to the heater to heat the sensor for accurate oxygen concentration detection.

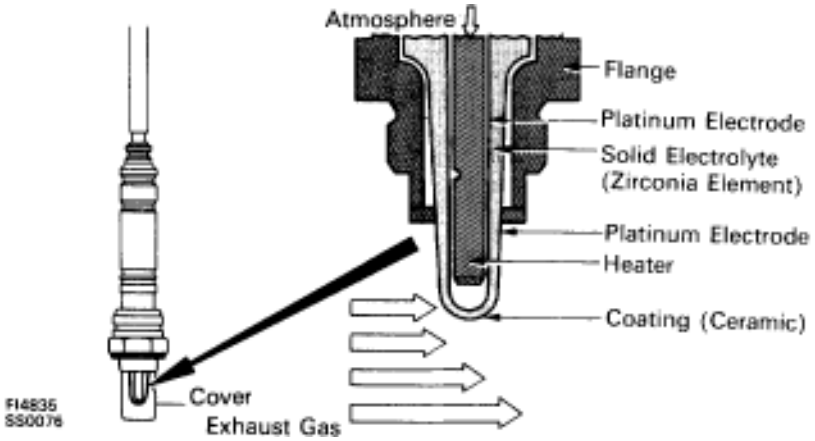

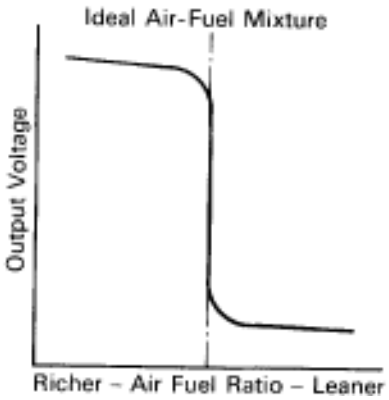

Code No.	Diagnostic Code Detecting Condition	Trouble Area
21 . 28	(1) Open or short in heater circuit of main oxygen sensor for 0.5 sec. or more.	▼Open or short in heater circuit of main oxygen sensor. ▼Main oxygen sensor heater ▼ECU
	(2) Main oxygen sensor signal voltage is reduced to between 0.35 V and 0.70 V for 60 sec. under conditions (a) ~ (d). (2 trip detection logic)* (a) Coolant temp.: Between 70°C (158°F) and 95°C (203°F). (b) Engine speed: 1,500 rpm or more. (c) Load driving (EX. ECT in 4th speed, A/C ON, Flat road, 50 mph (80km/h)). (d) Main oxygen sensor signal voltage: Alternating above and below 0.45 V.	▼Main oxygen sensor circuit ▼Main oxygen sensor

*: See page TR–21.

HINT: Diag. code 21 is for the left bank main oxygen sensor circuit. Diag. code 28 is for the right bank main oxygen sensor circuit.

WhereEverybodyKnowsYourName

— CIRCUIT DESCRIPTION (Cont'd) —

DIAGNOSIS CODE DETECTION DRIVING PATTERN

Purpose of the driving pattern.

(a) To simulate diag. code detecting condition after diag. code is recorded.

(b) To check that the malfunction is corrected when the repair is completed confirming that diag. code is no longer detected.

Malfunction: Main Oxygen Sensor Deterioration

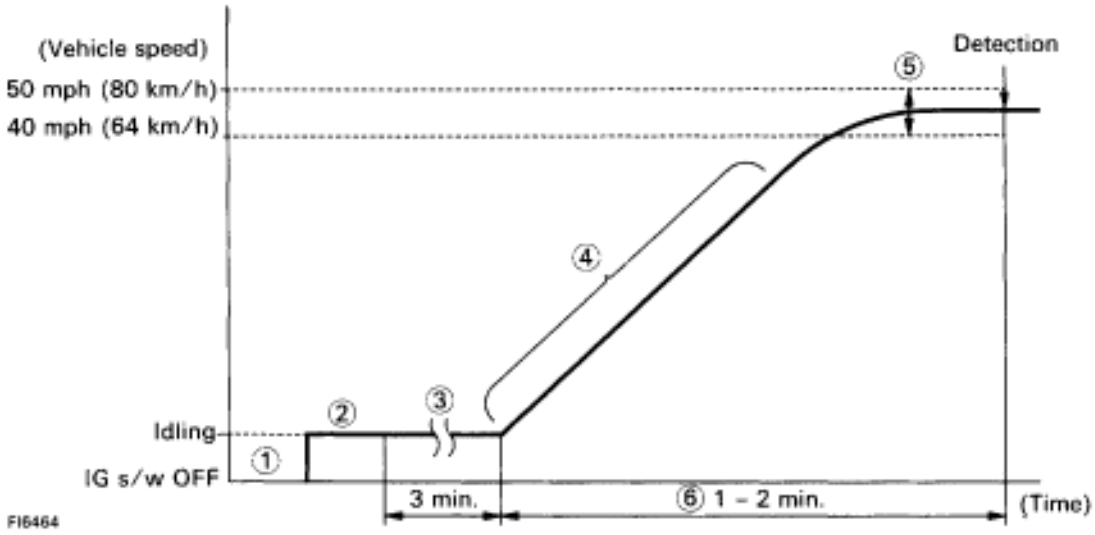

→ Initiate test mode (See page TR–12).

❹ Start engine and warm up.

③ After engine is warmed up, let it idle for 3 min.

⑤ With the A/C ON and the transmission in D range (O/D ON), perform gradual acceleration with in the range 1,300 – 1,700 rpm (centered around 1,500 rpm).
(Take care that the engine speed does not fall below 1,200 rpm when shifting. Gradually depress the accelerator pedal and kept it. Steady so that engine braking does not occur.)

⑤ Maintain the vehicle speed at 40 – 50 mph (64 – 80 km/h).

⑦ Keep the vehicle running for 1 – 2 min. after starting acceleration.

HINT: If a malfunction exists, the "CHECK" engine warning light will light up after approx. 60 sec. from the start of acceleration.

NOTICE: If the conditions in this test are not strictly followed, detection of the malfunction will not be possible.

WhereEverybodyKnowsYourName

DIAGNOSTIC CHART

HINT: If diag. code ”21” is output, check the left bank main oxygen sensor circuit. If diag. code ”28” is output, check the right bank main oxygen sensor circuit.

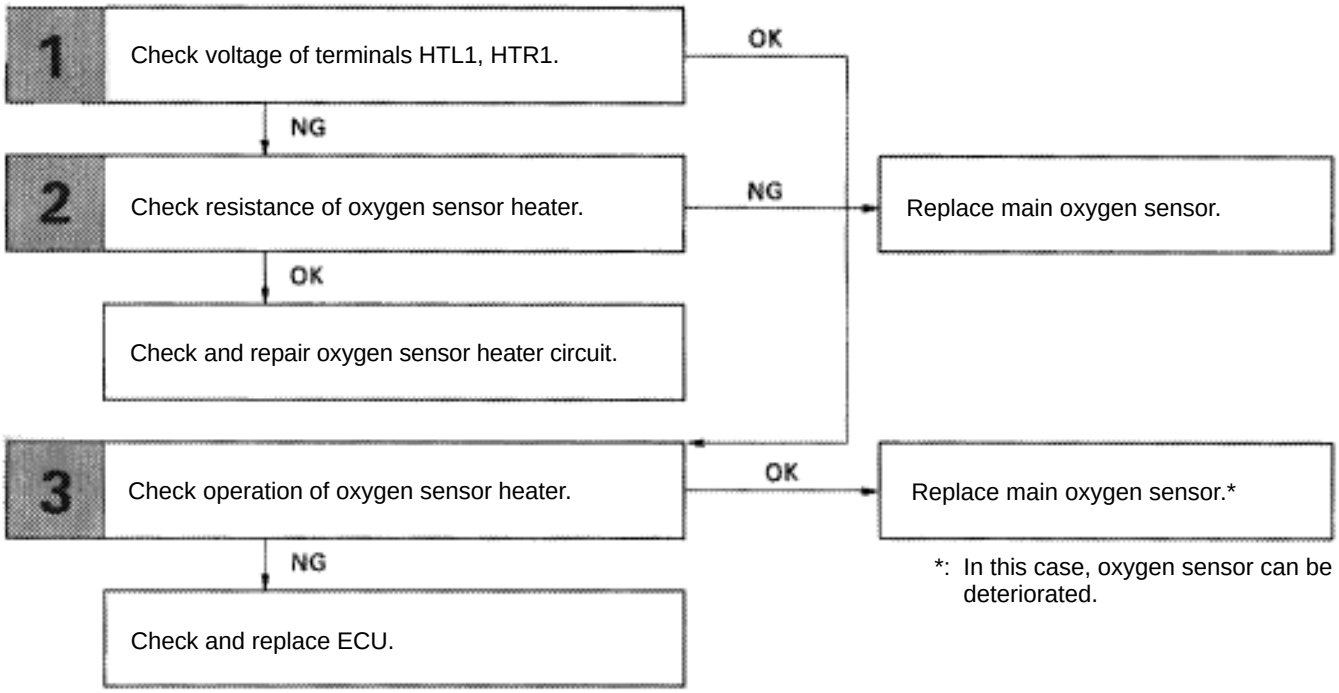

*: In this case, oxygen sensor can be deteriorated.

WIRING DIAGRAM

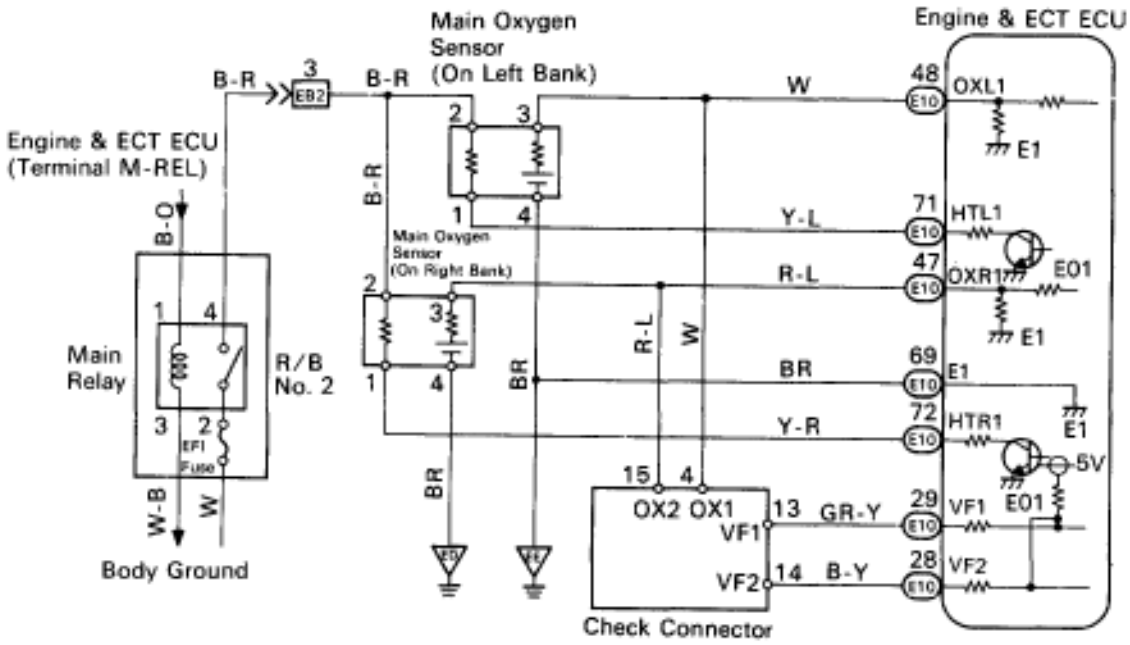

WhereEverybodyKnowsYourName

INSPECTION PROCEDURE

1	Disconnect the engine & ECT ECU connector, check voltage between terminals HTL1, HTR1 of engine & ECT ECU connector and body ground.

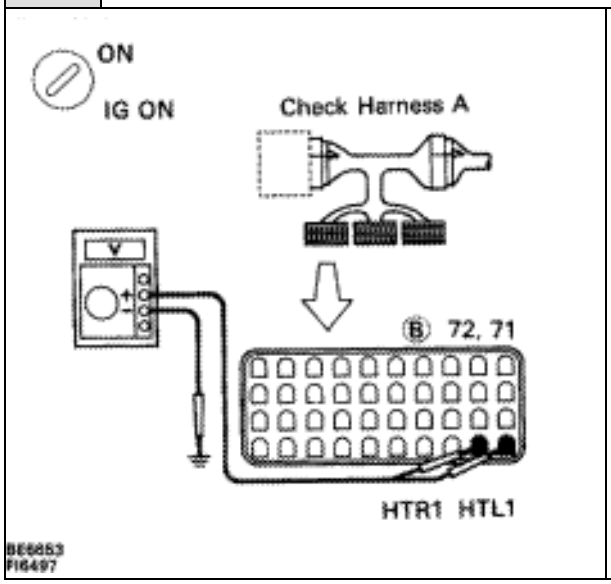

P (2) Connect the Check Harness A.
(See page TR–30)
(2) Disconnect engine & ECT ECU connector.
(2) Turn ignition switch on.

C Measure voltage beween terminals HTL1, HTR1 of engine & ECT ECU connector and body ground.

OK **Voltage: 10 – 14 V**

OK

NG **Go to step [3].**

2	Check main oxygen sensor heater.

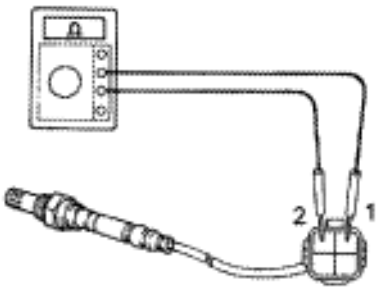

P Disconnect main oxygen sensor connector.

C Measure resistance between terminals 1 and 2 of main oxygen sensor connector.

OK **Resistance: 5.1 – 6.3 at 20°C (68°F)**

OK

NG **Replace main oxygen sensor.**

Check and repair harness or connector between main relay and main oxygen sensor, main oxygen sensor and engine & ECT ECU.

WhereEverybodyKnowsYourName

3 **Check voltage between terminals HTL1, HTR1 of engine & ECT ECU connector and body ground.**

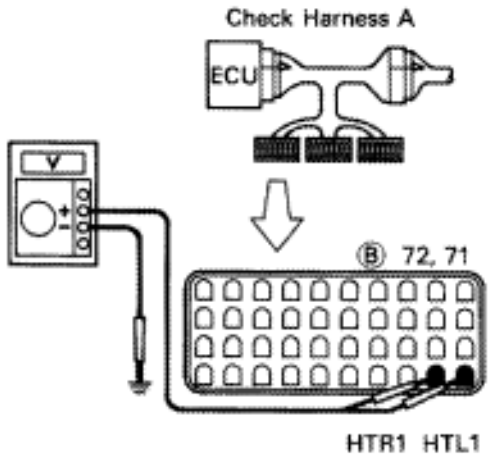

P (1) Connect engine & ECT ECU connector.
(2) Warm up engine to normal operating temperature.

C Measure voltage between terminals of HTL1, HTR1 of engine & ECT ECU connector and body ground, when engine is idling and racing at 4,000 rpm.

OK

	Voltage
Idling	0 V
Racing at 4,000 rpm	10 – 14 V

Hint In the 4,000 rpm racing check, continue engine racing at 4,000rpm for approx. 20 seconds or more.

OK

NG **Replace main oxygen sensor.***

*: In this case, oxygen sensor can be deteriorated.

Check and replace engine & ECT ECU.

Reference | INSPECTION USING OSCILLOSCOPE

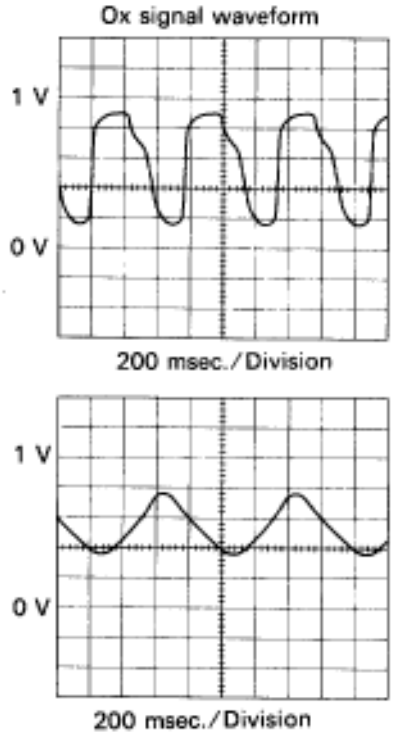

- With the engine racing (4,000 rpm) measure between terminals OXL1, OXR2 and E1 of engine & ECT ECU.

HINT: The correct waveform appears as shown in the illustration on the left, oscillating between approx. 0.1 V and 0.9 V

If the oxygen sensor is deteriorated, the amplitude of the voltage is reduced as shown on the left.

WhereEverybodyKnowsYourName

–MEMO–

WhereEverybodyKnowsYourName

Diag. Code 22 | Water Temp. Sensor Circuit

— CIRCUIT DESCRIPTION

The water temperature sensor senses the coolant temperature. A thermistor built in the sensor changes the resistance value according to the coolant temperature. The lower the coolant temperature, the greater the thermistor resistance value, and the higher the coolant temperature, the lower the thermistor resistance value (See Fig. 1.).
The water temperature sensor is connected to the ECU (See next page). The 5 V power source voltage in the ECU is applied to the water temperature sensor from the terminal THW via a resistor R. That is, the resistor R and the water temperature sensor are connected in series. When the resistance value of the water temperature sensor changes in accordance with changes in the coolant temperature, the potential at the terminal THW also changes. Based on this signal, the ECU increases the fuel injection volume to improve driveability during cold engine operation. If the ECU records the diagnostic code 22, it operates the fail safe function, keeping the coolant temperature at a constant 80°C (176°F).

(fig-1)

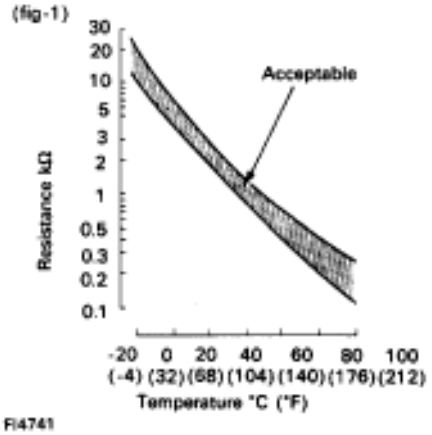

< Reference >

Water Temp. °C (°F)	Resistance (kΩ)	Voltage (V)
-20 (-4)	16.0	4.3
0 (32)	5.9	3.4
20 (68)	2.5	2.4
40 (104)	1.2	1.5
60 (140)	0.6	0.9
80 (176)	0.3	0.5
100 (212)	0.2	0.3

Code No.	Diagnostic Code Detecting Condition	Trouble Area
22	Open or short in water temp. sensor circuit for 0.5 sec. or more.	• Open or short in water temp. sensor circuit • Water temp. sensor • ECU

WhereEverybodyKnowsYourName

DIAGNOSTIC CHART

HINT: If diagnostic codes ”22” (water temperature sensor circuit), ”24” (intake air temperature sensor circuit) and ”41” (throttle position sensor circuit) are output simultaneously, E2 (sensor ground) may be open.

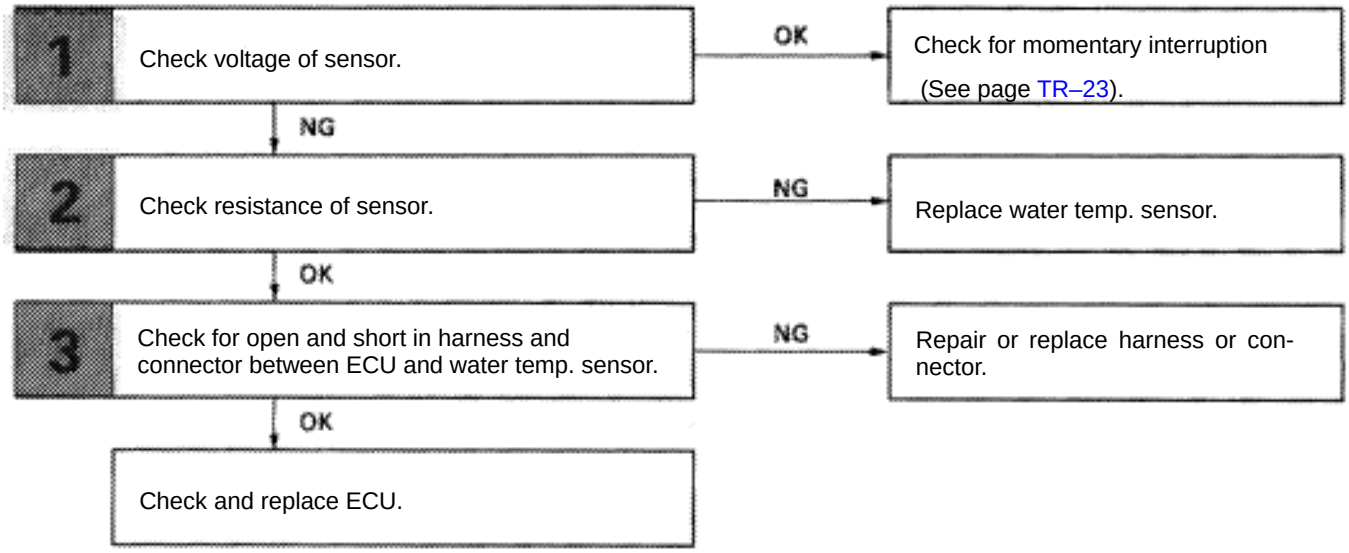

WIRING DIAGRAM

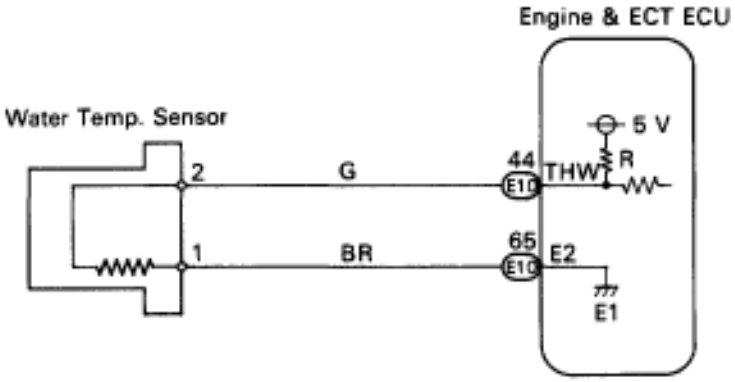

F6448

WhereEverybodyKnowsYourName

INSPECTION PROCEDURE

HINT: If diagnostic codes ”22” (water temperature sensor circuit), ”24” (intake air temperature sensor circuit) and ”41” (throttle position sensor circuit) are output simultaneously, E2 (sensor ground) may be open.

1 **Check voltage between terminals THW and E2 of engine & ECT ECU connector.**

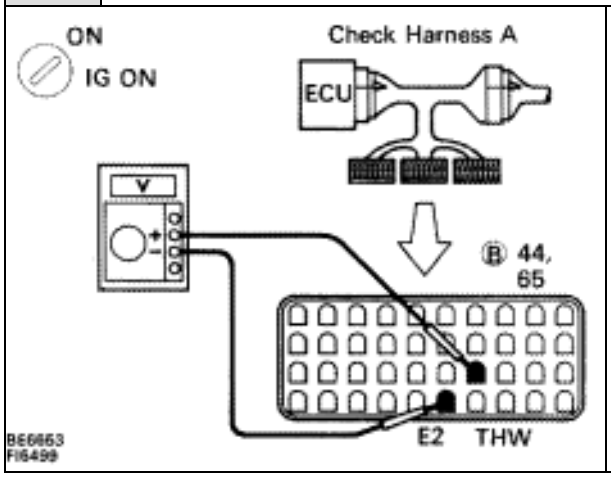

P (2) Connect the Check Harness A. (See page TR–30)

(2) Turn ignition switch on.

C Measure voltage between terminals THW and E2 and engine & ECT ECU connector.

OK

Water Temp. °C (°F)	Voltage
20 (68) (Engine is cool)	1 – 3 V
80 (176) (Engine is hot)	0.1 – 1.0 V

NG

OK **Check for momentary interruption (See Page TR–23).**

2 **Check water temp. sensor.**

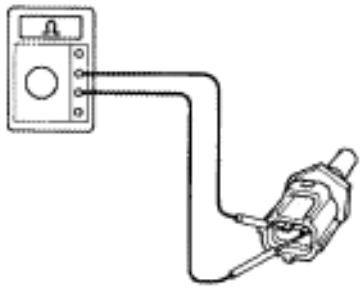

P Disconnect the water temp. sensor connector. (See page FI–99).

C Measure resistance between terminals.

OK **Resistance is within Acceptable Zone on chart.**

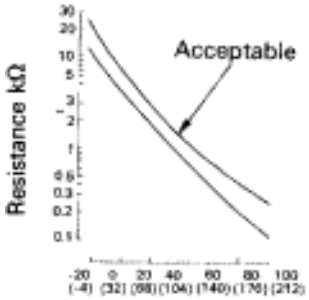

Water temp. °C (°F)	Resistance
20 (68)	2 – 3 kΩ
80 (176)	0.2 – 0.4 kΩ

OK

NG **Replace water temp. sensor.**

3 **Check for open and short in harness and connector between engine & ECT ECU and water temp. sensor (See page IN–27).**

OK

NG **Repair or replace harness or connector.**

Check and replace engine & ECT ECU.

WhereEverybodyKnowsYourName

–MEMO–

WhereEverybodyKnowsYourName

Diag. Code 24 | Intake Air Temp. Sensor Circuit

CIRCUIT DESCRIPTION

The intake air temp. sensor is built into the air flow meter and senses the intake air temperature.
The structure of the sensor and connection to the ECU is the same as in the water temp. sensor shown on page TR–68.
If the ECU records the diagnostic code ”24”, it operates the fail safe function, keeping the intake air temperature at a constant 20°C (68°F).

Code No.	Diagnostic Code Detecting Condition	Trouble Area
24	Open or short in intake air temp. sensor circuit for 0.5 sec. or more.	▼Open or short in intake air temp. sensor circuit. ▼Intake air temp. sensor ▼ECU

DIAGNOSTIC CHART

HINT: If diagnostic codes ”22” (water temperature sensor circuit), ”24” (intake air temperature sensor circuit) and ”41” (throttle position sensor circuit) are output simultaneously, E2 (sensor ground) may be open.

1. Check voltage of sensor.
   - OK → Check for momentary interruption (See page TR–23).
   - NG ↓
2. Check resistance of sensor.
   - NG → Replace water temp. sensor.
   - OK ↓
3. Check for open and short in harness and connector between ECU and water temp. sensor.
   - NG → Repair or replace harness or connector.
   - OK ↓

Check and replace ECU.

WIRING DIAGRAM

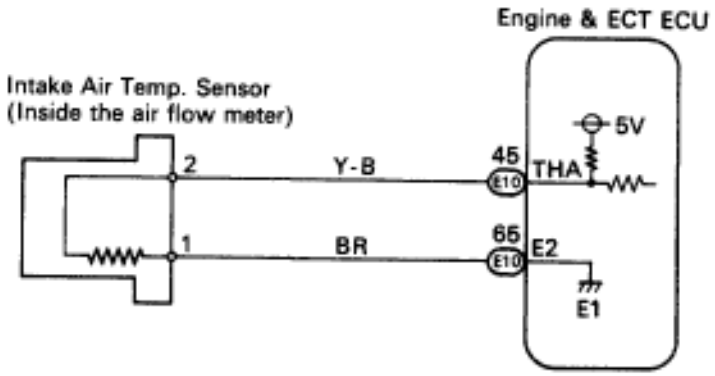

FI6448

WhereEverybodyKnowsYourName

INSPECTION PROCEDURE

1 **Check voltage between terminals THA and E2 of engine & ECT ECU connector.**

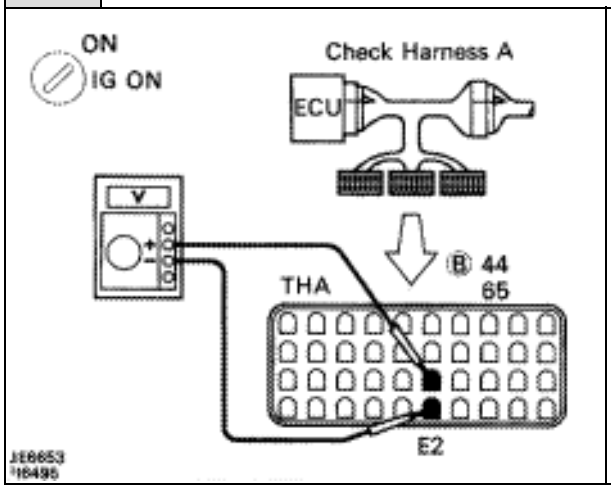

P (2) Connect the Check Harness A. (See page TR–30)

(2) Turn ignition switch on.

C Measure voltage between terminals THA and E2 and engine & ECT ECU connector.

OK

Intake air temp. °C (°F)	Voltage
20 (68)	1 – 3 V
60 (140)	0.5 – 1.0 V

NG

OK **Check for momentary Intertuption (See page TR–23).**

2 **Check intake air temp. sensor.**

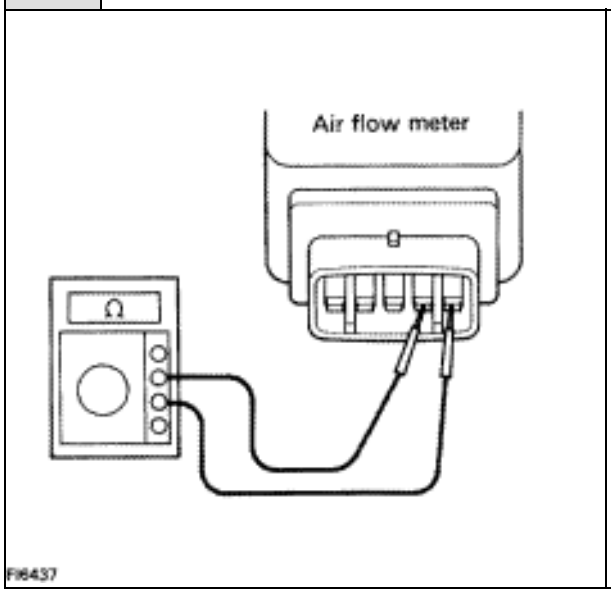

P Disconnect the air flow meter connector.

C Measure resistance between terminals 1 and 2 of air flow meter connector.

OK **Resistance is within Acceptable Zone on chart.**

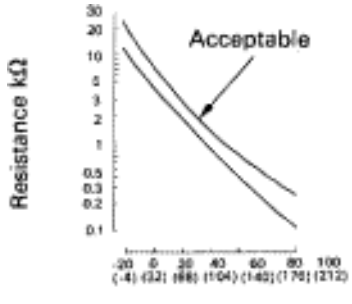

Intake air temp. °C (°F)	Resistance
20 (68)	2 – 3 kΩ
60 (140)	0.4 – 0.7 kΩ

OK

NG **Replace intake air temp. sensor (Replace air flow meter).**

3 **Check for open and short in harness and connector between engine & ECT ECU and intake air temp. sensor (See page IN–27).**

OK

NG **Repair or replace harness or connector.**

Check and replace engine & ECT ECU.

WhereEverybodyKnowsYourName

Diag. Code	25	Air–Fuel Ratio Lean Malfunction
	26	Air–Fuel Ratio Rich Malfunction

CIRCUIT DESCRIPTION

Refer to page TR–62 for the circuit description.

Code No.	Diagnostic Code Detecting Condition	Trouble Area
25 · 26	(1) Main oxygen sensor voltage is 0.45 V or less (lean) for 90 sec. under conditions (a) and (b). (2 trip detection logic)* (a) Coolant temp.: 60°C (140°F) or more. (b) Engine speed: 1,500 rpm or more.	▼Open or short in main oxygen sensor circuit ▼Main oxygen sensor ▼Ignition system ▼Water temp. sensor
	(2) Main oxygen sensor voltage is alternating above and below 0.45 V at 5 times par second or more under conditions (a) and (b). (2 trip detection logic)* (a) Engine speed: Idling (b) Coolant temp.: Between 60°C (140°F) and 95°C (203°F)	▼Open or short in injector circuit. ▼Fuel line pressure (injector blockage) ▼Air flow meter (air intake) ▼Engine ground bolt loose ▼Foreign object caught in valve
	(3) Difference of air–fuel ratio feedback compensation value between right and left banks is more than 10 percentage for 30 sec. or more under conditions (a) and (b). (2 trip detection logic)* (a) Engine speed : 2,000 rpm or more. (b) Coolant temp.: Between 60°C (140°F) and 95°C (203°F)	▼Fuel line pressure (injector leak, blockage) ▼Mechanical system malfunction (skipping teeth of timing belt) ▼Ignition system

*: See page TR–21.

WhereEverybodyKnowsYourName

— CIRCUIT DESCRIPTION (Cont'd) —

DIAGNOSIS CODE DETECTION DRIVING PATTERN

Purpose of the driving pattern.

(a) To simulate diag. code detecting condition after diag. code is recorded.

(b) To check that the malfunction is corrected when the repair is completed confirming that diag. code is no longer detected.

Malfunction: Open or Short in Main Oxygen Sensor

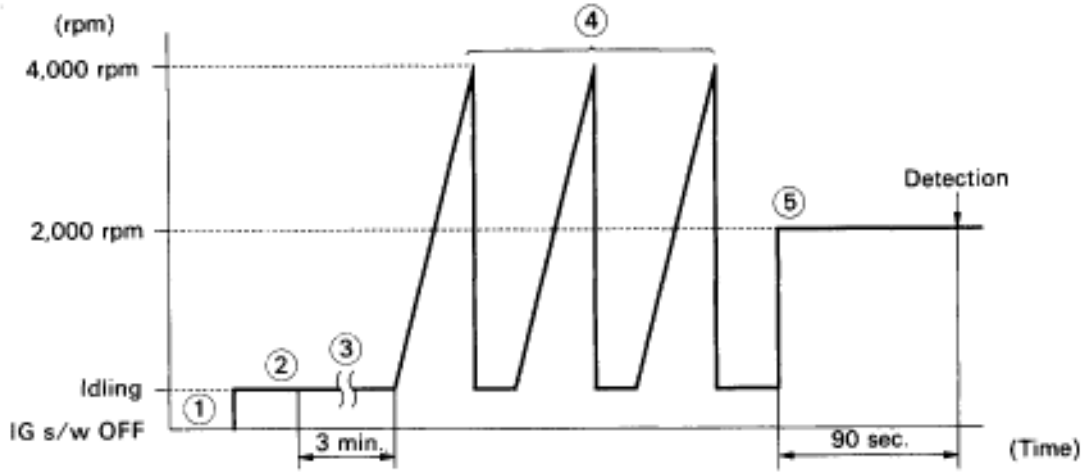

FI6465

❷ Initiate test mode (See page TR–12).

→ Start engine and warm up.

❹ After engine is warmed up, let it idle for 3 min.

③ Perform quick racing to 4,000 rpm three times by accelerator pedal.

⑤ After performing the racing in (4), perform racing at 2,000 rpm for 90 sec.

HINT: If a malfunction exists, the "CHECK" engine warning light will light up after 90 sec. from the start of racing.

NOTICE: If the conditions in this test are not strictly followed, detection of the malfunction will not be possible.

WhereEverybodyKnowsYourName

— CIRCUIT DESCRIPTION (Cont'd) —

DIAGNOSIS CODE DETECTION DRIVING PATTERN

Purpose of the driving pattern.

(a) To simulate diag. code detecting condition after diag. code is recorded.

(b) To check that the malfunction is corrected when the repair is completed confirming that diag. code is no longer detected.

Malfunction: Open or Short in Injector circuit, Injector Leak or Blockage, Loose E/G Earth Bolt.

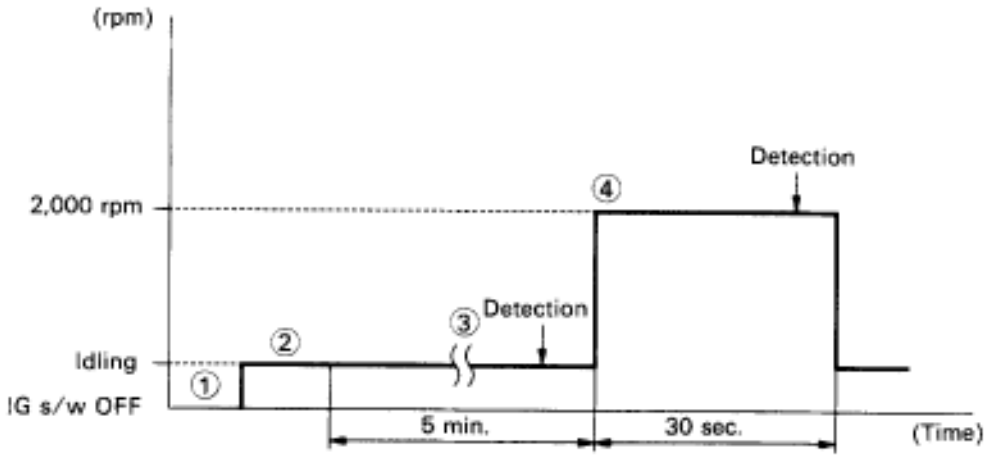

FI6483

❷ Initiate test mode (See page TR–12).

⑤ Start engine and warm up.

⑦ After engine is warmed up, let it idle for 5 min.
(After the engine is started, do not depress the accelerator pedal.)
If the malfunction is not detected during idling, perform racing without any load at approx. 2,000 rpm for 30 sec.

HINT: If a malfunction exists, the "CHECK" engine warning light will light up during the 5 min. idling period or within 30 sec. of starting racing.

NOTICE: If the conditions in this test are not strictly followed, detection of the malfunction will not be possible.

WhereEverybodyKnowsYourName

DIAGNOSTIC CHART

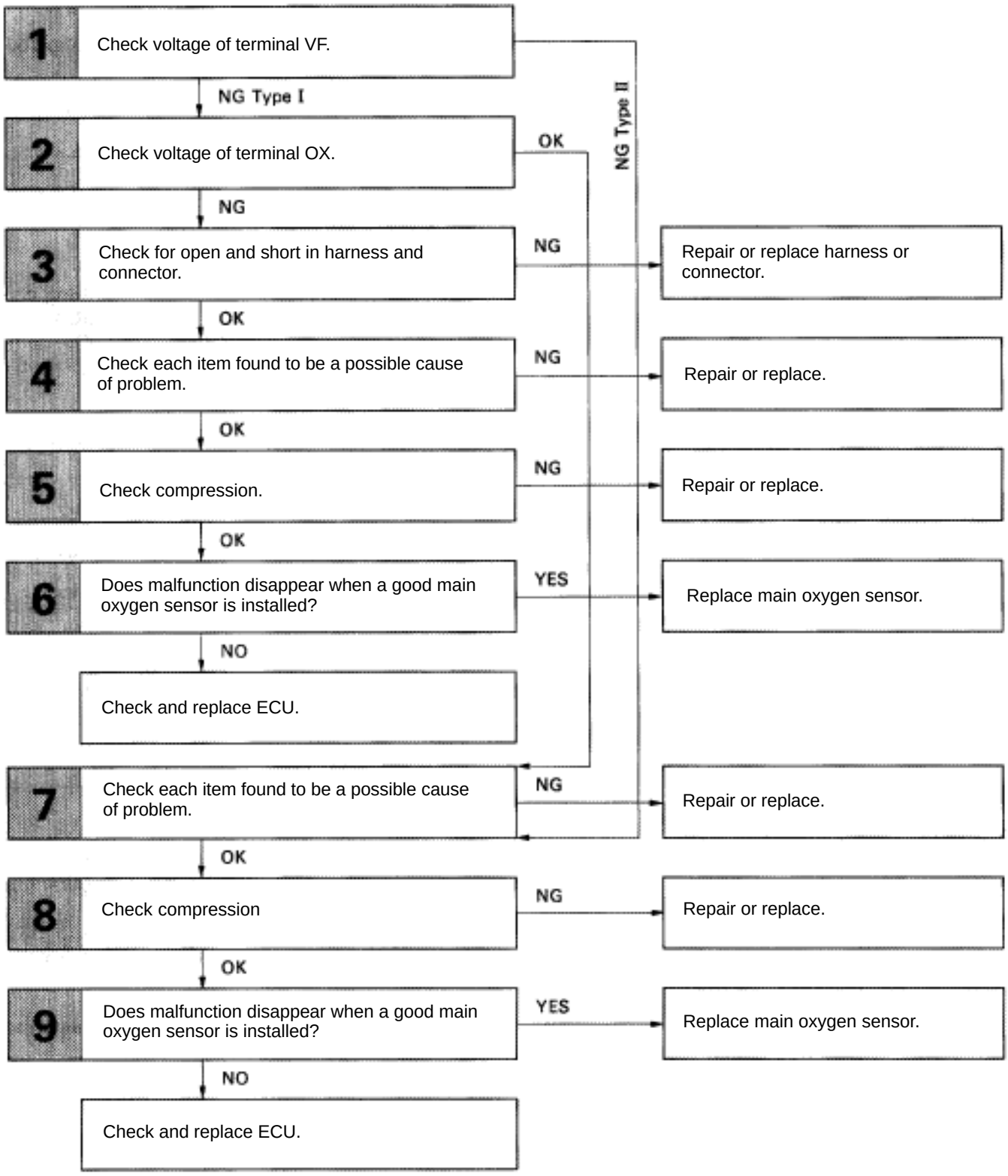

WIRING DIAGRAM

Refer to page TR–64 for the WIRING DIAGRAM.

WhereEverybodyKnowsYourName

INSPECTION PROCEDURE

1 **Check voltage between terminals VF1, VF2 and E1 of check connector.**

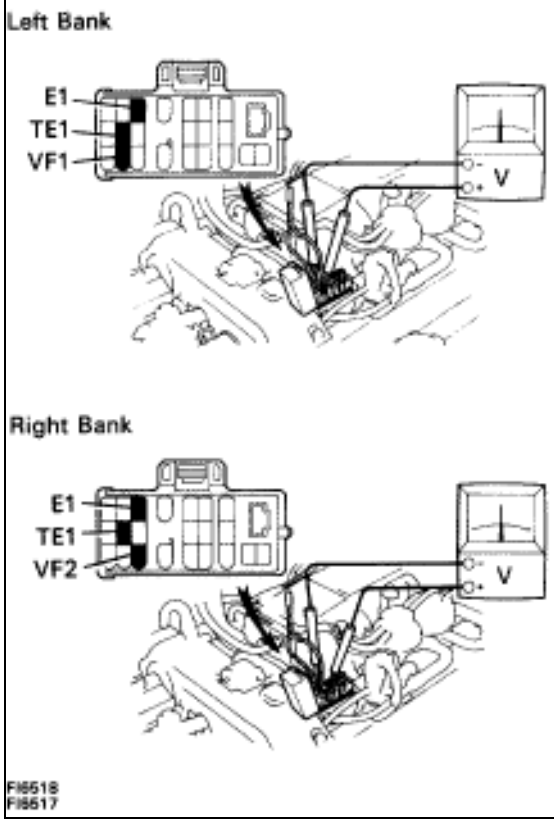

P (2) Warm up engine at normal operating temperature.
(2) Connect terminals TE1 and E1 of check connector.
(2) Connect positive prove to terminal VF1, VF2 and negative prove to terminal E1 of check connector.

C (2) Warm up the oxygen sensor by running engine at 2,500 rpm for about 2 minutes.
(2) Then, maintaining engine at 2,500 rpm, count how many times needle of voltmeter fluctuates between 0 and 5 V

Result:

Result	
Needle fluctuates of 8 times for every ten seconds	OK
Continue at 0 V	NG Type I
Continue at 5 V	NG Type II

NG Type I

NG Type II **Go to step [7].**

2 **Check voltage beween terminals OX1, OX2 and E1 of check connector.**

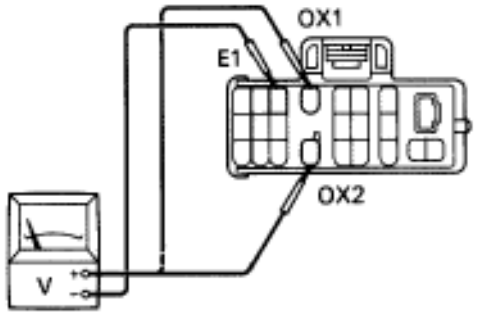

P Warm up engine at normal operating temperature.

C Measure voltage between terminals OX1, OX2 and E1 of check connector when sngine is suddenly raced to full throttle.

OK **The Voltage should be 0.5 V or higher at least once.**

Hint Perform inspection within 1 second

NG

OK **Go to step [7].**

WhereEverybodyKnowsYourName

3 **Check for open and short in harness and connector between engine & ECT ECU and main oxygen sensor, engine & ECT ECU and check connector (See page IN–27).**

OK

NG **Repair or replace harness or connector.**

4 **Check each item found to be a possible cause of problem.**

Check each circuit found to be a possible cause of trouble according to the results of the check in **1** or **2**. The numbers in the table below show the order in which the checks should be preformed.

Main oxygen sensor signal from either side continues at 0 V.	Main oxygen sensor signals from both sides continue at 0 V.	Possible Cause	See page
1		Faulty sensor installation.	–
3		Injector circuit	TR–132
2	3	Misfire	TR–6
4		Valve timing	TR–51
	1	Air leakage	TR–13
	2	Fuel system	TR–114
	6	Characteristics deviation in air flow meter.	TR–88
	4	Characteristics deviation in water temp. sensor.	TR–68
	5	Characteristics deviation in intake air temp. sensor.	TR–72

OK

NG **Repair or replace.**

5 **Check comparession (See page EM–30).**

OK

NG **Repair or replace.**

6 **Does malfunction disappear when a good main oxygen sensor is installed?**

NO

YES **Replace main oxygen sensor.**

check and replace engine & ECT ECU.

WhereEverybodyKnowsYourName

7 **Check each item found to be a possible cause of problem.**

Check each ciruit found to be a possible cause of trouble according to the results of the check in **1**. The numbers in the table below show the order in the which the checks should be performed.

Main oxygen sensor signal from either side continues at 5.0 V.	Main oxygen sensor signals from both sides continue at 5.0 V.	Main oxygen sensor signals from both sides are normal.	Possible Cause	See page
1		7	Injector circuit	TR–132
		3	Misfire	TR–6
2		4	Valve timing	TR–51
		1	Air leakage	TR–13
	1	2	Fuel system	TR–114
3	4		Cold start injector circuit	TR–88
	5	8	Characteristics deviation in air flow meter.	TR–68
	2	5	Characteristics deviation in water temp. sensor.	TR–72
	3	6	Characteristics deviation in intake air temp. sensor.	TR–72

OK

NG **Repair or replace.**

8 **Check compression (See page EM–30).**

OK

NG **Repair or replace.**

9 **Does malfunction disappear when a good main oxygen sensor is installed?**

NO

YES **Replace main oxygen sensor.**

Check and replace engine & ECT ECU.

WhereEverybodyKnowsYourName

–MEMO–

WhereEverybodyKnowsYourName

Diag. Code 27, 29 | Sub–Oxygen Sensor Circuit

— CIRCUIT DESCRIPTION

The sub–oxygen sensor is installed on the exhaust pipe. Its construction and operation is the same as the main oxygen sensor on page TR–62.

Code No.	Diagnostic Code Detecting Condition	Trouble Area
27 ▼ 29	(1) Open or short in heater circuit of sub–oxygen sensor for 0.5 sec. or more.	▼Open or short in heater circuit of sub–oxygen sensor ▼Sub–oxygen sensor heater. ▼ECU
	(2) Main oxygen sensor signal is 0.45 V or more and sub–oxygen sensor signal is 0.45 V or less under sonditions (a) and (b). (2 trip detection logic) * (a) Coolant temp.: 80°C (176°F) or more. (b) Accel. pedal: Fully depressed for 2 sec. or more.	▼Open or short in sub–oxygen sensor circuit. ▼Sub–oxygen sensor ▼ECU

*: See page TR–21.

HINT: Diag. code 27 is for the left bank sub–oxygen sensor circuit.
Diag. code 29 is for the right bank sub–oxygen sensor circuit.

WhereEverybodyKnowsYourName

— CIRCUIT DESCRIPTION (Cont'd) —

DIAGNOSIS CODE DETECTION DRIVING PATTERN

Purpose of the driving pattern.

(a) To simulate diag. code detecting condition after diag. code is recorded.

(b) To check that the malfunction is corrected when the repair is completed confirming that diag. code is no longer detected.

Malfunction: Open or Short in Sub–Oxygen Sensor

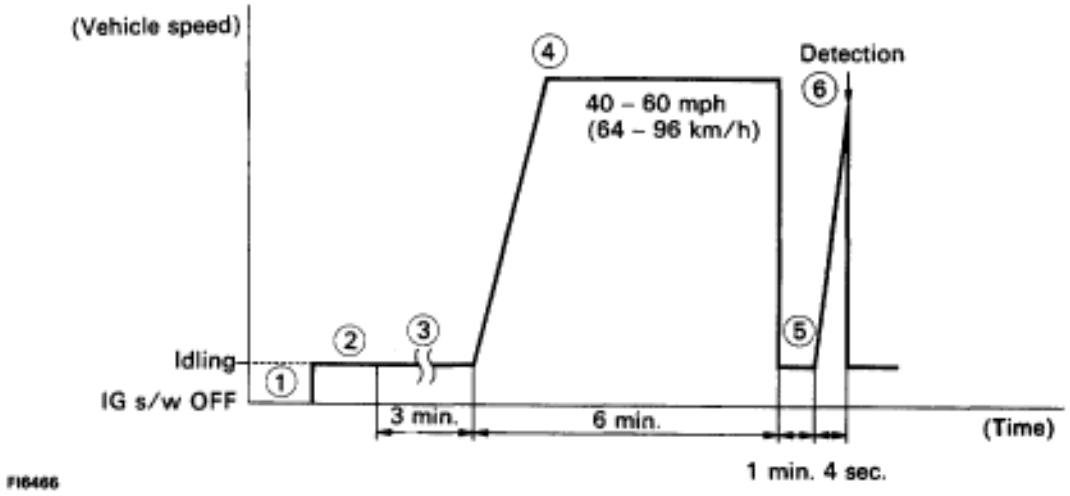

❷ Initiate test mode (See page TR–12).

→ Start engine and warm up.

❹ After engine is warmed up, let it idle for 3 min.

③ With the A/C ON and the transmission in D range (O/D OFF), drive at 40 –60 mph (64–96 km/h) for 6 min.

⑤ After the driving in , stop the vehicle.

⑤ Once the vehicle is stopped, within the next minute apply acceleration with the throttle fully open for 4 sec.

HINT: If a malfunction exists, the "CHECK" engine warning light will light up after full acceleration for 4 sec.

NOTICE: If the conditions in this test are not strictly followed, detection of the malfunction will not be possible.

WhereEverybodyKnowsYourName

DIAGNOSTIC CHART

HINT:

- When other codes are output in addition to 27 and 29 at the same time, check the circuits for other codes first.
- If diag. code 27 is displayed, check left bank sub–oxygen sensor circuit, and if 29 is displayed, check right bank sub–oxygen sensor circuit.

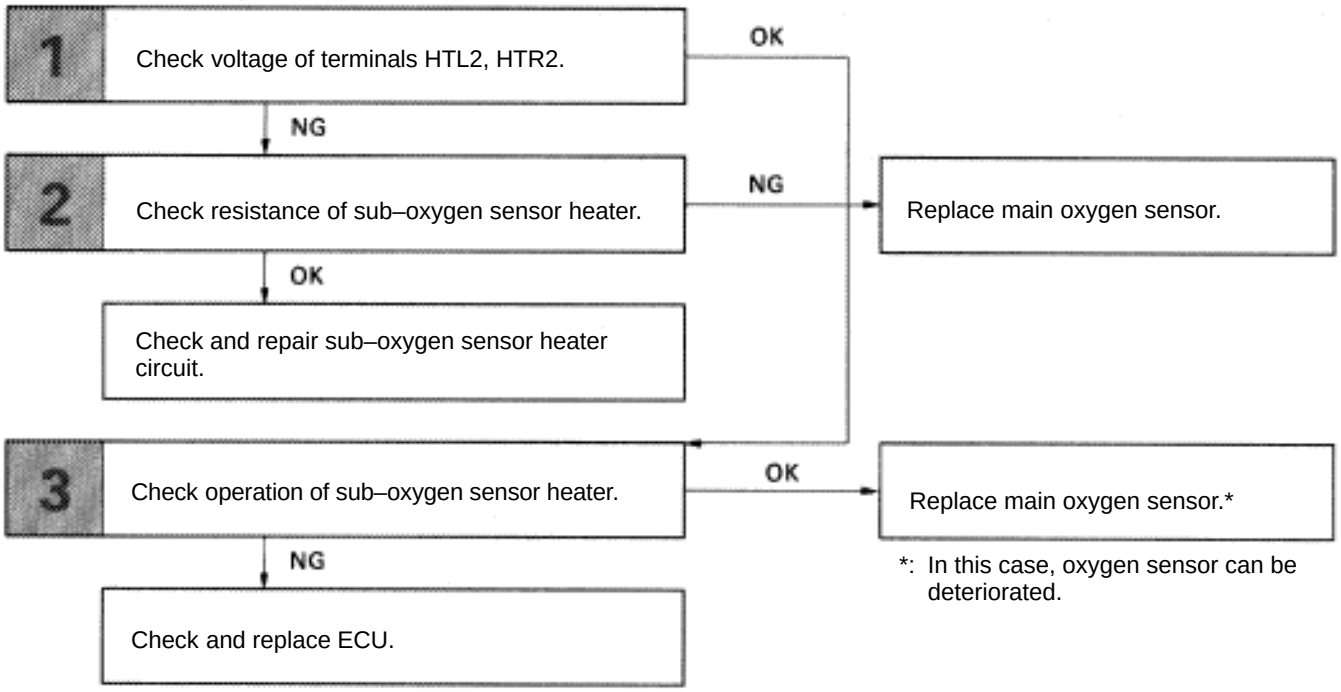

*: In this case, oxygen sensor can be deteriorated.

WIRING DIAGRAM

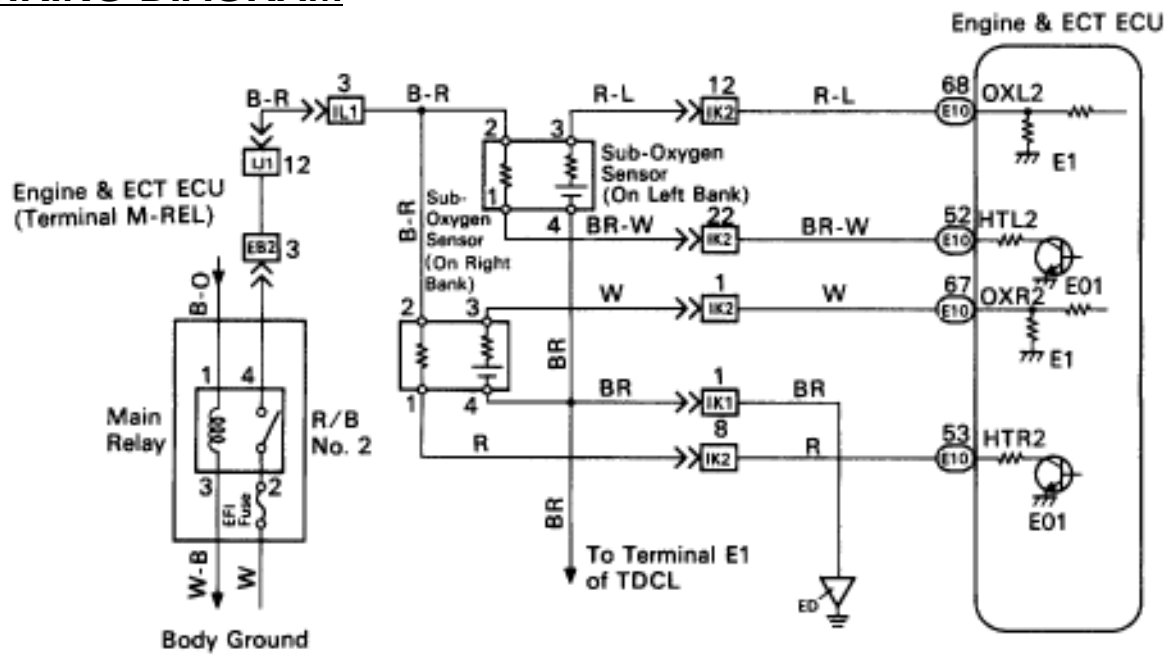

FI6453

WhereEverybodyKnowsYourName

INSPECTION PROCEDURE

1	Disconnect the engine & ECT ECU connector.

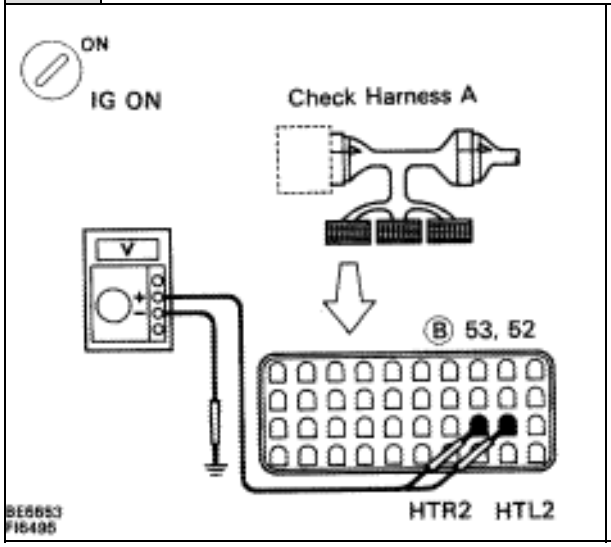

P (2) Connect the Check Harness A.
(See page TR–30)
(2) Disconnect engine & ECT ECU connector.
(2) Turn ignition switch on.

C Measure voltage between terminals HTL2, HTR2 of engine & ECT ECU connector and body ground.

OK **Voltage: 10 – 14 V**

NG

OK **Go to step [3].**

2	Check sub–oxygen sensor heater.

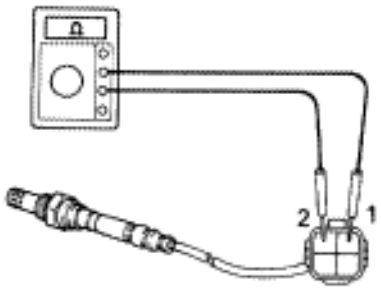

P Disconnect sub–oxygen sensor connector.

C Measure resistance between terminals 1 and 2 of sub–oxygen sensor connector.

OK **Resistance: 5.1 – 6.3 20°C (68°F)**

OK

NG **Replace sub–oxygen sensor.**

Check and repair harness or connector between main relay and sub–oxygen sensor, sub–oxygen sensor and engine & ECT ECU.

WhereEverybodyKnowsYourName

3 **Check voltage between terminals HTL2, HTR2 of engine & ECT ECU connector and body ground.**

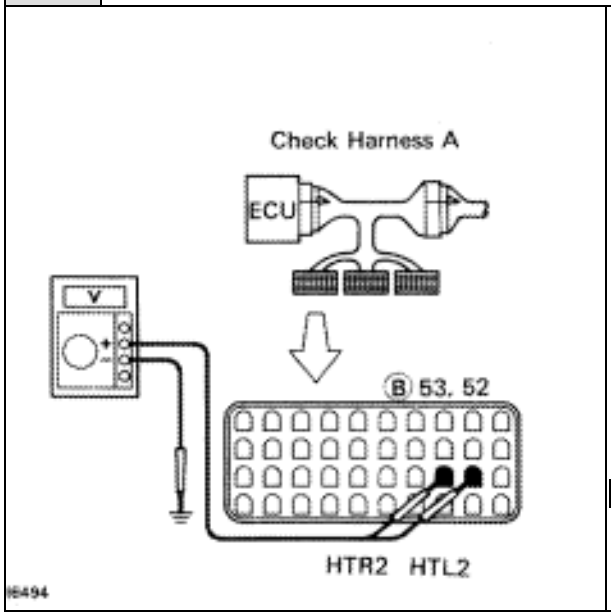

P (2) Connect engine & ECT ECU connector.
(2) Warm up engine to normal operating temperature.

C Measure voltage between terminals HTL2, HTR2 of engine & ECT ECU connector and body ground, when engine is idling and racing at 4,000 rpm.

OK

	Voltage
Idling	0 V
Racing at 4,000 rpm	10 – 14 V

Hint In the 4,000 rpm racing check , continue engine racing at 4,000 prm for approx. 20 seconds or more.

NG → **Check and replace engine & ECT ECU.**

OK → **Replace sub–oxygen sensor.***

*: In this case, oxygen sensor can be deteriorated.

WhereEverybodyKnowsYourName

–MEMO–

WhereEverybodyKnowsYourName

Diag. Code 31 | Air Flow Meter Circuit

CIRCUIT DESCRIPTION

As shown in the figure at right, when a pillar (Vortex generating body) is placed in the path of a uniform flow, vortices called Karman–Vortex are generated downstream of the object. Using this principle, a vortex generator is placed inside the air flow meter. By measuring the frequency of the vortices generated, the ECU can determine the volume of air flowing through the air flow meter. The vortices are detected by their exerting pressure on thin metal foil (mirror) surfaces and a light emitting element and light receptor (LED and photo transistor) positioned opposite the mirror which senses the vibrations in the mirror optically. The ECU uses these signals mainly for calculation of the basic injection volume and the basic ignition advance angle.

FI4504

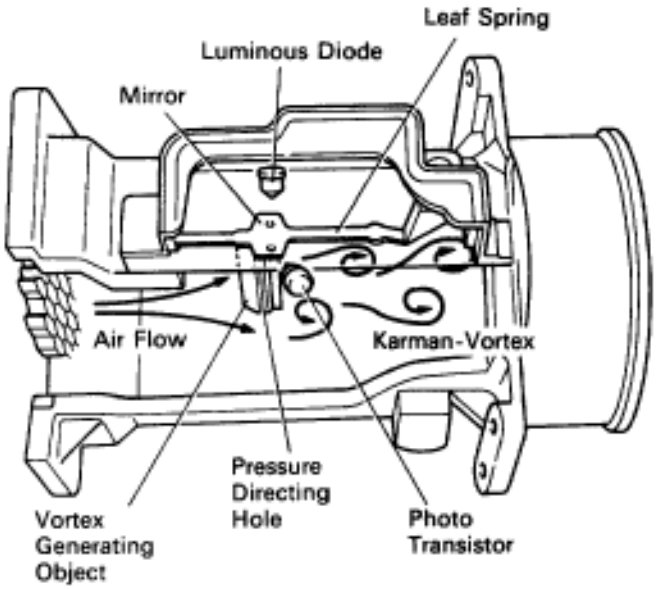

FI3045

Code No.	Diagnostic Code Detecting Condition	Trouble Area
31	All conditions below are detected. (a) No air-flow meter signal to ECU for 2 sec. when engine speed is above 300 rpm. (b) Engine stall.	• Open or short in air flow meter circuit • Air flow meter • ECU

If the ECU records diagnostic code ”31”, it enters fail safe mode (See page TR–22).

WhereEverybodyKnowsYourName

DIAGNOSTIC CHART

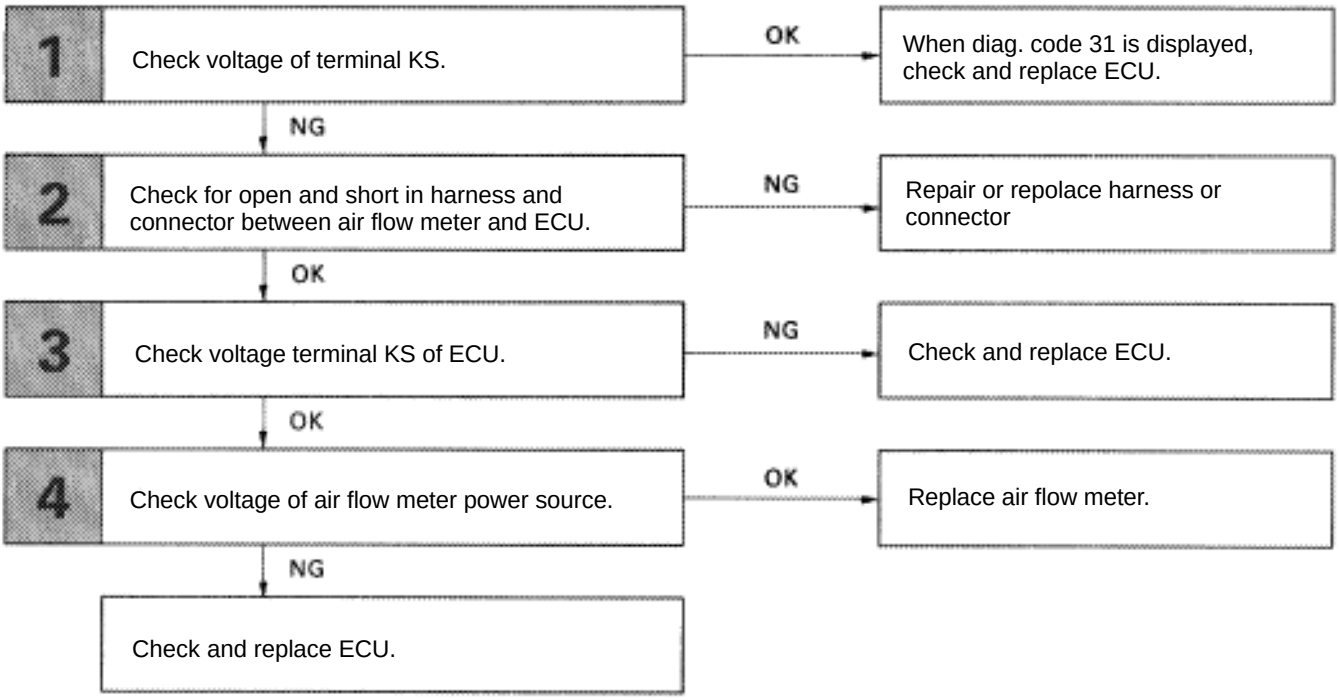

WIRING DIAGRAM

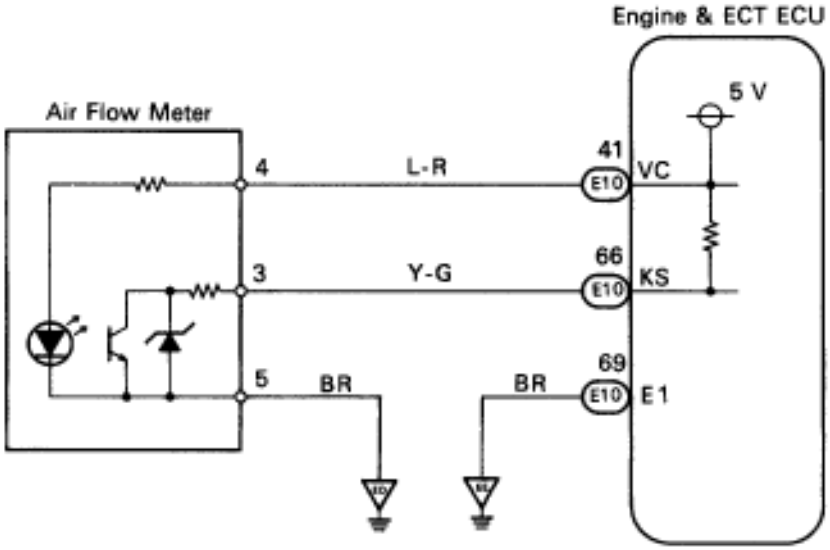

FI5458

WhereEverybodyKnowsYourName

INSPECTION PROCEDURE

1 **Check voltage between terminals KS and E1 of engine & ECT ECU connector.**

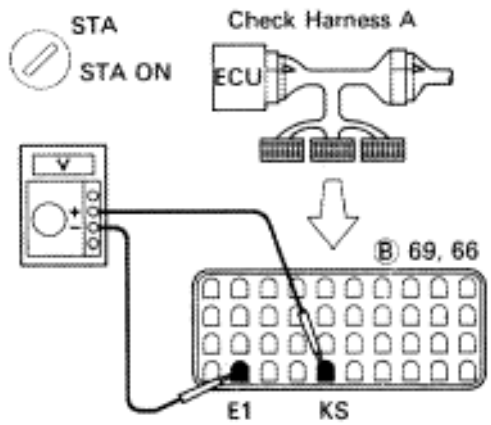

P Connect the check harness A.
(See page TR–30)

C Measure voltage between terminals KS and E1 of engine & ECT ECU connector while engine is cranked.

OK **Voltage:** **2.0 – 4.0 V**
(Neither 0 V nor 5 V)

Reference **INSPECTION USING OSCILLOSCOPE**

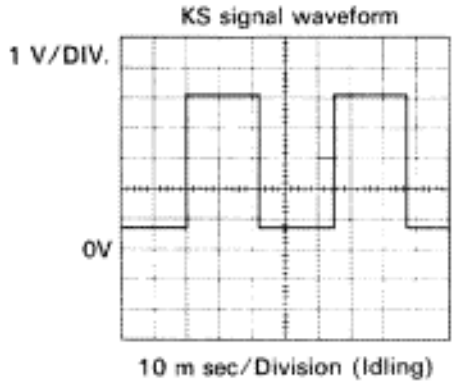

- During cranking or idling, measure between terminals KS and E1 of engine & ECT ECU.

HINT: The correct waveform appears as shown in the illustration on the left, with rectangle waves.

NG

OK **When diag. code 31 is displayed, check and replace engine & ECT ECU.**

2 **Check for open and short in harness and connector between engine & ECT ECU and air flow meter (See page IN–27).**

OK

NG **Repair or replace harness or connector.**

WhereEverybodyKnowsYourName

3	Disconnect air flow meter connector and check voltage between terminals KS and E1 of engine & ECT ECU.

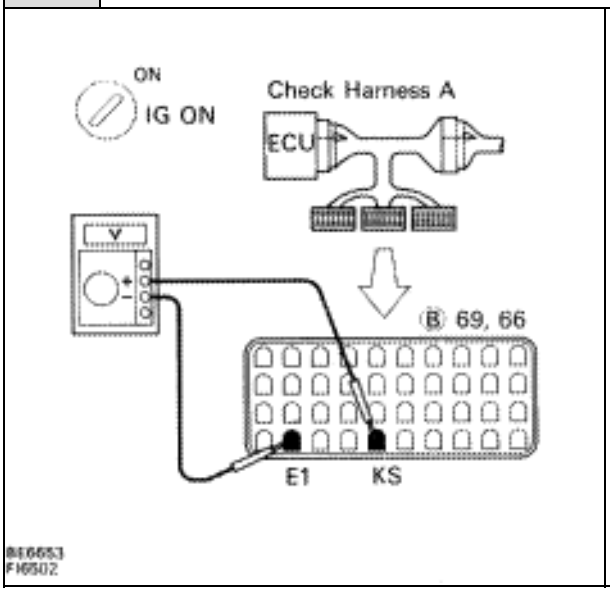

P Diconnect the air flow meter connector.
Turn ignition switch on.

C Measure voltage between terminals KS and E1 of engine & ECT ECU.

OK **Voltage: 4 – 6 V**

OK

NG → **Check and replace ECU.**

4	Diconnect air flow meter connector and check voltage between terminals VC and E1 of engine & ECT ECU.

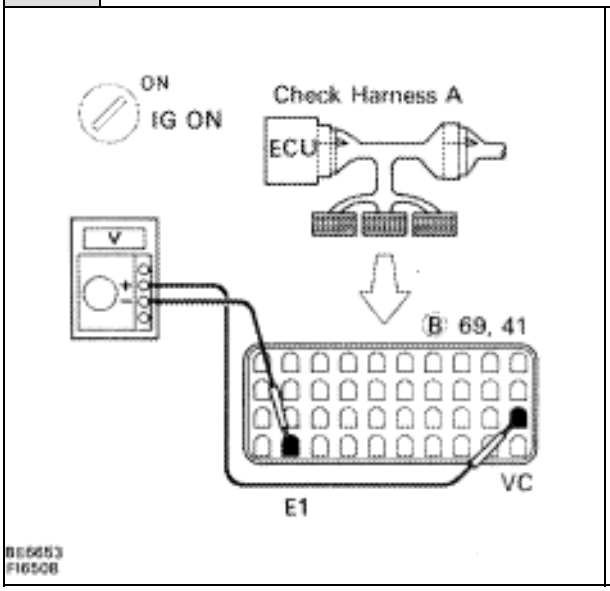

P Diconnect the air flow meter connector.
Turn ignition switch on.

C Measure voltage between terminals VC and E1 of engine & ECT ECU.

OK **Voltage: 4 – 6 V**

NG

OK → **Replace air flow meter.**

Check and replace engine & ECT ECU.

WhereEverybodyKnowsYourName

Diag. Code 35	High Altitude Compensator Sensor (HAC Sensor) Circuit

CIRCUIT DESCRIPTION

The HAC sensor is built into the ECU. This is a semiconductor pressure sensor with properties which cause its electrical resistance to change when stress is applied to the sensor's crystal (silicon) (piezoelectric effect). This sensor is used to detect the atmospheric (absolute) pressure and outputs corresponding electrical signals. Fluctuations in the air pressure cause changes in the intake air density, which can cause deviations in the air–fuel ratio. The signals from HAC sensor are used to make corrections for these fluctuations. If the ECU records diagnostic code "35", the fail safe function operates and the atmospheric pressure is set at a constant 760 mmHg.

Code No.	Diagnostic Code Detecting Condition	Trouble Area
35	Open or short detected in HAC sensor circuit for 0.5 sec. or more.	▼ECU

DIAGNOSTIC CHART

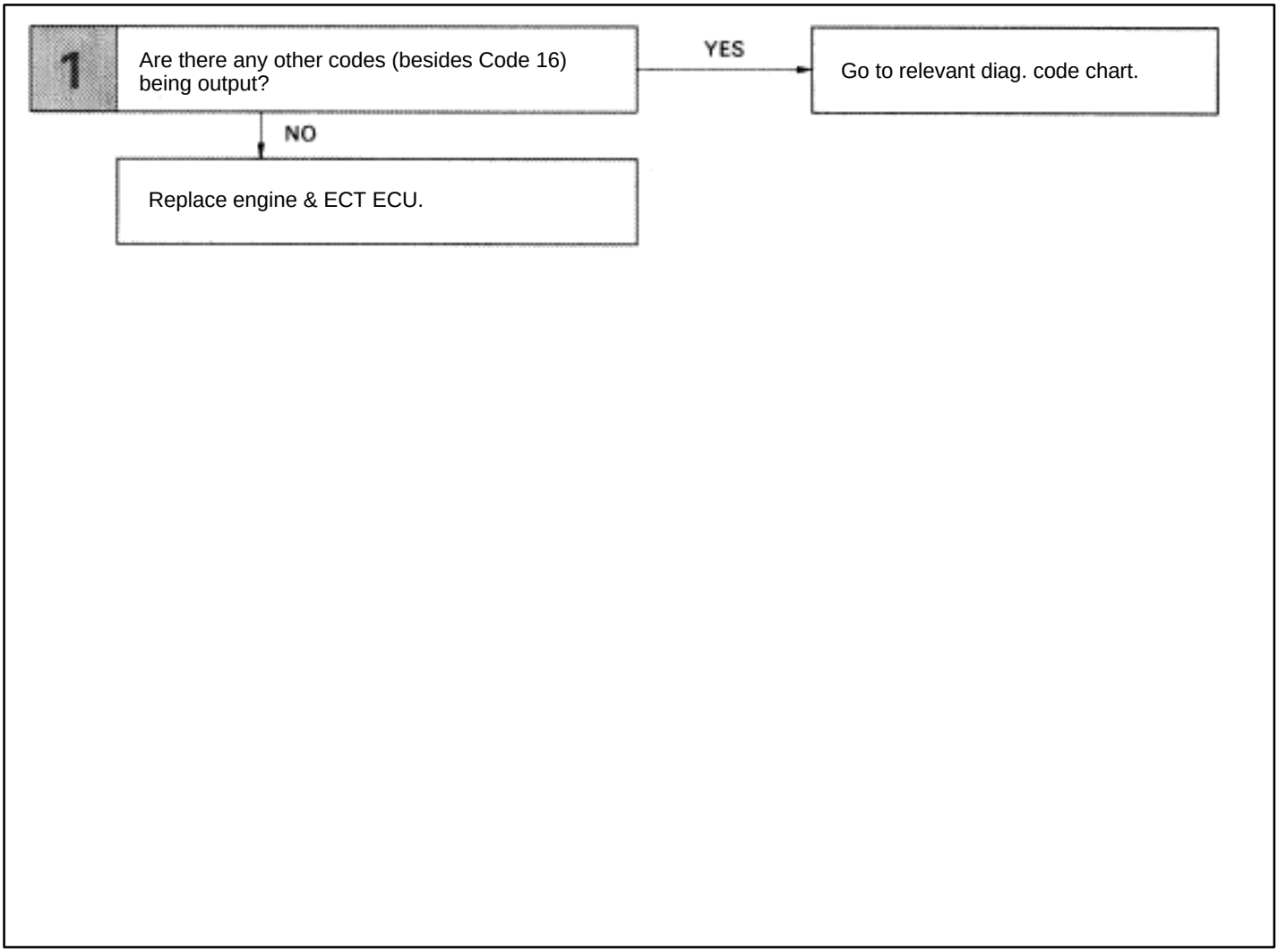

WhereEverybodyKnowsYourName

–MEMO–

WhereEverybodyKnowsYourName

Diag. Code 41, 47 (Sub–) Throttle Position Sensor Circuit

— CIRCUIT DESCRIPTION

The throttle position sensor is mounted in the throttle body and detects the throttle valve opening angle. When the throttle valve is fully closed, the IDL contacts in the throttle position sensor are on, so the voltage at the terminal IDL of the ECU become 0 V. At this time, a voltage of approximately 0.7 V is applied to the terminal VTA of the ECU. When the throttle valve is opened, the IDL contacts go off and thus the power source voltage of approximately 12 V in the ECU is applied to the terminal IDL of the ECU. The voltage applied to the terminal VTA of the ECU increases in proportion to the opening angle of the throttle valve and becomes approximately 3.5–5.0 V when the throttle valve is fully opened. The ECU judges the vehicle driving conditions from these signals input from the terminals VTA and IDL, and uses them as one of the conditions for deciding the air–fuel ratio correction, power increase correction and fuel–cut control etc. The sub–throttle position sensor is built and operates in the same way as the main throttle position sensor. This sensor is used for traction control. The sub–throttle valve is opened and closed by the sub–throttle actuator according to signals from the TRAC ECU to control the engine output.

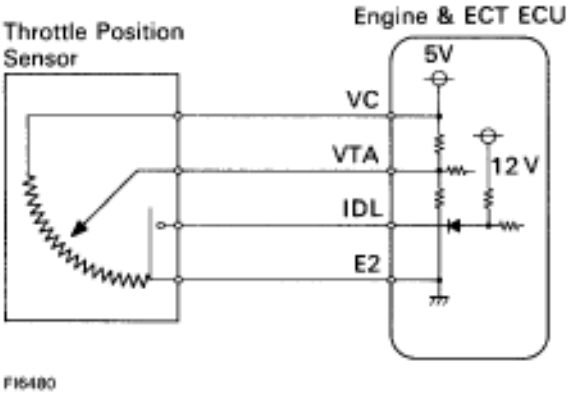

Code No.	Diagnostic Code Detecting Condition	Trouble Area
41	(1) Open or short in throttle position sensor circuit (VTA1) for 0.5 sec. or more.	▼Open or short in throttle position sensor circuit.
	(2) IDL1 contact is ON and VTA1 output exceeds 1.5 V for 0.5 sec. or more.	▼Throttle position sensor ▼ECU
47	(1) Open or short in sub–throttle position sensor circuit (VTA2) for 0.5 sec. or more.	▼Open or short in sub–throttle position sensor circuit.
	(2) IDL2 contact is ON and VTA2 output exceeds 1.5 V for 0.5 sec. or more.	▼Sub–throttle position sensor ▼ECU

HINT:

Diag. code 41 is for the throttle position sensor circuit.
Diag. code 47 is for the sub–throttle position sensor circuit.

- When the connector for the (sub–) throttle position sensor is disconnected, diagnostic code 41 or 47 is not displayed. Diagnostic code 41 or 47 is displayed only when there is an open or short in the VTA signal circuit of the (sub–) throttle position sensor.
- Signals from the (sub–) throttle position sensor are also input to the TRAC ECU, So when a malfunction occurs on the TRAC side, code 41 or 47 may be displayed.

WhereEverybodyKnowsYourName

DIAGNOSTIC CHART

HINT:

- If diag. code 41 is displayed, check throttle position sensor circuit; if diag. code 47 is displayed, check sub–throttle position sensor circuit.
- If diag. codes ”22” (water temperature sensor circuit), ”24” (intake air temperature sensor circuit) and ”41” (throttle position sensor circuit) are output simultaneously, E2 (sensor ground) may be open.

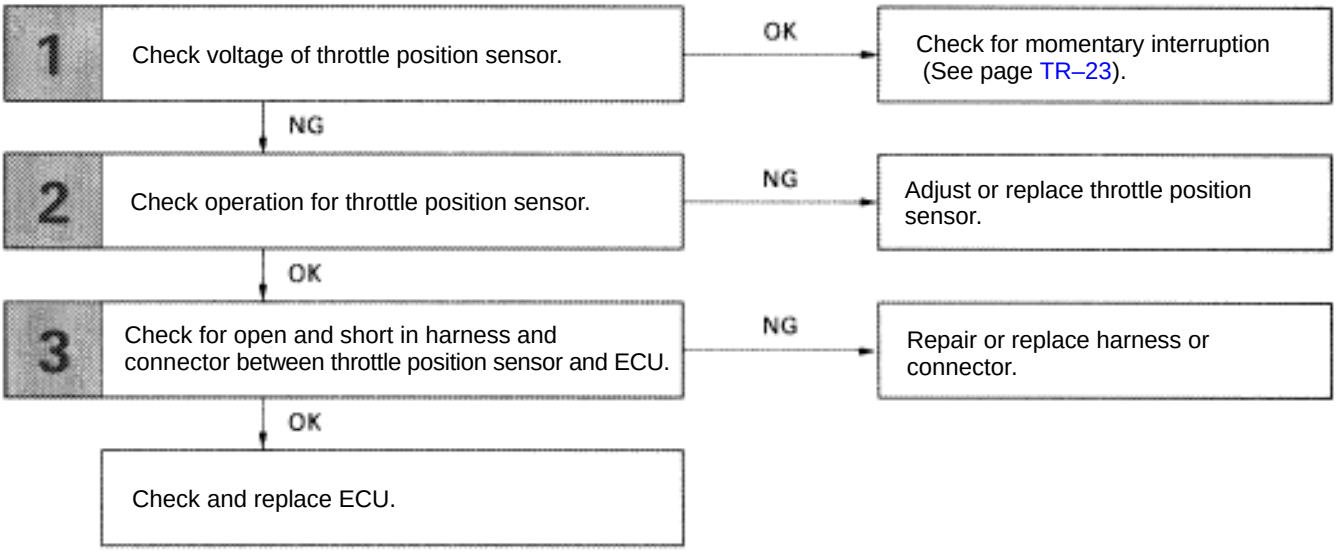

WIRING DIAGRAM

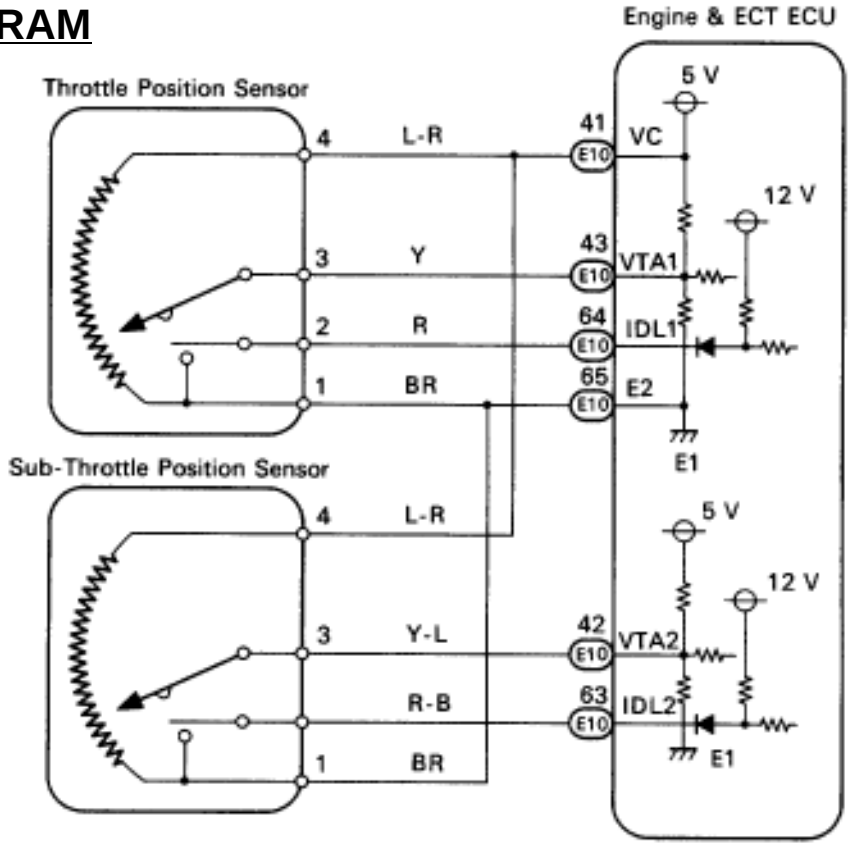

FI6478

WhereEverybodyKnowsYourName

INSPECTION PROCEDURE

HINT:

- If diag. code 41 is displayed, check throttle position sensor circuit. If diag. code 47 is displayed, check sub–throttle position sensor circuit.
- If diag. codes ”22” (water temperature sensor circuit), ”24” (intake air temperature sensor circuit) and ”41” (throttle position sensor circuit) are output simultaneously, E2 (sensor ground) may be open.

 # Check voltage between terminals VTA1, 2, IDL1, 2 and E2 of engine & ECT ECU connector.

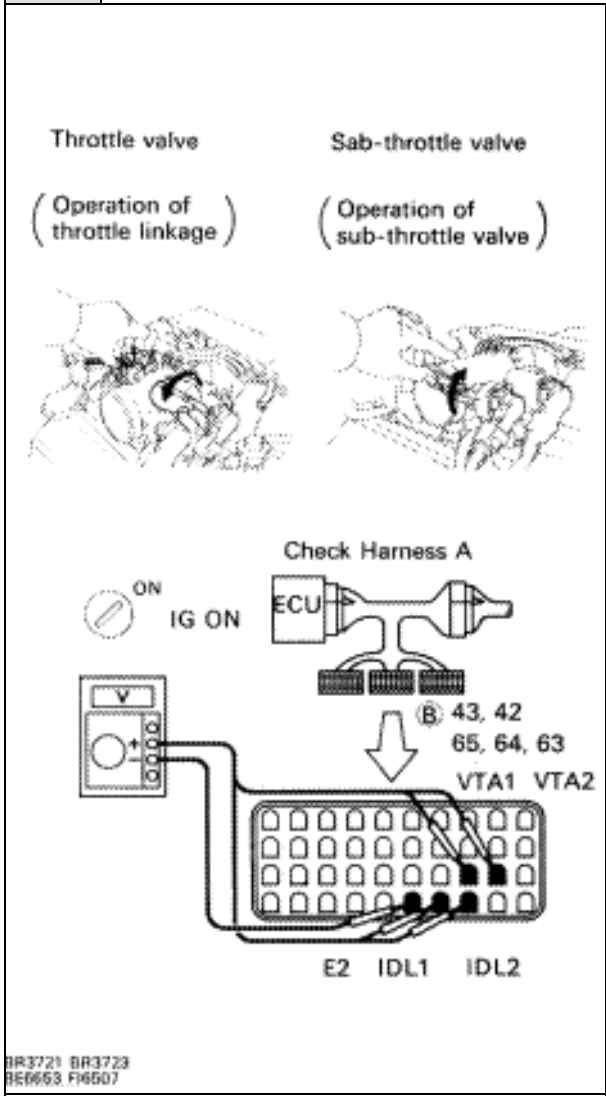

P (2) Connect the Check Harness A. (See page TR–30).

(2) Turn ignition switch on.

(2) For sub–throttle position sensor, remove intake air duct and disconnect sub–throttle valve step motor connector.

C Measure voltage between terminals VTA1, 2, IDL1, 2 and E2 of engine & ECT ECU connector when the (sub–) throttle valve is opened gradually from the closed condition.

OK

Terminal / Throttle Valve	VTA1, 2	IDL1, 2
Fully Closed	0.1 – 1.0 V	Below 1.0 V
Fully Open	3 – 5 V	10 – 14 V

Hint The voltage should increase steadily in proportion to the throttle valve opening angle.

NG

OK **Check for Momentary interruption (See page TR–23).**

Go to step [2].

WhereEverybodyKnowsYourName

2 **Check (sub–) throttle position sensor.**

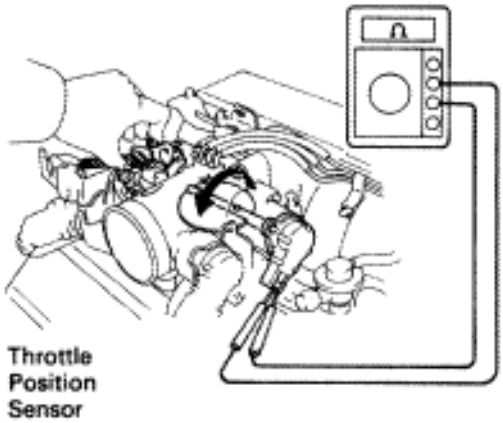

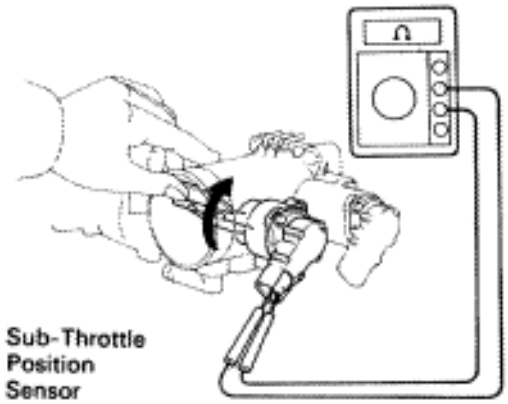

FI4746
FI4745

P (2) Remove intake air duct.

(2) Disconnect (sub–) throttle position sensor connector.

C Measure resistance between terminals 3, 2, and 1 of (sub–) throttle position sensor connector when the throttle valve is opened gradually from the closed condition.

OK

Terminal / Throttle Valve	3 – 1	2 – 1
Fully Closed	0.2 – 0.8 kΩ	Less than 0.5 kΩ
Fully Open	2.8 – 8.0 kΩ	1 MΩ or higher

Hint Resistance between terminals 3 and 1 should increase gradually in accordance with the throttle valve opening angle.

OK

NG **Adjust or replace (sub–) throttle position sensor (See page FI–73).**

3 **Check for open and short in harness and connector between engine & ECT ECU and (sub–) throttle position sensor (See page IN–27).**

OK

NG **Repair or replace harness or connector.**

Check and replace engine & ECT ECU.

WhereEverybodyKnowsYourName

Diag. Code 42 — Vehicle Speed Sensor Signal Circuit

CIRCUIT DESCRIPTION

The No. 1 speed sensor outputs a 20–pulse signal for every revolution of the rotor shaft, which is rotated by the transmission output shaft via the driven gear. This signal is converted in the combination meter to 4–pulse signal by the pulse conversion circuit and then sent to the Engine & ECT ECU. The ECU determines the vehicle speed based on the frequency of these pulse signals.

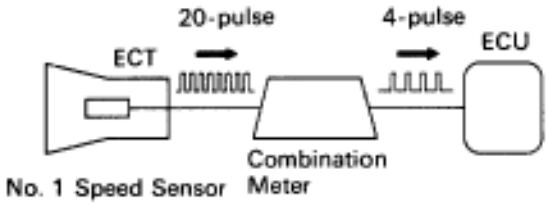

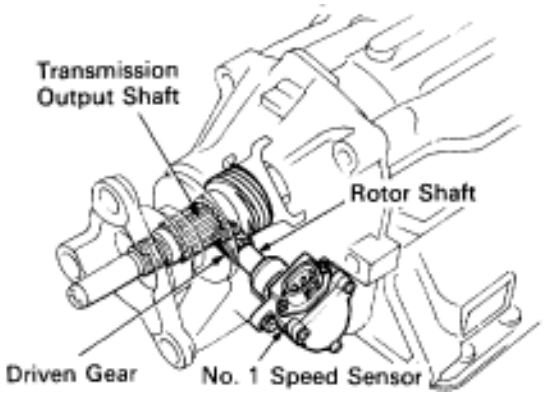

Code No.	Diagnostic Code Detecting Condition	Trouble Area
42	All conditions below are detected continuously for 8 sec. or more. (a) Vehicle speed signal: 0 km/h (0 mph) (b) Engine speed: 1,500 rpm or more (c) Neutral start switch (NSW): OFF	▼No. 1 speed sensor. ▼Combination meter. ▼Open or short in No. 1 speed sensor circuit. ▼ECU

HINT: In test mode, diag. code 42 is output when vehicle speed is 5 km/h (3 mph) or below.

DIAGNOSTIC CHART

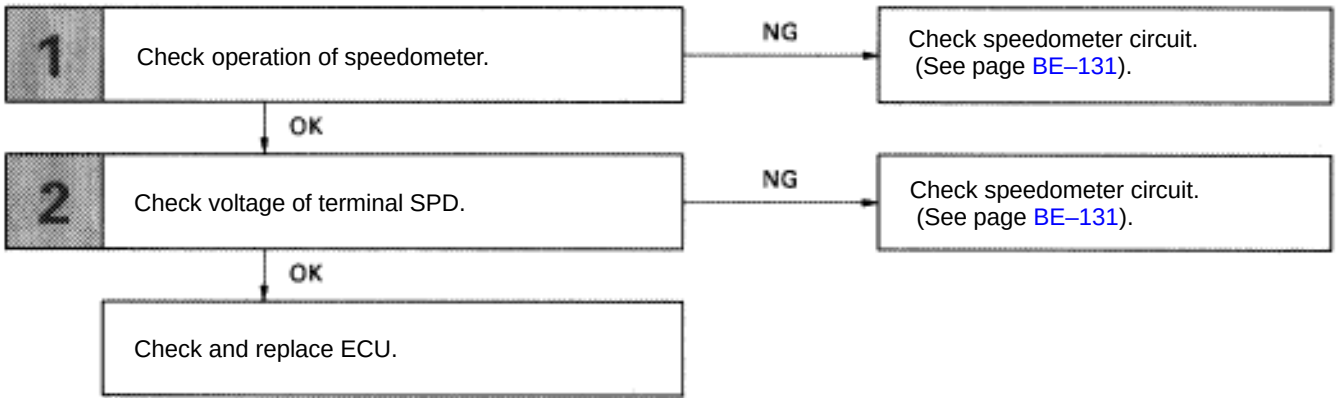

WIRING DIAGRAM

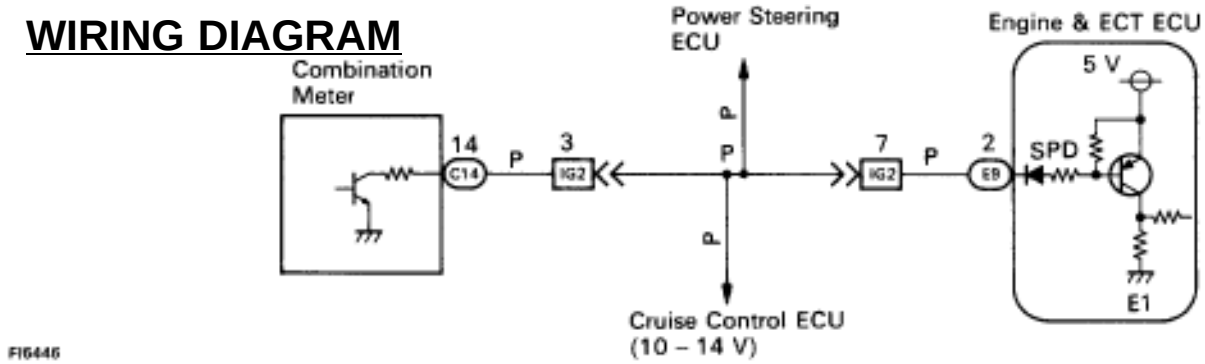

WhereEverybodyKnowsYourName

1	**Check operation of speedometer.**
C	Drive the vehicle and check if the operation of the speedometer in the combination meter is normal.
Hint	The No. 1 speed sensor is operating normally if the speedometer display is normal.

OK

NG **Check speedometer circuit. See combination meter troubleshooting on page BE–131.**

2	**Check voltage between terminal SPD of engine & ECT ECU connector and body ground.**

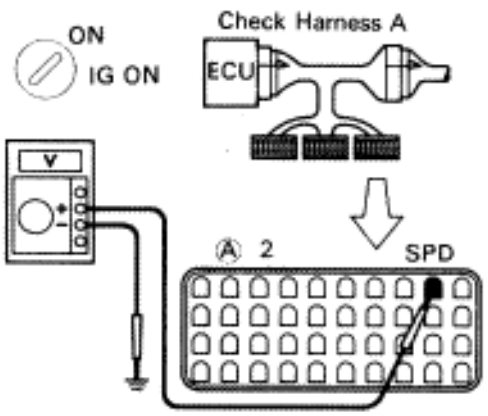

P
(2) Shift the shift level to N range.
(2) Jack up a read wheel on one side.
(2) Connect the Check Harness A. (See page TR–30)
(2) Turn ignition switch on.

C Measure voltage between terminal SPD of engine & ECT ECU connector and body ground when the wheel is turned slowly.

OK **Voltage is generated intermittently.**

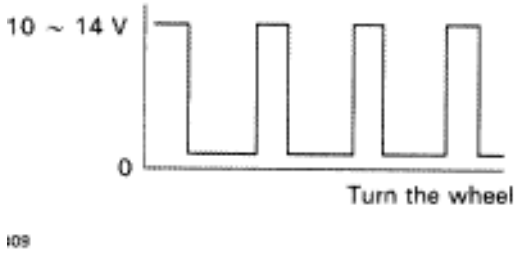

OK

NG **Check speedometer circuit. See combination meter troubleshooting on page BE–131.**

Check and replace engine & ECT ECU.

WhereEverybodyKnowsYourName

Diag. Code 43	Starter Signal Circuit

CIRCUIT DESCRIPTION

When the engine is cranked, the intake air flow is slow, so fuel vaporization is poor. A rich mixture is therefore necessary in order to achieve good startability. While the engine is being cranked, the battery voltage is applied to terminal STA of the ECU. The starter signal is mainly used to increase the fuel injection volume for the starting injection control and after–start injection control.

Code No.	Diagnostic Code Detecting Condition	Trouble Area
43	No starter signal to ECU	▼Open or short in starter signal circuit. ▼Open or short in ignition switch or main relay circuit. ▼ECU

DIAGNOSTIC CHART

HINT: This diagnostic chart is based on the premise that the engine is cranked normally. If the engine is not cranked, proceed to the matrix chart of problem symptoms on page TR–35.

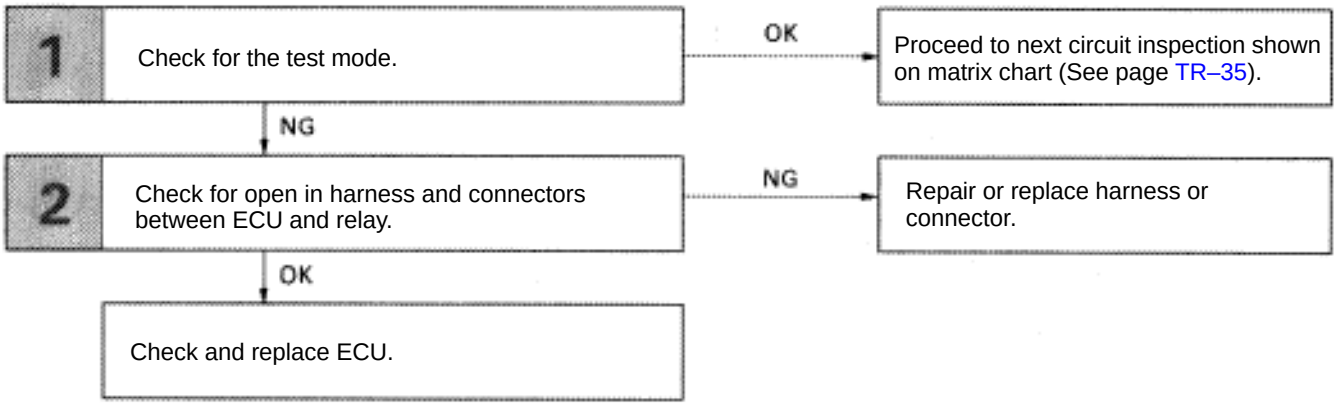

WIRING DIAGRAM

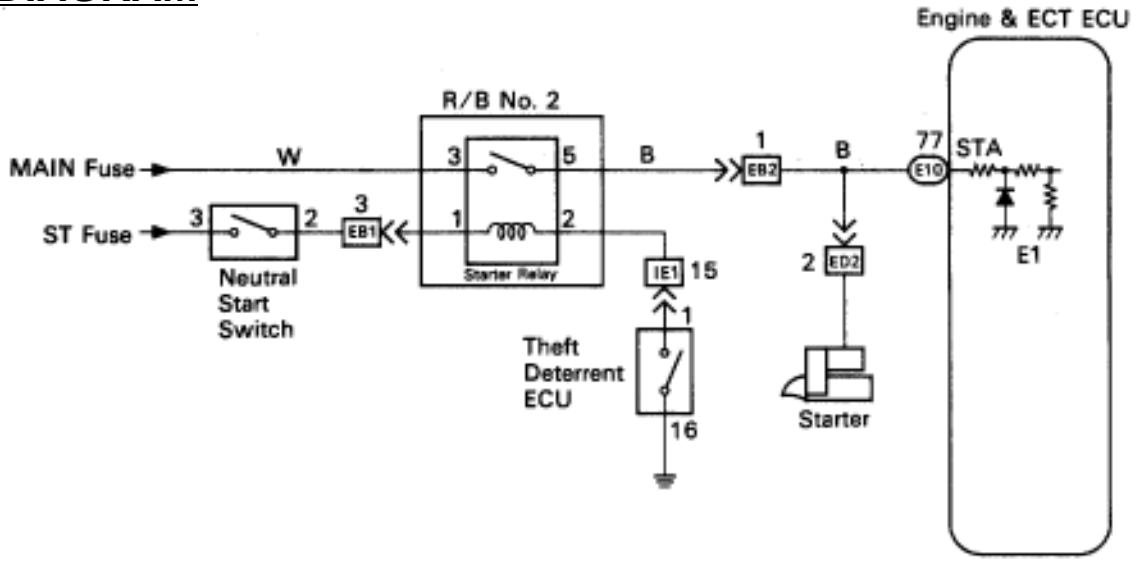

WhereEverybodyKnowsYourName

INSPECTION PROCEDURE

1	Check output condition of diag. code 43.

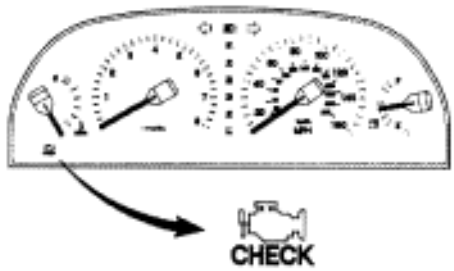

FI6433

P Setting the test mode.
(2) Turn ignition switch OFF.
(2) Connect terminals TE2 and E1 of TDCL.
(2) Turn ignition switch ON.
(Don't start the engine)
(2) Connect terminals TE1 and E1 of TDCL.

C Check if code "43" is output by the "CHECK" engine warning light.

OK **Code "43" is output.**

C Start the engine.
Check if the code "43" disapears.

OK **Code "43" is not output.**

NG

OK **Proceed to next circuit inspection shown on maxtric chart (See page TR–35).**

2	Check for open in harness and connectors between engine & ECT ECU and starter relay (See page IN–27).

OK

NG **Repair or replace harness or connector.**

Check and replace engine & ECT ECU.

WhereEverybodyKnowsYourName

Diag. Code 52,53,55 Knock Sensor Circuit

— CIRCUIT DESCRIPTION

Knock sensors are fitted one each to the right bank and left bank of the cylinder block to detect engine knocking. This sensor contains a piezoelectric element which generates a voltage when it becomes deformed, which occurs when the cylinder block vibrates due to knocking. If engine knocking occurs, ignition timing is retarded to suppress it.

Code No.	Diagnostic Code Detecting Condition	Trouble Area
52	No No. 1 knock sensor signal to ECU for 3 crank revolutions with engine speed between 1,600 rpm 5,200 rpm.	▼Open or short in No. 1 knock sensor circuit. ▼No. 1 knock sensor (looseness) ▼ECU
53	Engine control computer (for knock control) malfunction at engine speed between 650 rpm and 5,200 rpm.	▼ECU
55	No No. 2 knock sensor signal to ECU for 3 crank revolutions with engine speed between 1,600 rpm 5,200 rpm.	▼Open or short in No. 2 knock sensor circuit. ▼No. 2 knock sensor (looseness) ▼ECU

If the ECU detects the above diagnosis conditions, it operates the fail safe function in which the corrective retard angle value is set to the maximum value.

WhereEverybodyKnowsYourName

— CIRCUIT DESCRIPTION (Cont'd)

DIAGNOSIS CODE DETECTION DRIVING PATTERN

Purpose of the driving pattern.

(a) To simulate diag. code detecting condition after diag. code is recorded.

(b) To check that the malfunction is corrected when the repair is completed confirming that diag. code is no longer detected.

Malfunction: Open or Short in Knock Sensor

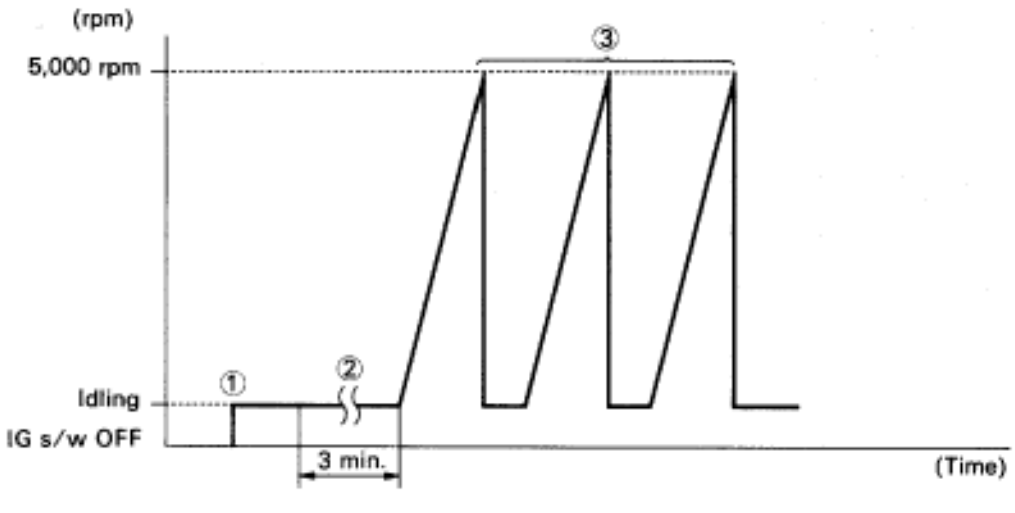

❷ Start engine and warm up.

→ After engine is warmed up, let it idle for 3 min.

❹ With the A/C ON, perform quick racing (5,000 rpm) three times.
(Rapidly depress the accelerator pedal and suddenly release it.)

HINT: If a malfunction exists, the "CHECK" engine warning light will light up when sudden racing is performed.

NOTICE: If the conditions in this test are not strictly followed, detection of the malfunction will not be possible.

WhereEverybodyKnowsYourName

DIAGNOSTIC CHART

HINT: If diag. code 52 is displayed, check No. 1 knock sensor (for left bank) circuit.
If diag. code 55 is displayed, check No. 2 knock sensor (for right bank) circuit.
If diag. code 53 is displayed, replace engine & ECT ECU.

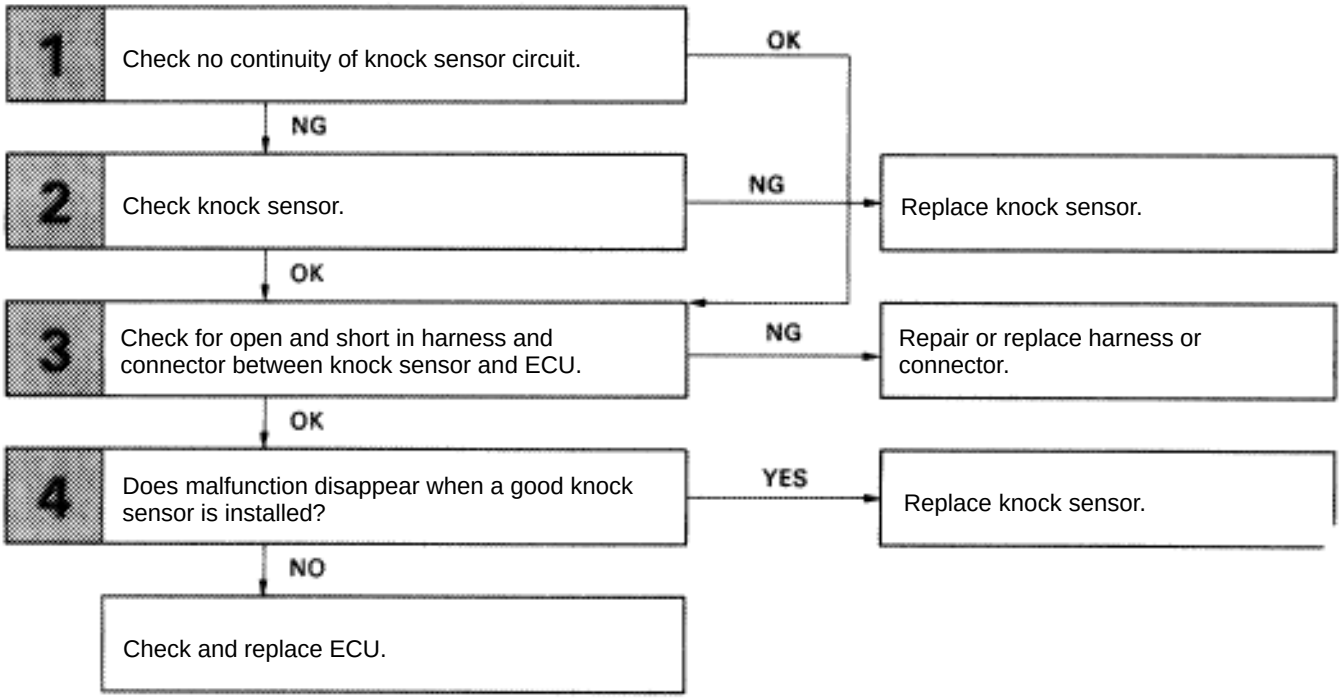

WIRING DIAGRAM

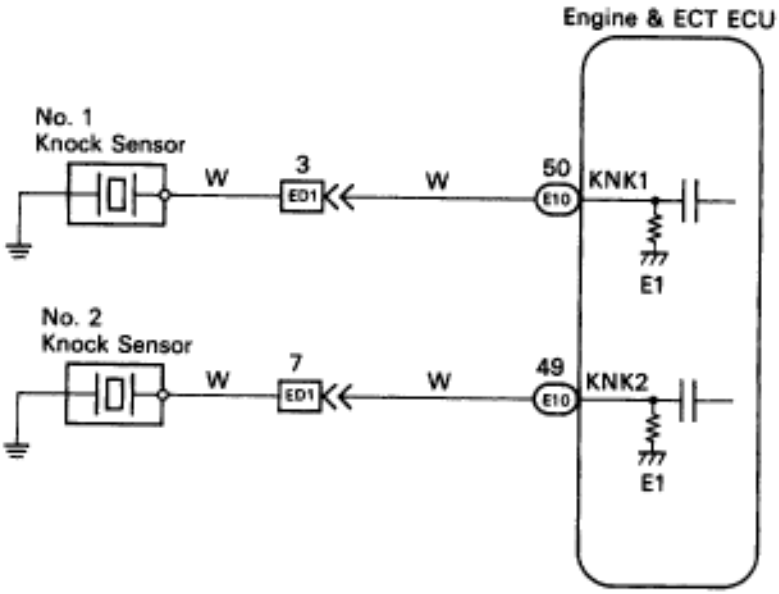

FI6449

WhereEverybodyKnowsYourName

INSPECTION PROCEDURE

1	Check continuity between terminals KNK1, KNK2 of engine & ECT ECU connector and body ground.

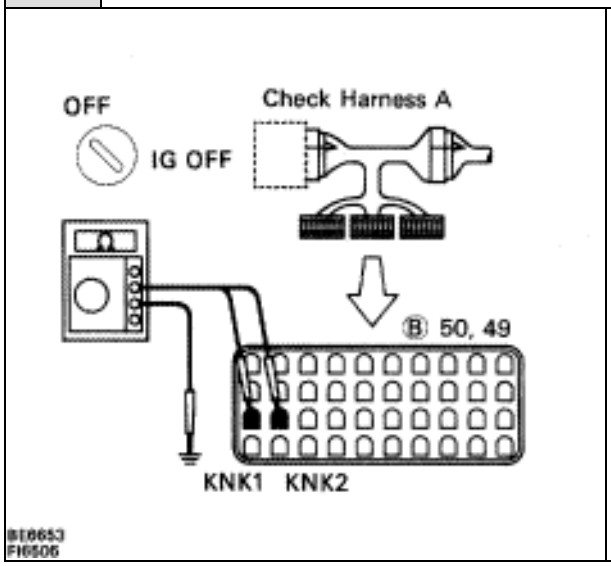

P (2) Connect the Check Harness A.
(See page TR–30)
(2) Disconnect the engine & ECT ECU connector.

C Measure resistance between terminals KNK1, KNK2 of engine & ECT ECU connector and body ground.

OK **Resistance: 1 M or higher**

NG

OK **Go to step 3.**

2	Check knock sensor.

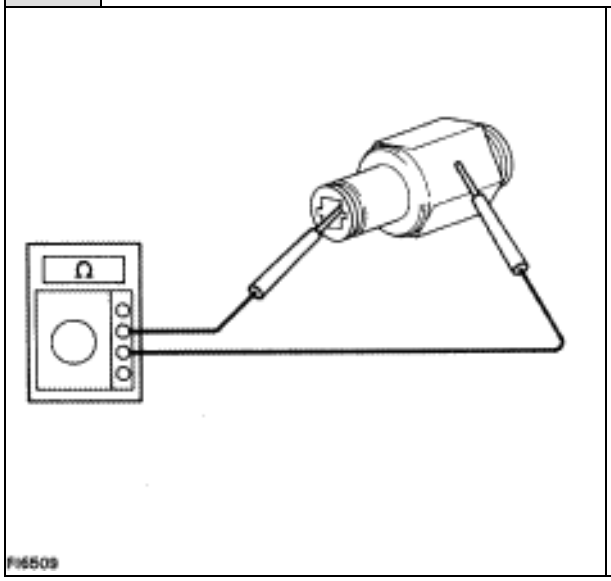

P Disconnect knock sensor connector.

C Measure resistance between the knock sensor terminal and body.

OK **Resistance: 1 M or higher**

OK

NG **Replace knock sensor (See page FI–108).**

WhereEverybodyKnowsYourName

3	**Check for open and short in harness and connectors between engine & ECT ECU and knock sensor (See page IN–27)**

OK

NG → **Repair or replace harness or connector.**

4	**Does malfunction disappear when a good knock sensor is installed?**

NO

YES → **Replace knock sensor (See page FI–108).**

Check and replace engine & ECT ECU.

Reference | INSPECTION USING OSCILLOSCOPE

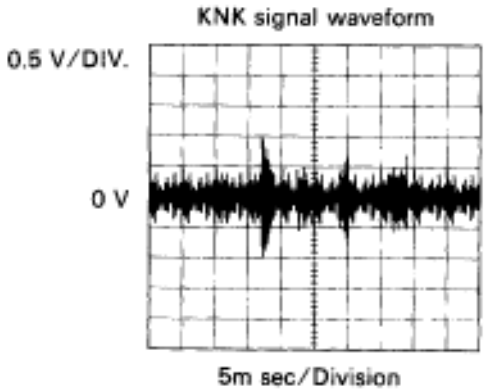

- With the engine racing (4,000 rpm) measure between terminals KNK1, KNK2 of engine & ECT ECU and body ground.

HINT: The correct waveform appears as shown in the Illustration on the left.

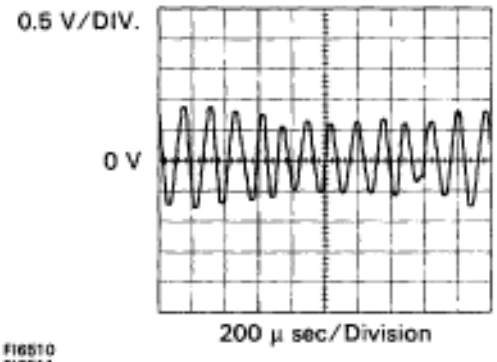

FI6510
FI6511

- Spread the time on the horizontal axis, and confirm that period of the wave is 151 sec.
  (Normal mode vibration frequency of knock sensor: 6.6 KHz).

HINT: If normal mode vibration frequency is not 6.6 KHz, the sensor is malfunctioning.

WhereEverybodyKnowsYourName

–MEMO–

WhereEverybodyKnowsYourName

Diag. Code 71	EGR System Malfunction (Only for USA spec.)

— CIRCUIT DESCRIPTION

The EGR system recirculates exhaust gas, which is controlled to the proper quantity to suit the driving conditions, into the intake air mixture to slow down combustion, reduce the combustion temperature and reduce NOx emissions.
The lift amount of the EGR valve is controlled by a step motor operated by the ECU. The ECU operates the motor only a preprogrammed amount in response to the engine operating conditions (engine rpm, intake air volume to adjust the EGR volume to the target valve.)
Under the following conditions, EGR is cut to maintain driveability.

- Coolant temp. below 535C (127.45F)
- During deceleration (throttle valve closed)
- Light engine load (amount of intake air very small)
- Engine speed over 4,000 rpm
- Engine idling
- Neutral start switch on

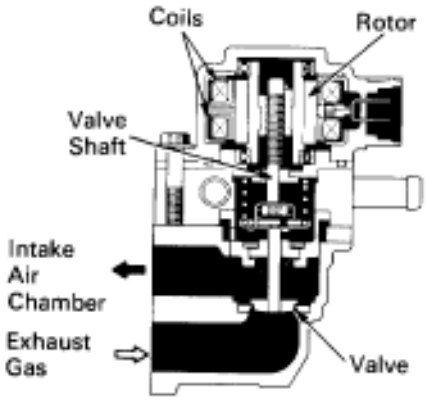

Code No.	Diagnostic Code Detecting Condition	Trouble Area
71	(1) Open or short in EGR step motor circuit for 1 sec. or more.	▼Open or short in EGR step motor circuit ▼ECU
	(2) EGR gas temp. is 65°C (149°F) or below for 1 ~ 4 min. under conditions (a) and(b). (2 trip detection logic)* (a) Coolant temp.: 65°C (149°F) or more. (b) EGR operation possible (EX. ECT in 3rd speed, A/C ON, 60 mph (96 km/h), Flat road).	▼Open in EGR gas temp. sensor circuit ▼ECU

*: See page TR–21.

WhereEverybodyKnowsYourName

— CIRCUIT DESCRIPTION (Cont'd) —

DIAGNOSIS CODE DETECTION DRIVING PATTERN

Purpose of the driving pattern.

(a) To simulate diag. code detecting condition after diag. code is recorded.

(b) To check that the malfunction is corrected when the repair is completed confirming that diag. code is no longer detected.

Malfunction: Open in EGR gas temp. sensor circuit

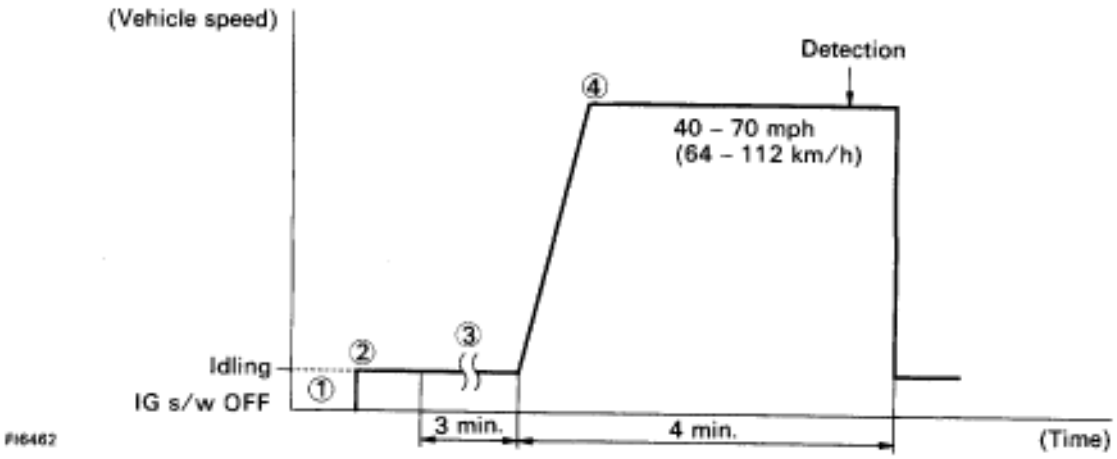

❷ Initiate test mode (See page TR–12).

→ Start engine and warm up.

❹ After engine is warmed up, let it idle for 3 min.

③ With the A/C ON and transmission in D range (O/D OFF), drive at 40–70 mph for 4 min.

HINT: If a malfunction exists, the "CHECK" engine warning light will light up at 1–4 min. of driving at 40–70 mph (64–112 km/h).

NOTICE: If the conditions in this test are not strictly followed, detection of the malfunction will not be possible.

WhereEverybodyKnowsYourName

DIAGNOSTIC CHART

1 Check voltage of terminal EGR 1 ~ 4.
- OK → 5
- NG ↓

2 Check voltage of EGR Step motor power source.
- NG → Check for ECU power source circuit.
- OK ↓

3 Check resistance of EGR step motor.
- NG → Replace EGR step motor.
- OK ↓

4 Check for open and short in harness and connector between EGR step motor and ECU.
- NG → Repair or replace harness or connector.
- OK ↓

Check and replace ECU.

5 Check operation for EGR step motor.
- NG → Replace EGR step motor.
- OK ↓

6 Check resistance of EGR gas temp. sensor.
- NG → Replace EGR gas temp. sensor.
- OK ↓

7 Check for open and short in harness and connector between EGR gas temp. sensor and ECU.
- NG → Repair or replace harness or connector.
- OK ↓

Check and replace ECU.

WIRING DIAGRAM

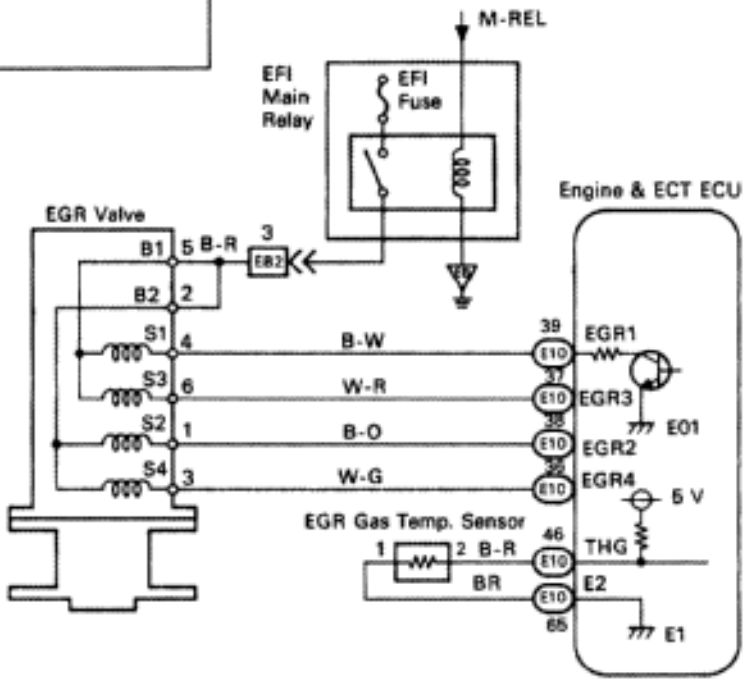

WhereEverybodyKnowsYourName

INSPECTION PROCEDURE

1	Check voltage between terminals EGR 1 ~ 4 of engine & ECT ECU connector and body ground.
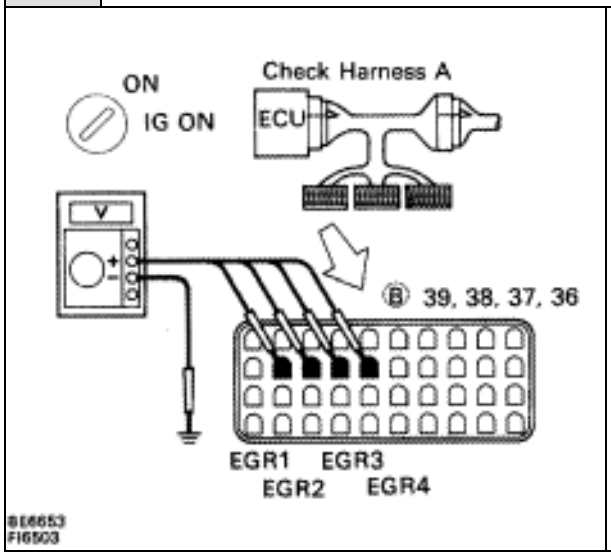	**P** (2) Connect the Check Harness A. (See page TR–30). (2) Turn ignition switch on. **C** Measure voltage between terminals EGR 1 ~ 4 of engine & ECT ECU connector and body ground. **OK** **Voltage: 10 – 14 V**

NG

OK → **Go to step 5.**

2	Check voltage between terminals B1 and B2 of EGR step motor connector and body ground.
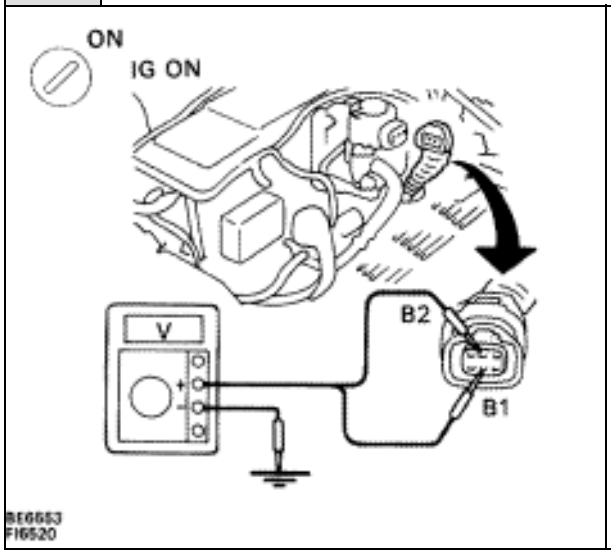	**P** (2) Disconnect EGR step motor connector. (2) Turn ignition switch on. **C** Measure voltage between terminals B1 and B2 of EGR step motor connector and body ground. **OK** **Voltage: 10 – 14 V**

OK

NG → **Check for ECU power source circuit (See page TR–124).**

WhereEverybodyKnowsYourName

3 **Check resistance of EGR step motor.**

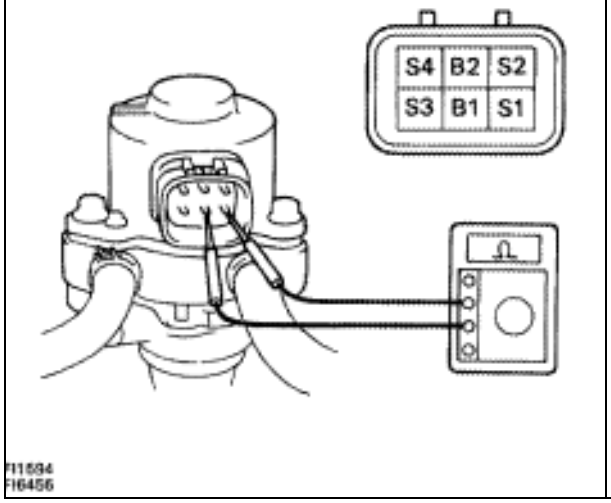

P Disconnect EGR step motor connector.

C Measure resistance between terminals shown below.

OK

Terminal	Resistance
B1 – S1	10 Ω – 30 Ω
B1 – S3	10 Ω – 30 Ω
B2 – S2	10 Ω – 30 Ω
B2 – S4	10 Ω – 30 Ω

OK → **NG** → **Replace EGR step motor.**

4 **Check for open and short in harness and connector between EGR step motor and engine & ECT ECU (See page IN–27).**

OK → **NG** → **Repair or replace harness or connector.**

Check and replace engine & ECT ECU.

5 **Check operation for EGR step motor.**

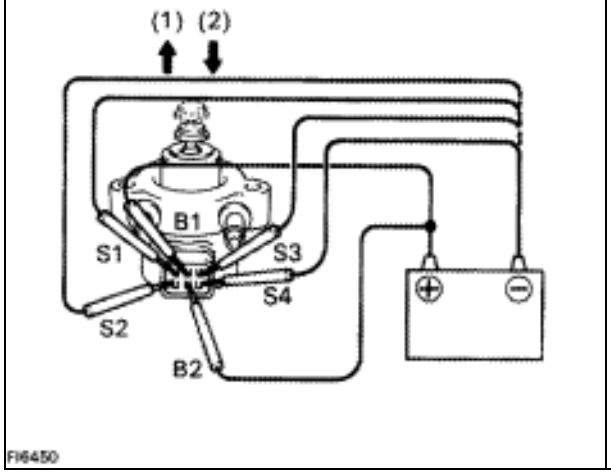

P Remove EGR step motor.

C (2) Connect the battery positive lead to terminals B1 and B2, and the negative lead to terminals S1 – S2 – S3 – S4 in that order.

(2) Connect the battery positive lead to terminals B1 and B2, and the negative lead to terminals S4 – S3 – S2 – S1 in that order.

OK **(2) The valve moves in the closing direction.**

(2) The valve moves in the opening direction.

OK → **NG** → **Replace EGR step motor.**

WhereEverybodyKnowsYourName

6	Check resistance of EGR gas temp. sensor.
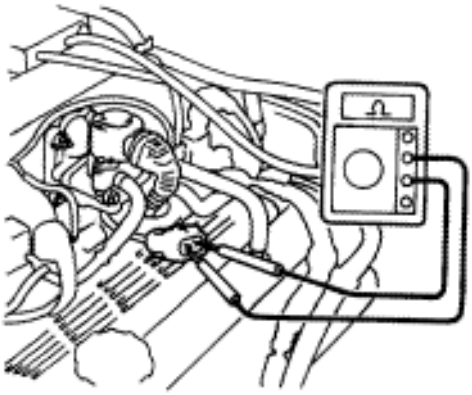 FI6486	**P** Disconnect EGR gas temp. sensor connector (See page FI–103). **C** Measure resistance between terminals of EGR gas temp. sensor connector. **OK** **Resistance: 69 – 89 k at 50°C (122°F)** **12 – 15 k at 100°C (212°F)** **2 – 4 k at 150°C (302°F)**

OK

NG **Replace EGR gas temp. sensor.**

7	Check for open and short in harness and connector between EGR gas temp. sensor and engine & ECT ECU (See IN–27).

OK

NG **Repair or replace harness or connector.**

Check and replace engine & ECT ECU.

WhereEverybodyKnowsYourName

Diag. Code 78 | Fuel Pump Control Circuit

— CIRCUIT DESCRIPTION

The fuel pump speed is controlled at two steps (high speed, low speed) by the condition of the engine (starting, light load, heavy load), when the engine starts (STA ON), the engine & ECT ECU sends a Hi signal to the fuel pump ECU (FPC terminal).
The fuel pump ECU then outputs Hi voltage (battery voltage) to the fuel pump so that the fuel pump operates at high speed.
After the engine starts, during idling or light loads, the engine & ECT ECU outputs a High Low signal to the fuel pump ECU, the fuel pump ECU outputs Lo battery voltage (about 9V) to the fuel pump and causes the fuel pump to operate at low speed.
If the intake air volume increases (high engine load), the engine & ECT ECU sends a Hi signal to the fuel pump ECU and causes the fuel pump to operate at high speed.

Code No.	Diagnostic Code Detecting Condition	Trouble Area
78	(1) Open or short in fuel pump circuit for 1 sec. or more with engine speed 1,000 rpm or less. (2 trip detection logic)*	▼Open or short in fuel pump ECU circuit. ▼Fuel pump ECU ▼Engine & ECT ECU power source circuit. ▼Fuel pump ▼Engine & ECT ECU
	(2) Open in input circuit of fuel pump ECU(FPC) with engine speed 1,000 rpm or less. (2 trip detection logic)*	
	(3) Open or short in diagnostic signal line (DI) of fuel pump ECU with engine speed 1,000 rpm or less. (2 trip detection logic)*	

*: See page TR–21.

WIRING DIAGRAM

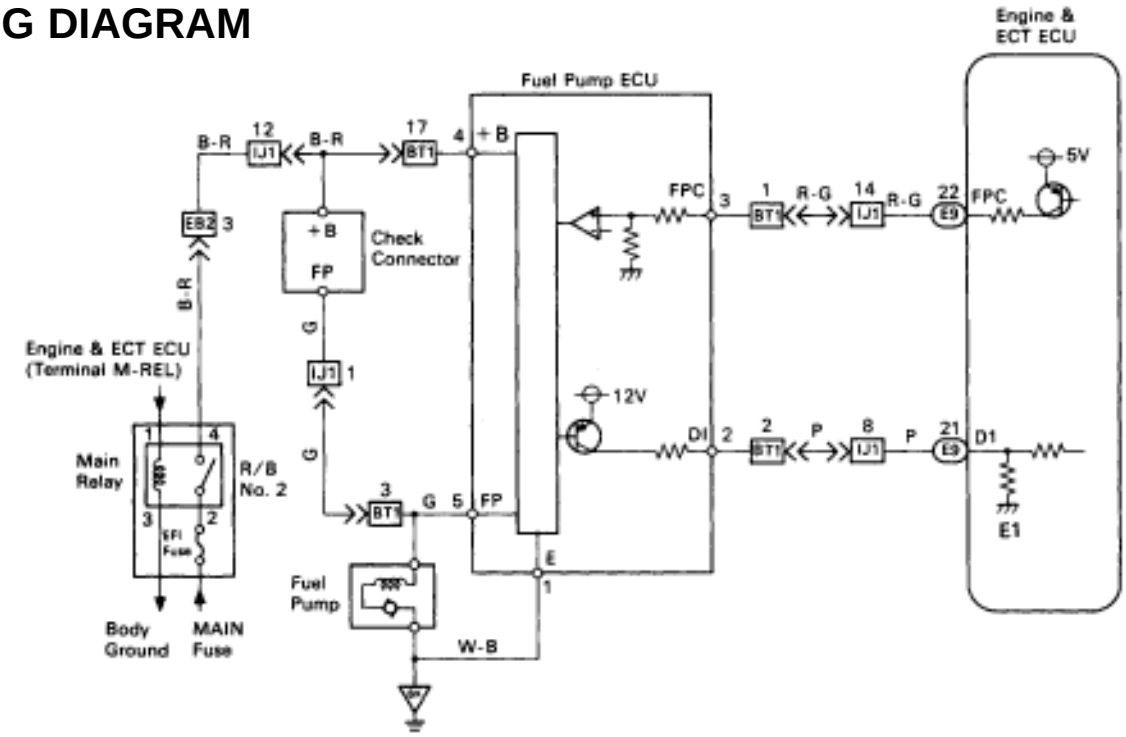

WhereEverybodyKnowsYourName

DIAGNOSTIC CHART

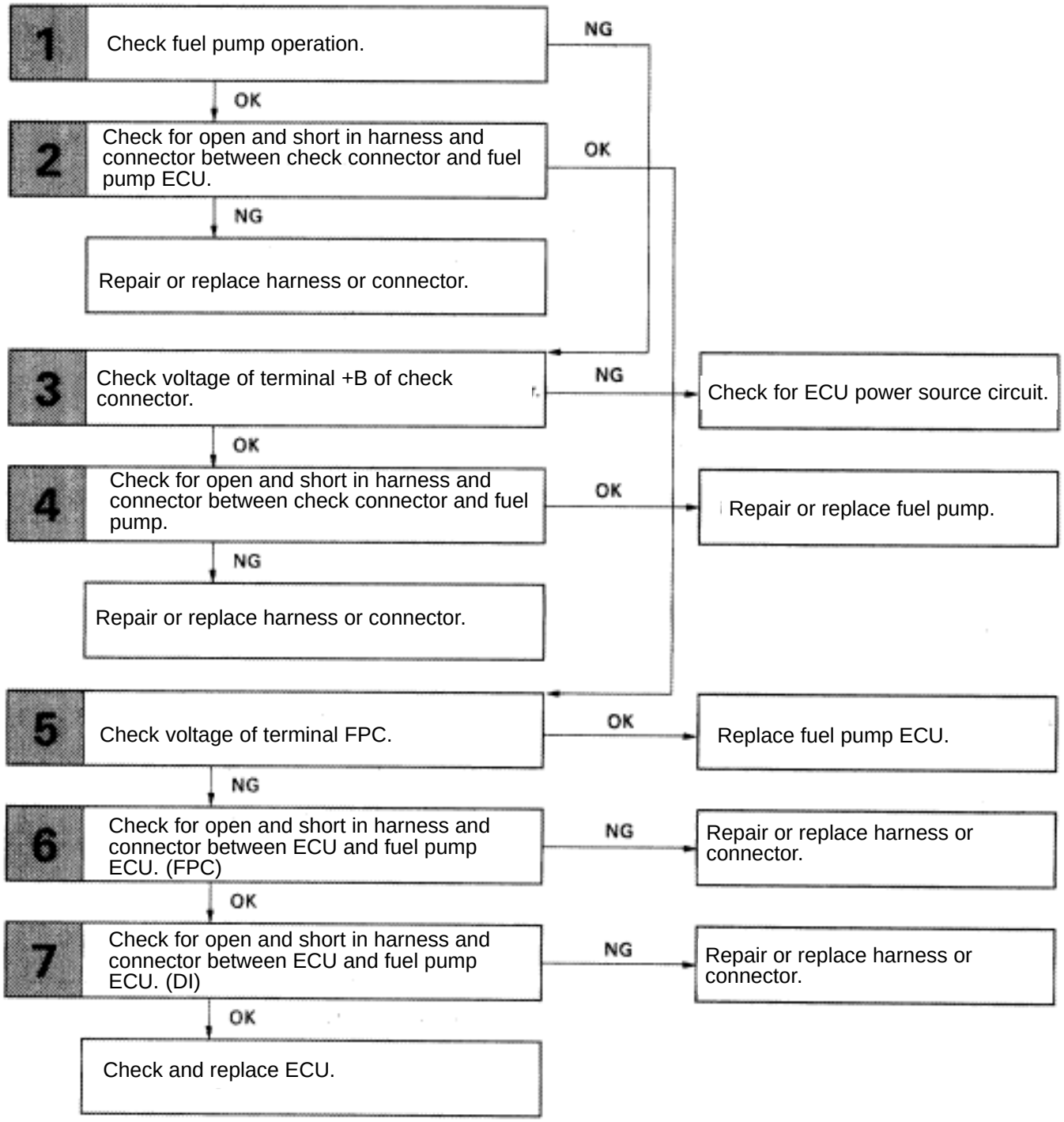

WhereEverybodyKnowsYourName

INSPECTION PROCEDURE

1 **Check fuel pump operation.**

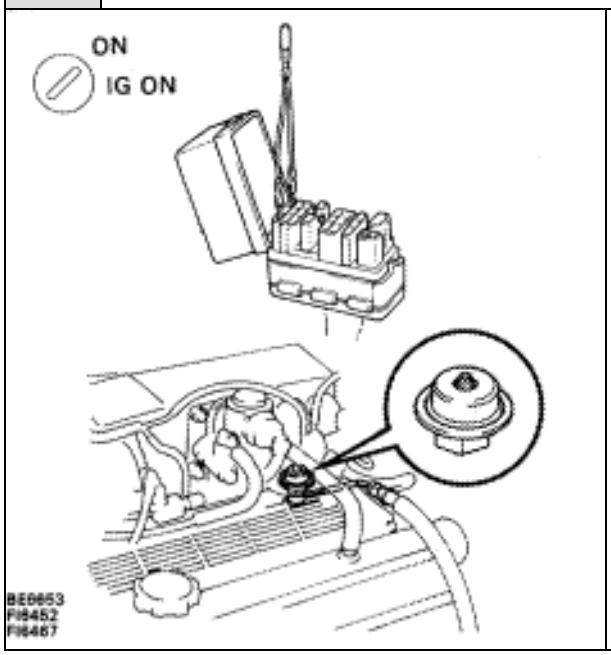

P (2) Turn ignition switch ON.

(2) Using SST. connect terminals + B and FP of check connector.

SST 09843–18020

C Check that there is projection of the head of the pulsation damper screw.

OK **Projection of the head of the pulsation damper screw.**

OK → **NG** → **Go to step 3.**

2 **Check for open and short in harness and connector between terminals + B ↔ + B FP ↔ FP of the check connector and fuel pump ECU (See page IN–27).**

NG → **OK** → **Go to step 5.**

Repair or replace harness or connector.

3 **Check voltage or terminal + B of check connector.**

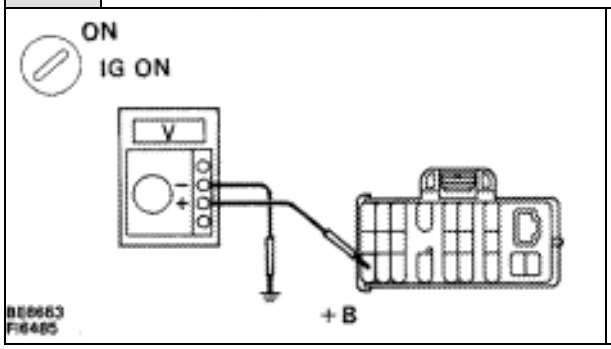

P Turn ignition switch ON.

C Measure voltage between terminal + B of check connector and body ground.

OK **Voltage: 10 – 14 V**

OK → **NG** → **Check for ECU power source circuit (See page TR–124), and check for open in harness and connector between terminal + B of check connector and main relay.**

WhereEverybodyKnowsYourName

4	Check for open and short in harness and connector between terminal FP of check connector, fuel pump and body ground (See page IN–27).

NG → Repair or replace harness or connector.

OK → Repair or replace fuel pump.

5	check voltage between terminals FPC and E of fuel pump ECU connector.

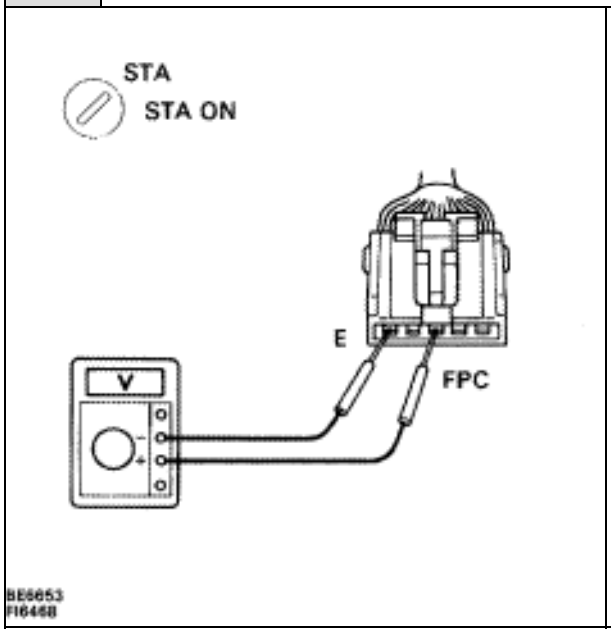

P (2) Remove the LH quarter trim panel. (See page BO–123)

(2) Disconnect fuel pump ECU connector.

C Measure voltage between terminals FPC and E of fuel pump ECU connector when ignition switch is turned to start.

OK **Voltage: 4 – 6 V**

NG → Replace fuel pump ECU.

OK → Replace fuel pump ECU.

6	Check for open in harness and connector between terminal FPC of engine & ECT ECU and terminal FPC of fuel pump ECU, terminal E of fuel pump ECU and body ground (See page IN–27).

OK → Check and replace engine & ECT ECU.

NG → Repair or replace harness or connector.

7	Check for open in harness and connector between terminal DI of engine & ECT ECU and terminal DI of fuel pump ECU (See page IN–27).

OK → Check and replace engine & ECT ECU.

NG → Repair or replace harness or connector.

WhereEverybodyKnowsYourName

Diag. Code 51 | Switch Condition Signal Circuit

CIRCUIT DESCRIPTION

Neutral Start Switch Signal

The ECU uses the signals from the neutral start switch to determine whether the transmission is in park or neutral, or in some other gear.

Air Conditioner Switch Signal

The ECU uses the output from the air conditioner switch to determine whether or not the air conditioner is operating so that it can increase the idling speed of the engine if necessary.

Throttle Position Sensor IDL Signal

The IDL contacts are mounted in the throttle position sensor, and detects the idle condition.

Code No.	Diagnostic Code Detecting Condition	Trouble Area
51	(1) 3 sec. or more after engine startsidle switch OFF (IDL1). (2) Neutral start switch OFF (NSW).(Shift position i n ”R”, ”D”, ”2”or ”1” ranges). (3) A/C switch ON.	▼Throttle position sensor IDL circuit ▼Accelerator pedal and cable ▼Neutral start switch circuit ▼A/C switch circuit ▼ECU

HINT: In this circuit, diagnosis can only be made in the test mode.

DIAGNOSTIC CHART

See next page for DIAGNOSTIC CHART

WIRING DIAGRAM

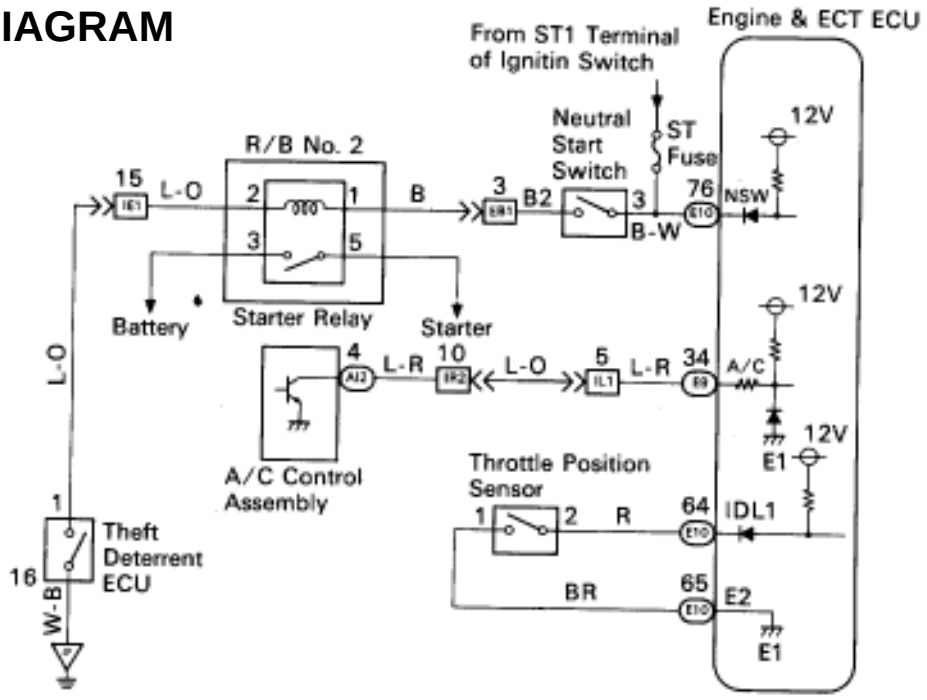

FI6484

WhereEverybodyKnowsYourName

DIAGNOSTIC CHART

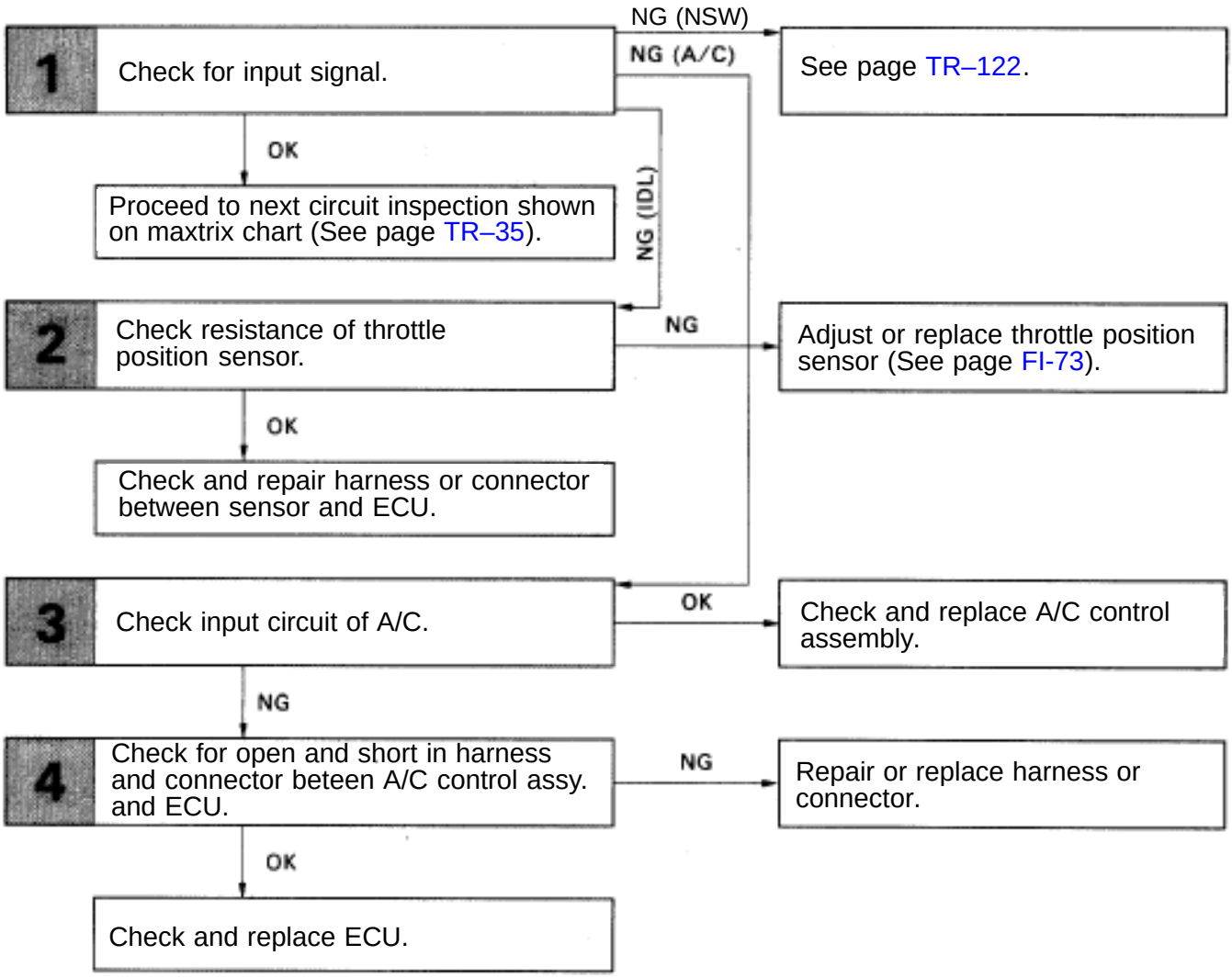

WhereEverybodyKnowsYourName

INSPECTION PROCEDURE

1 Check output condition of diag. code 51.

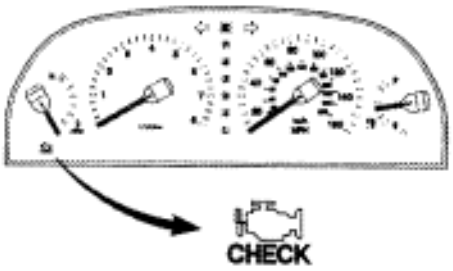

FI8433

P Setting the test mode.

(2) Turn ignition switch OFF.

(2) Connect terminals TE2 and E1 and TDCL.

(2) Turn ignition switch ON.
(For checking terminal A/C, start the engine.)

(2) Connect terminals TE1 and E1 of TDCL.

C Check if code “51” is output by the “CHECK” engine warning light.

OK

	Condition	Code
Neutral Start Switch (NSW)	P or N range	Normal*
	R,D,2 or L range	51*
Throttle Position Sensor (IDL1)	Accelerator pedal released	Normal*
	Accelerator pedal depressed	51*
A/C Switch (A/C)	A/C SW ON	51
	A/C SW OFF	Normal

*: Before the STA signal is input (ST is not ON), diagnostic code 43 is also output.

Hint Diag. code 42 is output with vehicle speed 5 km/h (3 mph) or below

OK

NG **IDL1 .... Go to step 2** **NSW ... Go to page TR–22.**
A/C ..... Go to step 3

Proceed to next circuit inspection shown on maxtrix chart (See page TR–35).

2 Check throttle position sensor.

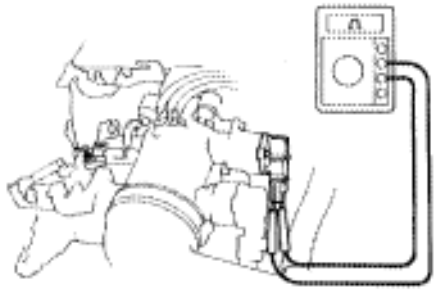

FI4755

P Disconnect throttle position sensor connector.

C Measure resistance between terminals IDL1 and E2 of throttle position sensor connector.

OK

Throttle Valve	Resistance
Fully closed	Less than 0.5 kΩ
Opened	1 MΩ or higher

OK

NG **Adjust or replace throttle position sensor See page FI–73).**

Check and repair harness or connector between engine & ECT ECU and throttle position sensor.

WhereEverybodyKnowsYourName

3	Disconnect A/C control assembly connector, check voltage between terminal MGC of A/C control assembly connector and body ground.

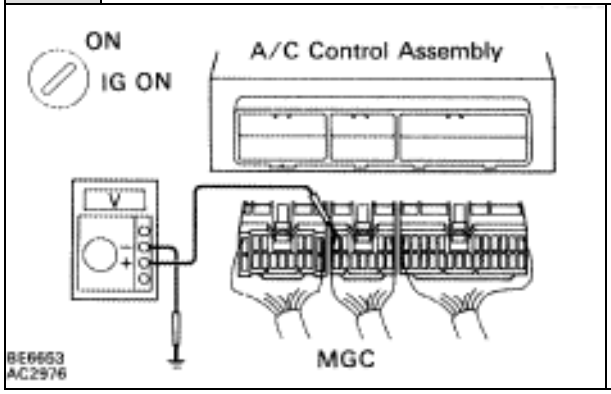

P (2) Remove air conditioner control assembly.

(2) Disconnect air conditioner control assembly connector.

(2) Turn ignition switch on.

C Measure voltage between terminal MGC of air conditioner control assembly connector and body ground.

OK **Voltage: 10 – 14 V**

NG → **OK** → **Check and replace A/C control assembly.**

4	Check for open and short in harness and connector between engine & ECT ECU and A/C control assembly (See page IN–27)

OK → **NG** → **Repair or replace harness or connector.**

Check and replace engine & ECT ECU.

WhereEverybodyKnowsYourName

Neutral Start Switch Circuit

CIRCUIT DESCRIPTION

The neutral start switch goes on when the shift lever is in the N or P shift position. When it goes on the terminal NSW of the ECU is grounded to body ground via the starter relay and theft deterrent ECU, thus the terminal NSW voltage becomes 0V. When the shift lever is in the D, 2, L or R position, the neutral start switch goes off, so the voltage of ECU terminal NSW becomes battery voltage, the voltage of the ECU internal power source. If the shift lever is moved from the N range to the D range, this signal is used for air–fuel ratio correction and for idle speed control (estimated control), etc.
When the neutral start switch is off, code ”51” is output in the test mode diagnosis. (This is not abnormal.)

DIAGNOSTIC CHART

HINT: This diagnosis chart is based on premise that the engine is cranked normally. If the engine is not cranked, proceed to the matrix chart of problem symptoms on page TR–35.

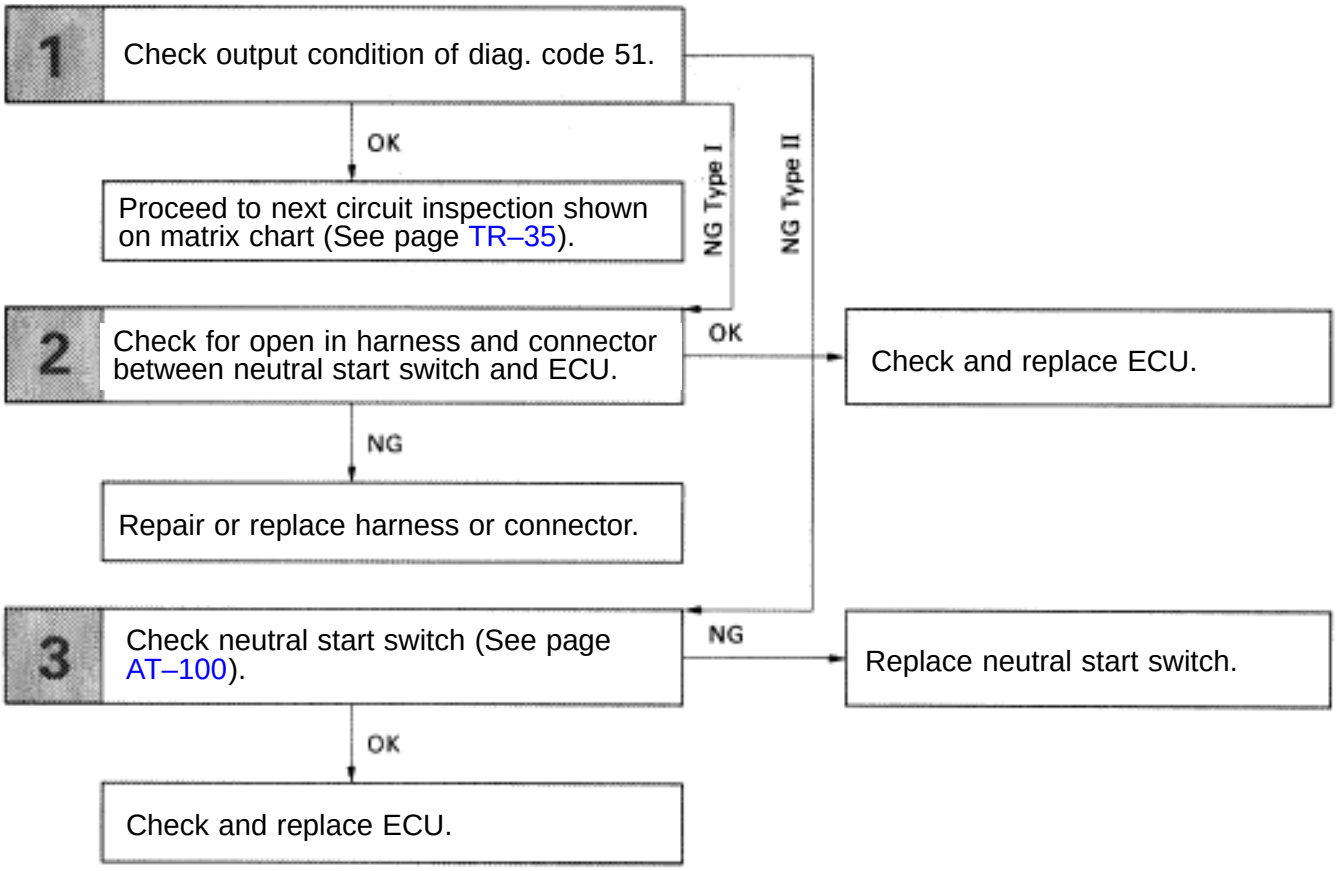

WIRING DIAGRAM

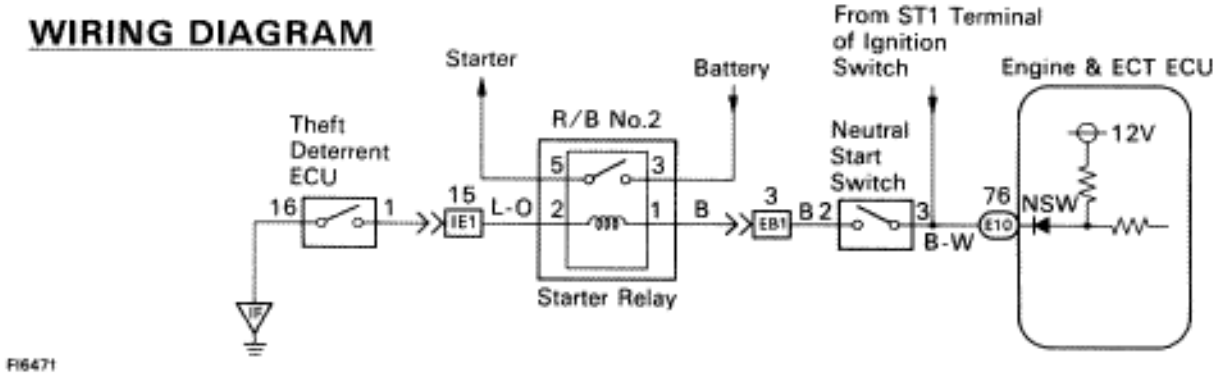

WhereEverybodyKnowsYourName

INSPECTION PROCEDURE

1 **Check output condition of diag. code 51.**

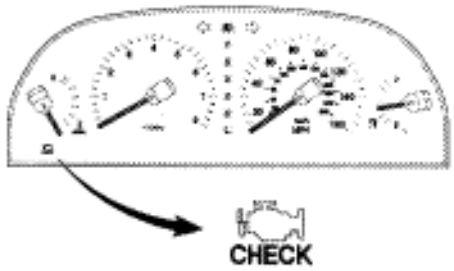

F06433

P
(2) Connect terminals TE2 and E1 of TDCL.
(2) Turn ignition switch on.
(2) Crank the engine.
(2) Connect terminal TE1 and E1 of TDCL.

C Check if diagnostic code “51” is output when then shift level is in the P and D shift positions.

Result:

Shift Position	Result		
	OK	NG Type I	NG Type II
"P"	Normal Code	Code 51	Normal Code
"D"	Code 51	Code 51	Normal Code

OK → **Proceed to next circuit inspection shown on matrix chart (See page TR–35).**

NG Type I → **Go to step 2.**

NG Type II → **Go to step 3.**

2 **Check for open in harness and connector between engine & ECT ECU and neutral start switch (See page IN–27).**

NG → **Repair or replace harness or connector.**

OK → **Check and replace engine & ECT ECU.**

3 **Check neutral start switch (See page AT–100).**

OK → **Check and replace engine & ECT ECU.**

NG → **Replace neutral start switch.**

WhereEverybodyKnowsYourName

ECU Power Source Circuit

CIRCUIT DESCRIPTION

When the ignition switch is turned on, battery voltage is applied to the terminal IG SW of the ECU, and the main relay control circuit in the ECU sends a signal to the terminal M–REL of the ECU, switching on the main relay. This signal causes current to flow to the coil, closing the contacts of the main relay and supplying power to the terminals +B and +B1 of the ECU.
If the ignition switch is turned off, the ECU continues to switch on the main relay for a maximum of 2 seconds for the initial setting of the ISC valve.

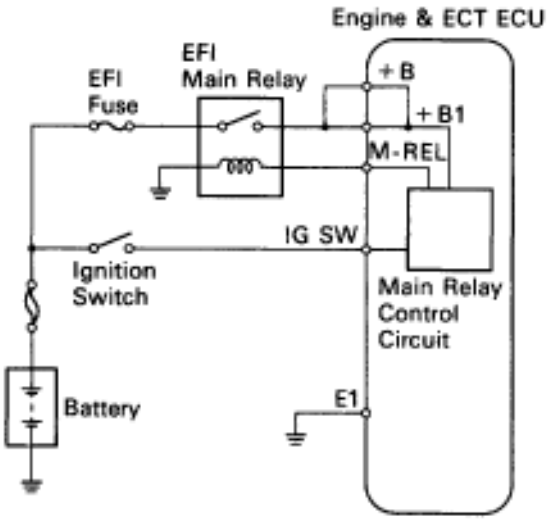

DIAGNOSTIC CHART

See next page for the DIAGNOSTIC CHART.

WIRING DIAGRAM

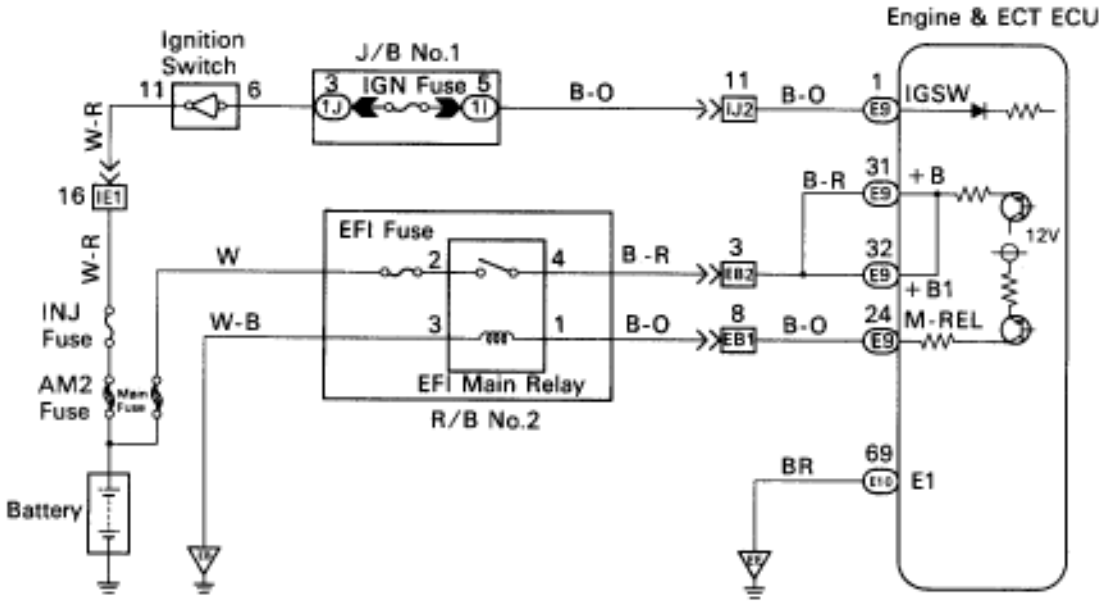

FI6477

WhereEverybodyKnowsYourName

DIAGNOSTIC CHART

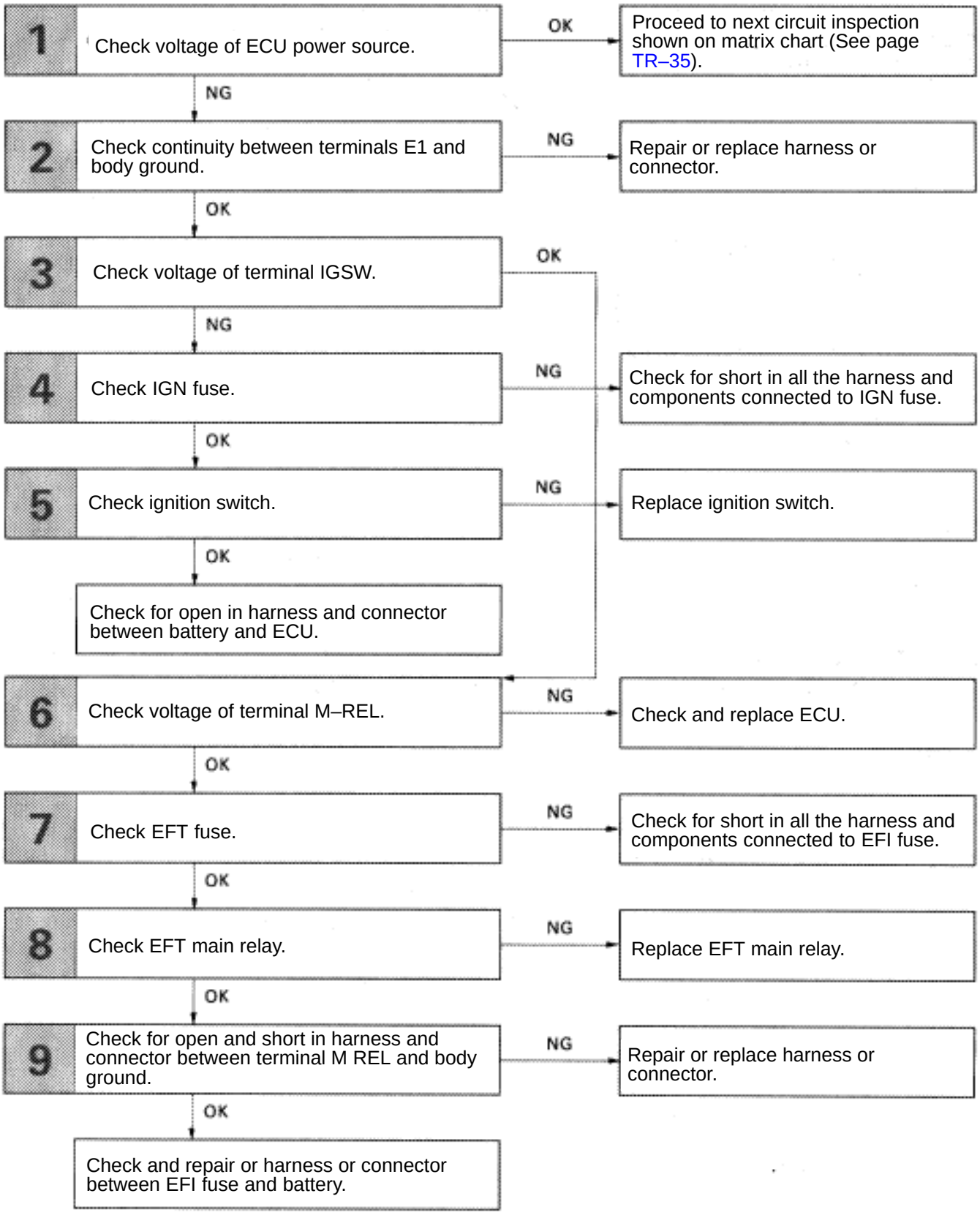

WhereEverybodyKnowsYourName

INSPECTION PROCEDURE

1 **Check voltage between terminals + B, + B1 and E1 of engine & ECT ECU connector.**

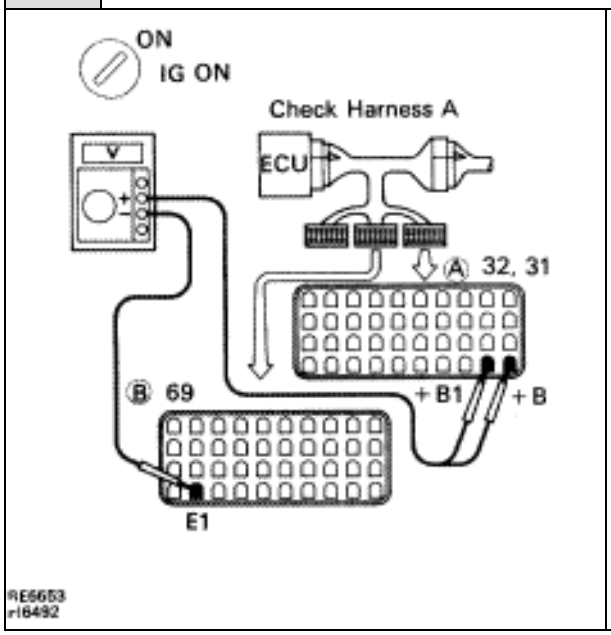

P (2) Connect the Check Harness A. (See page TR–30)

(2) Turn ignition switch on.

C Measure voltage between terminals + B, + B1 and E1 of engine & ECT ECU connector.

OK **Voltage: 10 – 14 V**

NG

OK **Proceed to next circuit inspection shown on matrix chart**

2 **Check for open in harness and connector between terminals E1 of engine & ECT ECU and body ground (See page IN–27).**

OK

NG **Repair or replace harness or connector.**

3 **Check voltage between terminal IG SW of engine & ECT ECU connector and body ground.**

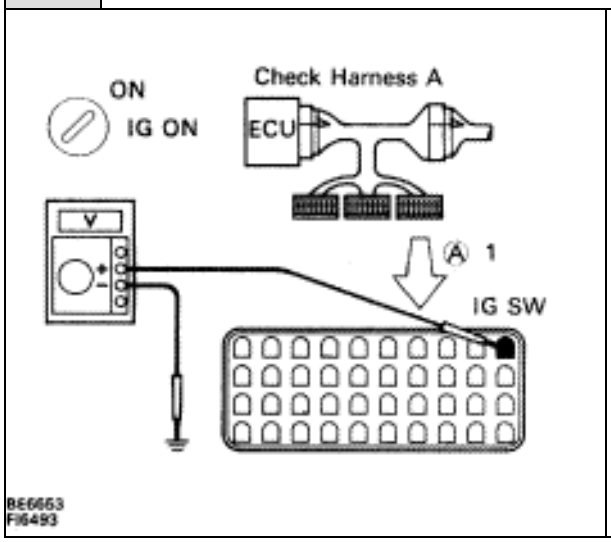

P Turn ignition switch on.

C Measure voltage between terminal IG SW of engine & ECT ECU connector and body ground.

OK **Voltage: 10 – 14 V**

NG

OK **Go to step 6.**

WhereEverybodyKnowsYourName

4 Check IGN Fuse.

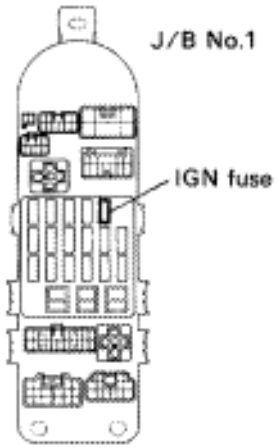

BE6624

P Remove IGN fuse from J/B No.1.

C Check continuity of IGN fuse.

OK **Continuity.**

OK

NG **Check for short in all the harness and components connected to IGN fuse (See attached wiring diagram).**

5 Check ignition switch.

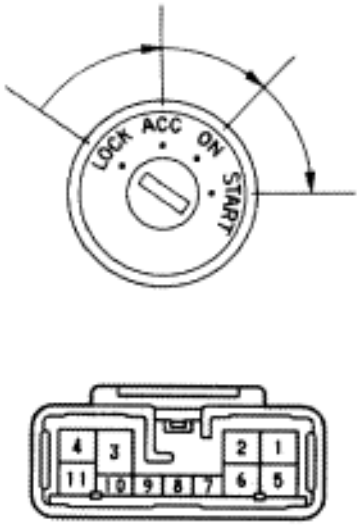

BE3582
eg-11-2

P Remove under cover and finish panel.

C Check continuity between terminals.

OK

○—○ continuity

Terminal / Switch position	2	3	4	5	6	11
LOCK						
ACC		○—○				
ON	○—○	○—○	○—○		○—○	○—○
START	○—○		○—○	○—○	○—○	○—○

OK

NG **Replace ignition switch.**

Check and repair harness and connector between battery and ignition switch, ignition switch and engine & ECT ECU.

WhereEverybodyKnowsYourName

6	Check voltage between terminal M–REL of engine & ECT ECU connector and body ground.

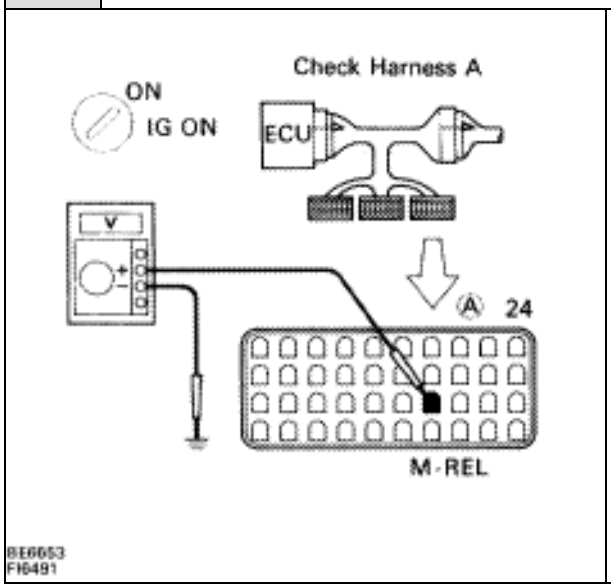

P Turn ignition switch on.

C Measure voltage between terminal M–REL of engine & ECT ECU connection and body ground.

OK **Voltage: 10 – 14 V**

OK

NG **Check and replace engine & ECT ECU.**

7	Check EFI

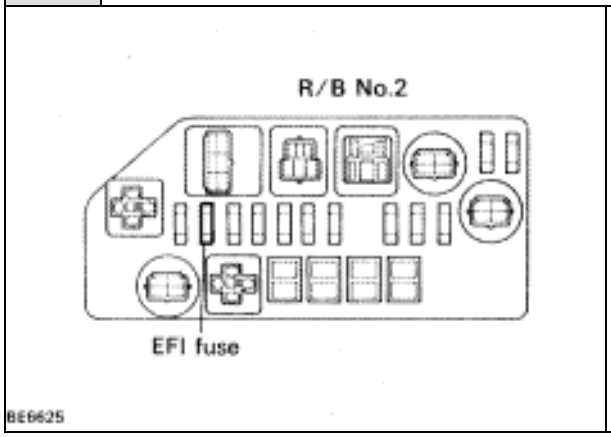

P Remove EFI fuse R/B No.2.

C Check continuity of EFI fuse.

OK **Continuity**

OK

NG **Rep**

WhereEverybodyKnowsYourName

8 **Check EFI main relay.**

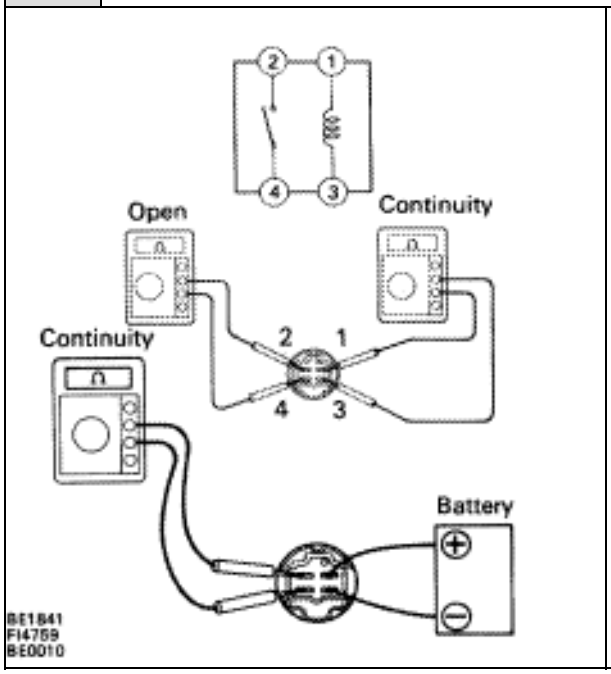

P Remove EFI main relay.

C Check continuity between terminals of EFI main relay shown below.

OK

Terminals 2 and 4	Open
Terminals 1 and 3	Continuity (Reference value 72 Ω)

C (2) Apply battery voltage between terminals 1 and 3.
(2) Check continuity between terminals 2 and 4.

OK

Terminals 2 and 4	Continuity

OK

NG → **Replace EFI main relay.**

9 **Check for open and short in harness and connector between terminal M–REL of engine & ECT ECU and body ground (See page IN–27).**

OK

NG → **Repair or replace harness or connector.**

Check and repair harness or connector between EFI fuse and battery.

WhereEverybodyKnowsYourName

Back Up Power Source Circuit

CIRCUIT DESCRIPTION

Battery voltage is supplied to terminal BATT of the ECU even when the ignition switch is off for use by the diagnostic code memory and air–fuel ratio adaptive control value memory, etc.

DIAGNOSTIC CHART

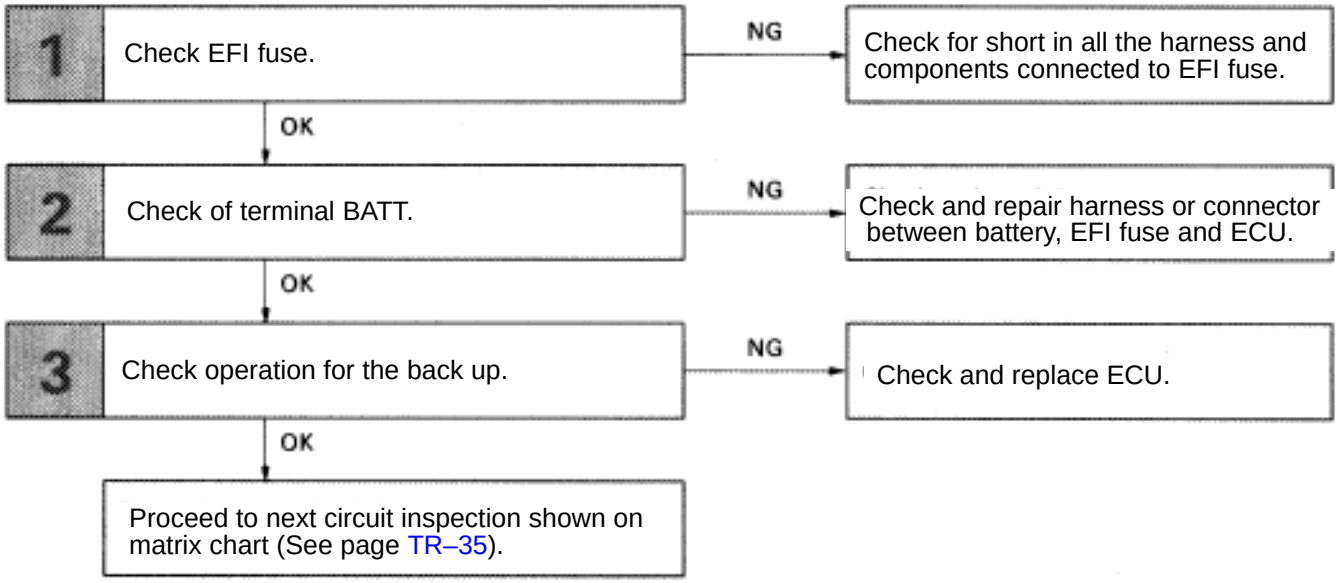

WIRING DIAGRAM

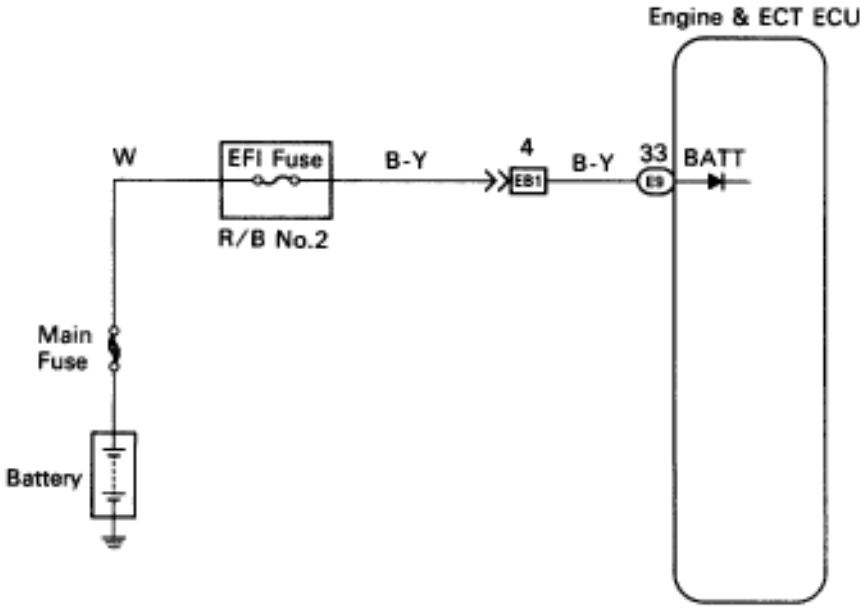

F16476

WhereEverybodyKnowsYourName

INSPECTION PROCEDURE

1 **Check EFI fuse.**

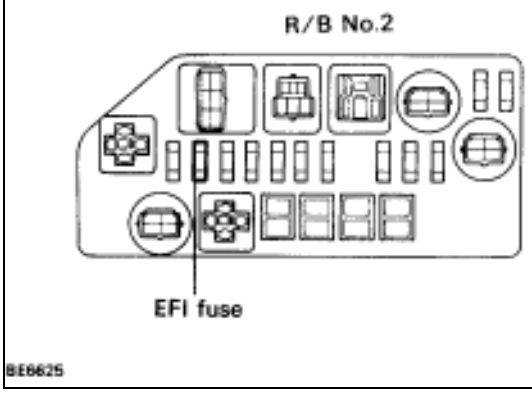

P Remove EFI fuse from R/B No.2.

C Check continuity of EFI fuse.

OK **Continuity**

OK

NG **Check for short in all the harness and components connected to EFI fuse (See attached wiring diagram).**

2 **Check voltage between terminal BATT of engine & ECT ECU connector and body ground.**

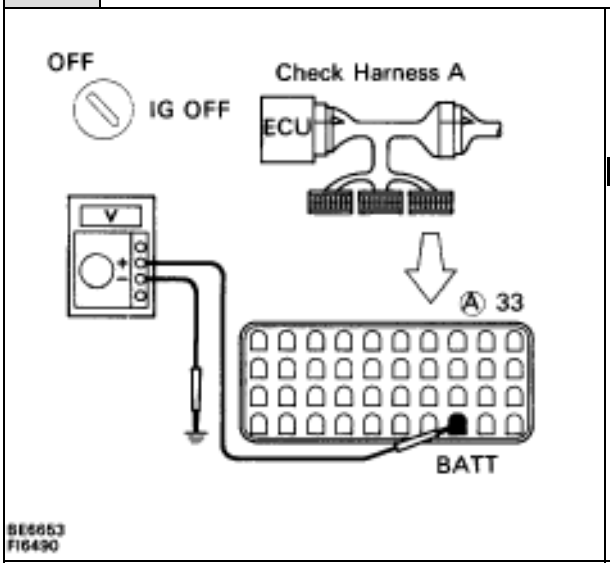

P Connect the Check Harness A.
(See page TR–30).

C Measure voltage between terminal BATT of engine & ECT ECU connector and body ground.

OK **Voltage: 10 – 14 V**

OK

NG **Check and repair harness or connector between engine & ECT ECU and EFI fuse, EFI fuse and battery.**

3 **Are the diagnostic codes still in the memory when the ignition switch is turned OFF?**

YES

NO **Check and replace engine & ECT ECU.**

Proceed to next circuit inspection shown on matrix chart (See page TR–35).

WhereEverybodyKnowsYourName

Injector Circuit

CIRCUIT DESCRIPTION

The injectors are provided to the intake manifold. They inject fuel into the cylinders based on the signals from the engine & ECT ECU.

DIAGNOSTIC CHART

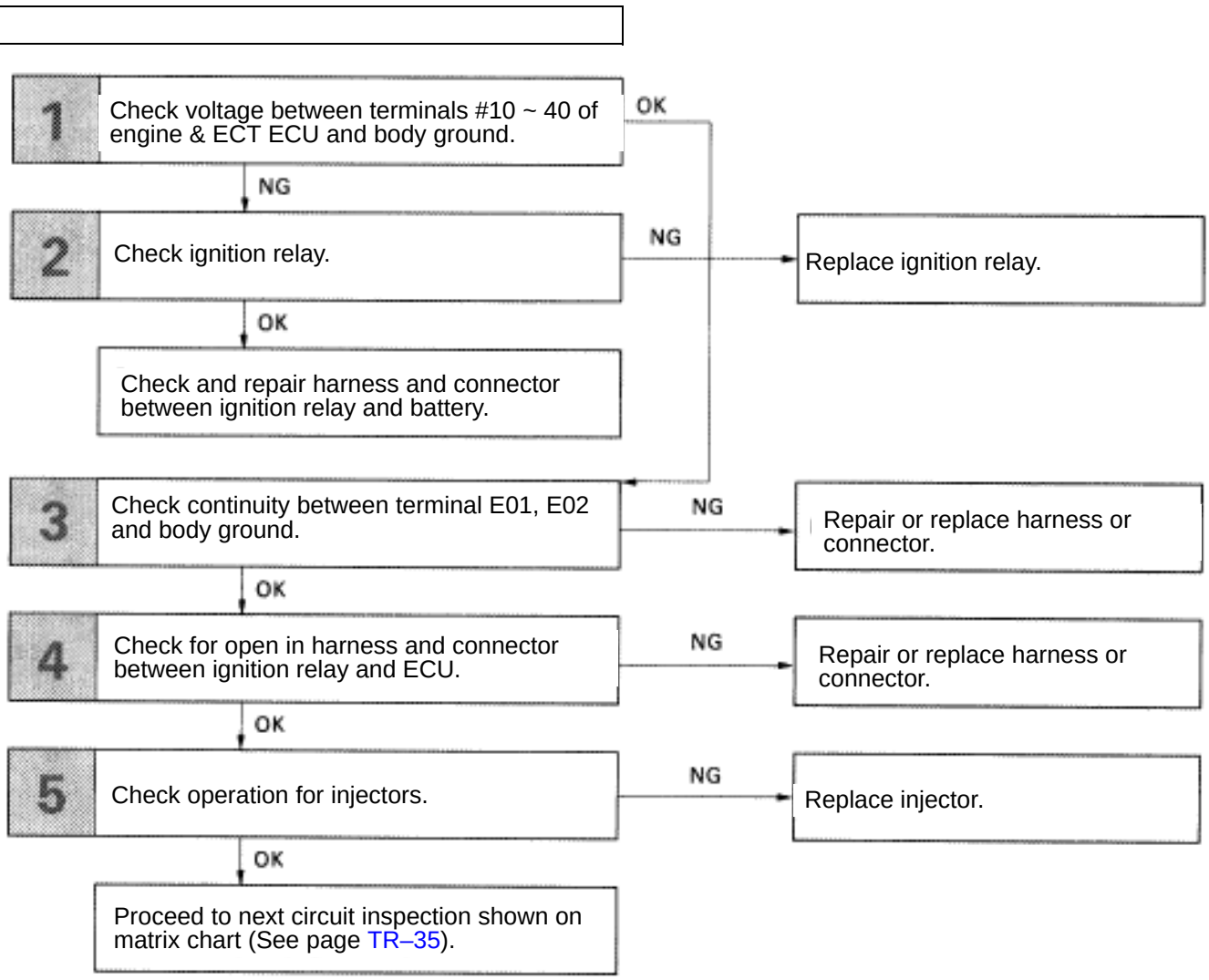

WhereEverybodyKnowsYourName

WIRING DIAGRAM

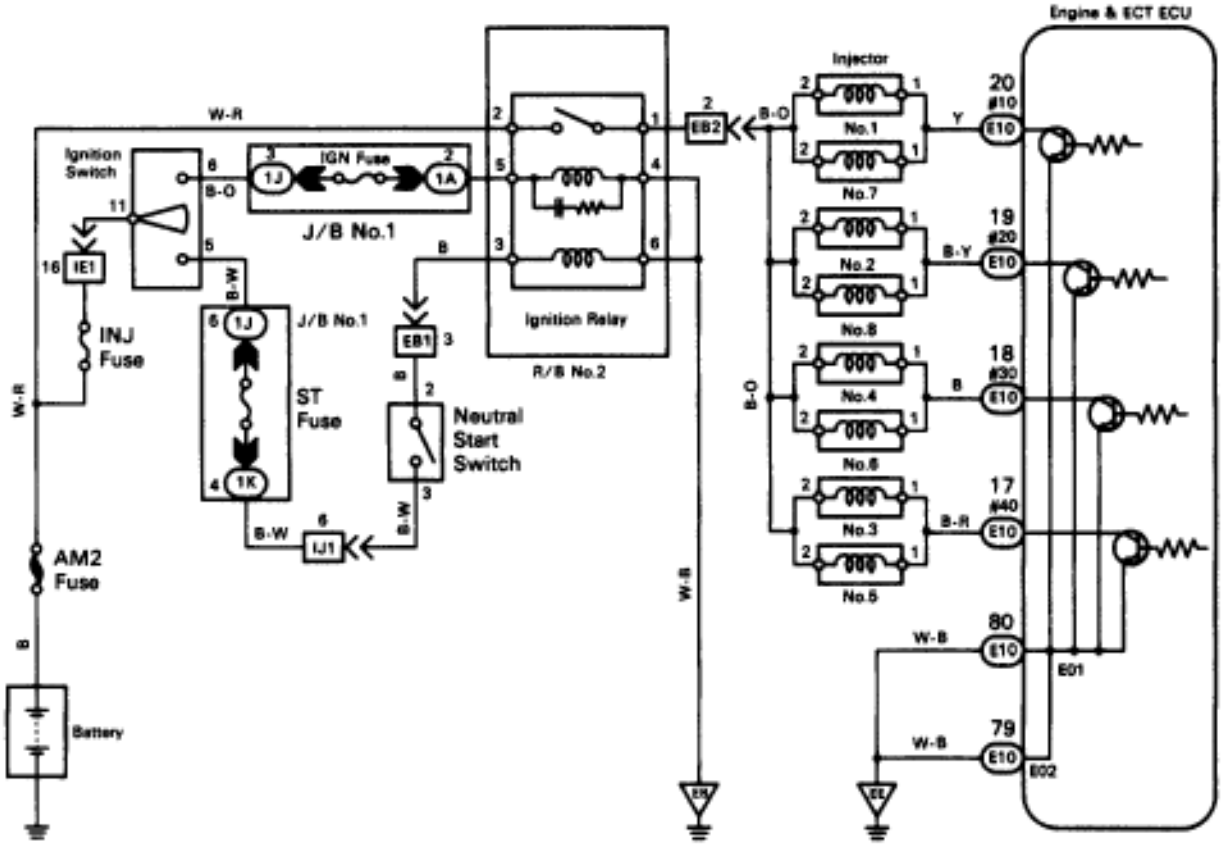

FI6487

WhereEverybodyKnowsYourName

INSPECTION PROCEDURE

1 **Check voltage between terminals #20 ~ 40 of engine & ECT ECU and body ground.**

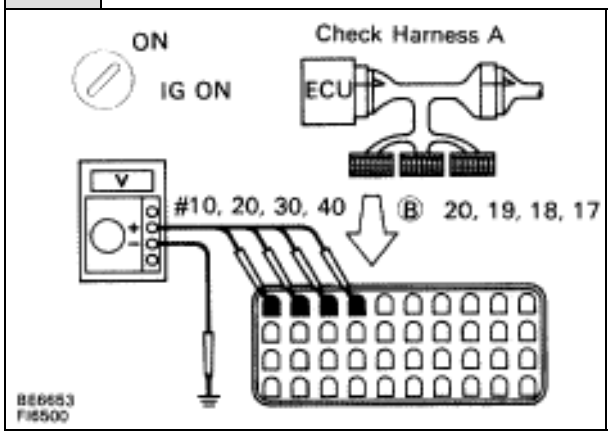

P (2) Connect the Check Harness A. (See page TR–30)

(2) Turn ignition switch on.

C Measure voltage between terminals #10 ~ 40 of engine & ECT ECU and body ground.

OK **Voltage: 10 – 14 V**

NG

OK **Go to step 3.**

2 **Check ignition relay.**

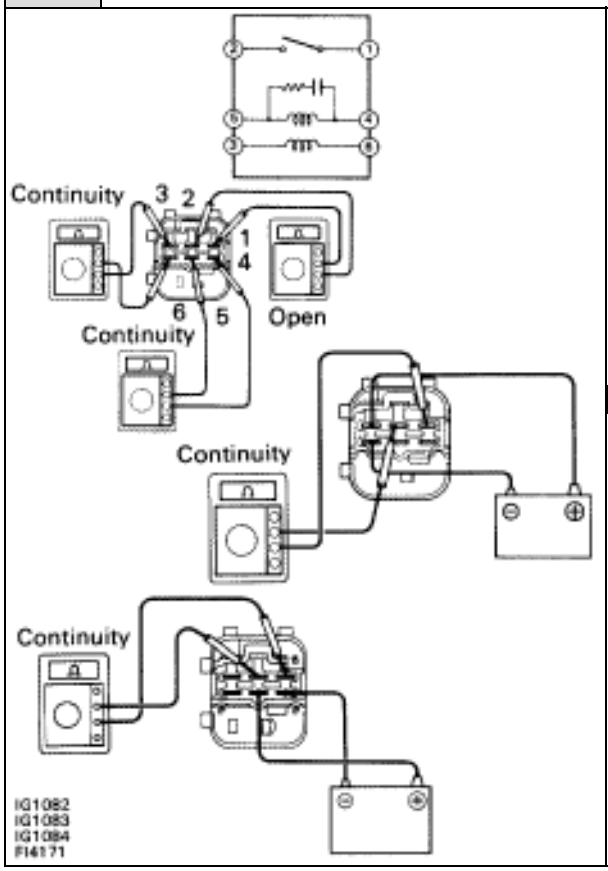

P Remove ignition relay from R/B No.2.

C Check continuity between terminals of ignition relay shown below.

OK

Terminals 1 and 2	Open
Terminals 3 and 6	Continuity (Reference value 22 Ω)
Terminals 4 and 5	Continuity (Reference value 107 Ω)

Hint (2) Apply battery voltage between terminals of ignition relay shown below.

(2) Check continuity between terminals 1 and 2.

Terminals 1 and 2	Continuity

OK

NG **Replace ignition relay.**

WhereEverybodyKnowsYourName

3	Check for open in harness and connector between terminal E01, E02 of engine & ECT ECU connector and body ground (See page IN–27).

OK

NG → Repair or replace harness or connector.

4	Check for open in harness and connector between ignition relay and injector, injector and engine & ECT ECU (See page IN–27).

OK

NG → Repair or replace harness or connector.

5	Check injectors.

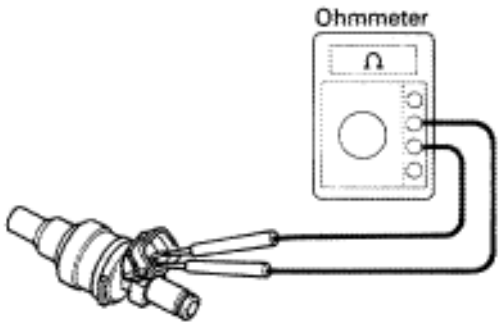

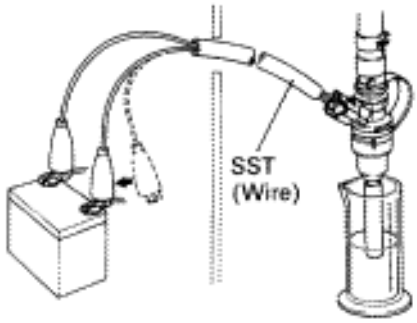

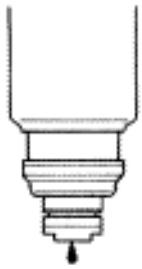

FI3183
FI2573
FI4849

P Disconnect injector connector (See page FI–50).

C Measure resistance of injector.

OK **Resistance: 13.4 – 14.2 at 20°C (68°F)**

C Check injection volume of injector (See page FI–52).

OK
- **Injection volume**
  55–70 cc/15 sec. (3.4–4.3 cu in.)
  Difference between each injector:
  Less than 10 cc (0.6 cu in.)
- **Leakage**
  Fuel drop: Once drop or less per minute.

OK

NG → Replace injector.

Proceed to next circuit inspection shown on matrix chart (See page TR–35).

WhereEverybodyKnowsYourName

Cold Start Injector Circuit

— CIRCUIT DESCRIPTION

The cold start injector is used to maintain the engine startability when it is cold. The injection volume, i,e, the length of time the injector is energized, is controlled by the ECU and the cold start injector time switch.
During a cold start, when the starter turns the contacts in the cold start injector time switch close. Thus current flows to the cold start injector coil, injecting fuel. At the same time, a bimetal in the heat coil is energized and heats up. This soon causes the contacts to open, cutting off the current flow to the injector coil and stopping fuel injection.
The injection duration of the cold start injector is determined by the coolant temperature and the length of time current flows to the heat coil. When the engine is warm, the contacts are opened by the bimetal and the cold start injector does not operate.
When the engine is hard to start and the starter is operated continuously, heat coil (2) heats up the bimetal keeping the contacts open to prevent spark plugs from becoming fouled, which is caused by the cold start injector operation when the open contacts close again.
When the engine is started at a coolant temperature of 22°C (72°F) or lower, the cold start injector operation time is controlled by the cold start injector time switch.
When the coolant temperature is in the normal temperature range 22°C (72°F) or higher, the contacts of the cold start injector time switch are open and the time switch is off, instead, the ECU controls the operating time of the cold start injector.
In this way, the CO and HC levels can be reduced while the engine is being started and the engine startability is maintained. Control by the ECU ends when the coolant temperature reaches 60°C (140°F).

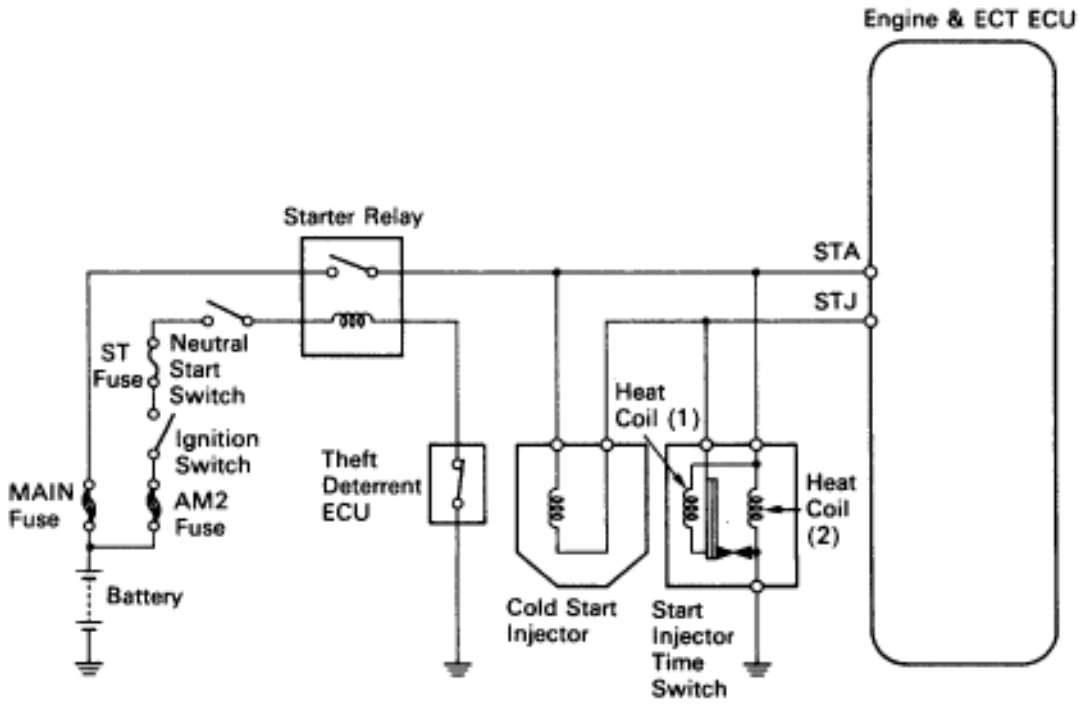

FI6483

WhereEverybodyKnowsYourName

DIAGNOSTIC CHART

1 Check voltage of cold start injector power source.
- OK → 3
- NG → 2

2 Check cold start injector.
- NG → Replace cold start injector.
- OK → Check for open in harness and connector between battery and ECU.

3 Check start injector time switch.
- NG → Replace start injector time switch.
- OK → 4

4 Check for open and short in harness and connector between cold start injector and start injector time switch.
- NG → Repair or replace harness or connector.
- OK → 5

5 Check fuel injection of cold start injector.
- NG → Replace cold start injector.
- OK → Proceed to next circuit inspection shown on matrix chart (See page TR–35).

WIRING DIAGRAM

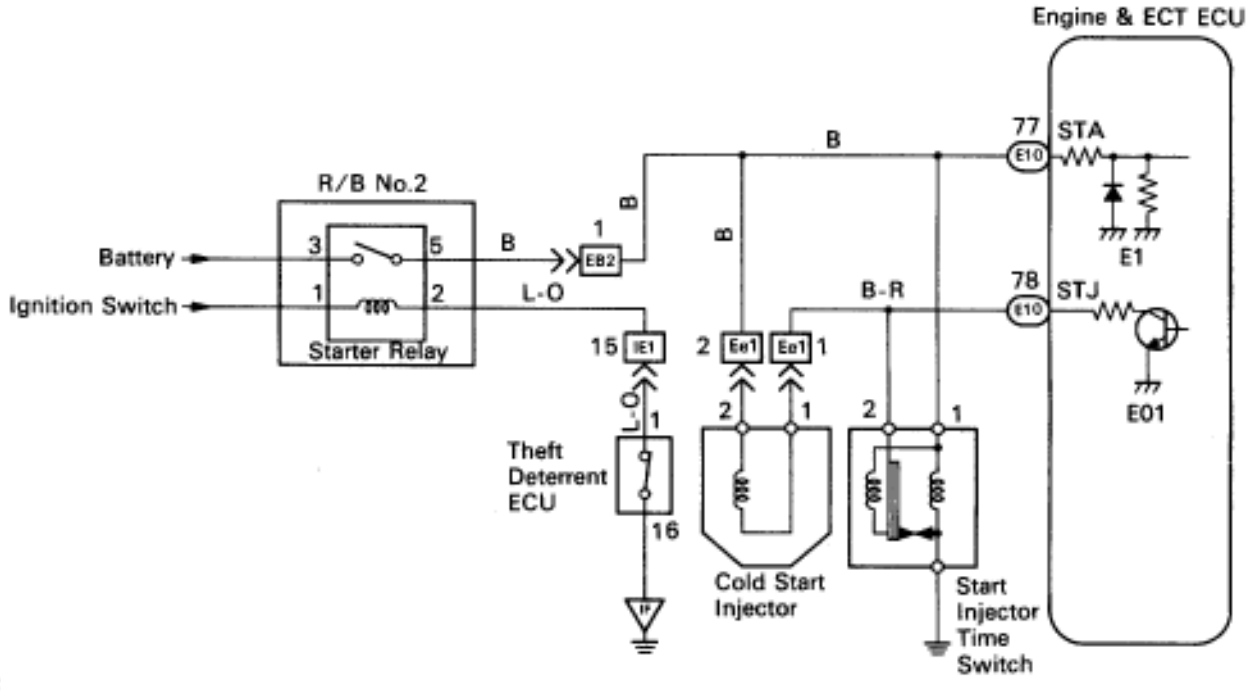

WhereEverybodyKnowsYourName

INSPECTION PROCEDURE

1	Check voltage between terminal STJ of engine & ECT ECU connector and body ground.
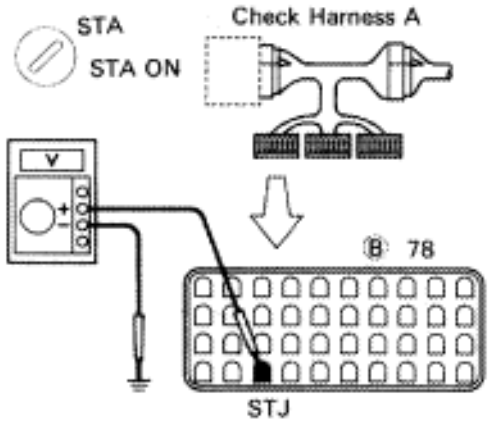	**P** Connect to the Check Harness A. (See page TR–30) **C** Disconnect start injector time switch connector. **OK** Disconnect engine & ECT ECU connector. Measure voltage between terminal STJ of engine & ECT ECU connector and body ground when ignition switch is turned to STA. 10 – 14 V **Hint**

NG

OK → **Go to step 3.**

2	Check resistance of cold start injector.
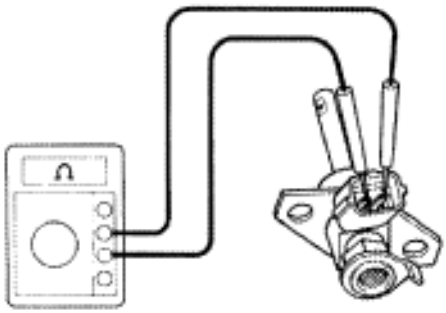	**P** Remove cold start injector (See page FI–27). **C** Measure resistance between terminals of cold start injector. **OK** **Resistance: 2 – 4 at 20°C (68°F)** **Hint**

OK

NG → **Replace cold start injector.**

Check and repair harness and connector between engine & ECT ECU and cold start injector, cold start injector and battery.

WhereEverybodyKnowsYourName

3 **Check start injector time switch.**

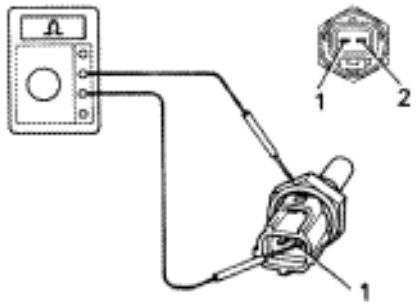

FI4175

P Remove start injector time switch (See page FI–88).

C Measure resistance between terminals shown below.

OK

Terminals	Resistance	Coolant temperature
1 – 2	25 – 45 Ω	below 15°C (59°F)
	65 – 85 Ω	above 30°C (86°F)
1-Ground	25 – 85 Ω	—

OK → **NG** → **Replace start injector time switch.**

4 **Check harness and connector between cold start injector and start injector time switch (See page IN–27).**

OK → **NG** → **Repair or replace harness or connector.**

5 **Check fuel injection of cold start injector.**

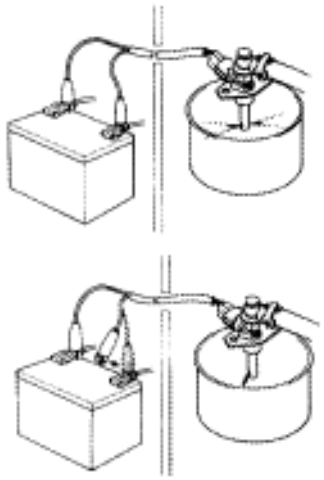

FI4104
FI4105

P Remove cold start injector (See page FI–27).

C (2) Check fuel injection of cold start injector (See page FI–33).

(2) Check fuel leakage of cold start injector (See page FI–34).

OK **(2) Fuel is injected normally.**

(2) Fuel leakage is less than one drop per minute.

Notice:

Perform this check within the shortest possible time.

OK → **NG** → **Repair or replace cold start injector.**

Proceed to next circuit inspection shown on matrix chart (See page TR–35).

WhereEverybodyKnowsYourName

ISC Valve Circuit

CIRCUIT DESCRIPTION

The ISC valve is provided on the intake air chamber and intake air bypassing the throttle valve is directed to the ISC valve through a hose.
A step motor is built into the ISC valve. It consists of four coils, the magnetic rotor, valve shaft and valve. When current flows to the coils due to signals from the ECU, the rotor turns and moves the valve shaft forward or backward, changing the clearance between the valve and the valve seat.
In this way the intake air volume bypassing the throttle valve is regulated, controlling the engine speed.
There are 125 possible positions to which the valve can be opened.

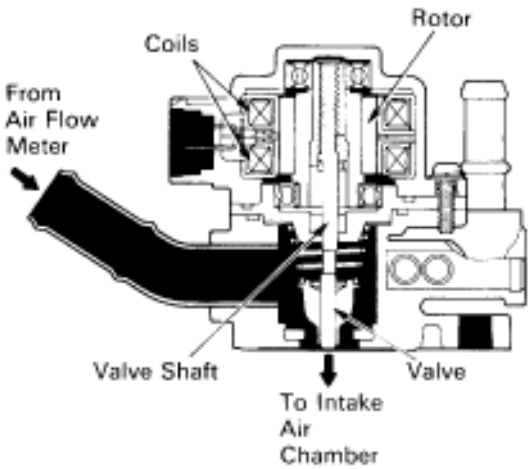

DIAGNOSTIC CHART

1 Check operation for ISC valve. — NG → Replace ISC valve.
OK ↓
2 Check harness and connector between EFI main relay, ISC valve and ECU. — NG → Repair or replace harness or connector.
OK ↓
Proceed to next circuit inspection shown on matrix chart (See page TR–35).

WIRING DIAGRAM

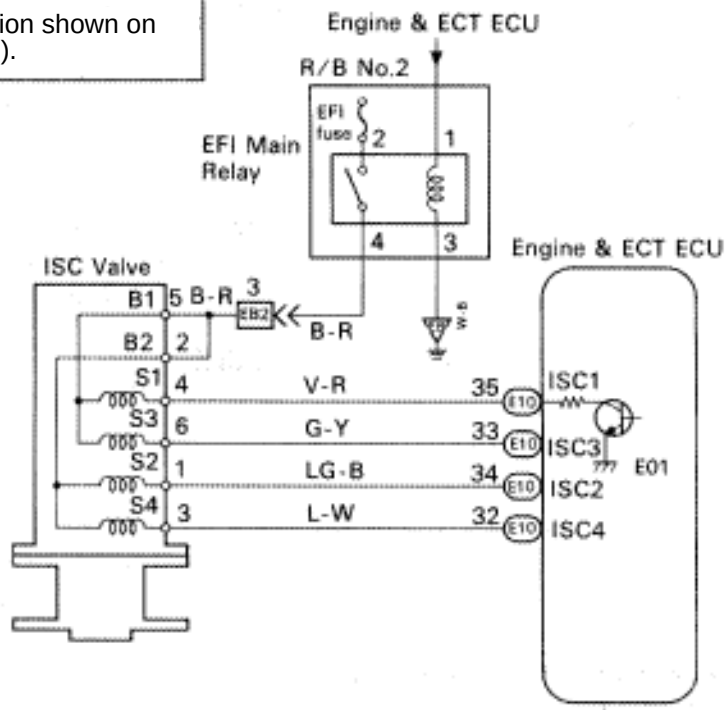

FI6475

WhereEverybodyKnowsYourName

INSPECTION PROCEDURE

1 **Check ISC value.**

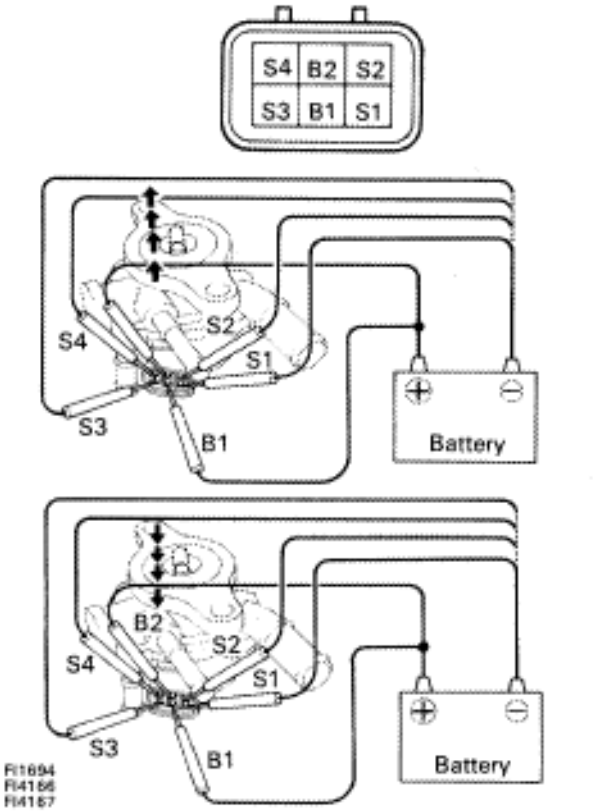

P Disconnect ISC connector.

C Measure resistance between terminals shown below.

OK

Terminal	Resistance
B1 – S1	10 Ω – 30 Ω
B1 – S3	10 Ω – 30 Ω
B2 – S2	10 Ω – 30 Ω
B2 – S4	10 Ω – 30 Ω

P Remove ISC Valve

C (2) Connect the battery positive lead to terminals B1 and B2, and the negative lead to terminals S1–S2–S3–S4 in that order.

(2) Connect the battery positive lead to terminals B1 and B2, and the negative lead to terminals S4–S3–S2–S1 in that order.

OK **(2) The valve moves in the closing direction.**

(2) The value moves in the opening direction.

OK

NG **Replace ISC valve.**

2 **Check for open and short in harness and connector between EFI main relay and ISC valve, ISC valve and engine & ECT ECU (See page IN–27).**

OK

NG **Repair or replace harness or connector.**

Proceed to next circuit inspection shown on matrix chart (See page TR–35).

WhereEverybodyKnowsYourName

Fuel Pressure Control VSV Circuit

CIRCUIT DESCRIPTION

The ECU turns on a VSV (Vacuum Switching Valve) to draw the air into the diaphragm chamber of the pressure regulator if it detects that the temperature of the coolant is too high during engine starting.
The air drawn into the chamber increases the fuel pressure to prevent fuel vapor lock at high engine temperature in order to help the engine start when it is warm.
Fuel pressure control ends approx. 100 secs. after the engine is started.

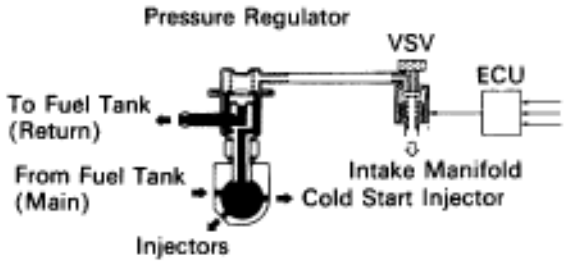

DIAGNOSTIC CHART

1	Check operation for fuel pressure control VSV.	NG →	Replace fuel pressure control VSV.
	OK ↓		
2	Check voltage of VSV power source.	OK →	Proceed to next circuit inspection shown on matrix chart (See page TR–35).
	NG ↓		
3	Check for open and short in harness and connector between main relay and ECU.	NG →	Repair or replace harness or connector.
	OK ↓		
	Check and replace ECU.		

WIRING DIAGRAM

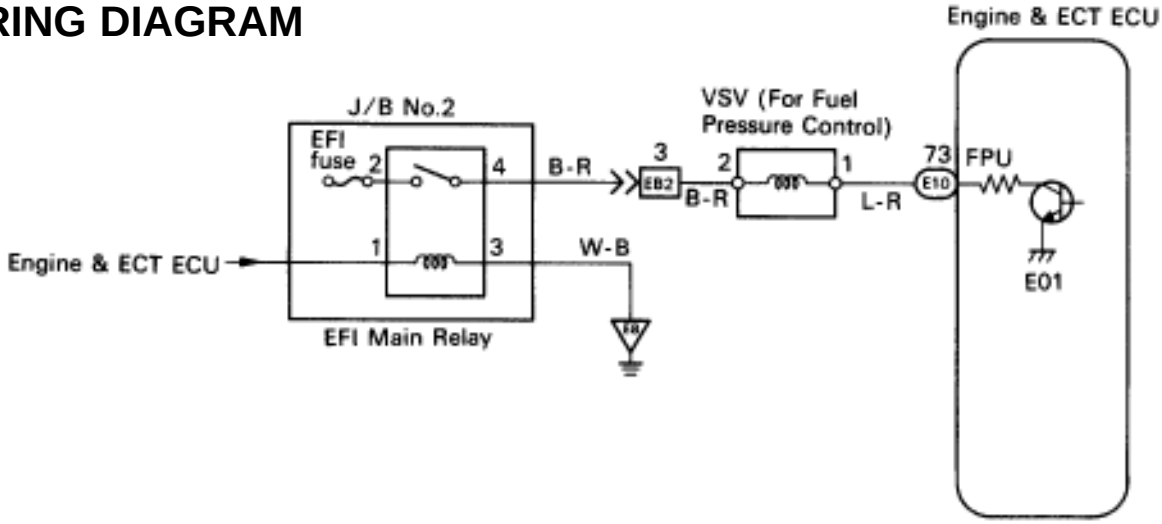

FI6473

WhereEverybodyKnowsYourName

INSPECTION PROCEDURE

1	Check fuel pressure control VSV.

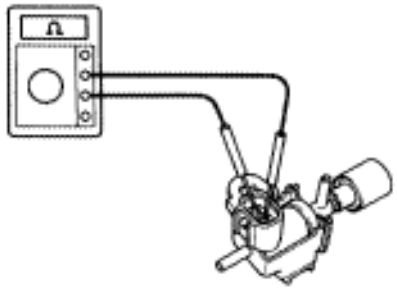

P (2) Remove fuel pressure control VSV.
(2) Disconnect fuel pressure control VSV connector.

C (2) Measure resistance between terminals.
(2) Measure resistance between each terminal and the body.

OK **1. Resistance: 30 – 50 at 20C (68F)**
2. Resistance: 1M or higher

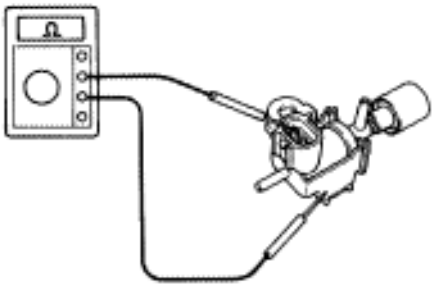

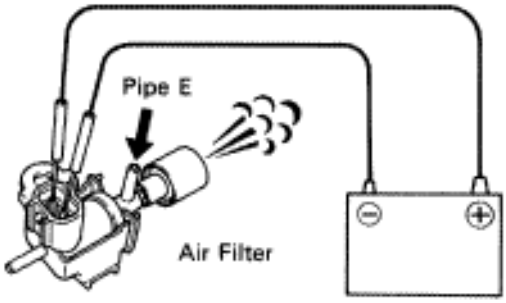

C Check operation of fuel pressure control VSV when battery voltage is applied to the terminals of fuel pressure control VSV connector or not.

OK **Battery voltage is applied:**
The air from pipe E is flowing out through the air filter.

Battery voltage is not applied:
The air from pipe E is flowing out through pipe G.

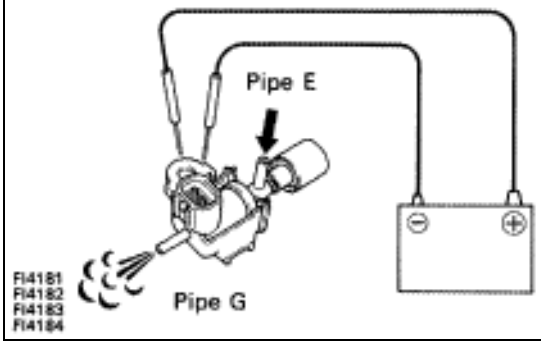

OK

NG **Replace fuel pressure control VSV.**

Go to step 2.

WhereEverybodyKnowsYourName

2	Check voltage between terminal FPU of engine & ECT ECU connector and body ground.

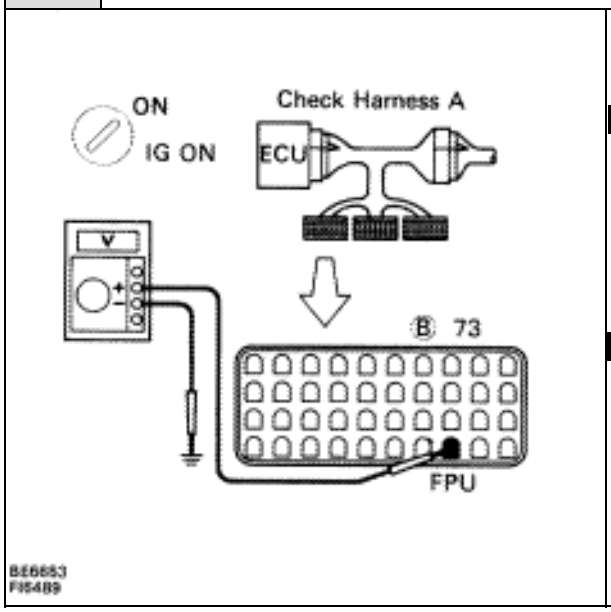

P (2) Connect the Check Harness A.

C (See page TR–30)

OK (2) Turn ignition switch on.

Measure voltage between terminal FPU of engine & ECT ECU connector and body ground.

Voltage: 10 – 14 V

Hint

NG

OK **Proceed to next circuit inspection shown on matrix chart (See page TR–35).**

3	Check for open and short in harness and connector between engine & ECT ECU and VSV, VSV and EFI main relay (See page IN–27).

OK

NG **Repair or replace harness or connector**

Check and replace engine & ECT ECU.

WhereEverybodyKnowsYourName

–MEMO–

WhereEverybodyKnowsYourName

TE1, TE2 Terminal Circuit

CIRCUIT DESCRIPTION

Terminal TE1 is located in the check connector in the engine compartment and terminals TE1 and TE2 are located in the TDCL in the cabin. When these terminals are connected with the E1 terminal, diagnostic codes in normal mode or test mode can be read from the ”CHECK” engine warning light on the combination meter.

DIAGNOSTIC CHART

HINT: If terminals TE1 and TE2 are connected with terminal E1, diagnostic code is not output or test mode is not activated.
Even though terminal TE1 is not connected with terminal E1, the ”CHECK” engine warning light blinks.
For the above phenomenon, the likely cause is an open or short in the wire harness, or malfunction inside the ECU.

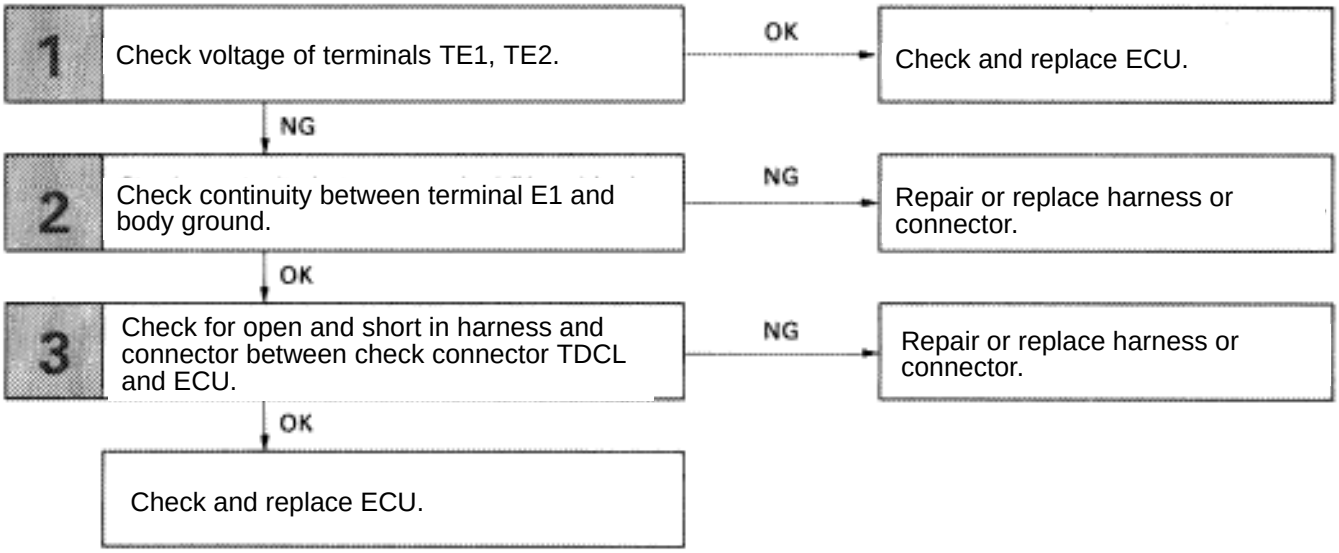

WIRING DIAGRAM

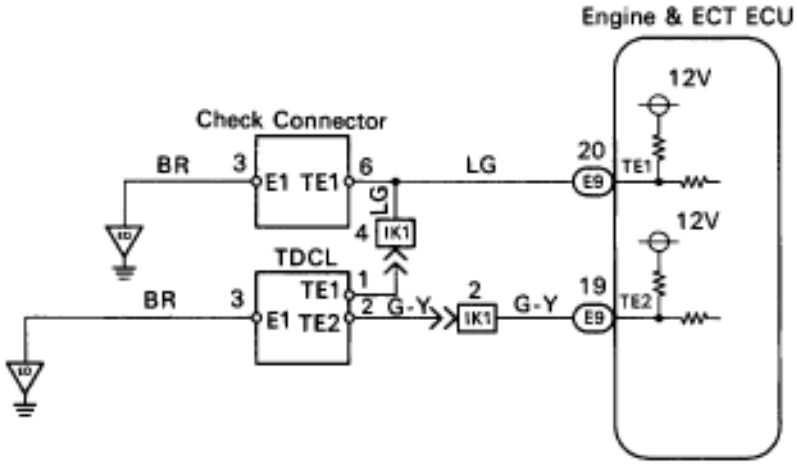

FI6516

WhereEverybodyKnowsYourName

INSPECTION PROCEDURE

1	Check voltage between terminals TE1, TE2 and E1 of check connector, TDCL.

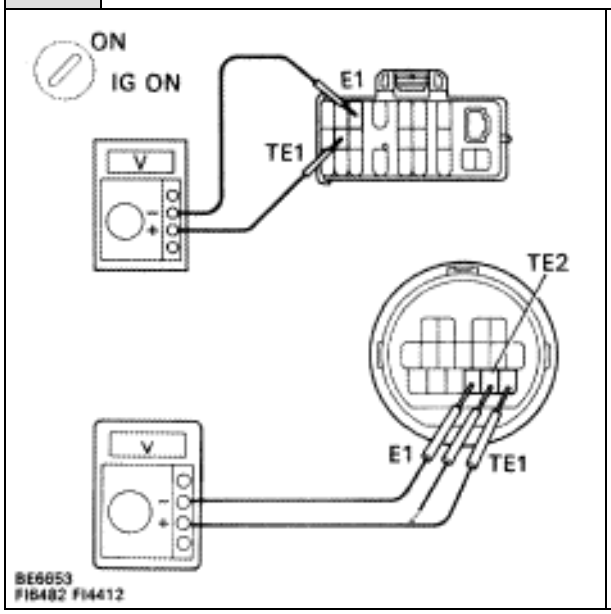

P Turn ignition switch on.

C Measure voltage between terminals TE1, TE2 and E1 of check connector, TDCL.

OK **Voltage: 10 – 14 V**

NG → **OK** → **Check and replace engine & ECT ECT.**

2	Check continuity between terminal E1 of check connector, TDCL and body ground.

OK → **NG** → **Repair or replace harness or connector.**

3	Check for open and short in harness and connector between engine & ECT ECU and check connector, TDCL (See page IN–27).

OK → **NG** → **Repair or replace harness or connector.**

Check and replace engine & ECT ECU.

WhereEverybodyKnowsYourName

DEFOGGER SYSTEM

Description

The component parts of this system and their functions are described in the following table.

Parts Name	Function
Defogger	When over current flows in the defogger circuit, the Defogger fuse breaks the circuit to protect it against damage.
Defogger Relay	This relay is supplied with current from terminal IG1 of ignition switch (Ignition switch ON) and switches large current from the defogger.
A/C Control Panel Assembly 2 Defogger Switch	The defogger switch is built into the A/C Control Panel Assembly. This switch is supplied with current from the relay and fuse HTR. Grounds current from the defogger relay, turning the defogger relay ON.
Defogger 2 Rear Window 2 Outer Mirror	These defoggers generate heat when current is supplied from the defogger relay.

Parts Location

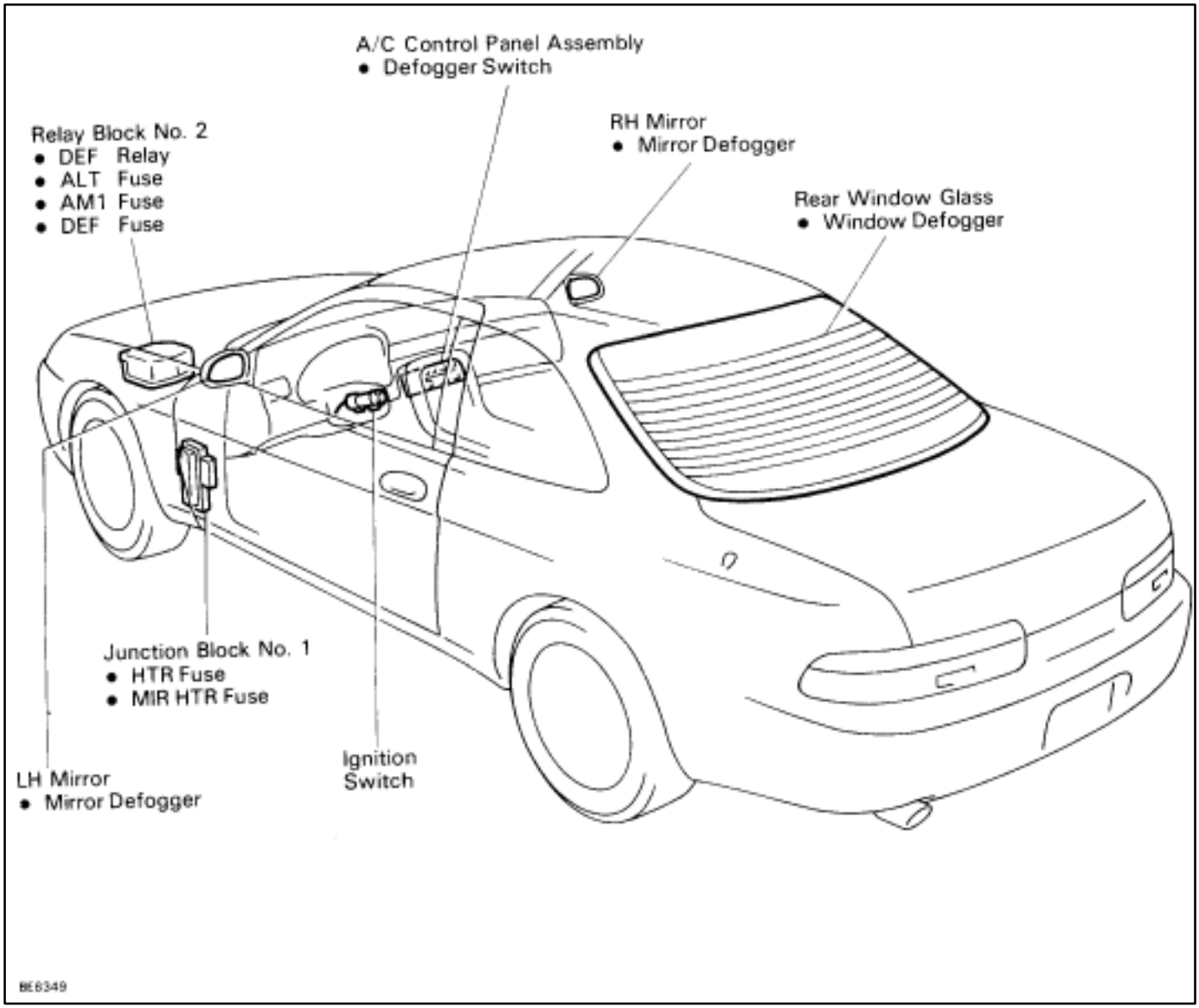

WhereEverybodyKnowsYourName

Wiring and Connector Diagrams

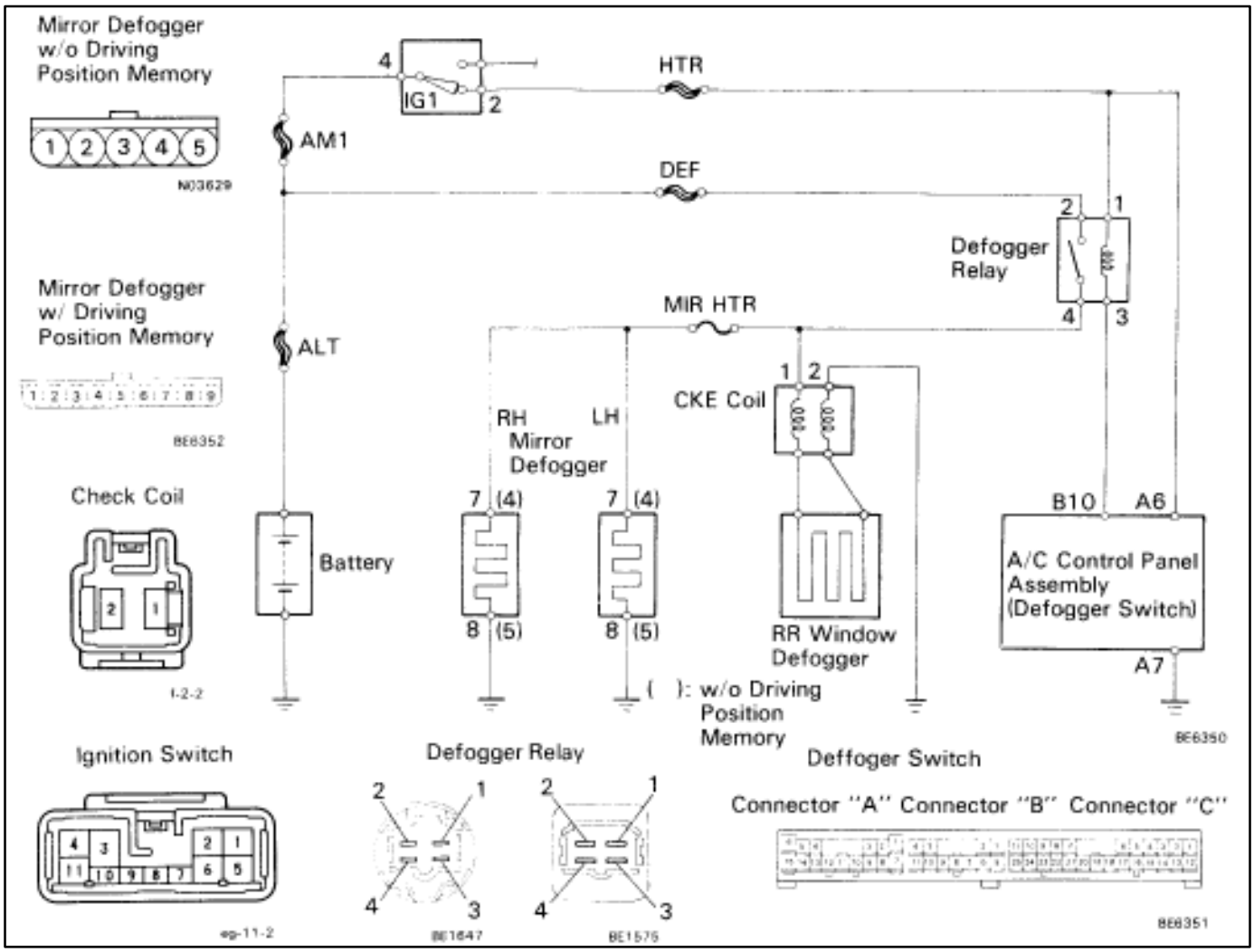

Parts Inspection (Defogger Switch)

REMOVAL AND INSTALLATION OF AIR CONDITIONER CONTROL PANEL ASSEMBLY

(See Instrument Panel on Pub. No. RM260U2, page BO–111**)**

INSPECTION OF DEFOGGER SWITCH

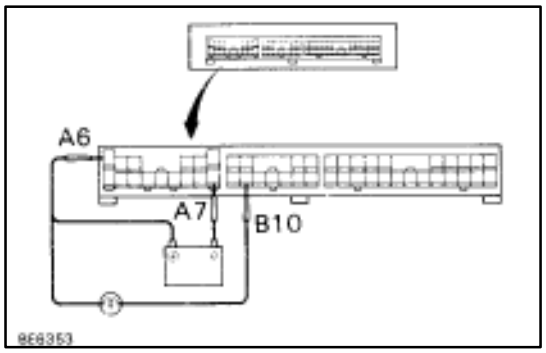

INSPECT SWITCH OPERATION

(a) Connect the positive (+) lead from the battery to terminal A6 and negative (–) lead to terminal A7.

(b) Connect the positive (+) lead from the battery to terminal B10 through a 1.4 W test bulb.

WhereEverybodyKnowsYourName

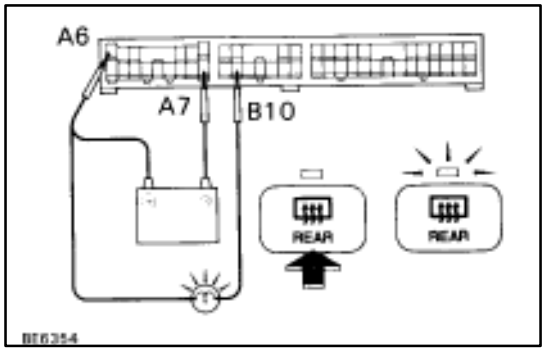

(c) Turn the defogger switch ON and check that the test bulb and indicator light turn ON, then turn OFF after about 15 minutes.

If operation is not as specified, replace the air conditioner control panel assembly.

(Defogger Relay)

INSPECTION OF DEFOGGER RELAY

INSPECT RELAY CONTINUITY AND OPERATION

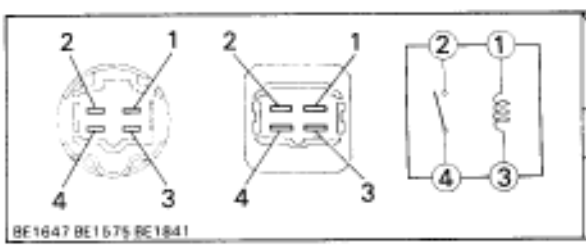

Terminal / Condition	1	2	3	4
Constant	○	⌇	○	
Apply battery voltage to terminals 1 and 3.		○		○

If continuity is not as specified, replace the relay.

(Defogger Wires)

INSPECTION AND REPAIR OF DEFOGGER WIRES

1. INSPECT DEFOGGER WIRES

NOTICE:

- **When cleaning the glass, use a soft, dry cloth, and wipe the glass in the direction of the wire. Take care not to damage the wires.**
- **Do not use detergents or glass cleaners with abrasive ingredients.**
- **When measuring voltage, wind a piece of tin foil around the top of the negative probe and press the foil against the wire with your finger as shown.**

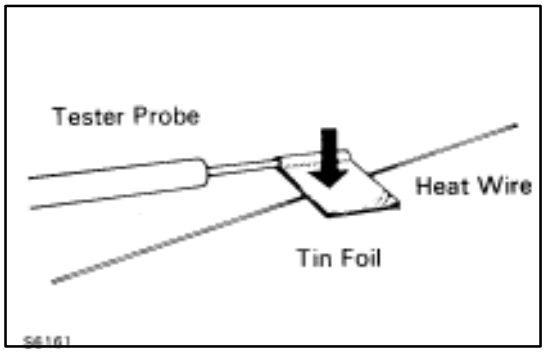

(a) Turn the ignition switch ON.

(b) Turn the defogger switch ON.

(c) Inspect the voltage at the center of each heat wire as shown.

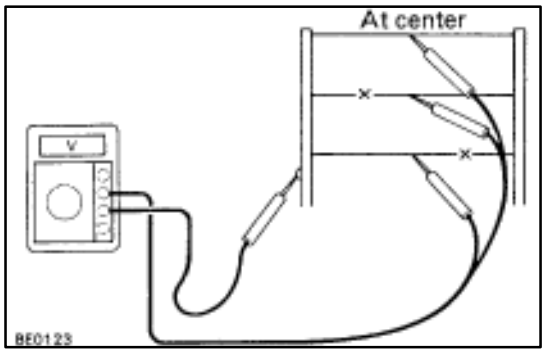

Voltage	Criteria
Approx. 5 V	Okay (No break in wire)
Approx. 10 V or 0 V	Broken wire

HINT: If there is approximately 10 volts, the wire is broken between the center of the wire and the positive (+) end. If there is no voltage, the wire is broken between the center of the wire and ground.

WhereEverybodyKnowsYourName

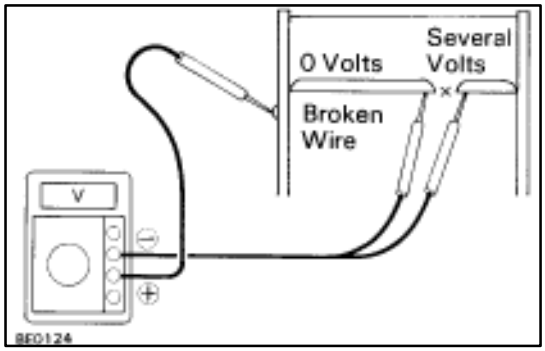

(d) Place the voltmeter positive (+) lead against the defogger positive (+) terminal.
(e) Place the voltmeter negative (–) lead with the foil strip against the heat wire at the positive (+) terminal end and slide it toward the negative (–) terminal end.
(f) The point where the voltmeter deflects from zero to several volts is the place where the heat wire is broken.

HINT: IF the heat wire is not broken, the voltmeter indicates 0 volts at the positive (+) end of the heat wire but gradually increases to about 12 volts as the meter probe is moved to the other end.

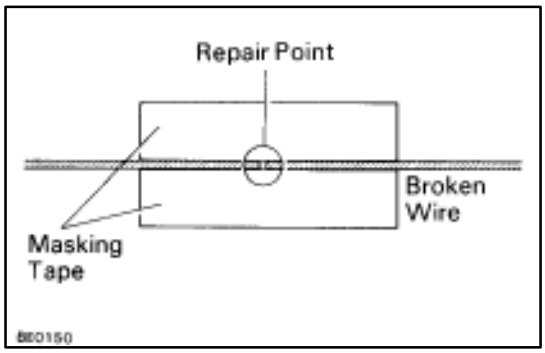

2. REPAIR DEFOGGER WIRES

(a) Clean the broken wire tips with a grease, wax and silicone remover.
(b) Place the masking tape along both sides of the wire to be repaired.
(c) Thoroughly mix the repair agent (Dupont paste No. 4817).

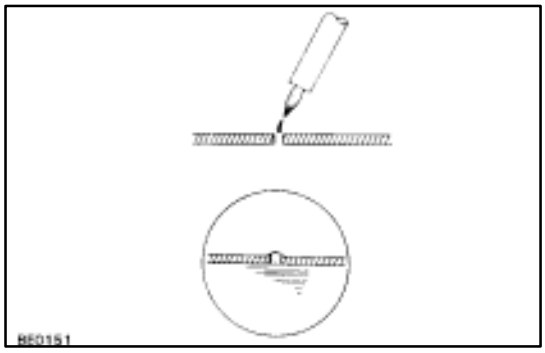

(d) Using a fine tip brush, apply a small amount to the wire.
(e) After a few minutes, remove the masking tape.
(f) Allow the repair to stand at least 24 hours.

(Mirror Defogger)

REMOVAL AND INSTALLATION OF MIRROR ASSEMBLY

(See Outside Rear View Mirror on Pub. No. RM260U2, page BO–42**)**

WhereEverybodyKnowsYourName

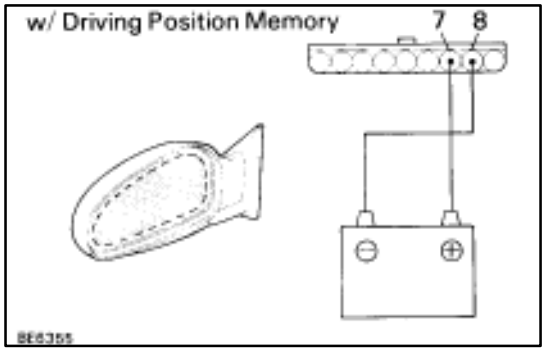

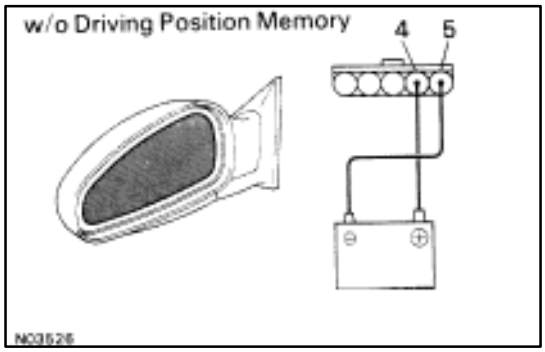

INSPECTION OF MIRROR DEFOGGER

INSPECT MIRROR DEFOGGER

(a) Connect the positive (+) lead from the battery to terminal 7 (4) and the negative (–) lead to terminal 8 (5).

(b) Check that the mirror becomes warm.
HINT: It will take a short time for the mirror to become warm. If the mirror does not become warm, replace the mirror assembly.

( ): w/o Driving Position Memory

Troubleshooting

You will find the cause of trouble more easily using the table shown below. In this table, the number indicate the order priority of the causes in trouble. Check each part in the order shown. If necessary, replace the parts.

See page / Part name / Trouble	BE–4, 20	BE–4, 20	BE–4, 22	BE–172★	BE–173★	–	BE–173★	–	BE–174★
	HEATER Fuse	MIR-HTR Fuse	DEFOG Fuse	Defogger Swtich	Defogger Relay	Wire Harness	Defogger Wires	CKE Coil	Mirror Defogger
All defogger systems do no operate.	1		1	2	3	4			
Rear window defogger does not operate.						3	1	2	
Mirror defogger does not operate.		1				3			2

▼Refer to 1992 LEXUS SC300 Repair Manual (Pub. No. RM260U2)

WhereEverybodyKnowsYourName

CHARGING SYSTEM

WhereEverybodyKnowsYourName

DESCRIPTION

The alternator is a small, high–rpm, high–performance type with an IC regulator incorporated. The IC regulator uses integrated circuits and controls the voltage produced by the alternator.

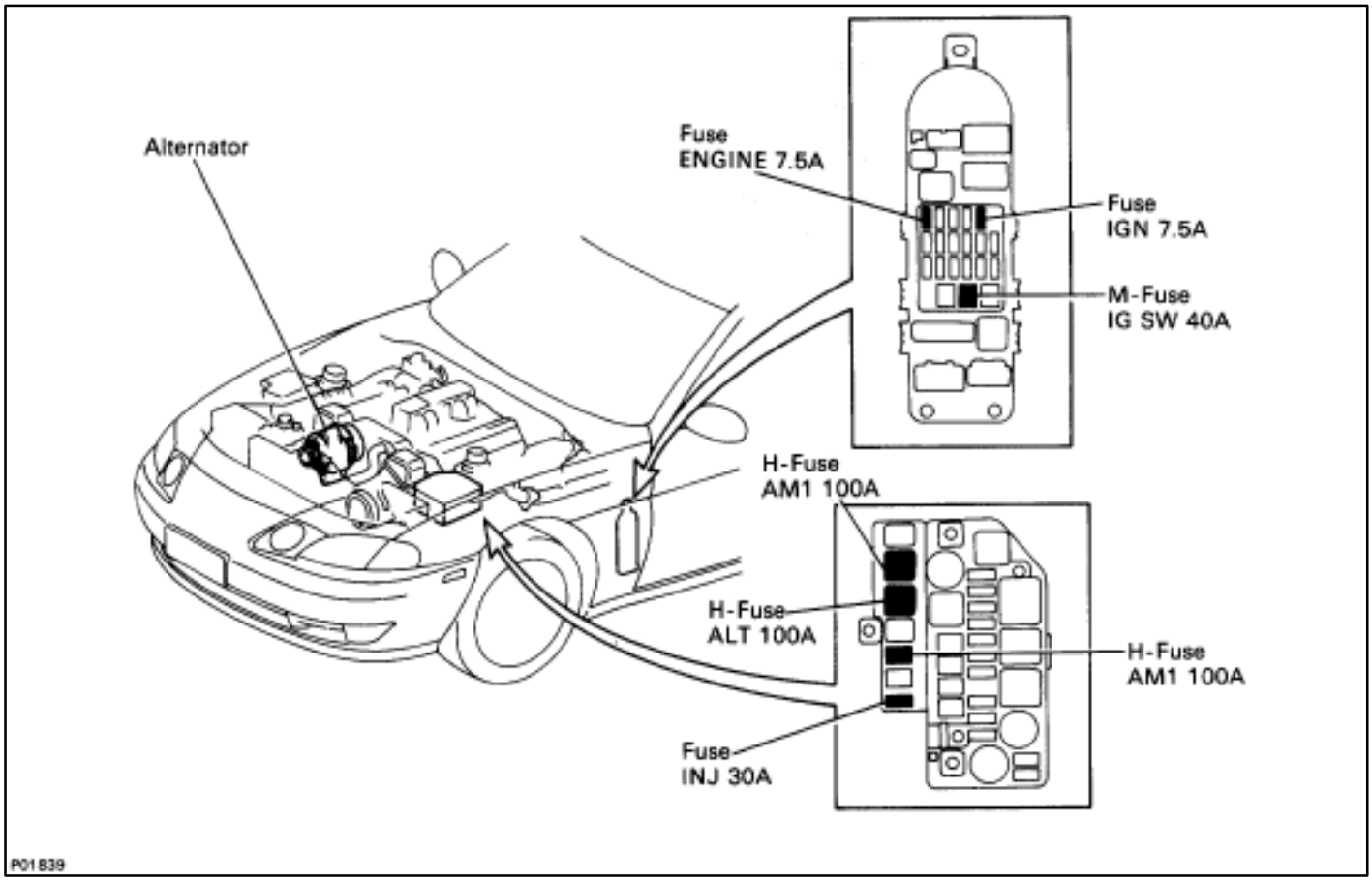

PRECAUTIONS

1. **Check that the battery cables are connected to the correct terminals.**
2. **Disconnect the battery cables when the battery is given a quick charge.**
3. **Do not perform tests with a high voltage insulation resistance tester.**
4. **Never disconnect the battery when the engine is running.**

WhereEverybodyKnowsYourName

DESCRIPTION

The alternator is a small, high–rpm, high–performance type with an IC regulator incorporated. The IC regulator uses integrated circuits and controls the voltage produced by the alternator.

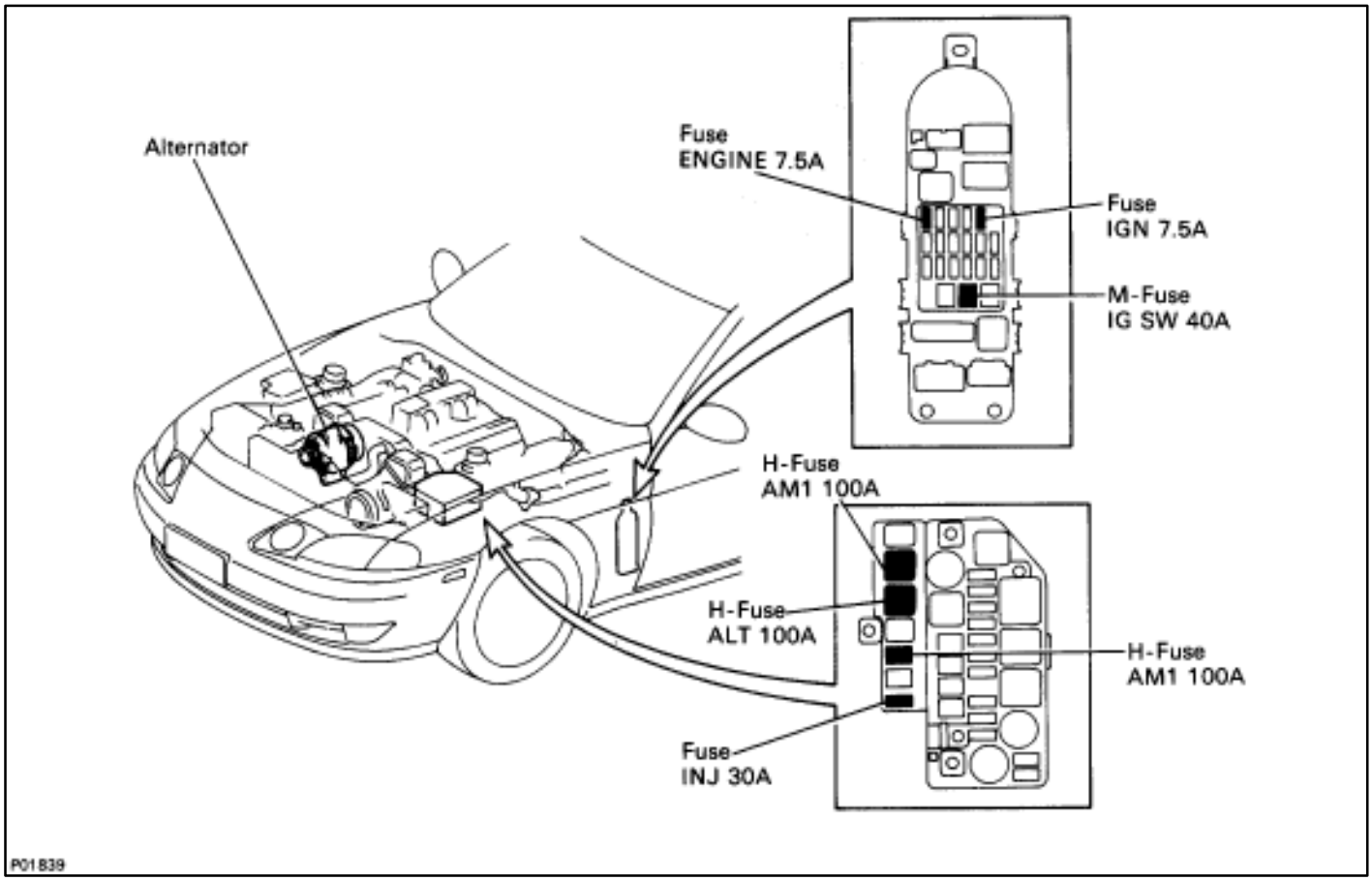

PRECAUTIONS

1. **Check that the battery cables are connected to the correct terminals.**
2. **Disconnect the battery cables when the battery is given a quick charge.**
3. **Do not perform tests with a high voltage insulation resistance tester.**
4. **Never disconnect the battery when the engine is running.**

WhereEverybodyKnowsYourName

SYSTEM CIRCUIT

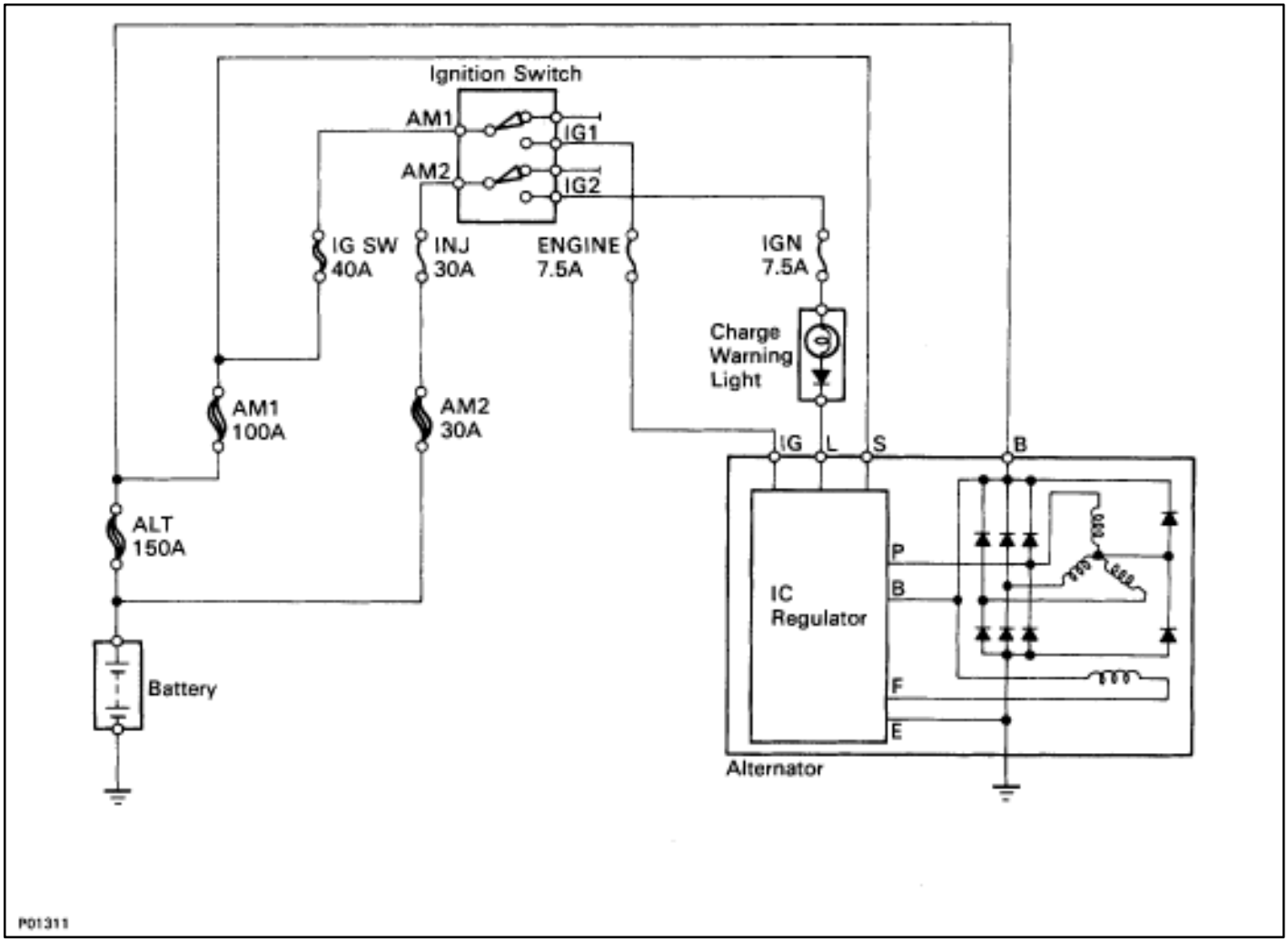

OPERATION

When the ignition switch is turned ON, current from the battery flows from terminal L of the alternator through the IC regulator to terminal E, causing the discharge warning light to light up.

Then when the engine is started, the voltage output increases as the alternator rpm increases. When the voltage output becomes greater than the battery voltage, current for recharging flows from terminal B. Simultaneously, voltage at terminal L increases and the potential difference between battery and terminal L disappears, causing the discharge warning light to go off. When the voltage output exceeds the regulator adjustment voltage, the transistor inside the IC regulator regulates the voltage so that the voltage from the alternator remains constant.

WhereEverybodyKnowsYourName

PREPARATION

SST (SPECIAL SERVICE TOOLS)

Illustration	Part No.	Part Name	Note
	09285–76010	Injection Pump Camshaft Bearing Cone Replacer	Rotor rear bearing
	09286–46011	Injection Pump Spline Shaft Puller	Rectifier end frame
	09608–20012	Front Hub & Drive Pinion Bearing Tool Set	
	(09608–00030)	(Replacer)	Rotor front bearing
	09820–00021	Alternator Rear Bearing Puller	
	09820–00030	Alternator Rear Bearing Replacer	
	09820–63010	Alternator Pulley Set Nut Wrench Set	

RECOMMENDED TOOLS

Illustration	Part No.	Part Name	Note
	09082–00015	TOYOTA Electrical Tester	
	09200–00010	Engine Adjust Kit	

EQUIPMENT

Part Name	Note
Battery specific gravity gauge	Battery
Vernier caliper	Rotor (Slip ring)
Torque wrench	

WhereEverybodyKnowsYourName

ON–VEHICLE INSPECTION

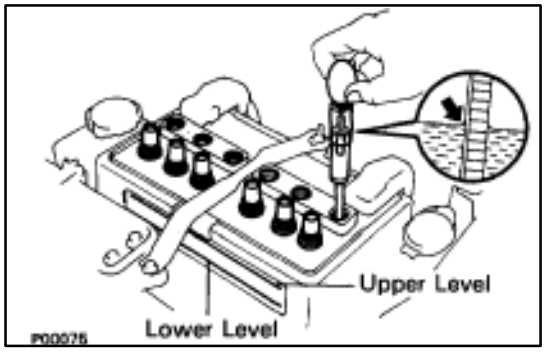

1. INSPECT BATTERY SPECIFIC GRAVITY AND ELECTROLYTE LEVEL

(a) Check the specific gravity of each cell.

Standard specific gravity:

1.27–1.29 when fully charged at 20°C (68°F)

If gravity is less than specification, charge the battery.

(b) Check the electrolyte quantity of each cell.

If insufficient, refill with distilled (or purified) water.

HINT: Check the indicator as shown in the illustration.

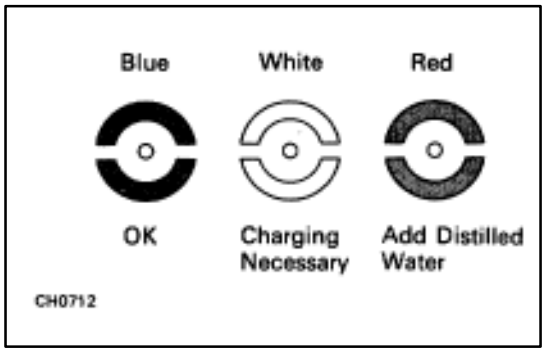

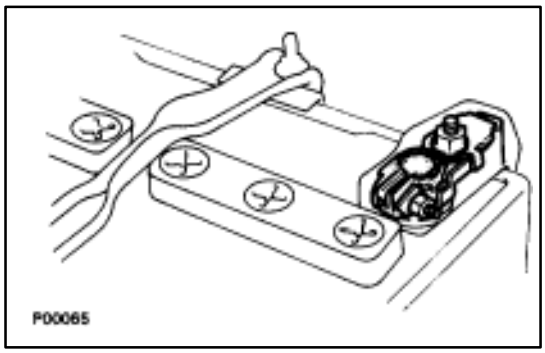

2. CHECK BATTERY TERMINALS, FUSIBLE LINKS AND FUSES

(a) Check that the battery terminals are not loose or corroded.

(b) Check the fusible links and fuses for continuity.

H–fuse:	**ALT 150A**
	AM1 100A
	AM2 30A
M–fuse:	**IG SW 40A**
Fuse:	**IGN 7.5A**
	ENGINE 7.5A
	INJ 30A

3. INSPECT DRIVE BELT

HINT: A belt tensioner is used, so checking the belt tension is not necessary.

(a) Visually check the drive belt for excessive wear, frayed cords, etc.

If necessary, replace the drive belt.

HINT:

- Cracks on rib side of a drive belt are considered acceptable. If the drive belt has chunks missing from the ribs, it should be replaced.
- The drive belt tension can be released by turning the belt tensioner counterclockwise. The pulley bolt for the belt tensioner has a left–hand thread.

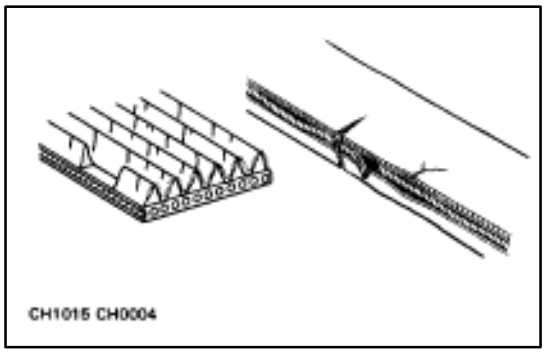

WhereEverybodyKnowsYourName

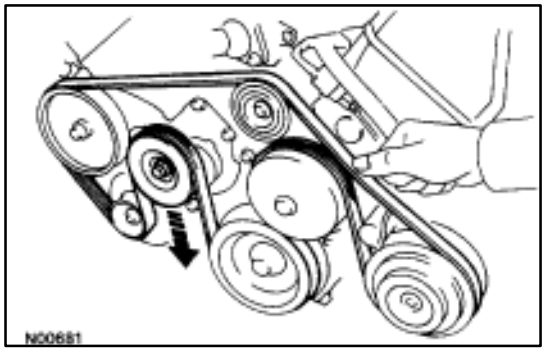

(b) Check the belt tensioner operation.
- Check that the belt tensioner moves downward when the drive belt is pressed down at the points indicated in the illustration with approx. 98 N (10 kgf, 22.0 lbf) of force.
- Check the alignment of the belt tensioner pulley to make sure the drive belt has not slipped off the pulley.

If necessary, replace the belt tensioner.

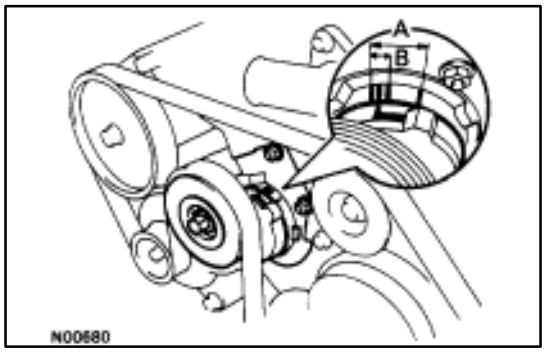

- Check that the arrow mark on the belt tensioner falls within area A of the scale.

If it is outside area A, replace the drive belt.

HINT:
- When a new belt is installed, it should lie within area B. If not, the drive belt is not correct.

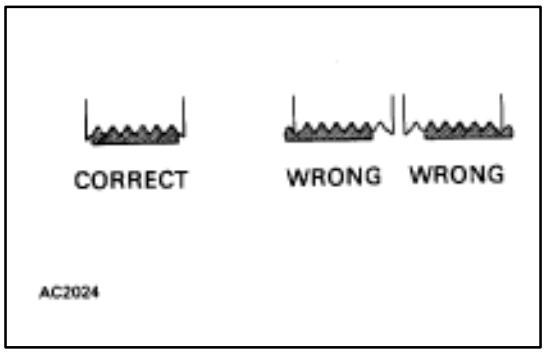

- After installing a belt, check that it fits properly in the ribbed grooves.
- Check by hand to confirm that the belt has not slipped out of the groove on the bottom of the pulley.

4. REMOVE ENGINE UNDER COVER

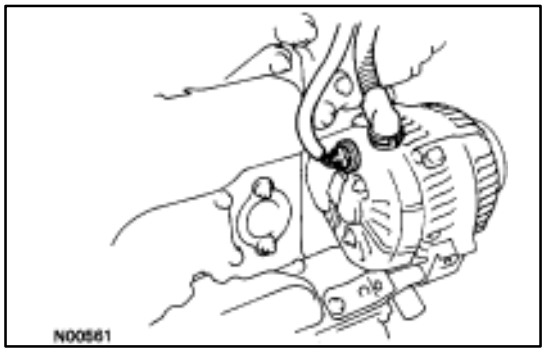

5. VISUALLY CHECK ALTERNATOR WIRING AND LISTEN FOR ABNORMAL NOISES

(a) Check that the wiring is in good condition.

(b) Check that there is no abnormal noise from the alternator while the engine is running.

6. INSPECT CHARGE WARNING LIGHT CIRCUIT

(a) Warm up the engine and then turn it off.

(b) Turn off all accessories.

(c) Turn the ignition switch ON. Check that the charge warning light is lit.

(d) Start the engine. Check that the light goes off.

If the light does not go off as specified, troubleshoot the charge light circuit.

WhereEverybodyKnowsYourName

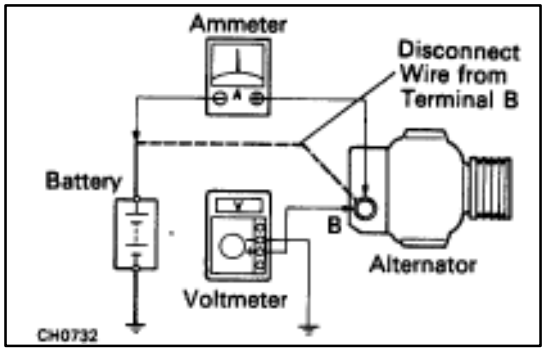

7. INSPECT CHARGING CIRCUIT WITHOUT LOAD

HINT: If a battery/alternator tester is available, connect the tester to the charging circuit as per manufacturer's instructions.

(a) If a tester is not available, connect a voltmeter and ammeter to the charging circuit as follows:
- Disconnect the wire from terminal B of the alternator and connect it to the negative (–) probe of the ammeter.
- Connect the positive (+) probe of the ammeter to terminal B of the alternator.
- Connect the positive (+) probe of the voltmeter to terminal B of the alternator.
- Ground the negative (–) probe of the voltmeter.

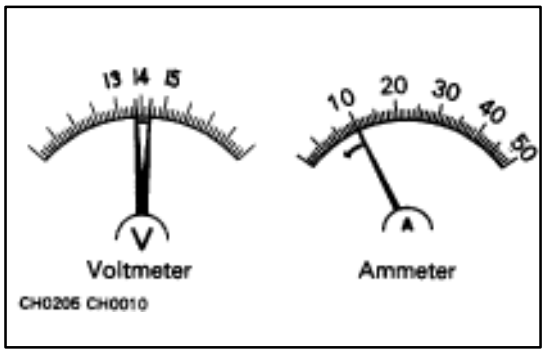

(b) Check the charging circuit as follows:

With the engine running from idling to 2,000 rpm, check the reading on the ammeter and voltmeter.

Standard amperage: 10 A or less

Standard voltage: 13.9–15.1 V at 25°C (77°F)

13.5–14.3 V at 115°C (239°F)

If the voltmeter reading is greater than standard voltage, replace the IC regulator.

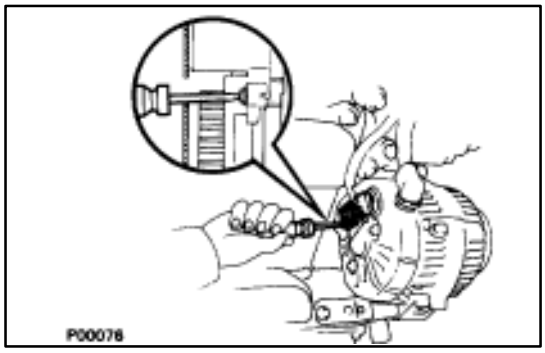

If the voltmeter reading is less than standard voltage, check the IC regulator and alternator as follows:
- Remove the engine under cover.
- With terminal F grounded, start the engine and check the voltmeter reading of terminal B.

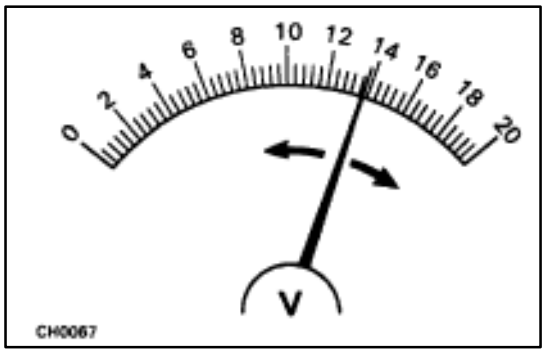

- If the voltmeter reading is greater than standard voltage, replace the IC regulator.
- If the voltmeter reading is less than standard voltage, check the alternator.
- Reinstall the engine under cover.

WhereEverybodyKnowsYourName

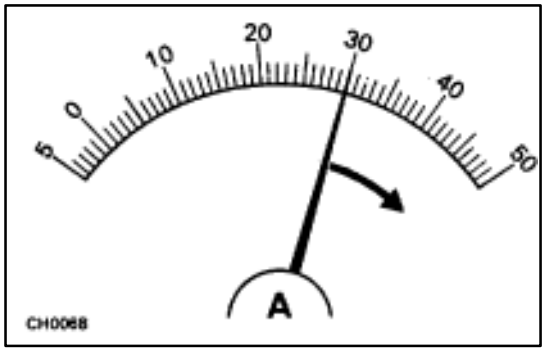

8. INSPECT CHARGING CIRCUIT WITH LOAD

(a) With the engine running at 2,000 rpm, turn on the high beam headlights and place the heater blower switch at ”HI”.

(b) Check the reading on the ammeter.

Standard amperage: 30 A or more

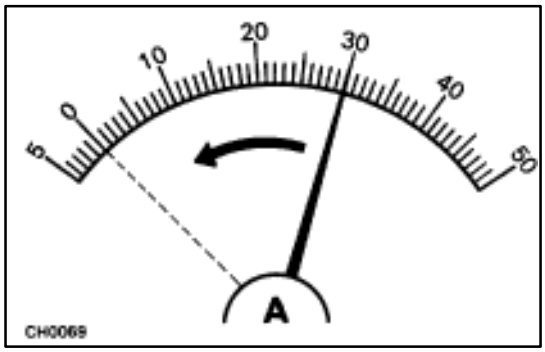

If the ammeter reading is less than standard amperage, repair the alternator. (See page CH–9)

HINT: With the battery fully charged, the indication will sometimes be less than standard amperage.

9. REINSTALL ENGINE UNDER COVER

WhereEverybodyKnowsYourName

ALTERNATOR

COMPONENTS FOR REMOVAL AND INSTALLATION

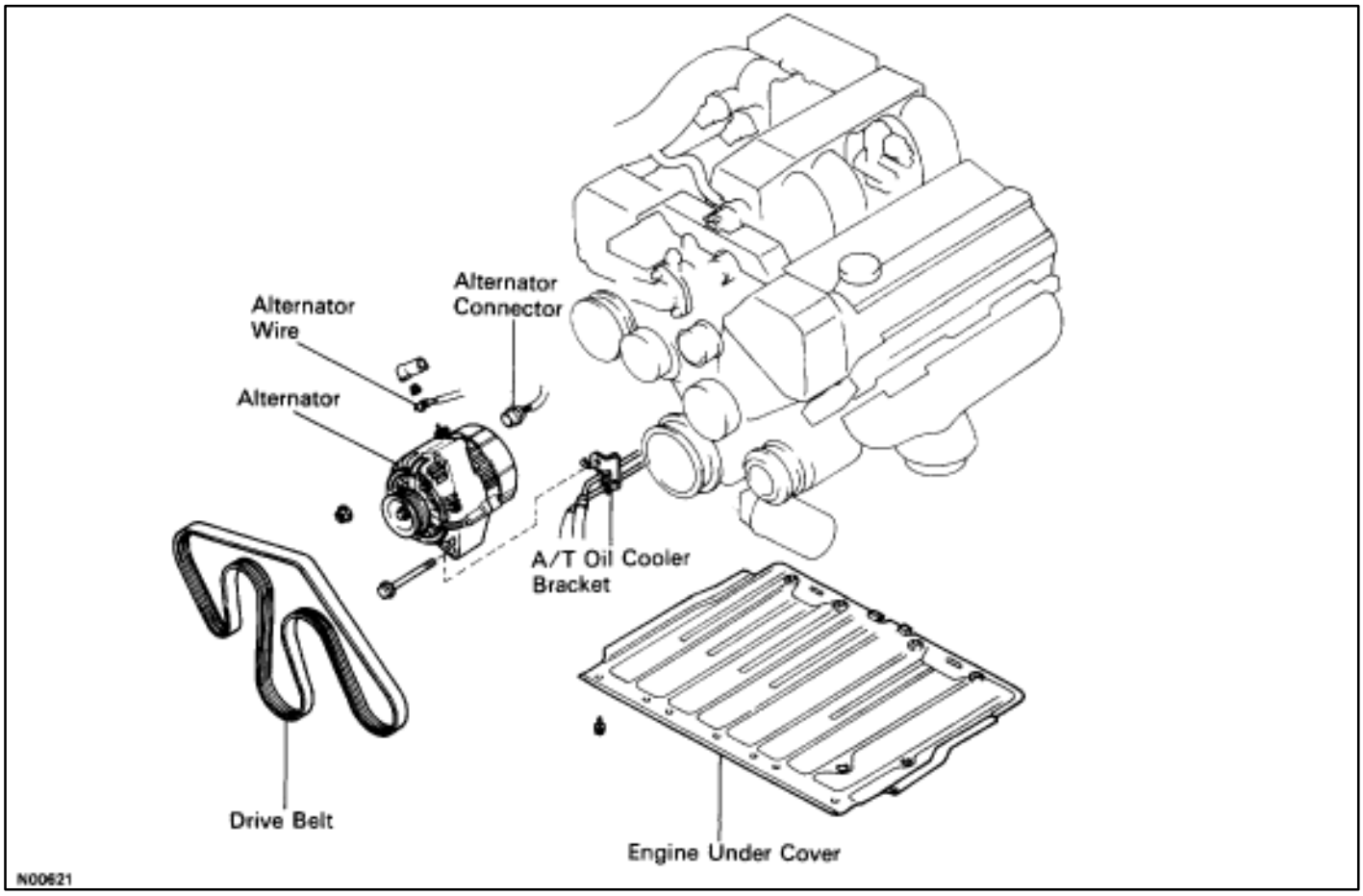

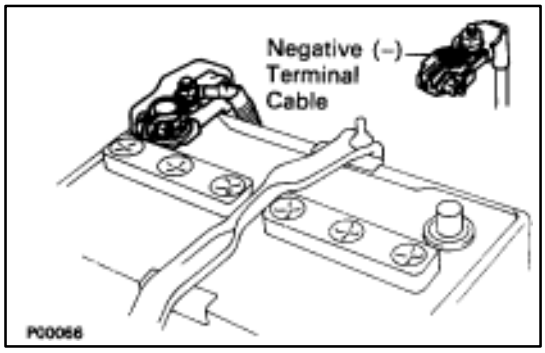

REMOVAL OF ALTERNATOR

1. **DISCONNECT CABLE FROM NEGATIVE TERMINAL OF BATTERY**
   CAUTION: Work must be started after approx. 20 seconds or longer from the time the ignition switch is turned to the "LOCK" position and the negative (–) terminal cable is disconnected from the battery.
2. **REMOVE ENGINE UNDER COVER**

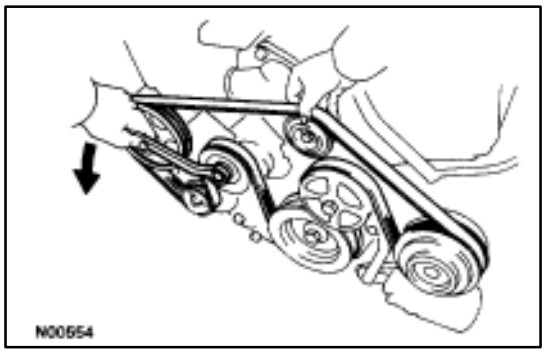

3. **REMOVE DRIVE BELT**
   Loosen the belt tension by turning the drive belt tensioner counterclockwise, and remove the drive belt.
   HINT: The pulley bolt for the belt tensioner has a left–hand thread.

WhereEverybodyKnowsYourName

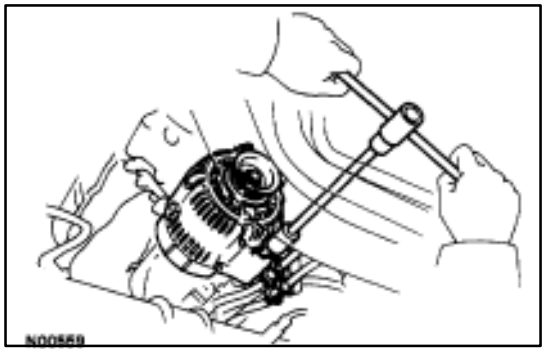

4. REMOVE ALTERNATOR

(a) Disconnect the alternator connector.

(b) Remove the cap and nut, and disconnect the alternator wire.

(c) Remove the bolt, and disconnect the A/T oil cooler pipe bracket.

(d) Remove the nut and alternator.

COMPONENTS FOR DISASSEMBLY AND ASSEMBLY

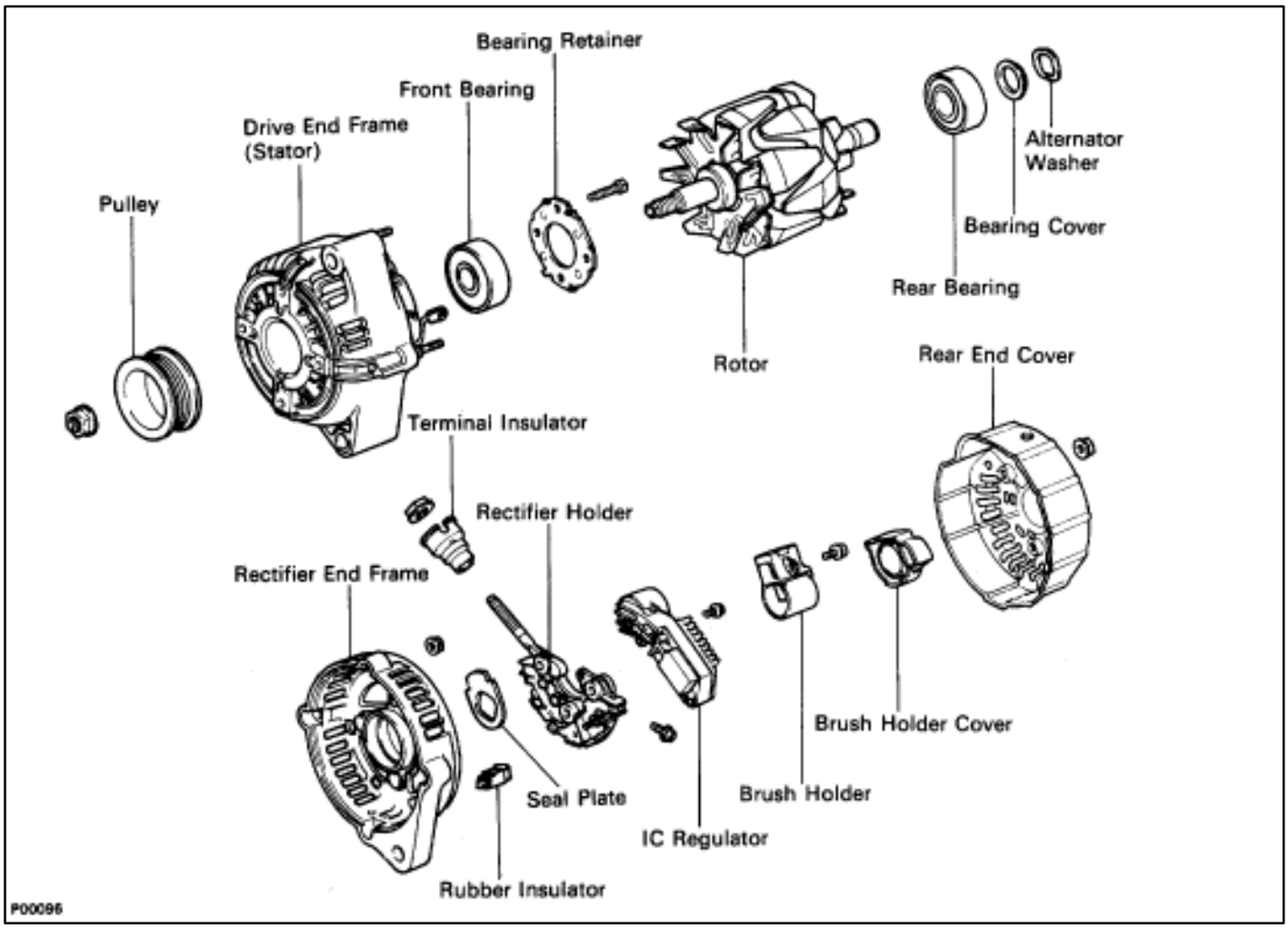

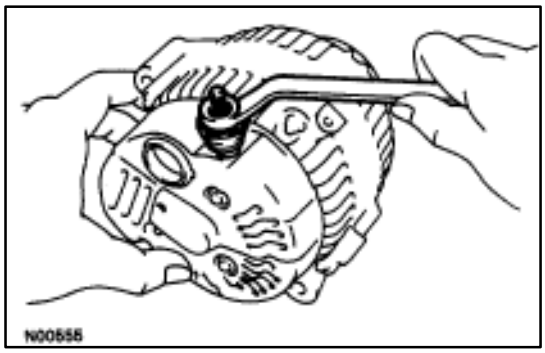

DISASSEMBLY OF ALTERNATOR

1. REMOVE REAR END COVER

(a) Remove the nut and terminal insulator.

WhereEverybodyKnowsYourName

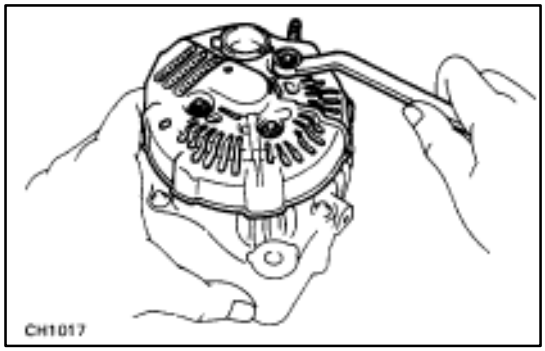

(b) Remove the three nuts and end cover.

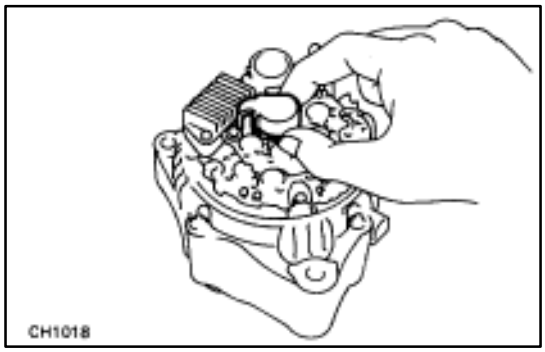

2. REMOVE BRUSH HOLDER AND IC REGULATOR

(a) Remove the brush holder cover from the brush holder.

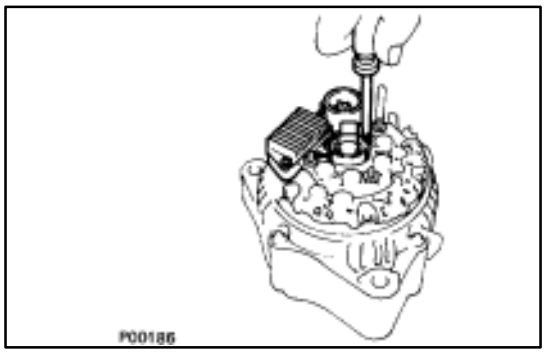

(b) Remove the five screws, brush holder and IC regulator.

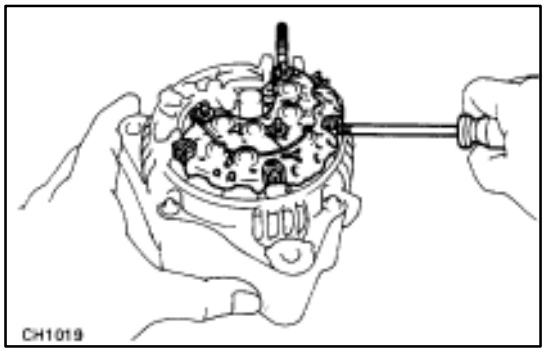

3. REMOVE RECTIFIER HOLDER

(a) Remove the four screws and rectifier holder.

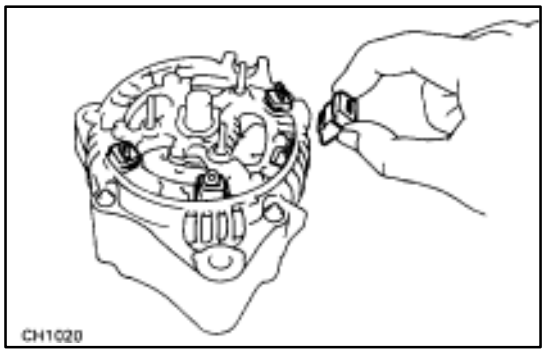

(b) Remove the four rubber insulators.

WhereEverybodyKnowsYourName

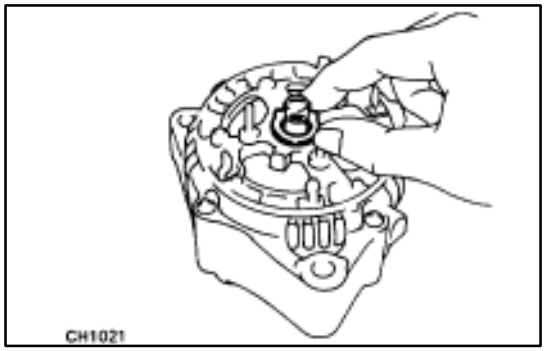

(c) Remove the seal plate.

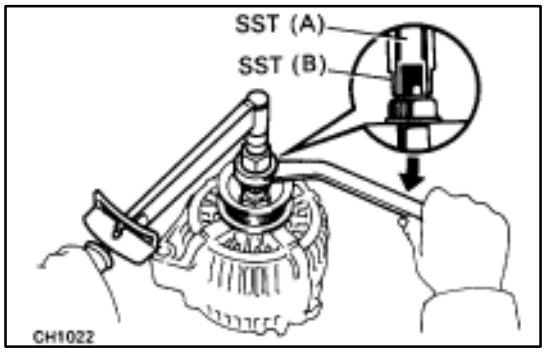

4. REMOVE PULLEY

(a) Hold SST (A) with a torque wrench, and tighten SST (B) clockwise to the specified torque.

SST 09820–63010

Torque: 39 N·m (400 kgf·cm, 29 ft·lbf)

(b) Check that SST (A) is secured to the rotor shaft.

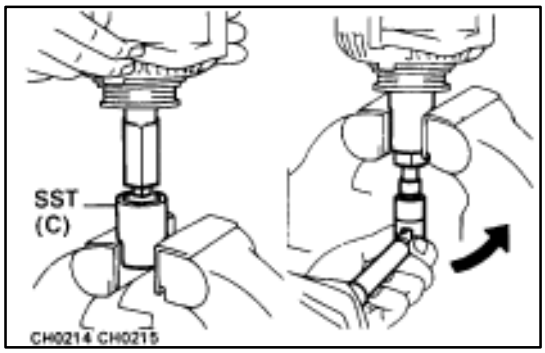

(c) As shown in the illustration, mount SST (C) in a vise, and install the alternator to SST (C).

(d) To loosen the pulley nut, turn SST (A) in the direction shown in the illustration.

NOTICE: To prevent damage to the rotor shaft, do not loosen the pulley nut more than one–half of a turn.

(e) Remove the alternator from SST (C).

(f) Turn SST (B) and remove SST (A and B).

(g) Remove the pulley nut and pulley.

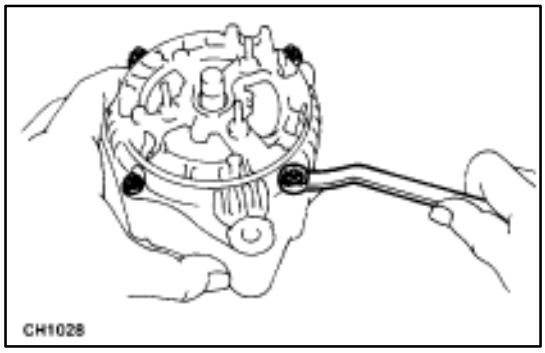

5. REMOVE RECTIFIER END FRAME

(a) Remove the four mounting nuts.

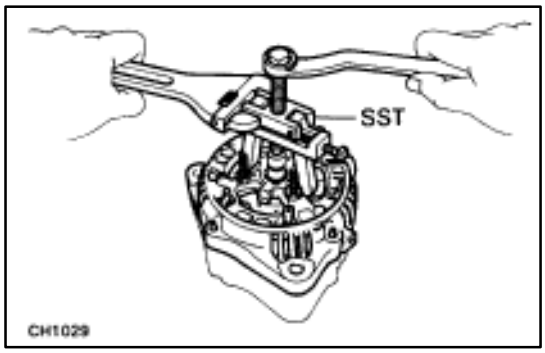

(b) Using SST, remove the rectifier end frame.

SST 09286–46011

WhereEverybodyKnowsYourName

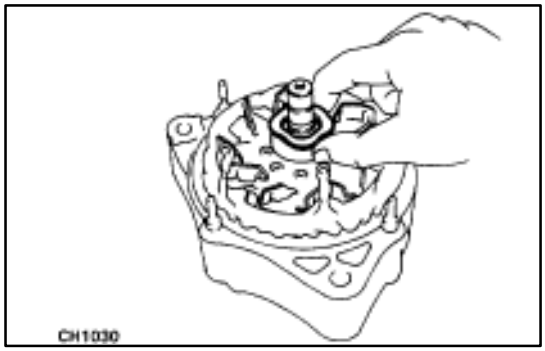

(c) Remove the alternator washer.

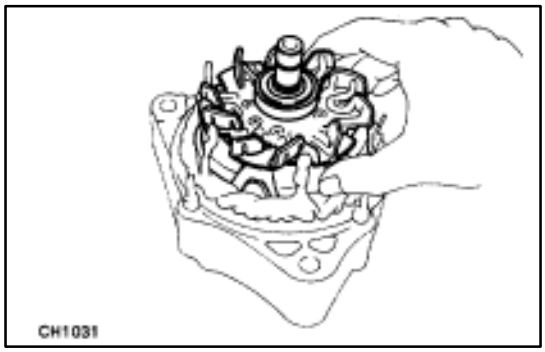

6. REMOVE ROTOR FROM DRIVE END FRAME

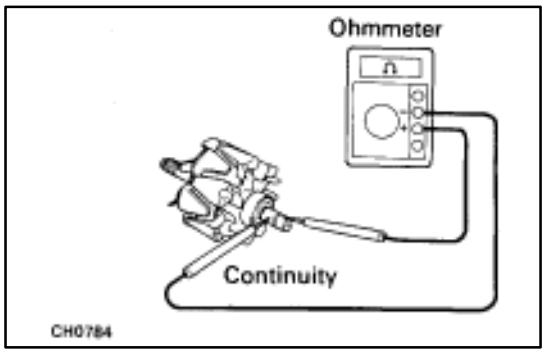

INSPECTION AND REPAIR OF ALTERNATOR

Rotor

1. INSPECT ROTOR FOR OPEN CIRCUIT

Using an ohmmeter, check that there is continuity between the slip rings.

Standard resistance (Cold): 2.8–3.0 ?

If there is no continuity, replace the rotor.

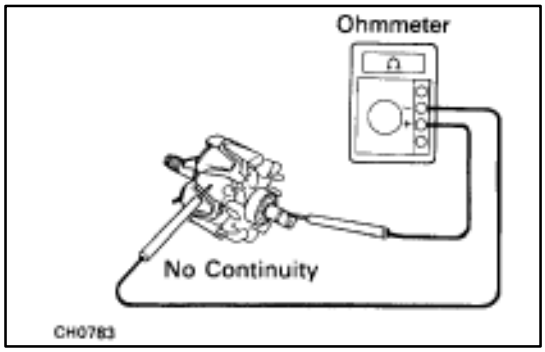

2. INSPECT ROTOR FOR GROUND

Using an ohmmeter, check that there is no continuity between the slip ring and rotor.

If there is continuity, replace the rotor.

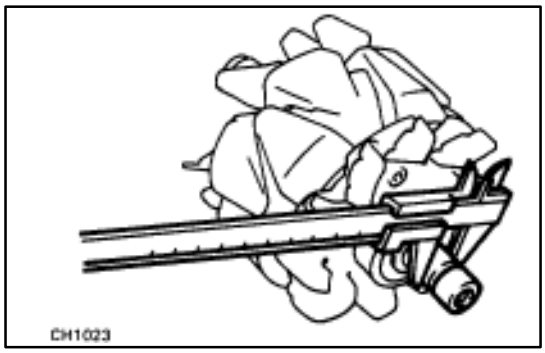

3. INSPECT SLIP RINGS

(a) Check that the slip rings are not rough or scored.

If rough or scored, replace the rotor.

(b) Using a vernier caliper, measure the slip ring diameter.

Standard diameter: 14.2–14.4 mm (0.559–0.567 in.)

Minimum diameter: 12.8 mm (0.504 in.)

If the diameter is less than minimum, replace the rotor.

WhereEverybodyKnowsYourName

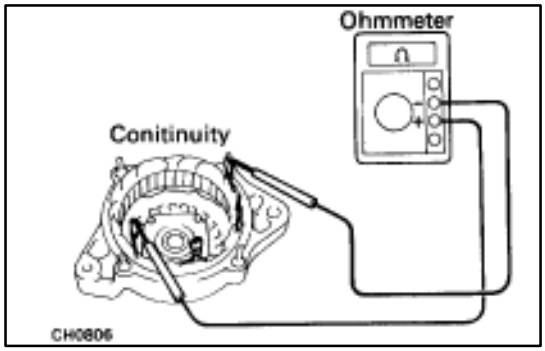

Stator (Drive End Frame)

1. INSPECT STATOR FOR OPEN CIRCUIT

Using an ohmmeter, check that there is continuity between the coil leads.

If there is no continuity, replace the drive end frame assembly.

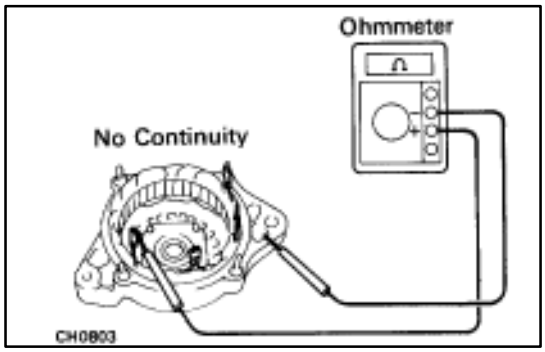

2. INSPECT STATOR FOR GROUND

Using an ohmmeter, check that there is no continuity between the coil lead and drive end frame.

If there is continuity, replace the drive end frame assembly.

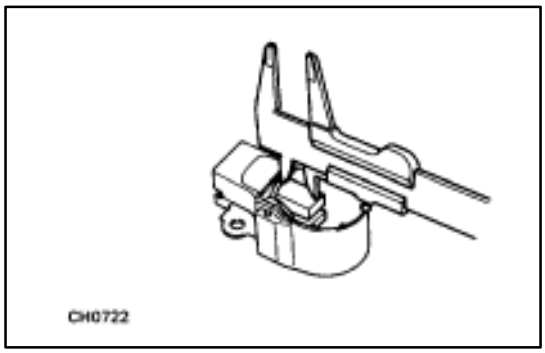

Brushes

INSPECT EXPOSED BRUSH LENGTH

Using a vernier caliper, measure the exposed brush length.

Standard exposed length: 10.5 mm (0.413 in.)

Minimum exposed length: 1.5 mm (0.059 in.)

If the exposed length is less than minimum, replace the brush holder.

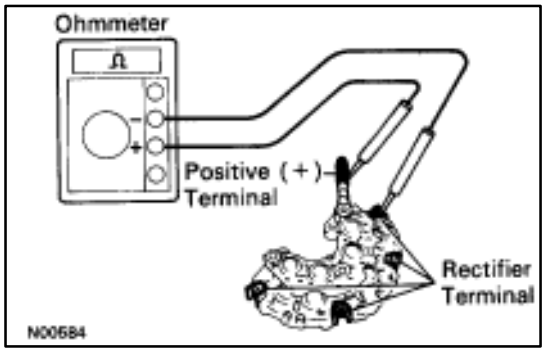

Rectifiers (Rectifier Holder)

1. INSPECT POSITIVE RECTIFIER

(a) Using an ohmmeter, connect one tester probe to the positive (+) terminal and the other to each rectifier terminal.

(b) Reverse the polarity of the tester and repeat (a).

(c) Check that one shows continuity and the other shows no continuity.

If continuity is not as specified, replace the rectifier holder.

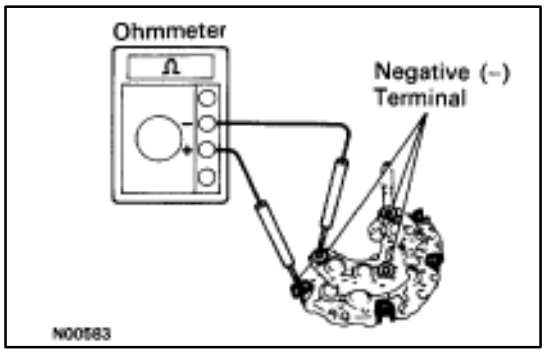

2. INSPECT NEGATIVE RECTIFIER

(a) Using an ohmmeter, connect one tester probe to each negative (–) terminal and the other to each rectifier terminal.

(b) Reverse the polarity of the tester probes and repeat (a).

(c) Check that one shows continuity and the other shows no continuity.

If continuity is not as specified, replace the rectifier holder.

WhereEverybodyKnowsYourName

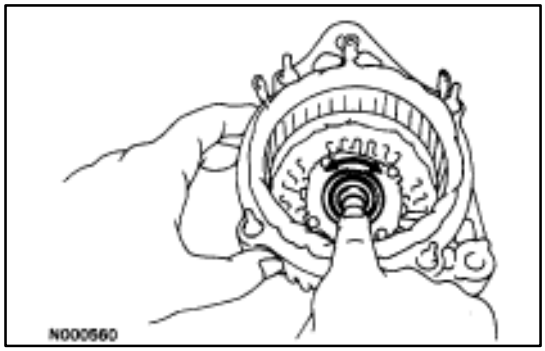

Bearings

1. INSPECT FRONT BEARING

Check that the bearing is not rough or worn.

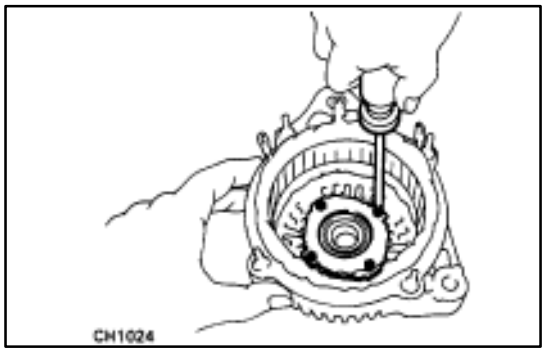

2. IF NECESSARY, REPLACE FRONT BEARING

(a) Remove the four screws, bearing retainer and bearing.

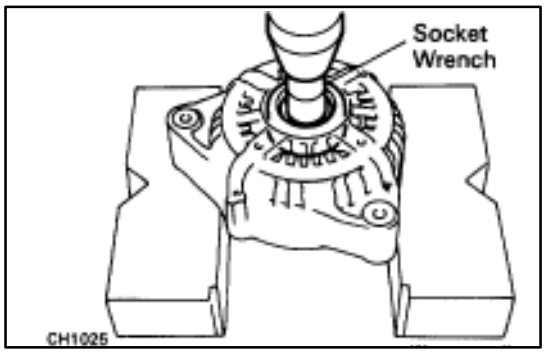

(b) Using a socket wrench and press, press out the bearing.

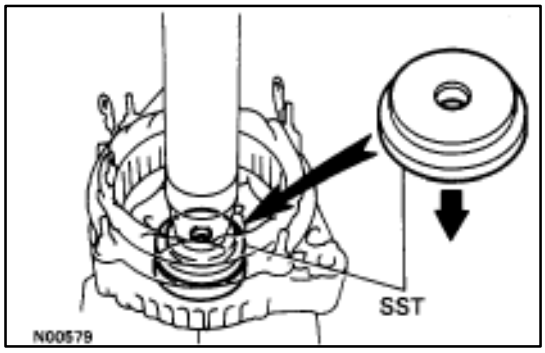

(c) Using SST and a press, press in a new bearing.

SST 09608–20012 (09608–00030)

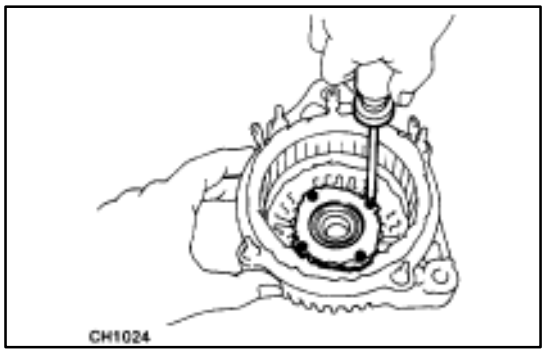

(d) Install the bearing retainer with the four screws.

WhereEverybodyKnowsYourName

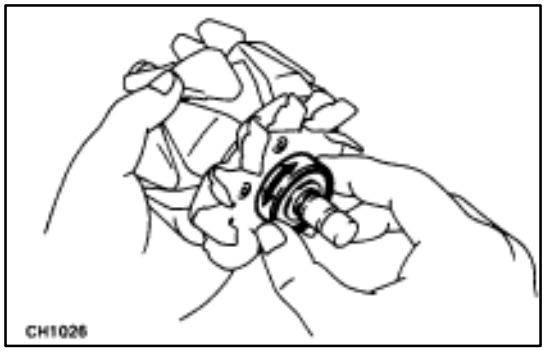

3. INSPECT REAR BEARING

Check that the bearing is not rough or worn.

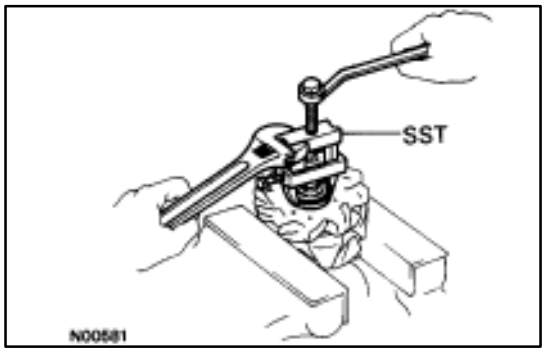

4. IF NECESSARY, REPLACE REAR BEARING

(a) Using SST, remove the bearing cover and bearing.

SST 09820–00021

NOTICE: Be careful not to damage the fan.

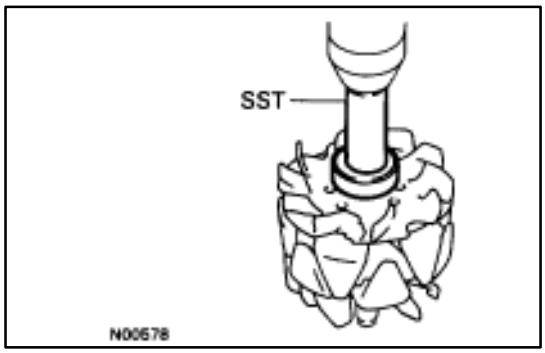

(b) Using SST and a press, press in a new bearing.

SST 09820–00030

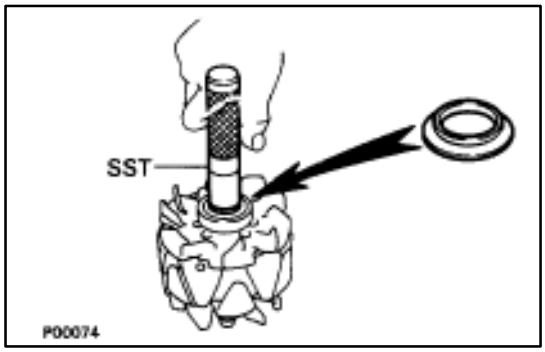

(c) Using SST, push in the bearing cover.

SST 09285–76010

WhereEverybodyKnowsYourName

ASSEMBLY OF ALTERNATOR

(See Components on page CH–10)

1. PLACE RECTIFIER END FRAME ON PULLEY

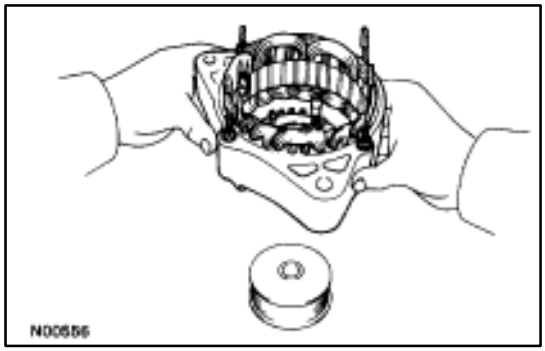

2. INSTALL ROTOR TO RECTIFIER END FRAME

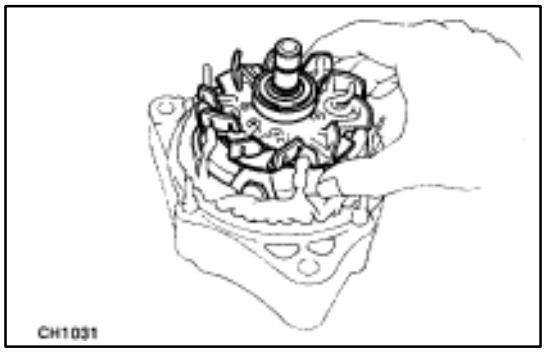

3. INSTALL RECTIFIER END FRAME

(a) Place the alternator washer on the rotor.

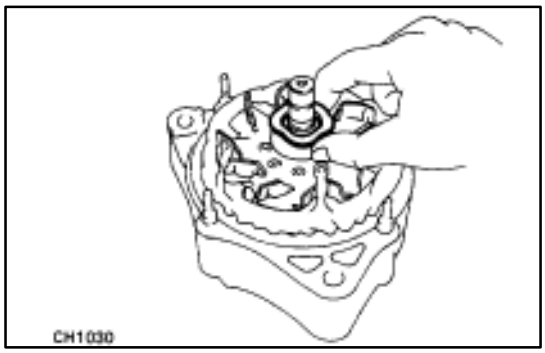

(b) Using a 29 mm socket wrench and press, slowly press in the rectifier end frame.

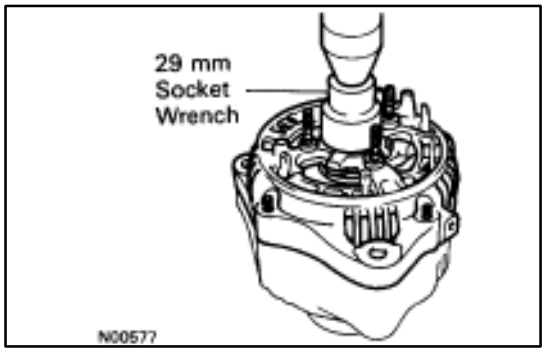

(c) Install the four mounting nuts.

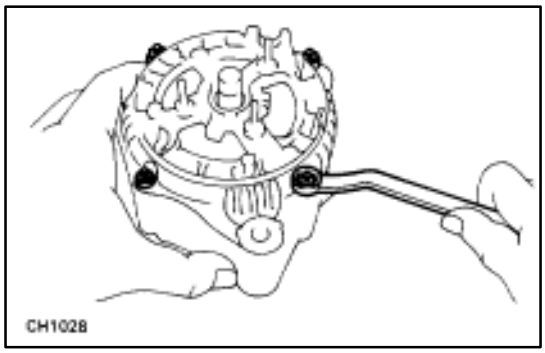

WhereEverybodyKnowsYourName

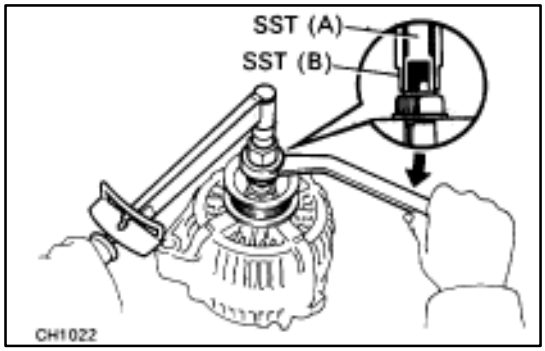

4. INSTALL PULLEY

(a) Install the pulley to the rotor shaft by tightening the pulley nut by hand.

(b) Hold SST (A) with a torque wrench, and tighten SST (B) clockwise to the specified torque.

SST 09820–63010

Torque: 39 N·m (400 kgf·cm, 29 ft·lbf)

(c) Check that SST (A) is secured to the pulley shaft.

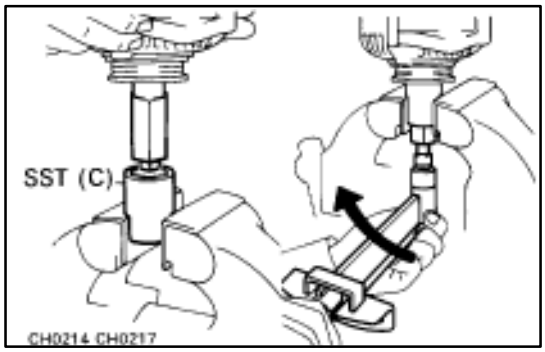

(d) As shown in the illustration, mount SST (C) in a vise, and install the alternator to SST (C).

(e) To torque the pulley nut, turn SST (A) in the direction shown in the illustration.

Torque: 110 N·m (1,125 kgf·cm, 81 ft·lbf)

(f) Remove the alternator from SST (C).

(g) Turn SST (B) and remove SST (A and B).

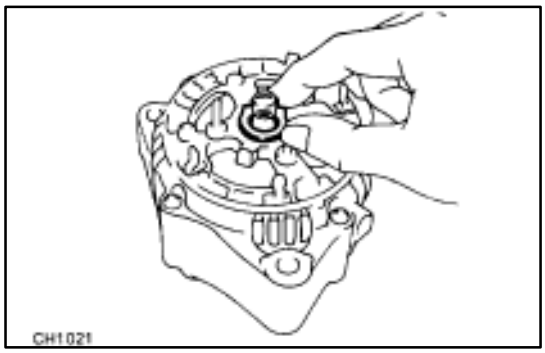

5. INSTALL RECTIFIER HOLDER

(a) Place the seal plate on the rectifier end frame.

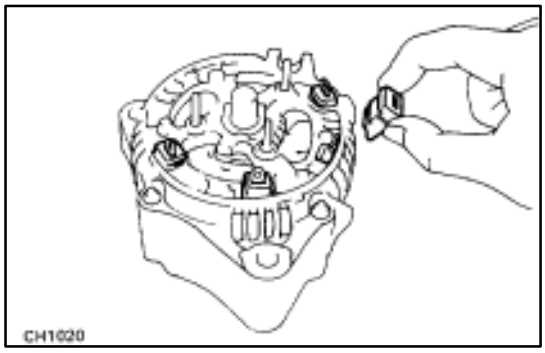

(b) Install the four rubber insulators on the lead wires.

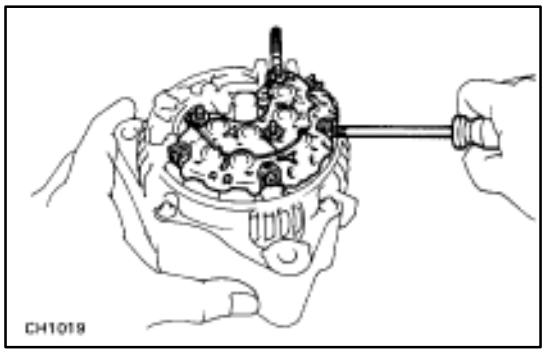

(c) Install the rectifier holder with the four screws.

WhereEverybodyKnowsYourName

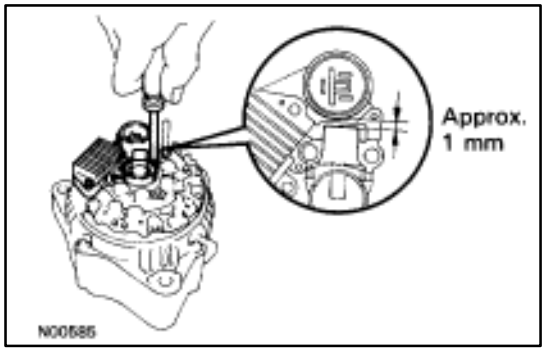

6. INSTALL IC REGULATOR AND BRUSH HOLDER

(a) Place the IC regulator together and brush holder on the rectifier end frame.

NOTICE: Be careful of the holder installation direction.

(b) Install the five mounting screws until there is a clearance of approx. 1 mm (0.04 in.) between the brush holder and connector.

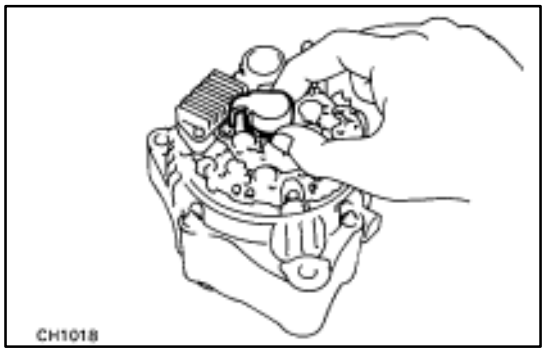

(c) Place the brush holder cover on the brush holder.

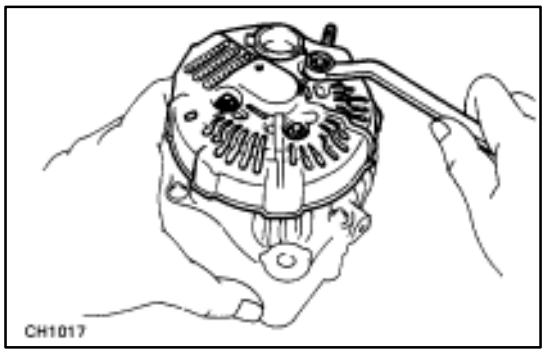

7. INSTALL REAR END COVER

(a) Install the end cover with the three nuts.

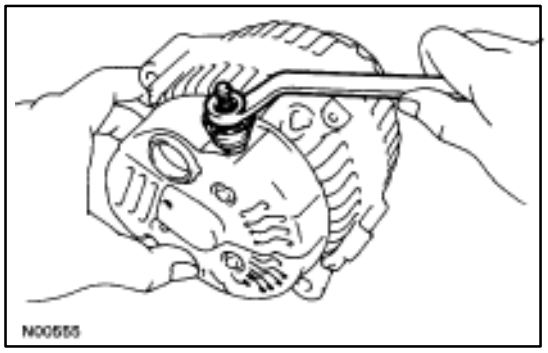

(b) Install the terminal insulator with the nut.

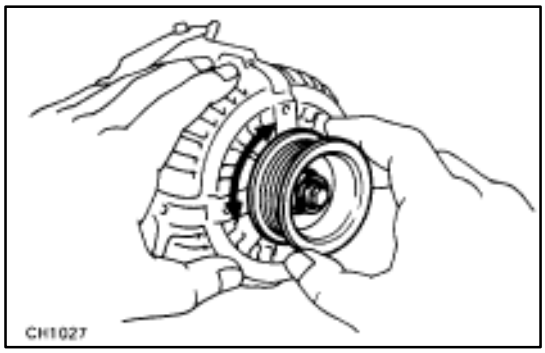

8. CHECK THAT ROTOR ROTATES SMOOTHLY

WhereEverybodyKnowsYourName

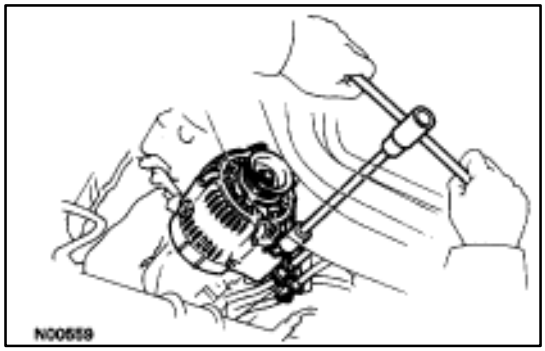

INSTALLATION OF ALTERNATOR

(See Components on page CH–9)

1. INSTALL ALTERNATOR

(a) Install the alternator and A/T oil cooler bracket with the bolt and nut.

Torque: 37 N·m (380 kgf·cm, 27 ft·lbf)

(b) Connect the alternator connector.

(c) Connect the alternator wire with the nut and cap.

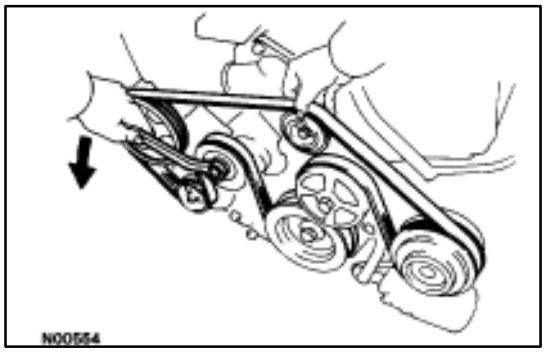

2. INSTALL DRIVE BELT

Install the drive belt by turning the drive belt tensioner counterclockwise.

HINT: The pulley bolt for the belt tensioner has a left–hand thread.

3. CONNECT CABLE TO NEGATIVE TERMINAL OF BATTERY

4. PERFORM ON–VEHICLE INSPECTION

(See steps 6 to 8 on pages CH–6 to 8)

5. INSTALL ENGINE UNDER COVER

WhereEverybodyKnowsYourName

SERVICE SPECIFICATIONS

SERVICE DATA

Battery	Specific gravity		1.27–1.29 (when fully charged at 20°C (68°F))	
Alternator	Rated output		12 V–100 A	
	Rotor coil resistance		2.8–3.0 ?	
	Slip ring diameter	STD	14.2–14.4 mm	0.559–0567 in.
		Limit	12.8 mm	0.504 in.
	Brush exposed length	STD	10.5 mm	0.413 in.
		Limit	1.5 mm	0.059 in.
Alternator regulator	Regulating voltage	at 25°C (77°F)	13.9–15.1 V	
		at 115°C (239°F)	13.5–14.3 V	

TORQUE SPECIFICATIONS

Part tightened	N·m	kgf·cm	ft·lbf
Alternator pulley X Rotor	110	1,125	81
Alternator X Alternator bracket	37	380	27
Alternator X Cylinder block	37	380	27

WhereEverybodyKnowsYourName

COOLING SYSTEM

WhereEverybodyKnowsYourName

DESCRIPTION

This engine utilizes a pressurized forced circulation cooling system which includes a hermostat equipped with a by–pass valve mounted on the inlet side.

The cooling system is composed of the water jacket (inside the cylinder block and cylinderhead), radiator, water pump, thermostat, cooling fan, hoses and other components.

OPERATION

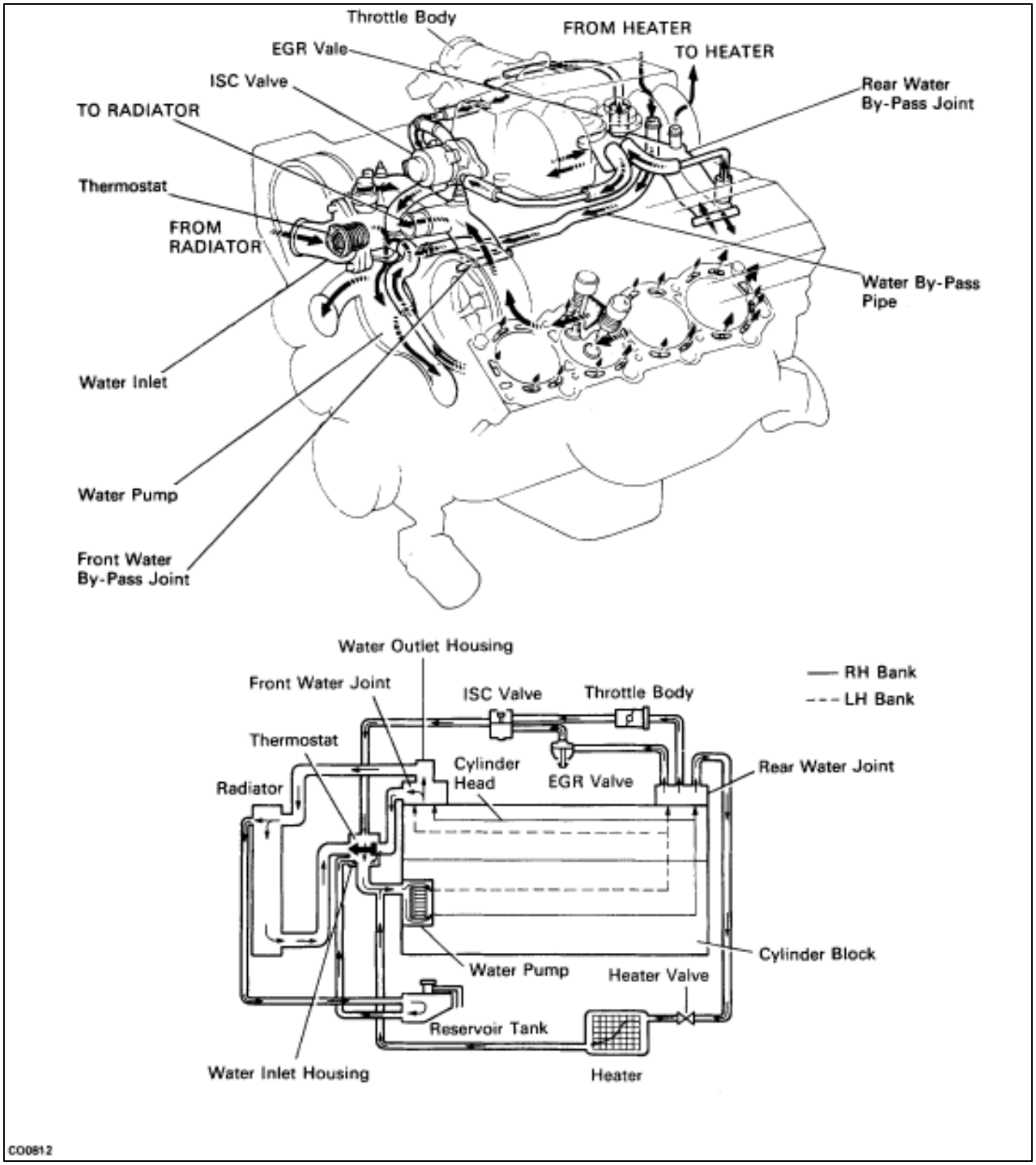

WhereEverybodyKnowsYourName

DESCRIPTION

This engine utilizes a pressurized forced circulation cooling system which includes a hermostat equipped with a by–pass valve mounted on the inlet side.

The cooling system is composed of the water jacket (inside the cylinder block and cylinderhead), radiator, water pump, thermostat, cooling fan, hoses and other components.

OPERATION

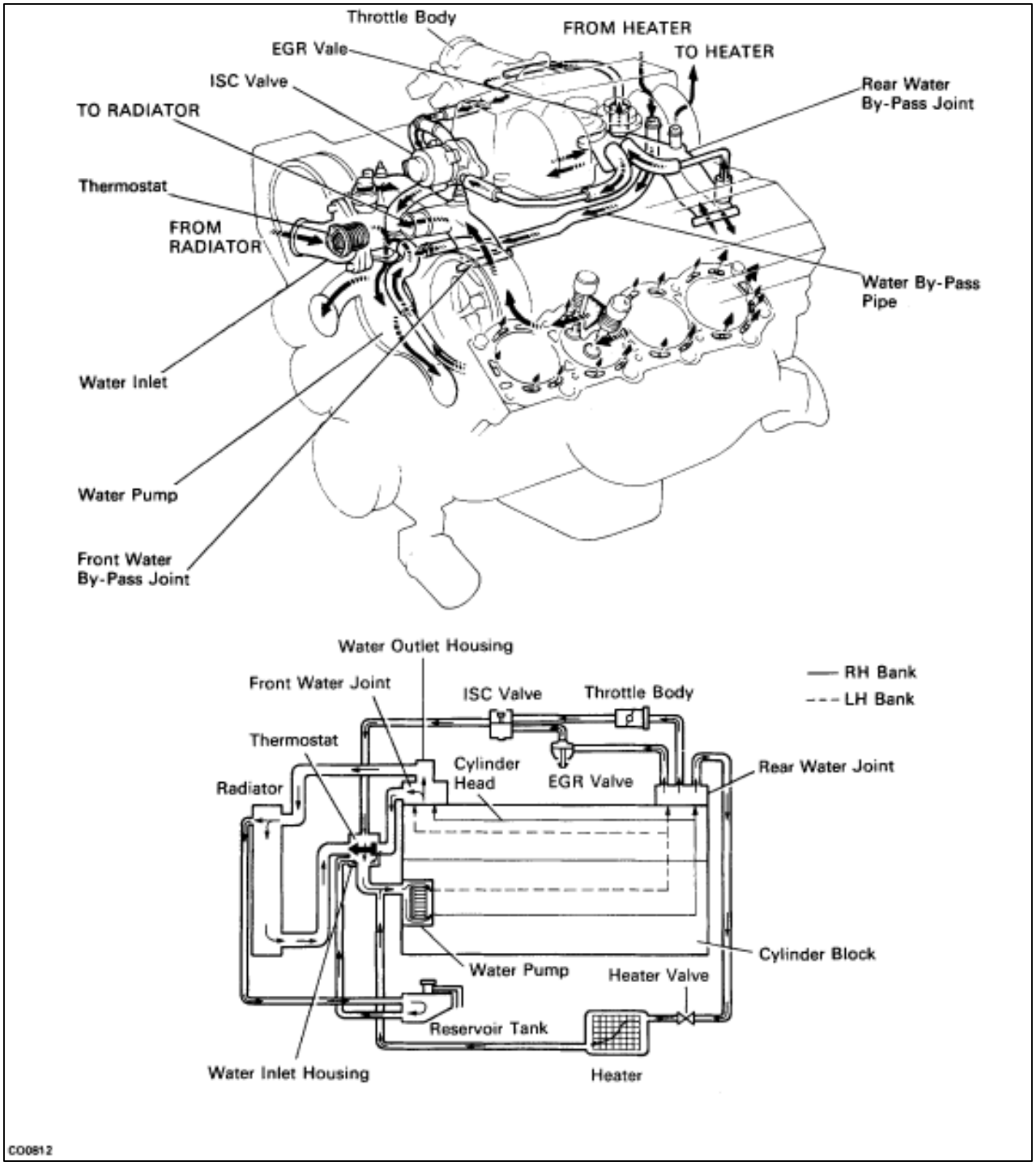

WhereEverybodyKnowsYourName

Coolant which is heated in the water jacket is pumped to the radiator, through which a cooling fan blows air to cool the coolant as it passes through. Coolant which has been cooled is then sent back to the engine by the water pump, where it cools the engine.

The water jacket is a network of channels in the shell of the cylinder block and cylinderhead through which coolant passes. It is designed to provide adequate cooling through the cylinders and combustion chambers which become heated during engine operation.

RADIATOR

The radiator performs the function of cooling the coolant which has passed through the waterjacket and become hot, and it is mounted in the front of the vehicle. The radiator consists of an upper tank and lower tank, and a core which connects the two tanks. The upper tank contains the inlet for coolant from the water jacket and the filler inlet. It also has a hose attached through which excess coolant or steam can flow. The lower tank contains the outlet for coolant and drain plug. The core contains many tubes through which coolant flows from the upper tank to the lower tank as well as cooling fins which radiate heat away from the coolant in the tubes. The air sucked through the radiator by the cooling fan, as well as the wind generated by the vehicle's travel, passes through the radiator, cooling the coolant. Models with automatic transmission include an automatic transmission fluid cooler built into the lower tank of the radiator. A cooling fan is mounted behind radiator to assist the flow of air through the radiator. When the coolant temperature is low, the fan operates slowly to help the warm up, and when the coolant temperature becomes high, the fan speed is increased to provide the air flow required for cooling.

RADIATOR CAP (on Reservoir Tank)

The radiator cap is a pressure type cap which seals the radiator, resulting in pressurization of the radiator as the coolant expands. The pressurization prevents the coolant from boiling even when the coolant temperature exceeds 100°C (212°F). A relief valve (pressurization valve) and a vacuum valve (negative pressure valve) are built into the radiator cap. The relief valve opens and lets steam escape through the overflow pipe when the pressure generated inside the cooling system exceeds the limit (coolant temperature: 110–120°C (230–248°F) pressure; 29.4–98.1 kPa (0.3–1.0 kgf/cm2, 4.3–14.2 psi)). The vacuum valve opens to alleviate the vacuum which develops in the coolant system after the engine is stopped and the coolant temperature drops.

RESERVOIR TANK

The purpose of the reservoir tank is to catch coolant overflows created by volumetrix expansion when the coolant temperature increases. The cap of the reservoir tank is a pressure type which prevents deterioration of the LLC (Long Life Coolant) caused by contact with atmospheric air, increases vaporization performance and reduces loss of the coolant volume.

WATER PUMP

The water pump is mounted on the front of the cylinder block and driven by the reverse side of the timing belt.

THERMOSTAT

The thermostat has a wax type by–pass valve and is mounted in the water inlet housing. The thermostat begins to open at the temperature of 80°C (180°F). When the coolant temperature is low, the valve closes to prevent coolant flow to the radiator, thus permitting the engine to warm up rapidly. When the by–pass valve opens the by–pass circuit, the engine coolant continues to circulate inside the engine, quickly and uniformly warming up to the appropriate temperature. When the coolant temperature is high, the valve opens and coolant flows to the radiator where it is cooled. When the wax inside the thermostat is heated, it expands and thus creates pressure which overpowers the force of the spring which keeps the valve closed. When the wax cools, its contraction causes the force of the spring to take effect once more, closing the valve.

ELECTRONICALLY CONTROLLED HYDRAULIC COOLING FAN (See page CO–22)

WhereEverybodyKnowsYourName

PREPARATION

SST (SPECIAL SERVICE TOOLS)

Illustration	Part No.	Part Name	Note
	09278–54012	Drive Shaft Holding Tool	Hydraulic pump pulley
	09286–46011	Injection Pump Spline Shaft Puller	Hydraulic pump pulley
	09620–30010	Steering Gear Box Replacer Set	
	(09627–30010)	Steering Sector Shaft Bushing Replacer	Oil seal for hydraulic motor
	(09631–00020)	(Handle)	Oil seal for hydraulic motor
	09631–10030	Oil Seal Remover	Oil seal for hydraulic pump
	09843–18020	Diagnosis Check Wire	

RECOMMENDED TOOLS

Illustration	Part No.	Part Name	Note
	09025–00010	Small Torque Wrench	For measuring preload
	09082–00015	TOYOTA Electrical tester	
	09200–00010	Engine Adjust Kit	
	09258–00030	Hose Plug Set	Plug for the vacuum hose, oil hose ect.
	09904–00010	Expander Set	Oil seal for hydraulic pump
	09905–00013	Snap Ring Pliers	Oil seal for hydraulic pump

WhereEverybodyKnowsYourName

EQUIPMENT

Part Name	Note
Caliper gauge	Hydraulic pump, Hydraulic motor
Micrometer	Hydraulic pump, Hydraulic motor
Precision straight edge	Hydraulic pump, Hydraulic motor
Pressure gauge	
Radiator cap tester	
Thermometer	
Torque wrench	
Vernier caliper	Hydraulic pump

COOLANT

Item	Capacity			Classification
	Liters	US qts	Imp. qts	
Engine coolant	10.8	11.4	9.5	Ethylene–glycol base

LUBRICANT

Item	Capacity	Classification
Cooling fan fluid	–	ATF DEXRON®II

SSM (SPECIAL SERVICE MATERIALS)

Part Name	Part No.	Use etc.
Seal packing 1282B, Three bond 1282B or equivalent	08826–00100	Water pump, Water inlet housing

WhereEverybodyKnowsYourName

CHECK AND REPLACEMENT OF ENGINE COOLANT

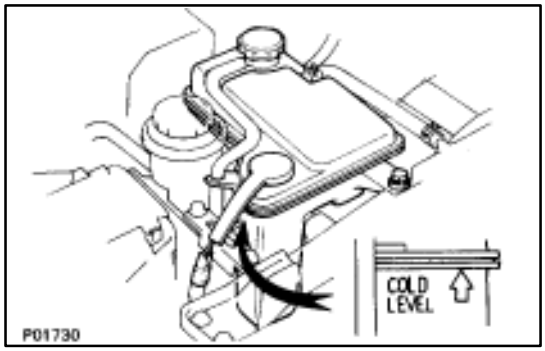

1. CHECK ENGINE COOLANT LEVEL AT RESERVE TANK

The coolant level should be above the ”COLD LEVEL” at normal temperature (20°C (68°F)).

If low, check for leaks and add coolant up to the ”COLD LEVEL”.

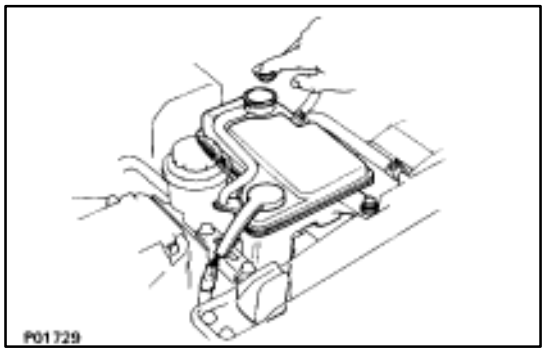

2. CHECK ENGINE COOLANT QUALITY

There should not be any excessive deposits of rust or scales around the radiator cap or reservoir tank filler hole, and the coolant should be free from oil.

If excessively dirty, clean the coolant passages and replace the coolant.

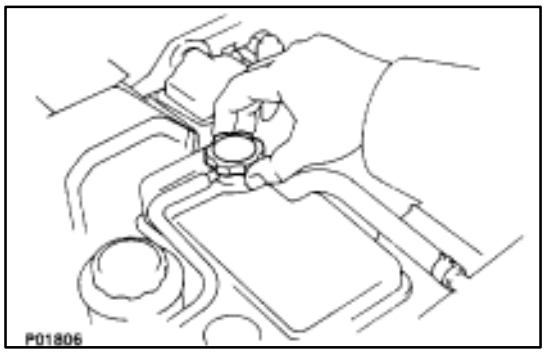

3. REPLACE ENGINE COOLANT

(a) Remove the radiator cap from the reservoir tank.

CAUTION: To avoid the danger of being burned, do not remove the cap while the engine and radiator are still hot, as fluid and steam can be blown out under pressure.

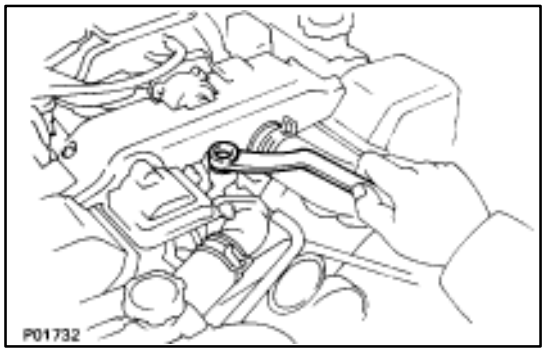

(b) Remove the filler plug from the water inlet housing.

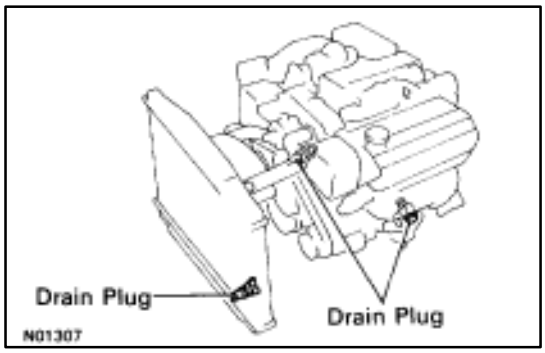

(c) Loosen the three drain plugs on the radiator and cylinder block, drain the coolant from the radiator and engine.

(d) Clean the coolant passages.

(e) Close the three drain plugs.

Torque (Engine drain plug):

18 N·m (180 kgf·cm, 13 ft·lbf)

WhereEverybodyKnowsYourName

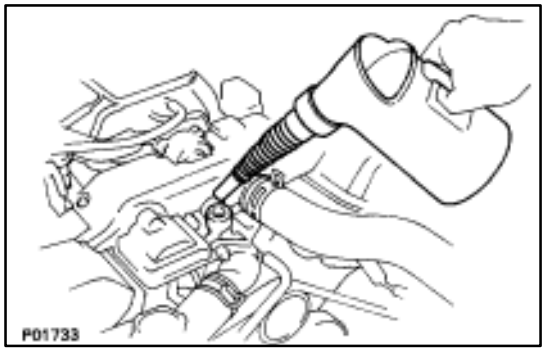

(f) Slowly add coolant to water inlet housing until it is full.
- Use a good brand of ethylene–glycol base coolant, mixed according to the manufacturer's directions.
- Using coolant which includes more than 50% ethylene–glycol (but not more 70%) than is recommended.

NOTICE:

- **Do not use alcohol type coolant.**
- **The coolant should be mixed with demineralized water or distilled water.**

Capacity (w/ Heater):

10.8 liters (11.4 US qts, 9.5 Imp. qts)

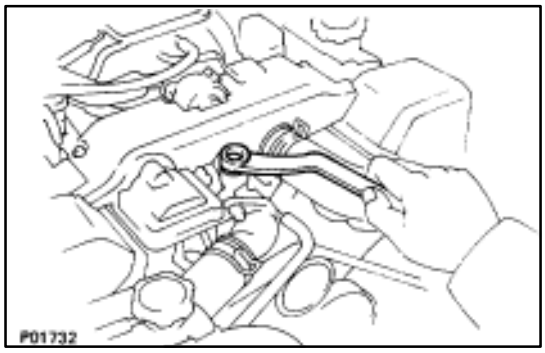

(g) Reinstall a new gasket and filler plug to the water inlet housing.

Torque: 44 N·m (450 kgf·cm, 33 ft·lbf)

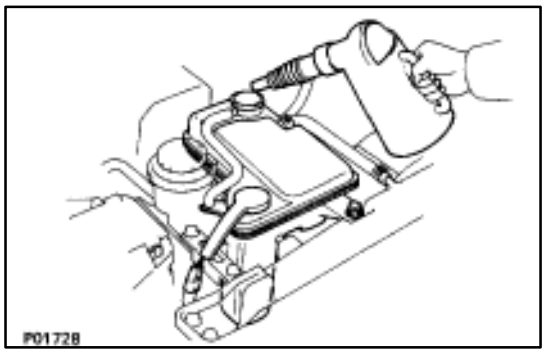

(h) Slowly add coolant to reservoir tank until it is full.

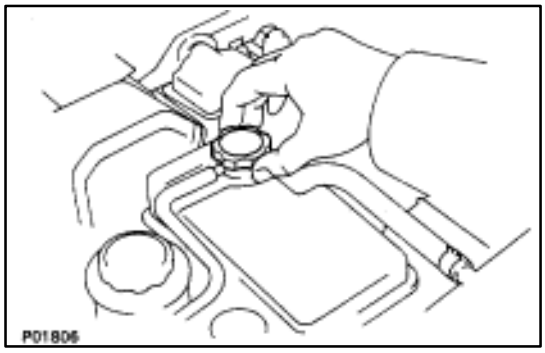

(i) Reinstall the radiator cap.

(j) Bleed the cooling system.
- Start the engine, and open the heater water valve.
- Maintain the engine speed at 2,000 rpm, and warm up the engine.

(k) Check for leaks.

(l) Recheck the coolant level and refill as necessary.

WhereEverybodyKnowsYourName

WATER PUMP

COMPONENTS FOR REMOVAL AND INSTALLATION

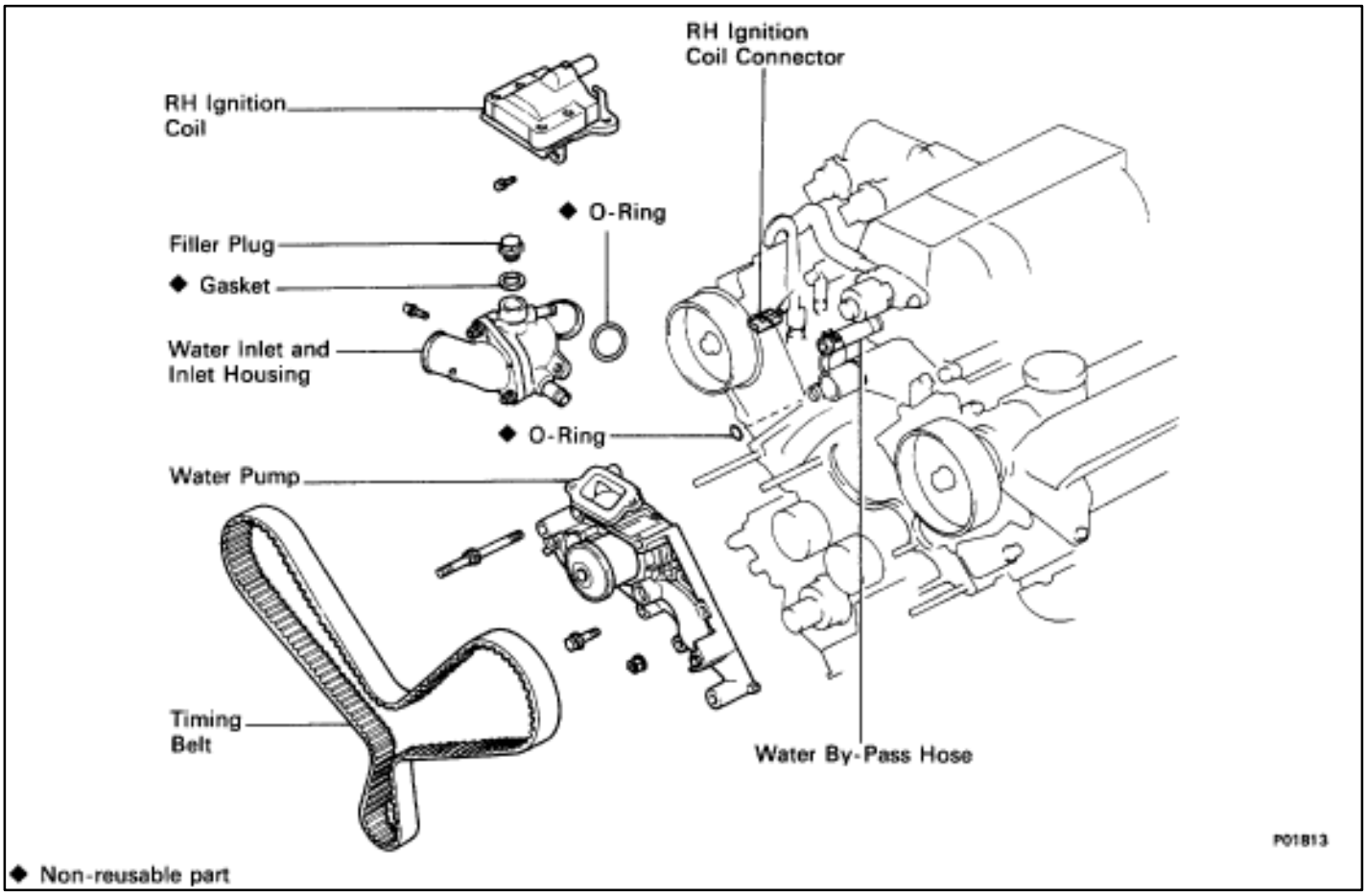

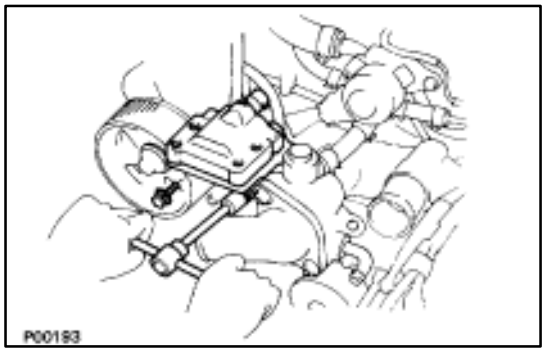

REMOVAL OF WATER PUMP

1. **REMOVE TIMING BELT**
   (See steps 1 to 35 on pages EM–35 to 43)
2. **REMOVE RH IGNITION COIL**
   (a) Disconnect the ignition coil connector.
   (b) Remove the two bolts and ignition coil.

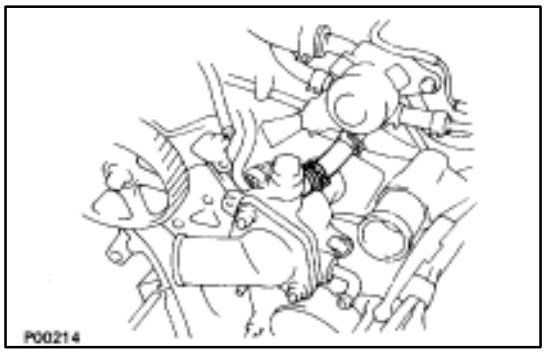

3. **REMOVE WATER INLET AND INLET HOUSING**
   (a) Disconnect the water by–pass hose from the water inlet housing.

WhereEverybodyKnowsYourName

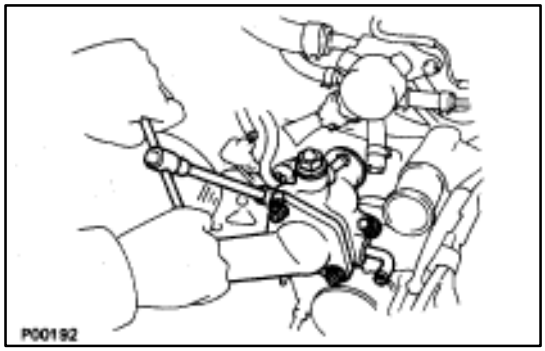

(b) Remove the two bolts holding the water inlet housing to the water pump.
(c) Pull out the water inlet and inlet housing assembly.
(d) Remove the O–ring from the water inlet housing.

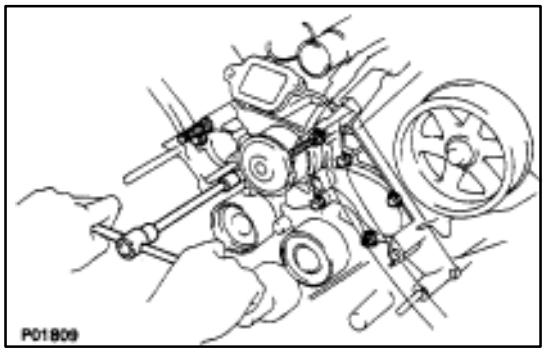

4. REMOVE WATER PUMP

(a) Remove the five mounting bolts, two stud bolts and nut.

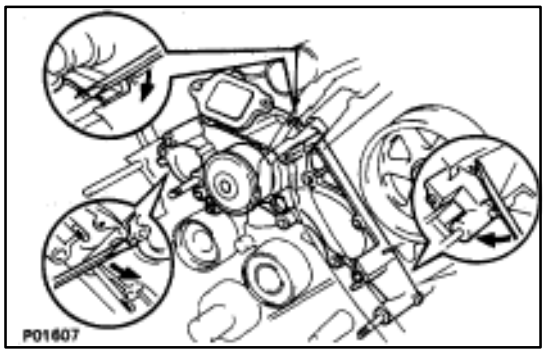

(b) Remove the water pump by prying the portions between the water pump and cylinder block with a screwdriver.
(c) Remove the O–ring from the water by–pass pipe.

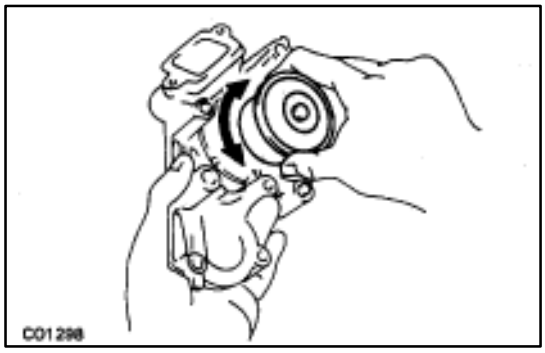

INSPECTION OF WATER PUMP

INSPECT WATER PUMP

Turn the pulley and check that the water pump bearing moves smoothly and quietly.

WhereEverybodyKnowsYourName

INSTALLATION OF WATER PUMP

(See Components on page CO–8)

1. INSTALL WATER PUMP

(a) Remove any old packing (FIPG) material and be careful not to drop any oil on the contact surfaces of the water pump and cylinder block.
- Using a razor blade and gasket scraper, remove all the old packing (FIPG) material from the gasket surfaces and sealing groove.
- Thoroughly clean all components to remove all the loose material.
- Using a non–residue solvent, clean both sealing surfaces.

(b) Apply seal packing to the sealing groove of the water pump as shown in the illustration.

Seal packing: Part No. 08826–00100 or equivalent

- Install a nozzle that has been cut to a 2–3 mm (0.08–0.12 in.) opening.

HINT: Avoid applying an excessive amount to the surface.

- Parts must be assembled within 5 minutes of application. Otherwise the material must be removed and reapplied.
- Immediately remove nozzle from the tube and reinstall cap.

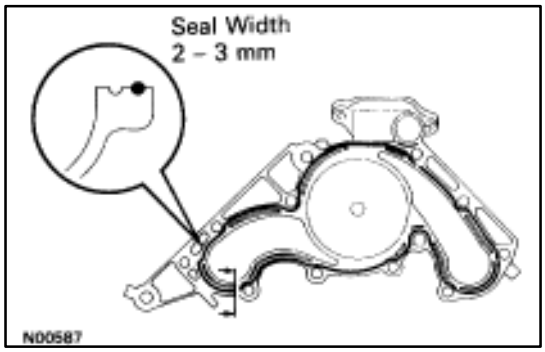

(c) Install a new O–ring to the water by–pass pipe end.

(d) Apply soapy water to the O–ring.

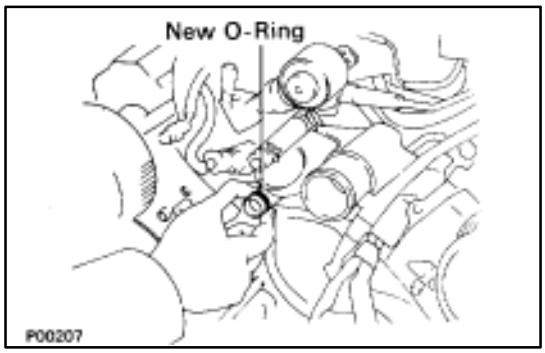

(e) Connect the water by–pass pipe end to water pump.

(f) Install the water pump with the five bolts, two stud bolts and nut. Uniformly tighten the bolts, stud bolts and nut.

Torque: 18 N·m (185 kgf·cm, 13 ft·lbf)

HINT: Use bolts 30 mm (1.18 in.) in length.

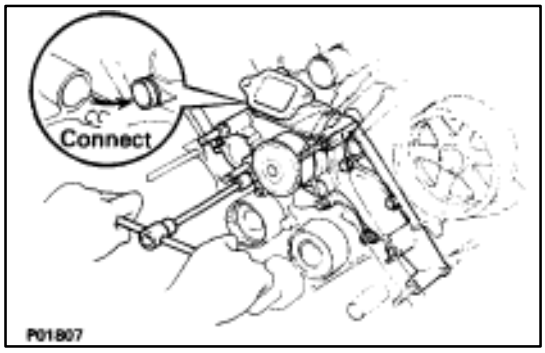

2. INSTALL WATER INLET AND INLET HOUSING

(a) Remove any old packing (FIPG) material and be careful not to drop any oil on the contact surfaces of the water inlet housing and water pump.
- Using a razor blade and gasket scraper, remove all the old packing (FIPG) material from the gasket surfaces and sealing groove.
- Thoroughly clean all components to remove all the loose material.
- Using a non–residue solvent, clean both sealing surfaces.

WhereEverybodyKnowsYourName

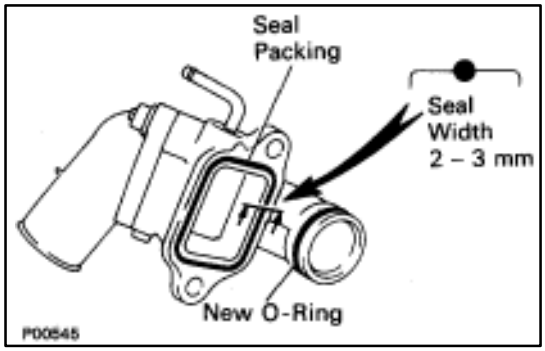

(b) Apply seal packing to the sealing groove of the water inlet housing as shown in the illustration.

Seal packing: Part No. 08826–00100 or equivalent

- Install a nozzle that has been cut to a 2–3 mm (0.08–0.12 in.) opening.

HINT: Avoid applying an excessive amount to the surface.

- Parts must be assembled within 5 minutes of application. Otherwise the material must be removed and reapplied.
- Immediately remove nozzle from the tube and reinstall cap.

(c) Install a new O–ring to the water inlet housing.

(d) Apply soapy water to the O–ring.

(e) Push the water inlet housing end into water pump hole.

(f) Install the water inlet and inlet housing assembly with the two bolts. alternately tighten the bolts.

Torque: 18 N·m (185 kgf·cm, 13 ft·lbf)

HINT: Use bolts 25 mm (0.98 in.) in length.

(g) Connect the water by–pass hose to the water inlet housing.

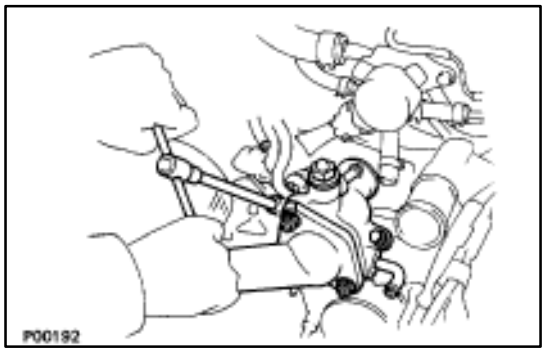

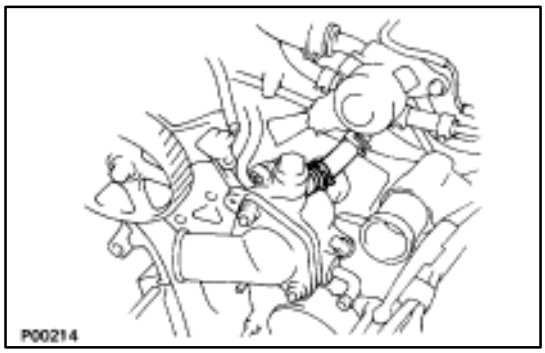

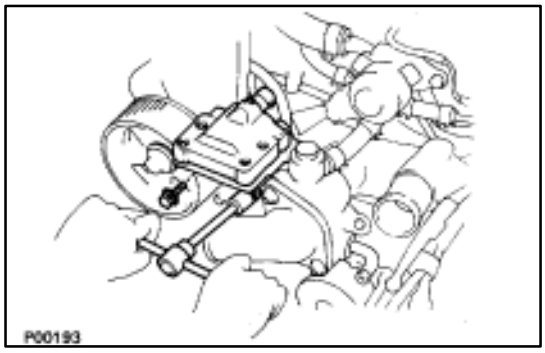

3. INSTALL RH IGNITION COIL

(a) Install the ignition coil with the two bolts.

(b) Connect the ignition coil connector.

4. INSTALL TIMING BELT

(See steps 4 to 43 on pages EM–47 to 57)

WhereEverybodyKnowsYourName

THERMOSTAT

HINT: Removal of the thermostat would have an adverse effect, causing a lowering of cooling efficiency. Do not remove the thermostat, even if the tends to overheat.

COMPONENTS FOR REMOVAL AND INSTALLATION

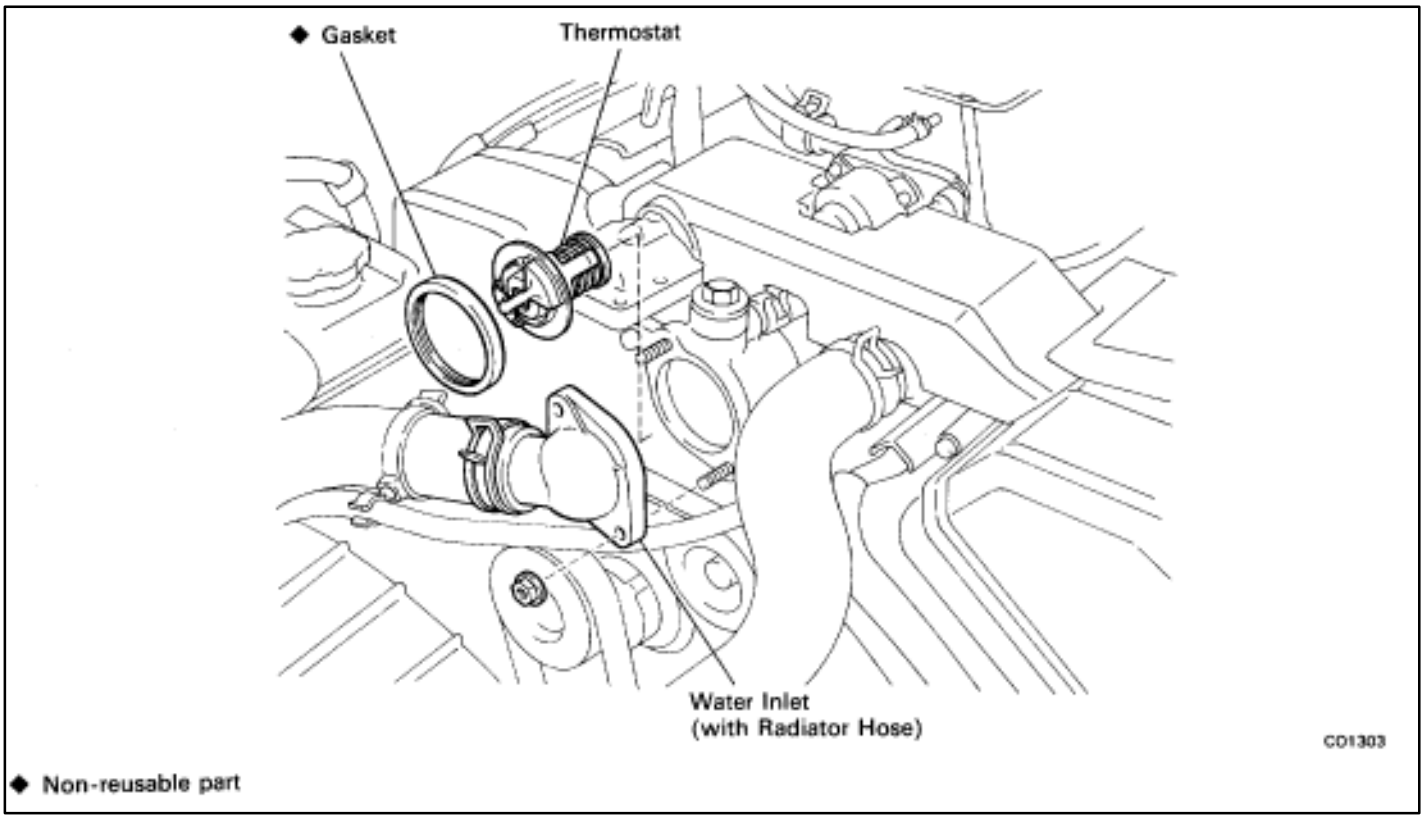

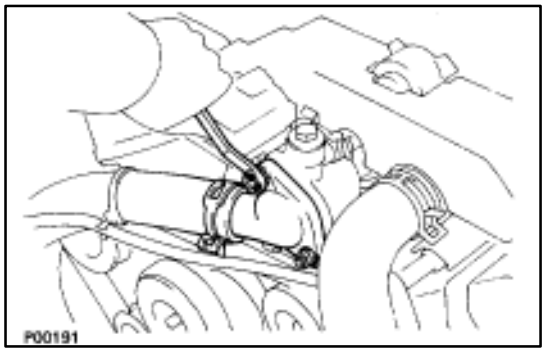

REMOVAL OF THERMOSTAT

1. **DRAIN ENGINE COOLANT (See page CO–6)**
2. **REMOVE THERMOSTAT**
   (a) Remove the two nuts holding the water inlet to the inlet housing, and disconnect the water inlet from the inlet housing.
   (b) Remove the thermostat.
   (c) Remove the gasket from the thermostat.

WhereEverybodyKnowsYourName

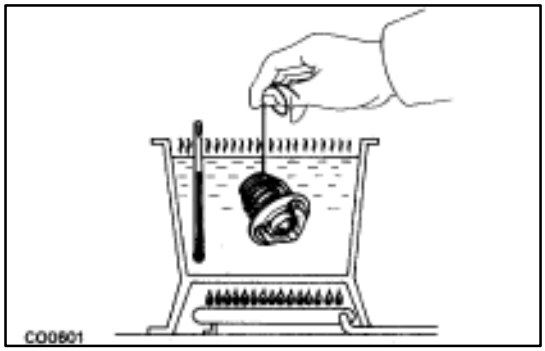

INSPECTION OF THERMOSTAT

INSPECT THERMOSTAT

HINT: The thermostat is numbered with the valve opening temperature.

(a) Immerse the thermostat in water and gradually heat the water.

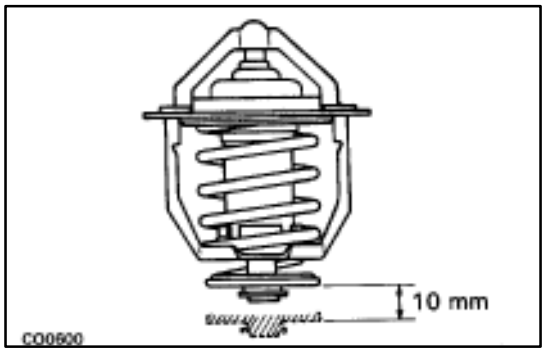

(b) Check the valve opening temperature.

Valve opening temperature:

80–84°C (176–183°F)

If the valve opening temperature is not as specified, replace the thermostat.

(c) Check the valve lift.

Valve lift:

10 mm (0.39 in.) or more at 95°C (203°F)

If the valve lift is less than specification, replace the thermostat.

(d) Check that the valve spring is tight when the thermostat is fully closed.

If necessary, replace the thermostat.

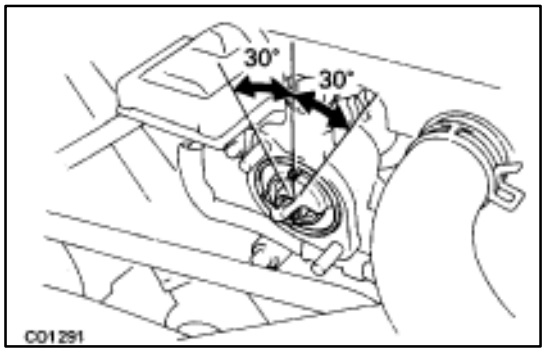

INSTALLATION OF THERMOSTAT

(See Components on page CO–12)

1. PLACE THERMOSTAT IN WATER INLET HOUSING

(a) Install a new gasket to the thermostat.

(b) Insert the thermostat into the water inlet housing with the jiggle valve facing straight upward.

HINT: The jiggle valve may be set within 30° of either side of the prescribed position.

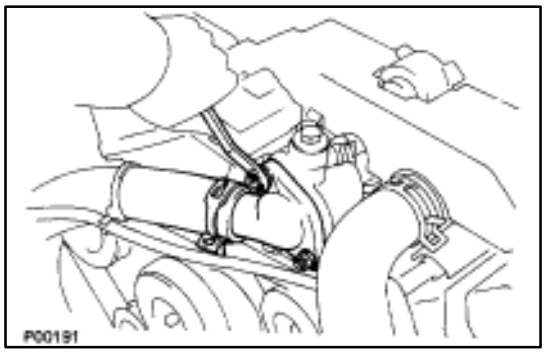

2. INSTALL WATER INLET

Install the water inlet with the two nuts.

Torque: 18 N·m (185 kgf·cm, 13 ft·lbf)

3. FILL WITH ENGINE COOLANT (See page CO–7)

4. START ENGINE AND CHECK FOR LEAKS

WhereEverybodyKnowsYourName

RADIATOR

CLEANING OF RADIATOR

Using water or a steam cleaner, remove any mud and dirt from the radiator core.

NOTICE: If using a high pressure type cleaner, be careful not to deform the fins of the radiator core. If the cleaner nozzle pressure is 2,942–3,432 kPa (30–35 kgf/cm2, 427–498 psi), keep a distance at least 40–50 cm (15.75–19.69 in.) between the radiator core and cleaner nozzle.

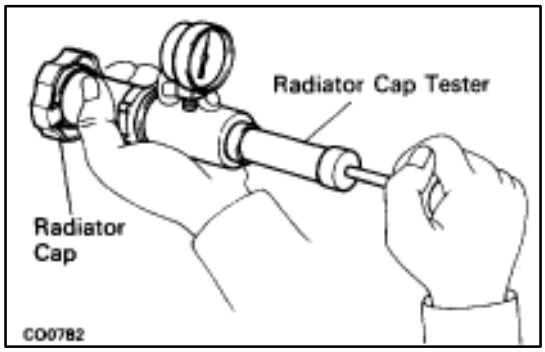

INSPECTION OF RADIATOR

1. **REMOVE RADIATOR CAP FROM RESERVOIR TANK**
2. **INSPECT RADIATOR CAP**

   Using a radiator cap tester, pump the tester and measure the relief valve opening pressure.

   Standard opening pressure:

   74–103 kPa

   (0.75–1.05 kgf/cm, 10.7–14.9 psi)

   Minimum opening pressure:

   59 kPa (0.6 kgf/cm, 8.5 psi)

   If the opening pressure is less than minimum, replace the radiator cap.

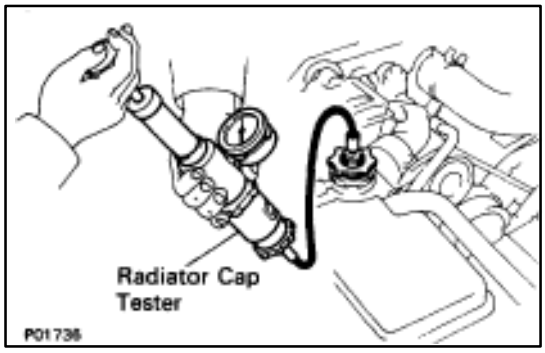

3. **INSPECT COOLING SYSTEM FOR LEAKS**
   (a) Fill the radiator with coolant and attach a radiator cap tester to the reservoir tank.
   (b) Warm up the engine.
   (c) Pump it to 118 kPa (1.2 kgf/cm2, 17.1 psi), check that pressure does not drop.

   If the pressure drops, check for leaks as the hoses, radiator or water pump. If no external leaks are found, check the heater core, cylinder block and head.
4. **REINSTALL RADIATOR CAP**

WhereEverybodyKnowsYourName

COMPONENTS FOR REMOVAL AND INSTALLATION

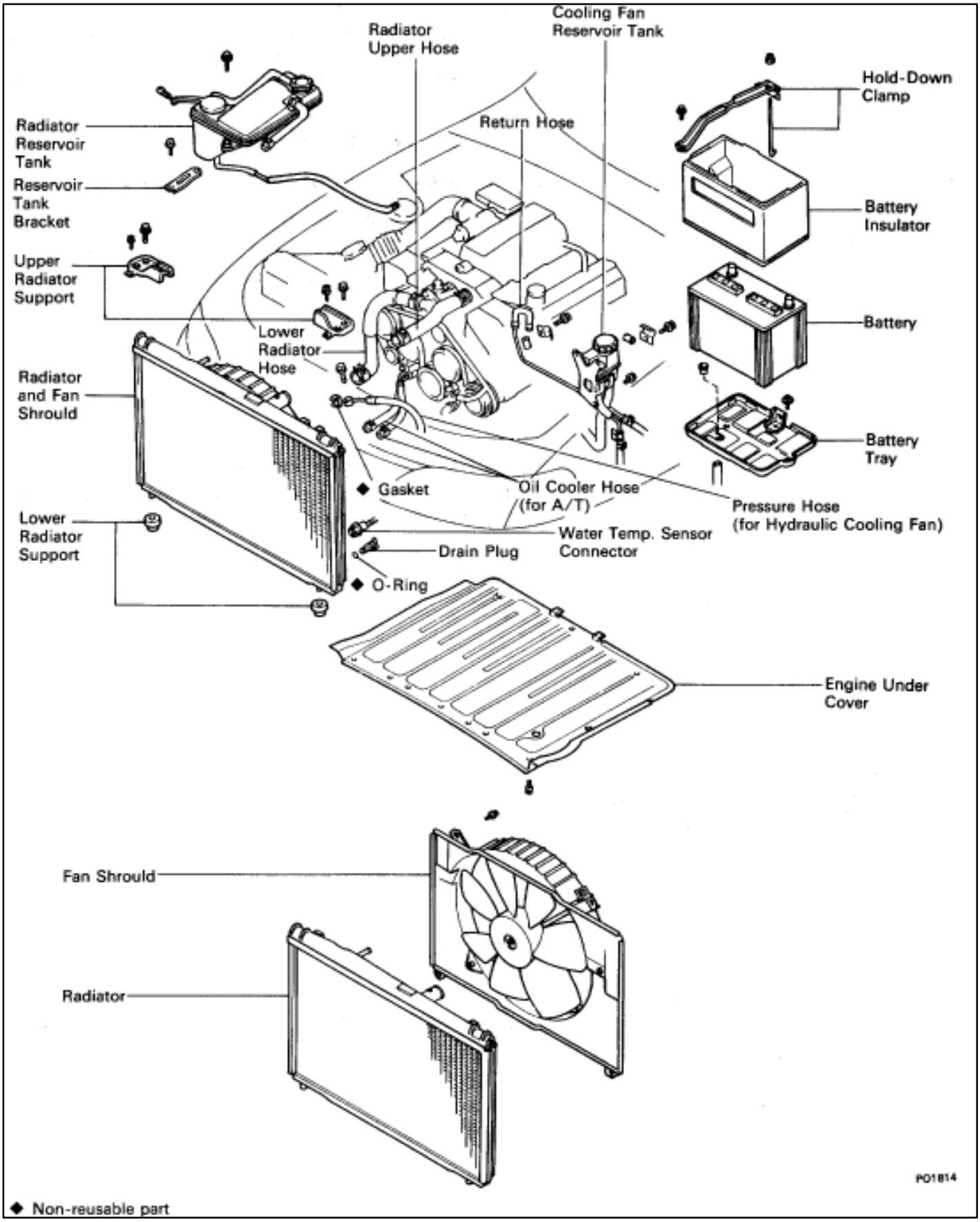

◆ Non-reusable part

WhereEverybodyKnowsYourName

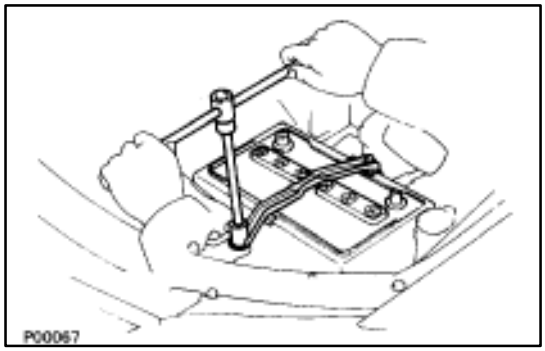

REMOVAL OF RADIATOR

(See Components on page CO–15)

1. REMOVE BATTERY

CAUTION: Work must be started after approx. 20 seconds or longer from the time the ignition switch is turned to the ”LOCK” position and the negative (–) terminal cable is disconnected from the battery.

2. REMOVE ENGINE UNDER COVERS

3. DRAIN ENGINE COOLANT (See page CO–6)

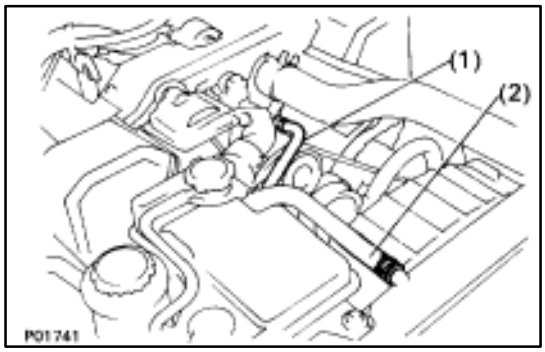

4. REMOVE RADIATOR RESERVOIR TANK

(a) Disconnect the coolant level sensor connector.

(b) Disconnect the following hoses:

(1) Reservoir hose from water inlet housing

(2) Reservoir hose from radiator

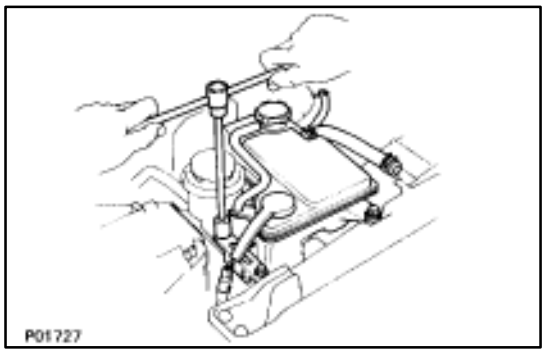

(c) Remove the two bolts and reservoir tank bracket.

(d) Disconnect the reservoir tank from the reservoir tank bracket, and remove the reservoir tank.

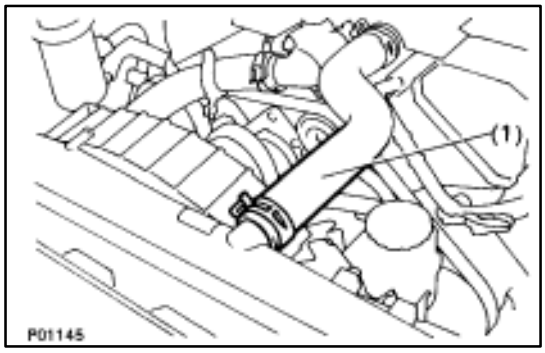

5. DISCONNECT HOSES

Disconnect the following hoses:

(1) Upper radiator hose from radiator

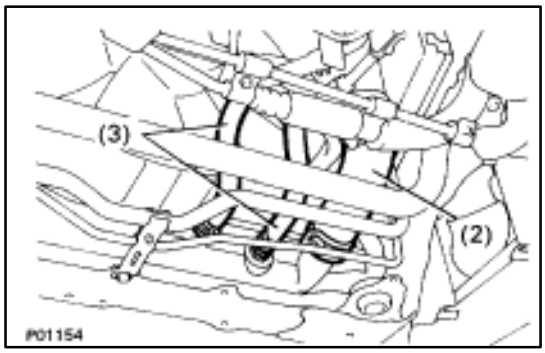

(2) Lower radiator hose from radiator

(3) Two oil cooler hoses (for A/T) from radiator. Plug hose end.

WhereEverybodyKnowsYourName

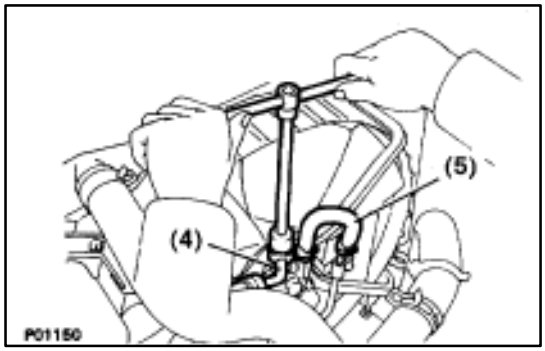

(4) Pressure hose from hydraulic motor
(5) Return hose from hydraulic motor

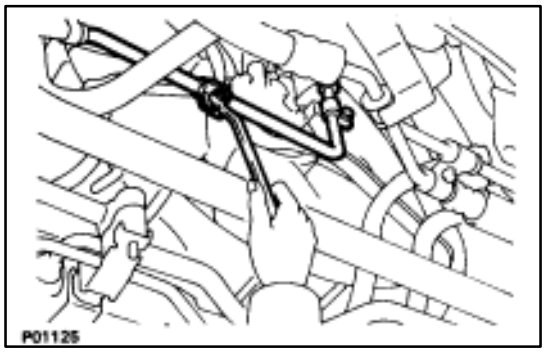

6. DISCONNECT COOLING FAN INLET PIPE FROM FAN SHROULD

Remove the two bolts, brackets and bushings, and disconnect the inlet pipe.

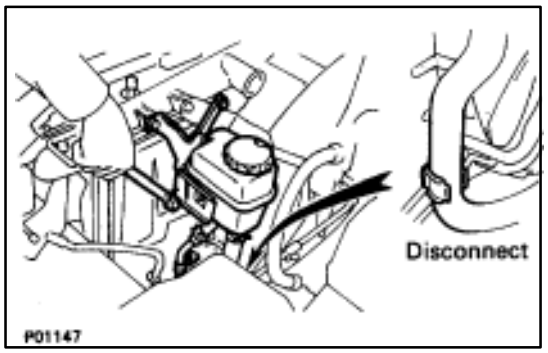

7. DISCONNECT COOLING FAN RESERVOIR TANK FROM FAN SHROULD

(a) Disconnect the suction hose from the clamp on the fan shrould.
(b) Remove the four bolts, and disconnect the reservoir tank.

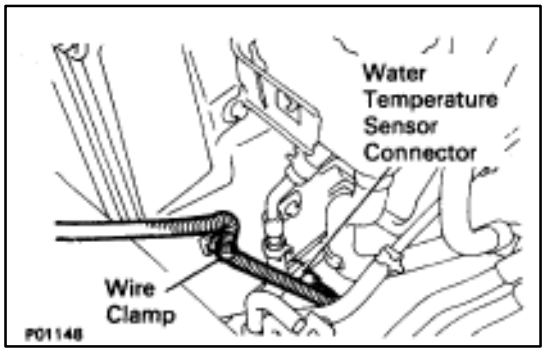

8. DISCONNECT WATER TEMPERATURE SENSOR CONNECTOR

(a) Disconnect the water temperature sensor connector.
(b) Disconnect the wire clamp from the radiator fan shrould.

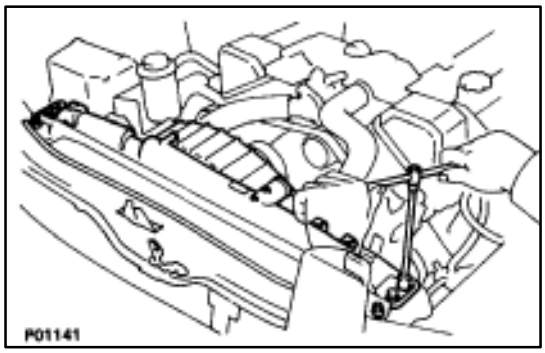

9. REMOVE RADIATOR

(a) Remove the two bolts, screw and upper radiator support. Remove the two upper radiator supports.

WhereEverybodyKnowsYourName

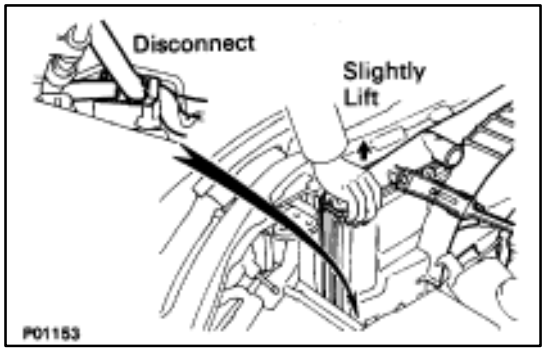

(b) Slightly lift the radiator, and disconnect the two oil cooler hoses (for cooling fan) from the hose clamp on the radiator fan shroud.
(c) Remove the radiator.
(d) Remove the two lower radiator supports.

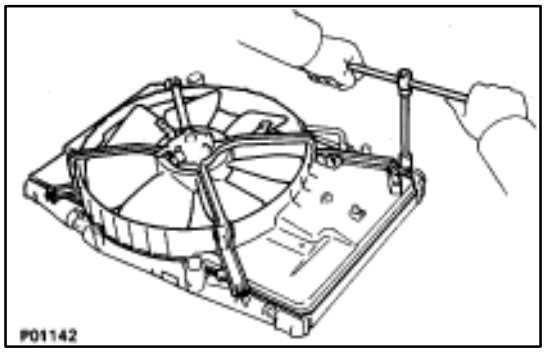

10. REMOVE FAN SHROULD FROM RADIATOR
Remove the four bolts and fan shroud.

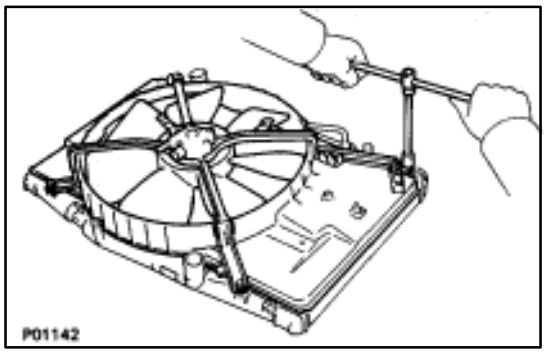

INSTALLATION OF RADIATOR

(See Components on page CO–15)

1. INSTALL FAN SHROULD TO RADIATOR
Install the fan shroud with the four bolts.
Torque: 4.9 N·m (50 kgf·cm, 43 in.·lbf)

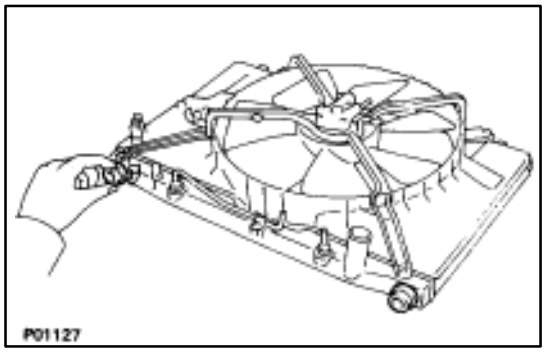

2. INSTALL RADIATOR
(a) Install the two lower radiator supports to the radiator.

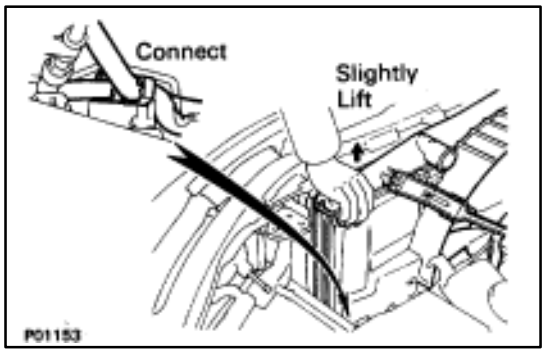

(b) Place the radiator on the body bracket.
(c) Slightly lift the radiator, and connect the two oil cooler hoses (for cooling fan) to the hose clamp on the radiator fan shroud.

WhereEverybodyKnowsYourName

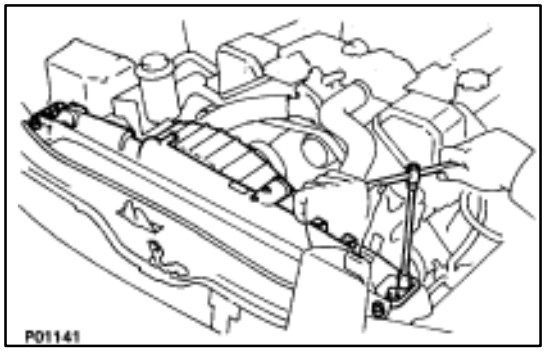

(d) Install the upper radiator support with the two bolts and screw. Install the two upper radiator supports.

Torque: 12 N·m (120 kgf·cm, 9 ft·lbf)

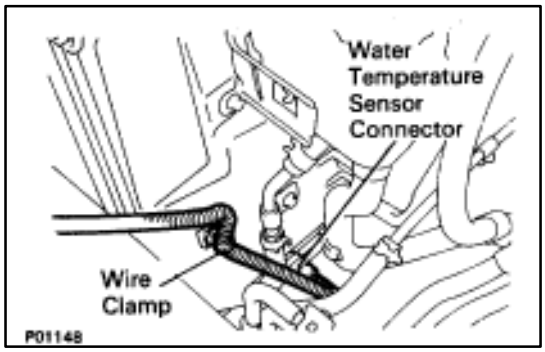

3. CONNECT WATER TEMPERATURE SENSOR CONNECTOR

(a) Connect the water temperature sensor connector.

(b) Install the wire clamp to the radiator fan shrould.

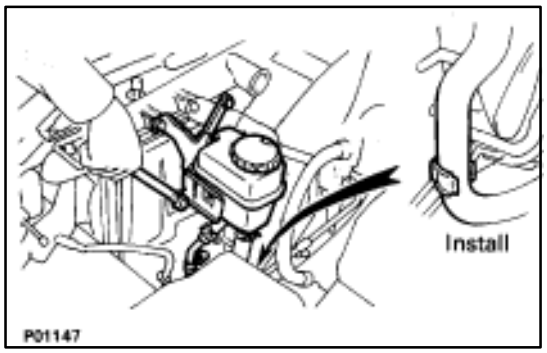

4. INSTALL COOLING FAN RESERVOIR TANK TO FAN SHROULD

(a) Install the reservoir tank with the four bolts.

Torque: 4.9 N·m (50 kgf·cm, 43 in.·lbf)

(b) Install the suction hose to the clamp on the fan shrould.

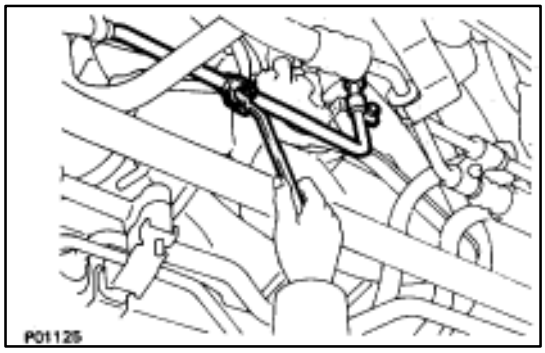

5. INSTALL COOLING FAN INLET PIPE TO FAN SHROULD

Install the inlet pipe with the two bushings, brackets and bolts.

Torque: 4.9 N·m (50 kgf·cm, 43 in.·lbf)

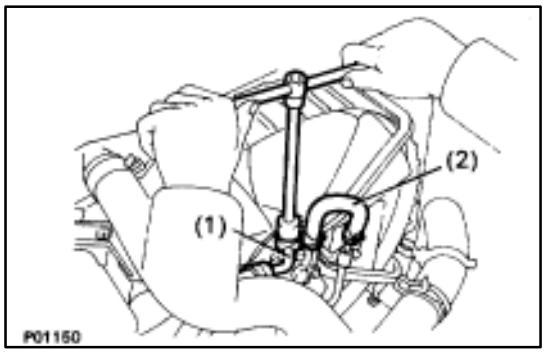

6. CONNECT HOSES

Connect the following hoses:

(1) Pressure hose to hydraulic motor Connect the pressure hose with a new gasket and union bolt.

Torque: 64 N·m (650 kgf·cm, 47 ft·lbf)

(2) Return hose to hydraulic motor

WhereEverybodyKnowsYourName

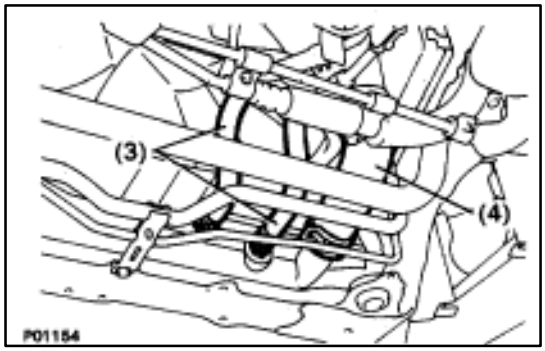

(3) Two oil cooler hoses (for A/T) to radiator.
(4) Lower radiator hose to radiator

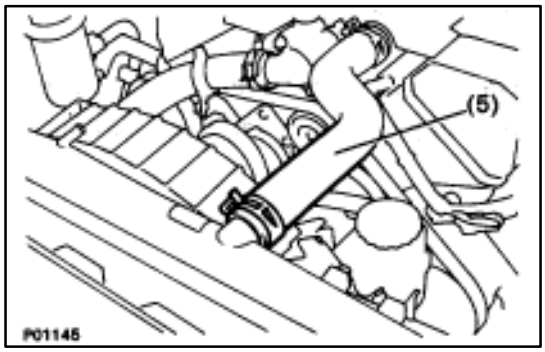

(5) Upper radiator hose to radiator

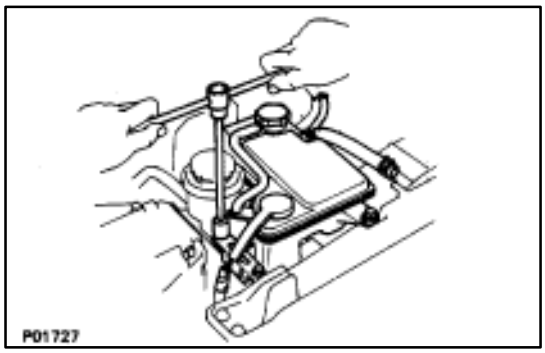

7. INSTALL RADIATOR RESERVOIR TANK

(a) Install the reservoir tank to the reservoir tank bracket.
(b) Install the reservoir tank bracket with two bolts.
Torque: 4.9 N·m (50 kgf·cm, 43 in.·lbf)

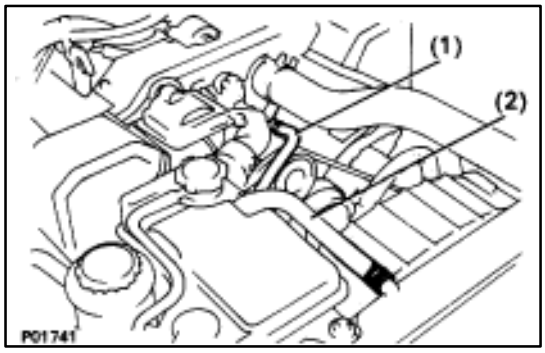

(c) Connect the following hoses:
(1) Reservoir hose to water inlet housing
(2) Reservoir hose to radiator
(d) Connect the coolant level sensor connector.

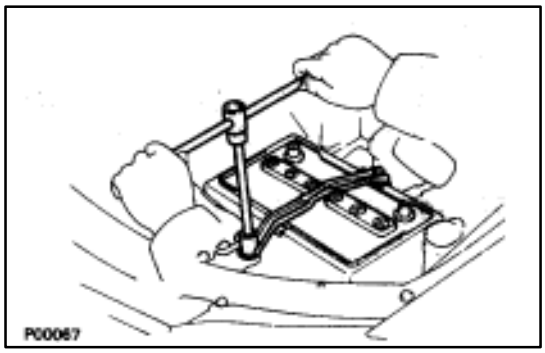

8. INSTALL BATTERY

WhereEverybodyKnowsYourName

9. **FILL ENGINE WITH COOLANT (See page CO–7)**
10. **FILL COOLING FAN RESERVOIR TANK WITH FLUID (See pages CO–23 and 24)**
11. **CHECK AUTOMATIC TRANSMISSION FLUID LEVEL (See page MA–11)**
    NOTICE: Do not overfill.
12. **START ENGINE AND CHECK FOR LEAKS**
13. **INSTALL ENGINE UNDER COVER**

WhereEverybodyKnowsYourName

ELECTRONICALLY CONTROLLED HYDRAULIC COOLING FAN

Description

In this way system, the cooling fan ECU controls the hydraulic pressure acting on the hydraulic motor, thus controlling the speed of the cooling fan steplessly in response to the condition of the engine and air conditioner.

Operation

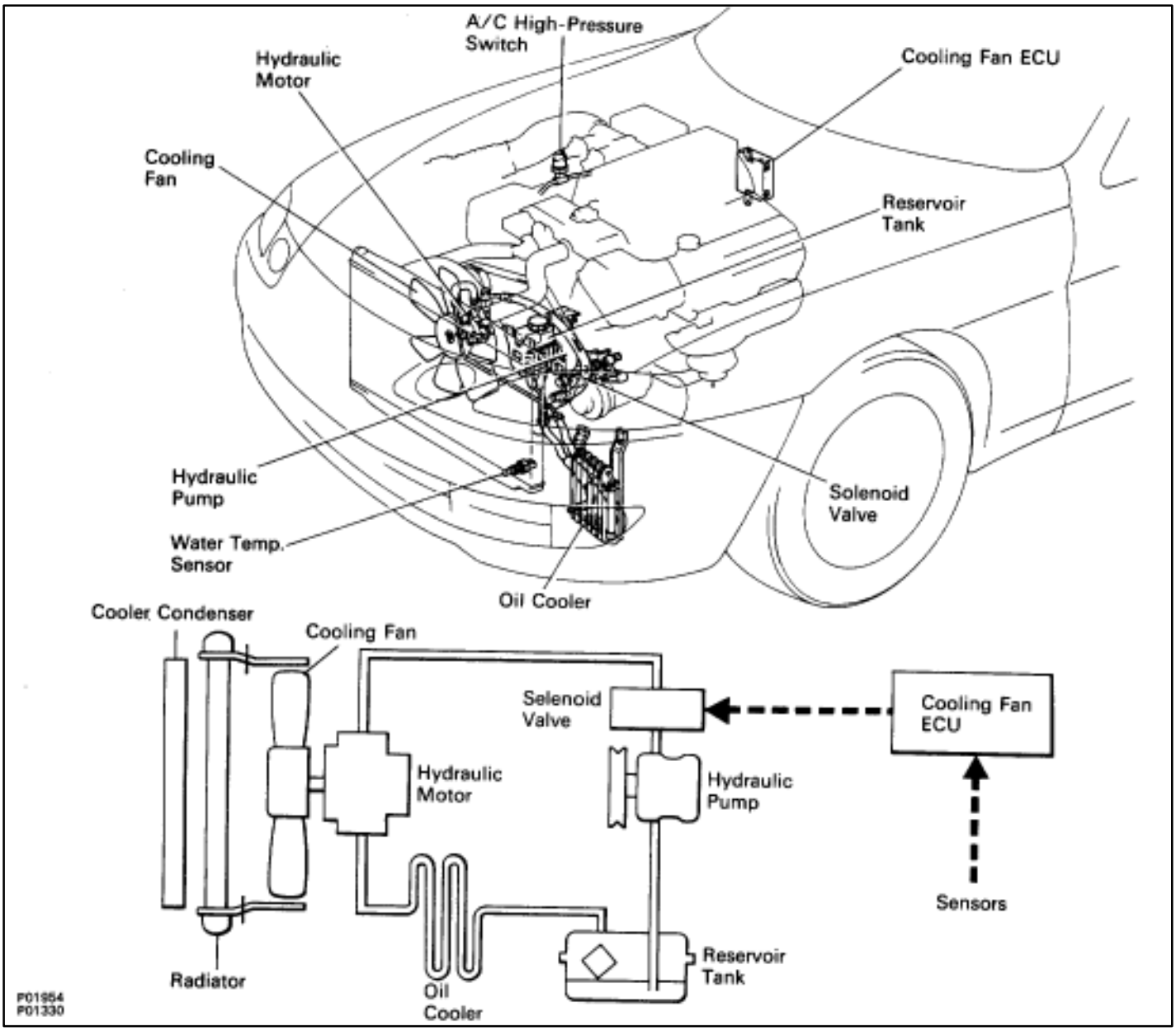

The hydraulic pump is driven by a drive belt (V–ribbed belt). The solenoid valve adjusts the volume of oil sent from the hydraulic pump to the hydraulic motor which drives the fan directly, thereby controlling the fan speed.

Oil which has passed through the hydraulic motor is cooled by the oil cooler before returning to the reservoir tank.

The solenoid valve is controlled by the computer in accordance with the E/G rpm, water temp. and A/C signals.

WhereEverybodyKnowsYourName

On–Vehicle Inspection

INSPECTION OF DRIVE BELT

(See step 1 on page CH–5)

INSPECTION OF FLUID LEVEL

1. KEEP VEHICLE LEVEL

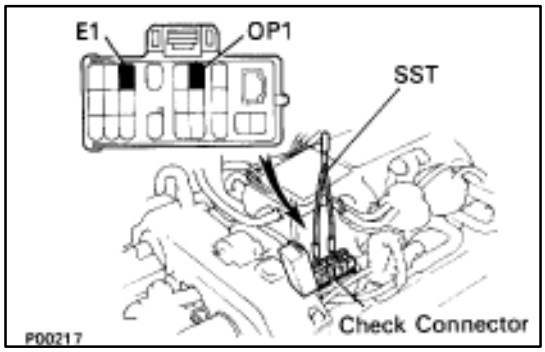

2. INSPECT FLUID LEVEL

(a) Using SST, connect terminals OP1 and E1 of the check (”DIAGNOSIS”) connector.

SST 09843–18020

HINT: When terminals OP1 and E1 are connected, the circuit of the water temp. sensor is grouded, fixing the fan speed at approx. 1,100 rpm. (Fail–safe operation occurs.)

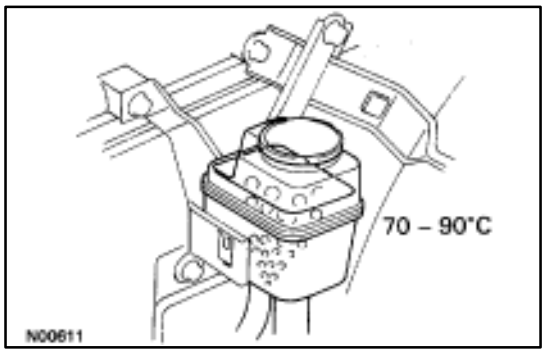

(b) Keep the engine speed at 2,000 rpm until the fluid temperature reaches the specified temperature.

Fluid temp.: 70–90°C (158–195°F)

(c) Check that there is no foaming and emulsification of the fluid in the reservoir tank.

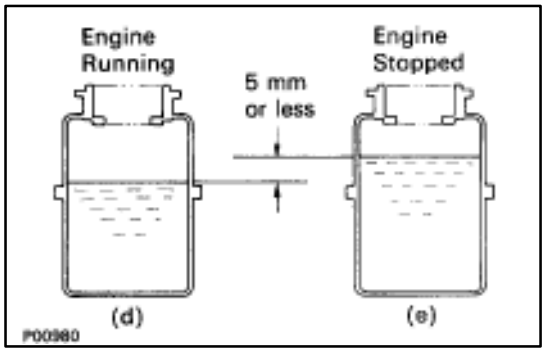

(d) Measure the fluid level with the engine running.

(e) Stop the engine, and measure the fluid level.

(f) Subtract (d) from (e).

Maximum stroke: 5 mm (0.20 in.)

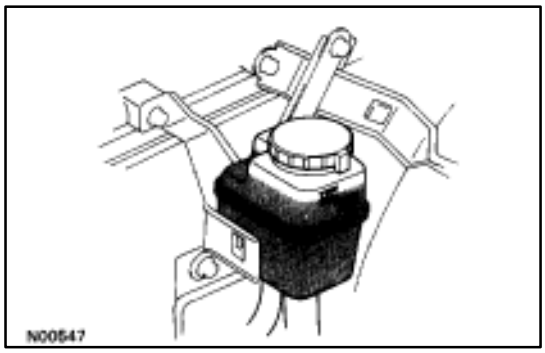

(g) Check the fluid level.

If low, add fluid.

Fluid: ATF DEXRON II

HINT: Check that fluid level is within the ”HOT” level on reservoir tank. If the fluid is cold, check that it is within the ”COLD” level on the tank.

(h) Remove the SST from the check connector.

SST 09843–18020

WhereEverybodyKnowsYourName

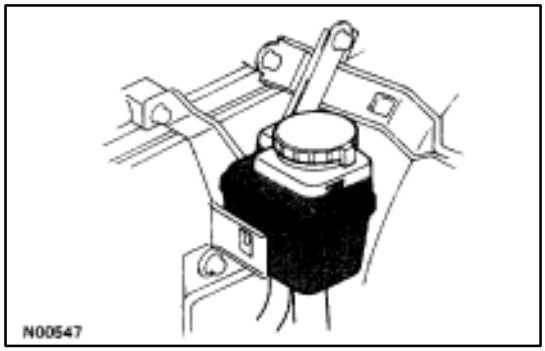

BLEEDING OF HYDRAULIC COOLING SYSTEM

1. CHECK FLUID LEVEL IN RESERVOIR TANK

If low, add fluid.

Fluid: ATF DEXRON II

HINT: Check that fluid level is within the ”HOT” level on reservoir tank. If the fluid is cold, check that it is within the ”COLD” level on the tank.

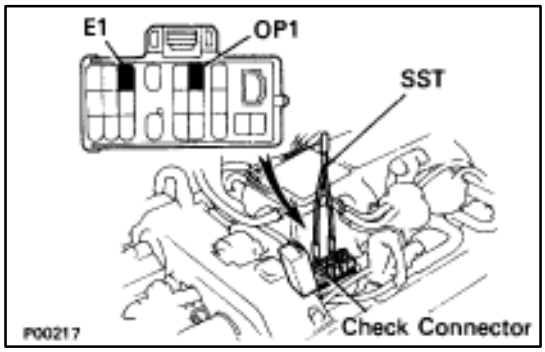

2. BLEED COOLING SYSTEM

(a) Using SST, connect terminals OP1 and E1 of the check (”DIAGNOSIS”) connector.

SST 09843–18020

HINT: When terminals OP1 and E1 are connected, the circuit of the water temp. sensor is grounded, fixing the fan speed at approx. 1,100 rpm. (Fail–safe operation occurs.)

(b) Start the engine without depressing the accelerator pedal.

(c) Leave the engine running for several seconds.

(d) Check that there is no foaming and emulsification of the fluid in the reservoir tank.

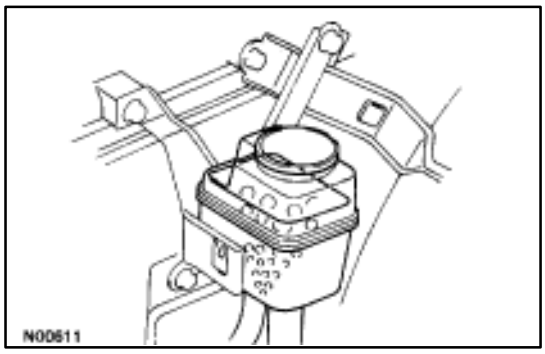

INSPECTION OF OIL PRESSURE

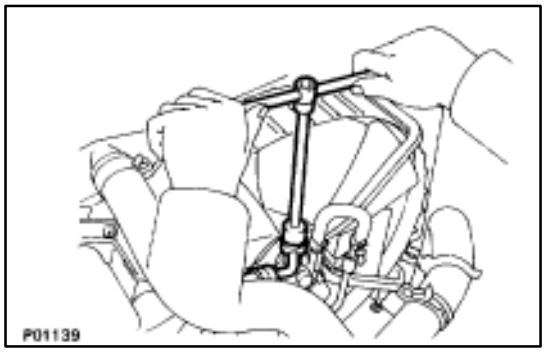

1. CONNECT PRESSURE GAUGE

(a) Remove the union bolt and gasket, and disconnect the pressure hose from the hydraulic motor.

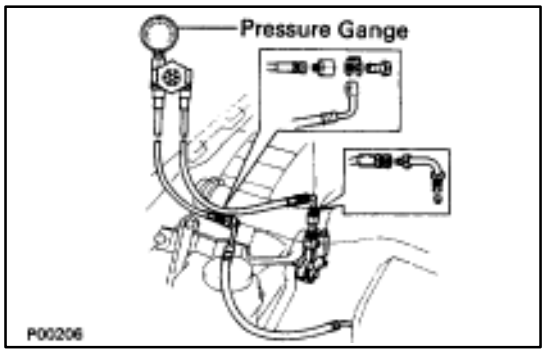

(b) Connect the gauge side of a pressure gauge to pressure hose, and the valve side to the hydraulic motor.

WhereEverybodyKnowsYourName

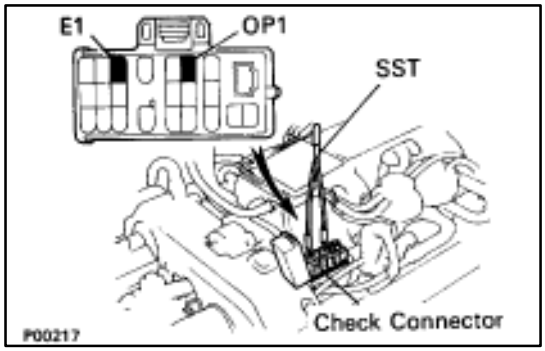

2. INSPECT OIL PRESSURE

HINT: Before inspecting the oil pressure, first check that the A/C is off.

(a) Using SST, connect terminals OP1 and E1 of the check (”DIAGNOSIS”) connector.

SST 09843–18020

HINT: When terminals OP1 and E1 are connected, the circuit of the water temp. sensor is grounded, fixing the fan speed at approx. 1,100 rpm. (Fail–safe operation occurs.)

(b) Bleed the hydraulic cooling system

(See page CO–24)

(c) Keep the engine speed at 2,000 rpm until the fluid temperature reaches the specified temperature.

Fluid temp.: 70–90°C (158–195°F)

(d) Check the fluid level is correct.

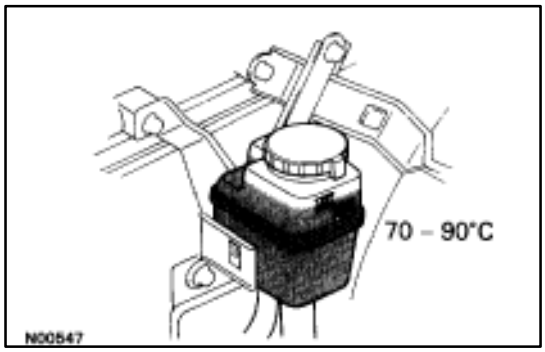

(e) Measure the oil pressure at idling.

Oil pressure: 1,177–2,452 kPa
(12–25 kgf/cm, 171–356 psi)

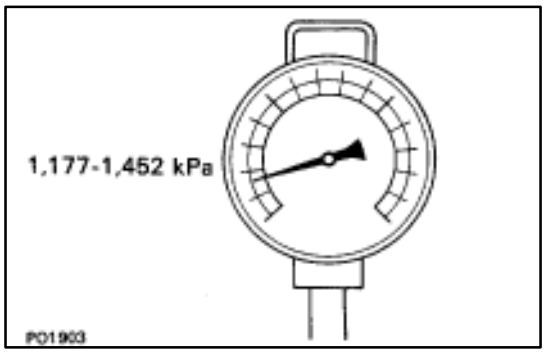

(f) Remove the SST from the check connector.

SST 09843–18020

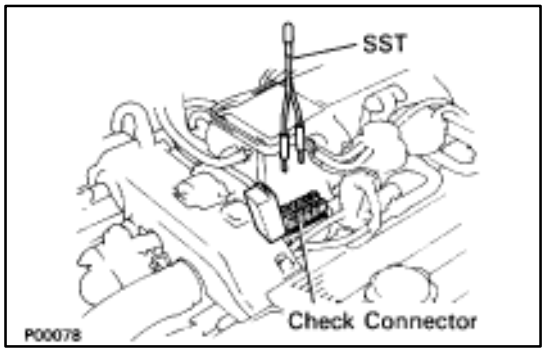

(g) Check that the oil pressure decreases.

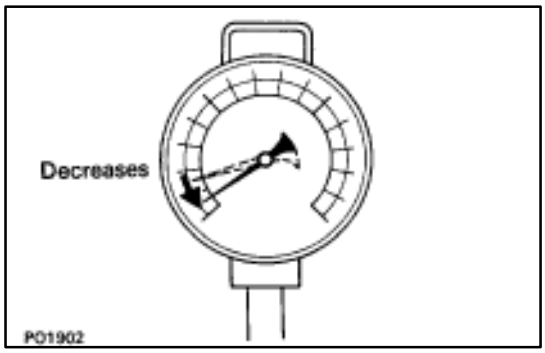

3. REMOVE PRESSURE GAUGE, AND CONNECT PRESSURE HOSE

Torque: 64 N·m (650 kgf·cm, 47 ft·lbf)

WhereEverybodyKnowsYourName

Hydraulic Pump

COMPONENTS FOR REMOVAL AND INSTALLATION

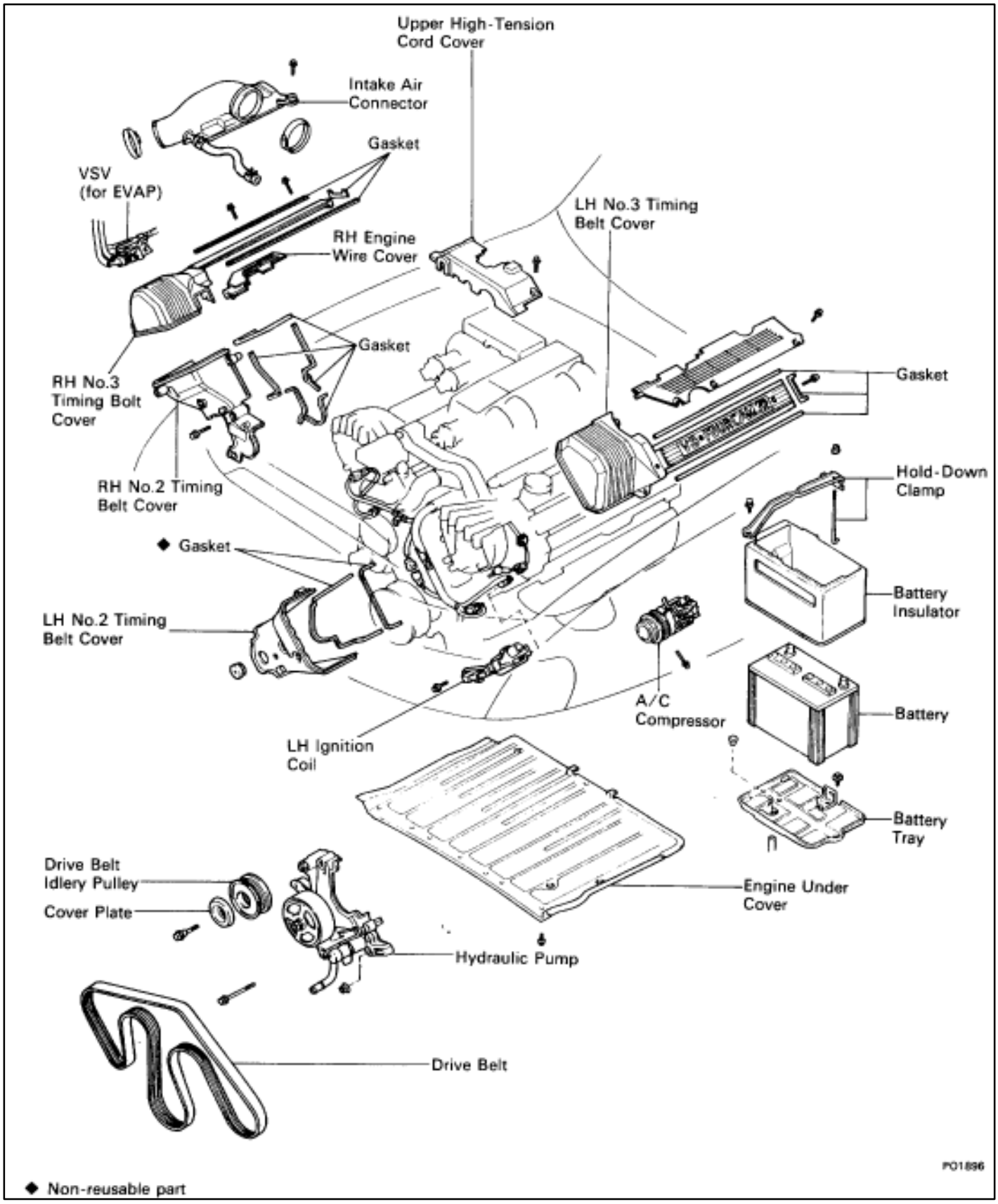

◆ Non-reusable part

WhereEverybodyKnowsYourName

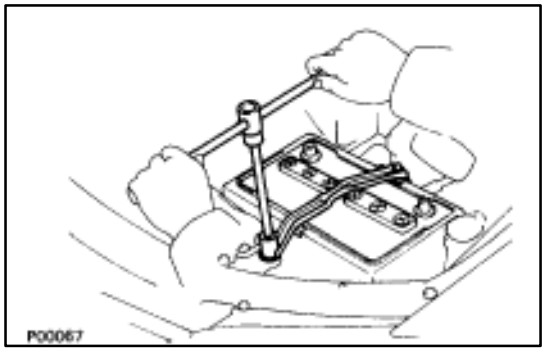

REMOVAL OF HYDRAULIC PUMP

(See Components on page CO–26)

1. **REMOVE BATTERY**
   CAUTION: Work must be started after approx. 20 seconds or longer from the time the ignition switch is turned to the "LOCK" position and the negative (–) terminal cable is disconnected from the battery.

2. **REMOVE ENGINE UNDER COVER**

3. **DRAIN ENGINE COOLANT (See page CO–6)**

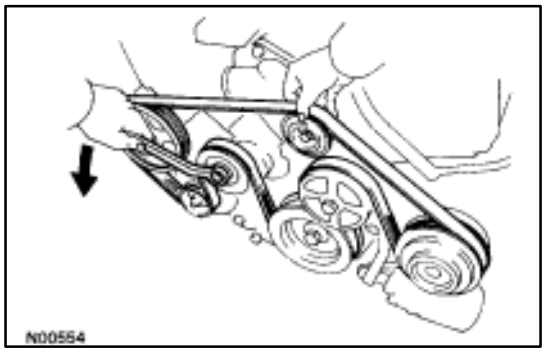

4. **REMOVE DRIVE BELT**
   Loosen the drive belt tension by turning the drive belt tensioner counterclockwise, and remove the drive belt.
   HINT: The pulley bolt for the belt tensioner has a left–hand thread.

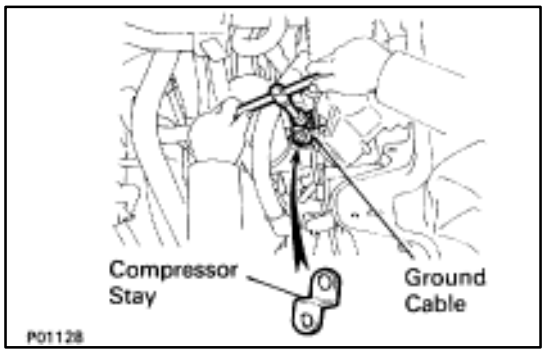

5. **DISCONNECT A/C COMPRESSOR**
   (a) Disconnect the A/C compressor connector.
   (b) Remove the nut, and disconnect the ground cable.
   (c) Remove the bolt and A/C compressor stay.

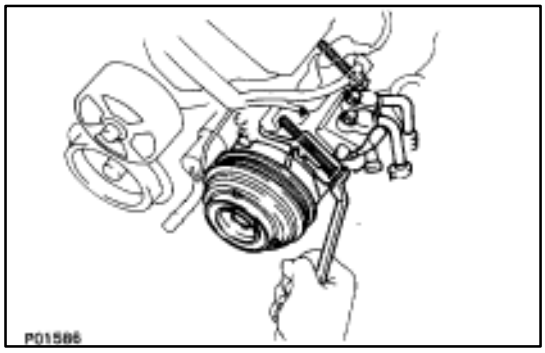

   (d) Remove the two bolts, and disconnect the A/C compressor from the engine.

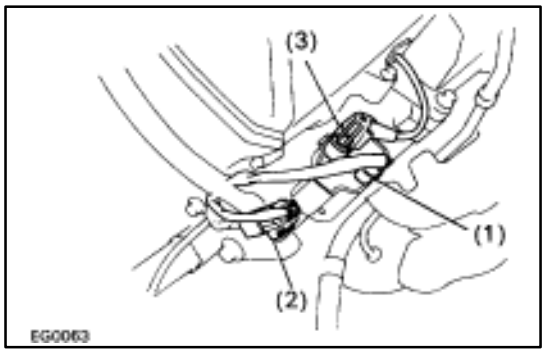

6. **REMOVE LH IGNITION COIL**
   (a) Disconnect the following connectors and cord:
      (1) Ignition coil connector
      (2) Noise filter connector
      (3) High–tension cord

WhereEverybodyKnowsYourName

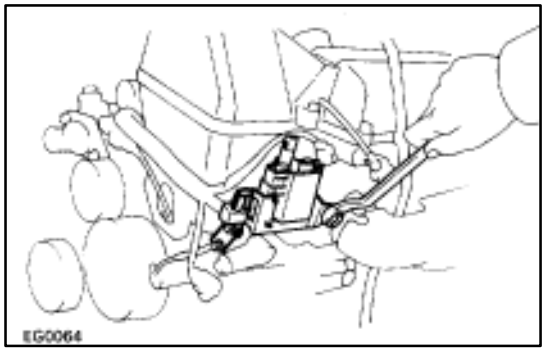

(b) Remove the two bolts and ignition coil.

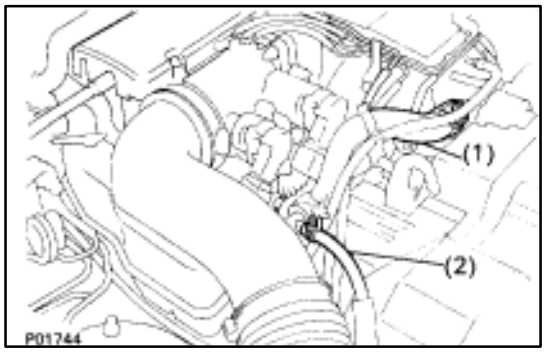

7. REMOVE INTAKE AIR CONNECTOR

(a) Disconnect the following hoses:
(1) Air hose from ISC valve
(2) Air hose (from PS air control valve) from intake air connector

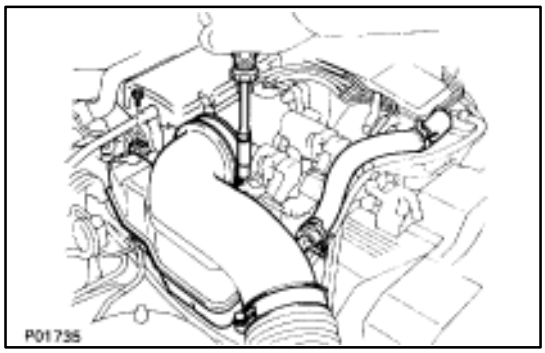

(b) Remove the bolt holding the intake air connector to the cylinder head cover.
(c) Loosen the two hose clamps.
(d) Disconnect the intake air connector from the throttle body and air cleaner hose, and remove the throttle body.

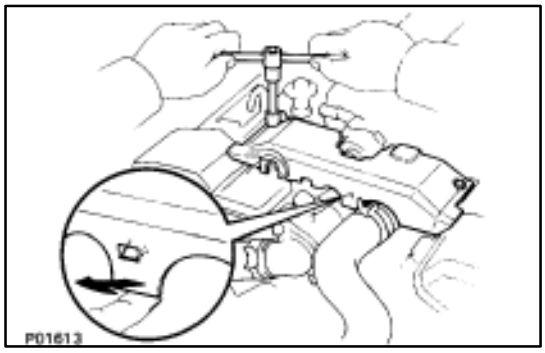

8. REMOVE UPPER HIGH–TENSION CORD COVER

(a) Remove the two mounting bolts.
(b) Disconnect the front side claw groove of the cord cover from the claw of the lower cover, and remove the cord cover.

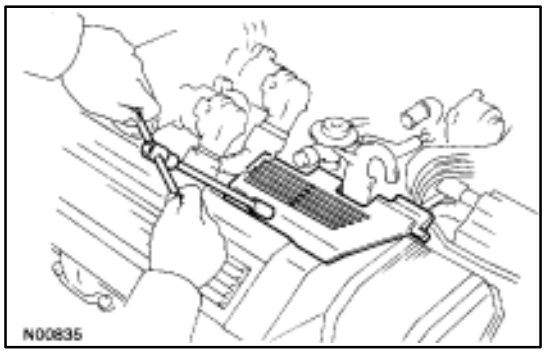

9. REMOVE RH ENGINE WIRE COVER

Remove the bolt and engine wire cover.

WhereEverybodyKnowsYourName

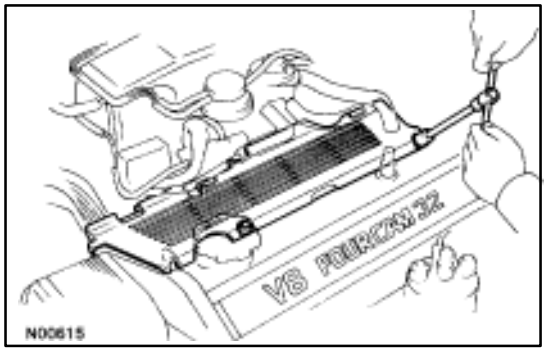

10. REMOVE LH ENGINE WIRE COVER

Remove the two bolts and engine wire cover.

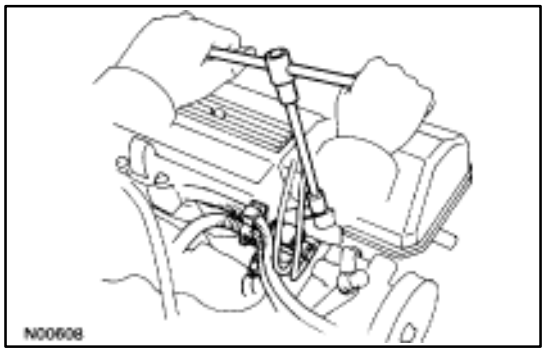

11. REMOVE VSV FOR EVAP SYSTEM

Remove the two bolts, and disconnect the VSV from cylinder head and timing belt cover.

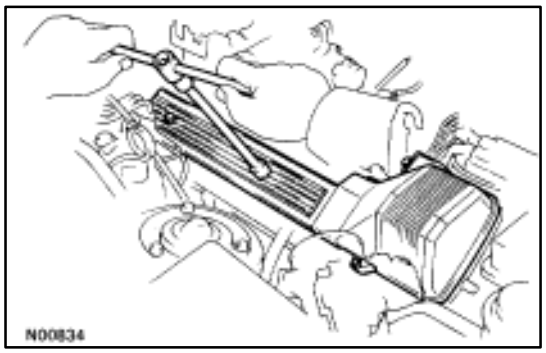

12. REMOVE RH NO.3 TIMING BELT COVER

Remove the three bolts and timing belt cover.

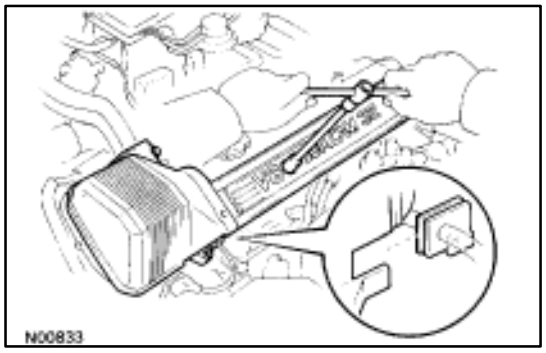

13. REMOVE LH NO.3 TIMING BELT COVER

(a) Remove the four mounting bolts.
(b) Disconnect the cord grommet from the timing belt cover, and remove the timing belt cover.
(c) Remove the cord grommet from the high–tension cord.

14. DISCONNECT RADIATOR HOSE FROM WATER INLET

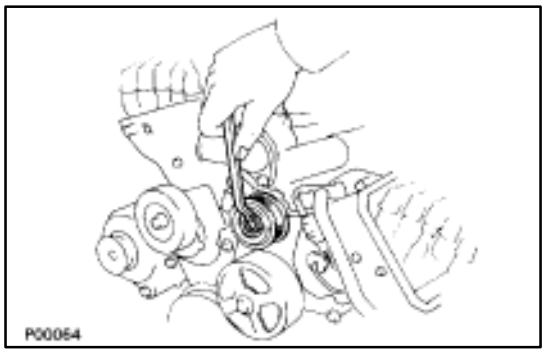

15. REMOVE DRIVE BELT IDLER PULLEY

Remove the pulley bolt, cover plate and idler pulley.

WhereEverybodyKnowsYourName

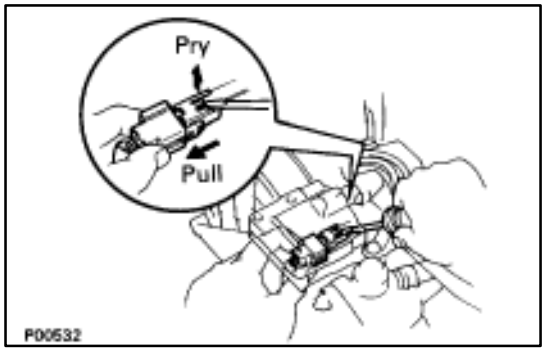

15. REMOVE RH NO.2 TIMING BELT COVER

(a) Disconnect the cam position sensor connector from the ignition coil bracket.

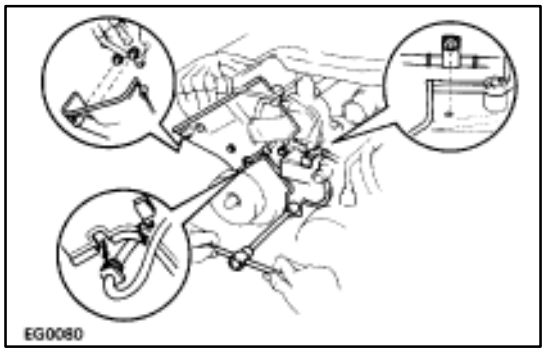

(b) Disconnect the cam position sensor wire from the clamp on the timing belt cover.
(c) Remove the five mounting bolts.
(d) Disconnect the wire clamp from the timing belt cover, and remove the timing belt cover and four gasket.

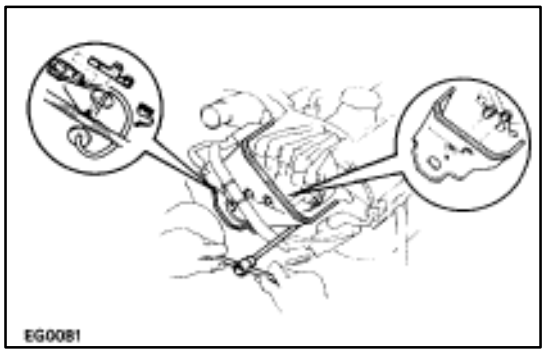

16. REMOVE LH NO.2 TIMING BELT COVER

(a) Disconnect the cam position sensor wire from the clamp on the timing belt cover.
(b) Disconnect the cam position sensor connector.
(c) Remove the three mounting bolts.
(d) Disconnect the connector grommet from the timing belt cover, and remove the timing belt cover and two gaskets.

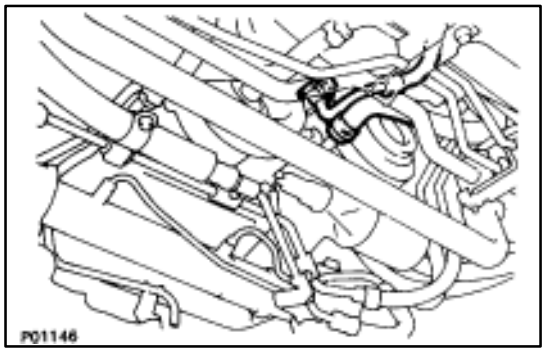

17. DISCONNECT PRESSURE AND SUCTION HOSES FROM HYDRAULIC PUMP

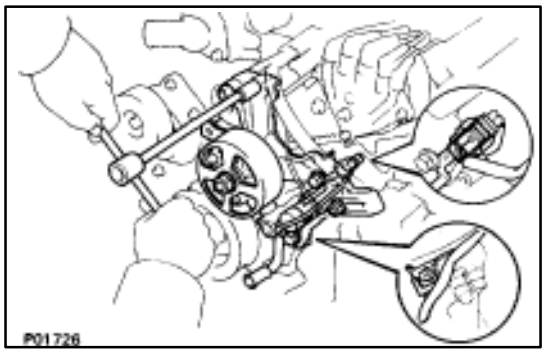

18. REMOVE HYDRAULIC PUMP

(a) Disconnect the solenoid valve connector.
(b) Remove the two mounting bolts and two nuts.
(c) Disconnect the engine speed sensor wire clamp.
(d) Remove the hydraulic pump.

WhereEverybodyKnowsYourName

COMPONENTS FOR DISASSEMBLY AND ASSEMBLY

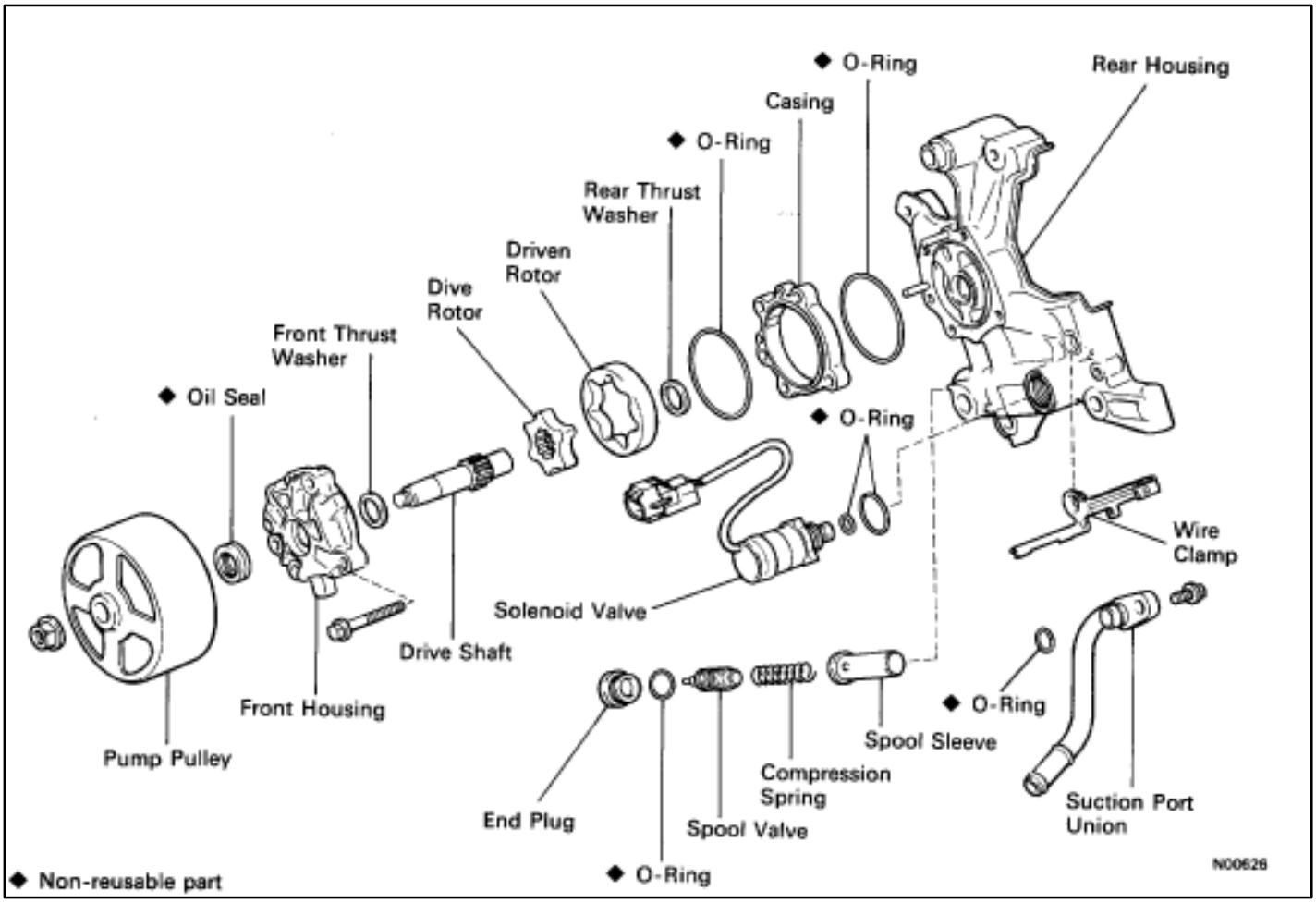

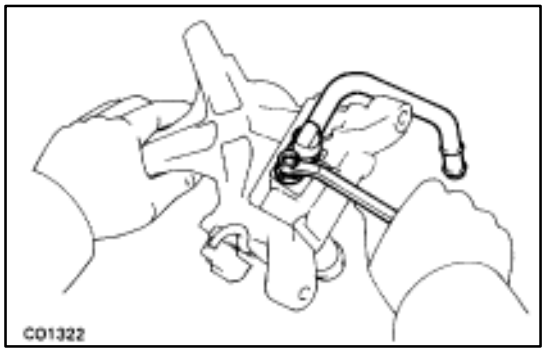

DISASSEMBLY OF HYDRAULIC PUMP

1. REMOVE SUCTION PORT UNION

(a) Remove the mounting bolt.
(b) Pull out the port union.
(c) Remove the O–ring from the port union.

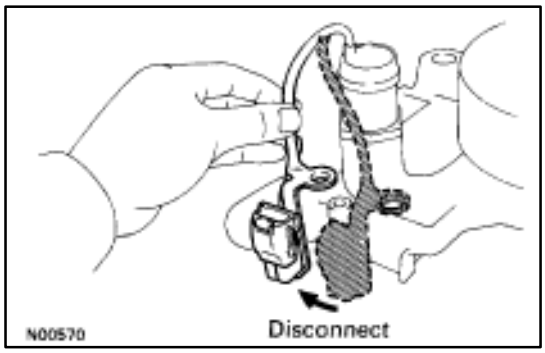

2. REMOVE WIRE CLAMP

(a) Disconnect the wire clamp from the rear housing.
(b) Remove the wire clamp from the read wire.

WhereEverybodyKnowsYourName

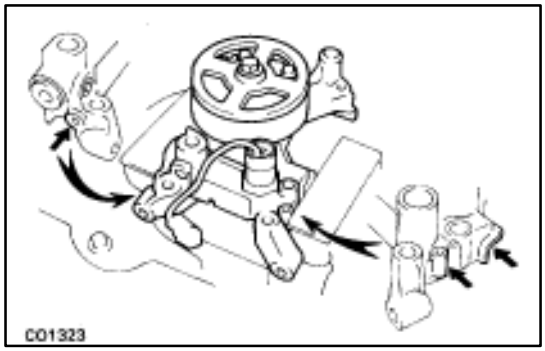

3. MOUNT REAR HOUSING

HINT: Mount the parts in a vise as shown in the illustration.

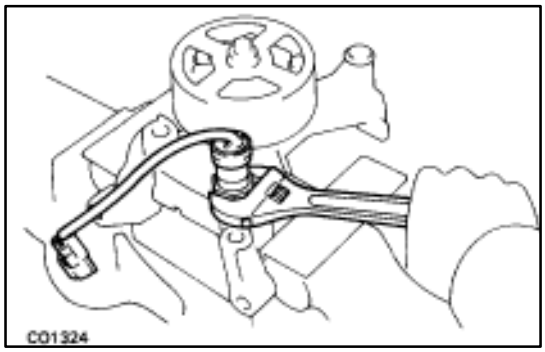

4. REMOVE SOLENOID VALVE

(a) Remove the solenoid valve.
(b) Remove the O–ring from the solenoid valve.
(c) Remove the O–ring from the rear housing.

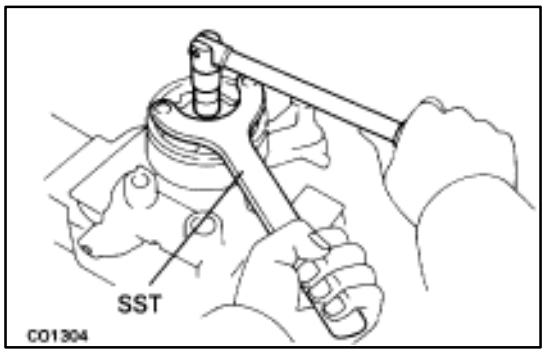

5. REMOVE PUMP PULLEY

(a) Using SST, remove the pulley nut by turning it clockwise.
SST 09278–54012

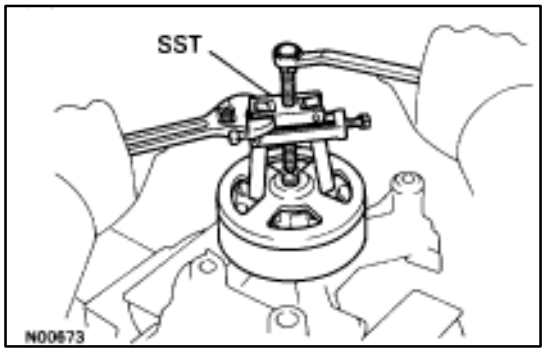

(b) Using SST, remove the pulley.
SST 09286–46011

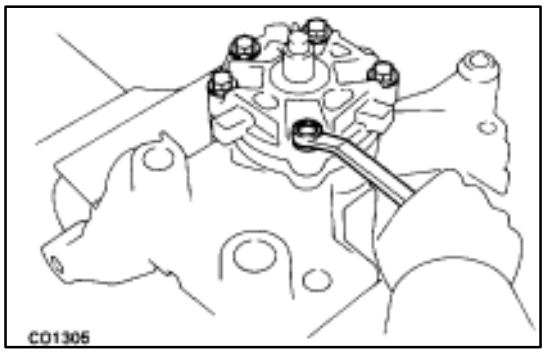

6. REMOVE FRONT HOUSING

(a) Remove the five mounting bolts.

WhereEverybodyKnowsYourName

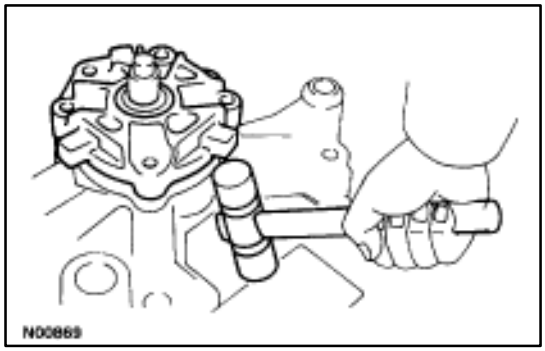

(b) Using a plastic–faced hammer, carefully tap out the front housing.
(c) Remove the O–ring from the casing.

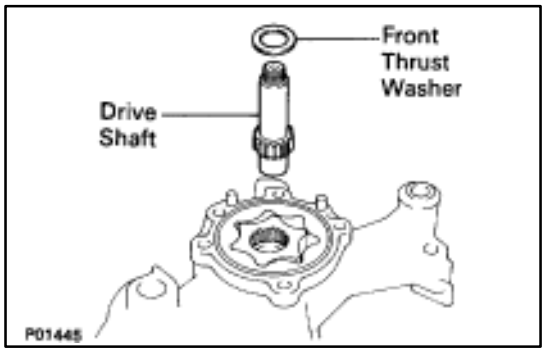

7. REMOVE FRONT THRUST WASHER AND DRIVE SHAFT

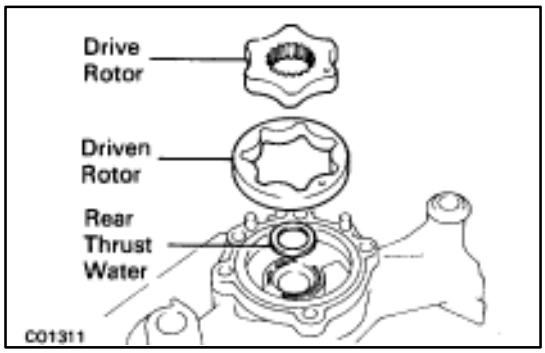

8. REMOVE DRIVE AND DRIVEN ROTORS
9. REMOVE REAR THRUST WASHER

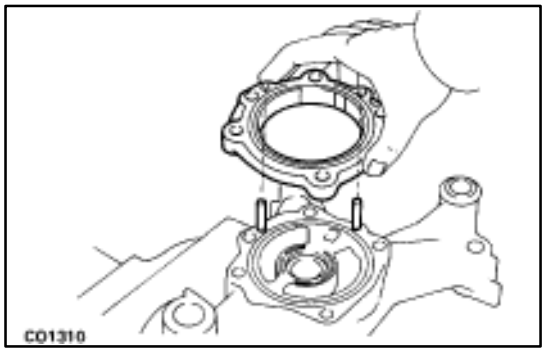

10. REMOVE CASING
(a) Remove the casing.
(b) Remove the O–ring from the rear housing.

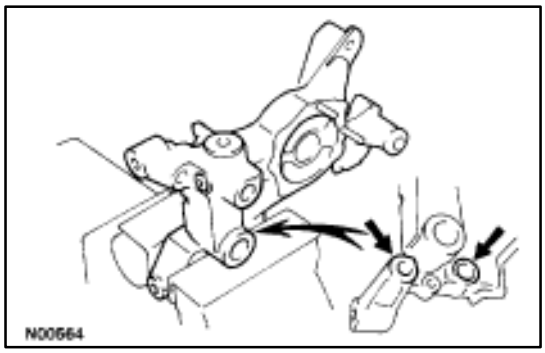

11. REMOUNT REAR HOUSING
HINT: Mount the parts in a vise as shown in the illustration.

WhereEverybodyKnowsYourName

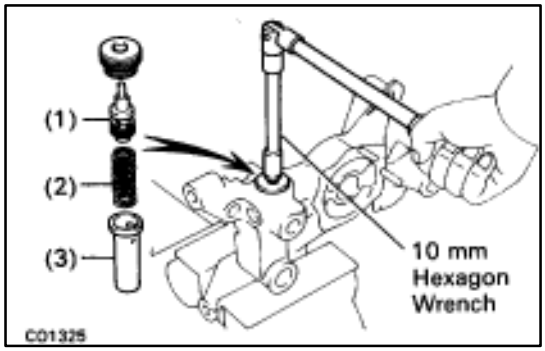

12. REMOVE SPOOL VALVE

(a) Using a 10 mm hexagon wrench, remove the end plug and following parts:
  (1) Spool valve
  (2) Compression spring
  (3) Spool sleeve

(b) Remove the O–ring from the end plug.

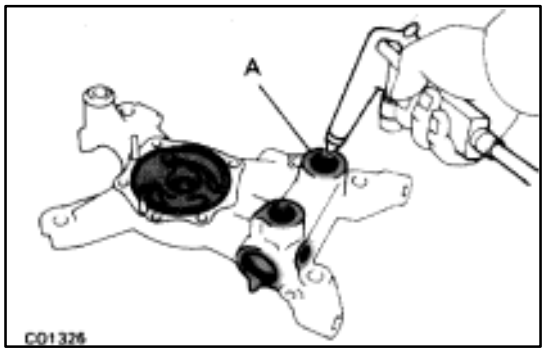

INSPECTION OF HYDRAULIC PUMP

1. CLEAN DISASSEMBLED PARTS

Using a cleaner and compressed air, clean the disassembled parts.

CAUTION: Thoroughly clean the oil passages of the rear housing. Oil passage A includes a filter which should be cleaned carefully.

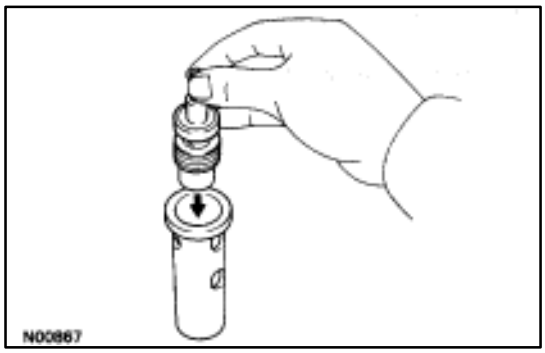

2. INSPECT SPOOL VALVE

(a) Coat the spool valve with PS fluid, and check that it falls smoothly into the spool sleeve by its own weight.

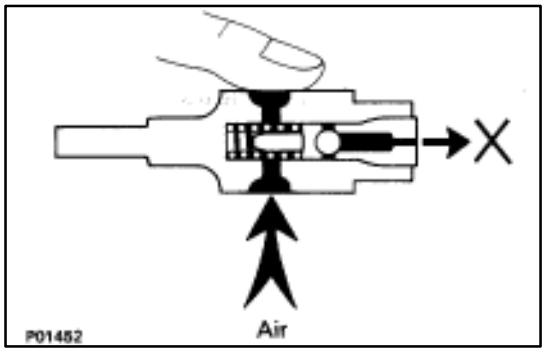

(b) Check the spool valve for leakage.
Close one of the holes and apply compressed air 392–490 kPa (4–5 kgf/cm2, 57–71 psi) into the opposite side, check that air does not come out of the end hole.

If it doesn't, replace the spool valve and sleeve as a set.

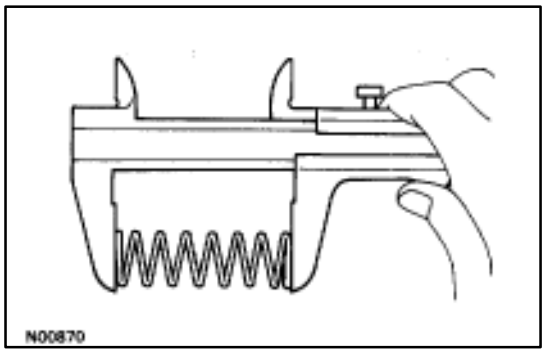

3. INSPECT SPOOL COMPRESSION SPRING

Using a vernier calipers, measure the free length of the compression spring.

Free length: 45.8 mm (1.803 in.)

If the free length is not as specified, replace the compression spring.

WhereEverybodyKnowsYourName

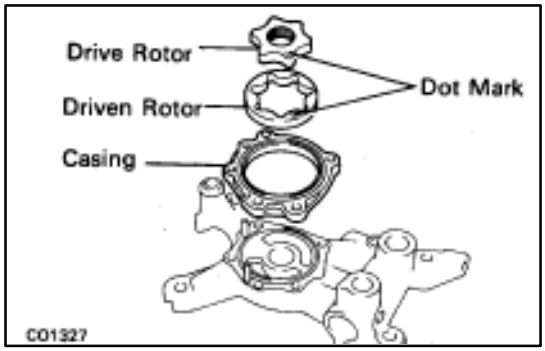

4. INSPECT DRIVE AND DRIVEN ROTORS

A. Install casing and rotors to rear housing

Face the dot mark of the rotors upward.

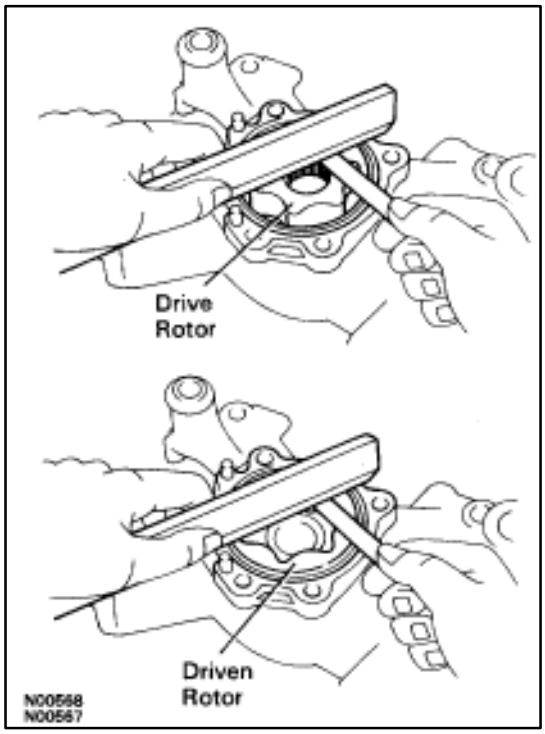

B. Inspect rotor side clearance

HINT: Before measuring the clearance, remove one side of the rotor.

Using a feeler gauge and precision straight edge, measure the clearance between the rotor and precision straight edge.

Standard side clearance:

Drive rotor 0.02 mm (0.0008 in.)

Driven rotor 0.03 mm (0.0012 in.)

Maximum side clearance:

Drive rotor 0.03 mm (0.0012 in.)

Driven rotor 0.04 mm (0.0016 in.)

If the clearance is greater than maximum, replace the rotors as a set. If necessary, replace the housings.

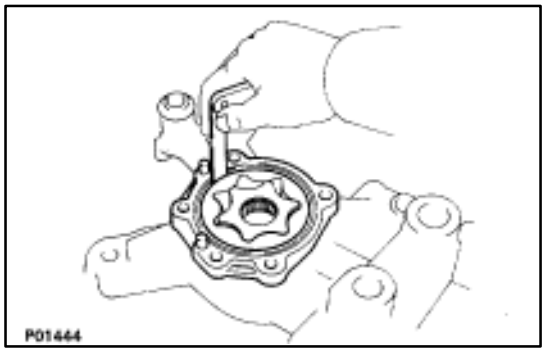

C. Inspect rotor body clearance

Using a feeler gauge, measure the clearance between the driven rotor and casing.

Standard body clearance: 0.05–0.09 mm (0.0020–0.0035 in.)

Maximum body clearance: 0.10 mm (0.0039 in.)

If the clearance is greater than maximum, replace the rotors as a set. If necessary, replace the casing.

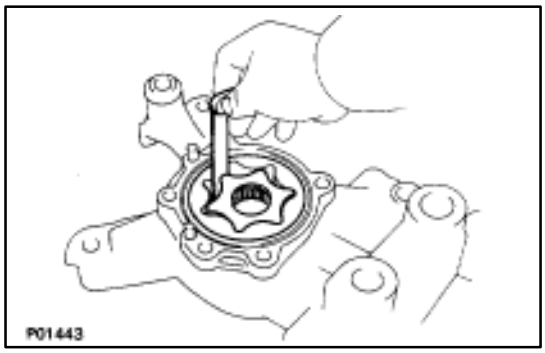

D. Inspect rotor tip clearance

Using a feeler gauge, measure the clearance of all the six drive rotor tips between the drive and driven rotors.

Standard tip clearance: 0.02 mm (0.0008 in.)

Maximum tip clearance: 0.03 mm (0.0012 in.)

If the clearance is greater than maximum, replace the rotors as a set.

E. Remove rotors and causing from rear housing

WhereEverybodyKnowsYourName

5. INSPECT OIL CLEARANCE OF DRIVE SHAFT

(a) Using a caliper gauge, measure the bushing inside diameter on the housing.

Bushing inside diameter: 17.00–17.05 mm (0.6693–0.6713 in.)

(b) Using a micrometer, measure the drive shaft diameter.

Shaft diameter: 16.97–16.98 mm (0.6681–0.6685 in.)

(c) Subtract the drive shaft diameter measurement from the bushing inside diameter measurement.

Standard clearance: 0.02–0.08 mm (0.0008–0.0031 in.)

Maximum clearance: 0.08 mm (0.0031 in.)

If the clearance is greater than maximum, replace the shaft. If necessary, replace the housings.

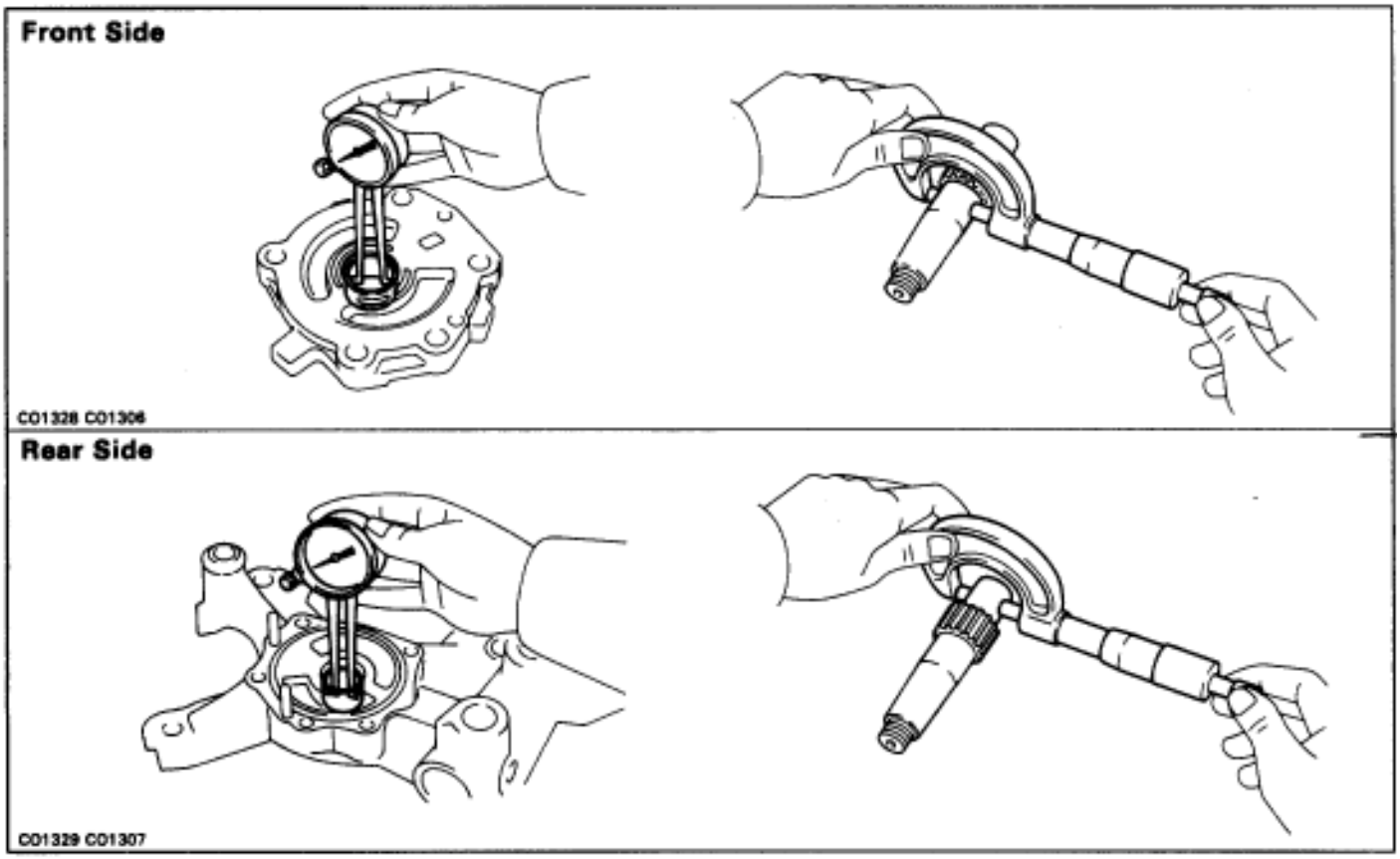

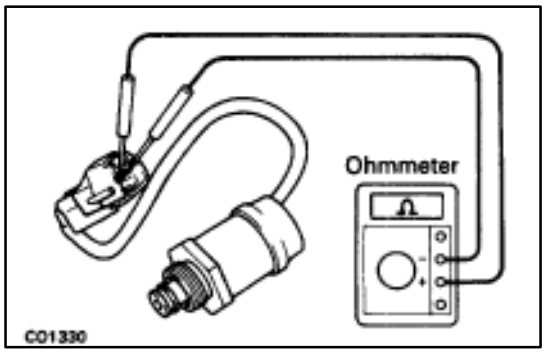

6. INSPECT SOLENOID VALVE RESISTANCE

Using an ohmmeter, measure the resistance between the terminals.

Resistance (Cold): 7.5–8.5 ?

WhereEverybodyKnowsYourName

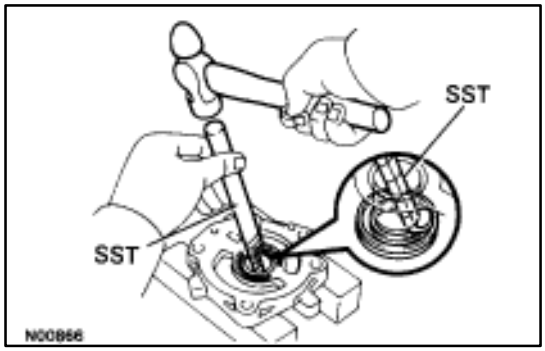

REPLACEMENT OF OIL SEAL

1. REMOVE OIL SEAL

Using SST and a hammer, tap out the oil seal.
SST 09631–10030

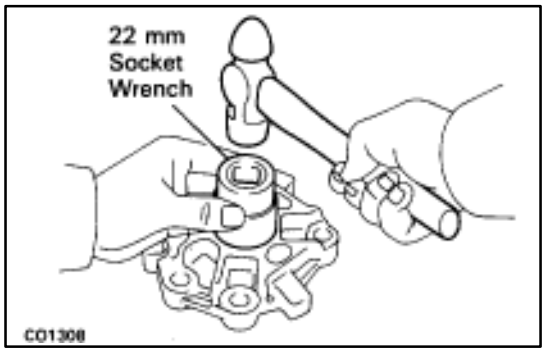

2. INSTALL OIL SEAL

(a) Using a 22 mm socket wrench and hammer, tap in a new oil seal until its surface is flush with the housing edge.
(b) Apply fluid to the oil seal lip.

ASSEMBLY OF HYDRAULIC PUMP

(See Components on page CO–31)

HINT:

- Thoroughly clean all parts to be assembled.
- Before installing the parts, apply new fluid to all sliding and rotating surfaces.

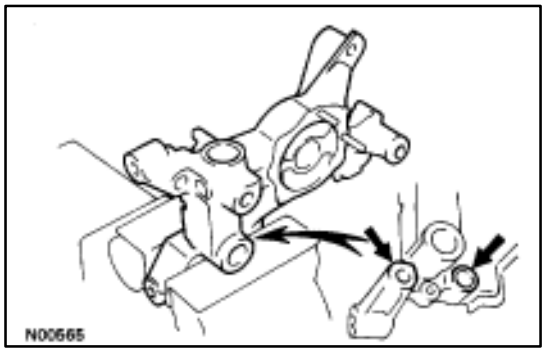

1. MOUNT REAR HOUSING

HINT: Mount the parts in a vise as shown in the illustration.

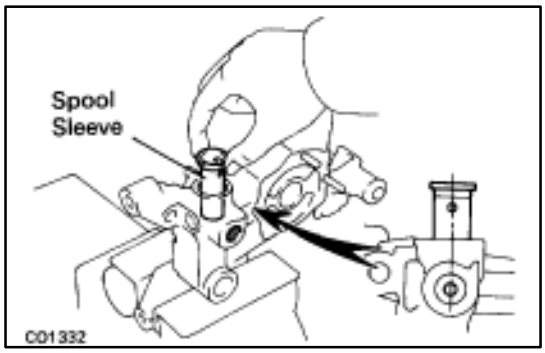

2. INSTALL SPOOL VALVE

(a) Align the small hole of the spool sleeve with the hole of the rear housing, and insert the spool body into the rear housing.

WhereEverybodyKnowsYourName

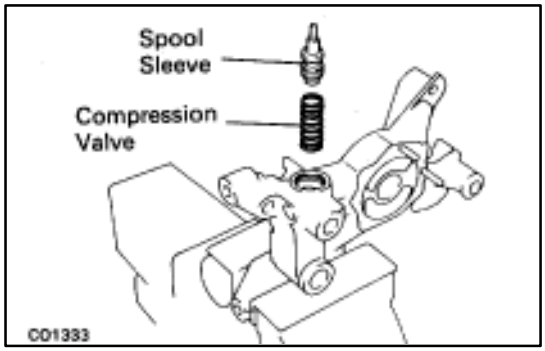

(b) Insert the compression spring and spool valve into the rear housing.

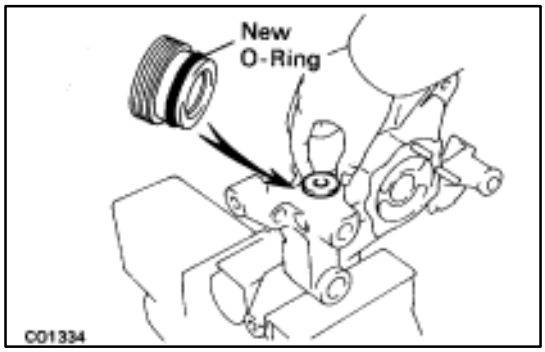

(c) Install a new O–ring to the end plug.
(d) Apply fluid to the O–ring.
(e) Temporarily install the end plug.

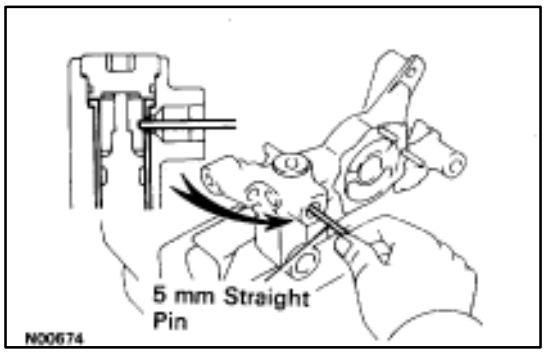

(f) Insert a 5 mm (0.19 in.) straight pin through the holes of the rear housing and spool sleeve.

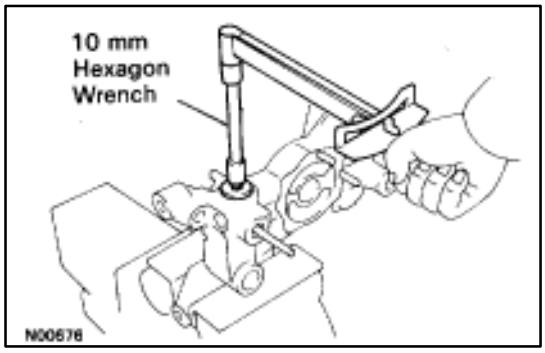

(g) Using a 10 mm hexagon wrench, install the end plug.
Torque: 19 N·m (200 kgf·cm, 14 ft·lbf)

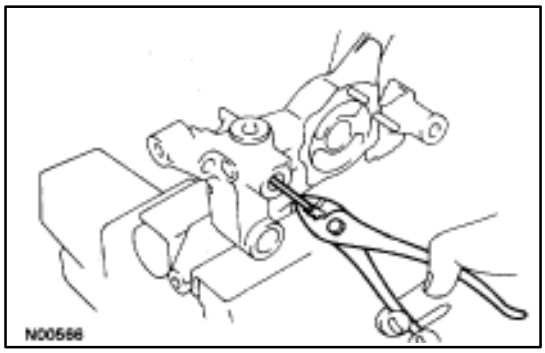

(h) Pull out the straight pin.

WhereEverybodyKnowsYourName

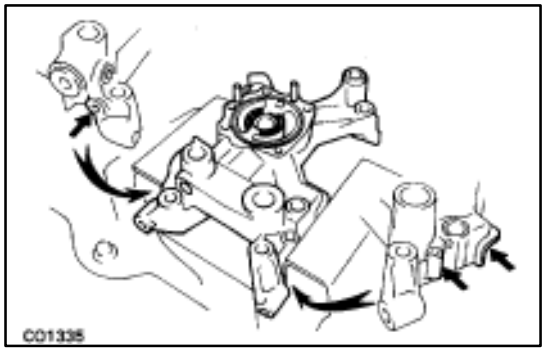

3. REMOUNT REAR HOUSING

HINT: Mount the parts in a vise as shown in the illustration.

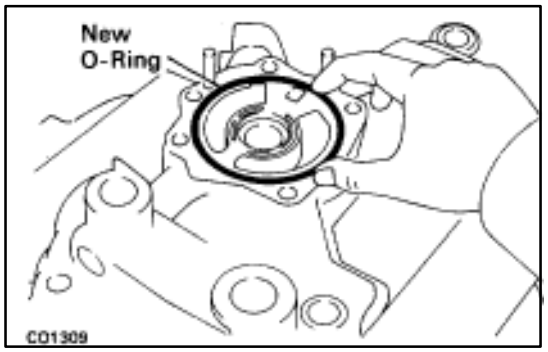

4. INSTALL CASING

HINT: If rubber from the O–rings adheres to the O–ring installation location, replace the casing.

(a) Install a new O–ring to the rear housing groove.

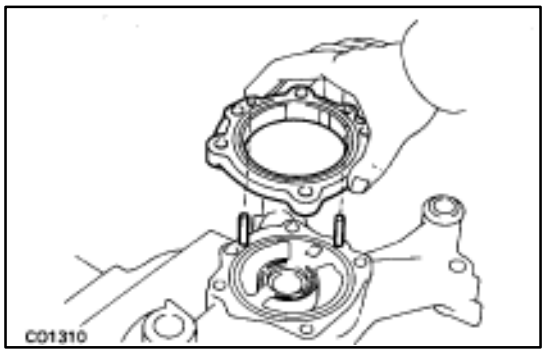

(b) Align the pin hole of the casing with the straight pin on the rear housing, and install the casing.

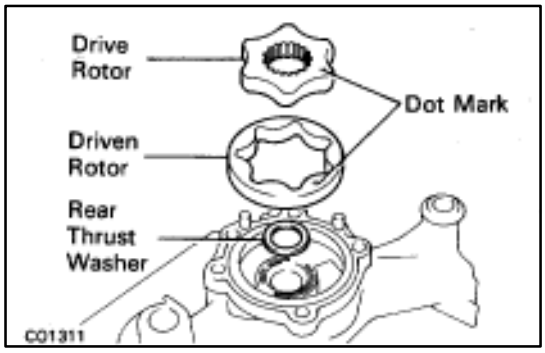

5. INSTALL REAR THRUST WASHER

6. INSTALL DRIVEN AND DRIVE ROTORS

Install the drive and driven rotors with the dot mark facing upward.

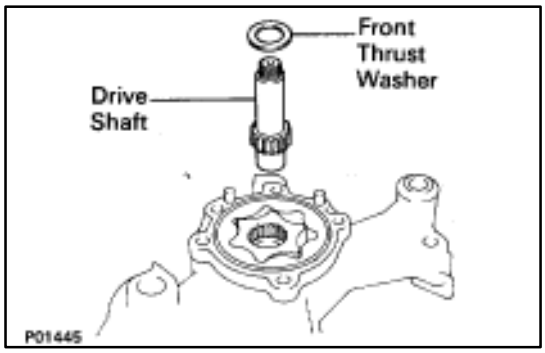

7. INSTALL DRIVE SHAFT

8. INSTALL FRONT THRUST WASHER

WhereEverybodyKnowsYourName

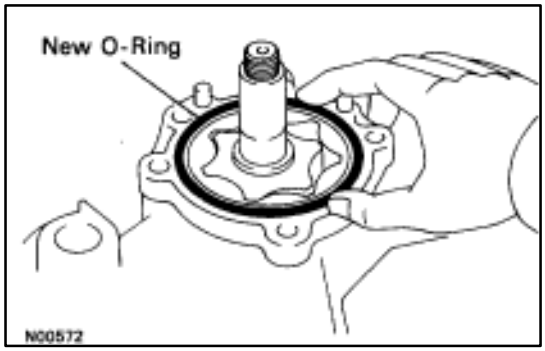

9. INSTALL FRONT HOUSING

(a) Install a new O–ring to the casing groove.

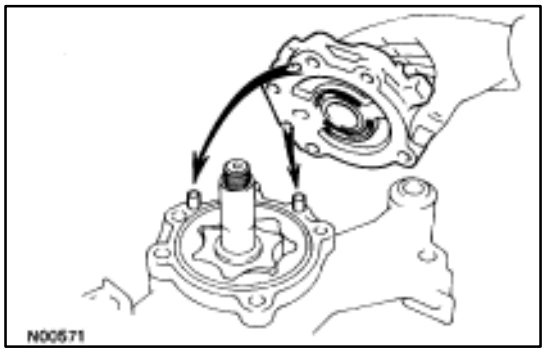

(b) Align the pin holes of the front housing with the straight pin.

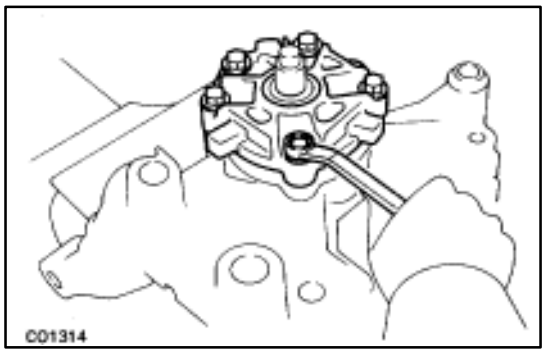

(c) Apply a light coat of fluid on the threads and under the heads of the mounting bolts.

(d) Install the front housing with the five bolts.

Torque: 21 N·m (210 kgf·cm, 15 ft·lbf)

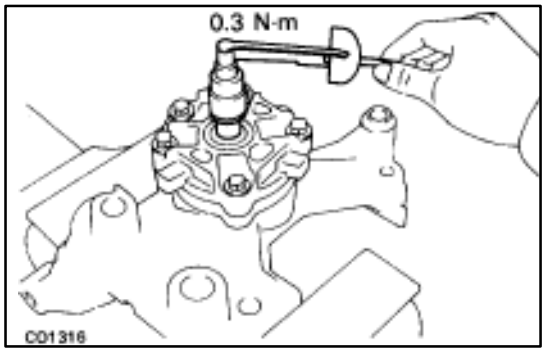

10. INSTALL DRIVE SHAFT PRELOAD

(a) Check that the drive shaft rotates smoothly without abnormal noise.

(b) Temporarily install the pulley nut, and check the rotating torque.

Rotating torque:

0.3 N·m (3.0 kgf·cm, 2.6 in.·lbf)

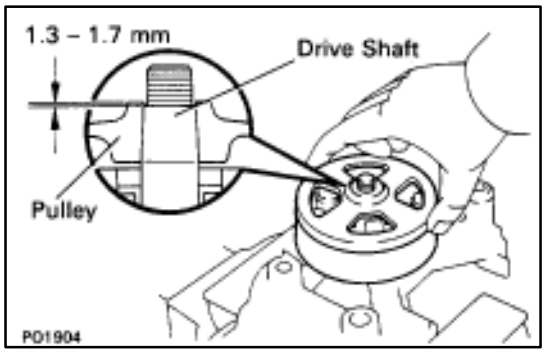

11. INSTALL PUMP PULLEY

(a) Slide the pulley onto the drive shaft.

(b) Measure the clearance between the pulley end and drive shaft end.

Standard: 1.3–1.7 mm (0.051–0.067 in.)

Minimum: 1.0 mm (0.039 in.)

If the clearance is less than minimum, replace the pulley.

WhereEverybodyKnowsYourName

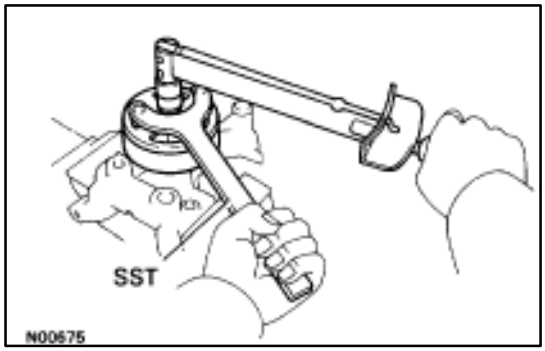

(c) Using SST, install the pulley with the nut. Tighten the nut by turning it counterclockwise.

SST 09278–54012

Torque: 59 N·m (600 kgf·cm, 43 ft·lbf)

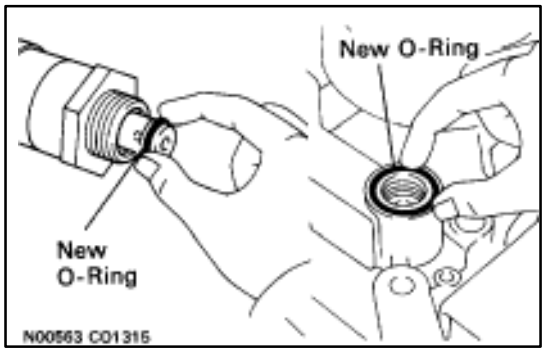

12. INSTALL SOLENOID VALVE

(a) Install a new O–ring to the solenoid valve.
(b) Install a new O–ring to the rear housing groove.
(c) Apply fluid to the two O–rings.

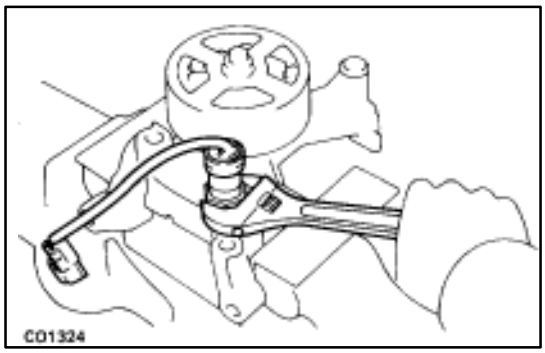

(d) Install the solenoid valve.

Torque: 39 N·m (400 kgf·cm, 28 ft·lbf)

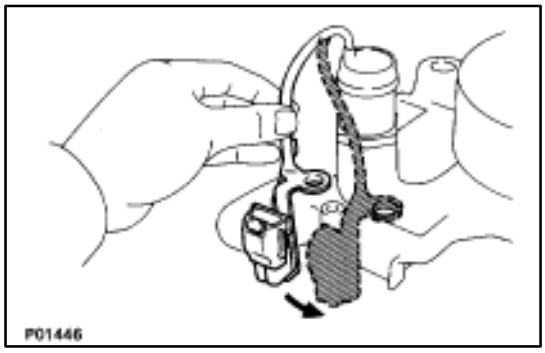

13. INSTALL WIRE CLAMP

(a) Install the wire clamp to the read wire.
(b) Install the wire clamp to the rear housing.

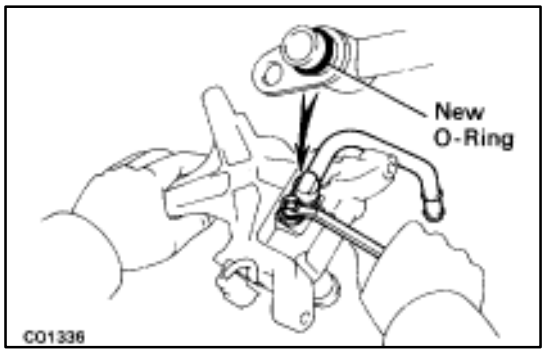

14. INSTALL SUCTION PORT UNION

(a) Install the O–ring to the port union.
(b) Apply fluid to the O–ring.
(c) Install the port union with the bolt.

Torque: 13 N·m (135 kgf·cm, 10 ft·lbf)

WhereEverybodyKnowsYourName

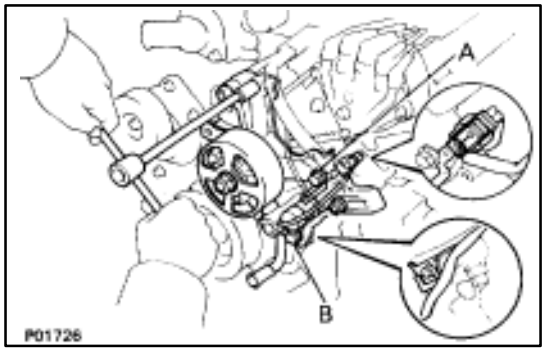

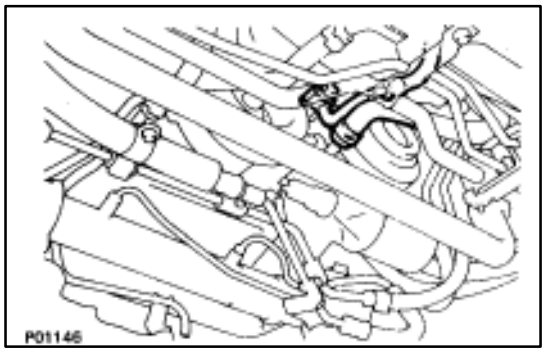

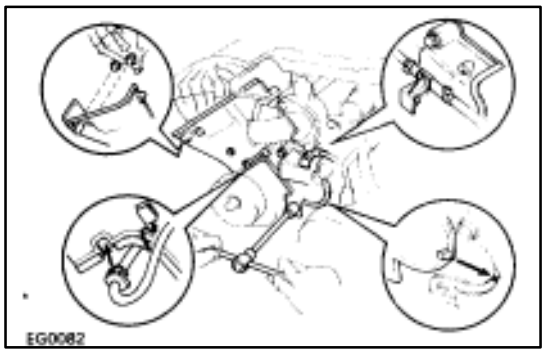

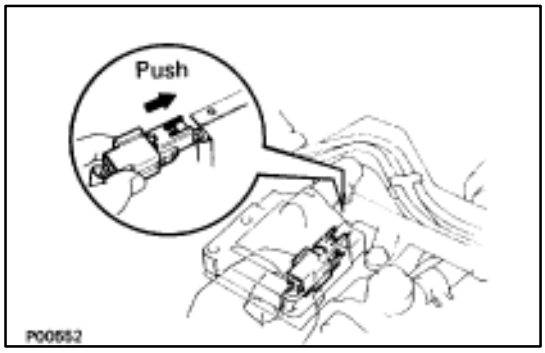

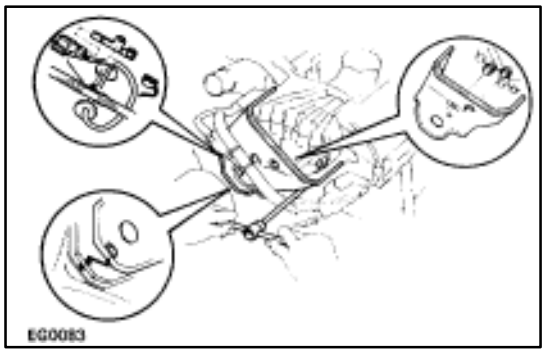

INSTALLATION OF HYDRAULIC PUMP

(See Components on page CO–26)

1. INSTALL HYDRAULIC PUMP

(a) Install the hydraulic pump, solenoid valve connector clamp and engine speed sensor wire clamp with the two bolts and two nuts.

Torque:

12 mm head 16 N·m (160 kgf·cm, 12 ft·lbf)

14 mm head 20 N·m (310 kgf·cm, 22 ft·lbf)

HINT: Each bolt length is indicated in the illustration.

Bolt length:

A 106 mm (4.17 in.) for 12 mm head

B 114 mm (4.49 in.) for 14 mm head

(b) Connect the solenoid valve connector.

2. CONNECT PRESSURE AND SUCTION HOSES TO HYDRAULIC PUMP

(a) Connect the pressure hose with new gasket and union bolt.

Torque: 64 N·m (650 kgf·cm, 47 ft·lbf)

(b) Connect suction hose.

3. INSTALL RH NO.2 TIMING BELT COVER

(a) Install the four gaskets to the timing belt cover.

(b) Install the connector grommet to the timing belt cover.

(c) Install the timing belt cover with the five bolts.

Torque: 16 N·m (160 kgf·cm, 12 ft·lbf)

HINT (12 mm head bolt): Use bolts 106 mm (4.17 in.) in length.

(d) Install the wire clamp to the timing belt cover.

(e) Install the cam position sensor wire to the wire clamp on the timing belt cover.

(f) Install the cam position sensor connector to the ignition coil bracket.

4. INSTALL LH NO.2 TIMING BELT COVER

(a) Install the two gaskets to the timing belt cover.

(b) Run the cam position sensor wire through the timing belt cover hole.

(c) Install the timing belt cover and connector bracket with the three bolts.

(d) Connect the cam position sensor connector.

(e) Install the cam position sensor connector to the connector bracket.

(f) Install the cam position sensor wire to the wire clamp on the timing belt cover.

(g) Install the connector grommet to the timing belt cover.

WhereEverybodyKnowsYourName

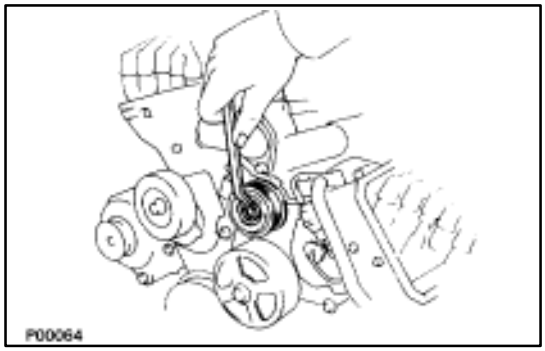

5. INSTALL DRIVE BELT IDLER PULLEY

Install the idler pulley and cover plate with the pulley bolt.

Torque: 37 N·m (380 kgf·cm, 27 ft·lbf)

6. CONNECT RADIATOR HOSE TO WATER INLET

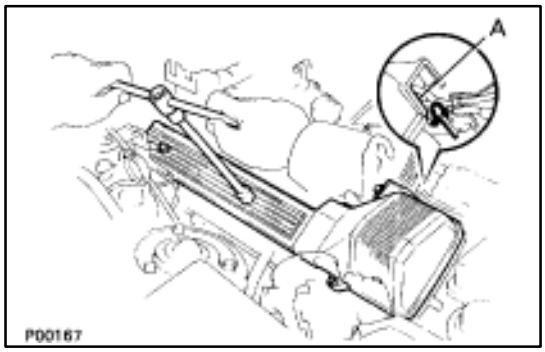

7. INSTALL RH NO.3 TIMING BELT COVER

(a) Install the three gaskets to the timing belt cover.
(b) Fit portion A of the timing belt cover, matching it with the lower high–tension cord cover.
(c) Install the timing belt cover with the three bolts.

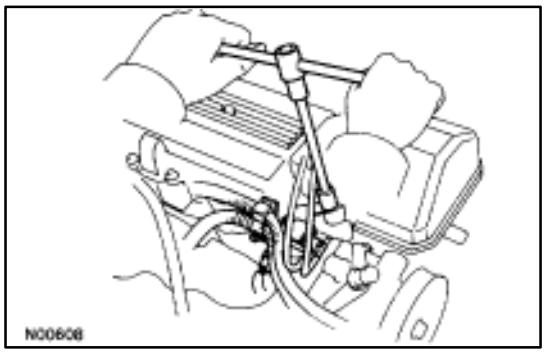

8. INSTALL VSV FOR EVAP SYSTEM

Install the VSV with the two bolts.

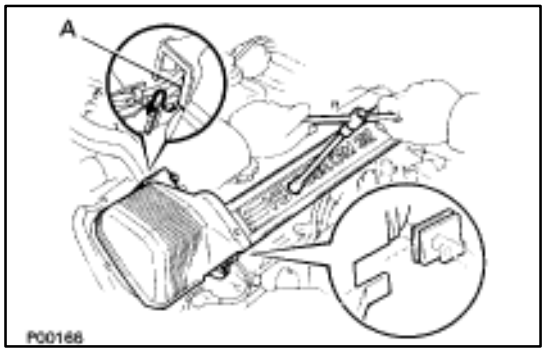

9. INSTALL LH NO.3 TIMING BELT COVER

(a) Install the three gaskets to the timing belt cover.
(b) Install the cord grommet to the high–tension cord.
(c) Install the cord grommet to the timing belt cover.
(d) Fit portion A of the timing belt cover, matching it with the lower high–tension cord cover.
(e) Install the timing belt cover with the four bolts.

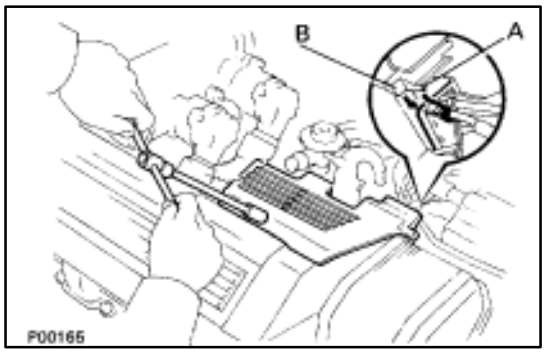

10. INSTALL RH ENGINE WIRE COVER

(a) Fit portions A and B of the engine wire cover, matching them with the lower high–tension cord cover and No.3 timing belt cover.
(d) Install the engine wire cover with the bolt.

WhereEverybodyKnowsYourName

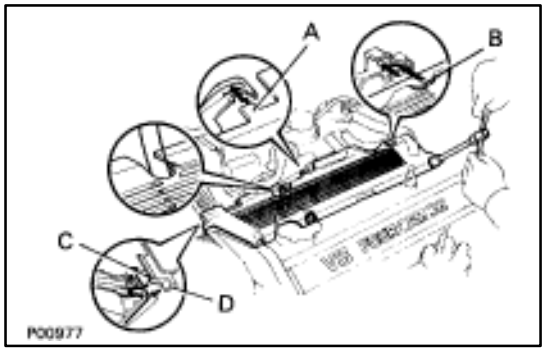

11. INSTALL LH ENGINE WIRE COVER

(a) Connect portions A and B engine wire cover to the wire brackets.

(b) Set the VSV (for fuel pressure control system) wire in original position.

(c) Fit portions C and D of the engine wire cover, matching them with the lower high–tension cord cover and No.3 timing belt cover.

(d) Install the engine wire cover with the two bolts.

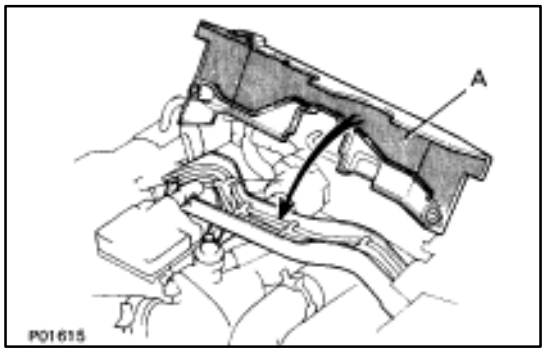

12. INSTALL UPPER HIGH–TENSION CORD COVER

(a) Fit portion A of the upper high–tension cover, matching it with the top of the lower high–tension cord cover.

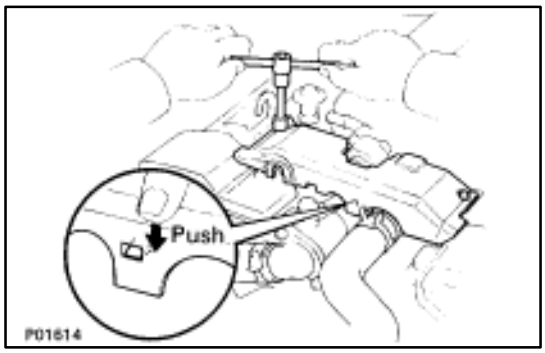

(b) Push the front side of the high–tension cord cover, and connect the front side claw groove of the upper high–tension cord cover to the claw of the lower high–tension cord cover.

(c) Install the upper high–tension cord cover with the two bolts.

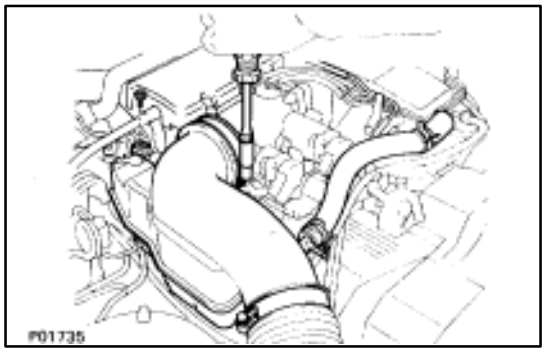

13. INSTALL INTAKE AIR CONNECTOR

(a) Connect the end portions of the intake air connector to the throttle body and air cleaner hose.

(b) Tighten the two hose clamps.

(c) Install the bolt holding the intake air connector to the cylinder head cover.

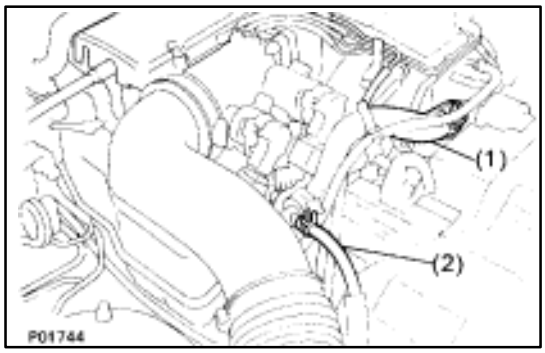

(d) Connect the following hoses:

(1) Air hose to ISC valve

(2) Air hose (from PS air control valve) to intake air connector

WhereEverybodyKnowsYourName

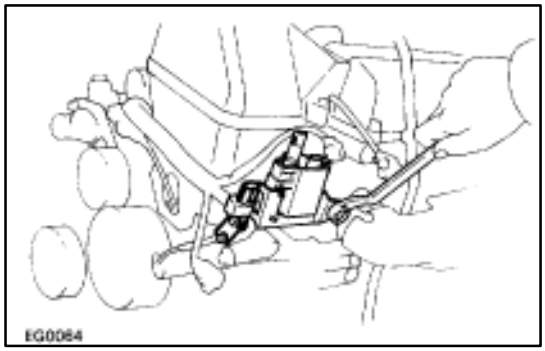

14. INSTALL IGNITION COIL

(a) Install the ignition coil with the two bolts.

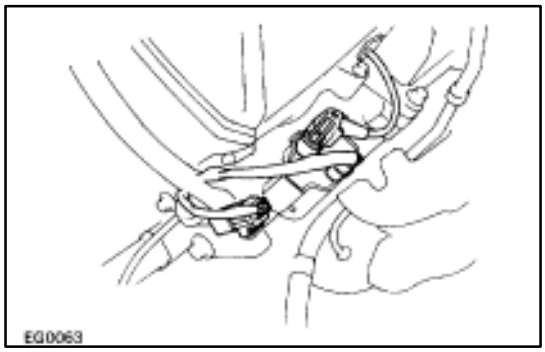

(b) Connect the following connectors and cord:
   (1) Ignition coil connector
   (2) Noise filter connector
   (3) High–tension cord

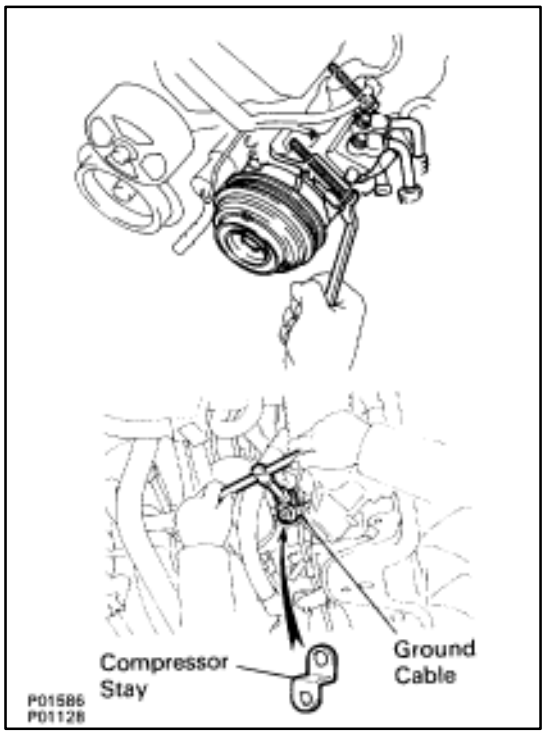

15. INSTALL A/C COMPRESSOR

(a) Install the A/C compressor, compressor stay and ground cable with the three bolts and nut.

Torque: Bolt 49 N·m (500 kgf·cm, 36 ft·lbf)
Nut 29 N·m (300 kgf·cm, 22 ft·lbf)

(b) Connect the A/C compressor connector.

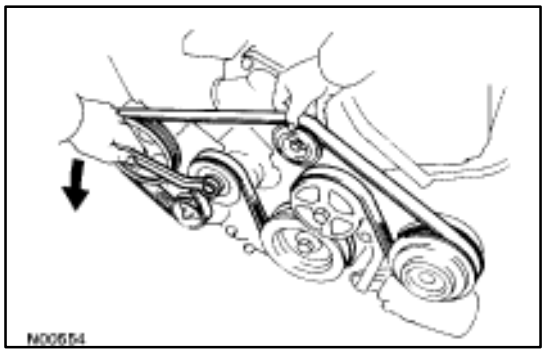

16. INSTALL DRIVE BELT

Install the drive belt by turning the drive belt tensioner counterclockwise.

HINT: The pulley bolt for the belt tensioner has a left–hand thread.

17. CONNECT RADIATOR HOSE TO WATER INLET

WhereEverybodyKnowsYourName

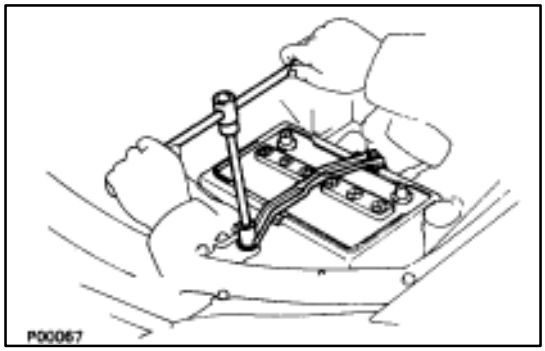

18. INSTALL BATTERY

19. FILL ENGINE WITH COOLANT (See page CO–7)
20. FILL COOLING FAN RESERVOIR TANK WITH FLUID (See pages CO–23 and 24)
21. START ENGINE AND CHECK FOR LEAKS
22. INSTALL ENGINE UNDER COVER

WhereEverybodyKnowsYourName

Hydraulic Motor

COMPONENTS FOR REMOVAL AND INSTALLATION

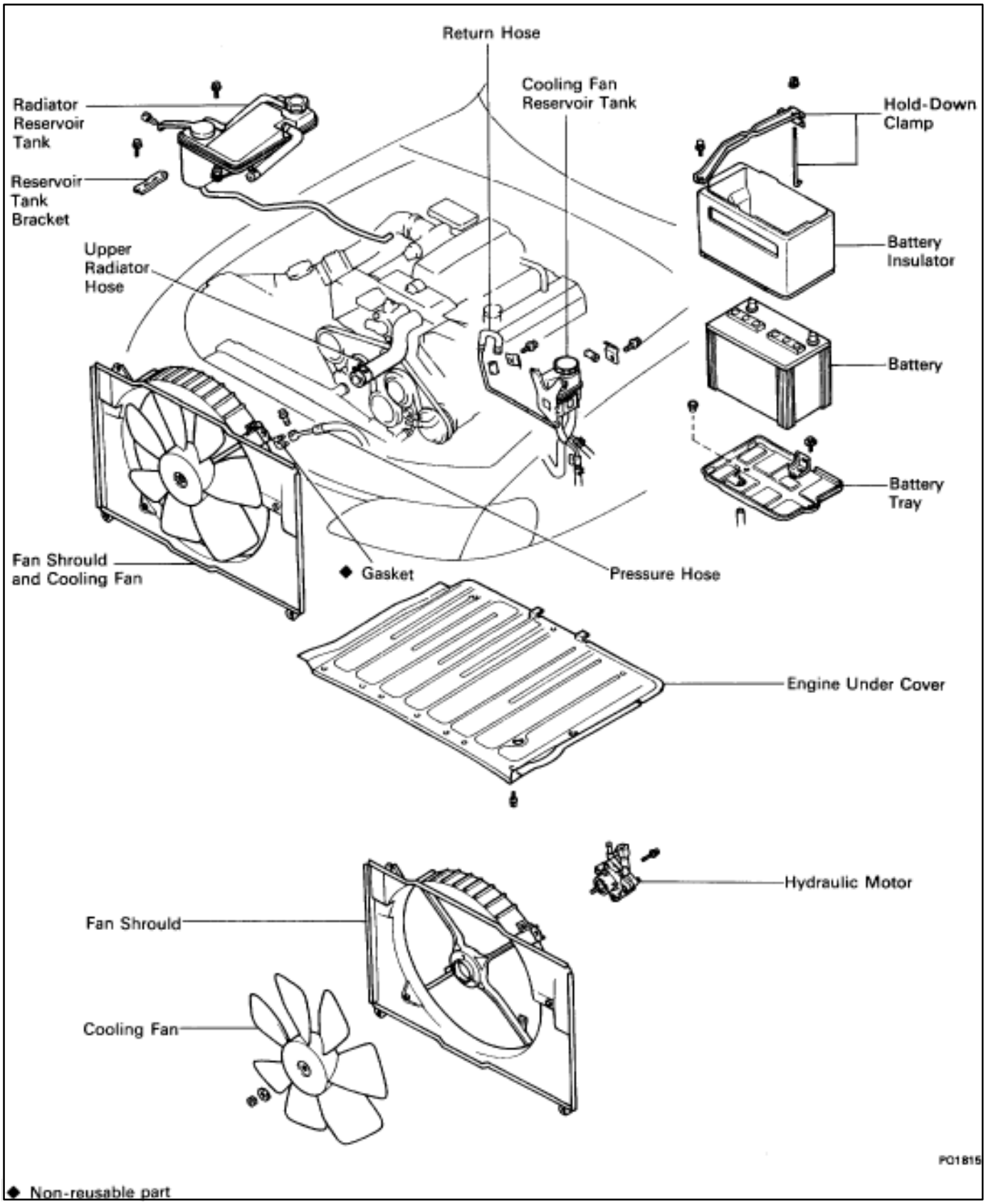

WhereEverybodyKnowsYourName

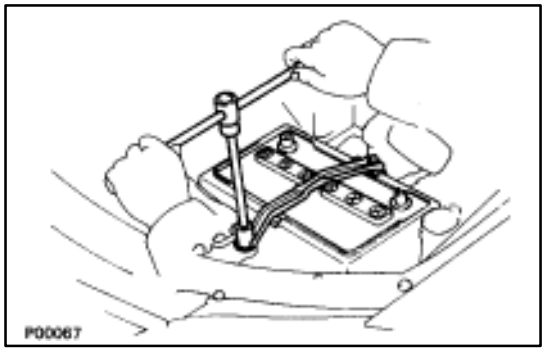

REMOVAL OF HYDRAULIC MOTOR

(See Components on page CO–47)

1. **REMOVE BATTERY**
   CAUTION: Work must be started after approx. 20 seconds or longer from the time the ignition switch is turned to the "LOCK" position and the negative (–) terminal cable is disconnected from the battery.
2. **REMOVE ENGINE UNDER COVERS**
3. **DRAIN ENGINE COOLANT (See page CO–6)**

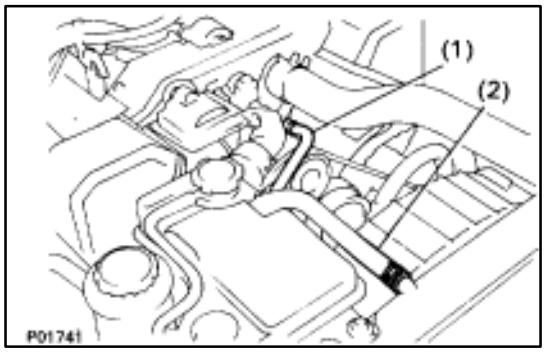

4. **REMOVE RADIATOR RESERVOIR TANK**
   (a) Disconnect the coolant level sensor connector.
   (b) Disconnect the following hoses:
      (1) Reservoir hose from water inlet housing
      (2) Reservoir hose from radiator

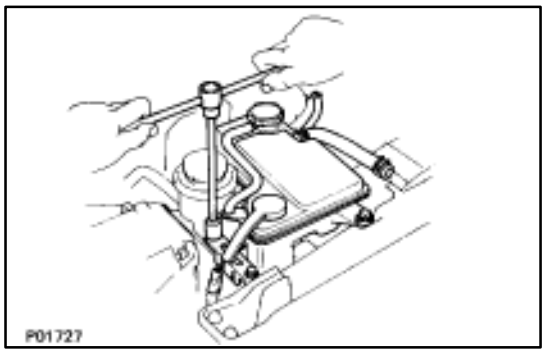

   (c) Remove the two bolts and reservoir tank bracket.
   (d) Disconnect the reservoir tank from the reservoir tank bracket, and remove the reservoir tank.

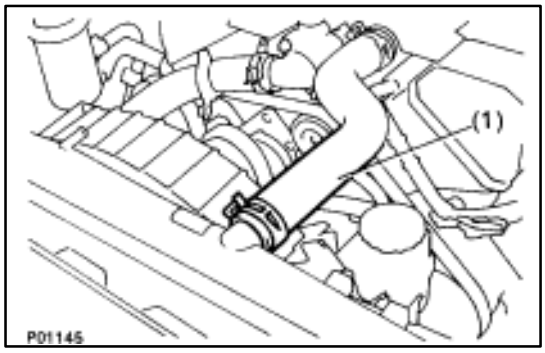

5. **DISCONNECT HOSES**
   Disconnect the following hoses:
      (1) Upper radiator hose from radiator

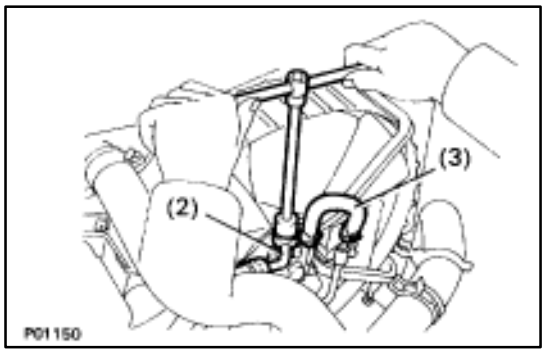

      (2) Pressure hose from hydraulic motor
      (3) Return hose from hydraulic motor

WhereEverybodyKnowsYourName

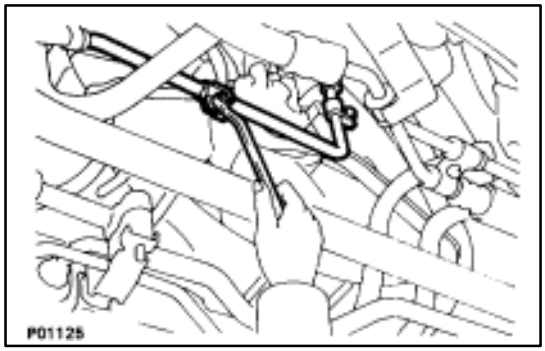

6. DISCONNECT COOLING FAN INLET PIPE FROM FAN SHROULD

Remove the two bolts, brackets and bushings, and disconnect the inlet pipe.

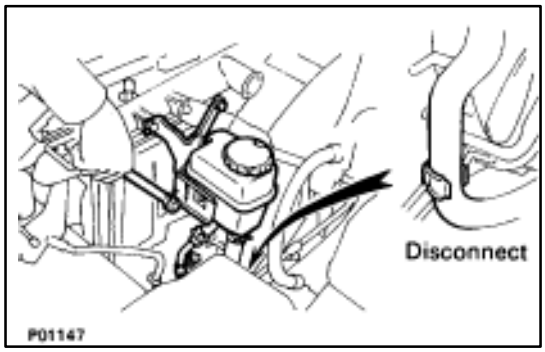

7. DISCONNECT COOLING FAN RESERVOIR TANK FROM FAN SHROULD

(a) Disconnect the suction hose from the clamp on the fan shrould.

(b) Remove the four bolts, and disconnect the reservoir tank.

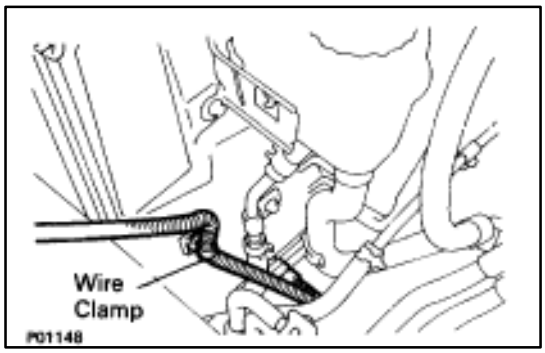

8. REMOVE RADIATOR FAN SHROULD

(a) Disconnect the wire clamp (for temperature sensor) from the radiator fan shrould.

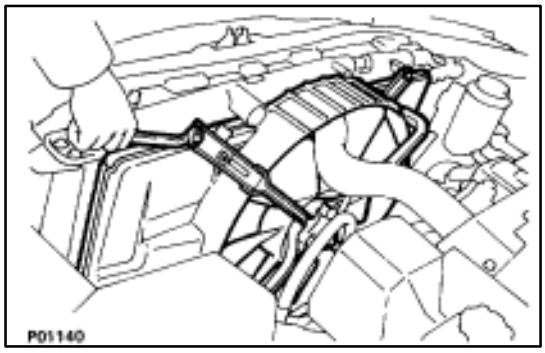

(b) Remove the four bolts, and disconnect the fan shrould from the radiator.

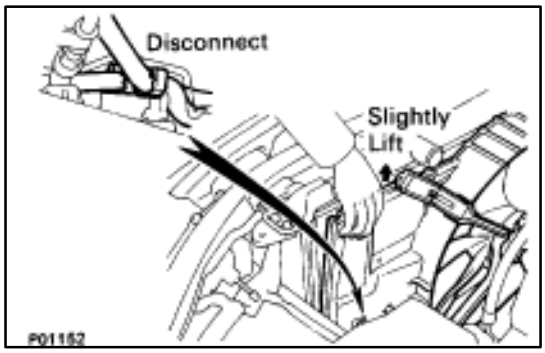

(c) Slightly lift the fan shrould, and disconnect the two oil cooler hoses (for cooling fan) from the hose clamp on the fan shrould.

(d) Remove the fan shrould.

WhereEverybodyKnowsYourName

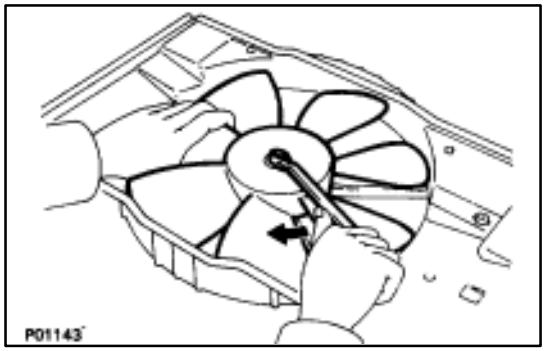

9. REMOVE COOLING FAN FROM HYDRAULIC MOTOR
Loosen the pulley nut clockwise, and remove the nut, plate washer and fan.

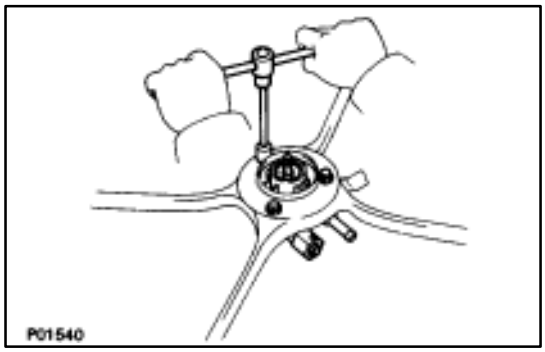

10. REMOVE HYDRAULIC MOTOR FROM FAN SHROULD
Remove the three bolts and hydraulic motor.

COMPONENTS FOR DISASSEMBLY AND ASSEMBLY

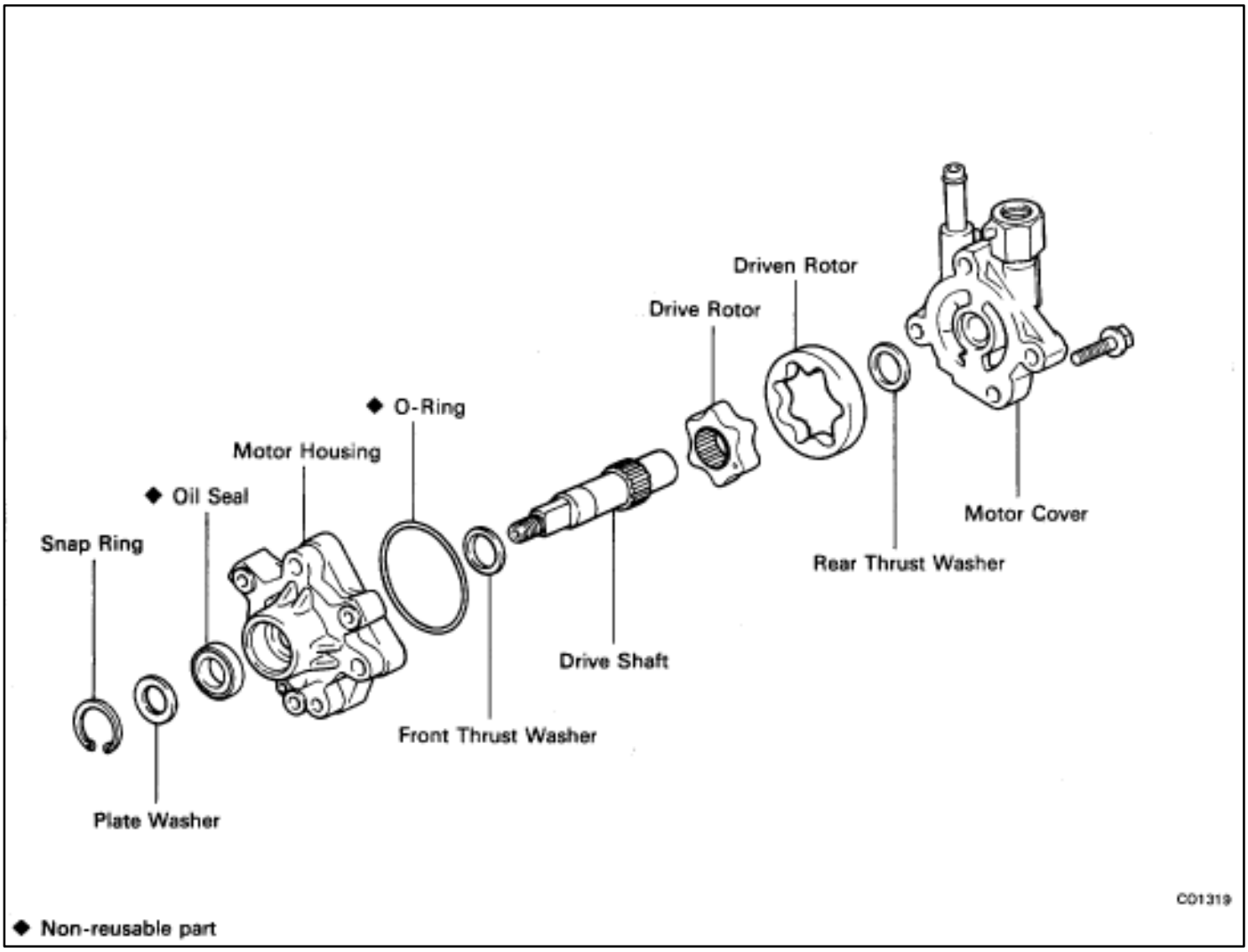

WhereEverybodyKnowsYourName

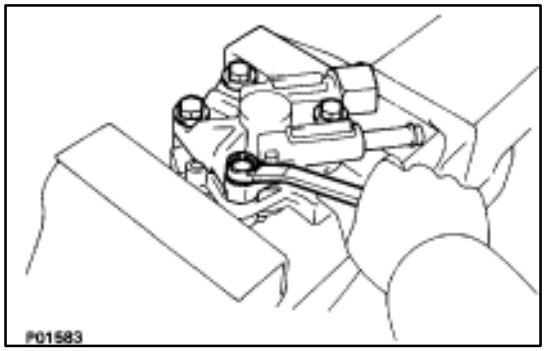

DISASSEMBLY OF HYDRAULIC MOTOR

(See Components on page CO–50)

1. **MOUNT MOTOR HOUSING**
   Slightly mount the motor housing in a vise.
   NOTICE: Be careful not to damage the motor housing.
2. **REMOVE MOTOR COVER**
   (a) Remove the four bolts and motor cover.
   (b) Remove the O–ring from the motor housing.

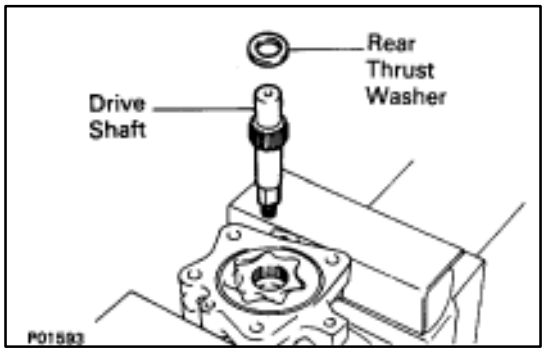

3. **REMOVE REAR THRUST WASHER AND DRIVE SHAFT**

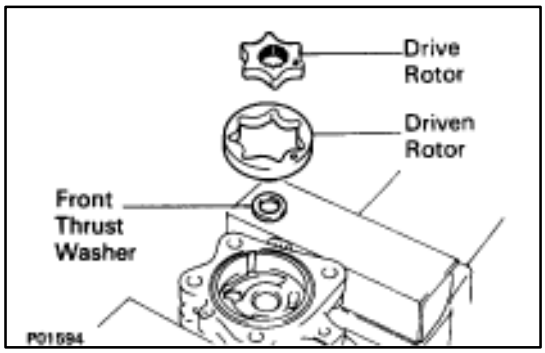

4. **REMOVE DRIVE AND DRIVEN ROTORS**
5. **REMOVE FRONT THRUST WASHER**

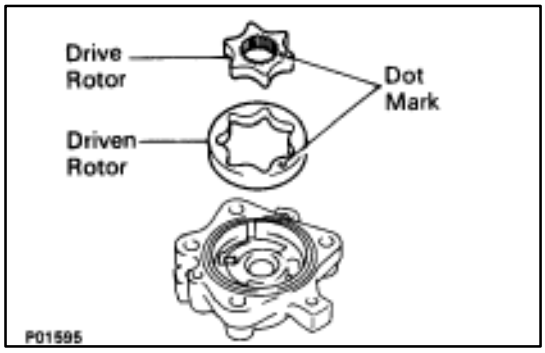

INSPECTION OF HYDRAULIC MOTOR

1. **INSPECT DRIVE AND DRIVEN ROTORS**
   (a) Install the drive and driven rotor to the motor housing with the dot mark facing upward.

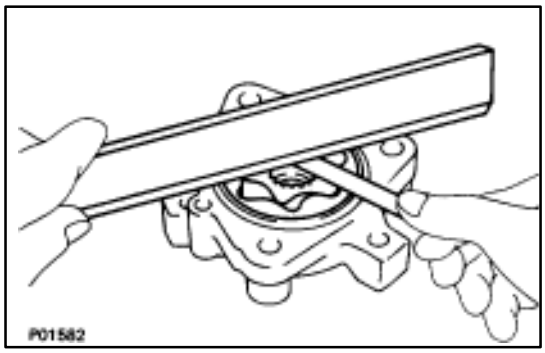

   (b) Using a feeler gauge and precision straight edge, measure the side clearance between the rotor and precision straight edge.

Standard side clearance: 0.01–0.04 mm (0.0004–0.0016 in.)

Maximum side clearance: 0.05 mm (0.0020 in.)

If the clearance is greater than maximum, replace the rotors as a set. If necessary, replace the motor assembly.

WhereEverybodyKnowsYourName

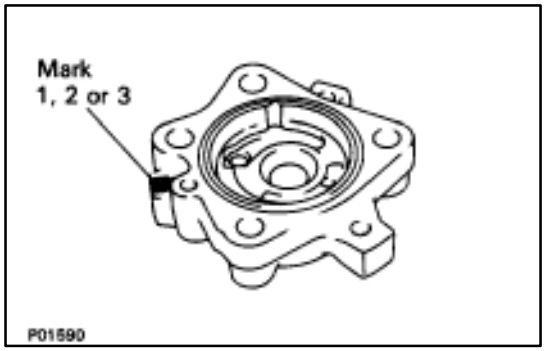

HINT: When replacing the rotors, select the rotor set according to the imprinted mark on the motor housing.

Imprinted mark on housing	Rotor set
1	16906–50010
2	16906–50020
3	16906–50030

2. INSPECT OIL CLEARANCE OF DRIVE SHAFT

(a) Using a caliper gauge, measure the shaft hole inside diameter of the housing and cover.

Shaft hole inside diameter: 14.000–14.011 mm (0.5512–0.5516 in.)

(b) Using a micrometer, measure the drive shaft diameter.

Shaft diameter: 13.973–13.984 mm (0.5501–0.5506 in.)

(c) Subtract the drive shaft diameter measurement from the shaft hole diameter measurement.

Standard clearance: 0.016–0.038 mm (0.0006–0.0015 in.)

Maximum clearance: 0.04 mm (0.0016 in.)

If the clearance is greater than maximum, replace the shaft. If necessary, replace the motor assembly.

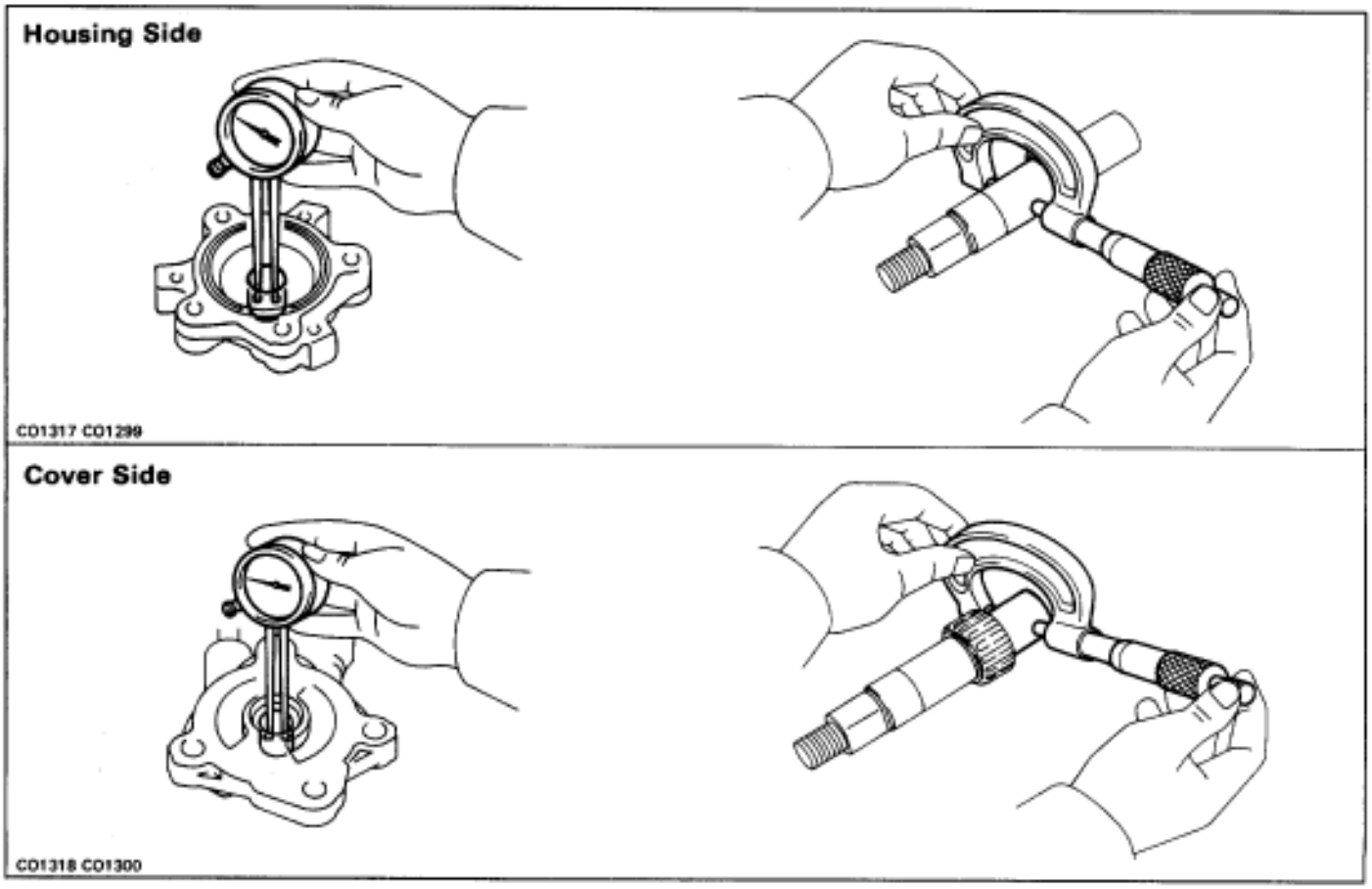

WhereEverybodyKnowsYourName

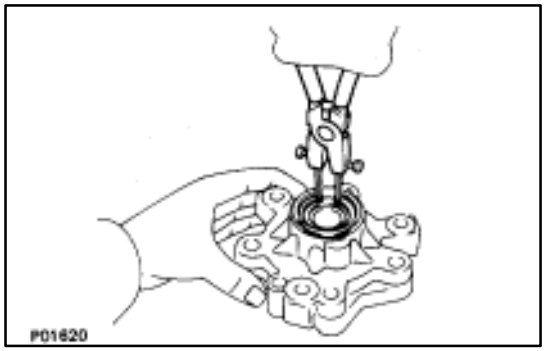

REPLACEMENT OF OIL SEAL

1. REMOVE OIL SEAL

(a) Using snap ring pliers, remove the snap ring and plate washer.

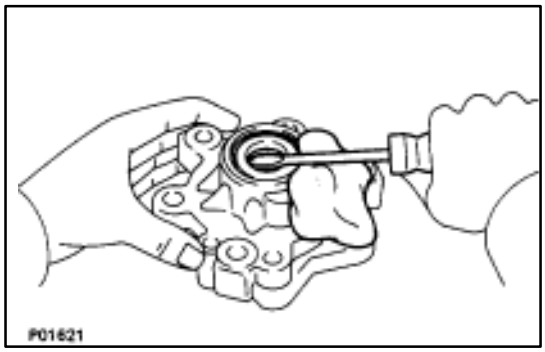

(b) Using a screwdriver, pry out the oil seal.

NOTICE: Be careful not to damage the housing.

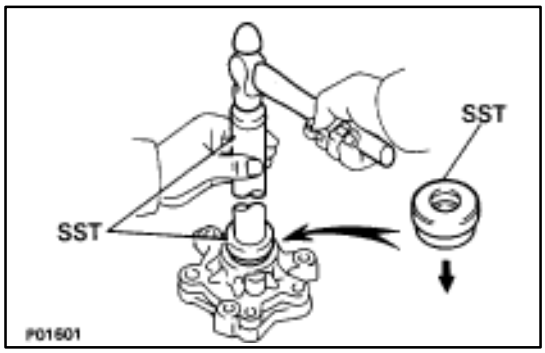

2. INSTALL OIL SEAL

(a) Using SST and a hammer, tap in a new oil seal to a depth of 4.5–5.5 mm (0.177–0.217 in.) from the housing edge.

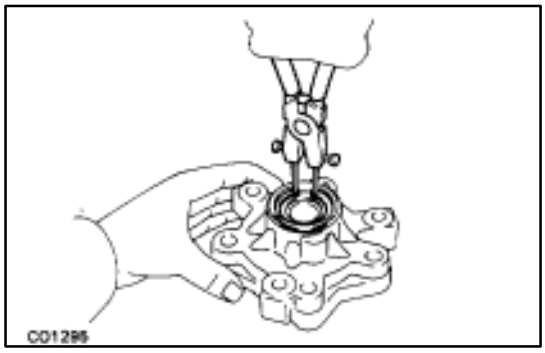

(b) Using snap ring pliers, install the plate washer and snap ring.

(c) Apply fluid to the oil seal lip.

WhereEverybodyKnowsYourName

ASSEMBLY OF HYDRAULIC MOTOR

(See Components on page CO–50)

HINT:

- Thoroughly clean all parts to be assembled.
- Before installing the parts, apply new fluid to all sliding and rotating surfaces.

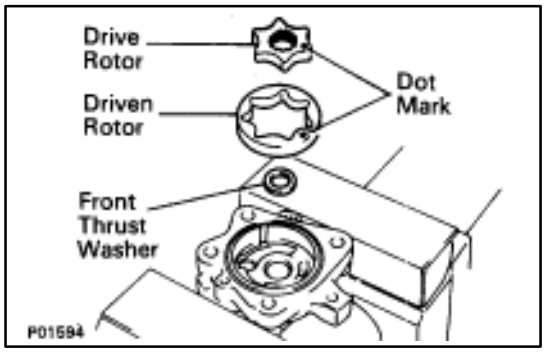

1. MOUNT MOTOR HOUSING

Slightly mount the motor housing in a vise.

NOTICE: Be careful not to damage the motor housing.

2. INSTALL FRONT THRUST WASHER

3. INSTALL DRIVEN AND DRIVE ROTORS

Install the drive and driven rotors with the dot mark facing upward.

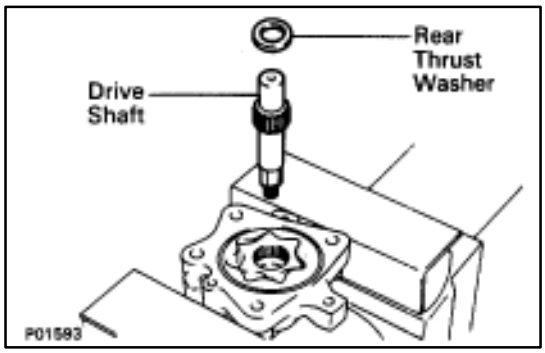

4. INSTALL DRIVE SHAFT

5. INSTALL REAR THRUST WASHER

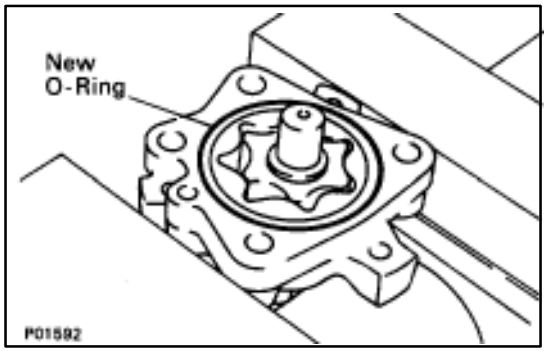

6. INSTALL MOTOR COVER

(a) Install a new O–ring to the motor housing groove.

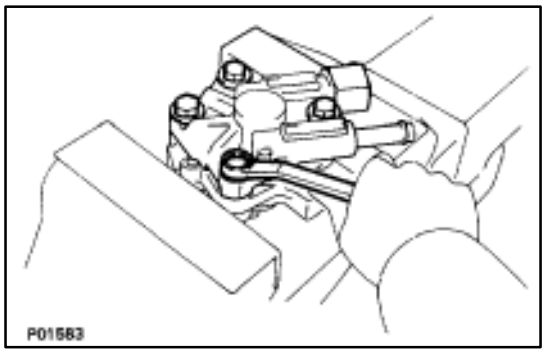

(b) Install the motor cover with the four bolts.

Torque: 28 N·m (290 kgf·cm, 21 ft·lbf)

WhereEverybodyKnowsYourName

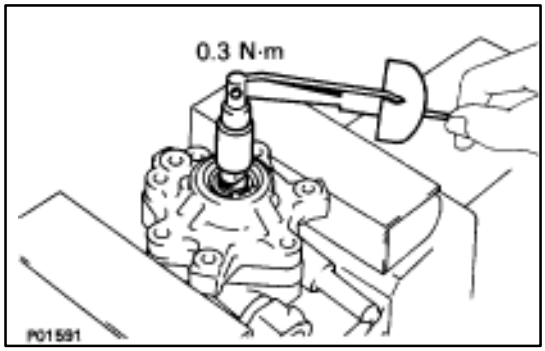

7. INSTALL DRIVE SHAFT PRELOAD

(a) Check that the drive shaft rotates smoothly without abnormal noise.

(b) Temporarily install the pulley nut, and check the rotating torque.

Rotating torque:

0.3 N·m (3.0 kgf·cm, 2.6 in.·lbf)

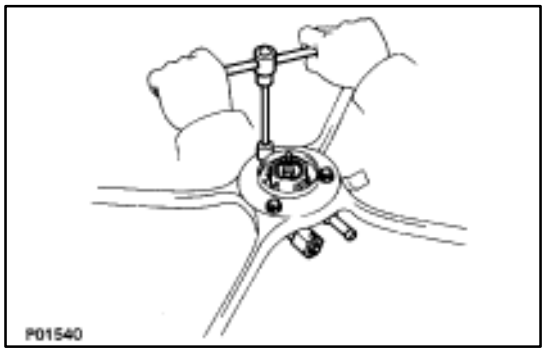

INSTALLATION OF HYDRAULIC MOTOR

(See Components on page CO–47)

1. INSTALL HYDRAULIC MOTOR TO FAN SHROULD

Install the hydraulic motor with the three bolts.

Torque: 4.9 N·m (50 kgf·cm, 43 in.·lbf)

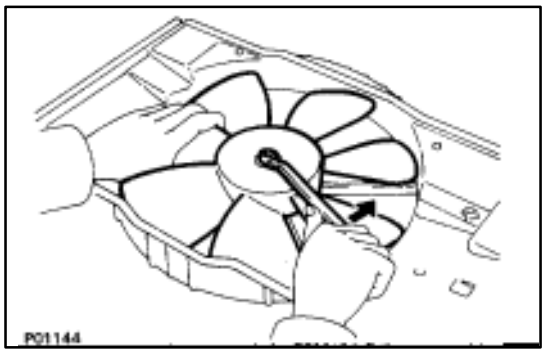

2. INSTALL COOLING FAN TO HYDRAULIC MOTOR

Install the fan with the plate washer bolt.

Tighten the nut by turning it counterclockwise.

Torque: 15 N·m (150 kgf·cm, 11 ft·lbf)

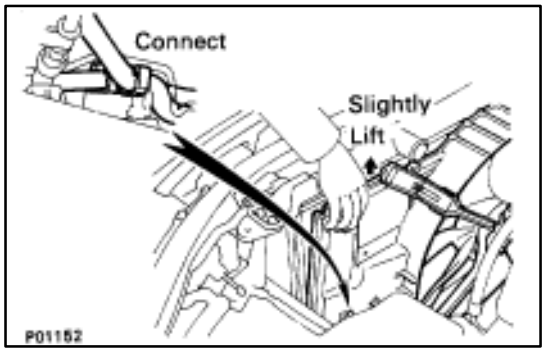

3. INSTALL RADIATOR FAN SHROULD

(a) Place the fan shroud on the radiator.

(b) Slightly lift the fan shroud, and connect the two oil cooler hoses (for cooling fan) to the hose clamp on the fan shroud.

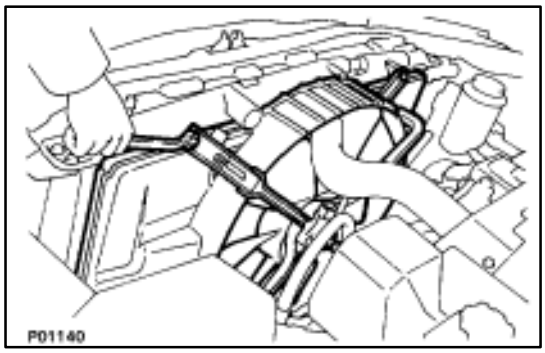

(c) Install the fan shroud with the four bolts.

Torque: 4.9 N·m (50 kgf·cm, 43 in.·lbf)

WhereEverybodyKnowsYourName

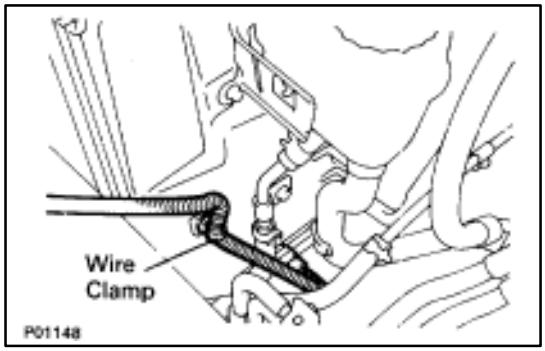

(d) Install the wire clamp to the fan shrould.

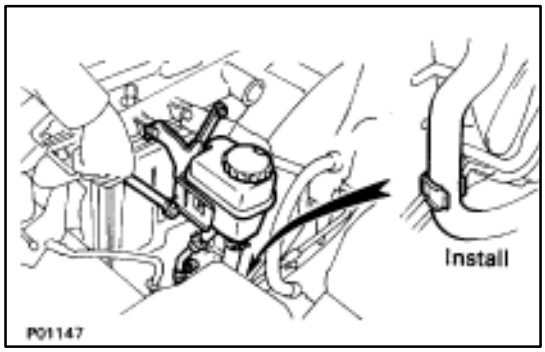

4. INSTALL COOLING FAN RESERVOIR TANK TO FAN SHROULD

(a) Install the reservoir tank with the four bolts.

Torque: 4.9 N·m (50 kgf·cm, 43 in.·lbf)

(b) Install the suction hose to the clamp on the fan shrould.

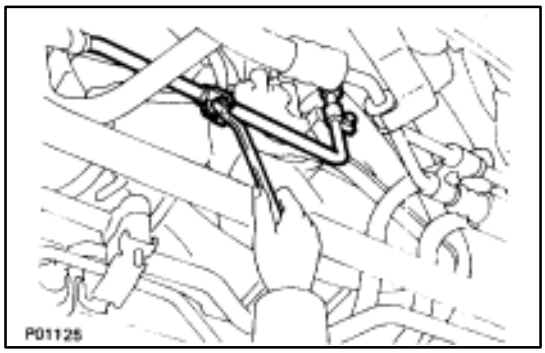

5. INSTALL COOLING FAN INLET PIPE TO FAN SHROULD

Install the inlet pipe with the two bushings, brackets and bolts.

Torque: 4.9 N·m (50 kgf·cm, 43 in.·lbf)

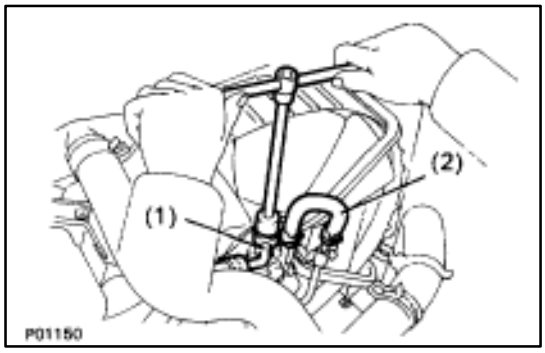

6. CONNECT HOSES

Connect the following hoses:

(1) Pressure hose to hydraulic motor Connect the pressure hose with a new gasket and union bolt.

Torque: 64 N·m (650 kgf·cm, 47 ft·lbf)

(2) Return hose to hydraulic motor.

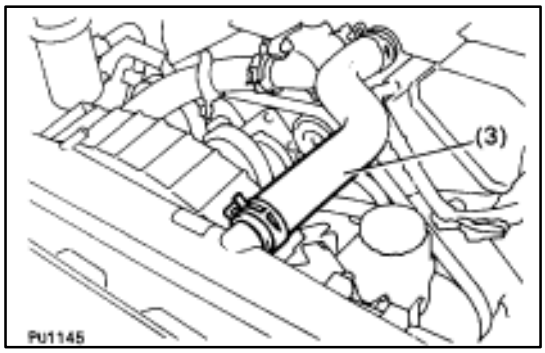

(3) Upper radiator hose to radiator.

WhereEverybodyKnowsYourName

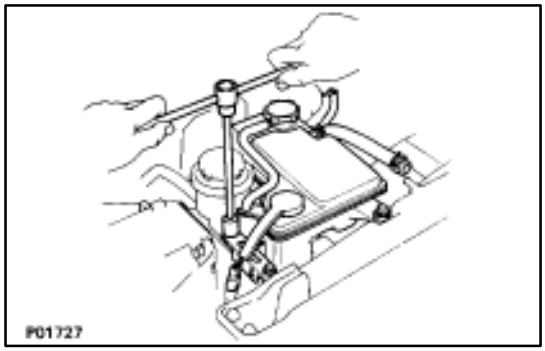

7. INSTALL RADIATOR RESERVOIR TANK

(a) Install the reservoir tank to the reservoir tank bracket.

(b) Install the reservoir tank bracket with two bolts.

Torque: 4.9 N·m (50 kgf·cm, 43 in.·lbf)

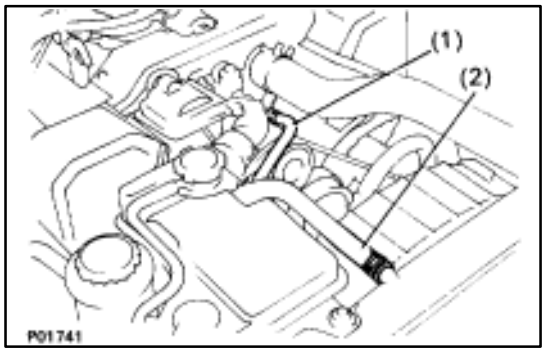

(c) Connect the following hoses:

(1) Reservoir hose to water inlet housing

(2) Reservoir hose to radiator

(d) Connect the coolant level sensor connector.

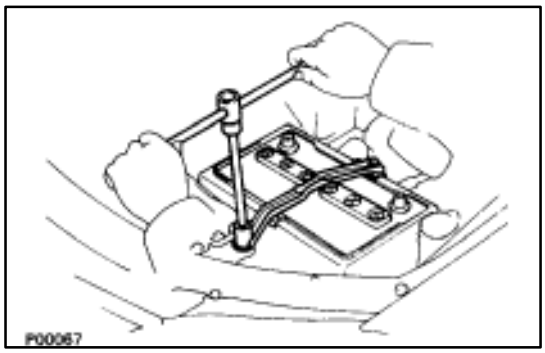

8. INSTALL BATTERY

9. FILL ENGINE WITH COOLANT (See page CO–7)

10. FILL COOLING FAN RESERVOIR TANK WITH FLUID (See pages CO–23 and 24)

11. START ENGINE AND CHECK FOR LEAKS

12. INSTALL ENGINE UNDER COVER

WhereEverybodyKnowsYourName

Oil Cooler

COMPONENTS FOR REMOVAL AND INSTALLATION

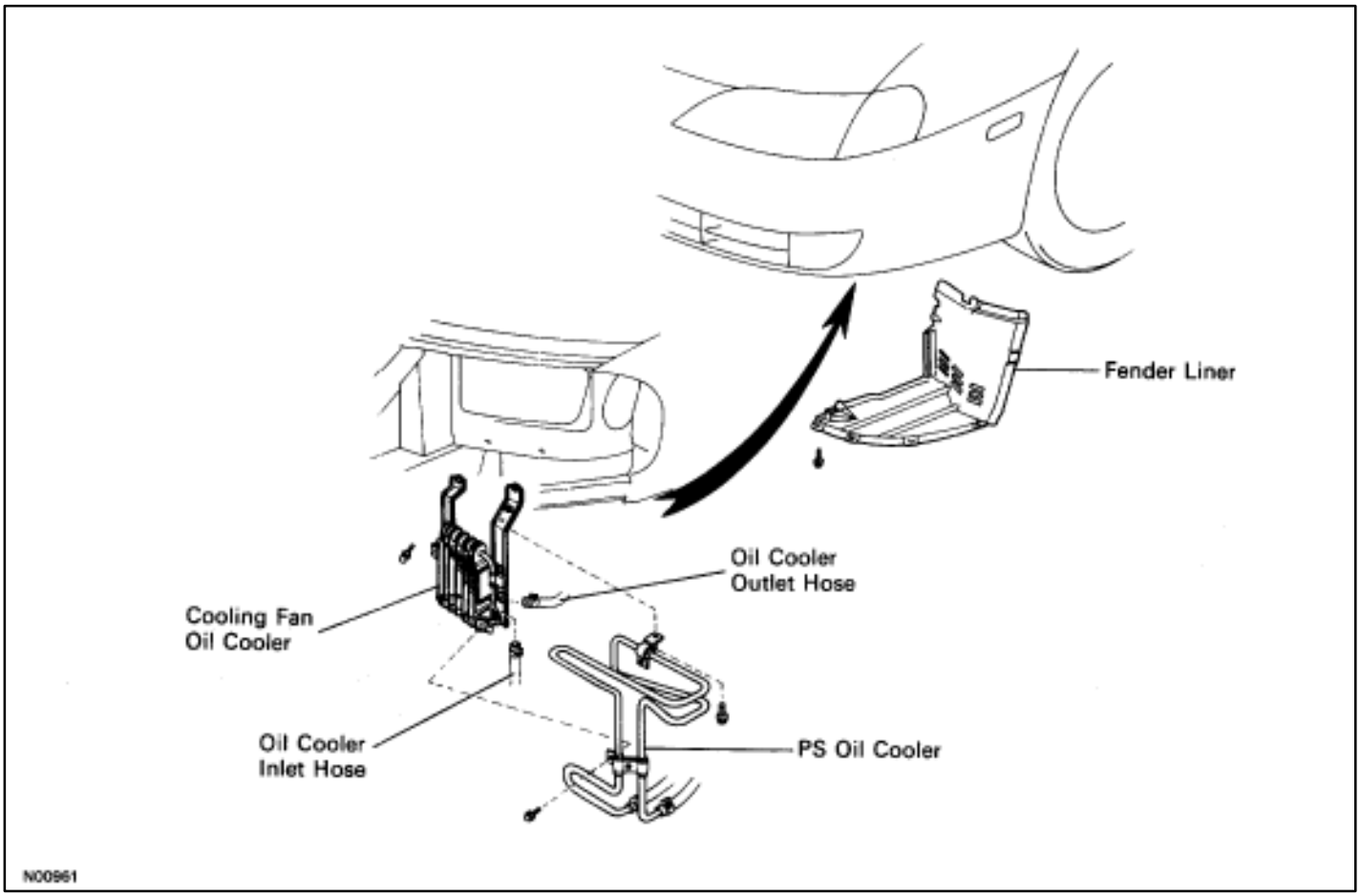

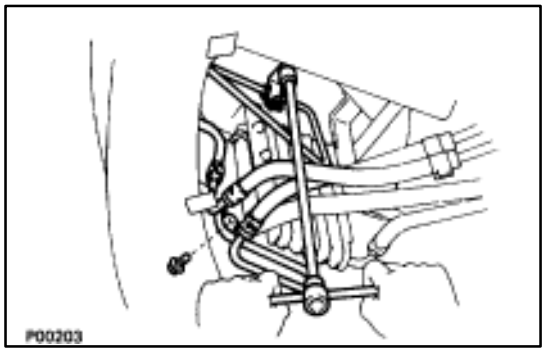

REMOVAL OF OIL COOLER

1. **REMOVE FENDER LINER**
2. **DISCONNECT PS OIL COOLER**
   Remove the two bolts, and disconnect the PS oil cooler from cooling fan oil cooler.

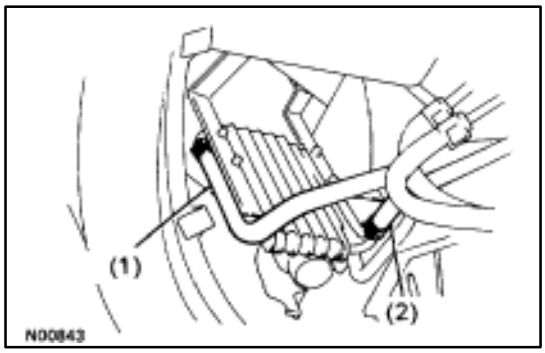

3. **DISCONNECT HOSES FROM OIL COOLER**
   Disconnect the following hoses:
   (1) Inlet hose (from reservoir tank)
   (2) Outlet hose (from hydraulic motor)

WhereEverybodyKnowsYourName

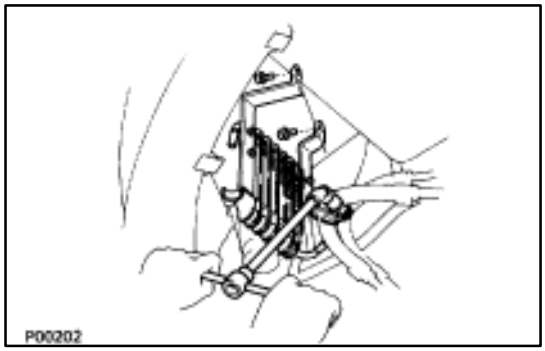

4. REMOVE OIL COOLER

Remove the three bolts and oil cooler.

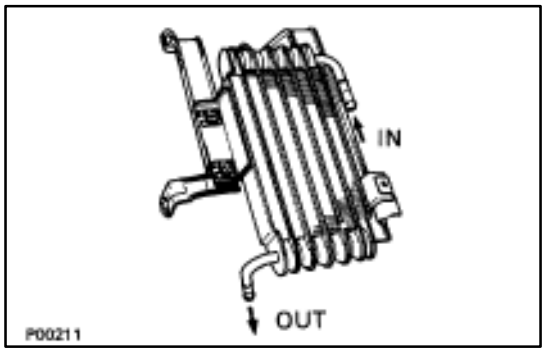

INSPECTION OF OIL COOLER

INSPECT OIL COOLER

Check the oil cooler for damage or clogging.

If necessary, replace the oil cooler.

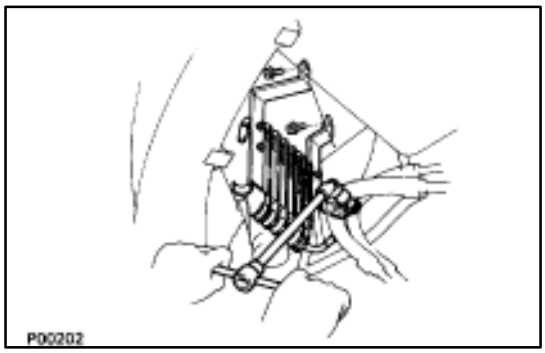

INSTALLATION OF OIL COOLER

(See Components on page CO–58)

1. INSTALL OIL COOLER

Install the oil cooler with the three bolts.

Torque: 18 N·m (180 kgf·cm, 13 ft·lbf)

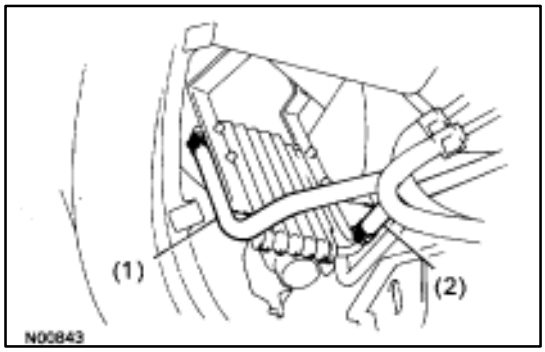

2. CONNECT HOSES FROM OIL COOLER

Connect the following hoses:

(1) Inlet hose (from reservoir tank)

(2) Outlet hose (from hydraulic motor)

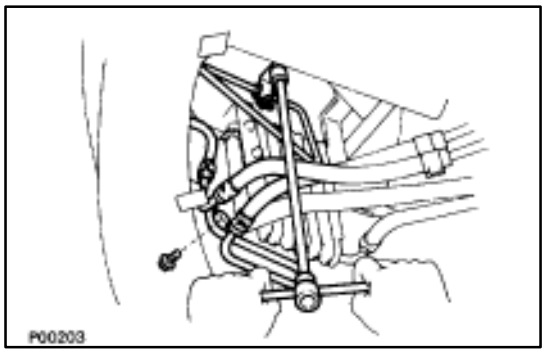

3. INSTALL PS OIL COOLER

Install the oil cooler with the two bolts.

4. REMOVE FENDER LINER

5. FILL COOLING FAN RESERVOIR TANK WITH FLUID

(See pages CO–23 and 24)

6. START ENGINE AND CHECK FOR LEAKS

WhereEverybodyKnowsYourName

Electronic Control Parts
(System Circuit)

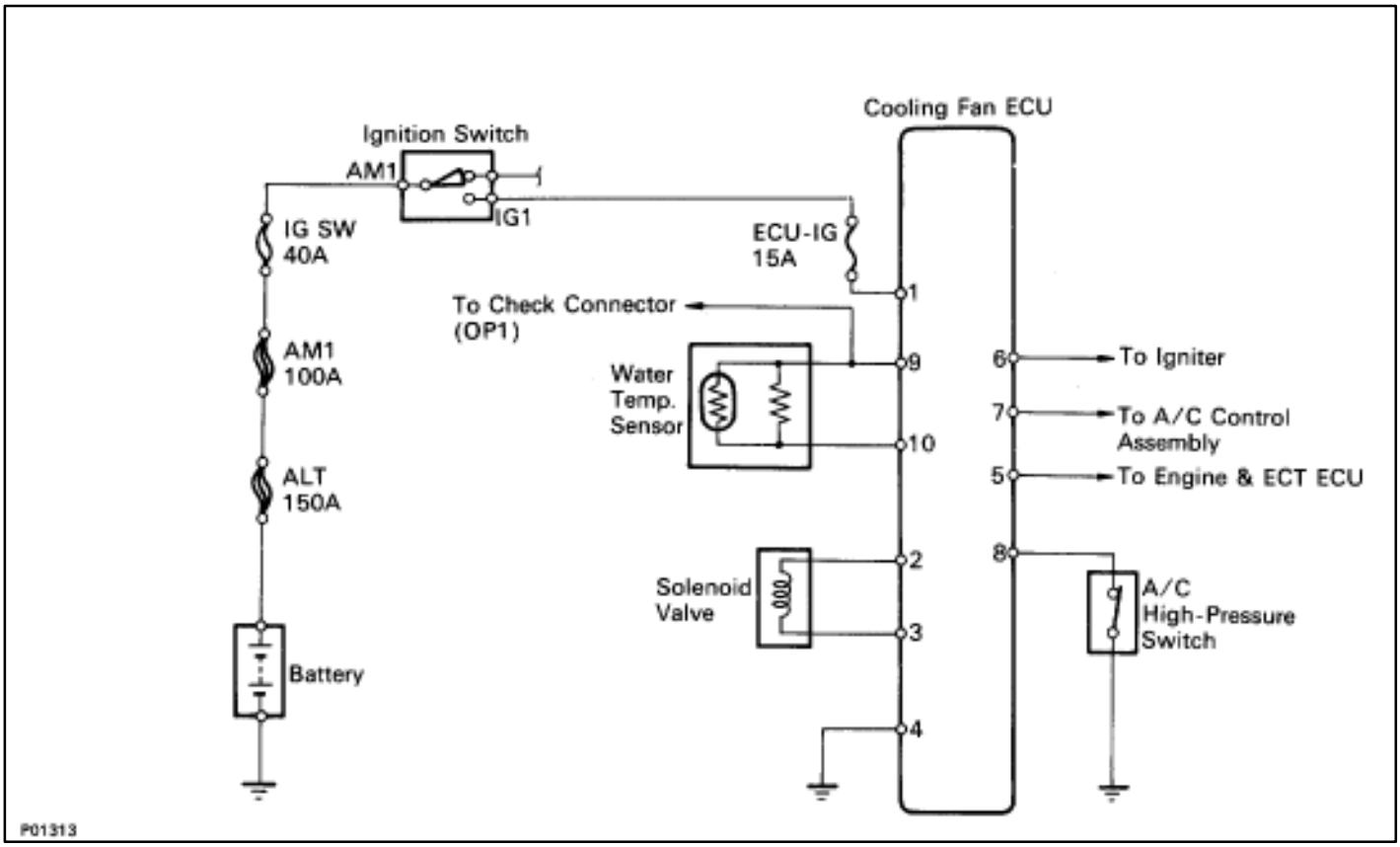

(Cooling Fan ECU)
COMPONENTS FOR REMOVAL AND INSTALLATION

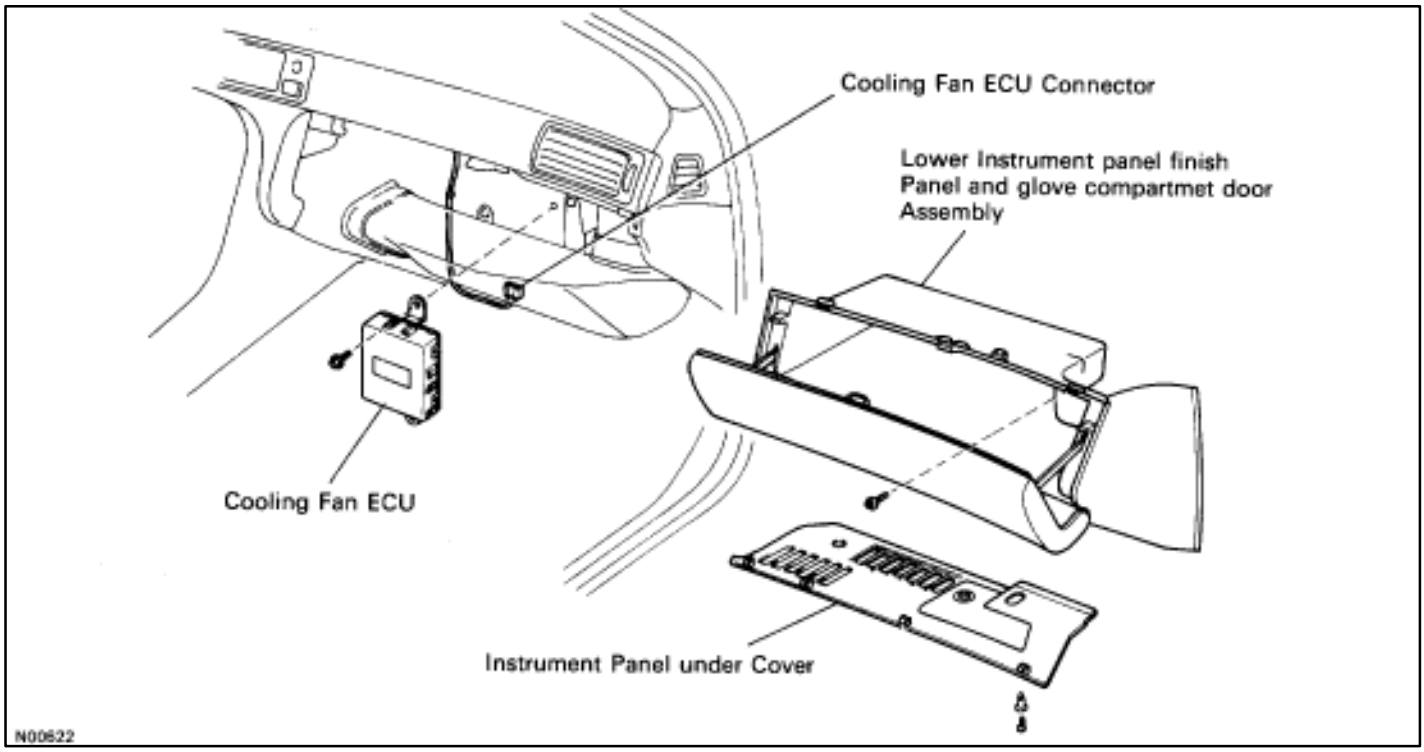

WhereEverybodyKnowsYourName

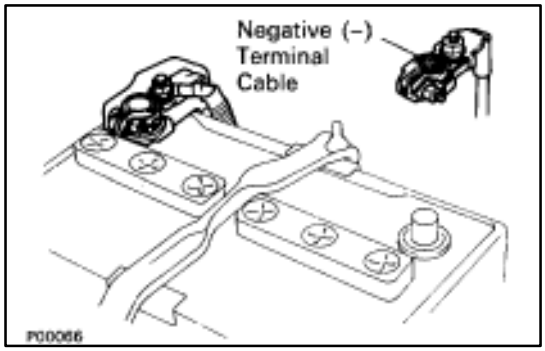

INSPECTION OF COOLING FAN ECU

1. DISCONNECT CABLE FROM NEGATIVE TERMINAL OF BATTERY

CAUTION: Work must be started after 20 seconds or longer from the time the ignition switch is turned to the ”LOCK” position and the negative (–) terminal cable is disconnected from the battery.

2. DISCONNECT COOLING FAN ECU CONNECTOR

(See Components on page CO–60)

(a) Remove the instrument panel under cover.
(b) Remove the lower instrument panel finish panel and glove compartment door assembly.
(c) Disconnect the cooling fan ECU connector.

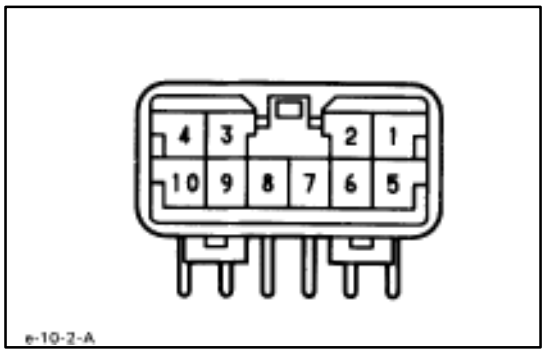

3. INSPECT COOLING FAN ECU

(a) Connect the cable to the negative (–) terminal of the battery.
(b) Check the connector on the wiring harness side as shown in the chart.

Check for	Tester connection	Condition	Specified value
Voltage	1–Ground	Ignition switch ON	Battery voltage
Resistance	2–3	Solenoid valve at cold (20°C (68°F))	7.5–8.5 ?
Continuity	4–Ground	–	Continuity
Continuity	5–Ground	Throttle valve open	No continuity
		Throttle valve closed	Continuity
Resistance	9–10	Coolant temp. at 80°C (176°F)	1.48–1.58 k?

(c) Disconnect the cable from the negative (–) terminal of the battery.

4. RECONNECT COOLING FAN ECU CONNECTOR

5. RECONNECT CABLE TO NEGATIVE TERMINAL OF BATTERY

WhereEverybodyKnowsYourName

(Water Temperature Sensor)

COMPONENTS FOR REMOVAL AND INSTALLATION

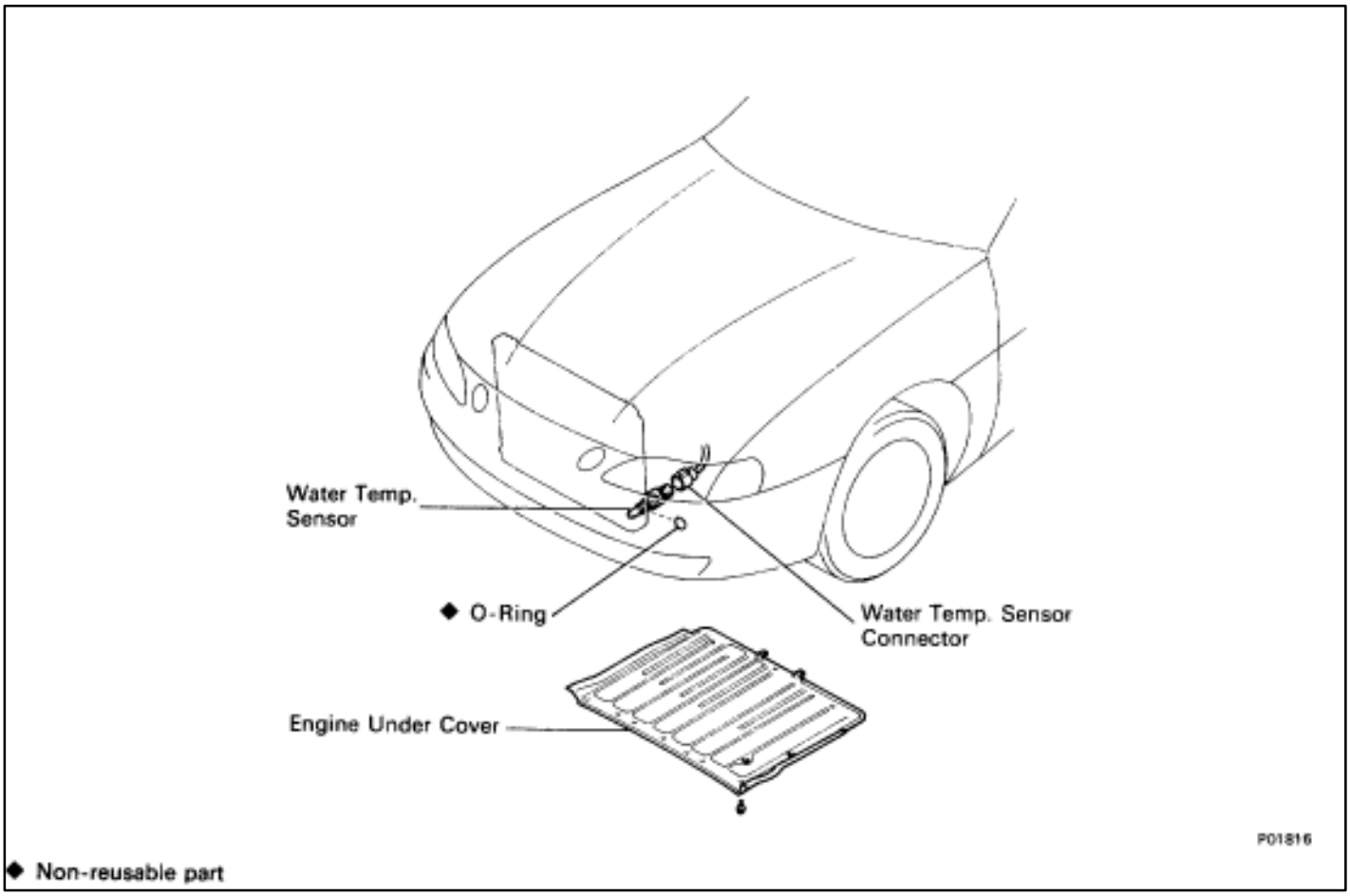

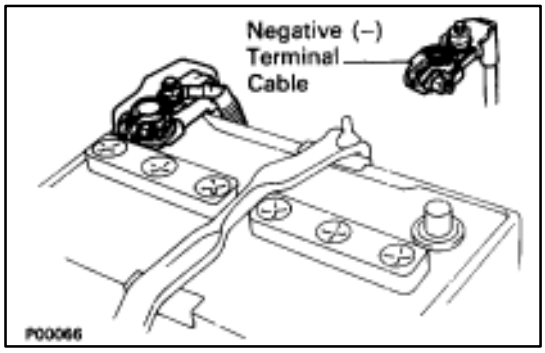

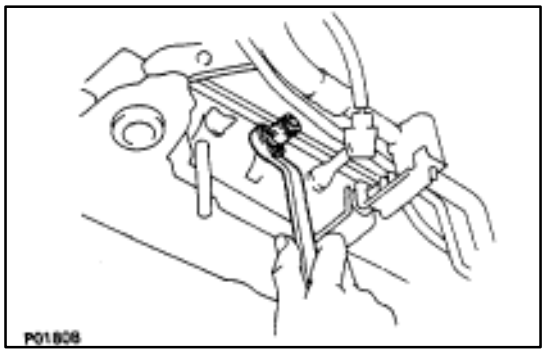

INSPECTION OF WATER TEMPERATURE SENSOR

1. **DISCONNECT CABLE FROM NEGATIVE TERMINAL OF BATTERY**
   CAUTION: Work must be started after 20 seconds or longer from the time the ignition switch is turned to the "LOCK" position and the negative (–) terminal cable is disconnected from the battery.
2. **REMOVE ENGINE UNDER COVER**
3. **DRAIN ENGINE COOLANT (See page CO–6)**
4. **REMOVE WATER TEMPERATURE SENSOR**
   (a) Disconnect the water temperature sensor connector.
   (b) Remove the water temperature sensor from left side of the radiator lower tank.
   (c) Remove the O–ring from the water temperature sensor.

WhereEverybodyKnowsYourName

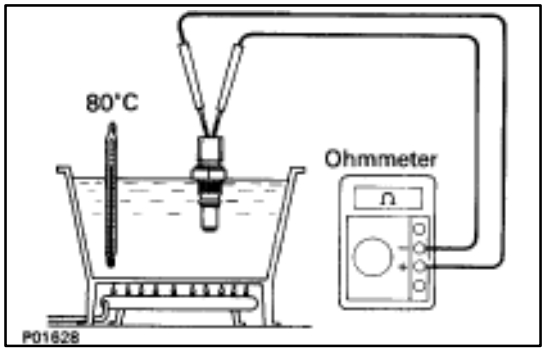

5. INSPECT WATER TEMPERATURE SENSOR

Using an ohmmeter, measure the resistance between the terminals.

Resistance: 1.48–1.58 k? at 80°C (176°F)

If the resistance is not as specified, replace the sensor.

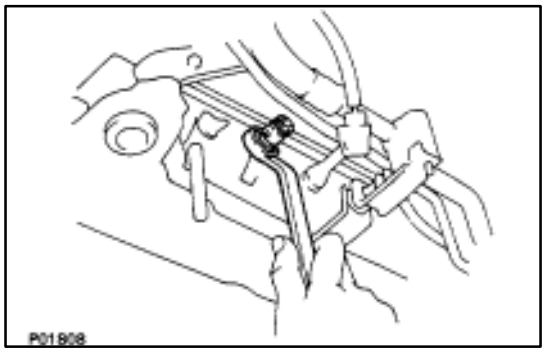

6. REINSTALL WATER TEMPERATURE SENSOR

(a) Install a new O–ring to the water temperature sensor.
(b) Apply soapy water to the O–ring.
(c) Install the water temperature sensor to the radiator.

Torque: 7.4 N·m (75 kgf·cm, 65 in.·lbf)

(d) Connect the water temperature sensor connector.

7. REFILL WITH ENGINE COOLANT (See page CO–7)
8. REINSTALL ENGINE UNDER COVER
9. RECONNECT CABLE FROM NEGATIVE TERMINAL OF BATTERY

(A/C High–Pressure Switch)

INSPECTION OF A/C HIGH–PRESSURE SWITCH

1. DISCONNECT HIGH–PRESSURE SWITCH CONNECTOR
2. INSTALL MANIFOLD GAUGE SET (See AC section)
3. INSPECT HIGH–PRESSURE SWITCH

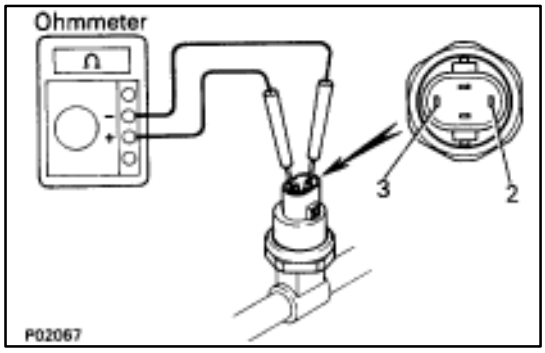

(a) When the A/C switch is OFF, check that there is continuity between terminals 2 and 3. (When the pressure is 1,226 kPa (12.5 kgf/cm^2, 178 psi) or lower.)
(b) When the A/C switch and blower switch are ON, check that there is no continuity between terminals 2 and 3. (When the pressure is 1,520 kPa (15.5 kgf/cm^2, 220 psi) or higher.)

If continuity is not as specified, replace the switch.

4. REMOVE MANIFOLD GAUGE SET
5. RECONNECT HIGH–PRESSURE SWITCH CONNECTOR

(Solenoid Valve)

(See page CO–36)

WhereEverybodyKnowsYourName

SERVICE SPECIFICATIONS

SERVICE DATA

Thermostat	Valve opening temperature			80–84°C	176–183°F
	Valve lift		at 95°C (203°F)	10 mm	0.39 in.
Radiator cap	Relief valve opening pressure		STD	74–103 kPa	
				(0.75–1.05 kgf/cm, 10.7–14.9 psi)	
			Limit	59 kPa	0.6 kgf/cm 8.5 psi
On–vehicle inspection for hydraulic cooling fan	Oil pressure			1,177–2,452 kPa	
				(12–25 kgf/cm, 171–356 psi)	
Hydraulic pump	Spool valve			45.8 mm	1.803 in.
	Rotor side clearance	STD	Drive rotor	0.02 mm	0.0008 in.
			Driven rotor	0.03 mm	0.0012 in.
		Limit	Drive rotor	0.03 mm	0.0012 in.
			Driven rotor	0.04 mm	0.0016 in.
	Rotor body clearance		STD	0.05–0.09 mm	0.0020–0.0035 in.
			Limit	0.10 mm	0.0039 in.
	Rotor tip clearance		STD	0.02 mm	0.0008 in.
			Limit	0.03 mm	0.0012 in.
	Drive shaft bushing inside diameter			17.00–17.05 mm	0.6693–0.6713 in.
	Drive shaft diameter			16.97–16.98 mm	0.6681–0.6685 in.
	Drive shaft oil clearance		STD	0.02–0.08 mm	0.0008–0.0031 in.
			Limit	0.08 mm	0.0031 in.
	Drive shaft preload (rotating torque)			0.3 N·m	3.0 kgf·cm 2.6 in.·lbf
	Solenoid valve resistance		at cold	7.5–8.5 ?	
Hydraulic motor	Rotor side clearance		STD	0.01–0.04 mm	0.0004–0.0016 in.
			Limit	0.05 mm	0.0020 mm
	Drive shaft hole inside diameter			14.000–14.011 mm	0.5512–0.5516 in.
	Drive shaft diameter			13.973–13.984 mm	0.5501–0.5506 in.
	Drive shaft oil clearance		STD	0.016–0.038 mm	0.0006–0.0015 in.
			Limit	0.04 mm	0.0031 in.
	Drive shaft preload (rotating torque)			0.3 N·m	3.0 kgf·cm 2.6 in.·lbf
Water temp. sensor	Resistance		at 80°C (176°F)	1.48–1.58 k?	

WhereEverybodyKnowsYourName

TORQUE SPECIFICATIONS

Part tightened		N·m	kgf·cm	ft·lbf
Engine drain plug X Cylinder block		18	180	13
Coolant filler plug X Water inlet housing		44	450	33
Water pump X Cylinder block		18	185	13
Water inlet housing X Water pump		18	185	13
Water inlet X Water inlet housing		18	185	13
Radiator fan shroud X Radiator		4.9	50	43 in.·lbf
Radiator X Body		12	120	9
Cooling fan reservoir tank X Radiator fan shroud		4.9	50	43 in.·lbf
Cooling fan inlet pipe X Radiator fan shroud		4.9	50	43 in.·lbf
Cooling fan pressure hose X Hydraulic motor		64	650	47
Radiator reservoir tank X Upper radiator support		4.9	50	43 in.·lbf
Radiator reservoir tank X Radiator reservoir tank support		4.9	50	43 in.·lbf
Hydraulic pump rear housing X End plug (for spool valve)		19	200	14
Hydraulic pump front housing X Rear housing		21	210	15
Hydraulic pump pulley X Drive shaft		59	600	43
Solenoid valve X Hydraulic pump rear housing		39	400	28
Hydraulic pump suction port union X Rear housing		13	135	10
Hydraulic pump X Cylinder block	12 mm head	16	160	12
	14 mm head	20	310	22
Cooling fan pressure hose X Hydraulic pump		64	650	47
RH No.2 timing belt cover X Cylinder block		16	160	12
Drive belt idler pulley X Hydraulic pump		37	380	27
A/C compressor X Hydraulic pump		49	500	36
A/C compressor X Cylinder block		49	500	36
A/C compressor stay X Oil filter bracket		29	300	22
Hydraulic motor cover X Motor housing		28	290	21
Hydraulic motor X Radiator fan shroud		4.9	50	43 in.·lbf
Cooling fan X Hydraulic motor		15	150	11
Cooling fan oil cooler X Body		18	180	13
Water temperature sensor X Radiator		7.4	75	65 in.·lbf

WhereEverybodyKnowsYourName

EMISSION CONTROL SYSTEM

NOTE: The specification descriptions ”**USA Spec.**” and ”**Exc. USA Spec.**” used in this section indicate the following specifications.
USA Spec.: USA (50 States) Specifications
Exc. USA Spec.: USA (except California) and Canadian Specifications.

WhereEverybodyKnowsYourName

DESCRIPTION

The emission control systems are installed to reduce the amount of HC, CO, and NOx emitted from the engine, and to also prevent the release of evaporated fuel from the gasoline tank and prevent atmospheric release of blow–by gas.

The system consists of the PCV, EVAP, EGR and TWC.

The function of each system is shown in the following table.

System	Abbreviation	Purpose
Positive crankcase ventilation	PCV	Reduces blow–by gas (HC)
Fuel evaporative emission control	EVAP	Reduces evaporative HC
Exhaust gas recirculation	EGR	Reduces NOx
Three–way catalyst	TWC	Reduces HC, CO, and NOx
Electronic fuel injection*	EFI	Regulates all engine conditions for reduction of exhaust emissions.

Remarks: * For inspection and repair of the EFI system, refer to EFI section.

COMPONENTS LAYOUT

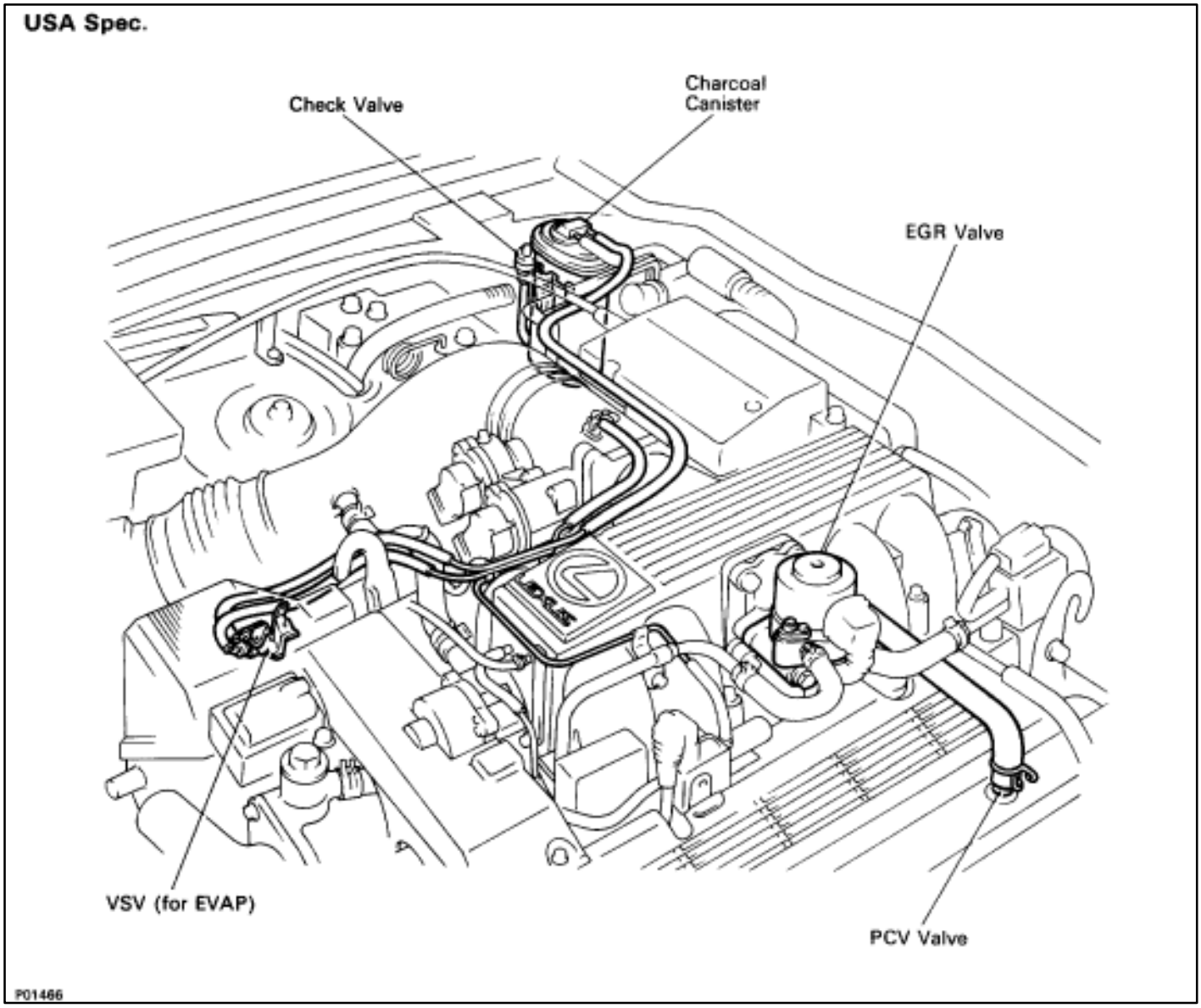

WhereEverybodyKnowsYourName

COMPONENTS LAYOUT (Cont'd)

Exc. USA Spec.

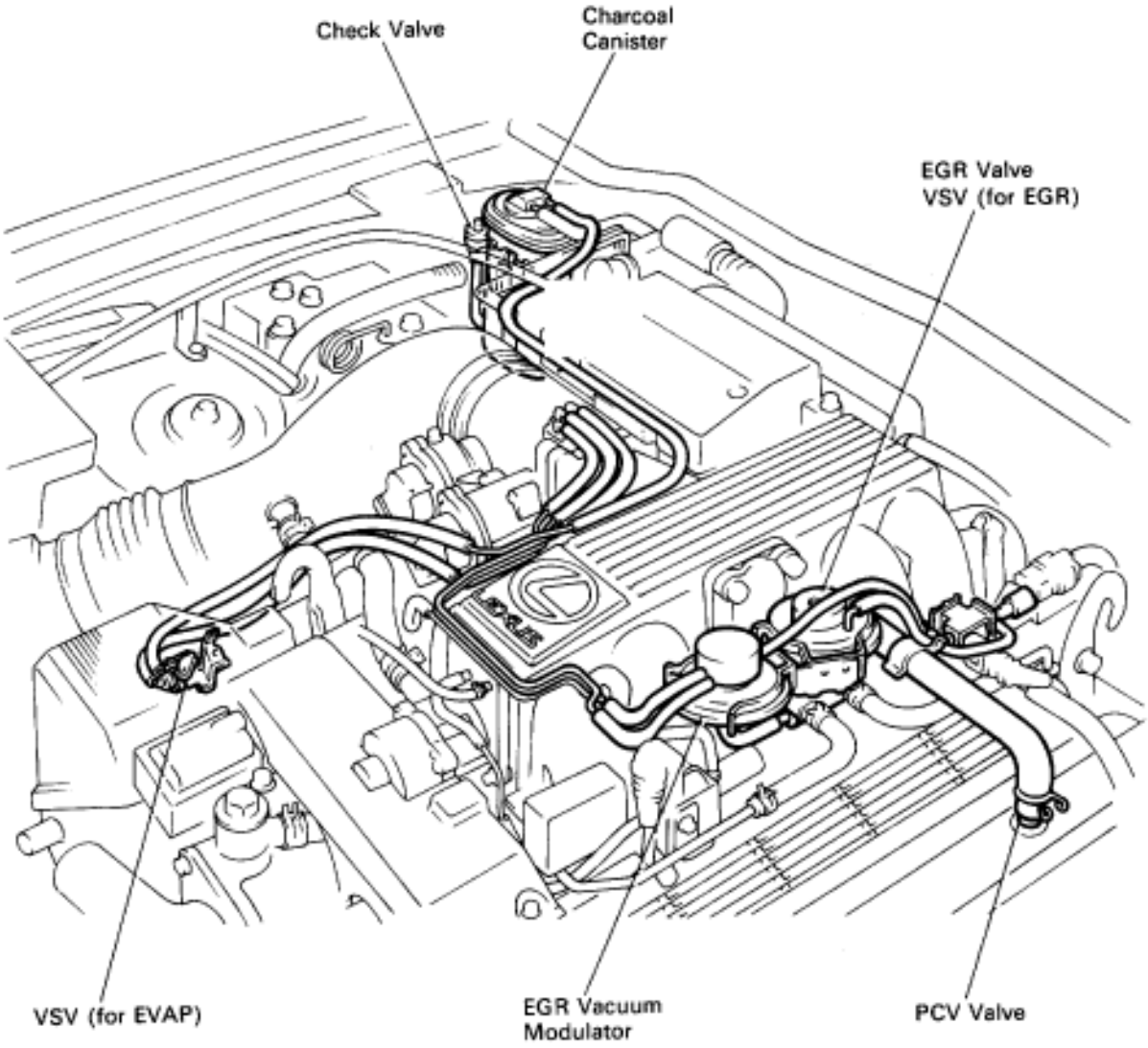

P01466

WhereEverybodyKnowsYourName

SCHEMATIC DRAWING

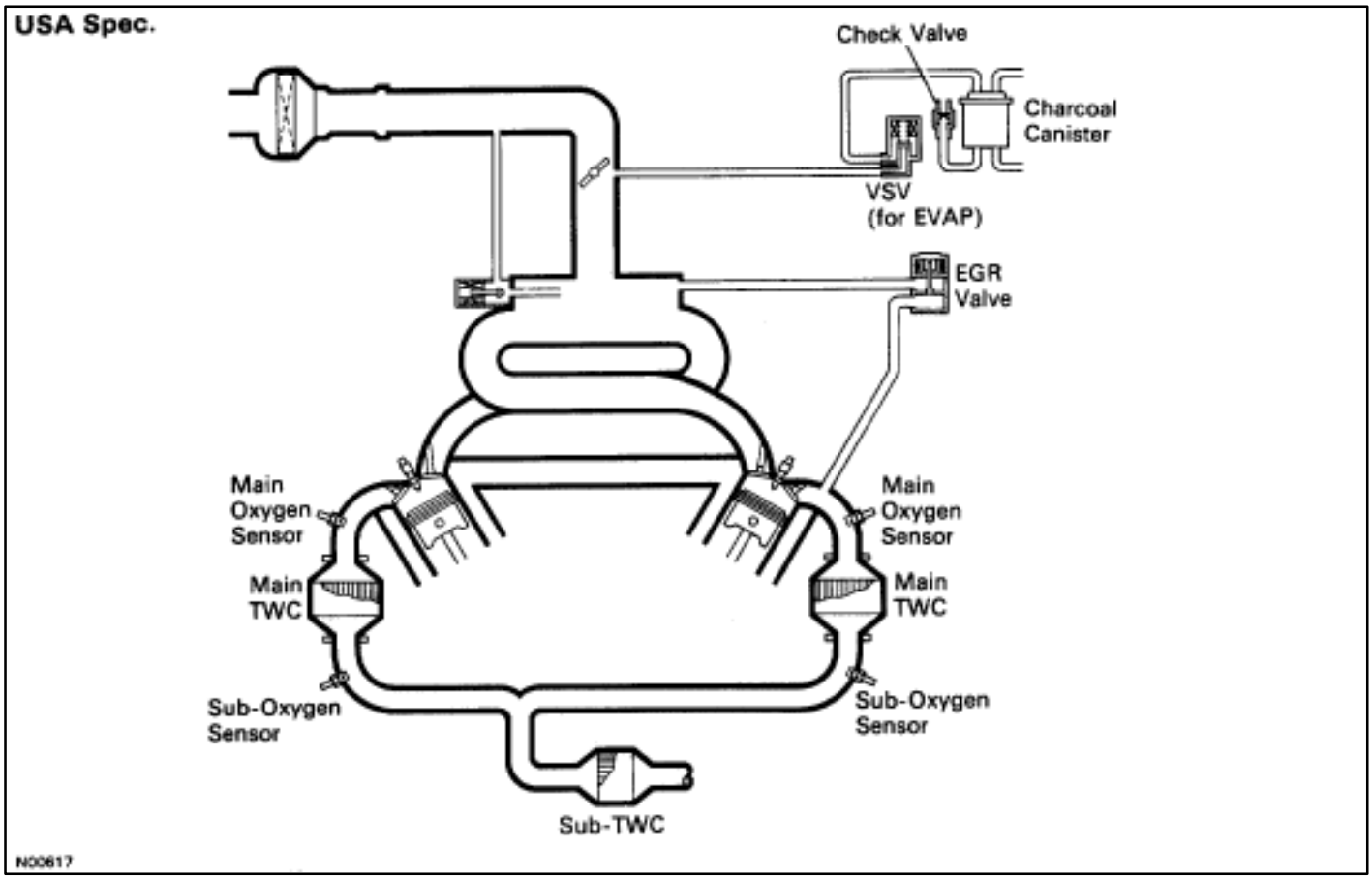

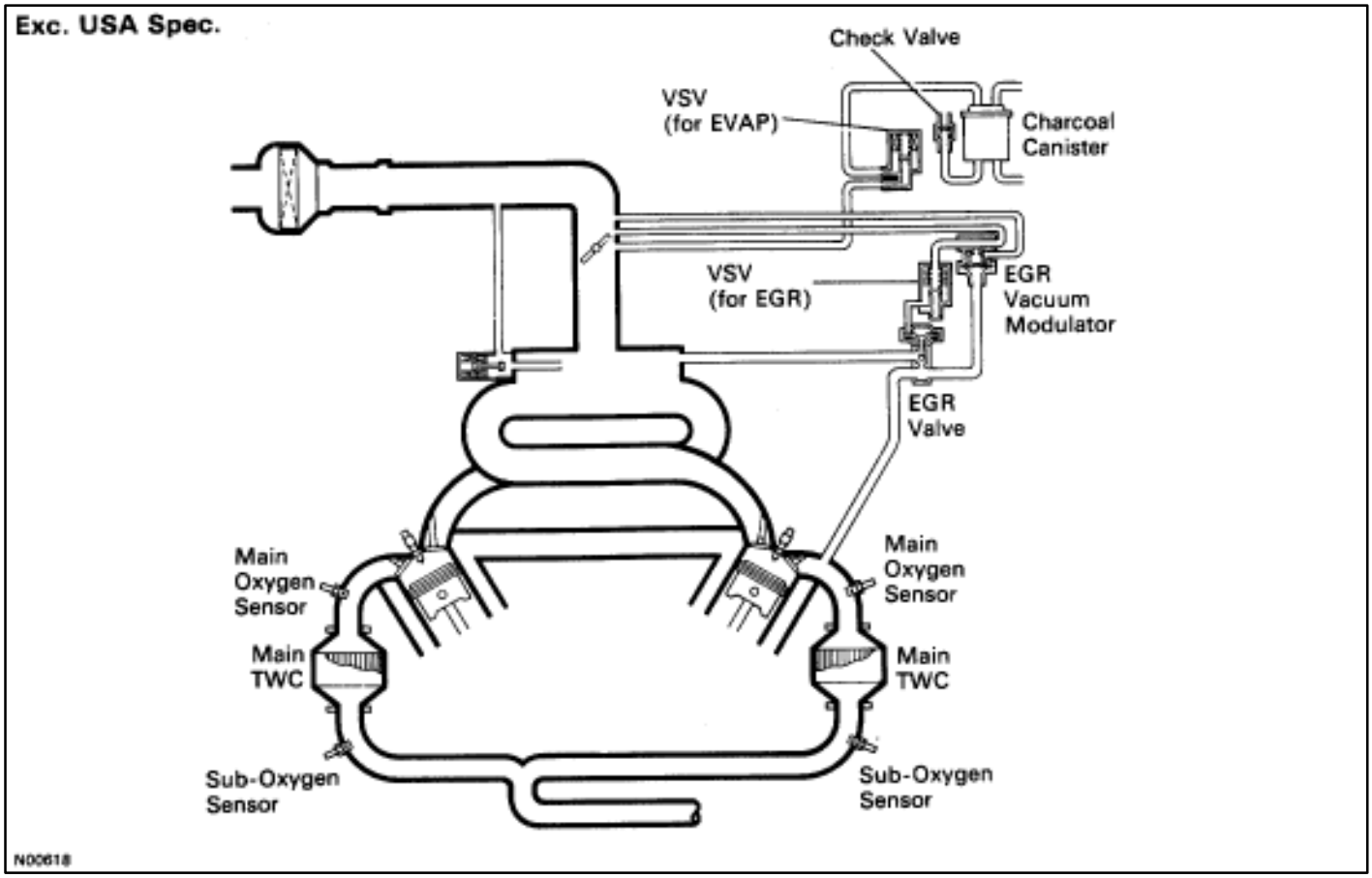

WhereEverybodyKnowsYourName

PREPARATION

SST (SPECIAL SERVICE TOOL)

Illustration	Part No.	Part Name	Note
	09843-18020	Diagnosis Check Wire	for EGR system inspection

RECOMMENDED TOOLS

Illustration	Part No.	Part Name	Note
	09082-00015	TOYOTA Electrical Tester	

EQUIPMENT

Part Name	Note
Engine tune–up tester	Engine speed

WhereEverybodyKnowsYourName

POSITIVE CRANKCASE VENTILATION (PCV) SYSTEM

DESCRIPTION

To reduce HC emission, crankcase blow–by gas (HC) is routed through the PCV valve to the air intake chamber for combustion in the cylinders.

OPERATION

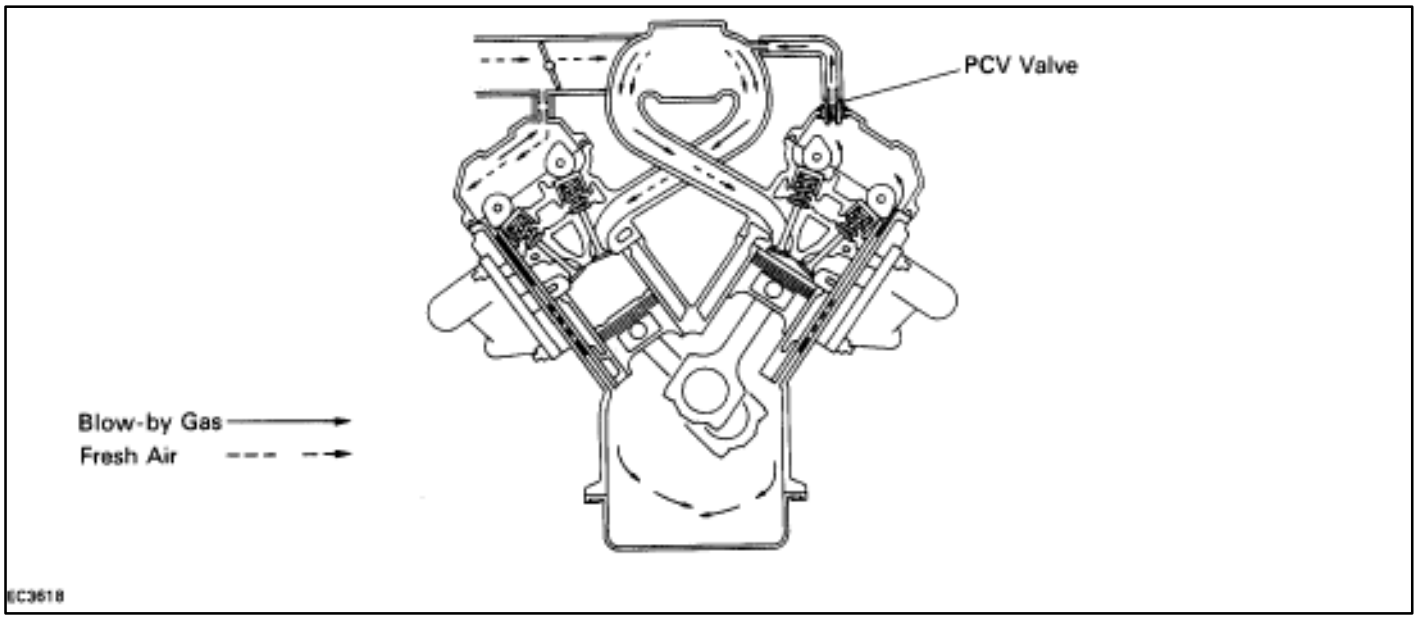

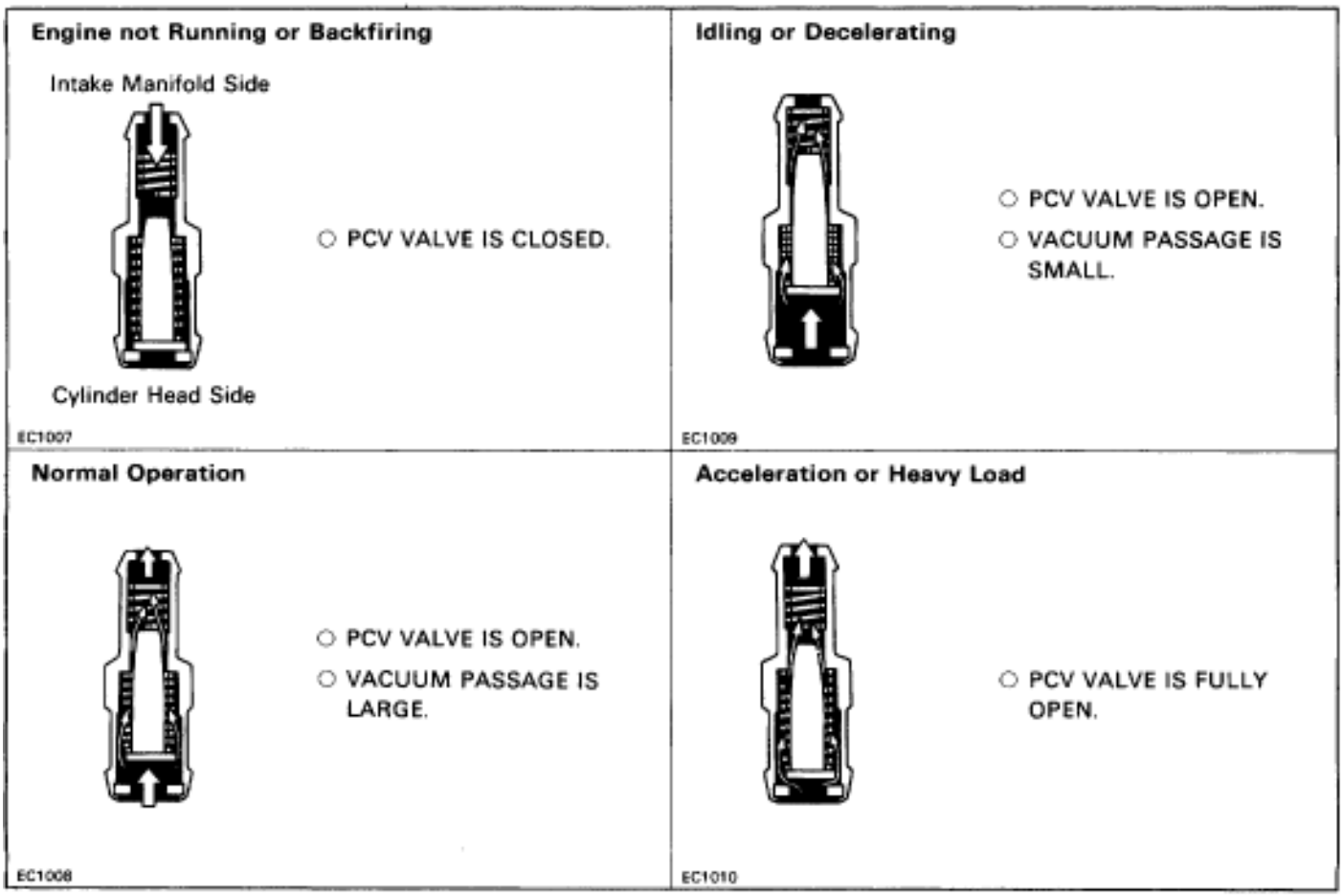

WhereEverybodyKnowsYourName

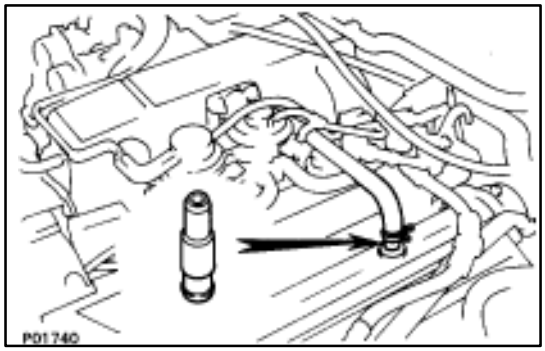

INSPECTION OF PCV VALVE

1. REMOVE PCV VALVE

(a) Disconnect the PCV hose from the PCV valve.

(b) Remove the PCV valve.

2. INSTALL CLEAN HOSE TO PCV VALVE

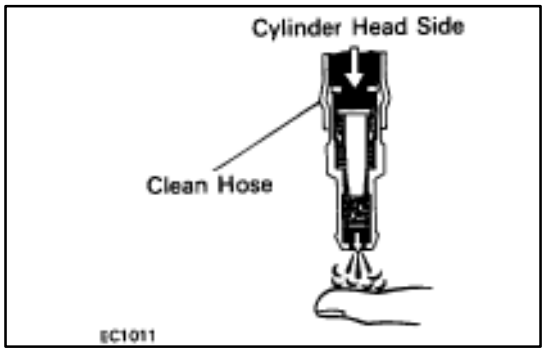

3. INSPECT PCV VALVE OPERATION

(a) Blow air into the cylinder head side, and check that air passes through easily.

CAUTION: Do not suck air through the valve. Petroleum substances inside the valve are harmful.

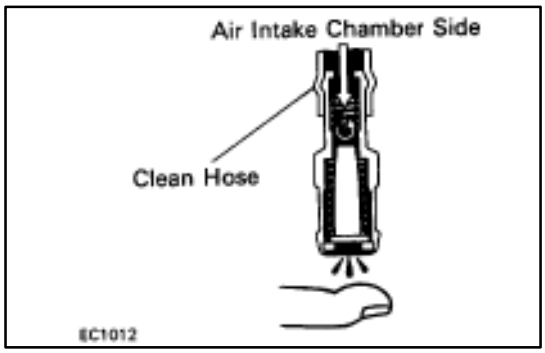

(b) Blow air into the air intake chamber side, and check that air passes through with difficulty.

If operation is not as specified, replace the PCV valve.

4. REMOVE CLEAN HOSE FROM PCV VALVE

5. REINSTALL PCV VALVE

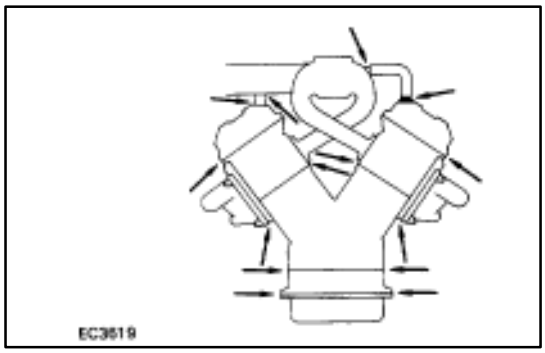

INSPECTION OF PCV HOSE AND CONNECTIONS

VISUALLY INSPECT HOSE, CONNECTIONS AND GASKETS

Check for cracks, leaks or damage.

WhereEverybodyKnowsYourName

FUEL EVAPORATIVE EMISSION CONTROL (EVAP) SYSTEM

DESCRIPTION

To reduce HC emission, evaporated fuel from the fuel tank is routed through the charcoal canister to the intake manifold for combustion in the cylinders.

OPERATION

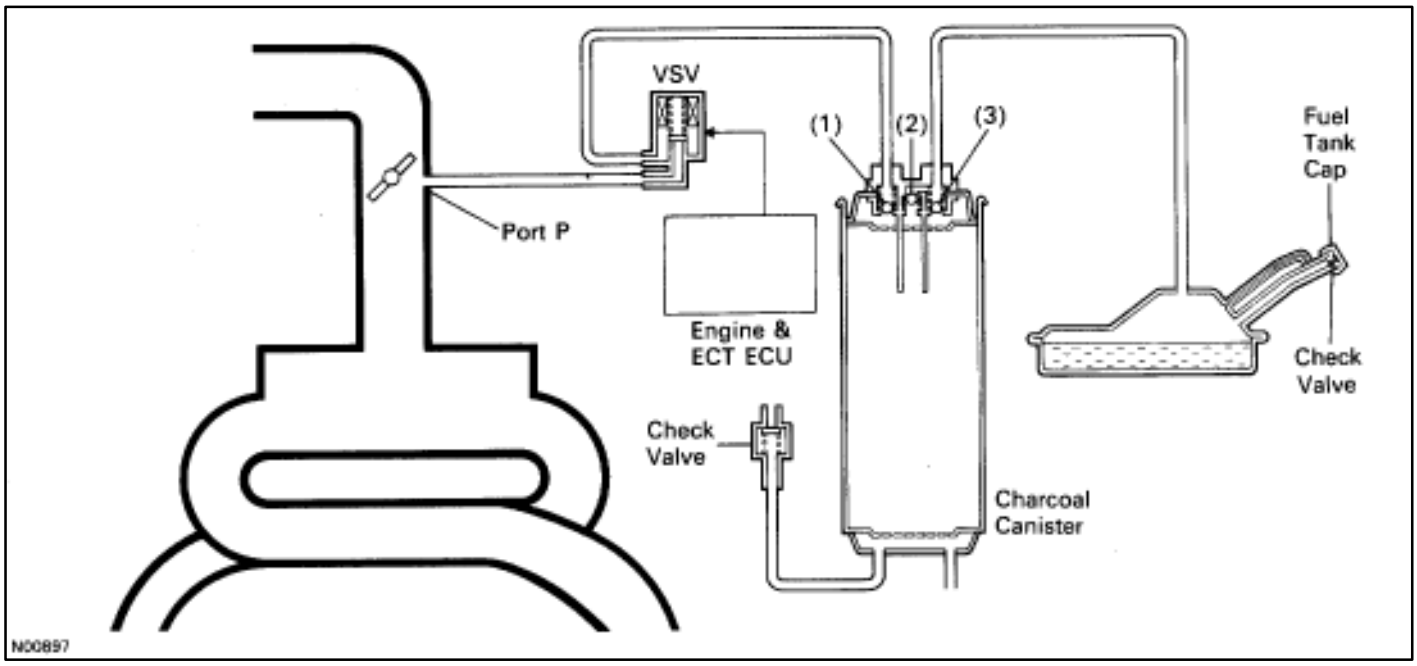

Coolant Temp.	VSV	Throttle Valve Opening	Canister Check Valve			Check Valve in Cap	Evaporated Fuel (HC)
			(1)	(2)	(3)		
Below 40°C (104°F)	No Operation	Fulley closed.	–	–	–	–	Small volume of HC from canister enters air intake chamber.
Above 40°C (104°F)	Operation	Fully closed or bellow Specified air volume.	–	–	–	–	
		Conditions other than above.	–	–	–	–	HC from canister enters air intake chamber in the amout programmed in accordance with the intake air volume.
High pressure in tank	–	–	–	OPEN	CLOSED	CLOSED	HC from tank is absorbed into the canister.
High vacuum in tank	–	–	–	CLOSED	OPEN	OPEN	Air is led into the fuel tank.

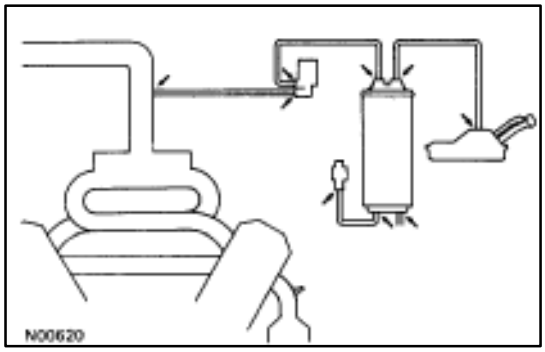

INSPECTION OF FUEL VAPOR LINES, FUEL TANK AND TANK CAP

1. **VISUALLY INSPECT LINES AND CONNECTIONS**
   Look for loose connections, sharp bends or damage.
2. **VISUALLY INSPECT FUEL TANK**
   Look for deformation, cracks or fuel leakage.

WhereEverybodyKnowsYourName

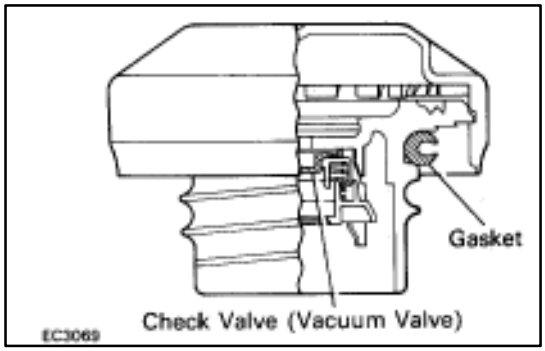

3. VISUALLY INSPECT FUEL TANK CAP

Check if the cap and/or gasket are deformed or damaged. If necessary, repair or replace the cap.

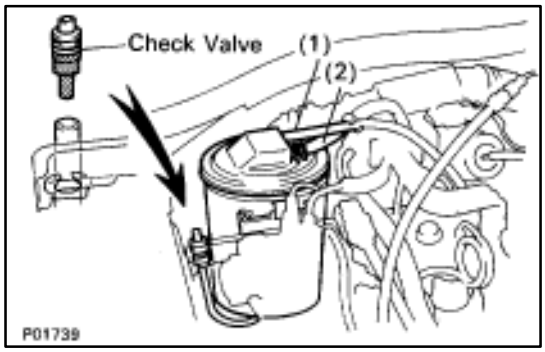

INSPECTION OF CHARCOAL CANISTER

1. REMOVE CHARCOAL CANISTER

(a) Disconnect the following hoses:
(1) Vacuum hose (from VSV) from charcoal canister
(2) EVAP hose from charcoal canister

(b) Disconnect the grommet on the check valve from the bracket, and remove the charcoal canister.

(c) Remove the check valve from the hose end on the charcoal canister.

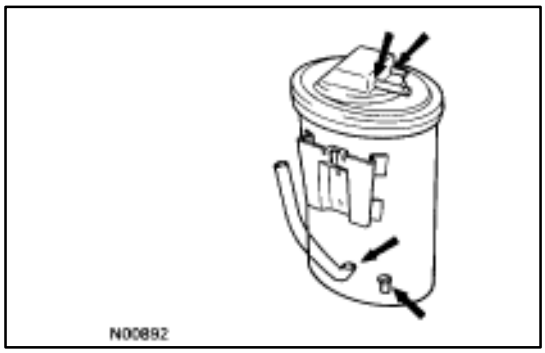

2. VISUALLY INSPECT CHARCOAL CANISTER

Look for cracks or damage.

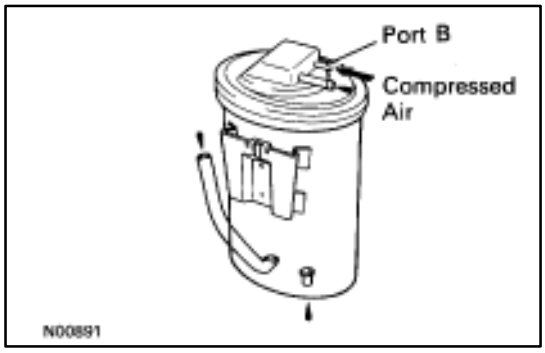

3. CHECK FOR CLOGGED FILTER AND STUCK CHECK VALVE

(a) Using low pressure compressed air, blow into port A and check that air flows without resistance from the other ports.

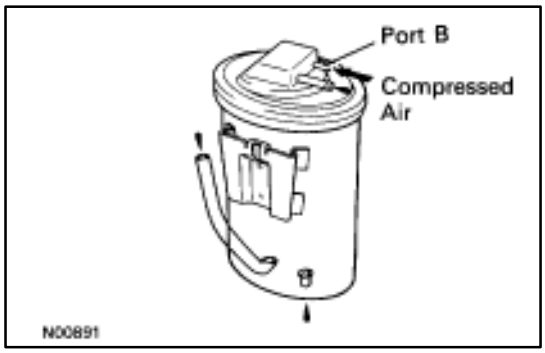

(b) Blow into port B and check that air does not flow from the other ports.

If a problem is found, replace the charcoal canister.

WhereEverybodyKnowsYourName

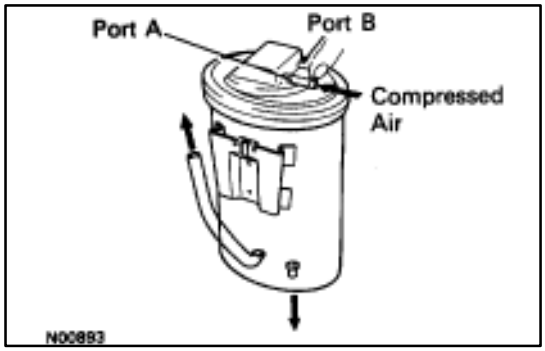

4. CLEAN FILTER IN CANISTER

Clean the filter by blowing 294 kPa (3 kgf/cm2, 43 psi) of compressed air into port A while holding port B closed.

NOTICE:

- **Do not attempt to wash the canister.**
- **No activated carbon should come out.**

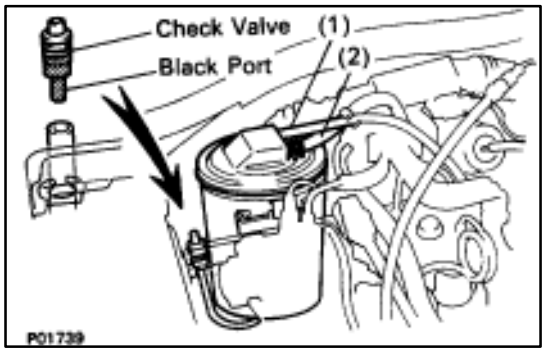

5. REINSTALL CHARCOAL CANISTER

HINT: Install the check valve with black port facing the charcoal canister side.

(a) Install the check valve to the hose end on the charcoal canister.
(b) Install the charcoal canister.
(c) Install the grommet on the check valve to the bracket.
(d) Connect the following hoses:
  (1) Vacuum hose (from VSV) to charcoal canister
  (2) EVAP hose to charcoal canister

COMPONENTS FOR REMOVAL AND INSTALLATION OF VSV

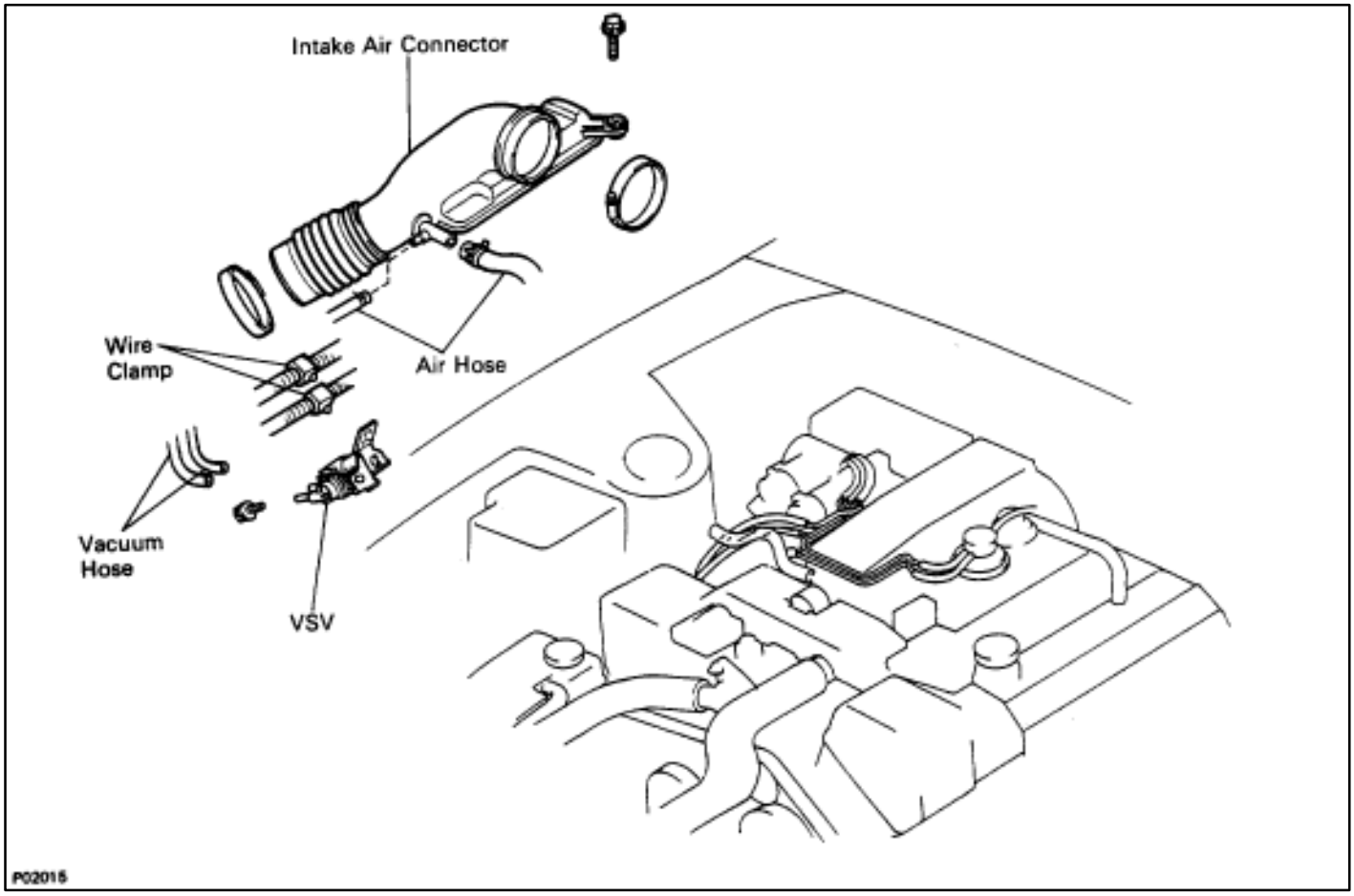

WhereEverybodyKnowsYourName

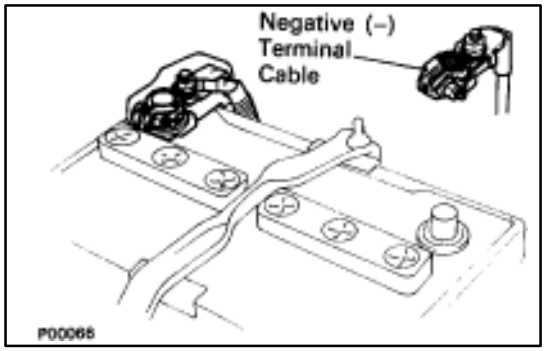

INSPECTION OF VSV

1. DISCONNECT CABLE FROM NEGATIVE TERMINAL OF BATTERY

CAUTION: Work must be started after approx. 20 seconds or longer from the time the ignition switch is turned to the "LOCK" position and the negative (–) terminal cable is disconnected from the battery.

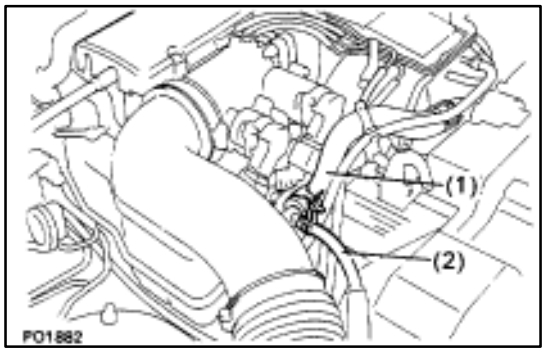

2. REMOVE INTAKE AIR CONNECTOR

(a) Disconnect the following hoses:
  (1) Air hose (from ISC valve) from intake air connector
  (2) Air hose (from PS air control valve) from intake air connector

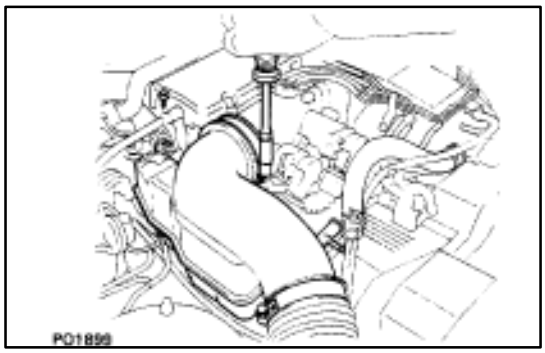

(b) Remove the bolt holding the intake air connector to the cylinder head cover.
(c) Loosen the two hose clamps.
(d) Disconnect the intake air connector from the throttle body and air cleaner hose, and remove the intake air connector.

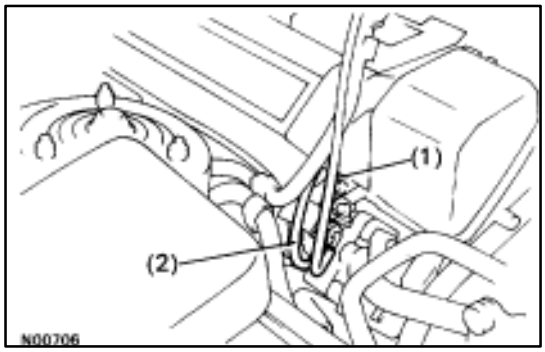

3. REMOVE VSV

(a) Disconnect the VSV connector.
(b) Disconnect the following hoses:
  (1) Vacuum hose (from vacuum pipe) from VSV
  (2) Vacuum hose (from charcoal canister) from VSV

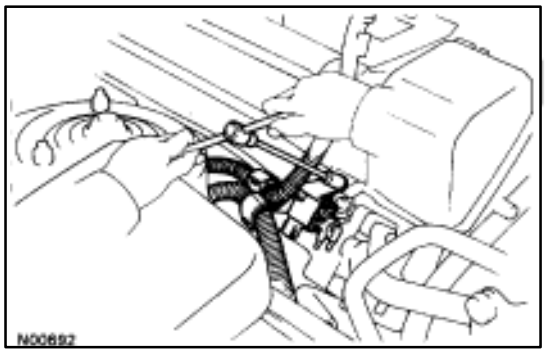

(c) Remove the two bolts and VSV from the cylinder head.
(d) Disconnect the two wire clamps from the VSV bracket, and remove the VSV.

WhereEverybodyKnowsYourName

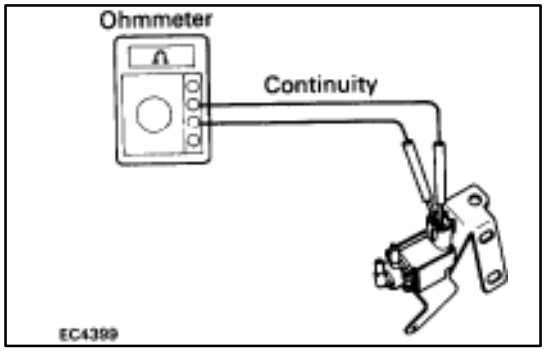

4. INSPECT VSV

A. Inspect VSV for open circuit

Using an ohmmeter, check that there is continuity between the terminals.

Resistance (Cold): 30–34 ?

If there is no continuity, replace the VSV.

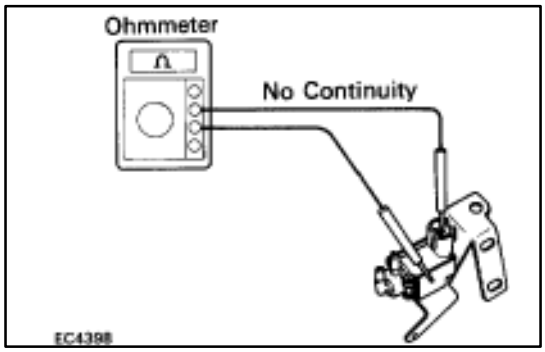

B. Inspect VSV for ground

Using an ohmmeter, check that there is no continuity between each terminal and the body.

If there is continuity, replace the VSV.

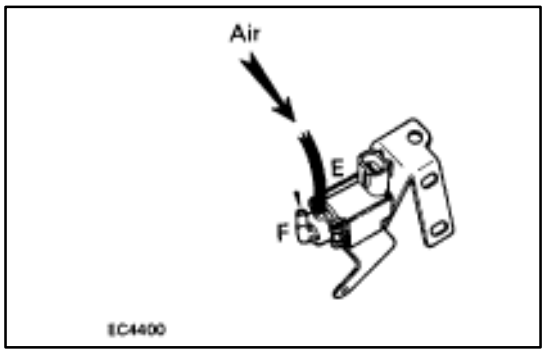

C. Inspect VSV operation

(a) Check that the air flows with difficulty from ports E to F.

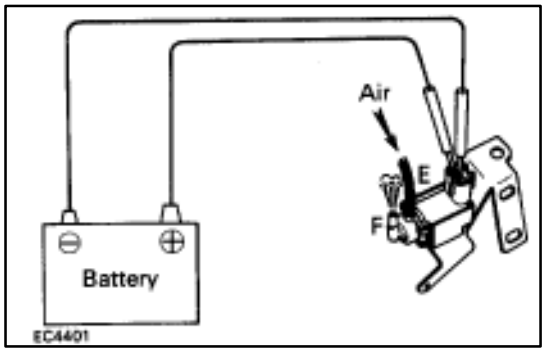

(b) Apply battery voltage across the terminals.

(c) Check that the air flows without resistance from port E to F.

If operation is not as specified, replace the VSV.

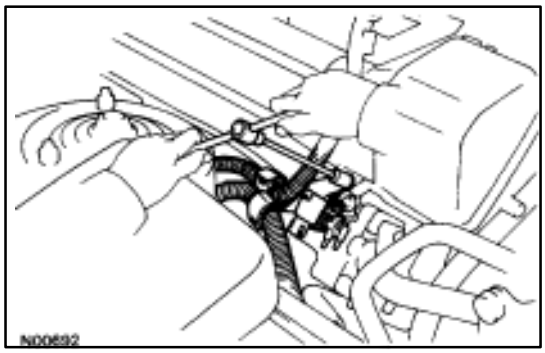

5. REINSTALL VSV

(a) Install the VSV with the two bolts.

(b) Connect the two wire clamps to the VSV bracket.

WhereEverybodyKnowsYourName

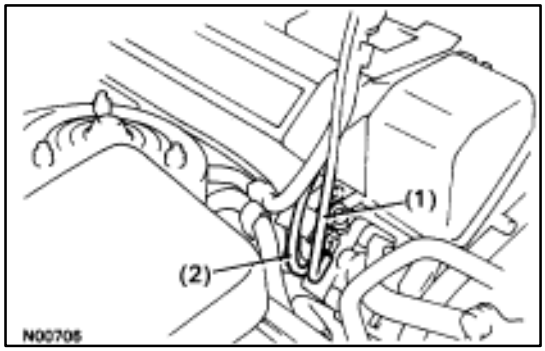

(c) Connect the following hoses:
  (1) Vacuum hose (from vacuum pipe) to VSV
  (2) Vacuum hose (from charcoal canister) to VSV
(d) Connect the VSV connector.

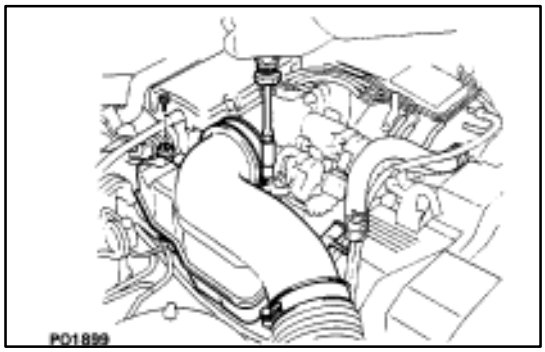

6. REINSTALL INTAKE AIR CONNECTOR
(a) Connect the end portions of the intake air connector to the throttle body and air cleaner hose.
(b) Tighten the two hose clamps.
(c) Install the bolt holding the intake air connector to the cylinder head cover.

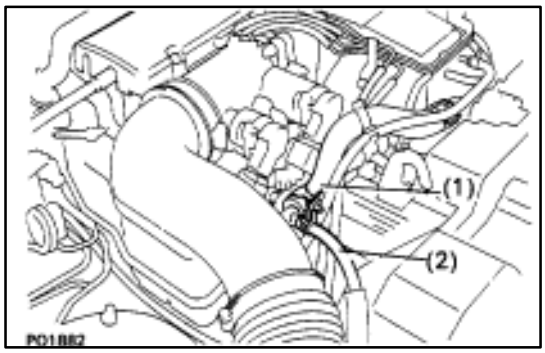

(d) Connect the following hoses:
  (1) Air hose (from ISC valve) to intake air connector
  (2) Air hose (from PS air control valve) to intake air connector

7. RECONNECT CABLE TO NEGATIVE TERMINAL OF BATTERY

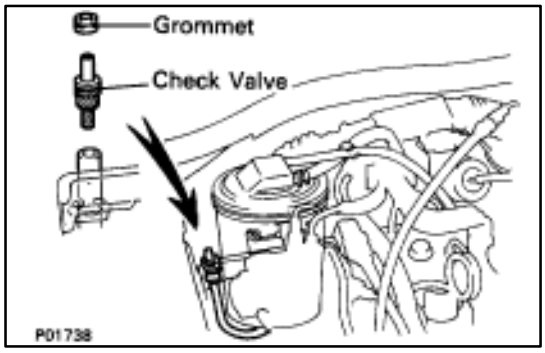

INSPECTION OF CHECK VALVE

1. REMOVE CHECK VALVE
(a) Disconnect the grommet on the check valve from the bracket.
(b) Remove the check valve from the hose end on the charcoal canister.
(c) Remove the grommet from the check valve.

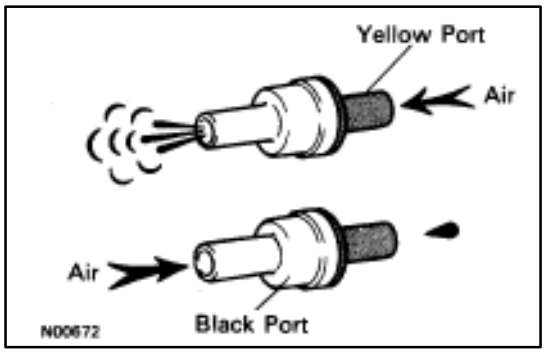

2. INSPECT CHECK VALVE
(a) Check that air flows from the yellow port to the black port.
(b) Check that air does not flow from the black port to the yellow port.

If operation is not as specified, replace the check valve.

WhereEverybodyKnowsYourName

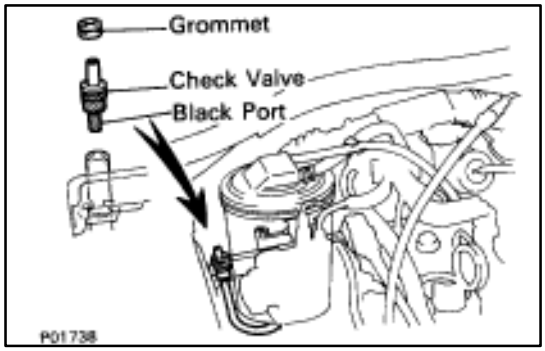

3. REINSTALL CHECK VALVE

HINT: Reinstall the check valve with the black port facing the charcoal canister side.

(a) Install the grommet to the check valve.

(b) Install the check valve to the hose end on the charcoal canister.

(c) Install the grommet on the check valve to the bracket.

WhereEverybodyKnowsYourName

EXHAUST GAS RECIRCULATION (EGR) SYSTEM

DESCRIPTION

To reduce NOx emission, part of the exhaust gases are recirculated through the EGR valve to the intake manifold to lower the maximum combustion temperature.

OPERATION

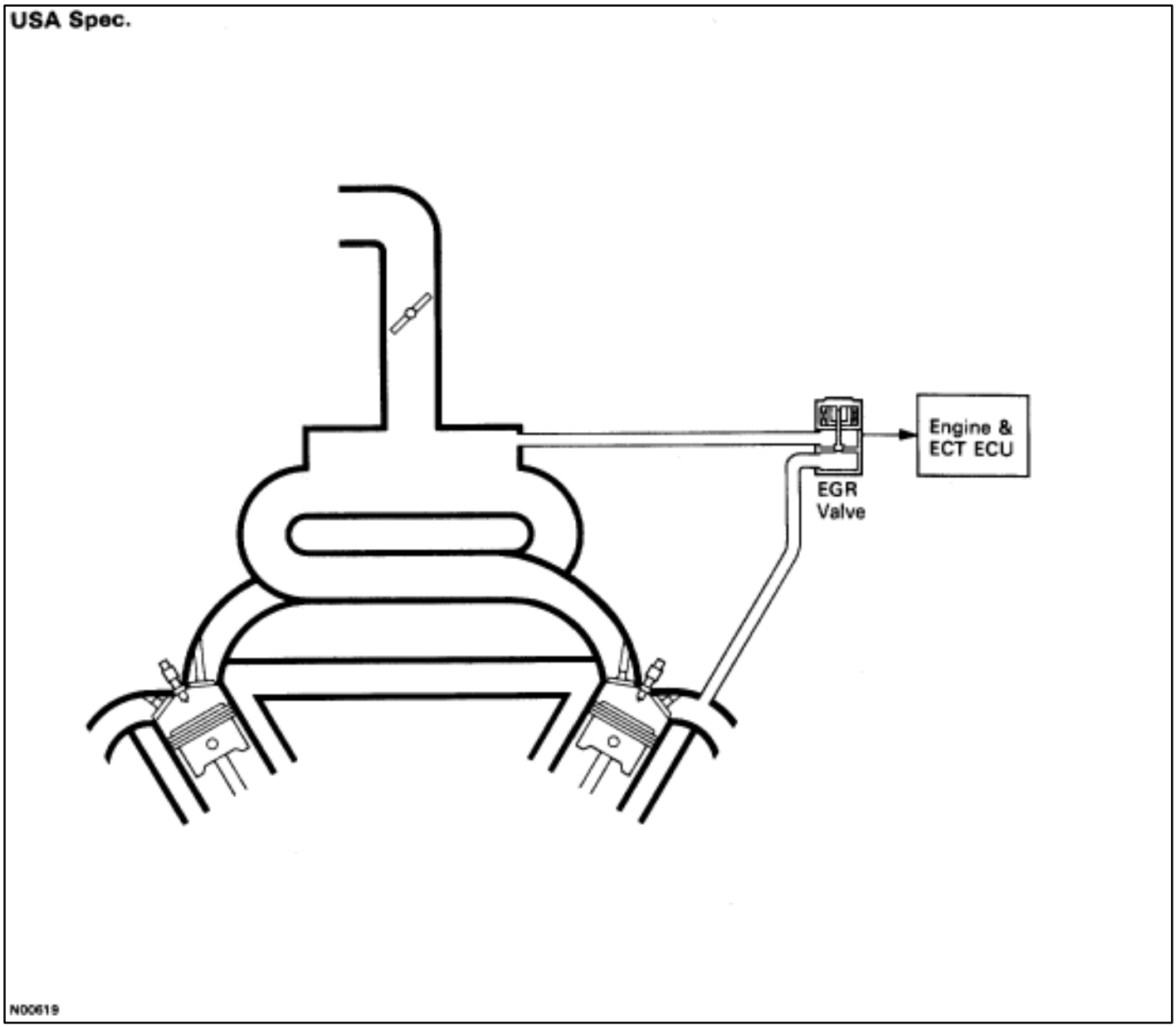

Coolant Temp.	Condition	EGR Valve	Exhaust Gas
Below 53°C (127°F)	–	CLOSED	Not recirculated
Above 55°C (131°F)	(a) Idling, Deceleration, Neutral, Low air volume, High Engine speed	CLOSED	Not recirculated
	Except (a)	OPEN	*Recirculated
* The ECU calculates the appropriate number of steps according to the intake air volume and the engine speed, then drives the stepping motor to maintain the EGR volume at a level appropriate to the driving conditions.			

WhereEverybodyKnowsYourName

OPERATION (Cont'd)

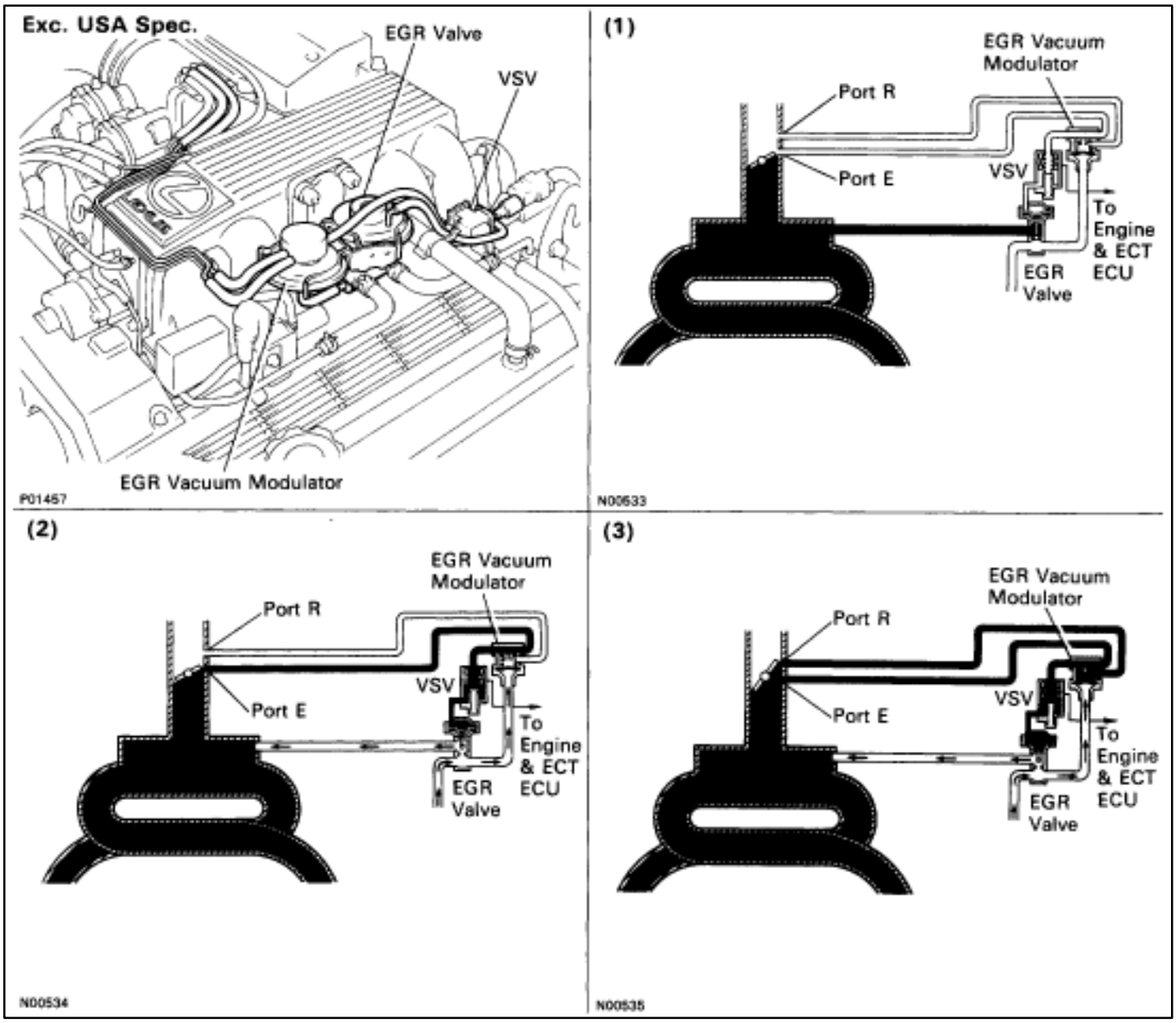

Coolant Temp.	Engine RPM	VSV	Throttle Valve Opening Angle	Pressure in EGR Valve Pressure Chamber		EGR Vacuum Modulator	EGR Valve	Exhaust Gas
Below 53°C (127°F)	–	CLOSED	–	–		–	CLOSED	Not recirculated
Above 55°C (131°F)	Below 3,800 rpm	CLOSED	–	(1)	–	–	CLOSED	Not recirculated
		OPEN	Positioned between Ports E and R	(2) HIGH	*	CLOSED passage to atmosphere	OPEN	Recirculated
			Positioned above Port R	(3) HIGH	**	CLOSES passage to atmosphere	OPEN	Recirculated (increase)
	Above 4,000 rpm	CLOSED	–	–		–	CLOSED	NOT Recirclated

* Pressure increase → Modulator closes → EGR valve opens → Pressure drops → EGR valve close → Modulator opens

** When the throttle valve is positioned above port R, the EGR vacuum modulator will close the atmosphere passage and open the EGR valve to increase the EGR gas, even if the exhaust pressure is insufficiently low.

WhereEverybodyKnowsYourName

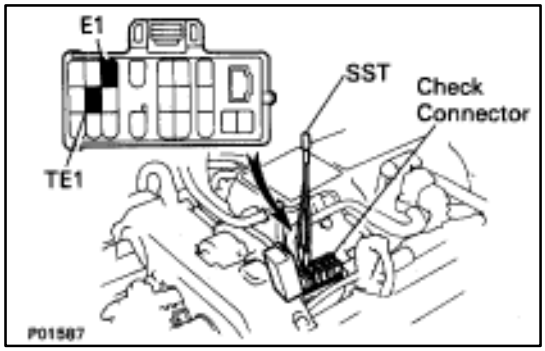

INSPECTION OF EGR SYSTEM (USA Spec.)

INSPECT SYSTEM OPERATION

(a) Using SST, connect terminals TE1 and E1 of the check (”DIAGNOSIS”) connector.

SST 09843–18020

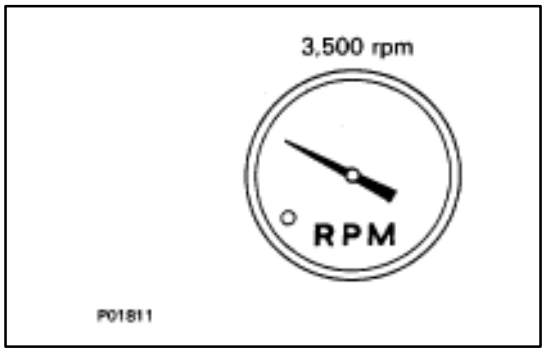

(b) Keep the engine at 3,500 rpm.

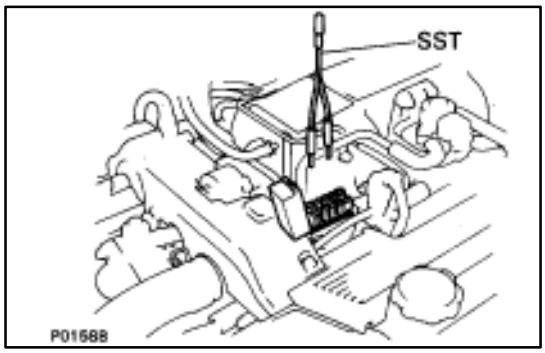

(c) Set the transmission shift lever to the ”N” position.

(d) Remove the SST from the check connector.

SST 09843–18020

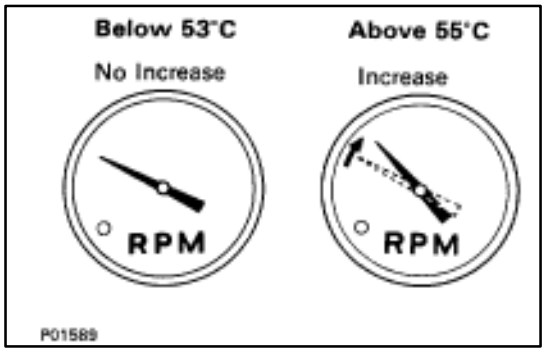

(e) Check whether the engine rpm increases 100–300 rpm under the following conditions.

Coolant temp.

Below 53°C (127°F) No increase

Above 55°C (131°F) Increases

WhereEverybodyKnowsYourName

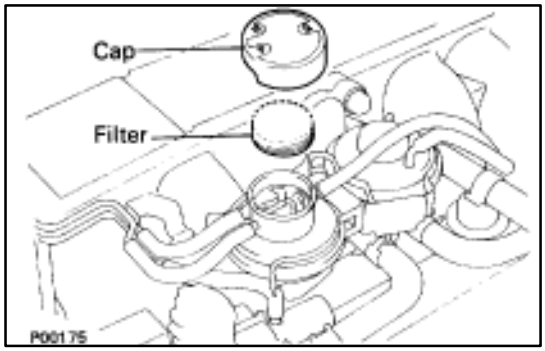

INSPECTION OF EGR SYSTEM (Exc. USA Spec.)

1. CHECK AND CLEAN FILTERS IN EGR VACUUM MODULATOR

(a) Remove the cap and filter.
(b) Check the filter for contamination or damage.
(c) Using compressed air, clean the filters.
(d) Reinstall the filter and cap.

HINT: Install the filter with the coarser surface facing the atmospheric side (outward).

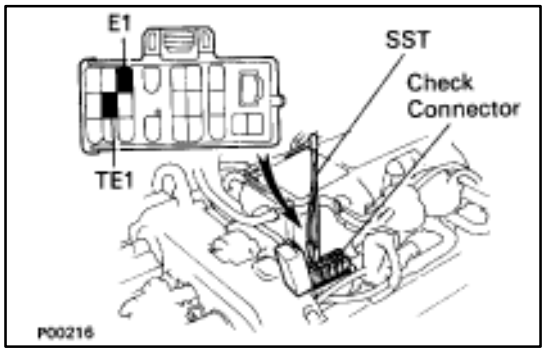

2. INSPECT SYSTEM OPERATION

(a) Using SST, connect terminals TE1 and E1 of the check (”DIAGNOSIS”) connector.

SST 09843–18020

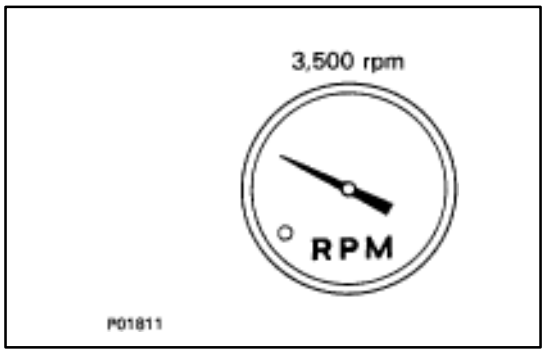

(b) Keep the engine at 3,500 rpm.

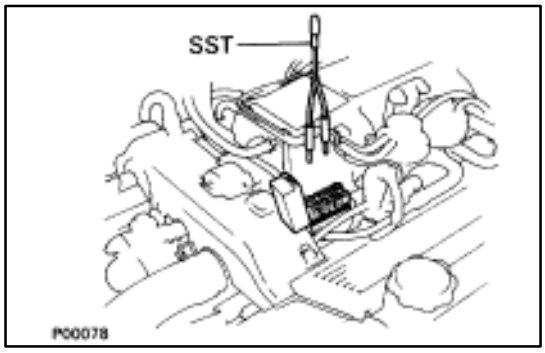

(c) Set the transmission shift lever to the ”N” position.
(d) Remove the SST from the check connector.

SST 09843–18020

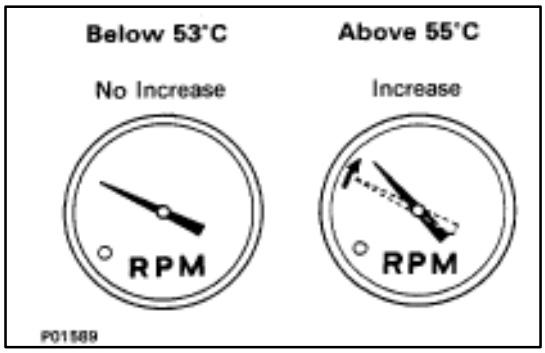

(e) Check whether the engine rpm increases 100–300 rpm under the following conditions:

Coolant temp.
Below 53°C (127°F) No increase
Above 55°C (131°F) Increases

WhereEverybodyKnowsYourName

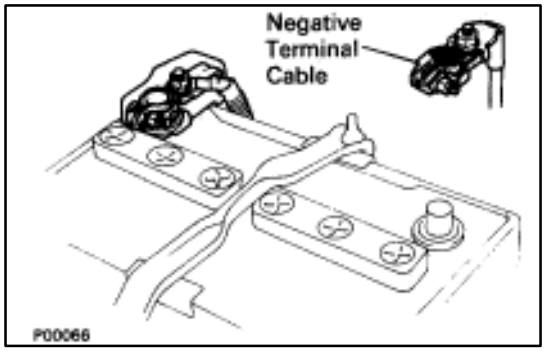

INSPECTION OF VSV (Exc. USA Spec.)

1. DISCONNECT CABLE FROM NEGATIVE TERMINAL OF BATTERY

CAUTION: Work must be started after approx. 20 seconds or longer from the time the ignition switch is turned to the "LOCK" position and the negative (–) terminal cable is disconnected from the battery.

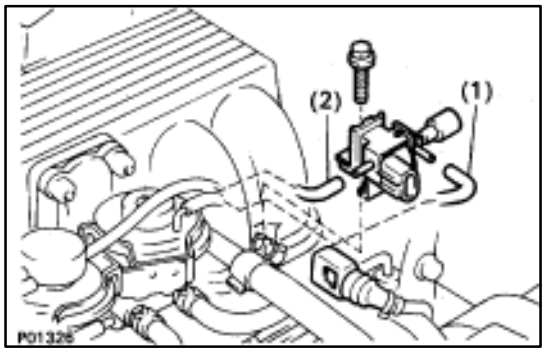

2. REMOVE VSV

(a) Disconnect the VSV connector.

(b) Disconnect the following hoses:

(1) Vacuum hose (from EGR valve) from VSV

(2) Vacuum hose (from EGR vacuum modulator) from VSV

(c) Remove the bolt and VSV.

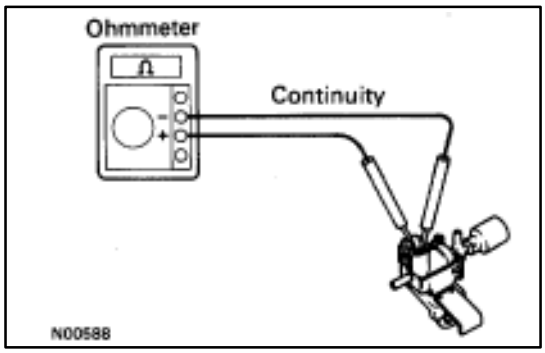

3. INSPECT VSV

A. Inspect VSV for open circuit

Using an ohmmeter, check that there is continuity between the terminals.

Resistance (Cold): 33–39 ?

If there is no continuity, replace the VSV.

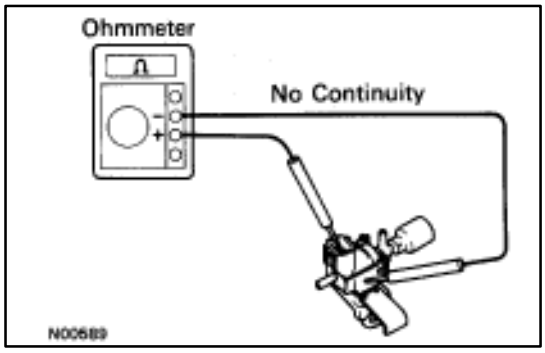

B. Inspect VSV for ground

Using an ohmmeter, check that there is no continuity between each terminal and the body.

If there is continuity, replace the VSV.

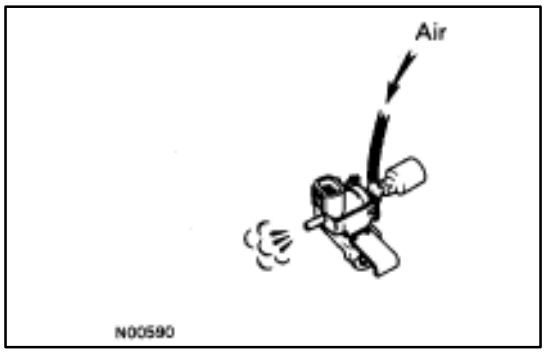

C. Inspect VSV operation

(a) Check that the air flows from ports E to G.

WhereEverybodyKnowsYourName

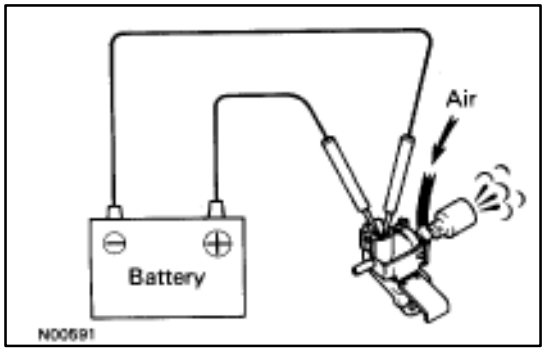

(b) Apply battery voltage across the terminals.
(c) Check that the air flows from port E to the filter.

If operation is not as specified, replace the VSV.

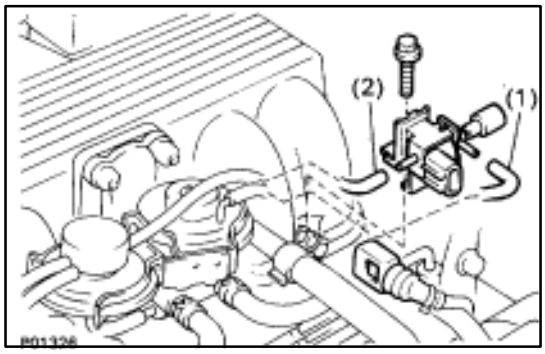

4. REINSTALL VSV

(a) Install the VSV with the bolt.

Torque: 18 N·m (185 kgf·cm, 13 ft·lbf)

(b) Connect the following hoses:
  (1) Vacuum hose (from EGR valve) to VSV
  (2) Vacuum hose (from EGR vacuum modulator) to VSV
(c) Connect the VSV connector.

5. RECONNECT CABLE TO NEGATIVE TERMINAL OF BATTERY

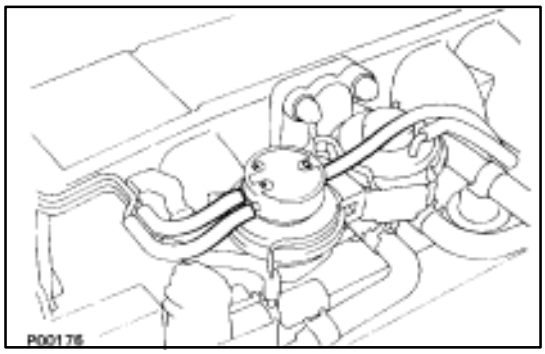

INSPECTION OF EGR VACUUM MODULATOR (Exc. USA Spec.)

1. DISCONNECT VACUUM HOSES FROM EGR VACUUM MODULATOR

Disconnect the three vacuum hoses from ports P, Q and R of the EGR vacuum modulator.

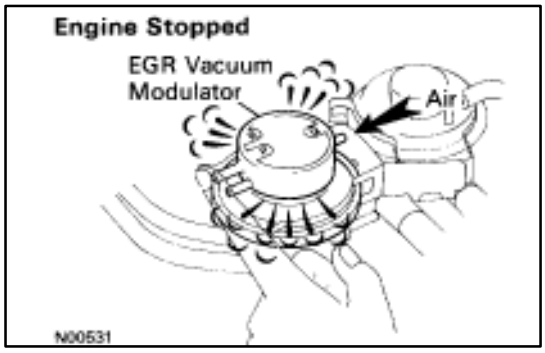

2. INSPECT EGR VACUUM MODULATOR OPERATION

(a) Block ports P and R with your finger.
(b) Blow air into port Q, and check that the air passes through to the air filter side freely.

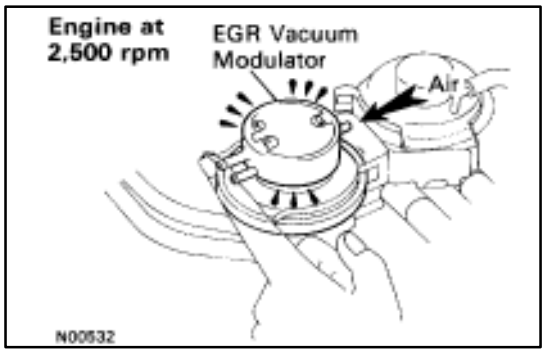

(c) Start the engine, and maintain speed at 2,500 rpm.
(d) Repeat the above test. Check that there is a strong resistance to air flow.

3. RECONNECT VACUUM HOSES TO EGR VACUUM MODULATOR

Connect the three vacuum hoses to the proper locations.

WhereEverybodyKnowsYourName

COMPONENTS FOR REMOVAL AND INSTALLATION OF EGR VALVE

USA Spec.

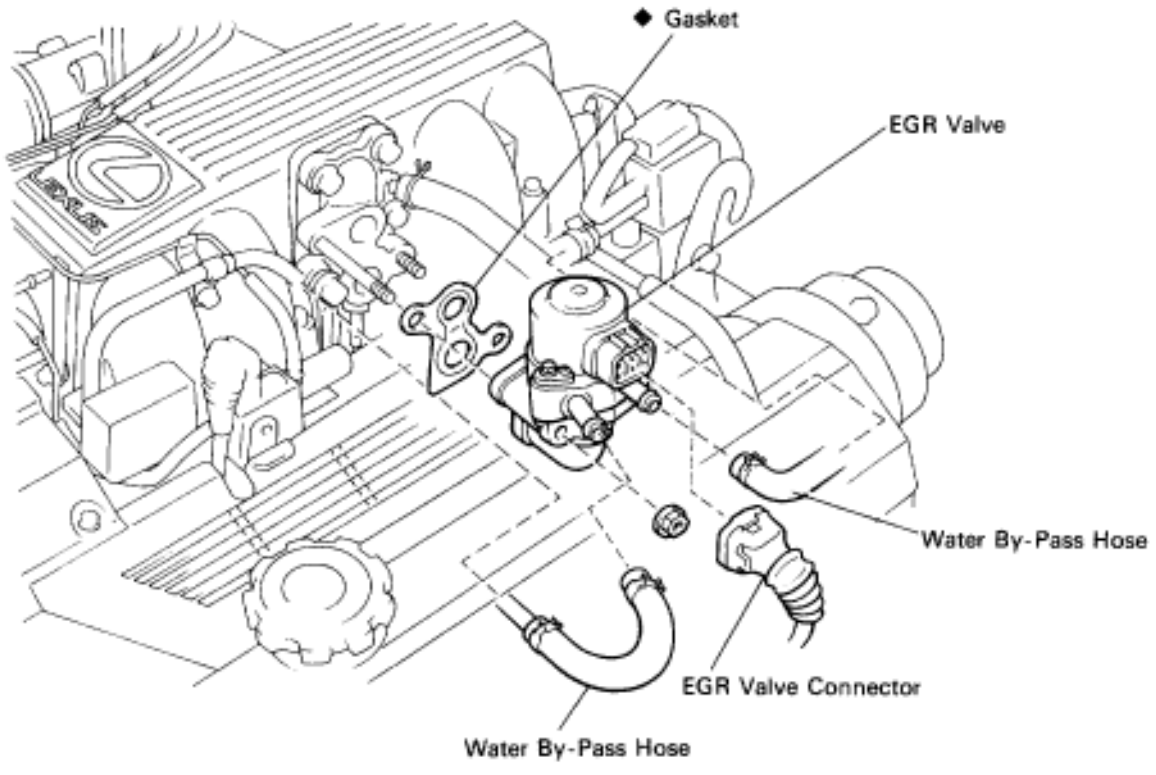

◆ Non-reusable part

Exc. USA Spec.

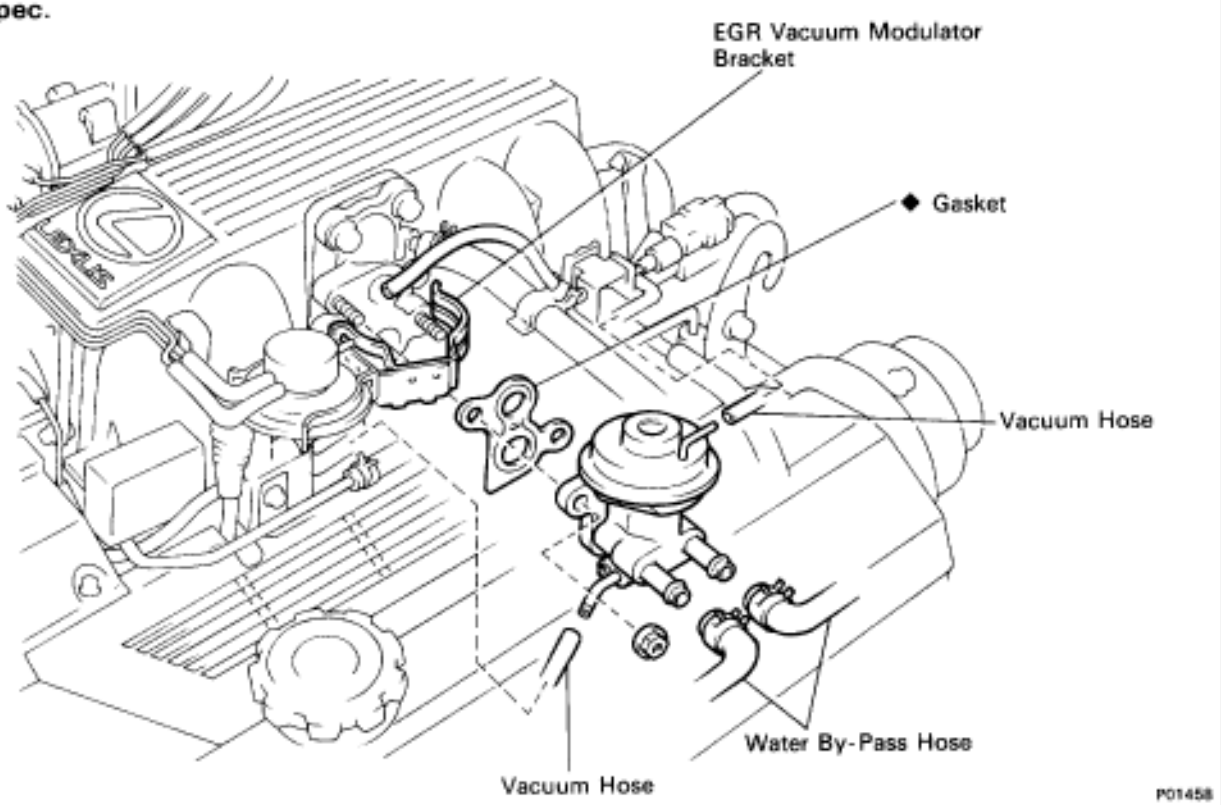

◆ Non-reusable part

WhereEverybodyKnowsYourName

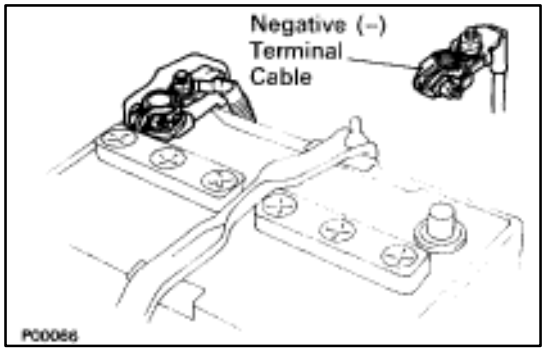

INSPECTION OF EGR VALVE (USA Spec.)

1. DISCONNECT CABLE FROM NEGATIVE TERMINAL OF BATTERY

CAUTION: Work must be started after approx. 20 seconds or longer from the time the ignition switch is turned to the "LOCK" position and the negative (–) terminal cable is disconnected from the battery.

2. DISCONNECT EGR VALVE CONNECTOR

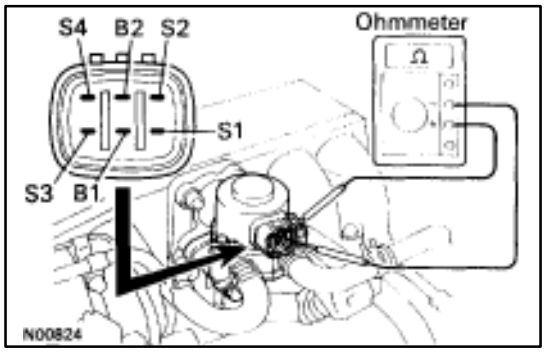

3. INSPECT EGR VALVE RESISTANCE

Using an ohmmeter, measure the resistance between terminal B1 (or B2) and other terminals (S1, S2, S3 and S4).

Resistance (Cold): 19.9–23.4 ?

4. DRAIN ENGINE COOLANT (See page CO–6)

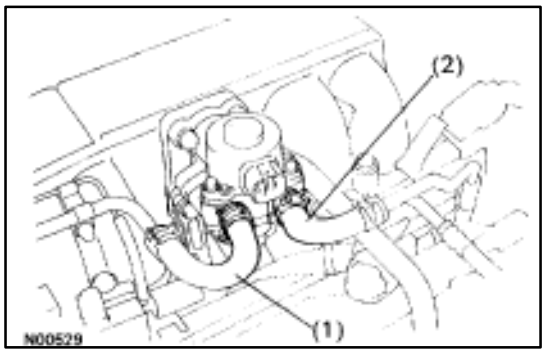

5. REMOVE EGR VALVE

(a) Disconnect the following hoses:

(1) Water by–pass hose (from ISC valve) from the EGR valve

(2) Water by–pass hose (from rear water by–pass joint) from the EGR valve

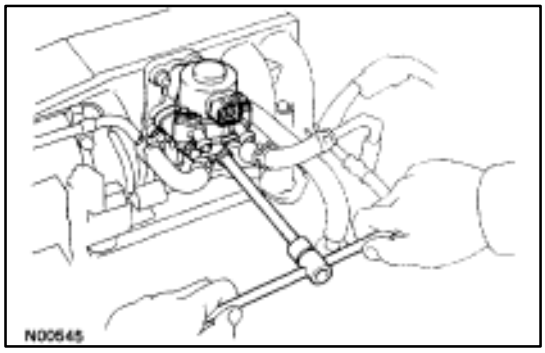

(b) Remove the two nuts, EGR valve and gasket.

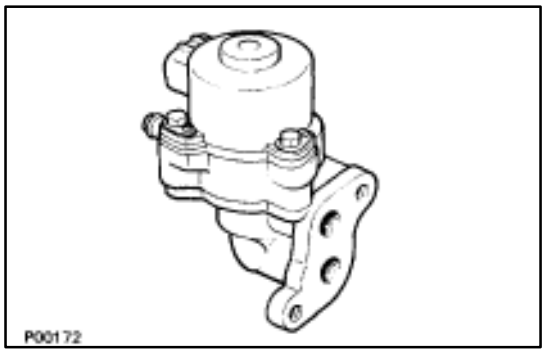

6. INSPECT EGR VALVE

A. Visually inspect EGR valve

Check for sticking and heavy carbon deposits.

If a problem is found, replace the EGR valve assembly.

WhereEverybodyKnowsYourName

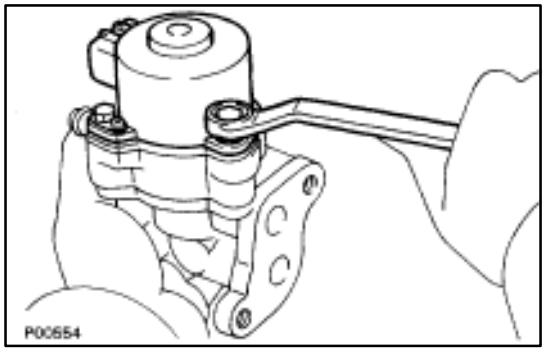

B. Inspect EGR valve operation

(a) Remove the three bolts and stepping motor from the housing.

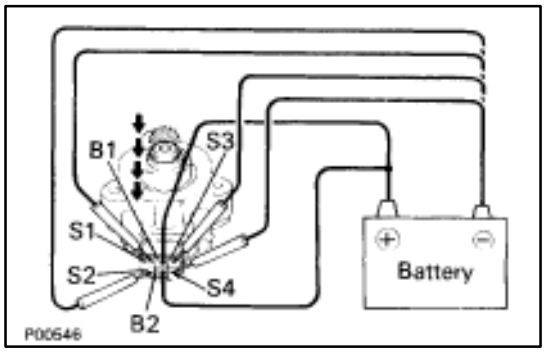

(b) Apply battery voltage to terminal B1 (or B2), and while repeately grounding (*S4)–(S4 and *S3)–(S3 and *S2)–(S2 and *S1)–(S1 and *S4) in sequence, check that the valve moves toward the open position.

HINT: Keep the terminal marked with an asterisk (*) grounded while proceeding to the next grounding.

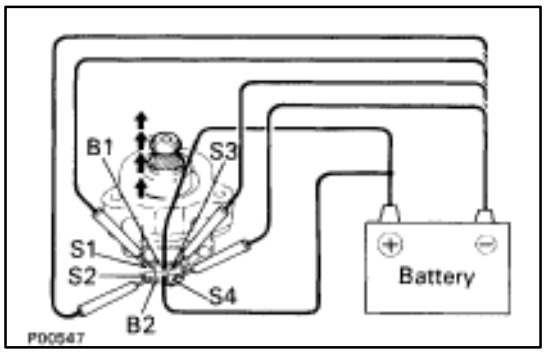

(c) Apply battery voltage to terminal B1 (or B2), and while repeately grounding (*S1)–(S1 and *S2)–(S2 and *S3)–(S3 and *S4)–(S4 and *S1) in sequence, check that the valve moves toward the closed position.

HINT:

- Keep the terminal marked with an asterisk (*) grounded while proceeding to the next grounding.
- Perform this operation after opening the valve by performing step (b) above.

If operation is not as specified, replace the EGR valve assembly.

(d) Reinstall the stepping motor to the housing with the three bolts.

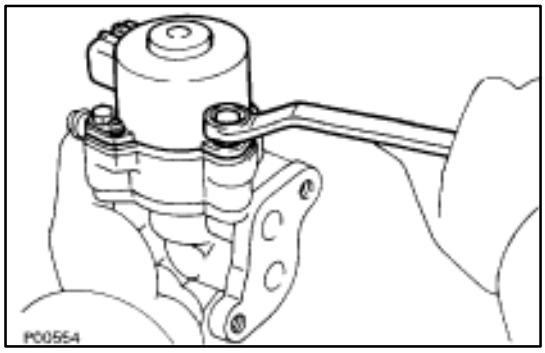

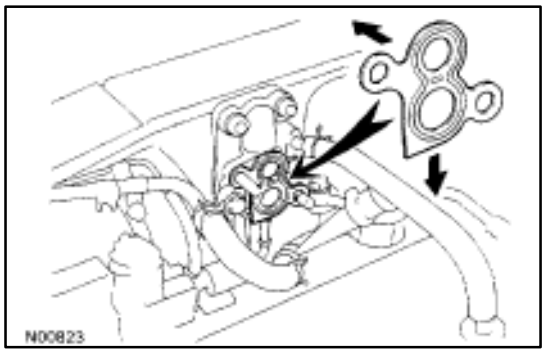

7. REINSTALL EGR VALVE

(a) Place a new gasket on the EGR valve adaptor.

NOTICE:

- **Do not touch the adaptor and EGR valve surfaces of the gasket with your hand.**
- **Align the port holes of the gasket and adaptor. Be careful of the installation direction.**

WhereEverybodyKnowsYourName

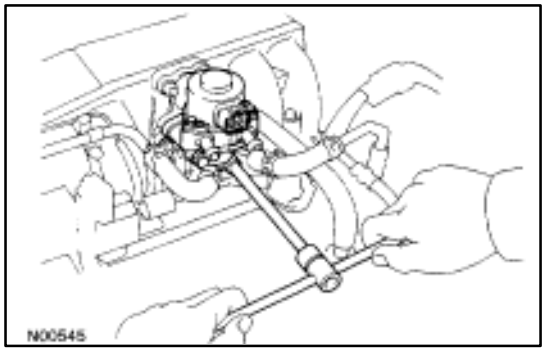

(b) Install the EGR valve with the two nuts.
Torque: 18 N·m (185 kgf·cm, 13 ft·lbf)

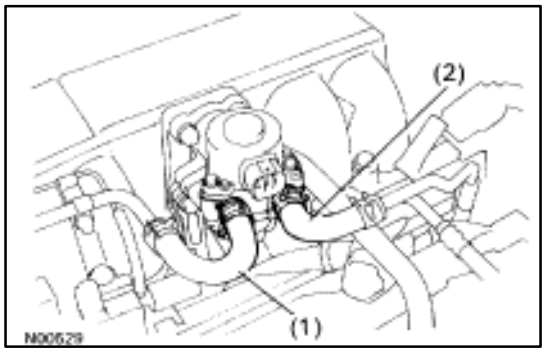

(c) Connect the following hoses:
(1) Water by–pass hose (from ISC valve) to the EGR valve
(2) Water by–pass hose (from rear water by–pass joint) to the EGR valve

8. RECONNECT EGR VALVE CONNECTOR

9. RECONNECT CABLE TO NEGATIVE TERMINAL OF BATTERY

10. REFILL WITH ENGINE COOLANT (See page CO–7)

INSPECTION OF EGR VALVE (Exc. USA Spec.)

1. DRAIN ENGINE COOLANT (See page CO–6)

2. REMOVE EGR VALVE

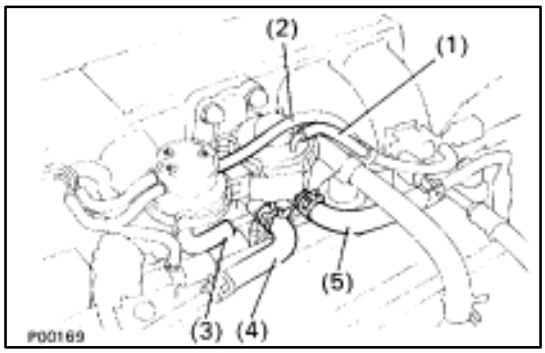

(a) Disconnect the following hoses:
(1) Vacuum hose (from VSV) from EGR valve
(2) Vacuum hose (from VSV) from EGR vacuum modulator
(3) Vacuum hose (from EGR vacuum modulator) f rom EGR valve
(4) Water by–pass hose (from ISC valve) from the EGR valve
(5) Water by–pass hose (from rear water by–pass joint) from the EGR valve

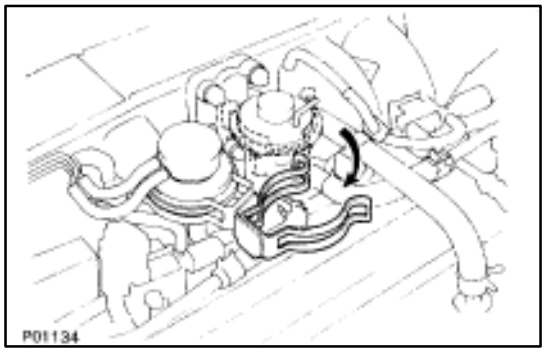

(b) Disconnect the vacuum modulator bracket from the EGR valve.

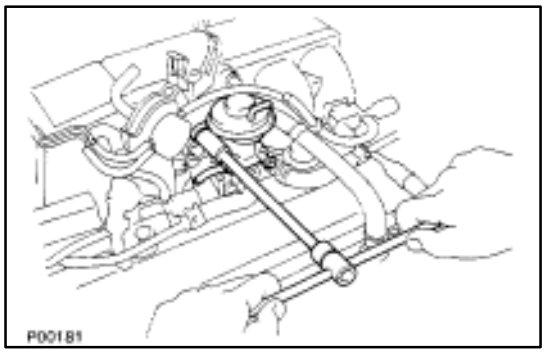

(c) Remove the two nuts, EGR valve and gasket.

WhereEverybodyKnowsYourName

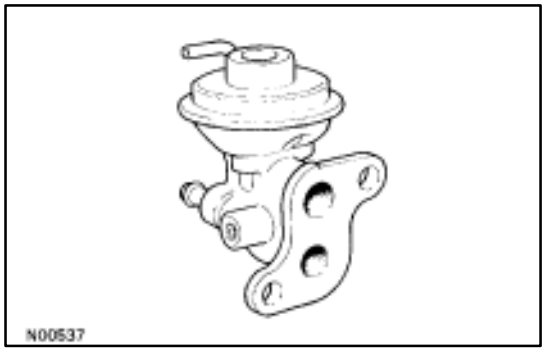

3. INSPECT EGR VALVE

Check for sticking and heavy carbon deposits.
If a problem is found, replace the EGR valve assembly.

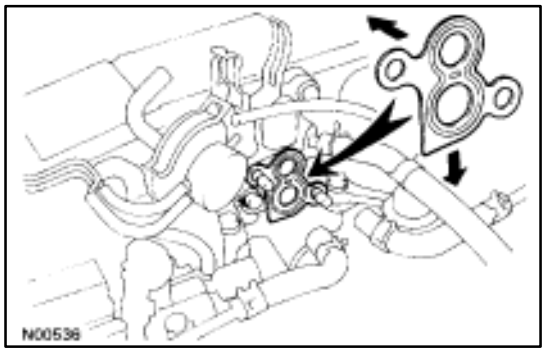

4. REINSTALL EGR VALVE

(a) Place a new gasket on the EGR valve adaptor.

NOTICE:

- **Do not touch the adaptor and EGR valve surfaces of the gasket with your hand.**
- **Align the port holes of the gasket and adaptor. Be careful of the installation direction.**

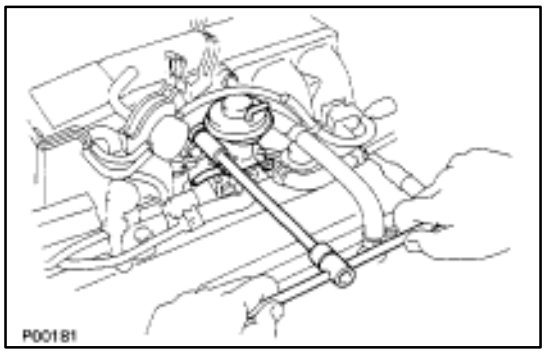

(b) Install the EGR valve with the two nuts.

Torque: 18 N·m (185 kgf·cm, 13 ft·lbf)

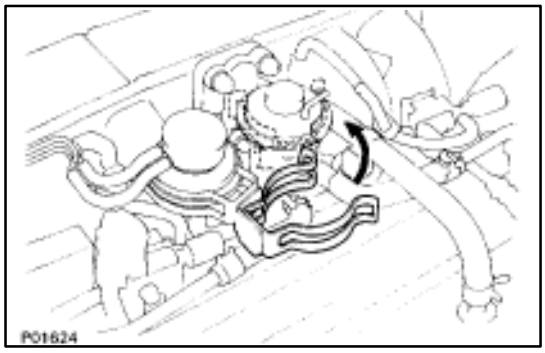

(c) Install the vacuum modulator bracket to the EGR valve.

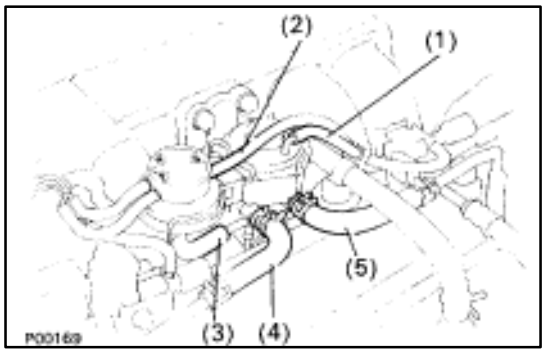

(d) Connect the following hoses:
  (1) Vacuum hose (from VSV) to EGR valve
  (2) Vacuum hose (from VSV) to EGR vacuum modulator
  (3) Vacuum hose (from EGR vacuum modulator) to EGR valve
  (4) Water by–pass hose (from ISC valve) to the EGR valve
  (5) Water by–pass hose (from rear water by–pass joint) to the EGR valve

5. REFILL WITH ENGINE COOLANT (See page CO–7)

WhereEverybodyKnowsYourName

THREE–WAY CATALYST (TWC) SYSTEM

DESCRIPTION

To reduce HC, CO and NOx emissions, they are oxidized, reduced and converted to nitrogen (N2), carbon dioxide (CO2) and water (H2O) by the catalyst.

OPERATION

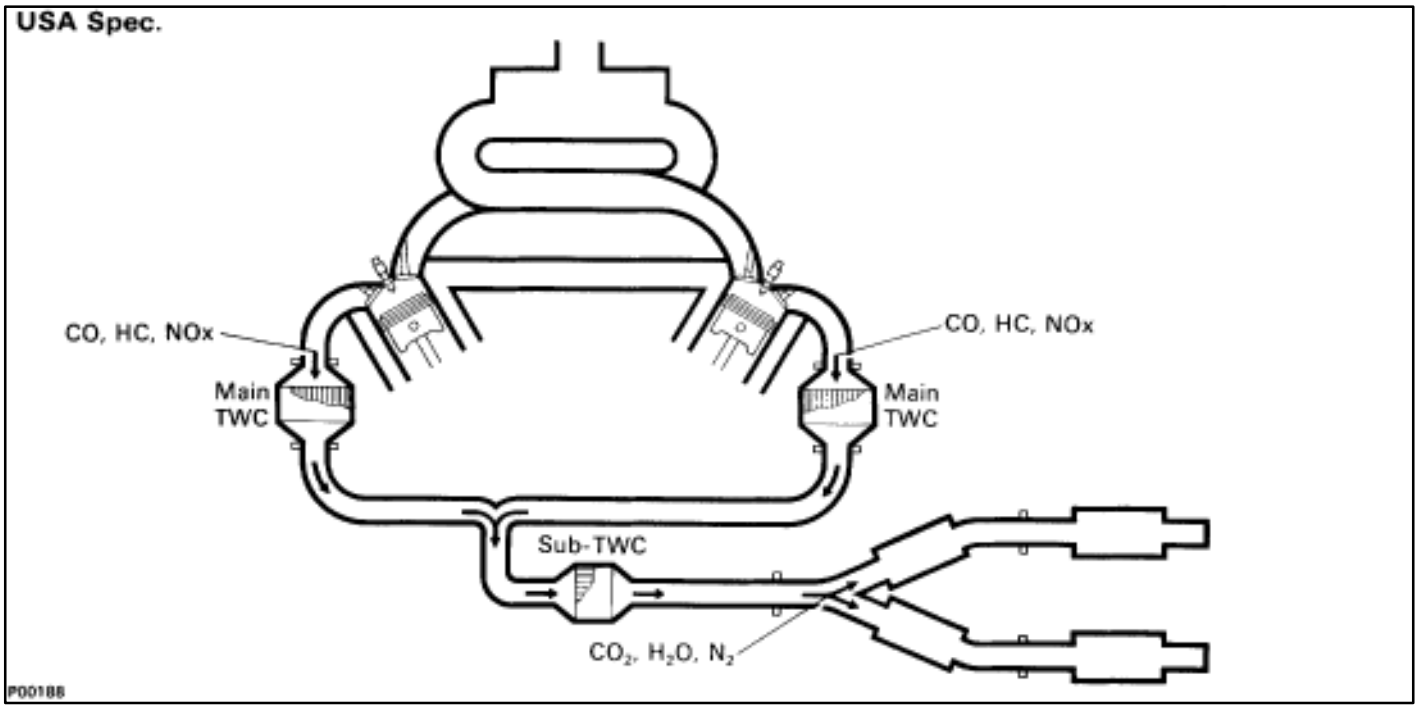

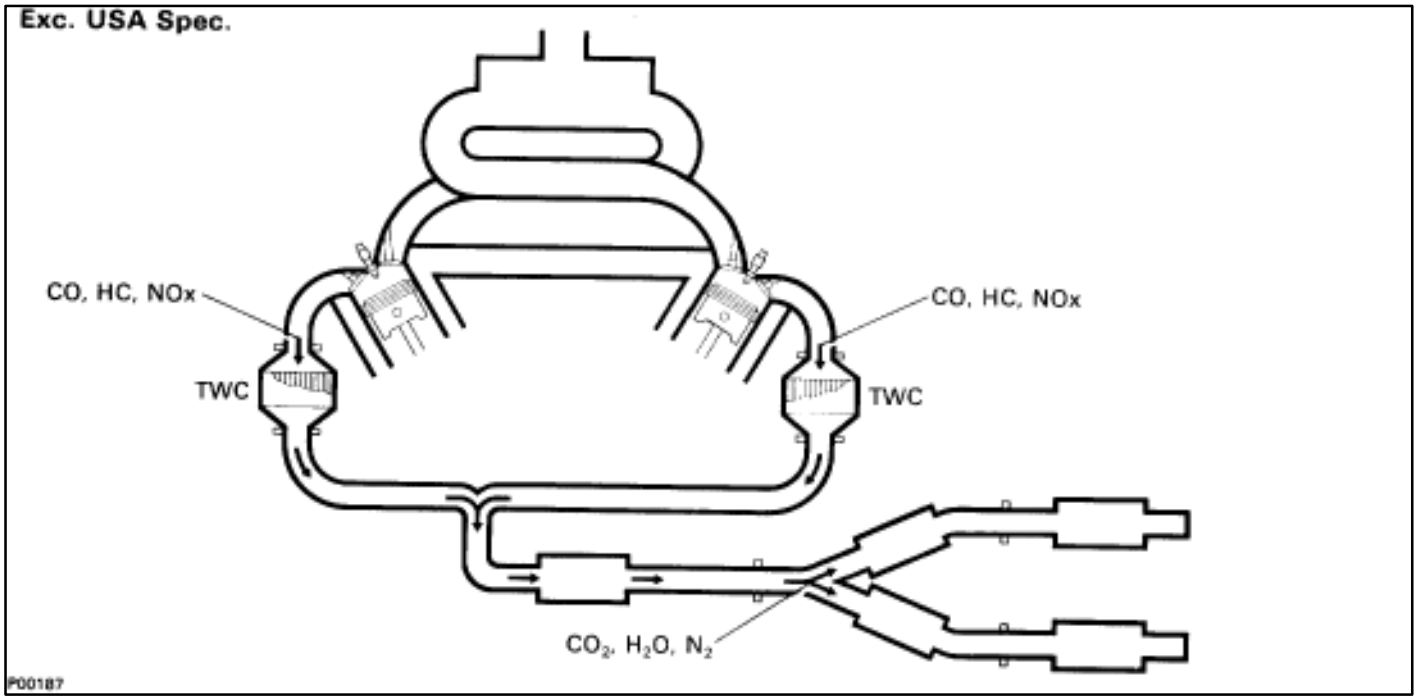

Exhaust Port		TWC (Main)		Sub-TWC (USA Spec. only)		Exhaust Gas
CO HC NOx	⇒	OXIDATION AND REDUCTION	⇒	OXIDATION AND REDUCTION	⇒	CO_2 H_2O N_2

WhereEverybodyKnowsYourName

INSPECTION OF EXHAUST PIPE ASSEMBLY

1. **CHECK CONNECTIONS FOR LOOSENESS OR DAMAGE**
2. **CHECK CLAMPS FOR WEAKNESS, CRACKS OR DAMAGE**

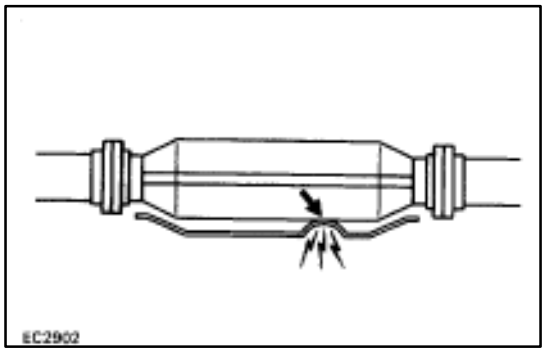

INSPECTION OF CATALYTIC CONVERTERS

CHECK FOR DENTS OR DAMAGE

If any part of protector is damaged or dented to the extent that it contacts the converter, repair or replace it.

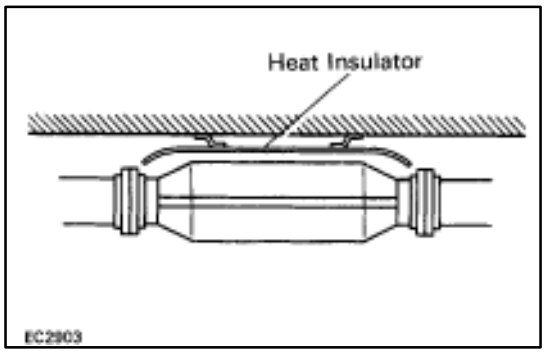

INSPECTION OF HEAT INSULATORS

1. **CHECK HEAT INSULATOR FOR DAMAGE**
2. **CHECK FOR ADEQUATE CLEARANCE BETWEEN CATALYTIC CONVERTER AND HEAT INSULATOR**

COMPONENTS FOR REPLACEMENT OF CATALYTIC CONVERTERS

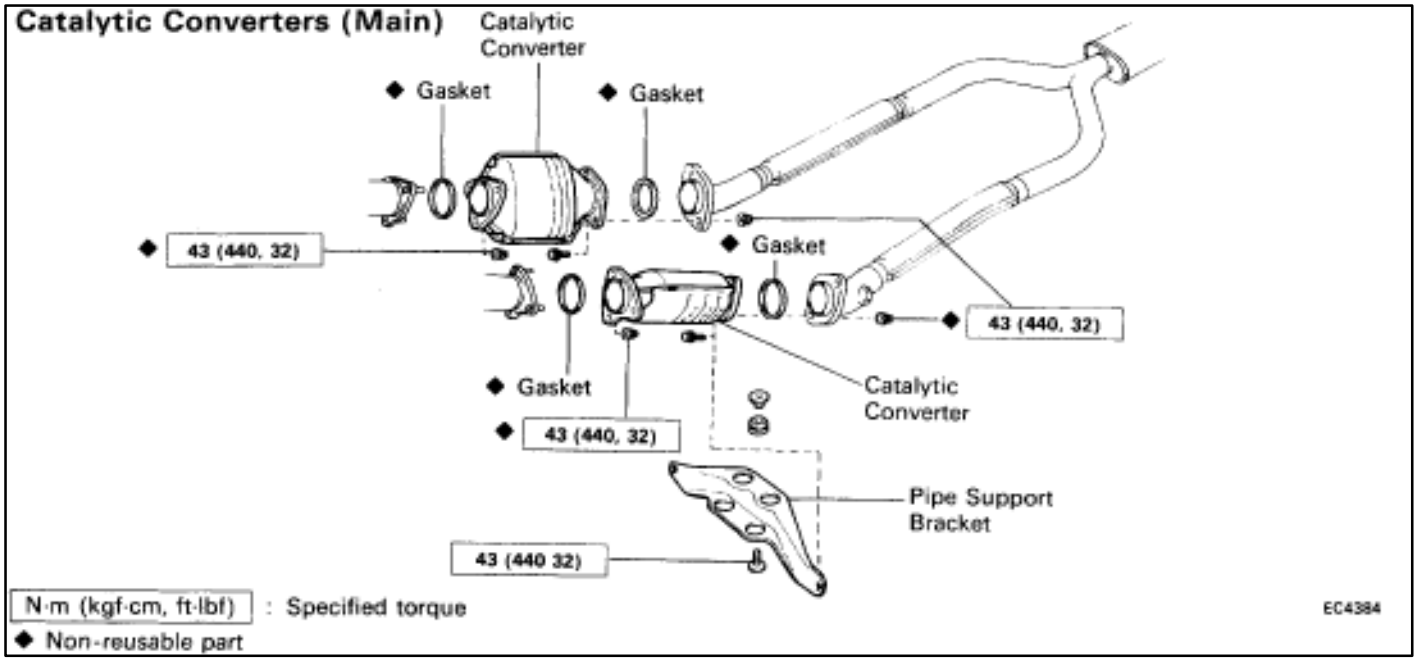

WhereEverybodyKnowsYourName

COMPONENTS FOR REPLACEMENT OF CATALYTIC CONVERTERS (Cont'd)

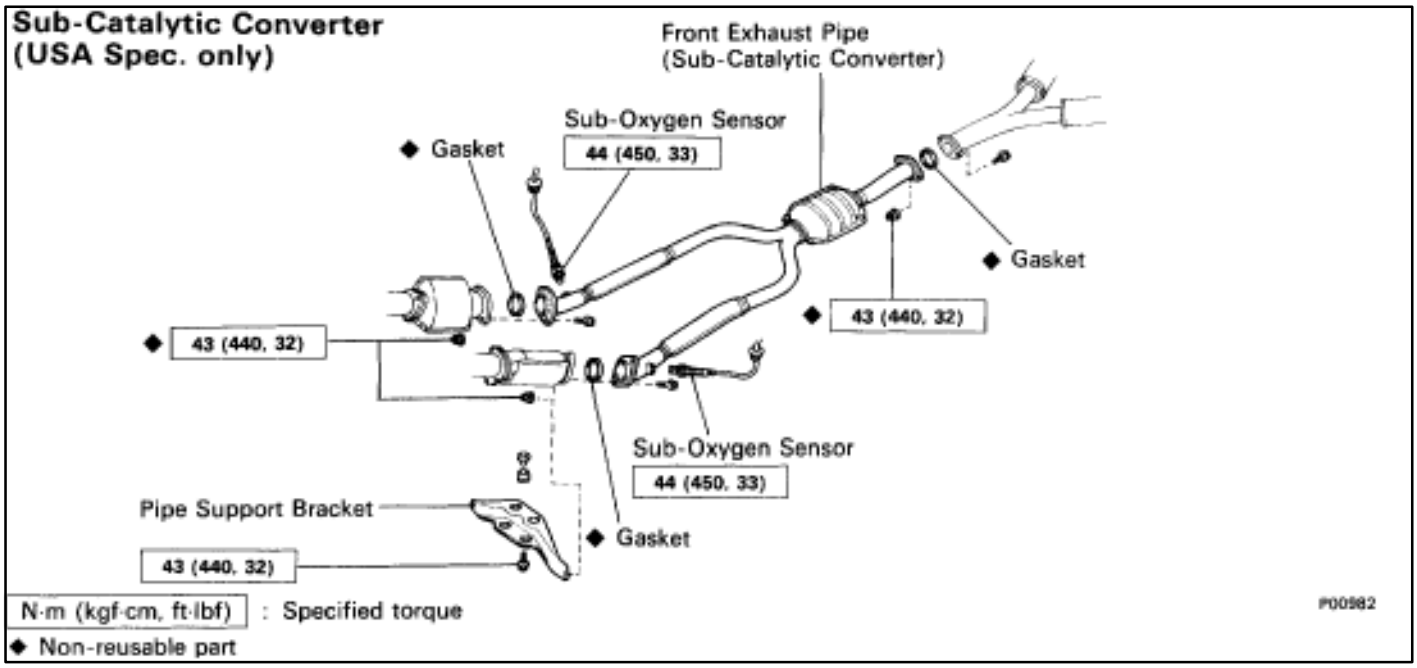

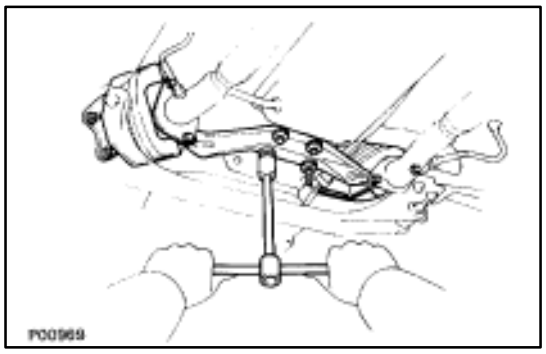

REPLACEMENT OF CATALYTIC CONVERTERS (Main Catalytic Converters)

1. REMOVE CATALYTIC CONVERTERS (MAIN)

(a) Check that the converter is cool.

(b) Remove the four bolts holding the pipe support bracket to the transmission.

(c) Remove the four bolt and nuts holding the catalytic converters to the front exhaust pipe. Remove the support bracket.

(d) Disconnect the front exhaust pipe from the catalytic converter, and remove the two gaskets.

(e) Remove the three nuts, converter and gasket. remove the two catalytic converters.

2. REINSTALL MAIN CATALYTIC CONVERTER

(a) Install a new gasket and the catalytic converter to the exhaust manifold with three new nuts. Install the two catalytic converters.

Torque: 62 N·m (630 kgf·cm, 46 ft·lbf)

(b) Install a new gasket to each front end of the front exhaust pipe, and temporarily connect the front exhaust pipe to the catalytic converters.

(c) Temporarily install the pipe support bracket to the transmission with the four bolts.

(d) Connect the front exhaust pipe to the catalytic converter with the four bolts and new nuts.

Torque: 43 N·m (440 kgf·cm, 32 ft·lbf)

(e) Tighten the four bolts holding the pipe support bracket to the transmission.

Torque: 43 N·m (440 kgf·cm, 32 ft·lbf)

WhereEverybodyKnowsYourName

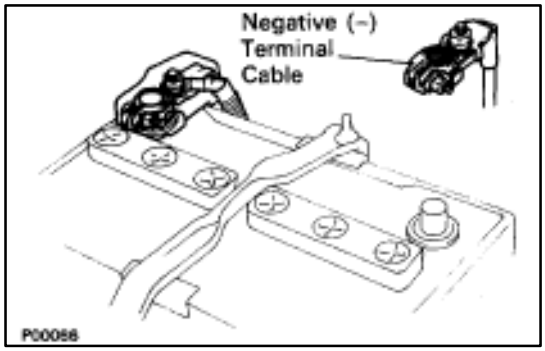

(Sub–Catalytic Converter (USA Spec. only)

1. **DISCONNECT CABLE FROM NEGATIVE TERMINAL OF BATTERY**

   CAUTION: Work must be started after, approx. 20 seconds or longer from the time the ignition switch is turned to the ”LOCK” position and the negative (–) terminal cable is disconnected from the battery.

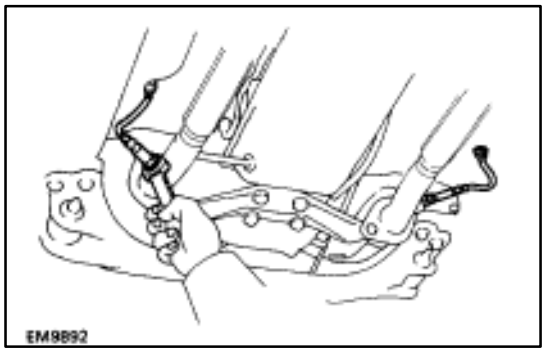

2. **DISCONNECT SUB–OXYGEN SENSOR CONNECTORS**

   Disconnect the grommet from the floor, and disconnect the sub–oxygen sensor from the front exhaust pipe.

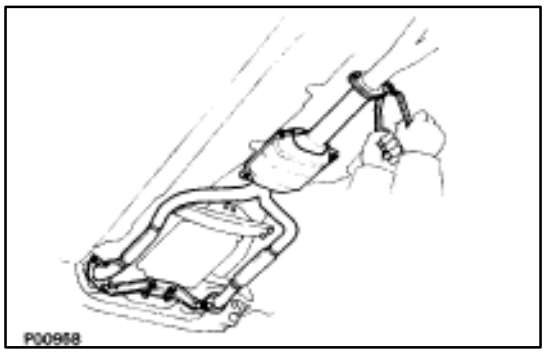

3. **REMOVE FRONT EXHAUST PIPE (SUB–CATALYTIC CONVERTER)**
   (a) Remove the four bolts holding the front exhaust pipe to the transmission.
   (b) Remove the two bolts and nuts holding the front exhaust pipe to the center exhaust pipe.
   (c) Remove the four bolts and nuts holding the front pipe to the catalytic converter, and remove the pipe support bracket, front pipe and three gaskets.

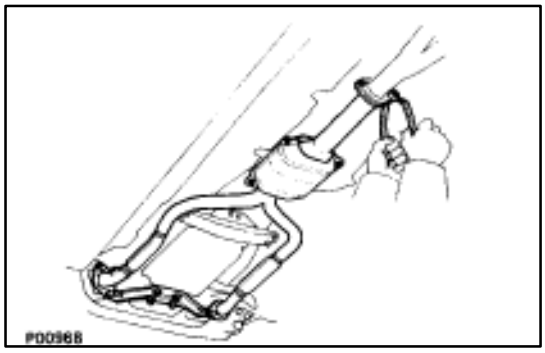

4. **REINSTALL FRONT EXHAUST PIPE (SUB–CATALYTIC CONVERTER)**
   (a) Temporarily install the pipe support bracket to the transmission with the four bolts.
   (b) Install three new gaskets, the front exhaust pipe and pipe support bracket with the six bolts and new nuts.

   Torque: 43 N·m (440 kgf·cm, 32 ft·lbf)

   (c) Tighten the four bolts holding the pipe support bracket to the transmission.

   Torque: 43 N·m (440 kgf·cm, 32 ft·lbf)

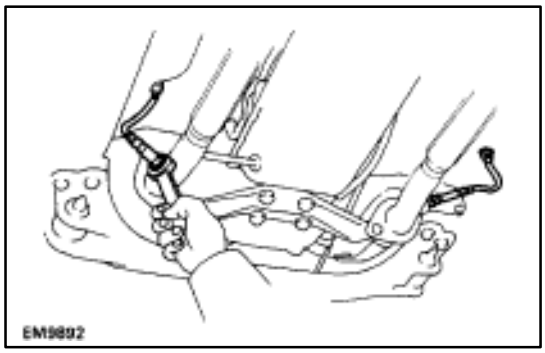

5. **RECONNECT SUB–OXYGEN SENSOR CONNECTORS**
   (a) Install the two sub–oxygen sensors to the front exhaust pipe.

   Torque: 44 N·m (450 kgf·cm, 33 ft·lbf)

   HINT:
   - Before installing the sub–oxygen sensor, twist the sensor wire counterclockwise 3 \frb\1/2\fre\ turns.
   - After installing the sub–oxygen sensor, check that the sensor wire is not twisted. If it is twisted, remove the sub–oxygen sensor and reinstall it.

   (b) Install the two wire grommets to the floor.
6. **RECONNECT CABLE TO NEGATIVE TERMINAL OF BATTERY**

WhereEverybodyKnowsYourName

SERVICE SPECIFICATIONS

SERVICE DATA

VSV for EVAP	Resistance	30–34 ?
VSV for EGR	Resistance	33–39 ?
EGR valve (CALIF. only)	Resistance	19.9–23.4 ?

TORQUE SPECIFICATIONS

Part tightened	N·m	kgf·cm	ft·lbf
VSV for EGR X Air intake chamber (Exc. USA Spec.)	18	185	13
EGR valve X Air intake chamber	18	185	13
Catalytic converter (Main) X Exhaust manifold	62	630	46
Catalytic converter (Main) X Front exhaust pipe	43	440	32
Front exhaust pipe support bracket X Transmission	43	440	32
Front exhaust pipe X Center exhaust pipe	43	440	32
Main oxygen sensor X Front exhaust pipe	44	450	33

WhereEverybodyKnowsYourName

ENGINE MECHANICAL

NOTE: The specification descriptions ”**USA Spec.**” and ”**Exc. USA Spec.**” used in this section indicate the following specifications.
USA Spec.: USA (50 States) Specifications.
Exc. USA Spec.: USA (except California) and Canadian Specifications.

WhereEverybodyKnowsYourName

DESCRIPTION

The 1 UZ–FE engine is an V–8 4.0 liter DOHC 32 valve engine.

OPERATION

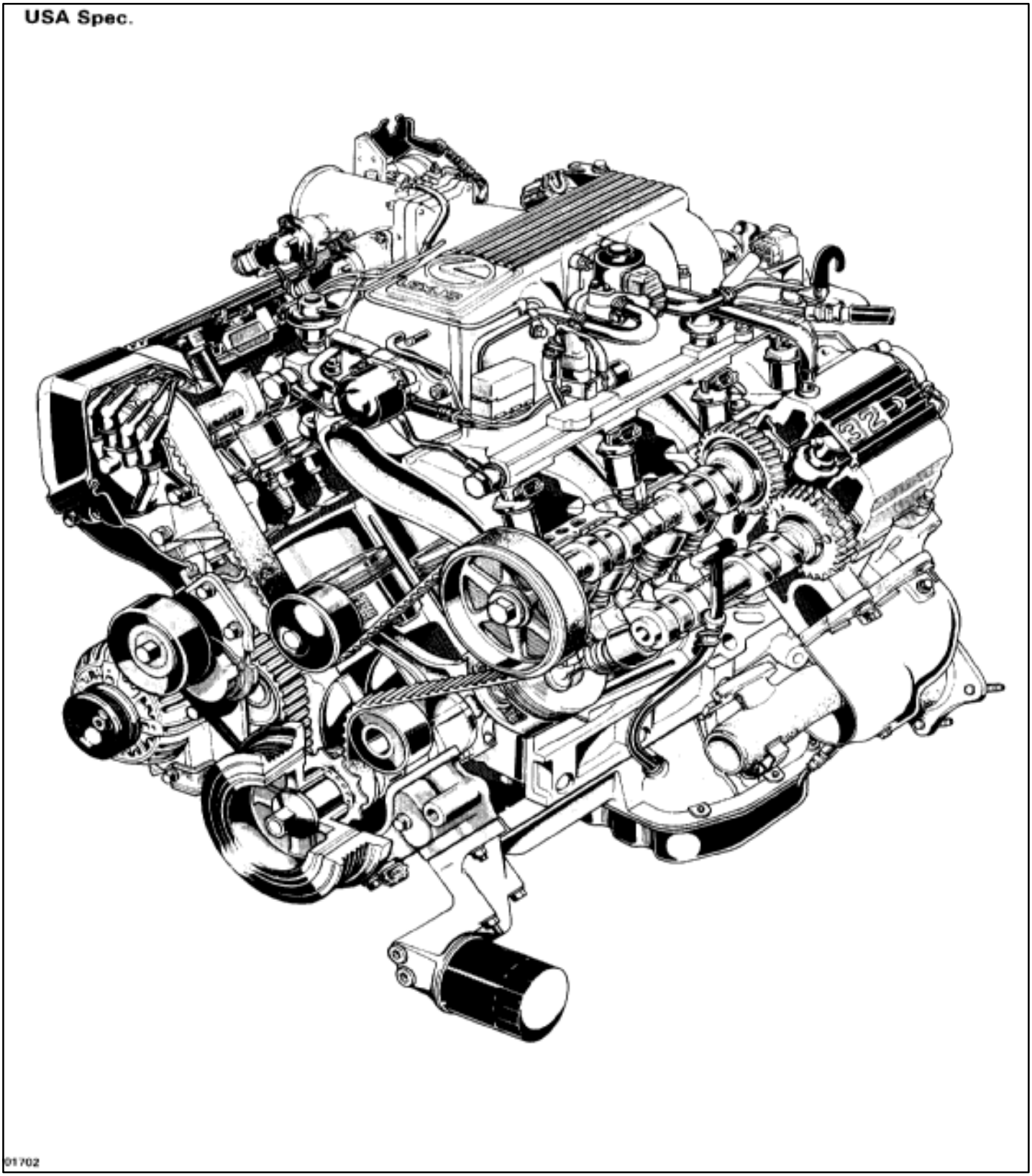

WhereEverybodyKnowsYourName

DESCRIPTION

The 1 UZ–FE engine is an V–8 4.0 liter DOHC 32 valve engine.

OPERATION

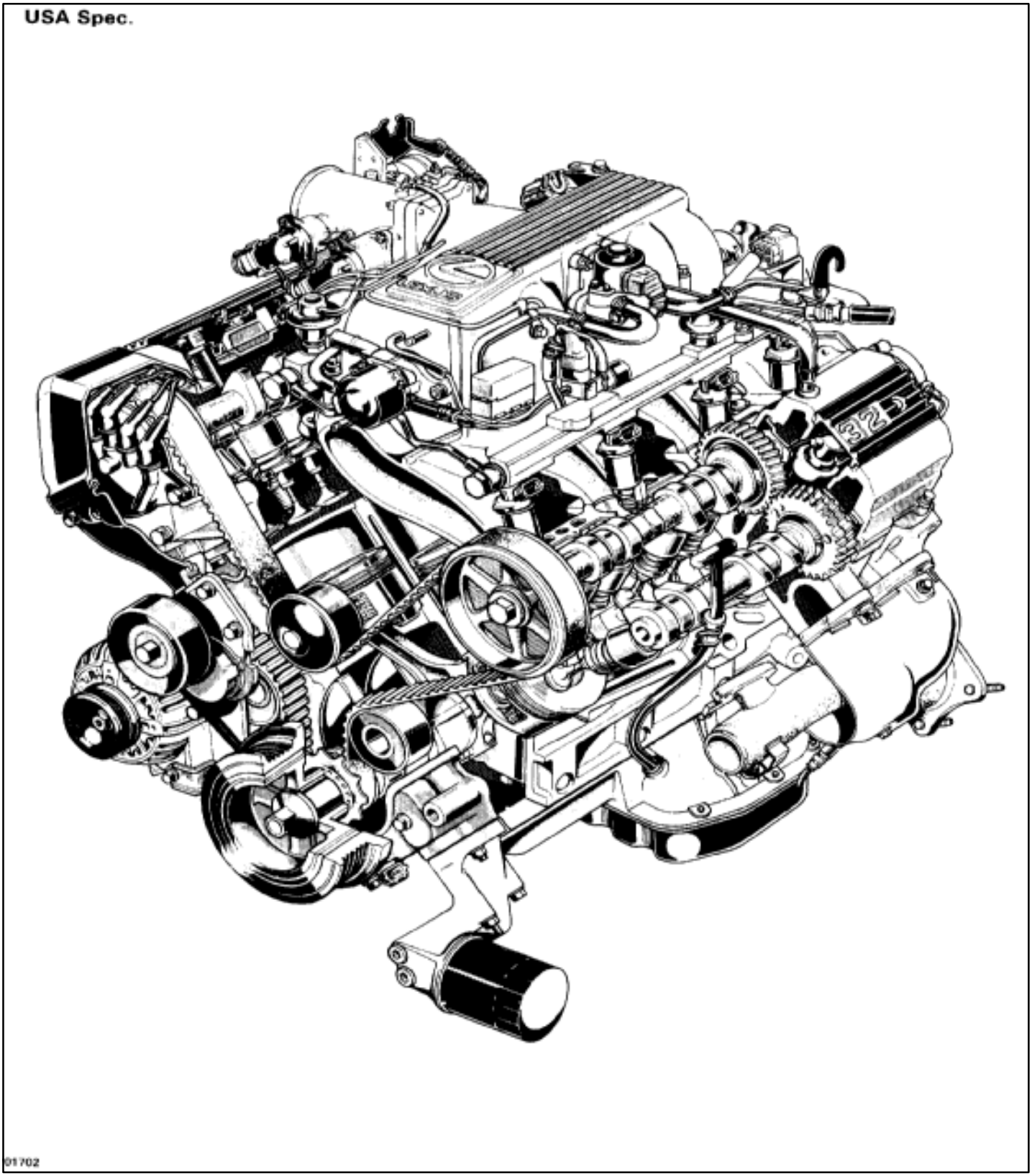

WhereEverybodyKnowsYourName

Exc. USA Spec.

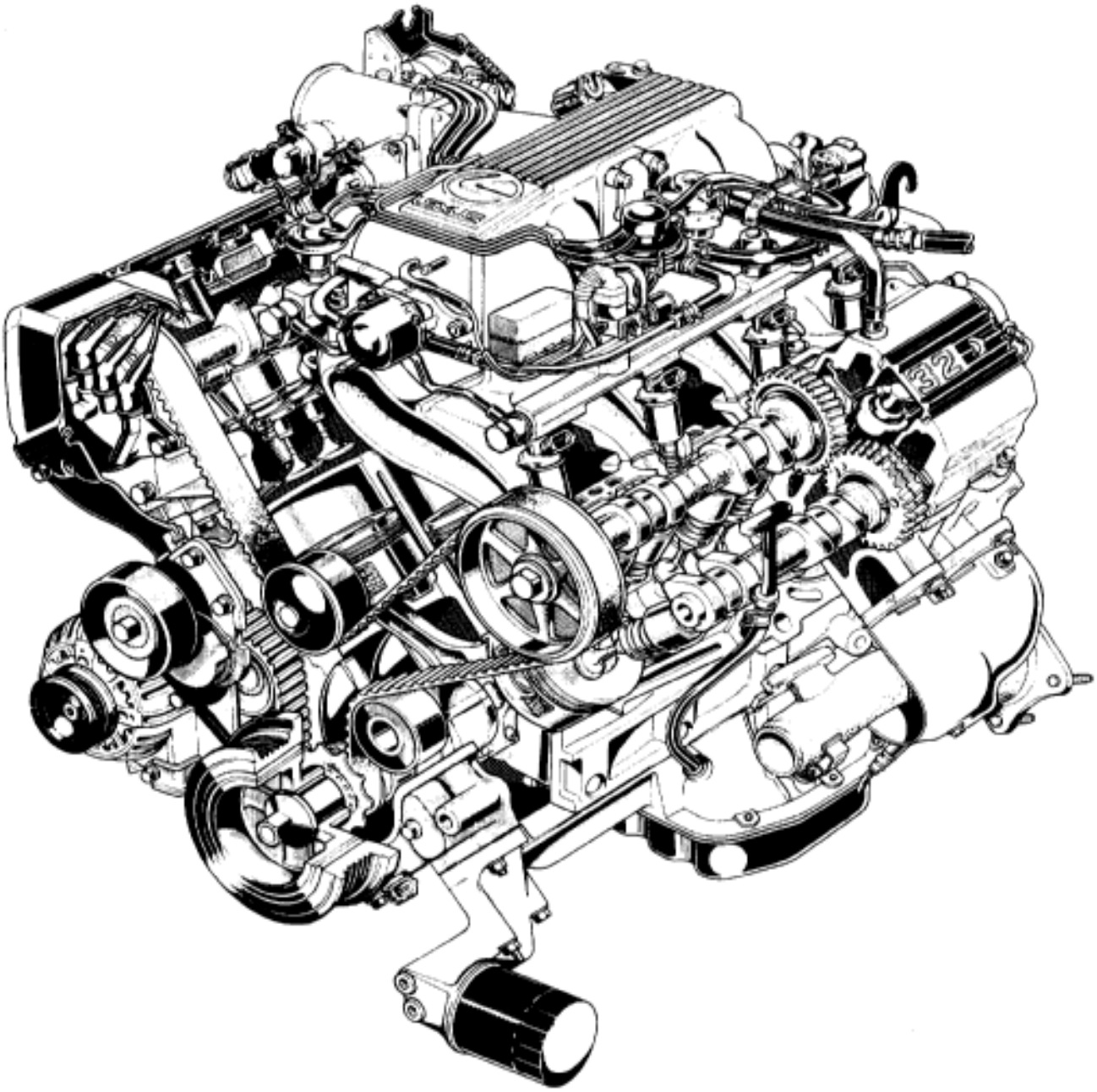

01703

WhereEverybodyKnowsYourName

The 1 UZ–FE engine has 8–cylinders in a V–arrangement at a bank angle of 90°. From the front of the RH bank cylinders are numbered 2–4–6–8, and from the front of the LH bank cylinders are numbered 1 –3–5–7. The crankshaft is supported by 5 bearings specified by the inside of the crankcase. These bearings are made of a copper and lead alloy.

The crankshaft is integrated with 8 weights which are cast along with it for balancing. Oil holes are built into the center of the crankshaft for supplying oil to the connecting rods, pistons and other components.

The ignition order is 1–8–4–3–6–5–7–2. The cylinder head is made of aluminum alloy, with a cross flow type intake and exhaust layout and with pent–roof type combustion chambers. The spark plugs are located in the center of the combustion chambers.

At the front and rear of the intake manifold, a water passage has been provided which connects the RH and LH cylinder heads.

Exhaust and intake valves are equipped with irregular pitch springs made of special valve spring carbon steel which are capable of following no matter what the engine speed.

The RH and LH intake camshafts are driven by a single timing belt, and a gear on the intake camshaft engages with a gear on the exhaust camshaft to drive it. The camshaft journal is supported at 5 (intake) or 4 (exhaust) places between the valve lifters of each cylinder and on the front end of the cylinder head. Lubrication of the cam journal gear is accomplished by oil being supplied through the oiler port in the center of the camshaft.

Adjustment of the valve clearance is done by means of an outer shim type system, in which valve adjusting shims are located above the valve lifters. This permits replacement of the shims without removal of the camshafts.

Pistons are made of high temperature–resistant aluminum alloy, and a depression is built into the piston head to prevent interference with valves.

Piston pins are the full–floating type, with the pins fastened to neither the piston boss nor the connecting rods. Instead, snap rings are fitted on both ends of the pins, preventing the pins from falling out.

The No.1 compression ring is made of steel and the No.2 compression ring is made of cast iron. The oil ring is made of a combination of steel and stainless steel. The outer diameter of each piston ring is slightly larger than the diameter of the piston and the flexibility of the rings allows them to hug the cylinder walls when they are mounted on the piston. Compression rings No.1 and No.2 work to prevent the leakage of gas from the cylinder and the oil ring works to scrape oil off the cylinder walls to prevent it from entering the combustion chamber.

The cylinder block is made of aluminum alloy with a bank angle of 90°. Cast iron cylinders are installed inside the cylinder block. It has 8 cylinders which are approximately twice the length of the piston stroke. The top of each cylinder is closed off by the cylinder heads and the lower end of the cylinders becomes the crankcase, in which the crankshaft is installed. In addition, the cylinder block contains a water jacket, through which coolant is pumped to cool the cylinders.

The No.1 and No.2 oil pans are bolted onto the bottom of the cylinder block. The No.1 oil pan is made of aluminum alloy. The No.2 oil pan is an oil reservoir made of pressed steel sheet. An oil level sensor is installed in the No.1 oil pan (If the oil level drops below a set level, a warning light lights up.). A oil pan baffle plate keeps sufficient oil in the bottom of the No.2 oil pan even when the vehicle is tilted. This dividing plate also prevents the oil from making waves when the vehicle is stopped suddenly and the oil shifts away from the oil pump suction pipe.

Plastic region tightening bolts are used for the cylinder head, main bearing cap and connecting rod.

WhereEverybodyKnowsYourName

PREPARATION

SST (SPECIAL SERVICE TOOLS)

Illustration	Part No.	Part Name	Note
	09011-38121	12 mm Socket Wrench for 12 Pointed Head	Connecting rod bolt
	09201-41020	Valve Stem Oil Seal Replacer	
	09201-70010	Valve Guide Bushing Remover & Replacer	
	09202-70010	Valve Spring Compressor	
	09213-31021	Crankshaft Pulley Puller	
	09213-60017	Crankshaft Pulley & Gear Puller Set	
	(09213-00050)	(Bolt Set)	
	09213-70010	Crankshaft Pulley Holding Tool	
	09222-30010	Connecting Rod Bushing Remover & Replacer	
	09223-46011	Crankshaft Front Oil Seal Replacer	Crankshaft timing pulley Crankshaft pulley Camshaft oil seal
	09223-56010	Crankshaft Rear Oil Seal Replacer	
	09248-55011	Valve Clearance Adjust Tool Set	
	(09248-05011)	(Valve Lifter Press)	
	(09248-05021)	(Valve Lifter Stopper)	
	09278-54012	Drive Shaft Holding Tool	Camshaft timing pulley

WhereEverybodyKnowsYourName

SST (SPECIAL SERVICE TOOLS) (Cont'd)

Illustration	Part No.	Part Name	Note
	09316-60010	Transmission & Transfer Bearing Replacer	
	(09316-00010)	(Replacer Pipe)	Crankshaft front oil seal
	09330-00021	Companion Flange Holding Tool	Crankshaft pulley
	09550-10012	Replacer Set "B"	
	(09552-10010)	(No. 2 Replacer Handle)	Spark plug tube gasket
	(09560-10010)	(Knuckle Outer Bearing Replacer)	Spark plug tube gasket
	09612-24014	Steering Gear Housing Overhaul Tool Set	
	(09617-24011)	(Steering Rack Wrench)	Fuel inlet hose
	09816-30010	Oil Pressure Switch Socket	Knock sensor

RECOMMENDED TOOLS

Illustration	Part No.	Part Name	Note
	09090-04010	Engine Sling Device	For suspending engine
	09200-00010	Engine Adjust Kit	
	09258-00030	Hose Plug Set	Plug for vacuum hose, fuel hose etc.
	09904-00010	Expander Set	

WhereEverybodyKnowsYourName

EQUIPMENT

Part Name	Note
Caliper gauge	
HC/CO meter	
Compression gauge	Cylinder compression pressure
Connecting rod aligner	
Cylinder gauge	
Dial indicator	
Engine turn–up tester	
Feeler gauge	
Micrometer	
Precision straight edge	
Spring tester	Valve spring
Steel square	Valve spring
Torque wrench	
Vernier caliper	

SSM (SPECIAL SERVICE MATERIALS)

Part Name	Part No.	Use etc.
Seal packing or equivalent	08826–00080	Camshaft bearing cap Cylinder head semi–circular plug Cylinder head cover Rear oil seal retainer Oil pump
Seal packing 1282B, Three bond 1282B or equivalent	08826–00100	Water inlet housing Water seal plate Water pump
Adhesive 1324, Three bond 1324 or equivalent	08833–00070	Drive plate mounting bolt
Adhesive 1344, Three bond 1344, Loctite 242 or equivalent	08833–00080	No.1 idler pulley mounting bolt

WhereEverybodyKnowsYourName

SERVICE SPECIFICATIONS

SERVICE DATA

Starter	Rated voltage and output power			12 V 2.0 kW	
	No–load characteristic		Current	120 A or less at 11.5 V	
			rpm	3,300 rpm or more at 11.5 V	
	Brush length		STD	15.0–15.5 mm	0.591–0.610 in.
			Limit	9.5 mm	0.374 in.
	Commutator	Outer diameter	STD	35.0 mm	1.378 in.
			Limit	34.0 mm	1.339 in.
		Undercut depth	STD	0.7–0.9 mm	0.028–0.035 in.
			Limit	0.2 mm	0.008 in.
		Circle runout	Limit	0.05 mm	0.0020 in.
	Spring installed load			26–32 N (2.7–3.3 kgf, 6.0–7.3 lbf)	

TORQUE SPECIFICATIONS

Part tightened	N·m	kgf·cm	ft·lbf
Starter X Cylinder block	39	400	29
Rear water by–pass joint X Cylinder head	18	185	13
Water by–pass pipe X Cylinder block	18	185	13
Intake manifold X Cylinder head	18	185	13
Fuel return pipe X Fuel pressure regulator	35	360	26
Fuel inlet hose X LH delivery pipe	39	400	29
for SST	33	340	24
Air intake chamber X Intake manifold	18	185	13
EGR pipe X Air intake chamber	18	185	13
EGR pipe X RH cylinder head	18	185	13
Cold start injector tube X RH delivery pipe	15	150	11
Throttle body X Air intake chamber	18	185	13

WhereEverybodyKnowsYourName

STARTING SYSTEM

NOTE: The specification descriptions ”**USA Spec.**” and ”**Exc. USA Spec.**” used in this section indicate the following specifications.
USA Spec.: USA (50 States) Specifications
Exc. USA Spec.: USA (except California) and Canadian Specifications.

WhereEverybodyKnowsYourName

DESCRIPTION

The starter is a reduction type starter with a small, high–speed motor used to drive the pinion gear. It is installed in the center of the V–bank of the cylinder block.

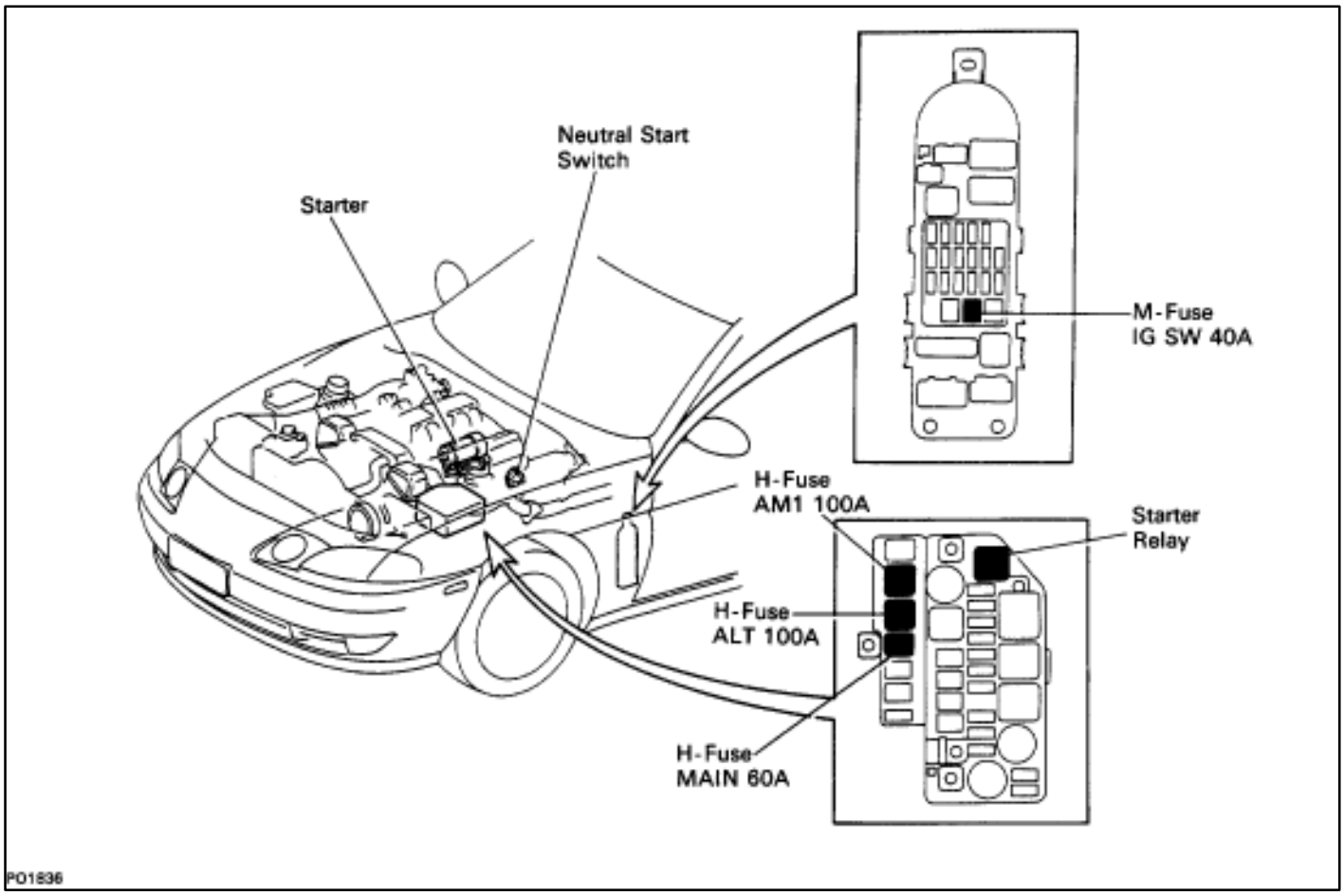

WhereEverybodyKnowsYourName

SYSTEM CIRCUIT

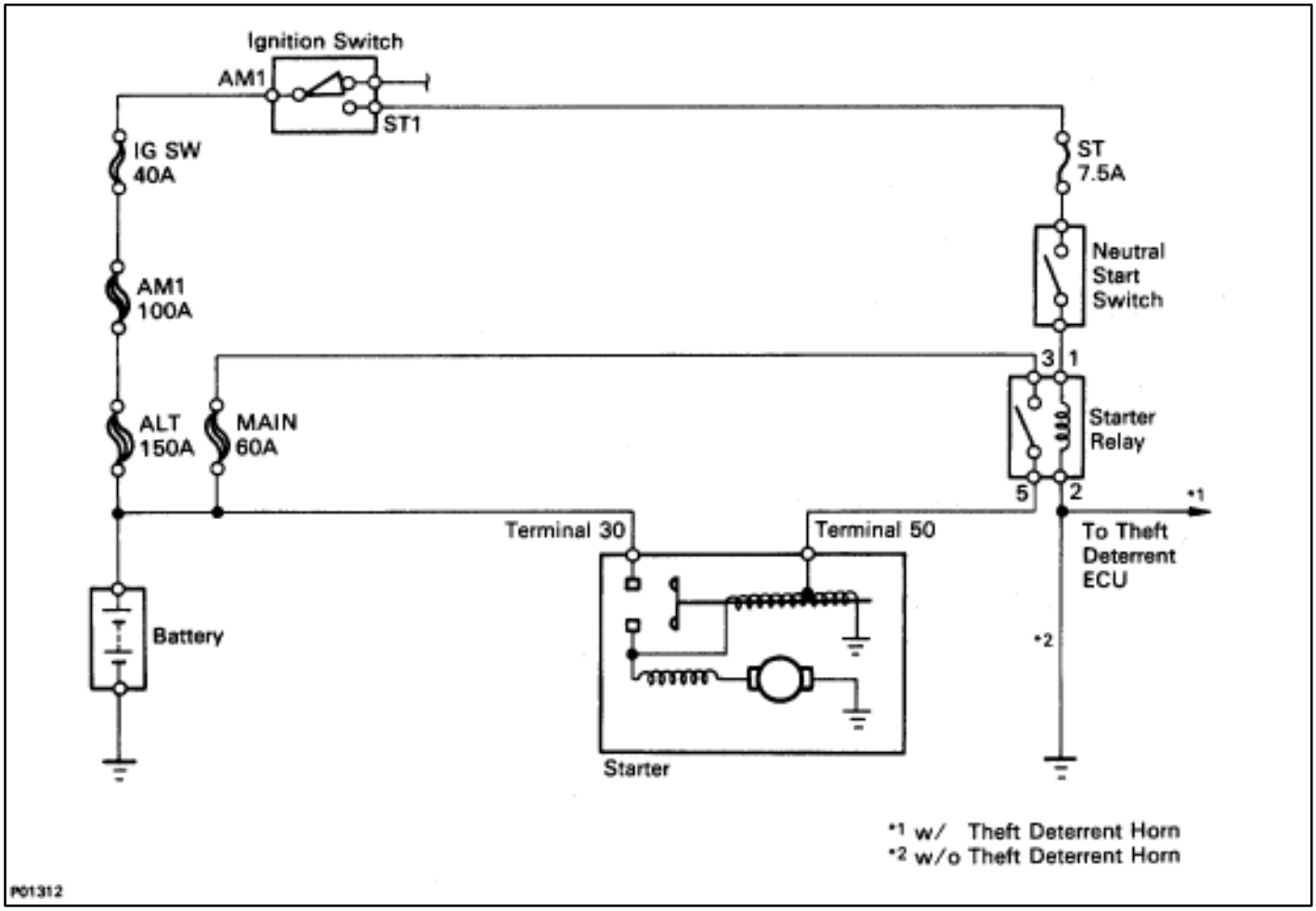

OPERATION

When the ignition switch is turned to START, current flows from terminal 50 to the coil of the solenoid and the plunger is pulled by the magnetic force of the coil. When the plunger is pulled to the left as shown above, the contact plate of the plunger allows current from the battery to flow directly from terminal 30 to the motor, and the starter rotates.

When the engine is running and the ignition switch is returned to ON, the magnetic force of the coil disappears and the contact plate of the plunger is returned to its original position by the return spring. Battery voltage no longer flows from terminal 30, so the motor stops.

WhereEverybodyKnowsYourName

PREPARATION

SST (SPECIAL SERVICE TOOLS)

Illustration	Part No.	Part Name	Note
	09201–41020	Valve Stem Oil Seal Replacer	Armature rear bearing
	09286–46011	Injection Pump Spline Shaft Puller	Armature front bearing
	09612–24014	Steering Gear Housing Overhaul Tool Set	
	(09617–24011)	(Steering Rack Wrench)	Fuel Inlet hose
	09950–00020	Bearing Remover	Armature rear bearing

RECOMMENDED TOOLS

Illustration	Part No.	Part Name	Note
	09082–00015	TOYOTA Electrical Tester	

EQUIPMENT

Part Name	Note
Dial indicator	Commutator
Vernier caliper	Commutator, Brush
Pull scale	Brush spring
Torque wrench	

WhereEverybodyKnowsYourName

STARTER

COMPONENTS FOR REMOVAL AND INSTALLATION

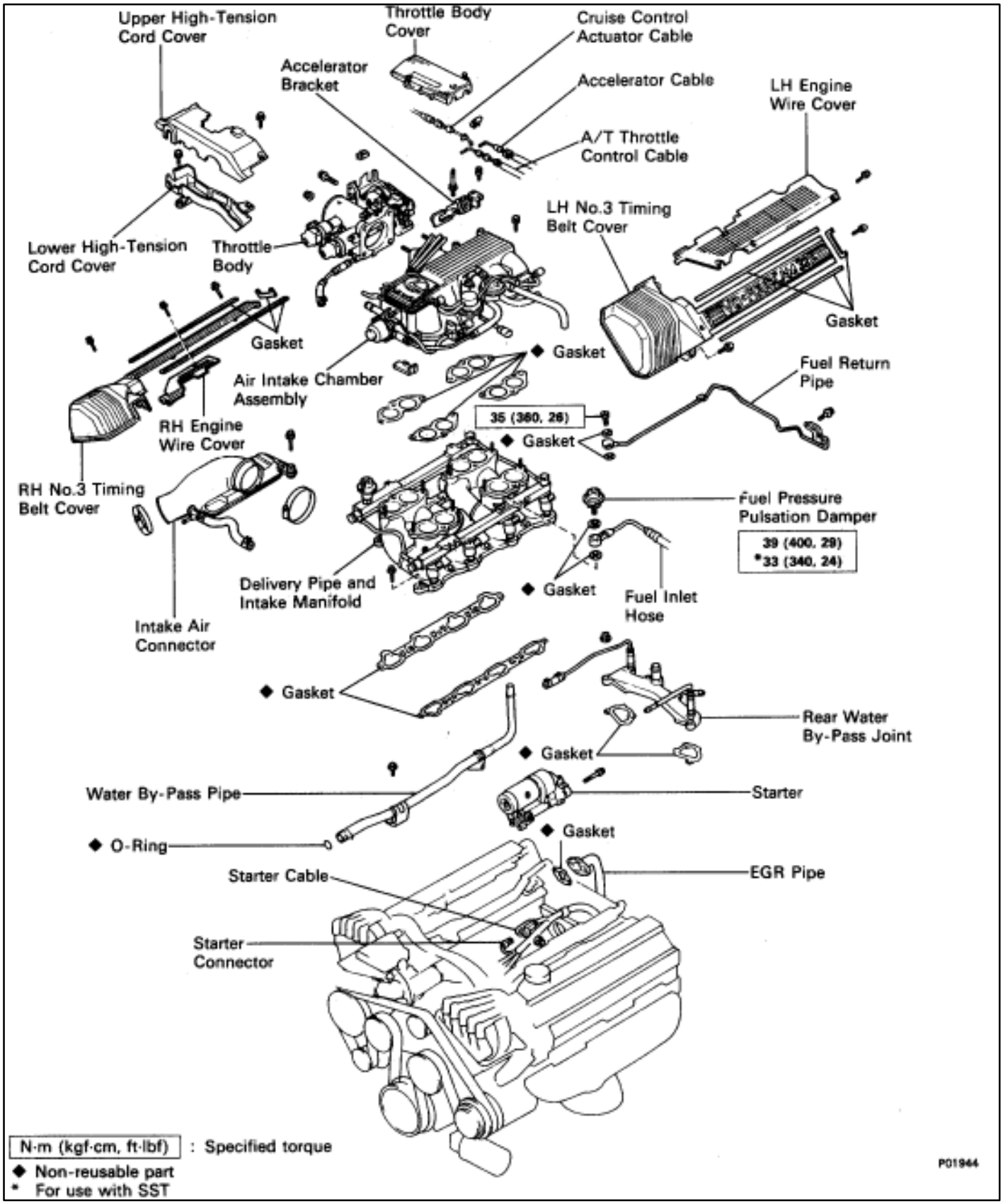

WhereEverybodyKnowsYourName

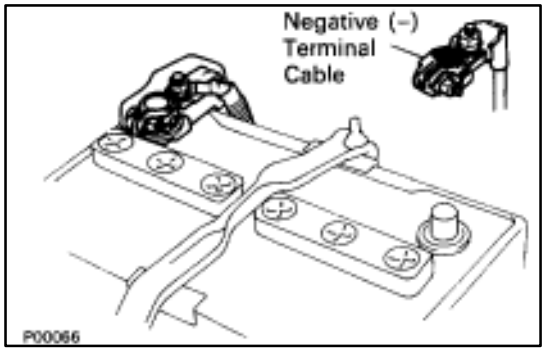

REMOVAL OF STARTER

(See Components on page ST–5)

1. **DISCONNECT CABLE FROM NEGATIVE TERMINAL OF BATTERY**
   CAUTION: Work must be started after approx. 20 seconds or longer from the time the ignition switch is turned to the "LOCK" position and the negative (–) terminal cable is disconnected from the battery.
2. **DRAIN ENGINE COOLANT**

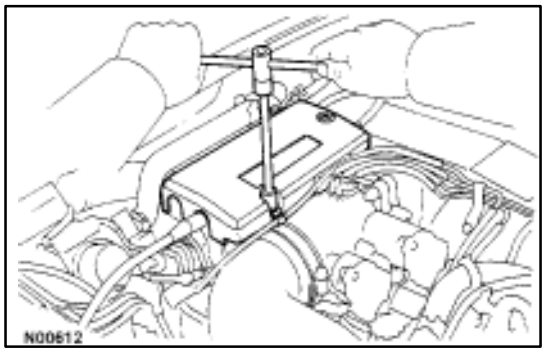

3. **REMOVE THROTTLE BODY COVER**
   (a) Remove the mounting cap nut.
   (b) Loosen the two bolts, and remove the throttle body cover.

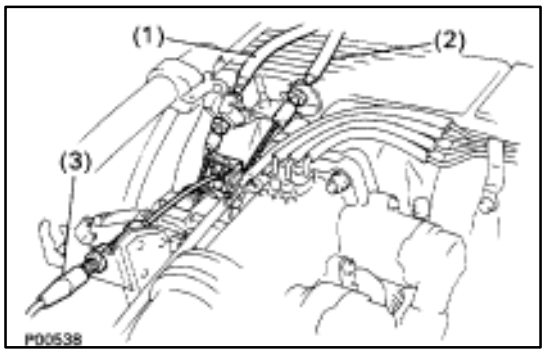

4. **DISCONNECT CONTROL CABLES FROM THROTTLE BODY**
   Disconnect the following cables:
   (1) Accelerator cable
   (2) A/T throttle control cable
   (3) (w/ Cruise Control System)
   Cruise control actuator cable

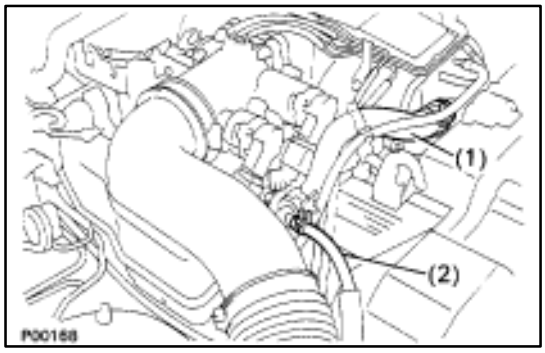

5. **REMOVE INTAKE AIR CONNECTOR**
   (a) Disconnect the following hoses:
   (1) Air hose from ISC valve
   (2) Air hose (from PS air control valve) from intake air connector

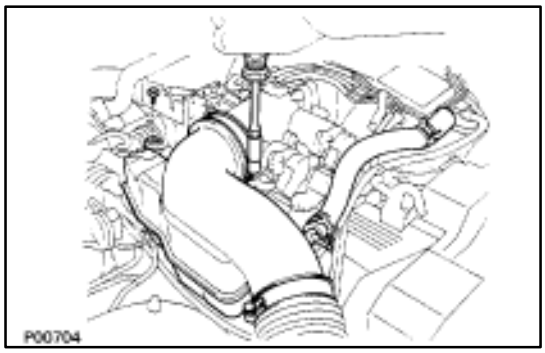

   (b) Remove the bolt holding the intake air connector to the cylinder head cover.
   (c) Loosen the two hose clamps.
   (d) Disconnect the intake air connector from the throttle body and air cleaner hose, and remove the intake air connector.

WhereEverybodyKnowsYourName

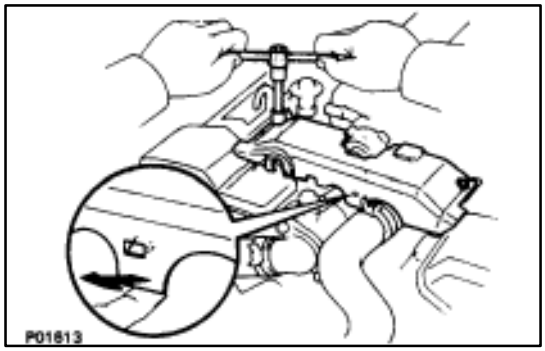

6. REMOVE UPPER HIGH–TENSION CORD COVER

(a) Remove the two mounting bolts.

(b) Disconnect the front side claw groove of the cord cover from the claw of the lower cover, and remove the cord cover.

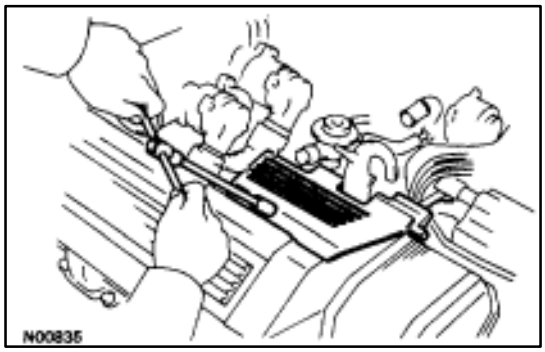

7. REMOVE RH ENGINE WIRE COVER

Remove the bolt and engine wire cover.

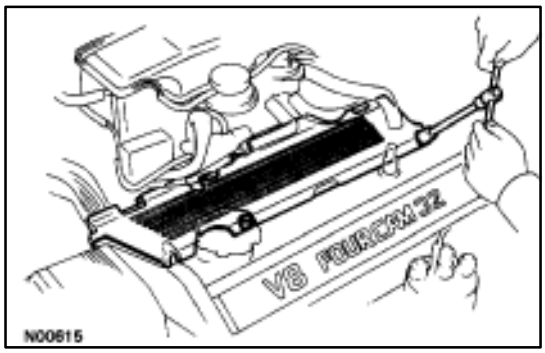

8. REMOVE LH ENGINE WIRE COVER

Remove the two bolts and engine wire cover.

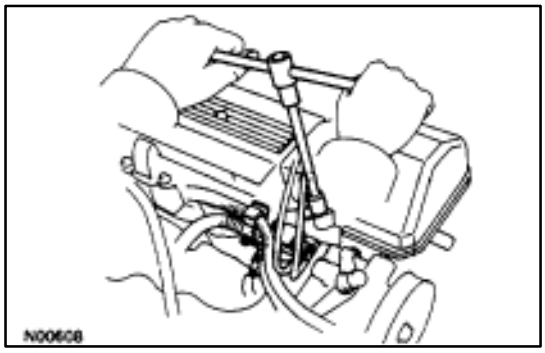

9. REMOVE VSV FOR EVAP SYSTEM

Remove the two bolts, and disconnect the VSV from cylinder head and timing belt cover.

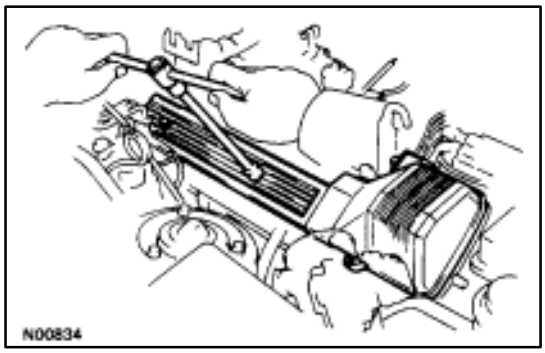

10. REMOVE RH NO.3 TIMING BELT COVER

Remove the three bolts and timing belt cover.

WhereEverybodyKnowsYourName

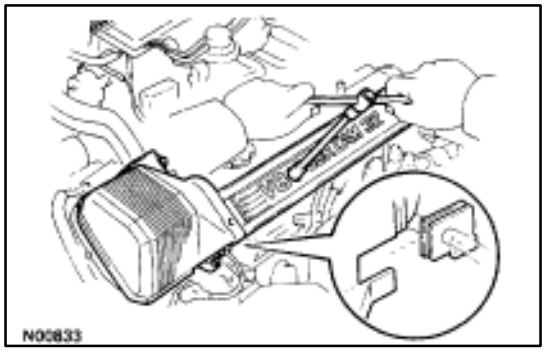

11. REMOVE LH NO.3 TIMING BELT COVER

(a) Remove the four mounting bolts.

(b) Disconnect the cord grommet from the timing belt cover, and remove the timing belt cover.

(c) Remove the cord grommet from the high–tension cord.

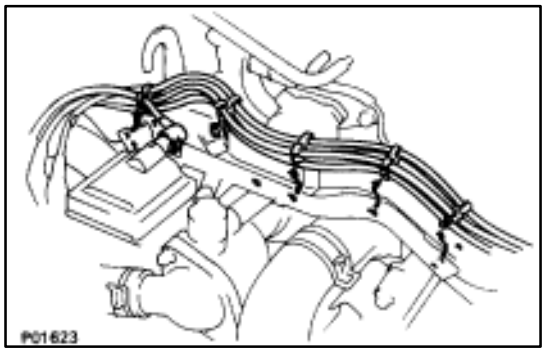

12. REMOVE LOWER HIGH–TENSION CORD COVER

(a) Disconnect the high–tension cord from the RH ignition coil.

(b) Disconnect the high–tension cords from the high–tension cord cover.

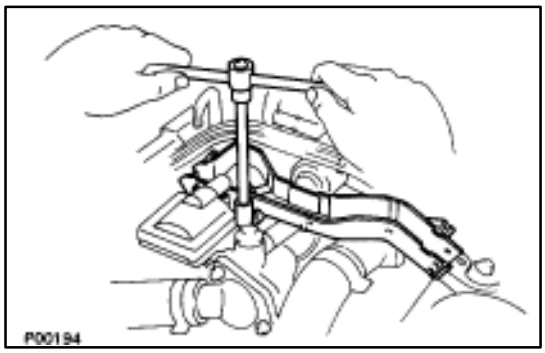

(c) Remove the bolt and cord cover.

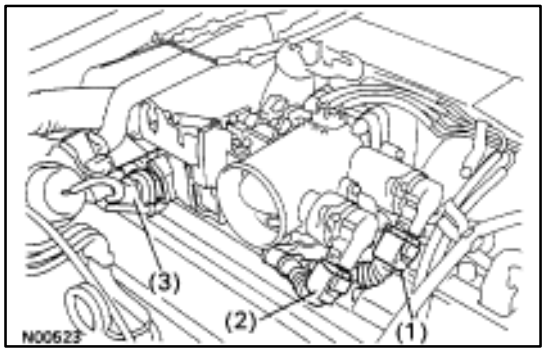

13. REMOVE THROTTLE BODY

(a) Disconnect the following connectors:

(1) Throttle position sensor connector

(2) (w/ TRAC)
Sub–throttle position sensor connector

(3) (w/ TRAC)
Sub–throttle actuator connector

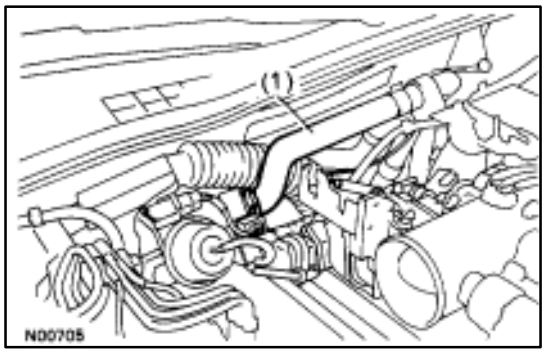

(b) Disconnect the following hoses:

(1) Heat water hose from heater water valve

WhereEverybodyKnowsYourName

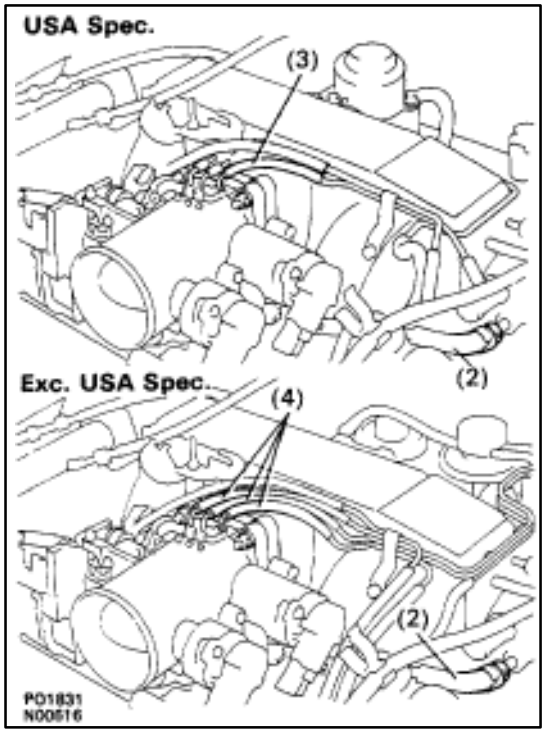

(2) Water by–pass hose from ISC valve
(3) (USA Spec.)
Vacuum hose from throttle body
(4) (Exc. USA Spec.)
Three vacuum hoses from throttle body

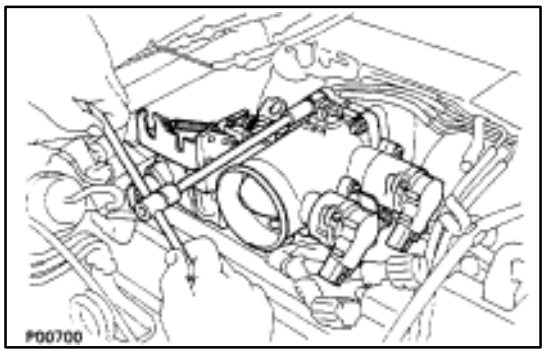

(c) Remove the two bolts and two nuts, disconnect the throttle body from the air intake chamber.

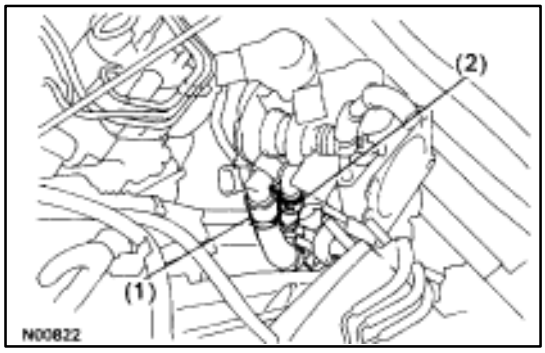

(d) Disconnect the following hoses, and remove the throttle body:
(1) PCV hose from throttle body
(2) Water by–pass hose from throttle body
(e) Remove the throttle body gasket.

14. DISCONNECT CONNECTORS

Disconnect the following connectors:

- Cold start injector connector
- ISC valve connector
- (USA Spec.)
  EGR Valve connector
- (Exc. USA Spec.)
  VSV connector for EGR system
- VSV connector for fuel pressure control system

WhereEverybodyKnowsYourName

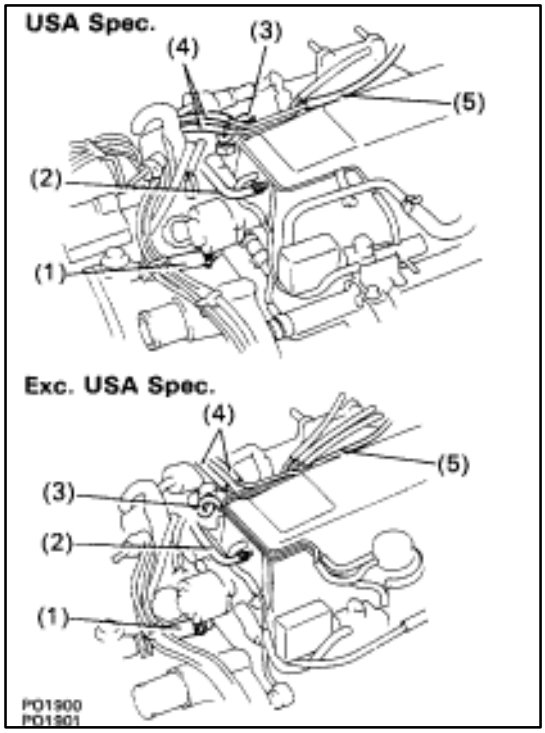

15. DISCONNECT HOSES

Disconnect the following hoses:

(1) Water by–pass hose (from water inlet housing) from ISC valve
(2) Vacuum hose (from PS air control valve) from air intake chamber
(3) Vacuum sensing hose (from fuel pressure regulator) from vacuum pipe
(4) Two vacuum hoses (from VSV for EVAP system) from vacuum pipe
(5) Vacuum hose (from charcoal canister) from vacuum pipe.

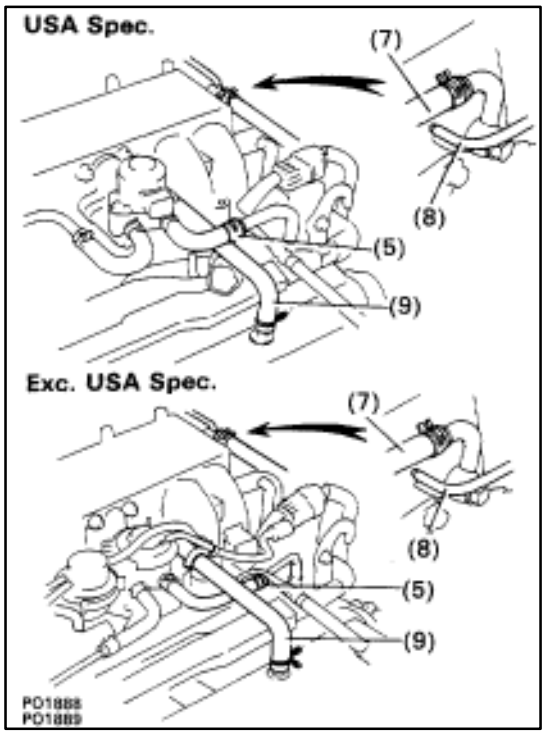

(6) Water by–pass hose (from EGR valve) from water by–pass pipe
(7) Vacuum hose (from brake booster) from air intake chamber
(8) Vacuum hose (from VSV for heater water valve) from air intake chamber
(9) PCV hose from LH cylinder head cover

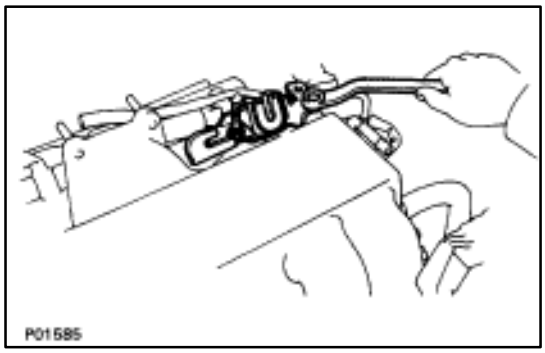

16. REMOVE AIR INTAKE CHAMBER

(a) Remove the bolt, stud bolt and accelerator bracket.

WhereEverybodyKnowsYourName

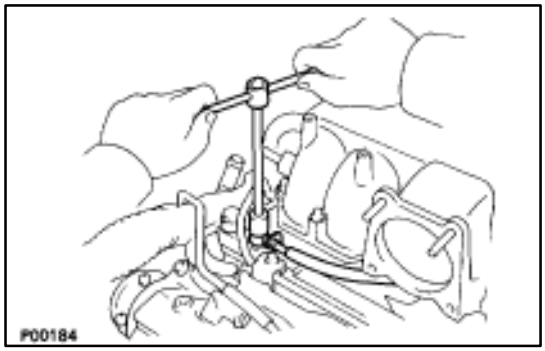

(b) Remove the union bolt and two gaskets, and disconnect the cold start injector tube from the RH delivery pipe.

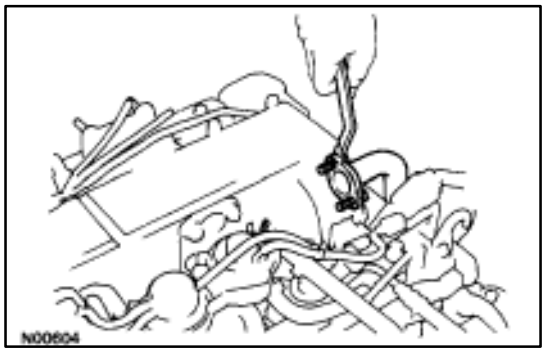

(c) Remove the two bolts and gasket, and disconnect the EGR pipe from the air intake chamber.

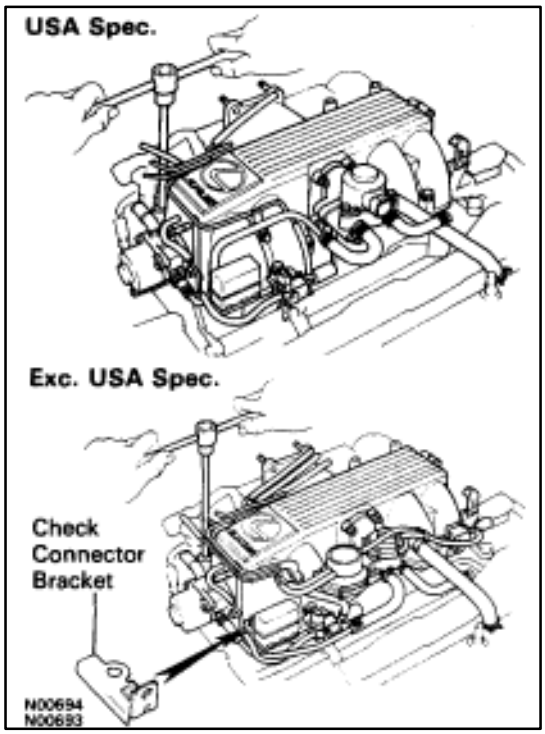

(d) Remove the four bolts, eight nuts and A/T throttle cable bracket.
(e) (USA Spec.)
Disconnect the check (”DIAGNOSIS”) connector bracket from the air intake chamber.
(f) (Exc. USA Spec.)
Remove the connector bracket from the check (”DIAGNOSIS”) connector.
(g) Remove the air intake chamber assembly and four gaskets.

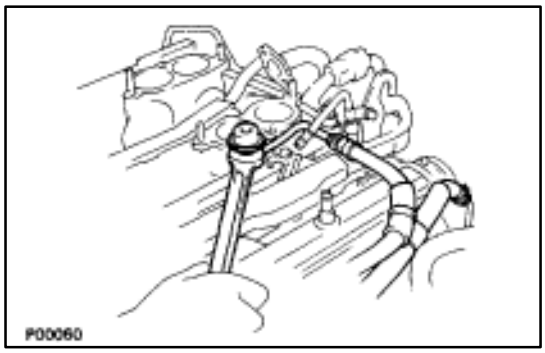

17. DISCONNECT FUEL INLET HOSE FROM LH DELIVERY PIPE

Remove the pulsation damper and two gaskets, and disconnect the inlet hose.

18. DISCONNECT FUEL RETURN HOSE FROM FUEL RETURN PIPE

WhereEverybodyKnowsYourName

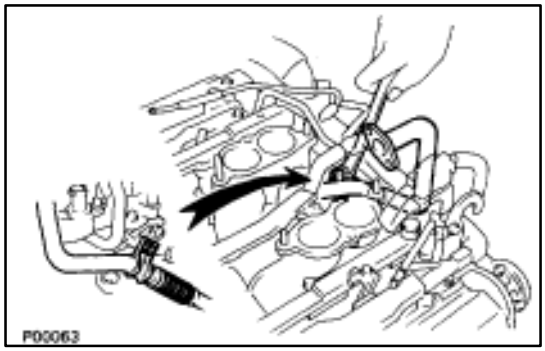

19. DISCONNECT EGR PIPE FROM RH CYLINDER HEAD

Remove the bolt holding the EGR pipe to the cylinder head, and disconnect the EGR pipe.

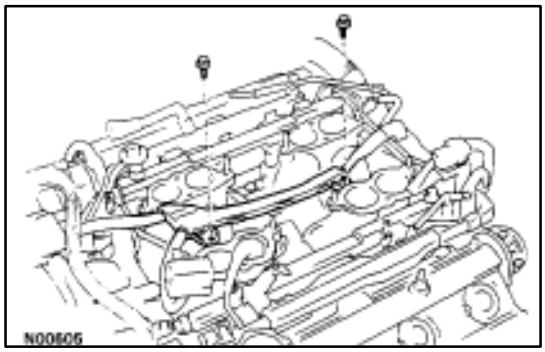

20. DISCONNECT ENGINE WIRE FROM INTAKE MANIFOLD

Remove the two bolts, and disconnect the engine wire.

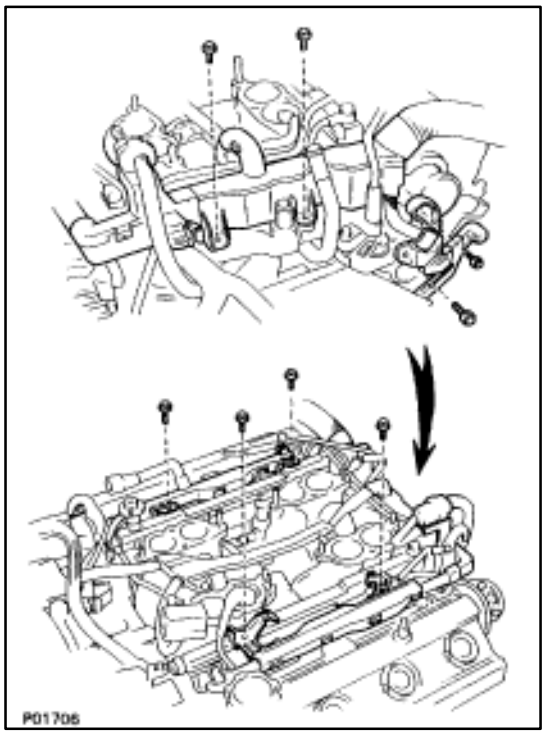

21. DISCONNECT ENGINE WIRE FROM DELIVERY PIPES, REAR WATER BY–PASS JOINT AND RH CYLINDER HEAD

(a) Remove the four bolts holding the engine wire to the delivery pipes, and disconnect the engine wire from the delivery pipe.

(b) Remove the two bolts holding the engine wire to the rear water by–pass joint, and disconnect the engine wire from the rear water by–pass joint.

(c) Remove the two bolts holding the engine wire to the rear side of the RH cylinder head, and disconnect the engine wire from the RH cylinder head.

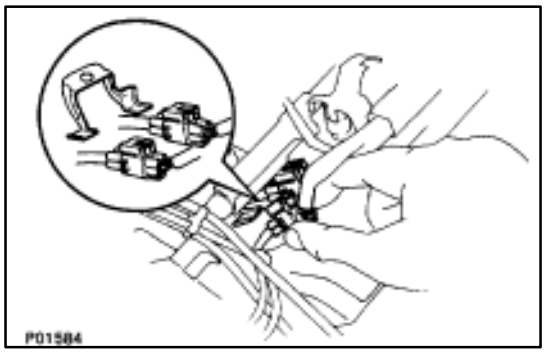

(d) Disconnect the two engine wire connectors from the connector bracket on the front side of the LH delivery pipe.

(e) Disconnect the eight injector connectors.

WhereEverybodyKnowsYourName

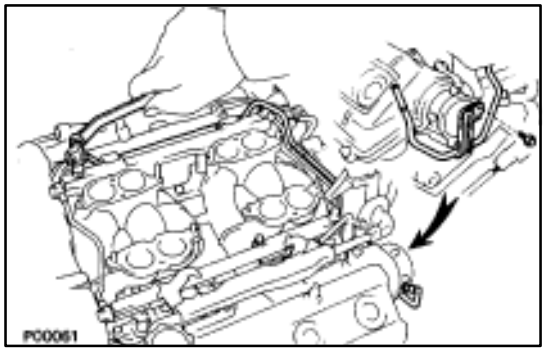

22. REMOVE FUEL RETURN PIPE

(a) Remove the bolt holding the return pipe to the LH cylinder head.

(b) Remove the union bolt, two gaskets and return pipe.

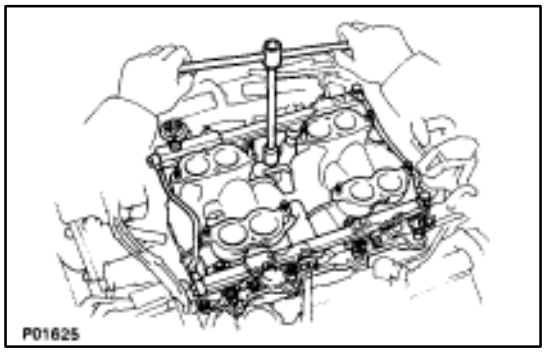

23. REMOVE DELIVERY PIPES AND INTAKE MANIFOLD ASSEMBLY

(a) Remove the six bolts and four nuts holding the intake manifold to the cylinder heads.

(b) Remove the two delivery pipe and intake manifold assembly.

(c) Remove the two intake manifold gaskets.

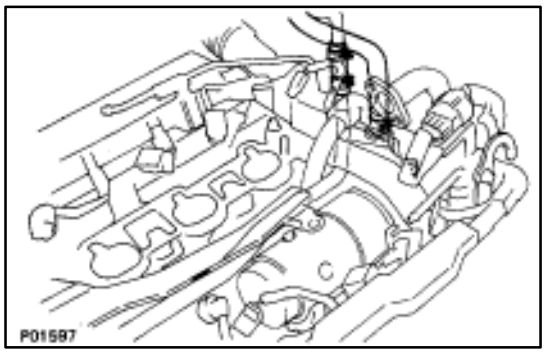

24. DISCONNECT HEATER WATER HOSES FROM WATER BY–PASS PIPE AND REAR WATER BY–PASS JOINT

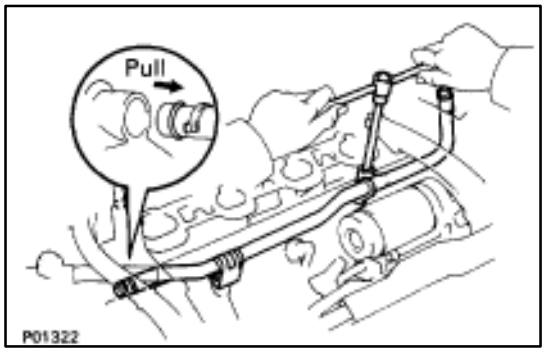

25. REMOVE WATER BY–PASS PIPE

(a) Remove the two mounting bolts.

(b) Pull out the water by–pass pipe from the water pump.

(c) Remove the O–ring from the water by–pass pipe.

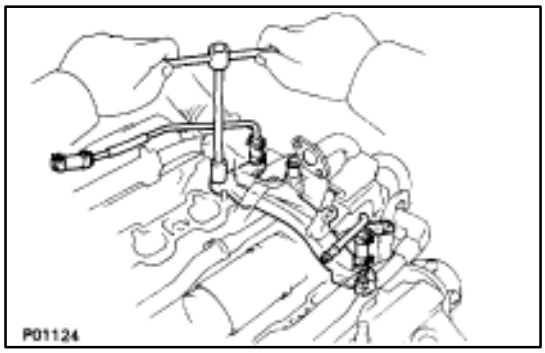

26. REMOVE REAR WATER BY–PASS JOINT

Remove the four nuts, water by–pass joint and two gaskets.

WhereEverybodyKnowsYourName

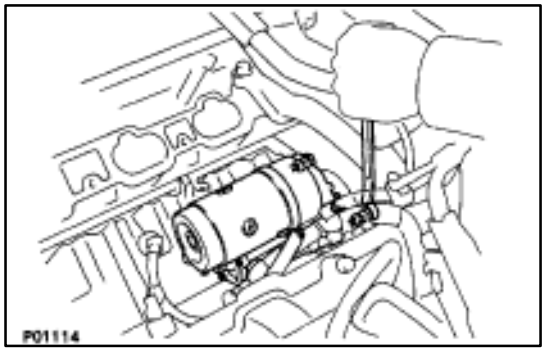

27. REMOVE STARTER

(a) Remove the two bolts holding the starter to the cylinder block.

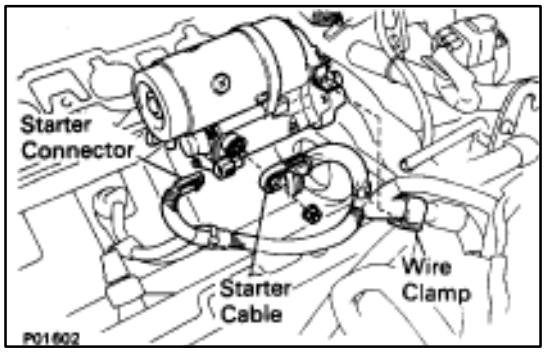

(b) Disconnect the starter connector.
(c) Remove the nut, and disconnect the starter wire.
(d) Disconnect the wire clamp from the wire bracket, and remove the starter.

WhereEverybodyKnowsYourName

COMPONENTS FOR DISASSEMBLY AND ASSEMBLY

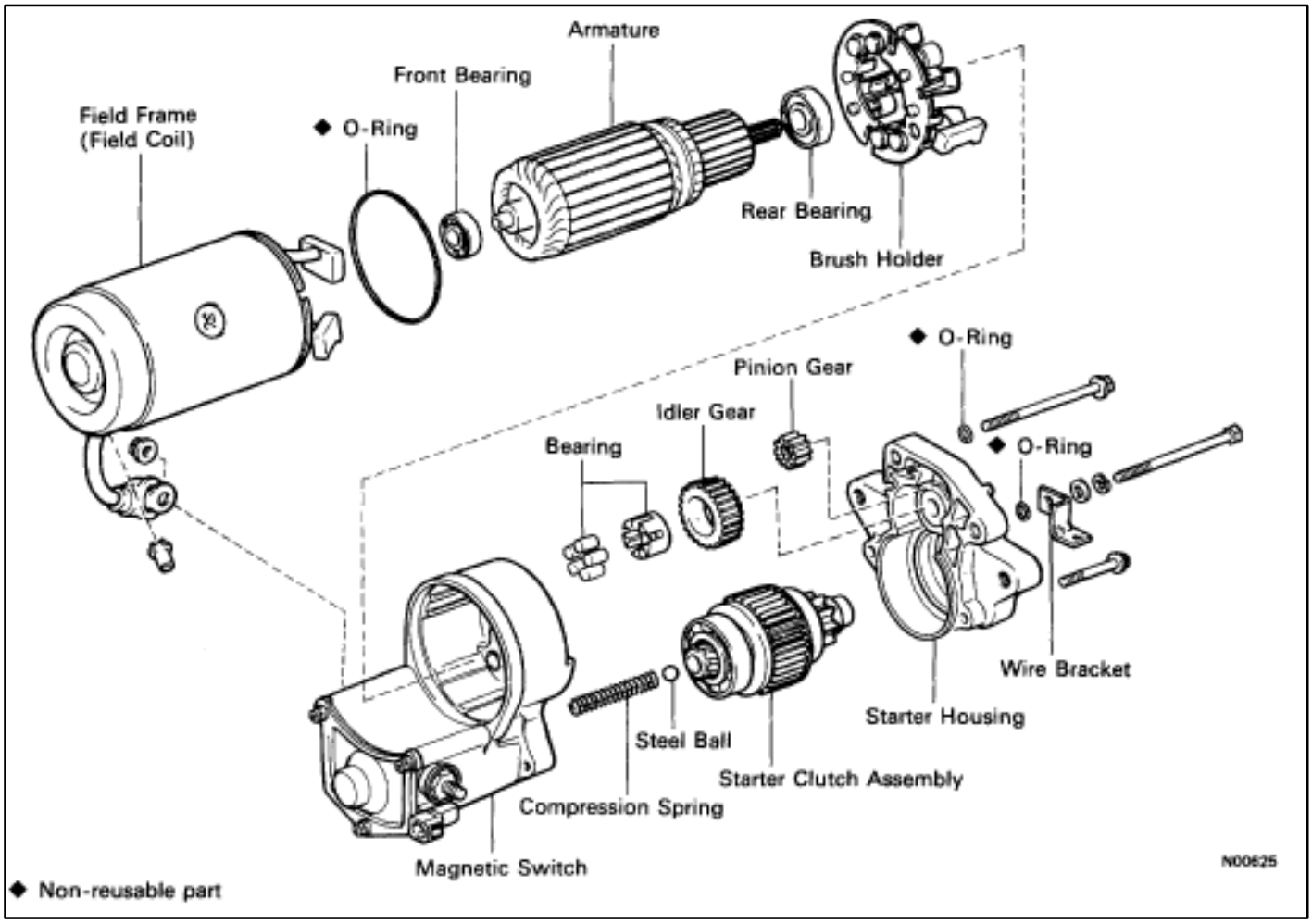

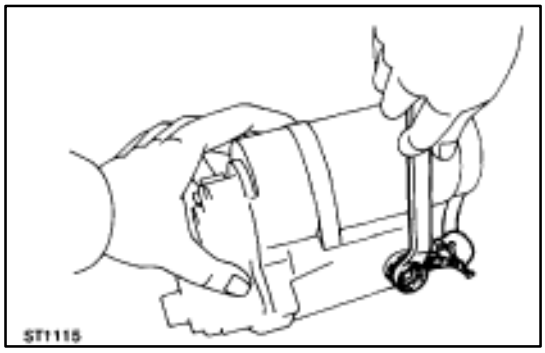

DISASSEMBLY OF STARTER

1. REMOVE FIELD FRAME AND ARMATURE

(a) Remove the nut, and disconnect the lead wire from the magnetic switch terminal.

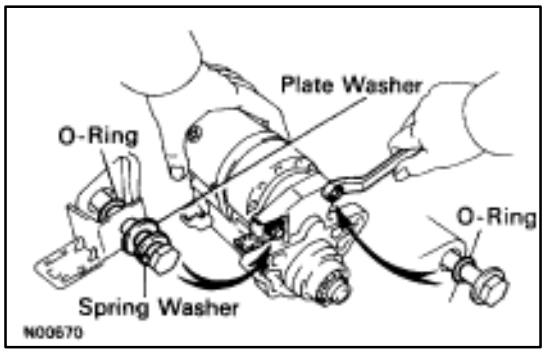

(b) Remove the two through bolts, spring washer, wire bracket and two O–rings.
(c) Pull out the field frame together with the armature.
(d) Remove the O–ring from the field frame.

WhereEverybodyKnowsYourName

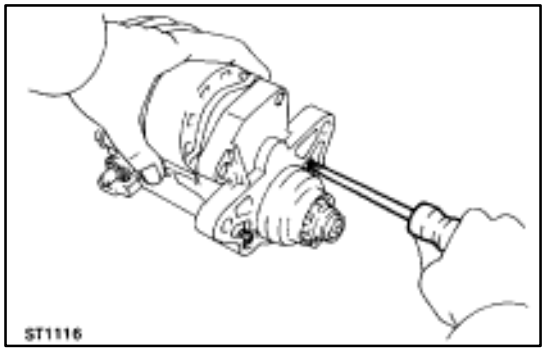

2. REMOVE STARTER HOUSING, CLUTCH ASSEMBLY AND GEARS

(a) Remove the two mounting screws.

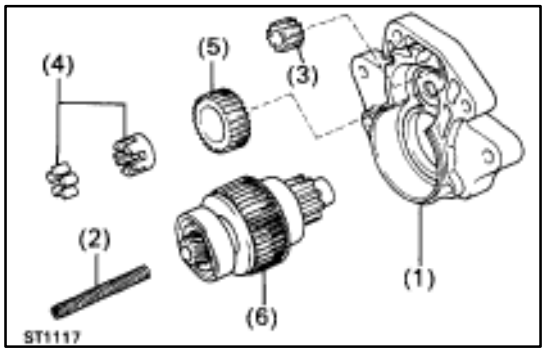

(b) Remove the following parts from the magnetic switch:
- (1) Starter housing
- (2) Return spring
- (3) Pinion gear
- (4) Bearing
- (5) Idler gear
- (6) Clutch assembly

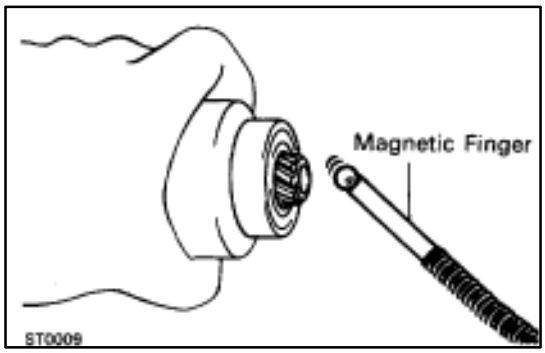

3. REMOVE STEEL BALL

Using a magnetic finger, remove the steel ball from the clutch shaft hole.

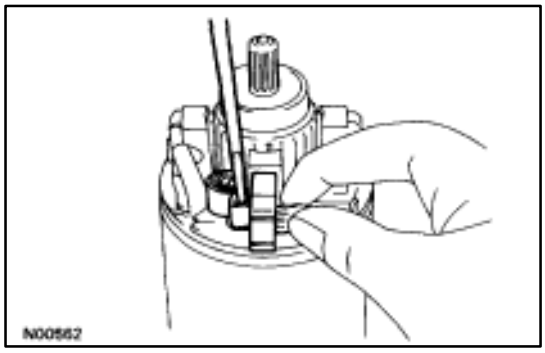

4. REMOVE BRUSH HOLDER

Using a screwdriver, hold the spring back and disconnect the brush from the brush holder. Disconnect the four brushes, and remove the brush holder.

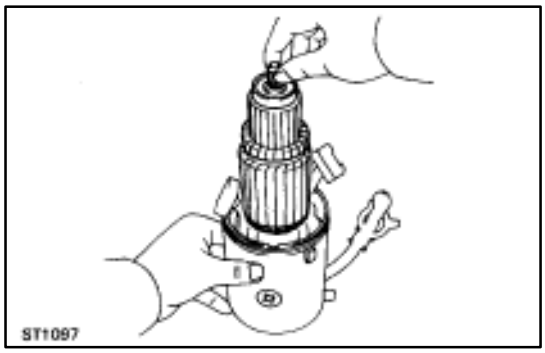

5. REMOVE ARMATURE FROM FIELD FRAME

WhereEverybodyKnowsYourName

INSPECTION AND REPAIR OF STARTER

Armature Coil

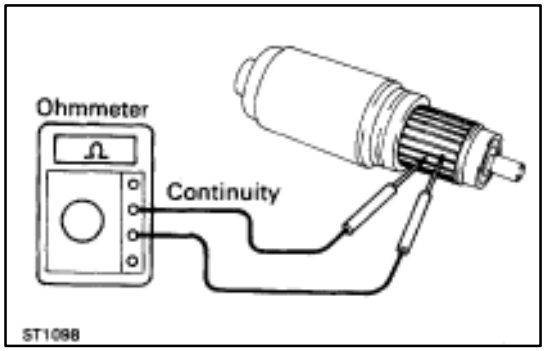

1. INSPECT COMMUTATOR FOR OPEN CIRCUIT

Using an ohmmeter, check that there is continuity between the segments of the commutator.

If there is no continuity, replace the armature.

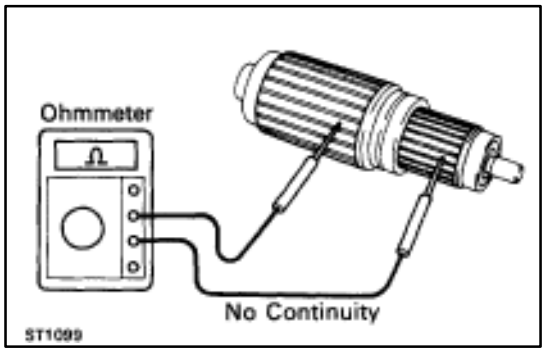

2. INSPECT COMMUTATOR FOR GROUND

Using an ohmmeter, check that there is no continuity between the commutator and armature coil core.

If there is continuity, replace the armature.

Commutator

1. INSPECT COMMUTATOR FOR DIRTY AND BURNT SURFACE

If the surface is dirty or burnt, correct with sandpaper (No.400) or on a lathe.

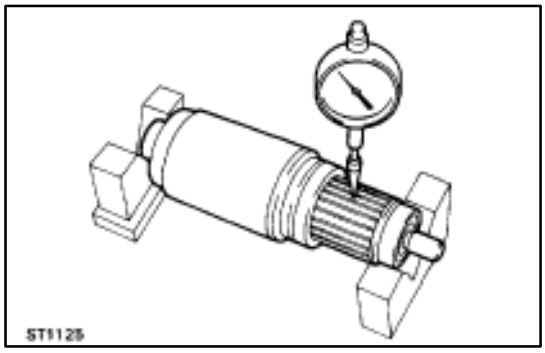

2. INSPECT COMMUTATOR FOR RUNOUT

(a) Place the commutator on V–blocks.

(b) Using a dial indicator, measure the circle runout.

Maximum circle runout: 0.05 mm (0.0020 in.)

If the circle runout is greater than maximum, correct it on a lathe.

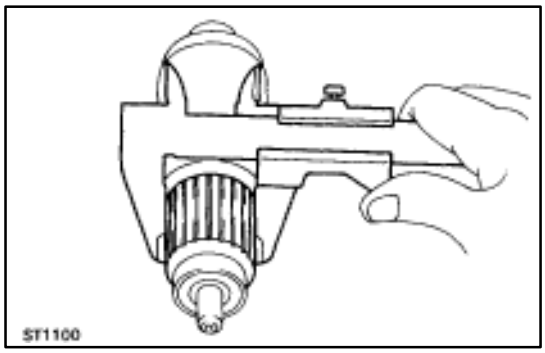

3. INSPECT COMMUTATOR DIAMETER

Using a vernier caliper, measure the diameter.

Standard diameter: 35.0 mm (1.378 in.)

Minimum diameter: 34.0 mm (1.339 in.)

If the diameter is less than minimum, replace the armature.

WhereEverybodyKnowsYourName

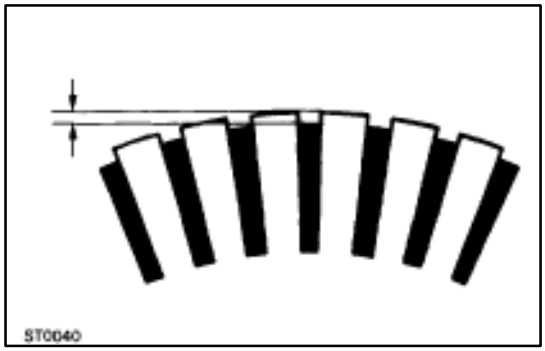

4. INSPECT UNDERCUT DEPTH

Check that the undercut depth is clean and free of foreign material. Smooth out the edge.

Standard undercut depth: 0.7–0.9 mm (0.028–0.035 in.)

Minimum undercut depth: 0.2 mm (0.008 in.)

If the undercut depth is less than minimum, correct it with a hacksaw blade.

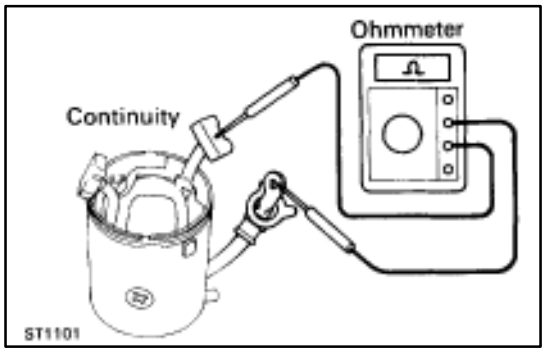

Field Coil (Field Frame)

1. INSPECT FIELD COIL FOR OPEN CIRCUIT

Using an ohmmeter, check that there is continuity between the lead wire and field coil brush lead.

If there is no continuity, replace the field frame.

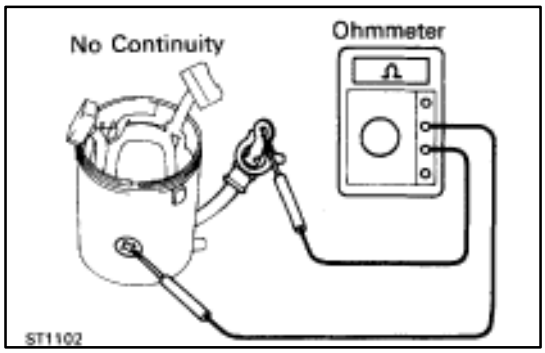

2. INSPECT FIELD COIL FOR GROUND

Using an ohmmeter, check that there is no continuity between the field coil end and field frame.

If there is continuity, replace the field frame.

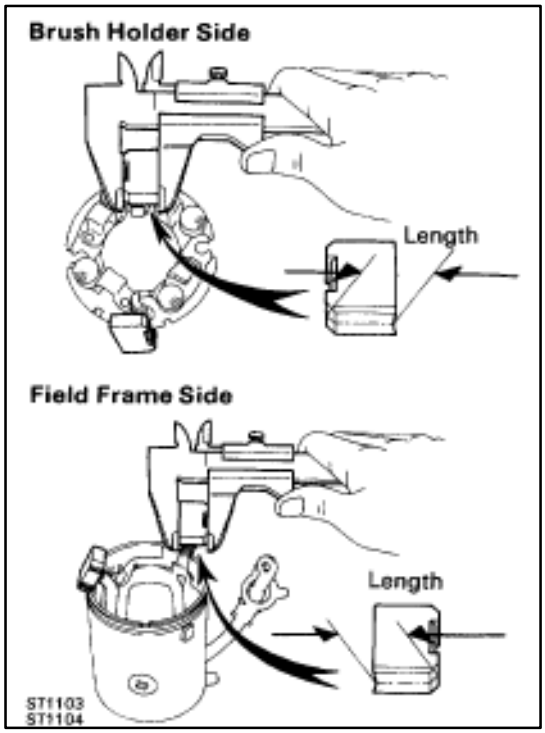

Brushes

INSPECT BRUSH LENGTH

Using a vernier caliper, measure the brush length.

Standard length: 15.0–15.5 mm (0.591–0.610 in.)

Minimum length: 9.5 mm (0.374 in.)

If the length is less than minimum, replace the brush holder and field frame.

WhereEverybodyKnowsYourName

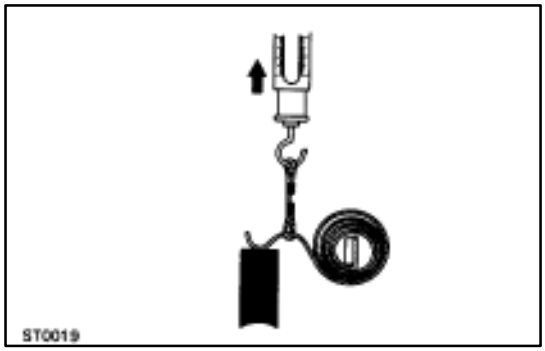

Brush Springs

INSPECT BRUSH SPRING LOAD

Take the pull scale reading the instant the brush spring separates from the brush.

Standard installed load:

26–32 N (2.7–3.3 kgf, 6.0–7.3 lbf)

If the installed load is not as specified, replace the brush springs.

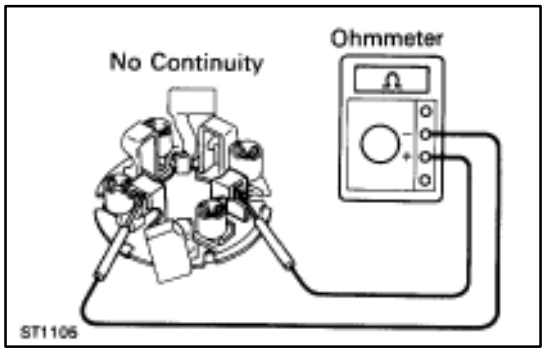

Brush Holder

INSPECT BRUSH HOLDER INSULATION

Using an ohmmeter, check that there is no continuity between the positive (+) and negative (–) brush holders.

If there is continuity, repair or replace the brush holder.

Clutch and Gears

1. INSPECT GEAR TEETH

Check the gear teeth on the pinion gear, idler gear and the clutch assembly for wear or damage.

If damaged, replace the gear or clutch assembly.

If damaged, also check the flywheel ring gear for wear or damage.

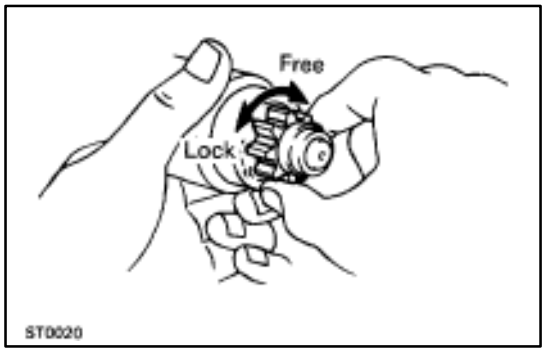

2. INSPECT CLUTCH PINION GEAR

Rotate the pinion gear counterclockwise and check that it turns freely. Try to rotate the pinion gear clockwise and check that it locks.

If necessary, replace the clutch assembly.

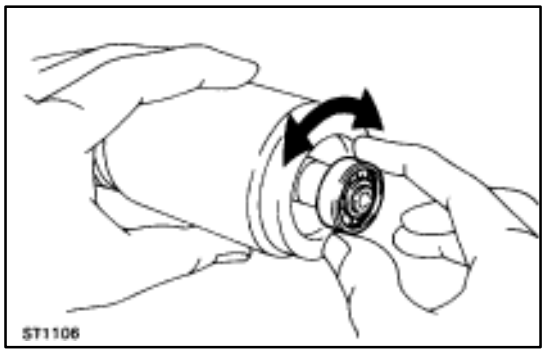

Bearings

1. INSPECT FRONT BEARING

Turn each bearing by hand while applying inward force.

If resistance is felt or the bearing sticks, replace the bearing.

WhereEverybodyKnowsYourName

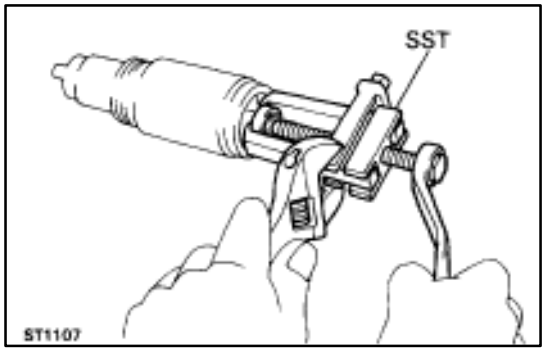

2. IF NECESSARY, REPLACE FRONT BEARING

(a) Using SST, remove the bearing.

SST 09286–46011

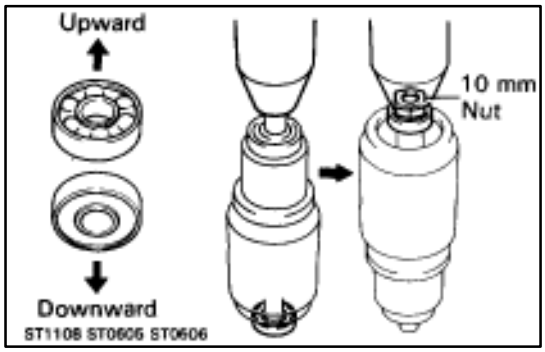

(b) Using a 10 mm nut and press, press in a new front bearing.

NOTICE: Be careful of the bearing installation direction.

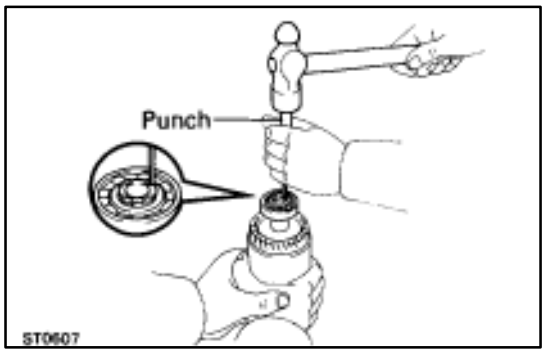

(c) Using a punch, stake the armature shaft.

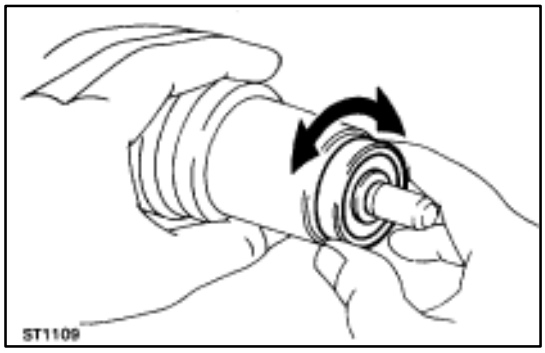

3. INSPECT REAR BEARING

Turn each bearing by hand while applying inward force.

If resistance is felt or the bearing sticks, replace the bearing.

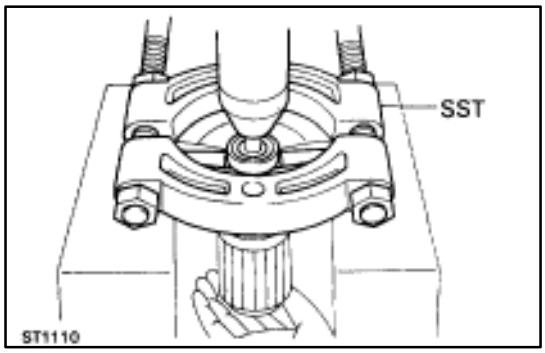

4. IF NECESSARY, REPLACE REAR BEARING

(a) Using SST and a press, press out the bearing.

SST 09950–00020

WhereEverybodyKnowsYourName

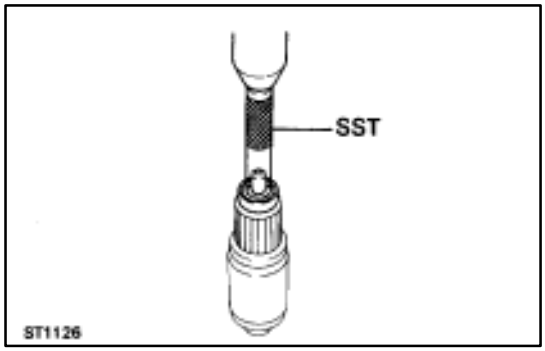

(b) Using SST and a press, press in a new bearing.
SST 09201–41020

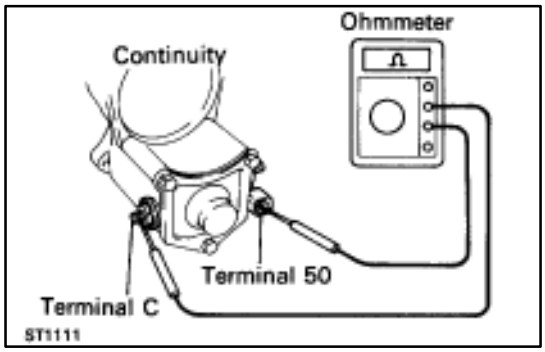

Magnetic Switch

1. PERFORM PULL–IN COIL OPEN CIRCUIT TEST

Using an ohmmeter, check that there is continuity between terminals 50 and C.

If there is no continuity, replace the magnetic switch.

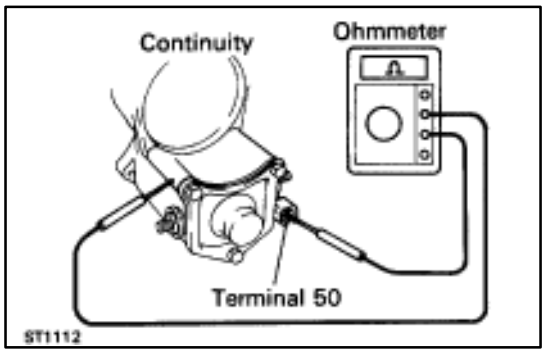

2. PERFORM HOLD–IN COIL OPEN CIRCUIT TEST

Using an ohmmeter, check that there is continuity between terminal 50 and the switch body.

If there is no continuity, replace the magnetic switch.

WhereEverybodyKnowsYourName

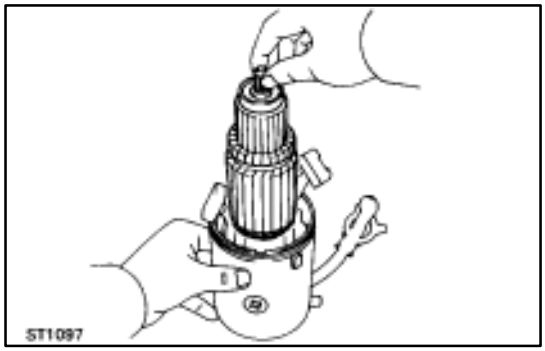

ASSEMBLY OF STARTER

(See Components on page ST–15)

HINT: Use high–temperature grease to lubricate the bearings and gears when assembling the starter.

1. PLACE ARMATURE INTO FIELD FRAME

Apply grease to the armature bearings, and insert the armature into the field frame.

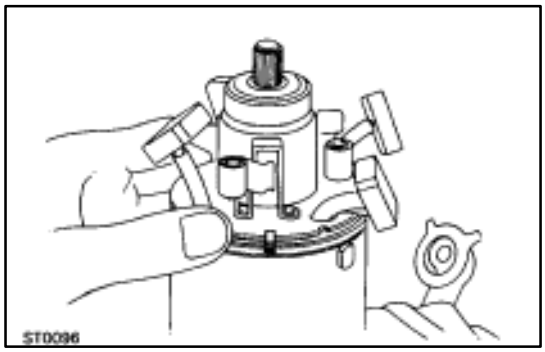

2. INSTALL BRUSH HOLDER

(a) Align the claw of the brush holder with the claw groove of the field frame.

(b) Place the brush holder on the field frame.

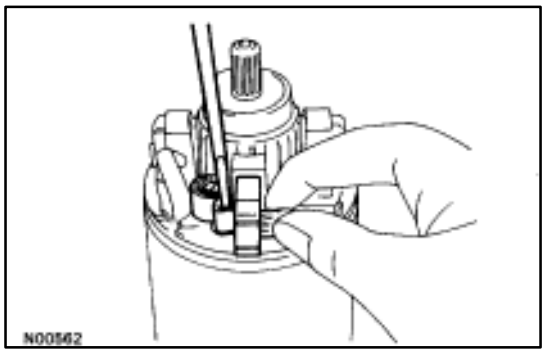

(c) Using a screwdriver, hold the brush spring back, and connect the brush into the brush holder. Connect the four brushes.

NOTICE: Check that the positive (+) lead wires are not grounded.

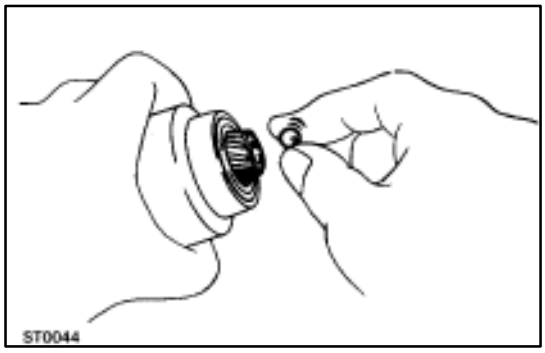

3. INSERT STEEL BALL INTO CLUTCH SHAFT HOLE

(a) Apply grease to the steel ball.

(b) Insert the steel ball into the clutch shaft hole.

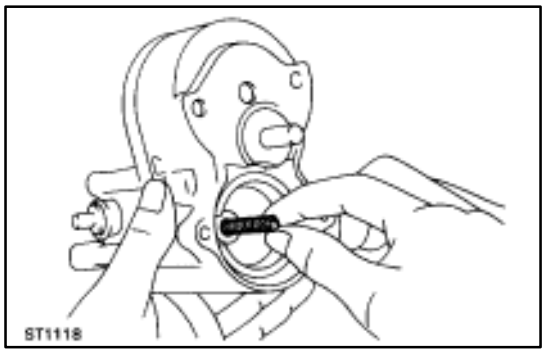

4. INSTALL CLUTCH ASSEMBLY, GEARS AND STARTER HOUSING

(a) Apply grease to the return spring.

(b) Insert the return spring into the magnetic switch hole.

WhereEverybodyKnowsYourName

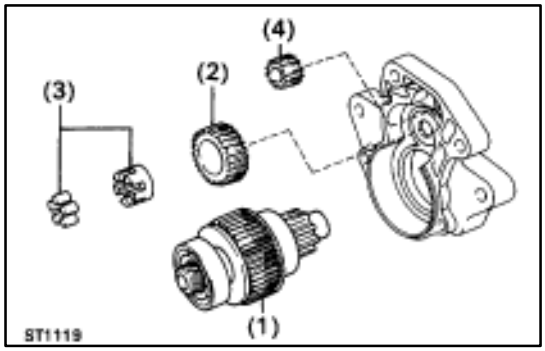

(c) Place the following parts in position on the starter housing:
(1) Clutch assembly
(2) Idler gear
(3) Bearing
(4) Pinion gear

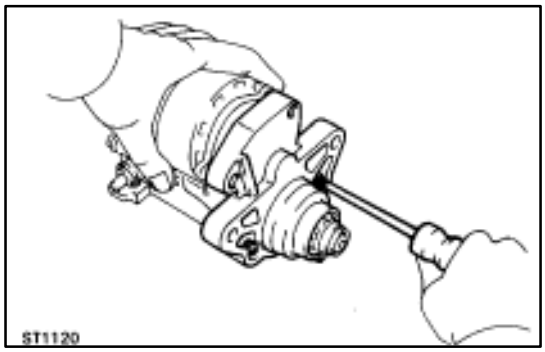

(d) Install the starter housing to magnetic switch with the two screws.

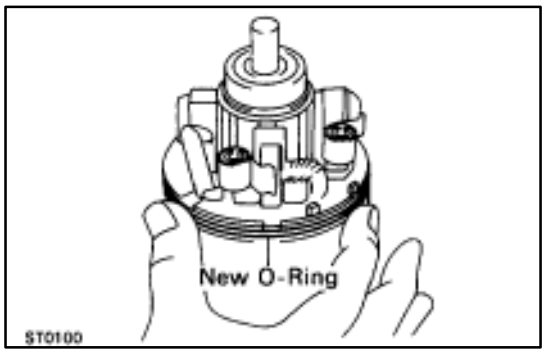

5. INSTALL FIELD FRAME AND ARMATURE ASSEMBLY

(a) Install a new O–ring to groove of the field frame.

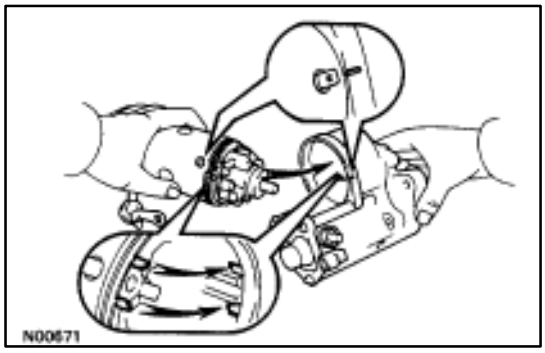

(b) Align the claws of the brush holder with the grooves of the magnetic switch, and install the field frame and armature shaft assembly.
(c) Align the punch mark of the field frame with the line of the magnet switch.

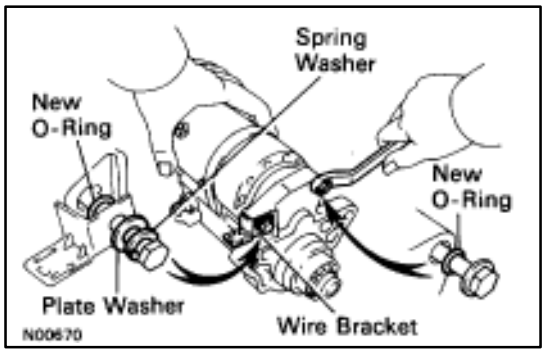

(d) Install a new O–ring to through bolt A.
(e) Install the spring washer, plate washer, wire bracket and a new O–ring to through bolt B.
(f) Install the two through bolts.

WhereEverybodyKnowsYourName

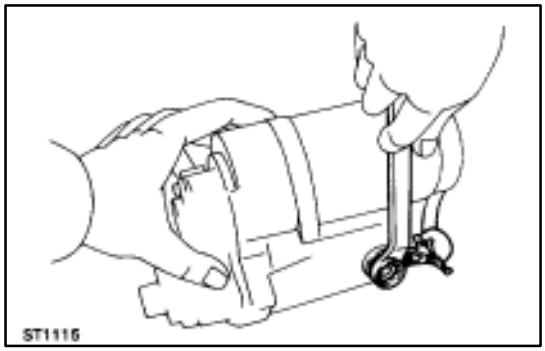

(g) Connect the lead wire to terminal C, and install the nut.

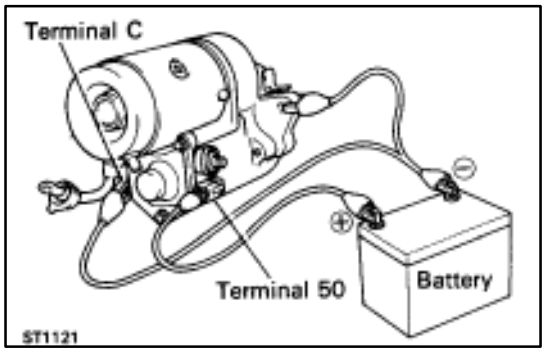

PERFORMANCE TEST OF STARTER

NOTICE: These tests must be performed within 3 to 5 seconds to avoid burning out the coil.

1. PERFORM PULL–IN TEST

(a) Disconnect the field coil lead wire from terminal C.

(b) Connect battery to the magnetic switch as shown. Check that the pinion gear moves outward.

If the pinion gear does not move, replace the magnetic switch.

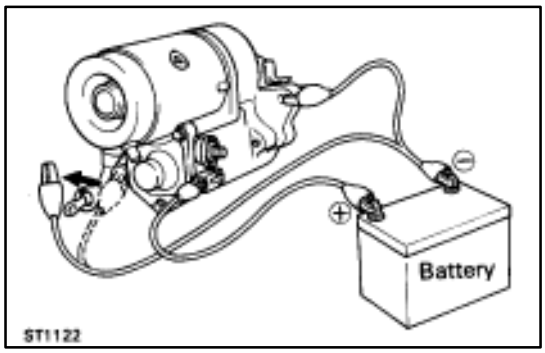

2. PERFORM HOLD–IN TEST

While connected as above with the pinion gear out, disconnect the negative (–) lead from terminal C.

Check that the pinion gear remains out.

If the pinion gear returns inward, replace the magnetic switch.

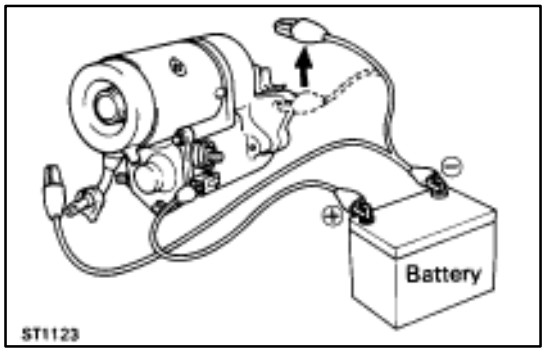

3. INSPECT PLUNGER RETURN

Disconnect the negative (+) lead from the switch body. Check that the pinion gear returns inward.

If the pinion gear does not return, replace the magnetic switch.

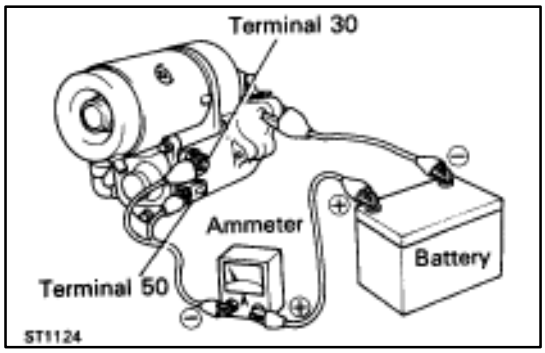

4. PERFORM NO–LOAD PERFORMANCE TEST

(a) Connect battery and ammeter to the starter as shown.

(b) Check that the starter rotates smoothly and steadily with the pinion gear moving out.
Check the reading on the ammeter.

Standard amperage: 120 A or less at 11.5 V

WhereEverybodyKnowsYourName

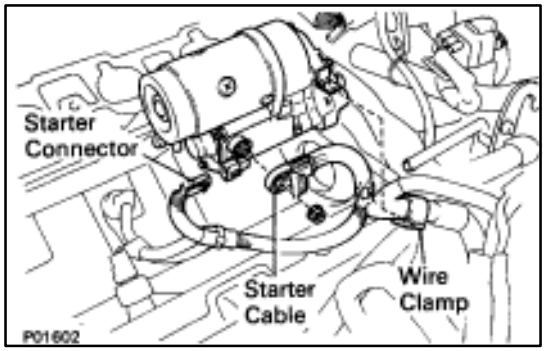

INSTALLATION OF STARTER

(See Components on page ST–5)

1. INSTALL STARTER

(a) Connect the wire clamp to the wire bracket.
(b) Connect the starter wire with the nut.
(c) Connect the starter connector.

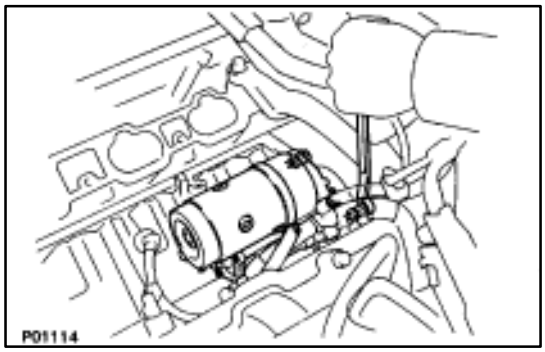

(d) Install the starter with the two bolts.
Torque: 39 N·m (400 kgf·cm, 29 ft·lbf)

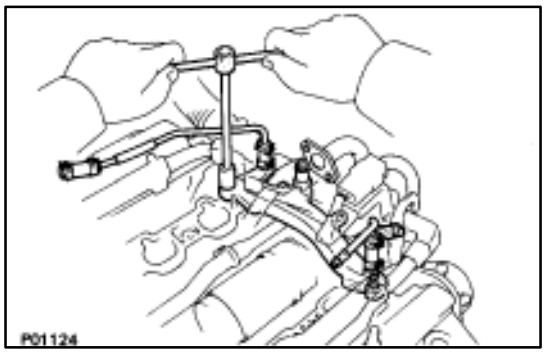

2. INSTALL REAR WATER BY–PASS JOINT

(a) Install four new gaskets and the water by–pass joint with the four nuts.
Torque: 18 N·m (185 kgf·cm, 13 ft·lbf)
(b) Install the bolt holding the water by–pass pipe to the LH engine hanger.

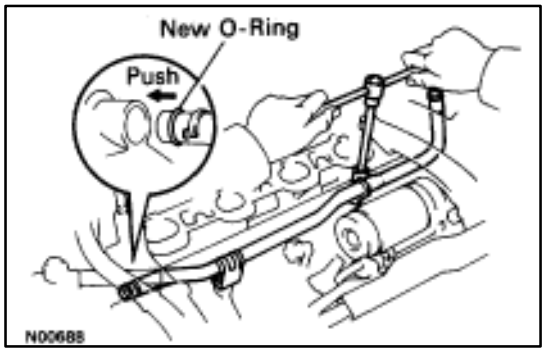

3. INSTALL WATER BY–PASS PIPE

(a) Install a new O–ring to the water by–pass pipe.
(b) Apply soapy water to the O–ring.
(c) Push in the water by–pass pipe end into the pipe hole of the water pump.
(d) Install the water by–pass pipe with the two bolts.
Torque: 18 N·m (185 kgf·cm, 13 ft·lbf)

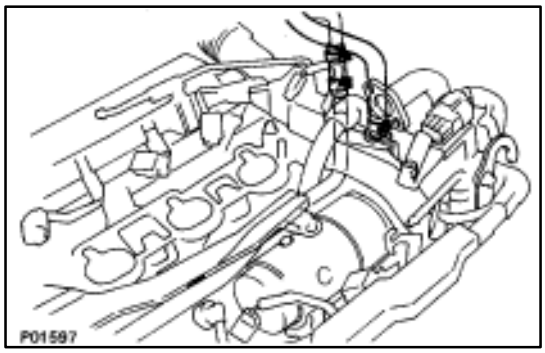

4. CONNECT HEATER WATER HOSES TO WATER BY–PASS PIPE AND REAR WATER BY–PASS JOINT

WhereEverybodyKnowsYourName

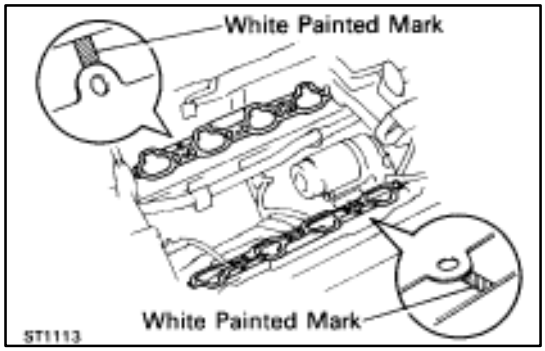

5. INSTALL DELIVERY PIPES AND INTAKE MANIFOLD ASSEMBLY

(a) Place two new gaskets on the cylinder heads with the white painted mark facing upward.

NOTICE: Align the port holes of the gasket and cylinder head. Be careful of the installation direction.

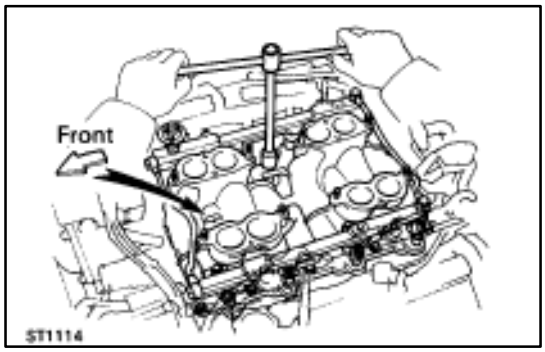

(b) Place the delivery pipes and intake manifold assembly in position on the cylinder heads with the arrow mark on the intake manifold facing forward.

NOTICE: Be careful of the installation direction.

(c) Install the six mounting bolts and four mounting nuts.

Torque: 18 N·m (185 kgf·cm, 13 ft·lbf)

HINT: Use bolts 30 mm (1.18 in.) in length.

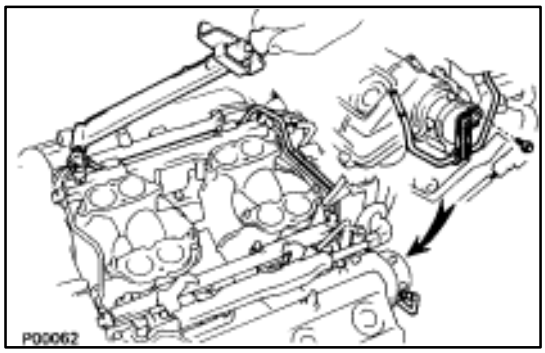

6. INSTALL FUEL RETURN PIPE

Install the return pipe with two new gaskets, union bolt and bolt.

Torque (Union bolt):

35 N·m (360 kgf·cm, 26 ft·lbf)

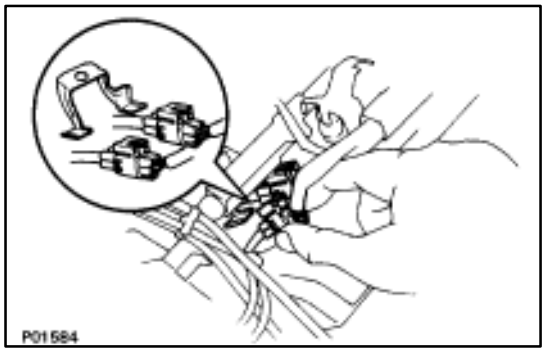

7. INSTALL ENGINE WIRE TO DELIVERY PIPES, REAR WATER BY–PASS JOINT AND RH CYLINDER HEAD

(a) Connect the eight injector connectors.

(b) Connect the two engine wire connectors to the connector bracket on the LH delivery pipe.

WhereEverybodyKnowsYourName

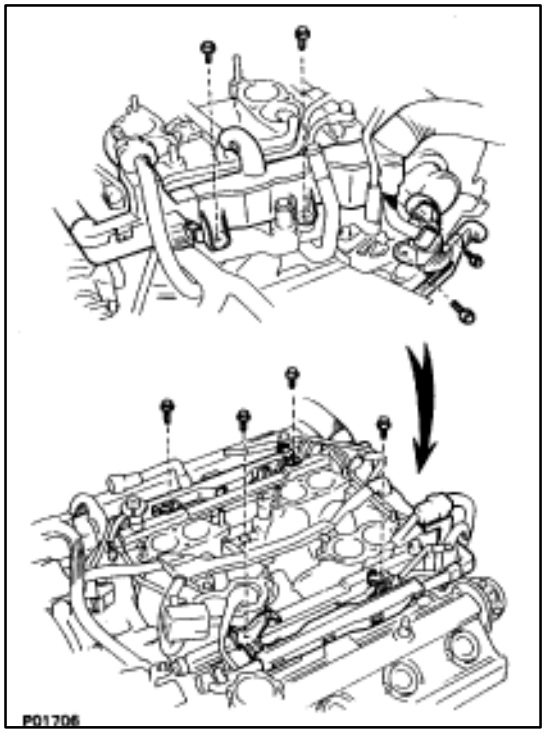

(c) Install the engine wire to the RH cylinder head with the two bolts.
(d) Install the engine wire to the rear water by–pass joint with the two bolts.
(e) Install the engine wire to the delivery pipes with the four bolts.

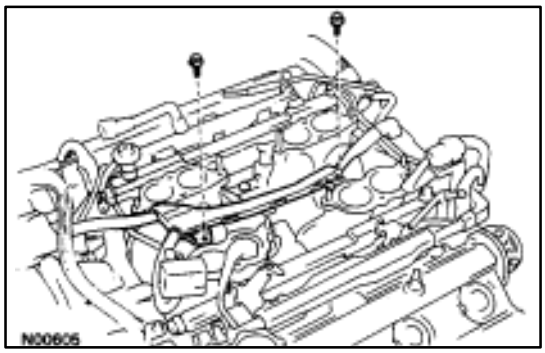

8. INSTALL ENGINE WIRE TO INTAKE MANIFOLD
Install the engine wire with the two bolts.

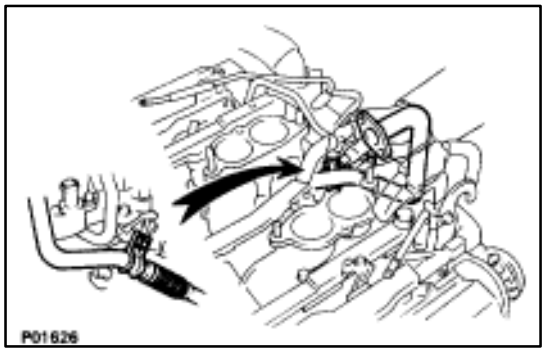

9. TEMPORARILY INSTALL EGR PIPE TO RH CYLINDER HEAD
Temporarily install the EGR pipe with the bolt.

10. CONNECT FUEL RETURN HOSE TO FUEL RETURN PIPE

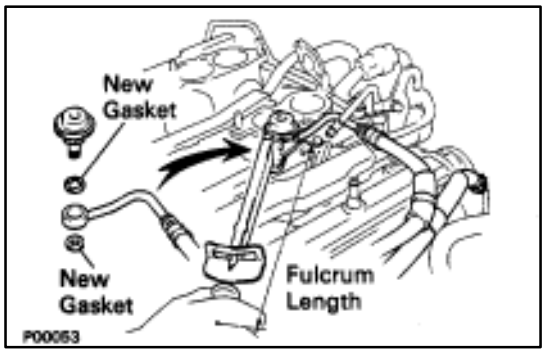

11. CONNECT FUEL INLET HOSE TO LH DELIVERY PIPE
Using SST, connect the inlet hose with two new gaskets and pulsation damper.
SST 09612–24014 (09617–24011)
Torque: 39 N·m (400 kgf·cm, 29 ft·lbf)
33 N·m (340 kgf·cm, 24 ft·lbf) for SST
HINT: Use a torque wrench with a fulcrum length of 30 cm (11.81 in.).

WhereEverybodyKnowsYourName

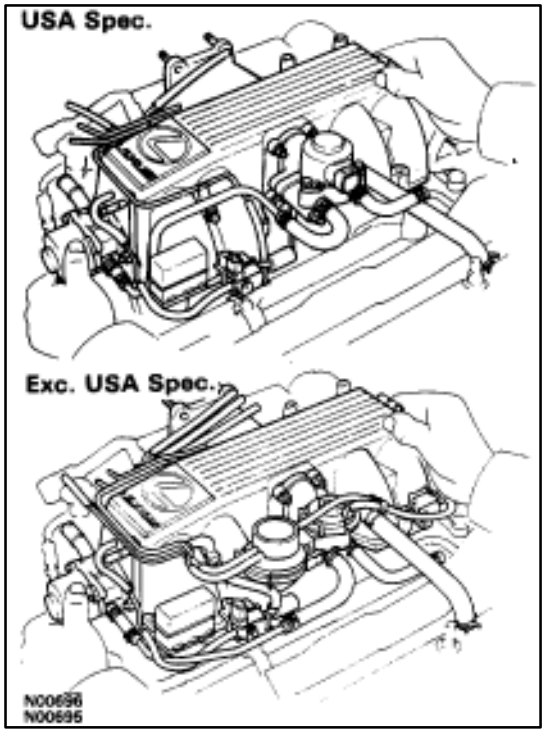

12. INSTALL AIR INTAKE CHAMBER

(a) Place four new gaskets and the air intake chamber on the intake manifold.

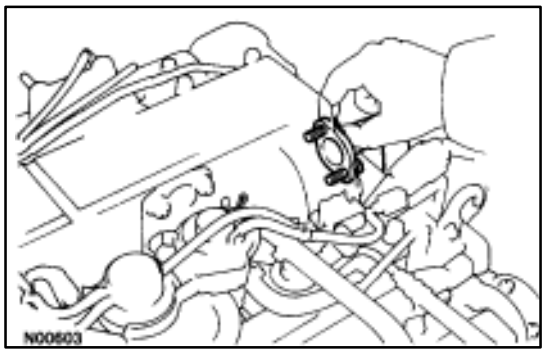

(b) Temporarily install a new gasket and the EGR pipe to air intake chamber with the two bolts.

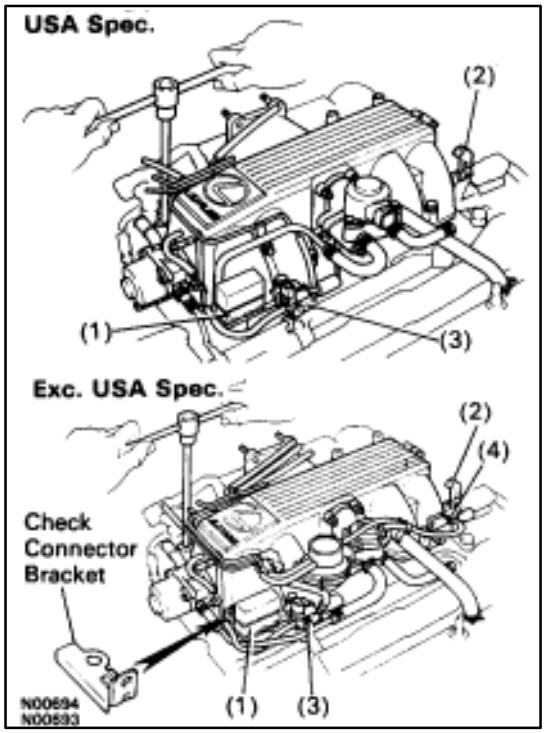

(c) (Exc. USA Spec.)
Install the connector bracket to check (”DIAGNOSIS”) connector.

(d) Install the air intake chamber and following parts with the four bolts and eight nuts:
   (1) Check (”DIAGNOSIS”) connector
   (2) A/T throttle cable bracket
   (3) VSV for fuel pressure control system
   (4) VSV for EGR system

Torque: 18 N·m (185 kgf·cm, 13 ft·lbf)

HINT: Use bolts 40 mm (1.57 in.) of length.

WhereEverybodyKnowsYourName

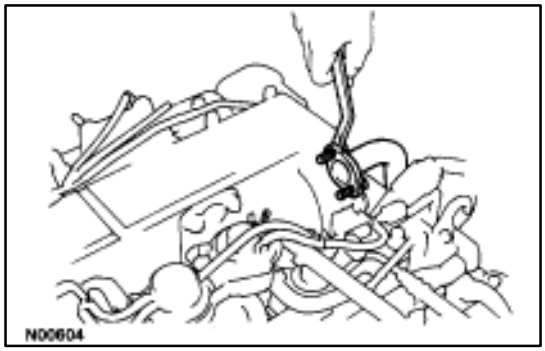

(e) Tighten the bolt holding the EGR pipe to the air intake chamber.

Torque: 18 N·m (185 kgf·cm, 13 ft·lbf)

(f) Tighten the bolt holding the EGR pipe to the RH cylinder head.

Torque: 18 N·m (185 kgf·cm, 13 ft·lbf)

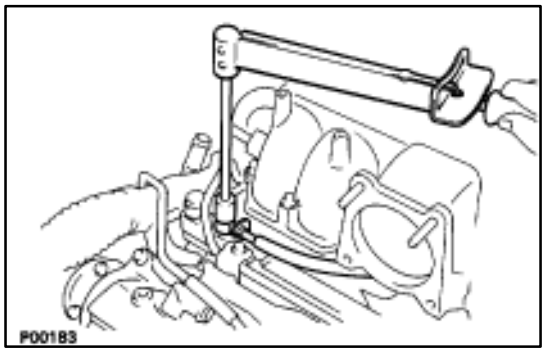

(g) Connect the cold start injector tube to the RH delivery pipe with two new gaskets and union bolt.

Torque: 15 N·m (150 kgf·cm, 11 ft·lbf)

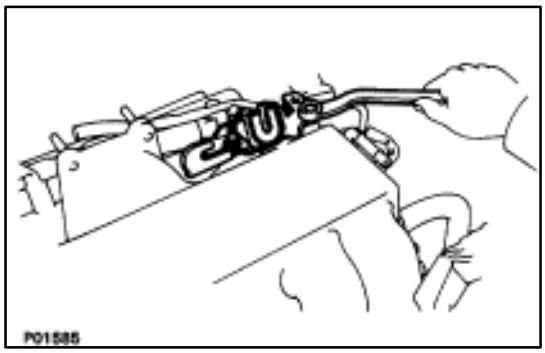

(h) Install the accelerator bracket with the bolt and stud bolt.

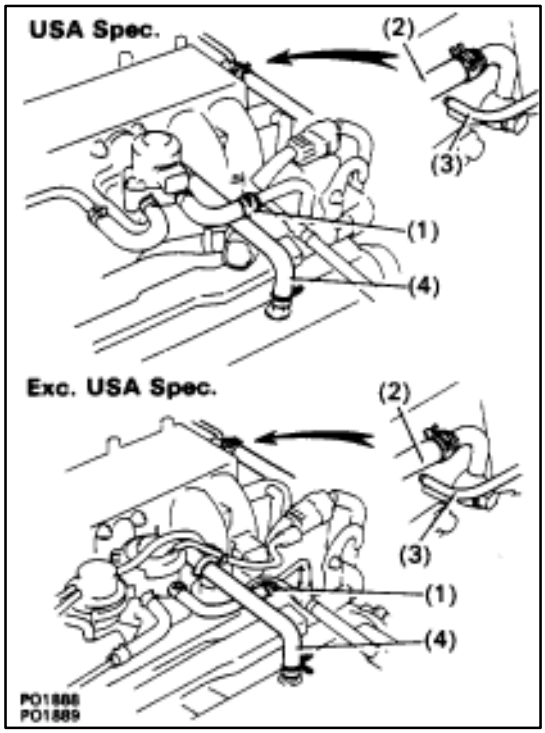

13. CONNECT HOSES

Connect the following hoses:

(1) Water by–pass (from EGR valve) to water bypass pipe
(2) Vacuum hose (from brake booster) to air intake chamber
(3) Vacuum hose (from VSV for heater water valve) to air intake chamber
(4) PCV hose to LH cylinder head cover

WhereEverybodyKnowsYourName

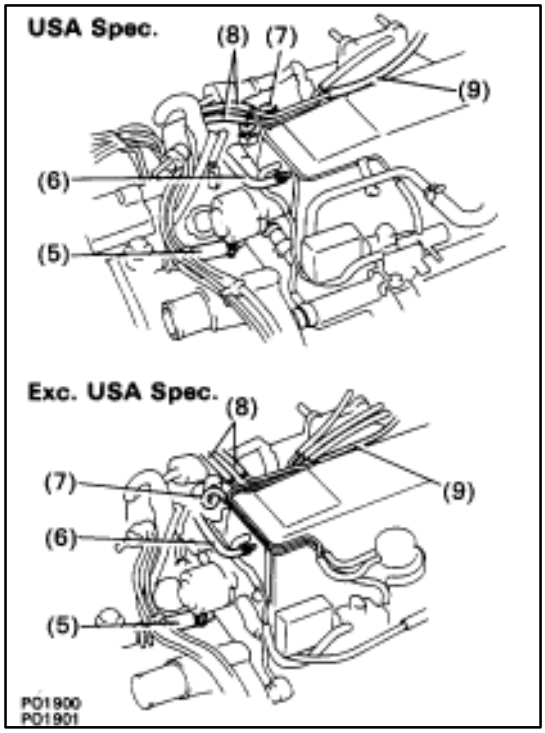

(5) Water by–pass hose (from water inlet housing) to ISC valve
(6) Vacuum hose (from PS air control valve) to air intake chamber
(7) Vacuum sensing hose (from fuel pressure regulator) to vacuum pipe
(8) Two vacuum hoses (from VSV for EVAP system) to vacuum pipe
(9) Vacuum hose (from charcoal canister) to vacuum pipe.

14. CONNECT CONNECTORS

Connect the following connectors:

- Cold start injector connector
- ISC valve connector
- (USA Spec.)
  EGR valve connector
- (Exc. USA Spec.)
  VSV connector for EGR system
- VSV connector for fuel pressure control system

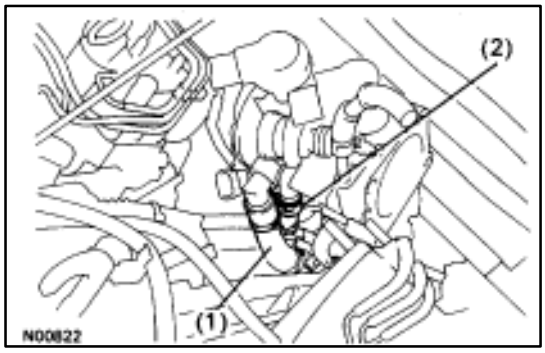

15. INSTALL THROTTLE BODY

(a) Connect the following hoses:
(1) PCV hose to throttle body
(2) Water by–pass hose to throttle body

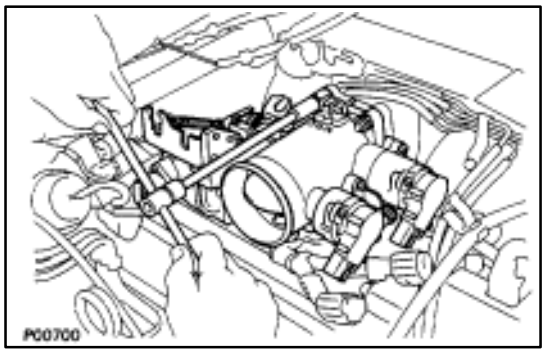

(b) Install a new gasket and throttle body with the two bolts and two nuts.

Torque: 18 N·m (185 kgf·cm, 13 ft·lbf)

HINT: Use bolts 40 mm (1.57 in.) in length.

(c) Install the water by–pass pipe (from rear water bypass joint) to the clamp on the engine wire cover.

WhereEverybodyKnowsYourName

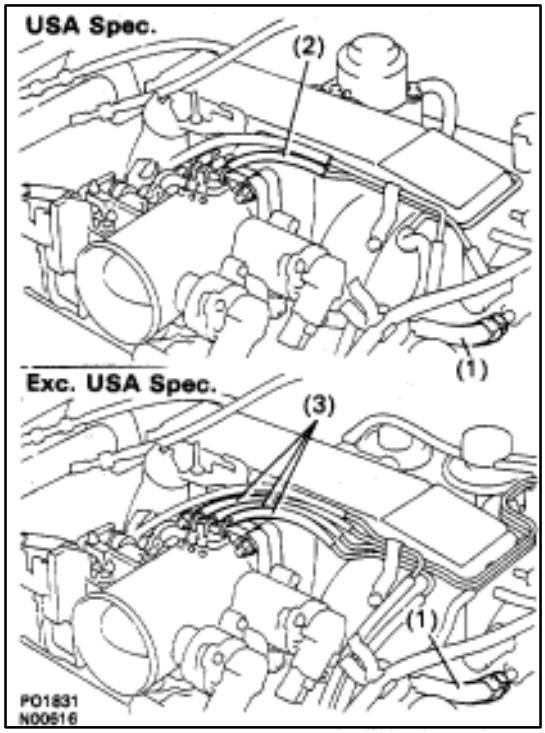

(d) Connect the following hoses:
(1) Water by–pass hose to the ISC valve
(2) (USA Spec.)
Vacuum hose to throttle body
(3) (Exc. USA Spec.)
Three vacuum hoses to throttle body

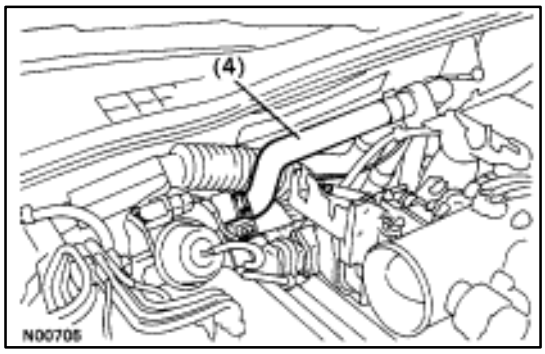

(4) Heater water hose to heater water valve

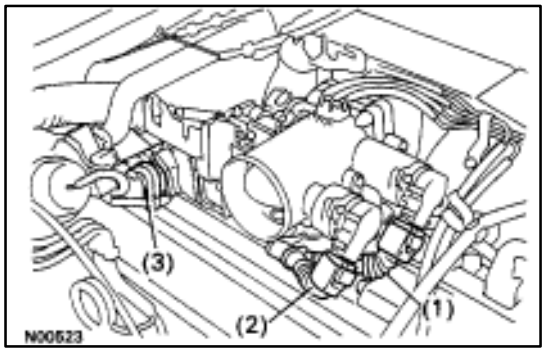

(e) Connect the following connectors:
(1) Throttle position sensor connector
(2) (w/ TRAC)
Sub–throttle position sensor connector
(3) (w/ TRAC)
Sub–throttle actuator connector

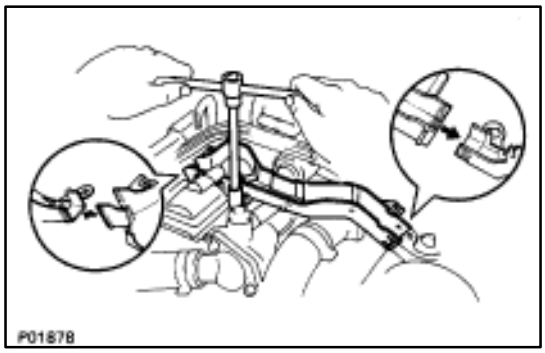

16. INSTALL LOWER HIGH–TENSION CORD COVER

(a) Connect the end portions of the high–tension cord to the cord clamps
(b) Install the high–tension cord cover with the bolt.

WhereEverybodyKnowsYourName

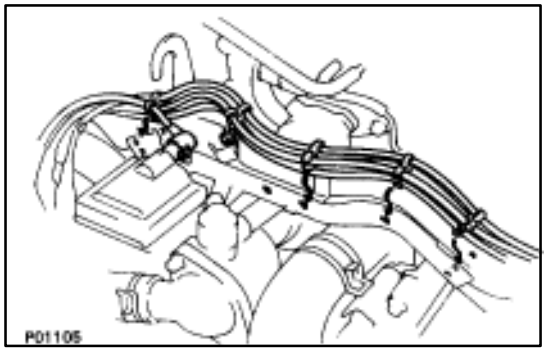

(c) Install the clamps on the high–tension cords to the high–tension cord cover.
(d) Connect the high–tension cord to the RH ignition coil.

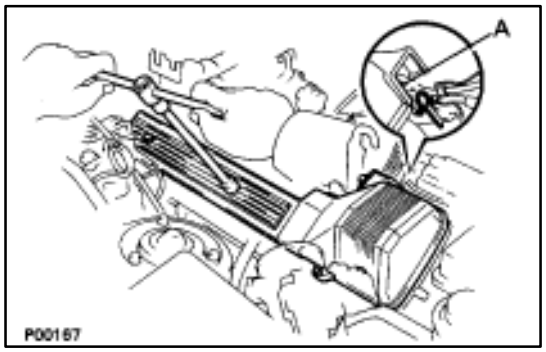

17. INSTALL RH NO.3 TIMING BELT COVER
(a) Install the three gaskets to the timing belt cover.
(b) Fit portion A of the timing belt cover, matching it with the lower high–tension cord cover.
(c) Install the timing belt cover with the three bolts.

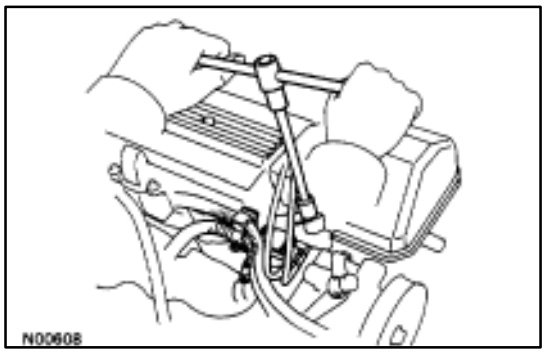

18. INSTALL VSV FOR EVAP SYSTEM
Install the VSV with the two bolts.

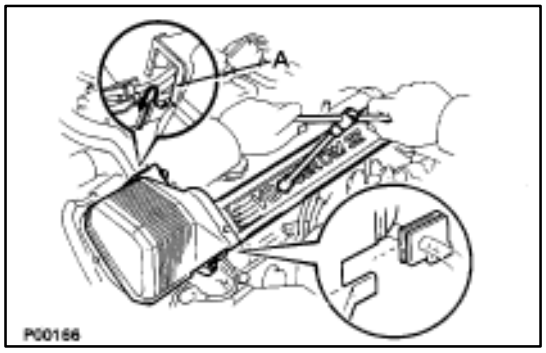

19. INSTALL LH NO.3 TIMING BELT COVER
(a) Install the three gaskets to the timing belt cover.
(b) Install the cord grommet to the high–tension cord.
(c) Install the cord grommet to the timing belt cover.
(d) Fit portion A of the timing belt cover, matching it with the lower high–tension cord cover.
(e) Install the timing belt cover with the four bolts.

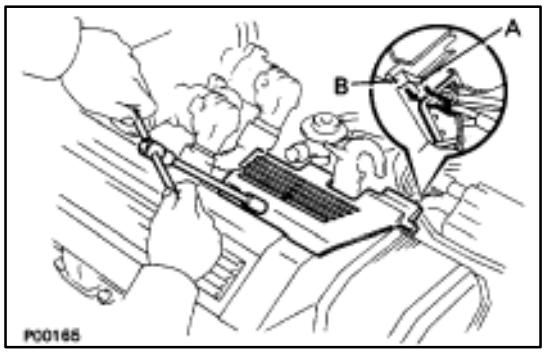

20. INSTALL RH ENGINE WIRE COVER
(a) Fit portions A and B of the engine wire cover, matching them with the lower high–tension cord cover and No.3 timing belt cover.
(d) Install the engine wire cover with the bolt.

WhereEverybodyKnowsYourName

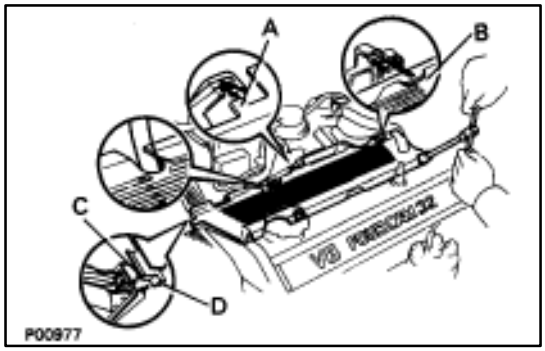

21. INSTALL LH ENGINE WIRE COVER

(a) Connect portions A and B engine wire cover to the wire brackets.
(b) Set the VSV (for fuel pressure control system) wire in original position.
(c) Fit portions C and D of the engine wire cover, matching them with the lower high–tension cord cover and No.3 timing belt cover.
(d) Install the engine wire cover with the two bolts.

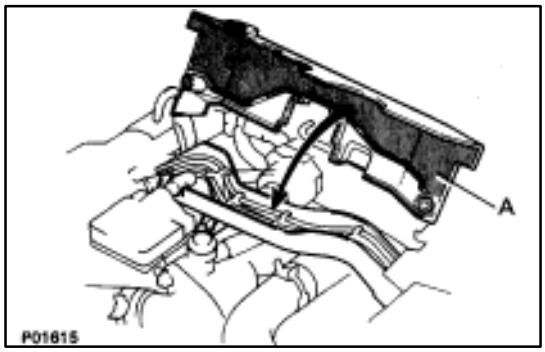

22. INSTALL UPPER HIGH–TENSION CORD COVER

(a) Fit portion A of the upper high–tension cover, matching it with the top of the lower high–tension cord cover.

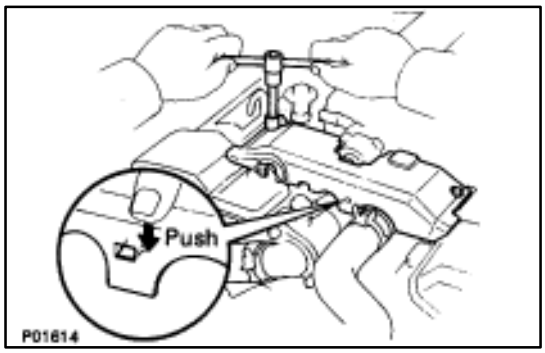

(b) Push the front side of the high–tension cord cover, and connect the front side claw groove of the upper high–tension cord cover to the claw of the lower high–tension cord cover.
(c) Install the upper high–tension cord cover with the two bolts.

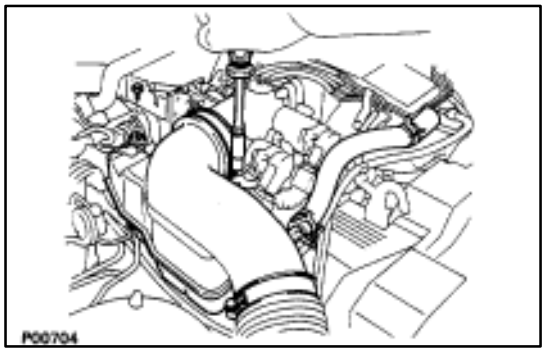

23. INSTALL INTAKE AIR CONNECTOR

(a) Connect the end portions of the intake air connector to the throttle body and air cleaner hose.
(b) Tighten the two hose clamps.
(c) Install the bolt holding the intake air connector to the cylinder head cover.

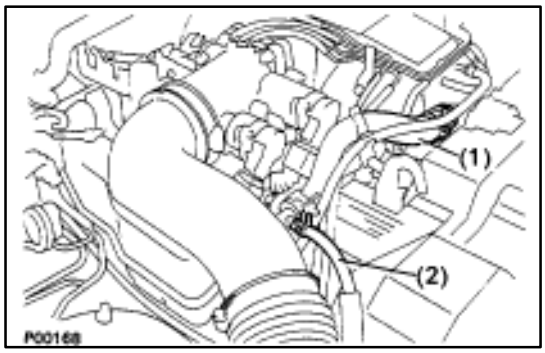

(d) Connect the following hoses:
  (1) Air hose to ISC valve
  (2) Air hose (from PS air control valve) to intake air connector

WhereEverybodyKnowsYourName

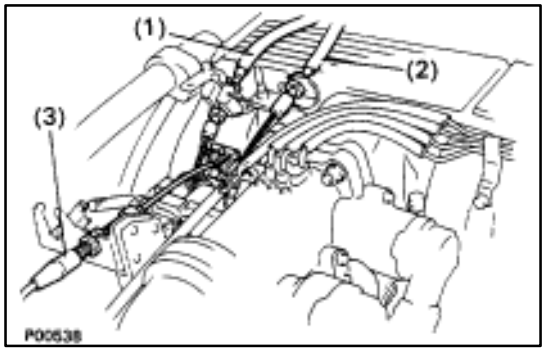

24. CONNECT CONTROL CABLES TO THROTTLE BODY

Connect the following hoses:

(1) Accelerator cable
(2) A/T throttle control cable
(3) (w/ Cruise Control System)
Cruise control actuator cable

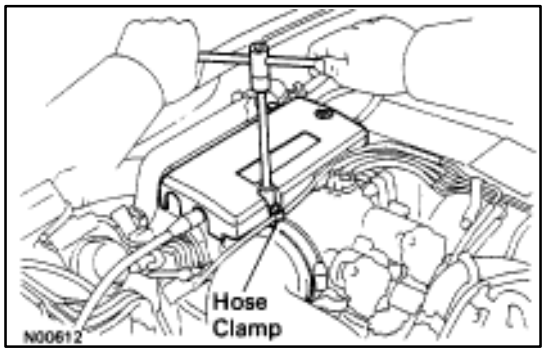

25. INSTALL THROTTLE BODY COVER

Install the throttle body cover and hose clamp with the two bolts and cap nut.

26. CONNECT CABLE TO NEGATIVE TERMINAL OF BATTERY

27. FILL WITH ENGINE COOLANT (See page CO–7)

28. CHECK THAT ENGINE STARTS

WhereEverybodyKnowsYourName

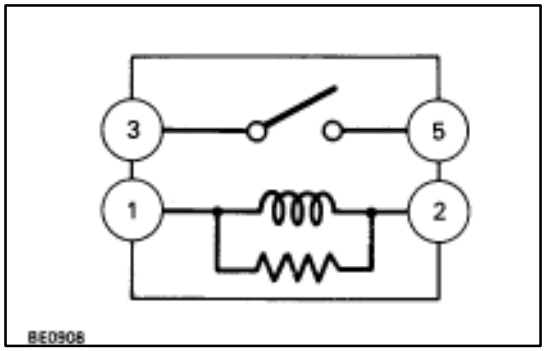

STARTER RELAY

INSPECTION OF STARTER RELAY

(See page ST–2)

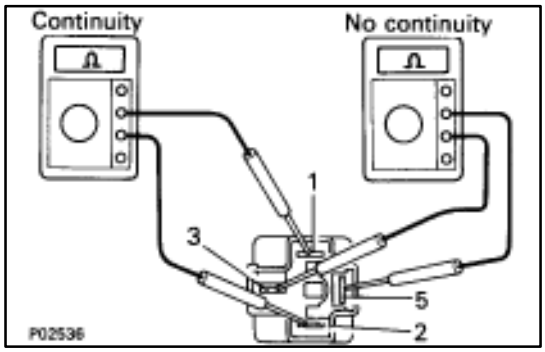

1. INSPECT RELAY CONTINUITY

(a) Using an ohmmeter, check that there is continuity between terminals 1 and 2.

(b) Check that there is no continuity between terminals 3 and 5.

If continuity is not as specified, replace the relay.

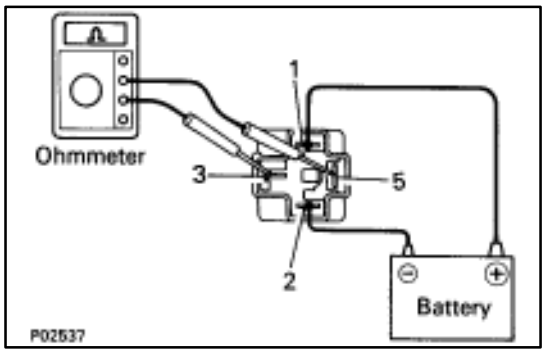

2. INSPECT RELAY OPERATION

(a) Apply battery voltage across terminals 1 and 2.

(b) Using an ohmmeter, check that there is continuity between terminals 3 and 5.

If operation is not as specified, replace the relay.

NEUTRAL START SWITCH

(See AT section)

THEFT DETERRENT SYSTEM

(See BE Section)

WhereEverybodyKnowsYourName

SERVICE SPECIFICATIONS

SERVICE DATA

Starter	Rated voltage and output power			12 V 1.4 kW	
	No–load characteristic		Current	90 A or less at 11.5 V	
			rpm	3,500 rpm or more	
	Brush length		STD	15.5 mm	0.610 in.
			Limit	10.0 mm	0.394 in.
	Commutator	Outer diameter	STD	30 mm	1.18 in.
			Limit	29 mm	1.14 in.
		Undercut depth	STD	0.6 mm	0.024 in.
			Limit	0.2 mm	0.008 in.
		Circle runout	Limit	0.05 mm	0.0020 in.
	Spring installed load		STD	18–24 N	
				(1.79 – 2.41 kgf, 3.9 – 5.3 lbf)	
			Limit	12 N 1.2 kgf	2.6 lbf

TORQUE SPECIFICATIONS

Part tightened	N·m	kgf·cm	ft·lbf
Starter x Cylinder block	39	400	29

WhereEverybodyKnowsYourName

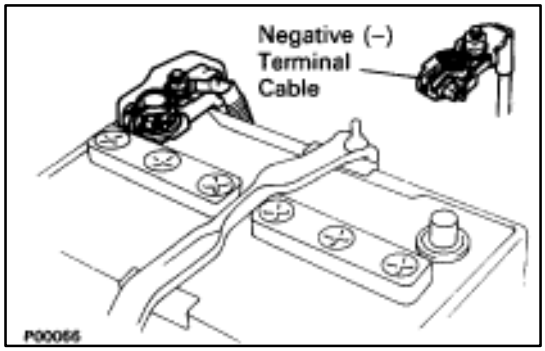

STARTER RELAY

INSPECTION OF STARTER RELAY

1. **DISCONNECT CABLE FROM NEGATIVE TERMINAL OF BATTERY**
   CAUTION: Work must be started after approx. 20 seconds or longer from the time the ignition switch is turned to the ”LOCK” position and the negative (–) terminal cable is disconnected from the battery.

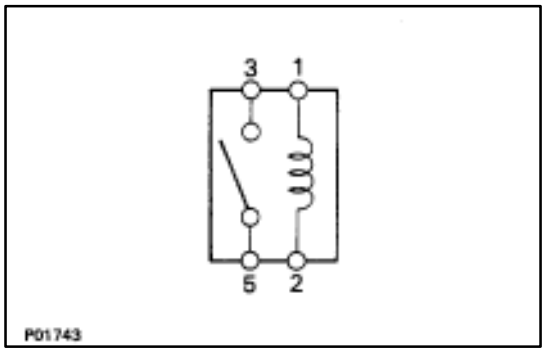

2. **REMOVE STATER RELAY**
   LOCATION: In the engine compartment relay box.
3. **INSPECT STARTER RELAY**

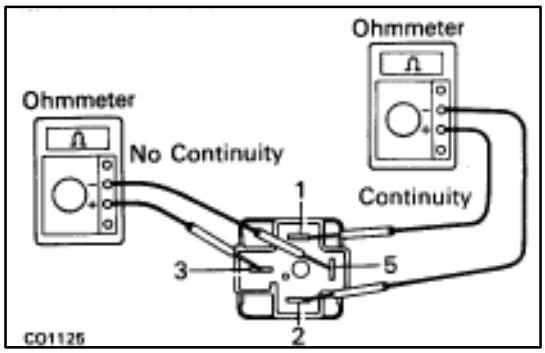

A. Inspect relay continuity

(a) Using an ohmmeter, check that there is continuity between terminals 1 and 2.
(b) Check that there is no continuity between terminals 3 and 5.

If continuity is not as specified, replace the relay.

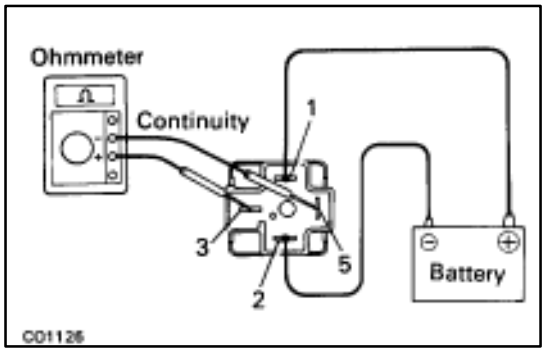

B. Inspect relay operation

(a) Apply battery voltage across terminals 1 and 2.
(b) Using an ohmmeter, check that there is continuity between terminals 3 and 5.

If operation is not as specified, replace the relay.

4. **REINSTALL STARTER RELAY**
5. **RECONNECT CABLE TO NEGATIVE TERMINAL OF BATTERY**

NEUTRAL START SWITCH

(See AT section)

THEFT DETERRENT SYSTEM

(See BE section)

WhereEverybodyKnowsYourName

Actuator Power Source Circuit

CIRCUIT DESCRIPTION

This is the power source for the motor.

DIAGNOSTIC CHART

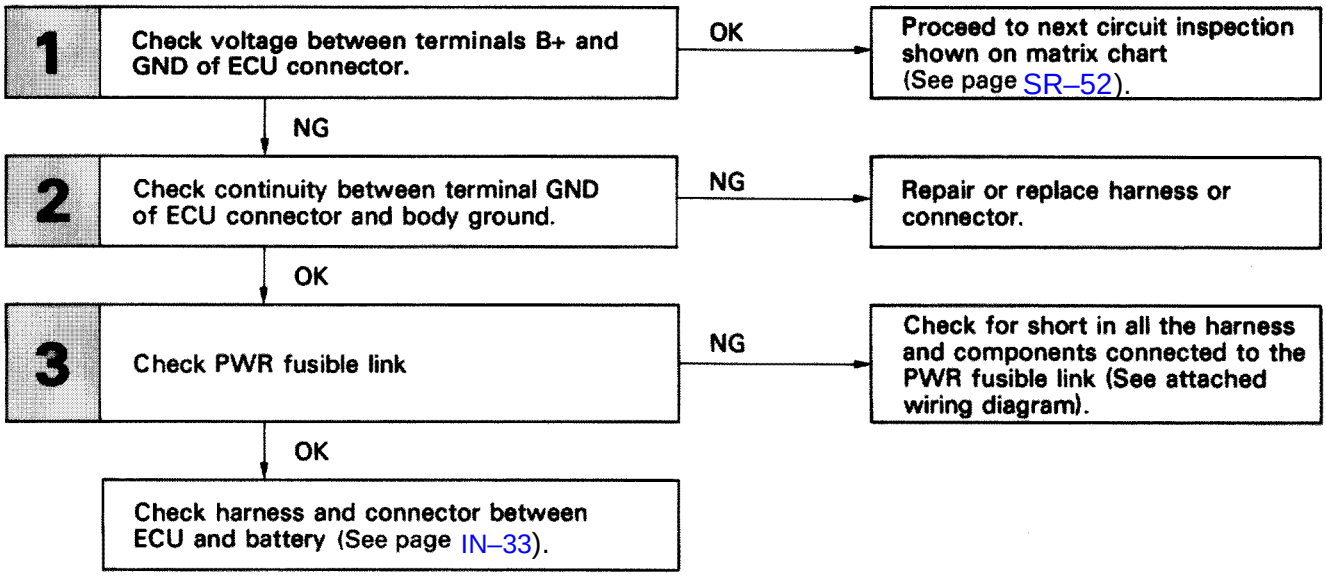

WIRING DIAGRAM

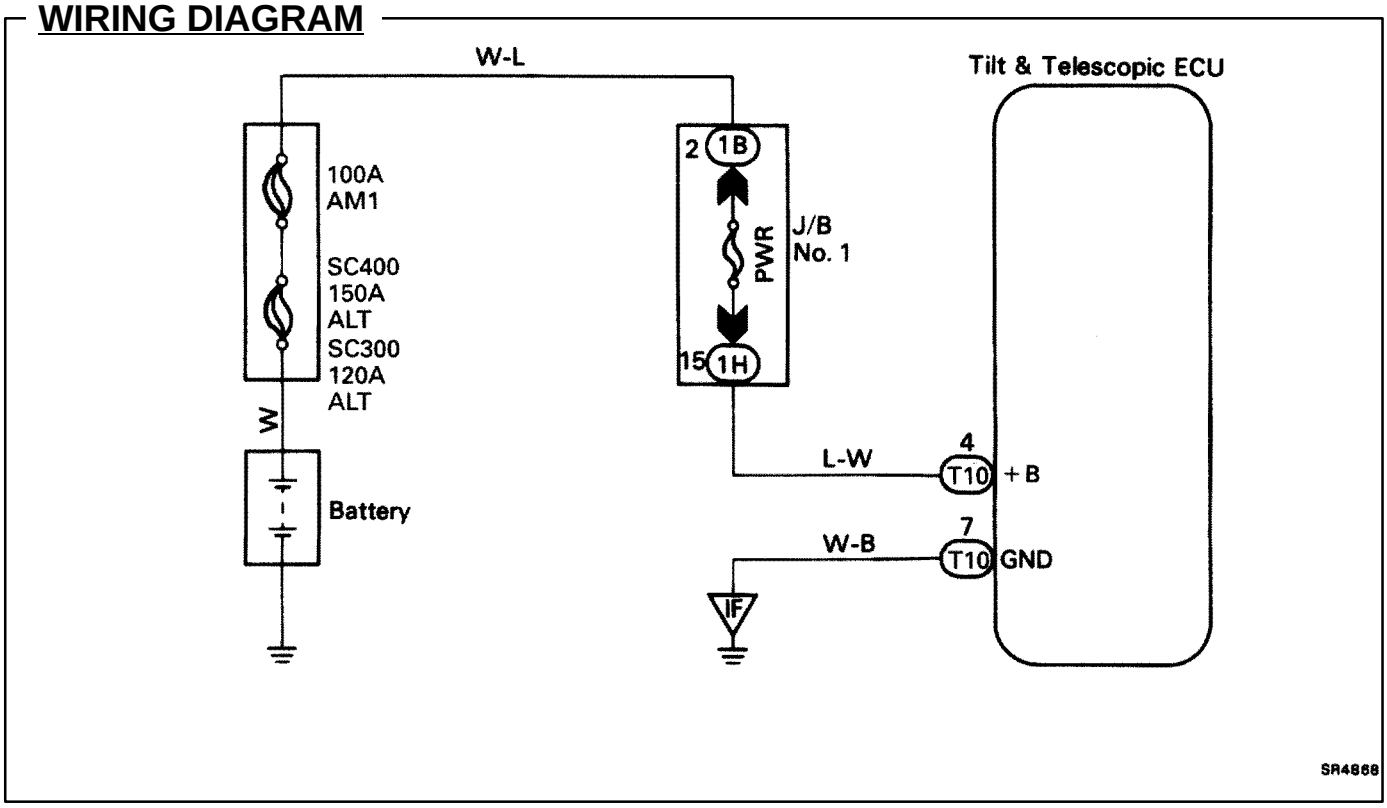

WhereEverybodyKnowsYourName

INSPECTION PROCEDURE

1	Check voltage between terminals +B and GND of ECU connector.
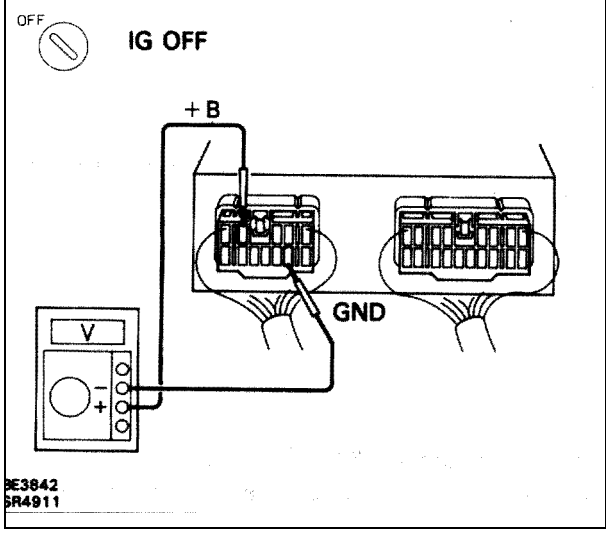	**P** Remove ECU with connectors still connected. **C** Measure voltage between terminals +B and GND of ECU connector. **OK** **Voltage: 10 – 14 V**

NG

OK **Proceed to next circuit inspection shown on matrix chart (See page SR–52).**

2	Check continuity between terminal GND of ECU connector and body ground.
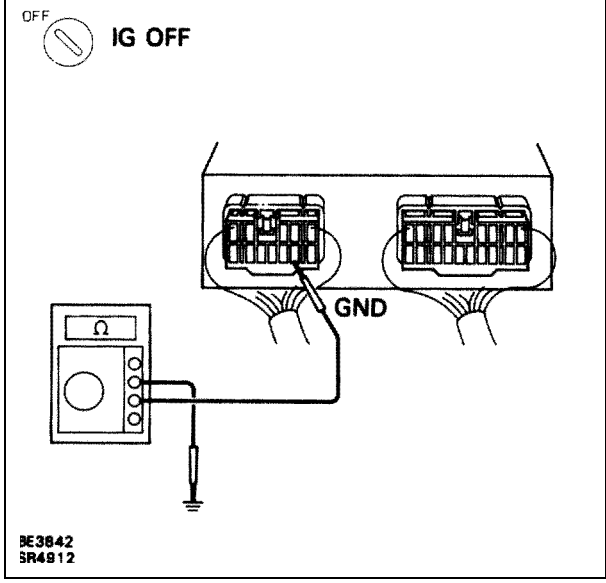	**P** Measure resistance between terminal GND of ECU connector and body ground. **OK** Condition: Continuity

OK

NG **Repair or replace harness or connector.**

Go to Step▼.

WhereEverybodyKnowsYourName

3	Check PWR fusible link.
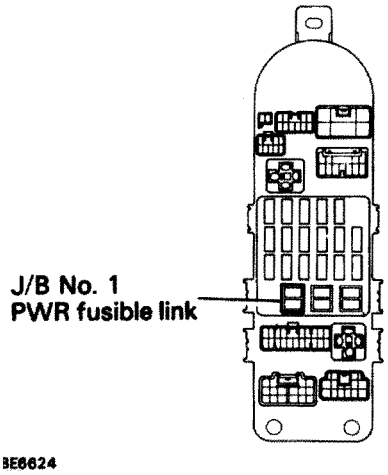	**P** Remove PWR fusible link from J/B No. 1. **C** Check continuity of PWR fusible link. **OK** Continuity

OK

NG **Check for short in all the harness and components connected to the PWR fusible link (See attached wiring diagram).**

Check harness and connector between ECU and battery (See page IN–33).

WhereEverybodyKnowsYourName

–MEMO–

WhereEverybodyKnowsYourName

Sensor Power Source Circuit

CIRCUIT DESCRIPTION

Power to the position sensors, manual switch and auto set switch is output from the ECU.

DIAGNOSTIC CHART

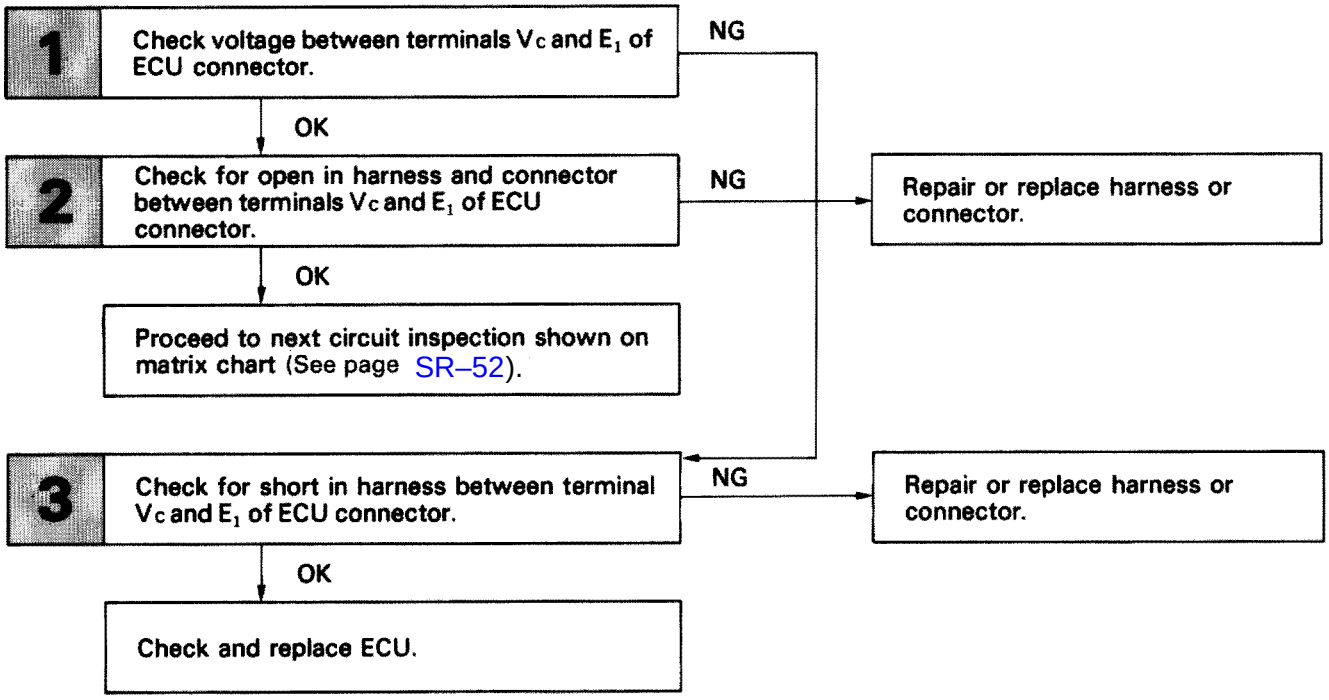

WIRING DIAGRAM

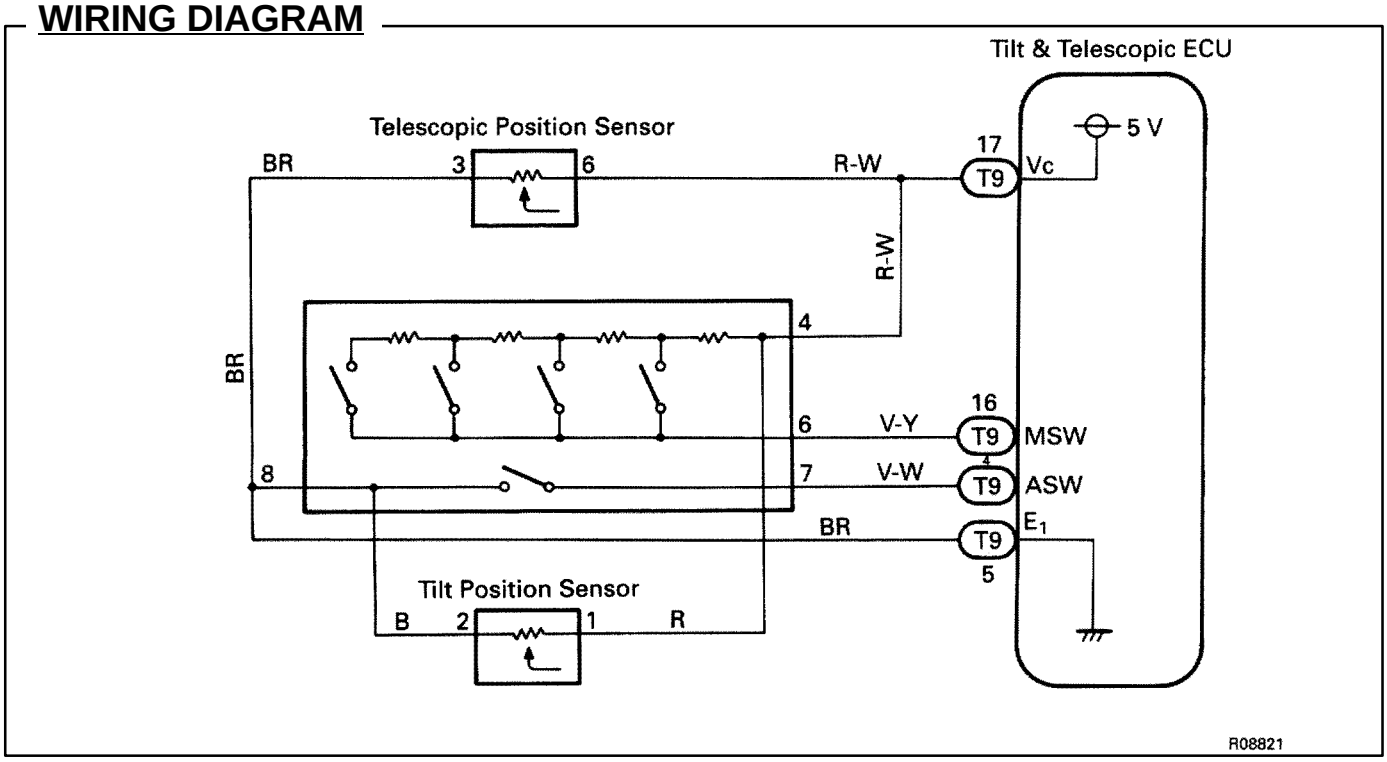

WhereEverybodyKnowsYourName

INSPECTION PROCEDURE

1	Check voltage between terminals V_C and E_1 of ECU connector.

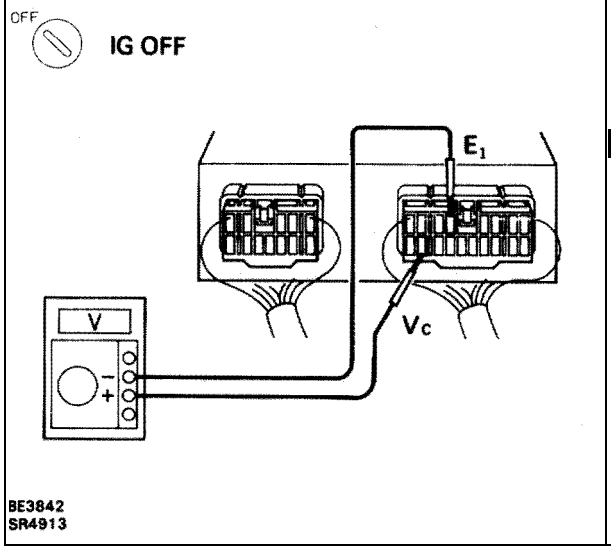

P Remove ECU with connectors still connected.

C Measure voltage between terminals V_C and E_1 of ECU connector.

OK **Voltage: 4 – 6 V**

OK

NG **Go to Step ▼.**

2	Check for open in harness and connector between terminals Vc and E_1 of ECU connector.

OK

NG **Repair or replace harness or connector.**

Proceed to next circuit inspection shown on matrix chart (See page SR–52).

3	Check for short in harness between terminal V_C and E_1 of ECU connector.

OK

NG **Repair or replace harness or connector.**

Check and replace ECU.

WhereEverybodyKnowsYourName

Tilt Position Sensor Circuit

CIRCUIT DESCRIPTION

The tilt position is sent to the ECU as a voltage signal from the position sensor.
A constant 5 V is supplied to terminal 1 of sensor.
The voltage at terminal 3 varies with position and is input to the ECU.

DIAGNOSTIC CHART

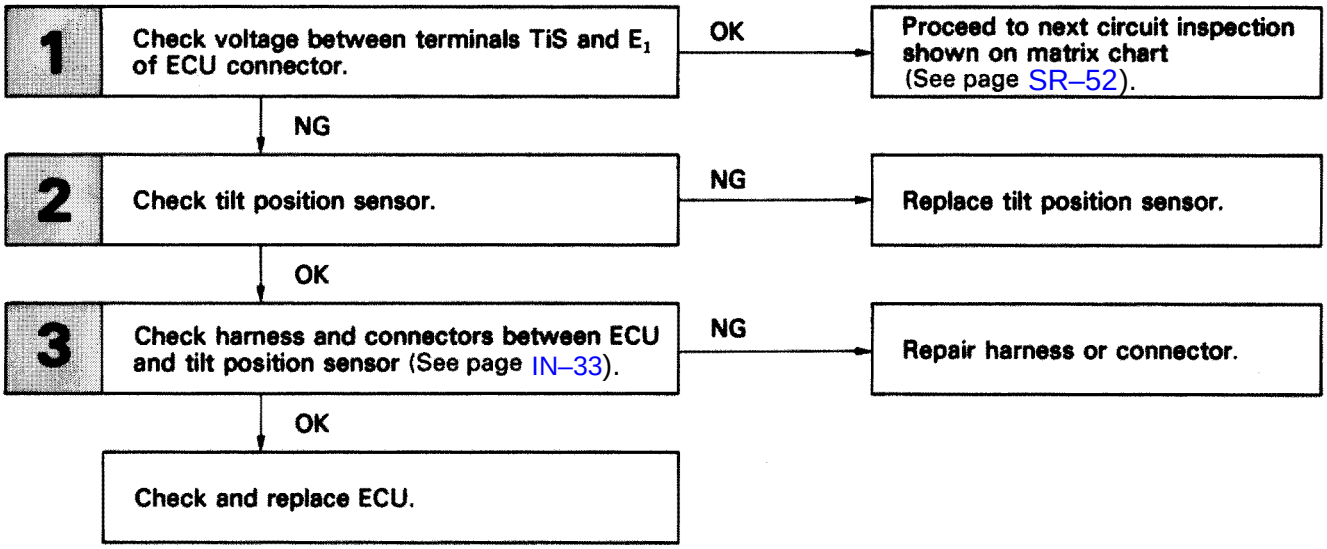

WIRING DIAGRAM

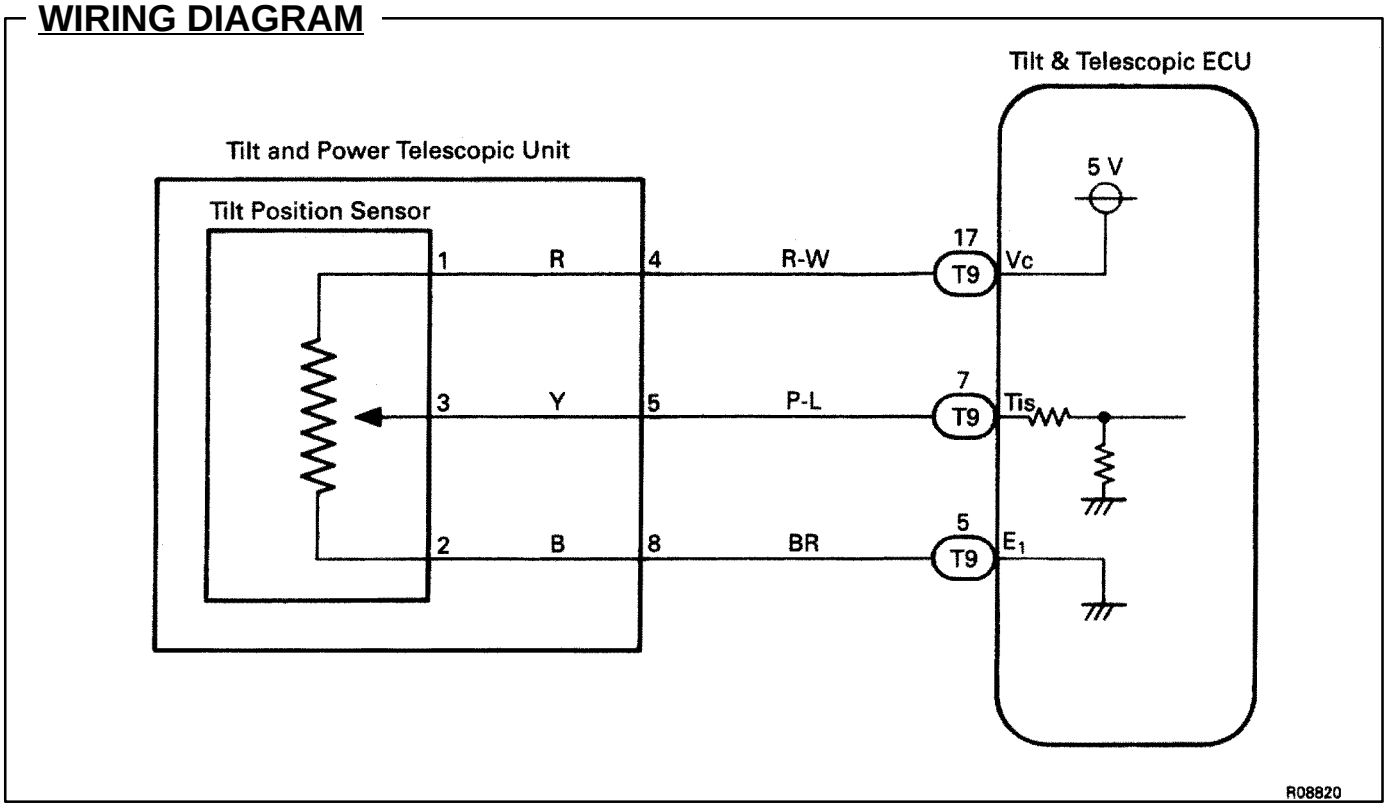

WhereEverybodyKnowsYourName

INSPECTION PROCEDURE

1 **Check voltage between terminals TiS and E_1 of ECU connector.**

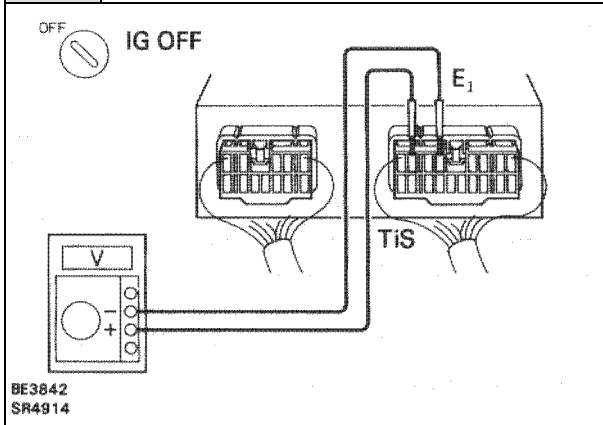

P 1. Remove ECU with connectors still connected.

C 2. Remove tilt sensor with connector still connected.

OK Measure voltage between terminals TiS and E_1 of ECU connector, while turning tilt sensor lever slowly by hand from raised side to lowered side.

Voltage:

Fully raised:	**Below 1 V**
Fully lowered:	**4 – 6 V**

Hint **In addition, as the lever is turned, the voltage should increase gradually without interruption.**

NG

OK **Proceed to next circuit inspection shown on matrix chart (See page SR–52).**

2 **Check tilt position sensor.**

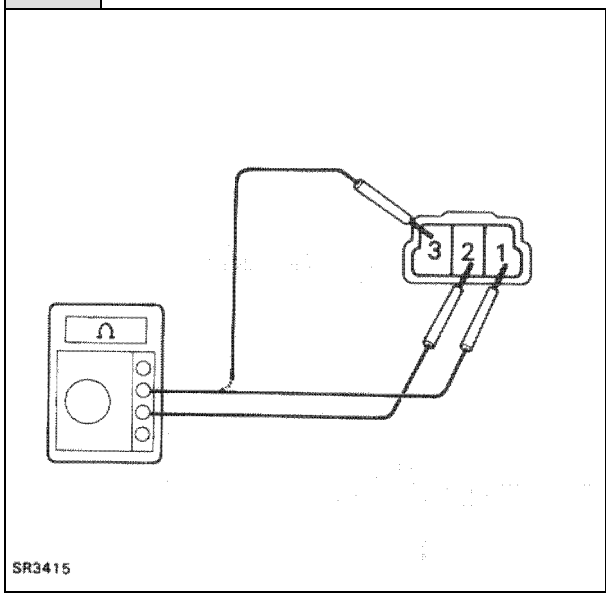

P Disconnect tilt sensor connector.

C Measure resistance between terminals 1 and 2 of tilt sensor connector.

OK

Resistance: 4 – 6 ?

Measure resistance between terminals 3 and 2 of tilt sensor connector, while turning tilt sensor lever slowly by hand from raised side to lowered side.

Resistance:

Hint

Fully raised:	**Below 100 ?**
Fully lowered:	**4 – 6?**

In addition, as the lever is turned, the resistance should increase gradually without interruption.

OK

NG **Replace tilt position sensor.**

3 **Check harness and connectors between ECU and tilt position sensor (See page IN–33).**

OK

NG **Repair harness or connector.**

Check and replace ECU.

WhereEverybodyKnowsYourName

Telescopic Position Sensor Circuit

CIRCUIT DESCRIPTION

The telescopic position is sent to the ECU as a voltage signal from the position sensor.
A constant 5 V is supplied to terminal 6 of the sensor.
The voltage at terminal 5 varies with position and is input to the ECU.

DIAGNOSTIC CHART

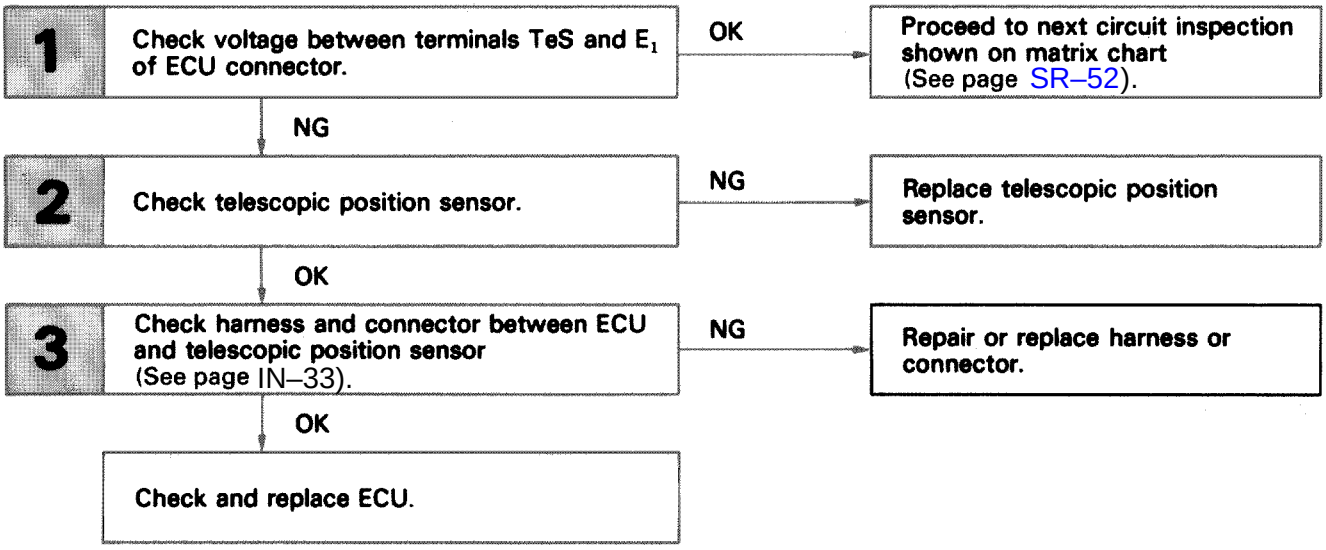

WIRING DIAGRAM

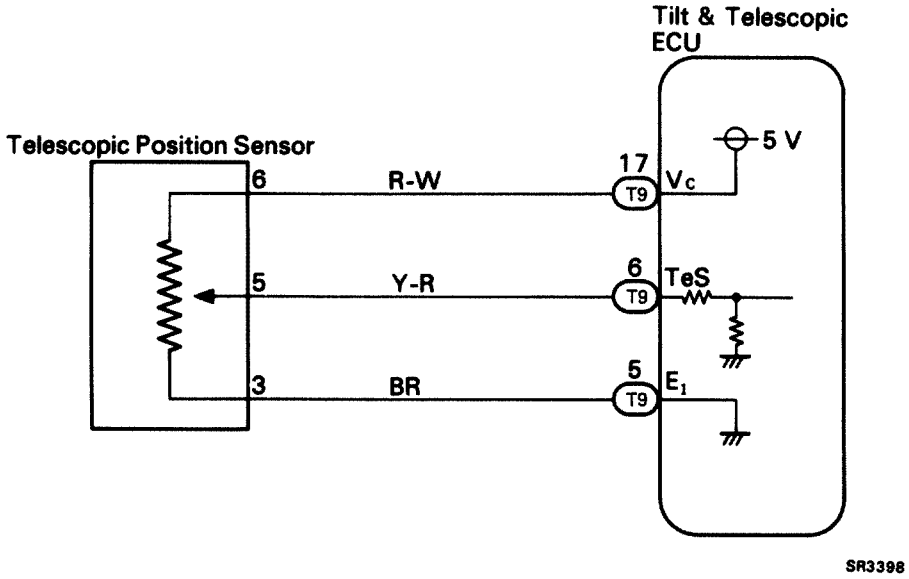

WhereEverybodyKnowsYourName

INSPECTION PROCEDURE

1 **Check voltage between terminals TeS and E_1 of ECU connector.**

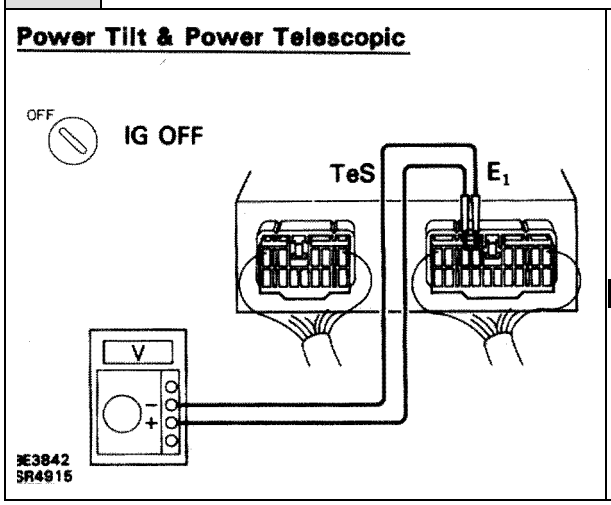

P 1. Remove ECU with connectors still connected.
2. Remove telescopic sensor with connectors still connected.

C Measure voltage between terminals TeS and E_1 of ECU connector while turning telescopic sensor lever slowly by hand from Contracted side to Extended side.

OK **Voltage:**

Fully forward:	**0 – 1 V**
Fully back:	**4 – 5 V**

In addition, as the lever is turned, the voltage should increase gradually without interruption.

NG

OK **Proceed to next circuit inspection shown on matrix chart (See page SR–52).**

2 **Check telescopic position sensor.**

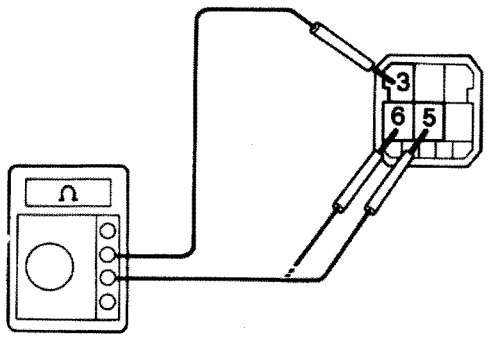

P Disconnect telescopic sensor connector.

C Measure resistance between terminals 3 and 6 of telescopic sensor connector.

OK **Resistance: Approx. 5 k?**

C Measure resistance between terminals 3 and 5 of telescopic sensor connector while turning telescopic lever slowly by hand from Contracted side to Extended side.

OK **Resistance:**

Fully forward:	**0 – 1**
Fully back:	**4 – 5**

In addition, as the lever is turned, the resistance should increase gradually without interruption.

OK

NG **Replace tilt position sensor.**

3 **Check harness and connectors between ECU and tilt position sensor (See page IN–33).**

OK

NG **Repair harness or connector.**

Check and replace ECU.

WhereEverybodyKnowsYourName

Telescopic Motor Circuit

CIRCUIT DESCRIPTION

The ECU provides both + B and ground for the telescopic motor.
Reversing polarity of the applied voltage reverses the motor.

TeM^+	TeM^-	Rotation	Telescopic
+	–	Clockwise	Contracted
–	+	Counterclockwise	Extended

DIAGNOSTIC CHART

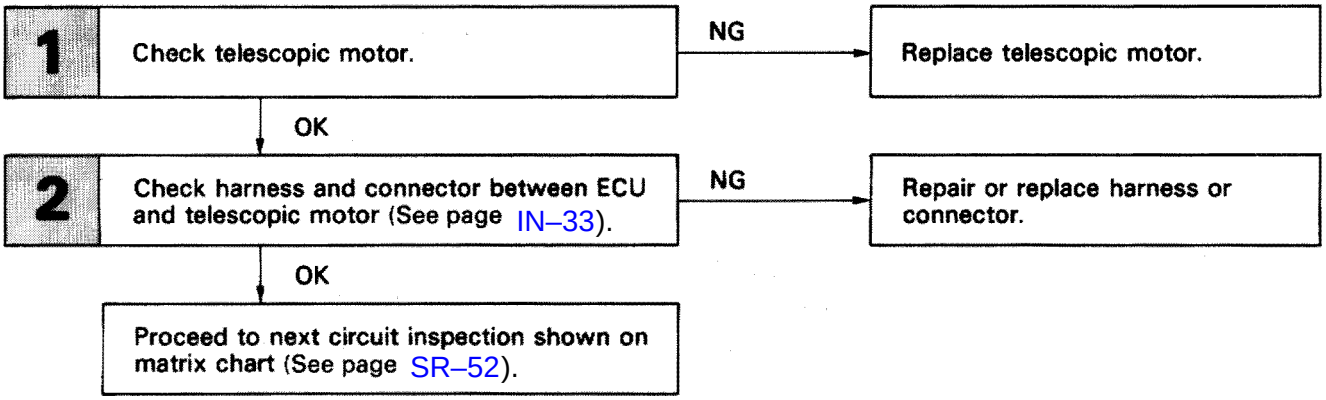

WIRING DIAGRAM

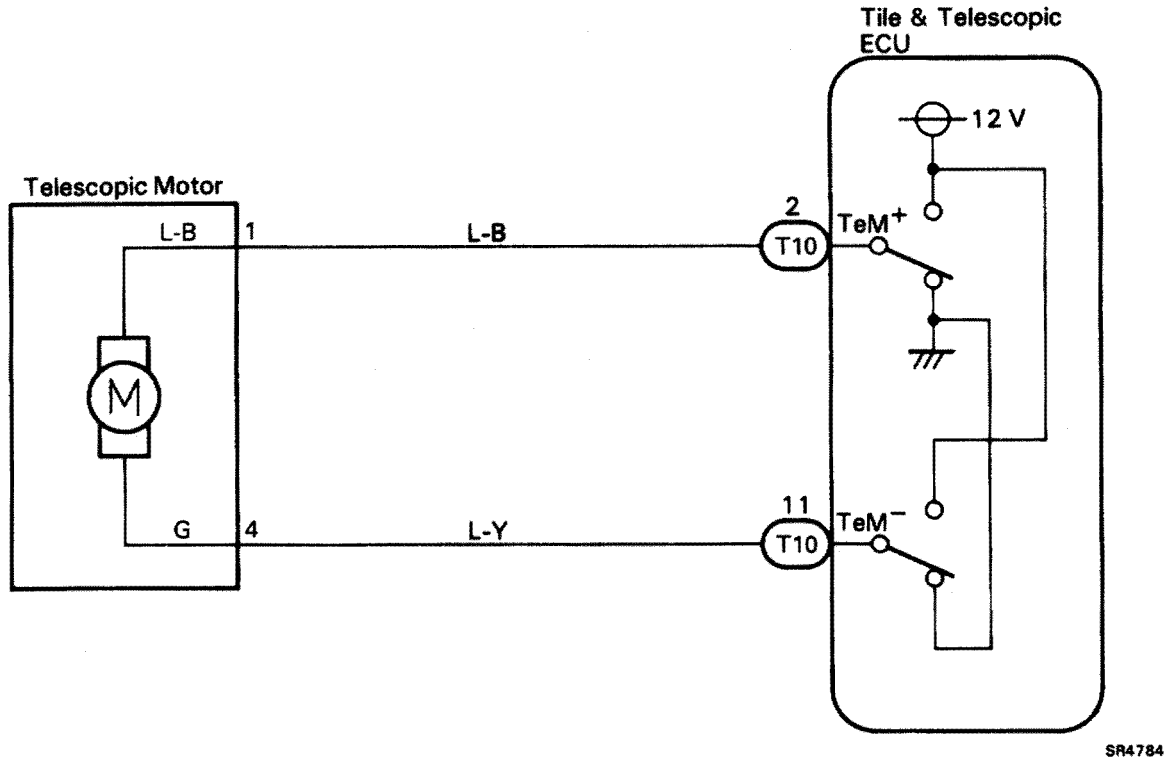

WhereEverybodyKnowsYourName

INSPECTION PROCEDURE

1 **Check telescopic motor.**

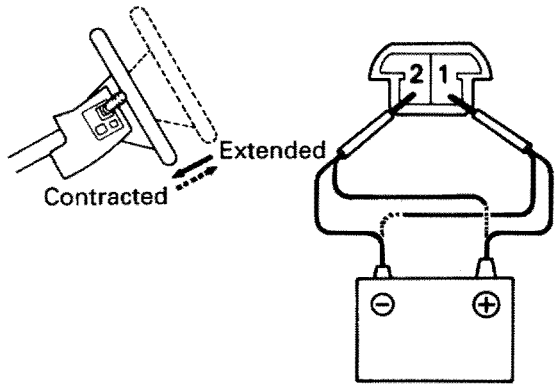

SR3575 SR3576

P Disconnect telescopic motor connector.

C Connect positive ↔ (negative ⊖) terminal to terminal 1 of telescopic motor connector and negative ⊖ (positive ↔) terminal to terminal 2.

Movement \ Terminal	1	2
Telescopic Contracted	⊖	⊕
Telescopic Extended	⊕	⊖

OK

NG **Replace telescopic motor.**

2 **Check harness and connector between ECU and telescopic motor (See page IN–33).**

OK

NG **Repair or replace harness or connector.**

Proceed to next circuit inspection shown on matrix chart (See page SR–52).

WhereEverybodyKnowsYourName

Auto Set Switch Circuit

CIRCUIT DESCRIPTION

This is the main switch for auto operation.
When the switch is off, auto operation is prohibited.

DIAGNOSTIC CHART

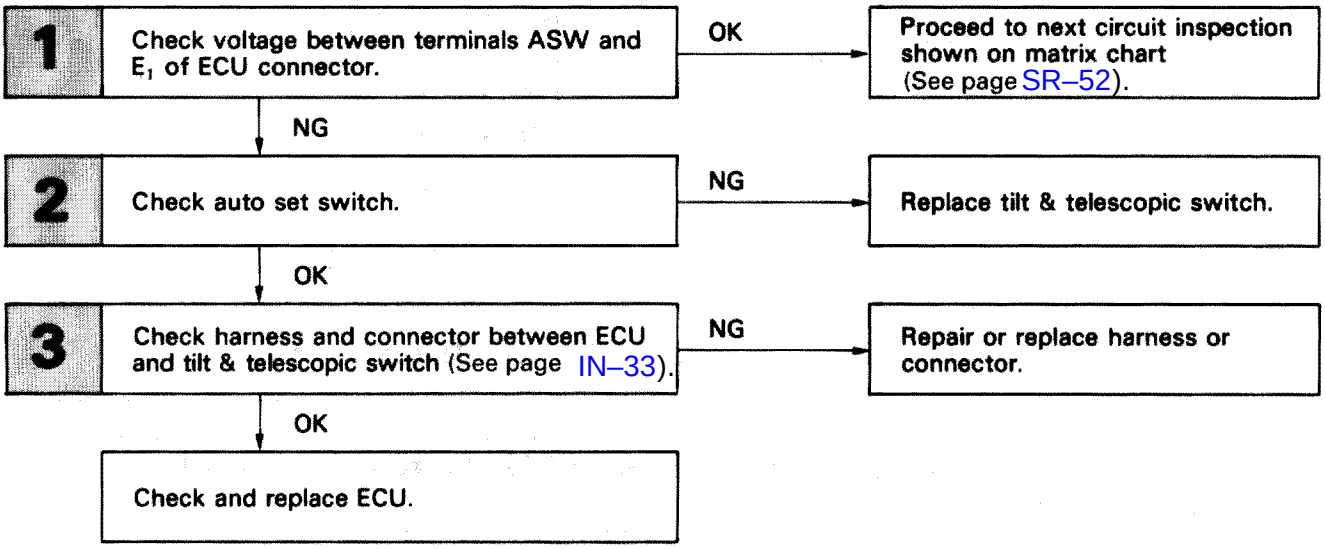

WIRING DIAGRAM

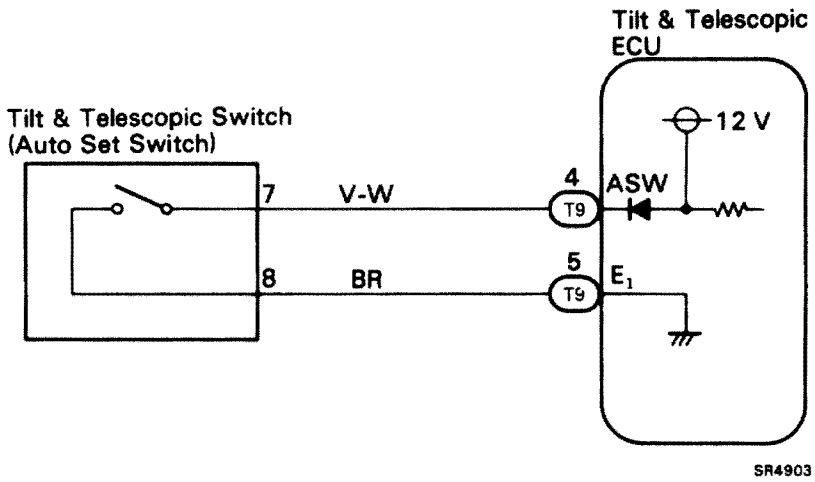

WhereEverybodyKnowsYourName

INSPECTION PROCEDURE

1 Check voltage between terminals ASW and E_1 of ECU connector.

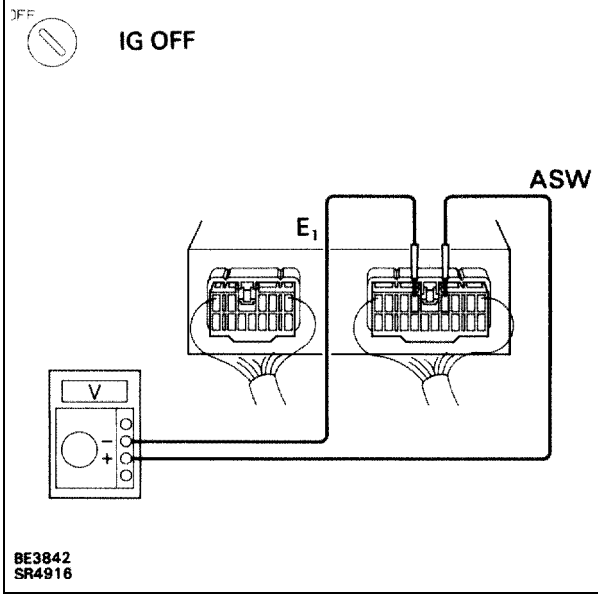

P Remove ECU with connectors still connected.

C Measure voltage between terminals ASW and E_1 of ECU connector when auto switch is on and off.

OK

Auto Switch	Voltage
ON	10 – 14 V
OFF	Below 1 V

NG

OK **Proceed to next circuit inspection shown on matrix chart (See page SR–52).**

2 Check auto set switch.

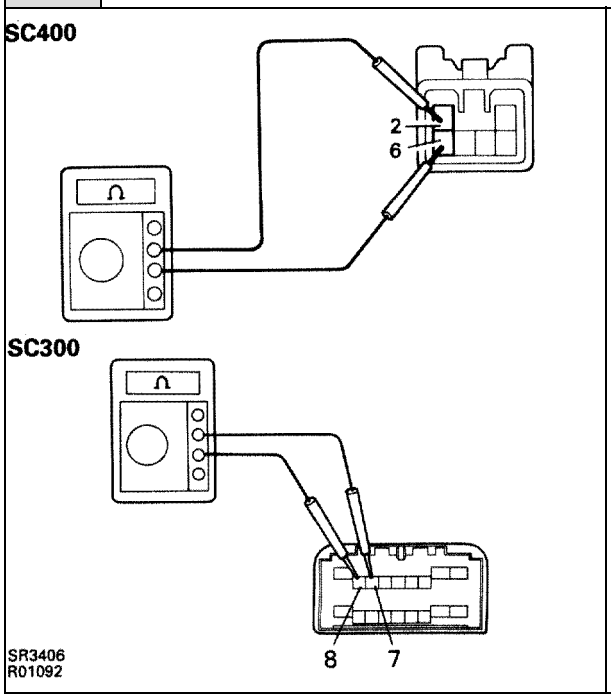

P Disconnect combination switch connector.

C Measure resistance between terminals 2 (7) and 6 (8) of combination switch connector when auto switch is on and off.

( ): SC300

OK

Auto Switch	Resistance
ON	1 MΩ or higher
OFF	Continuity

OK

NG **Replace tilt & telescopic switch.**

Go to Step ▼

WhereEverybodyKnowsYourName

3	Check harness and connector between ECU and tilt & telescopic switch (See page IN–33).

OK

NG → Repair or replace harness or connector.

Check and replace ECU.

WhereEverybodyKnowsYourName

–MEMO–

WhereEverybodyKnowsYourName

Manual Switch Circuit

CIRCUIT DESCRIPTION

Operation of the switch sends different voltage signals to the ECU.

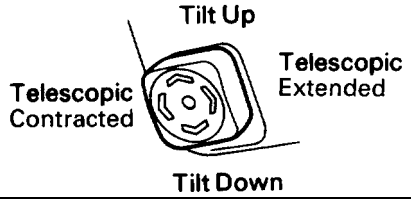

DIAGNOSTIC CHART

1 Check voltage between terminals Vc and MSW of ECU connector.
- OK → Proceed to next circuit inspection shown on matrix chart (See page SR–52).
- NG ↓

2 Check manual switch.
- NG → Replace tilt & telescopic switch.
- OK ↓

3 Check harness and connector between ECU and tilt & telescopic switch (See page IN–33).
- NG → Repair or replace harness or connector.
- OK ↓

Check and replace ECU.

WIRING DIAGRAM

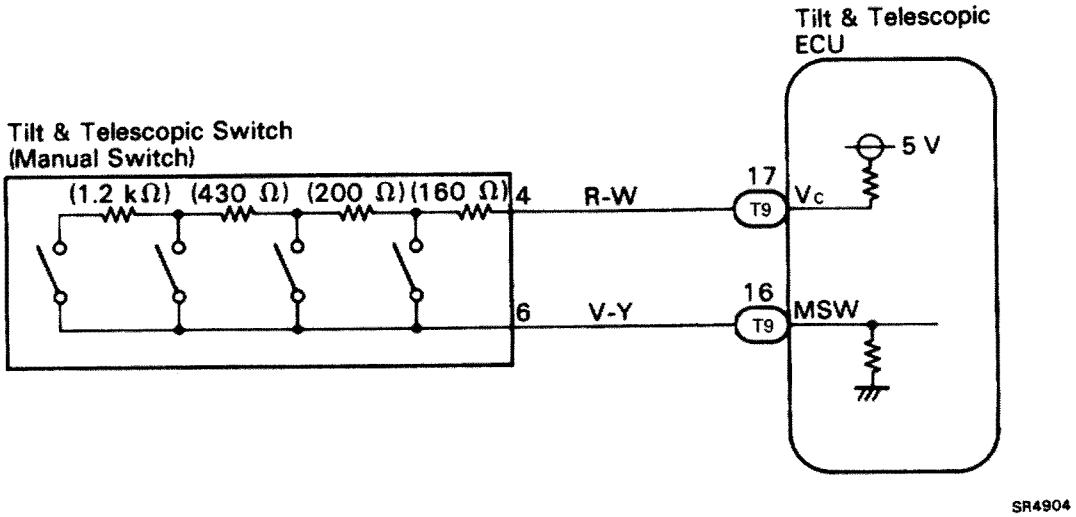

WhereEverybodyKnowsYourName

INSPECTION PROCEDURE

1 **Check voltage between terminals V_C and MSW of ECU connector.**

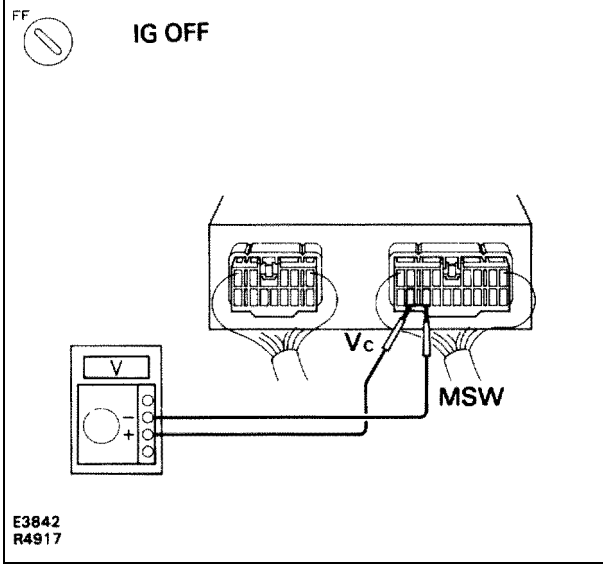

P Remove ECU with connectors still connected.

C Measure voltage between terminals V_C and MSW of ECU connector when manual switch is operated.

OK

Position	Voltage
Telescopic back	Approx. 2.6 V
Tilt up	Approx. 3.5 V
Telescopic forward	Approx. 4.2 V
Tilt down	Approx. 4.6 V

NG

OK **Proceed to next circuit inspection shown on matrix chart (See page SR–52).**

2 **Check manual switch.**

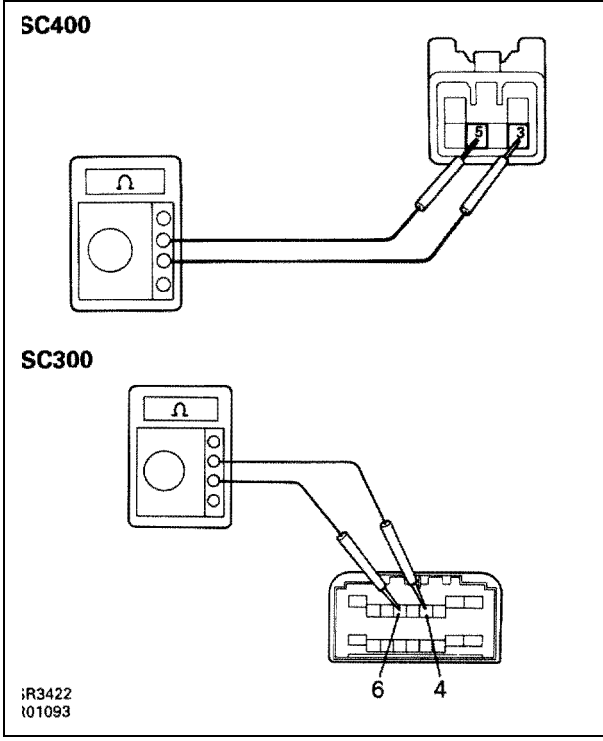

P Disconnect combination switch connector.

C Measure resistance between terminals 3 (4) and 5 (6) of combination switch connector when manual switch is operated.

( ): SC200

OK

Position	Resistance
Telescopic Extended	Approx. 160 Ω
Tilt up	Approx. 360 Ω
Telescopic Contracted	Approx. 790 Ω
Tilt down	Approx. 1990 Ω

OK

NG **Replace tilt & telescopic switch.**

Go to Step ▼.

WhereEverybodyKnowsYourName

3	Check harness and connector between ECU and tilt & telescopic switch (See page IN–33).

OK

NG → Replace tilt & telescopic switch.

Check and replace ECU.

WhereEverybodyKnowsYourName

–MEMO–

WhereEverybodyKnowsYourName

Set Switch Circuit

CIRCUIT DESCRIPTION

When switch 1 or 2 is pushed while SET switch is being pushed ON in memory operation, a signal is sent to the ECU to memorize the present positions of the tilt, telescopic, seat and mirror.

DIAGNOSTIC CHART

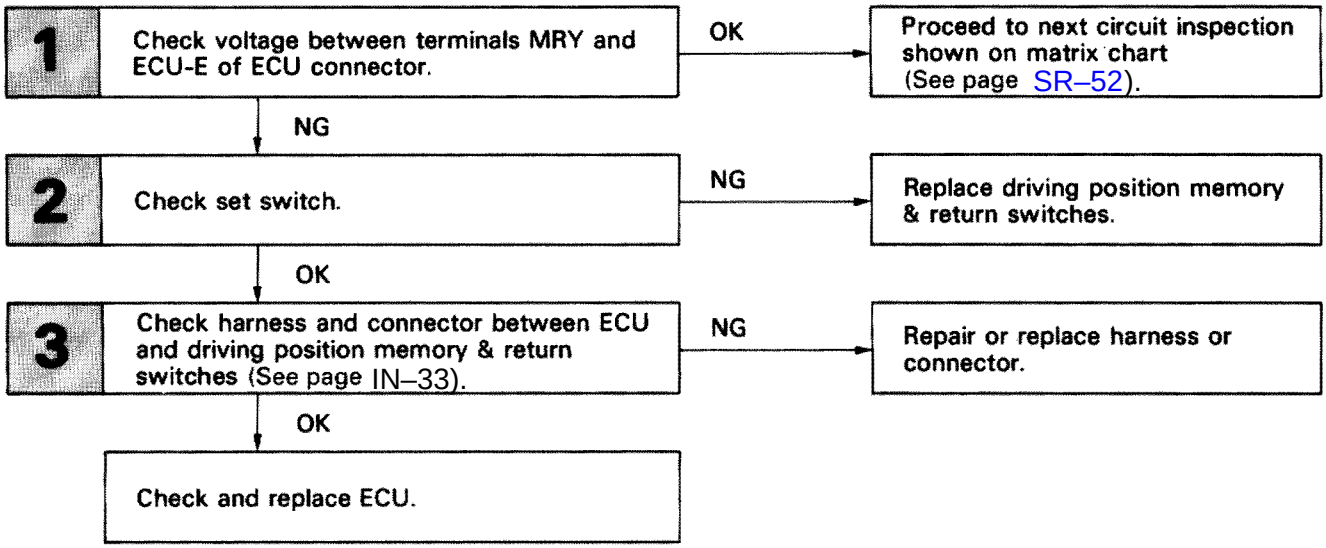

WIRING DIAGRAM

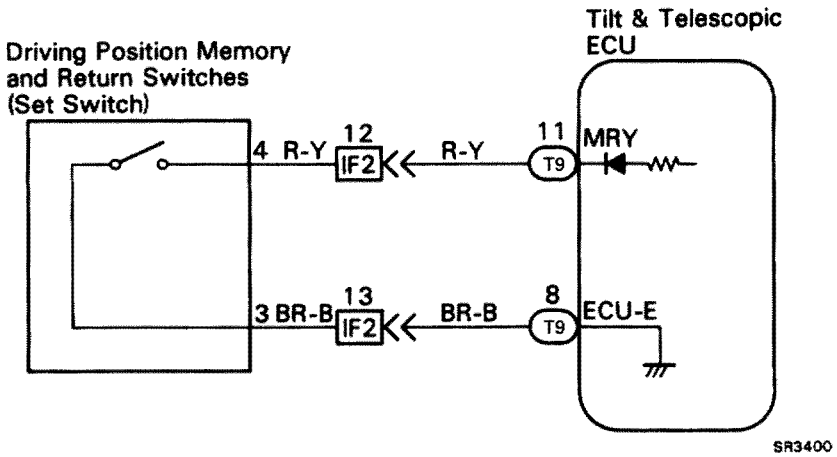

WhereEverybodyKnowsYourName

INSPECTION PROCEDURE

1 **Check voltage between terminals MRY and ECU–E of ECU connector.**

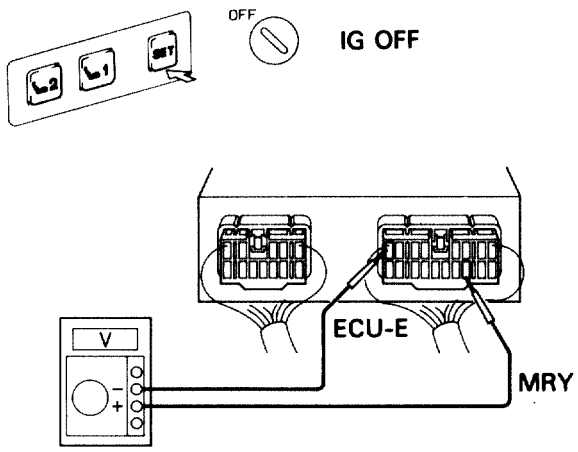

P Remove ECU with connectors still connected.

C Measure voltage between terminals MRY and ECU–E of ECU connector when SET switch is on and off.

OK

SET switch	Voltage
ON	Below 1 V
OFF	10 – 14 V

NG

OK **Proceed to next circuit inspection shown on matrix chart (See page SR–52).**

2 **Check set switch.**

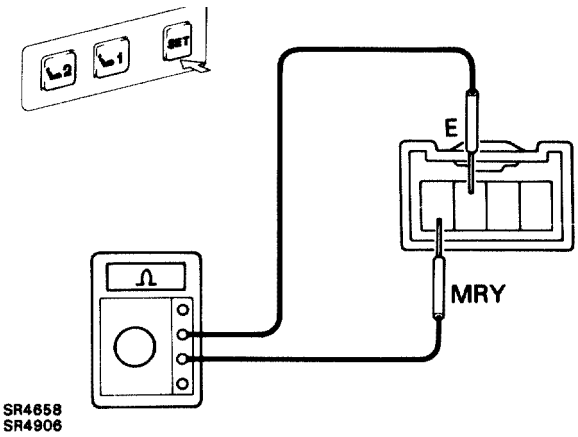

P Disconnect driving position memory & return switches connector.

C Measure resistance between terminals 3 and 4 of driving position memory & return switches connector when SET switch is on and off.

OK

SET switch	Resistance
ON	Continuity
OFF	1 MΩ or higher

OK

NG **Replace memory & return switches.**

3 **Check harness and connector between ECU and driving position memory & return switches (See page IN–33).**

OK

NG **Repair or replace harness or connector.**

Check and replace ECU.

WhereEverybodyKnowsYourName

Memory & Return Switches Circuit

CIRCUIT DESCRIPTION

A memory command signal when switch 1 or 2 pushed while SET switch is being pushed ON or a return command signal when switch 1 or 2 is pushed ON is sent to the ECU for memory and return operations of the tilt, telescopic, seat and mirror.

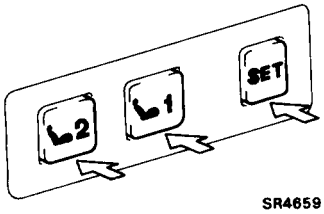

DIAGNOSTIC CHART

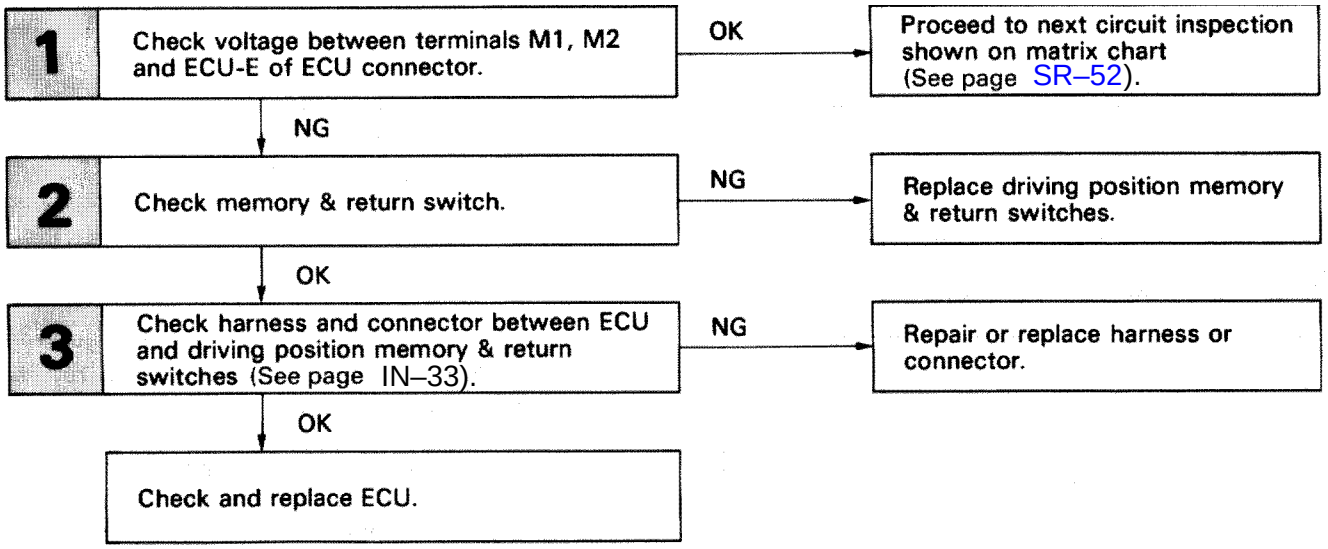

WIRING DIAGRAM

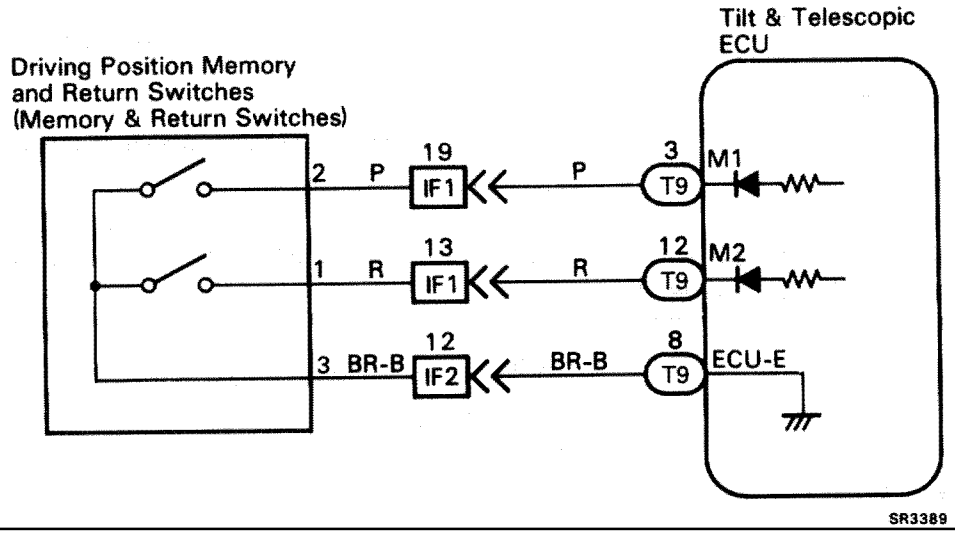

WhereEverybodyKnowsYourName

INSPECTION PROCEDURE

1 **Check voltage between terminals M1, M2 and ECU–E of ECU connector.**

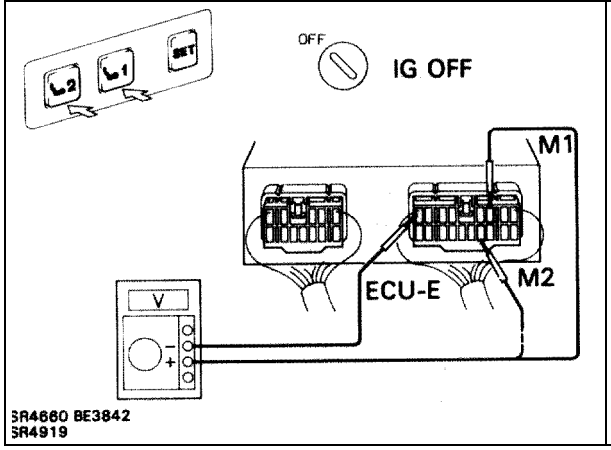

P Remove ECU with connectors still connected.

C Measure voltage between terminals M1, M2 and ECU–E of ECU connector when memory & return switches is on and off.

OK

Memory & Return Switches	Voltage
ON	Below 1 V
OFF	10 – 14 V

NG

OK **Proceed to next circuit inspection shown on matrix chart (See page SR–52).**

2 **Check memory & return switches.**

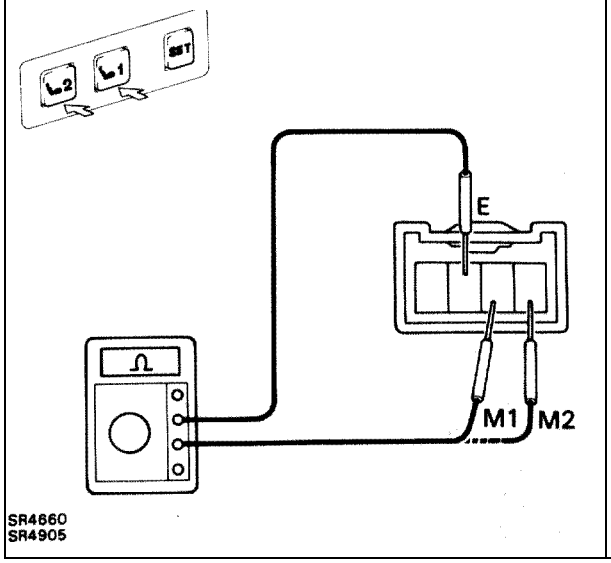

P Disconnect driving position memory & return switches connector.

C Measure resistance between terminals M2, M1 and E of driving position memory & return switches connector when memory & return switches is on and off.

OK

○—○ Continuity

Switches \ Terminal	M1	M2	E
Return SW1 ON	○		○
Return SW2 ON		○	○

OK

NG **Replace memory & return switches.**

3 **Check harness and connector between ECU and memory & return switches (See page IN–33).**

OK

NG **Repair or replace harness or connector.**

Check and replace ECU.

WhereEverybodyKnowsYourName

Ignition Switch Circuit

CIRCUIT DESCRIPTION

The ON, OFF signal from the IG switch is sent to the ECU.

DIAGNOSTIC CHART

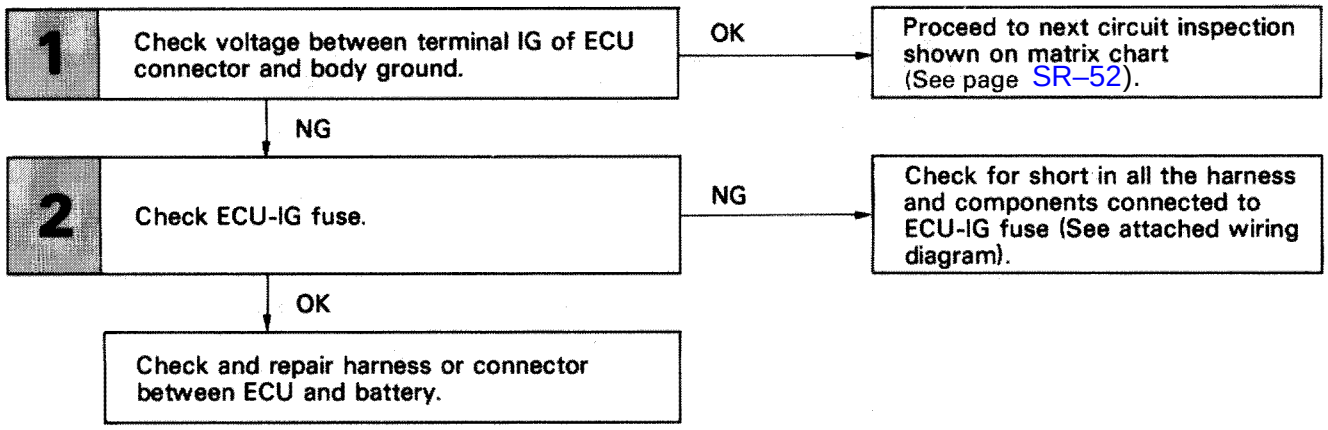

WIRING DIAGRAM

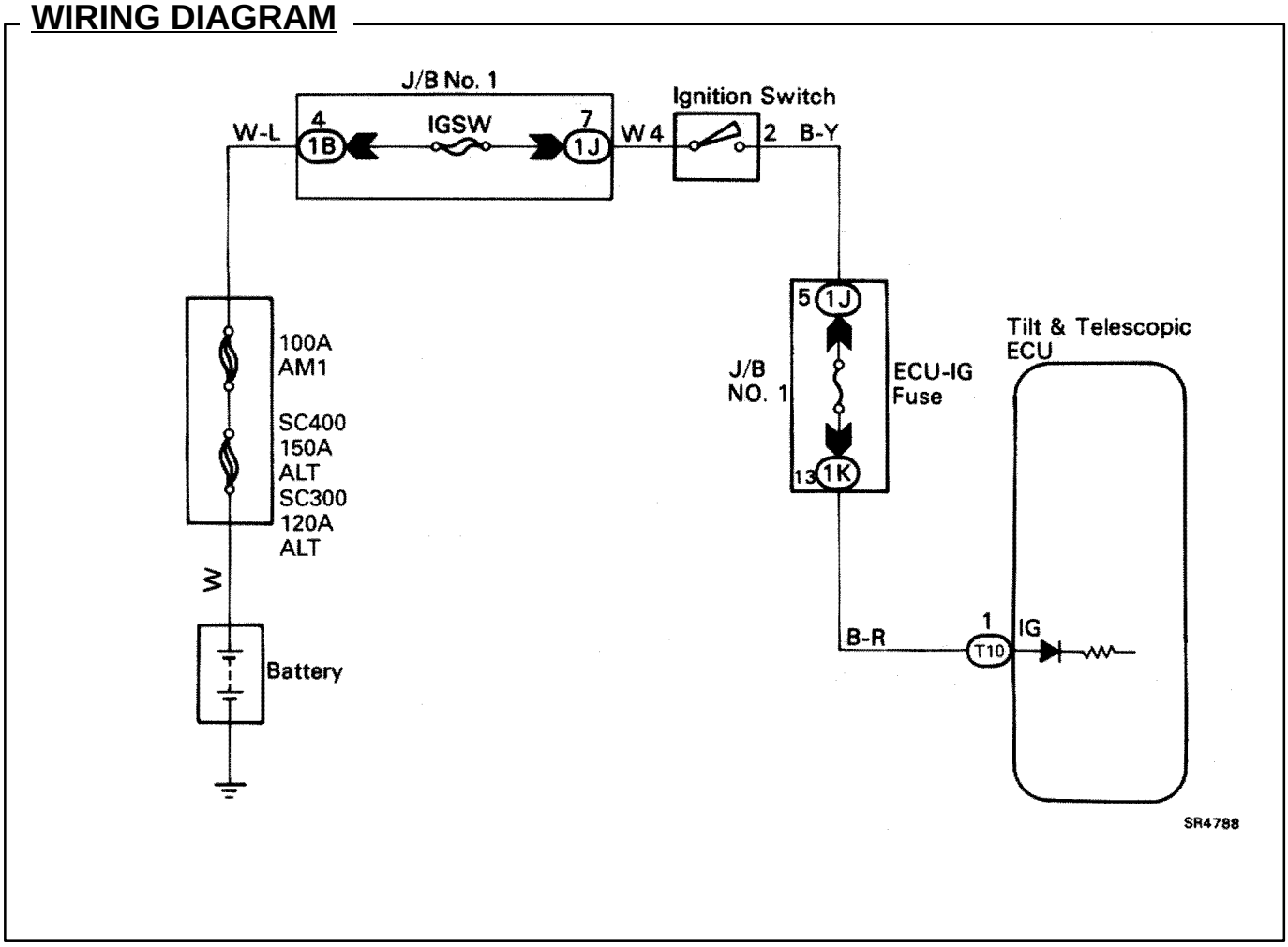

WhereEverybodyKnowsYourName

INSPECTION PROCEDURE

1 **Check voltage between terminal IG of ECU connector and body ground.**

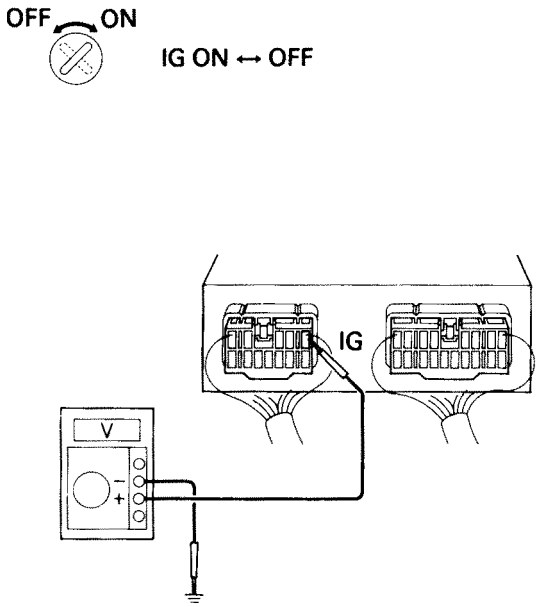

SR3573
SR4920

P Remove ECU with connectors still connected.

C Measure voltage between terminal EG of ECU connector and body ground when ignition switch is on and off.

OK

IG Switch	Voltage
ON	10 – 14 V
OFF	Below 1 V

NG

OK **Proceed to next circuit inspection shown on matrix chart (See page SR–52.)**

2 **Check ECU–IG fuse.**

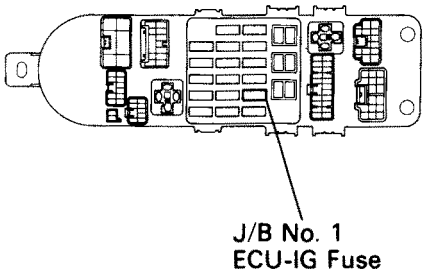

IE6624

P Remove ECU–IG fuse from J/B No. 1.

C Check continuity of ECU–IG fuse.

OK **Continuity**

OK

NG **Check for short in all the harness and components connected to ECU–IG fuse.**

Check and repair harness or connector between ECU and battery.

WhereEverybodyKnowsYourName

Park/Neutral Position Switch Circuit

CIRCUIT DESCRIPTION

The park/neutral position switch detects whether the shift position is in P position or in another position, and sends a signal to the ECU.

DIAGNOSTIC CHART

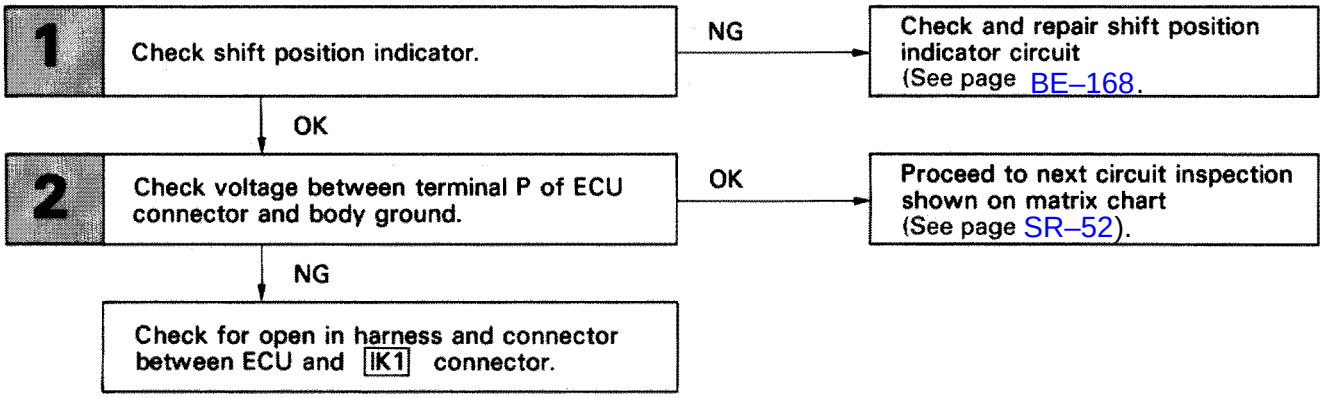

WIRING DIAGRAM

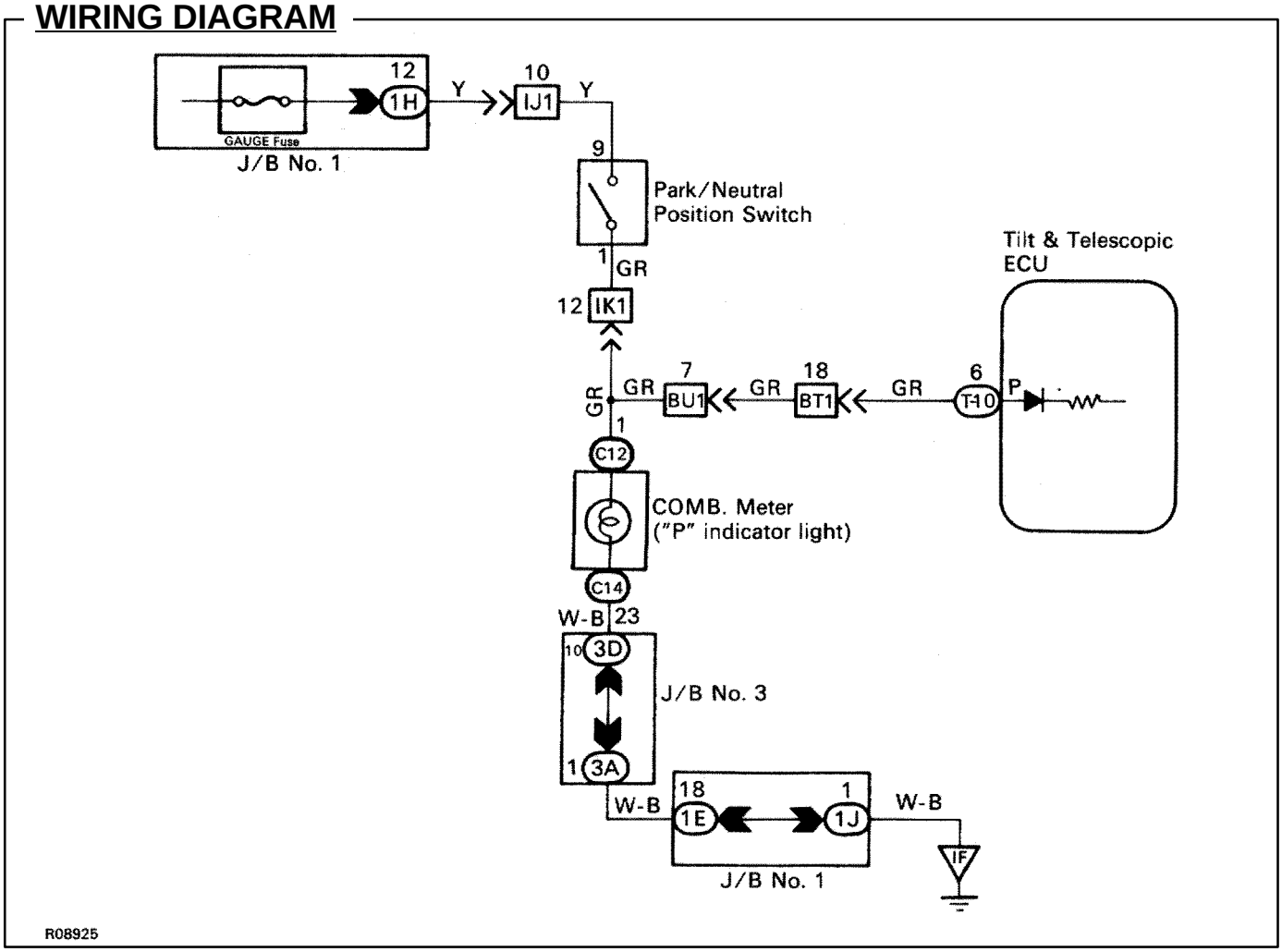

WhereEverybodyKnowsYourName

INSPECTION PROCEDURE

1	Check shift position indicator.
P	Check that “P” lights up on the shift indicator when P position is shifted into, and that “P” is extinguished when shifting into another position.

OK

NG → **Check and repair shift position indicator circuit (See page BE–168).**

2	Check voltage between terminal P of ECU connector and body ground.

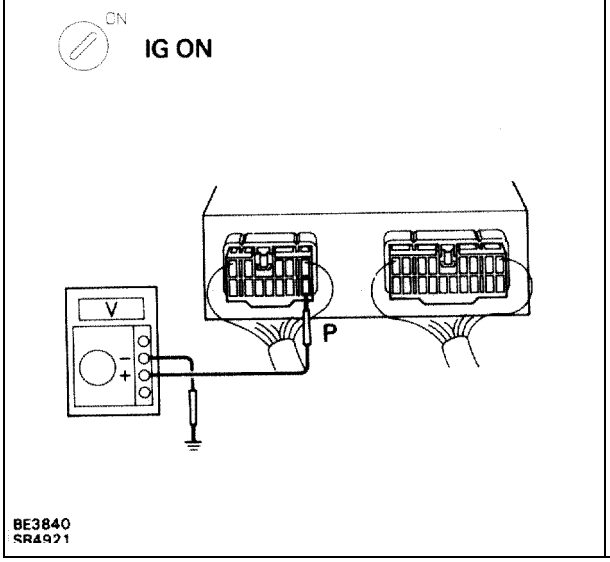

P Remove ECU with connectors still connected.

C
1. Turn ignition switch on.
2. Measure voltage between terminal P of ECU connector and body ground when the shift lever is operated.

OK

Shift Position	Voltage
P position	10 – 14 V
Other than P position	Below 1 V

NG

OK → **Proceed to next circuit inspection shown on matrix chart (See page SR–52).**

Check for open in harness and connectors between ECU and [IK1] connector.

WhereEverybodyKnowsYourName

CIRCUIT INSPECTION

Parking Brake Switch Circuit

CIRCUIT DESCRIPTION

When the parking brake is operating, the parking brake switch sends a signal to the ECU. When this signal is input to the ECU during tilt & telescopic, the ECU cancels tilt & telescopic.

DIAGNOSTIC CHART

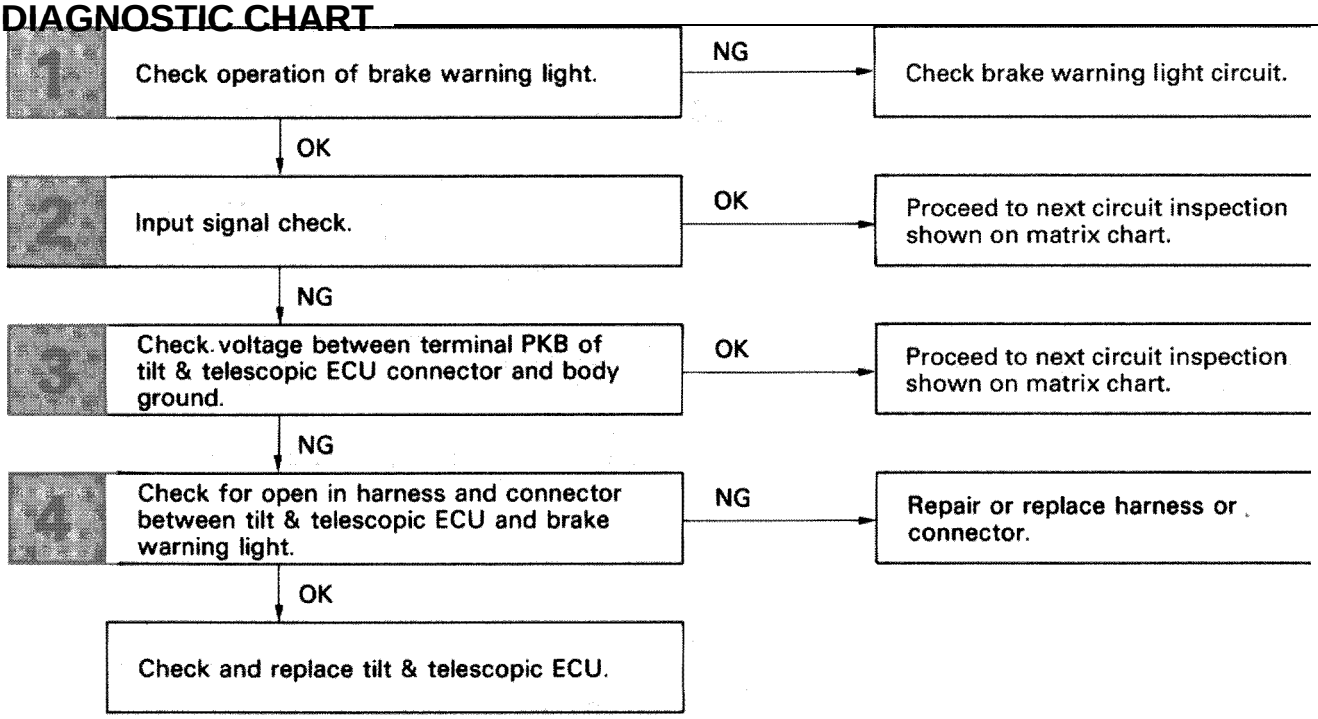

WIRING DIAGRAM

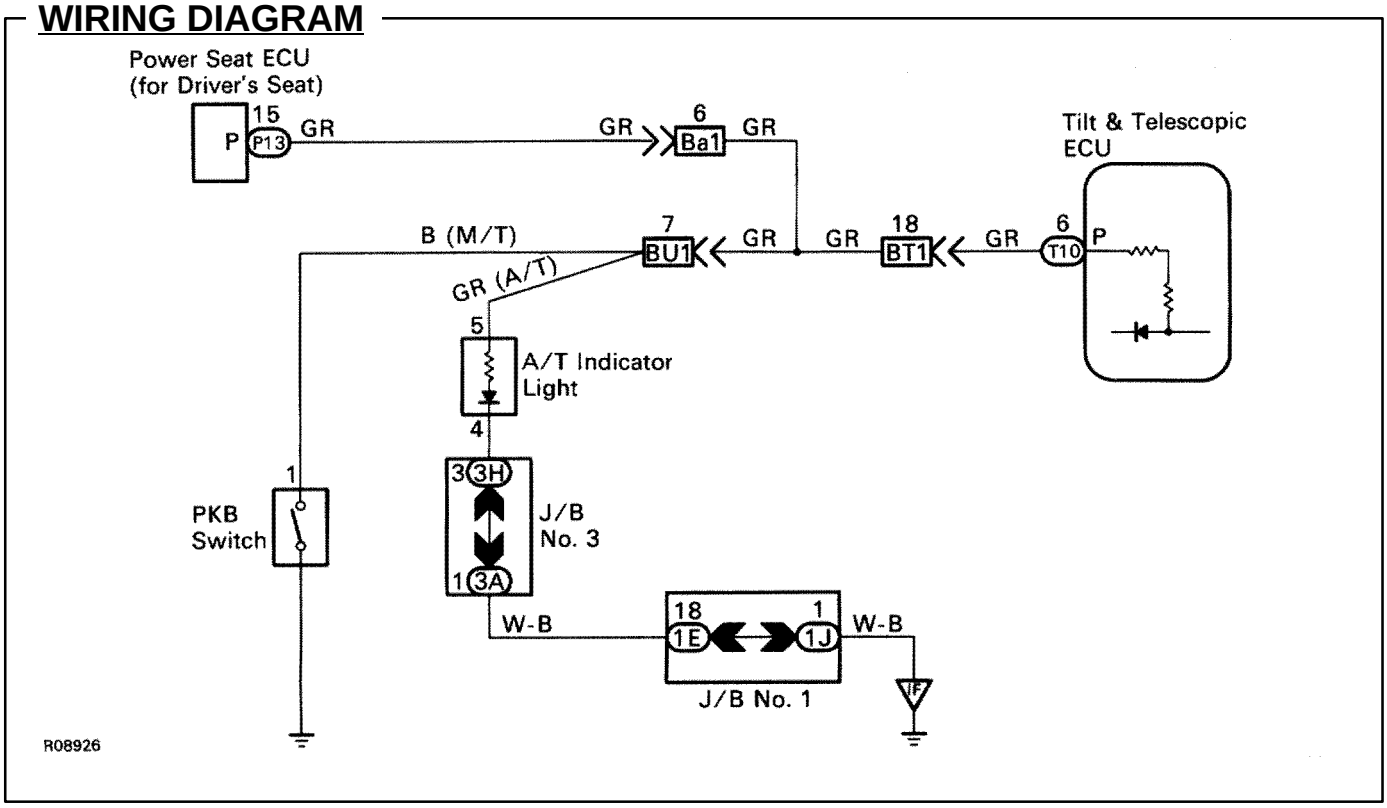

WhereEverybodyKnowsYourName

INSPECTION PROCEDURE

1	**Check operation of brake warning light.**
C	Check that the brake warning light in the instrument panel comes on when the parking brake is operation with the engine running, and the light goes off when the parking brake is not operating.

OK

NG → **Check brake warning light circuit.**

2	**Input signal check.**

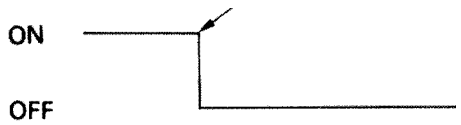

C
1. See input signal check.
2. Check the indicator light when the parking brake is operating.

OK **The indicator light goes off when the parking brake is operating.**

NG

OK → **Proceed to next circuit inspection shown on matrix chart.**

3	**Check voltage between terminal PKB of tilt & telescopic ECU connector and body ground.**

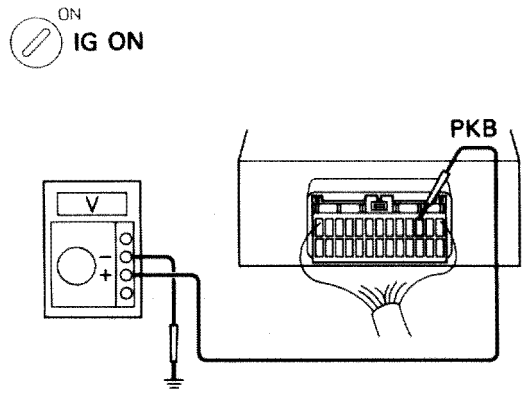

P Remove tilt & telescopic ECU with connectors still connected.

C
1. Turn ignition switch ON.
2. Measure voltage between terminal PKB of tilt & telescopic ECU connector and body ground, when the parking brake lever is operating.

OK

Switch Position	Voltage
ON (lever pulled)	Below 1 V
OFF (lever released)	10 – 14 V

NG

OK → **Proceed to next circuit inspection shown on matrix chart.**

4	**Check for open in harness and connector between tilt & telescopic ECU and brake warning light (See page IN–33).**

OK

NG → **Repair or replace harness or connector**

Check and replace tilt & telescopic ECU.

WhereEverybodyKnowsYourName

Door Courtesy Switch Circuit

CIRCUIT DESCRIPTION

The ECU determines the position of the driver's door by monitoring the voltage at terminal DSW.

Door Position	Switch Position	DSW Voltage
Opened	Closed	Below 1 V
Closed	Opened	10–14 V

DIAGNOSTIC CHART

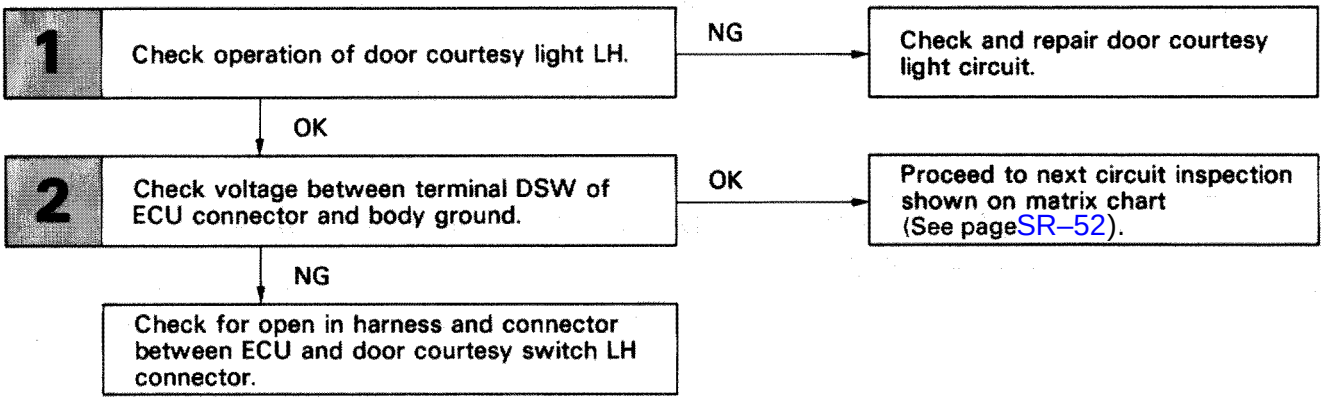

WIRING DIAGRAM

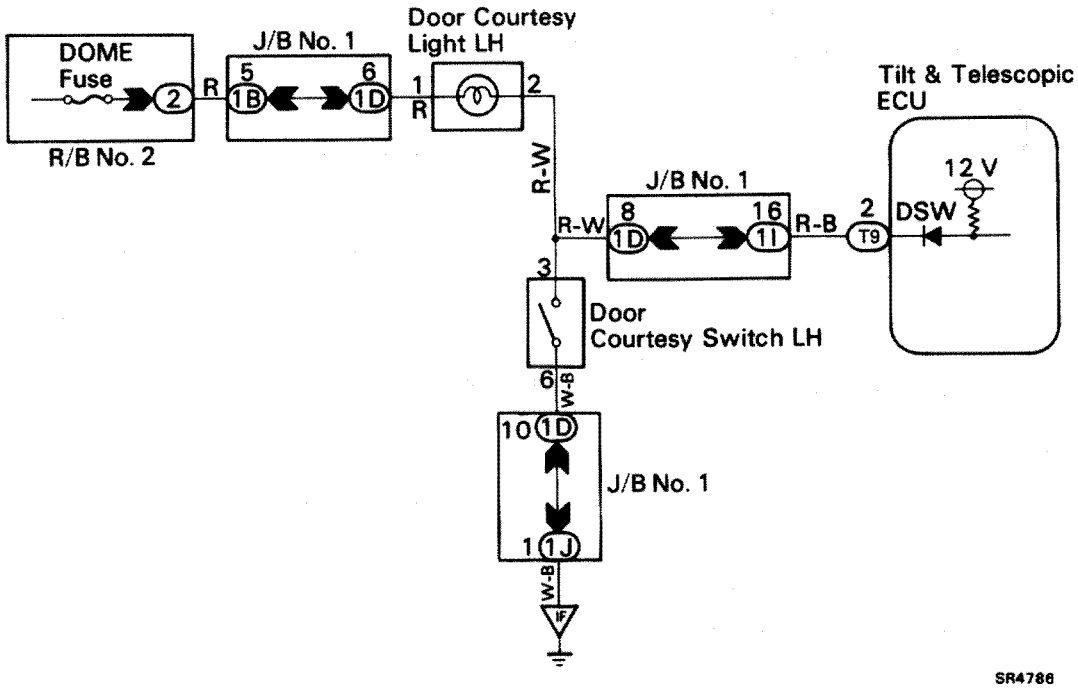

WhereEverybodyKnowsYourName

INSPECTION PROCEDURE

1	**Check operation of door courtesy light LH.**
P	Check that door courtesy light comes on when the driver's door is opened, and that the light goes off when the driver's door is closed.

OK

NG → **Check and repair door courtesy light circuit.**

2	**Check voltage between terminal DSW of ECU connector and body ground.**

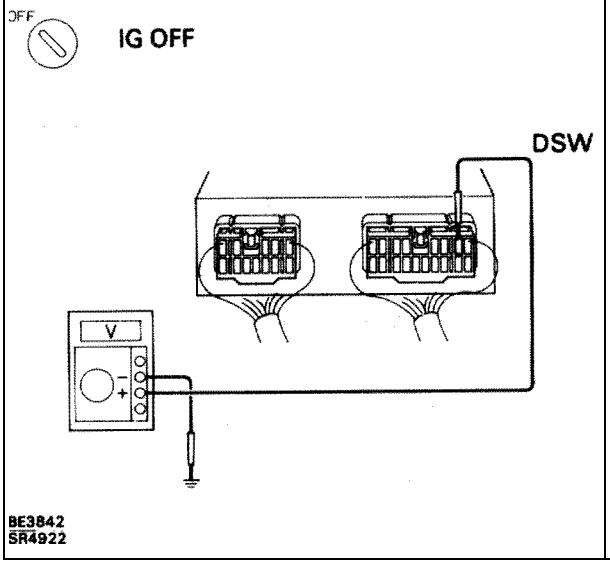

P Remove ECU with connectors still connected.

C Measure voltage between terminal DSW of ECU connector and body ground when the driver's door is opened and closed.

Driver's Door	Voltage
Opened	Below 1 V
Closed	10 – 14 V

NG

OK → **Proceed to next circuit inspection shown on matrix chart (See page SR–52).**

Check for open in harness and connector between ECU and door courtesy switch LH connector.

WhereEverybodyKnowsYourName

Unlock Warning Switch Circuit

CIRCUIT DESCRIPTION

Whether or not the key is inserted in the key cylinder is detected and a signal is sent to the ECU.
(The switch is ON (closed) when the ignition key is inserted.)

Ignition key	Unlock Warning Switch	UWSW Voltage
Out	Opened	10–14 V
In	Closed	Below 1 V

DIAGNOSTIC CHART

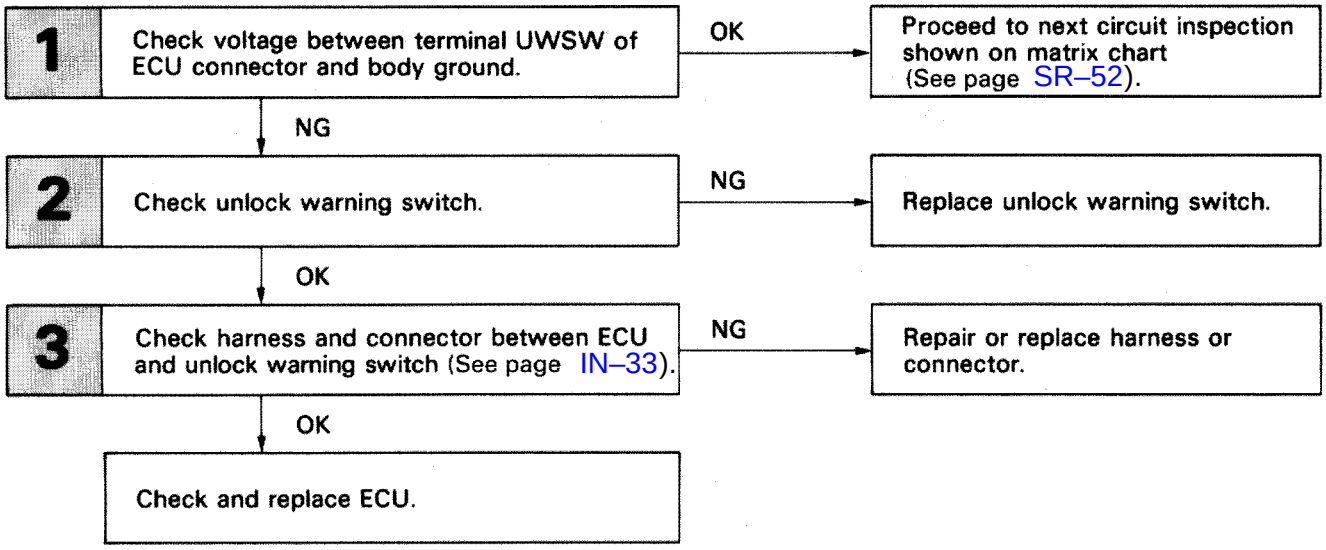

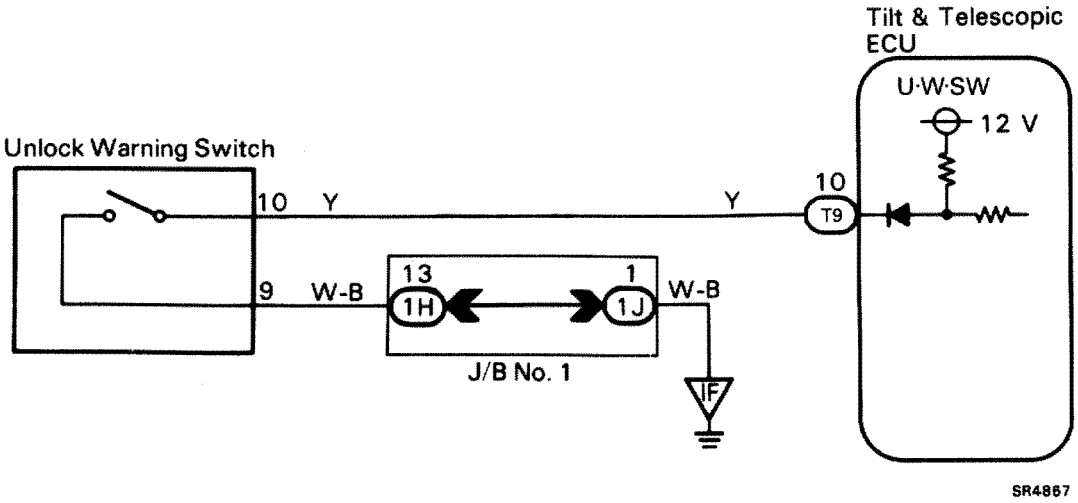

WhereEverybodyKnowsYourName

INSPECTION PROCEDURE

1 **Check voltage between terminal UWSW of ECU connector and body ground**

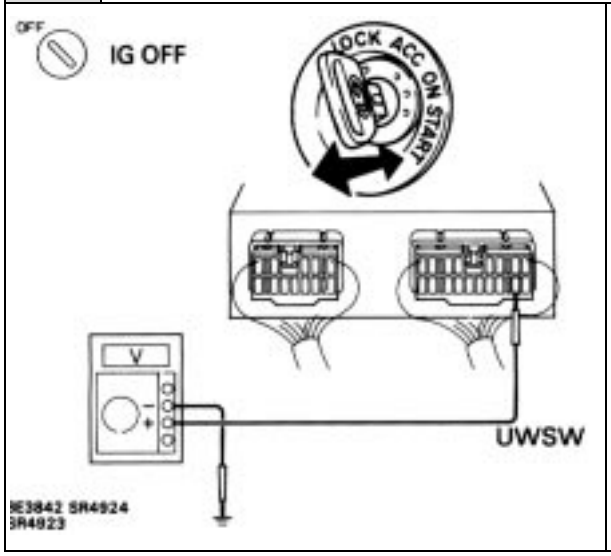

P Remove ECU with connectors still connected.

C Measure voltage between terminal UWSW of ECU connector and body ground with the ignition key inserted, or removed.

OK

Ignition Key	Voltage
Inserted	Below 1 V
Removed	10 – 14 V

NG

OK **Proceed to next circuit inspection shown on matrix chart (See page SR–52).**

2 **Check unlock warning switch.**

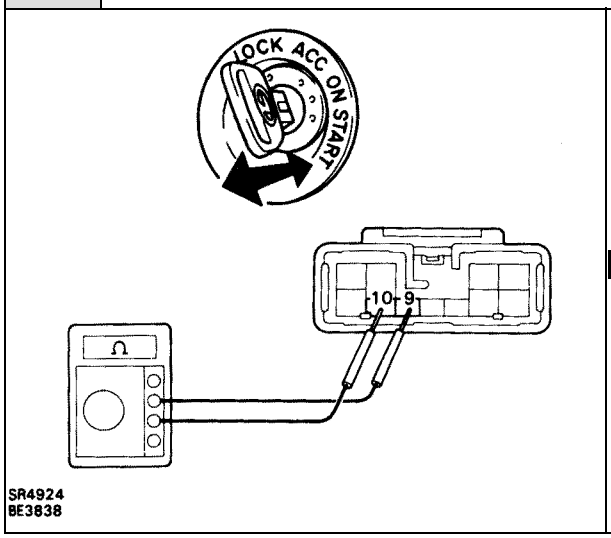

P Disconnect unlock warning switch connector.

C Measure resistance between terminals 9 and 10 of unlock warning switch connector with the ignition key inserted or removed.

OK

Ignition Key	Resistance
Inserted	Continuity
Removed	1 MΩ or higher

OK

NG **Replace unlock warning switch.**

3 **Check harness and connector between ECU and unlock warning switch (See page IN–33).**

OK

NG **Repair or replace harness or connector.**

Check and replace ECU.

WhereEverybodyKnowsYourName

POWER STEERING

DESCRIPTION

SR0KG–03

The Progressive Power Steering (PPS) is basically a power rack and pinion gear with a rotary control valve. The PPS varies the amount of hydraulic assistance with respect to vehicle road speed. In addition the unit incorporates an electronically controlled hydraulic reaction chamber.

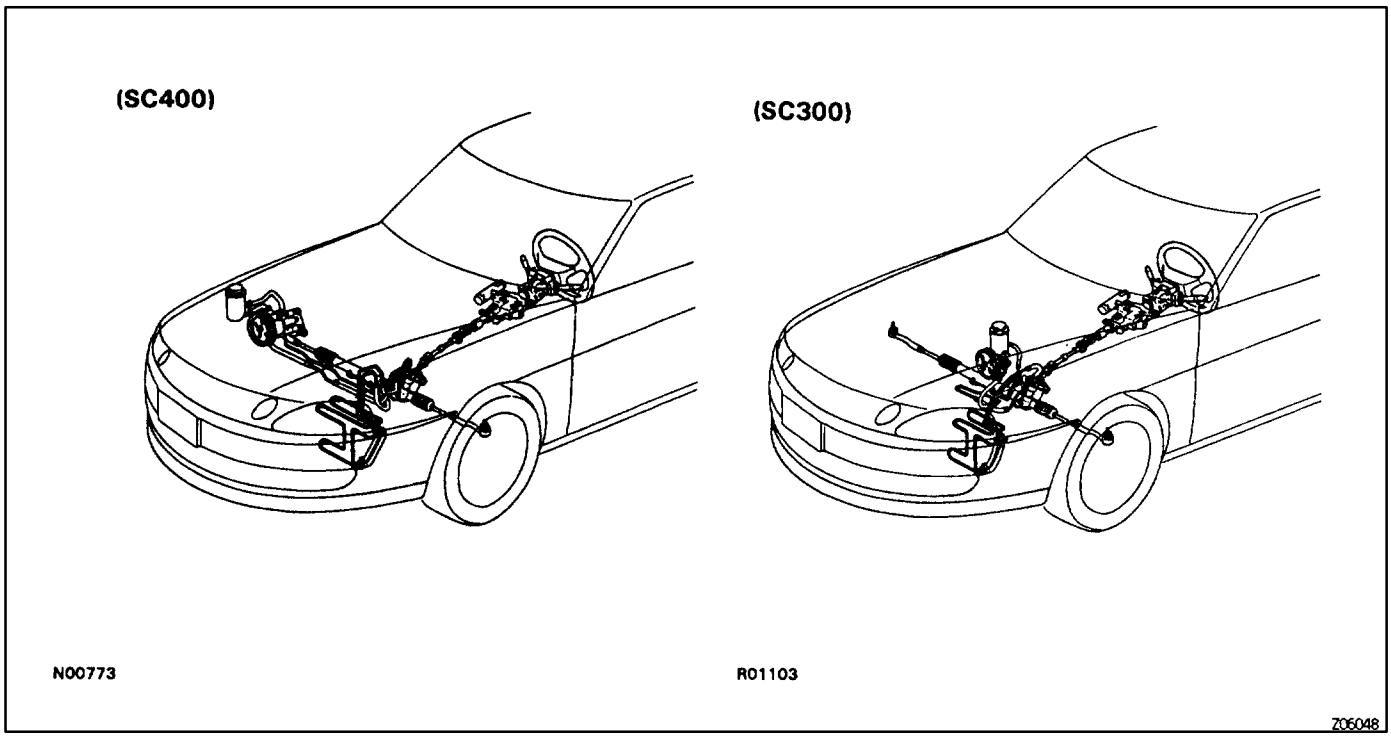

PRINCIPLES OF POWER STEERING

Power steering is a hydraulic device which utilizes engine power to reduce steering effort. Consequently, the engine is used to drive a pump to develop fluid pressure, and this pressure acts on a piston within the power cylinder so that the piston assists the rack effort. The amount of this assistance depends on the extent of pressure acting on the piston. Therefore, if more steering force is required, the pressure must be raised. The variation in the fluid pressure is accomplished by a control valve which is linked to the steering main shaft.

WhereEverybodyKnowsYourName

OPERATION

NEUTRAL (STRAIGHT–AHEAD) POSITION

SR0NU–01

Fluid from the pump is sent to the control valve. If the control valve is in the neutral position, all the fluid will flow through the control valve into the relief port and back to the pump. At this time, hardly any pressure is created and because the pressure on the cylinder piston is equal on both sides, the piston will not move in either direction.

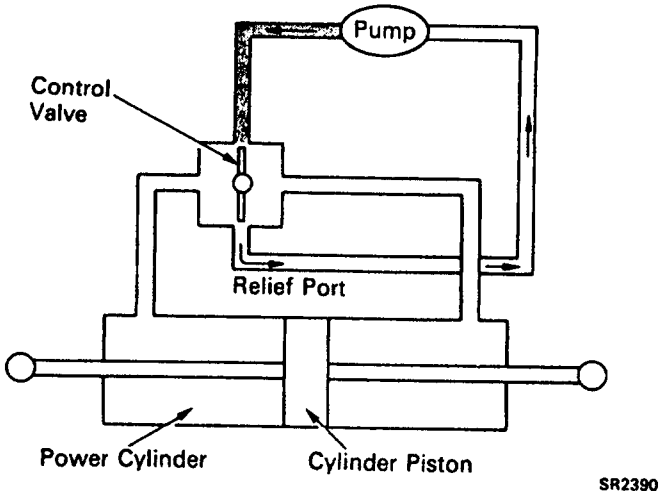

WHEN TURNING

When the steering main shaft is turned in either direction, the control valve also moves, closing one of the fluid passages. The other passage then opens wider, causing a change in fluid flow volume and, at the same time, a differential pressure is created between both sides of the piston. Consequently, the piston moves in the direction of the lower pressure so that the fluid in the cylinder is forced back to the pump through the control valve.

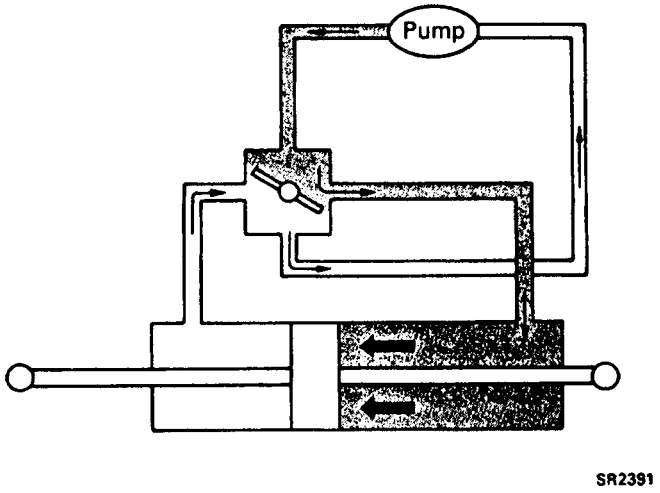

WhereEverybodyKnowsYourName

SERVICE HINT

Troubles with the power steering system are usually concerned with hard steering due to the fact that there is no assistance. In such cases, before attempting to make repairs, it is necessary to determine whether the trouble lies with the pump or with the gear housing. To do this, an on–vehicle inspection, can be made by using a pressure gauge.

ON–VEHICLE INSPECTION

Power steering is a hydraulic device and problems are normally due to insufficient fluid pressure acting on the piston. This could be caused by either the pump not producing the specified fluid pressure or the control valve in the gear housing not functioning properly so that the proper fluid pressure can not be obtained. If the fault lies with the pump, the same symptoms will generally occur whether the steering wheel is turned fully to the right or left. On the other hand, if the fault lies with the control valve, there will generally be a difference between the amount of assistance when the steering wheel is turned to the left and right, causing harder steering. However, if the piston seal of the power cylinder is worn, there will be a loss of fluid pressure whether the steering wheel is turned to the right or left and the symptoms will be the same for both.

Before performing an on–vehicle inspection, a check must first be made to confirm that the power steering system is completely free of any air. If there is any air in the system, the volume of this air will change when the fluid pressure is raised, causing a fluctuation in the fluid pressure so that the power steering will not function properly. To determine if there is any air in the system, check to see if there is a change of fluid level in the reservoir tank when the steering wheel is turned fully to the right or left.

For example, if there is air in the system, it will be compressed to a smaller volume when the steering wheel is turned, causing a considerable drop in the fluid level. If the system is free of air, there will be very little change in the level even when the fluid pressure is raised. This is because the fluid, being a liquid, does not change volume when compressed. The little change in the fluid level is due to expansion of the hoses between the pump and gear housing when pressure rises. Also, air in the system will sometimes result in an abnormal noise occurring from the pump or gear housing when the steering wheel is fully turned in either direction.

This on–vehicle inspection must be performed every time to ensure that the power steering system is working properly after overhauling or repairing the pump or gear housing.

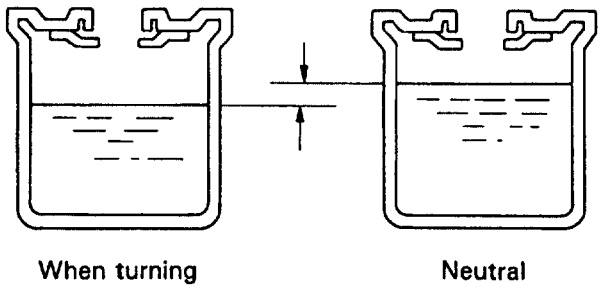

SR2392 SR2393

WhereEverybodyKnowsYourName

VANE PUMP

The main component parts of the vane pump, such as the cam ring, rotor, vanes and flow control valve are high precision parts and must be handled carefully. Also, because this pump produces a very high fluid pressure, O–rings are used for sealing each part. When reassembling the pump, always use new O–rings. In the flow control valve, there is a relief valve which controls the maximum pressure of the pump. The amount of this maximum pressure is very important; if it is too low, there will be insufficient power steering assistance and if too high, it will have an adverse effect on the pressure hoses, oil seals, etc. If the maximum pressure is either too high or too low due to a faulty relief valve, do not disassemble or adjust the relief valve, but replace the flow control valve as an assembly.

The clearance between the flow control valve and pump body installation hole is very important. After manufacture, the factory measures the size of the installation hole and outer circumference of the flow control valve, and punches a mark accordingly. Therefore, when replacing the flow control valve, be sure to do so with one having the same mark in order to ensure the proper clearance.

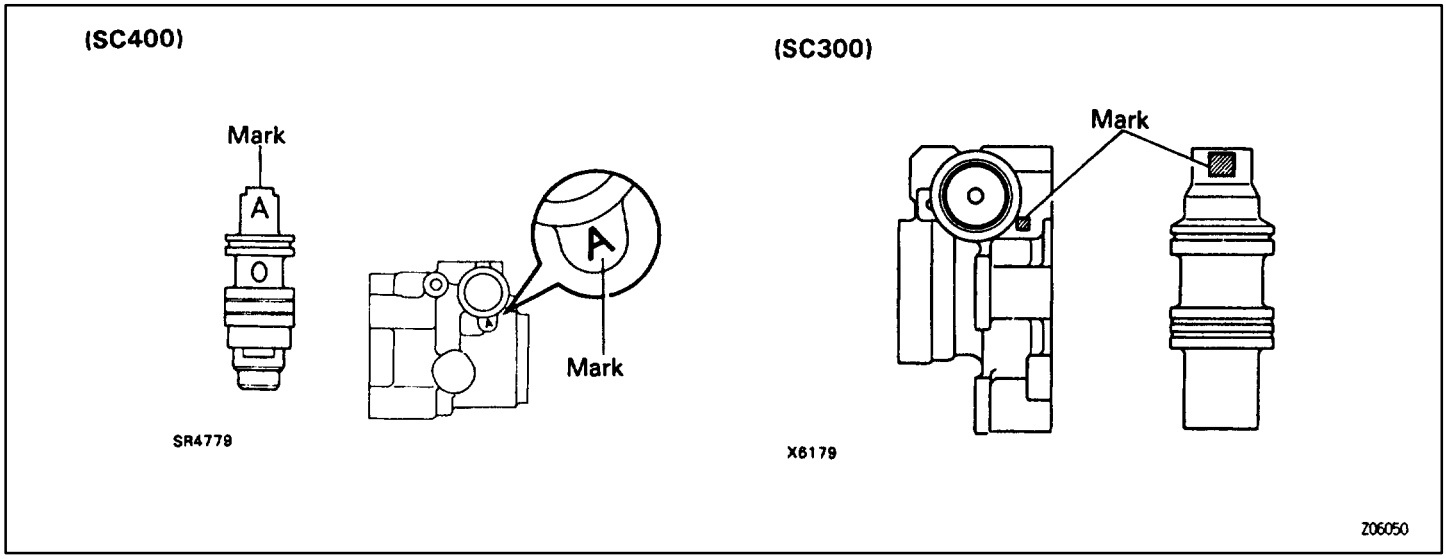

The functional parts of the pump which produce fluid pressure are the cam ring, rotor and vanes, and these should be checked for wear. If the clearance between each is not within standard when reassembling, any worn parts should be replaced.

In this case, the replaced cam ring and rotor should be of the same length (have the same mark), and the vanes should be replaced with those having a length corresponding to that mark, otherwise the proper thrust clearance cannot be obtained. If there is too much thrust clearance, there will be insufficient fluid pressure at low speeds. If there is too little thrust clearance, it may result in seizure of the vanes.

WhereEverybodyKnowsYourName

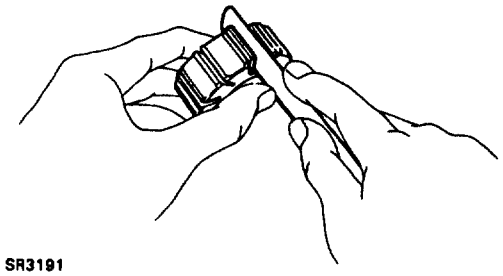

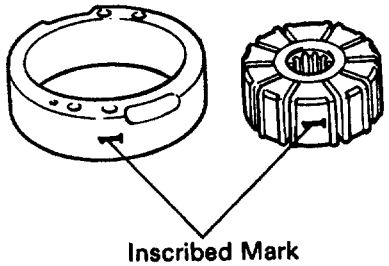

GEAR HOUSING

If the gear housing is secured directly in a vise during overhaul, there is danger of deforming it, so always first secure it in the SST provided (rack & pinion steering rack housing stand) before placing it in the vise.

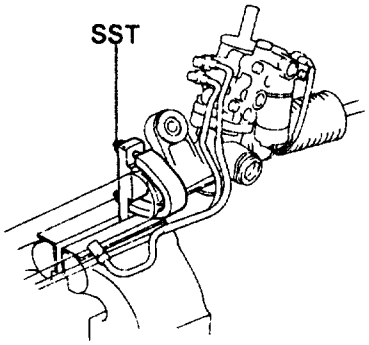

Z06865

The oil seals on both sides of the power cylinder are for the prevention of leakage of the high pressure fluid which acts on the piston. Always use new oil seals when reassembling and be very careful not to scratch or damage them.

Because of the high pressure, even the slightest scratch will cause fluid leakage, resulting in an inoperative power steering system.

Also, be very careful not to scratch the sliding portion of the rack which makes contact with the oil seals.

When removing the rack ends from the rack, it is very easy to cause a burr when holding the tip of the rack with a wrench. Therefore, before assembling the rack, first check the tip for burrs and remove any with an oil stone.

Teflon rings are used for the piston and control valve. These teflon rings are highly durable against wear, but if it is necessary to replace them, be careful not to stretch the new ones.

After installing a teflon ring into its groove, snug it down into the groove before assembly of the cylinder or housing to prevent possible damage.

WhereEverybodyKnowsYourName

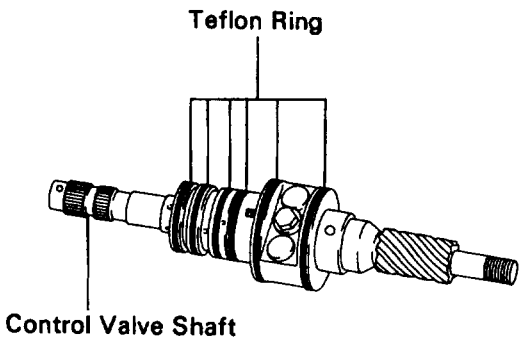

SR3279

As with the rack and pinion type steering, preload is very important. If the preload is not correct, it could result in such trouble as steering wheel play or shimmy or lack of durability, so always make sure that it is correct.

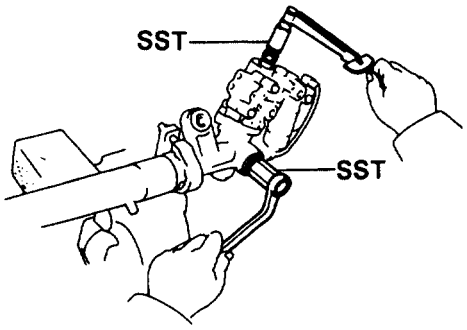

SR4382

Z06866

WhereEverybodyKnowsYourName

IDLE–UP DEVICE

The pump produces the maximum fluid pressure when the steering wheel is turned fully to the right or left and, at this time, there is a maximum load on the pump which causes a decrease in engine idle rpm. To solve this problem, vehicles are equipped with an idle–up device which acts to raise the engine idle rpm whenever there is a heavy load on the pump.

On EFI engines, when the piston of the air control valve is pushed by fluid pressure, the air valve opens and the volume of air by–passing the throttle valve is increased to regulate engine rpm.

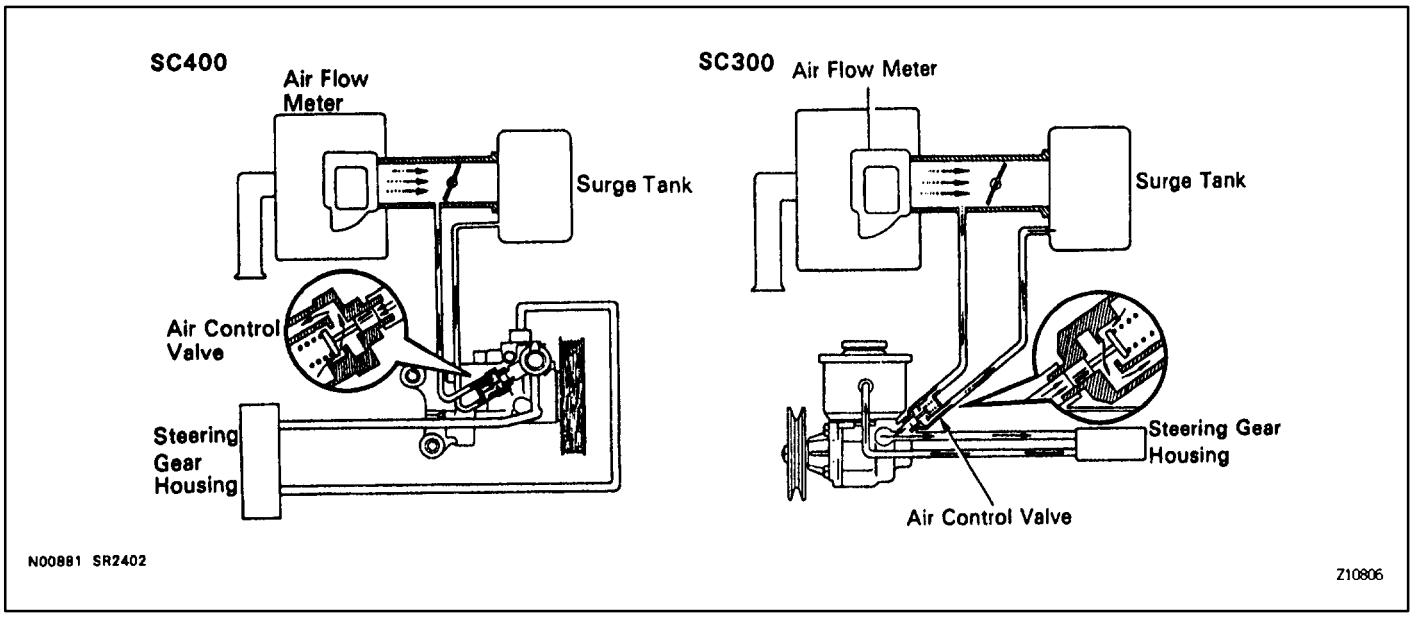

The idle–up device functions to raise engine idle rpm when pump fluid pressure acts on the air control valve, installed to the pump body, to control the flow of air.

WhereEverybodyKnowsYourName

PREPARATION
SST (SPECIAL SERVICE TOOLS)

SR0FV–05

	09238–47012	Water Pump Bearing Remover & Replacer	Vane pump shaft with bearing Front side plate (SC400)
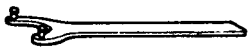	09278–54012	Drive Shaft Holding Tool	PS pump pulley
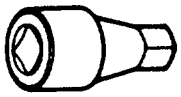	09313–30021	Detent Ball Plug Socket	Control valve housing set bolt Pressure control valve set bolt (SC400)
	09608–30012	Front Hub & Drive Pinion Bearing Tool Set	(SC300)
	(09608–04030)	Front Hub Inner Bearing Cone Replacer	Vane pump shaft with bearing (SC300)
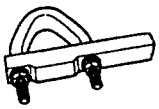	09612–00012	Rack & Pinion Steering Rack Housing Stand	
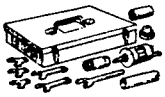	09612–24014	Steering Gear Housing Overhaul Tool Set	
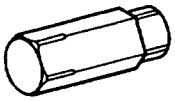	(09612–10022)	Hexagon Wrench	
	(09612–10061)	Steering Pinion Bearing Replacer	
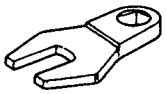	(09617–24011)	Steering Rack Wrench	
	(09617–24020)	Steering Pinion Bearing Adjusting Screw Lock Nut Wrench	
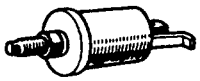	09612–30012	Steering Worm Bearing Puller	
	09616–00010	Steering Worm Bearing Adjusting Socket	

WhereEverybodyKnowsYourName

	09617–14010 Steering Rack End Wrench	
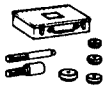	09620–30010 Steering Gear Box Replacer Set	
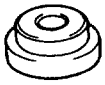	(09624–30010) Steering Sector Shaft Oil Seal Replacer	
	(09626–30010) Steering Worm Front Bearing Replacer	
	(09627–30010) Steering Sector Shaft Bushing Replacer	
	(09631–00020) Handle	
	09628–62011 Ball Joint Puller	
	09630–24013 Steering Rack Oil Seal Tool Set	
	(09620–24010) Valve Cup Oil Seal Remover	
	(09620–24020) Valve Cup Oil Seal Replacer	
	(09620–24030) Valve Cup Bearing Replacer	
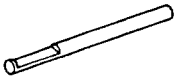	09631–10030 Oil Seal Remover	
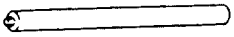	09631–12020 Handle	
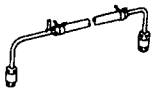	09631–12071 Steering Rack Oil Seal Test Tool	

WhereEverybodyKnowsYourName

	09631–20031	Oil Seal "B" Remover	
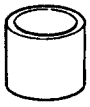	09631–20081	Seal Ring Tool	
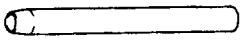	09631–20102	Steering Rack Cover "H"	
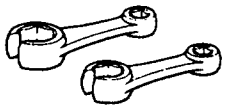	09631–22020	Power Steering Hose Nut 14 x 17 mm Wrench Set	(SC400)
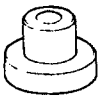	09631–32010	Oil Seal Replacer	
	09631–32020	Seal Ring Tool	
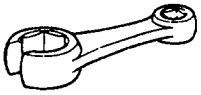	09633–00020	Power Steering Hose Nut Wrench	
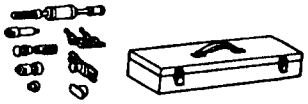	09910–00015	Puller Set	(SC400)
	(09911–00011)	Puller Clamp	(SC400)
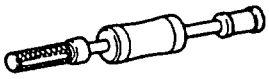	(09912–00010)	Puller Slide Hammer	(SC400)

WhereEverybodyKnowsYourName

RECOMMENDED TOOLS

SR0FW–03

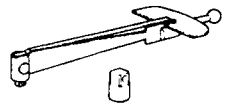	09025–00010	Small Torque Wrench	Total preload
	09082–00050	TOYOTA Electrical Tester Set	
	09905–00012	Snap Ring No. 1 Expander	
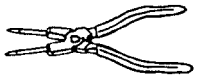	09905–00013	Snap Ring Pliers	

LUBRICANT

SR015–05

Item	Capacity	Classification
Power steering fluid Total	1.0 liters (1.1 US qts, 0.9 Imp.qts)	ATF DEXRON® II

EQUIPMENT

SR0FX–01

Caliper gauge	Power steering pump
Dial indicator	Steering rack
Micrometer	Power steering pump
Oil pressure gauge	
Torque wrench	
Vacuum gauge	Gear housing

SSM (SPECIAL SERVICE MATERIALS)

SR0FY–01

08833–00080	Adhesive 1344, THREE BOND 1344, LOCTITE 242 or equivalent	Rack housing cap Rack guide spring cap Rack guide spring cap lock nut

WhereEverybodyKnowsYourName

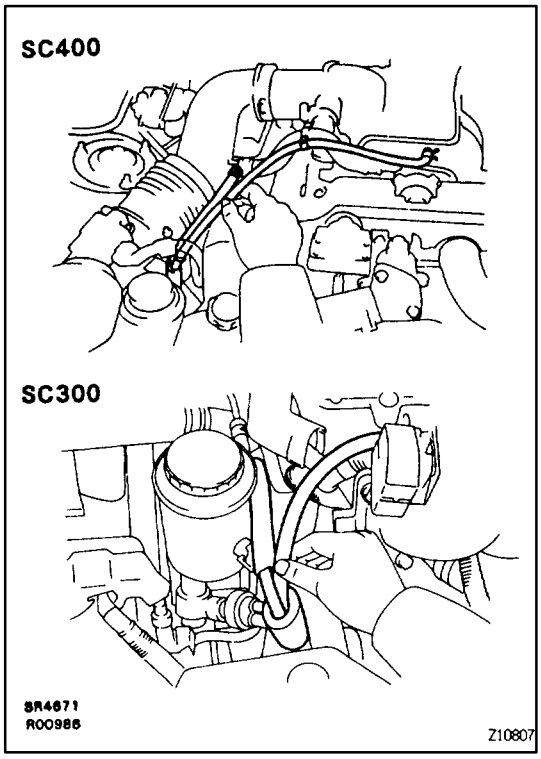

ON–VEHICLE INSPECTION

CHECK IDLE–UP

SR0FZ–04

1. **WARM UP ENGINE**
2. **TURN AIR CONDITIONER SWITCH OFF**
3. **CHECK IDLE–UP**

(a) Fully turn the steering wheel.

(b) Check that the engine rpm decreases when the air control valve hose is pinched.

(c) Check that the engine rpm increases when the air control valve hose is released.

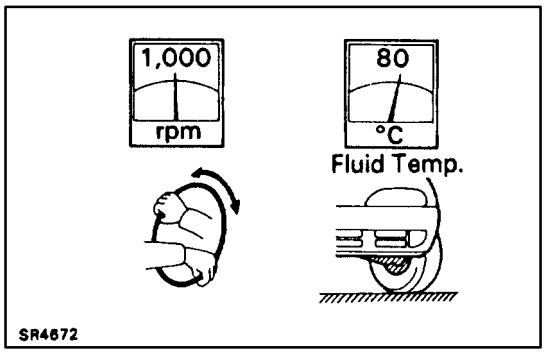

FLUID LEVEL CHECK

SR0G0–03

1. **KEEP VEHICLE LEVEL**
2. **BOOST FLUID TEMPERATURE**

   With the engine idling at 1,000 rpm or less, turn the steering wheel from lock to lock several times to boost fluid temperature.

   Fluid temperature:

   80°C (176°F)
3. **STOP ENGINE**
4. **CHECK FOR FOAMING OR EMULSIFICATION**

   HINT: Foaming and emulsification indicate either the existence of air in the system or that the fluid level is too low.

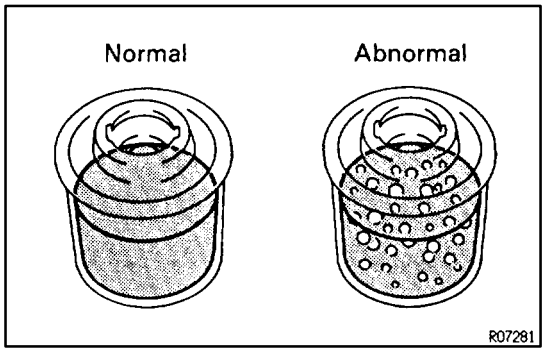

5. **CHECK FLUID LEVEL IN OIL RESERVOIR**

   Check the fluid level and add fluid if necessary.

   Fluid:

   ATF DEXRON® II

   HINT: Check that the fluid level is within the HOT LEVEL of the dipstick of the reservoir cap. If the fluid is cold, check that it is within the COLD LEVEL of the dipstick.

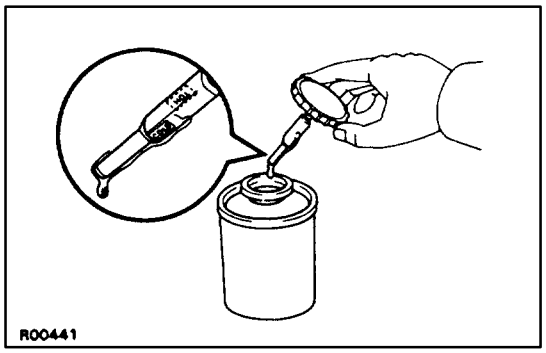

WhereEverybodyKnowsYourName

POWER STEERING FLUID REPLACEMENT

SR0G1–04

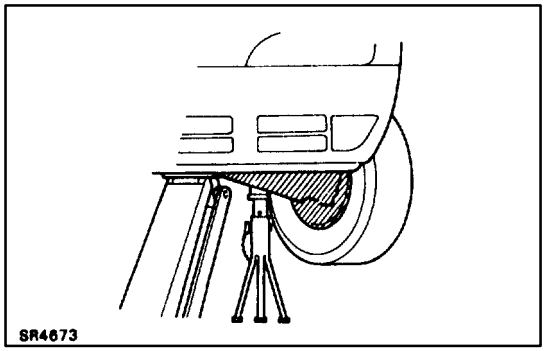

1. **JACK UP FRONT OF VEHICLE AND SUPPORT IT WITH STANDS**

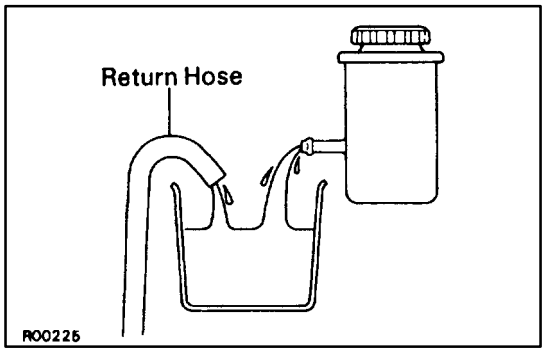

2. **REMOVE FLUID RETURN HOSE FROM OIL RESERVOIR AND DRAIN FLUID INTO CONTAINER**
   NOTICE: Take care not to spill fluid on the drive belt.

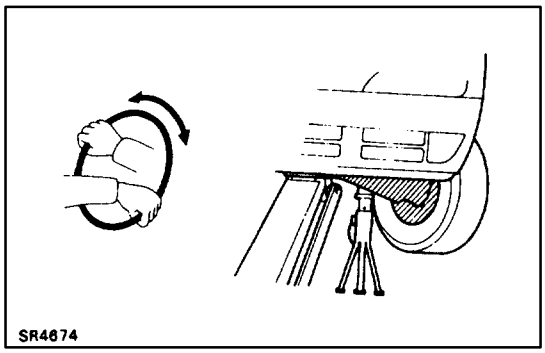

3. **TURN STEERING WHEEL FROM LOCK TO LOCK WHILE DRAINING FLUID**

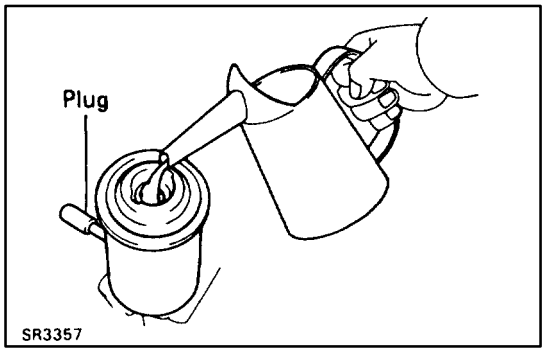

4. **FILL OIL RESERVOIR WITH FRESH FLUID**
   Fluid:
   ATF DEXRON® II

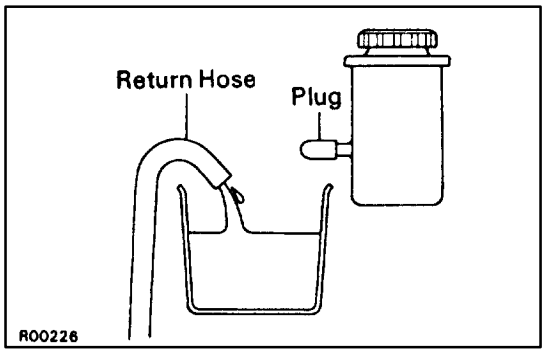

5. **START ENGINE AND RUN IT AT 1,000 RPM**
   After 1 or 2 seconds, fluid will begin to discharge from the return hose. Stop the engine immediately at this time.
   NOTICE: Take care that some fluid remains left in the oil reservoir.
6. **REPEAT STEPS 4 AND 5 FOUR OR FIVE TIMES UNTIL THERE IS NO MORE AIR IN FLUID**
7. **CONNECT RETURN HOSE TO OIL RESERVOIR**
8. **BLEED POWER STEERING SYSTEM**
   (See page SR–115)

WhereEverybodyKnowsYourName

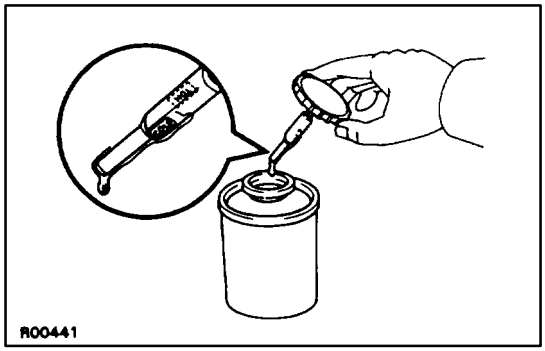

POWER STEERING SYSTEM BLEEDING

SR0G2–04

1. CHECK FLUID LEVEL IN OIL RESERVOIR

Check the fluid level and add fluid if necessary.

Fluid:

ATF DEXRON® II

HINT: Check that the fluid level is within the HOT LEVEL of the dipstick of the reservoir cap. If the fluid is cold, check that it is within the COLD LEVEL of the dipstick.

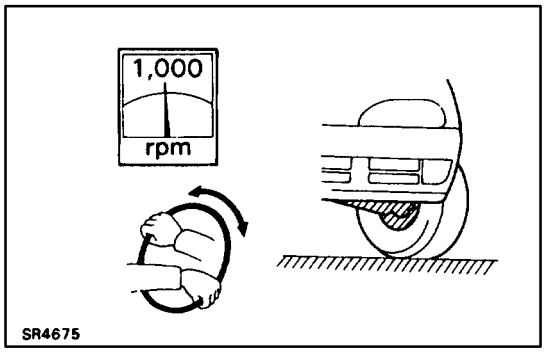

2. START ENGINE AND TURN STEERING WHEEL FROM LOCK TO LOCK 3 OR 4 TIMES

With the engine speed below 1,000 rpm, turn the steering wheel to left or right full lock and keep it there for 2–3 seconds, then turn the wheel to the opposite full lock and keep it there for 2–3 seconds.

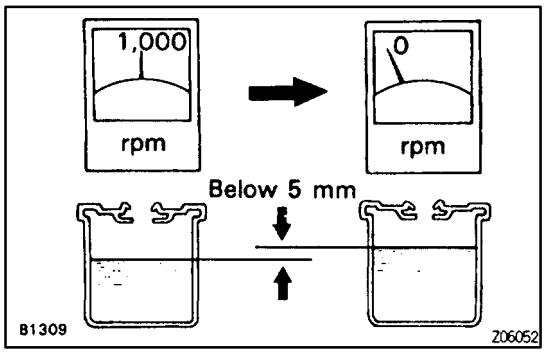

3. CHECK THAT FLUID IN OIL RESERVOIR IS NOT FOAMY OR CLOUDY AND DOES NOT RISE OVER MAXIMUM WHEN ENGINE IS STOPPED

Measure the fluid level with the engine running. Stop the engine and measure the fluid level.

Maximum rise:

5 mm (0.20 in.)

If a problem is found, repeat fluid replacement on page SR–114. Rep air the PS if the problem persists.

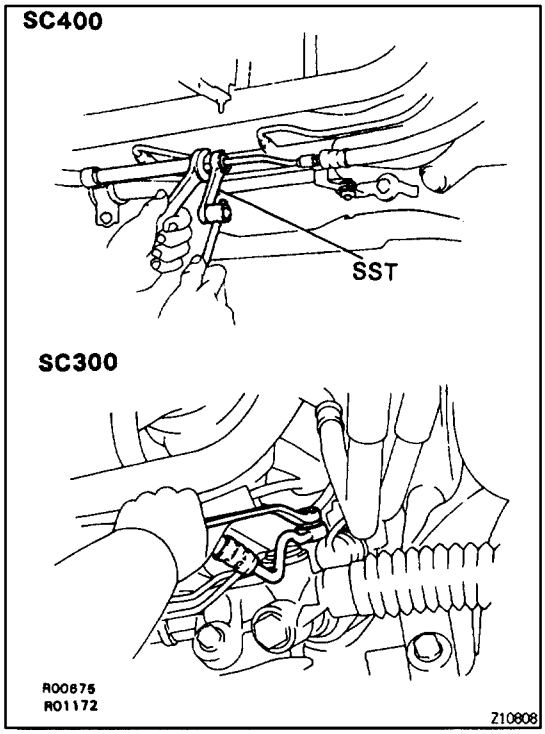

OIL PRESSURE CHECK

SR0G3–03

1. CONNECT PRESSURE GAUGE

(a) Using SST, disconnect the pressure line joint.
SC 400:
SST 09631–22020

WhereEverybodyKnowsYourName

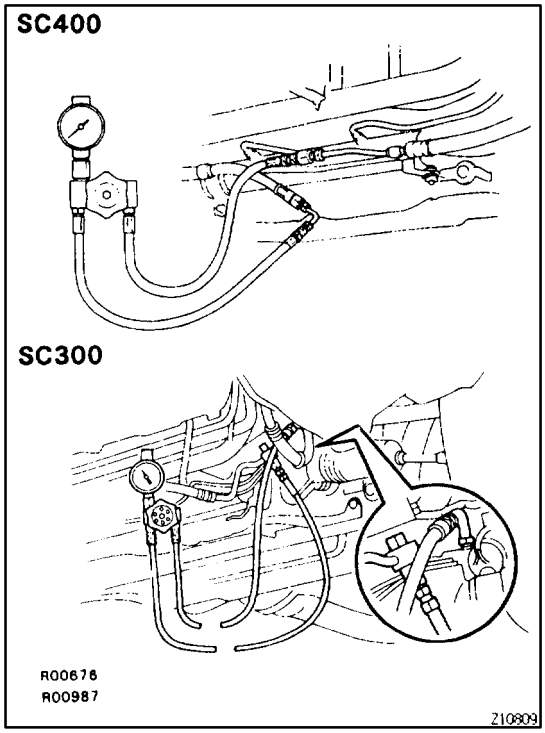

(b) Connect the gauge side of the pressure gauge to the PS pump side, and the valve side to the gear housing side.

2. BLEED POWER STEERING SYSTEM
(See page SR–115)

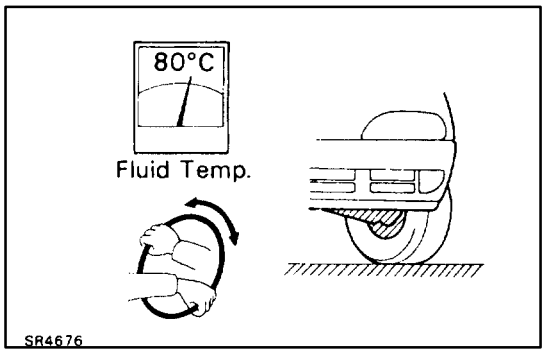

3. START ENGINE AND RUN IT AT IDLE

4. BOOST FLUID TEMPERATURE

With the engine idling at 1,000 rpm or less, turn the steering wheel from lock to lock several times to boost fluid temperature.

Fluid temperature: 80°C (176°F)

5. CHECK FLUID PRESSURE READING WITH VALVE CLOSED

Close the pressure gauge valve and observe the reading on the gauge.

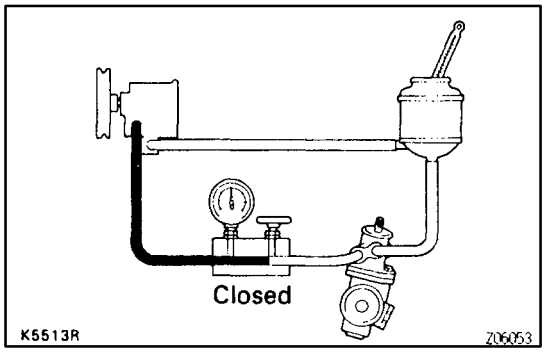

Minimum pressure:

7,355 kPa (75 kgf/cm^2, 1,067 psi)

NOTICE:

- Do not keep the valve closed for more than 10 seconds.
- Do not let the fluid temperature become too high.

If pressure is low, repair or replace the PS vane pump.

6. OPEN VALVE FULLY

7. CHECK AND RECORD PRESSURE READING AT 1,000 RPM

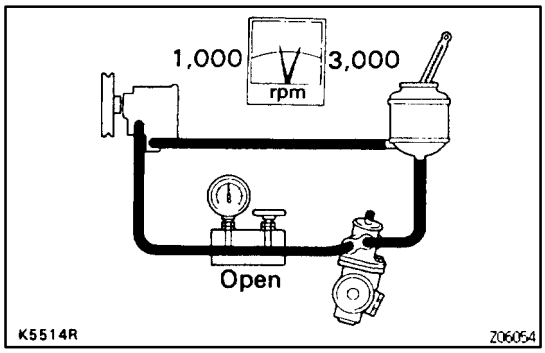

8. CHECK AND RECORD PRESSURE READING AT 3,000 RPM

Check that the pressure difference between the 1,000 rpm and 3,000 rpm checks is less than 490 kPa (5 kgf/cm^2, 71 psi). If the difference is excessive, repair or replace the flow control valve of the PS vane pump.

NOTICE: Do not operate the steering wheel.

WhereEverybodyKnowsYourName

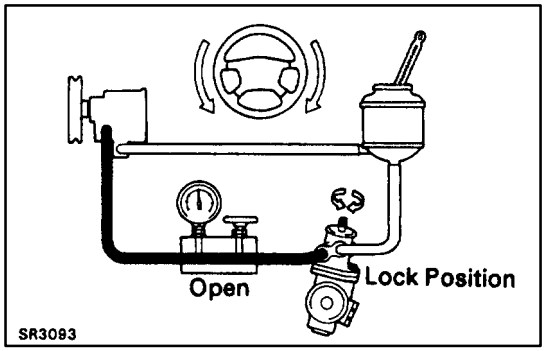

9. CHECK PRESSURE READING WITH STEERING WHEEL TURNED TO FULL LOCK

Be sure the pressure gauge valve is fully opened and the engine idling.

Minimum pressure:

7,355 kPa (75 kgf/cm^2, 1,067 psi)

NOTICE:

- Do not maintain lock position for more than 10 seconds.
- Do not let the fluid temperature become too high.

If pressure is low, the gear housing has an internal leak and must be repaired or replaced.

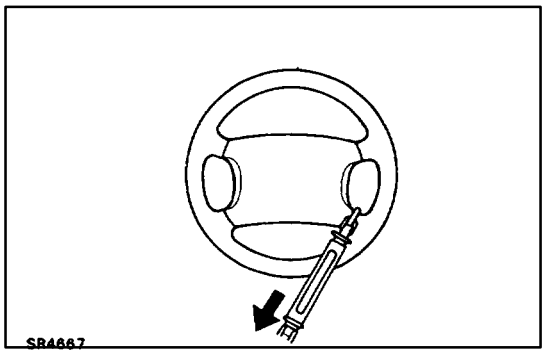

10. MEASURE STEERING EFFORT

(a) Center the steering wheel and run the engine at idle.

(b) Using a spring scale, measure the steering effort in both directions.

Maximum steering effort:

40 N (4.1 kgf, 9.0 lbf)

If steering effort is excessive, repair the power steering unit.

HINT: Be sure to consider the tire type, pressure and contact surface before making your diagnosis.

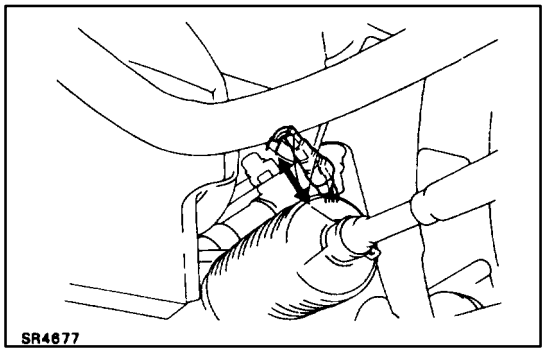

(c) Disconnect the solenoid connector.

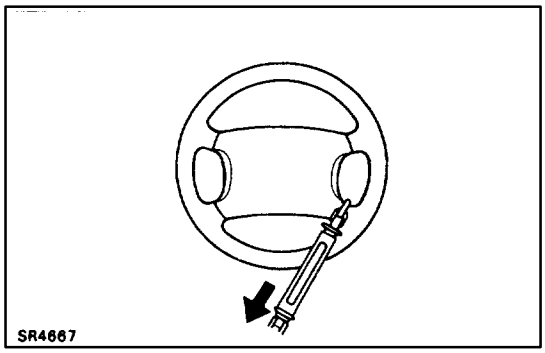

(d) Using a spring scale, measure the steering effort in both directions.

(Reference)

Maximum steering effort:

76 N (7.7 kgf, 17.0 lbf)

If steering effort is not heavier than (b), check solenoid.

HINT: Be sure to consider the tire type, pressure and contact surface before making your diagnosis.

WhereEverybodyKnowsYourName

POWER STEERING PUMP (SC400)

POWER STEERING PUMP REMOVAL AND INSTALLATION

SR0G4–01

Remove and install the parts, as shown.

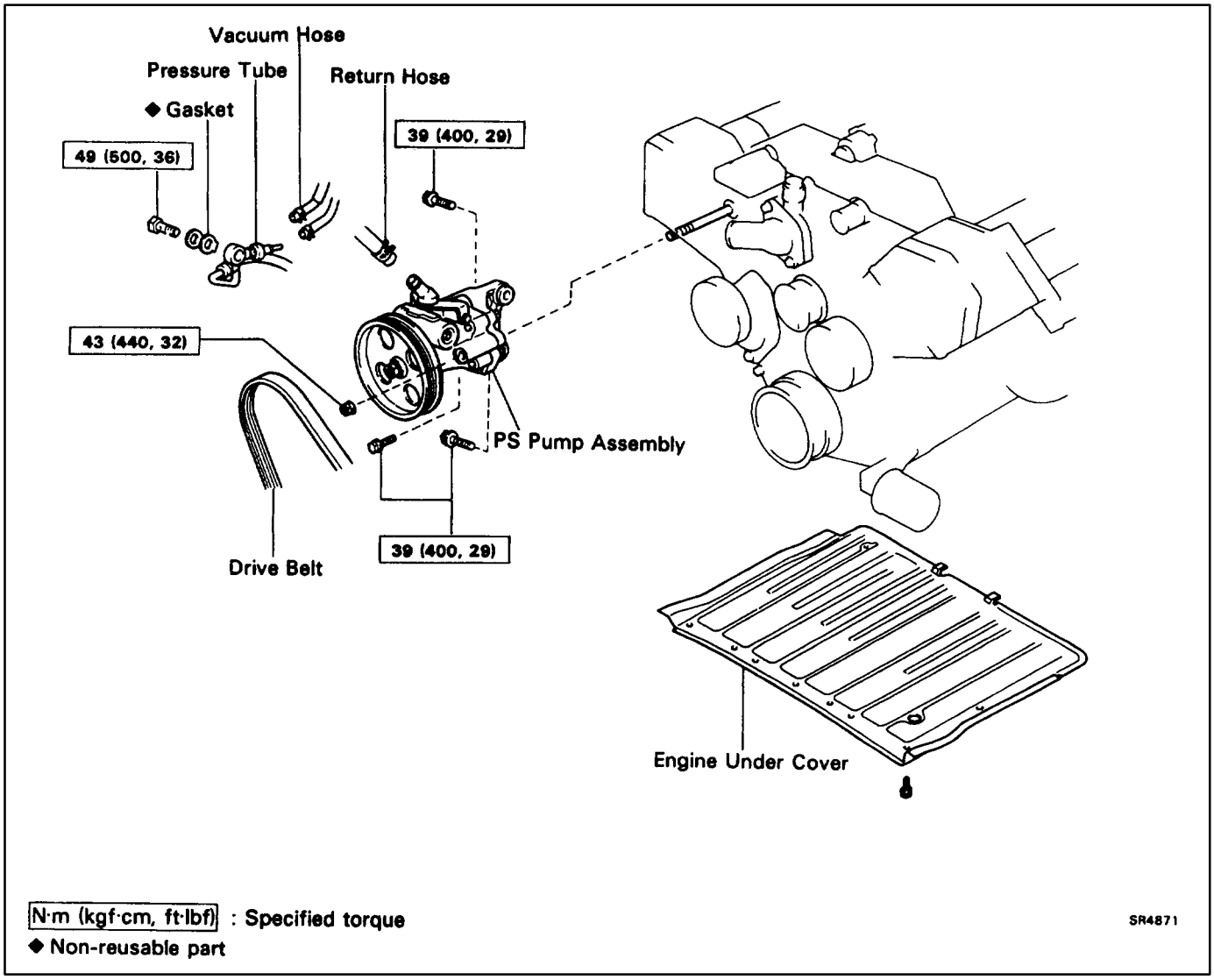

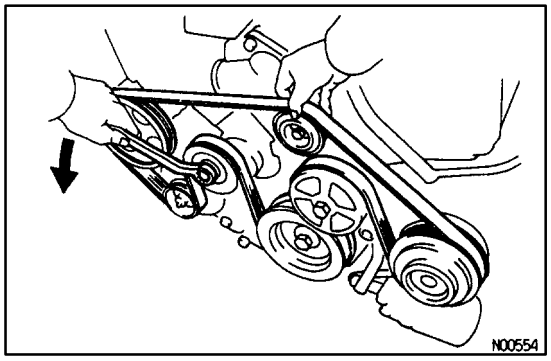

MAIN POINTS OF REMOVAL AND INSTALLATION

1. REMOVE DRIVE BELT

Loosen the drive belt tension by turning the drive belt tensioner counterclockwise, and remove the drive belt.

WhereEverybodyKnowsYourName

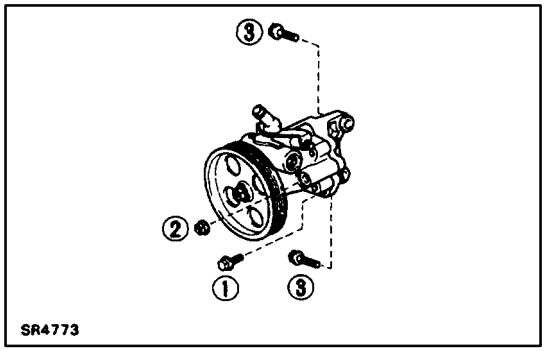

2. INSTALL PUMP ASSEMBLY

Torque the bolts and nut on the pump assembly in the order shown.

Torque:

Bolt 39 N·m (400 kgf·cm, 29 ft·lbf)
Nut 43 N·m (440 kgf·cm, 32 ft·lbf)

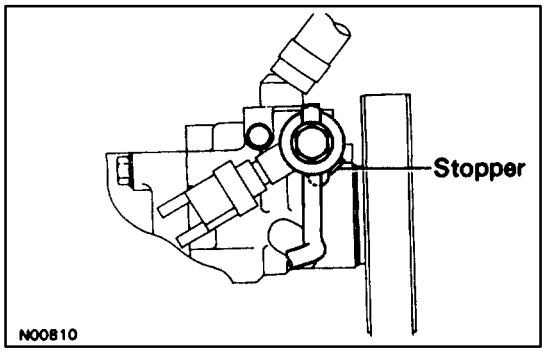

3. CONNECT PRESSURE TUBE

Make sure the stopper is touching the pump housing, as shown, then torque the union bolt.

Torque: 49 N·m (500 kgf·cm, 36 ft·lbf)

4. BLEED POWER STEERING SYSTEM

(See page SR–115)

WhereEverybodyKnowsYourName

COMPONENTS

SR0G5–03

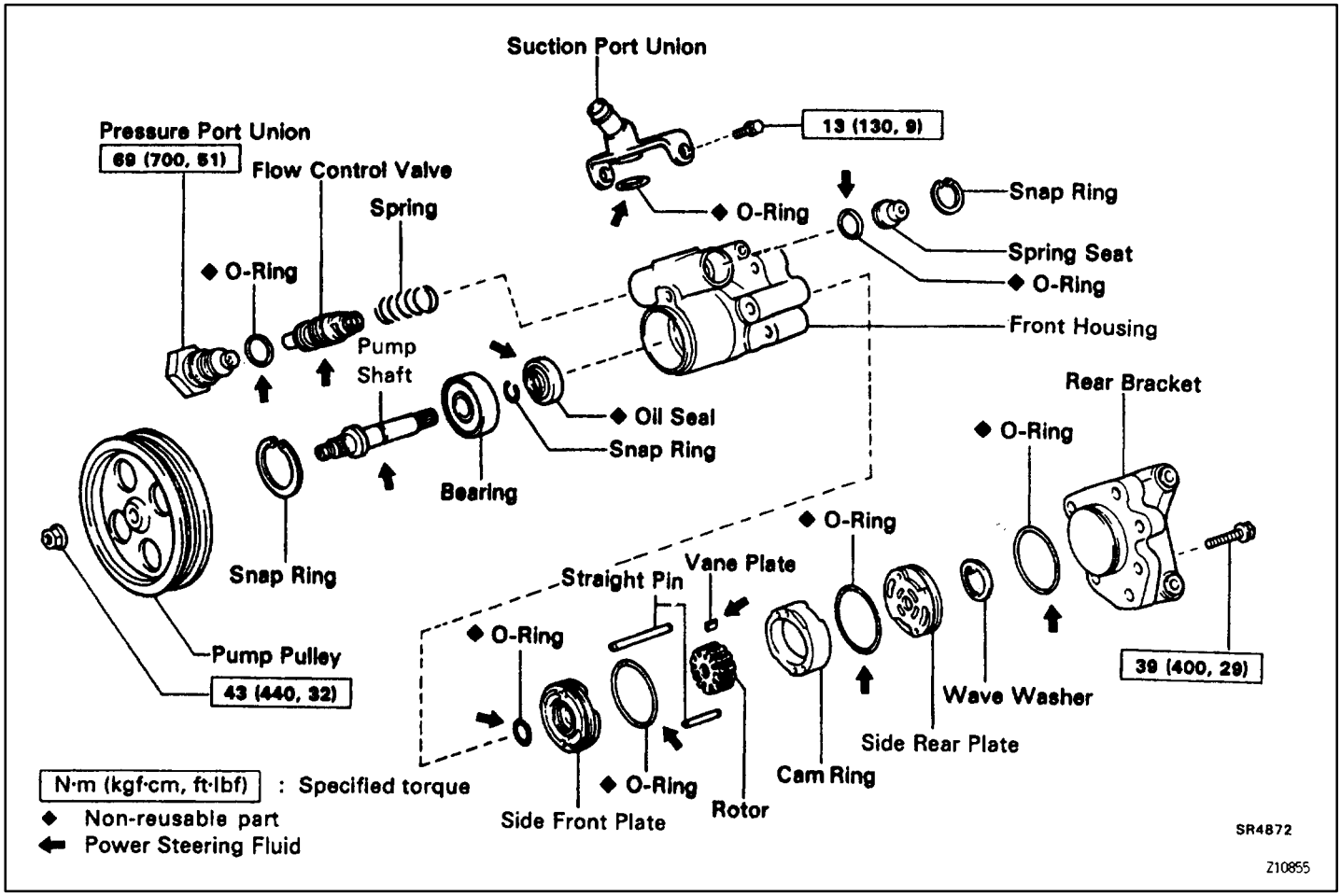

SECTIONAL VIEW

SR0G6–01

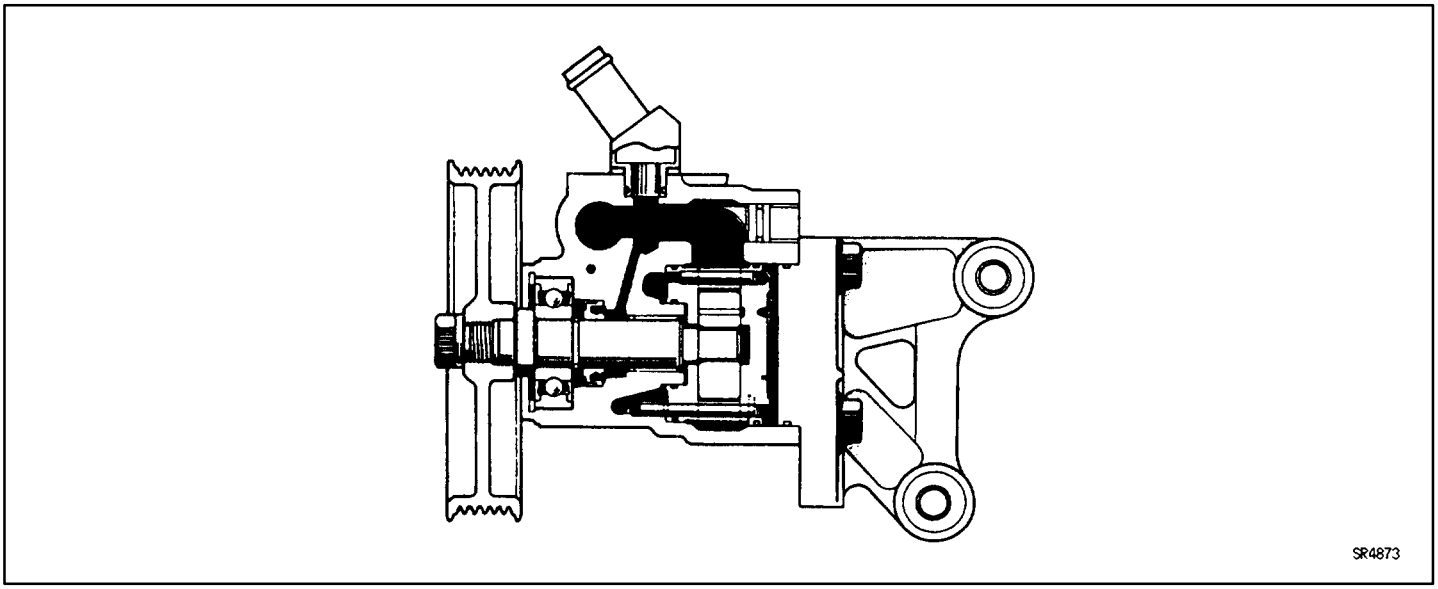

WhereEverybodyKnowsYourName

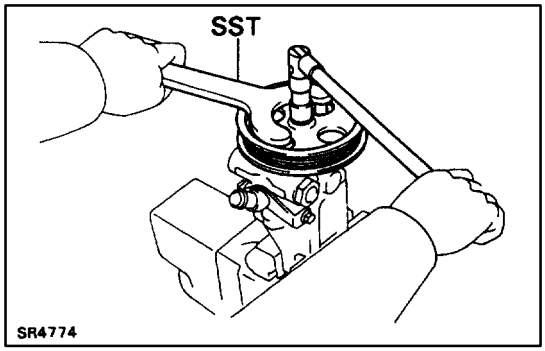

POWER STEERING PUMP DISASSEMBLY

SR0G7–02

1. MOUNT POWER STEERING PUMP IN VISE

NOTICE: Do not tighten the vise too tight.

2. REMOVE PUMP PULLEY

(a) Using SST, remove the pulley set nut.
SST 09278–54012

(b) Remove the pulley.

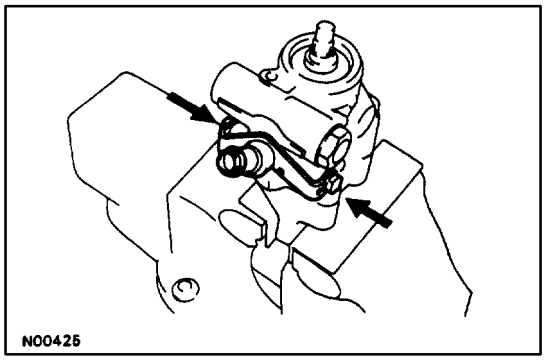

3. REMOVE SUCTION PORT UNION

(a) Remove the 2 bolts and union.

(b) Remove the O–ring from the union.

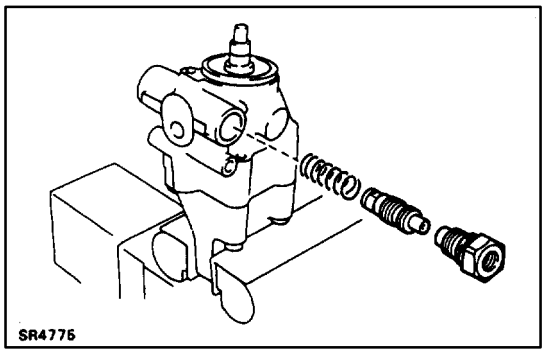

4. REMOVE PRESSURE PORT UNION, FLOW CONTROL VALVE AND SPRING

(a) Remove the pressure port union.

(b) Remove the O–ring from the union.

(c) Remove the flow control valve and spring.

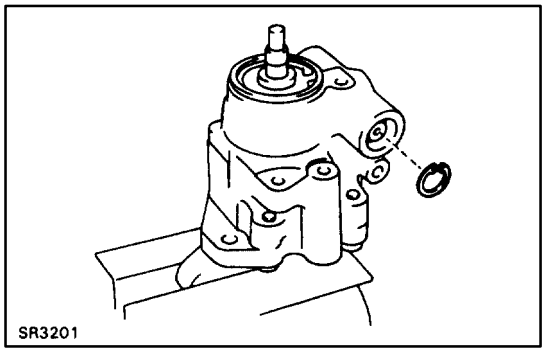

5. REMOVE SPRING SEAT

(a) Using snap ring pliers, remove the snap ring.
HINT: The snap ring is easier to remove if the spring seat is pressed down slightly.

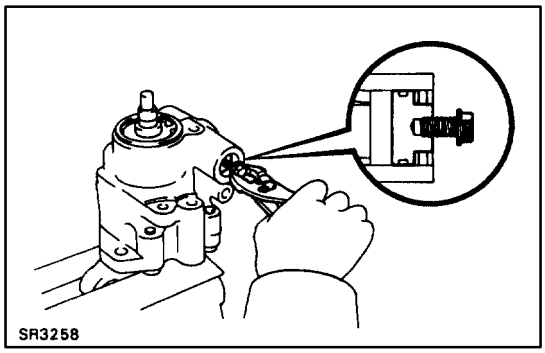

(b) Temporarily install a bolt to the seat and pull out it.
HINT: Use a bolt with diameter 6 mm (0.24 in.) and pitch 1.0 mm (0.039 in.).

(c) Remove the O–ring from the seat.

WhereEverybodyKnowsYourName

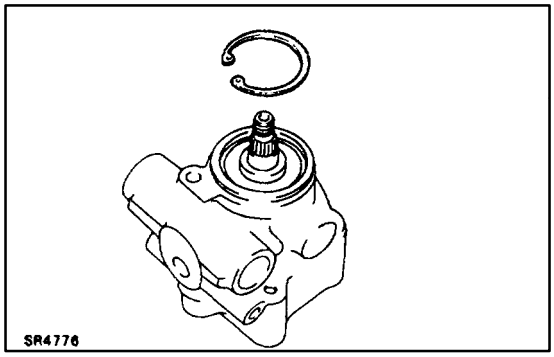

6. REMOVE VANE PUMP SHAFT WITH BEARING

(a) Using snap ring pliers, remove the snap ring.

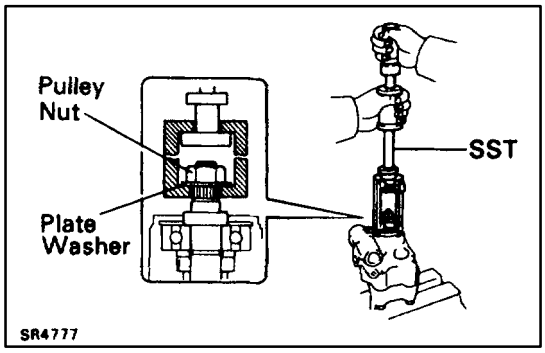

(b) Temporarily install the appropriate plate washer and pulley nut to the pump shaft.

(c) Using SST, pull out the pump shaft.
SST 09910–00015 (09911–00011, 09912–00010)

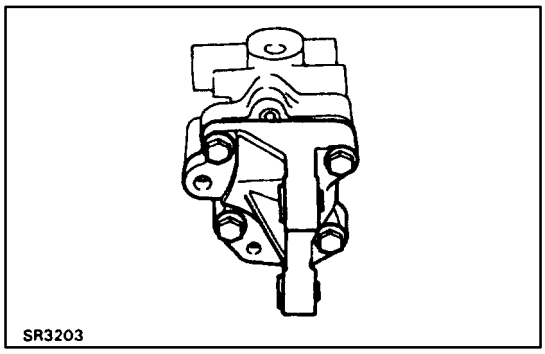

7. REMOVE REAR BRACKET

(a) Remove the 4 bolts and rear bracket.

(b) Remove the O–ring from the bracket.

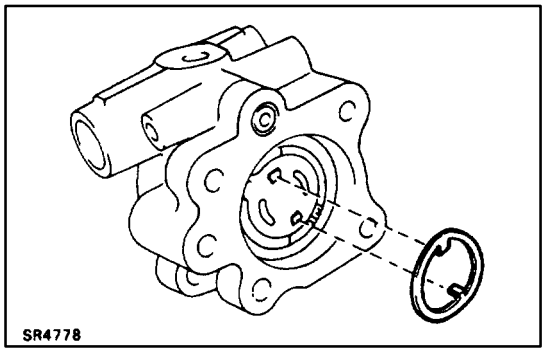

8. REMOVE WAVE WASHER

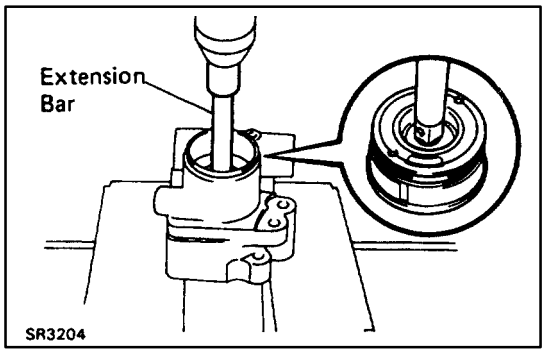

9. REMOVE SIDE FRONT PLATE, CAM RING, ROTOR, VANE PLATES AND SIDE REAR PLATE

(a) Using an extension bar and press, remove the side front plate, cam ring, rotor, vane plates and side rear plate as an assembly.
HINT: Catch the assembly in your hand to prevent it dropping.

WhereEverybodyKnowsYourName

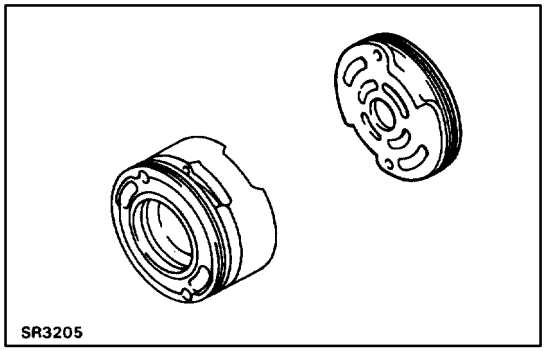

(b) Remove the side rear plate.
(c) Remove the O–ring from side rear plate.

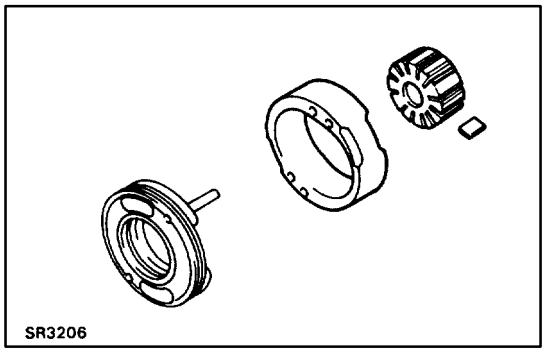

(d) Remove the cam ring, rotor and the 10 vane plates.

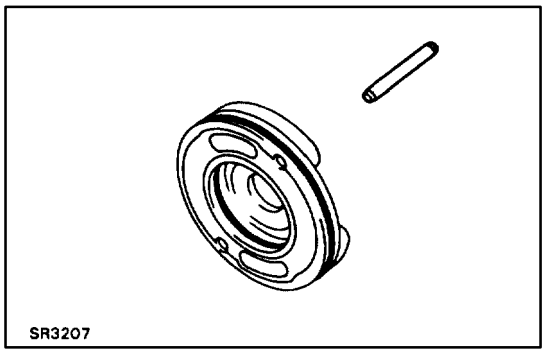

(e) Remove the straight pin from the side front plate.
(f) Remove the 2 O–rings from the side front plate.

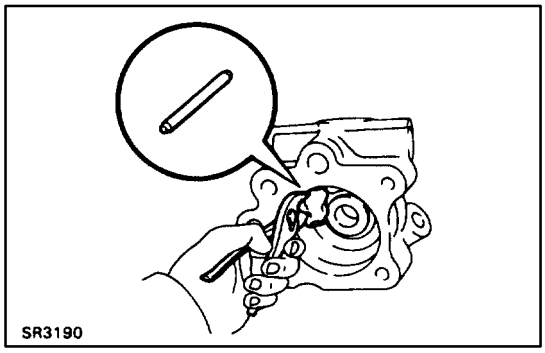

(g) Remove the straight pin from the front housing.
HINT: Place a workshop rag over the pin to prevent damaging it.

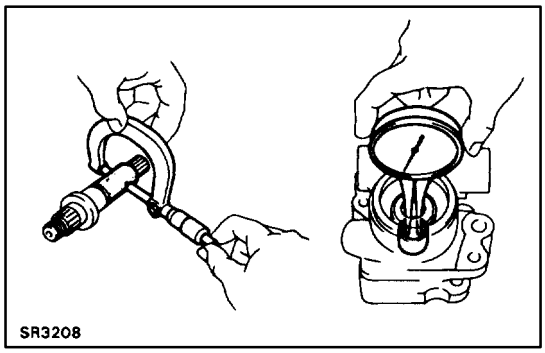

POWER STEERING PUMP INSPECTION

SR0G8–02

1. MEASURE OIL CLEARANCE OF SHAFT AND BUSHING

Using a micrometer and calipers, measure the oil clearance.

Standard clearance:

0.01–0.03 mm (0.0004–0.00012 in.)

WhereEverybodyKnowsYourName

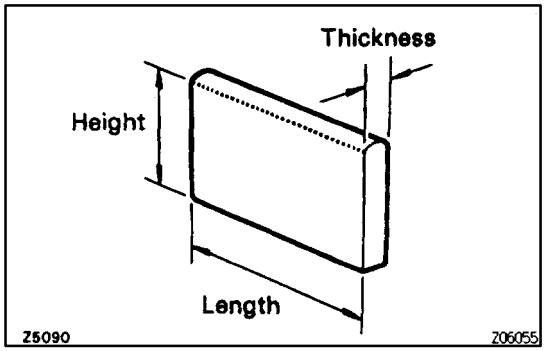

Maximum clearance:

0.07 mm (0.0028 in.)

If more than maximum, replace the entire power steering pump.

2. INSPECT ROTOR AND VANE PLATES

(a) Using a micrometer, measure the height, thickness and length of the vane plates.

Minimum height:

8.0 mm (0.315 in.)

Minimum thickness:

1.77 mm (0.0697 in.)

Minimum length:

14.97 mm (0.5894 in.)

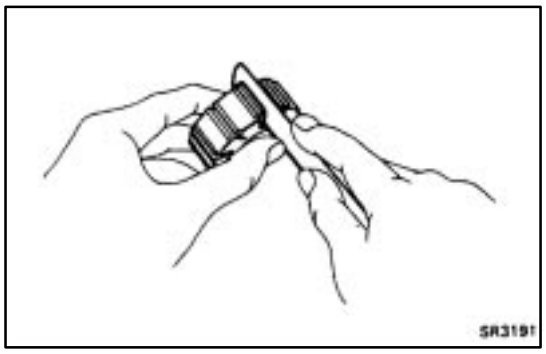

(b) Using a feeler gauge, measure the clearance between the rotor groove and vane plate.

Maximum clearance:

0.03 mm (0.0012 in.)

If more then maximum, replace the vane plate and/or rotor with one having the same mark stamped on the cam ring.

Inscribed mark:

1, 2, 3, 4 or None

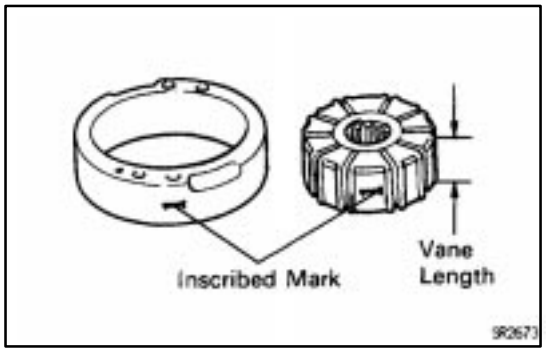

HINT: There are 5 vane lengths with the following rotor and cam ring marks:

Rotor and cam ring number	Vane length mm (in.)
None	14.996–14.998 (0.59039–0.59047)
1	14.994–14.996 (0.59031–0.59039)
2	14.992–14.994 (0.59023–0.59031)
3	14.990–14.992 (0.59016–0.59024)
4	14.988–14.990 (0.59007–0.59016)

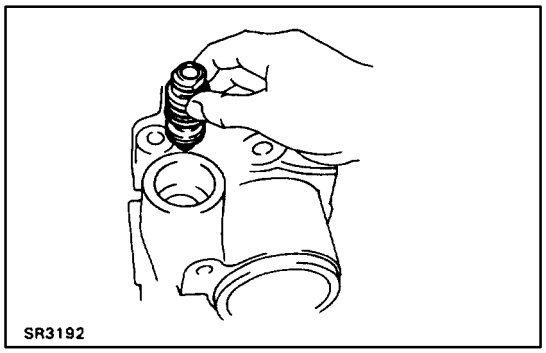

3. INSPECT FLOW CONTROL VALVE

(a) Coat the valve with power steering fluid and check that it falls smoothly into the valve hole by its own weight.

WhereEverybodyKnowsYourName

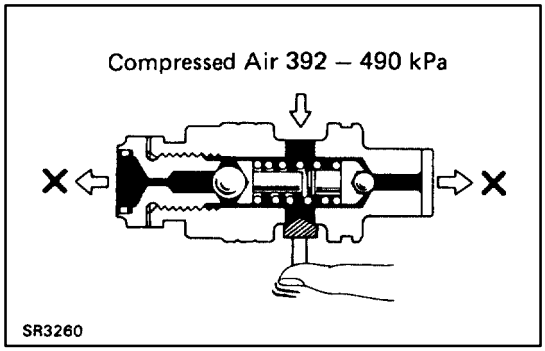

(b) Check the flow control valve for leakage.
Close one of the holes and apply compressed air 392 –490 kPa (4–5 kgf/ cm^2, 57–71 psi) into the opposite side, and confirm that air does not come out from the end holes.

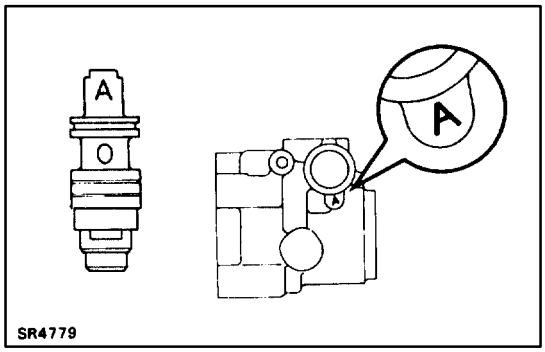

If necessary, replace the valve with one having the same letter as inscribed on the front housing.
Inscribed mark:
A, B, C, D, E or F

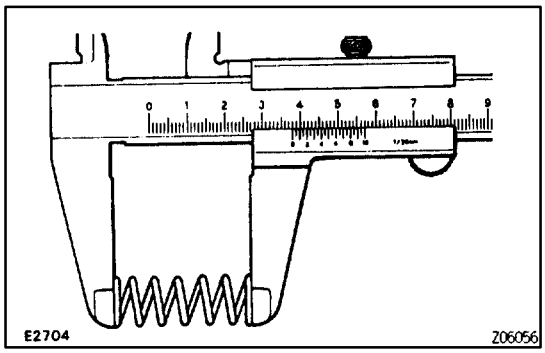

4. INSPECT FLOW CONTROL SPRING
Using a calipers, measure the free length of the spring.
Minimum spring length:
36 mm (1.42 in.)
If not within specification, replace the spring.

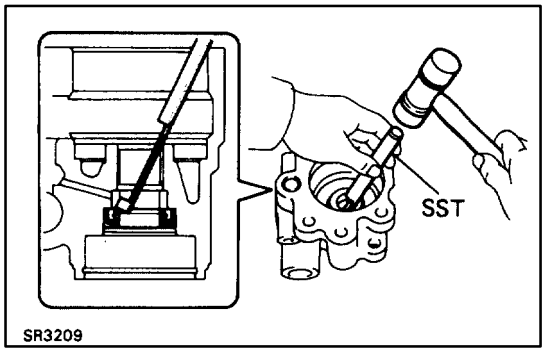

5. IF NECESSARY, REPLACE OIL SEAL
(a) Using SST, tap out the oil seal.
SST 09631–10030

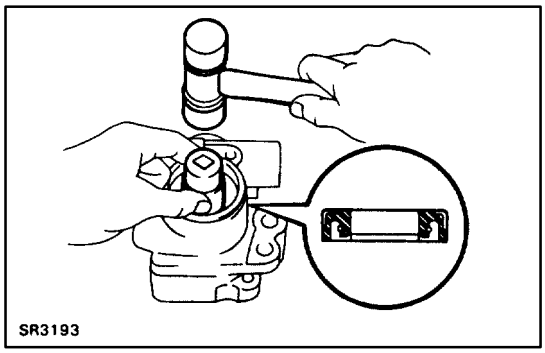

(b) Using a 22 mm socket wrench and hammer, drive in a new oil seal.
NOTICE: Make sure you install the oil seal facing the correct direction.
(c) Coat the oil seal lip with power steering fluid.

WhereEverybodyKnowsYourName

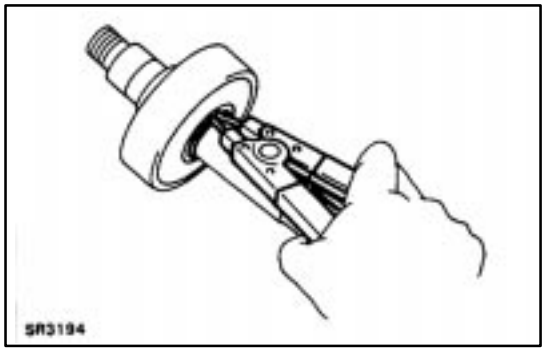

6. IF NECESSARY, REPLACE BEARING

(a) Using snap ring pliers, remove the snap ring.

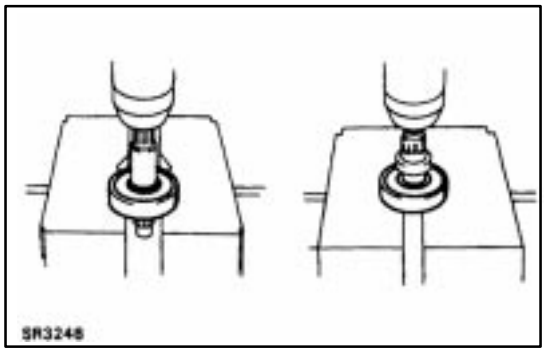

(b) Using a press, press out the bearing.

(c) Using a press, press in a new bearing.

(d) Using snap ring pliers, install a new snap ring.

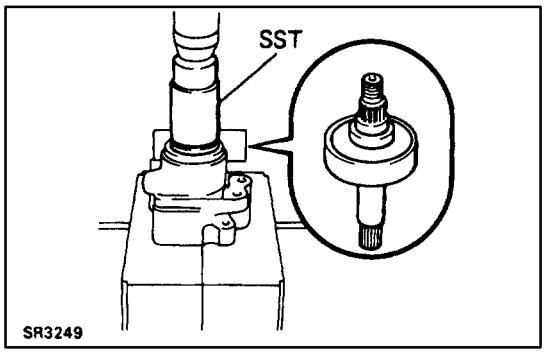

POWER STEERING PUMP ASSEMBLY

SR0G9–02

1. COAT WITH POWER STEERING FLUID BEFORE ASSEMBLY

(See page SR–120**)**

2. INSTALL VANE PUMP SHAFT WITH BEARING

(a) Using SST and a press, press in the pump shaft.
SST 09238–47012

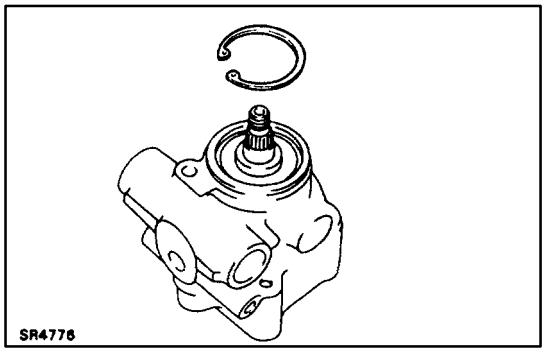

(b) Using snap ring pliers, install a new snap ring.

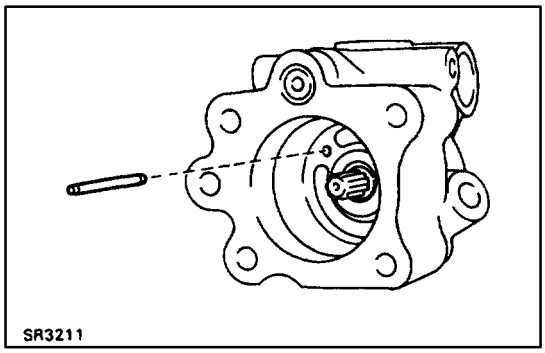

3. INSTALL SIDE FRONT PLATE, CAM RING, ROTOR, VANE PLATES AND SIDE REAR PLATE

(a) Install the longer straight pin to the front housing.

WhereEverybodyKnowsYourName

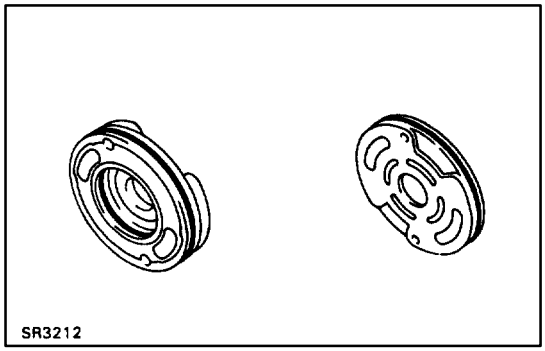

(b) Coat new 2 O–rings with power steering fluid and install them to the side front plate.

(c) Coat a new O–rings with power steering fluid and install it to the side rear plate.

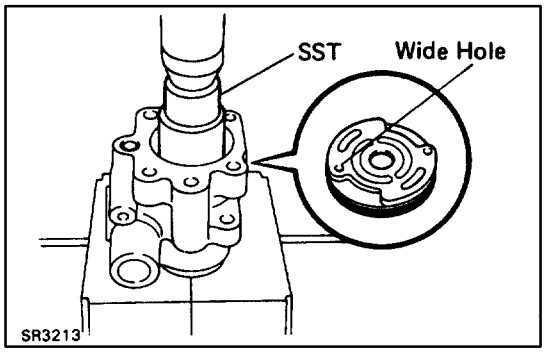

(d) Using SST and a press, press in the side front plate.
SST 09238–47012
HINT: Match the wide hole on the side front plate with the longer straight pin.
NOTICE: Be careful not to damage the O–rings.

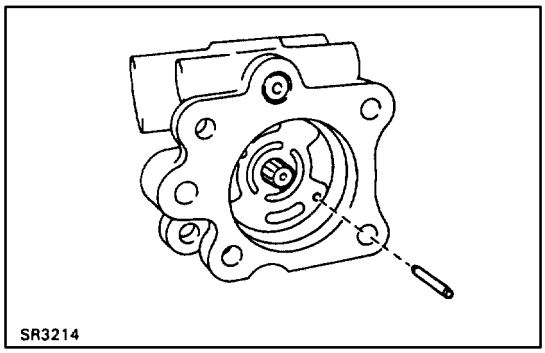

(e) Install the shorter straight pin to the side front plate.

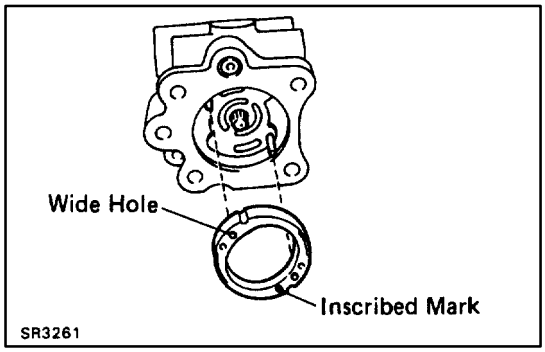

(f) Match the wide hole of the cam ring with the longer straight pin, and install the cam ring.
HINT: Install the cam ring with the inscribed mark facing the rear.

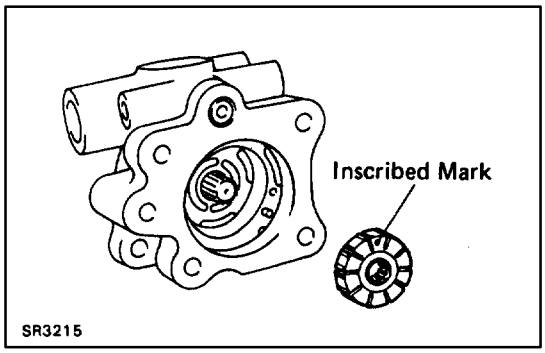

(g) Install the rotor to the shaft with the inscribed mark facing the rear.

WhereEverybodyKnowsYourName

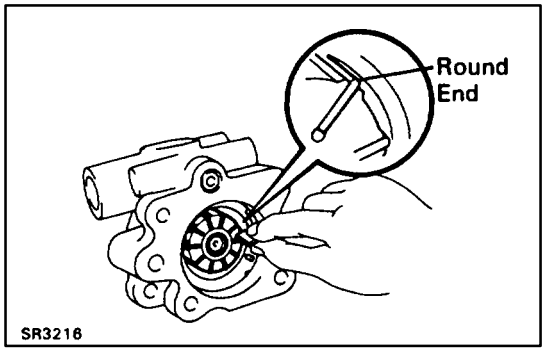

(h) Coat the 10 vane plates with power steering fluid.
(i) Install the 10 vane plates with the round end facing outward.

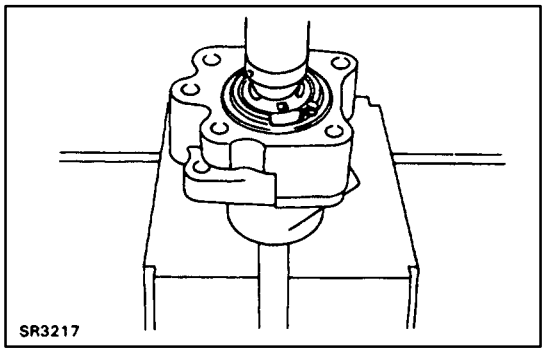

(j) Match the wide hole with the longer straight pin and press in the side rear plate with a press.
NOTICE: Be careful not to damage the O–ring.

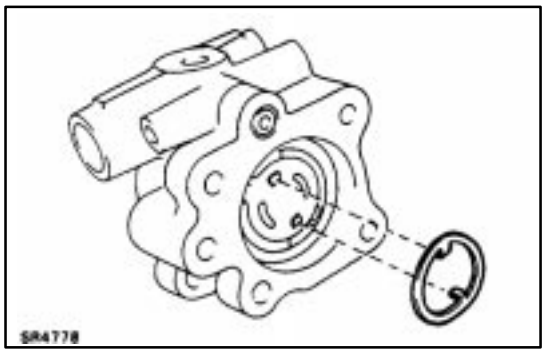

4. INSTALL WAVE WASHER
Install the wave washer so that its protrusions fit into the slots in the side rear plate.

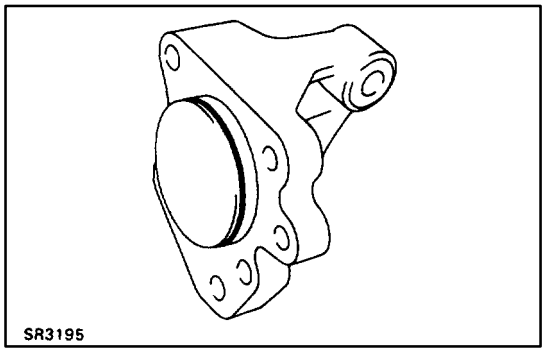

5. INSTALL REAR BRACKET
(a) Coat a new O–ring with power steering fluid and install it to the rear bracket.

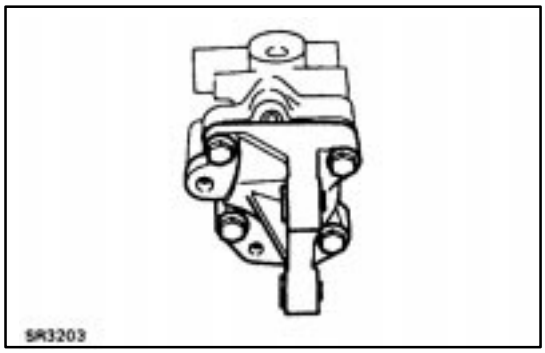

(b) Install the rear bracket and tighten the 4 bolts.
Torque: 39 N·m (400 kgf·cm, 29 ft·lbf)

WhereEverybodyKnowsYourName

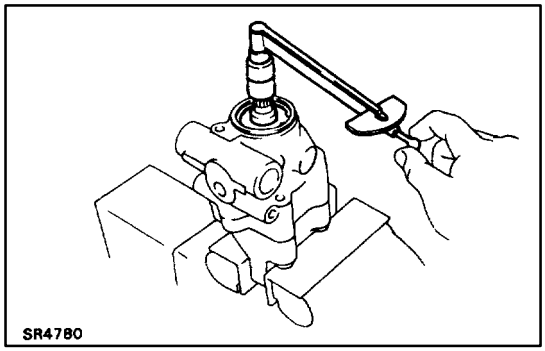

6. MEASURE PUMP SHAFT PRELOAD

(a) Check that the shaft rotates smoothly without abnormal noise.

(b) Temporarily install the pulley nut and check the rotating torque.

Rotating torque:

0.1 N·m (1.0 kgf·cm, 0.9 in.·lbf) or less

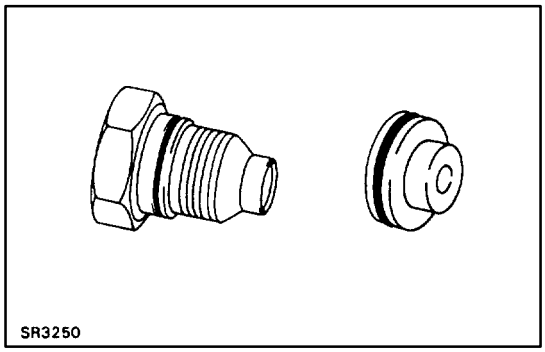

7. INSTALL FLOW CONTROL VALVE, SPRING, SPRING SEAT AND PRESSURE PORT UNION

(a) Coat new O–rings with power steering fluid and install them to the spring seat and pressure port union.
HINT: Install a thick O–ring to the spring seat and a thin O–ring to the pressure port union.

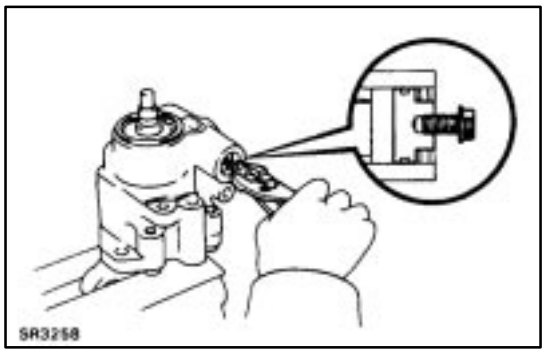

(b) Install the spring seat with the bolt hole facing out–ward.

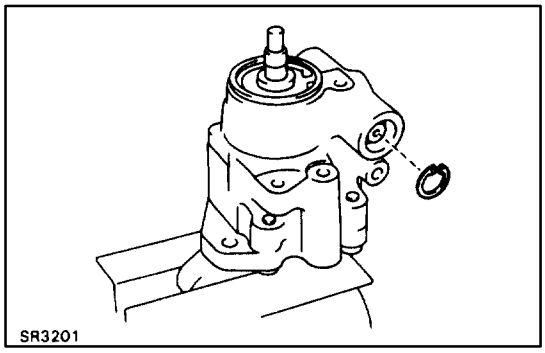

(c) Using snap ring pliers, install a new snap ring.

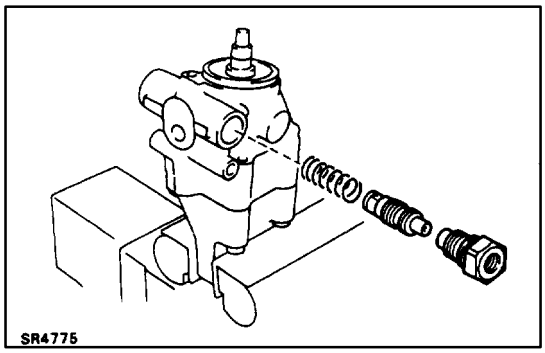

(d) Install spring and valve to the front housing.

(e) Install and torque the pressure port union.

Torque: 69 N·m (700 kgf·cm, 51 ft·lbf)

WhereEverybodyKnowsYourName

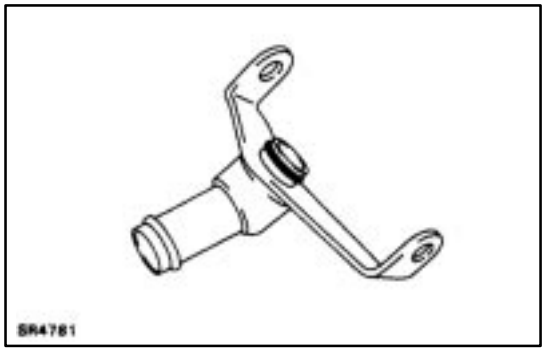

8. INSTALL SUCTION PORT UNION

(a) Coat a new O–ring with power steering fluid and install it to the suction port union.

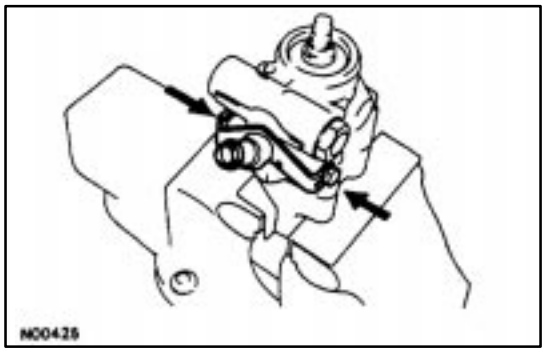

(b) Install the suction port union with the 2 bolts.
Torque: 13 N·m (130 kgf·cm, 9 ft·lbf)

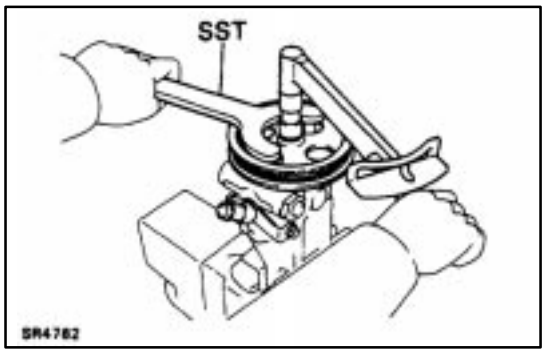

9. INSTALL PUMP PULLEY

(a) Install the pulley and nut to the shaft.

(b) Using SST, torque the set nut.
SST 09278–54012
Torque: 43 N·m (440 kgf·cm, 32 ft·lbf)

WhereEverybodyKnowsYourName

GEAR HOUSING (SC400)

GEAR HOUSING REMOVAL AND INSTALLATION

SR0GG–03

Remove and install the parts, as shown.

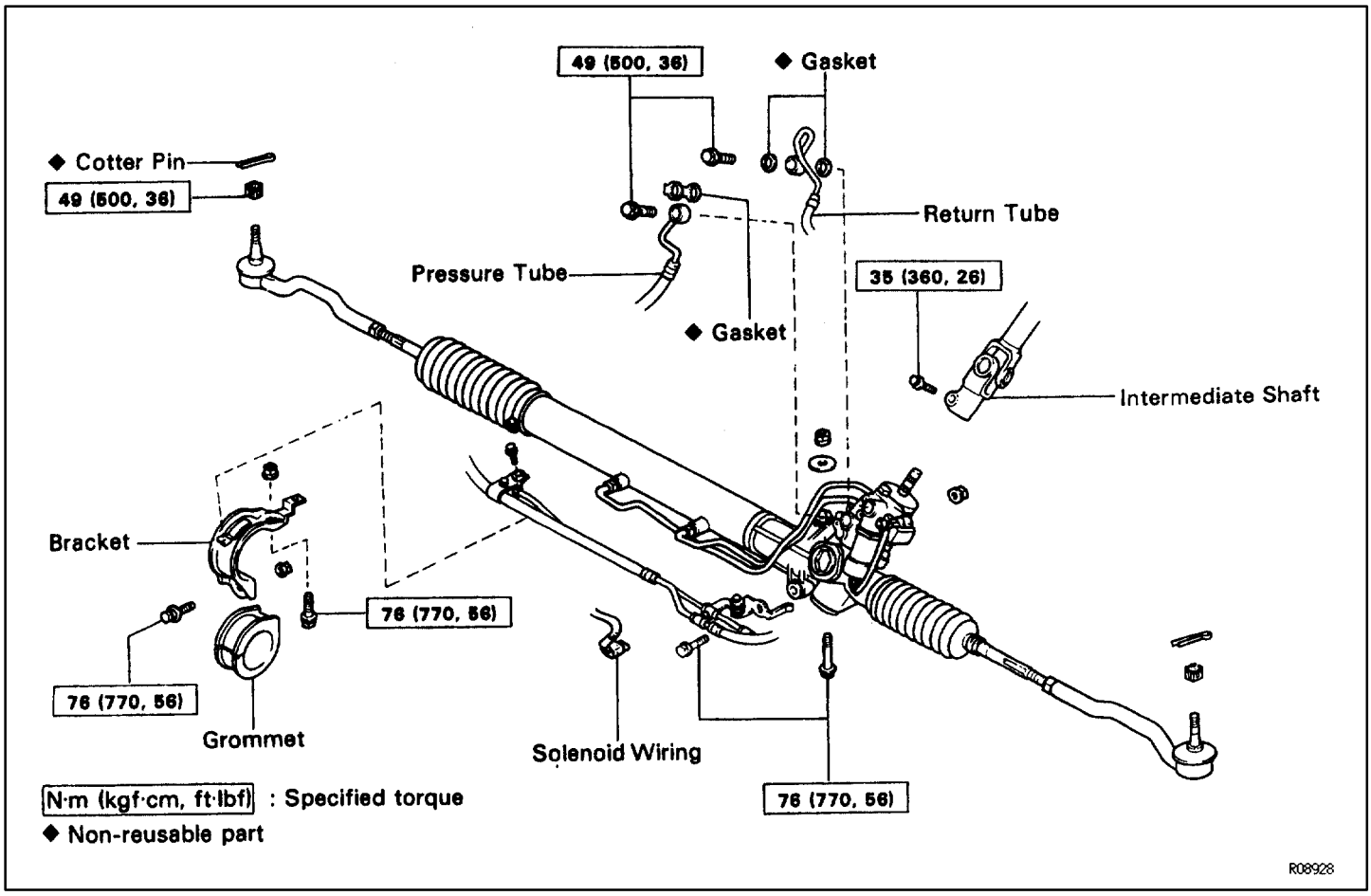

MAIN POINTS OF REMOVAL AND INSTALLATION

NOTICE: When disconnecting the intermediate shaft during removal of the gear housing, remove the steering wheel and perform centering of the spiral cable.
(See page SR–11)
If the operation is performed without removing the steering wheel, use the procedure below to make sure the steering wheel is firmly fixed in position and cannot turn.

WhereEverybodyKnowsYourName

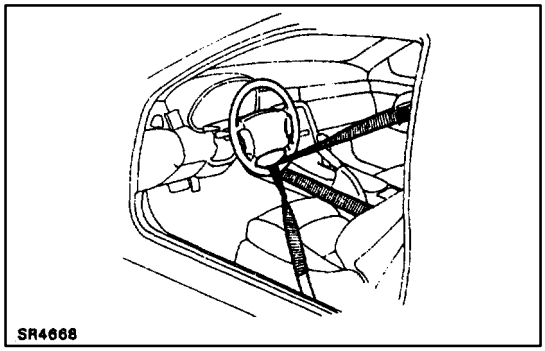

1. DISCONNECT INTERMEDIATE SHAFT

(a) Position the front wheels facing straight ahead.

(b) Using the seat belt of the driver's seat, fix the steering wheel so that it does not turn.

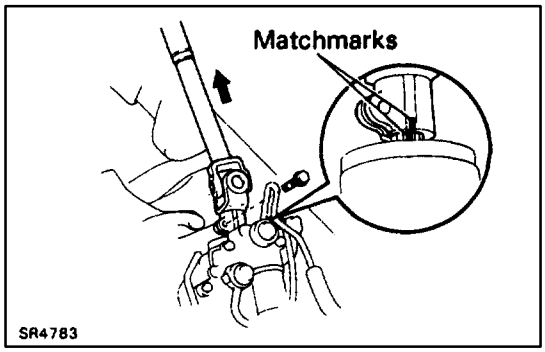

(c) Place matchmarks on the intermediate shaft and control valve shaft.

(d) Loosen the bolt on the upper side of the intermediate shaft, remove the bolt on the lower side and disconnect the intermediate shaft.

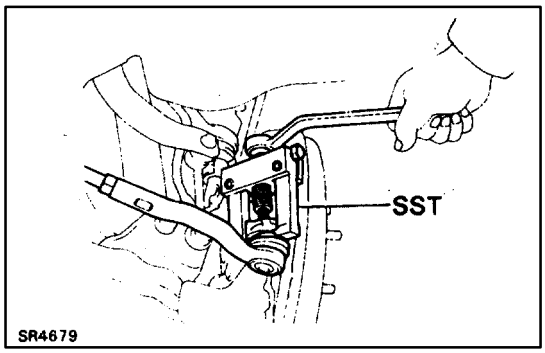

2. DISCONNECT TIE ROD ENDS

(a) Remove the cotter pin and nut.

(b) Using SST, disconnect the tie rod end from the knuckle arm.
SST 09628–62011

3. CONNECT INTERMEDIATE SHAFT

(a) Set the gear housing so that it matches the dimensions shown below, with the gear housing at the center point.

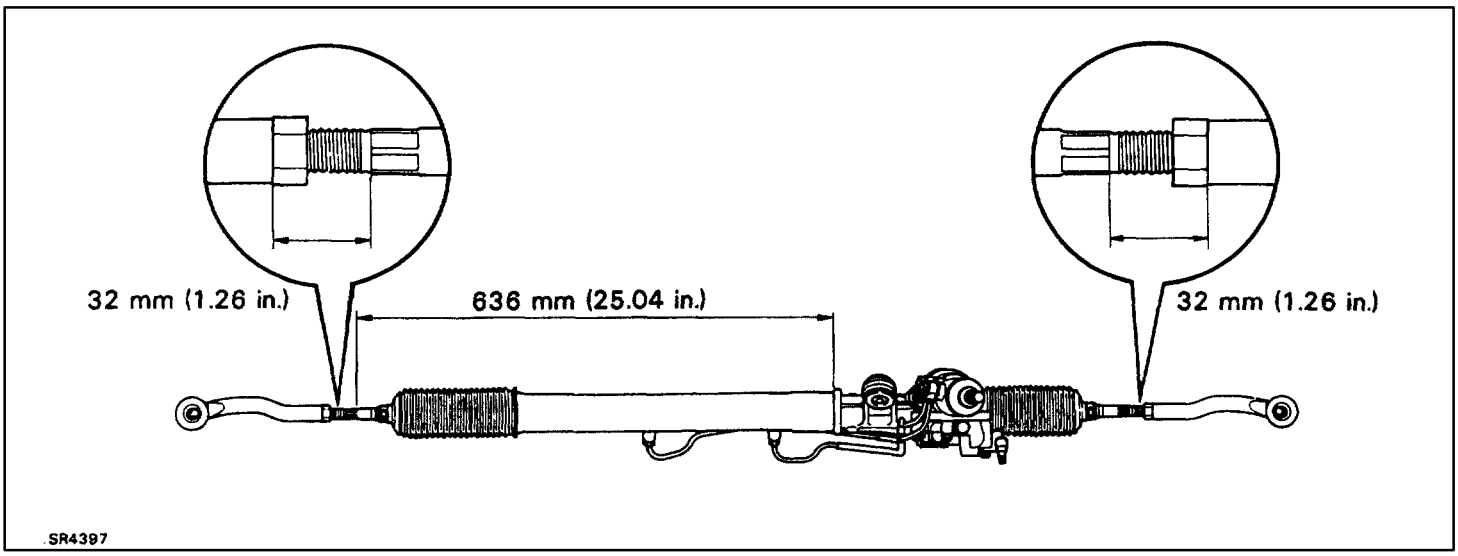

WhereEverybodyKnowsYourName

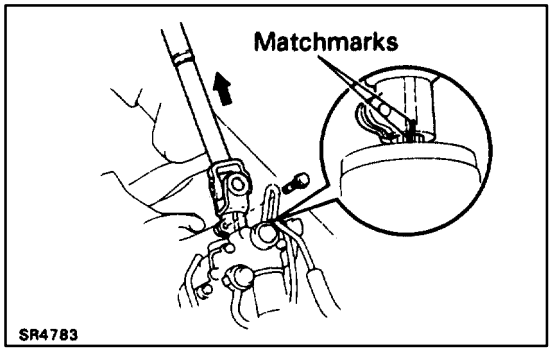

(b) Align matchmarks on the intermediate shaft and control valve shaft and connect them.
Torque: 35 N·m (360 kgf·cm, 36 ft·lbf)

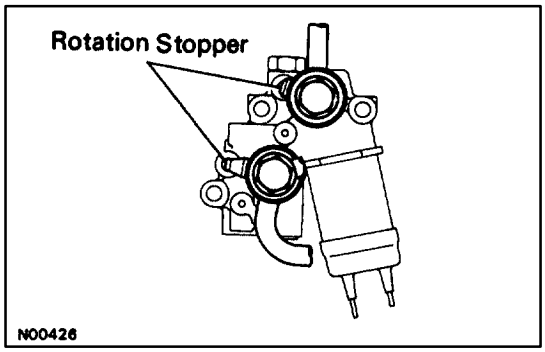

4. CONNECT PRESSURE AND RETURN TUBES
After inserting the rotation stopper in the valve housing holes, tighten the union bolts.
Torque: 49 N·m (500 kgf·cm, 36 ft·lbf)

5. CENTER SPIRAL CABLE
If the steering wheel has been removed, or the steering wheel may have moved during the operation, always perform centering of the spiral cable.
(See page SR–11)

6. CHECK STEERING WHEEL CENTER POINT

7. BLEED POWER STEERING SYSTEM
(See page SR–115)

8. CHECK TOE–IN
(See page SA–5)

WhereEverybodyKnowsYourName

(SC300)
GEAR HOUSING REMOVAL AND INSTALLATION

SR0GH–03

Remove and install the parts, as shown.

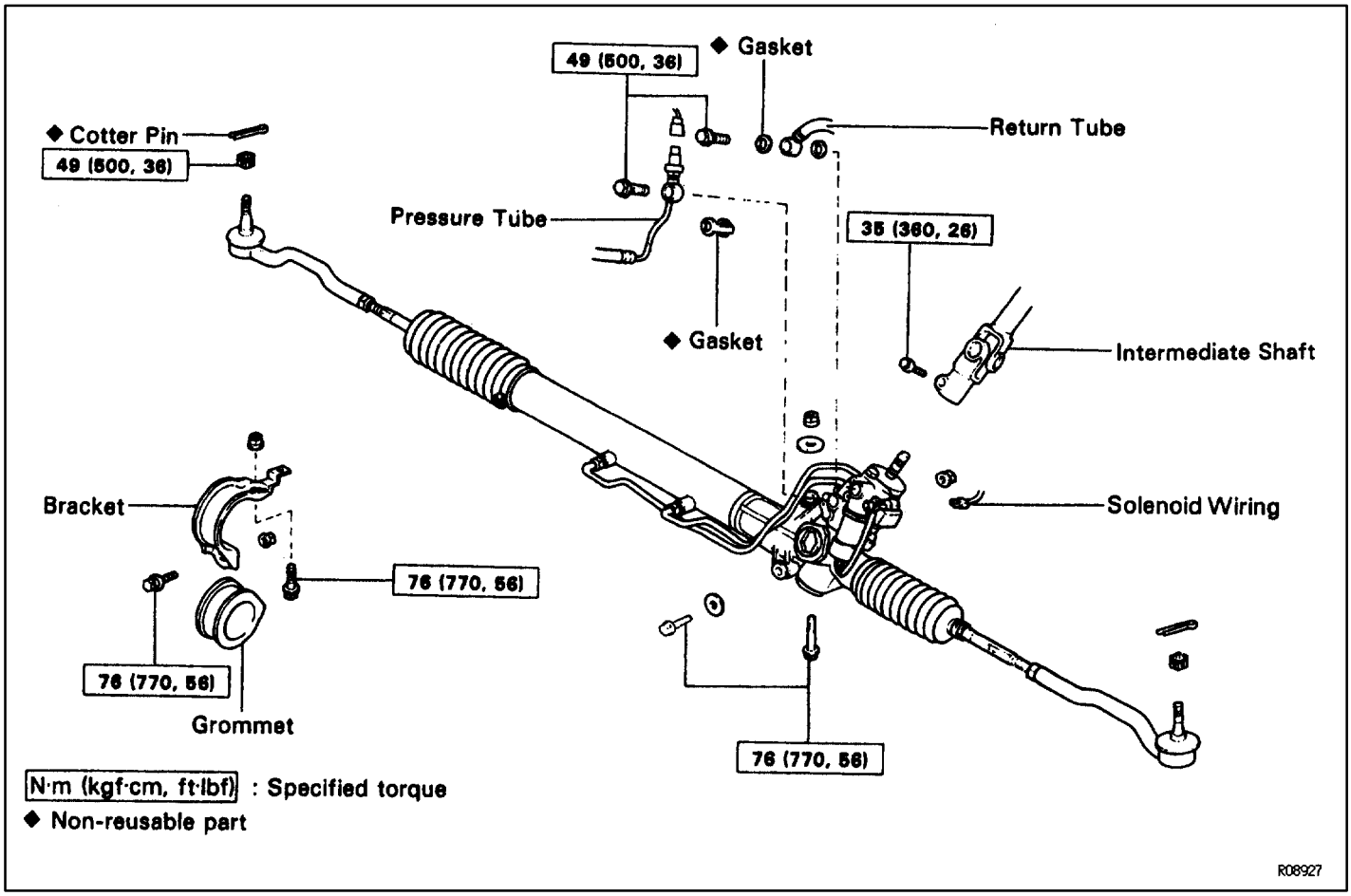

MAIN POINTS OF REMOVAL AND INSTALLATION

NOTICE: When disconnecting the intermediate shaft during removal of the gear housing, remove the steering wheel and perform centering of the spring cable.
(See page SR–11)
If the operation is performed without removing the steering wheel, use the procedure below to make sure the steering wheel is firmly fixed in position and cannot turn.

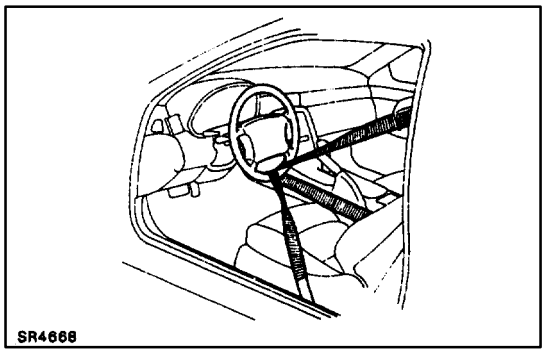

1. DISCONNECT INTERMEDIATE SHAFT

(a) Position the front wheels facing straight ahead.

(b) Using the seat belt of the driver's seat, fix the steering wheel so that it does not turn.

WhereEverybodyKnowsYourName

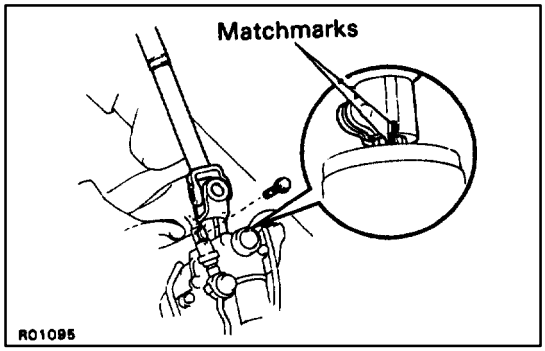

(c) Place matchmarks on the intermediate shaft and control valve shaft.

(d) Loosen the bolt on the upper side of the intermediate shaft, remove the bolt on the lower side and disconnect the intermediate shaft.

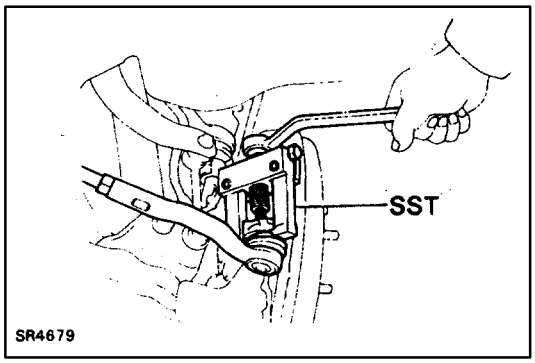

2. DISCONNECT TIE ROD ENDS

(a) Remove the cotter pin and nut.

(b) Using SST, disconnect the tie rod end from the knuckle arm.
SST 09628–62011

3. CONNECT INTERMEDIATE SHAFT

(a) Set the gear housing so that it matches the dimensions shown below, with the gear housing at the center point.

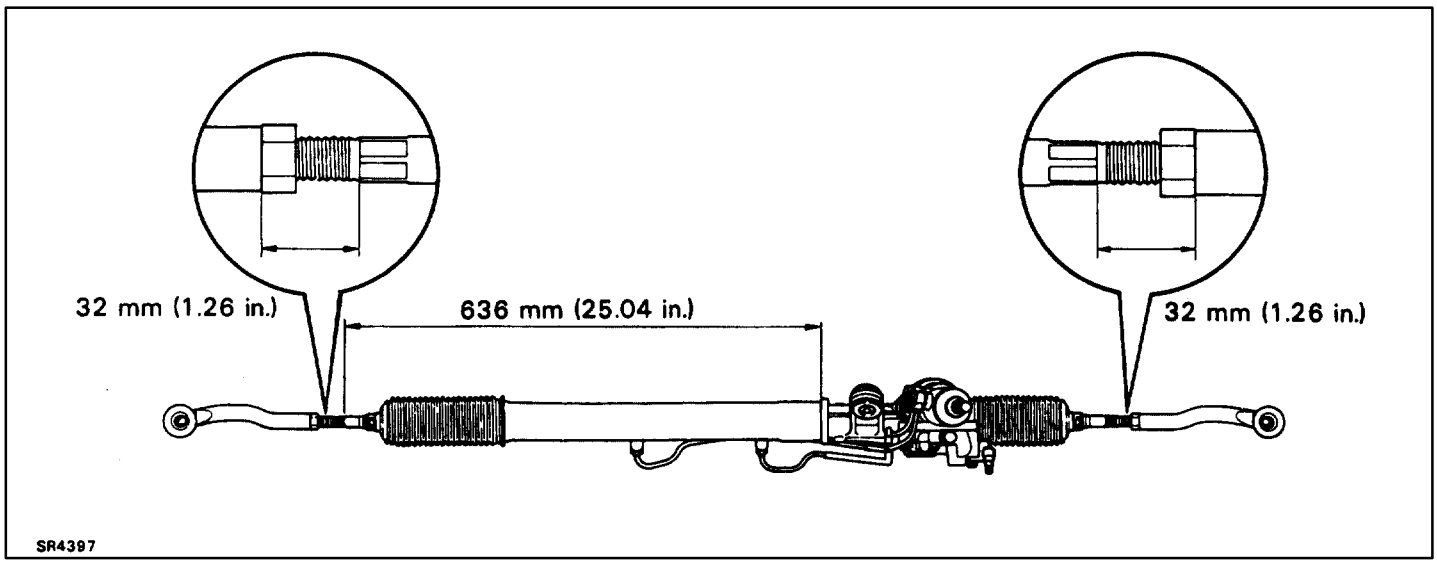

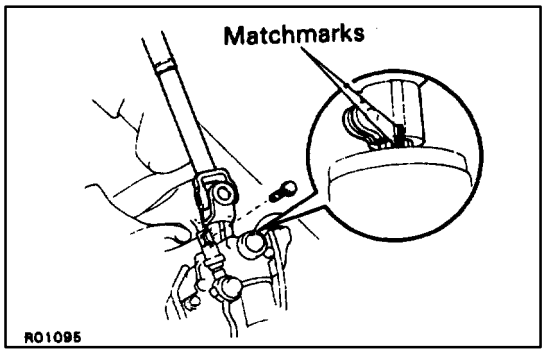

(b) Align matchmarks on the intermediate shaft and control valve shaft and connect them.
Torque: 35 N·m (360 kgf·cm, 26 ft·lbf)

WhereEverybodyKnowsYourName

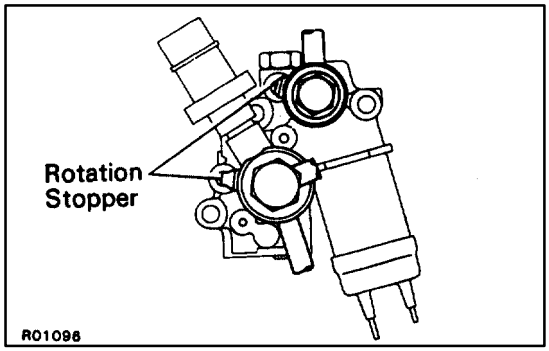

4. **CONNECT PRESSURE AND RETURN TUBES**
   After inserting the rotation stopper in the valve housing holes, tighten the union bolts.
   Torque: 46 N·m (500 kgf·cm, 36 ft·lbf)
5. **CENTER SPIRAL CABLE**
   If the steering wheel has been removed, or the steering wheel may have moved during the operation, always perform centering of the spiral cable.
   (See page SR–11)
6. **CHECK STEERING WHEEL CENTER POINT**
7. **BLEED POWER STEERING SYSTEM**
   (See page SR–115)
8. **CHECK TOE–IN**
   (See page SA–5)

WhereEverybodyKnowsYourName

COMPONENTS

SR0GJ–02

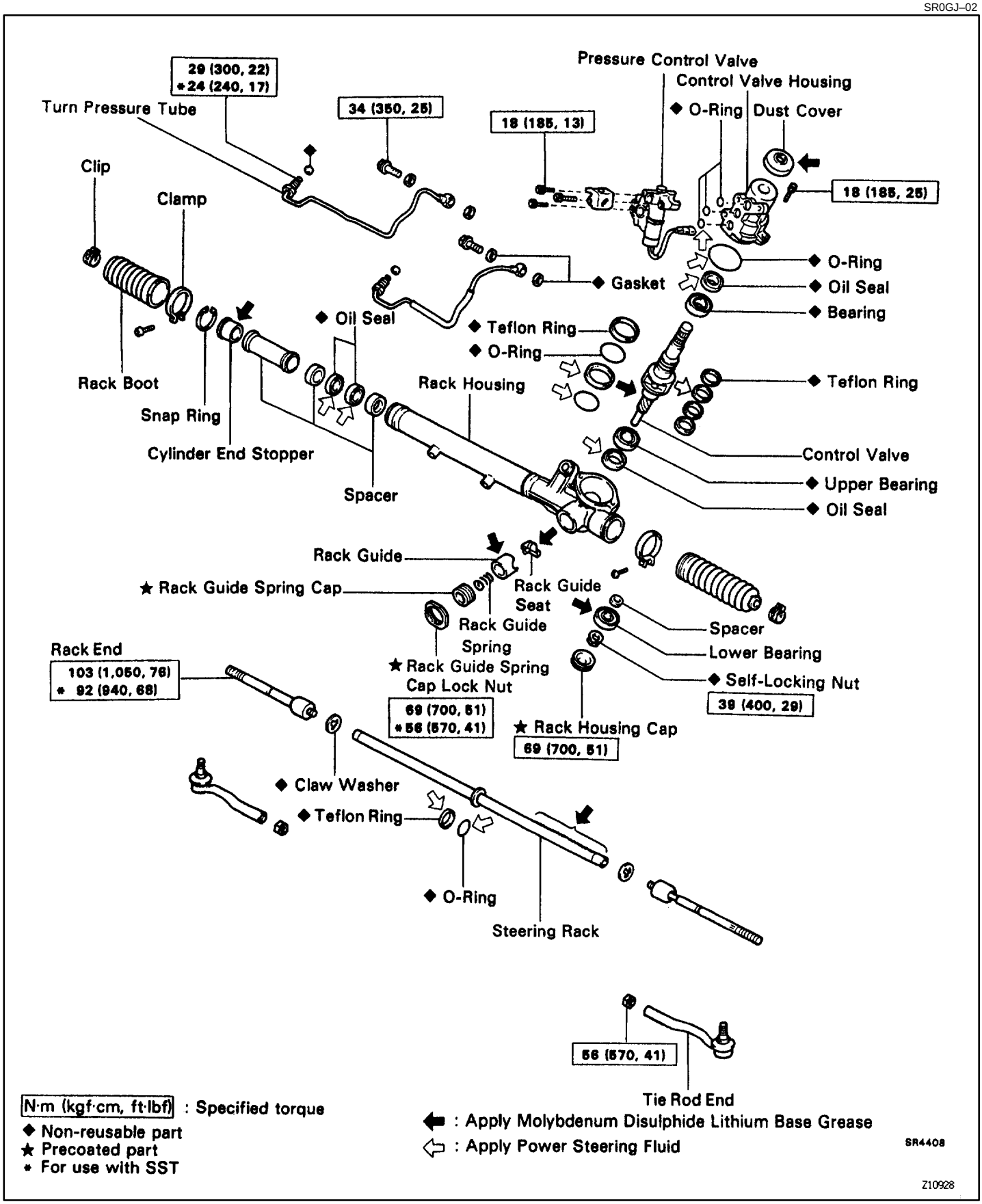

WhereEverybodyKnowsYourName

SECTIONAL VIEW

SR0GK–01

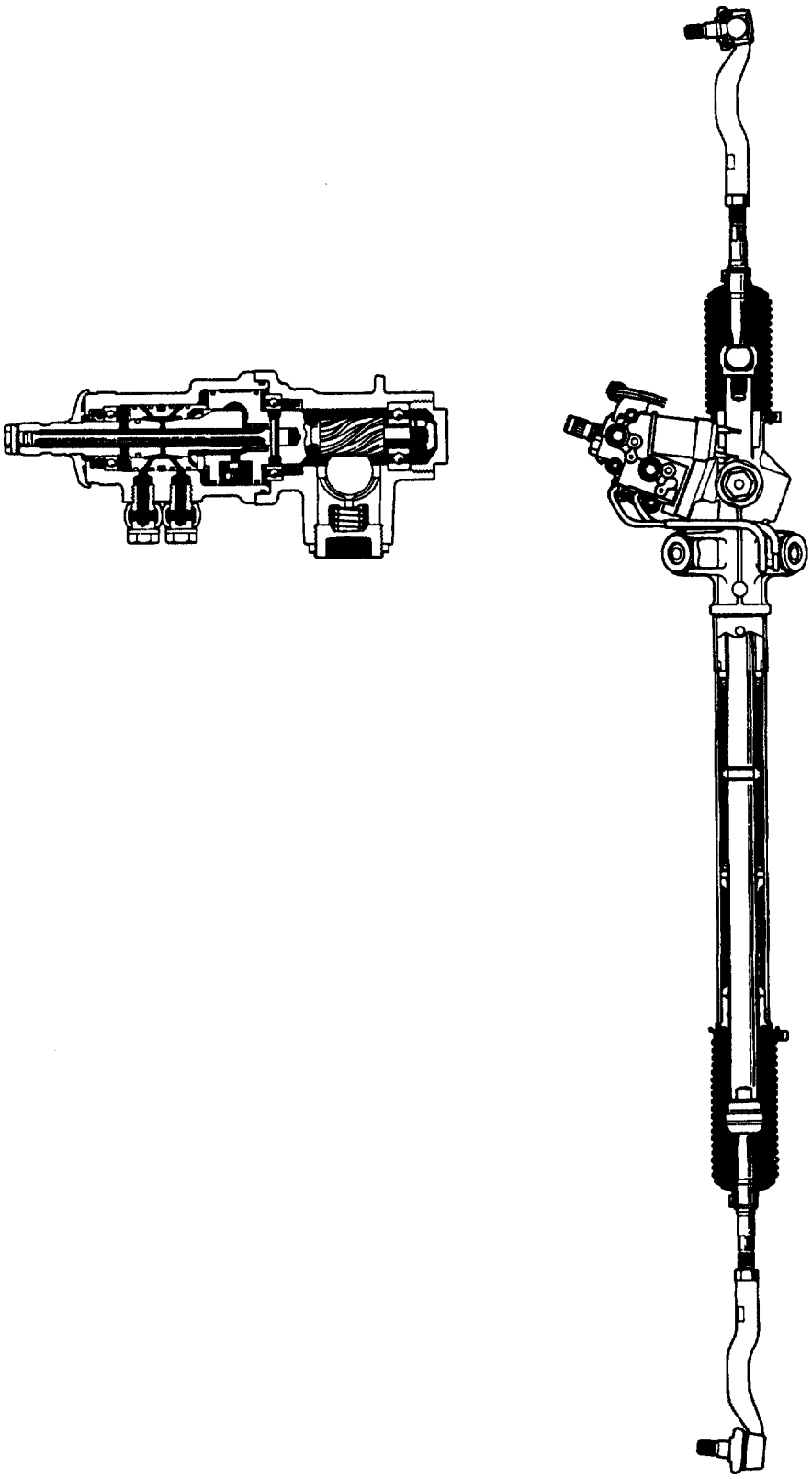

WhereEverybodyKnowsYourName

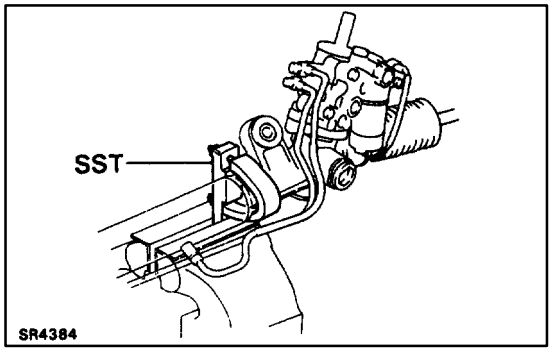

STEERING GEAR HOUSING DISASSEMBLY

SR0GL–02

1. CLAMP GEAR HOUSING IN VISE

Using SST, secure the steering gear in a vise.
SST 09612–00012

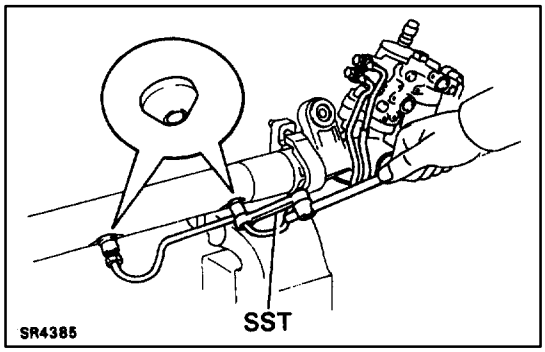

2. REMOVE RIGHT AND LEFT TURN PRESSURE TUBES

(a) Remove the union bolt and gaskets.
(b) Using SST, remove the pressure tube.
SST 09633–00020
(c) Remove the union seat.

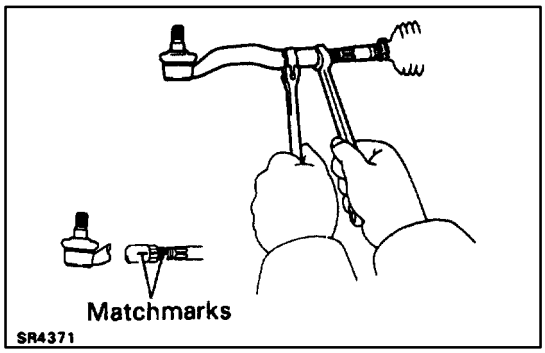

3. REMOVE TIE ROD ENDS

(a) Loosen the lock nut and place matchmarks on the tie rod end and rack end.
(b) Remove the tie rod end and rack guide spring cap lock nut.

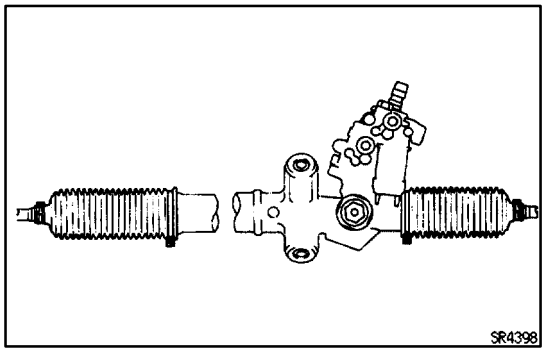

4. REMOVE RACK BOOTS, CLAMPS AND CLIPS

(a) Remove the clip and clamp.
(b) Remove the rack boot.
(c) Mark the left and right boot.

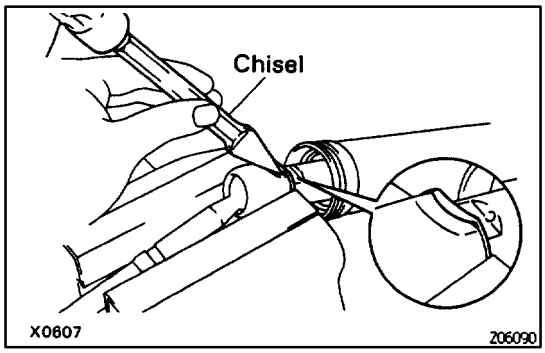

5. REMOVE RACK ENDS AND CLAW WASHERS

(a) Unstake the claw washer.
NOTICE: Avoid any impact to the rack.

WhereEverybodyKnowsYourName

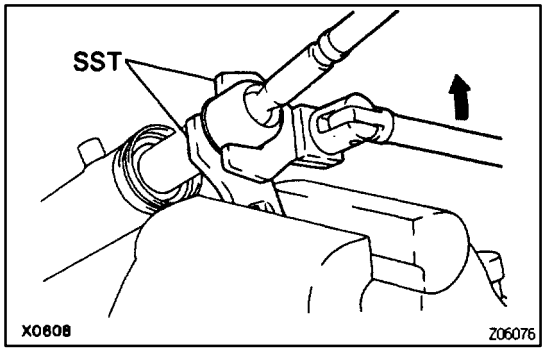

(b) Using SST, remove the rack end.
SST 09612–24014 (09617–24011)
09617–14010

(c) Remove the claw washer.

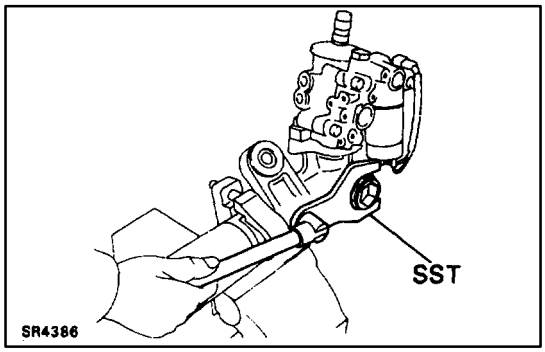

6. REMOVE RACK GUIDE SPRING LOCK NUT

Using SST, remove the rack guide spring cap lock nut.
SST 09612–24014 (09617–24020)

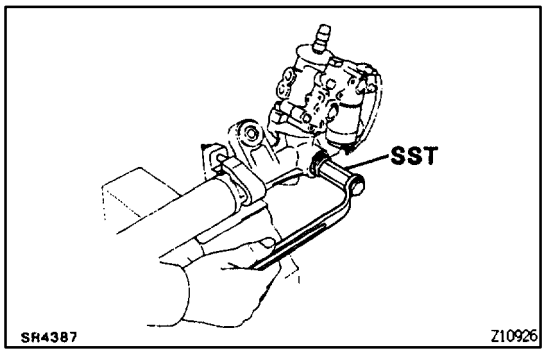

7. REMOVE RACK GUIDE SPRING CAP

Using SST, remove the rack guide spring cap.
SST 09612–24014 (09612–10022)

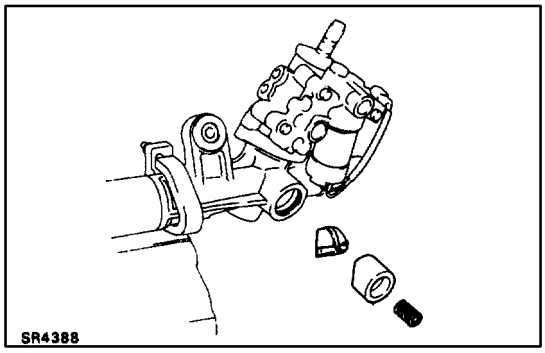

8. REMOVE RACK GUIDE SPRING, RACK GUIDE AND RACK GUIDE SEAT

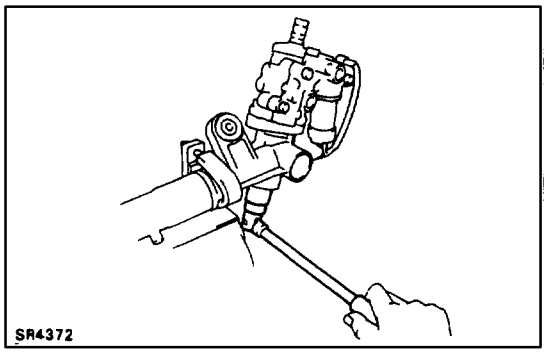

9. REMOVE RACK HOUSING CAP

WhereEverybodyKnowsYourName

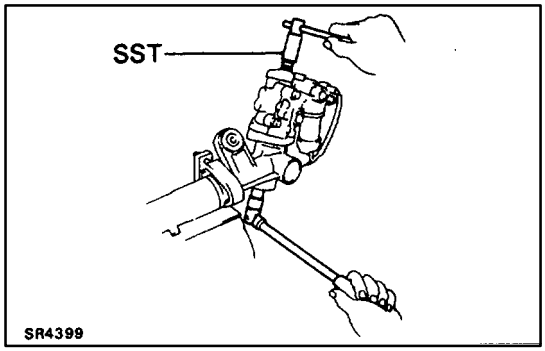

10. REMOVE SELF–LOCKING NUT

Using SST to hold the control valve shaft, remove the self–locking nut.

SST 09616–00010

11. REMOVE DUST COVER

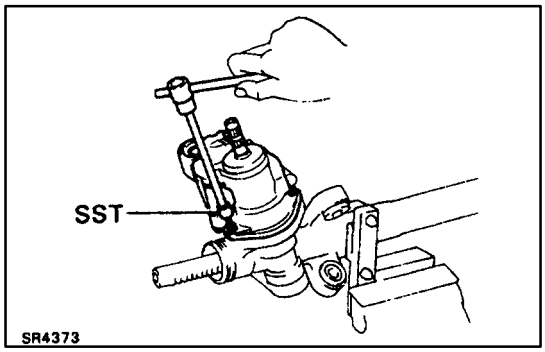

12. REMOVE CONTROL VALVE HOUSING

(a) Using a hexagon wrench, remove the 2 bolts.

(b) Pull out the valve with the valve housing.

(c) Remove the O–ring from the valve housing.

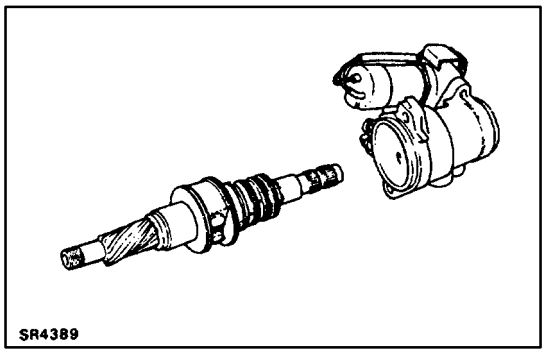

13. REMOVE CONTROL VALVE

Using a plastic hammer, tap out the control valve.

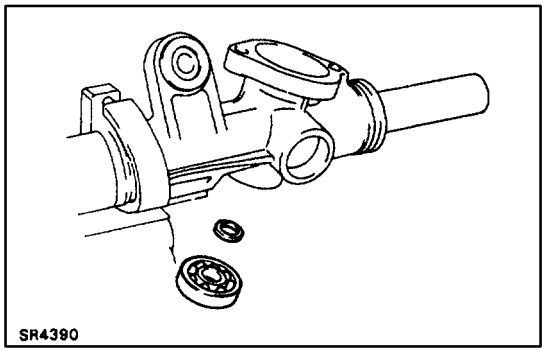

14. REMOVE LOWER BEARING AND SPACER

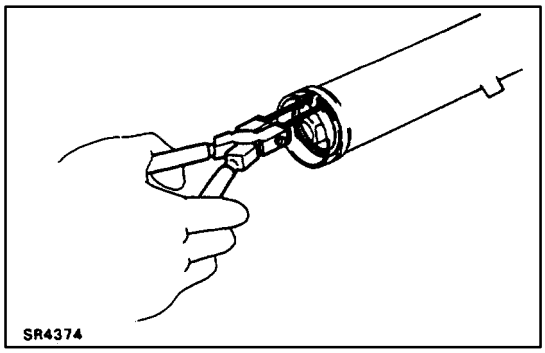

15. REMOVE CYLINDER END STOPPER, SPACERS, OIL SEAL AND RACK

(a) Using snap ring pliers, remove the snap ring.

WhereEverybodyKnowsYourName

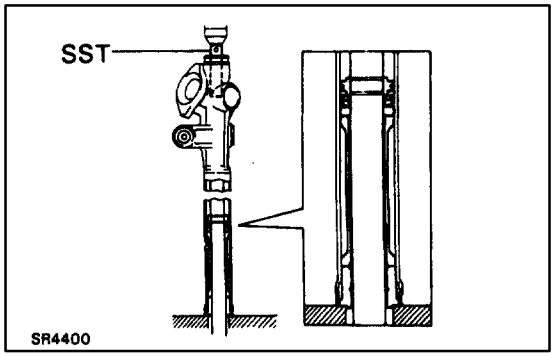

(b) Using SST, press the rack until the end stopper slightly touches the press block.
SST 09612–24014 (09612–10061)

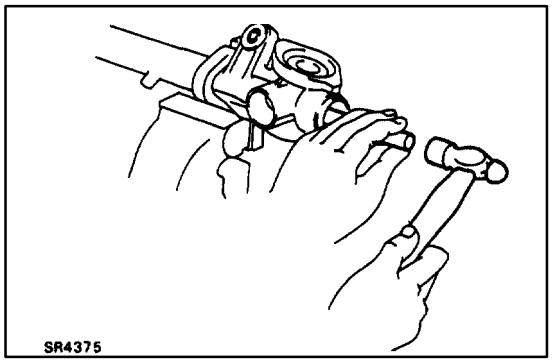

(c) Slightly tap the rack end with a brass bar and hammer.
(d) Pull out the rack with cylinder end stopper, 2 spacers and oil seal.

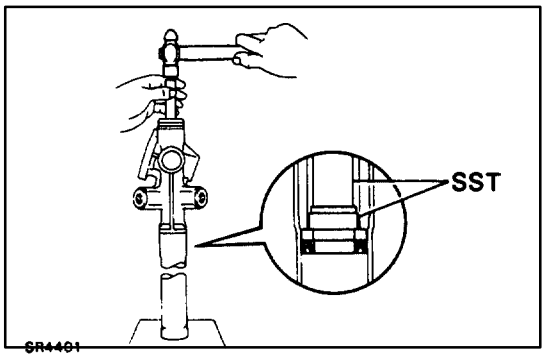

16. REMOVE RACK HOUSING OIL SEAL AND SPACER
Using SST, tap out the oil seal and spacer.
SST 09631–12020, 09631–20031

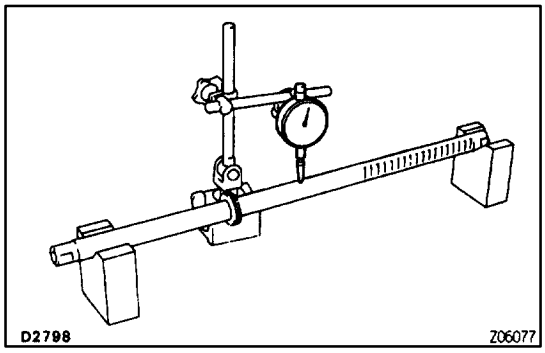

GEAR HOUSING COMPONENTS INSPECTION AND REPAIR

SR0NZ–01

1. INSPECT RACK

(a) Using a dial indicator, check the rack for runout and for teeth wear or damage.
Maximum runout:
0.3 mm (0.012 in.)

(b) Check the back surface for wear or damage.
If faulty, replace it.

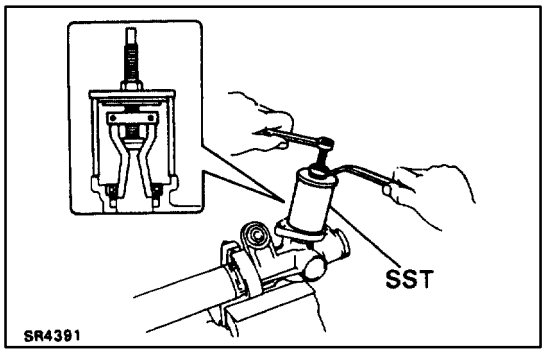

2. IF NECESSARY, REPLACE RACK HOUSING BEARING AND OIL SEAL

(a) Using SST, remove the bearing.
SST 09612–30012
NOTICE: Be careful not to damage the rack housing.

WhereEverybodyKnowsYourName

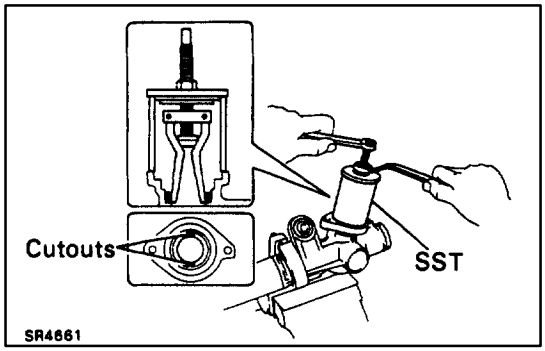

(b) Using SST, remove the oil seal.
SST 09612–30012
NOTICE: Be careful not to damage the rack housing.
HINT: When using the SST, apply the tips of the SST to the cutouts in the housing.

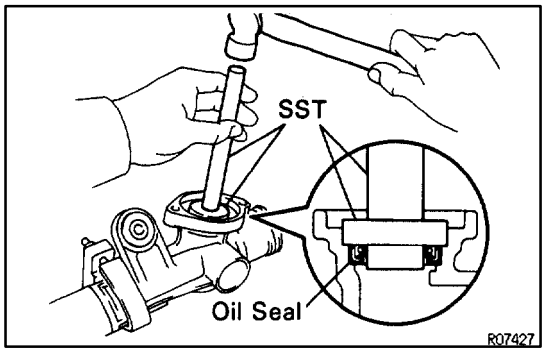

(c) Coat a new oil seal lip with power steering fluid.
(d) Using SST, install the new oil seal.
SST 09620–30010 (09624–30010, 09631–00020)
NOTICE: Ensuse that the oil seal facing the correct direction.

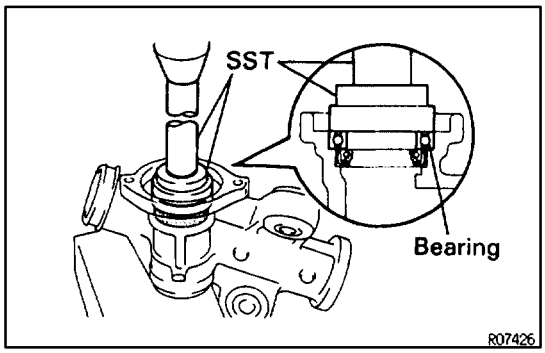

(e) Using SST, press in a new bearing.
SST 09620–30010 (09626–30010, 09631–00020)

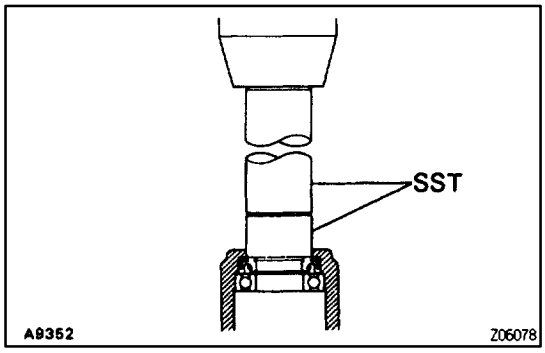

3. IF NECESSARY, REPLACE CONTROL VALVE HOUSING OIL SEAL AND BEARING

(a) Using SST, press out the oil seal with the bearing.
SST 09630–24013 (09620–24010), 09631–12020

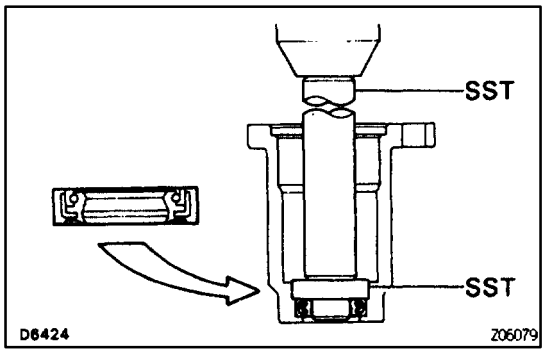

(b) Coat the lip of a new oil seal with power steering fluid.
(c) Using SST, press in the new oil seal.
SST 09630–24013 (09620–24020), 09631–12020
NOTICE: Ensure that the oil seal facing the correct direction.

WhereEverybodyKnowsYourName

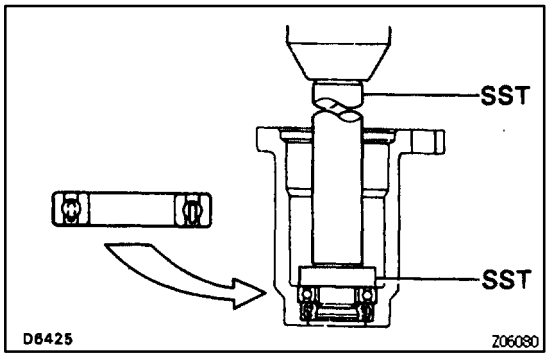

(d) Using SST, press in a new bearing.
SST 09630–24013 (09620–24030), 09631–12020

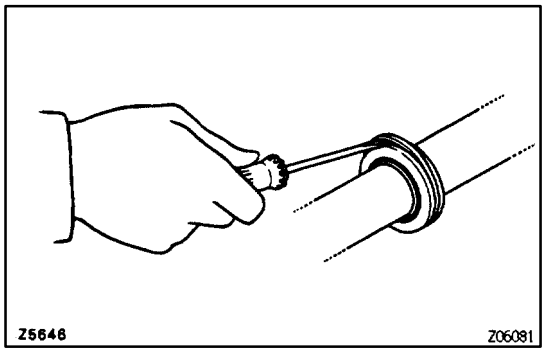

4. IF NECESSARY, REPLACE STEERING RACK TEFLON RING AND O–RING

(a) Using a screwdriver, remove the teflon ring and O–ring.
NOTICE: Be careful not to damage the groove for the teflon ring.

(b) Coat a new O–ring with power steering fluid, and install it.

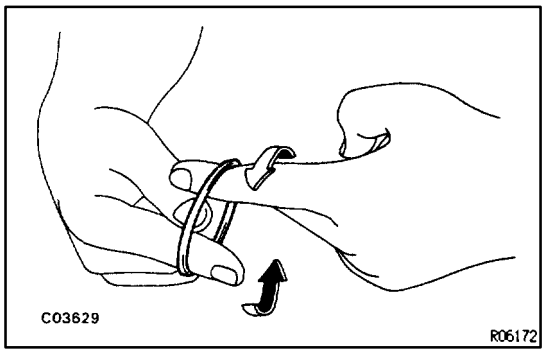

(c) Expand a new teflon ring with your fingers.
NOTICE: Be careful not to over–expand the teflon ring.

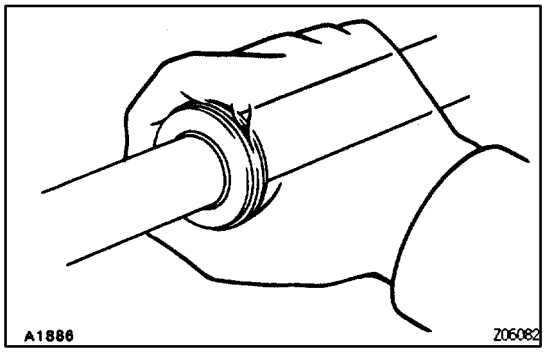

(d) Install the teflon ring to the rack.

(e) Coat the teflon ring with power steering fluid and snug it down with your fingers.

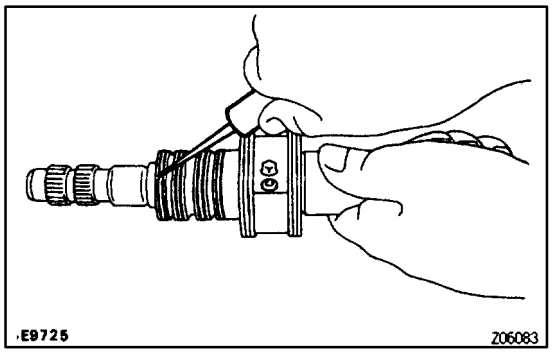

5. IF NECESSARY, REPLACE CONTROL VALVE TEFLON RINGS

(a) Using a screwdriver, remove the 4 teflon rings.
NOTICE: Be careful not to damage the grooves for the teflon ring.

WhereEverybodyKnowsYourName

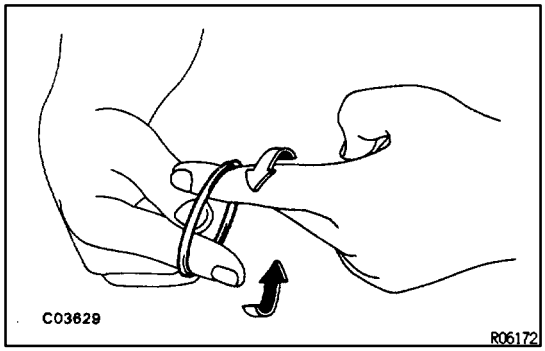

(b) Expand 4 new teflon rings with your fingers.
NOTICE: Be careful not to over–expand the teflon ring.
(c) Install the 4 teflon rings to the control valve.
(d) Coat the 4 teflon rings with power steering fluid and snug them down with your fingers.

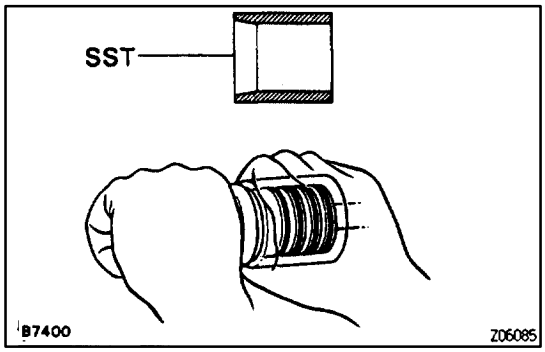

(e) Carefully slide the tapered end of the SST over the teflon rings to seat the rings.
SST 09631–20081
NOTICE: Be careful not to damage the teflon rings.

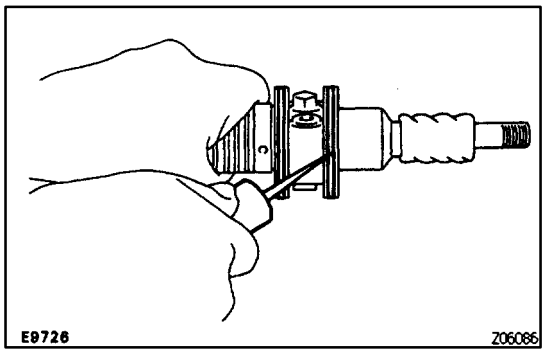

6. IF NECESSARY, REPLACE HYDRAULIC REACTION CHAMBER TEFLON RINGS AND O–RINGS
(a) Using a screwdriver, remove the 2 teflon rings and 2 O –rings.
NOTICE: Be careful not to damage the grooves for the teflon ring.
(b) Coat 2 new O–rings with power steering fluid, and install them.

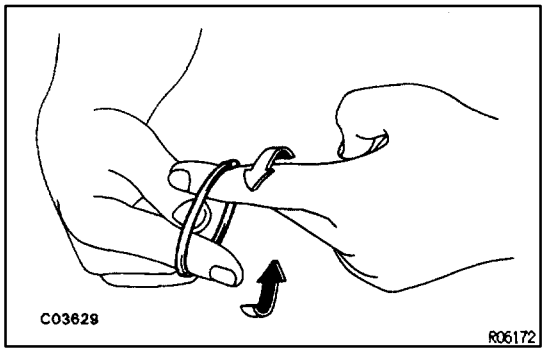

(c) Expand 2 new teflon rings with your fingers.
NOTICE: Be careful not to over–expand the teflon rings.
(d) Install the 2 teflon rings to the control valve.
(e) Coat the teflon rings with power steering fluid, and snug them down with your fingers.

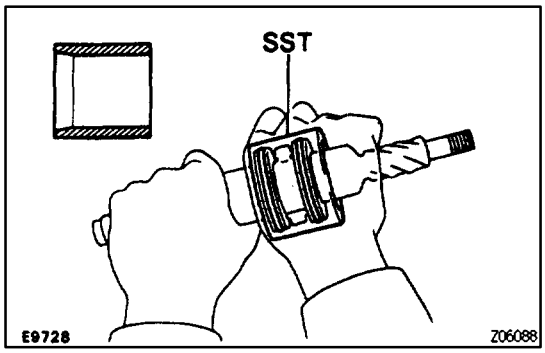

(f) Carefully slide the tapered end of the SST over the teflon rings to seat the rings.
SST 09631–32020
NOTICE: Be careful not to damage the teflon rings.

WhereEverybodyKnowsYourName

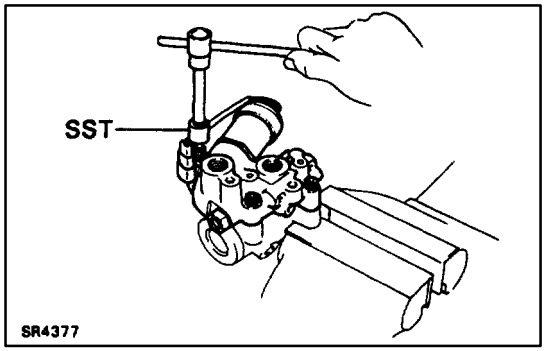

7. IF NECESSARY, REPLACE PRESSURE CONTROL VALVE

(a) Using a hexagon wrench, remove the 3 bolts.

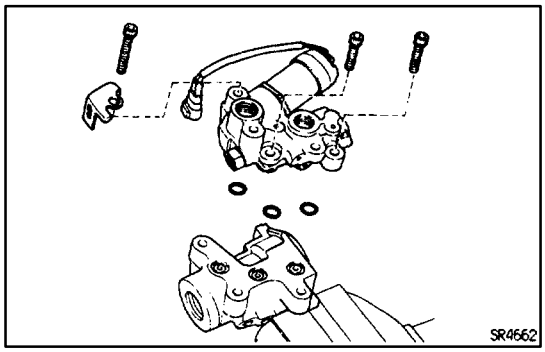

(b) Remove the 3 O–rings from the housing.

(c) Coat 3 new O–rings with power steering fluid, and install them on the control valve housing.

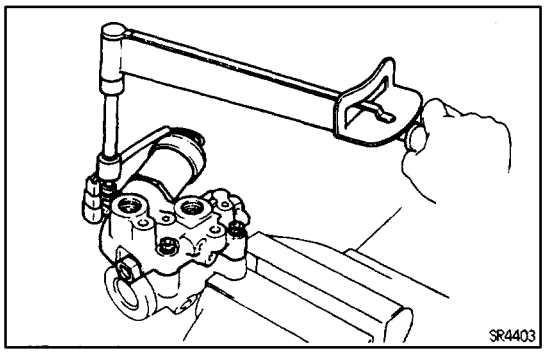

(d) Using a hexagon wrench, install a new pressure control valve with the 3 bolts.
Torque: 18 N·m (185 kgf·cm, 13 ft·lbf)

STEERING GEAR HOUSING ASSEMBLY

SR0P0–01

1. COAT WITH POWER STEERING FLUID OR MOLYBDENUM DISULPHIDE LITHIUM BASE GREASE (See page SR–148)

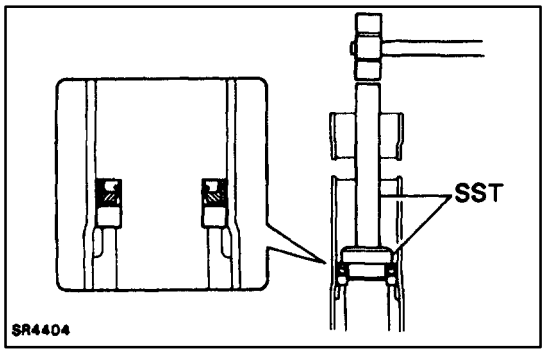

2. INSTALL RACK HOUSING OIL SEAL AND SPACER

(a) Coat a new oil seal lip with power steering fluid.

(b) Insert SST into the oil seal and spacer.
SST 09631–12020, 09631–32010
NOTICE:
- **Make sure you install the oil seal facing the correct direction.**
- **Take care that the oil seal does not get reversed as you install it.**

(c) Softly tap in the spacer and oil seal.

WhereEverybodyKnowsYourName

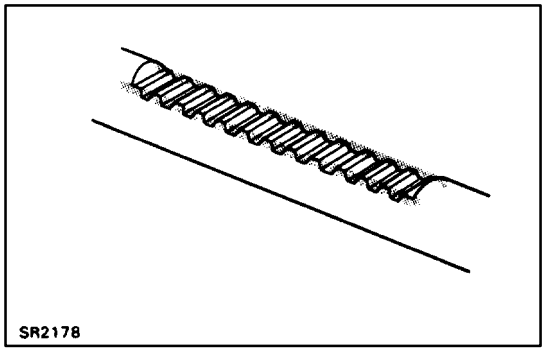

3. INSTALL STEERING RACK

(a) Install SST to the steering rack.
HINT: If necessary, scrape the burrs off the steering rack teeth end and burnish.
SST 09631–20102

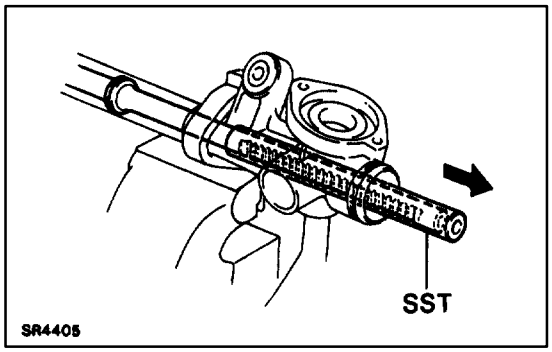

(b) Coat SST with power steering fluid.
(c) Insert the rack into the cylinder.
(d) Remove SST.

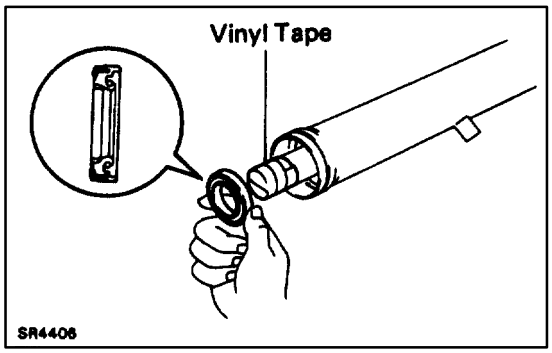

4. INSTALL CYLINDER END STOPPER, OIL SEAL AND SPACERS

(a) To prevent oil seal lip damage, wind vinyl tape on the steering rack end, and apply power steering fluid.
(b) Install the oil seal by pushing it into the cylinder, without tilting.
NOTICE:
- **Make sure you install the oil seal facing the correct direction.**
- **Take care that the oil seal does not get reversed as you install it.**

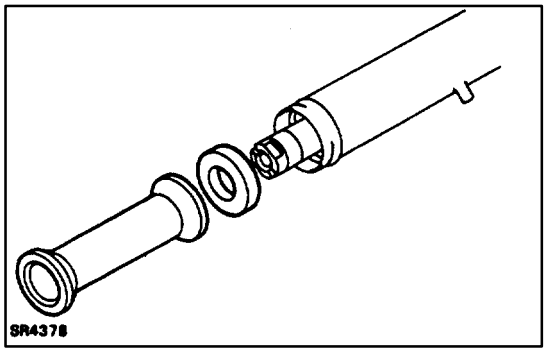

(c) Install the 2 spacers.

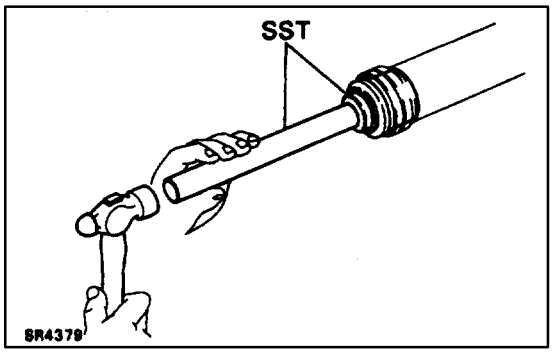

(d) Using SST, drive in the cylinder end stopper.
SST 09620–30010 (09627–30010, 09631–00020)

WhereEverybodyKnowsYourName

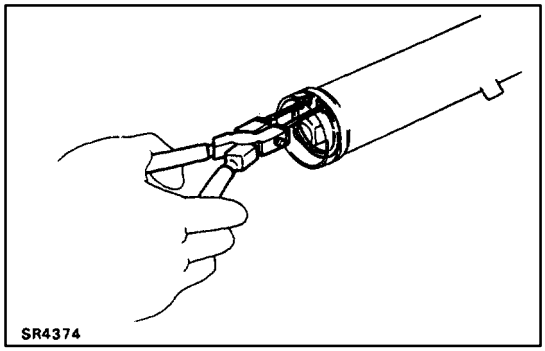

(e) Using snap ring pliers, install a new snap ring.

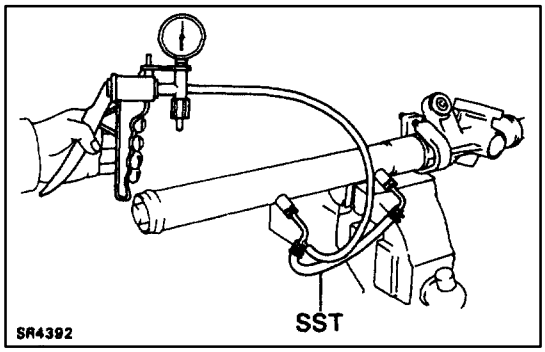

5. AIR TIGHTNESS TEST

(a) Install SST to the unions of the rack housing.
SST 09631–12071

(b) Apply 53.3 kPa (400 mmHg, 15.75 inVHg) of vacuum for about 30 seconds.

(c) Check that there is no change in the vacuum.
If there is change in the vacuum, check the installation of the rack housing oil seals.

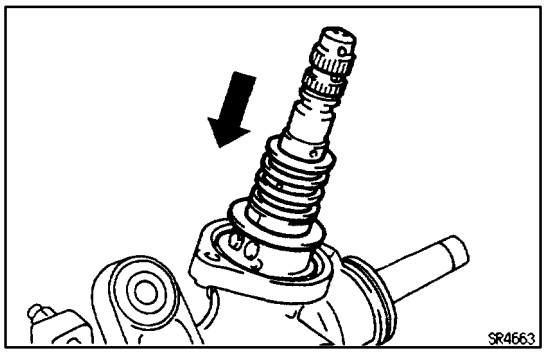

6. INSTALL CONTROL VALVE

(a) Coat the teflon rings with power steering fluid.

(b) Push the control valve into the rack housing.

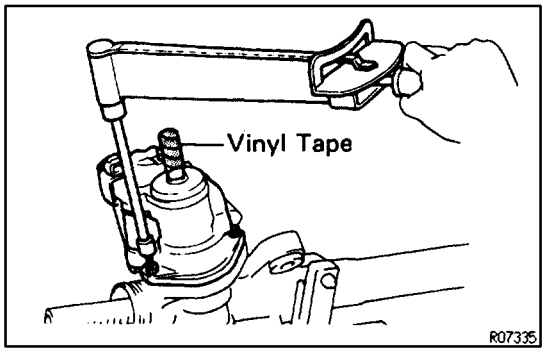

7. INSTALL CONTROL VALVE HOUSING

(a) Coat a new O–ring with power steering fluid, and install it to the valve housing.

(b) Using a hexagon wrench, tighten the 2 bolts.
Torque: 18 N·m (185 kgf·cm, 13 ft·lbf)
NOTICE: To prevent oil seal lip damage, wind vinyl tape on the serration part of the control valve shaft.

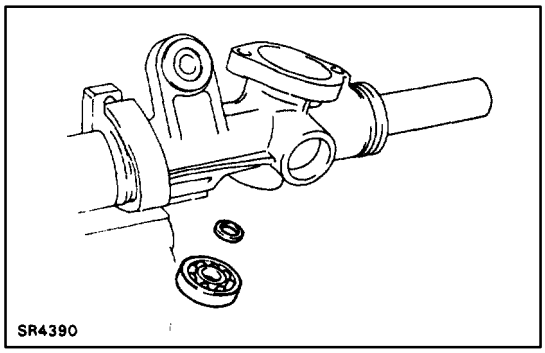

8. INSTALL LOWER BEARING AND SPACER

WhereEverybodyKnowsYourName

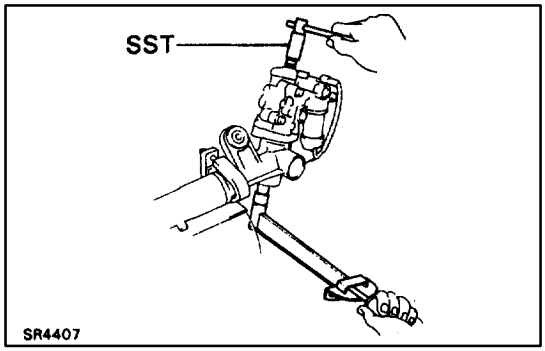

9. INSTALL SELF–LOCKING NUT

Using SST to hold the control valve shaft, install a new self–locking nut.

SST 09616–00010

Torque: 39 N·m (400 kgf·cm, 29 ft·lbf)

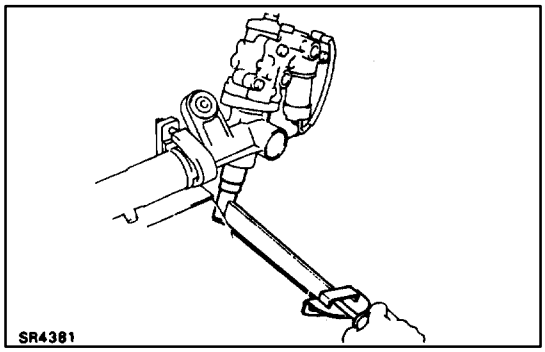

10. INSTALL RACK HOUSING CAP

(a) Apply sealant to 2 or 3 threads of the cap.

Sealant:

Part No. 08833–00080, THREE BOND 1344, LOCTITE 242 for equivalent

(b) Install the cap.

Torque: 69 N·m (700 kgf·cm, 51 ft·lbf)

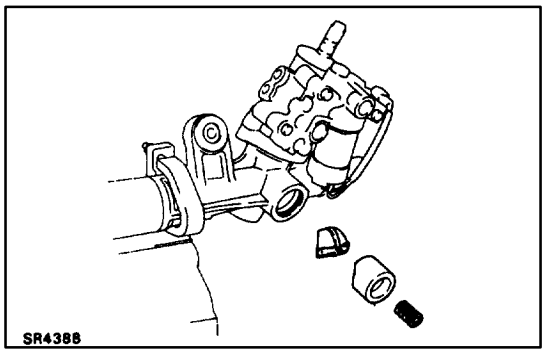

11. INSTALL RACK GUIDE SEAT, RACK GUIDE AND RACK GUIDE SPRING

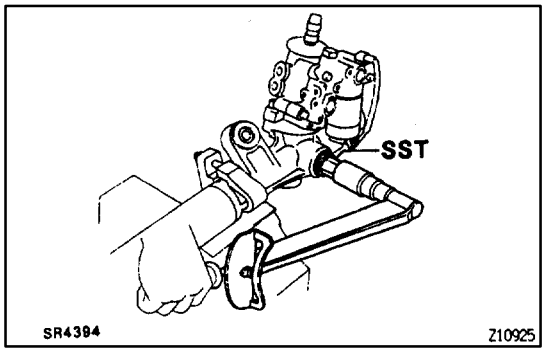

12. ADJUST TOTAL PRELOAD

(a) Apply sealant to 2 or 3 threads of the spring cap.

Sealant:

Part No. 08833–00080, THREE BOND 1344, LOCTITE 242 or equivalent

(b) Using SST, install and torque the spring cap.

SST 09612–24014 (09612–10022)

Torque: 25 N·m (250 kgf·cm, 18 ft·lbf)

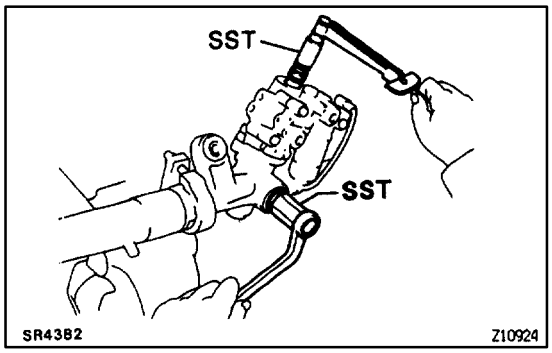

(c) Using SST, return the rack guide spring cap 125

SST 09612–24014 (09612–10022)

(d) Using SST, turn the control valve shaft right and left 1 or 2 times.

SST 09616–00010

(e) Loosen the spring cap until the rack guide compression spring is not functioning.

WhereEverybodyKnowsYourName

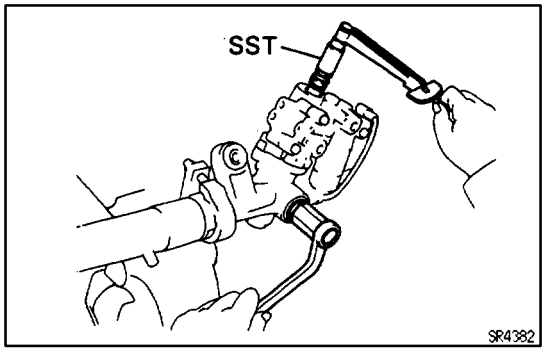

(f) Using SST and a torque meter, tighten the rack guide spring cap until the preload is within specification.
SST 09612–24014 (09612–10022)
09616–00010
Preload (turning):
0.9–1.9 N·m (9–20 kgf·cm 7.9–17.3 in.·lbf)

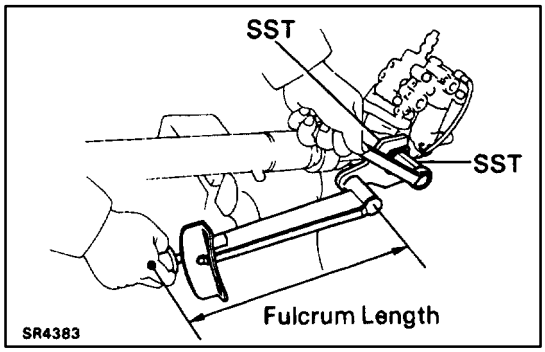

13. INSTALL RACK GUIDE SPRING CAP LOCK NUT

(a) Apply sealant to 2 or 3 threads of the lock nut.
Sealant:
Part No. 08833–00080, THREE BOND 1344, LOCTITE 242 or equivalent

(b) Using SST, install and torque the lock nut.
SST 09612–24014 (09612–10022, 09617–24020)
Torque: 56 N·m (570 kgf·cm, 41 ft·lbf)
HINT: Use a torque wrench with a fulcrum length of 340 mm (13.39 in.).

(c) Recheck the total preload.
Preload (turning):
0.9–1.9 N·m (9–20 kgf·cm 7.9–17.3 in.·lbf)

14. INSTALL DUST COVER

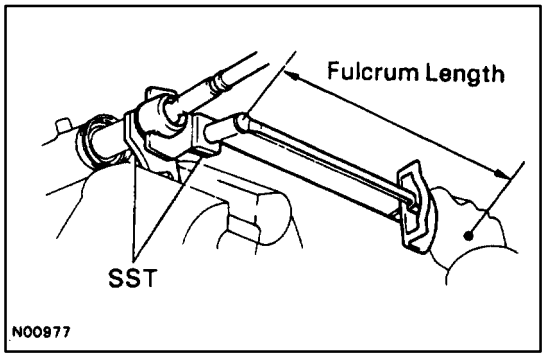

15. INSTALL CLAW WASHERS AND RACK ENDS

(a) Install new claw washer.
HINT: Align the claws of the claw washer with the rack grooves.

(b) Using SST, install and torque the rack end.
SST 09612–24014 (09617–24011)
09617–14010
Torque: 92 N·m (940 kgf·cm, 68 ft·lbf)
HINT: Use a torque wrench with a fulcrum length of 340 mm (13.39 in.).

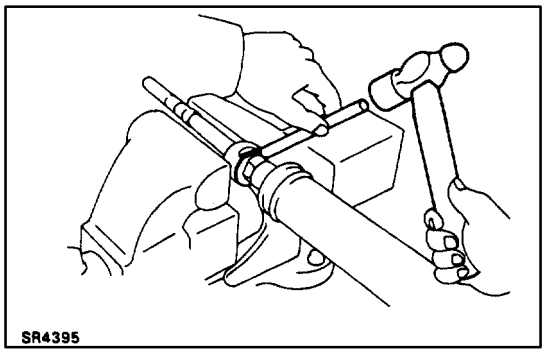

(c) Using a brass bar and hammer, stake the claw washer.

WhereEverybodyKnowsYourName

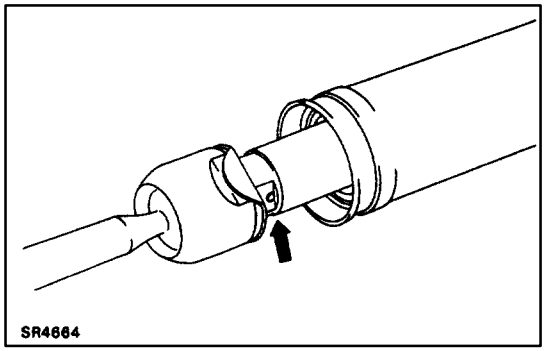

16. INSTALL RACK BOOTS, CLAMPS AND CLIPS

(a) Ensure that the tube hole is not clogged with grease.
HINT: If the tube hole is clogged, the pressure inside the boot will change after it is assembled and the steering wheel turned.

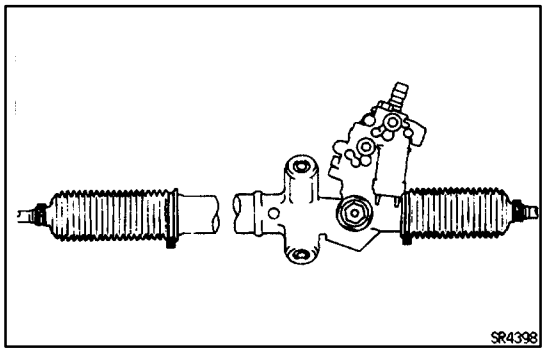

(b) Install the boot.
NOTICE: Be careful not to damage or twist the boot.

(c) Install the clamp and clip to the boot.

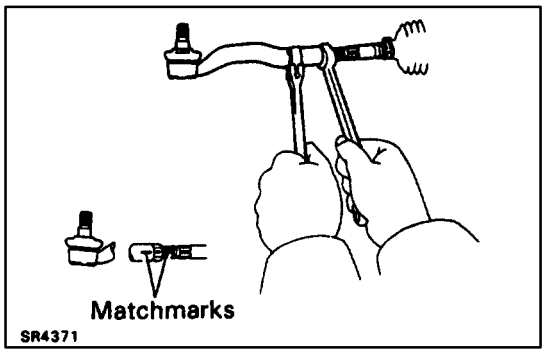

17. INSTALL TIE ROD ENDS

(a) Screw the lock nut and tie rod end onto the rack end until the matchmarks are aligned.

(b) After adjusting toe–in, torque the lock nut.
Torque: 56 N·m (570 kgf·cm, 41 ft·lbf)

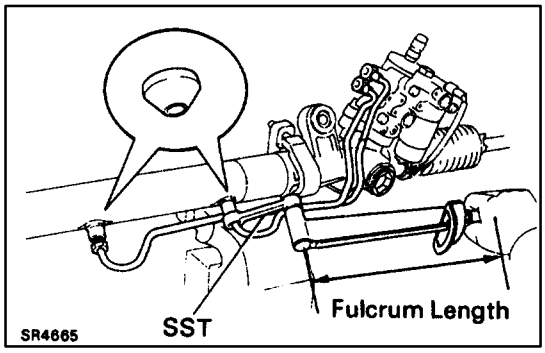

18. INSTALL RIGHT AND LEFT TURN PRESSURE TUBES

(a) Install a new union seat.

(b) Using SST, tighten nut.
SST 09633–00020
Torque: 24 N·m (240 kgf·cm, 17 ft·lbf)
HINT: Use a torque wrench with a fulcrum length of 300 mm (11.81 in.).

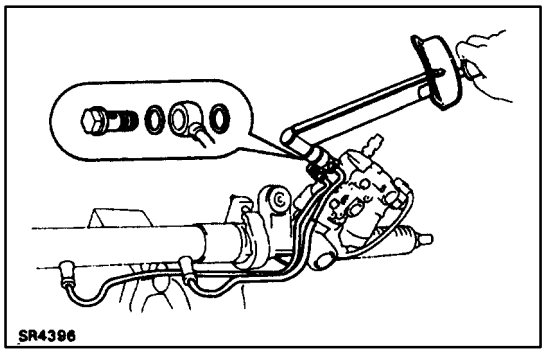

(c) Install the union bolt over the new gaskets and torque it.
Torque: 34 N·m (350 kgf·cm, 25 ft·lbf)

WhereEverybodyKnowsYourName

ELECTRONIC CONTROL SYSTEM PRECAUTION

SR0GR–01

Do not open the cover or the case of the ECU and various computers unless absolutely necessary. (If the IC terminals are touched, the IC may be destroyed by static electricity.)

ELECTRONIC CIRCUIT

SR0GS–04

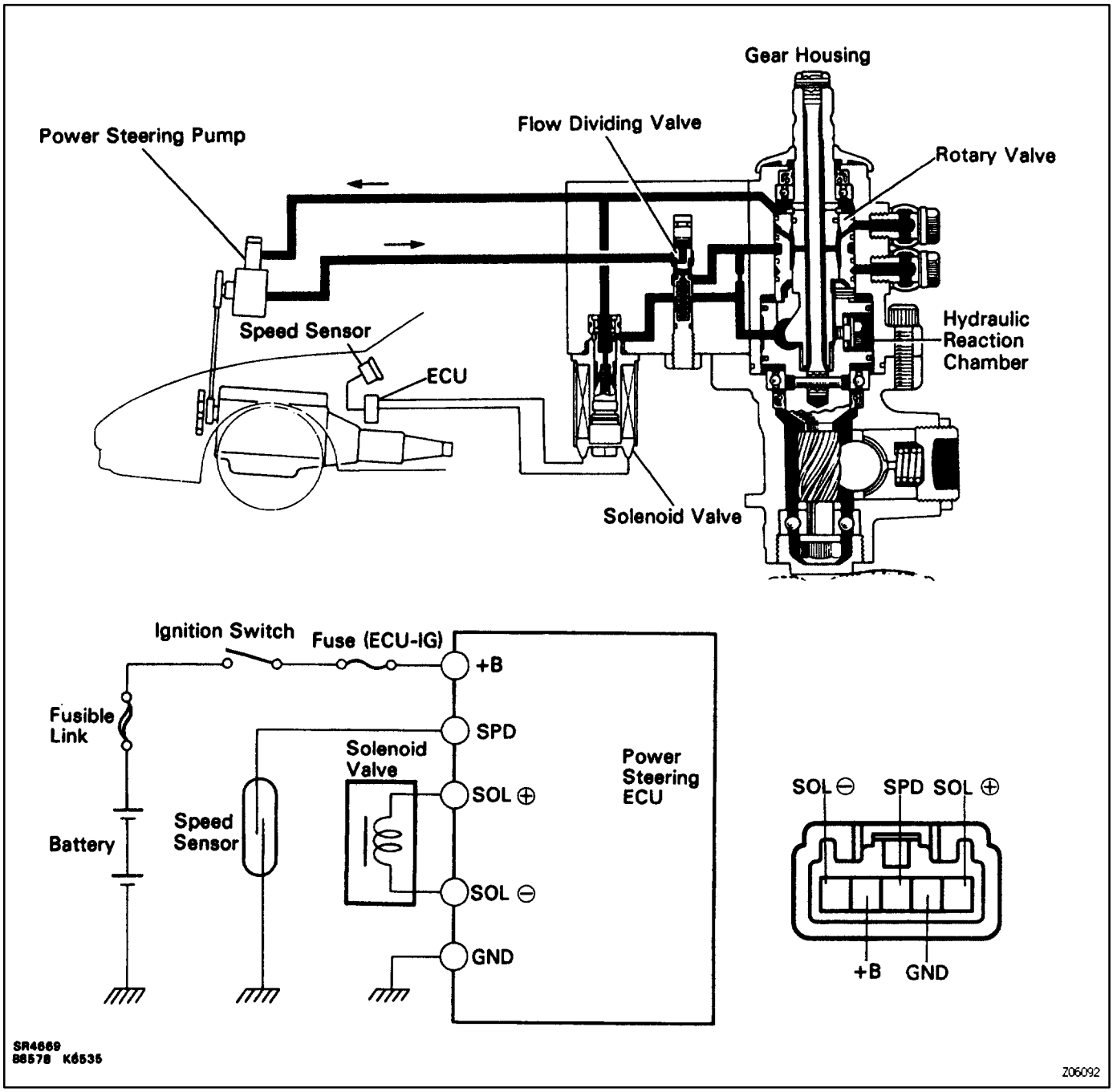

WhereEverybodyKnowsYourName

TROUBLESHOOTING FLOW–CHART

SR0GT–04

Trouble

- ▼ **Hard steering at idle or low–speed driving.**
- ▼ **Steering too sensitive during high–speed driving.**

Preliminary Check

- ▼ **Check tire pressure.**
- ▼ **Check lubrication of suspension and steering linkage.**
- ▼ **Check front wheel alignment.**
- ▼ **Check steering system joint and suspension arm ball joint.**
- ▼ **Check for bent steering column.**
- ▼ **Check that all connectors are secure.**
- ▼ **Check PS pump fluid pressure. (See page SR–115)**

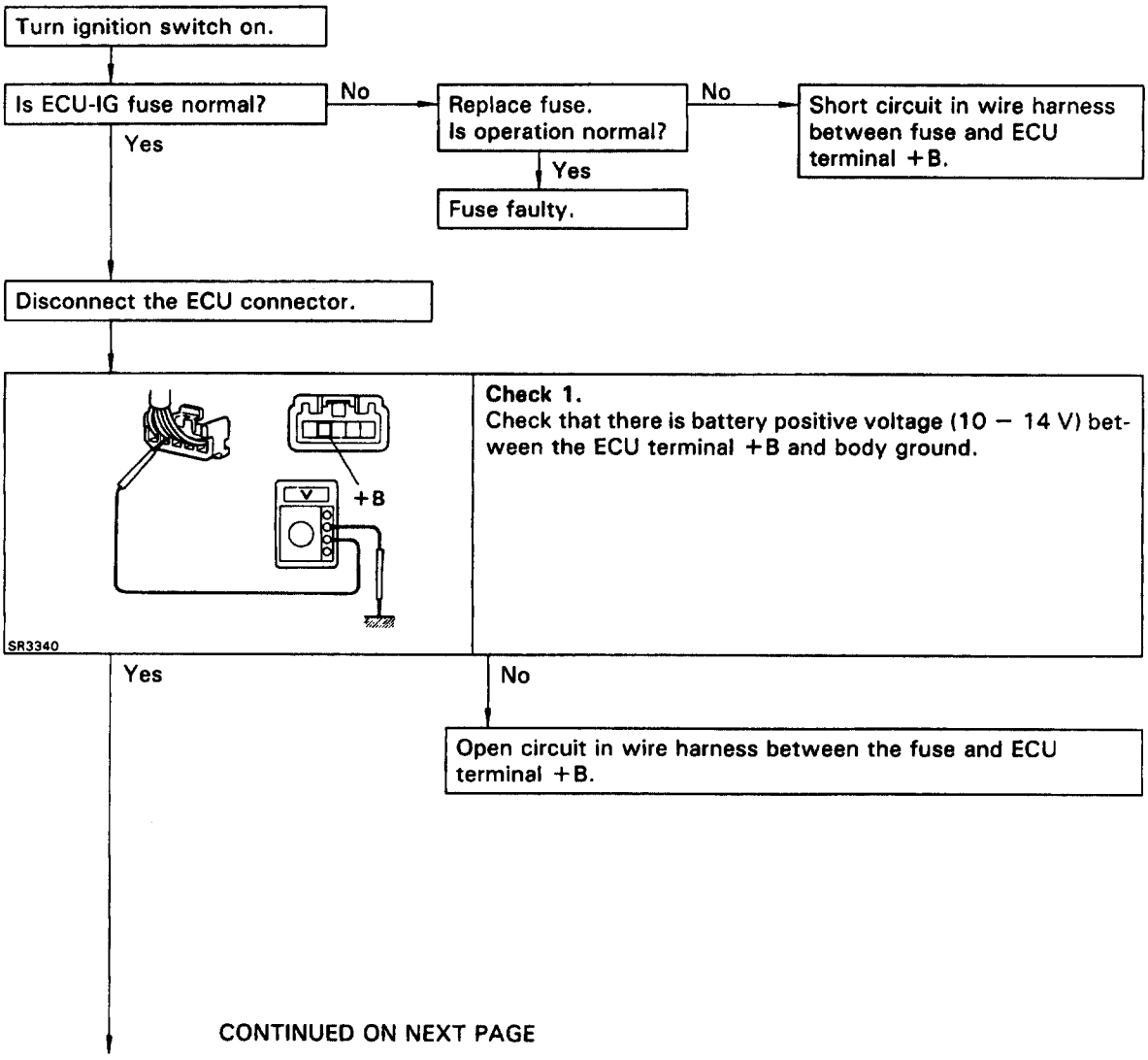

CONTINUED ON NEXT PAGE

WhereEverybodyKnowsYourName

Yes CONTINUED FROM PREVIOUS PAGE

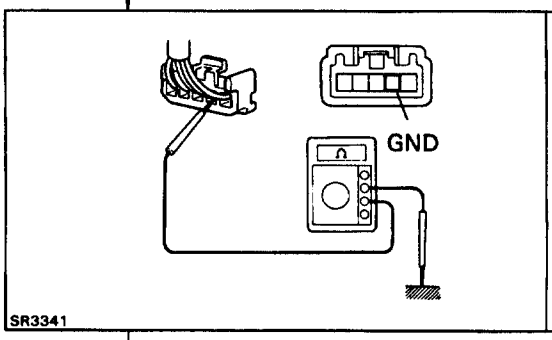

Check 2.
Check that there is continuity between the ECU terminal GND and body ground.

Yes

No

- Open circuit in wire harness between the ECU terminal GND and body ground.
- Body ground faulty.

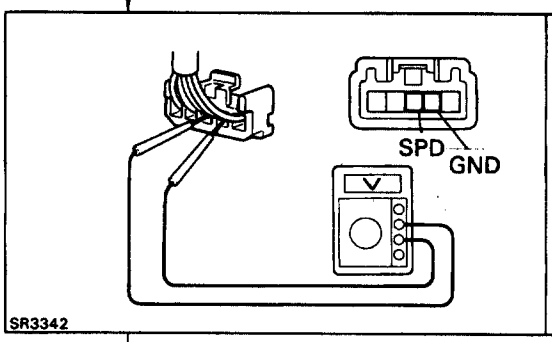

Check 3.
(a) Jack up the rear wheel on one side.
(b) Connect a voltmeter between the ECU connector terminals SPD and GND.
(c) Spin the rear wheel and check that the meter needle deflects 0 V → 5 V or more → 0 V.

Yes

No

- Open or short circuit in wire harness between the ECU terminal SPD and speed sensor.
- Speed sensor faulty (See page BE–136).

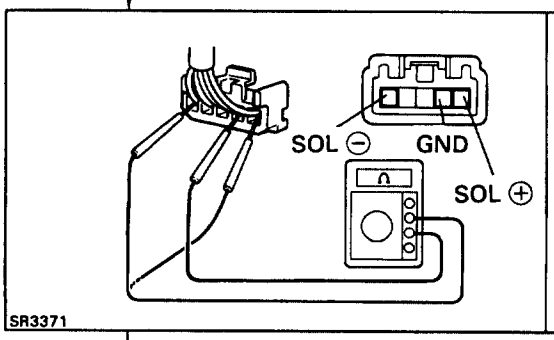

Check 4.
Check that there is no continuity between terminals SOL ⊕ or SOL ⊖ and GND.

Yes

No

- Short circuit in wire harness between the terminals SOL ⊕ and SOL ⊖.
- Solenoid valve faulty.

CONTINUED ON NEXT PAGE

WhereEverybodyKnowsYourName

Yes CONTINUED FROM PREVIOUS PAGE

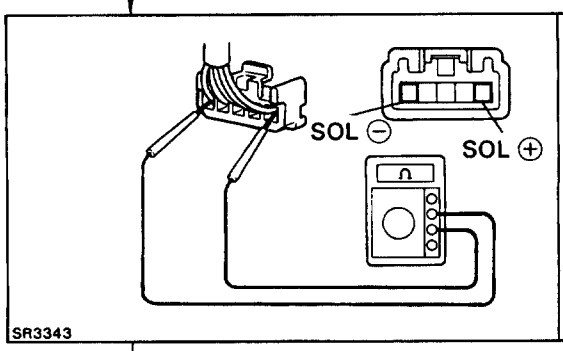

Check 5.
Measure the resistance between terminal SOL ⊕ and SOL ⊖.
Standard resistance: 6.0 – 11.0 Ω

Yes

No

- Open circuit in wire harness between the terminals SOL ⊕ and SOL ⊖.
- Solenoid valve faulty.

Check 6.
Inspect ECU.

Bad → Replace ECU.

WhereEverybodyKnowsYourName

ELECTRONIC CONTROL COMPONENTS INSPECTION
SOLENOID VALVE

SR0GU–01

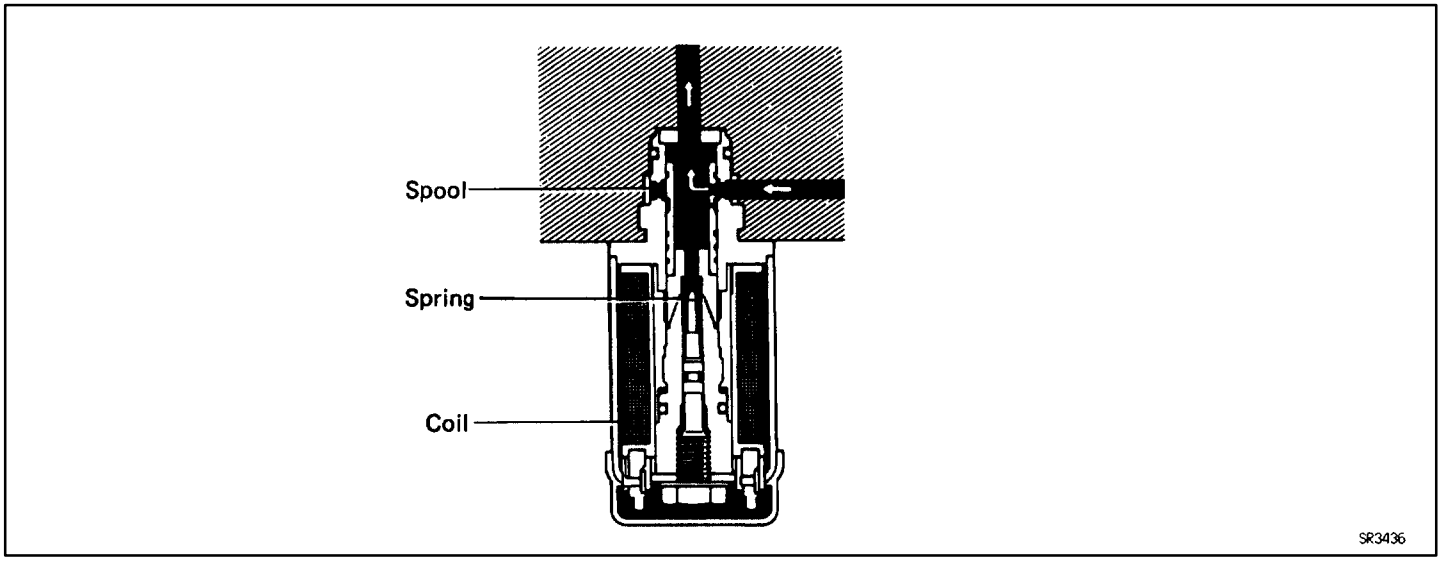

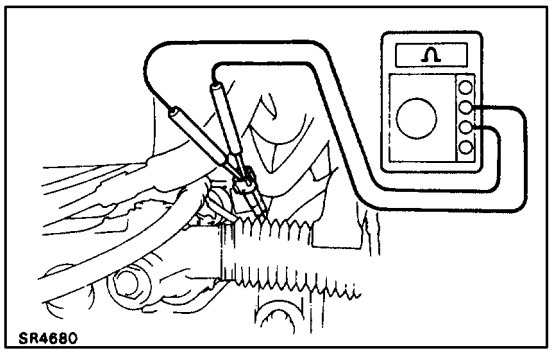

1. DISCONNECT WIRING CONNECTOR

2. MEASURE RESISTANCE

Measure the resistance between SOL ≦ and SOL ↔.

Resistance:

6.0–11.0 ?

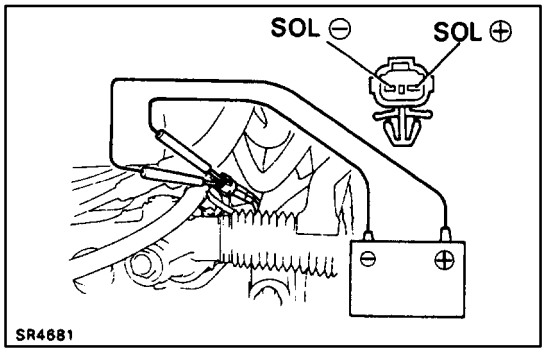

3. CHECK SOLENOID OPERATION

(a) Connect the battery positive terminal to the solenoid terminal SOL ≦.

(b) Connect the battery negative terminal to the solenoid terminal SOL ↔.

(c) Check that the solenoid is clicked.
If faulty, replace the pressure control valve with the solenoid valve.

NOTICE:

- **Do not apply voltage for more than 30 seconds to avoid burning out the solenoid.**
- **If repeating this step, wait until the solenoid cools down enough that it can be touched by hand.**

4. CONNECT WIRING CONNECTOR

WhereEverybodyKnowsYourName

POWER STEERING ECU

1. JACK UP VEHICLE AND SUPPORT IT ON STANDS

2. START ENGINE

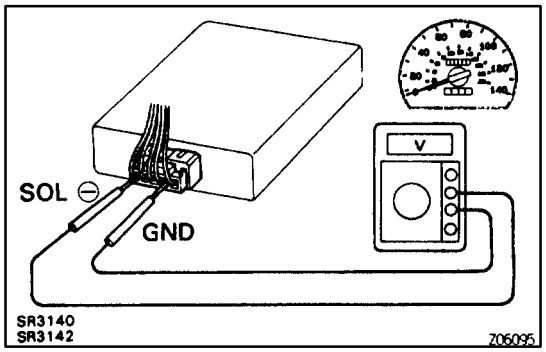

3. MEASURE VOLTAGE OF ECU

(a) Using a voltmeter, measure the voltage between ECU terminals SOL ↔ and GND while the engine is idling.

Standard voltage:

0.3–0.5 V

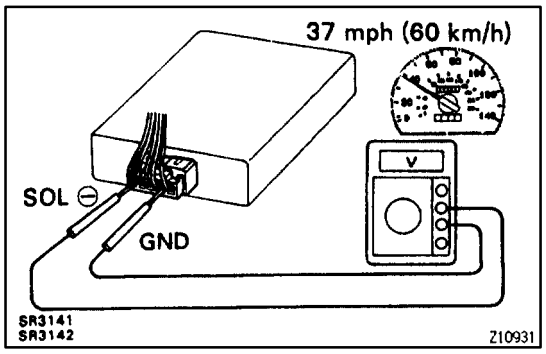

(b) Place the transmission in gear and while running at about 37 mph (60 km/h), measure the voltage between ECU terminals SOL ↔ and GND.

Standard voltage:

Voltage measured in (a) above, minus
(IUZ–FE Engine)
0.07–0.02 V
(2JZ–FE Engine)
0.05–0.18 V

If no voltage, try another ECU.

4. LOWER VEHICLE

WhereEverybodyKnowsYourName

SERVICE SPECIFICATIONS

SERVICE DATA

SR0GP–01

Steering wheel freeplay	Maximum	30 mm (1.18 in.)
STEERING COLUMN		
Pawl stopper	Mark	
	1 or A	12.68–12.74 mm (0.4992–0.5016 in.)
	2 or B	12.61–12.67 mm (0.4965–0.4988 in.)
	3 or C	12.54–12.60 mm (0.4937–0.4961 in.)
	4 or D	12.47–12.53 mm (0.4909–0.4933 in.)
	5 or E	12.40–12.46 mm (0.4882–0.4906 in.)
	6 or F	12.33–12.39 mm (0.4854–0.4878 in.)
	7 or G	12.26–12.32 mm (0.4827–0.4850 in.)
PS ON–VEHICLE INSPECTION		
Maximum rise of oil level		Below 5 mm (0.20 in.)
Oil pressure at idle speed with valve closed	Minimum	7,355–7,845 kPa (75–80 kgf/cm^2, 1,067–1,137 psi)
Steering effort at idle speed	Maximum	40 N (4.1 kgf, 9.0 lbf)
PS PUMP		
Rotor shaft bushing oil clearance (SC 400)	STD	0.01–0.03 mm (0.0004–0.0012 in.)
Rotor shaft bushing oil clearance (SC 400)	Maximum	0.07 mm (0.0028 in.)
Rotor shaft bushing oil clearance (SC 300)	STD	0.03–0.05 mm (0.0012–0.0020 in.)
Rotor shaft bushing oil clearance (SC 300)	Maximum	0.07 mm (0.0028 in.)
Vane plate to rotor groove clearance (SC 400)		0.03 mm (0.0012 in.) or less
Vane plate to rotor groove clearance (SC 300)		0.04 mm (0.0016 in.) or less
Vane plate length (SC 400)	Minimum	14.97 mm (0.5894 in.)
Vane plate height (SC 400)	Minimum	8.0 mm (0.315 in.)
Vane plate thickness (SC 400)	Minimum	1.77 mm (0.0697 in.)
Vane plate length (SC 300)	Minimum	14.97 mm (0.5894 in.)
Vane plate height (SC 300)	Minimum	8.5 mm (0.335 in.)
Vane plate thickness (SC 300)	Minimum	1.37 mm (0.0539 in.)
Vane plate length (SC 400)	Rotor and cam ring mark	
	NONE	14.996–14.998 mm (0.59039–0.59047 in.)
	1	14.994–14.996 mm (0.59031–0.59039 in.)
	2	14.992–14.994 mm (0.59023–0.59031 in.)
	3	14.990–14.992 mm (0.59016–0.59024 in.)
	4	14.988–14.990 mm (0.59007–0.59016 in.)
Vane plate length (SC 300)	Rotor and cam ring mark	
	NONE	14.999–15.001 mm (0.59051–0.59059 in.)
	1	14.997–14.999 mm (0.59043–0.59051 in.)
	2	14.995–14.997 mm (0.59035–0.59043 in.)
	3	14.993–14.995 mm (0.59027–0.59035 in.)
	4	14.991–14.993 mm (0.59020–0.59027 in.)

WhereEverybodyKnowsYourName

Flow control valve spring length (SC 400)	STD	37 mm (1.46 in.)
Flow control valve spring length (SC 400)	Minimum	36 mm (1.42 in.)
Flow control valve spring length (SC 300)	STD	35 mm (1.38 in.)
Flow control valve spring length (SC 300)	Minimum	33 mm (1.30 in.)
Pump rotating torque (SC 400)		0.1 N·m (1.0 kgf·cm, 0.9 in.·lbf) or less
Pump rotating torque (SC 300)		0.2 N·m (2.5 kgf·cm, 2.2 in.·lbf) or less
PS GEAR HOUSING		
Steering rack runout	Maximum	0.3 mm (0.012 in.)
Total preload		0.9–1.9 N·m (9–20 kgf·cm, 7.9–17.3 in.·lbf)
Solenoid valve resistance		6–11 ?

WhereEverybodyKnowsYourName

TORQUE SPECIFICATIONS

SR0GQ–01

Part tightened	N·m	kgf·cm	ft·lbf
STEERING COLUMN			
Steering wheel	35	360	26
Steering wheel pad	7.4	75	65 in.·lbf
Column bracket X Body	25	260	19
Sliding yoke	35	360	26
(Power tilt and power telescopic steering column)			
Tilt steering housing support X Lower tube	13	130	9
Support stopper bolt lock nut	2.9	30	26 in.·lbf
Connector bracket	4.9	50	43 in.·lbf
Telescopic sensor plate	4.9	50	43 in.·lbf
Telescopic adjusting screw	6.9	70	61 in.·lbf
Telescopic adjusting screw lock nut	31	320	23
(Manual tilt and Manual telescopic steering column)			
Tilt memory bolt	6.4	65	56 in.·lbf
Tilt memory bolt set nut	5.9	60	52 in.·lbf
Tilt lever assembly installation bolt	2.9	30	26 in.·lbf
Tilt pawl set nut	5.9	60	52 in.·lbf
Tilt lever retainer set nut	15	150	11
Compression spring bushing bolt	7.8	80	69 in.·lbf
Steering column tube stopper bolt	19	195	14
Serration attachment set nut	13	130	9
Telescopic lever set bolt	25	260	19
Connector bracket set bolt	4.9	50	43 in.·lbf
POWER STEERING PUMP			
(SC 400)			
PS pump installation bolt	39	400	29
PS pump installation nut	43	440	32
Pressure tube X Pressure port union	49	500	36
Drive pulley X Rotor shaft	43	440	32
Front housing X Rear bracket	39	400	29
Pressure port union X Pump housing	69	700	51
Suction port union X Pump housing	13	130	9
(SC 300)			
PS pump installation bolt	58	590	43
Pressure tube X Pressure port union	49	500	36
Drive pulley X Rotor shaft	43	440	32
Front housing X Rear housing	17	170	12
Pressure port union X Pump housing	83	850	61
Reservoir tank X Pump housing Front side bolt	13	130	9
Rear side bolts	17	170	12

WhereEverybodyKnowsYourName

POWER STEERING GEAR HOUSING			
Tie rod end X Steering knuckle	49	500	36
Control valve shaft X Universal joint	35	360	26
Pressure and return tube X Gear housing	49	500	36
Gear housing installation bolt	76	770	56
Pressure control valve X Control valve housing	18	185	13
Rack housing X Control valve housing	18	185	13
Control valve self–locking nut	39	400	29
Rack housing cap	69	700	51
Rack guide spring cap lock nut	56	570	41
Rack X Rack end	92	940	68
Tie rod end lock nut	56	570	41
Turn pressure tube union nut	24	240	17
Turn pressure tube union bolt	34	350	25

WhereEverybodyKnowsYourName

STEERING

WhereEverybodyKnowsYourName

GENERAL DESCRIPTION

SR0E7–02

- ▼ **Care must be taken to replace parts properly because they could affect the performance of the steering system and result in a driving hazard.**
- ▼ **The steering wheel pad has an airbag built in, so take all due precautions when handling it. For more details, see the RS section.**

TROUBLESHOOTING

SR0E8–02

You will find the cause of trouble more easily by properly using the table shown below. In this table, the numbers indicate the priority of the probable cause of trouble. Check each part in the order shown. If necessary, repair or replace the part.

See page / Parts Name / Trouble	SA–3	SA–3	SR–113	–	–	SA–41	–	–	–	SR–167	SR–163	SA–16
	Tires (Improperly inflated)	Front wheel alignment (Incorrect)	Fluid level (Low)	Drive belt (Loose)	Steering system joints (Worn)	Suspension arm ball joints (Worn)	Steering column (Binding)	Sliding yoke (Worn)	Steering gear housing	Solenoid valve	Electronic control	Front wheel bearing (Worn)
Hard steering	1	4	2	3	5	6	7		10	8	9	
Poor return	1	2					3		4			
Excessive play					1	2		3	5			4
Abnormal noise			1		2				3			

WhereEverybodyKnowsYourName

GENERAL DESCRIPTION

SR0E7–02

- ▼ **Care must be taken to replace parts properly because they could affect the performance of the steering system and result in a driving hazard.**
- ▼ **The steering wheel pad has an airbag built in, so take all due precautions when handling it. For more details, see the RS section.**

TROUBLESHOOTING

SR0E8–02

You will find the cause of trouble more easily by properly using the table shown below. In this table, the numbers indicate the priority of the probable cause of trouble. Check each part in the order shown. If necessary, repair or replace the part.

See page / Parts Name / Trouble	SA–3	SA–3	SR–113	–	–	SA–41	–	–	–	SR–167	SR–163	SA–16
	Tires (Improperly inflated)	Front wheel alignment (Incorrect)	Fluid level (Low)	Drive belt (Loose)	Steering system joints (Worn)	Suspension arm ball joints (Worn)	Steering column (Binding)	Sliding yoke (Worn)	Steering gear housing	Solenoid valve	Electronic control	Front wheel bearing (Worn)
Hard steering	1	4	2	3	5	6	7		10	8	9	
Poor return	1	2					3		4			
Excessive play					1	2		3	5			4
Abnormal noise			1		2				3			

WhereEverybodyKnowsYourName

ON–VEHICLE INSPECTION

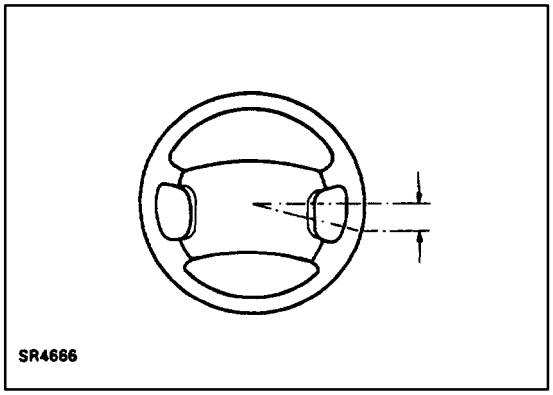

SR0E9–02

CHECK THAT STEERING WHEEL FREEPLAY IS CORRECT

With the vehicle stopped and tires pointed straight ahead, rock the steering wheel gently back and forth with light finger pressure.

Freeplay should not exceed the maximum.

Maximum freeplay:

30 mm (1.18 in.)

If incorrect, repair.

WhereEverybodyKnowsYourName

STEERING COLUMN

DESCRIPTION

SR0EA–02

There are two types of steering column, the manual tilt/manual telescopic one, and the power tilt/power telescopic one.

SR0EB–02

OPERATION

POWER TILT OPERATION

The power tilt mechanism consists of the control gear assembly, tilt motor, tilt position sensor, tilt and telescopic switch, unlock warning switch and tilt and telescopic ECU.

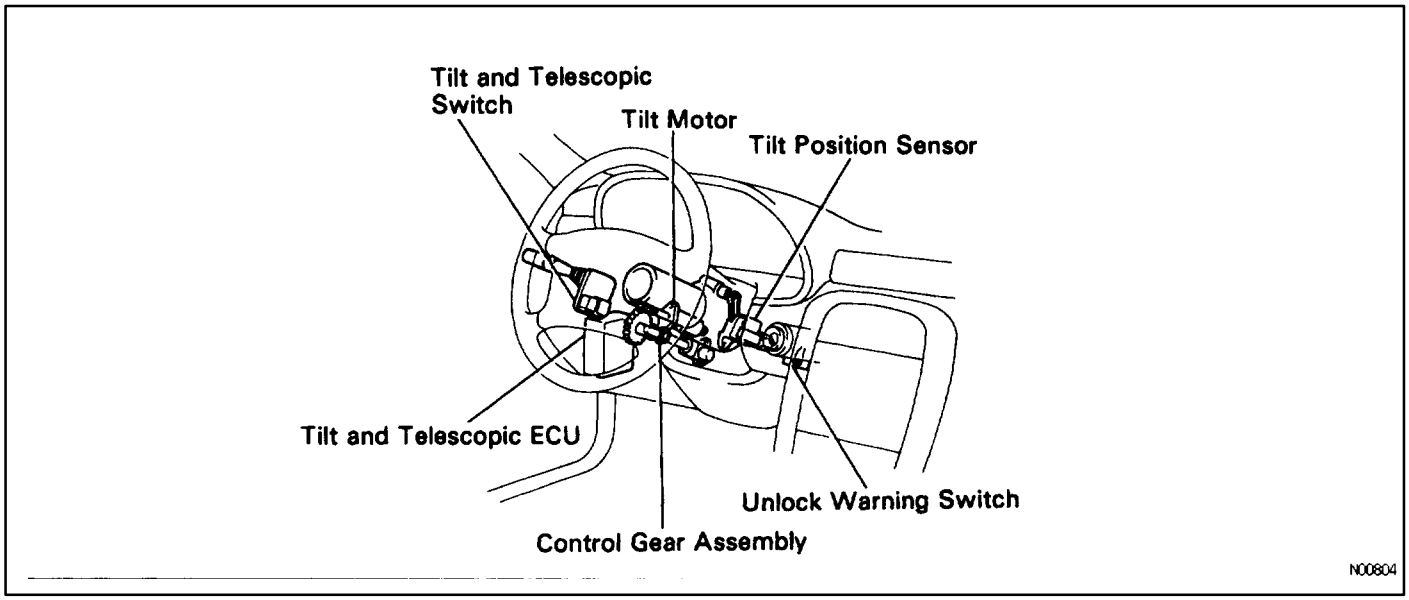

The control gear assembly consists of the worm wheel, tilt gear, tilt worm and slider. Rotation of the tilt motor moves the slider towards the tilt worm. The column upper tube is integrated with the slider and is rotated up and down by movement of the slider.

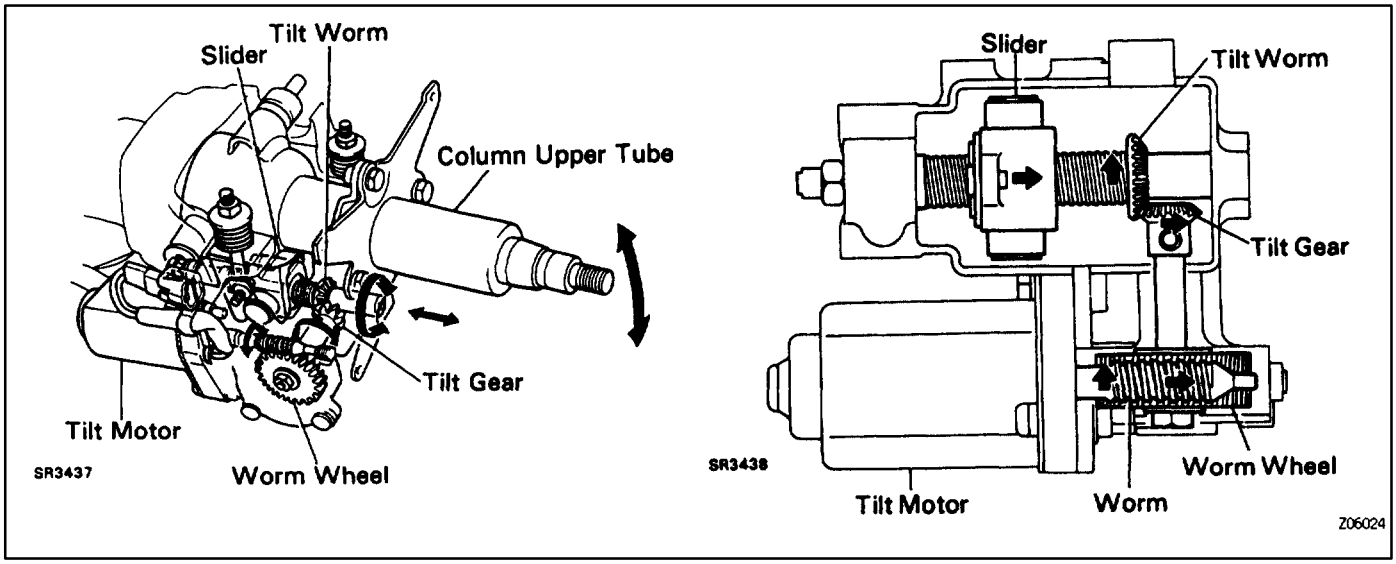

WhereEverybodyKnowsYourName

POWER TELESCOPIC OPERATION

SR0EC–02

The power telescopic mechanism is composed of the control gear assembly, telescopic motor, telescopic position sensor, tilt and telescopic switch, unlock warning switch and tilt and telescopic ECU.

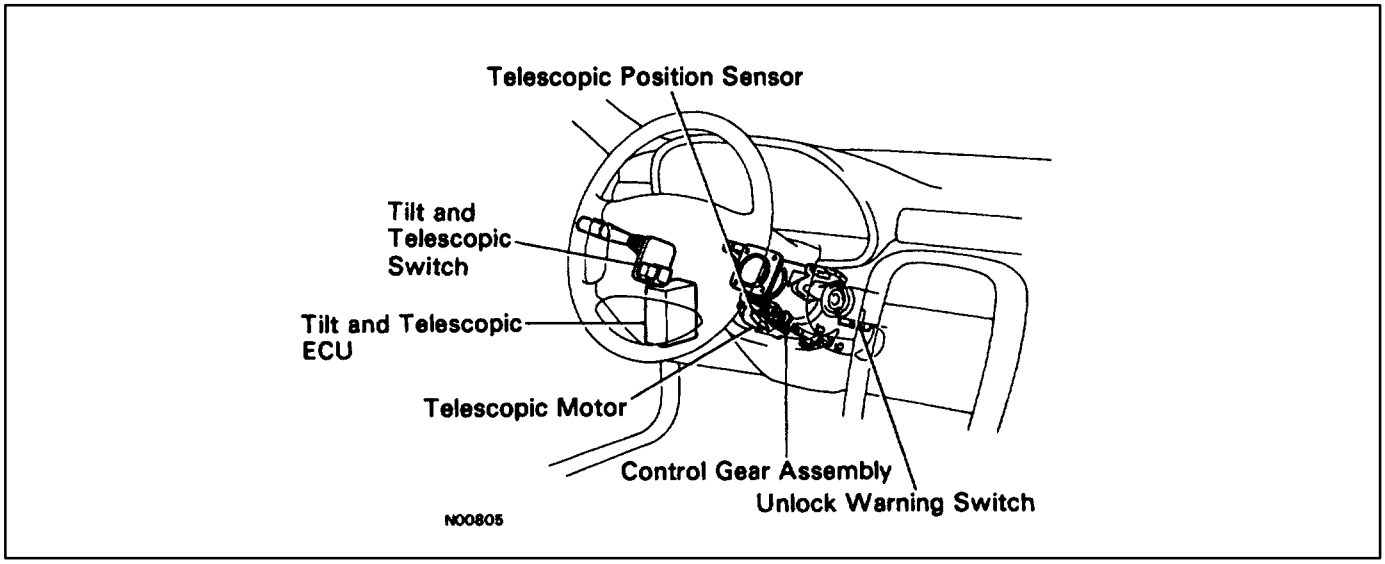

The control gear assembly is composed of the worm wheel, telescopic screw and slider. Rotation of the telescopic motor moves the slider in the direction of the telescopic screw axis. The sliding tube is integrated with the slider and is moved forward and backward by movement of the slider.

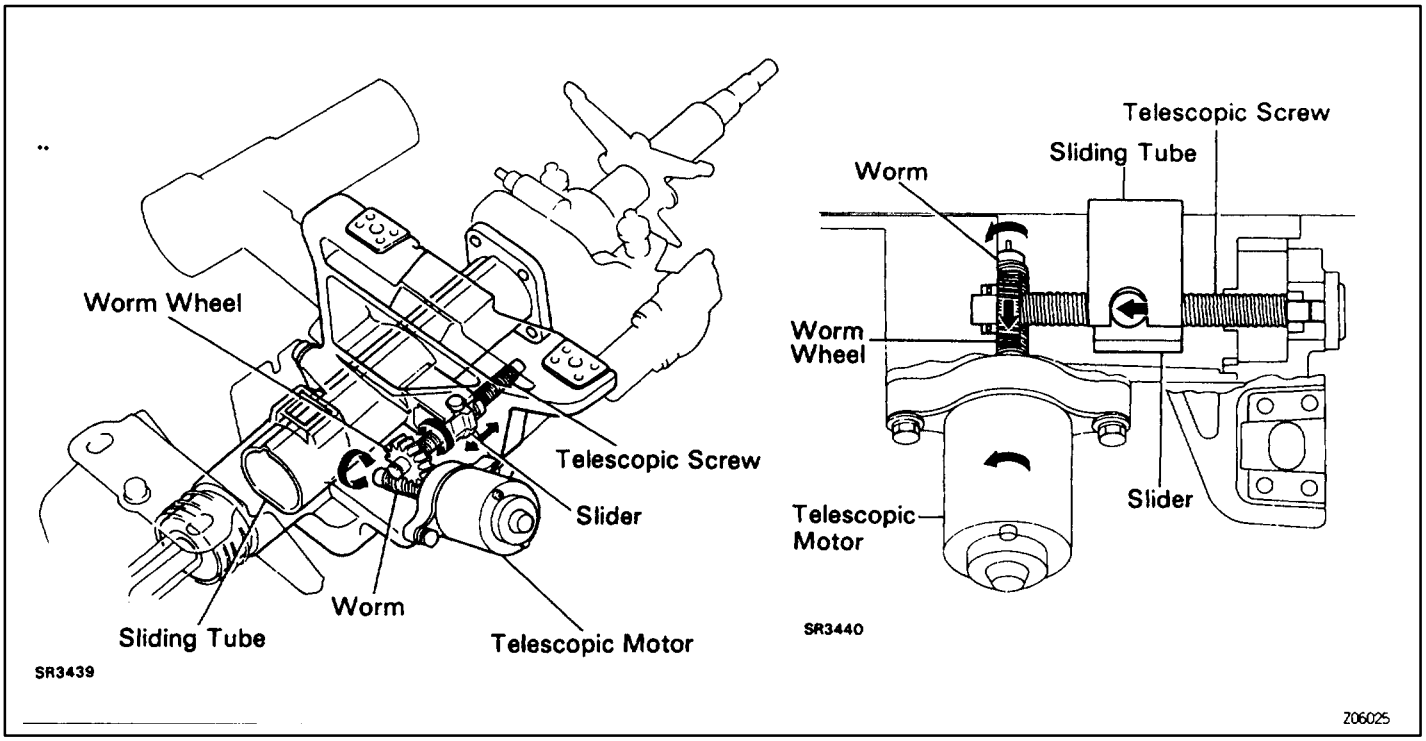

WhereEverybodyKnowsYourName

MANUAL TELESCOPIC OPERATION (SC300)

SR0ED–04

When the telescopic lever is pushed down, the lock bolt is rotated by the gear and the sliding tube is released by the lock wedges, allowing forward and backwards adjustment.
On the other hand, when the telescopic lever is pushed up, the lock wedges press the sliding tube against the breakaway bracket to stop it from moving.

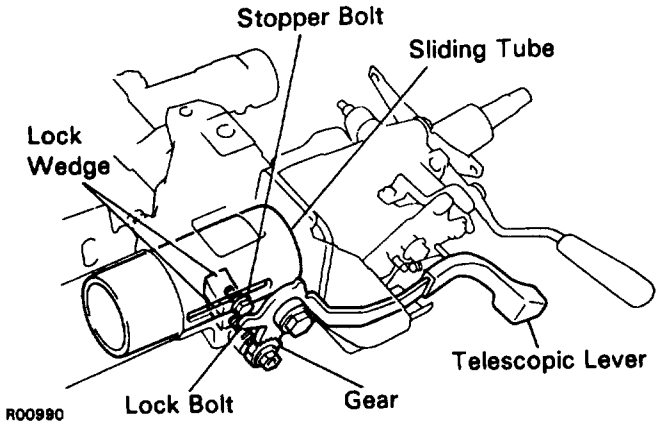

WhereEverybodyKnowsYourName

PREPARATION
SST (SPECIAL SERVICE TOOLS)

SR0EE–04

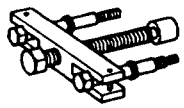	09213–31021	Crankshaft Pulley Puller	Steering wheel (SC400)
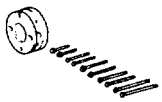	09213–54015	Crankshaft Pulley Holding Tool	
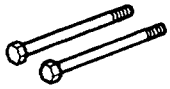	(09214–00030)	Bolt	Tilt steering shaft and No. 2 tilt steering shaft
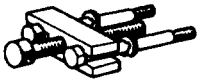	09609–20011	Steering Wheel Puller	(SC300)
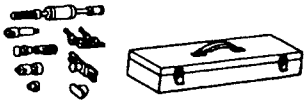	09910–00015	Puller Set	
	(09911–00011)	Puller Clamp	
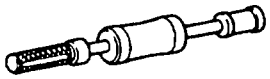	(09912–00010)	Puller Slide Hammer	
	09950–20017	Universal Puller	
	(09956–00010)	Tightening Piece	

SR0EF–03

RECOMMENDED TOOLS

	09042–00010	Torx Socket T30	Steering wheel pad Compression spring
	09905–00012	Snap Ring No. 1 Expander	

EQUIPMENT

SR0EG–02

Torque wrench	

WhereEverybodyKnowsYourName

ASSEMBLY REMOVAL AND INSTALLATION
STEERING COLUMN ASSEMBLY REMOVAL AND INSTALLATION

SR0NP–02

Remove and install the parts as shown.

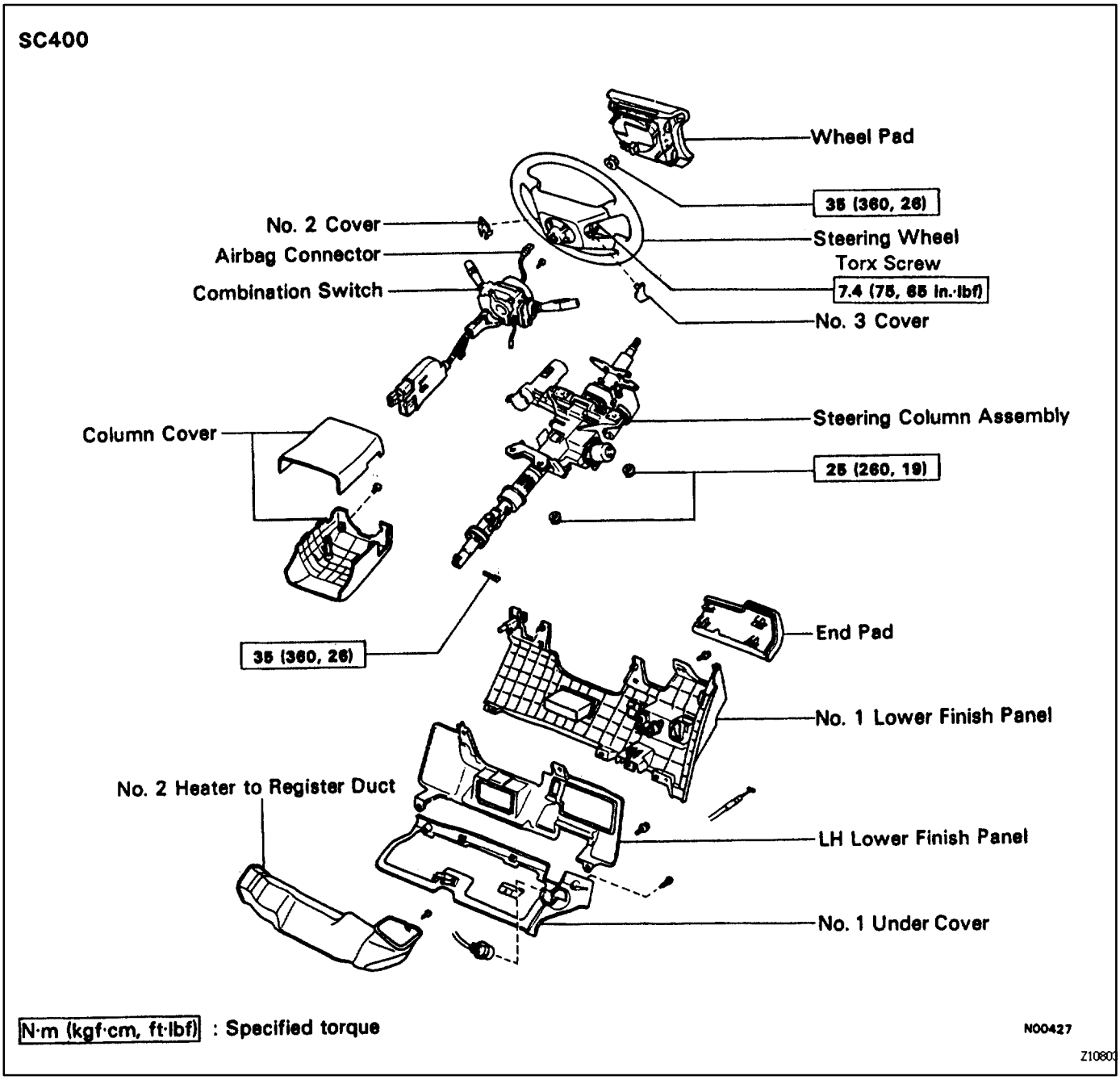

WhereEverybodyKnowsYourName

SC300

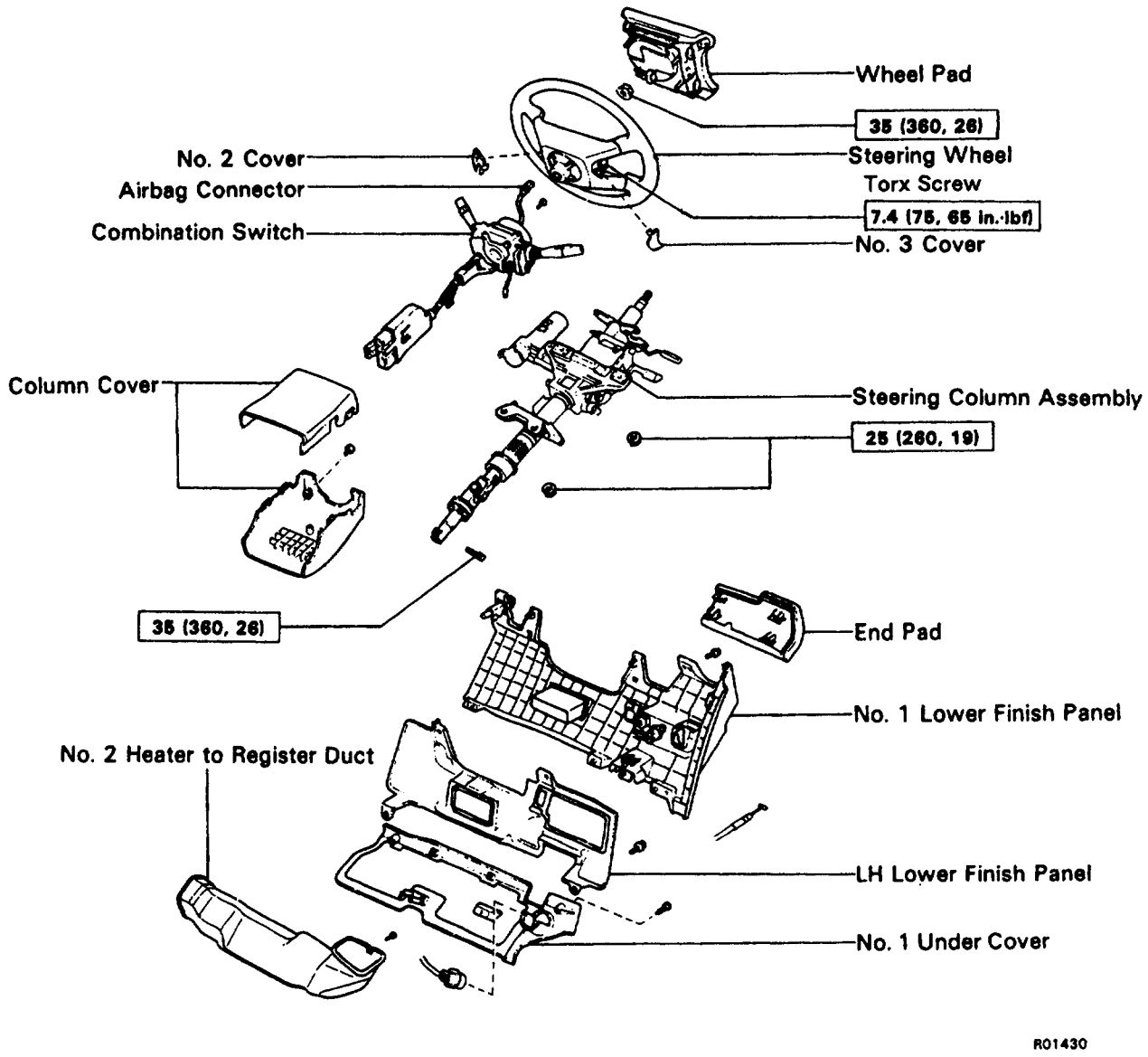

N·m (kgf·cm, ft·lbf) : Specified torque

Z10804

WhereEverybodyKnowsYourName

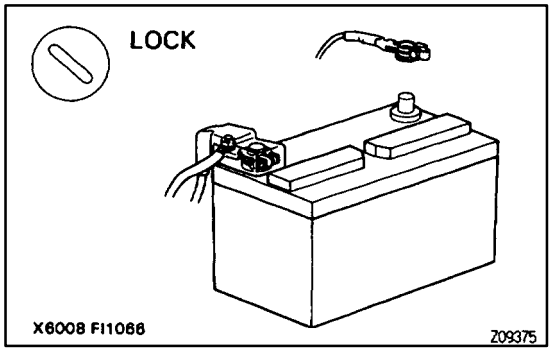

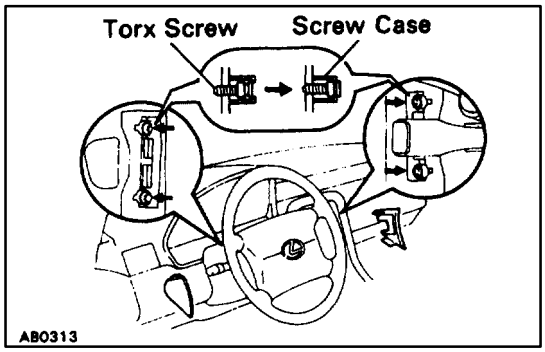

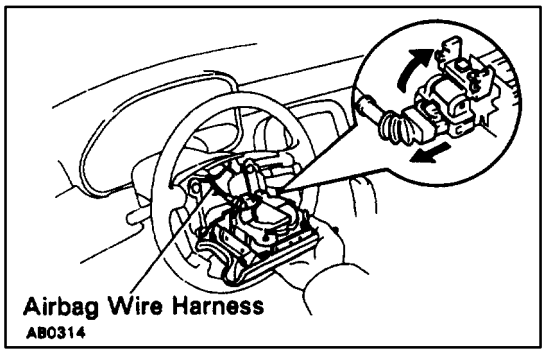

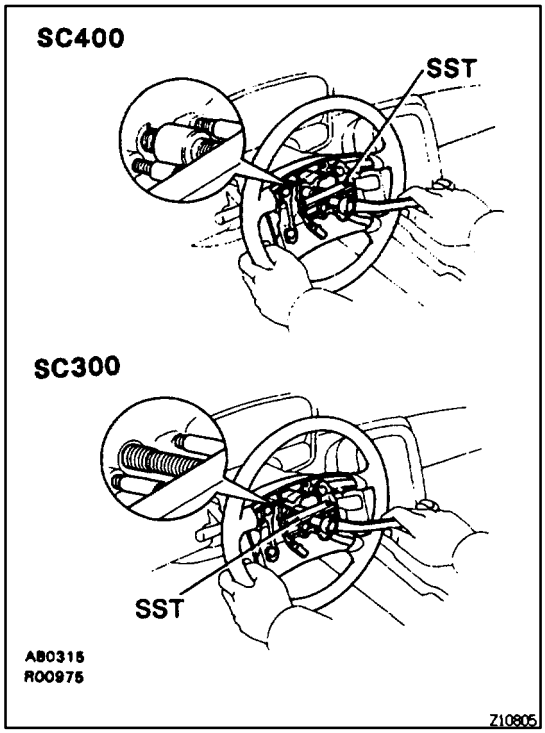

MAIN POINTS OF REMOVAL AND INSTALLATION

NOTICE:

- **If the SRS (Supplemental Restraint System) connector is disconnected with the ignition switch at ON or ACC, diagnostic trouble codes will be recorded.**
- **Never use SRS parts from another vehicle. When replacing parts, replace with new parts.**

1. DISCONNECT NEGATIVE (–) TERMINAL CABLE FROM BATTERY

CAUTION: Work must be started after 90 seconds from the time the ignition switch is turned to the "LOCK" position and the negative (–) terminal cable is disconnected from the battery.

(See RS section)

2. REMOVE STEERING WHEEL PAD

(a) Place the front wheels facing straight ahead.

(b) Remove the No.2 and No.3 covers.

(c) Using a torx wrench, loosen the 4 torx screws.

Torx wrench: T30 (Part No. 09042–00010 or locally manufactured tool)

HINT: Loosen the 4 screws until the groove along the screw circumference catches on the screw case.

(d) Pull the wheel pad out from the steering wheel and disconnect the Airbag connector.

NOTICE: When removing the wheel pad, take care not to pull the Airbag wire harness.

CAUTION:

- **When storing the wheel pad, keep the upper surface of the pad facing upward.**
- **Never disassemble the wheel pad.**

3. REMOVE STEERING WHEEL

(a) Disconnect the connector.

(b) Remove the steering wheel set nut.

(c) Place matchmarks on the steering wheel and main shaft.

(d) Using SST, remove the wheel.

SC400:

SST 09213–31021

SC300:

SST 09609–20011

WhereEverybodyKnowsYourName

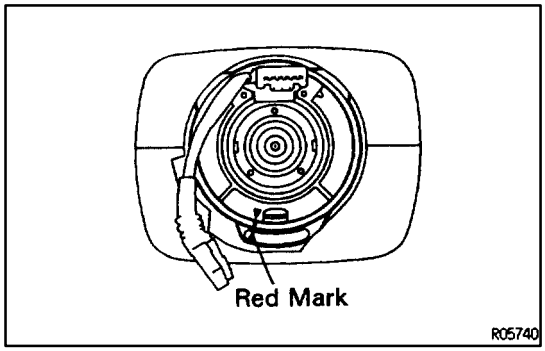

4. CENTER SPIRAL CABLE

(a) Check that the front wheels are facing straight ahead.

(b) Turn the spiral cable counterclockwise by hand until it becomes harder to turn the cable.

(c) Then rotate the spiral cable clockwise about 3 turns to align the red mark.
HINT: The spiral cable will rotate about 3 turns to either left or right of the center.

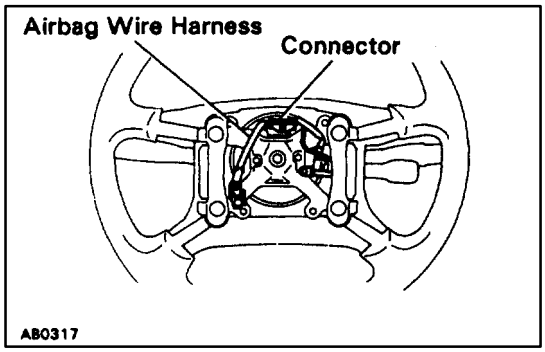

5. INSTALL STEERING WHEEL

(a) Align matchmarks on the steering wheel and main shaft, and install the wheel to the shaft.

(b) Tighten the wheel set nut.
Torque: 35 N·m (360 kgf·cm, 26 ft·lbf)

(c) Connect the connector.

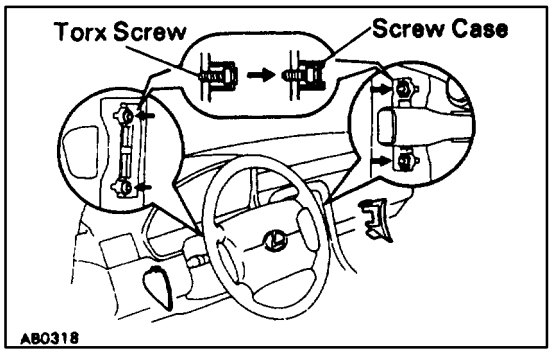

6. INSTALL STEERING WHEEL PAD

(a) Connect the Airbag connector.

(b) Install the pad after confirming that the circumference groove of the torx screws is caught on the screw case.

(c) Using a torx wrench, tighten the 4 torx screws.
Torque: 7.4 N·m (75 kgf·cm, 65 in.·lbf)
NOTICE:
- **Make sure the wheel pad is installed to the specified torque.**
- **If the wheel pad has been dropped, or there are cracks, dents or other defects in the case or connector, replace the wheel pad with a new one.**
- **When installing the wheel pad, take care that the wiring does not interfere with other parts and is not pinched between other parts.**

7. CHECK STEERING WHEEL CENTER POINT

8. CONNECT NEGATIVE (–) TERMINAL CABLE TO BATTERY

WhereEverybodyKnowsYourName

MANUAL TILT AND MANUAL TELESCOPIC STEERING COLUMN

SR0EP–07

(SC300) COMPONENTS

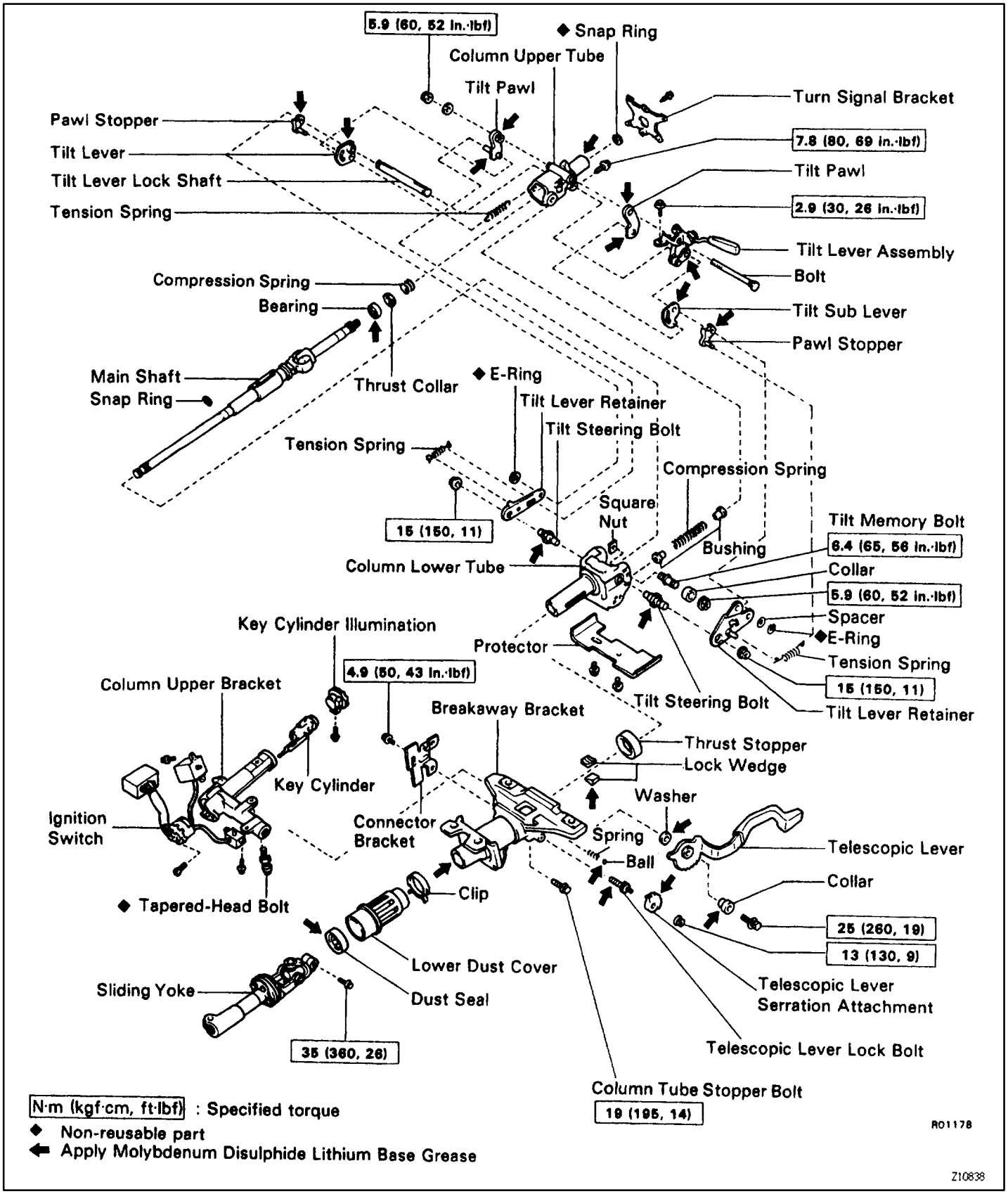

WhereEverybodyKnowsYourName

SECTIONAL VIEW

SR0EQ–02

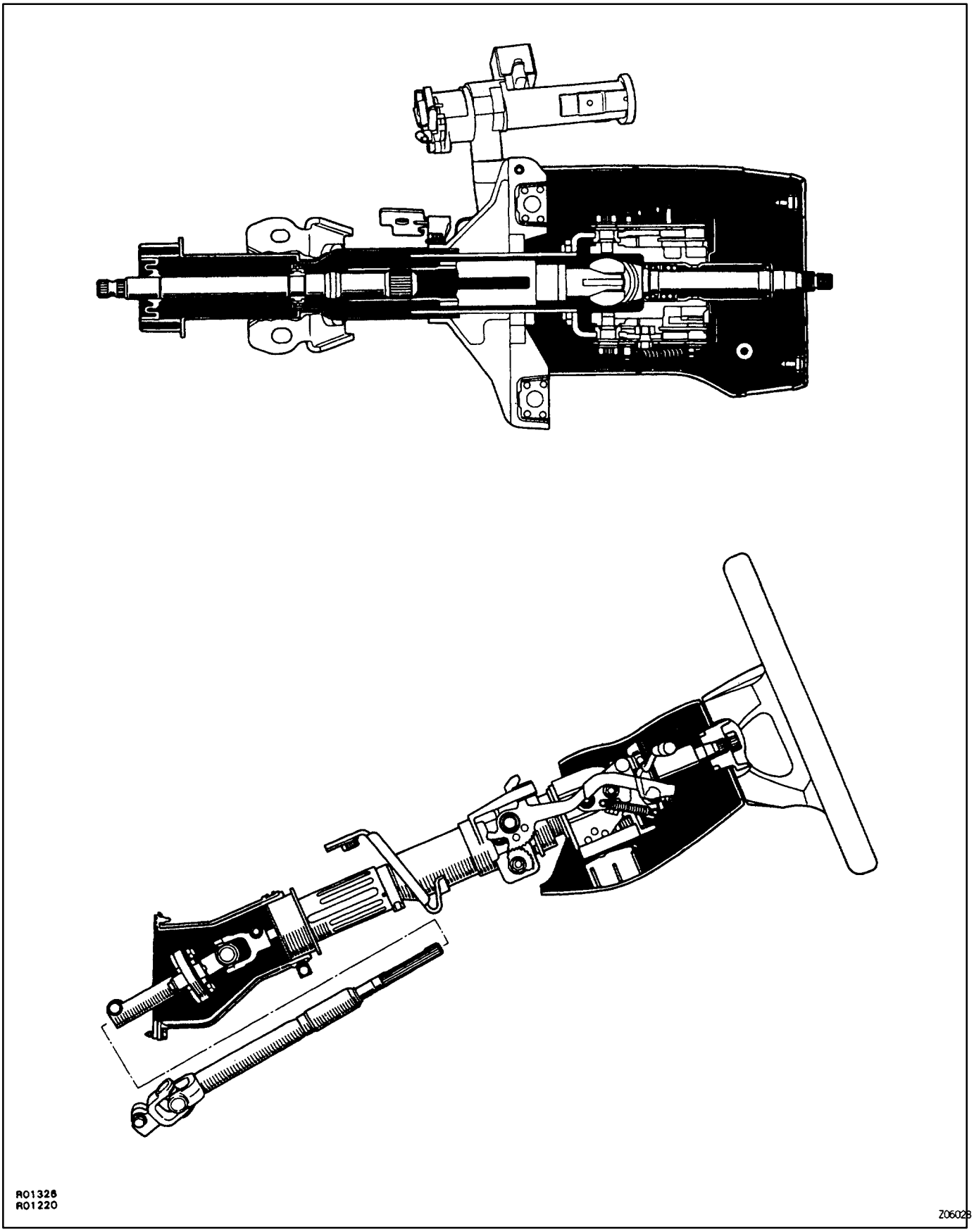

WhereEverybodyKnowsYourName

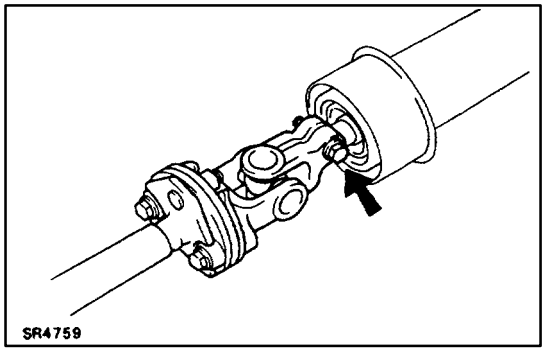

STEERING COLUMN DISASSEMBLY

SR0ER–03

NOTICE: When placing the breakaway bracket in a vise during disassembly or assembly of the steering column, use aluminum, etc. to prevent scratches to the tip of the capsule.

1. REMOVE IGNITION KEY CYLINDER ILLUMINATION

2. REMOVE SLIDING YOKE

Place matchmarks on the sliding yoke and main shaft.

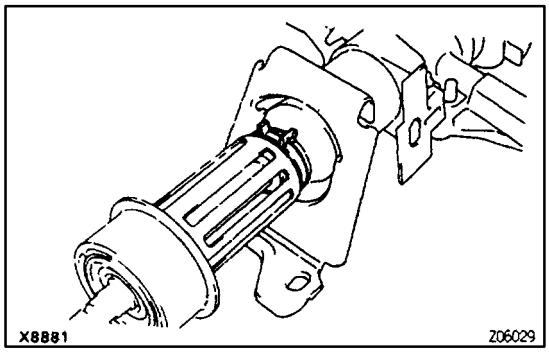

3. REMOVE LOWER DUST COVER

(a) Remove the clip and dust cover.

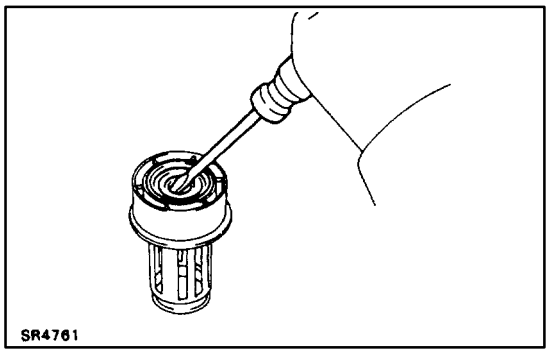

(b) Using a screwdriver, remove the dust seal.

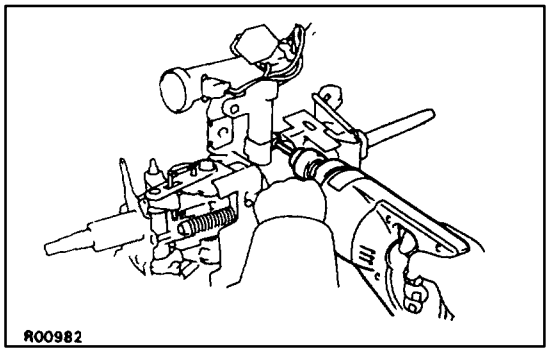

4. REMOVE COLUMN UPPER BRACKET

(a) Using a centering punch, mark the center of the 2 tapered–head bolts.

(b) Using a 4–5 mm (0.16–0.20 in.) drill, drill into the 2 tapered–head bolts.

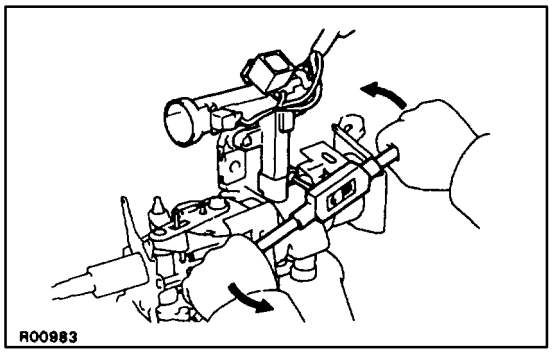

(c) Using a screw extractor, remove the 2 tapered–head bolts.

(d) Remove the bracket and column upper clamp.

WhereEverybodyKnowsYourName

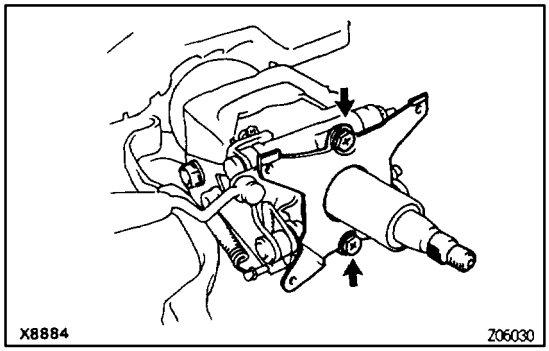

5. REMOVE TURN SIGNAL BRACKET

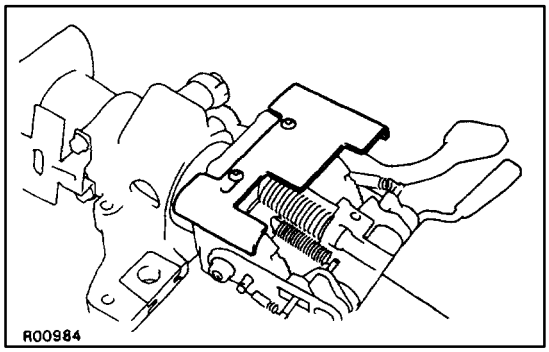

6. REMOVE PROTECTOR

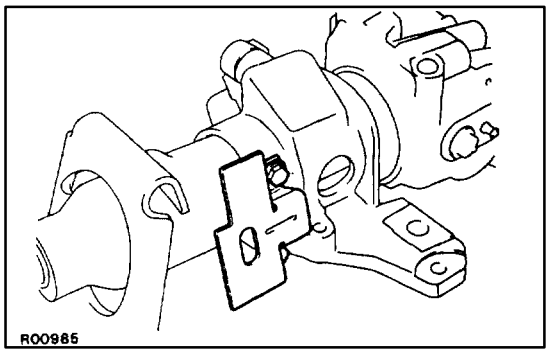

7. REMOVE CONNECTOR BRACKET

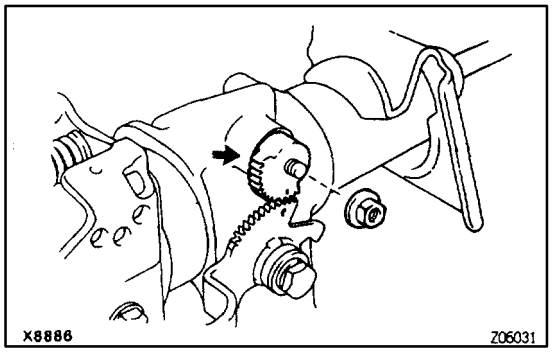

8. REMOVE TELESCOPIC LEVER SERRATION ATTACHMENT

Remove the nut and the serration attachment.

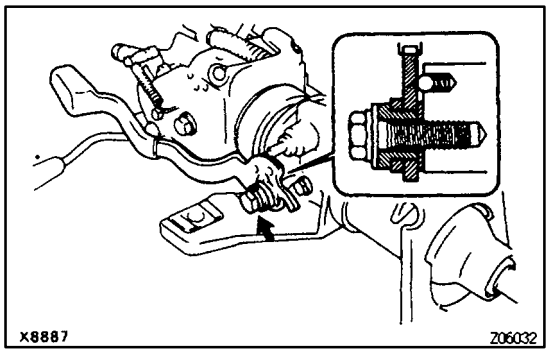

9. REMOVE TELESCOPIC LEVER

(a) Remove the bolt, collar, lever and washer.

(b) Remove the ball and compression spring.

WhereEverybodyKnowsYourName

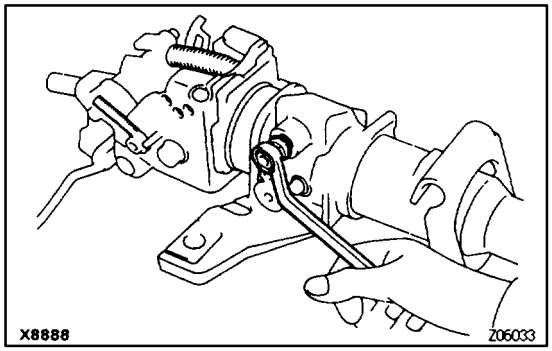

10. REMOVE TELESCOPIC LEVER LOCK BOLT

Install a double nut on the lock bolt, then remove the lock bolt.

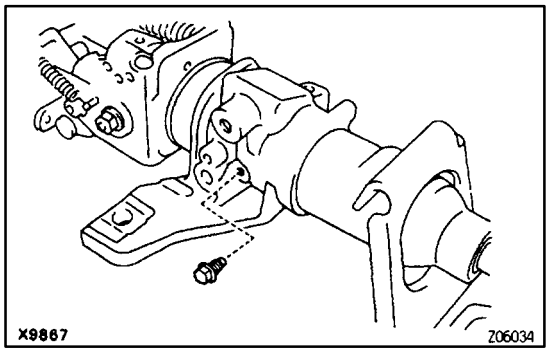

11. REMOVE BREAKAWAY BRACKET

(a) Remove the steering column tube stopper bolt.

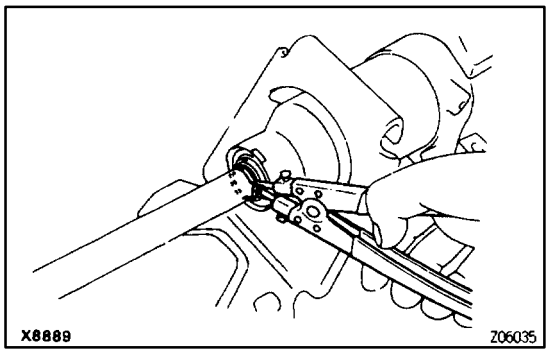

(b) Using snap ring pliers, remove the snap ring from the main shaft.

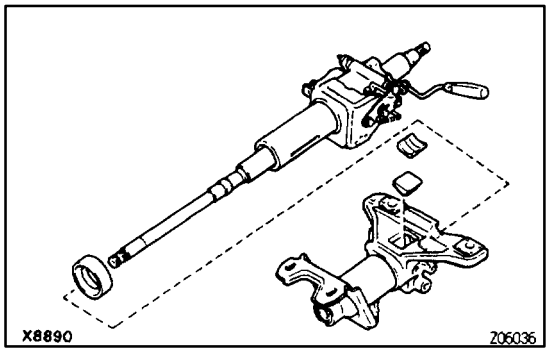

(c) Remove the breakaway bracket from the main shaft.
Be careful the spline part of the main shaft does not come loose.

12. REMOVE 2 LOCK WEDGES FROM BREAKAWAY BRACKET

13. REMOVE STEERING SHAFT THRUST STOPPER

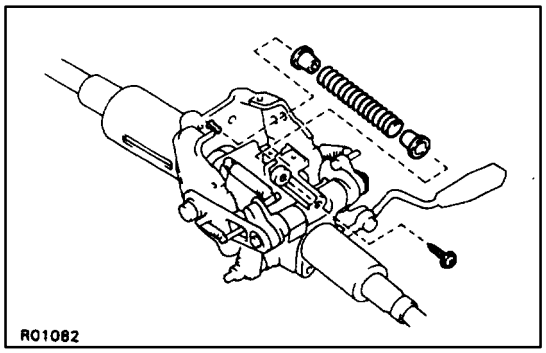

14. REMOVE COMPRESSION SPRING

(a) Using a torx wrench, remove the bolt and spring.
Torx wrench: T30 (Part No. 09042–00010 or locally manufactured tool)

(b) Remove the 2 bushings from the spring.

WhereEverybodyKnowsYourName

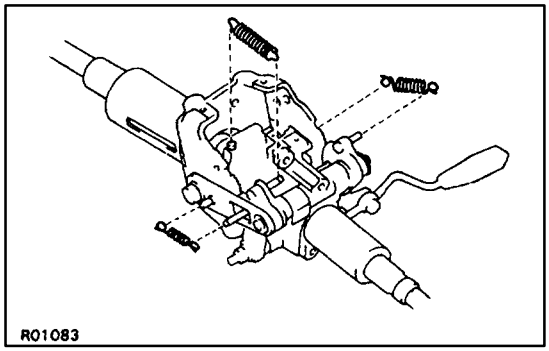

15. REMOVE 3 TENSION SPRINGS

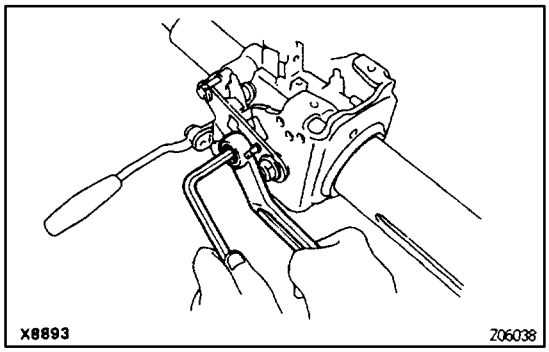

16. REMOVE TILT LEVER RETAINERS

(a) Using a hexagon wrench to hold the tilt memory bolt, remove the nut.

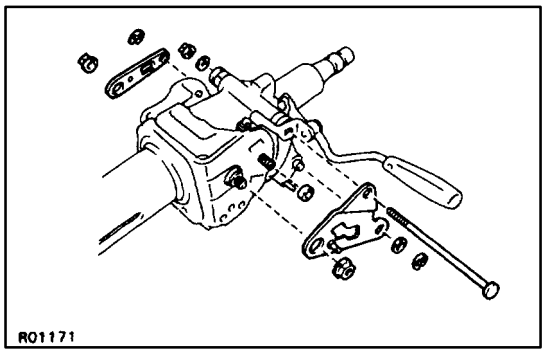

(b) Remove the nut and washer.
(c) Pull out the bolt.
(d) Remove the 2 E–rings and the spacer from the tilt lever lock shaft.
(e) Remove the 2 nuts from the tilt steering bolts.
(f) Remove the 2 tilt lever retainers.
(g) Remove the collar from the tilt memory bolt.

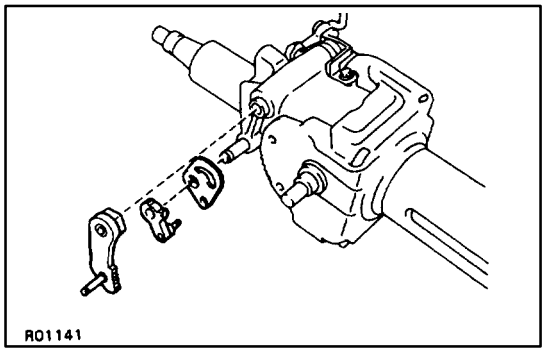

17. REMOVE RH TILT PAWL, PAWL STOPPER AND TILT LEVER

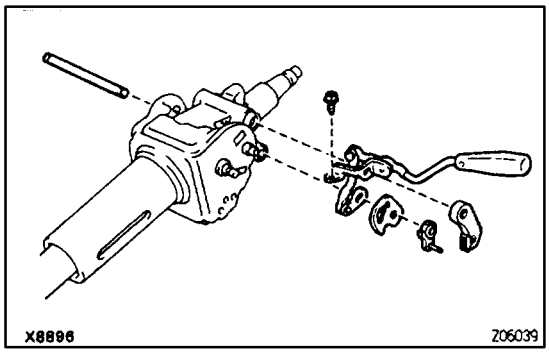

18. REMOVE LH TILT PAWL, PAWL STOPPER, TILT SUB LEVER, TILT LEVER ASSEMBLY AND TILT LEVER LOCK SHAFT

WhereEverybodyKnowsYourName

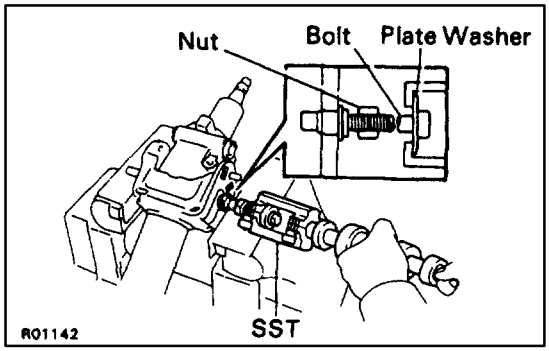

19. REMOVE UPPER COLUMN TUBE

(a) Set SST, the nut (10 mm diameter, 1.25 mm pitch), plate washer (36 mm outer diameter) and bolt (10 mm diameter, 1.25 mm pitch, 50 mm length), as shown.
And then remove the 2 tilt steering bolts.
SST 09910–00015 (09911–00011, 09912–00010)
(Reference)
Nut 90170–10004
Plate washer 90201–10201
Bolt 91111–51050

(b) Remove the upper column tube from the lower column tube.

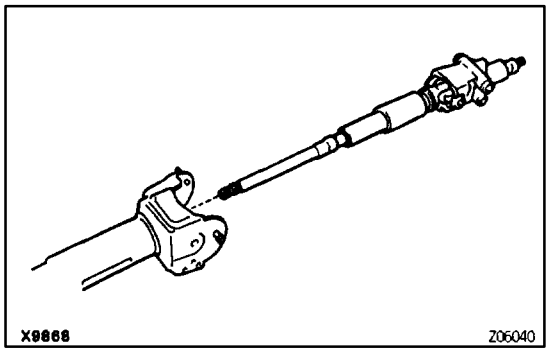

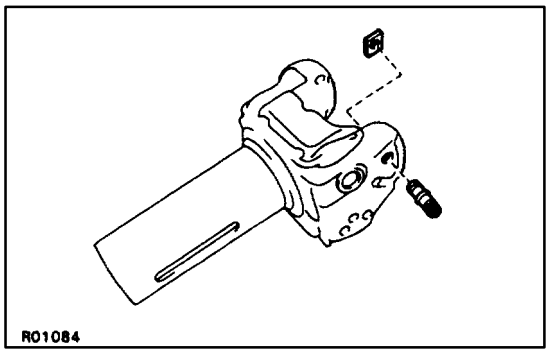

20. REMOVE TILT MEMORY BOLT

Using a hexagon wrench, remove the tilt memory bolt and square nut.

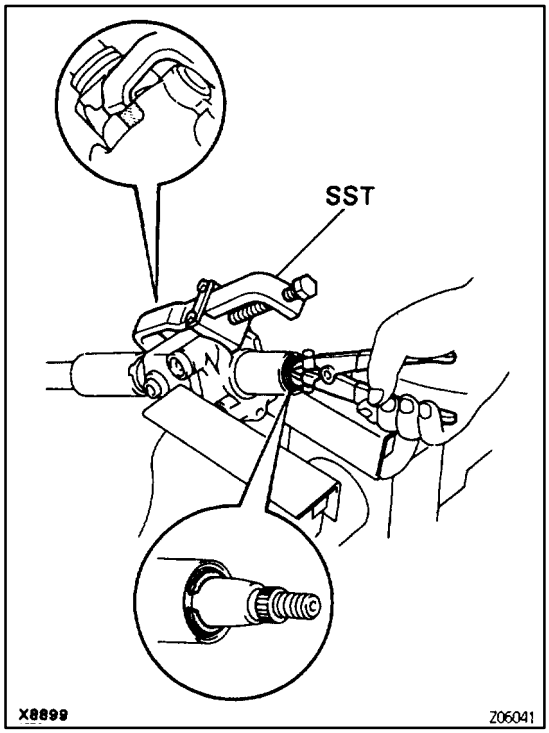

21. REMOVE MAIN SHAFT ASSEMBLY

(a) Secure the column upper tube in a vise.
NOTICE: Do not tighten the vise too tight.

(b) Using SST, compress the compression spring.
SST 09950–20017 (09956–00010)

(c) Using snap ring pliers, remove the snap ring.

WhereEverybodyKnowsYourName

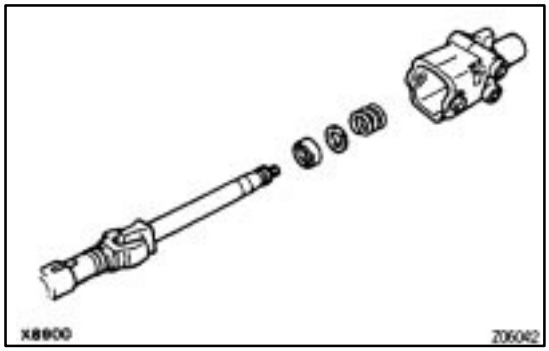

(b) Remove the main shaft from the column tube.
(c) Remove the spring, thrust collar and bearing.

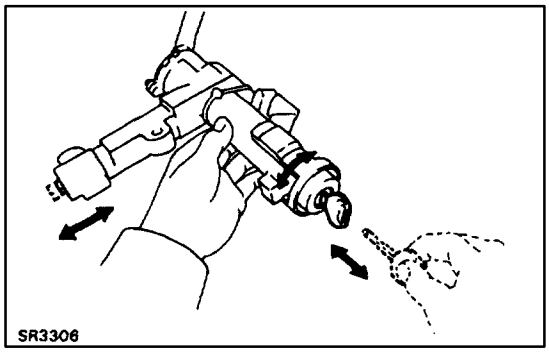

STEERING COLUMN INSPECTION AND REPLACEMENT

SR0ES–03

1. INSPECT KEY CYLINDER

Check that the steering lock mechanism operates properly.

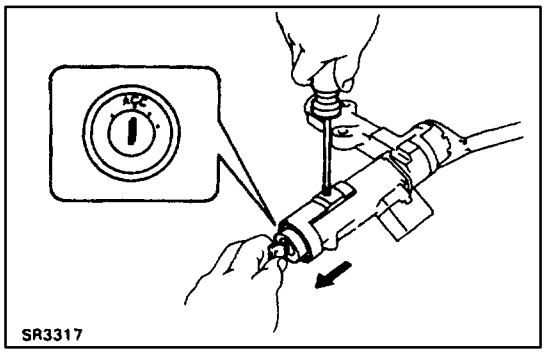

2. IF NECESSARY, REPLACE KEY CYLINDER

(a) Place the ignition key at the ACC position.
(b) Push down the stop pin with a thin rod, and pull out the key cylinder.
(c) Install a new key cylinder.
HINT: Make sure the ignition key is at the ACC position.

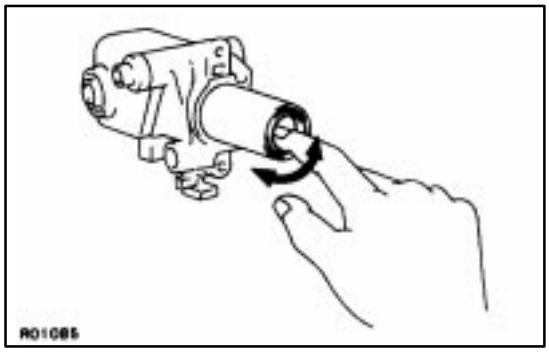

3. INSPECT UPPER BEARING

Check the upper bearing rotation condition and check for abnormal noise.
If the bearing is worn or damaged, replace the column upper tube.

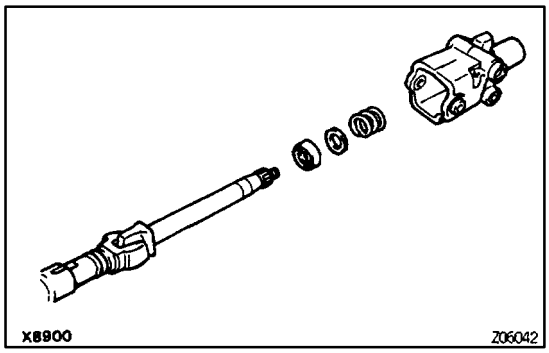

STEERING COLUMN ASSEMBLY

SR0ET–04

1. APPLY MOLYBDENUM DISULPHIDE LITHIUM BASE GREASE (See page SR–12)

2. INSTALL MAIN SHAFT

(a) Install the bearing, thrust collar and spring to the main shaft.
(b) Install the main shaft into the upper column tube.

WhereEverybodyKnowsYourName

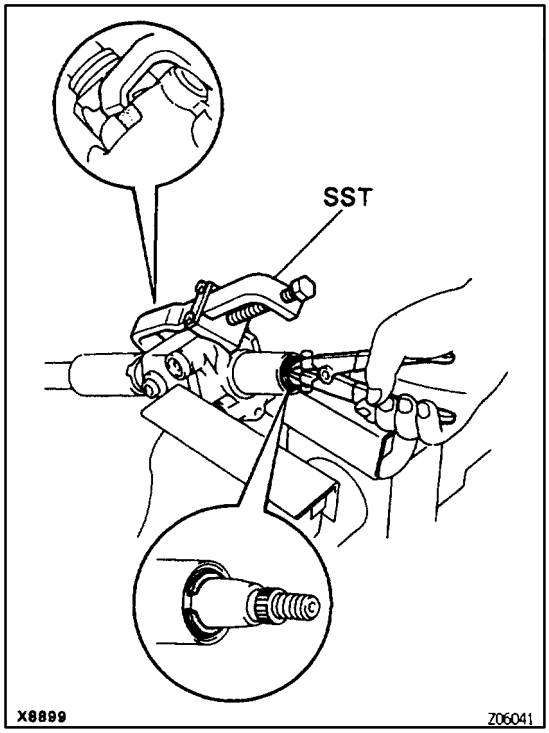

(c) Using SST to compress the compression spring.
SST 09950–20017 (09956–00010)

(d) Using snap ring pliers, install a new snap ring.

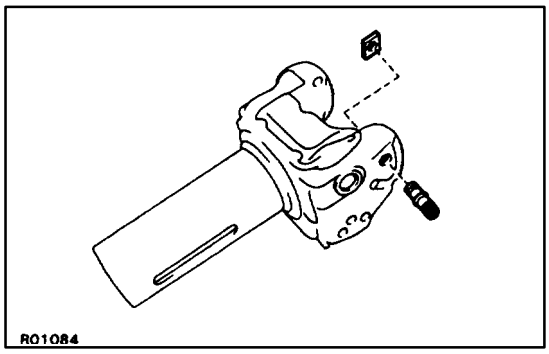

3. INSTALL TILT MEMORY BOLT

(a) Install the square nut and tilt memory bolt.

(b) Using a hexagon wrench, torque the tilt memory bolt.
Torque: 6.4 N·m (65 kgf·cm, 56 in.·lbf)

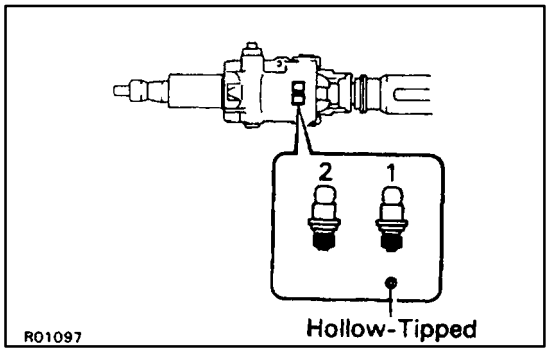

4. SELECT TILT STEERING BOLTS

Select the bolt with the plain thread end when the upper column tube mark is 2, and the bolt with the hollow–tipped thread end when the mark is 1.

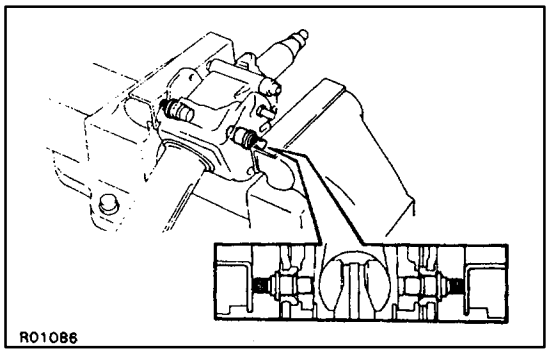

5. INSTALL MAIN SHAFT WITH UPPER COLUMN TUBE

(a) Install the main shaft with the upper column tube into the lower column tube.

(b) Using a vise, press in the 2 tilt steering bolts.
HINT: Make sure the upper tube turns smoothly.

WhereEverybodyKnowsYourName

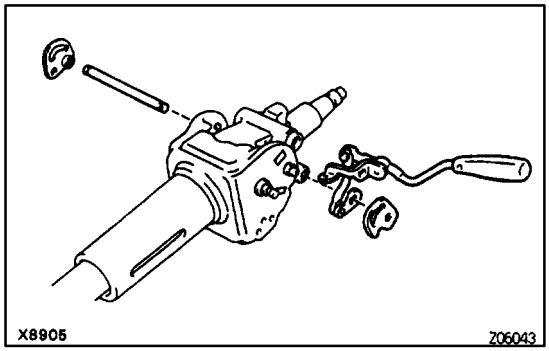

6. INSTALL TILT LEVER LOCK SHAFT, TILT LEVER ASSEMBLY, TILT SUB LEVER AND TILT LEVER

(a) Install the tilt lever lock shaft into the upper column tube.
(b) Install the tilt lever assembly.
(c) Install the tilt lever and tilt sub lever.

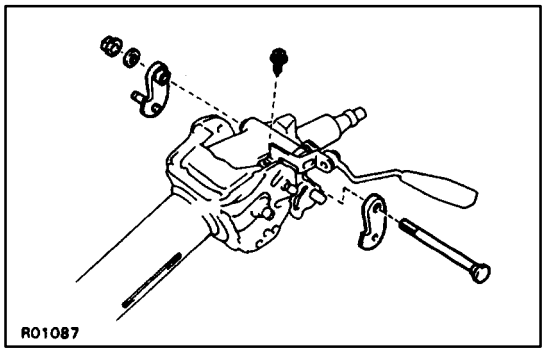

7. INSTALL TILT PAWLS

(a) Install the 2 tilt pawls to the upper column tube.
HINT: Install the pawl pin into the long hole of the tilt lever and tilt sub lever.
(b) Install the bolt through the tilt pawls and tilt lever assembly.
(c) Temporarily install the washer and nut.
(d) Install and torque the tilt lever assembly installation bolt.
Torque: 2.9 N·m (30 kgf·cm, 26 in.·lbf)

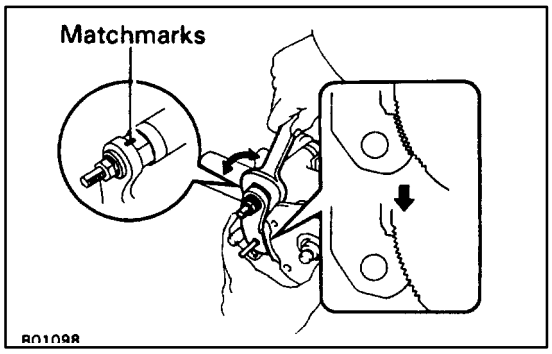

8. ENGAGE AND ADJUST TILT PAWL

(a) Engage the tilt sub lever side pawl to the center of the ratchet.
(b) While turning the tilt lever side collar, completely engage the tilt lever side pawl to the ratchet.
(c) Place matchmarks on the pawl and collar.

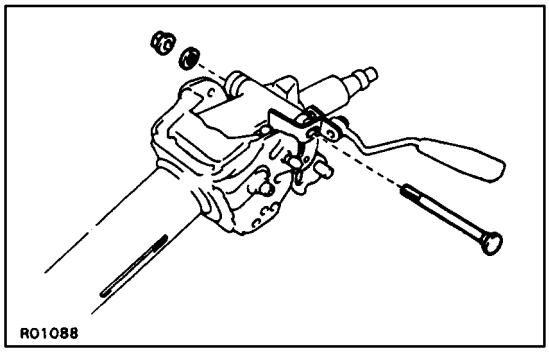

(d) Remove the nut and washer.
(e) Pull out the bolt.

WhereEverybodyKnowsYourName

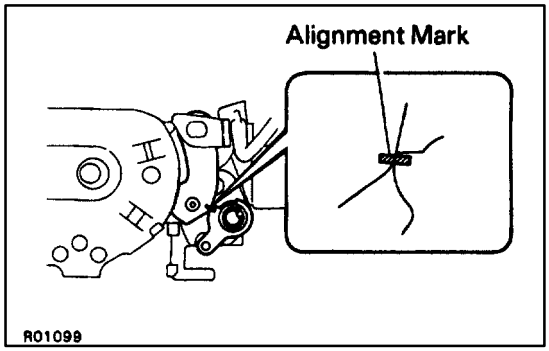

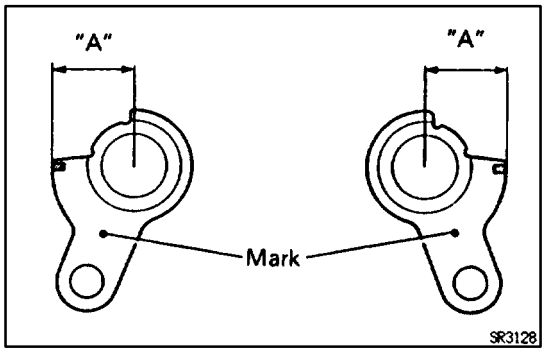

9. SELECT 2 PAWL STOPPERS

(a) With the tilt pawl and ratchet engaged, install the 2 pawl stoppers.

(b) Check that the alignment marks on the stopper and pawl align when the stopper is lightly rotated to the pawl side.

(c) If the alignment marks do not align, select pawl stoppers according to the following table.

Tilt lever side	Tilt sub lever side	Dimension "A" mm (in.)
1	A	12.68 – 12.74 (0.4992 – 0.5016)
2	B	12.61–12.67 (0.4965 – 0.4988)
3	C	12.54 – 12.60 (0.4937 – 0.4961)
4	D	12.47 – 12.53 (0.4909– 0.4933)
5	E	12.40 – 12.46 (0.4882 – 0.4906)
6	F	12.33 – 12.39 (0.4854 – 0.4878)
7	G	12.26 – 12.32 (0.4827 – 0.4850)

(d) After selecting the stoppers, check that on both sides the pawl and ratchet are fully engaged.

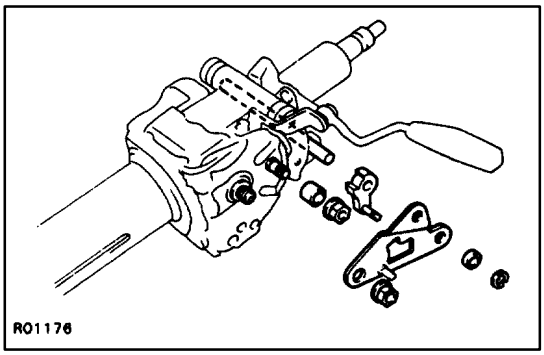

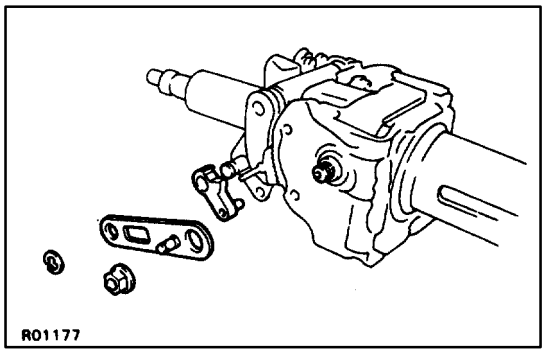

10. INSTALL 2 PAWL STOPPERS AND 2 TILT LEVER RETAINERS

(a) Install the tilt sub lever side pawl stopper and retainer.

(b) Install the spacer and new E–ring.

(c) Install the nut to the tilt steering bolt.
Torque: 15 N·m (150 kgf·cm, 11 ft·lbf)

(d) Install the collar to the tilt memory bolt.

(e) Install the nut to the tilt memory bolt.
Torque: 5.9 N·m (60 kgf·cm, 52 in.·lbf)

(f) Install the tilt lever side pawl stopper and tilt lever retainer.

(g) Install the E–ring.

(h) Install and torque the nut.
Torque: 15 N·m (150 kgf·cm, 11 ft·lbf)

WhereEverybodyKnowsYourName

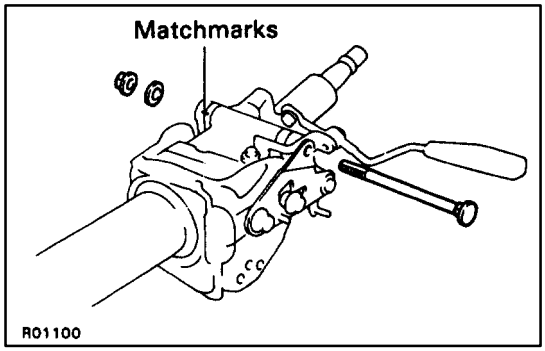

11. INSTALL BOLT

(a) Tighten the nut with the matchmarks on the pawl and collar are aligned.
Torque: 5.9 N·m (60 kgf·cm, 52 in.·lbf)

(b) Check that the pawls rotate smoothly.

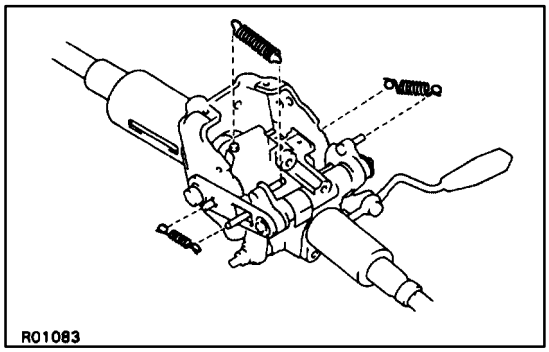

12. INSTALL 3 TENSION SPRINGS

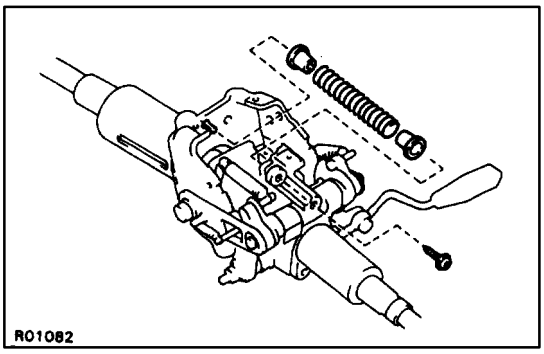

13. INSTALL COMPRESSION SPRING

(a) Install the 2 bushings to the spring.

(b) Install the spring and bolt.

(c) Using a torx wrench, tighten the bolt.
Torx wrench: T30 (Part No. 09042–00010 or locally manufactured tool)
Torque: 7.8 N·m (80 kgf·cm, 69 in.·lbf)

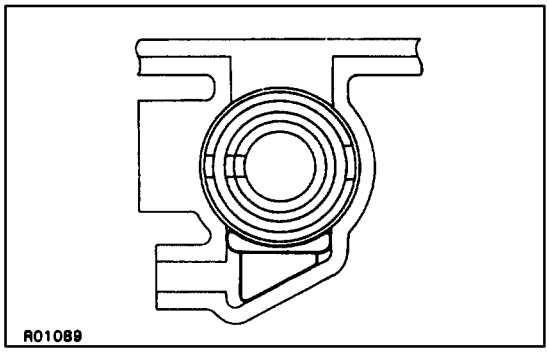

14. INSTALL 2 LOCK WEDGES TO BREAKAWAY BRACKET
NOTICE: Make sure that no grease gets on the contact surface between the lock wedge and the lower column tube.

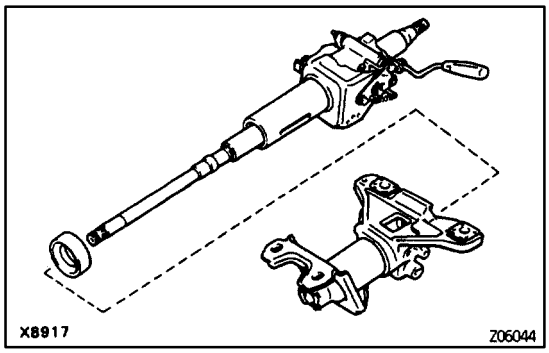

15. INSTALL BREAKAWAY BRACKET

(a) Install the steering shaft thrust stopper.

(b) Install the breakaway bracket to the main shaft.
Be careful that the spline part of the main shaft does not separate.

WhereEverybodyKnowsYourName

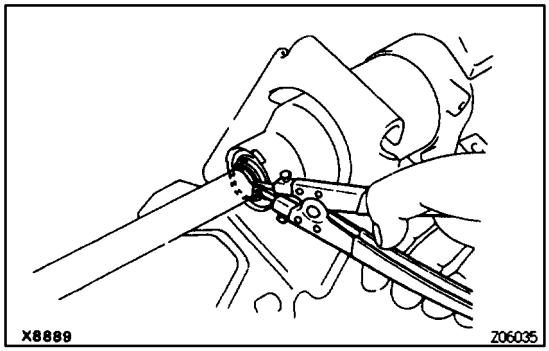

(c) Using snap ring pliers, install the snap ring to the main shaft.

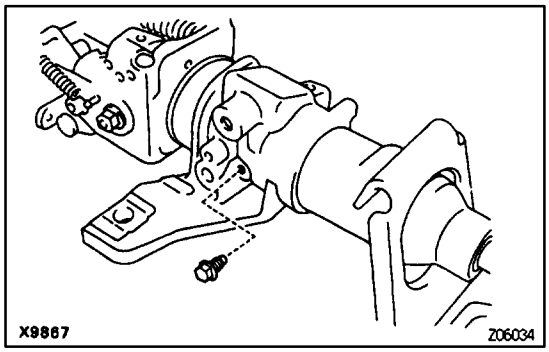

(d) Install the steering column tube stopper bolt.
Torque: 19 N·m (195 kgf·cm, 14 ft·lbf)

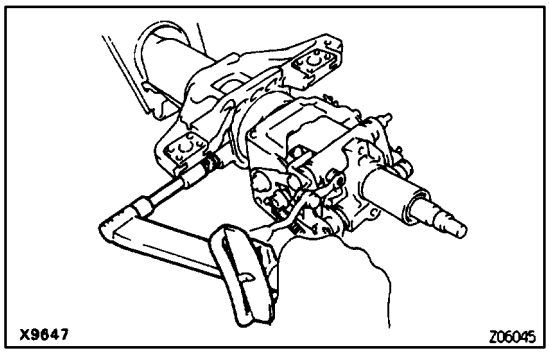

16. INSTALL TELESCOPIC LEVER LOCK BOLT

(a) Pull the steering column tube away from the breakaway bracket and facing the body installation surface of the breakaway bracket upward, temporarily install the lock bolt.

(b) Install a double nut on the lock bolt.
Torque to 16 N·m (160 kgf·cm, 12 ft·lbf), loosen once, then torque again to 7.4 N·m (75 kgf·cm, 65 in.·lbf).

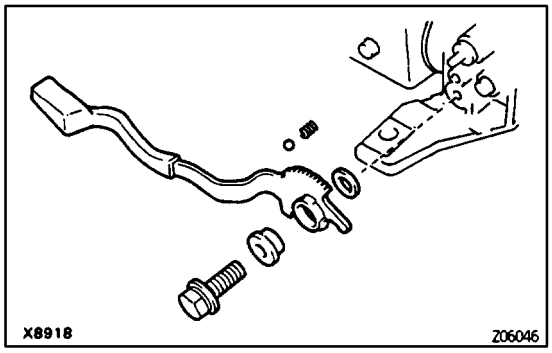

17. INSTALL TELESCOPIC LEVER

(a) Install the compression spring and ball.

(b) Install the washer, lever, collar and bolt.
Torque: 25 N·m (260 kgf·cm, 19 ft·lbf)

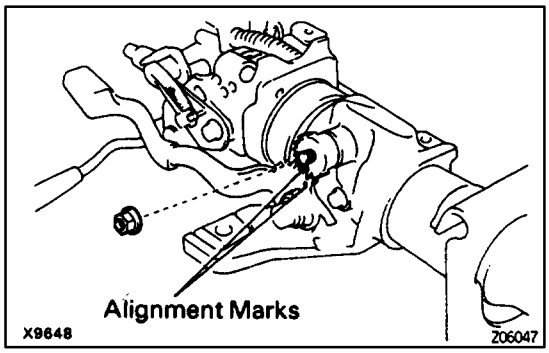

18. INSTALL TELESCOPIC LEVER SERRATION ATTACHMENT

(a) Rotate the telescopic lever until it touches the breakaway bracket.

(b) Install the serration attachment so that the alignment marks on the telescopic lever and the serration attachment align.
Torque: 13 N·m (130 kgf·cm, 9 ft·lbf)

WhereEverybodyKnowsYourName

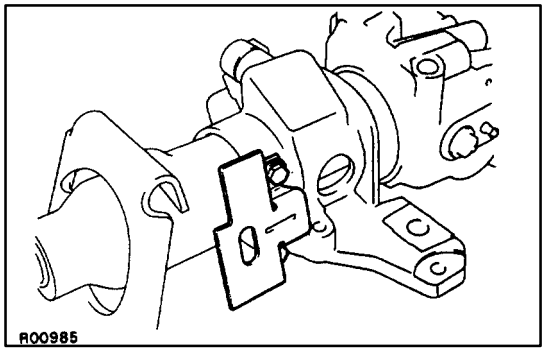

19. INSTALL CONNECTOR BRACKET

Torque: 4.9 N·m (50 kgf·cm, 43 in.·lbf)

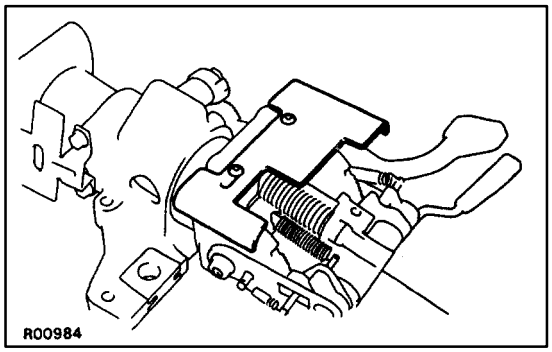

20. INSTALL PROTECTOR

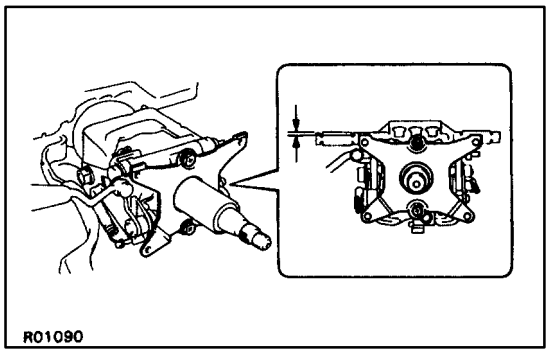

21. INSTALL TURN SIGNAL BRACKET

Install the turn signal bracket so that its upper surface is parallel with upper surface of the capsule of the breakaway bracket.

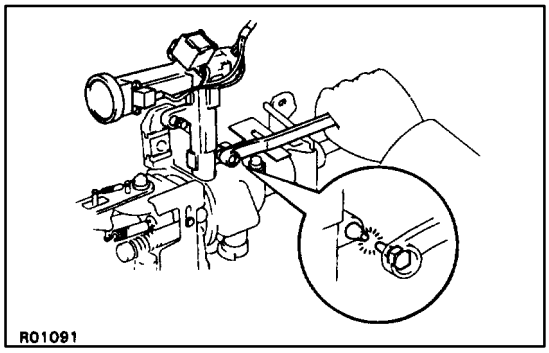

22. INSTALL UPPER BRACKET

(a) Install the upper bracket with 2 new tapered–head bolts.

(b) Tighten the 2 tapered–head bolts until the bolt heads break off.

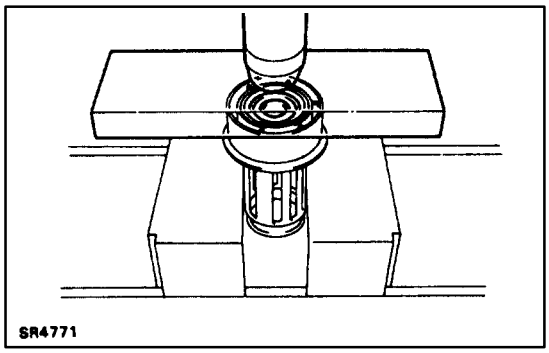

23. INSTALL LOWER DUST COVER

(a) Using a press, install the dust seal.

WhereEverybodyKnowsYourName

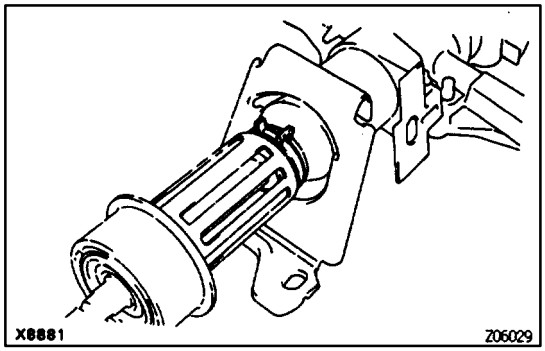

(b) Install the lower dust cover and clip.

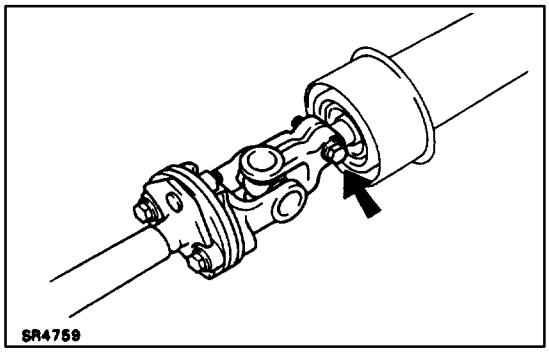

24. INSTALL SLIDING YOKE

Align matchmarks and install the sliding yoke to the main shaft.

Torque: 35 N·m (360 kgf·cm, 26 ft·lbf)

25. INSTALL IGNITION KEY CYLINDER ILLUMINATION

26. CHECK TILT OPERATION

(a) Check that there is not axial play at the end of the main shaft.

(b) With the main shaft in the neutral position, push the tilt lever and check that the main shaft rises to the uppermost position.

(c) Lower the main shaft, and check that it locks in the uppermost position.

27. CHECK TELESCOPIC OPERATION

(a) Check that there is no axial play when the lever is turned fully counterclockwise.

(b) Check that the main shaft moves smoothly when the lever is turned clockwise.

WhereEverybodyKnowsYourName

POWER TILT AND POWER TELESCOPIC STEERING COLUMN COMPONENTS

SR0EJ-03

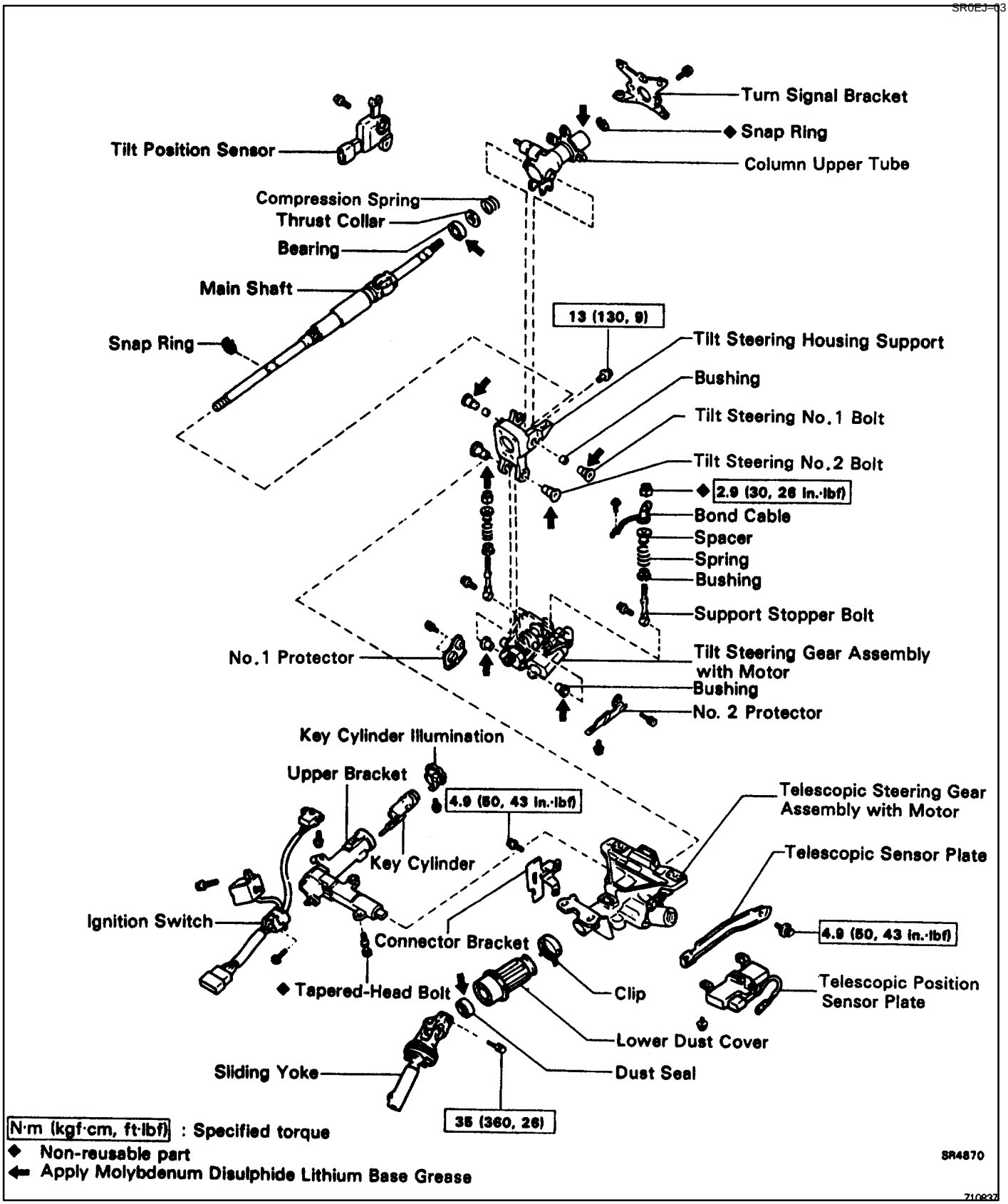

WhereEverybodyKnowsYourName

SECTIONAL VIEW

SR0EK–02

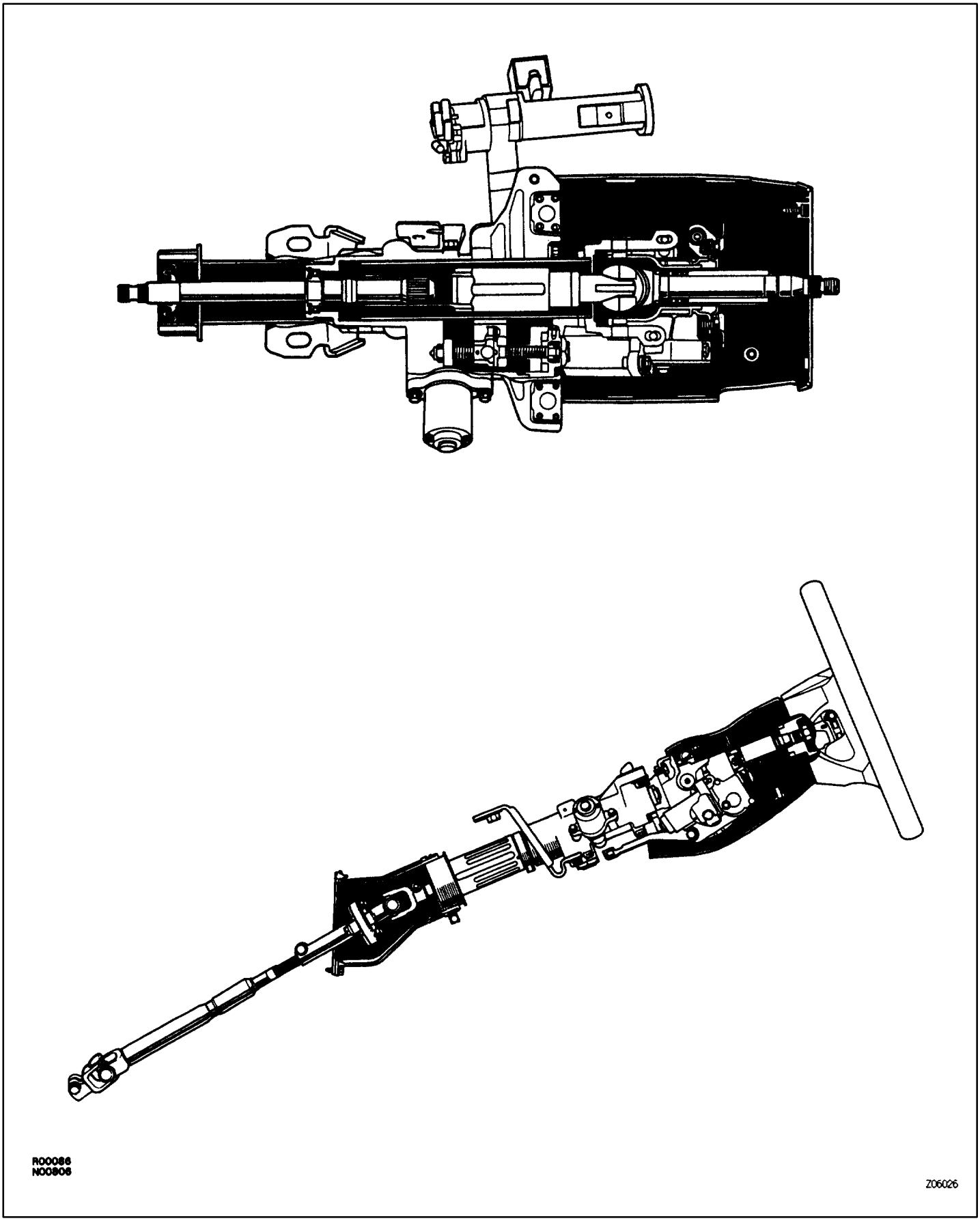

WhereEverybodyKnowsYourName

STEERING COLUMN DISASSEMBLY

SR0EL–04

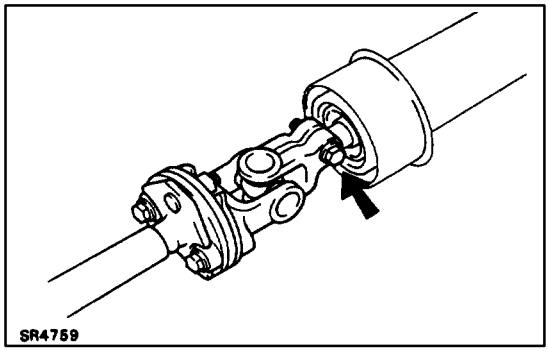

NOTICE: When placing the breakaway bracket in a vise during disassembly or assembly of the steering column, use aluminum, etc. to prevent scratches to the tip of the capsule.

1. REMOVE IGNITION KEY CYLINDER ILLUMINATION

2. REMOVE SLIDING YOKE

Place matchmarks on the sliding yoke and main shaft.

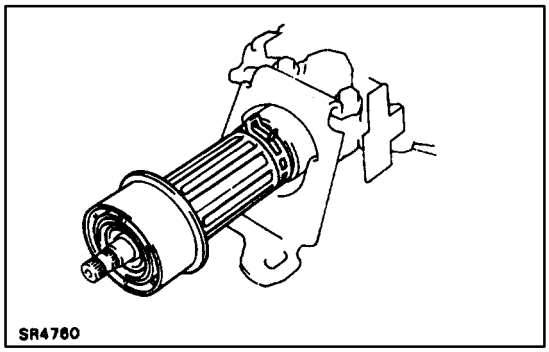

3. REMOVE LOWER DUST COVER

(a) Remove the clip and dust cover.

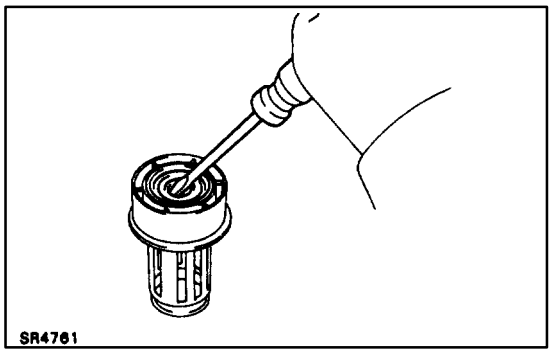

(b) Using a screwdriver, remove the dust seal.

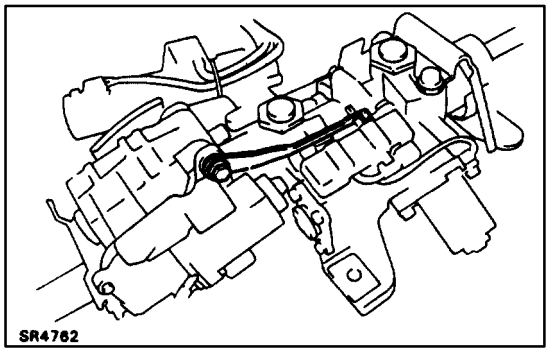

4. REMOVE TELESCOPIC POSITION SENSOR PLATE

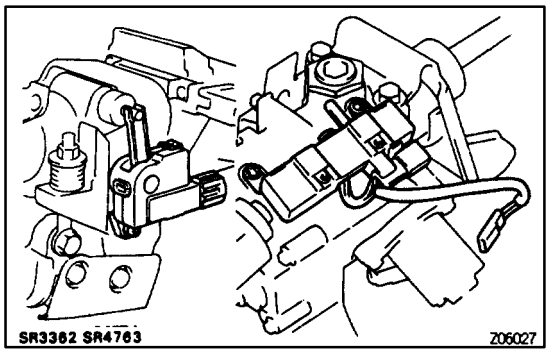

5. REMOVE TILT AND TELESCOPIC POSITION SENSORS

WhereEverybodyKnowsYourName

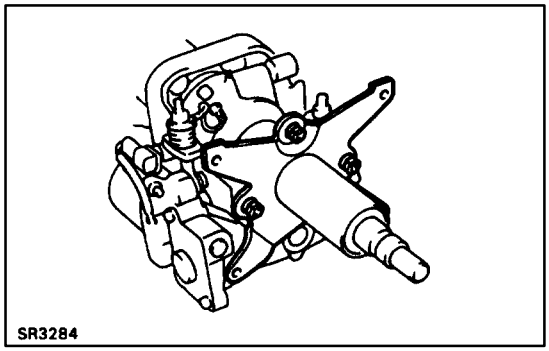

6. REMOVE TURN SIGNAL BRACKET

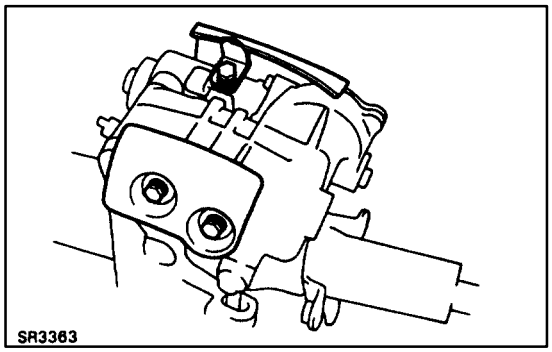

7. REMOVE NO. 1 PROTECTOR AND NO. 2 PROTECTOR

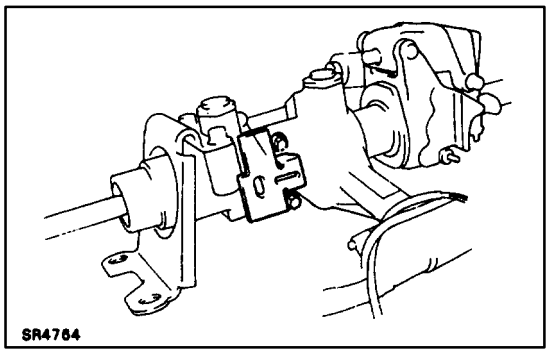

8. REMOVE CONNECTOR BRACKET

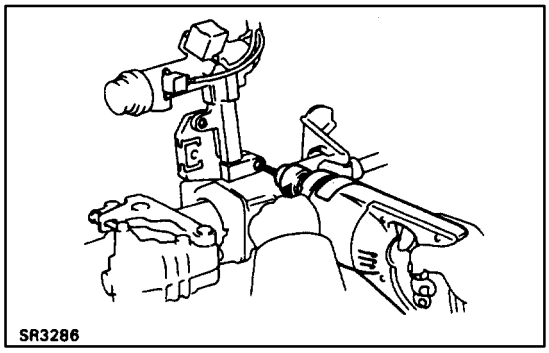

9. REMOVE UPPER BRACKET

(a) Using a centering punch, mark the center of the 2 tapered–head bolts.

(b) Using a 4–5 mm (0.16–0.20 in.) drill, drill into the 2 tapered–head bolts.

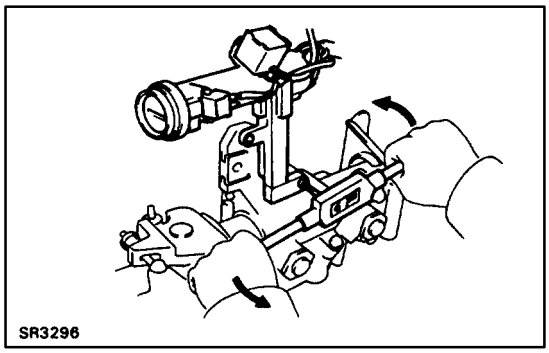

(c) Using a screw extractor, remove the 2 tapered–head bolts.

(d) Remove the bracket and column upper camp.

WhereEverybodyKnowsYourName

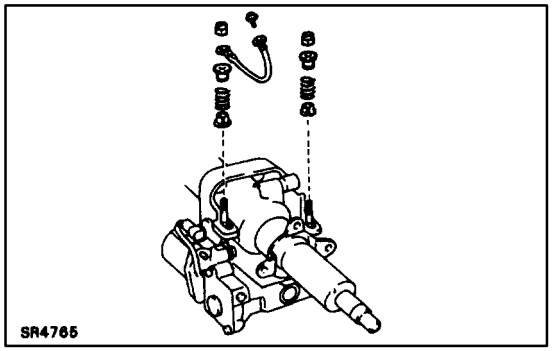

10. REMOVE TILT STEERING GEAR ASSEMBLY WITH MOTOR

(a) Remove the 2 nuts, spacers, springs, bushings and bond cable.

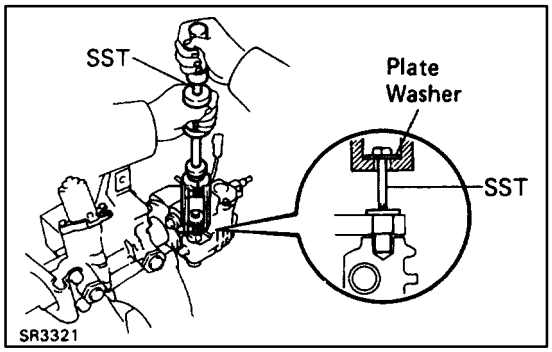

(b) Set SST and plate washer (36 mm outer diameter), as shown, and then remove the 2 No. 2 tilt steering shafts.
SST 09213–54015 (09214–00030)
09910–00015 (09911–00011, 09912–00010)
(Reference) Plate washer … 90201–10201

(c) Remove the tilt steering gear assembly.

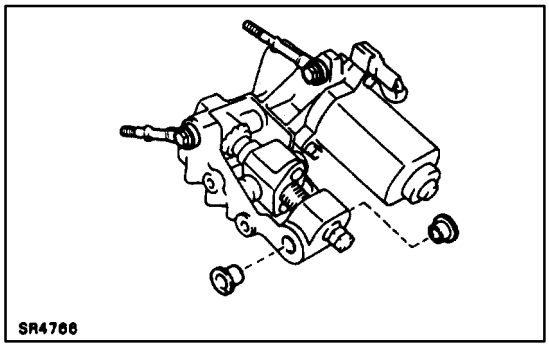

(d) Remove the 2 bushings and support stopper bolts.

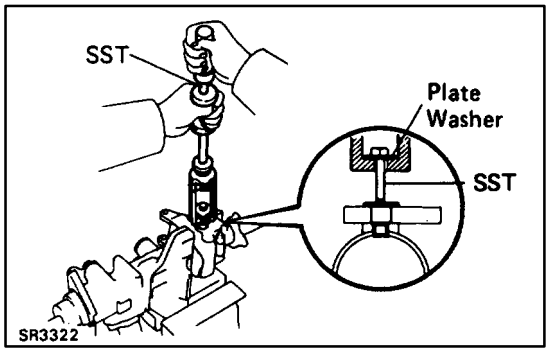

11. REMOVE COLUMN UPPER TUBE WITH MAIN SHAFT

(a) Set SST and plate washer (36 mm outer diameter), as shown, and then remove the 2 tilt steering shafts.
SST 09213–54015 (09214–00030)
09910–00015 (09911–00011, 09912–00010)
(Reference) Plate washer … 90201–10201

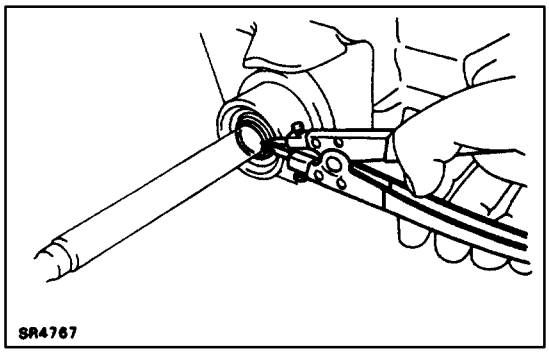

(b) Using snap ring pliers, remove the snap ring from the main shaft.

WhereEverybodyKnowsYourName

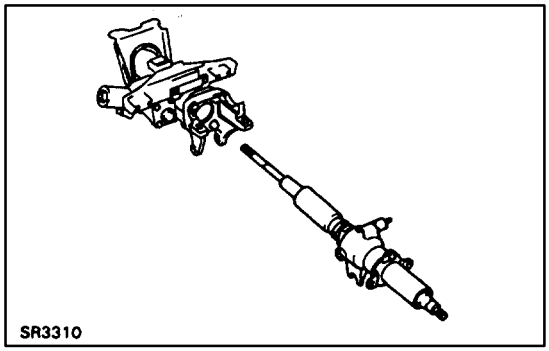

(c) Remove the upper tube and main shaft from the lower tube.

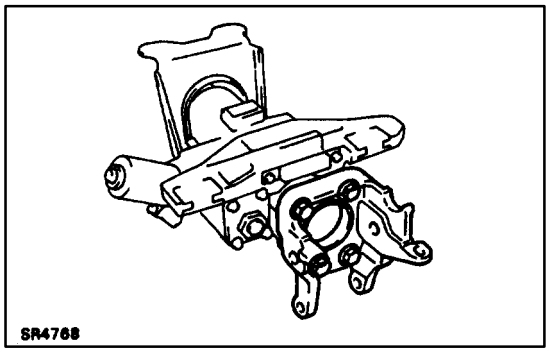

12. REMOVE TILT STEERING HOUSING SUPPORT

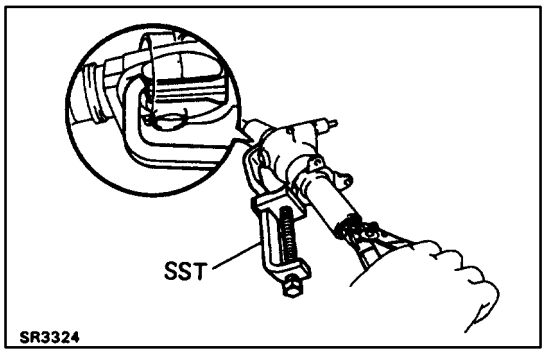

13. REMOVE MAIN SHAFT ASSEMBLY

(a) Secure the column upper tube in a vise.
NOTICE: Do not tighten the vise too tight.

(b) Using SST, compress the compression spring.
SST 09950–20017 (09956–00010)

(c) Using snap ring pliers, remove the snap ring.

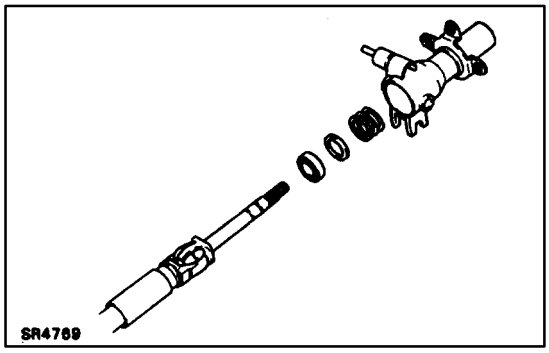

(b) Remove the main shaft from the upper tube.

(c) Remove the spring, thrust collar and bearing.

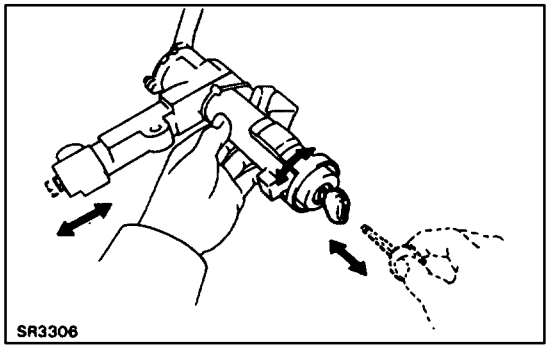

STEERING COLUMN INSPECTION AND REPLACEMENT

SR0EM–03

1. INSPECT KEY CYLINDER

Check that the steering lock mechanism operates properly.

WhereEverybodyKnowsYourName

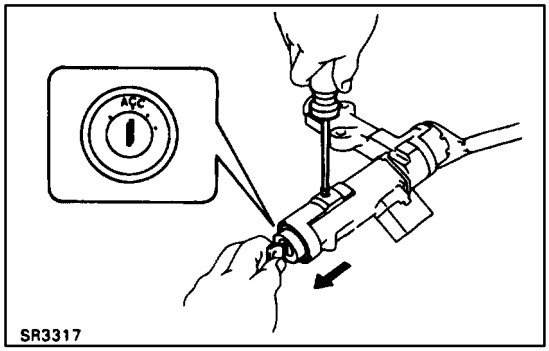

2. IF NECESSARY, REPLACE KEY CYLINDER

(a) Place the ignition key at the ACC position.

(b) Push down the stop pin with a thin rod, and pull out the key cylinder.

(d) Install a new key cylinder.
HINT: Make sure the ignition key is at the ACC position.

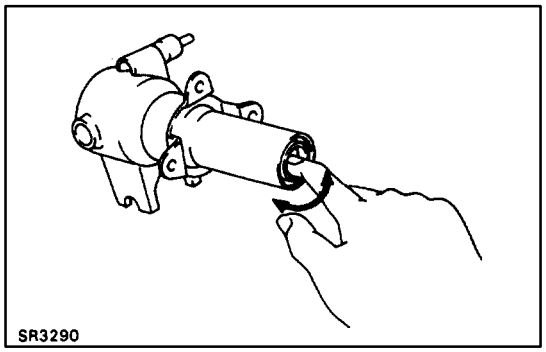

3. INSPECT UPPER BEARING

Check the upper bearing rotation condition and check for abnormal noise.
If the bearing is worn or damaged, replace the column upper tube.

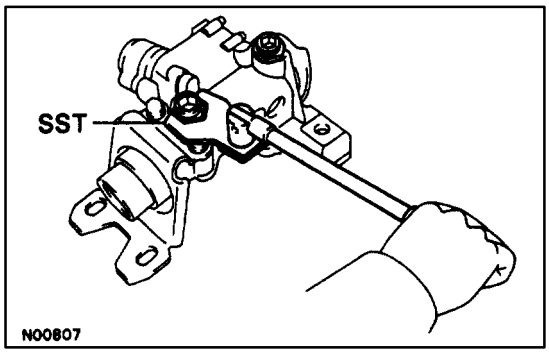

4. IF NECESSARY, ADJUST TELESCOPIC ADJUSTING SCREWS

(a) Using SST, remove the lock nuts.
SST 09617–14010

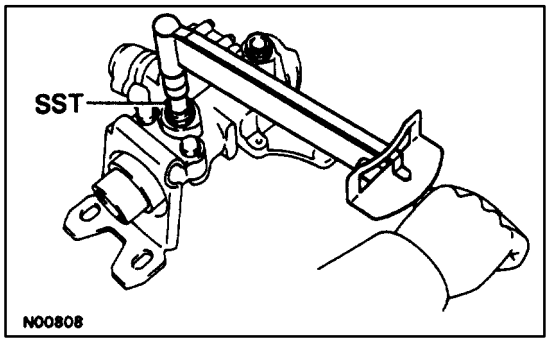

(b) Using SST, tighten the adjusting screws.
SST 09923–00010
Torque: 6.9 N·m (70 kgf·cm, 64 in.·lbf)
NOTICE:

- **If the adjusting screw is tightened higher than the specified torque, the telescopic mechanism may malfunction. Conversely, if the torque applied is too low, rattling may develop in the column, so the specified torque should always be applied.**

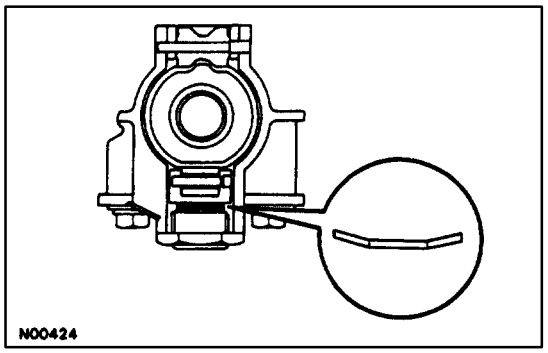

- **When the adjusting screw and conical springs have been removed, replace the conical springs facing in the direction shown in the illustration.**

WhereEverybodyKnowsYourName

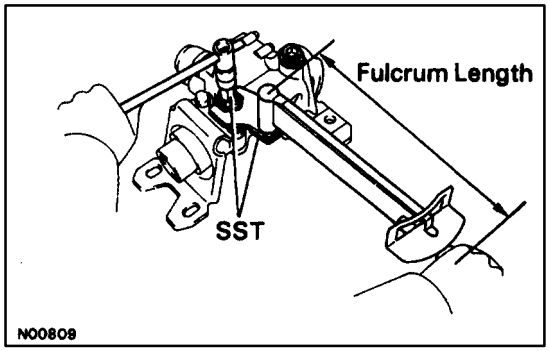

(c) Using SST, install the lock nuts.
SST 09617–14010, 09923–00010
Torque: 31 N·m (320 kgf·cm, 23 ft·lbf)
HINT: Use a torque wrench with a fulcrum length of 340 mm (13.39 in.).

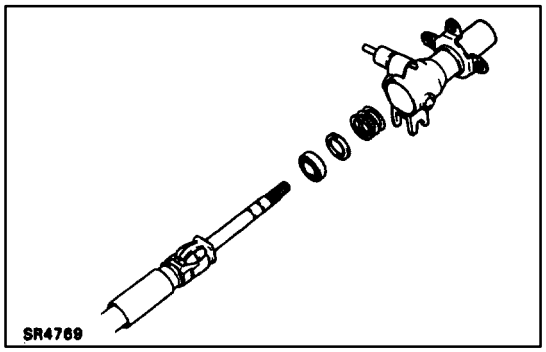

STEERING COLUMN ASSEMBLY

SR0EN–03

1. APPLY MOLYBDENUM DISULPHIDE LITHIUM BASE GREASE
(See page SR–27)

2. INSTALL MAIN SHAFT

(a) Install the bearing, thrust collar and spring to the main shaft.

(b) Install the main shaft into the upper tube.

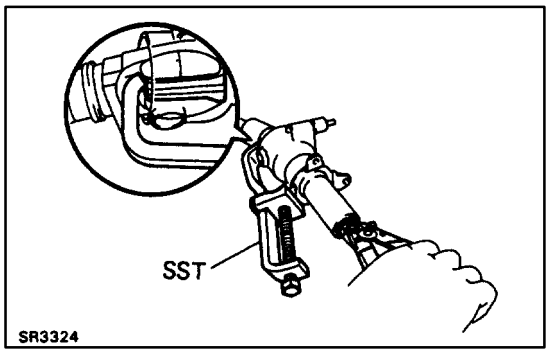

(c) Using SST to compress the compression spring.
SST 09950–20017 (09956–00010)

(d) Using snap ring pliers, install a new snap ring.

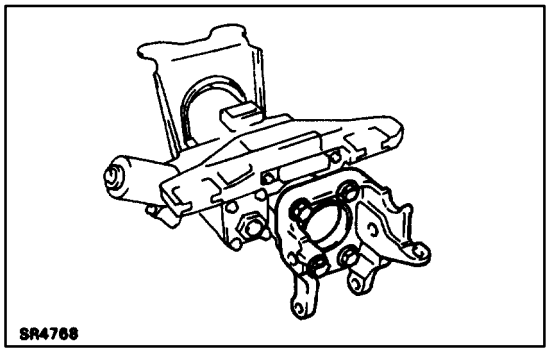

3. INSTALL TILT STEERING HOUSING SUPPORT
Torque: 13 N·m (130 kgf·cm, 9 ft·lbf)

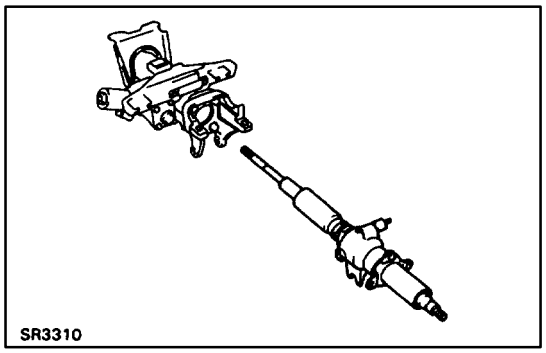

4. INSTALL COLUMN UPPER TUBE WITH MAIN SHAFT

(a) Install the upper tube and main shaft into the lower tube.

WhereEverybodyKnowsYourName

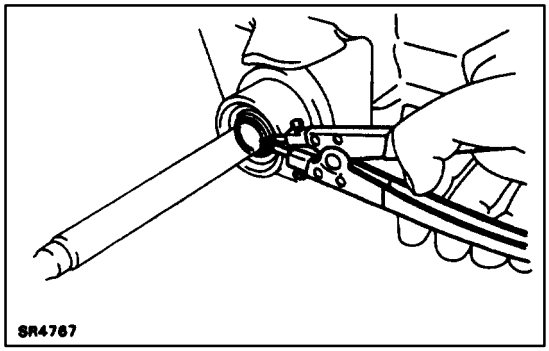

(b) Using snap ring pliers, install the snap ring to the main shaft.

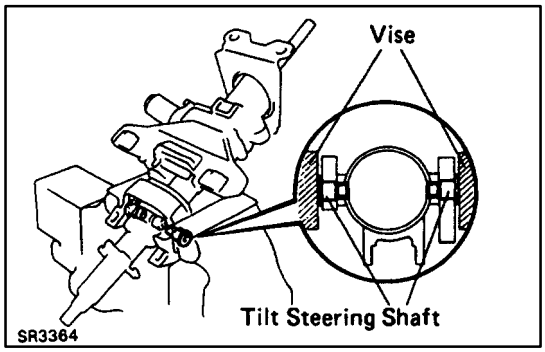

(c) Using a vise, press in the 2 tilt steering shafts.
HINT: Make sure the upper tube turns smoothly.

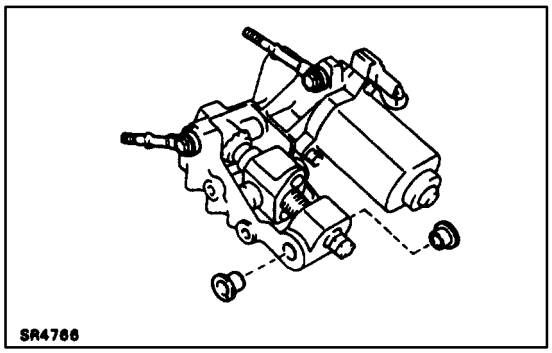

5. INSTALL TILT STEERING GEAR ASSEMBLY WITH MOTOR

(a) Install the 2 bushings and support stopper bolts.

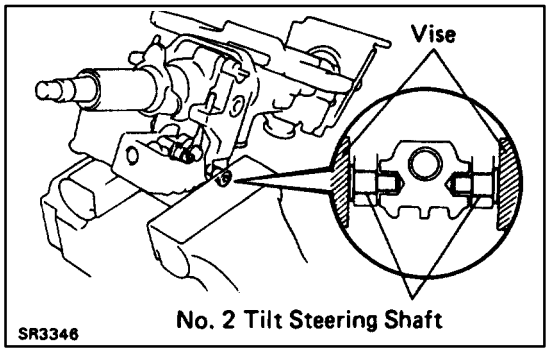

(b) Using a vise, press in the 2 No. 2 tilt steering shafts.

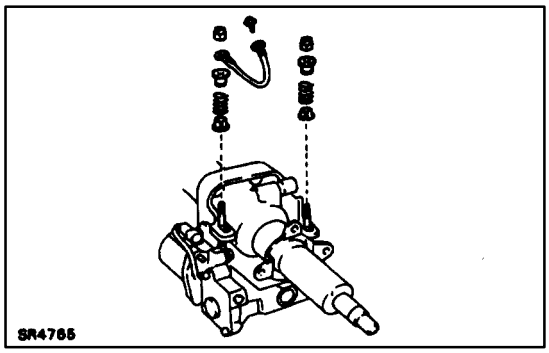

(c) Install the bushing, spring and spacer to each stopper bolt.
(d) Install the bond cable.
(e) Install and torque 2 new lock nuts.
Torque: 2.9 N·m (30 kgf·cm, 26 in.·lbf)

WhereEverybodyKnowsYourName

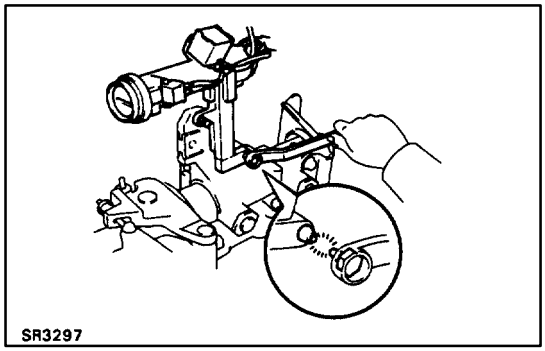

6. INSTALL UPPER BRACKET

(a) Install the upper bracket with 2 new tapered–head bolts.

(b) Tighten the tapered–head bolts until the bolt heads break off.

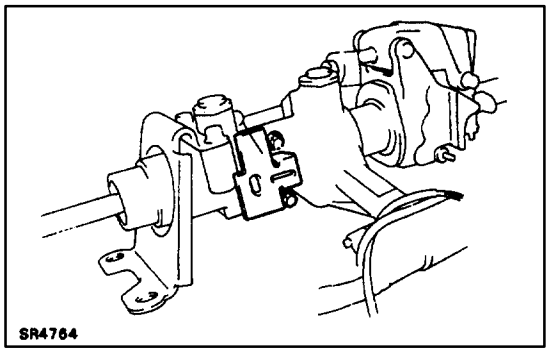

7. INSTALL CONNECTOR BRACKET

Torque: 4.9 N·m (50 kgf·cm, 43 in.·lbf)

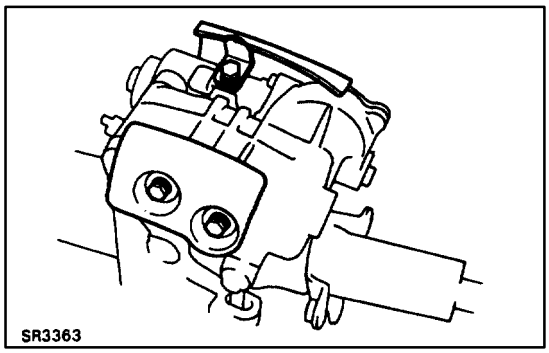

8. INSTALL NO. 1 PROTECTOR AND NO. 2 PROTECTOR

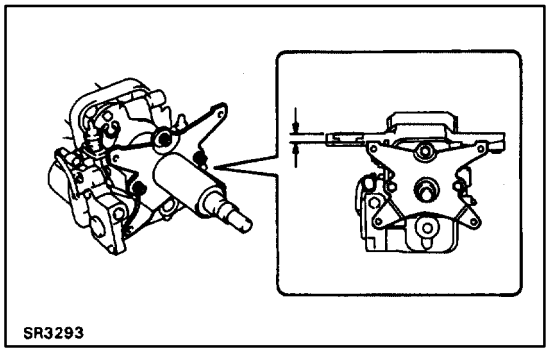

9. INSTALL TURN SIGNAL BRACKET

Install the turn signal bracket so that its upper surface is parallel with upper surface of the capsule of the breakaway bracket.

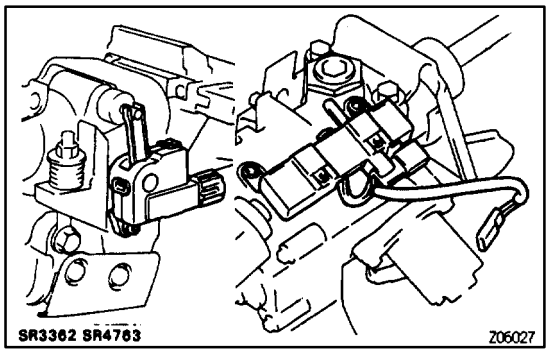

10. INSTALL TILT AND TELESCOPIC POSITION SENSORS

WhereEverybodyKnowsYourName

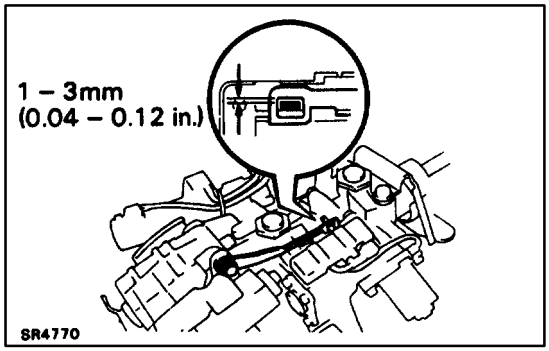

11. INSTALL TELESCOPIC SENSOR PLATE

Torque: 4.9 N·m (50 kgf·cm, 43 in.·lbf)

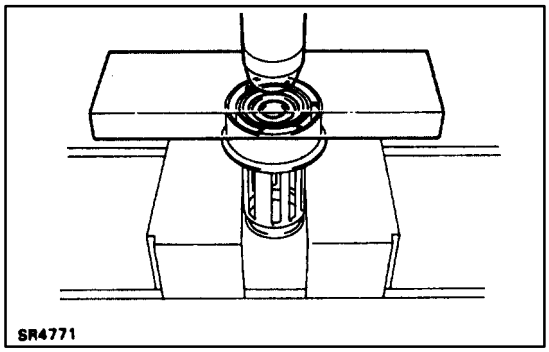

12. INSTALL LOWER DUST COVER

(a) Using a press, install the dust seal.

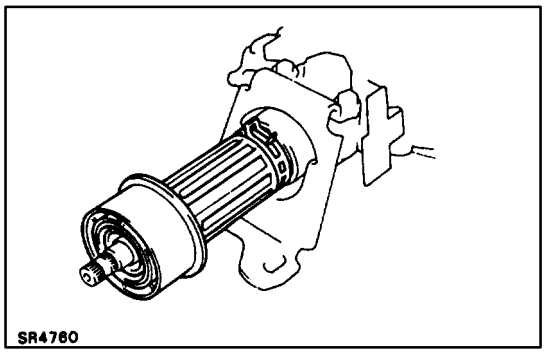

(b) Install the lower dust cover and clip.

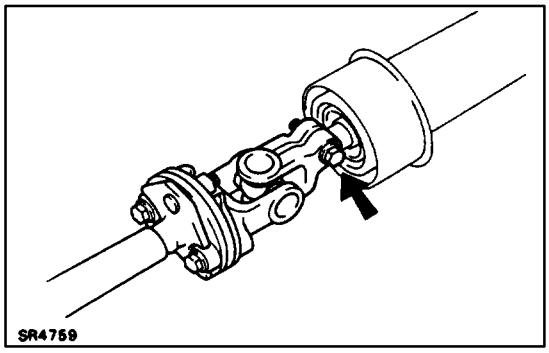

13. INSTALL SLIDING YOKE

Align matchmarks and install the sliding yoke to the main shaft.

Torque: 35 N·m (360 kgf·cm, 26 ft·lbf)

14. INSTALL IGNITION KEY CYLINDER ILLUMINATION

WhereEverybodyKnowsYourName

–MEMO–

WhereEverybodyKnowsYourName

ELECTRONIC CONTROL SYSTEM

WhereEverybodyKnowsYourName

DESCRIPTION

By operating the driving position memory and return switch the driver's seat, steering wheel and outer mirror are moved to their respective memorized positions.

Parts Name	Function
Tilt & Telescopic ECU	Control the manual operation, return operation and memory and return operation for tilt and telescopic of steering wheel.
Auto Set Switch	This switch is a main switch for the away operation of tilt and telescopic.
Manual Switch	This switch is an operation switch to operate tilt and telescopic manually. When one of tilt up, tilt down, telescopic Extension and telescopic Contraction is operated, steering wheel will be able to set on the optional position within the extent of operating.
Driving Position Memory and Return Switch	Operating this switch makes return operation that driver seat steering wheel and outer mirror are set on the memorized position working together power seat and outer mirror.
Position Sensor	Tilt position sensor detect an amount of tilt and input it to ECU. Telescopic position sensor detect an amount of slide and input it to ECU.
Motor	There is a tilt motor and telescopic motor respectively. These are operated by a signal from the ECU.

WhereEverybodyKnowsYourName

PARTS LOCATION

SC400

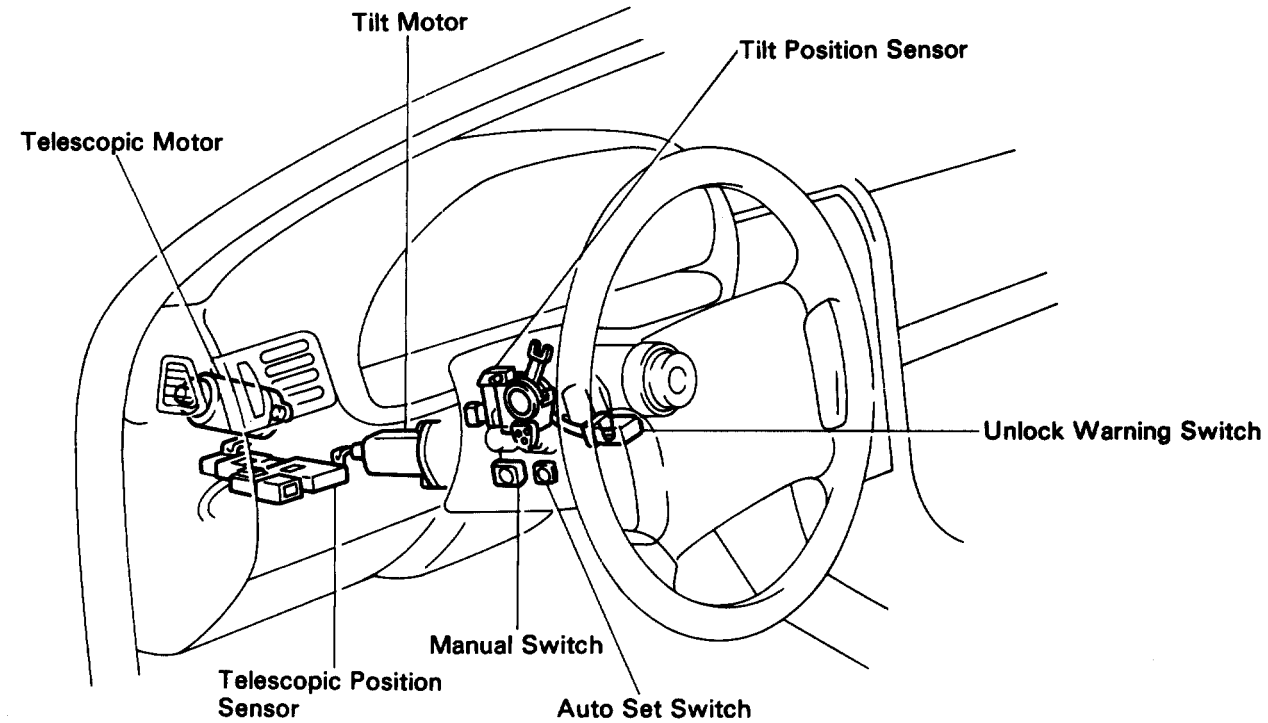

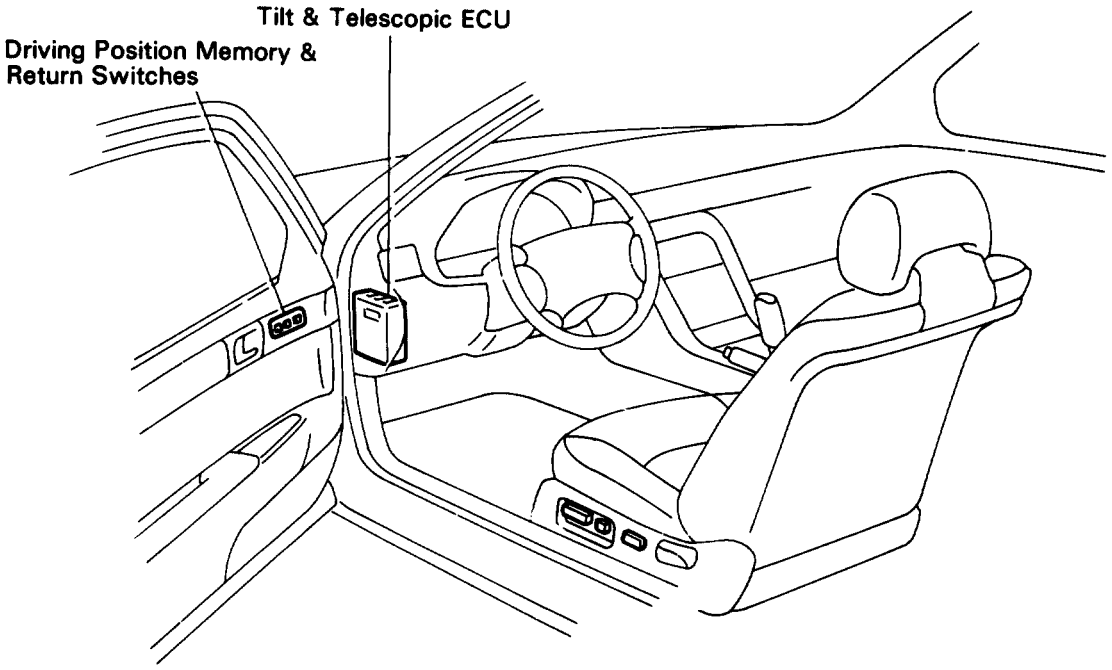

SR4908
SR4907

WhereEverybodyKnowsYourName

SC300 (A/T)

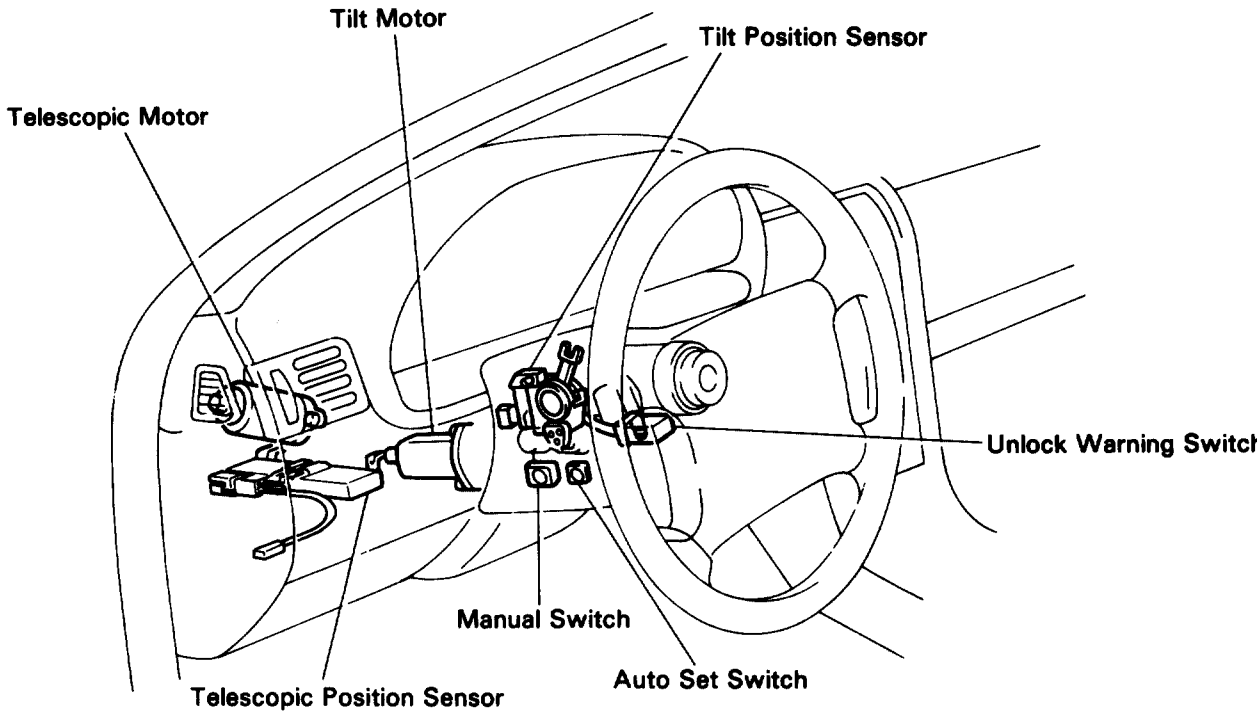

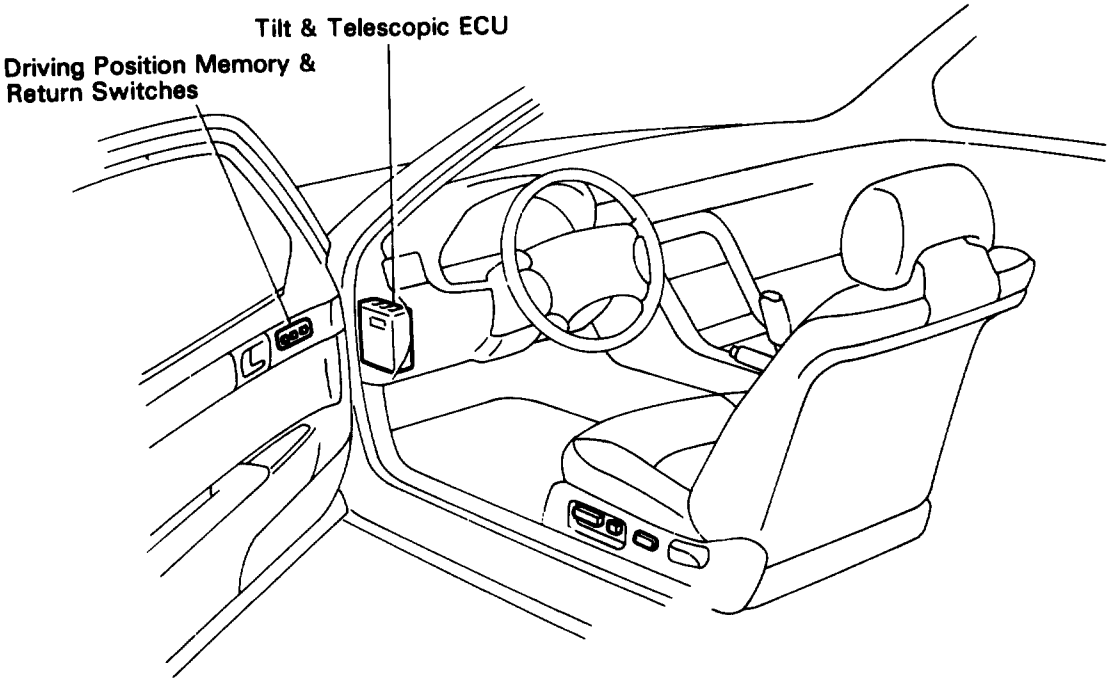

R01104
SR4907

WhereEverybodyKnowsYourName

SC300 (M/T)

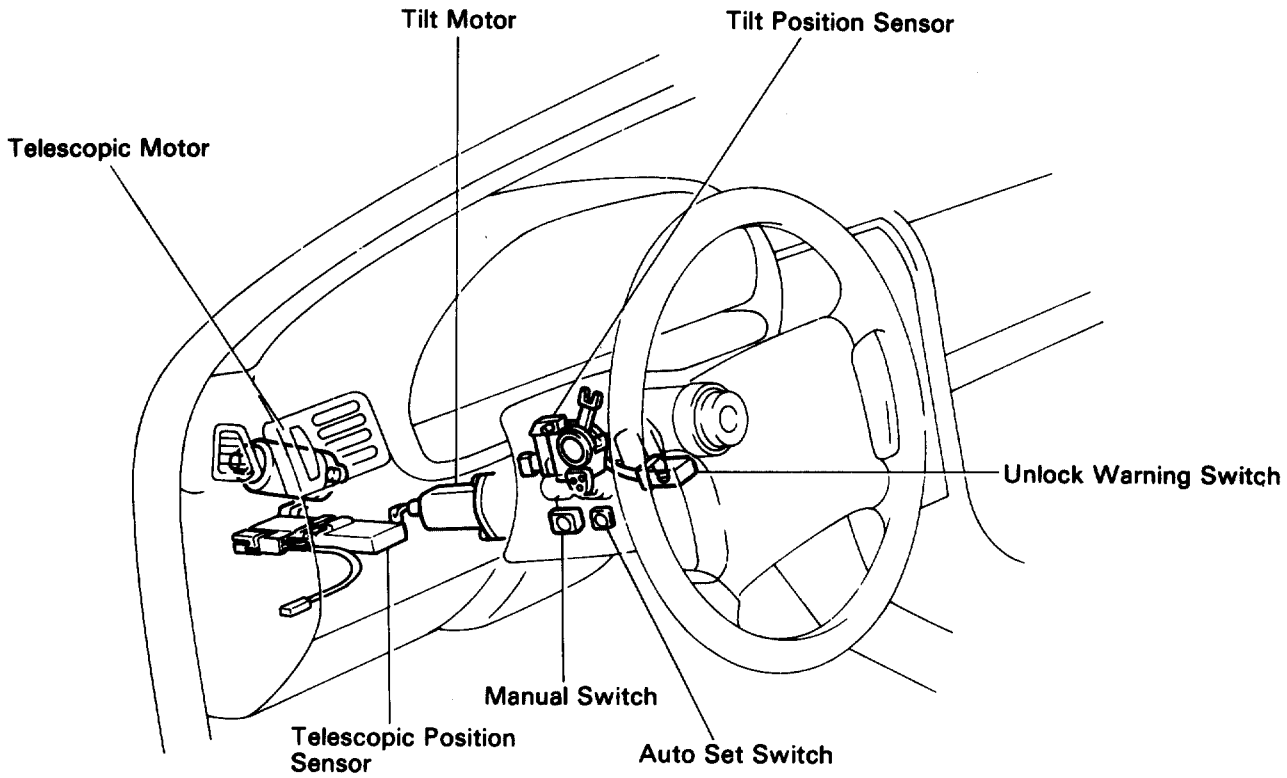

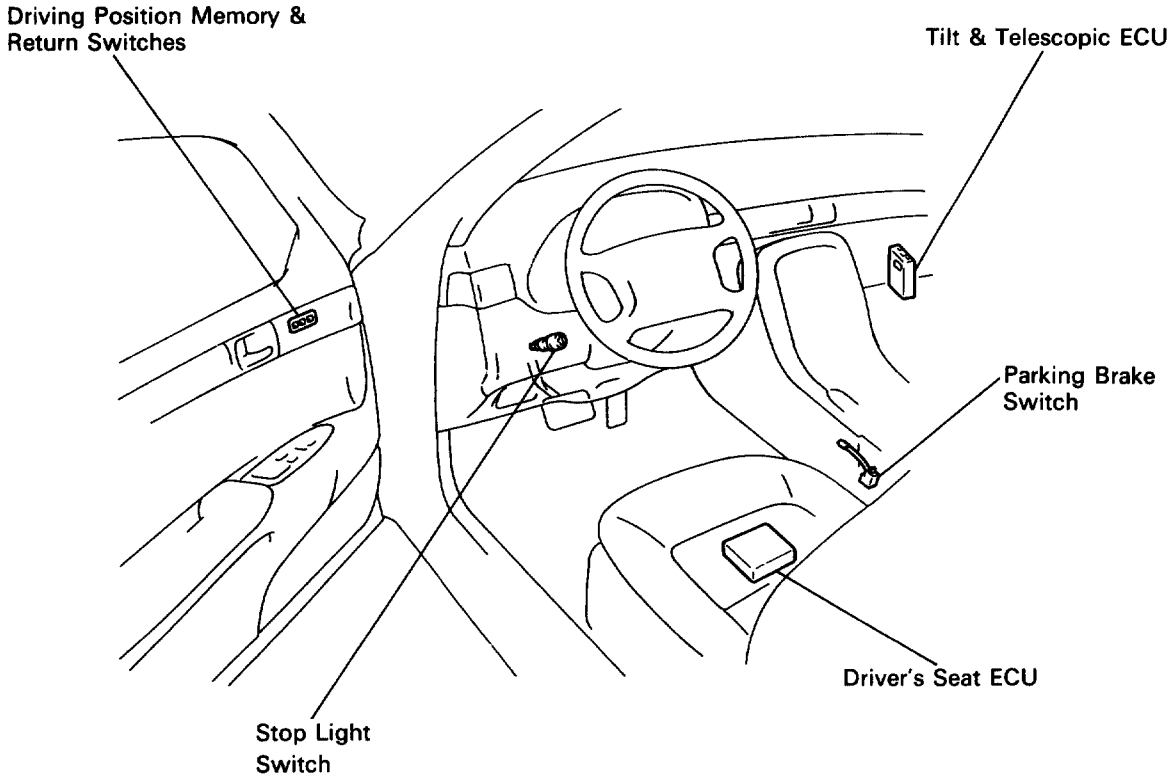

R01104
R09078

WhereEverybodyKnowsYourName

HOW TO PROCEED WITH TROUBLESHOOTING

Perform troubleshooting in accordance with the procedure on the following page.

▼ CUSTOMER PROBLEM ANALYSIS

Using the customer problem analysis check sheet for reference, obtain as much detail as possible about the problem.

6 PROBLEM SYMPTOM CONFIRMATION, 2 SYMPTOM SIMULATION

Confirm the problem symptoms. If the problem does not reappear, be sure to simulate the problem, using the “Problem Simulation Methods”.

10 MATRIX CHART OF PROBLEM SYMPTOMS

Confirm the order of inspection for each applicable problem symptom on the matrix chart after first fully confirming the scope of the problem symptoms. For example, if the tilt operation is not working, check whether the tilt is not working in manual, auto and return, and also check if the telescopic, seat or mirror operation is not working in addition to the tilt operation.

5 CIRCUIT INSPECTION

Proceed with diagnosis of each circuit in accordance with the inspection order confirmed in 10. Judge whether the cause of the problem is in the sensor, actuators, wire harness and connectors, or the ECU.

6 REPAIR

After the cause of the problem is located, perform repairs by following the inspection and replacement procedures in this manual.

7 CONFIRMATION TEST

After completing repairs, confirm not only that the malfunction is eliminated, but also seat and mirror operations are normal.

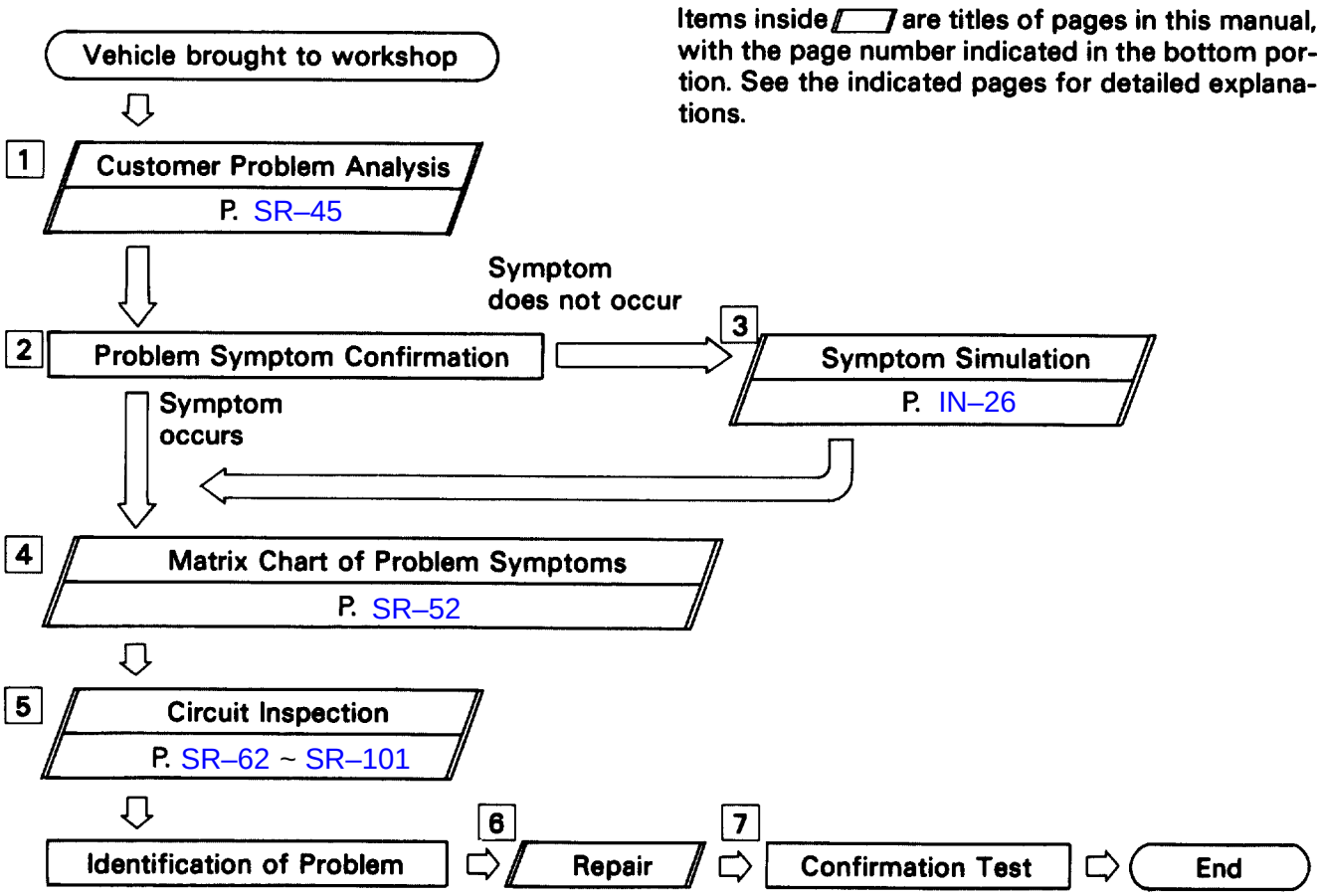

WhereEverybodyKnowsYourName

CUSTOMER PROBLEM ANALYSIS

TILT & TELESCOPIC Check Sheet

Inspector's Name :

Customer's Name		**Registration No.**	
		Registration Year	/ /
		Frame No.	
Date Vehicle Brought In	/ /	**Odometer Reading**	Km Miles

Condition of Problem Occurrence	**Date of Problem Occurrence**	/ /
	How Often does Problem Occur?	☐ Continuous ☐ Intermittent (times a day)

Symptoms	**Manual Function does not Operate**	☐ Both tilt and telescopic ☐ Tilt only ☐ Telescopic only
	Auto Function does not operate	☐ No auto return ☐ No auto return cut
	Return Function does not Operate	☐ Does not operate under any conditions ☐ Tilt only ☐ Telescopic only ☐ Only with key inserted ☐ Only with key not inserted ☐ Only with memory & return switch 1 or 2
	☐ Memory Function does not Operate	

Check Item	**Power Seat**	☐ Manual function does not operate ☐ Return function does not operate
	Outer Mirror	☐ Manual function does not operate ☐ Return function does not operate

WhereEverybodyKnowsYourName

WIRING DIAGRAM

TILT & TELESCOPIC ECU

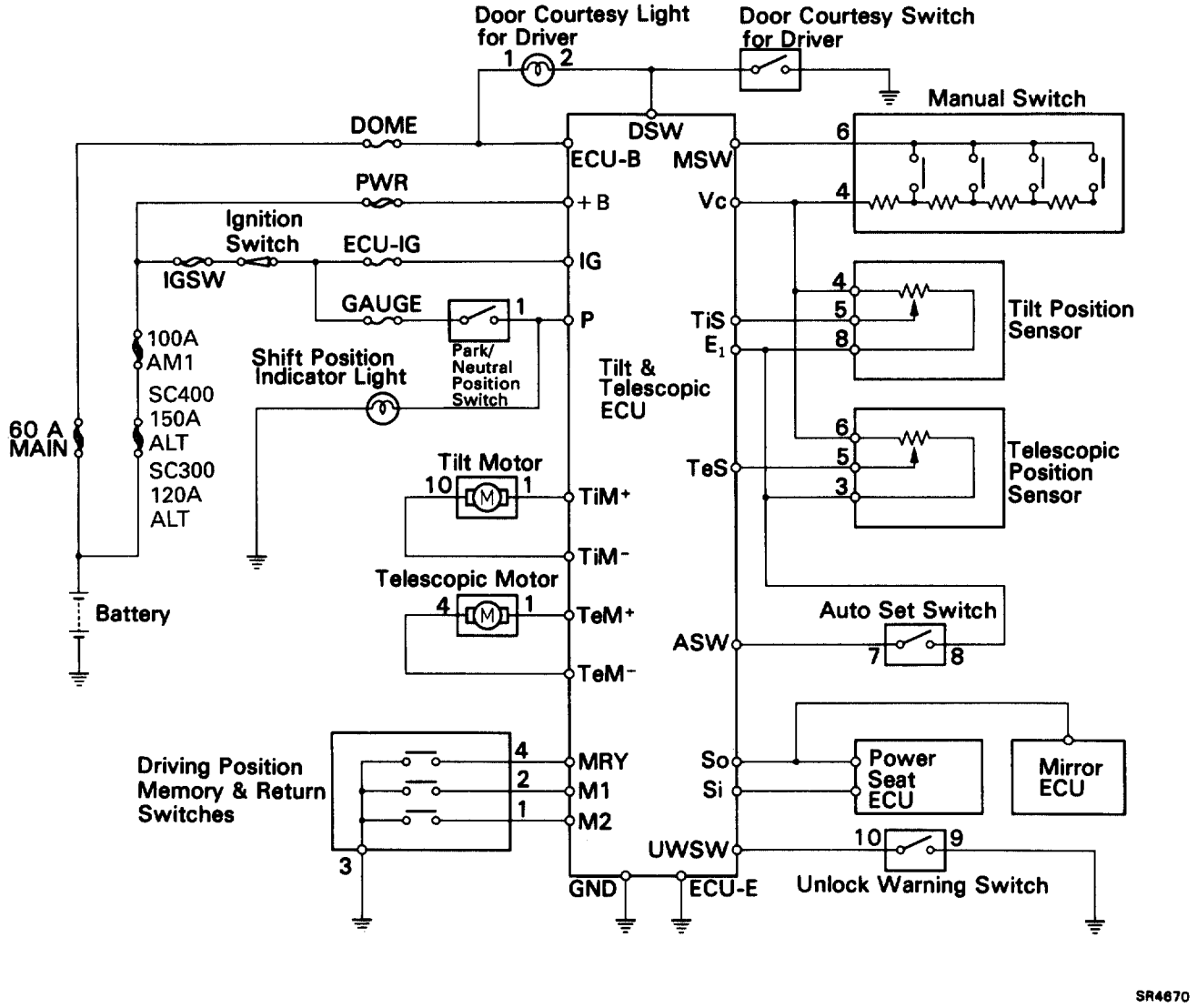

WhereEverybodyKnowsYourName

SC300 (M/T)

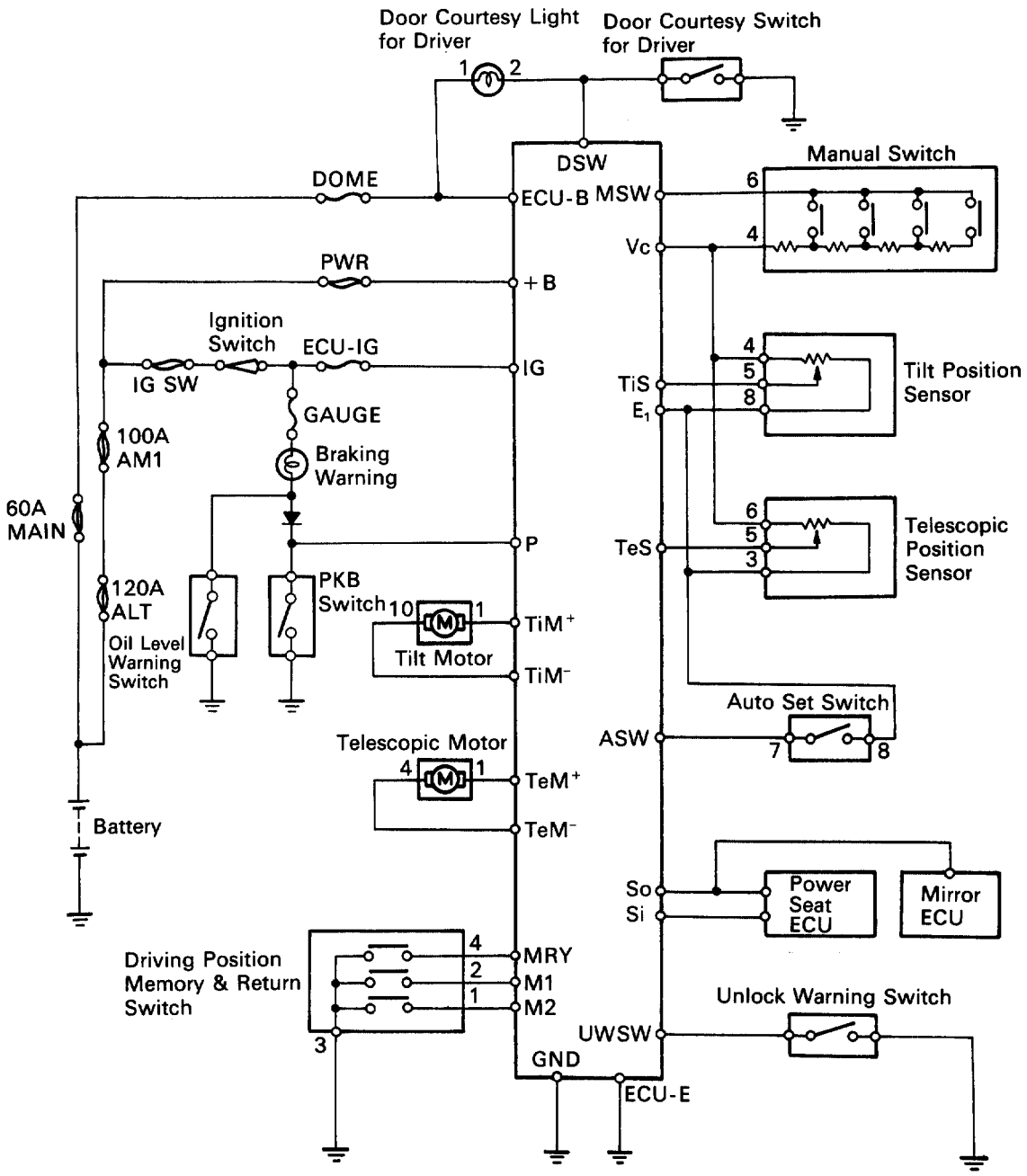

R09079

WhereEverybodyKnowsYourName

TERMINAL OF ECU

TILT & TELESCOPIC ECU

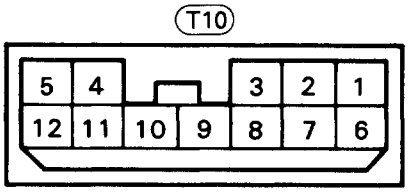

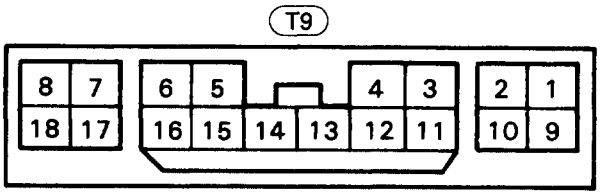

Terminal No.	Symbol	Terminal Name	Terminal No.	Symbol	Terminal Name
T9–1	Si	Serial In	T9–16	MSW	Manual Switch
2	DSW	Door Courtesy Switch	17	Vc	Sensor Power Source
3	M1	Return Switch 1	18	ECU–B	Power Source
4	ASW	Auto Switch	T10– 1	IG	Ignition Switch
5	E_1	Sensor Ground	2	TeM^+	Telescopic Contracted
6	TeS	Telescopic Sensor	3	TiM^-	Tilt Down
7	TiS	Tilt Sensor	4	+B	Power Source
8	ECU–E	Ground	6	P	Park/Neutral Position Switch
9	So	Serial Out	6	P	Parking Brake Switch*
10	UWSW	Unlock Warning Switch	7	GND	Ground
11	MRY	Memory Switch	10	TiM^+	Tilt Up
12	M2	Return Switch 2	11	TiM^-	Telescopic Extended

* SC300 (M/T) Models

WhereEverybodyKnowsYourName

STANDARD VALUE OF ECU TERMINAL

Terminals	Symbols	Wiring Color	Condition	Standard Value
T9–1	Si	B	Tilt & telescopic ECU & power seat ECU communication	0 V↔12 V
T9–2↔ Body Ground	DSW↔ Body Ground	R–B↔ Body Ground	Driver's door open	Below 1 V
			Driver's door closed	1014 V
T9–3↔T9–8	M1↔ECU–E	P↔BR–B	Driving position memory & return switch ON	Below 1 V
			Driving position memory & return switch OFF	10 ~ 14 V
T9–4↔T9–5	ASW↔E1	V–W↔BR	Unlock warning switch ON, auto switch ON	10 ~ 14 V
			Unlock warning switch ON, auto switch OFF	Below 1 V
T9–5	E1	BR	Always	Below 1 V
T9–6↔T9–5	TeS↔E1	Y–R↔BR	Unlock warning switch ON, telescopic fully forward	Below 2 V
			Unlock warning switch ON, telescopic fully backward	4–6 V
T9–7↔T9–5	TiS↔E1	P–L↔BR	Unlock warning switch ON, tilt fully raised	Below 2 V
			Unlock warning switch ON, tilt fully lowered	4–6 V
T9–8	ECU–E	BR–B	Always	Below 1 V
T9–9	So	W	Tilt & telescopic ECU & power seat ECU communication	0 V↔12 V
T9–10↔ Body Ground	UWSW↔ Body Ground	Y↔ Body Ground	Ignition key inserted in the key cylinder	Below 1 V
			Ignition key pulled out from the key cylinder	10 ~ 14 V
T9–11↔T9–8	MRY↔ECU–E	R–Y↔BR–B	Auto set switch ON	Below 1 V
			Auto set switch OFF	10 ~ 14 V
T9–12↔T9–8	M2↔ECU–E	P–B↔BR–B	Driving position memory & return switch ON	Below 1 V
			Driving position memory & return switch OFF	10 ~ 14 V
T9–16↔T9–17	MSW↔VC	V–Y↔R–W	Unlock warning switch ON Telescopic extend by manual switch	2.6 V
			Unlock warning switch ON Tilt up by manual switch	3.5 V
			Unlock warning switch ON Telescopic contracted by manual switch	4.2 V
			Unlock warning switch ON Tilt down by manual switch	4.6 V
			Unlock warning switch ON, manual switch OFF	4–6 V

WhereEverybodyKnowsYourName

STANDARD VALUE OF ECU TERMINAL

Terminals	Symbols	Wiring Color	Condition	Standard Value
T9–17↔T9–5	Vc↔E1	R–W↔BR	Unlock warning switch ON	4–6 V
			Unlock warning switch OFF	Below 1 V
T9–18	ECU–B	R	Always	10 ~ 14 V
T10–1↔ Body Ground	IG↔ Body Ground	B–R↔ Body Ground	Ignition switch ON	10 ~ 14 V
			Ignition switch OFF	Below 1 V
T10–2↔ Body Ground	TeM^{+}↔ Body Ground	L–B↔ Body Ground	Unlock warning switch ON, telescopic forward	10 ~ 14 V
			Except above mention	Below 1 V
T10–3↔ Body Ground	TiM^{-}↔ Body Ground	R–L↔ Body Ground	Unlock warning switch ON, tilt down	10 ~ 14 V
			Except above mention	Below 1 V
T10–4	+B	L–W	Always	10 ~ 14 V
T10–6↔ Body Ground	P↔ Body Ground	GR↔ Body Ground	Ignition switch ON, shift lever “P” position	10 ~ 14 V
			Ignition switch ON, except above mention	Below 1 V
T10–6↔ Body Ground	P↔ Body Ground	GR↔ Body Ground	Ignition switch ON, PKB lever pulled	Below 1 V
			Ignition switch ON, PKB lever released	10 ~ 14 V
T10–7	GND	W–B	Always	Below 1 V
T10–10↔ Body Ground	TiM^{+}↔ Body Ground	R–B↔ Body Ground	Unlock warning switch ON, tilt up	10 ~ 14 V
			Except above mention	Below 1 V
T10–11↔ Body Ground	TeM^{-}↔ Body Ground	L–Y↔ Body Ground	Unlock warning switch ON, telescopic backward	10 ~ 14 V
			Except above mention	Below 1 V

TILT & TELESCOPIC ECU

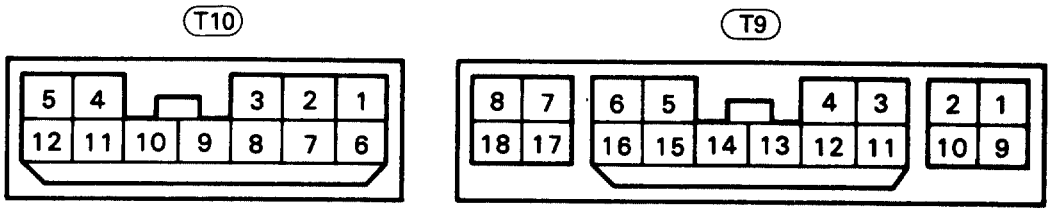

SR4791

WhereEverybodyKnowsYourName

–MEMO–

WhereEverybodyKnowsYourName

MATRIX CHART OF PROBLEM SYMPTOMS

Perform troubleshooting of the circuits for the applicable problem symptom in the order given in the chart below. Proceed to the page number given for each circuit.

See page		SR–62	SR–66	SR–70	SR–72	SR–74
Suspect Area / Trouble Symptom		ECU Power Source Circuit	Actuator Power Source Circuit	Sensor Power Source Circuit	Tilt Position Sensor Circuit	Tilt Motor Circuit
Manual and auto return functions do not operate	Both tilt and telescopic	1	2	4		
	Tilt only				1	2
	Telescopic only					
Auto return or auto return cut function does not operate						
Memory function does not operate						
Only manual function does not operate	Both tilt and telescopic					
	Tilt only					
	Telescopic only					
Only return function does not operate	Does not operate under any condition					
	Only with key inserted					
	Only with key not inserted					
	Only with memory & return switch 1 or 2					

WhereEverybodyKnowsYourName

HINT

- If the instruction “Proceed to next circuit inspection shown on matrix chart” is given in the flow chart for each circuit, proceed to the circuit with the next highest number in the table to continue the check.
- If the trouble still reappears even through there are no abnormalities in any of the other circuits, then check and replace the Tilt & Telescopic ECU as the last step.

Telescopic Position Sensor Circuit SR–76	Telescopic Motor Circuit SR–76	Auto Switch Circuit SR–80	Manual Switch Circuit SR–84	SET Switch Circuit SR–88	Memory & Return Switches Circuit SR–90	Ignition Switch Circuit SR–92	Park/Neutral Position Switch SR–94	Parking Brake Switch Circuit SR–96	Door Courtesy Switch Circuit SR–98	Unlock Warning Switch Circuit SR–100	Tilt & Telescopic ECU IN–38
										3	5
										2	3
1	2										3
		1									3
				1							2
			1								2
			1								2
			1								2
				2	1						3
						1	2	3			4
									1	2	3
					1						2

WhereEverybodyKnowsYourName

LOCATION OF CONNECTORS

LOCATION OF CONNECTORS IN ENGINE COMPARTMENT

SC400

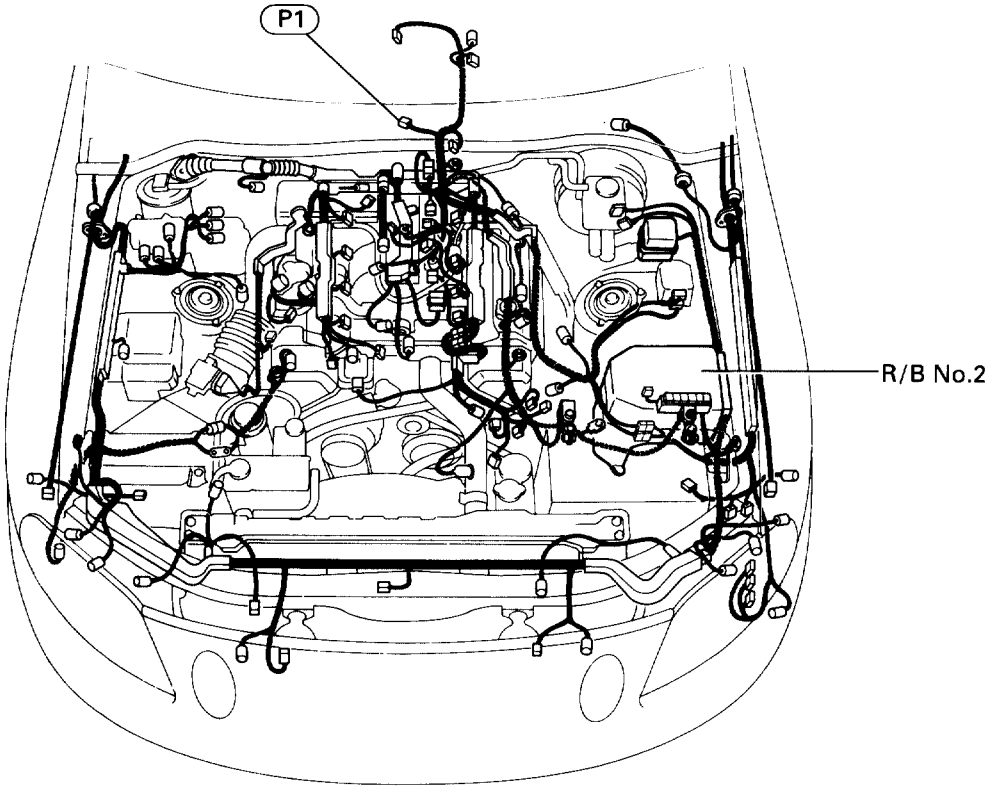

N09566

SC300

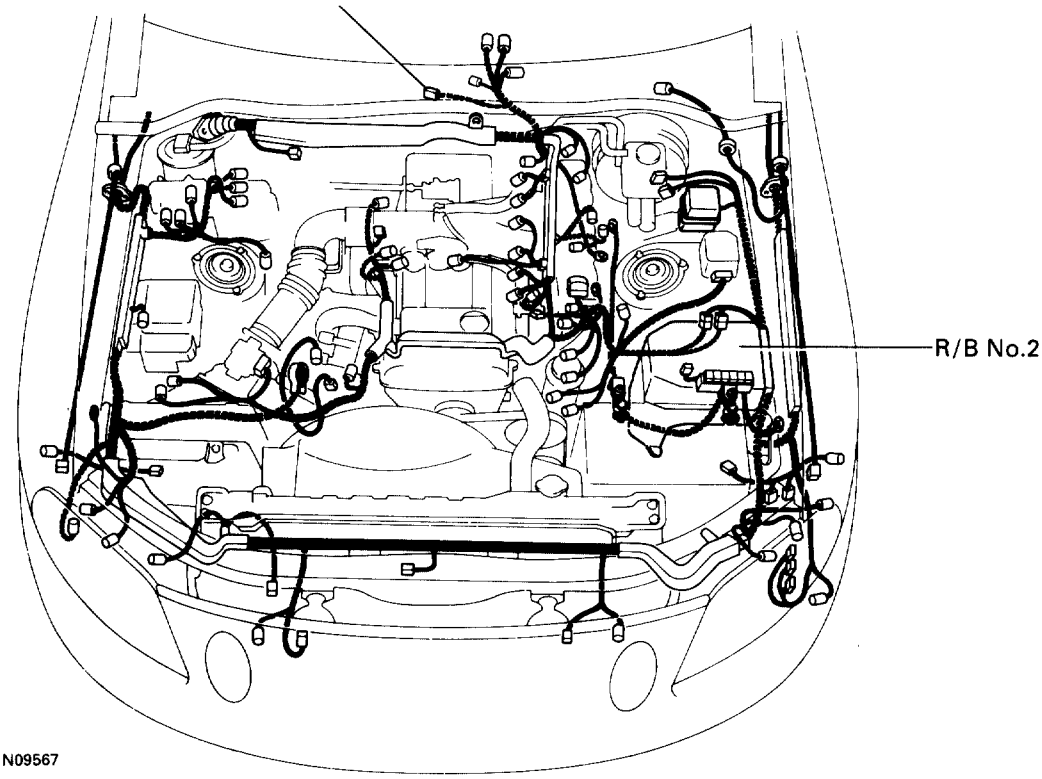

N09567

WhereEverybodyKnowsYourName

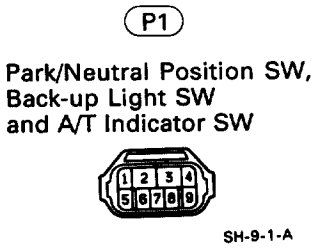

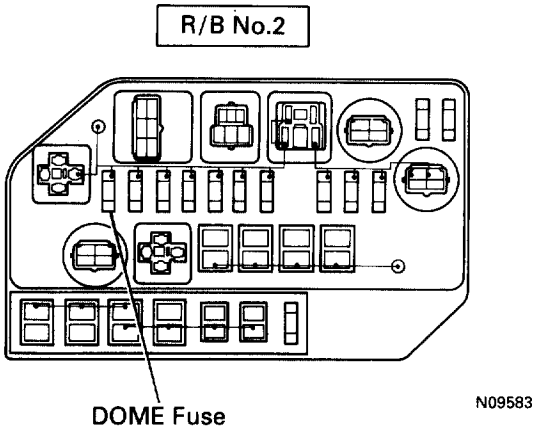

WhereEverybodyKnowsYourName

LOCATION OF CONNECTORS IN BODY

SC400

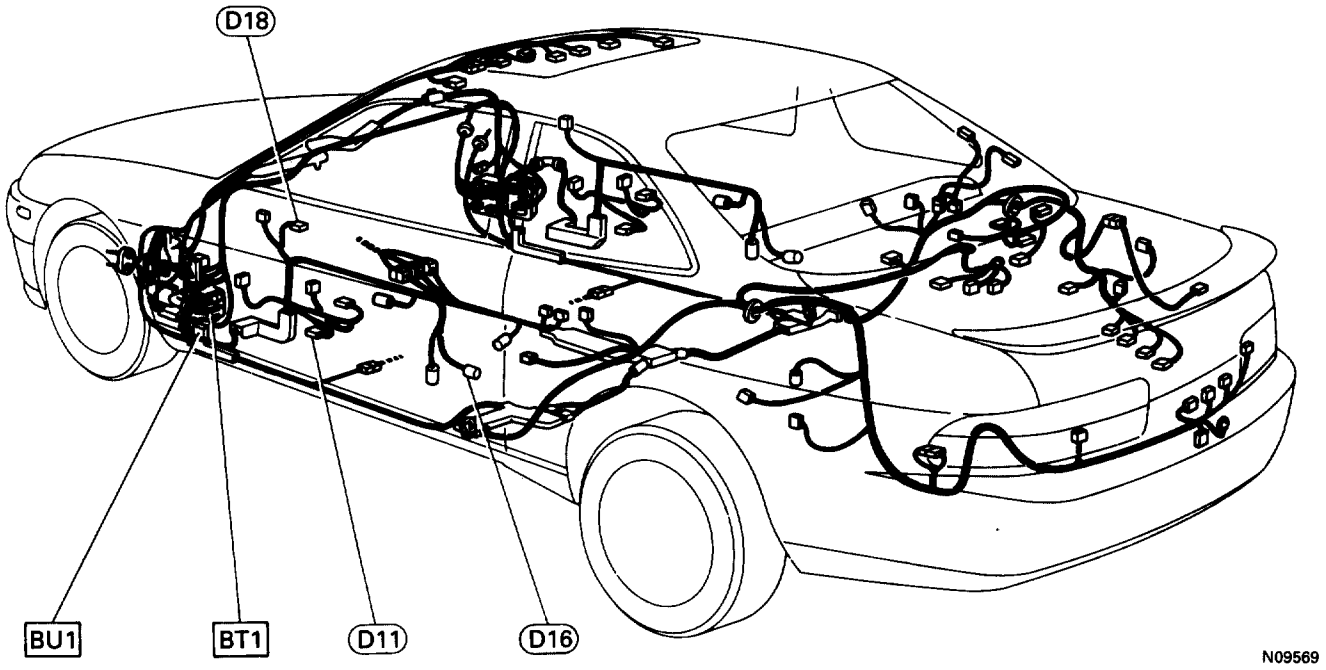

SC300

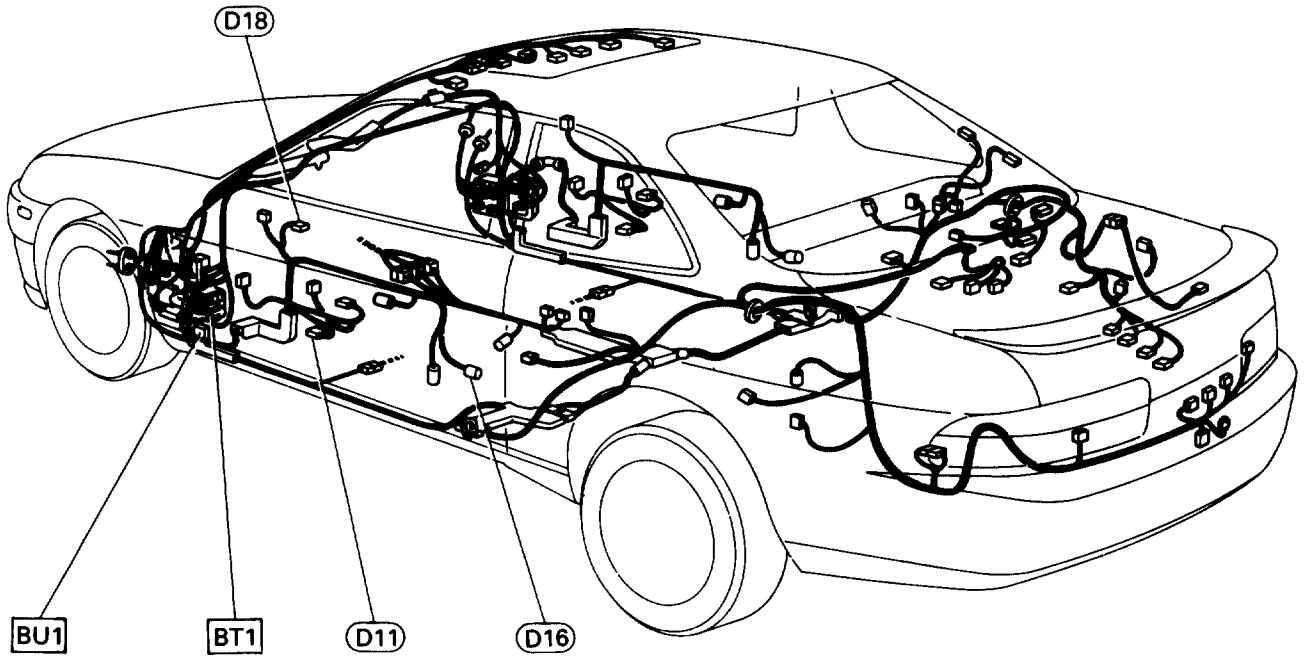

N09569

WhereEverybodyKnowsYourName

(D11)
Door Courtesy Light LH

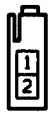

GA-2-1-B

(D16)
Door Lock Motor,
Door Unlock Detection SW
and Door Open Detection SW LH

le-6-1-C

(D18)
Driving Position Memory
and Return SW

S-4-1-C

BT1

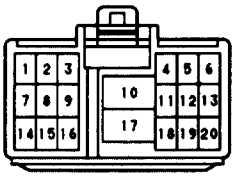

e-20-1-B

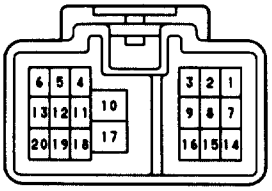

e-20-2-B

BU1

e-10-1

e-10-2

WhereEverybodyKnowsYourName

LOCATION OF CONNECTORS IN INSTRUMENT PANEL

SC400

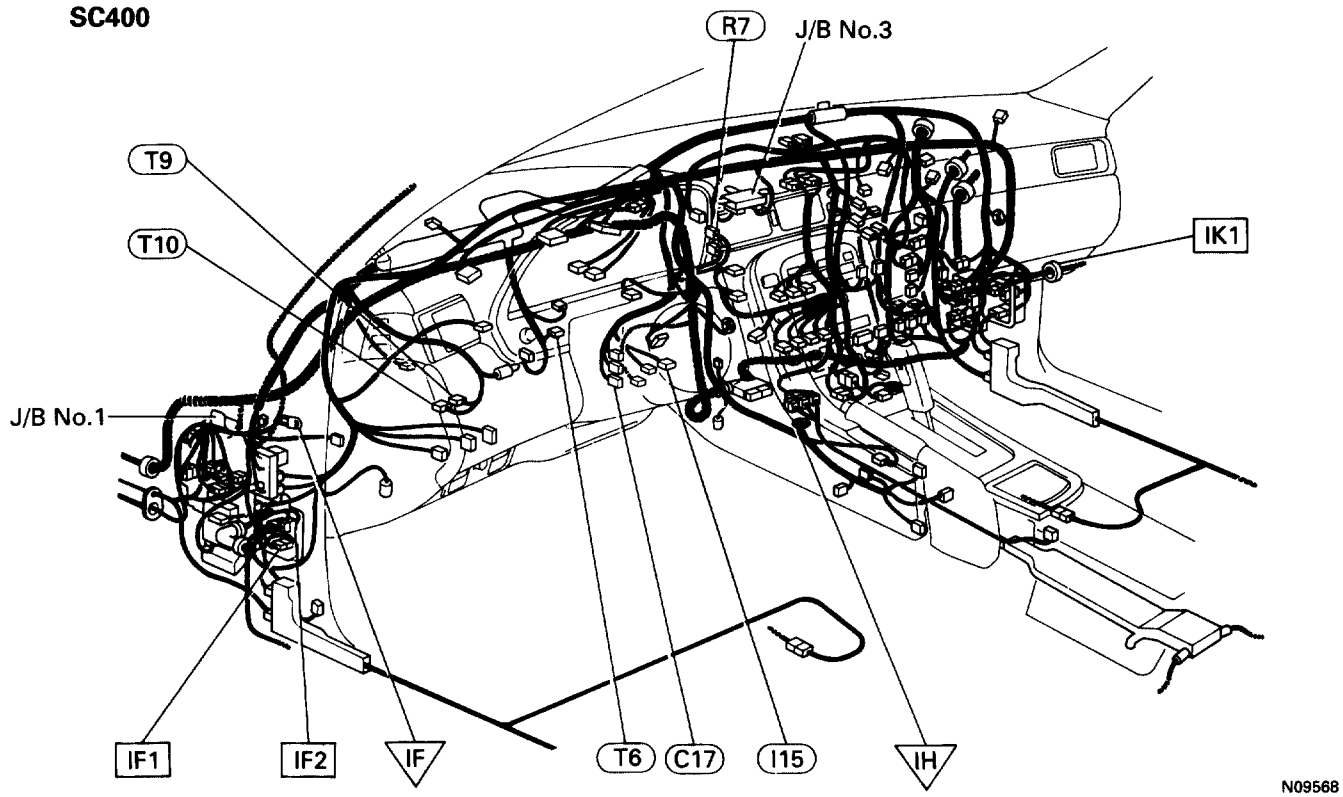

SC300

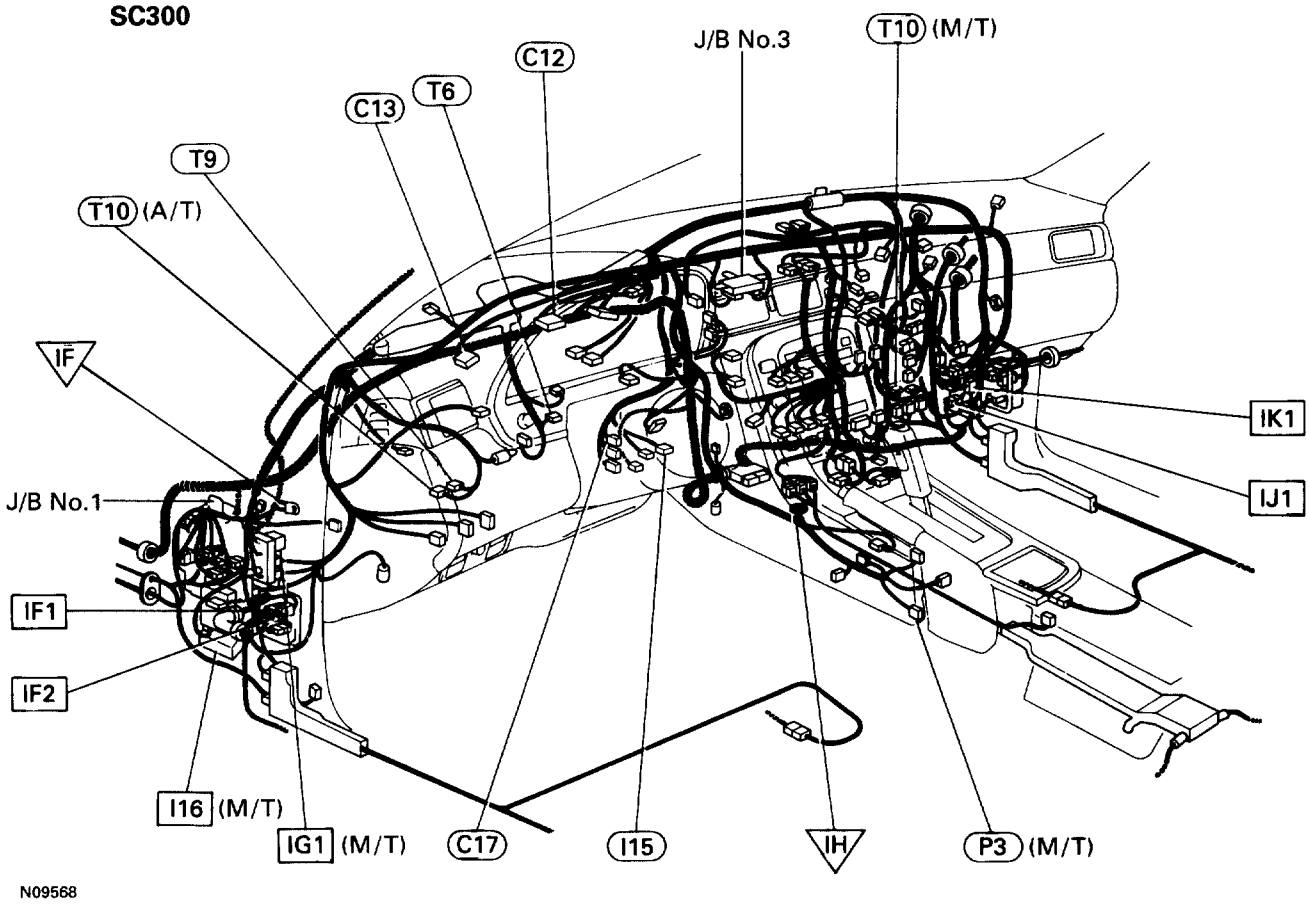

WhereEverybodyKnowsYourName

(C17)
Auto Set Switch, Manual Switch Tilt Motor, Tilt Position Sensor (COMB. Switch) (SC400)

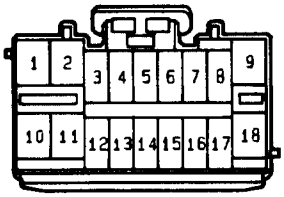

(I15)
Unlock Warning SW

eg-11-1

(R6)
Remote Control Mirror ECU
(SC400)

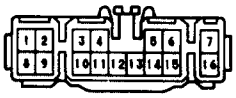

e-16-1-A

(T6)
Telescopic Position Sensor

S-6-1-B

(T9)
Tilt and Telescopic ECU

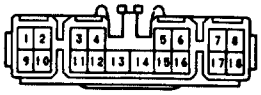

e-18-1

(T10)
Tilt and Telescopic ECU

e-12-1

(I16)
Running Light Relay
(SC300 M/T)

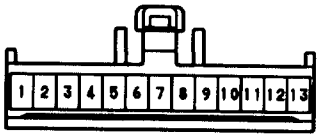

h-13-1

(P3)
PKB Switch
(SC300 M/T)

e-1-1

IF1

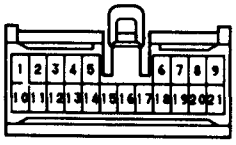

h-21-1

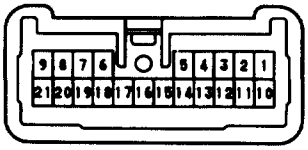

h-21-2

IF2

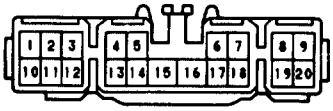

e-20-1

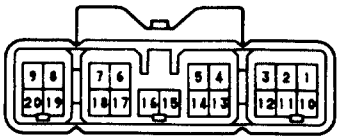

e-20-2

(C13)
Combination Meter
(SC300)

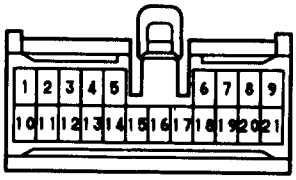

h-21-1

(C14)
Combination Meter
(SC300)

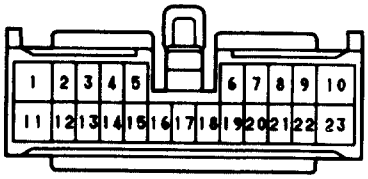

eh-23-1

(C17)
Auto Set Switch, Manual Switch, Tilt Motor, Tilt Position Sensor (COMB. Switch) (SC300)

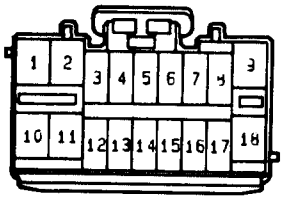

mn-18-1-A

WhereEverybodyKnowsYourName

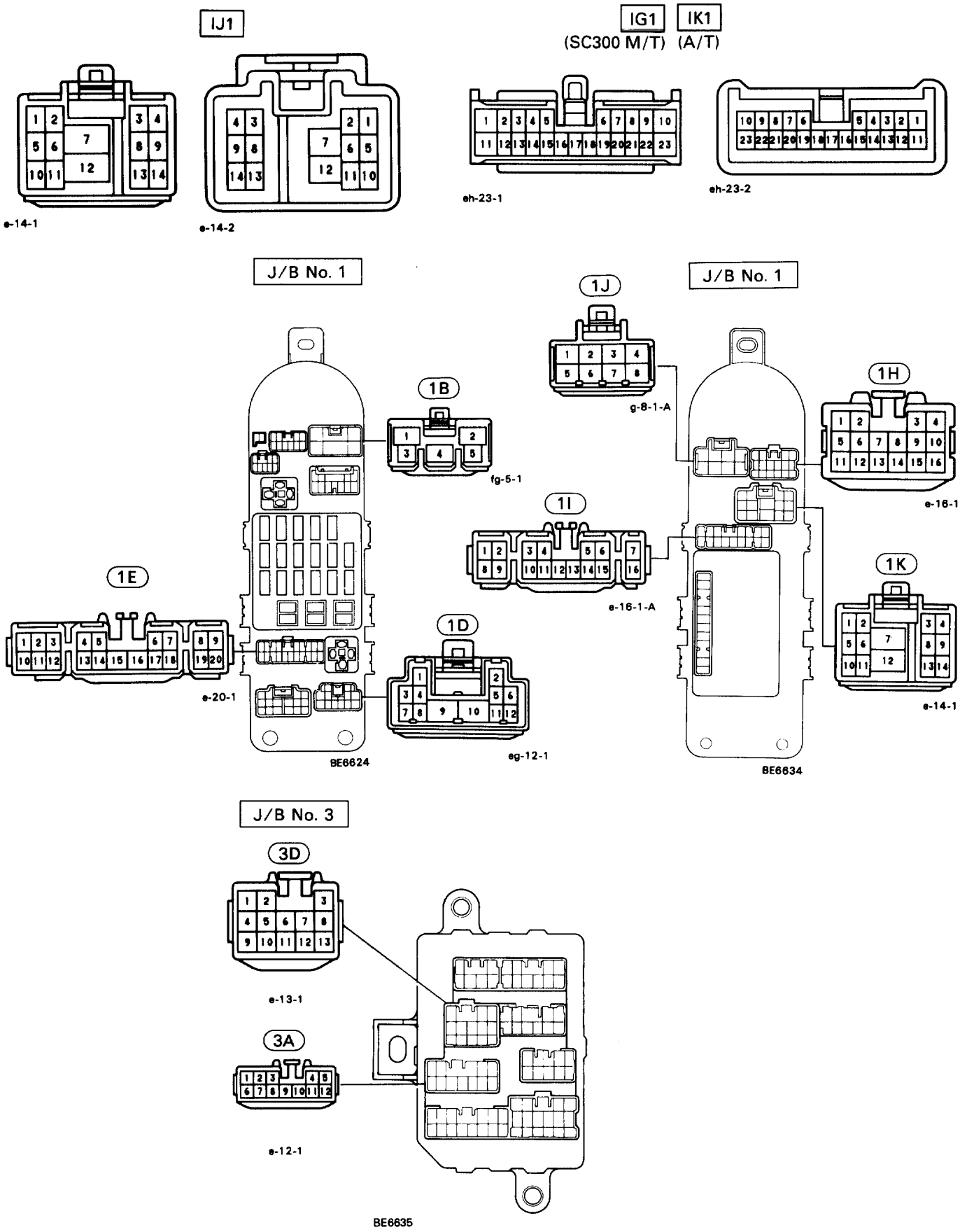

WhereEverybodyKnowsYourName

LOCATION OF CONNECTORS IN SEAT

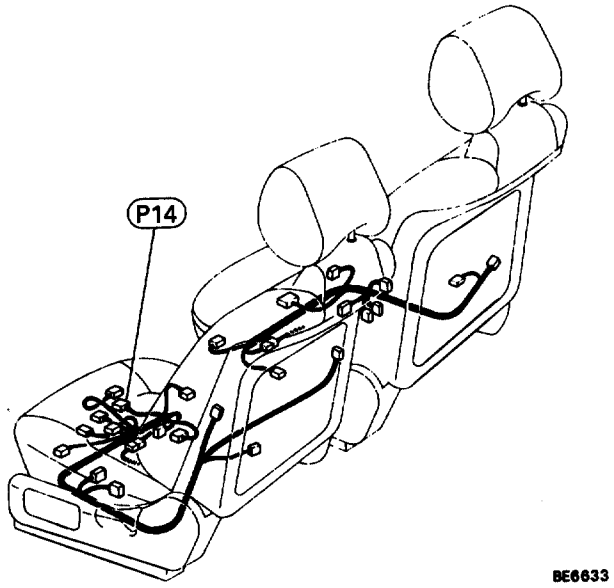

P14

Power Seat ECU
(for Driver's Seat)

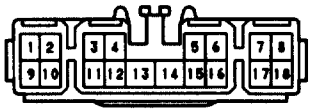

e-18-1

WhereEverybodyKnowsYourName

CIRCUIT INSPECTION

ECU Power Source Circuit

CIRCUIT DESCRIPTION

The ECU power source also supplies power to the CPU and sensor, etc. Power is supplied to the ECU even when the ignition switch is off.

DIAGNOSTIC CHART

1 Check voltage between terminals ECU-B and ECU-E of ECU connector.
- OK → Proceed to next circuit inspection shown on matrix chart. (See page SR–52).
- NG ↓

2 Check continuity between terminal ECU-E of ECU connector and body ground.
- NG → Repair or replace harness or connector.
- OK ↓

3 Check DOME fuse.
- NG → Check for short in all the harness and components connected to DOME fuse (See attached wiring diagram).
- OK ↓

Check harness and connector between ECU and battery (See page IN–33).

WIRING DIAGRAM

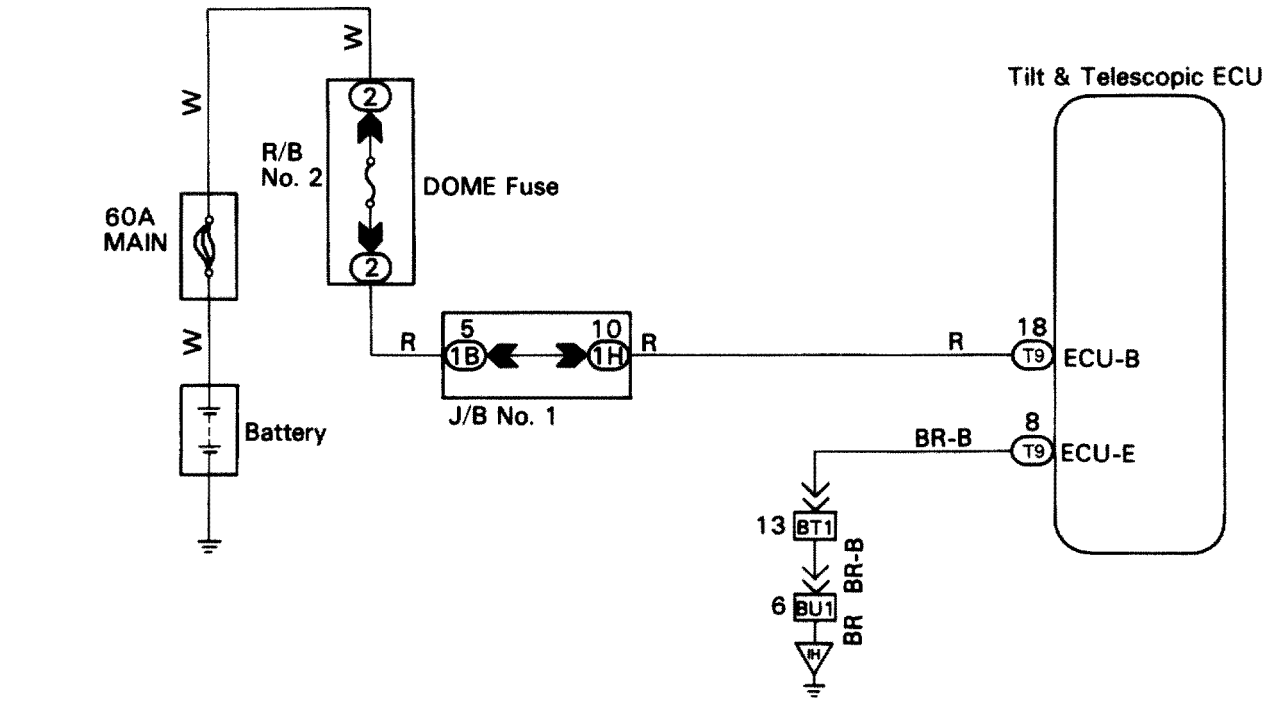

WhereEverybodyKnowsYourName

INSPECTION PROCEDURE

1	Check voltage between terminals ECU–B and ECU–E of ECU connector.
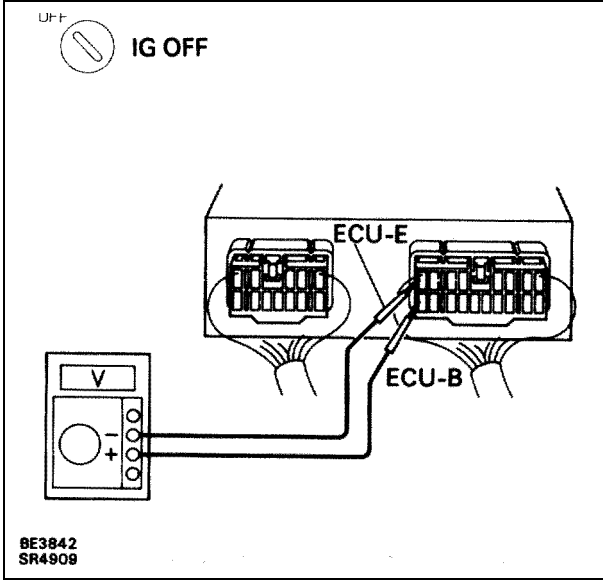	**P** Remove ECU with connectors still connected. **C** Measure voltage between terminals ECU–B and ECU–E of ECU connector. **OK** **Voltage: 10 ~ 14 V**

NG

OK **Proceed to next circuit inspection shown on matrix chart (See page SR–52).**

2	Check continuity between terminal ECU–E of ECU connector and body ground.
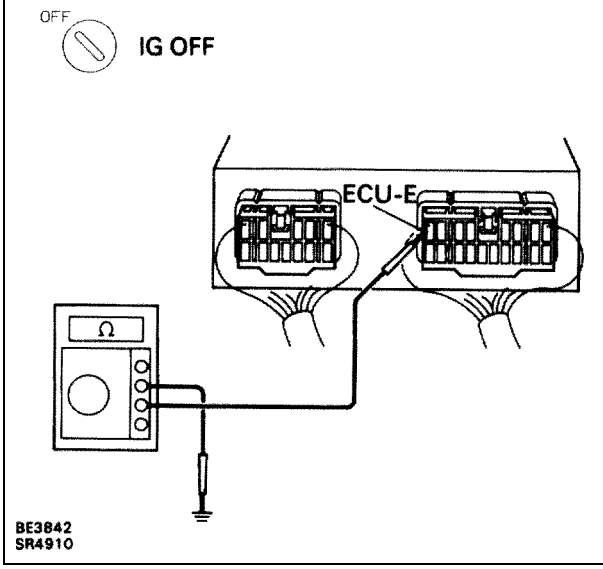	**C** Measure resistance between terminal ECU–E of ECU connector and body ground. **OK** **Resistance: 1 or less**

OK

NG **Repair or replace harness or connector.**

Go to Step ▼.

WhereEverybodyKnowsYourName

3	Check DOME Fuse.
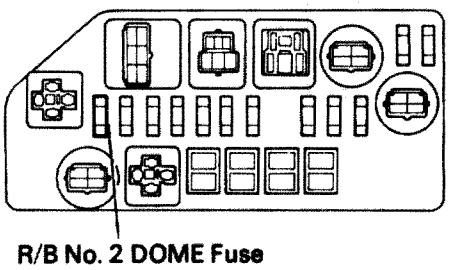 BE6625	**P** Remove DOME Fuse from R/B No. 2. **C** Check continuity of DOME Fuse. **OK** **Continuity**

OK

NG **Check for short in all the harness and components connected to DOME Fuse (See attached wiring diagram).**

Check harness and connector between ECU and battery (See page IN–33).

WhereEverybodyKnowsYourName

–MEMO–

WhereEverybodyKnowsYourName

DTC	53	Short in Squib Circuit (Between P^+ Wire Harness P^- Wire Harness)

CIRCUIT DESCRIPTION

The squib circuit consists of the center airbag sensor assembly, (squib). It causes the SRS to deploy when the SRS deployment conditions are satisfied.
For details of the function of each component, see FUNCTION OF COMPONENTS on page RS–10. Diagnostic trouble code 53 is recorded when an short is detected in the P^+ wire harness and P^- wire harness of the squib circuit.

DTC No.	Diagnosis
53	2Short circuit between P^+ wire harness and P^- wire harness of squib. 2Squib malfunction. 2Center airbag Sensor Assembly malfunction.

DIAGNOSTIC CHART

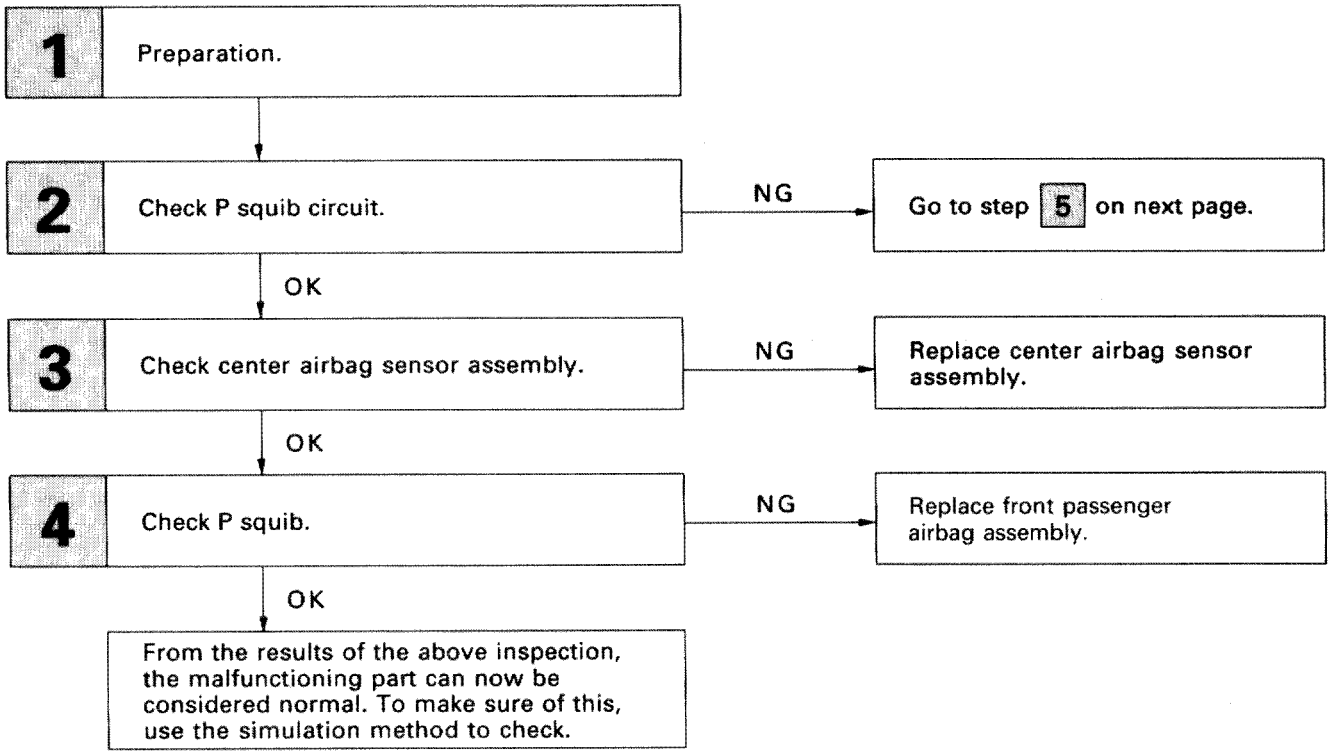

WhereEverybodyKnowsYourName

DIAGNOSTIC CHART

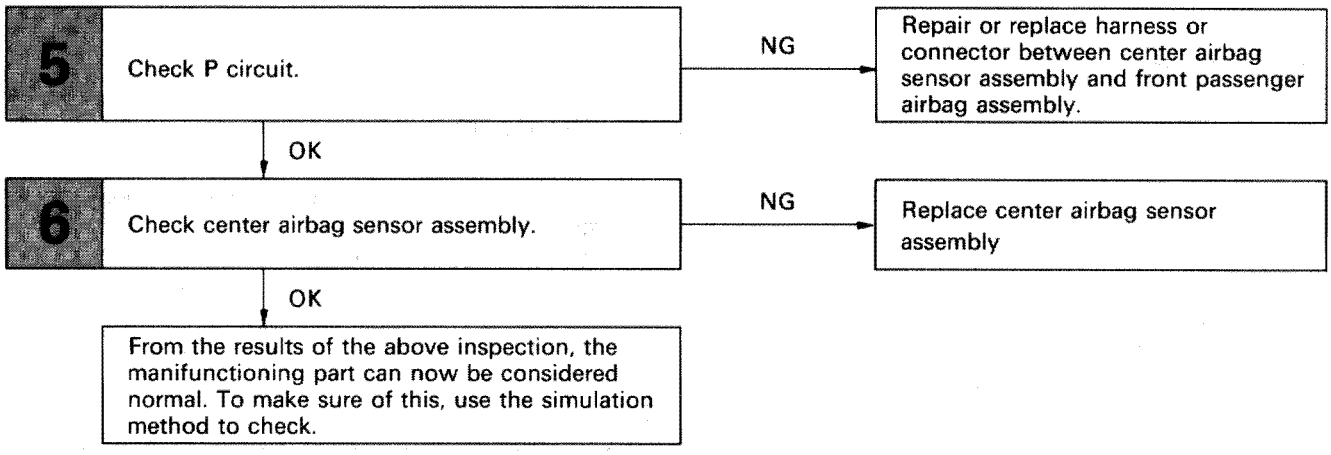

WIRING DIAGRAM

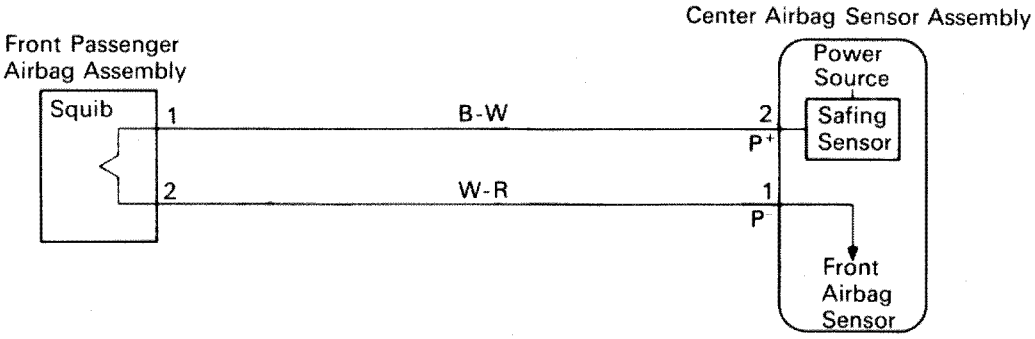

WhereEverybodyKnowsYourName

INSPECTION PROCEDURE

1 Preparation.

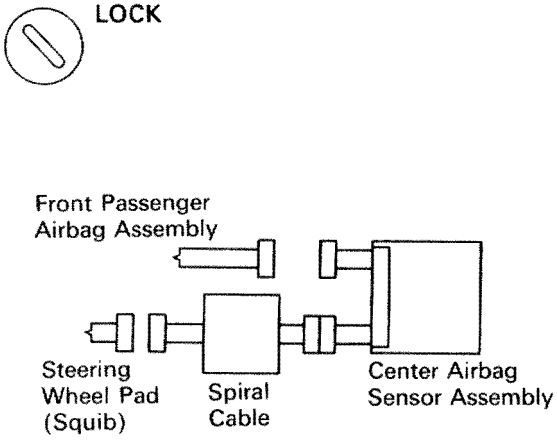

AB0117
R05902

P

1. Disconnect battery negative (–) terminal cable, and wait at least 90 seconds.
2. Remove steering wheel pad (See page RS–19).
3. Disconnect connectors of front passenger airbag assembly (See page RS–32).

Caution: Store the steering wheel pad with the surface facing upward.

2 Check P squib circuit.

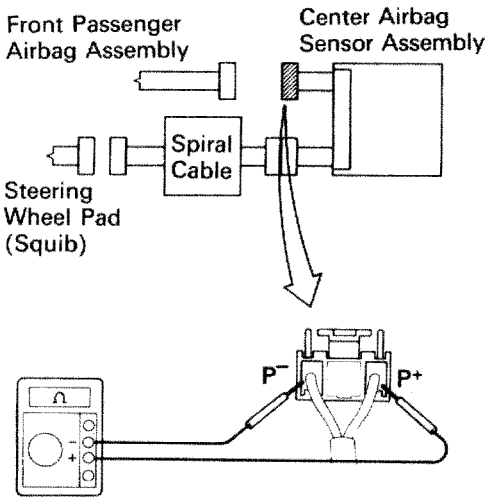

R05908
AB0068

C Measure resistance between P+ and P– on center airbag sensor assembly side of connector between center airbag sensor assembly and front passenger airbag assembly.

OK **Resistance: 1 k or higher**

OK

NG **Go to step ▼.**

WhereEverybodyKnowsYourName

3 Check center airbag sensor assembly.

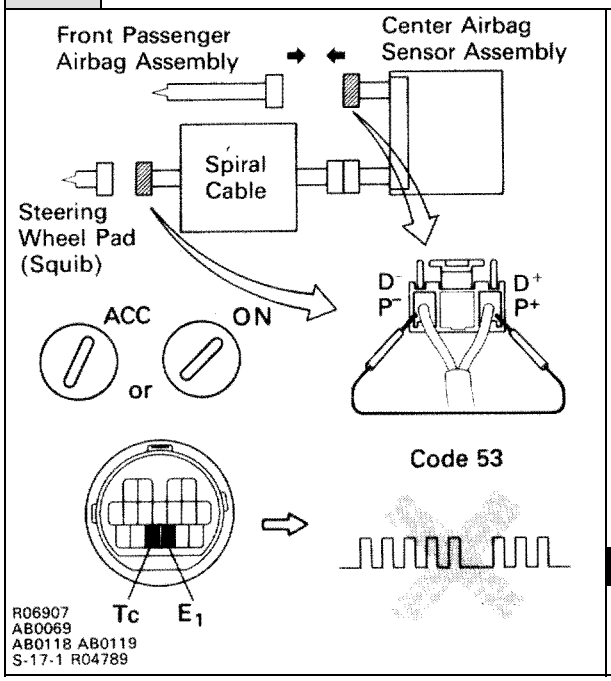

P

1. Connect negative (–) terminal cable to battery.
2. Clear malfunction code stored in memory. (See page RS–63).

C

1. Turn ignition switch LOCK, and wait at least 20 seconds.
2. Using a service wire, connect D^+ and D^-, P^+ and P^-.
3. Turn ignition switch ACC or ON, and wait at least 20 seconds.
4. Using SST, connect terminals Tc and E_1 of DLC2. SSt 09843–18020
5. Check diagnostic trouble code.

OK **Diagnostic trouble code 53 is not output.**

Hint Codes other than code 53 may be output at this time, but this is not relevant to this check.

OK

NG **Replace center airbag sensor assembly.**

4 Check P squib.

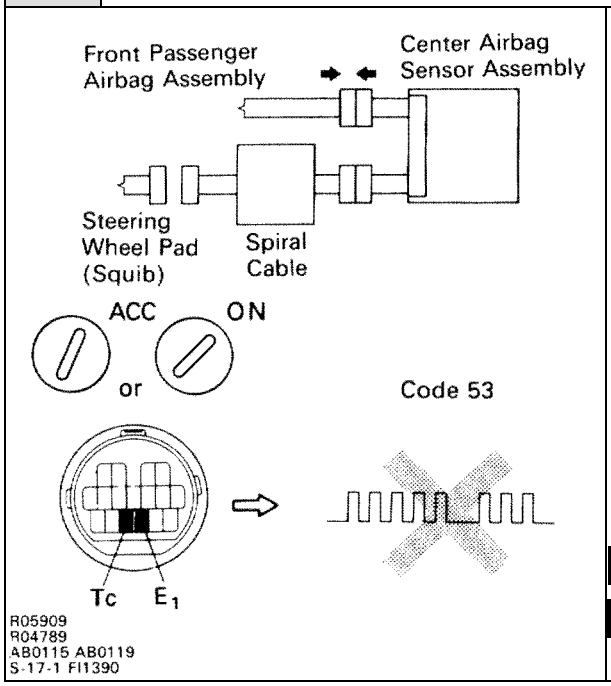

P

1. Turn ignition switch LOCK.
2. Disconnect battery negative (–) terminal cable, and wait at least 90 seconds.
3. Connect front passenger airbag assembly connector.
4. Connect negative (–) terminal cable to battery.
5. Clear malfunction code.

C

1. Turn ignition switch LOCK, and wait at least 20 seconds.
2. Turn ignition switch ACC or ON, and wait at least 20 seconds.
3. Using SST, connect terminals Tc and E_1 of DLC2. SST 09843–18020
4. Check diagnostic trouble code.

OK **Diagnostic trouble code 53 is not output.**

Hint Codes other than code 53 may be output at this time, but this is not relevant to this check.

OK

NG **Replace front passenger airbag assembly.**

WhereEverybodyKnowsYourName

From the results of the above inspection, the malfunctioning part can now be considered normal. To make sure of this, use the simulation method to check.

5 Check P circuit.

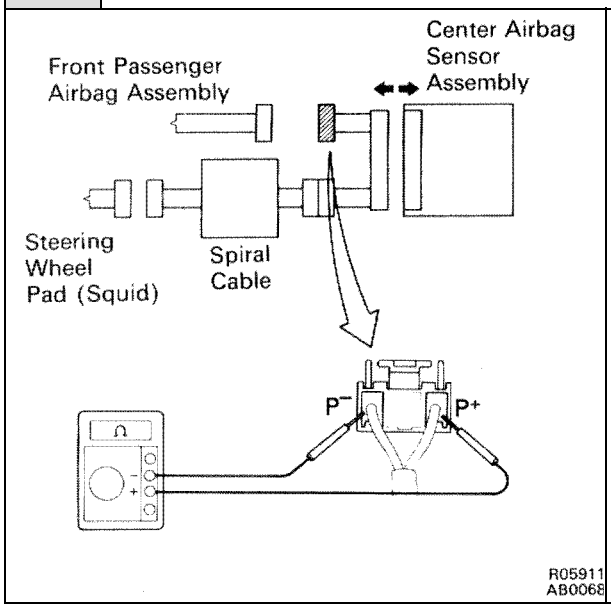

P

1. Disconnect center airbag sensor assembly connector.
2. Release airbag activation prevention mechanism on center airbag sensor assembly connector (See page RS–91).

C Measure resistance between P^+ and P^- on center airbag sensor assembly side of connector between airbag sensor assembly and front passenger airbag assembly.

OK **Resistance: 1 M of higher**

OK

NG **Repair or replace harness or connector between center airbag sensor assembly and front passenger airbag assembly.**

6 Check center airbag sensor assembly.

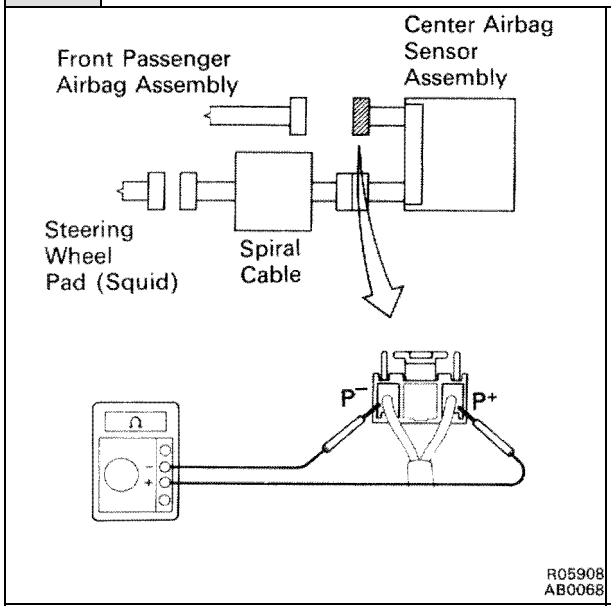

P Connect center airbag sensor assembly connector.

C Measure resistance between P^+ and P^- on center airbag sensor assembly side of connector between center airbag sensor assembly and front passenger airbag assembly.

OK **Resistance: 1 k or higher**

OK

NG **Replace center airbag sensor assembly.**

From the results of the above inspection, the malfunction part can now be considered normal. To make sure of this, use the simulation method to check.

WhereEverybodyKnowsYourName

DTC	54	Open in P Squib Circuit

CIRCUIT DESCRIPTION

The squib circuit consists of the center airbag sensor assembly and front passenger airbag assembly. It causes the SRS to deploy when the SRS deployment conditions are satisfied. For details of the function of each component, see FUNCTION OF COMPONENTS on page RS–10.
Diagnostic trouble code 54 is recorded when an open is detected in the squib circuit.

DTC No.	Diagnosis
54	▼Open circuit in P^+ wire harness and P^- wire harness of squib. ▼Squib malfunction. ▼Center airbag sensor malfunction.

WhereEverybodyKnowsYourName

DIAGNOSTIC CHART

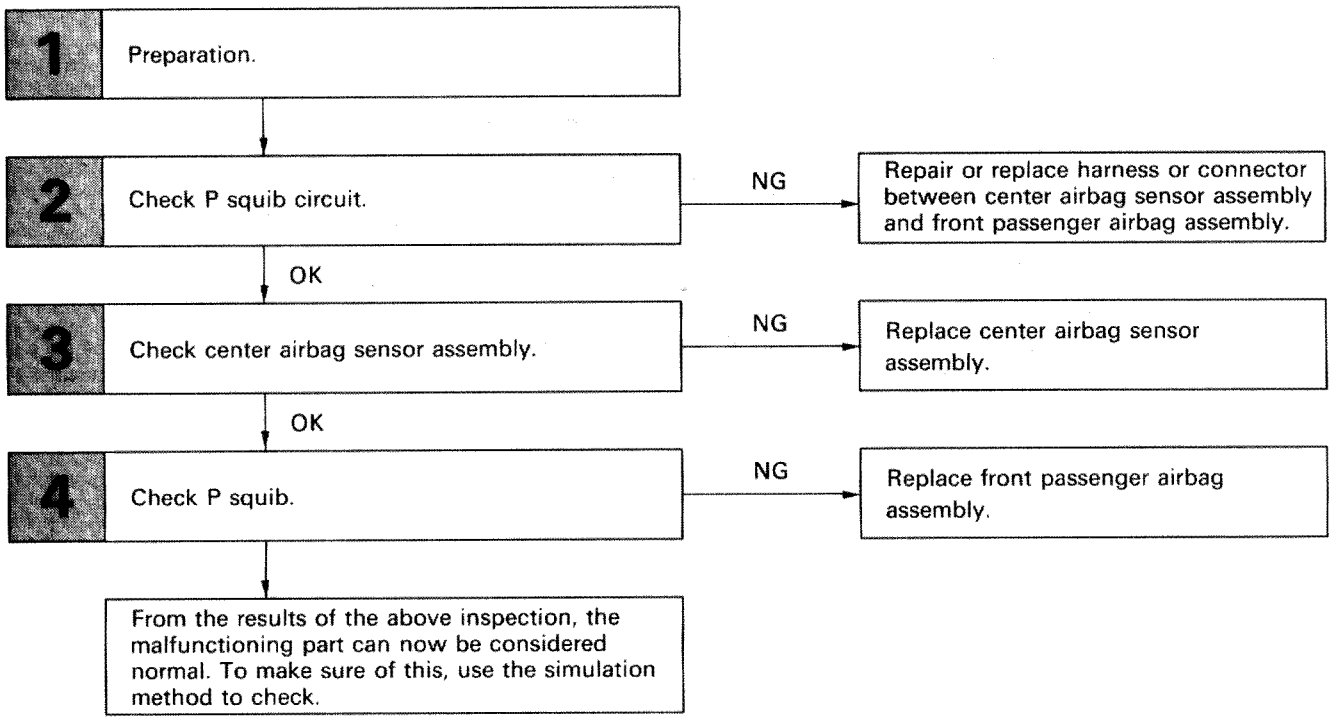

WIRING DIAGRAM

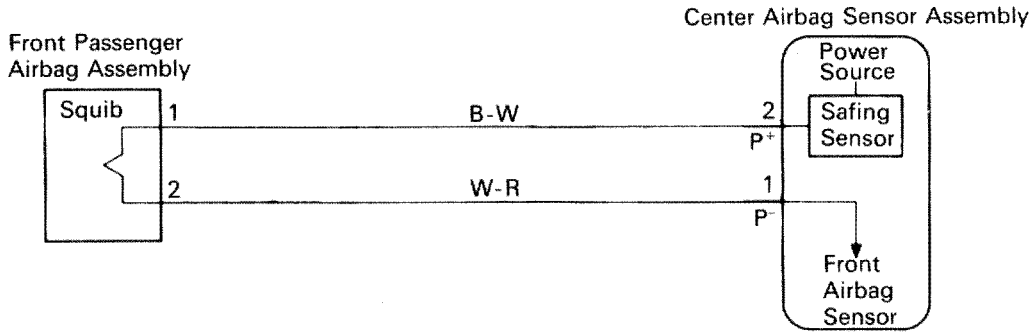

WhereEverybodyKnowsYourName

1 Preparation.

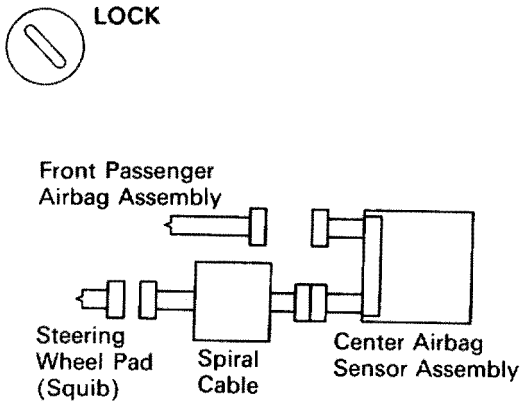

P

1. Disconnect battery negative (–) terminal cable, and wait at least 90 seconds.
2. Remove steering wheel pad (See page RS–19).
3. Disconnect connectors of front passenger airbag assembly (See page RS–32).

Caution: Store the steering wheel pad with the surface facing upward.

2 Check P squib circuit.

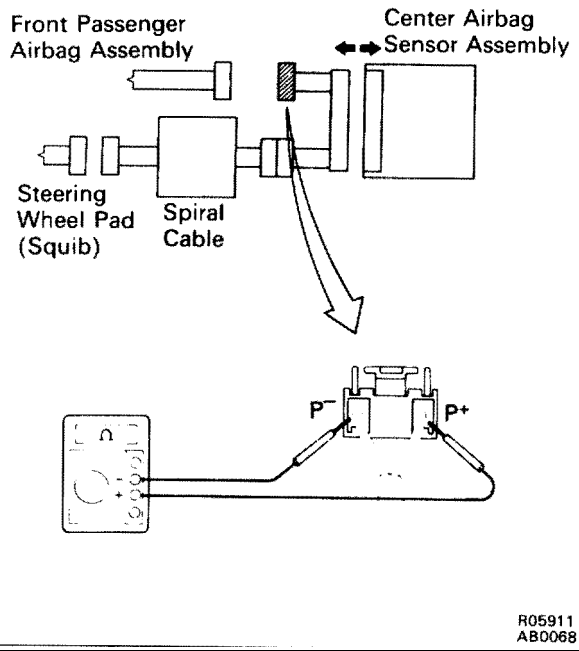

P Disconnect center airbag sensor assembly connector.

C Measure resistance between P^+ and P^- on center airbag sensor assembly side of connector between center airbag sensor assembly and front passenger airbag assembly.

OK **Resistance: Below 1**

OK

NG **Repair or replace harness or connector between center airbag sensor assembly and front passenger airbag assembly.**

WhereEverybodyKnowsYourName

3 Check center airbag sensor assembly.

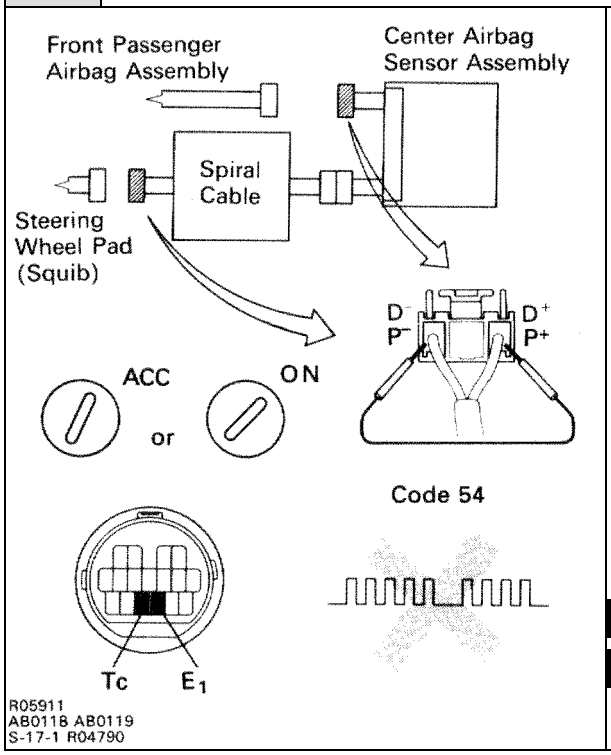

P

1. Connect connector to center airbag sensor connector.
2. Connect connector between center airbag sensor assembly and wiring harness connector.
3. Using a service wire, connect D^+ and D^-, P^+ and P^-.
4. Connect negative (–) terminal cable to battery, and wait at least 2 seconds.

C

1. Turn ignition switch ACC or ON and wait at least 20 seconds. Clear malfunction code. Turn ignition switch LOCK and wait at least 20 seconds.
2. Turn ignition switch ACC or ON , and wait at least 20 seconds.
3. Using SST, connect terminals Tc and E_1 of DLC2. SST 09843–18020
4. Check diagnostic trouble code.

OK **Diagnostic trouble code 54 is not output.**

Hint Codes other than code 54 may be output at this time, but this is not relevant to this check.

OK

NG **Replace center airbag sensor assembly.**

4 Check P squib.

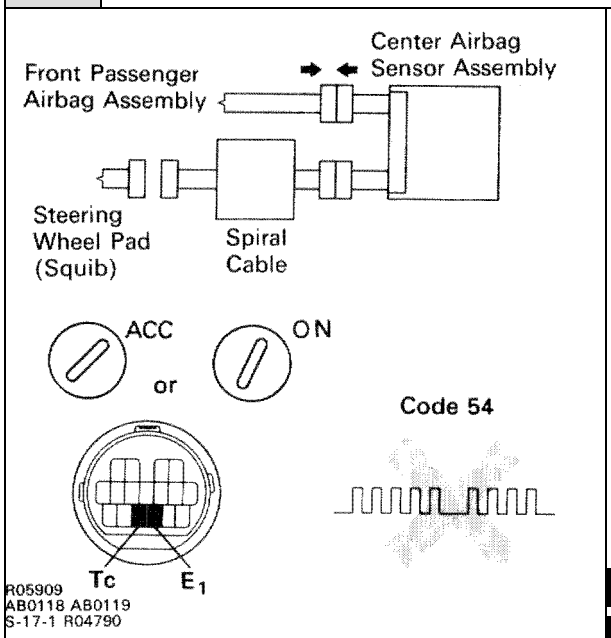

P

1. Turn ignition switch LOCK.
2. Disconnect battery negative (–) terminal cable, and wait at least 90 seconds.
3. Connect front passenger airbag assembly connector.
4. Connect negative (–) terminal cable to battery, and wait at least 2 seconds.

C

1. Turn ignition switch ACC or ON and wait at least 20 seconds. Clear malfunction code. Turn ignition switch LOCK and wait at least 20 seconds.
2. Turn ignition switch ACC or ON, and wait at least 20 seconds.
3. Using SST, connect terminals Tc and E_1 of DLC2. SST 09843–18020
4. Check diagnostic trouble code.

OK **Diagnostic trouble code 54 is not output.**

Hint Codes other than code 54 may be output at this time, but this is not relevant to this check.

OK

NG **Replace front passenger airbag assembly.**

From the results of the above inspection, the malfunctioning part can now be considered normal. To make sure of this, use the simulation method to check.

WhereEverybodyKnowsYourName

SRS Warning Light System (Always Lit Up, when ignition switch in LOCK position)

CIRCUIT DESCRIPTION

The SRS warning light is located on the combination meter.
When the supplemental restraint system is normal, the SRS warning light lights up for approx. 6 seconds after the ignition switch is turned from LOCK position to ACC or ON position, and then turns off automatically.
If there is a malfunction in the supplemental restraint system, the SRS warning light lights up to inform the driver of the abnormality.
When terminals Tc and E_1 of the DLC2 are connected, the diagnostic trouble code is displayed by the blinking of the SRS warning light.

DIAGNOSTIC CHART

HINT: If the SRS warning light is always lit up by a DTC check procedure, perform Tc Terminal circuit check procedure (See page RS–121).

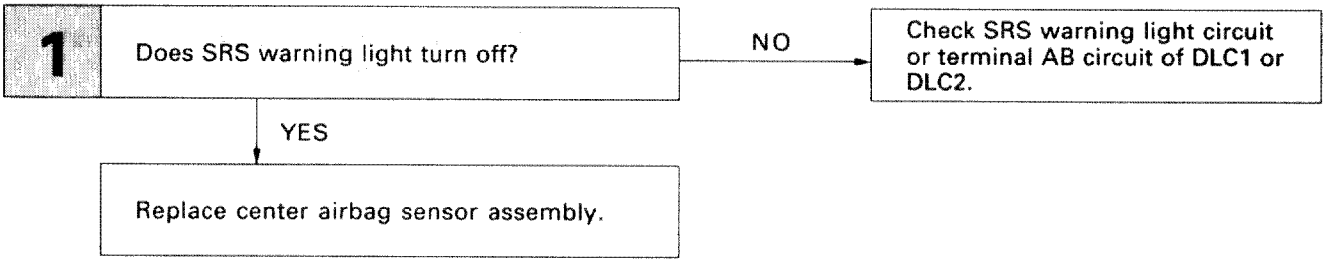

WIRING DIAGRAM

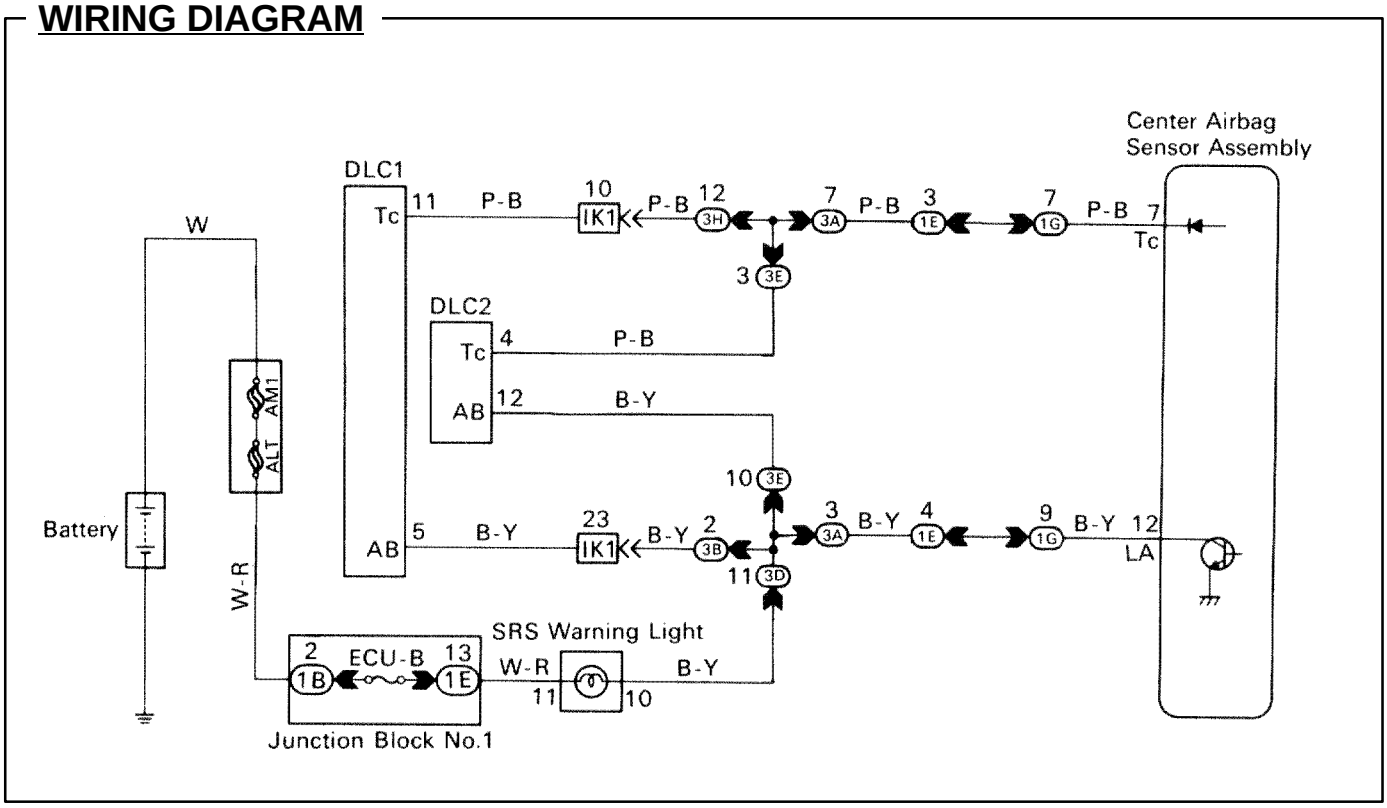

WhereEverybodyKnowsYourName

INSPECTION PROCEDURE

1 **Does SRS warning light turn off?**

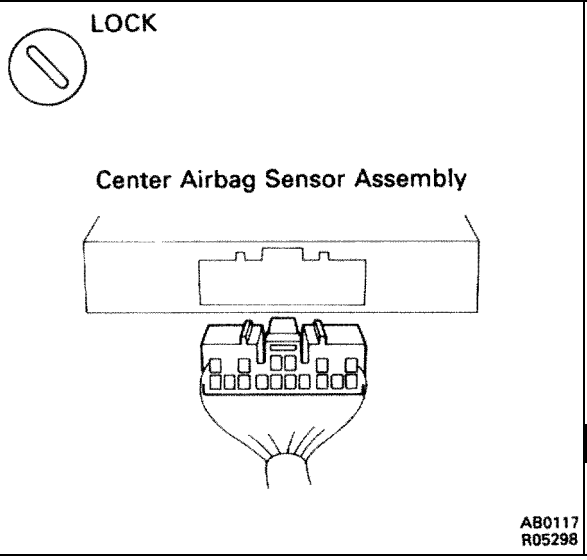

P

1. Turn ignition switch LOCK.
2. Disconnect negative (–) terminal cable from battery and wait at least 90 seconds.
3. Remove steering wheel pad (See page RS–19).
4. Disconnect connectors of front passenger airbag assembly (See page RS–32).
5. Disconnect center airbag sensor assembly connector.
6. Connect negative (–) terminal cable to battery.

C Check operation of SRS warning light.

Hint Ignition Switch is LOCK position.

YES

NO **Check SRS warning light circuit or terminal AB circuit of DCL1 or DLC2.**

Replace center airbag sensor assembly.

WhereEverybodyKnowsYourName

Tc Terminal Circuit

CIRCUIT DESCRIPTION

By connecting terminal Tc and E_1 of the DLC1 or DLC2, the center airbag sensor assembly is set in the diagnostic trouble code output mode. The diagnostic trouble codes are displayed by the blinking of the SRS warning light.

DIAGNOSTIC CHART

Troubleshooting for this system is different depending on whether the diagnostic trouble code is not displayed SRS warning light is always lit up with a DTC check procedure, or is displayed without a DTC check procedure. Confirm the problem symptoms first before selecting the appropriate troubleshooting procedure.
HINT: If the diagnostic trouble code is not displayed or SRS warning light is always lit up with a DTC check procedure perform the following troubleshooting:

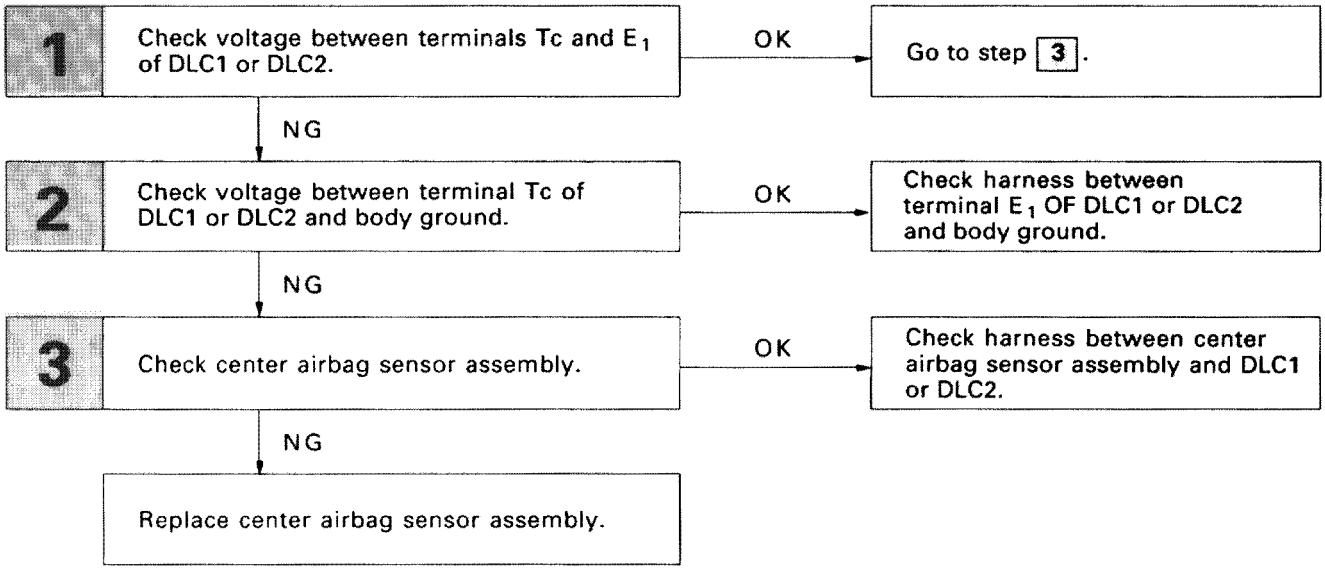

HINT: If the diagnostic trouble code is continuously displayed without a DTC check procedure, perform the following troubleshooting:

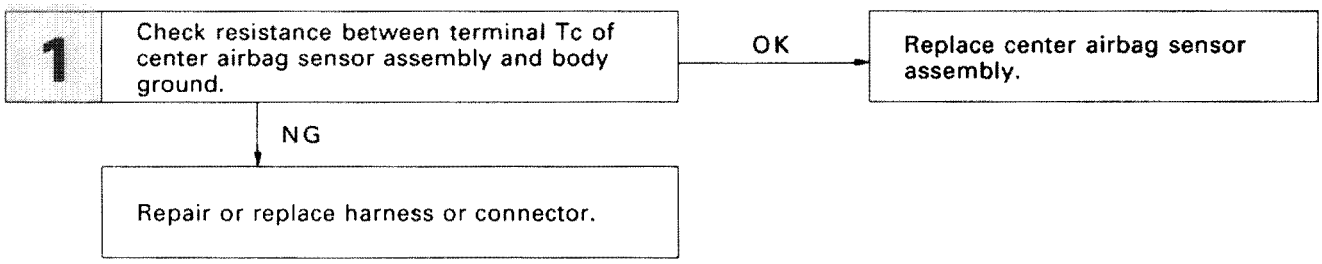

WhereEverybodyKnowsYourName

DIAGNOSTIC CHART

WIRING DIAGRAM

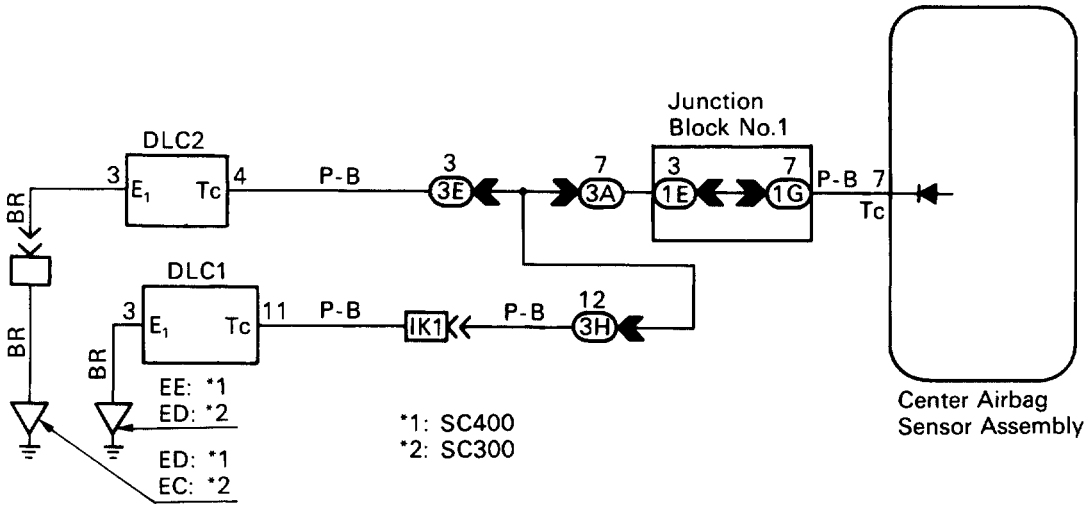

WhereEverybodyKnowsYourName

INSPECTION PROCEDURE

HINT: If the diagnostic trouble code is not displayed, perform the following troubleshooting:

1 **Check voltage between terminals Tc and E_1 of DLC1 or DLC2.**

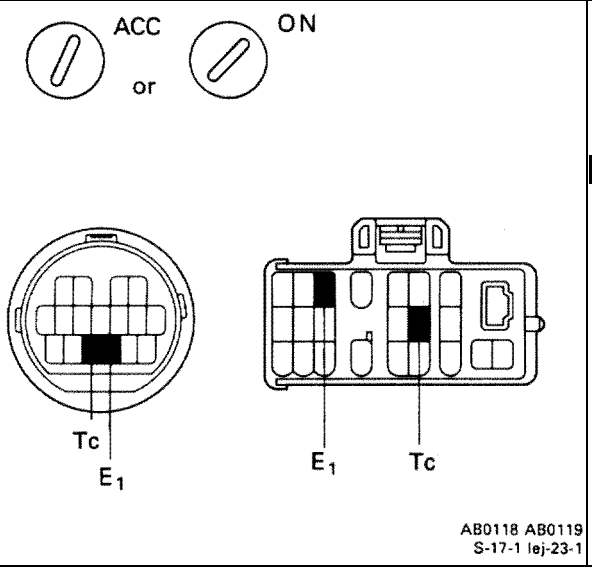

P Turn ignition switch ACC or ON.

C Measure voltage between terminals Tc and E_1 of DLC1 or DLC2.

OK **Voltage:** **Battery positive voltage**

NG

OK **Go to step ▼.**

2 **Check voltage between terminal Tc of DLC1 or DLC2 and body ground.**

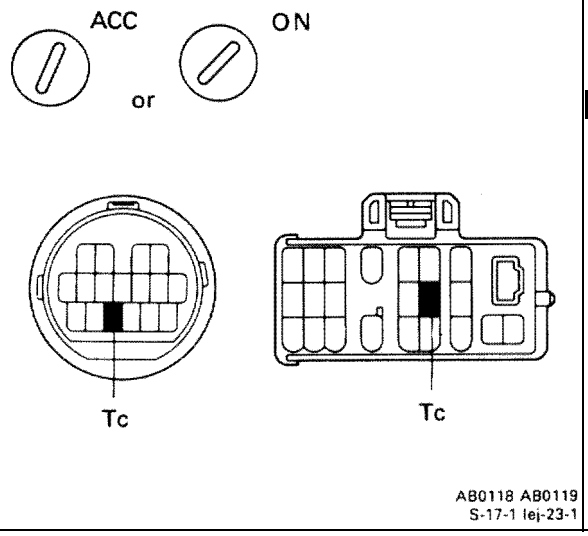

C Measure voltage between terminal Tc of DLC1 or DLC2 and body ground.

OK **Voltage:** **Battery positive voltage**

NG

OK **Check harness between terminal E1 of DLC1 or DLC2 and body ground.**

WhereEverybodyKnowsYourName

3	Check center airbag sensor assembly.
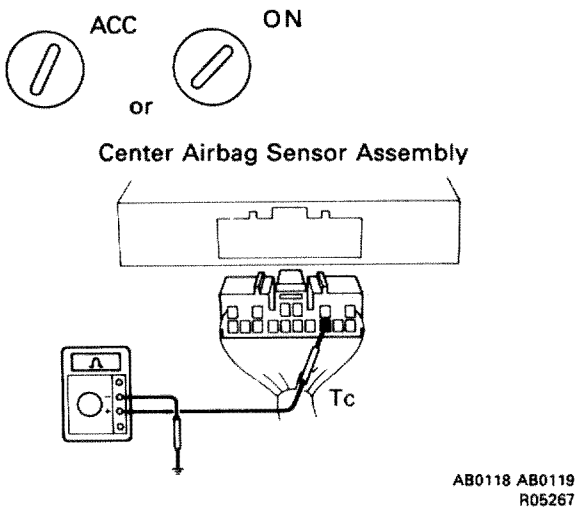	**P** 1. Turn ignition switch LOCK. 2. Disconnect battery negative (–) terminal cable, and wait at least 90 seconds. 3. Remove steering wheel pad (See page RS–19). 4. Disconnect connectors of front passenger airbag assembly (See page RS–32). **C** Check operation of SRS warning light. **OK** **SRS warning light comes on.**

NG

OK **Check harness between center airbag sensor assembly and DLC1 or DLC2.**

Replace center airbag sensor assembly.

WhereEverybodyKnowsYourName

HINT: If the diagnostic trouble code is continuously displayed, perform the following troubleshooting.

1	Check resistance between terminal Tc of center airbag sensor assembly and body ground.
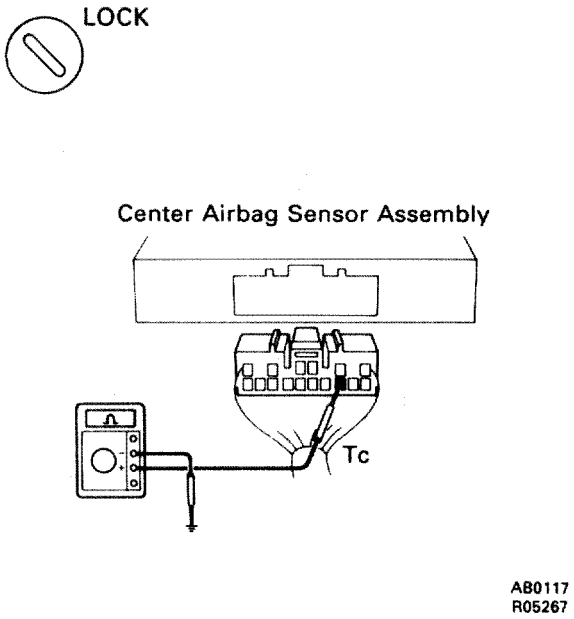	**P** 1. Turn ignition switch LOCK. 2. Disconnect center airbag sensor assembly connector. 3. Disconnect battery negative (–) terminal cable, and wait at least 90 seconds. 4. Remove steering wheel pad (See page RS–19). 5. Disconnect connectors of front passenger airbag assembly (See page RS–32). **C** Check resistance between terminal Tc of center airbag sensor assembly and body ground. **OK** **Resistance: 1 M or higher**

NG

Repair or replace harness or connector.

OK

Replace center airbag sensor assembly.

WhereEverybodyKnowsYourName

SERVICE SPECIFICATIONS

SERVICE DATA

RS02S–01

FRONT AIRBAG SENSOR	
±S – ±A	755–855 ?
±S – ⊖S	1 M ? or Higher
⊖S – ⊖A	Less than 1 ?

TORQUE SPECIFICATIONS

RS02T–07

Part tightened	N·m	kgf·cm	ft·lbf
Steering wheel	35	360	26
Steering wheel pad	7.4	75	65 in.·lbf
Front passenger airbag assembly	21	210	15
Front airbag sensor	25	260	19
Center airbag sensor assembly	15	150	11

WhereEverybodyKnowsYourName

SUPPLEMENTAL RESTRAINT SYSTEM

WhereEverybodyKnowsYourName

GENERAL DESCRIPTION

The LEXUS SC400/300 is equipped with an SRS (Supplemental Restraint System) such as the driver airbag and front passenger airbag. Failure to carry out service operations in the correct sequence could cause the SRS to unexpectedly deployed during servicing, possibly leading to a serious accident. Further, if a mistake is made in servicing the supplemental restraint system, it is possible the SRS may fail to operate when required. Before performing servicing (including removal or installation of parts, inspection or replacement), be sure to read the following items carefully, then follow the correct procedure described in the repair manual.

1. Malfunction symptoms of the supplemental restraint system are difficult to confirm, so the diagnostic trouble codes become the most important source of information when troubleshooting. When troubleshooting the supplemental restraint system, always inspect the diagnostic trouble codes before disconnecting the battery (See page RS–59).
2. **Work must be started after 90 seconds from the time the ignition switch turned to the LOCK position and the negative (–) terminal cable is disconnected from the battery. (The supplemental restraint system is equipped with a back–up power source so that if work is started within 90 seconds of disconnecting the negative (–) terminal cable of the battery, the SRS may be deployed.)**
   When the negative (–) terminal cable is disconnected from the battery, memory of the clock and audio systems will be canceled. So before starting work, make a record of the contents memorized by the audio memory system. When work is finished, reset the audio systems as before and adjust the clock. When the vehicle has power tilt and power telescopic steering, power seat, power outside rear view mirror and power shoulder belt anchorage, which are all equipped with memory function, it is not possible to make a record of the memory contents. So when the work is finished, it will be necessary to explain this fact to the customer, and ask the customer to adjust the features and reset the memory.
   To avoid erasing the memory of each memory system, never use a back–up power supply from outside the vehicle.
3. Even in cases of a minor collision where the SRS does not deploy, the steering wheel pad, front passenger airbag assembly, front airbag sensors and center airbag sensor assembly should be inspected (See pages RS–16, 28, 41 and 44).
4. Never use SRS parts from another vehicle. When replacing parts, replace them with new parts.
5. Before repairs, remove the airbag sensor if shocks are likely to be applied to the sensors during repairs.
6. Never disassemble and repair the steering wheel pad, front passenger airbag assembly, front airbag sensors or center airbag sensor assembly in order to reuse it.
7. If the steering wheel pad, front passenger airbag assembly, front airbag sensors or center airbag sensor assembly have been dropped, or if there are cracks, dents or dents or other defects in the case, bracket or connector, replace them with new ones.
8. Do not expose the steering wheel pad, front passenger airbag assembly, front airbag sensors and center airbag sensor assembly directly to hot air or flames.
9. Use a volt/ohmmeter with high impedance (10 k? /V minimum) of troubleshooting of the system's electrical circuit.
10. Information labels are attached to the periphery of the SRS components. Follow the instructions on the notices.
11. After work on the supplemental restraint system is completed, perform the SRS warning light check (See page RS–59).
12. If the vehicle is equipped with a mobile communication system, refer to the precaution in the IN section.

WhereEverybodyKnowsYourName

STEERING WHEEL PAD (with AIRBAG)

RS00Q–07

1. **When removing the steering wheel pad or handling a new steering wheel pad, it should be placed with the pad top surface facing up.**
   In this case, the twin–lock type connector lock lever should be in the locked state and care should be taken to place it so the connector will not be damaged. And do not store a steering wheel pad on top of another one. (Storing the pad with its metallic surface up may lead to a serious accident if the airbag inflates for some reason.

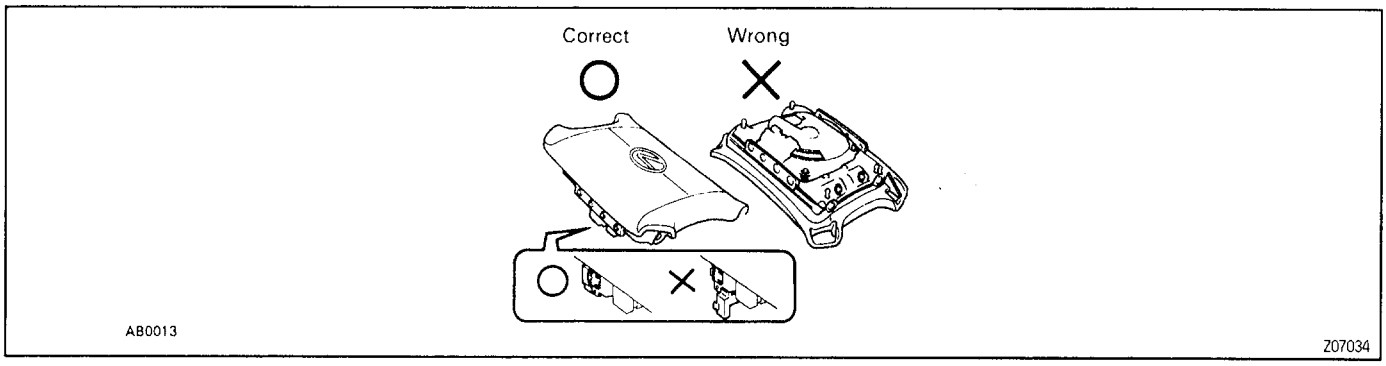

2. **Never measure the resistance of the airbag squib. (This may cause the airbag to deploy, which is very dangerous.)**

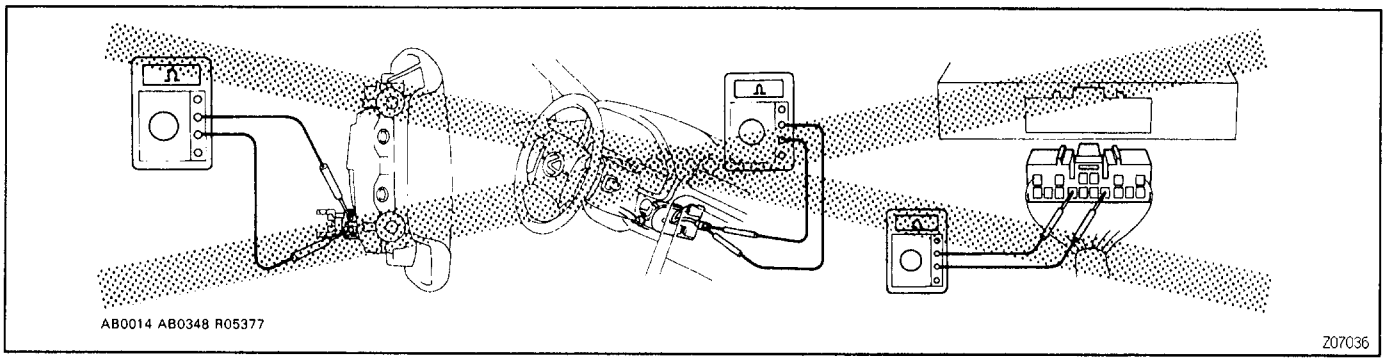

3. **Grease should not be applied to the steering wheel pad and the pad should not be cleaned with detergents of any kind.**
4. **Store the steering wheel pad where the ambient temperature below 93▼C (200▼F), without high humidity and away from electrical noise.**
5. **When using electric welding, first disconnect the SRS connector (yellow color and 2 pins) under the steering column near the combination switch connector before starting work.**
6. **When disposing of a vehicle or the steering wheel pad alone, the airbag should be deployed using an SST before disposal (See page RS–21).**
   Perform the operation in a place away from electrical noise.

WhereEverybodyKnowsYourName

SPIRAL CABLE (in COMBINATION SWITCH)

RS00P–06

The steering wheel must be fitted correctly to the steering column with the spiral cable at the neutral position, otherwise cable disconnection and other troubles may result.

Refer to page RS–19 of this manual concerning correct steering wheel installation.

FRONT PASSENGER AIRBAG ASSEMBLY

RS00N–07

1. **Always store a removed or new front passenger airbag assembly with the airbag door facing up. Store the airbag assembly with the airbag door facing down could cause a serious accident if the airbag inflates.**

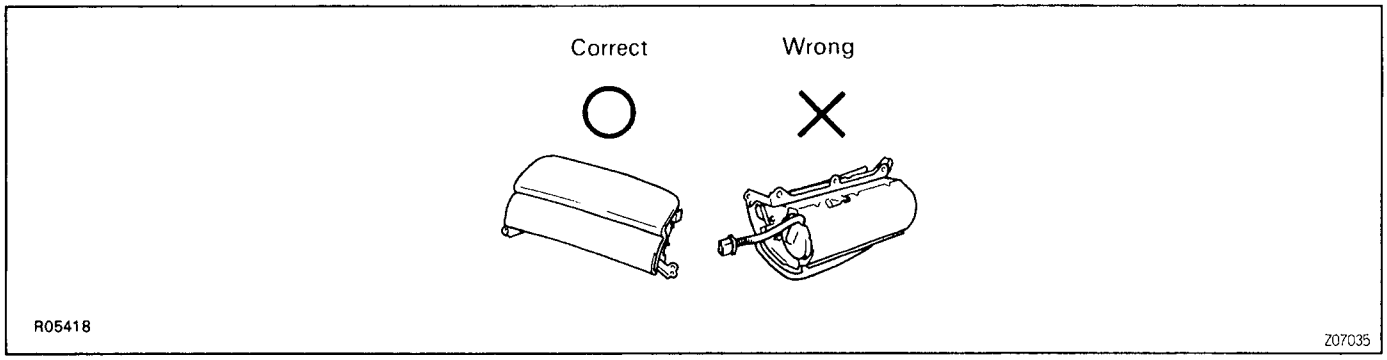

2. **Never measure the resistance of the airbag squib. (This may cause the airbag to deploy, which is very dangerous.)**

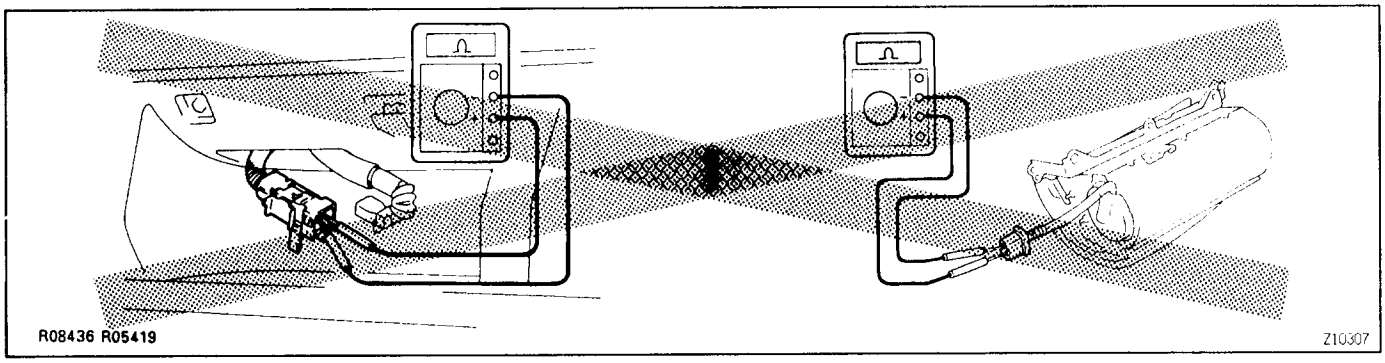

3. **Grease should not be applied to the front passenger airbag assembly and the door should not be cleaned with detergents of any kind.**
4. **Store the front passenger airbag assembly where the ambient temperature remains below 93°C (200°F), without high humidity and away from electrical noise.**
5. **When using electric welding, first disconnect the SRS connector (yellow color and 2 pins) installed on the glove compartment door finish plate at upper side of the glove compartment assembly before starting work.**
6. **When disposing of a vehicle or the front passenger airbag assembly alone, the airbag should be deployed using an SST before disposal (See page RS–34). Perform the operation in a place away from electrical noise.**

WhereEverybodyKnowsYourName

FRONT AIRBAG SENSOR

RS00N–07

1. Never reuse the front airbag sensor involved in a collision when the airbag has deployed. (Replace both the left and right airbag sensors.)
2. Install the front airbag sensor with the arrow on the sensor facing toward the front of the vehicle.

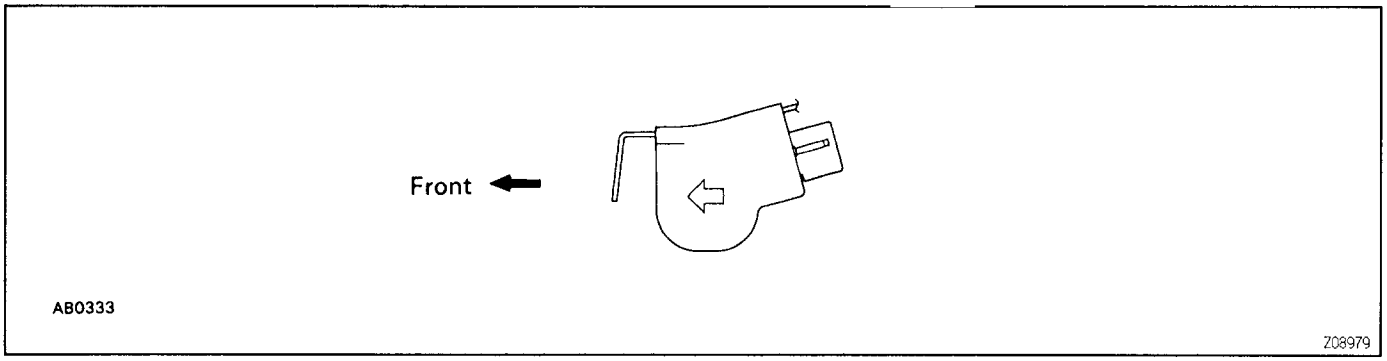

3. The front airbag sensor set bolts have been anti–rust treated. When the sensor is removed, always replace the set bolts with new ones.
4. The front airbag sensors is equipped with an electrical connection check mechanism. Be sure to lock this mechanism securely when connecting the connector. If the connector is not securely locked, a malfunction code will be detected by the diagnosis system (See page RS–12).

CENTER AIRBAG SENSOR ASSEMBLY

RSOOR–0A

1. **Never reuse the center airbag sensor assembly involved in a collision when the airbag has deployed.**
2. **Work must be started after 90 seconds from the time the ignition switch is turned to LOCK position and the negative (–) terminal cable is disconnected from the battery even just loosing the set bolts of center airbag sensor assembly.**

WIRE HARNESS AND CONNECTOR

RSO41–01

The SRS wire harness is integrated with the cowl wire harness assembly. The wires for the SRS wire harness are encased in a yellow corrugated tube. All the connectors for the system are also a standard yellow color. If the SRS wire harness becomes disconnected or the connector becomes broken due to an accident etc., repair or replace it as shown on page RS–48.

WhereEverybodyKnowsYourName

DESCRIPTION

RS00S–02

The SRS (Supplemental Restraint System), together with the seat belt, is designed to help protect the driver. Frontal inspect, the airbag sensor detect the shock, and if the front–to–rear shock is greater than a specified value, an airbag stored in the steering wheel pad is inflated instantaneously to help reduce the shock to the driver.

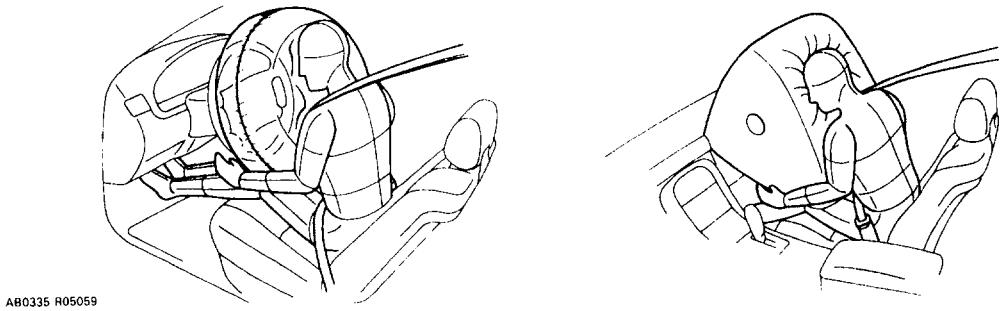

LOCATION OF COMPONENTS

RS00T–02

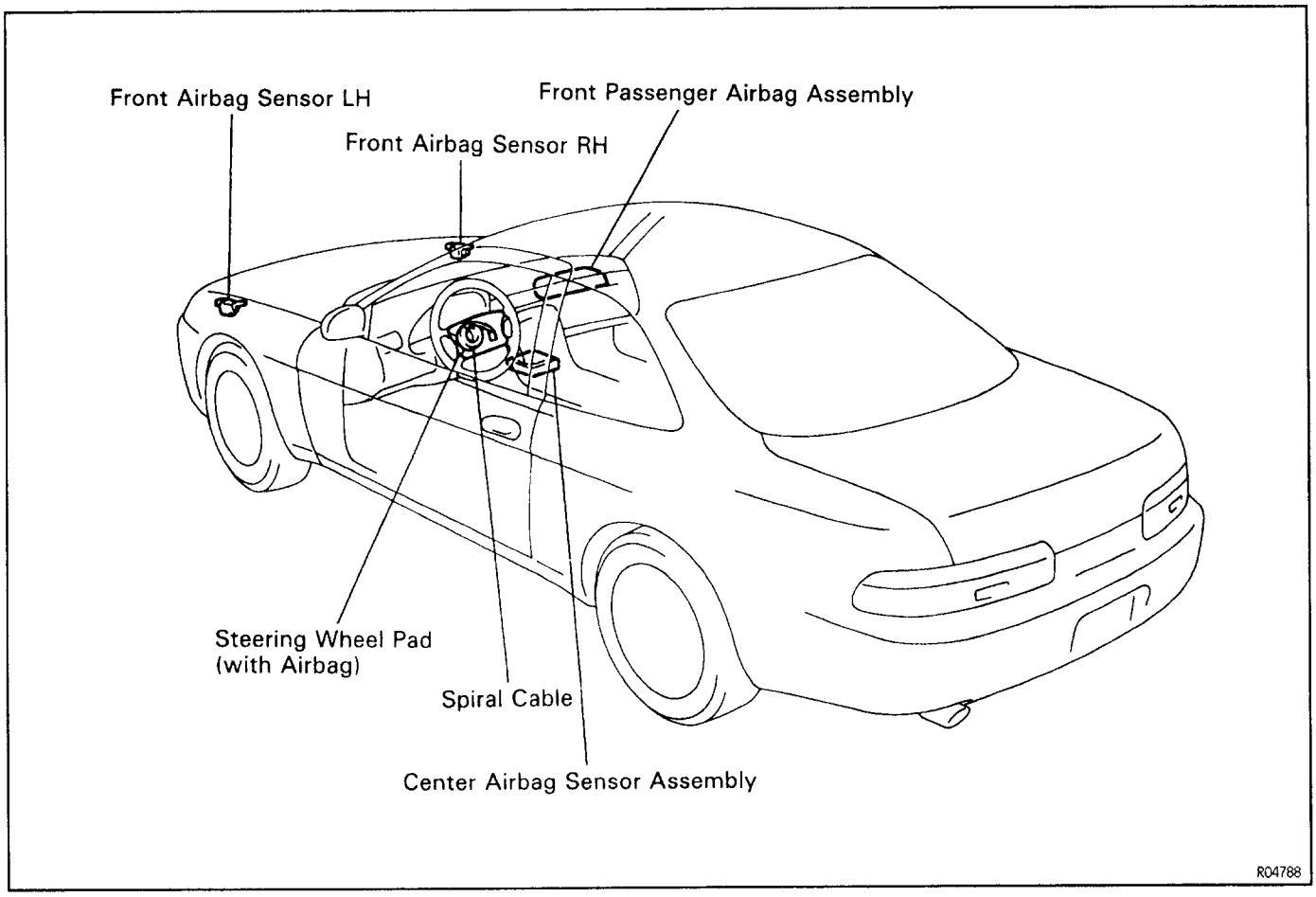

WhereEverybodyKnowsYourName

RSOOU–02

WIRING DIAGRAM

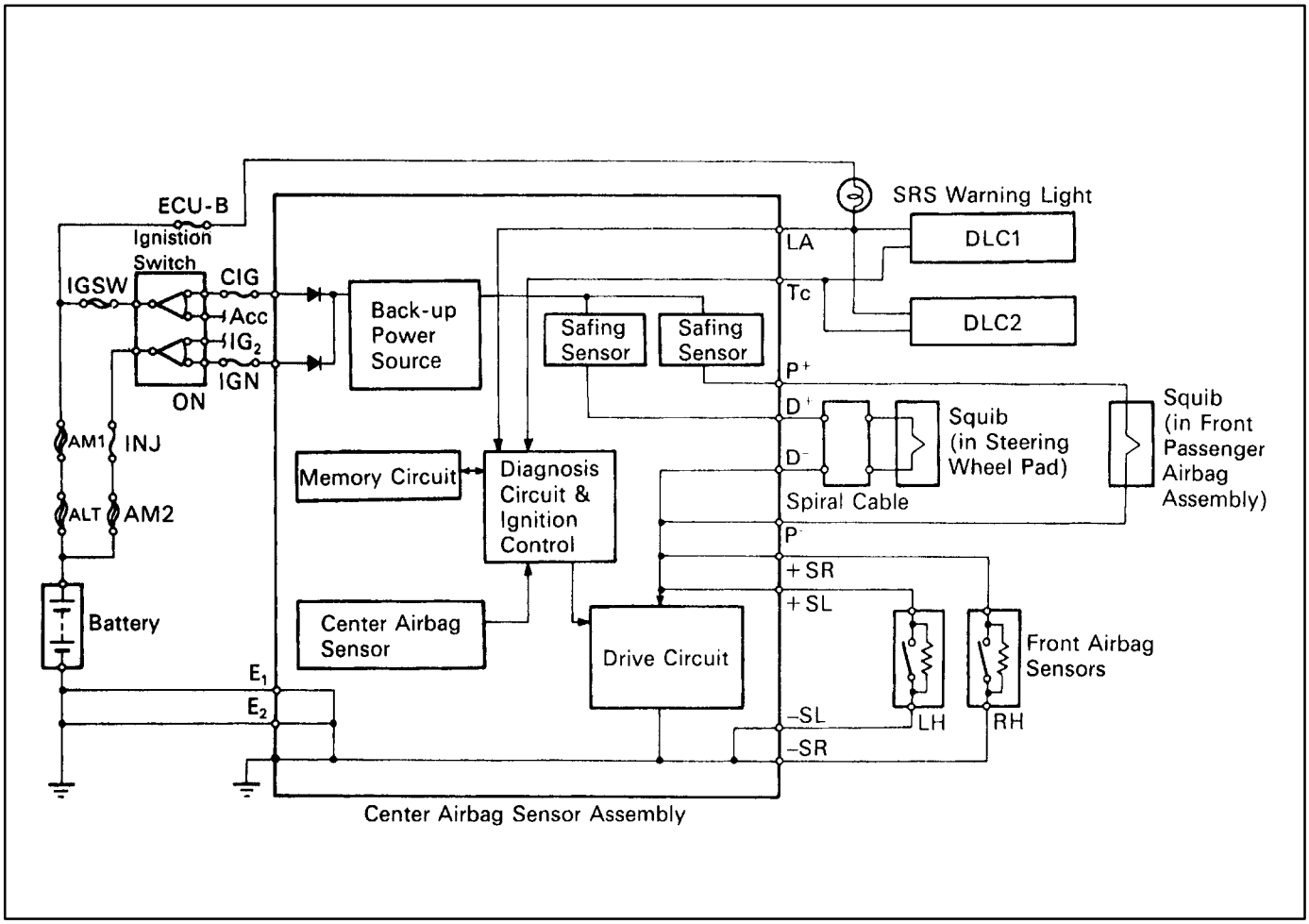

R08297

WhereEverybodyKnowsYourName

CENTER AIRBAG SENSOR ASSEMBLY CONNECTOR

RS00V–0B

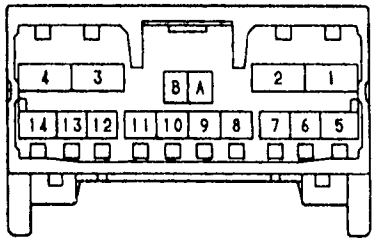

R05552

No.	Symbol	Terminal Name
A	–	Electrical Connection Check Mechanism
B	–	Electrical Connection Check Mechanism
1	P^-	Squib ⊖ (Passenger)
2	P^+	Squib ⊥ (Passenger)
3	D^+	Squib ⊥ (Driver)
4	D–	Squib ⊖ (Driver)
5	E_1	Ground
6	E_2	Ground
7	Tc	Diagnosis
8	+SR	Front Airbag Sensor RH ⊥
9	–SR	Front Airbag Sensor RH ⊖
10	–SL	Front Airbag Sensor LH ⊖
11	+SL	Front Airbag Sensor LH ⊥
12	LA	SRS Warning Light
13	IG_2	Power Source (IGN Fuse)
14	ACC	Power Source (CIG Fuse)

WhereEverybodyKnowsYourName

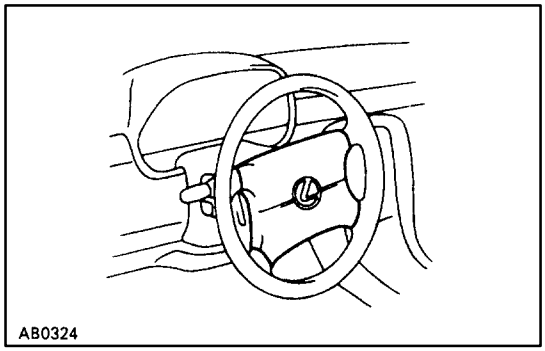

OPERATION

FUNCTION OF COMPONENTS

RS02M–04

1. STEERING WHEEL PAD (with AIRBAG)

The inflater and bag of the supplemental restraint system are stored in the steering wheel pad and cannot be disassembled. The inflater contains a squib, igniter charge, gas generant, etc., and inflates the bag in case of frontal collision.

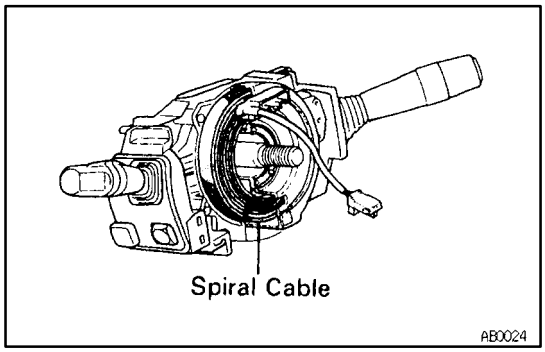

2. SPIRAL CABLE (in COMBINATION SWITCH)

A spiral cable is used as an electrical joint from the vehicle body side to the steering wheel.

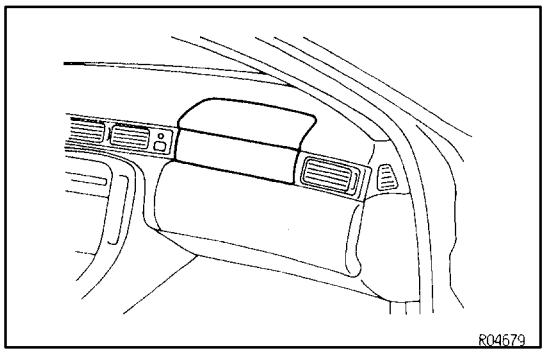

3. FRONT PASSENGER AIRBAG ASSEMBLY

The inflater and bag of the supplemental restraint system are stored in the front passenger airbag assembly and cannot be disassembled.

The inflater contains a squib, igniter charge, gas generant, etc., and inflates the bag in case of a frontal collision.

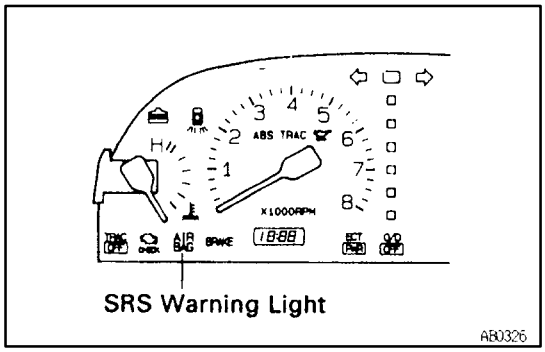

4. SRS WARNING LIGHT

The SRS warning light is located on the combination meter. It goes on to alert the driver of trouble in the system when a malfunction is detected in the center airbag sensor assembly. In normal operating conditions when the ignition switch is turned to the ACC or ON position, the light goes on for about 6 seconds and then goes off.

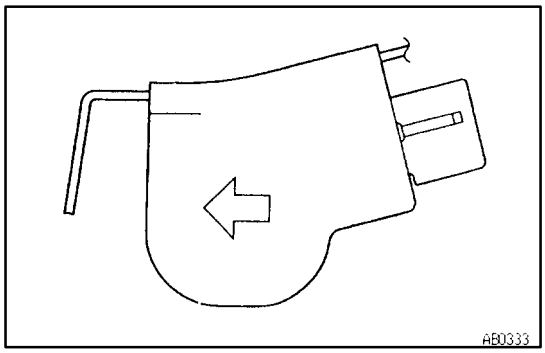

5. FRONT AIRBAG SENSOR

A front airbag sensor is mounted inside each of the front fenders. The sensor unit is a mechanical type. When the sensor detects deceleration force above a predetermined limit, contacts is made in the sensor, sending a signal to the center airbag sensor assembly. The sensor cannot be disassembled.

WhereEverybodyKnowsYourName

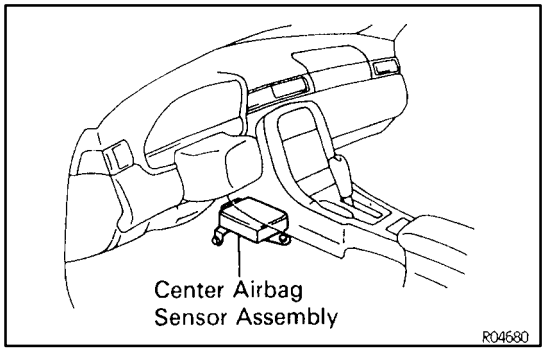

6. CENTER AIRBAG SENSOR ASSEMBLY

The center airbag sensor assembly is mounted on the floor inside the center cluster. The center airbag sensor assembly consists of a center airbag sensor, safing sensor, diagnosis circuit and ignition control, drive circuit, etc.

It receives signals from the airbag sensors, judges whether the SRS must be activated or not.

7. SRS CONNECTORS

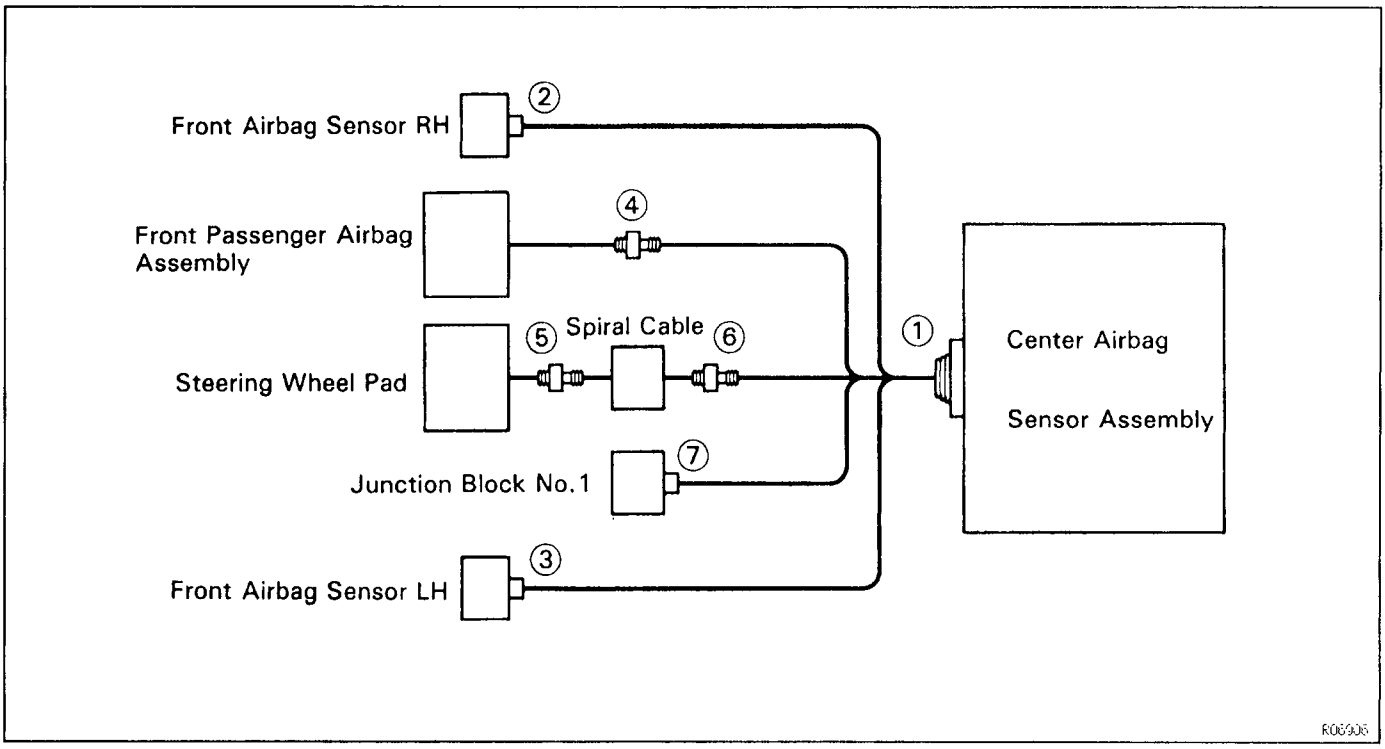

No.	Item	Application
(1)	Terminal Twin–Lock Mechanism	Connectors ❷, →, ❹, ③, ⑤, ⑤, ⑦
(2)	Airbag Activation Prevention Mechanism	Connectors ❷, ③, ⑤, ⑤
(3)	Electrical Connection Check Mechanism	Connectors ❷, →, ❹
(4)	Connector Twin–Lock Mechanism	Connectors ③, ⑤, ⑤

All connectors in the supplemental restraint system are colored yellow to distinguish them from other connectors. Connectors having special functions and specifically designed for SRS are used in the locations shown below to ensure high reliability. These connectors use durable gold–plated terminals.

WhereEverybodyKnowsYourName

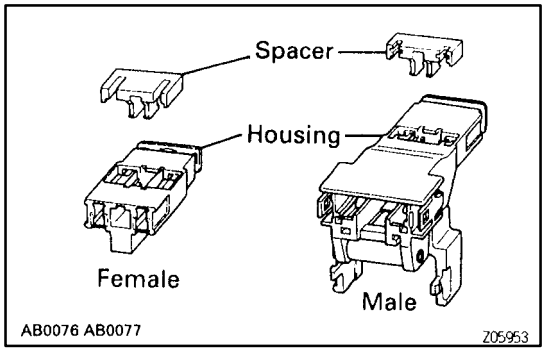

(1) Terminal Twin–Lock Mechanism

Each connector has a two–piece construction consisting of a housing and a spacer. This design secures the locking of the terminal by two locking devices (the spacer and the lance) to prevent terminals from coming out.

(2) Airbag Activation Prevention Mechanism

Each connector contains a short spring plate. When the connector is disconnected, the short spring plate automatically connects the power source and grounding terminals of the squib.

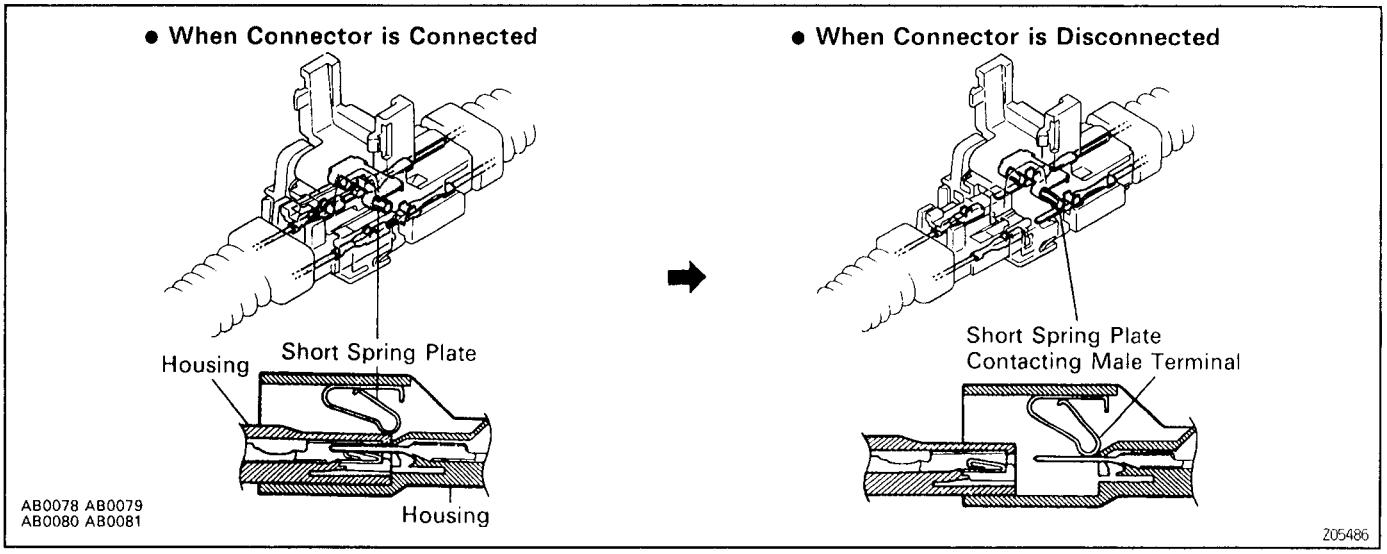

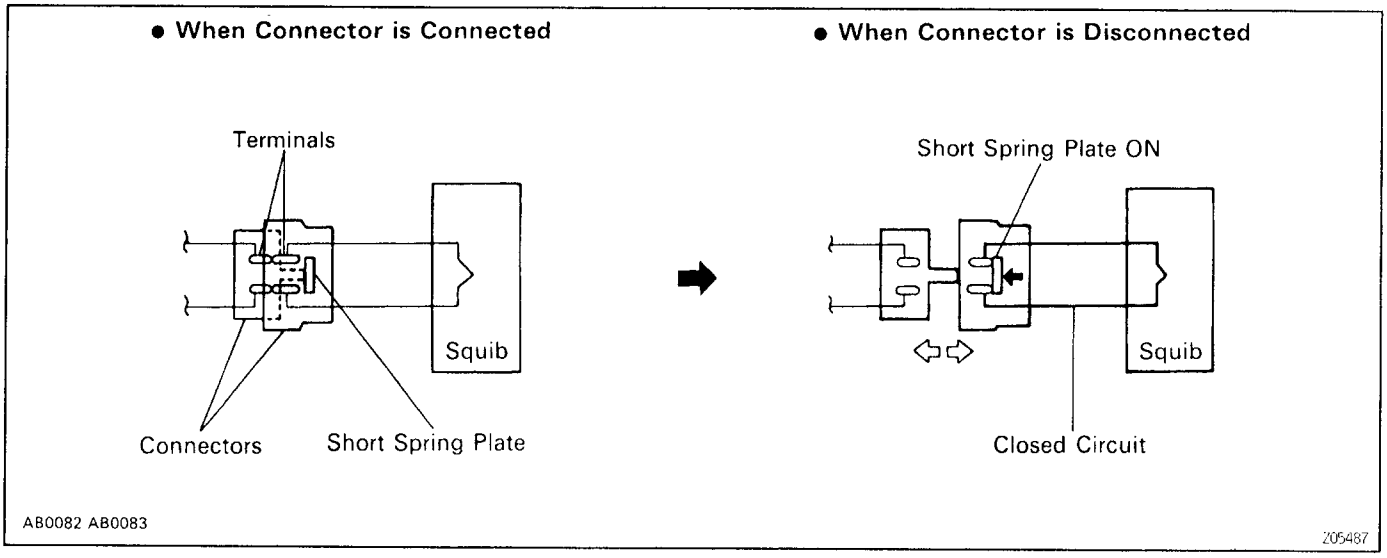

HINT: The illustration shows connectors ③, ⑤ and ⑤. Connector ❷ has short spring plates on the female terminal side.

WhereEverybodyKnowsYourName

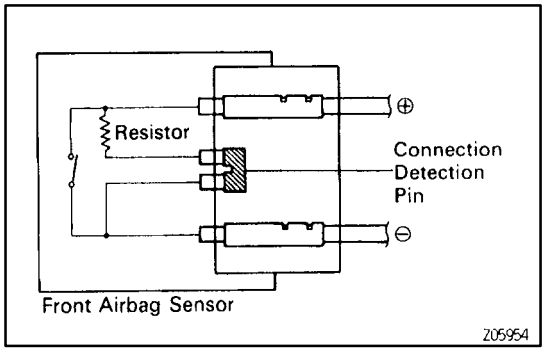

(3) Electrical Connection Check Mechanism

This mechanism is designed to electrically check if connectors are connected correctly and completely. The electrical connection check mechanism is designed so that the connection detection pin connects with the diagnosis terminals when the connector housing lock is in the locked condition.

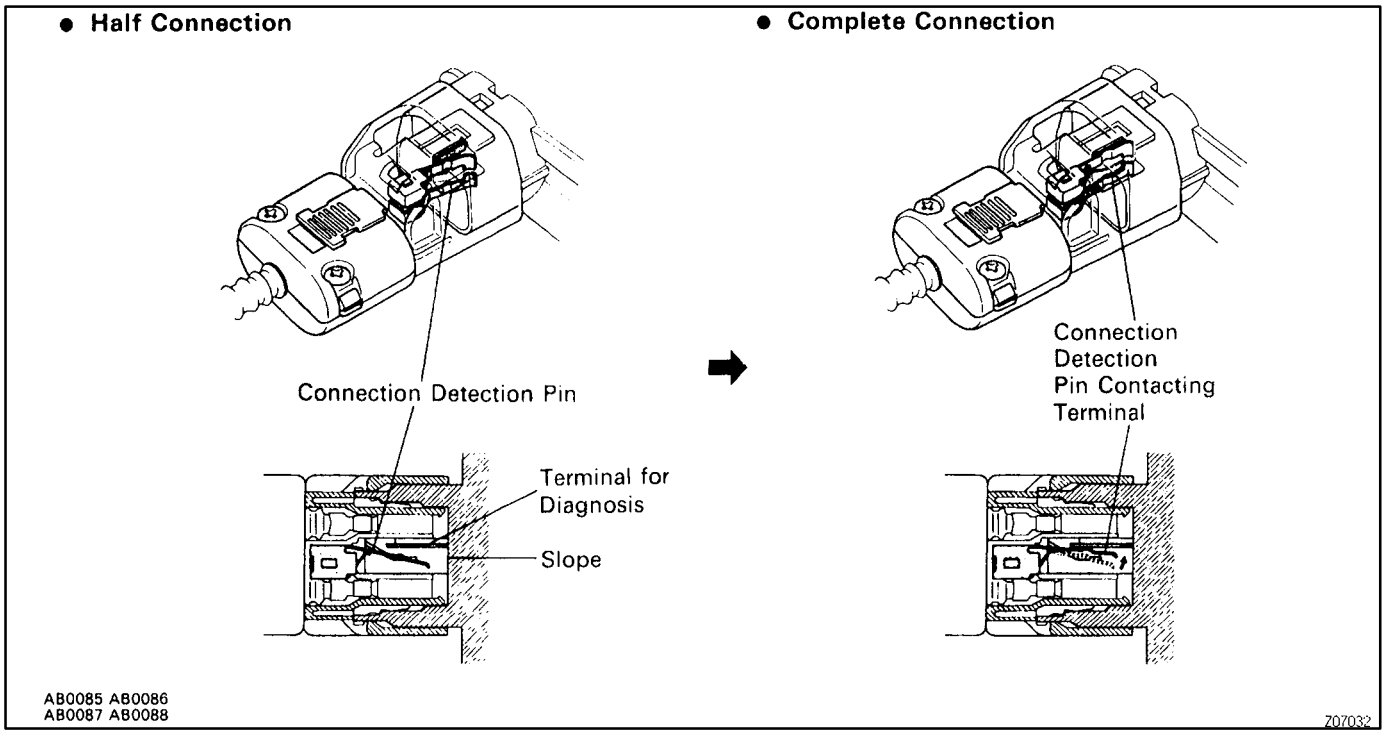

HINT: The illustration shows connectors → and ❹ Connector, also has the same operating principle.

WhereEverybodyKnowsYourName

(4) Connector Twin–Lock Mechanism

With this mechanism connectors (male and female connectors) are locked by 2 locking devices to increase connection reliability. If the primary lock is incomplete, ribs interfere and prevent the secondary lock.

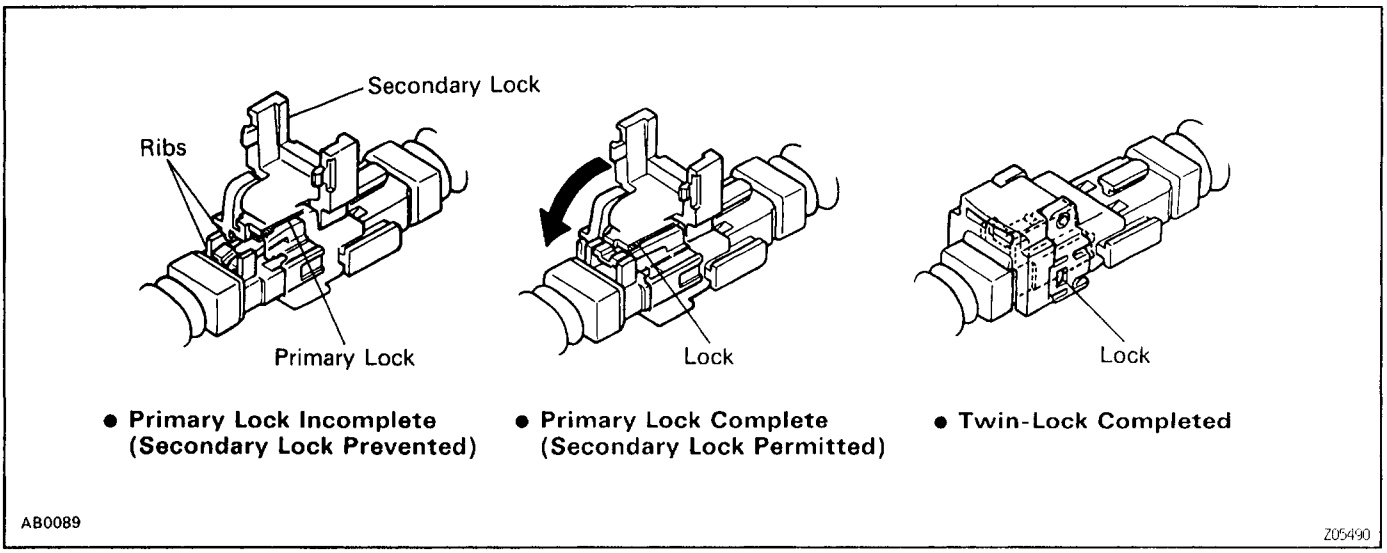

WhereEverybodyKnowsYourName

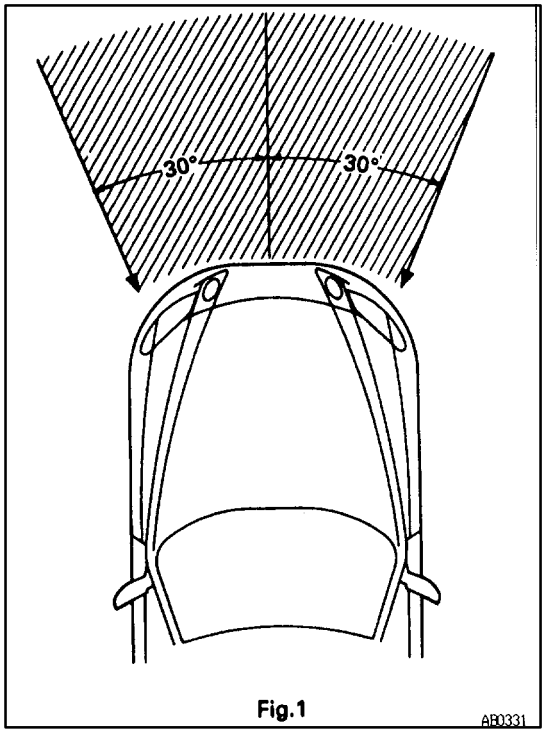

Fig.1

When the vehicle is involved in a frontal collision in the hatched area (Fig. 1) and the shock is larger than a predetermined level, the SRS is activated automatically. A safing sensor is designed to go on at a smaller deceleration rate than the front and center airbag sensors. As illustrated in Fig. 2, ignition is caused when current flows to the squib, which happens when a safing sensor and a front airbag sensor and/or the center airbag sensor go on simultaneously. When a deceleration force acts on the sensors, two squibs in the driver airbag and front passenger airbag ignite and generate gas. The gas discharging into the driver and front passenger airbags rapidly increases the pressure inside the bags breaking open the steering wheel pad and instrument panel door.
Bag inflation then ends, and the bags deflate as the gas is discharged through discharge holes at the bag's rear or side.

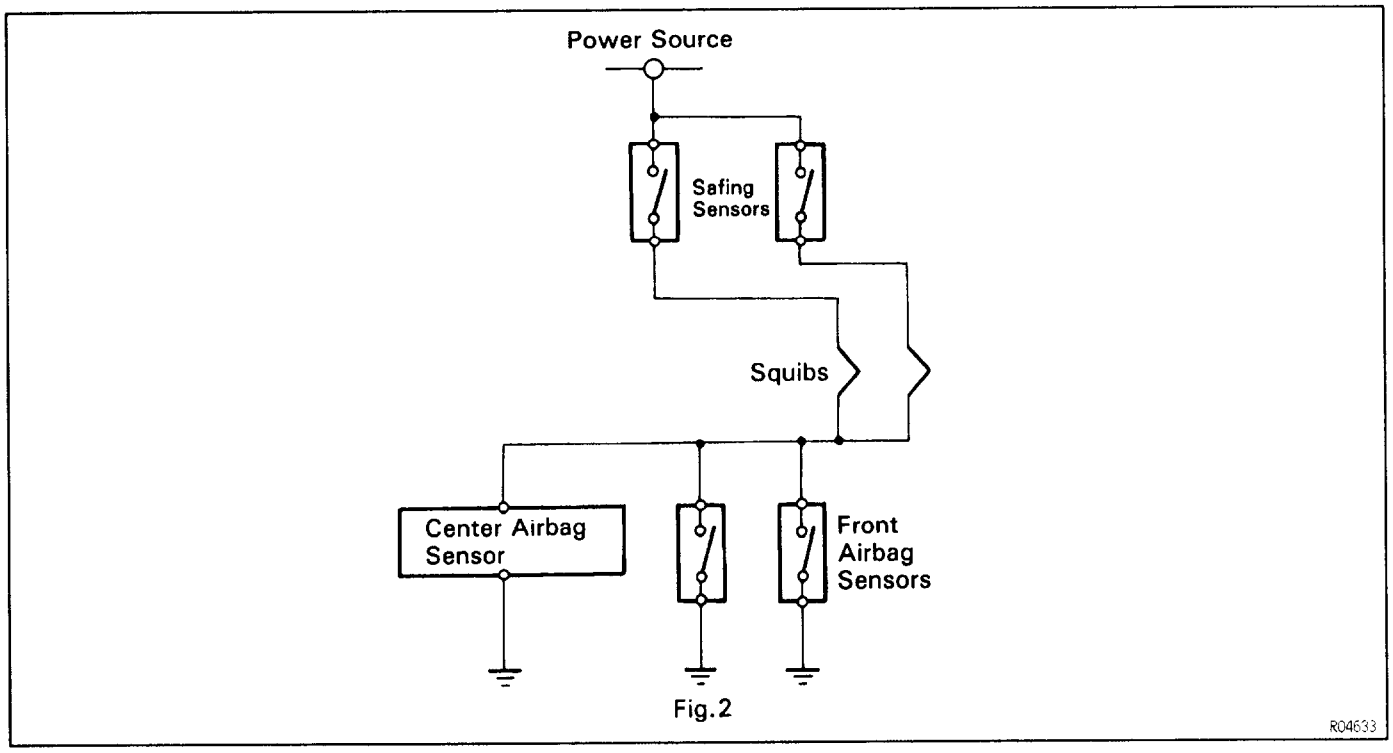

Fig.2

WhereEverybodyKnowsYourName

PREPARATION

SST (SPECIAL SERVICE TOOLS)

RS00X–04

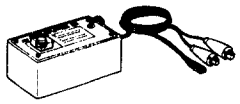	09082–00700 SRS Airbag Deployment Tool	
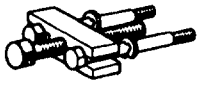	09609–20011 Steering Wheel Puller	Steering wheel
	09843–18020 Diagnosis Check Wire	

RECOMMENDED TOOLS

RSOOY–04

	09042–00010 Torx Socket T30	Steering wheel pad
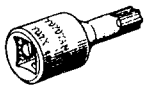	09042–00020 Torx Socket T40	Center airbag sensor assembly
	09082–00050 TOYOTA Electrical Tester Set	

EQUIPMENT

RS00Z–04

Torque wrench	
Bolt Length: 35 mm (1.38 in.) Pitch: 1.0 mm (0.039 in.) Diam.: 6.0 mm (0.236 in.)	Airbag disposal
Tire Width: 185 mm (7.28 in.) Inner diam.: 360mm (14.17 in.)	Airbag disposal
Tire with disk wheel Width: 185 mm (7028 in.) Inner diam.: 360 mm (14.17 in.)	Airbag disposal
Vinyl bag	Airbag disposal

WhereEverybodyKnowsYourName

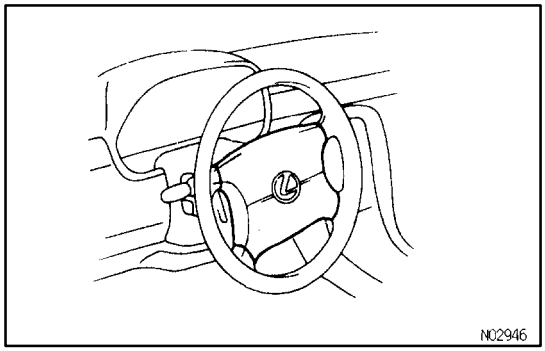

STEERING WHEEL PAD AND SPIRAL CABLE

INSPECTION ITEMS

RS04B–01

1. VEHICLES NOT INVOLVED IN A COLLISION

(a) Perform diagnostic system check. (See page RS–59)

(b) Perform a visual check which includes the following items with the steering wheel pad (with airbag installed in the vehicle.

- Check for cuts, minute cracks or marked discoloration of the steering wheel pad top surface and grooved portion.

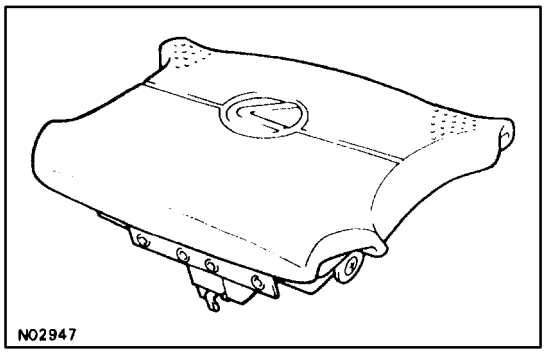

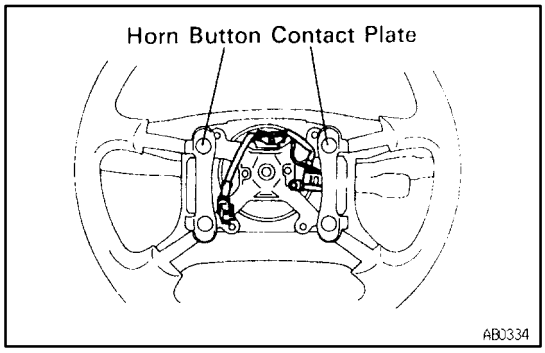

2. VEHICLES INVOLVED IN A COLLISION IF THE AIRBAG IS NOT DEPLOYED

(a) Perform a diagnostic system check. (See page RS–59)

(b) Perform a visual check which includes the following items with the steering wheel pad (with airbag) removed from the vehicle.

- Check for cuts or cracks in, or marked discoloration of the steering wheel pad top surface and grooved portion.
- Check for cuts and cracks in, or chipping of connectors and wire harness.
- Check for deformation of the horn button contact plate of the steering wheel.

HINT:

- If the horn button contact plate of the steering wheel is deformed, never repair it. Always replace the steering wheel assembly with a new one.
- There should be no interference between the steering wheel pad and the steering wheel, and the clearance should be uniform all the way around when the new steering wheel pad is installed on the steering wheel.

CAUTION: For removal and installation of the steering wheel pad, see page RS–18, “STEERING WHEEL PAD AND SPIRAL CABLE REMOVAL AND INSTALLATION” and be sure to follow the correct procedure.

WhereEverybodyKnowsYourName

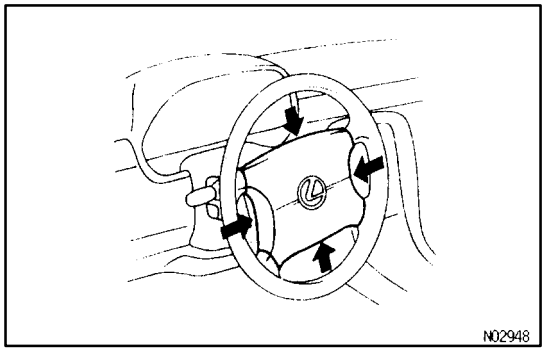

IF THE AIRBAG IS DEPLOYED

(a) Perform a diagnostic system check. (See page RS–59)

(b) Perform a visual check which includes the following items with the steering wheel pad (with airbag) removed from he vehicle.
- Check for deformation of the horn button contact plate of the steering wheel.
- Check for damage to the spiral cable connector and wire harness.

HINT:
- If the horn button contact plate of the steering wheel is deformed, never repair it. Always replace the steering wheel assembly with a new one.
- There should be no interference between the steering wheel pad and the steering wheel, and the clearance should be uniform all the way around when the new steering pad is installed on the steering wheel.

REPLACEMENT REQUIREMENTS

RS011–02

In the following cases, replace the steering wheel pad, steering wheel or spiral cable.

CAUTION: For replacement of the steering wheel pad, see page RS–18, "STEERING WHEEL PAD AND SPIRAL CABLE REMOVAL AND INSTALLATION" and be sure to follow the correct procedure.
- If the airbag has been deployed.
- If the steering wheel pad or spiral cable has been found to be faulty in troubleshooting.
- If the steering wheel pad, steering wheel or spiral cable has been found to be faulty during the check in item 1–(b) or 2–(b).
- If the steering wheel pad has been dropped.

WhereEverybodyKnowsYourName

COMPONENTS

RS04D–01

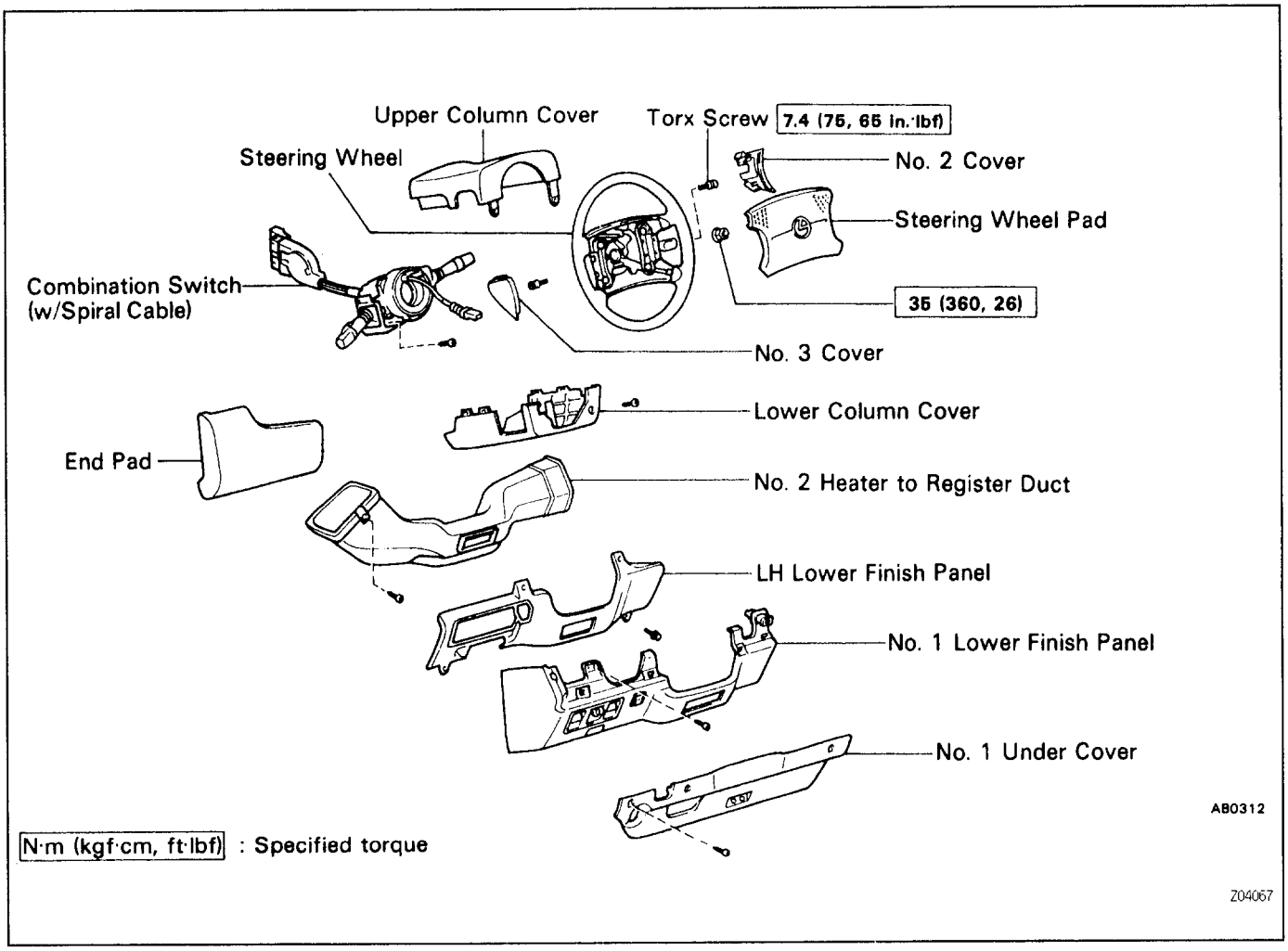

STEERING WHEEL PAD AND SPIRAL CABLE REMOVAL AND INSTALLATION

RS04D–01

NOTICE:

- **If the wiring connector of the supplemental restraint system is disconnected with the ignition switch at ON or ACC, diagnostic trouble codes will be recorded.**
- **Never use SRS parts from another vehicle. When replacing parts, replace with new parts.**

1. DISCONNECT NEGATIVE (–) TERMINAL CABLE FROM BATTERY

CAUTION: Work must be started after 90 seconds from the time the ignition switch is turned to the LOCK position and the negative (–) terminal cable is disconnected from the battery (See page RS–2).

WhereEverybodyKnowsYourName

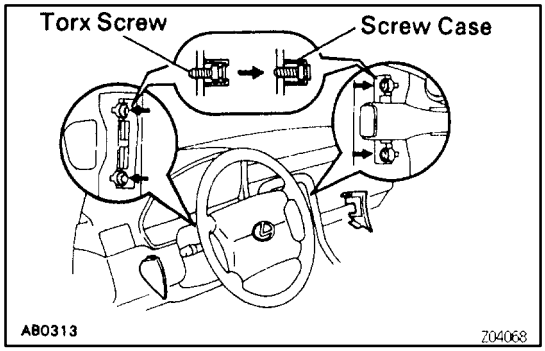

2. REMOVE STEERING WHEEL PAD

(a) Place the front wheels facing straight ahead.

(b) Using a torx wrench, loosen the 4 screws. Torx wrench: T30 (Part No. 09042–00010 or locally manufactured tool)

(d) Loosen the torx screws until the groove along the screw circumference catches on the screw case.

(e) Pull the wheel pad out from the steering wheel and disconnect the SRS connector.

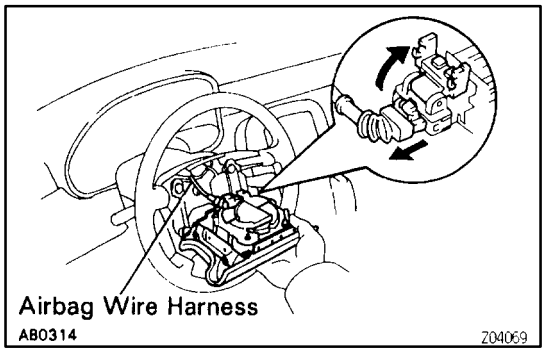

NOTICE: When removing the wheel pad, take care not to pull the airbag wire harness.

CAUTION:

- **When storing the wheel pad, keep the upper surface of the pad facing upward (See pages RS–3).**
- **Never disassemble the wheel pad.**

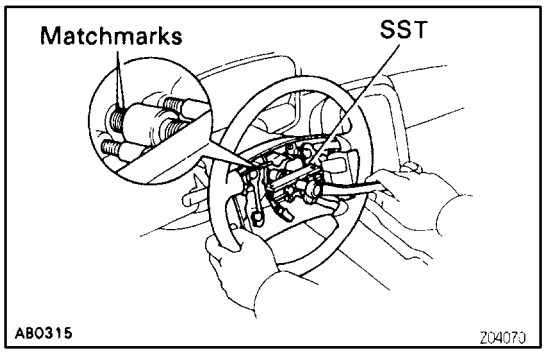

3. REMOVE STEERING WHEEL

(a) Disconnect the connector.

(b) Remove the set nut.

(c) Place matchmarks on the steering wheel and main shaft.

(d) Using SST, remove the steering wheel.
SST 09213–31021

4. REMOVE AND INSTALL SPIRAL CABLE FROM/TO COMBINATION SWITCH
(See page BE–51)
NOTICE: Do not disassemble the spiral cable or apply oil to it.

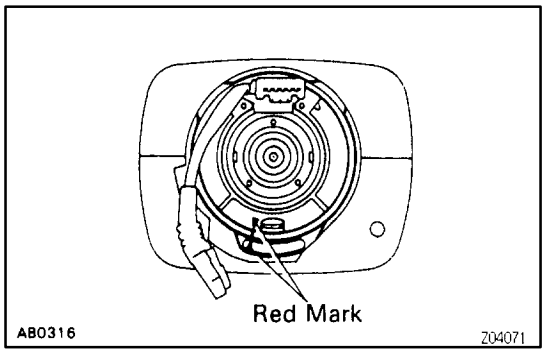

5. CENTER SPIRAL CABLE

(a) Check that the front wheels are facing straight ahead.

(b) Turn the spiral cable counterclockwise by hand until it becomes harder to turn the cable.

(c) Then rotate the spiral cable clockwise about 3 turns to align the red mark.

WhereEverybodyKnowsYourName

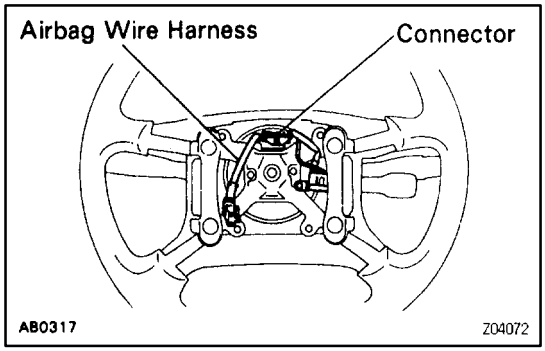

6. INSTALL STEERING WHEEL

(a) Align matchmarks on the steering wheel and main shaft, and install the steering wheel to the main shaft.

(b) Install and torque the set nut.
Torque: 35 N·m (360 kgf·cm, 26 ft·lbf)

(c) Connect the connector.

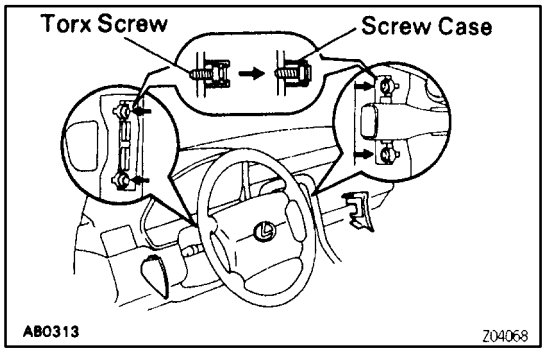

7. INSTALL STEERING WHEEL PAD

(a) Connect the SRS connector.

(b) Install the wheel pad after confirming that the circumference groove of the torx screws is caught on the screw case.

(c) Using a torx wrench, tighten the 4 screws.
Torque: 7.4 N·m (75 kgf·cm, 65 in.·lbf)

NOTICE:

- **Make sure the wheel pad is installed to the specified torque.**
- **If the wheel pad has been dropped, or there are cracks, dents or other defects in the case or connector, replace the wheel pad with a new one.**
- **When installing the wheel pad, take care that the wirings do not interfere with other parts and are not pinched between other parts.**

8. CHECK STEERING WHEEL CENTER POINT

9. CONNECT NEGATIVE (–) TERMINAL CABLE TO BATTERY

WhereEverybodyKnowsYourName

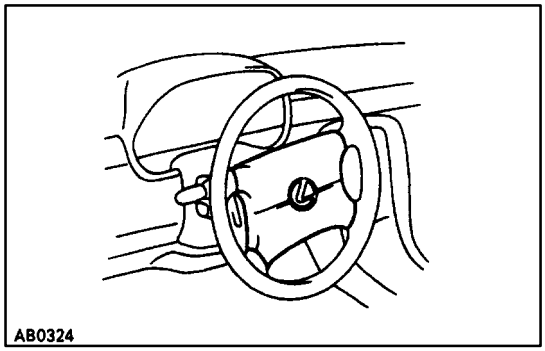

STEERING WHEEL PAD (WITH AIRBAG) DISPOSAL

RS04E–01

When scrapping vehicles equipped with a supplemental restraint system or disposing of a steering wheel pad (with airbag), always first deploy the airbag in accordance with the procedure described below.

If any abnormality occurs with the airbag deployment, contact the SERVICE DEPT. of TOYOTA MOTOR SALES, U.S.A., INC..

Never dispose of a steering wheel pad which has an undeployed airbag.

When disposing of a steering wheel pad with an airbag deployed in a collision, follow the same procedure given under “When scrapping vehicle, step 5. DISPOSAL OF STEERING WHEEL PAD (WITH AIRBAG)” (See page RS–23).

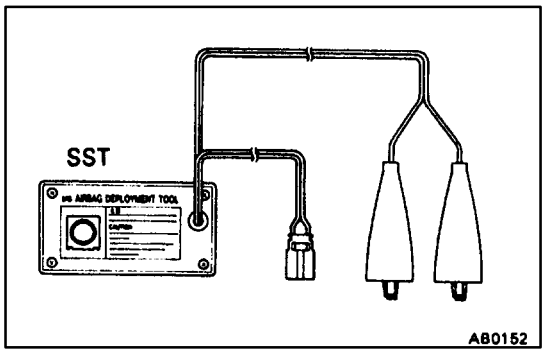

PRECAUTIONS FOR AIRBAG DEPLOYMENT

- The airbag produces a sizeable exploding sound when it deploys, so perform the operation out–of–doors and where it will not create a nuisance to nearby residents.
- When deploying the airbag, always use the specified SST; SRS AIRBAG DEPLOYMENT TOOL (SST 09082–00700). Perform the operation in a place away from electrical noise.
- When deploying an airbag, perform the operation from at least 10 m (33 ft) away from the steering wheel pad.
- The steering wheel pad is very hot when the airbag is deployed, so leave it alone for at least 30 minutes after deployment.
- Use gloves and safety glasses when handling a steering wheel pad with deployed airbag.
- Always wash your hands with water after completing the operation.
- Do not apply water, etc. to a steering wheel pad with deployed airbag.

WhereEverybodyKnowsYourName

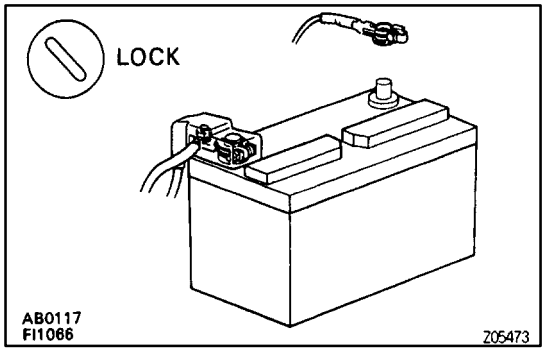

When scrapping vehicle

HINT: Have a battery ready as the power source to deploy the airbag.

1. **DISCONNECT NEGATIVE (–) TERMINAL CABLE FROM BATTERY**
   CAUTION: Work must be started after 90 seconds from the time the ignition switch is turned to the LOCK position and the negative (–) terminal cable is disconnected from the battery (See page RS–2).

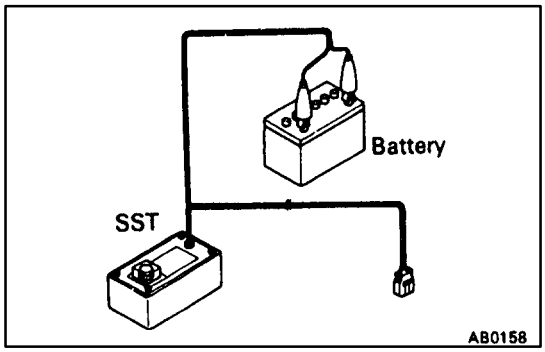

2. **CONFIRM FUNCTIONING OF SST**
   (See page RS–27)
   SST 09082–00700

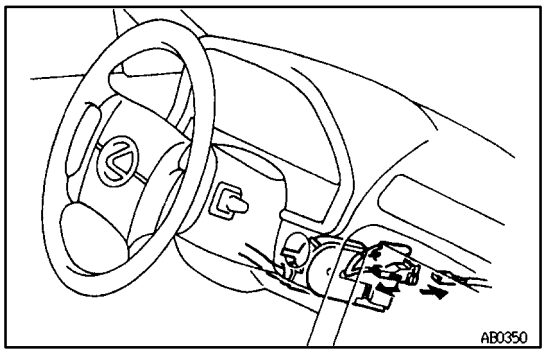

3. **INSTALL SST**
   CAUTION: Check that there is no looseness in the steering wheel and steering wheel pad.

(a) Remove the No.1 under cover.
(b) Disconnect the airbag connector of the spiral cable.

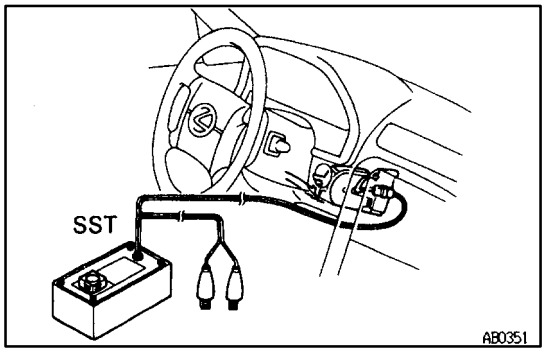

(c) Connect the SST connector to the airbag connector of the spiral cable.
SST 09082–00700
(d) Move the SST to at least 10 m (33 ft) from the front of the vehicle.
(e) Close all the doors and windows of the vehicle.
NOTICE: Take care not to damage the SST wire harness.
(f) Connect the SST red clip to the battery positive (+) terminal and the black clip to the battery negative (–) terminal.

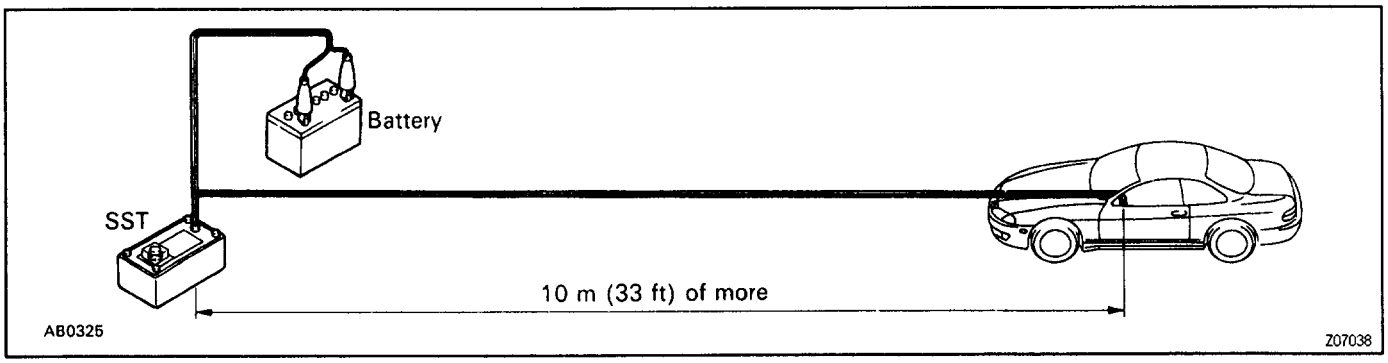

WhereEverybodyKnowsYourName

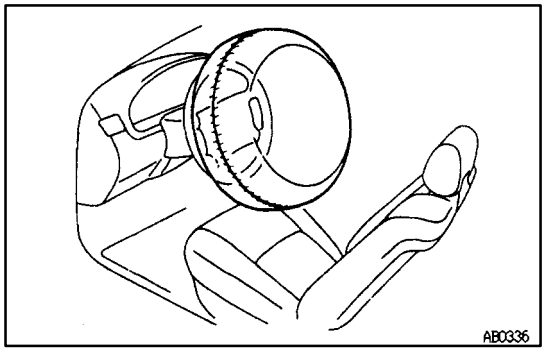

4. DEPLOY AIRBAG

(a) Confirm that no–one is inside the vehicle or within 10 m (33 ft) of the vehicle.

(b) Press the SST activation switch and deploy the airbag.
HINT: The airbag deploys simultaneously as the LED of the SST activation switch lights up.

5. DISPOSAL OF STEERING WHEEL PAD (WITH AIRBAG)

CAUTION:

- **The steering wheel pad is very hot when the airbag is deployed, so leave it alone for at least 30 minutes after deployment.**
- **Use gloves and safety glasses when handling a steering wheel pad with deployed airbag.**
- **Do not apply water, etc. to a steering wheel pad with deployed airbag.**
- **Always wash your hands with water after completing the operation.**

(a) When scrapping a vehicle, deploy the airbag and scrap the vehicle with the steering wheel pad still installed.

(b) When moving a vehicle for scrapping which has a steering wheel pad with deployed airbag, use gloves and safety glasses.

When disposing of the steering wheel pad only

When disposing of the steering wheel pad (with airbag) only, never use the customer's vehicle to deploy the air-bag.

Remove the steering wheel pad from the vehicle and be sure to follow the procedure given below when deploying the air-bag.

HINT: Have a battery ready as the power source deploy the airbag.

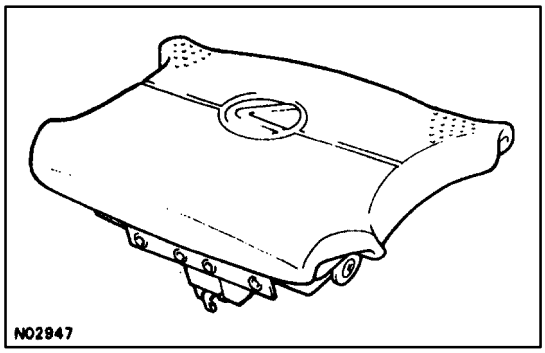

1. REMOVE STEERING WHEEL PAD (See page RS–18)

CAUTION:

- **When removing the steering wheel pad (with airbag), work must be started after 90 seconds from the time the ignition switch is turned to the LOCK position and the negative (–) terminal cable is disconnected from the battery.**
- **When storing the steering wheel pad, keep the upper surface of the pad facing upward.**

WhereEverybodyKnowsYourName

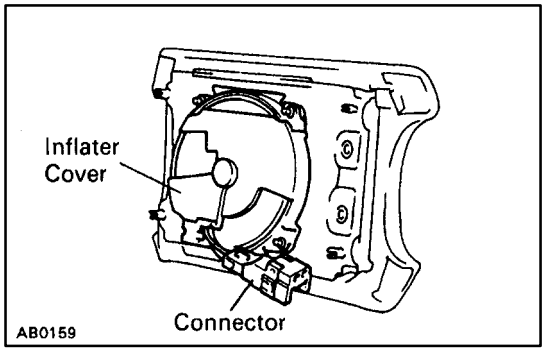

2. REMOVE STEERING WHEEL PAD CONNECTOR

Remove the connector on the steering wheel pad rear surface from the inflater cover.

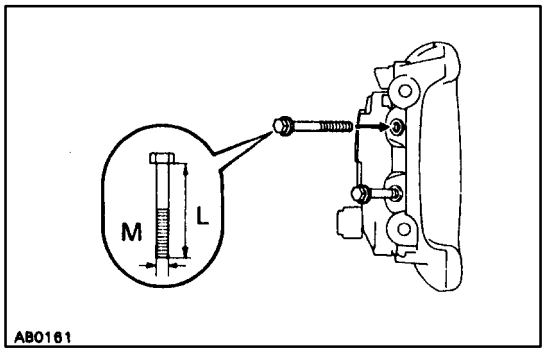

3. FIX STEERING WHEEL PAD TO DISC WHEEL WITH TIRE

(a) Install the 4 bolts with washer in the 4 bolt holes in the steering wheel pad.

Bolt:

L 35.0 mm (1.398 in.) M 6.0 mm (0.236 in.) Pitch 1.0 mm (0.039 in.)

NOTICE:

- **Tighten the bolts by hand until the bolts become difficult to turn.**
- **Do not tighten the bolts too much.**

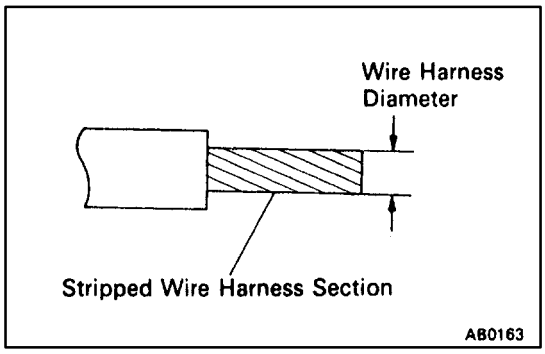

(b) Using a service–purpose wire harness for vehicle tie down the steering wheel pad to the disc wheel.

Wire harness: Stripped wire harness section

1.25 mm^2 or more (0.0019 in^2 or more)

HINT: To calculate the square of the stripped wire harness section —

Square = 3.14 x (Diameter)^2 divided by 4

CAUTION: If a wire harness which is too thin or some other thing is used to tie down the steering wheel pad it may be snapped by the chock when the airbag is deployed, this is highly dangerous. Always use a wire harness for vehicle use which is at least 1.25 mm^2 (0.0019 in^2.).

(1) Using 3 wire harnesses, wrap the wire harnesses at least 2 times each around the bolts installed on the left and right sides of the steering wheel pad.

CAUTION:

- **Tightly wind the wire harness around the bolts so that there is no slack.**
- **If there is slackness in the wire harness, the steering wheel pad may come loose due to the shock when the airbag is deployed, this is highly dangerous.**

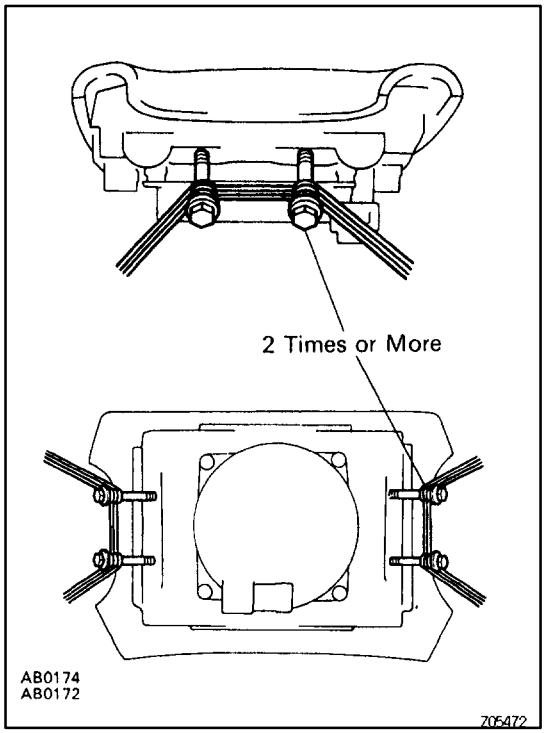

WhereEverybodyKnowsYourName

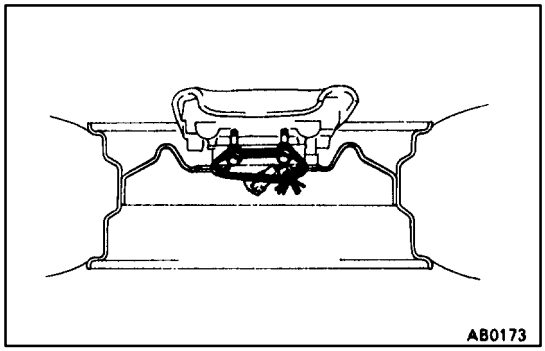

(2) Face the upper surface of the steering wheel pad upward.
(3) Separately tie the left and right sides of the steering wheel pad to the disc wheel through the hub nut holes.

(c) Position the steering wheel pad connector so that it hangs downward through a hub hole in the disc wheel.

CAUTION:

- **Make sure that the wire harness is tight. It is very dangerous if looseness in the wire harness results in the steering wheel pad coming free through the shock of the airbag deploying.**
- **Always tie down the steering wheel pad with the pad side facing upward. It is very dangerous if the steering wheel pad is tied down with the metal surface facing upward as the wire harness will be cut by the shock of the airbag deploying and the steering wheel pad will be thrown into the air.**

HINT: The disc wheel will be marked by airbag deployment, so use a redundant disc wheel.

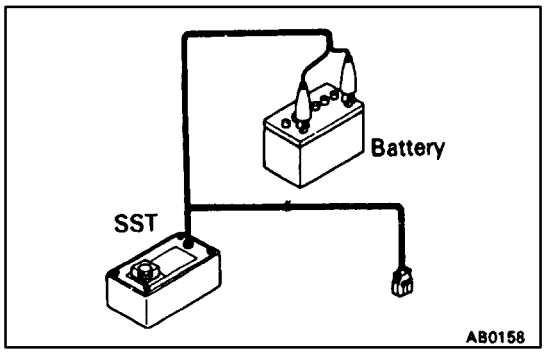

4. CONFIRM FUNCTIONING OF SST
(See page RS–27)
SST 09082–00070

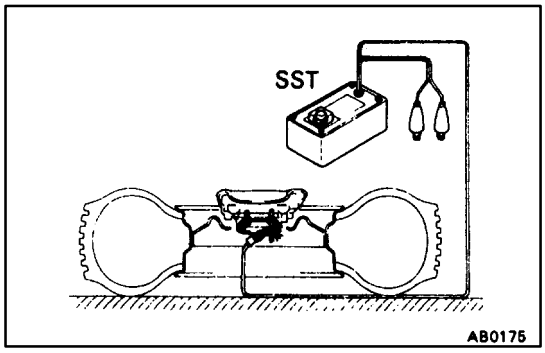

5. INSTALL SST
CAUTION: Place the disc wheel on level ground.

(a) Connect the SST connector to the steering wheel pad connector.
SST 09082–00700
NOTICE: To avoid damaging the SST connector and wire harness, do not lock the secondary lock of the twin lock. Also provide some slack for the SST wire harness inside the disc wheel.

(b) Move the SST to at least 10 m (33 ft) away from the steering wheel pad tied down on the disc wheel.

WhereEverybodyKnowsYourName

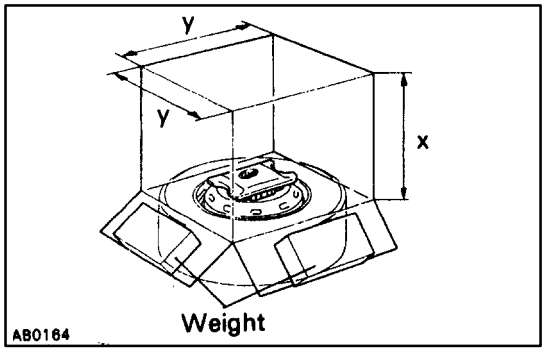

6. COVER STEERING WHEEL PAD WITH CARDBOARD BOX OR TIRES

Covering Method Using Cardboard Box:

Cover the steering wheel pad with the cardboard box and weigh the cardboard box down in four places with a at least 196 N (20 kgf, 44 lbf).

Size of cardboard box:

Must exceed the following dimensions–

x = 460 mm (18.11 in.)

When dimension y of the cardboard box exceeds the diameter of the disc wheel with tire the steering wheel pad is tied to–

x = 460 mm (18.11 in.) + width of tire

y = 650 mm (25.59 in.)

NOTICE: If a cardboard box smaller than the size specified is used, the cardboard box will be broken by the shock of the airbag deployment.

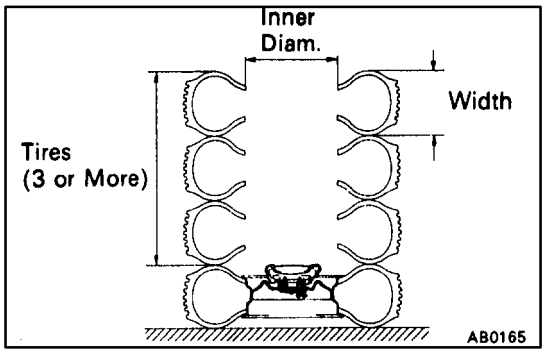

Covering Method Using Tires:

Place at least 3 tires without disc wheel on top of the disc wheel with tire to which the steering wheel pad is tied.

Tire size: Must exceed the following dimensions–

Width 185 mm (7.28 in.)

Inner diam 360 mm (14.17 in.)

CAUTION: Do not use tires with disc wheels.

NOTICE: The tires by marked by the airbag deployment, so use redundant tires.

7. AIRBAG DEPLOYMENT

(a) Connect the SST red clip to the battery positive (+) terminal and the black clip to the battery negative (–) terminal.

(b) Confirm that no–one is within 10 m (33 ft) of the disc wheel the steering wheel pad is tied to.

(c) Press the SST activation switch and deploy the airbag.
HINT: The airbag deploys simultaneously as the LED of the SST activation switch lights up.

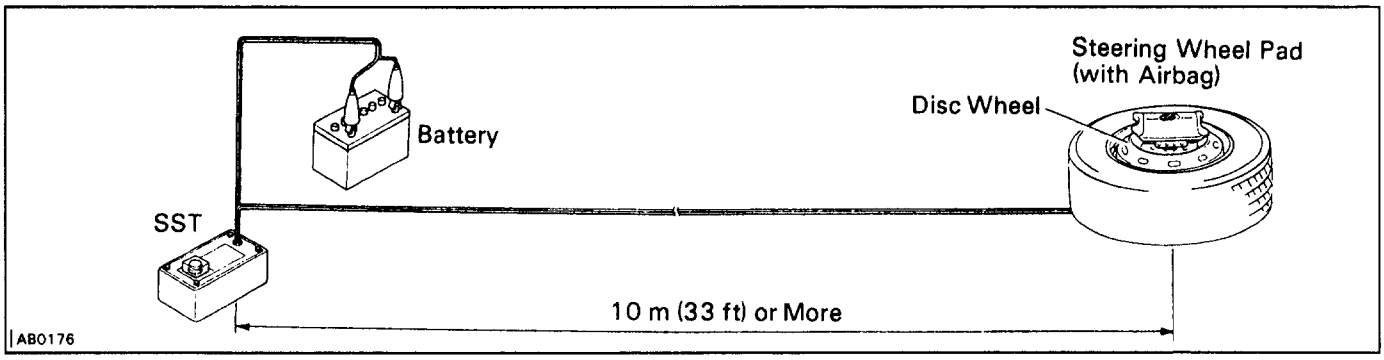

WhereEverybodyKnowsYourName

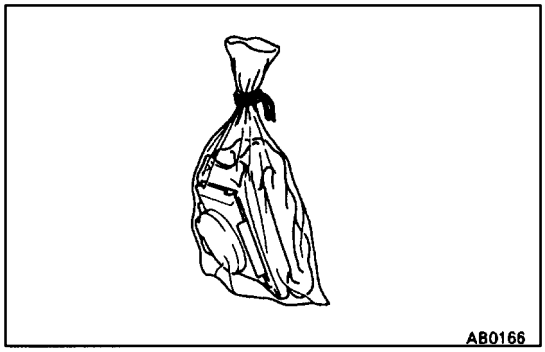

8. DISPOSAL OF STEERING WHEEL PAD (WITH AIRBAG)

CAUTION:

- **The steering wheel pad is battery hot when the airbag is deployed, so leave it alone for at least 30 minutes after deployment.**
- **Use gloves and safety glasses when handling a steering wheel pad with deployed airbag.**
- **Do not apply water, etc. to a steering wheel pad with deployed airbag.**
- **Always wash your hands with water after completing the operation.**

(a) Remove the steering wheel pad from the disc wheel.

(b) Place the steering wheel pad in a vinyl bag, tie the end tightly and dispose of it the same way as other general parts.

CONFIRM FUNCTIONING OF SST

RS014–02

When deploying the airbag, always use the specified SST: SRS AIRBAG DEPLOYMENT TOOL.
SST 09082–00700

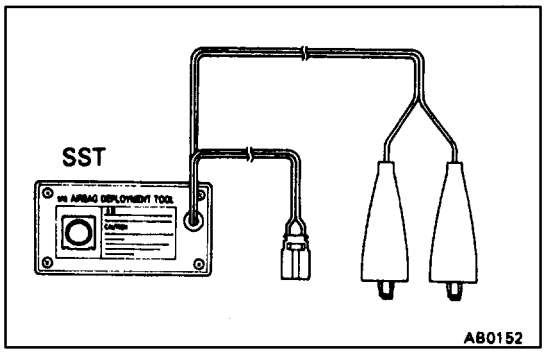

1. CONNECT SST TO BATTERY

Connect the red clip of the SST to the battery positive (+) terminal and the black clip to the battery negative (–) terminal.
HINT: Do not connect the yellow connector which connects with the supplemental restraint system.

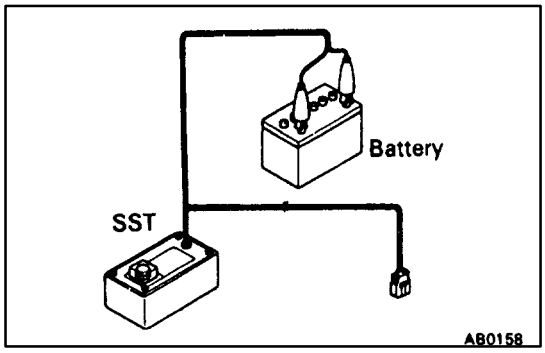

2. CONFIRM FUNCTIONING OF SST

Press the SST activation switch, and confirm the LED of the SST activation switch lights up.

CAUTION: If the LED lights up when the activation switch is not being pressed, SST malfunction is probable, so definitely do not use the SST.

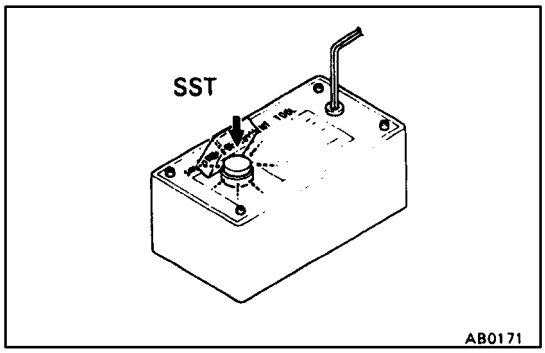

WhereEverybodyKnowsYourName

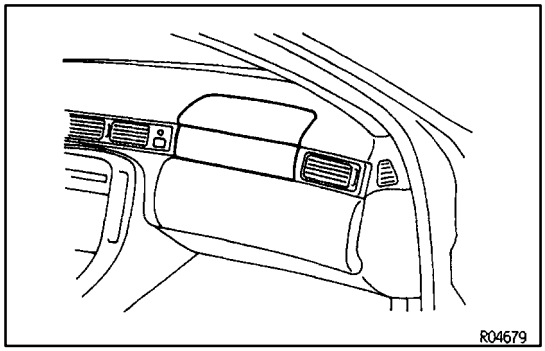

FRONT PASSENGER AIRBAG ASSEMBLY

INSPECTION ITEMS

RS042–01

1. VEHICLES NOT INVOLVED IN A COLLISION

(a) Perform a diagnostic system check.
(See page RS–59)

(b) Perform a visual check which includes the following items with the front passenger airbag assembly installed in the vehicle.
- Check for cuts, minute cracks or marked discoloration of the front passenger airbag door.

2. VEHICLE INVOLVED IN A COLLISION IF THE AIRBAG IS NOT DEPLOYED

(a) Perform a diagnostic system check.
(See page RS–59)

(b) Perform a visual check which includes the following items with the airbag assembly removed from the vehicle.
- Check for cuts, cracks in, or marked discoloration of the front passenger airbag door.
- Check for cuts, cracks in, or chipping of connectors and wire harness.
- Check for deformation of the instrument panel and instrument panel reinforcement.

HINT:
- If the instrument panel and instrument panel reinforcement is deformed, never repair it. Always replace it with a new one.
- There should be no interference between the instrument panel and front passenger airbag door. The clearance should be uniform all the way around when the new airbag assembly is installed on the instrument panel.

CAUTION: For replacement of the airbag assembly, see page RS–30, “FRONT PASSENGER AIRBAG ASSEMBLY REMOVAL AND INSTALLATION” and be sure to follow the correct procedure.

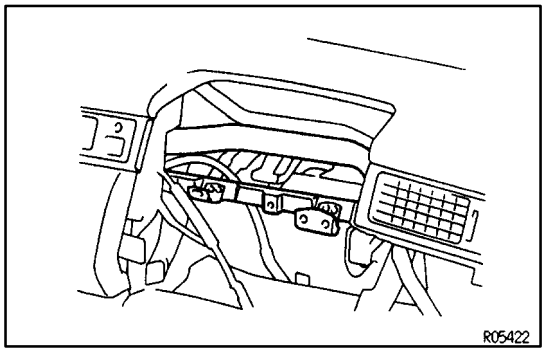

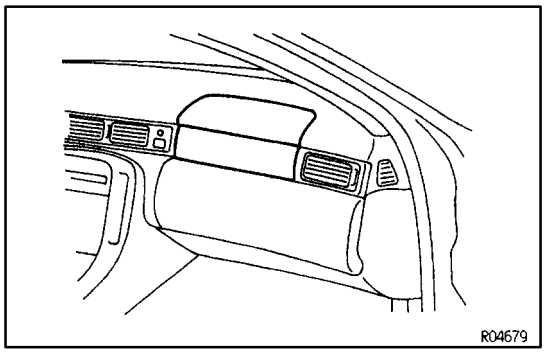

WhereEverybodyKnowsYourName

IF THE AIRBAG IS DEPLOYED

(a) Perform a diagnostic system check.
(See page RS–59)

(b) Perform a visusal check which includes the following items with the airbag assembly removed from vehicle.
- Check for deformation of the instrument panel and instrument panel reinforcement.
- Check for damage to the connector and wire harness.

HINT:
- If the instrument panel and instrument panel reinforcement is deformed, never repair it. Always replace it with a new one.
- There should be no interference between the instrument panel and front passenger airbag door. The clearance should be uniform all the way around when the new airbag assembly is installed on the instrument panel.

REPLACEMENT REQUIREMENTS

RS01M–06

In the following case, replace the front passenger airbag assembly, instrument panel, instrument panel reinforcement.

CAUTION: For replacement of the front passenger airbag assembly, see page RS–30, "FRONT PASSENGER AIRBAG ASSEMBLY REMOVE AND INSTALLATION" and be sure to follow the correct procedure.

- If the airbag has been deployed.
- If the front passenger airbag assembly has been found to be faulty in troubleshooting.
- If the front passenger airbag assembly or instrument panel reinforcement has been found to be faulty during the check in item 1–(b) or 2–(b).
- If the front passenger airbag assembly has been dropped.

WhereEverybodyKnowsYourName

COMPONENTS

RS043–01

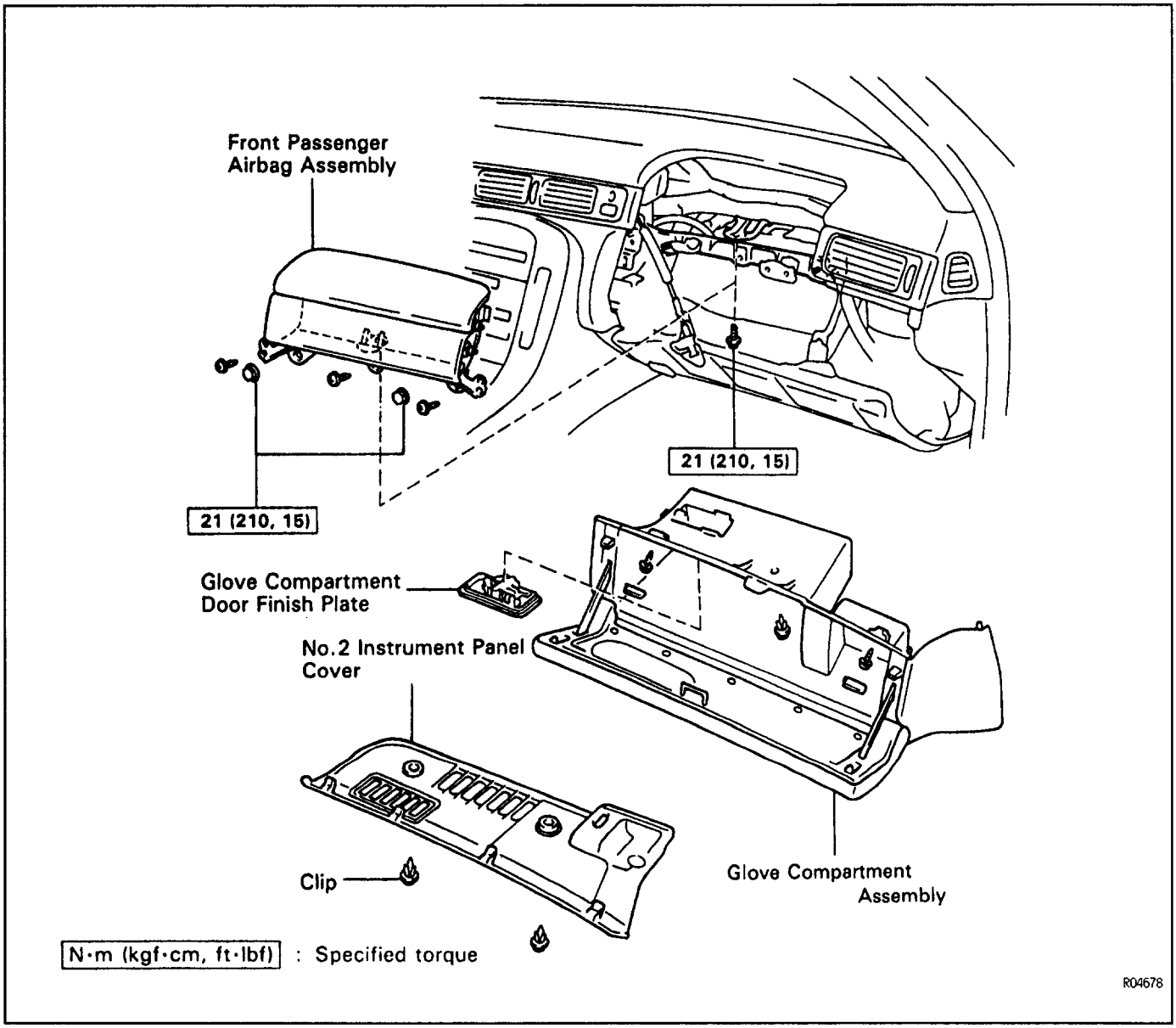

FRONT PASSENGER AIRBAG ASSEMBLY REMOVAL AND INSTALLATION

RS044–01

NOTICE:

- **If the wiring connector of the supplemental restraint system is disconnected with the ignition switch at ON or ACC, diagnostic trouble codes will be recorded.**
- **Never use airbag parts from another vehicle. When replacing parts, replace with new parts.**

WhereEverybodyKnowsYourName

1. DISCONNECT NEGATIVE (–) TERMINAL CABLE FROM BATTERY

CAUTION: Work must be started after 90 second from the time the ignition switch is turned to the LOCK position and the negative (–) terminal cable is disconnected from the battery (See page RS–2).

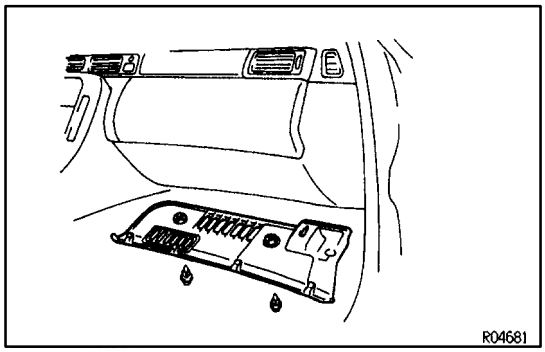

2. REMOVE NO. 2 INSTRUMENT PANEL UNDER COVER

(a) Using a clip remover, remove 2 clips.

(b) Remove the under cover.

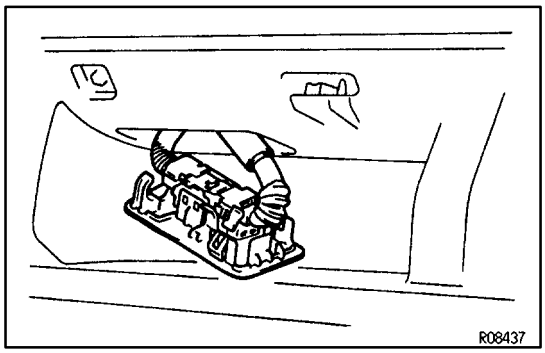

3. DISCONNECT AIRBAG CONNECTER

(a) Remove the glove compartment door finish plate inside the glove compartment.

NOTICE: When handling the airbag connector, take care not to damage the airbag wire harness.

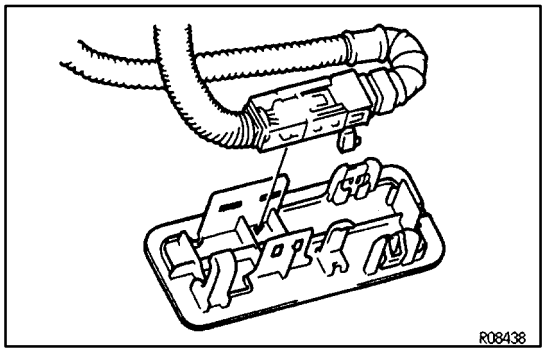

(b) Pull up the connector.

(c) Disconnect the airbag connector.

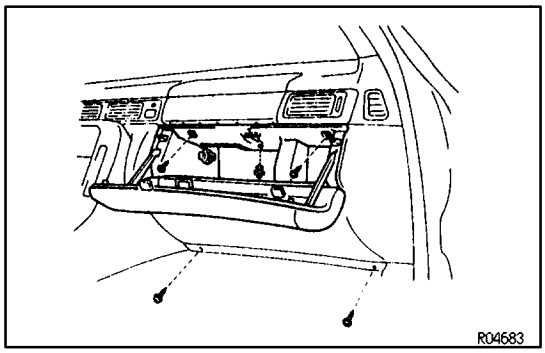

4. REMOVE GLOVE COMPARTMENT ASSEMBLY

(a) Remove the 2 console box hole covers.

(b) Remove the 4 screws and clip.

(c) Remove the glove compartment assembly.

WhereEverybodyKnowsYourName

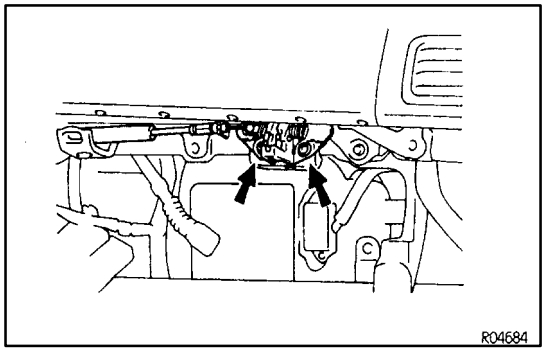

5. REMOVE GLOVE COMPARTMENT DOOR LOCK MOUNTING BRACKET

Remove the 2 screws, disconnect the door lock mounting bracket.

(a) Remove the 3 screws, 2 nuts and bolt.

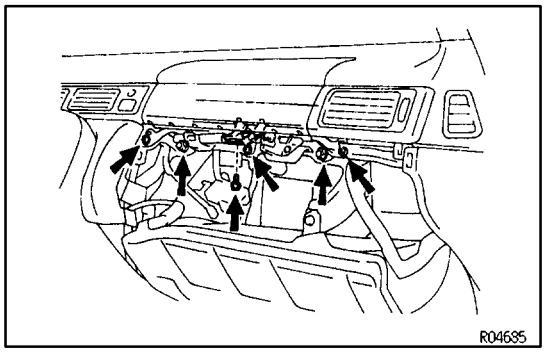

6. REMOVE FRONT PASSENGER AIRBAG ASSEMBLY

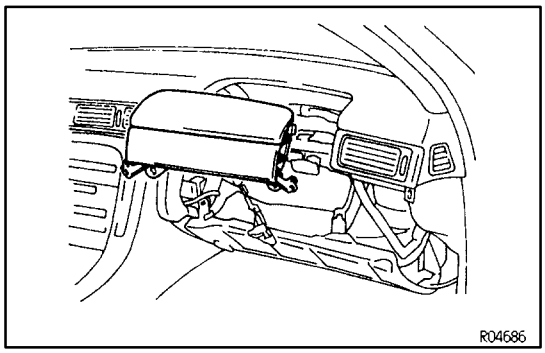

(b) Pull out the front passenger airbag assembly from the instrument panel.

NOTICE: When removing the front passenger airbag assembly, take care not to pull the airbag wire harness.

CAUTION:

- **When storing the front passenger airbag assembly, keep the upper surface of the front passenger airbag assembly facing upward.**
- **Never disassemble the front passenger airbag assembly.**

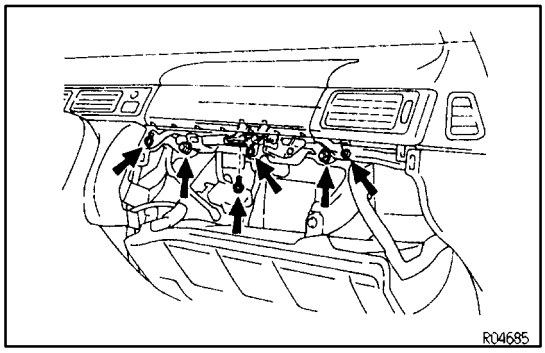

7. INSTALL FRONT PASSENGER AIRBAG ASSEMBLY

(a) Install and torque the 2 nuts and the bolt.

Torque: 21 N·m (210 kgf·cm, 15 ft·lbf)

(b) Install the 3 screws.

NOTICE:

- **Make sure the front passenger airbag assembly is installed to the specified torque.**
- **If the front passenger airbag assembly has been dropped, or there are cracks, dents or other defects in the case or connector, replace the front passenger airbag assembly with a new one.**
- **When installing the front passenger airbag assembly, take care that the wiring do not interfere with other parts and are not pinched between other parts.**

WhereEverybodyKnowsYourName

8. INSTALL FOLLOWING PARTS:

(a) Glove compartment door lock mounting bracket

(b) Glove compartment assembly

NOTICE: When installing the glove compartment assembly, carefully pull out the airbag wire harness from the glove compartment upper hole.

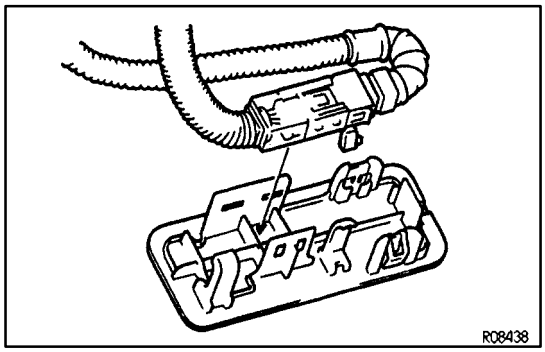

(c) Airbag connector

(d) Glove compartment door finish plate

(e) No.2 instrument panel under cover

9. CONNECT NEGATIVE (–) TERMINAL CABLE TO BATTERY

WhereEverybodyKnowsYourName

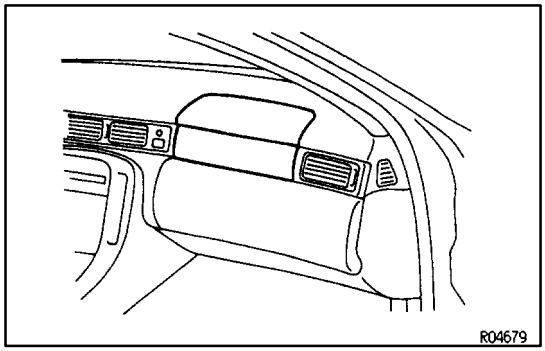

FRONT PASSENGER AIRBAG ASSEMBLY DISPOSAL

RS01P–02

When scrapping vehicles equipped with an supplemental restraint system or disposing of a front passenger airbag assembly, always first deploy the airbag in accordance with the procedure described below.

If any abnormality occurs with the airbag deployment, contact the SERVICE DEPT. of TOYOTA MOTOR SALES, U.S.A., INC..

Never dispose of a front passenger airbag assembly which has an undeployed airbag.

When disposing of a front passenger airbag assembly with an airbag deployed in a collision, follow the same procedure given under “When scrapping vehicle, step 5. DISPOSAL OF FRONT PASSENGER AIRBAG ASSEMBLY” (See page RS–36).

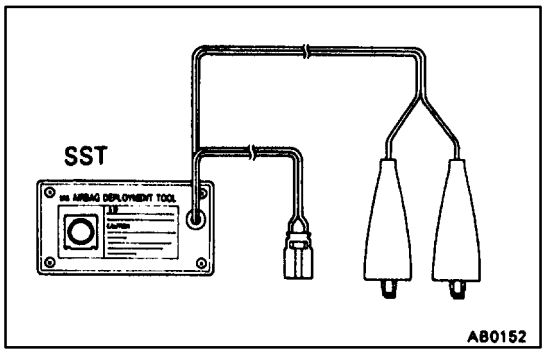

PRECAUTIONS FOR AIRBAG DEPLOYMENT

- The airbag produces a sizeable exploding sound when it deploys, so perform the operation out–of–doors and where it will not create a nuisance to nearby residents.
- When deploying the airbag, always use the specified SST: SRS AIRBAG DEPLOYMENT TOOL (SST 09082–00700). Perform the operation in a place away from electrical noise.
- When deploying an airbag, perform the operation from at least 10 m (33 ft) away from the front passenger airbag assembly.
- The front passenger airbag assembly is very hot when the airbag is deployed, so leave it alone for at least 30 minutes after deployment.
- Use gloves and safety glasses when handling a front passenger airbag assembly with deployed airbag.
- Always wash your hands with water after completing the operation.
- Do not apply water, etc., to a front passenger airbag assembly deployed airbag.

WhereEverybodyKnowsYourName

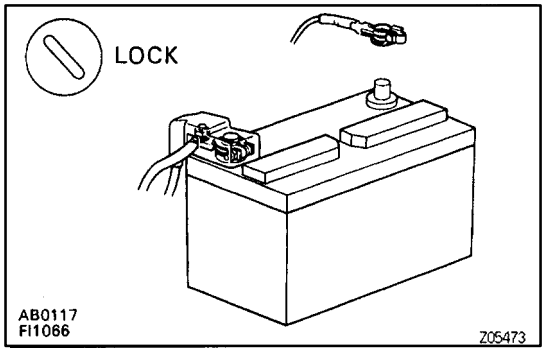

When scrapping vehicle

HINT: Have a battery ready as the power source to deploy the airbag.

1. DISCONNECT NEGATIVE (–) TERMINAL CABLE FROM THE BATTERY

CAUTION: Work must be started after 90 seconds from the time the ignition switch is turned to the LOCK position and the negative (–) terminal cable is disconnected from the battery (See page RS–2).

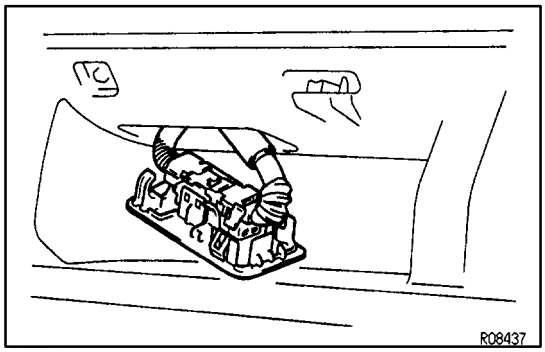

2. DISCONNECT AIRBAG CONNECTOR

(a) Remove the glove compartment door finish plate inside the glove compartment.

NOTICE: When handling the airbag connector, take care not to the airbag wire harness.

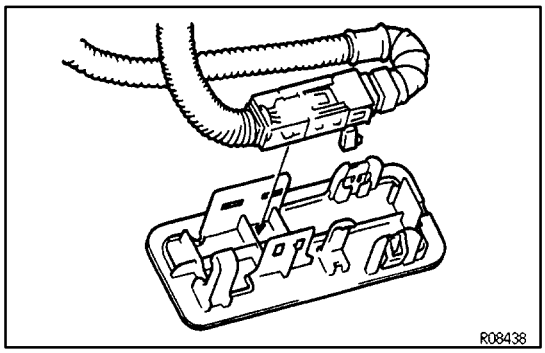

(b) Pull up the connector.

(c) Disconnect the airbag connector.

3. CONFIRM FUNCTIONING OF SST

(See page RS–27)

SST 09082–00700

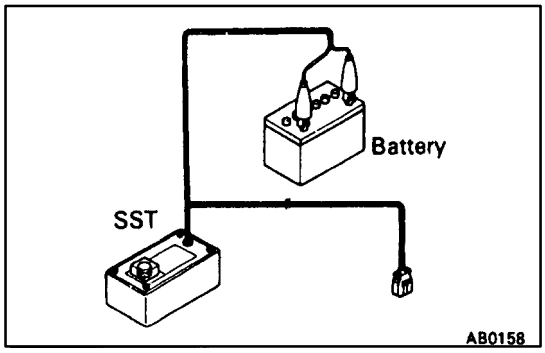

4. INSTALL SST

(a) Connect the SST connector to the front passenger airbag assembly connector.

NOTICE: To avoid damaging the SST connector and wire harness, do not lock the secondary lock of the twin lock.

SST 09082–00700

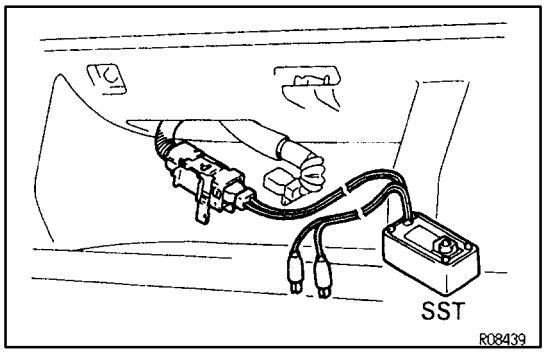

WhereEverybodyKnowsYourName

(b) Move the SST to at least 10 m (33 ft) from the front of the vehicle.

(c) Close all the doors and windows of the vehicle.
NOTICE: Take care not change the SST wire harness.

(d) Connect the SST red clip to the battery positive (+) terminal and the black clip to the battery negative (–) terminal.

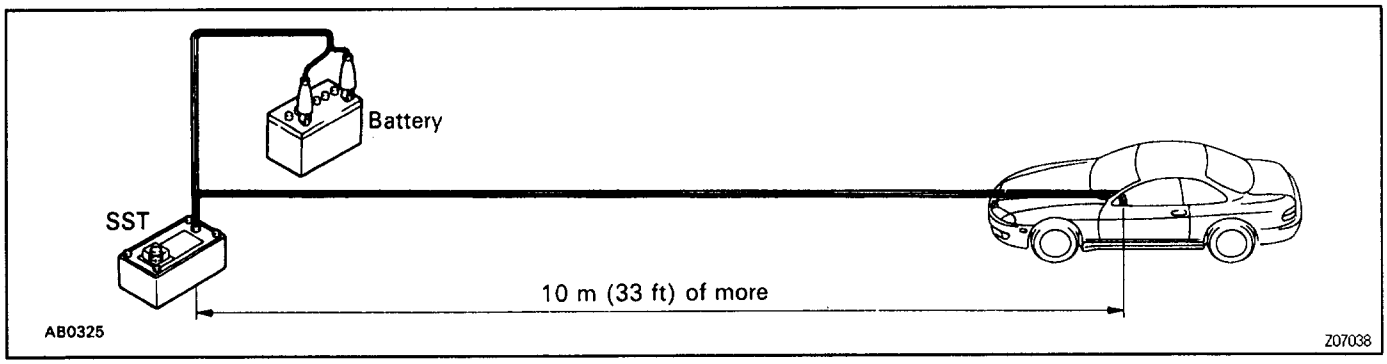

5. DEPLOY AIRBAG

(a) Confirm that no–one is inside the vehicle or within 10 m (33 ft) of the vehicle.

(b) Press the SST activation switch and deploy the airbag.
HINT: The airbag deploys simultaneously as the LED of the SST activation switch lights up.

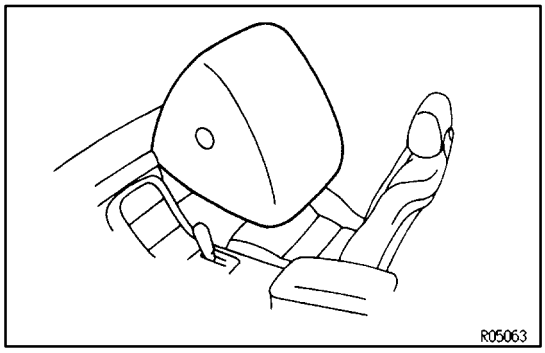

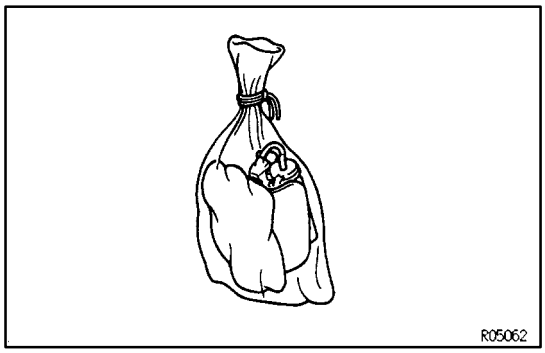

6. DISPOSAL OF FRONT PASSENGER AIRBAG ASSEMBLY

NOTICE:

- **The front passenger airbag assembly is very out not when the airbag is deployed, so leave it alone for at least 30 minutes after deployment.**
- **Use gloves and safety glasses when handling a front passenger airbag assembly with deployed airbag.**
- **Do not apply water, etc., to a front passenger airbag assembly with deployed airbag.**
- **Always wash your hands with water after completing the operation.**

When scrapping a vehicle, deploy the airbag and scrap the vehicle with the front passenger airbag assembly still installed.

WhereEverybodyKnowsYourName

When disposing of front passenger airbag assembly only

When disposing of the front passenger airbag assembly only, never use the customer's vehicle to deploy the airbag.

Remove the front passenger airbag assembly from the vehicle and be sure to follow the procedure given below when deploying the airbag.

HINT: Have a battery ready as the power source to deploy the airbag.

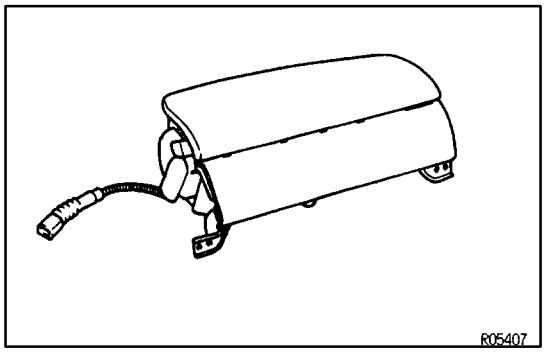

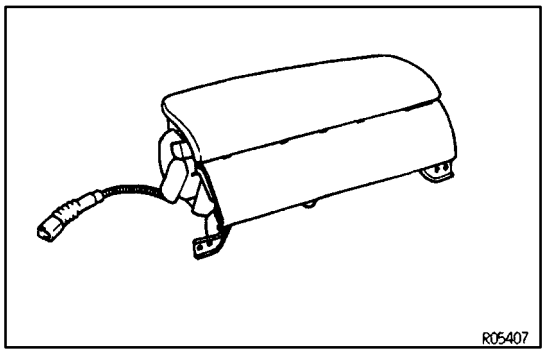

1. REMOVE FRONT PASSENGER AIRBAG ASSEMBLY

CAUTION:

- **When removing the front passenger airbag assembly, work must be started after 90 seconds from the time the ignition switch is turned to the LOCK position and the negative (–) terminal cable is disconnected from the battery.**
- **Store the front passenger airbag assembly with the airbag door facing up.**

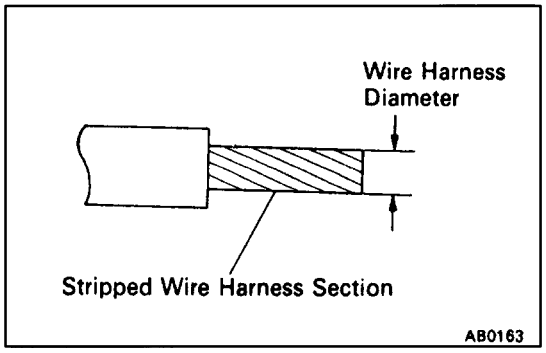

2. FIX FRONT PASSENGER AIRBAG ASSEMBLY TO TIRE

Using a service–purpose wire harness for vehicle, tie down the front passenger airbag assembly to the tire.

Wire harness: Stripped wire harness section

1.25 mm^2 or more (0.0019 in^2 or more).

HINT: To calculate the square of the stripped wire harness section–

Square = 3.14 x $(Diameter)^2$ divided by 4

WhereEverybodyKnowsYourName

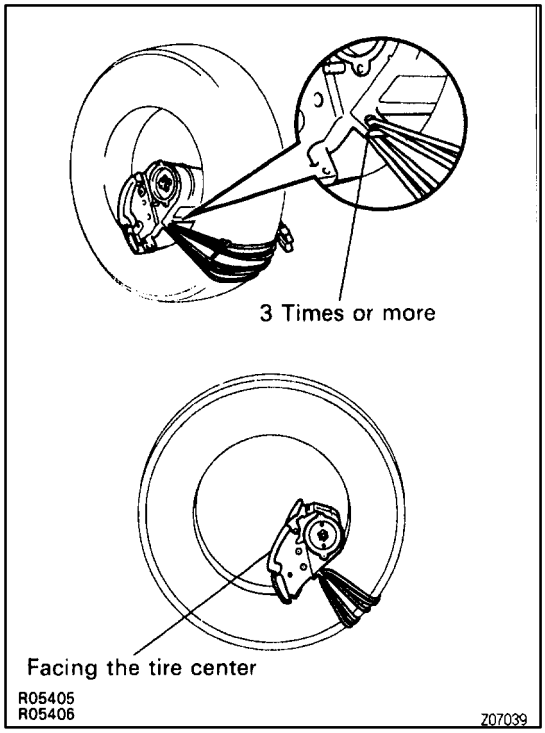

CAUTION: If a wire harness which is too thin or some other thing is used to tie down the front passenger airbag assembly, it may be snapped by the shock when the airbag is deployed, this is highly dangerous.
Always use a wire harness for vehicle use which is at least 1.25 mm^2 (0.0019 in)^2.

(1) Wrap the wire harness around the tire, passing the wire harness at least 3 times through the installation hole on the left and right sides of the front passenger airbag assembly.

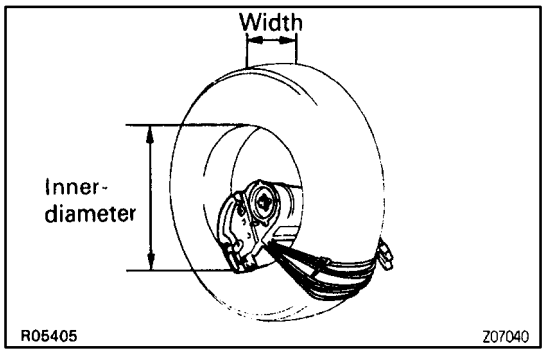

(2) Position the front passenger airbag assembly inside the tire with the airbag door facing inside.

Tie the wire harness to the tire.

Tire size: Must exceed the following dimensions
Width 185 mm (7.28 in.)
Inner diam 360 mm (14.17 in.)

CAUTION:

- **Make sure the wire harness is tight. It is very dangerous if a loose wire harness results in the front passenger airbag assembly coming free due to the shock of the airbag deploying.**
- **Always tie down the front passenger airbag assembly with the airbag door facing inside.**

NOTICE: The tire will be marked by the airbag deployment, so use a redundant tire.

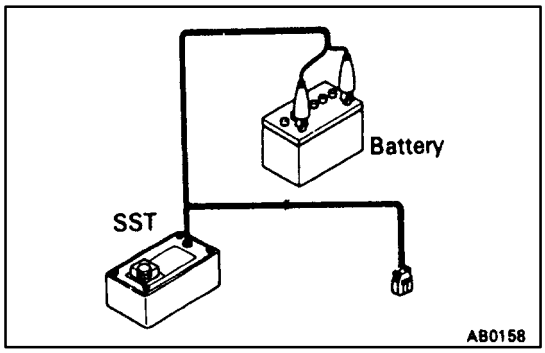

3. CONFIRM FUNCTIONING OF SST
(See page RS–27)
SST 09082–00700

WhereEverybodyKnowsYourName

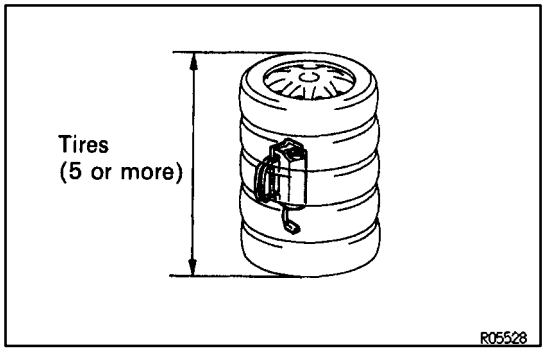

4. PLACE TIRES

(a) Place at least 2 tires under the tire to which the front passenger airbag assembly is tied.

(b) Place at least 2 tires over the tire to which the front passenger airbag assembly is tied. The top tire should have the wheel installed.

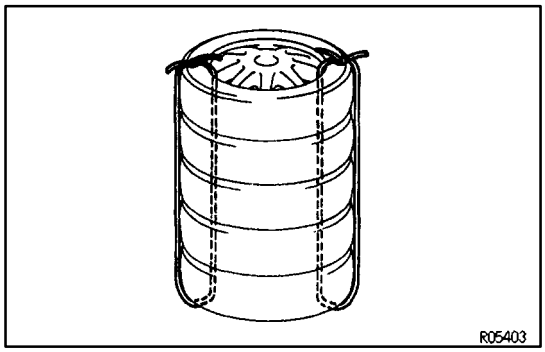

(c) Tie the tires together by 2 wire harnesses.
CAUTION: Make sure that the wire harnesses are tight. It is very dangerous if looseness in the tires coming free through the shock of the airbag deploying.
HINT: Place the SST connect and wire harness inside tires. Provide at least 1 m (3 ft) of slack for the wire harness.

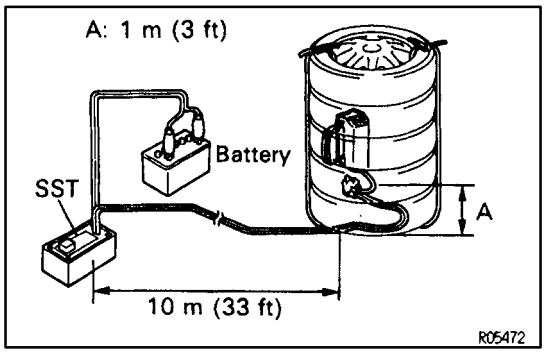

5. INSTALL SST

Connect the SST connector to the front passenger airbag assembly connector.
SST 09082–00700
NOTICE: To avoid damaging the SST connector and wire harness, do not lock the secondary lock of the twin lock.

6. AIRBAG DEPLOYMENT

(a) Connect the SST red clip to the battery positive (+) terminal and the black clip to the battery negative (–) terminal.

(b) Confirm that no–one is within 10 m (33 ft) of the tire the front passenger airbag assembly is tied to.

(c) Press the SST activation switch and deploy the airbag.

WhereEverybodyKnowsYourName

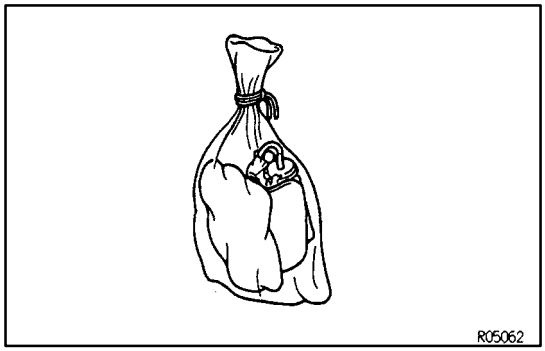

7. DISPOSAL OF FRONT PASSENGER AIRBAG ASSEMBLY

CAUTION:

- **The front passenger airbag assembly is very hot when the airbag is deployed, so leave it alone for at least 30 minutes after deployment.**
- **Use gloves and safety glasses when handling a front passenger airbag assembly with deployed airbag.**
- **Do not apply water, etc., to a front passenger airbag assembly with deployed airbag.**
- **Always wash your hand with water after completing the operation.**

(a) Remove the front passenger airbag assembly from the tire.

(b) Place the front passenger airbag assembly in a vinyl bag, tie the end tightly and dispose of it the same way as other general parts.

WhereEverybodyKnowsYourName

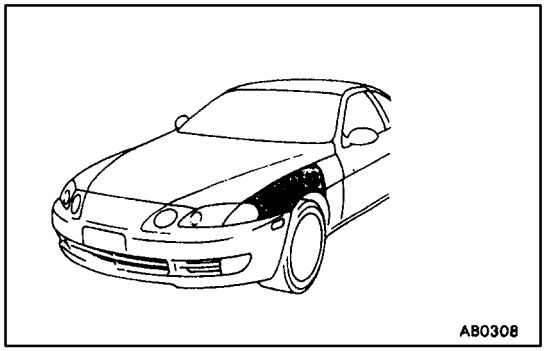

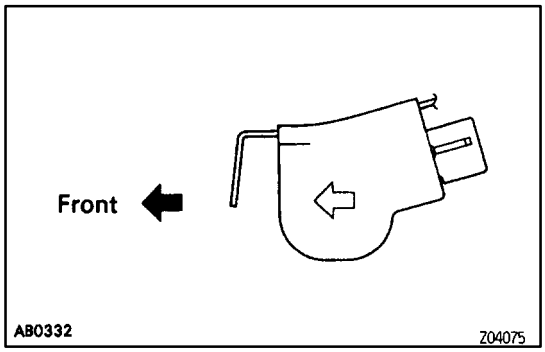

FRONT AIRBAG SENSOR

INSPECTION ITEMS

RS015–0C

1. VEHICLES NOT INVOLVED IN A COLLISION

Perform a diagnostic system check.
(See page RS–59)

2. VEHICLES INVOLVED IN A COLLISION

(a) Perform a diagnostic system check.
(See page RS–59)

(b) If the front fender of the car or its periphery is damaged, perform visual check for damage to the front airbag sensor, which includes the following items even if the airbag was not deployed:

- Bracket deformation.
- Peeling of paint from the bracket.
- Cracks, dents or chips in the case.
- Cracks and dents in, or chipping and scratches of the connector.
- Peeling off of the label or damage to the series number.

Also refer to the body dimension drawings in the BODY section and check the dimensions and mounting surface angle of the body area where the front airbag sensors are mounted. (The SRS may malfunction, or may not work, if the mounting angle or dimensions of the sensor mount are not correct.)

REPLACEMENT REQUIREMENTS

RS016–06

In the following cases, replace the front airbag sensor.

NOTICE: for replacement of the front airbag sensor, see page RS–42, “FRONT AIRBAG SENSOR REMOVAL AND INSTALLATION” and be sure to follow the correct procedure.

- If the SRS has been deployed in a collision.
  (Replace both the left and right airbag sensors.)
- If the front airbag sensor has been found to be faulty in troubleshooting.
- If the front airbag sensor has been found to be faulty during the check in item 2–(b).
- If the front airbag sensor has been dropped.

WhereEverybodyKnowsYourName

COMPONENTS

RS045–01

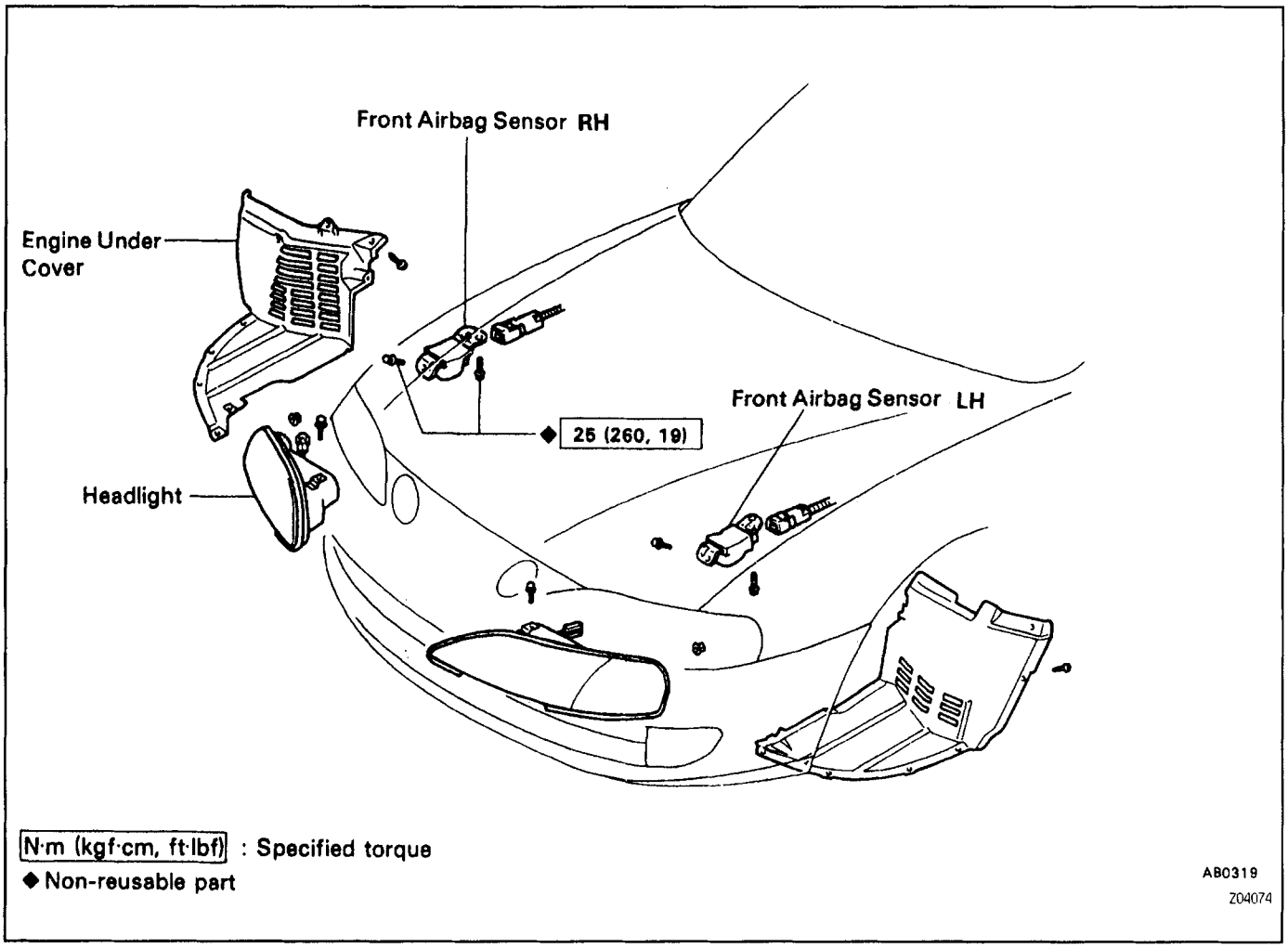

FRONT AIRBAG SENSOR REMOVAL AND INSTALLATION

RS046–01

NOTICE:

- **If the wiring connector of the supplemental restraint system is disconnected with the ignition switch at ON or ACC, diagnostic trouble codes will be recorded.**
- **Never use SRS parts from another vehicle. When replacing parts, replace with new parts.**
- **Never reuse the sensor involved in a collision when the SRS has deployed.**
- **Never repair a sensor in order to reuse it.**

WhereEverybodyKnowsYourName

1. DISCONNECT NEGATIVE (–) TERMINAL CABLE FROM BATTERY

CAUTION: Work must be started after 90 seconds from the time the ignition switch is turned to the "LOCK" position and the negative (–) terminal cable is disconnected from the battery.

(See page RS–2)

2. REMOVE ENGINE UNDER COVER

(See page BO–12)

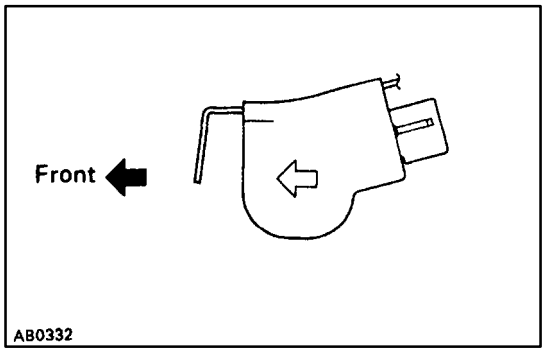

3. REMOVE FRONT AIRBAG SENSOR

(a) Disconnect the connector.

(b) Remove the bolt, the nut and the sensor.

4. INSTALL FRONT AIRBAG SENSOR

(a) Install the sensor with the arrow on the sensor facing toward the front of the vehicle.

Torque: 25 N·m (260 kgf·cm, 19 ft·lbf)

NOTICE:

- **Make sure the sensor is installed to the specified torque.**
- **If the sensor has been dropped, or there are cracks, dents or other defects in the case, brackets or connector, replace the sensor is removed, always replace the set bolt and the nut with new one.**
- **The sensor set bolt and the nut have been anti–rust treated. When the sensor is removed, always replace the set bolt and the nut with new ones.**
- **After installation, shake the sensor to check that there is no looseness.**
- **The front sensor is equipped with an electrical connection check mechanism. Be sure to lock this mechanism securely when connecting the connector. If the connector is not securely locked, a malfunction code will be detected by the diagnosis system.**
- **Check that the dimensions of the body where the front airbag sensor is installed match those in the body dimension drawings in the BODY section.**

  (The SRS may malfunction, or may not work, if the dimensions of the sensor mount is not correct.)

5. INSTALL ENGINE UNDER COVER

6. CONNECT NEGATIVE (–) TERMINAL CABLE TO BATTERY

WhereEverybodyKnowsYourName

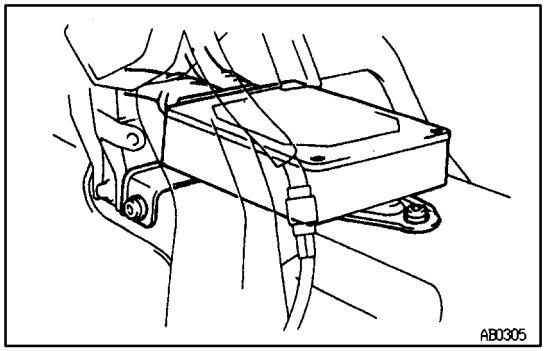

CENTER AIRBAG SENSOR ASSEMBLY

INSPECTION ITEMS

RS047–01

1. **VEHICLES NOT INVOLVED IN A COLLISION**
   Perform a diagnostic system check.
   (See page RS–59)
2. **VEHICLES INVOLVED IN A COLLISION**
   IF THE SRS IS NOT DEPLOYED
   Perform a diagnostic system check.
   (See page RS–59)
   IF THE SRS IS DEPLOYED
   Replace the center airbag sensor assembly.

REPLACEMENT REQUIREMENTS

RS019–06

In the following cases, replace the center airbag sensor assembly.

NOTICE: For replacement of the center airbag sensor assembly, see page RS–46 "CENTER AIRBAG SENSOR ASSEMBLY REMOVAL AND INSTALLATION" and be sure to follow the correct procedure.

- If the SRS has been deployed in a collision.
- If the center airbag sensor assembly has been found to be faulty in troubleshooting.
- If the center airbag sensor assembly has been dropped.

WhereEverybodyKnowsYourName

COMPONENTS

RS048–01

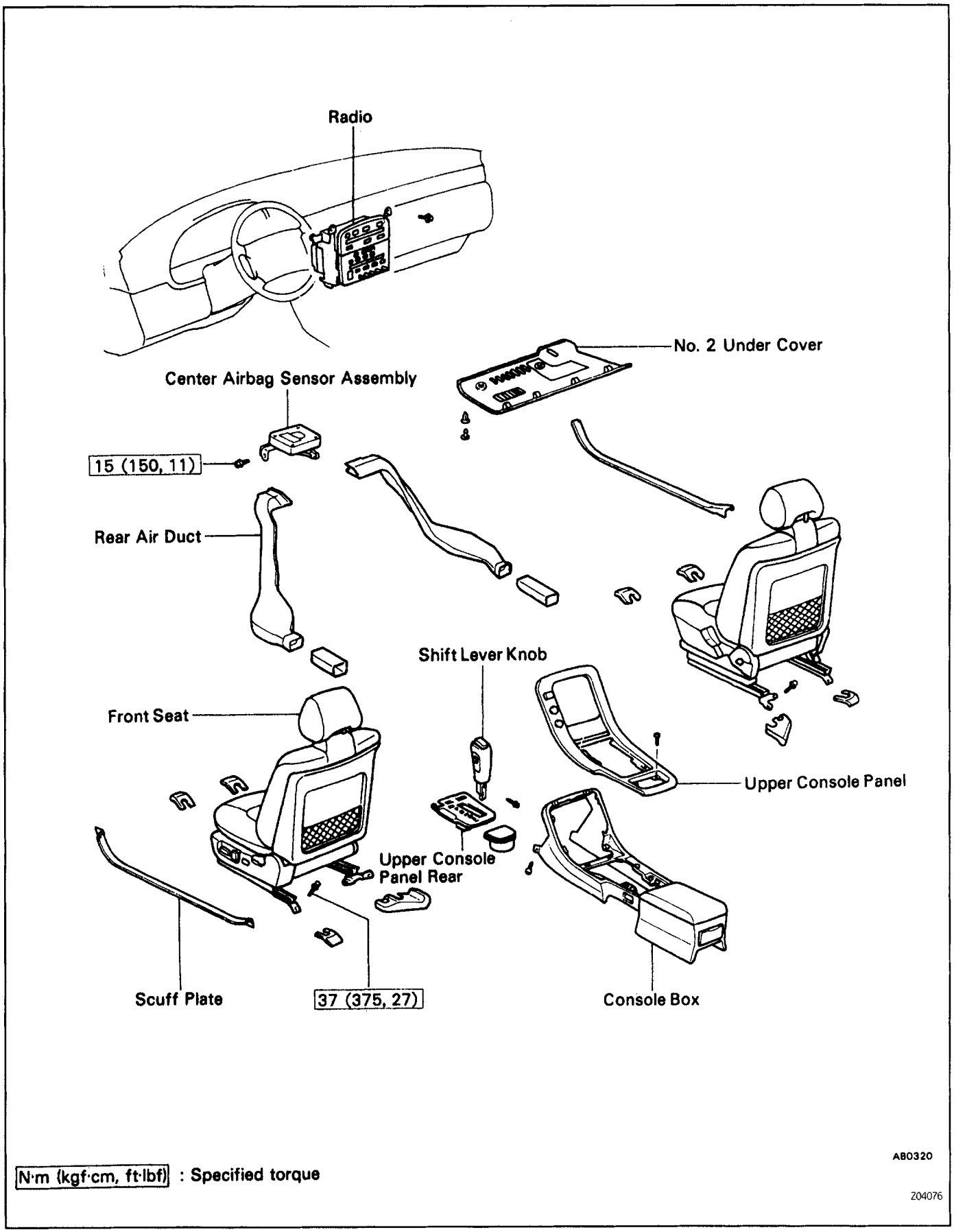

WhereEverybodyKnowsYourName

CENTER AIRBAG SENSOR ASSEMBLY REMOVAL AND INSTALLATION

RS049–01

NOTICE:

- **Do not open the cover or the case of the ECU and various computers unless absolutely necessary. (If the IC terminals are touched, the IC may be destroyed by static electricity.)**
- **Never use SRS parts from another vehicle. When replacing parts, replace with new parts.**
- **Never reuse the center airbag sensor assembly involved in a collision when the airbag has deployed.**
- **Never repair a sensor in order to reuse it.**

1. DISCONNECT NEGATIVE (–) TERMINAL CABLE FROM BATTERY

CAUTION: Work must be started after 90 seconds from the time the ignition switch is turned to the LOCK position and the negative (–) terminal cable is disconnected from the battery (See page RS–2).

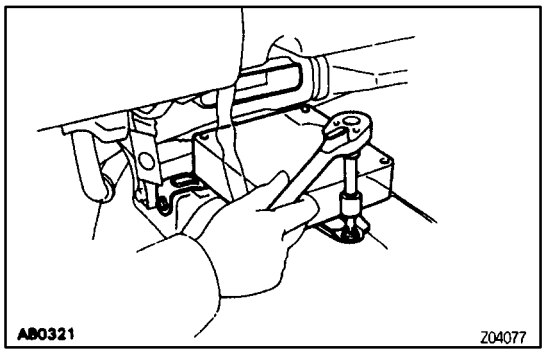

2. REMOVE AND INSTALL CENTER AIRBAG SENSOR ASSEMBLY

(a) Using a torx wrench, loosen and tighten the 3 screws.
Torx wrench: T40 (Part No. 09042–00020 or locally manufactured tool)

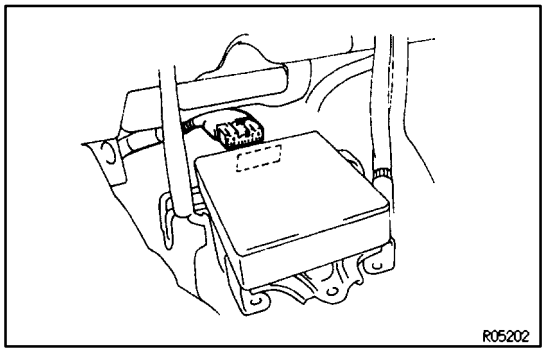

(b) Disconnect and connect the connector.
NOTICE: Removal and installation of the connector is done with the sensor assembly installed.

(c) Using a torx wrench, tighten the 3 screws.
Torx wrench: T40 (Part No. 09042–00020 or locally manufactured tool)
Torque: 15 N·m (150 kgf·cm, 11 ft·lbf)

NOTICE:

- **Make sure the sensor assembly is installed to the specified torque.**

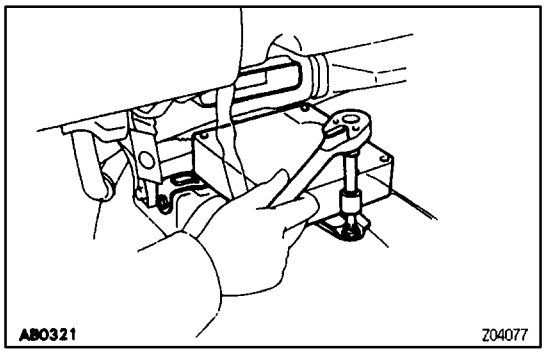

- **If the sensor assembly has been dropped, or there are cracks, dents or other defects in the case, bracket or connector, replace the sensor assembly with a new one.**
- **When installing the sensor assembly, take care that the airbag wiring does not interfere with other parts and is not pinched between other parts.**
- **After installation, shake the sensor assembly to check that there is no looseness.**

WhereEverybodyKnowsYourName

WIRE HARNESS AND CONNECTOR

RS01B–02

HINT: The SRS wire harness is integrated with the cowl wire harness assembly and floor wire harness assembly.
The wires for the SRS wire harness are encased in a yellow corrugated tube and all the connectors in the system are a standard yellow color.

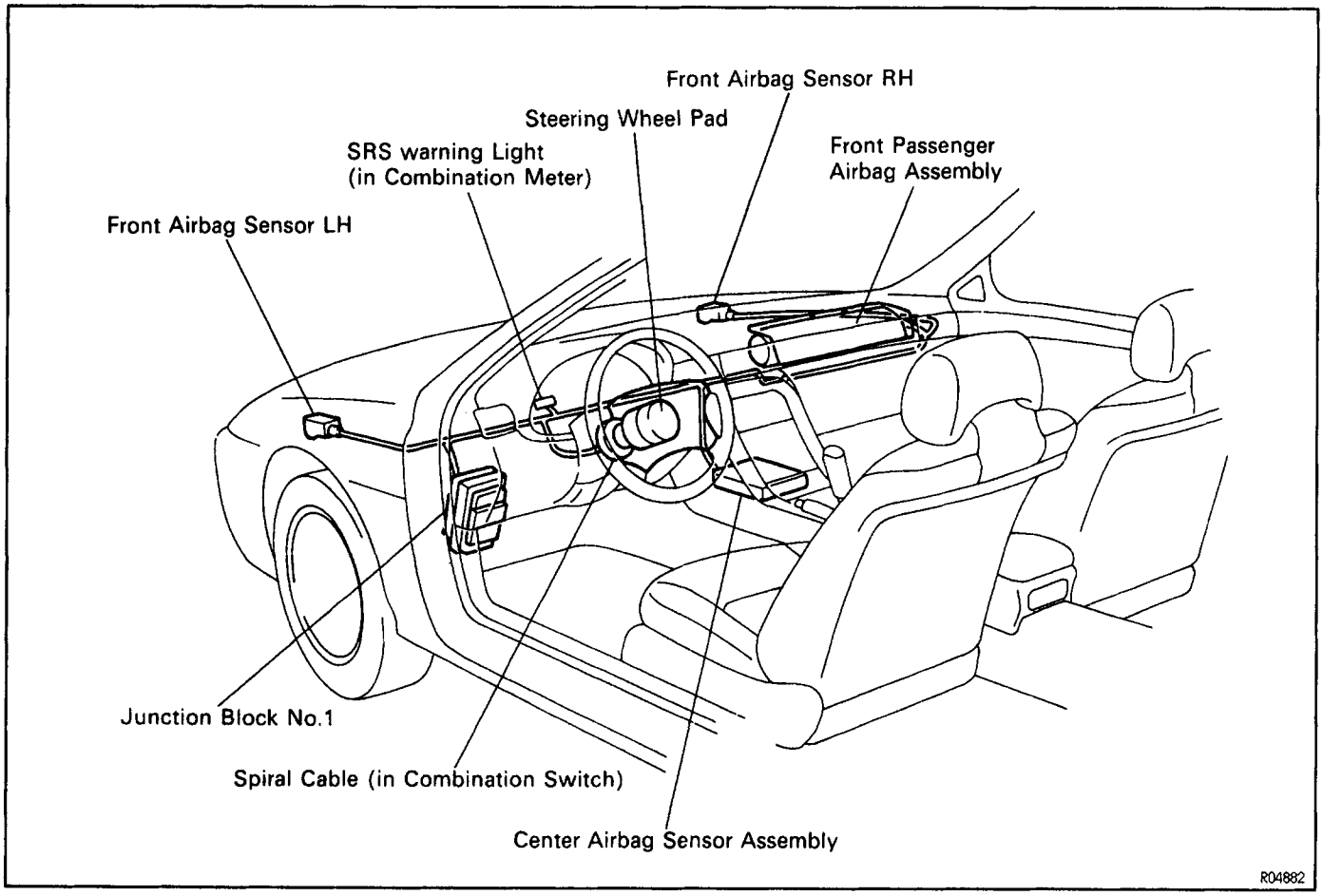

INSPECTION ITEMS

RS01C–0A

1. VEHICLES NOT INVOLVED IN A COLLISION

Perform a diagnostic system check.
(See page RS–59)

2. VEHICLES INVOLVED IN A COLLISION

(a) Perform a diagnostic system check.
(See page RS–59)

(b) If there is a break in any of the wires in the SRS wire harness, or if conductors are exposed.

(c) In the SRS wire harness connectors are cracked or chipped.

WhereEverybodyKnowsYourName

REPLACEMENT REQUIREMENTS

RS01D–07

In the following cases, replace the wire harness or connector.

- If any part of the SRS wire harness or any connector has been found to be faulty in troubleshooting.
- If any part of the SRS wire harness or any connector has been found to be faulty during the check in items 2–(b) or (c).

NOTICE:

- **If the wire harness used in the SRS is damaged, replace the whole wire harness assembly.**
- **When the connector to the WIRE HARNESS AND CONNECTORs can be repaired alone (when there is no damage to the wire harness), use the repair wire specially designed for the purpose.**

SENSOR REPLACEMENT

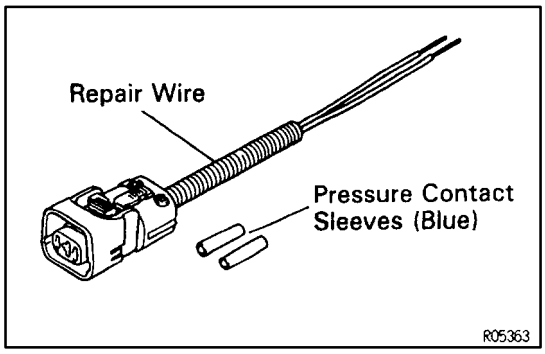

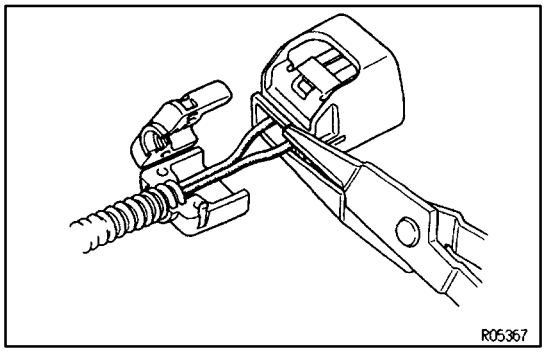

REPAIR WIRE FOR FRONT AIRBAG

RS04A–01

Repair wire with 2 pressure–contact sleeves (Part No. 82988–24010) has been prepared for exclusive use in repairing connector damage etc. caused by frontal collision of the vehicle.

When repairing the WIRE HARNESS AND CONNECTOR connector on the wire harness side, always use the special repair wire.

NOTICE: Do not replace the connector housing or terminal only.

1. DISCONNECT NEGATIVE (–) TERMINAL CABLE FROM BATTERY

CAUTION: Work must be started after 90 seconds from the time the ignition switch is turned to the “LOCK” position and the negative (–) terminal cable is disconnected from the battery.

(See page RS–2)

2. DISCONNECT WIRE HARNESS AT VEHICLE SIDE

(a) Remove the cover at the rear of the connector housing and expose the wire harness.

(b) Cut the wire harness behind the connector housing.

HINT: The operation is performed more easily if the wire harness is left as long as possible.

WhereEverybodyKnowsYourName

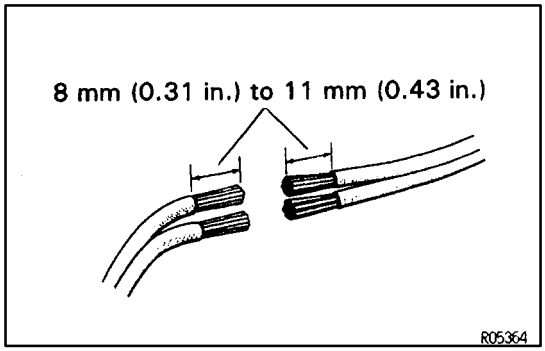

3. CONNECT WIRE HARNESS AND CONNECTOR WIRE HARNESS AT VEHICLE SIDE AND REPAIR WIRE

(a) Start stripping at least 8 mm (0.31 in.) to 11 mm (0.43 in.) away from the end of the existing harness at vehicle side and also from the end of the repair wire.

NOTICE: Take care not to damage the wire when stripping the wire harness lead. After finishing the operation, visually inspect the wire. If there is any damaged, perform the operation again.

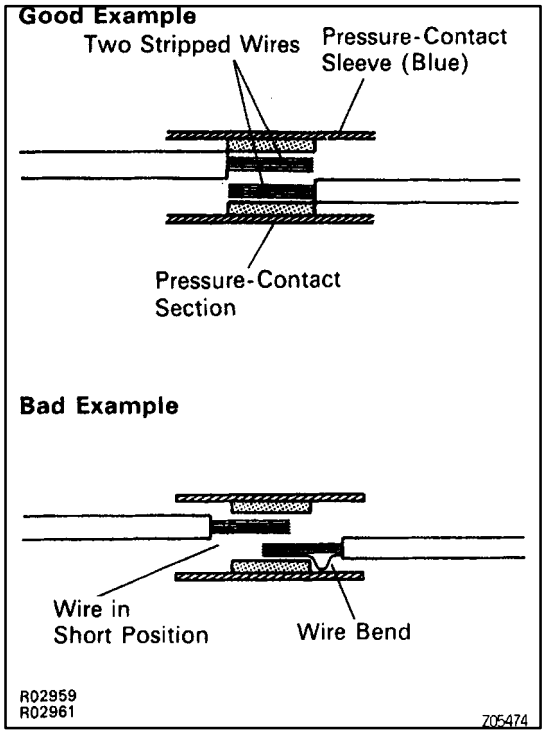

(b) Overlap the 2 stripped wire ends inside of the pressure–contact sleeve as illustrated in the left.
HINT: The blue pressure–contact sleeve (Part No. 82999–12020) is available individually.

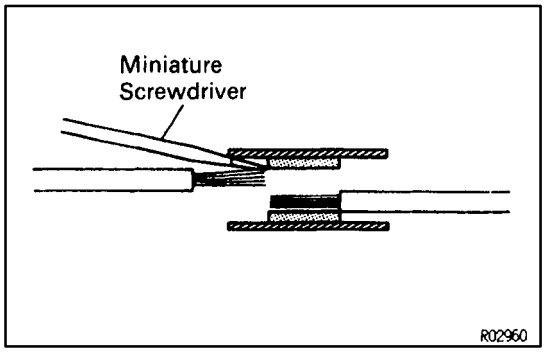

HINT: You might find it easier if you use a miniature screwdriver as a guide as you insert wires into the sleeve.

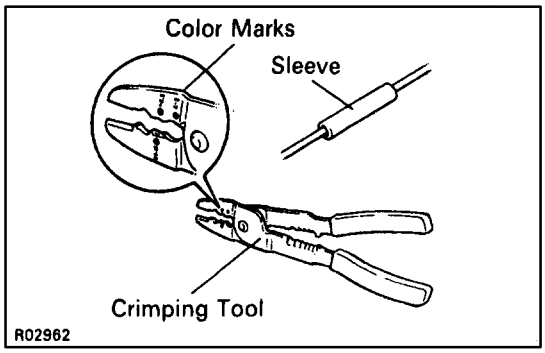

(c) The crimping tool (AMP Part No. 169060) has color marks on it. Place the sleeve in the correct section of the tool according to the color of the sleeve itself.

WhereEverybodyKnowsYourName

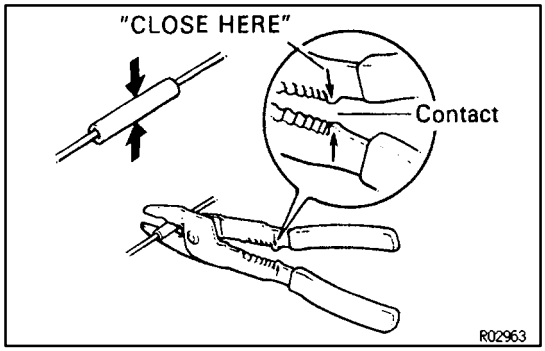

(d) With the center of the sleeve correctly placed between the crimping jaws, squeeze the crimping tool until either end comes into contact at the section marked by "CLOSE HERE".
HINT: Check to see that the sleeve and wires are still in the correct position before closing the crimping tool ends with steady pressure.

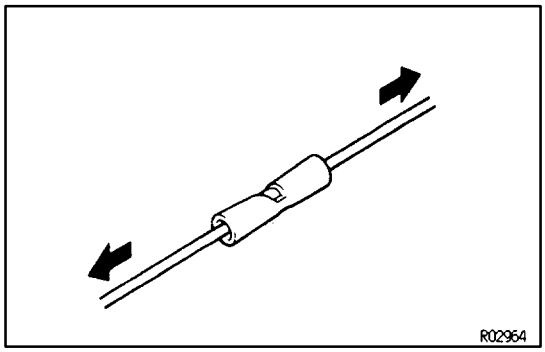

(e) Pull the joined wires to either end. Make sure that they are joined firmly by the sleeve.
NOTICE: If the joined wires come loose the splice is defective, so replace the sleeve and repeat the procedure.

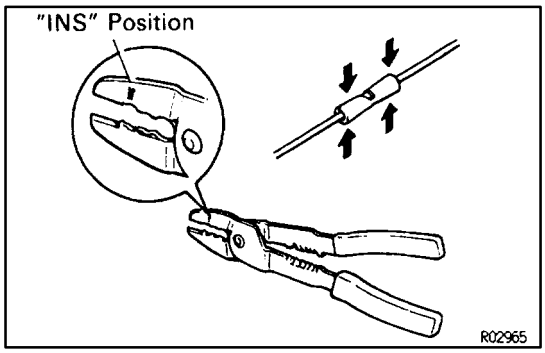

(f) Crimp both ends of the sleeve with the crimping tool at the "INS" position.

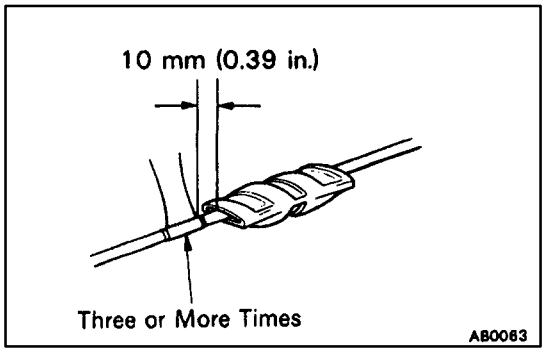

4. PROTECT JOINED SECTION

Wrap silicon tape around the joins to protect them from water.
HINT:

- Before starting the operation, throughly wipe dirt and grease off the sections to be joined.
- If the adhesive surfaces of 2 tapes come in contact, they will stick together and will not come apart, so do not remove the backing film except when using the tape.
- Do not let oil and dust, etc., get on the tape surface.

(a) Ready about 100 mm (3.94 in.) of silicon tape (Part No. 08231–00045) and peel off the film.
(b) Stretch the silicon tape until its width is reduced by half.
(c) About 10 mm (0.39 in.) from the end of the pressure contact sleeve, wrap the silicon tape around the sleeve 3 or more times while stretching the tape.

WhereEverybodyKnowsYourName

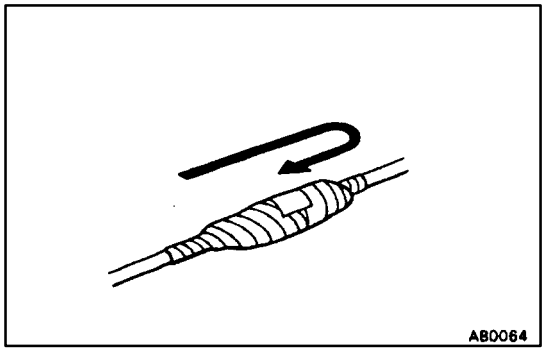

(d) Wrap the remaining part of sleeve with half of the tape overlapping at each turn.

(e) Firmly wrap the tape 2 times or more about 10 mm (0.39 in.) from the other end of the pressure–contact sleeve, then wrap the tape back towards the start again and firmly finish winding the tape around the center of the sleeve.

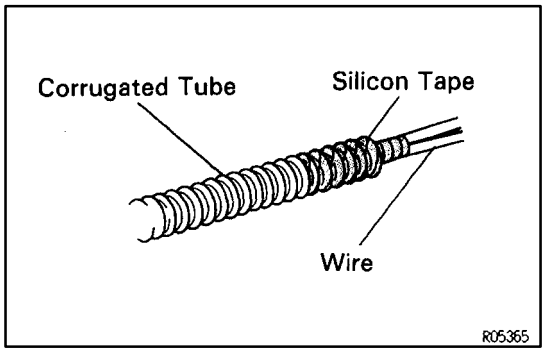

(f) Fix the corrugated tube to the wire using silicon tape.

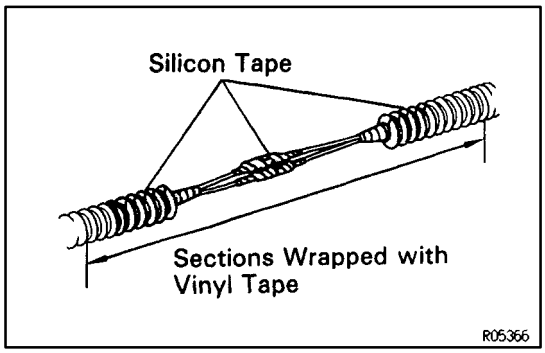

(g) After applying the silicon tape, apply vinyl tape on the corrugated tube of repair wire side over to the corrugated tube of vehicle wire harness side.

5. CONNECT NEGATIVE (–) TERMINAL CABLE TO BATTERY

WhereEverybodyKnowsYourName

– MEMO –

WhereEverybodyKnowsYourName

TROUBLESHOOTING

HOW TO PROCEED WITH TROUBLESHOOTING RS–54
CUSTOMER PROBLEM ANALYSIS CHECK SHEET RS–58
DIAGNOSIS INSPECTION RS–59
SYMPTION SIMULATION RS–65
DIAGNOSTIC TROUBLE CODE MATRIX CHART RS–67
PROBLEM SYMPTOM CHART RS–67
CIRCUIT INSPECTION RS–68
DTC (Normal) RS–68
DTC 11 RS–70
DTC 12 RS–78
DTC 13 RS–85
DTC 14 RS–92
DTC 15 RS–97
DTC 22 RS–102
DTC 31 RS–108
DTC 53 RS–110
DTC 54 RS–115
SRS Warning Light System (Always Lit Up, when ignition switch is Lock position) RS–119
Tc Terminal Circuit RS–121

WhereEverybodyKnowsYourName

HOW TO PROCEED WITH TROUBLESHOOTING

Malfunction symptoms of the supplemental restraint system are difficult to confirm, so the diagnostic trouble codes become the most important source of information when troubleshooting. Perform troubleshooting of the supplemental restraint system in accordance with the following procedure:

HINT: Do not disconnect the battery negative (–) terminal cable until step 2 , Diagnostic Trouble Code Check and Recording, has been completed.

▼ CUSTOMER PROBLEM ANALYSIS

Using the CUSTOMER PROBLEM ANALYSIS CHECK SHEET (See page RS–58) for reference, ask the customer in as much detail as possible about the problem.

2 WARNING LIGHT CHECK

Check the SRS warning light. If the light remains on, a malfunction is stored in the center airbag sensor, assembly, so proceed to step 2 . If the SRS warning light is not on, a malfunction has occurred in the SRS warning light circuit, so perform troubleshooting for 22.

HINT: 22 is recorded when a malfunction occurs in the SRS warning light system.

If an open malfunction occurs in the SRS warning light system, the SRS warning light does not light up, so that until the malfunction is repaired, the diagnostic trouble codes (including 22) cannot be confirmed.

2 DIAGNOSTIC TROUBLE CODE CHECK AND RECORDING

Check the diagnostic trouble codes and make a note of any malfunction codes which are output. If a normal code is output, an abnormality in the power source circuit may have occurred, so perform troubleshooting for source voltage in step 9.

If 22 is output, skip steps 10 and 5 and proceed to step 7.

10 MALFUNCTION CODE CLEARANCE

Clear the malfunction code.

HINT: The malfunction code output in step 2 indicates that a malfunction has occurred in the circuit designated by the malfunction code, but does not indicate whether the malfunction is still occurring or whether it was in the past.

Accordingly, it is necessary to find out the present condition of the malfunction occurrence by clearing the malfunction code and performing the diagnostic code check again. If this operation is neglected and troubleshooting is performed using only the malfunction code confirmed in step 2 , isolating the problem component becomes difficult and invites mistaken diagnosis.

5 DIAGNOSTIC TROUBLE CODE CHECK AND RECORDING 6 SYMPTOM SIMULATION

After repeating ignition switch ON–OFF operation (ON: wait 20 secs, OFF: wait 20 secs.) 5 times, check the diagnostic trouble codes. If any code is output, the malfunction is still occurring, so proceed to step 7.

Bearing in mind that a malfunction code was registered in step 2 , provided that the normal code is presently output, use the methods described in step 6 to simulate the malfunction.

WhereEverybodyKnowsYourName

NOTICE: When connecting the battery after clearing the malfunction code, always do it with the ignition switch in LOCK position. When the battery has been reconnected, turn the ignition switch to ACC or ON position after at least 2 seconds have elapsed.
If the battery is reconnected with the ignition switch in ACC or ON position, or the ignition switch is turned to ACC or ON within 2 seconds of connecting the battery, it is possible that the diagnosis system will not operate normally.

7 DIAGNOSTIC TROUBLE CODE CHART

Proceed to the appropriate flow chart in step 9 in accordance with the malfunction code found in step 5 or 6.

9 CIRCUIT INSPECTION 2 REPAIR

Find out if the problem lies in a sensor, actuator or TROUBLESHOOTING, and repair the problem. After the problem part is repaired, reinstall the disassembled parts. Do not start work until at least 90 seconds after the ignition switch is turned to the LOCK position and the negative (–) terminal cable is disconnected.
CAUTION: If incorrect procedure is used, a malfunction may occur in the system or there is the danger that airbag may be accidentally deploy during the repair operation. Carefully read the GENERAL DESCRIPTION (See page RS–2) and the cautions for each operation, and perform repairs in the correct order using the correct methods.
HINT: The following illustration for the CIRCUIT INSPECTION shows each connector for the SRS squib circuit.

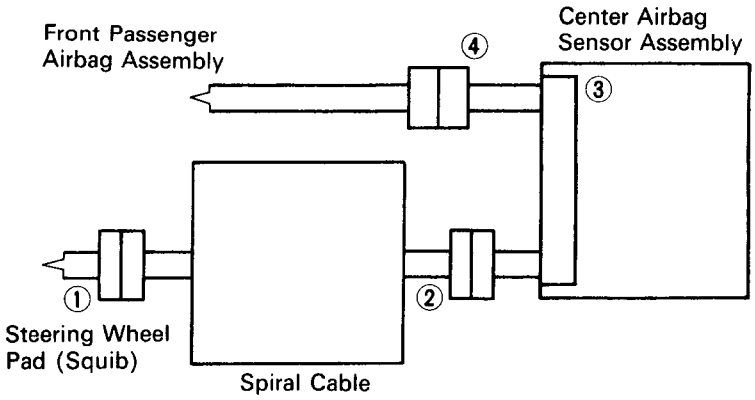

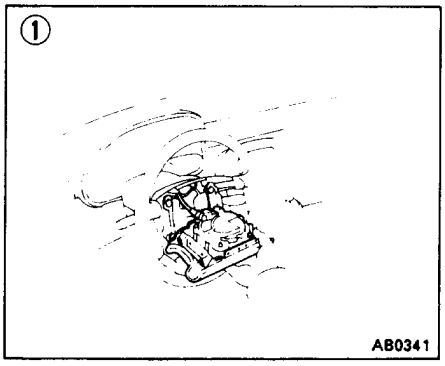

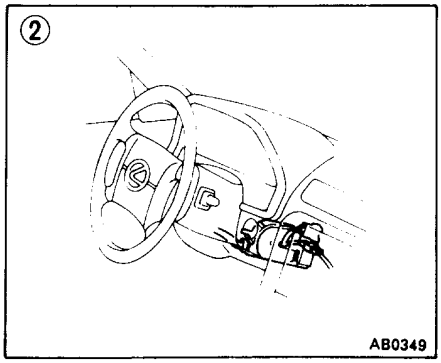

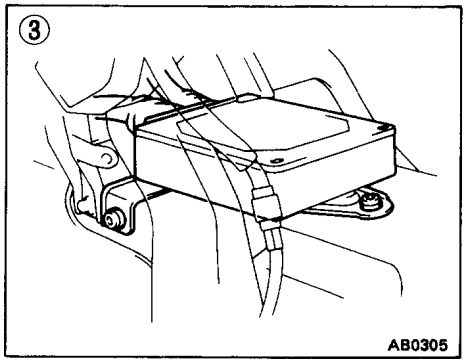

WhereEverybodyKnowsYourName

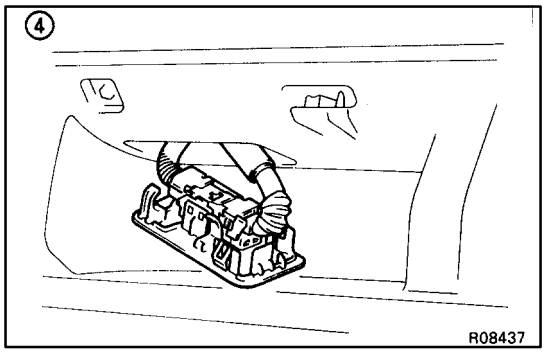

10 MALFUNCTION CODE CLEARANCE

When all the malfunction codes found in steps 5 and 6 have been repaired, clear the malfunction codes.

11 DIAGNOSTIC TROUBLE CODE CHECK

After repeating ignition switch ON–OFF operation (ON: wait 20 secs, OFF: wait 20 secs.) 5 times, check the diagnostic trouble codes. If a code is displayed, return to step 7 and troubleshoot the displayed malfunction code.

NOTICE: When connecting the battery after clearing the malfunction code, always do it with the ignition switch in LOCK position. When the battery has been reconnected, turn the ignition switch to ACC or ON position after at least 20 seconds have elapsed.

If the battery is reconnected with the ignition switch in ACC or ON position, or the ignition switch is turned ACC or ON within 20 seconds of connecting the battery, it is possible that the diagnosis system will not operate normally.

12 CONFIRMATION TEST

Check the warning light again and confirm that all the malfunctions have been repaired. If the warning light indicates an abnormality, repeat the operation again from step 2.

WhereEverybodyKnowsYourName

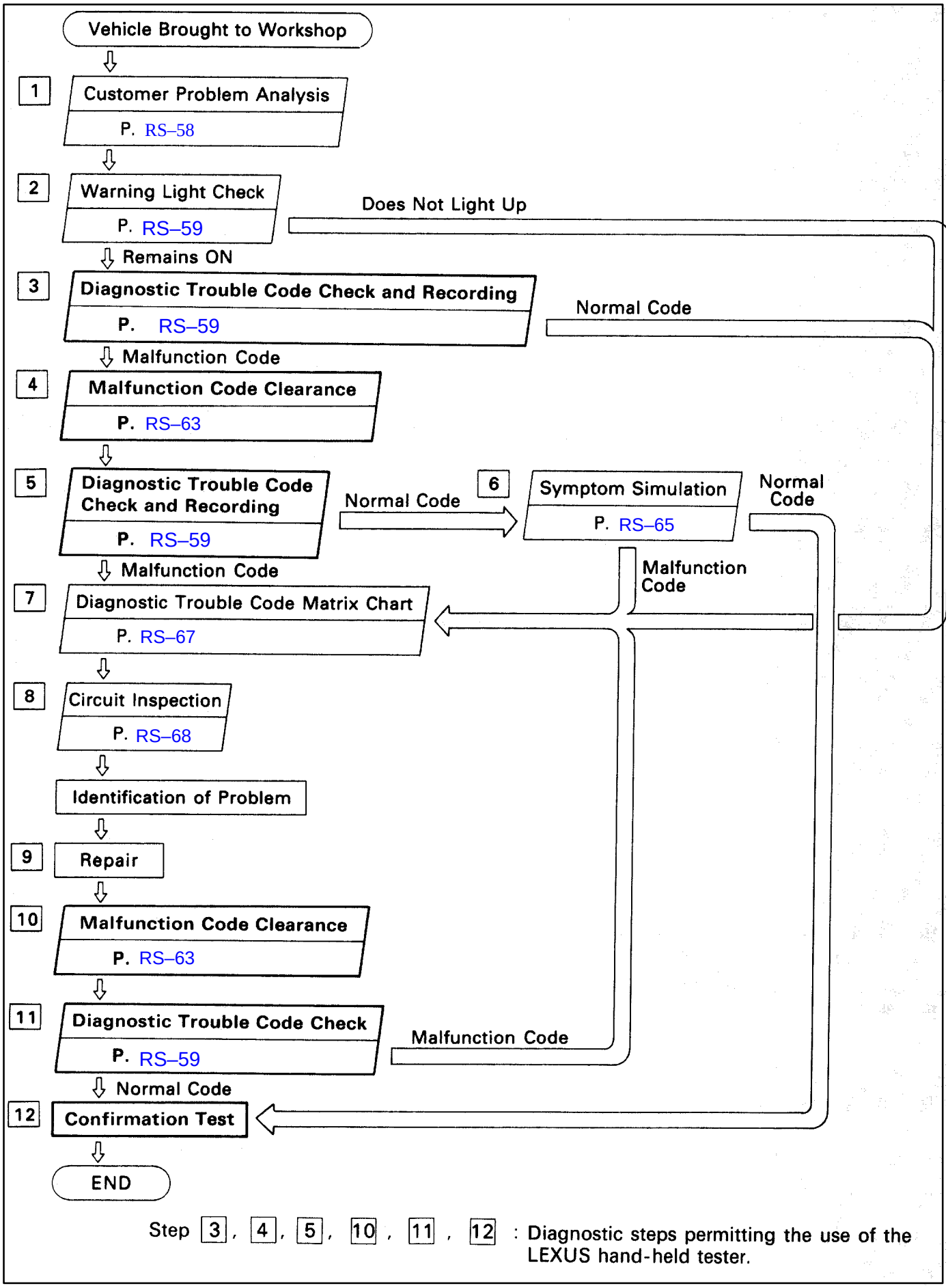

WhereEverybodyKnowsYourName

CUSTOMER PROBLEM ANALYSIS CHECK SHEET

Supplemental Restraint System Check Sheet	Inspector's Name

Customer's Name	==========	**Registration No.**	
		Registration Year	/ /
		Frame No.	
Date Vehicle Brought In	/ /	**Odometer Reading**	km Miles

Date Problem First Occurred	/ /
Weather	▼Fine ▼Cloudy ▼Rainy ▼Snowy ▼Other_____
Temperature	Approx. °C (°F)

Vehicle Operation	▼Starting ▼Idling ▼Driving ▼Constant speed ▼Acceleration ▼Deceleration ▼other]
Road Conditions	
Details of Problem	

Vehicle Inspection, Repair History Prior to Occurrence of Malfunction (Including Supplemental Restraint System)	

Diagnosis System Inspection

SRS Warning Light Inspection	**1st Time**	▼Remains ON ▼Sometimes Lights Up ▼Does Not Light Up
	2nd Time	▼Remains ON ▼Sometimes Lights Up ▼Does not Light Up
Diagnostic Trouble Code Inspection	**1st Time**	▼Normal Code ▼Malfunction Code [Code.]
	2nd Time	▼Normal Code ▼Malfunction Code [Code.]

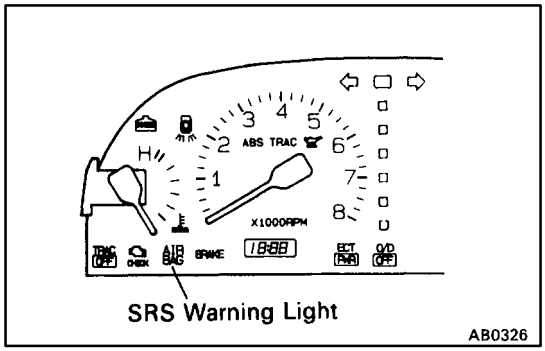

SRS WARNING LIGHT CHECK
DIAGNOSIS INSPECTION

(a) Turn the ignition switch to ACC or ON and check that the SRS warning light lights up.

(b) Check that the SRS warning light goes out after approx. 6 seconds.

HINT:

- When the ignition switch is at ACC or ON and the SRS warning light remains on, the TROUBLESHOOTING has detected a malfunction code.
- If, after approx. 6 seconds have elapsed, the SRS warning light sometimes lights up or the SRS warning light lights up even when the ignition switch is OFF, a short in the SRS warning light circuit can be considered likely. Proceed to SRS warning light system (always lit up when ignition switch LOCK position) on page RS–119.

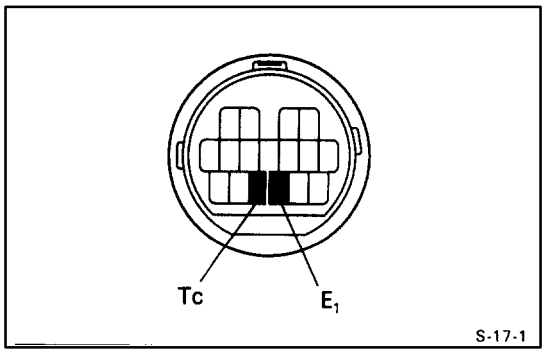

DIAGNOSTIC TROUBLE CODE CHECK

Using diagnosis check wire:

1. OUTPUT DIAGNOSTIC TROUBLE CODE

(a) Turn the ignition switch to ACC or ON position and wait approx. 20 seconds.

(b) Using SST, connect terminals Tc and E of the DLC2.
SST 09843–18020

NOTICE: Never make a mistake with the terminal connection position as this will cause a malfunction.

WhereEverybodyKnowsYourName

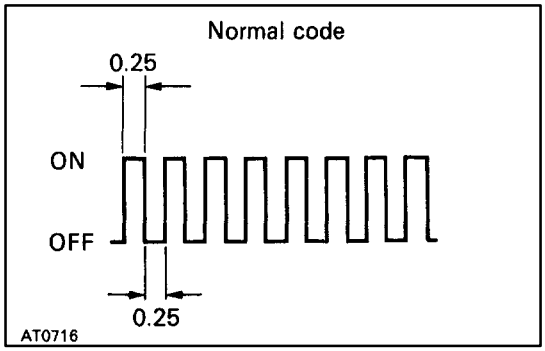

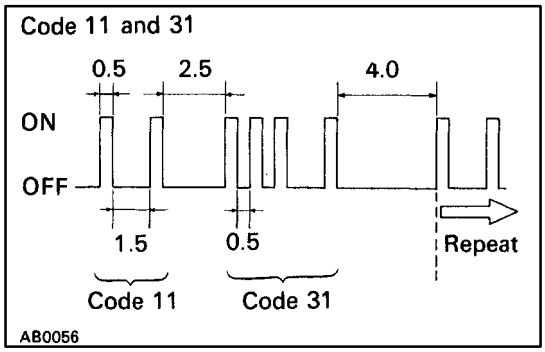

2. READ DIAGNOSTIC TROUBLE CODE

Read the 2–digit diagnostic trouble code as indicated by the number of times the SRS warning light blinks. As an example, the blinking patterns; normal, 11 and 31 are as shown on the illustration.

- Normal code indication

The light will blink 2 times per second.

- Malfunction code indication

In the event of a malfunction, the light will blink. The number represented by the first blink code output indicates the first digit of a 2–digit diagnostic trouble code. After a 1.5 second pause, the second blink code will indicate the second digit. If there are two or more codes, there will be a 2.5 second pause between each.

After all the codes have been output, there will be a 4.0 second pause and they will all be repeated.

HINT:

- In the event of a number of trouble codes, indication will begin from the smaller numbered code to the larger.
- If it does not output a diagnostic trouble code or output a diagnostic trouble code without terminal connection, proceed to the Tc terminal circuit inspection on page RS–121.

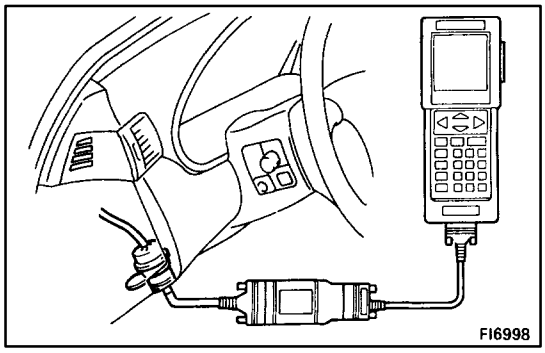

Using LEXUS hand–held tester:

(a) Hook up the LEXUS hand–held tester to the DLC1 or DLC2.

(b) Read the diagnostic trouble codes by following the prompts on the tester screen.

HINT: Please refer to the LEXUS hand–held tester operator's manual for further details.

WhereEverybodyKnowsYourName

DIAGNOSTIC TROUBLE CODES

DTC No.	Blink Pattern	Diagnosis	Trouble Area	SRS Warning Light
(Normal)	FI1401	● System normal	—	OFF
		● Source voltage drop	● Battery ● Center airbag sensor assembly	ON
11	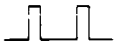 AB0057	● Short in squib circuit or front airbag sensor circuit (to ground) ● Front airbag sensor malfunction ● Center airbag sensor assembly malfunction	● Steering wheel pad (squib) ● Front passenger airbag assembly (squib) ● Front airbag sensor ● Spiral cable ● Center airbag sensor assembly ● Wire harness	ON
12	FI1389	● Short in squib circuit (to B+) . ● Open in front airbag circuits	● Steering wheel pad (squib) ● Front passenger airbag assembly (squib) ● Front airbag sensor ● Spiral cable ● Center airbag sensor assembly ● Wire harness	ON
13	FI1390	● Short in squib circuit (between D^+ wire harness and D^- wire harness)	● Steering wheel pad (squib) ● Spiral cable ● Center airbag sensor assembly ● Wire harness	ON
14	FI1391	● Open in driver side airbag squib circuit	● Steering wheel pad (squib) ● Spiral cable ● Center airbag sensor assembly ● Wire harness	ON
15	AB0058	● Open in front airbag sensor circuit	● Front airbag sensor ● Center airbag sensor assembly ● Wire harness	ON
22	FI1392	● SRS warning light system malfunction	● SRS warning light ● Center airbag sensor assembly ● Wire harness	ON
31	FI1394	● Center airbag sensor assembly malfunction	● Center airbag sensor assembly	ON
53	R04789	● Short in passenger airbag squib circuit (between P^+ wire harness and P^- wire harness)	● Front passenger airbag assembly ● Center airbag sensor assembly ● Wire harness	ON
54	R04790	● Open in passenger airbag squib circuit	● Front passenger airbag assembly ● Center airbag sensor assembly ● Wire harness	ON

WhereEverybodyKnowsYourName

HINT:

▼When the SRS warning light remains lit up and the diagnostic trouble code in the normal code, this means a source voltage drop.

This malfunction is not stored in memory by the center airbag sensor assembly and if the power source voltage returns to normal, after approx. 10 seconds the SRS warning light will automatically go out.

▼Code 22 in recorded when a malfunction occurs in the SRS warning light system. If an open malfunction occurs in the SRS warning light system, the SRS warning light does not light up. so that until the malfunction is repaired, the diagnostic trouble codes (including code 22) cannot be confirmed.

▼When 2 or more codes are indicated, the lowest numbered code will appear first.

▼If a code not listed on the chart is displayed, then the center airbag sensor assembly is faulty.

WhereEverybodyKnowsYourName

DIAGNOSTIC TROUBLE CODE CLEARANCE

Using diagnostic check wire:

(a) Connect the 2 service wires to terminals Tc and AB of DLC1.

(b) Turn the ignition switch ACC or ON And wait approx. 6 seconds.

(c) Starting with the Tc terminal, apply body ground alternately to terminal Tc and terminal AB twice each in cycles of 1.0 seconds Confirm that body ground is absolute. Finally, keep applying body ground to terminal Tc.
HINT: When alternately grounding terminals Tc and AB, release ground from one terminal and immediately apply it to the other terminal within an interval of 0.2 second. If diagnostic trouble codes do not clear, repeat the above procedure until the codes are cleared.

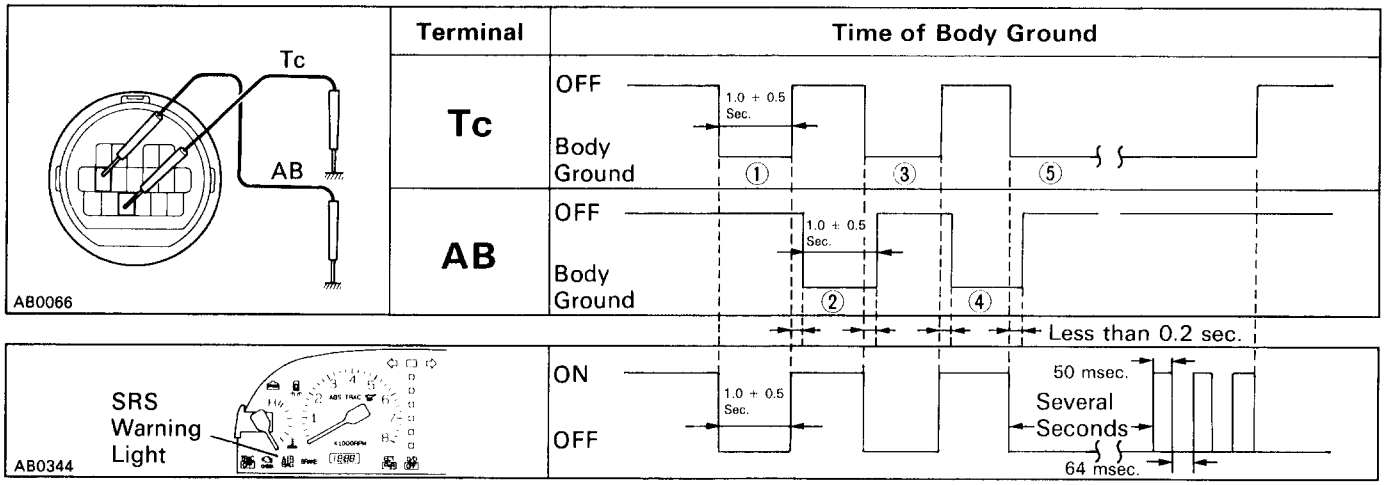

(d) Several seconds after performing the clearing procedure, the SRS warning light will blink in a 50 m sec cycle to indicate the codes have been cleared.

WhereEverybodyKnowsYourName

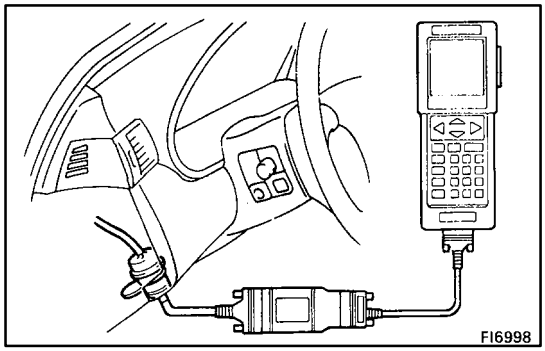

Using LEXUS hand–held tester:

(a) Hook up the LEXUS hand–held tester to the DLC1 or DLC2.

(b) Clear the diagnostic trouble codes by following the prompts on the tester screen.
HINT: Please refer to the LEXUS hand–held tester operator's manual for further details.

WhereEverybodyKnowsYourName

SYMPTOM SIMULATION

“Intermittent troubles or problems” are the malfunctions about which the customer has a complaint, but which do not occur and can not be confirmed in the workshop. The intermittent problems also include complaints about the SRS warning light going on and off erratically.

The self–diagnostic system stores the circuit of the intermittent problem in memory even if the ignition switch is turned off.

And, for accurate diagnosis of the problems, ask the customer to obtain information as much as possible following the customer problem analysis check sheet (See page RS–58) and try to reproduce the intermittent problem.

The problem simulation methods described below are the effective ways for this nature of problem to produce the problem conditions by applying vibration, heat, and humidity.

1	**VIBRATION METHOD: When vibration seems to be the major cause.**
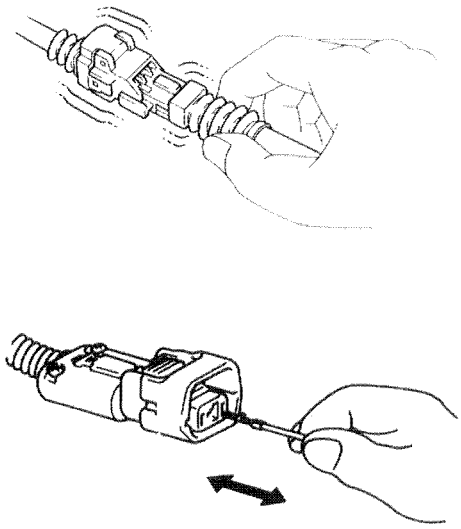 AB0245 R02966	**CONNECTORS** Slightly shake the connector vertically and horizontally. (Inspection of connectors) (a) Does the wire harness connecting with its corresponding part have insufficient slack? (b) Are the terminals dirty? (c) Are the terminals making loose contact due to terminals spread?
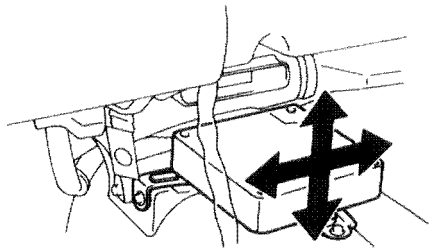	**WIRE HARNESS** Slightly shake the wire harness vertically and horizontally. The connector joint, fulcrum of the vibration, and body through portion are the major areas to be checked thoroughly.
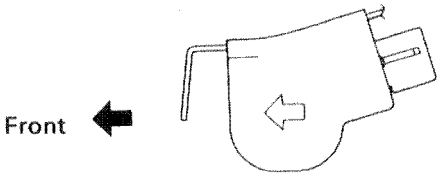 AB0332	**PARTS AND SENSORS** Apply vibration slightly by a finger to the part or sensor considered to be the problem cause and check if the malfunction will occur. **Caution: Do not apply vibration to the center airbag sensor assembly.**

WhereEverybodyKnowsYourName

2	HEAT METHOD: When the problem seems to occur when the suspect area is heated.
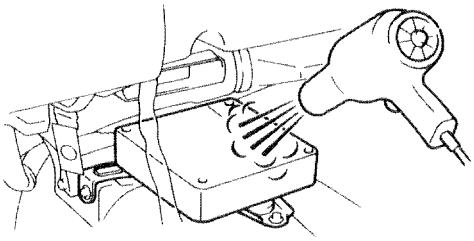 R05535	Heat the component that is likely the cause of the malfunction with a hair dryer or similar object. Check to see if the malfunction will occur. **Notice:** ▼ Do not heat to more than 60°C (140°F) (Temperature limit that the component can be touched with a hand.) ▼ Do not apply heat directly to any part in the ECU.

3	WATER SPRINKLING METHOD: When the malfunction seems to occur on a rainy day or in a high–humidity condition.
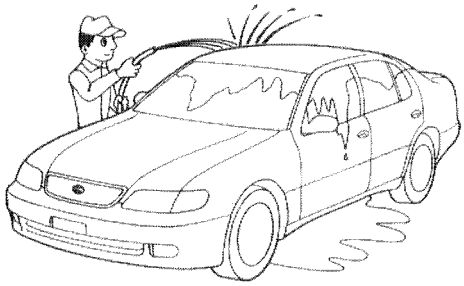 R05641	Sprinkle water onto the vehicle and check to see if the malfunction will occur. **Notice: Never apply water directly onto the electronic components.** HINT: ▼ If the vehicle is subject to water leakage, the leaked water may contaminate the ECU. When testing a vehicle with a water leakage problem, special caution must be paid.

4	OTHER: When a malfunction seems to occur when electrical load is excessive.
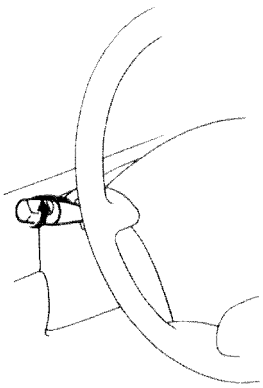	Turn on all electrical loads including the heater blower, headlights, rear window defogger, etc. and check to see if the malfunction will occur.

WhereEverybodyKnowsYourName

DIAGNOSTIC TROUBLE CODE MATRIX CHART

If a malfunction code is displayed during the diagnostic trouble code check, check the circuit listed for that code in the table below (Proceed to the page given for that circuit).

DTC No.	Diagnosis	Page
(Normal)*1	▼Source voltage drop	RS–68
11	▼Short in squib circuit or front airbag sensor circuit (to ground)	RS–70
12	▼Short in squib circuit or front airbag sensor circuit (to B+)	RS–78
13	▼Short in squib circuit (between D+ wire harness and D– wire harness)	RS–85
14	▼Open in squib circuit (between D+ wire harness and D– wire harness)	RS–92
15	▼Open in front airbag sensor circuit	RS–97
22*2	▼SRS warning light system malfunction	RS–102
31	▼Center airbag sensor assembly malfunction	RS–108
53	▼Short in squib circuit (between P+ wire harness and P– wire harness)	RS–110
54	▼Open in squib circuit (between P+ wire harness and P– wire harness)	RS–115

HINT:

*1 When the SRS warning light remains lit up and the diagnostic trouble code is the normal code, this means a source voltage drop.

*2 Code 22 is recorded when a malfunction occurs in the SRS warning light system. If an open malfunction occurs in the SRS warning light system, the SRS warning light does not light up, so that until the malfunction is repaired, the diagnostic trouble code (including 22) cannot be confirmed.

PROBLEM SYMPTOM CHART

Proceed with troubleshooting of each circuit in the table below.

Problem Symptom	Inspection Item	Page
▼With the ignition switch at ACC or ON, the SRS warning light sometimes lights up after approx. 6 seconds have elapsed ▼SRS warning light lights up even when ignition switch is in the LOCK position	▼SRS warning light system (Always lit up when ignition switch is LOCK position)	RS–119
▼Diagnostic trouble code not displayed. ▼Diagnostic trouble code continuously displayed.	▼Tc terminal circuit	RS–121

WhereEverybodyKnowsYourName

CIRCUIT INSPECTION

DTC	(Normal)	Source Voltage Drop

CIRCUIT DESCRIPTION

The supplemental restraint system is equipped with a voltage – increase circuit (DC–DC converter) in the center airbag sensor assembly in case the source voltage drops.
When the battery voltage drops, the voltage – increase circuit (DC–DC converter) functions to increase the voltage of the supplemental restraint system to normal voltage.
The diagnosis system malfunction display for this circuit is different to other circuits – when the SRS warning light remains lit up and the diagnostic trouble code is a normal code, source voltage drop is indicated. Malfunction in this circuit is not recorded in the center airbag sensor assembly, and approx. 10 seconds after the source voltage returns to normal, the SRS warning light automatically goes off.

DTC No.	Diagnosis
(Normal)	Source voltage drop.

DIAGNOSTIC CHART

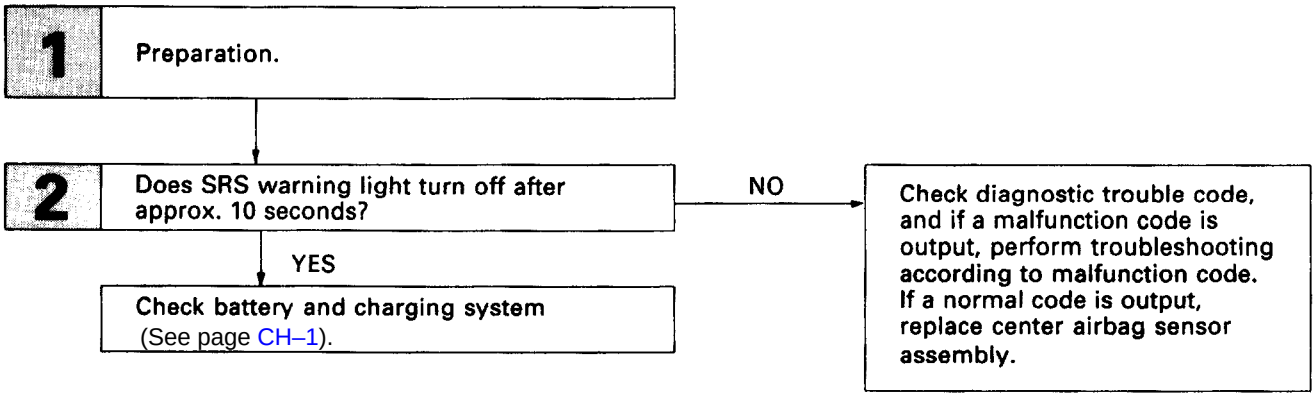

WIRING DIAGRAM

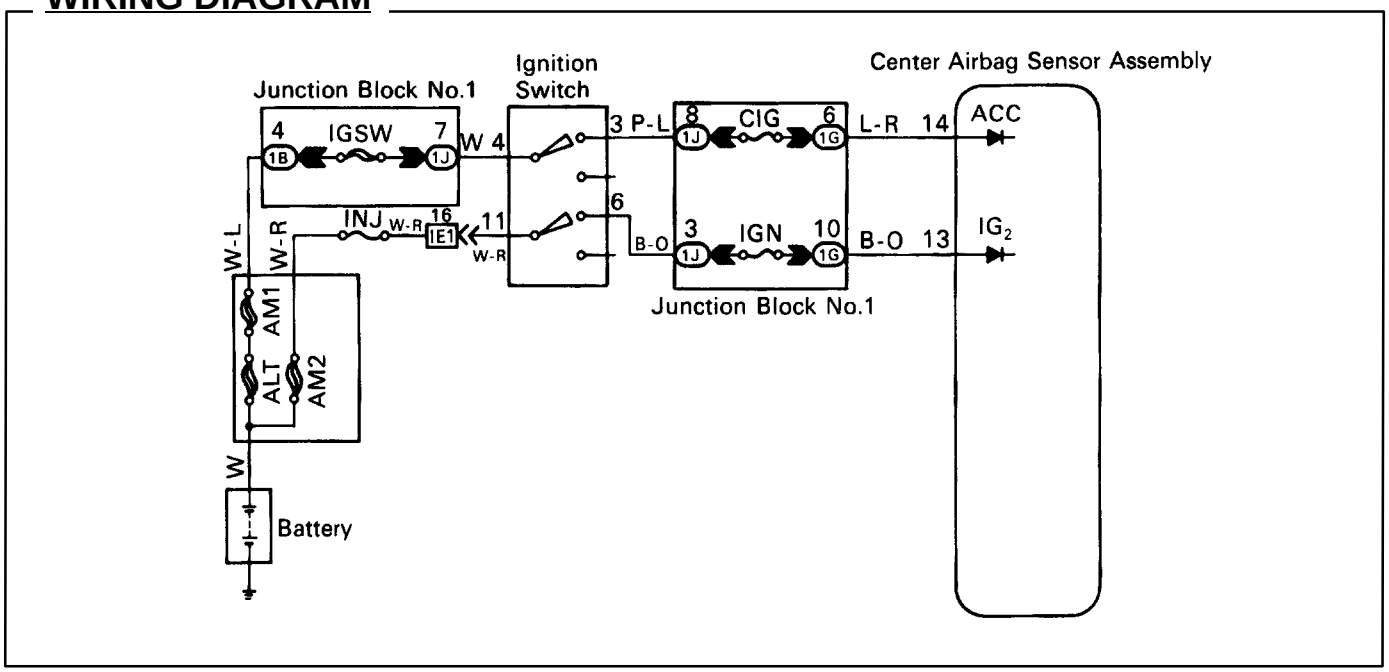

WhereEverybodyKnowsYourName

INSPECTION PROCEDURE

1 Preparation.

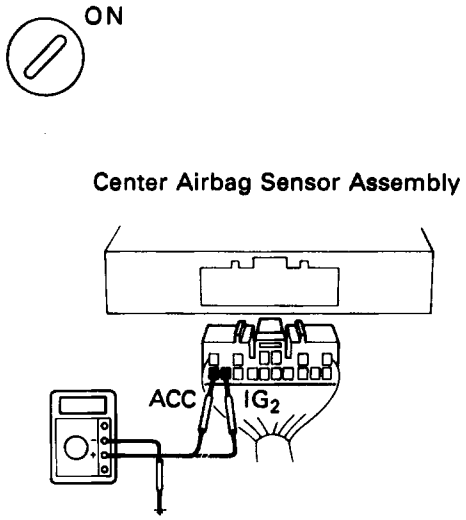

P

1. Turn ignition switch LOCK.
2. Disconnect battery negative (–) terminal cable, and wait at least 90 seconds.
3. Connect battery negative (–) terminal cable.
4. Disconnect center airbag sensor assembly connector.
5. Turn ignition switch ON. But do not start engine.
6. Measure voltage at IG_2 or ACC on connector wire harness side of center airbag sensor assembly and operate electric system (defogger, wiper, headlight, heater blower, etc.)
   Voltage: 6 V – 11.5 V at IG_2 and ACC.
7. Turn electric system switch OFF.
8. Turn ignition switch LOCK.
9. Disconnect battery negative (–) terminal cable, and wait at least 90 seconds.
10. Remove voltmeter and connect center airbag sensor assembly connector.
11. Connect battery negative (–) terminal cable.

2 Does SRS warning light turn off after approx. 10 seconds?

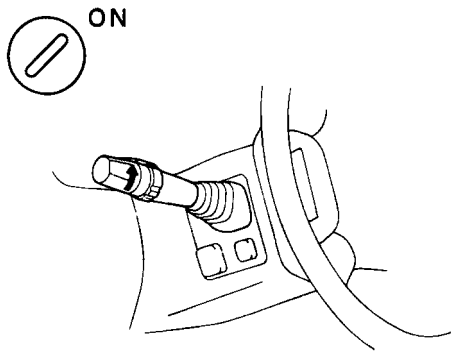

P Turn ignition switch ACC or ON and wait at least 20 seconds.

Clear malfunction code. Turn ignition switch LOCK and wait at least 20 seconds.

C Operate electric system checked in ▼ (5) and check that SRS warning light goes off after approx. 10 seconds.

YES

NO **Check diagnostic trouble code, and if a malfunction code is output, perform trouble shooting according to malfunction code. If a normal code is output, replace center airbag sensor assembly.**

Check battery and charging system.
(See page CH–1)

WhereEverybodyKnowsYourName

DTC	11	Short in Squib Circuit or Front Airbag Sensor Circuit (to Ground)

— CIRCUIT DESCRIPTION

The squib circuit consists of the center airbag sensor assembly, spiral cable and the steering wheel pad (squib), wire harness connector and front passenger airbag assembly (squib). It causes the SRS to operate when the SRS operation conditions are satisfied.
The front airbag sensor detects the deceleration force in a frontal collision and is located in the front fender on the left and right sides.
For details of the function of each component, see FUNCTION OF COMPONENTS on page RS–10. Diagnostic trouble code 11 is recorded when occurrence of ground short is detected in the squib circuit or front airbag sensor circuit.

DTC No.	Diagnosis
11	2Short circuit in squib wire harness (to ground) 2Squib malfunction 2Short circuit in front airbag sensor +S, D^+, D–, P+, P– wire harness (to ground). 2Front airbag sensor malfunctions. 2Short circuit between +S wire harness and –S wire harness of front airbag sensor. 2Spiral cable malfunction. 2Center airbag sensor assembly malfunction.

WhereEverybodyKnowsYourName

DIAGNOSTIC CHART

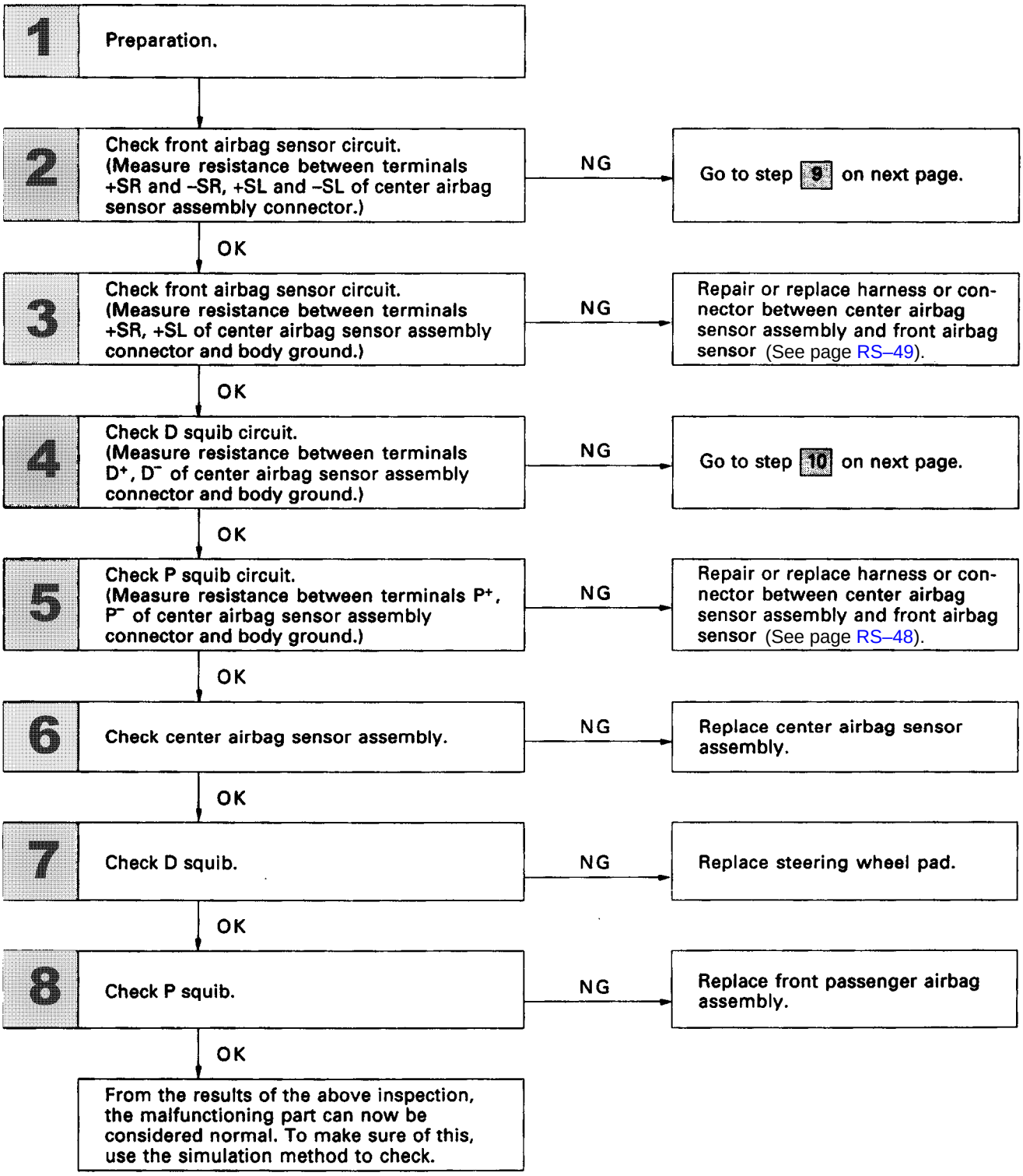

WhereEverybodyKnowsYourName

DIAGNOSTIC CHART (Cont'd)

9 Check front airbag sensor.

NG → Replace front airbag sensor.

OK ↓ Repair or replace harness or connector between center airbag sensor assembly and front airbag sensor (See page RS–49).

10 Check spiral cable.

NG → Repair or replace spiral cable.

OK ↓ Repair or replace harness or connector between center airbag sensor assembly and spiral cable.

WIRING DIAGRAM

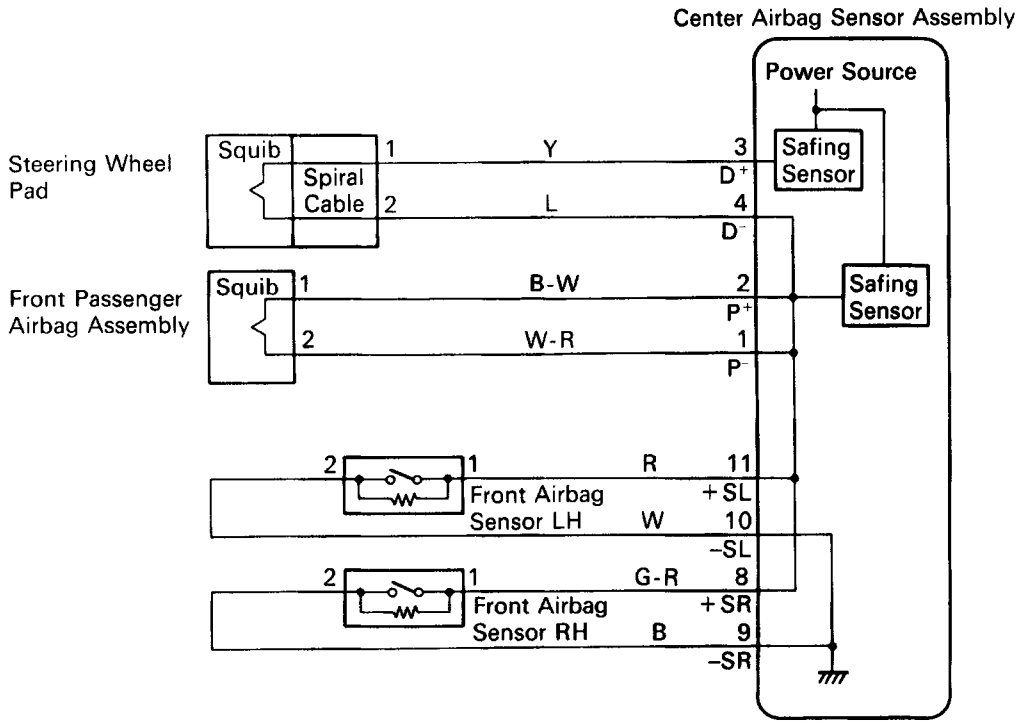

WhereEverybodyKnowsYourName

INSPECTION PROCEDURE

1 Preparation.

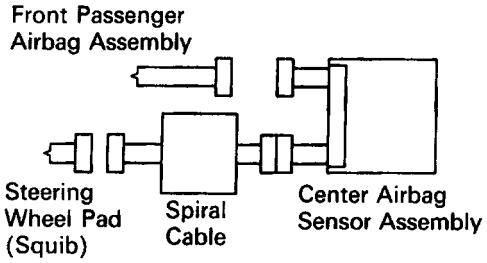

AB0117
R05902

P

1. Disconnect battery negative (–) terminal cable, and wait at least 90 seconds.
2. Remove steering wheel pad (See page RS–19).
3. Disconnect connectors of front passenger airbag assembly (See page RS–32).

Caution: Store the steering wheel pad with the surface facing upward.

2 Check front airbag sensor circuit. (Measure resistance between terminals +SR and –SR, +SL and –SL of center airbag sensor assembly connector.)

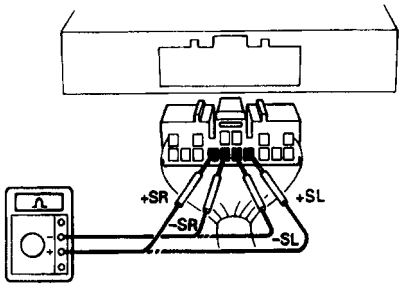

R05264

P Disconnect center airbag sensor assembly connector.

C Measure resistance between terminals +SR and –SR, +SL and –SL of harness side connector o center airbag sensor assembly.

OK **Resistance: 755 – 885**

OK

NG Go to step ▼

WhereEverybodyKnowsYourName

3	Check front airbag sensor circuit. (Measure resistance between terminals +SR and +SL of center airbag sensor assembly connector and body ground.)
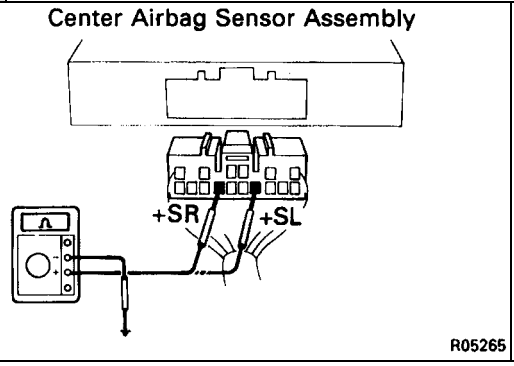	**C** Measure resistance between terminals +SR, +SL of harness side connector of center airbag sensor assembly and body ground. **OK** **Resistance: 1 M or higher**

OK

NG **Repair or replace harness or connector between center airbag sensor assembly and front airbag sensor (See page RS–48).**

4	Check D squib circuit.
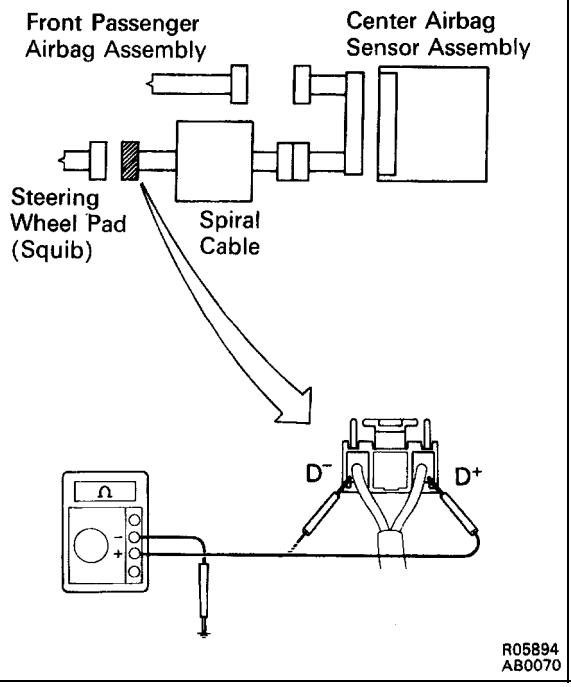	**C** For the connector (on the spiral cable side) between the spiral cable and steering wheel pad, measure the resistance between D+, D– and body ground. **OK** **Resistance: 1 M or higher**

OK

NG **Go to step 10**

WhereEverybodyKnowsYourName

5 Check P squib circuit.

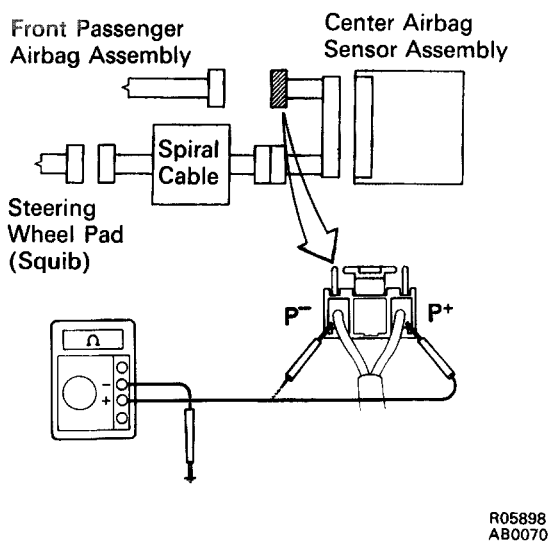

P For the connector (on the center airbag sensor assembly side) between the center airbag sensor assembly and front passenger airbag assembly, measure the resistance between P+, P– and body ground.

OK **Resistance: 1 M or Higher**

OK

NG **Repair or replace harness or connector between the center airbag sensor assembly and front passenger airbag assembly.**

6 Check center airbag sensor assembly.

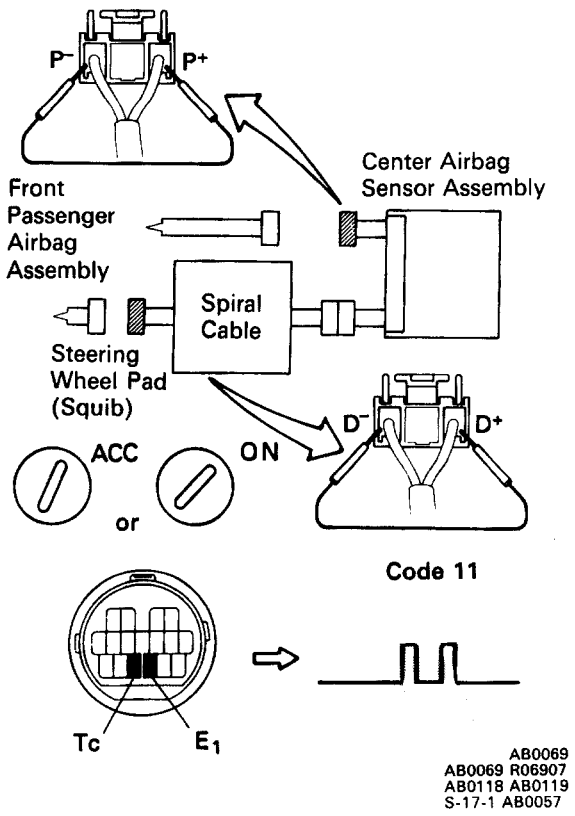

P
1. Connect connector to center airbag sensor assembly.
2. Using a service wire, connect D+ and D– on spiral cable side of connector between spiral cable and steering wheel pad.
3. Using a service wire, connect P+ and P– on center airbag sensor assembly and front passenger airbag assembly.
4. Connect negative (–) terminal cable to battery, and wait at least 2 seconds.

C
1. Turn ignition switch ACC or ON and wait at least 20 seconds.
2. Using SST, connect terminals Tc and E_1 of DLC2. SST 09843–18020
3. Check diagnostic trouble code.

OK **Diagnostic trouble code 11 is not output.**

Hint Codes other than code 11 may be output at this time, but this is not relevant to this check.

OK

NG **Replace center airbag sensor assembly.**

WhereEverybodyKnowsYourName

7 Check D squib.

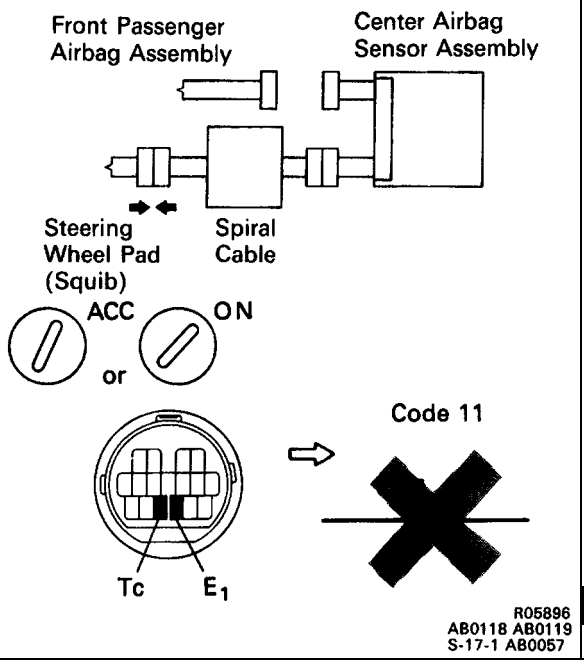

P

1. Turn ignition switch LOCK.
2. Disconnect battery negative (–) terminal cable, and wait at least 90 seconds.
3. Connect steering wheel pad (squib) connector.
4. Connect negative (–) terminal cable to battery, and wait at least 2 seconds.

C

1. Turn ignition switch ACC or ON, and wait at least 20 seconds.
   Clear malfunction code. Turn ignition switch LOCK and wait at least 20 seconds.
2. Turn ignition switch ACC or ON, and wait at least 20 seconds.
3. Using SST, connect terminals Tc and E_1 of DLC2.
   SST 09843–18020
4. Check diagnostic trouble code.

OK **Diagnostic trouble code 11 is not output.**

Hint Codes other than code 11 may be output at this time, but this is not relevant to this check.

OK

NG **Replace steering wheel pad.**

8 Check P squib.

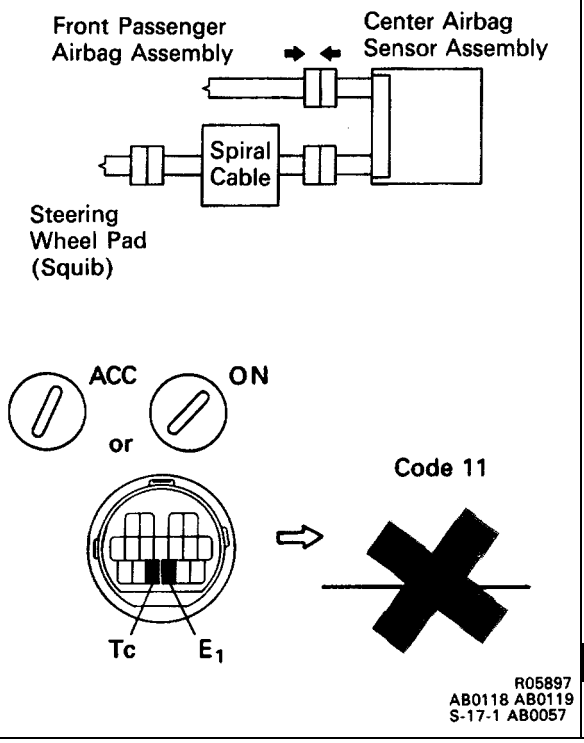

P

1. Turn ignition switch LOCK.
2. Disconnect battery negative (–) terminal cable, and wait at least 20 seconds.
3. Connect front passenger airbag assembly (squib) connector.
4. Disconnect steering wheel pad (squib) connector.
5. Connect negative (–) terminal cable to battery and wait at least 2 seconds.

C

1. Turn ignition switch ACC or ON, and wait at least 20 seconds.
   Clear malfunction code. Turn ignition switch LOCK and wait at least 20 seconds.
2. Turn ignition switch ACC or ON, and wait at least 20 seconds.
3. Using SST, connect terminals Tc and E_1 of DLC2.
4. Check diagnostic trouble code.

OK **Diagnostic trouble code 11 is not output.**

Hint Codes other than code 11 nay be output at this time, but they are not relevant to this check.

OK

NG **Replace front passenger airbag assembly.**

WhereEverybodyKnowsYourName

From the results of the above inspection, the malfunctioning part can now be considered normal. To make sure of this, use the simulation method to check.

9 Check front airbag sensor.

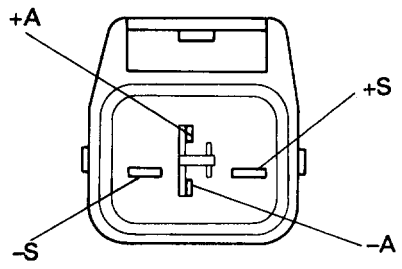

AB0034

P Disconnect front airbag sensor connector.

C Measure resistance between each terminal of front airbag sensor.

OK

Terminal	Resistance
⊕ S – ⊕ A	755 Ω – 885 Ω
⊕ S – ⊖ S	1 MΩ or higher
⊖ S – ⊖ A	Below 1 Ω

Notice:

- **Do not touch ohmmeter probes strongly against terminals of front airbag sensor.**
- **Make sure the front airbag sensor connector is properly connected.**

OK

NG **Replace front airbag sensor.**

Repair or replace harness or connector between center airbag sensor assembly and front airbag sensor (See page RS–48).

10 Check spiral cable.

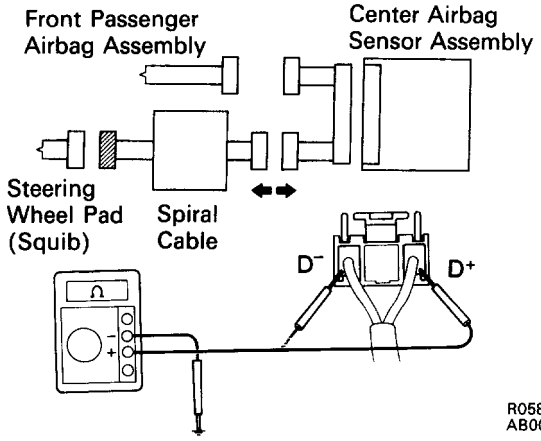

R05899
AB0070

P Disconnect connector between center airbag sensor assembly and spiral cable.

C Measure resistance between D+, D– on spiral cable side of connector between spiral cable and steering wheel pad and body ground.

OK **Resistance: 1 M or Higher**

OK

NG **Repair or replace spiral cable.**

Repair or replace harness or connector between center airbag sensor assembly and spiral cable.

WhereEverybodyKnowsYourName

DTC	12	• Short in Squib Circuit of Front Airbag Sensor Circuit (to B+) • Open in Front Airbag Sensor Circuit

CIRCUIT DESCRIPTION

The squib circuit consists of the center airbag sensor assembly, spiral cable and the steering wheel pad (squib). It causes the SRS to deploy when the SRS deployment conditions are satisfied.
The front airbag sensor detects the deceleration force in a frontal collision and is located in the front fender on the left and right sides.
For details of the function of each component, see FUNCTION OF COMPONENTS on page RS–10. Diagnostic trouble code 12 is recorded when a B+ short is detected in the squib circuit or the front airbag sensor circuit.

DTC No.	Diagnosis
12	Short circuit in squib wire harness (to B+) Squib malfunction Short circuit in front airbag sensor +S wire harness (to B+) Open circuit in RH and LH front airbag sensor harness. Spiral cable malfunction Center airbag sensor assembly malfunction

WIRING DIAGRAM

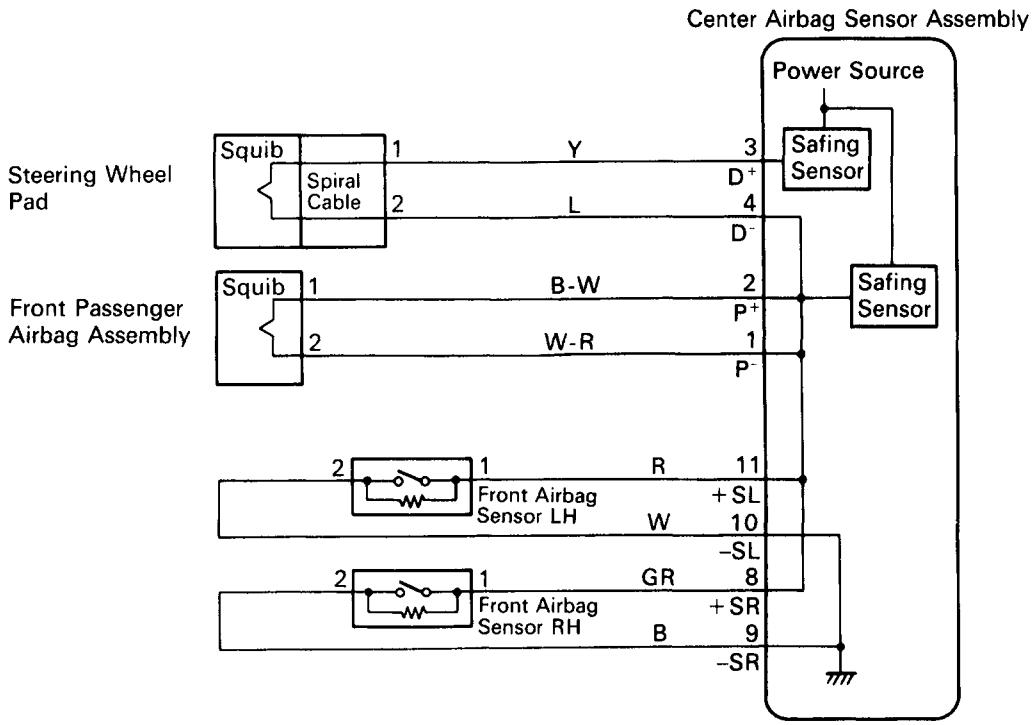

WhereEverybodyKnowsYourName

DIAGNOSTIC CHART

DIAGNOSTIC CHART

1 Preparation.

↓

2 Check front airbag sensor circuit. (Measure resistance between terminals +SR and –SR, –SL and –SL of center airbag sensor assembly connector.)

- NG → Go to Code 15.
- OK ↓

3 Check front airbag sensor circuit. (Measure voltage between terminals +SR or +SL of center airbag sensor assembly connector and body ground.)

- NG → Repair or replace harness or connector between center airbag sensor assembly and front airbag sensor (See page RS–49).
- OK ↓

4 Check D squib circuit. (Measure voltage between terminals D^+, D^- of center airbag sensor assembly connector and body ground.)

- NG → Go to step **9**.
- OK ↓

5 Check P squib circuit. (Measure voltage between terminals P^+, P^- of center airbag sensor assembly connector and body ground.)

- NG → Repair or replace harness or connector between center airbag sensor assembly and front airbag sensor (See page **RS–48**).
- OK ↓

6 Check center airbag sensor assembly.

- NG → Replace center airbag sensor assembly.
- OK ↓

7 Check D squib.

- NG → Replace steering wheel pad.
- OK ↓

8 Check P squib.

- NG → Replace front passenger airbag assembly.
- OK ↓

From the results of the above inspection, the malfunctioning part can now be consiered normal. To make sure of this, use the simulation method to check.

9 Check spiral cable.

- NG → Repair or replace spiral cable.
- OK ↓

Repair or replace harness or connector between center airbag sensor assembly and spiral cable.

WhereEverybodyKnowsYourName

INSPECTION PROCEDURE

1 Preparation.

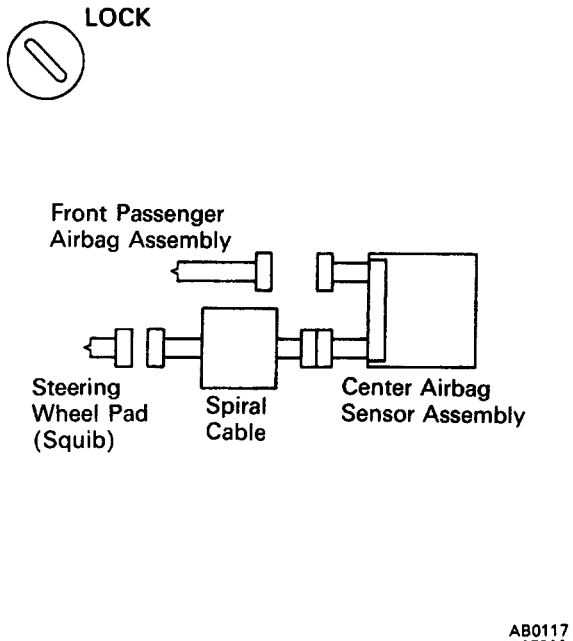

P

1. Disconnect battery negative (–) terminal cable, and wait at least 90 seconds.
2. Remove steering wheel pad (See page RS–19).
3. Disconnect connectors of front passenger airbag assembly (See page RS–32).

Caution: Store the steering wheel pad with the front surface facing upward.

2 Check front airbag sensor circuit. (Measure resistance between terminals +SR and –SR, +SL and –SL of center airbag sensor assembly connector.)

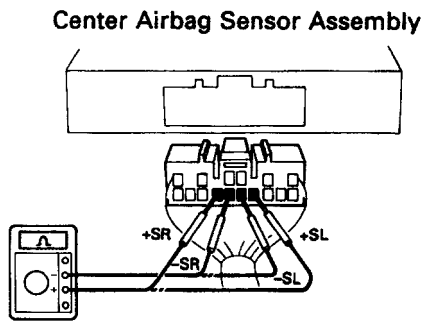

P Disconnect center airbag sensor assembly connector.

C Measure resistance between terminals +SR and –Sr, +SL and –SL of harness side connector of center airbag sensor assembly.

OK **Resistance: 755 – 855**

OK

NG **Go to code 15.**

WhereEverybodyKnowsYourName

3	Check front airbag sensor circuit. (Measure voltage between terminals +SR or +SL of center airbag sensor assembly connector and body ground.)
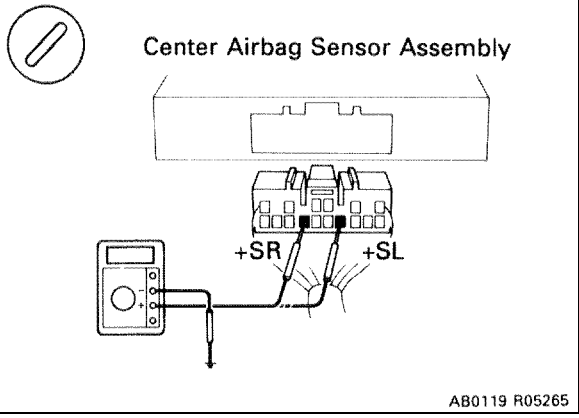	**P** 1. Connect negative (–) terminal cable to battery. 2. Turn ignition switch ON. **C** Measure voltage between terminals +SR or +SL of harness side connector of center airbag sensor assembly and body ground. **OK** **Voltage: Below 1 V**

OK

NG **Repair or replace harness or connector between center airbag sensor assembly and front airbag sensor (See page RS–48).**

4	Check D squib circuit.
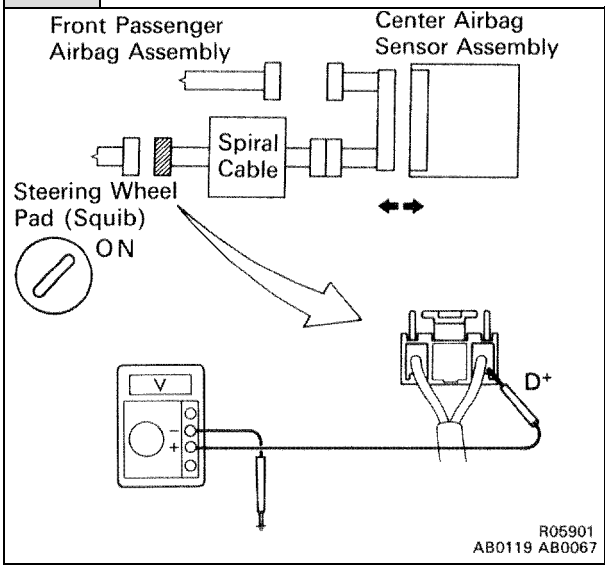	**P** Disconnect center airbag sensor assembly connector. **C** Measure resistance voltage between D+ and D– on spiral cable side of connector between spiral cable and steering wheel pad. **OK** **Voltage: Below 1 V**

OK

NG **Go to step** 2

WhereEverybodyKnowsYourName

5 Check P squib circuit.

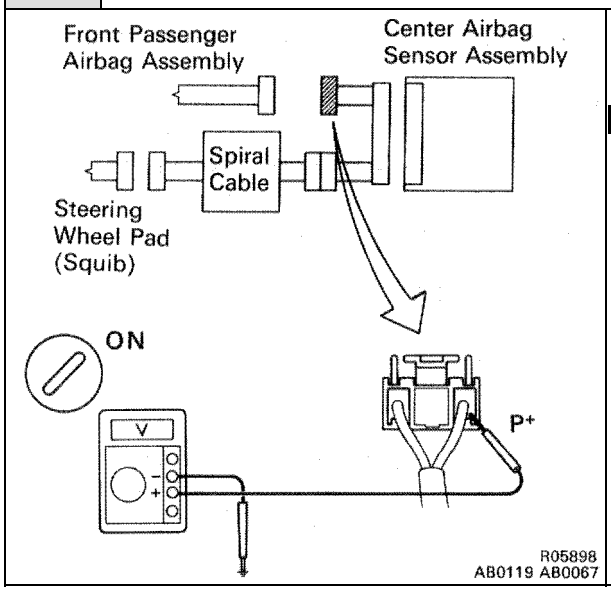

C Measure voltage at P+ on spiral cable side of connector between spiral cable and steering wheel pad.

OK **Voltage: Below 1 V**

OK

NG **Go to step ▼**

6 Check center airbag sensor assembly.

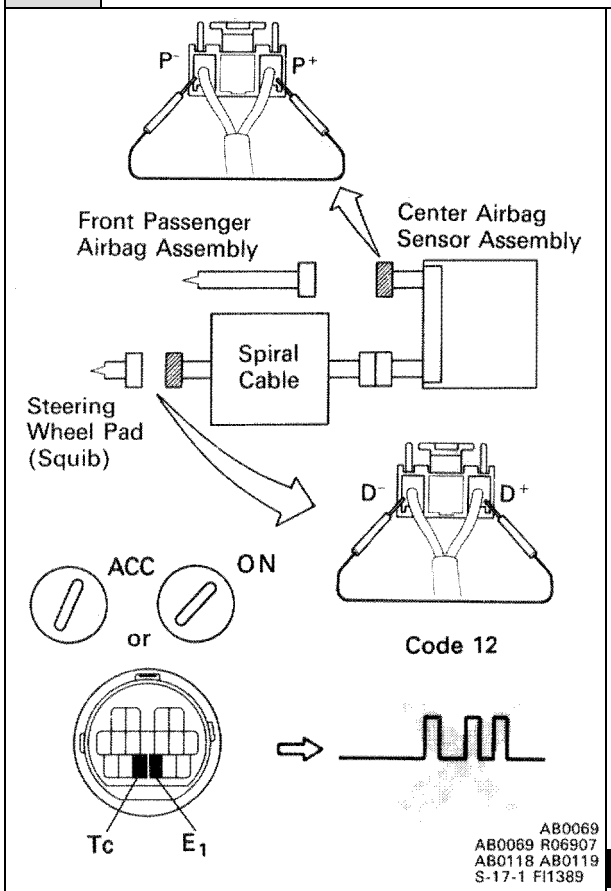

P

1. Turn ignition switch LOCK.
2. Disconnect negative (–) terminal cable from battery.
3. Connect connector to center airbag sensor assembly.
4. Using a service wire, connect D^+ and D^- on spiral cable side connector between spiral cable and steering wheel pad.
5. Using a service wire, connect P^+ and P^- on center airbag sensor assembly side of connector between center airbag sensor assembly a dn front passenger airbag assembly.
6. Connect negative (–) terminal cable to battery, and wait at least 2 seconds.

C

1. Turn ignition switch ACC or ON and wait at least 20 seconds.
   Clear malfunction code. Turn ignition switch LOCK and wait at least 20 seconds.
2. Turn ignition switch ACC or ON, an s wait at least 20 seconds.
3. Using SST, connect terminals Tc and E_1 of DLC2
   SST 09843–18020
4. Check diagnostic trouble code.

OK **Diagnostic trouble code 12 is not output.**

Hint Code other than code 12 may be output at this time, but this is not relevant to this check.

OK

NG **Replace center airbag sensor assembly.**

WhereEverybodyKnowsYourName

7 Check D squib.

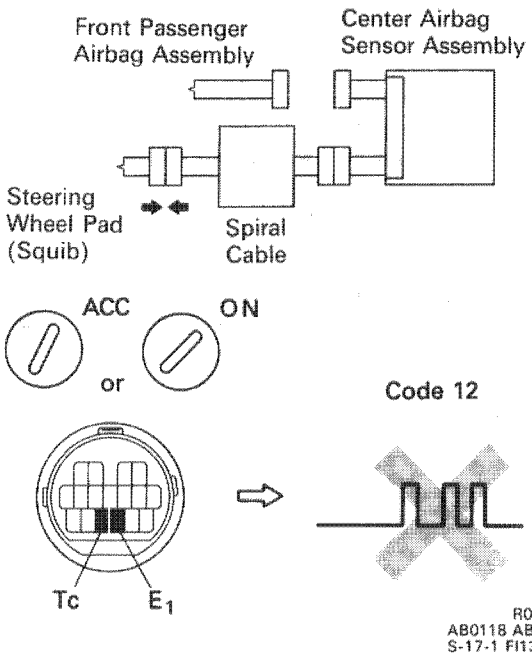

P
1. Turn ignition switch LOCK.
2. Disconnect battery negative (–) terminal cable, and wait at least 90 seconds.
3. Connect steering wheel pad (squib) connector.
4. Connect negative (–) terminal cable to battery, and wait at least 2 seconds.

C
1. Turn ignition switch ACC or ON and wait at least 20 seconds.
   Clear malfunction code. Turn ignition switch LOCK and wait at least 20 seconds.
2. Turn ignition switch ACC or ON, and wait at least 20 seconds.
3. Using SST, connect terminals Tc and E_1 of DLC2
   SST 09843–18020
4. Check diagnostic trouble code.

OK **Diagnostic trouble code 12 is not output.**

Hint Codes other than code 12 may be output at this time, but is not relevant to this check.

OK

NG **Replace steering wheel pad.**

8 Check P squib.

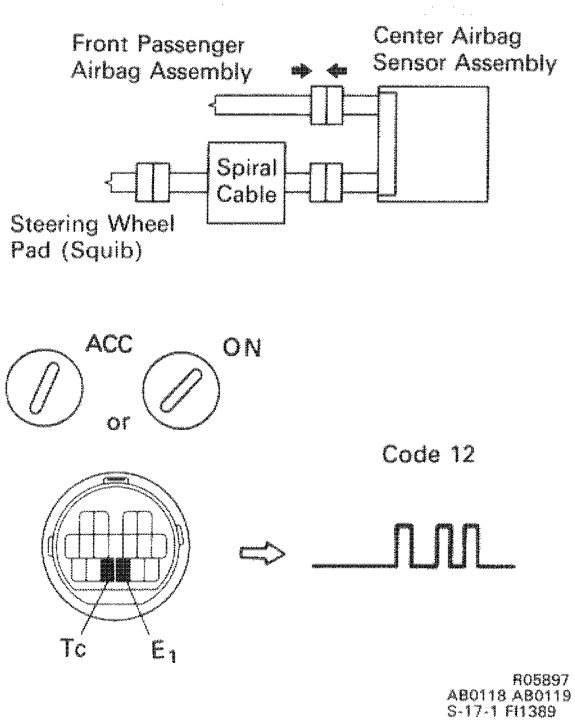

P
1. Turn ignition switch LOCK.
2. Disconnect battery negative (–) terminal cable, and wait at least 90 seconds.
3. Connect front passenger airbag assembly (squib) connector.
4. Disconnect steering wheel pad (squib) connector.
5. Connect negative (–) terminal cable to battery, and wait at least 2 seconds.

C
1. Turn ignition switch ACC or ON and wait at least 20 seconds.
   Clear malfunction code. Turn ignition switch LOCK and wait at least 20 seconds.
2. Turn ignition switch ACC or ON, and wait at least 20 seconds.
3. Using SST, connect terminals Tc and E_1 of DLC2.
4. Check diagnostic trouble code.

OK **Diagnostic trouble code 12 is not output.**

Hint Codes other than code 12 may be output at this time, but they are not relevant to this check.

OK

NG **Replace center airbag sensor assembly.**

WhereEverybodyKnowsYourName

From the results of the above inspection, the malfunctioning part can now be considered normal. To make sure of this, use the simulation method to check.

9	**Check spiral cable.**

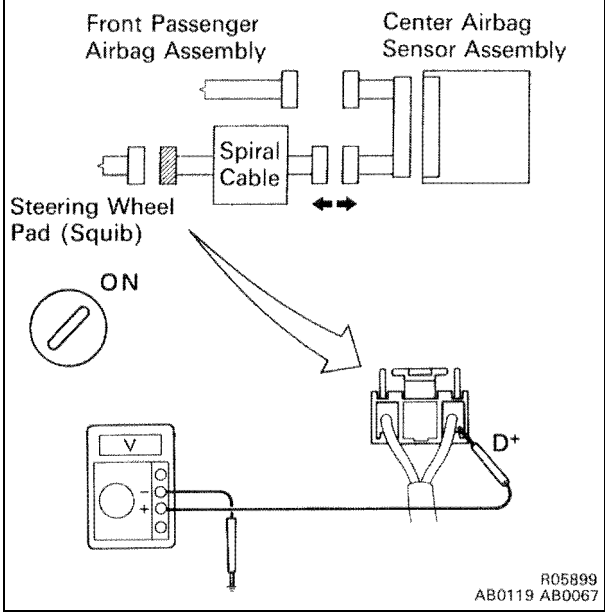

P
1. Turn ignition switch LOCK.
2. Disconnect connector between center airbag sensor assembly and spiral cable.
3. Turn ignition switch ON.

C Measure voltage at D+ on spiral cable side of connector between spiral cable and steering wheel pad.

OK **Voltage: Below 1 V**

OK

NG **Repair or replace spiral cable.**

Repair or replace harness or connector between center airbag sensor assembly and spiral cable.

WhereEverybodyKnowsYourName

DTC	13	Short in Squib Circuit (Between D^+ Wire Harness and D^- Wire Harness

CIRCUIT DESCRIPTION

The squib circuit consists of the center airbag sensor assembly, spiral cable and the steering wheel pad (squib). It causes the SRS to deploy when the SRS deployment conditions are satisfied.
For details of the function of each component, see FUNCTION OF COMPONENTS on page RS–10.
Diagnostic trouble code 13 is recorded when a short is detected in the D+ wire harness and D wire harness of the squib circuit.

DTC No.	Diagnosis
13	2Short circuit between D^+ wire harness and D^- wire harness of squib. 2Squib malfunction. 2Spiral cable malfunction. 2Center airbag sensor assembly malfunction.

DIAGNOSTIC CHART

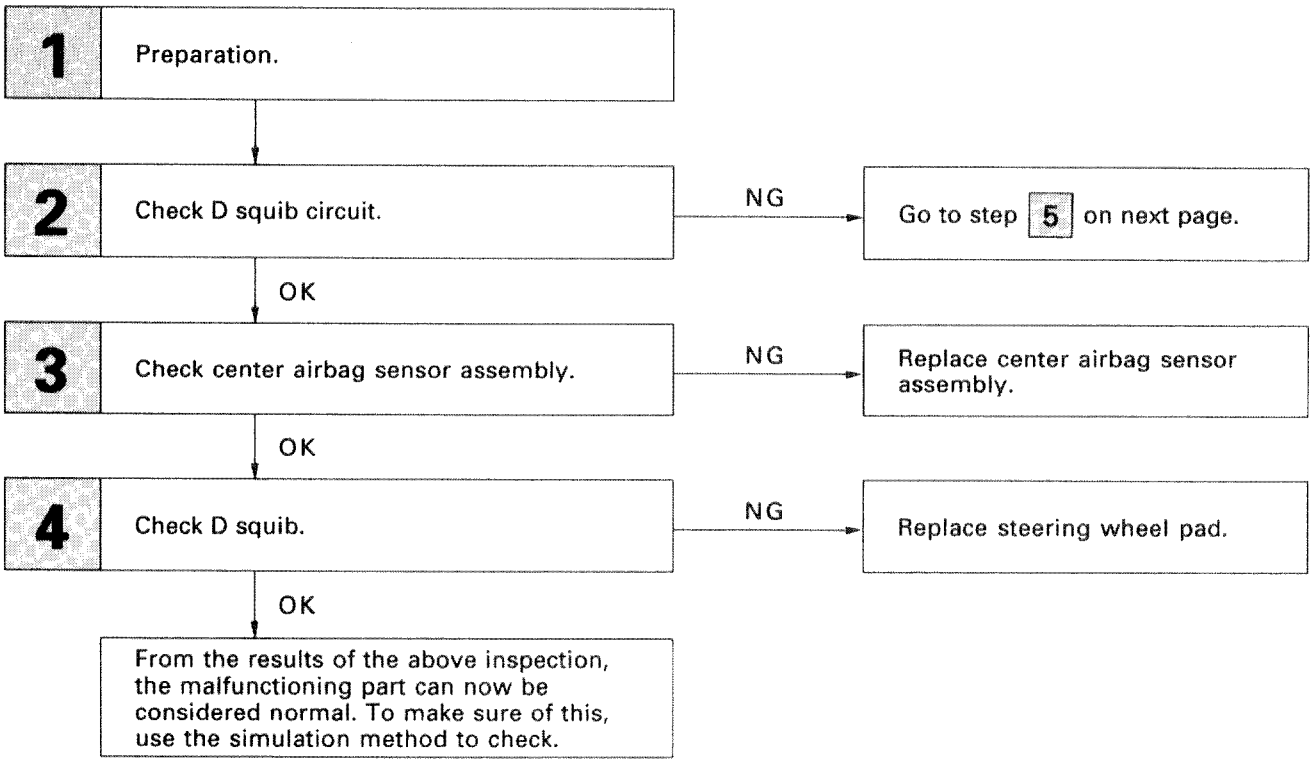

WhereEverybodyKnowsYourName

DIAGNOSTIC CHART

5 Check spiral cable.
- NG → Repair or replace spiral cable.
- OK ↓

6 Check harness between center airbag sensor assembly and spiral cable.
- NG → Repair or replace harness or connector between center airbag sensor assembly and spiral cable.
- OK ↓

7 Check center airbag sensor assembly.
- NG → Replace center airbag sensor assembly.
- OK ↓

From the results of the above inspection, the malfunctioning part can now be considered normal. To make sure of this, use the simulation method to check.

WIRING DIAGRAM

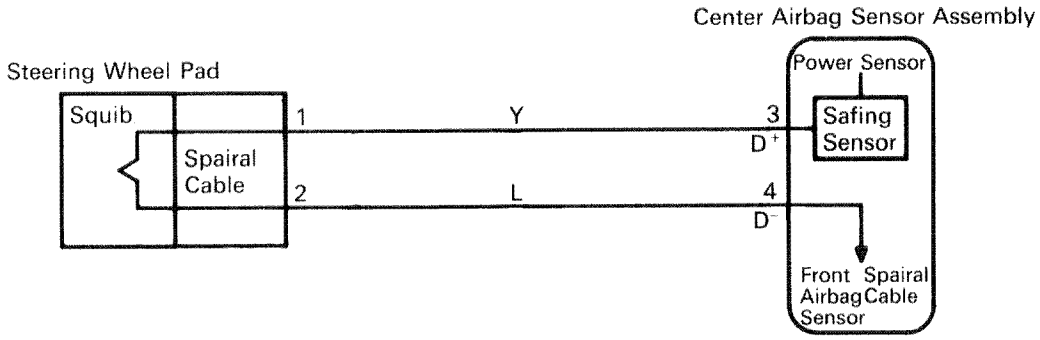

WhereEverybodyKnowsYourName

INSPECTION PROCEDURE

1 Preparation.

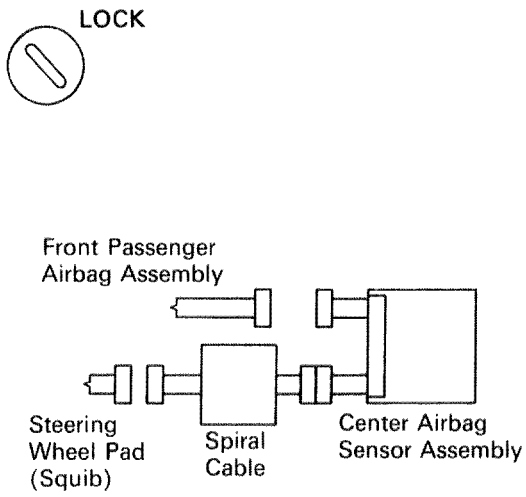

AB0117
R05902

P

1. Disconnect battery negative (–) terminal cable, and wait at least 90 seconds.
2. Remove steering wheel pad (See page RS–19)
3. Disconnect connectors of front passenger airbag assembly (See page RS–32).

Caution: Store the steering wheel pad with the surface facing upward.

2 Check D squib circuit.

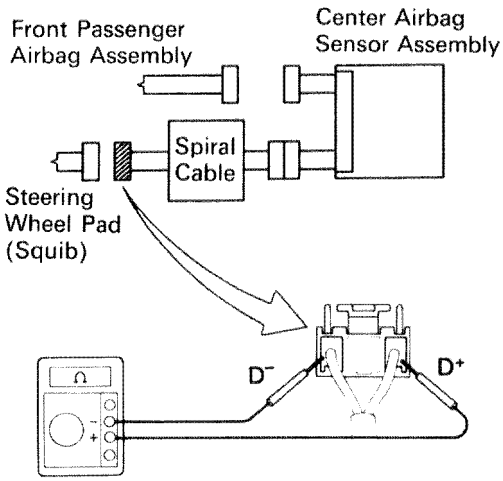

R05902
AB0068

C Measure resistance between D^+ and D– on spiral cable side of connector between spiral cable and steering wheel pad.

OK **Resistance: 1 k or higher**

OK

NG **Go to step ▼.**

WhereEverybodyKnowsYourName

3 Check center airbag sensor assembly.

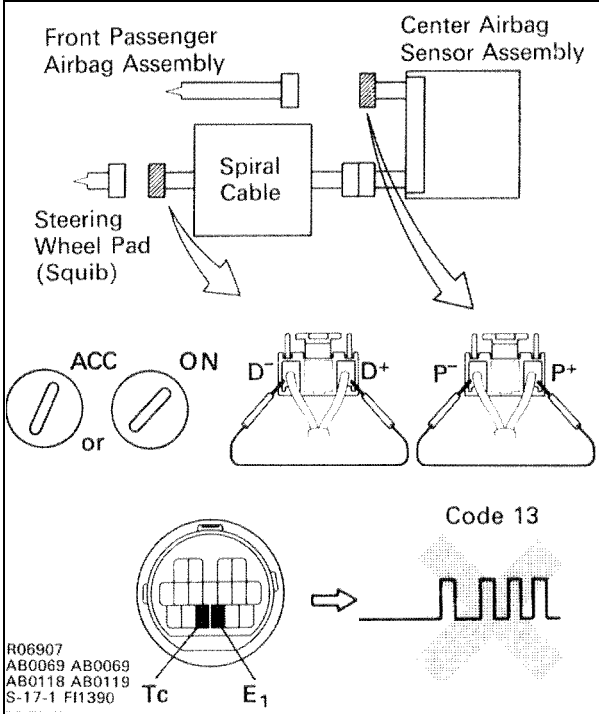

P

1. Using a service wire, connect D^+ and D–.
2. Using a service wire, connect P^+ and P–.
3. Connect negative (–) terminal cable to battery.
4. Clear malfunction.
5. Turn ignition switch LOCK, and wait at least 20 seconds.
6. Disconnect service wire of D^+ and D–.
7. Turn ignition switch ACC or ON, and wait at least 20 seconds.

C

1. Turn ignition switch LOCK, and wait at least 20 seconds.
2. Turn ignition switch ACC or ON, and wait at least 20 seconds.
3. Using SST, connect terminals Tc and E_1 of DLC2. SST 09842–18020
4. Check diagnostic trouble code.

OK **Diagnostic trouble code 13 is not output.**

Hint Codes other than code 13 may be output at this time, but this is not relevant to this check.

OK

NG **Replace center airbag sensor assembly.**

4 Check D squib.

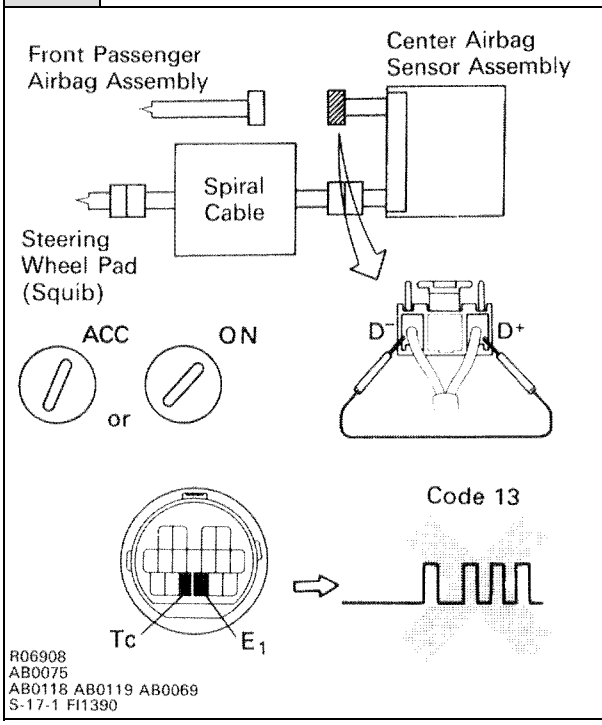

P

1. Turn ignition switch LOCK.
2. Disconnect battery negative (–) terminal cable, and wait at least 90 seconds.
3. Connect steering wheel pad (squib) connector.
4. Connect negative (–) terminal cable to battery.
5. Clear malfunction.

C

1. Turn ignition switch LOCK, and wait at least 20 seconds.
2. Turn ignition switch ACC or ON, and wait at least 20 seconds.
3. Using SST, connect terminals Tc and E_1 of DLC2. SST 09843–18020
4. Check diagnostic trouble code.

OK **Diagnostic trouble code 13 is not output.**

Hint Codes other than code 13 may be output at this time, but this is not relevant to this check.

OK

NG **Replace steering wheel pad.**

WhereEverybodyKnowsYourName

From the results of the above inspection, the malfunctioning part can now be considered normal. To make sure of this, use the simulation method to check.

5 Check spiral cable.

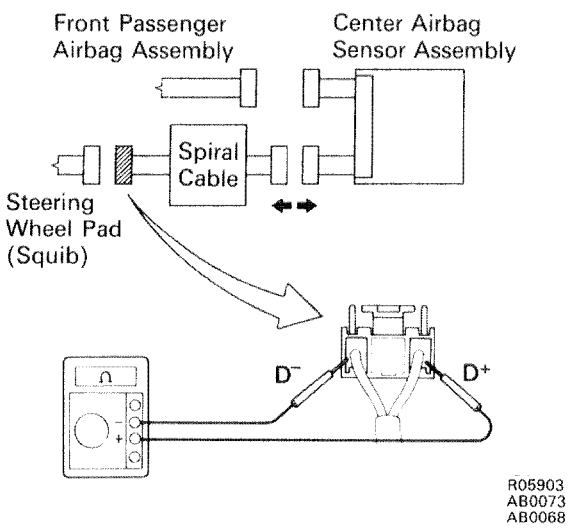

P
1. Disconnect connector between center airbag sensor assembly and spiral cable.
2. Release airbag activation prevention mechanism on center airbag sensor assembly side of spiral cable connector (See page RS–91).

C Measure resistance between D^+ and D– on spiral cable side of connector between spiral cable and steering wheel pad.

OK **Resistance: 1 M or higher**

OK

NG **Repair or replace spiral cable.**

6 Check harness between center airbag sensor assembly and spiral cable.

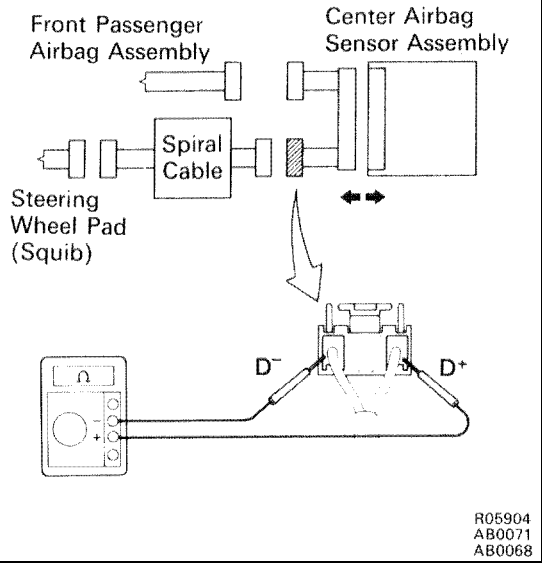

P
1. Disconnect center airbag sensor assembly connector.
2. Release airbag activation prevention mechanism on center airbag sensor assembly connector (See page RS–91).

C Measure resistance between D^+ and D^- on center airbag sensor assembly side of connector between center airbag sensor assembly and spiral cable.

OK **Resistance: 1 M or higher.**

OK

NG **Repair or replace harness or connector between center airbag sensor assembly and spiral cable.**

WhereEverybodyKnowsYourName

7	Check center airbag sensor assembly.

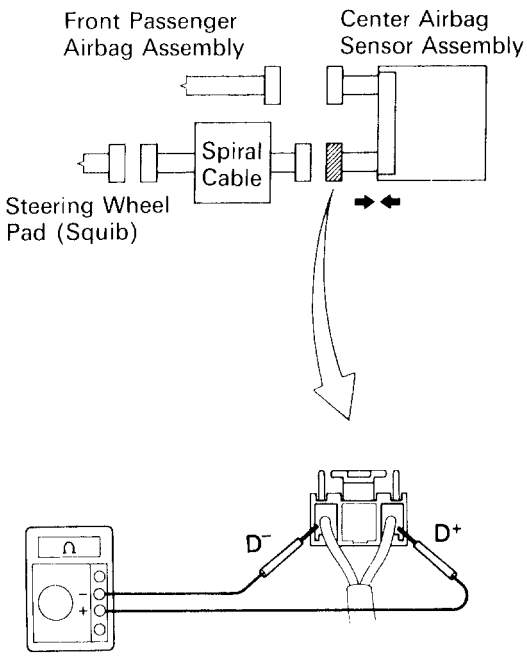

P Connect center airbag sensor assembly connector.

C Measure resistance between D^+ and D– on center airbag sensor assembly side of connector between center airbag sensor assembly and spiral cable.

OK **Resistance: 1 k or more**

OK

NG **Replace center airbag sensor assembly.**

From the results of the above inspection, the malfunctioning part can now be considered normal. To make sure of this, use the simulation method to check.

WhereEverybodyKnowsYourName

RELEASE METHOD OF AIRBAG ACTIVATION PREVENTION MECHANISM

An airbag activation prevention mechanism is built into the connector for the squib circuit of the supplemental restraint system. When release of the airbag activation prevention mechanism is directed in the troubleshooting procedure, as shown in the illustration of the connectors 1 and 2 below, insert paper which is the same thickness as the male terminal, between the terminal and the short spring.

CAUTION:

2**NEVER RELEASE the airbag activation prevention mechanism on the steering wheel pad connector.**

NOTICE:

2**Do not release the airbag activation prevention mechanism unless specifically directed by the troubleshooting procedure.**

2**If the paper inserted is too thick the terminal and short spring may be damaged, so always use paper the same thickness as the male terminal.**

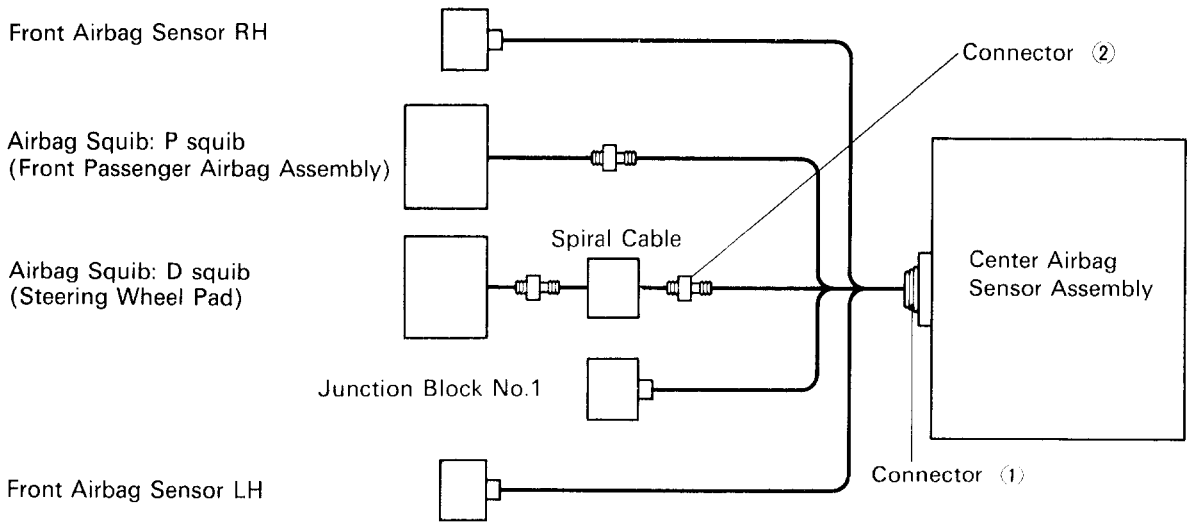

R06906

Center Airbag Sensor Assembly Connector (Connector ①)

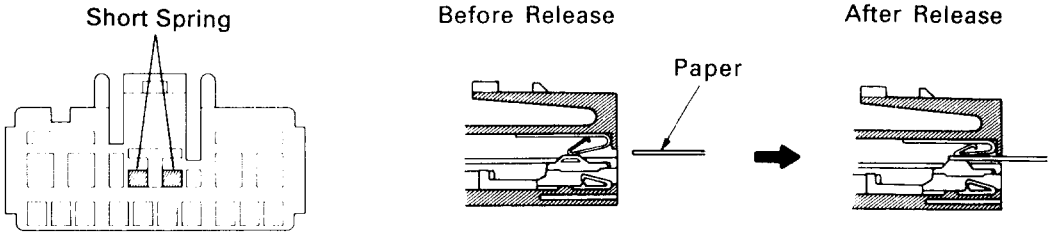

R05103 AB0042 AB0043

Spiral Cable Connector (Connector ②)

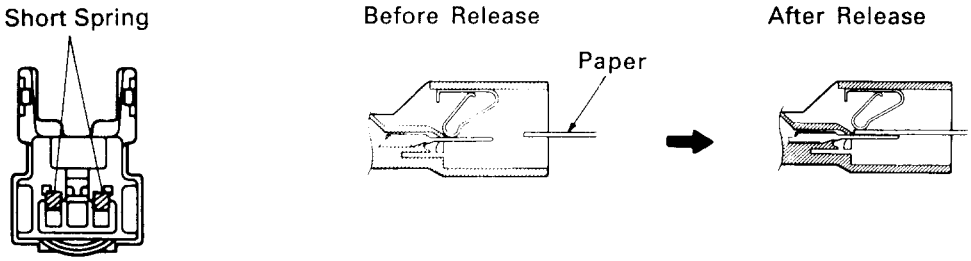

AB0130 AB0045 AB0046

WhereEverybodyKnowsYourName

DTC	14	Open in D Squib Circuit

— CIRCUIT DESCRIPTION

The squib circuit consists of the center airbag sensor assembly, spiral cable and the steering wheel pad (squib). It causes the SRS to deploy when the SRS deployment conditions are satisfied.
For details of the function of each component, see FUNCTION OF COMPONENTS on page RS–9. Diagnostic trouble code 14 is recorded when an open is detected in the squib circuit.

DTC No.	Diagnosis
14	2Open circuit in D+ wire harness or D– wire harness of squib. 2Squib malfunction. 2Spiral cable malfunction. 2Center airbag sensor assembly malfunction.

WhereEverybodyKnowsYourName

DIAGNOSTIC CHART

1 Preparation.

↓

2 Check D squib circuit. —OK→ Go to step **5**.

↓ NG

3 Check spiral cable. —NG→ Repair or replace spiral cable.

↓ OK

4 Check harness between center airbag sensor assembly and spiral cable. —NG→ Repair or replace harness or connector between center airbag sensor assembly and spiral cable.

↓ OK

5 Check center airbag sensor assembly. —NG→ Replace center airbag sensor assembly.

↓ OK

6 Check D squib. —NG→ Replace steering wheel pad.

↓ OK

From the results of the above inspection, the malfunctioning part can now be considered normal. To make sure of this, use the simulation method to check.

WIRING DIAGRAM

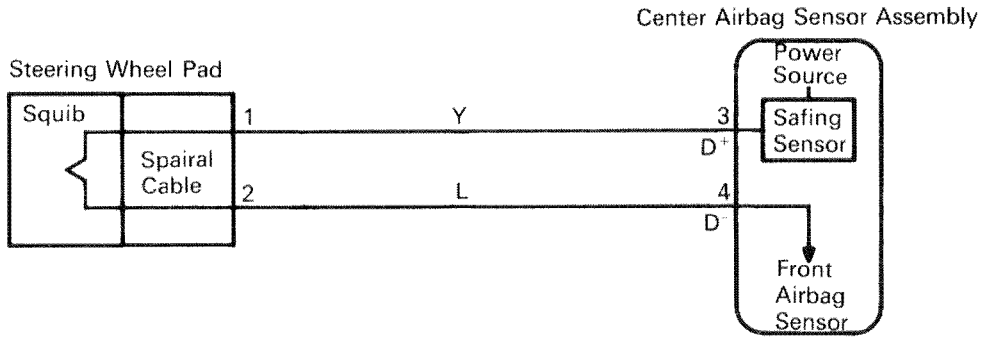

AB0346

WhereEverybodyKnowsYourName

INSPECTION PROCEDURE

1 Preparation.

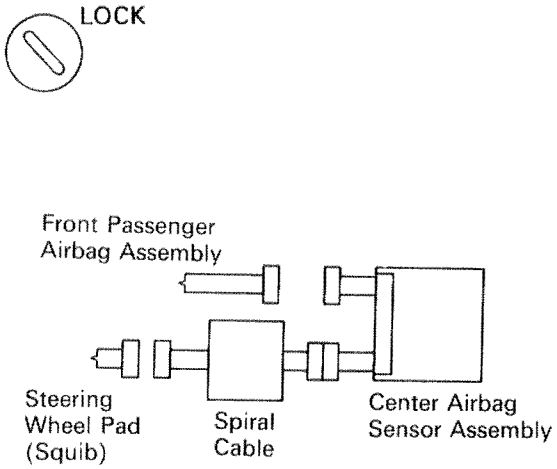

AB0117
R05902

P

1. Disconnect battery negative (–) terminal cable, and wait at least 90 seconds.
2. Remove steering wheel pad. (See page RS–19)
3. Disconnect connectors of front passenger airbag assembly (See page RS–32).

Caution: Store the steering wheel pad with the surface facing upward.

2 Check D squib circuit.

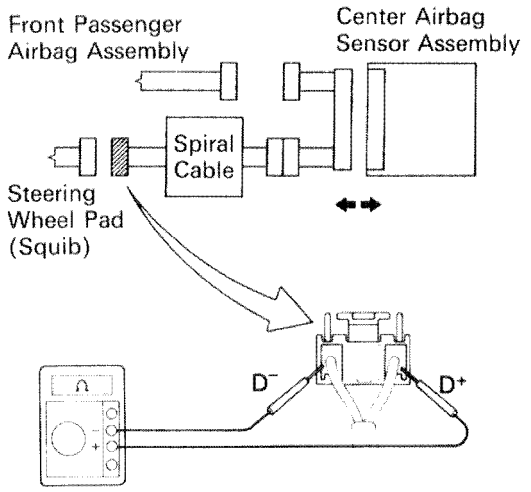

R05901
AB0068

P Disconnect center airbag sensor assembly connector.

C Measure resistance between D+ and D– on spiral cable side of connector between spiral cable and steering wheel pad.

OK **Resistance: Below 1**

NG

OK **Go to Step ▼.**

WhereEverybodyKnowsYourName

3 **Check spiral cable.**

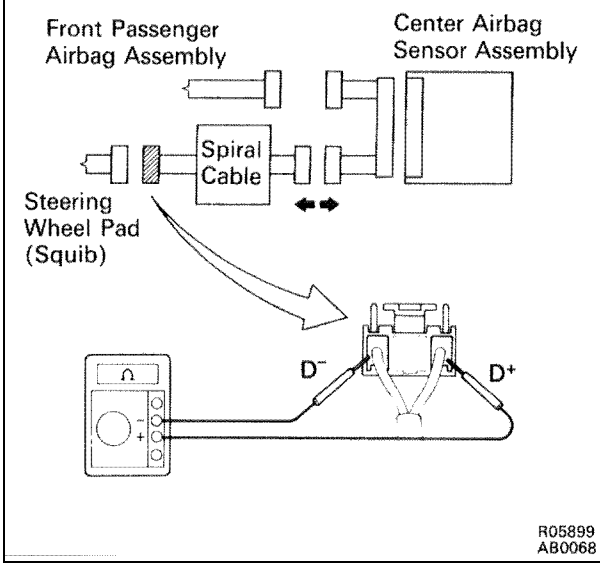

P Disconnect connector between center airbag sensor assembly and spiral cable.

C Measure resistance between D^+ and D– on spiral cable side of connector between spiral cable and steering wheel pad.

OK **Resistance: Below 1**

OK

NG **Repair or replace spiral cable.**

4 **Check harness between center airbag sensor assembly and spiral cable.**

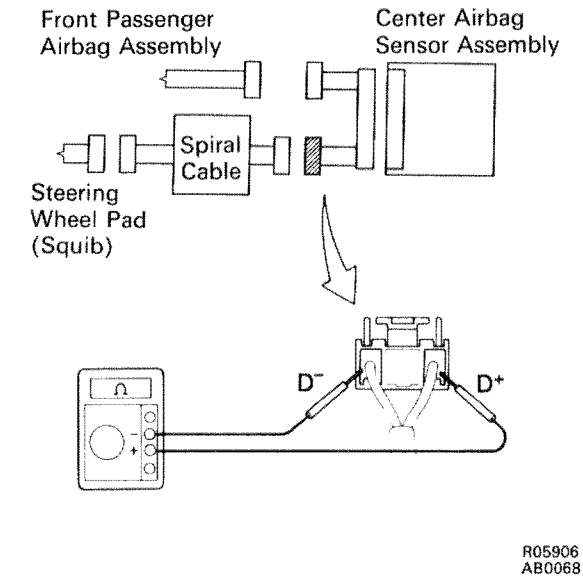

C Measure resistance between D^+ and D– on center airbag sensor assembly side of connector between center airbag sensor assembly and spiral cable.

OK **Resistance: Below 1**

OK

NG **Repair or replace harness or connector between center airbag sensor assembly and spiral cable.**

WhereEverybodyKnowsYourName

5 Check center airbag sensor assembly.

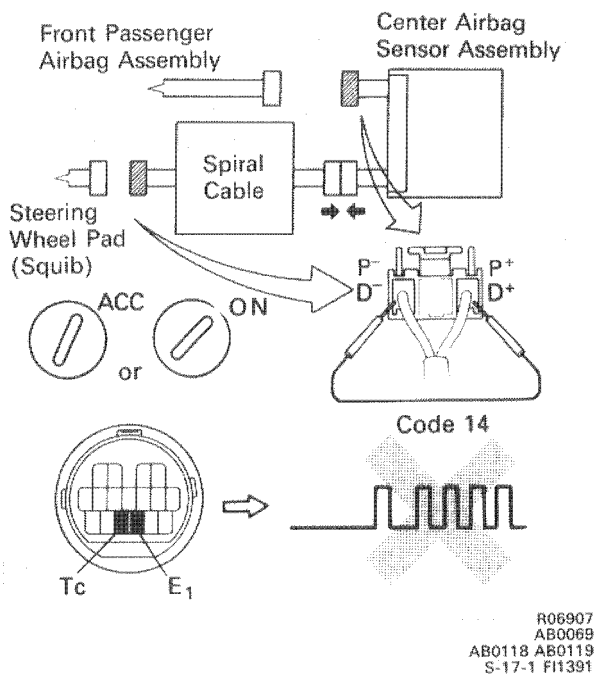

P

1. Connect connector to center airbag sensor connector.
2. Connect connector between center airbag sensor assembly and spiral cable.
3. Using a service, wire, connect D^+ and D–. P+ and P–.
4. Connect negative (–) terminal cable to battery and wait at least 2 second.

C

1. turn ignition switch ACC or ON, and wait at least 20 seconds.
   Clear malfunction code. Turn ignition switch LOCK and wait at least 20 seconds.
2. Turn ignition switch ACC or ON, and wait at least 20 seconds.
3. Using SST, connect terminals Tc and E_1 of DLC2.
   SST 09843–18020
4. Check diagnostic trouble code.

OK **Diagnostic trouble code 14 is not output.**

Hint Codes other than code 14 may be output at this time , but this is not relevant to this check.

OK

NG **Replace center airbag sensor assembly.**

6 Check D squib.

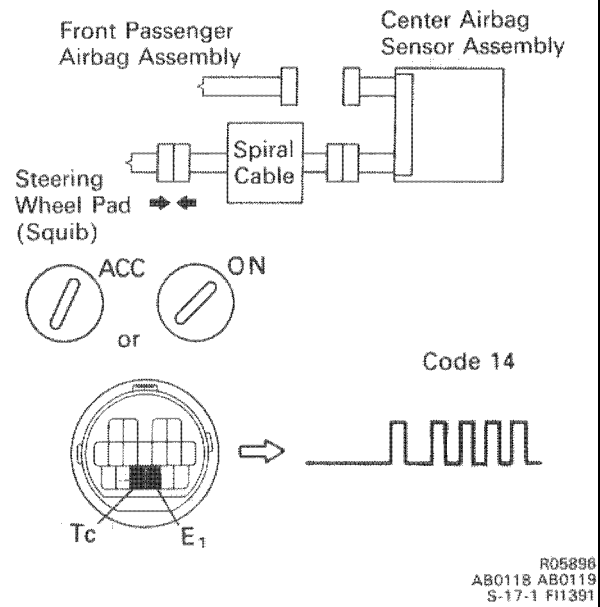

P

1. Turn ignition switch LOCK.
2. Disconnect battery negative (–) terminal cable, and wait at least 90 seconds.
3. Connect steering wheel pad (squib) connector.
4. Connect negative (–) terminal cable to battery, and wait at least 2 seconds.

C

1. Turn ignition switch ACC or ON, and wait at least 20 seconds.
   Clear malfunction code. Turn ignition switch LOCK and wait at least 20 seconds.
2. Turn ignition switch ACC or ON, and wait at least 20 seconds.
3. Using SST, connect terminals Tc and E_1 of DLC2.
   SST 09843–18020
4. Check diagnostic trouble code.

OK **Diagnostic trouble code 14 is not output.**

Hint Codes other than code 14 may be output at this time, but this is not relevant to this check.

OK

NG **Replace steering wheel pad.**

From the results of the above inspection, the malfunctioning part can now be considered normal. To make sure of this, use the simulation method to check.

WhereEverybodyKnowsYourName

DTC	15	Open in Front Airbag Sensor Circuit

CIRCUIT DESCRIPTION

The front airbag sensor detects the deceleration force in a frontal collision and is located in the front fender on the left and right sides.
For details of the function of each component, see FUNCTION OF COMPONENTS on page RS–10. Diagnostic trouble code 15 is recorded when an open is detected in the front airbag sensor circuit.
NOTICE: The front airbag sensor connector is equipped with an electrical connection check mechanism for the purpose of detecting an open in the front airbag sensor (See page RS–13). This mechanism is constructed so that when the terminals of the front airbag sensor have been connected (when the connector housing lock is in the locked condition), the connection detection pin on the wire harness side connects with the terminals for diagnosis use on the sensor side. If the connector is not properly connected, the diagnosis system may detect only a malfunction code, even though the supplemental restraint system is functioning normally. When connecting the front airbag sensor connector, make sure it is connected properly. If diagnostic trouble code 15 is displayed after the front airbag sensor connector has been connected, check again that it is properly connected.

DTC No.	Diagnosis
15	Open circuit in +S wire harness or –S wire harness of front airbag sensor. Front airbag sensor malfunction. Malfunction of electrical connection check mechanism of front airbag sensor. Center airbag sensor assembly malfunction.

WhereEverybodyKnowsYourName

DIAGNOSTIC CHART

1 Preparation.

↓

2 Check front airbag sensor circuit. (Measure resistance between terminals +SR and –SR, +SL and –SL of center airbag sensor assembly connector.)

NG → Go to step **4**.

OK ↓

3 Check center airbag sensor assembly.

NG → Replace center airbag sensor assembly.

OK ↓

From the results of the above inspection, the malfunctioning part can now be considered normal. To make sure of this, use the simulation method to check.

4 Check front airbag sensor.

NG → Replace front airbag sensor.

OK ↓

5 Check harness between center airbag sensor assembly and front airbag sensor.

NG → Repair or replace harness or connector between center airbag sensor assembly and front airbag sensor (See page RS–49).

OK ↓

Replace front airbag sensor connector. (See page RS–49).

WIRING DIAGRAM

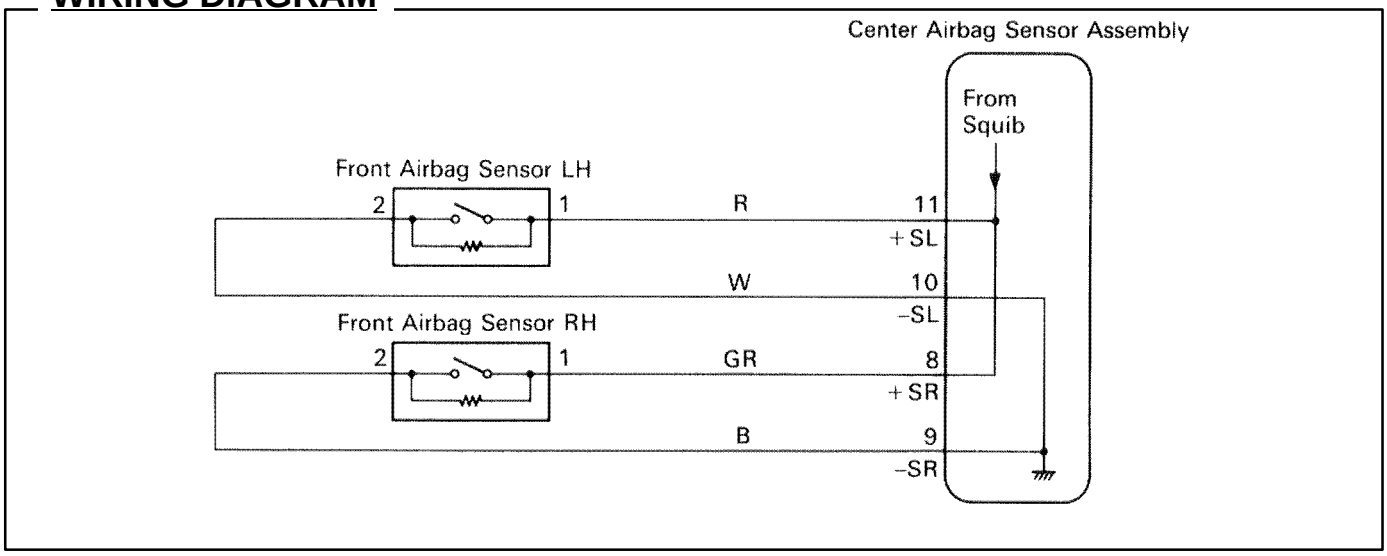

WhereEverybodyKnowsYourName

INSPECTION PROCEDURE

1 Preparation.

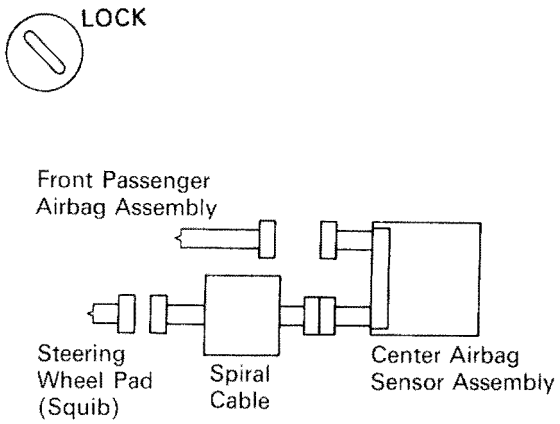

P

1. Disconnect battery negative (–) terminal cable, and wait at least 90 seconds.
2. Remove steering wheel pad (See page RS–19).
3. Disconnect connectors of front passenger airbag assembly (See page RS–32).

Caution: Store the steering wheel pad with the surface facing upward.

2 Check front airbag sensor circuit (Measure resistance between terminals +SR and –SR, +SL and –SL of center airbag sensor assembly connector.)

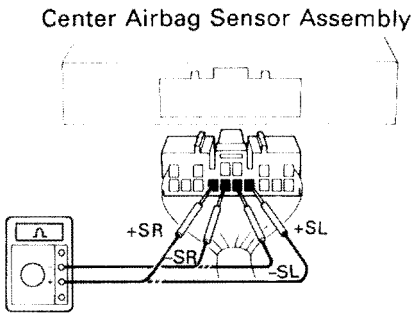

P Disconnect center airbag sensor assembly connector.

C Measure resistance between terminals +SR and –SR, +SL and –SL of harness side connector of center airbag sensor assembly.

OK **Resistance: 755 – 885**

OK

NG **Go to step ▼.**

WhereEverybodyKnowsYourName

3 **Check center airbag sensor assembly.**

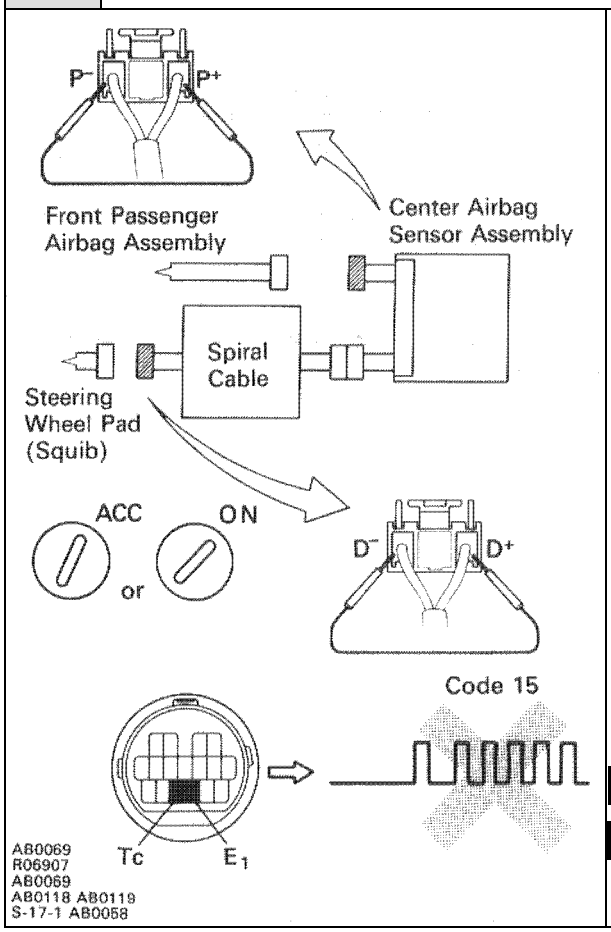

P

1. Connect connector to center airbag sensor assembly.
2. Using a service wire, connect D+ and D– on spiral cable side of connector between spiral cable and steering wheel pad.
3. Using a service wire, connect P+ and P–n on center airbag sensor assembly side of connector between center airbag sensor assembly and front passenger airbag.
4. Connect negative (–) terminal cable to battery, and wait at least 2 seconds.

C

1. Turn ignition switch AAC or ON, and wait at least 20 seconds.
   Clear malfunction code. Turn ignition switch LOCK and wait at least 20 seconds.
2. Turn ignition switch ACC or ON, and wait at least 20 seconds.
3. Using SST, connect terminals Tc and E_1 of DLC2.
   SST 09843–18020
4. Check diagnostic trouble code.

OK **Diagnostic trouble code 15 is not output.**

Hint Code other than code 15 may be output at this time, but this is not relevant to this check.

OK

NG **Replace center airbag sensor assembly.**

From the results of the above inspection, the malfunctioning part can now be considered normal. To make sure of this, use the simulation method to check.

WhereEverybodyKnowsYourName

4 Check front airbag sensor.

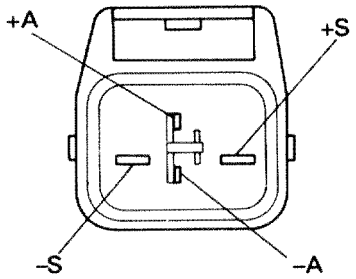

AB0034

P Disconnect front airbag sensor connector.

C Measure resistance between each terminal of front airbag sensor.

OK

Terminal	Resistance
⊕S – ⊕A	755 Ω – 885 Ω
⊕S – ⊖S	1 MΩ or higher
⊖S – ⊖A	Below 1 Ω

Notice:

10 Do not touch ohmmeter probes strongly against terminals of front airbag sensor.

10 Make sure the front airbag sensor connector is properly connected.

OK

NG **Replace front airbag sensor.**

5 Check harness between center airbag sensor assembly and front airbag sensor.

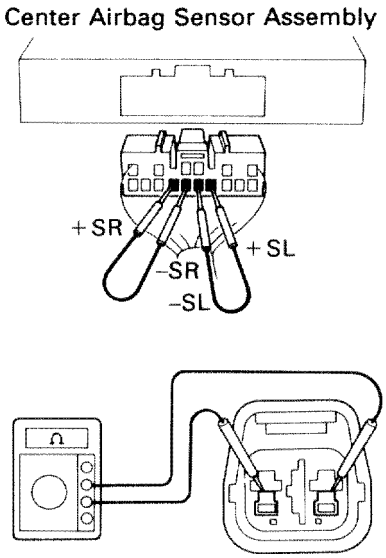

AB0039

P

5. Disconnect center airbag sensor assembly connector.
6. Using service wires, connect +SR and –SR, +SL and –SL on the wire harness side of the center airbag sensor assembly connector.

C Measure resistance between terminals +SR and –SR, +SL and –SL of harness side connector of front airbag sensor.

Notice:

10 Lightly touch ohmmeter proves at position shown in illustration.

10 Make sure the front airbag sensor connector is properly connected.

OK **Resistance: Below 1**

OK

NG **Repair or replace harness or connector between center airbag sensor assembly and front airbag sensor. (See page RS–48).**

Replace front airbag sensor connector (See page RS–48).

WhereEverybodyKnowsYourName

DTC	22	SRS Warning Light System Malfunction

— CIRCUIT DESCRIPTION

The SRS warning light is located on the combination meter.
When the supplemental restraint system is normal, the SRS warning light lights up for approx. 6 seconds after the ignition switch is turned from LOCK position to ACC or ON position, and then turns off automatically. If there is a malfunction in the supplemental restraint system, the SRS warning light lights up to inform the driver of the abnormality.
When terminals Tc and E_1 of the DLC2 are connected, the diagnostic trouble code is displayed by the blinking of the SRS warning light.
The SRS warning light circuit is equipped with an electrical connection check mechanism which detects when the connector to the center airbag sensor assembly is not properly connected.
If the connector to the center airbag sensor assembly is not properly connected, the SRS warning light will not light up.
Diagnostic trouble code 22 is recorded when a malfunction occurs in the SRS warning light system. If an OPEN malfunction occurs in the SRS warning light system, the SRS warning light does not light up, so that until the malfunction is repaired, the diagnostic trouble codes (including 22) cannot be confirmed.

DTC No.	Trouble Area
22	2Open circuit in SRS warning light system. 2Center airbag sensor assembly malfunction.

WhereEverybodyKnowsYourName

DIAGNOSTIC CHART

Troubleshooting for this system is different for when the SRS warning light does not light up and for when diagnostic trouble code 22 is output. Confirm the problem symptoms first before selecting the appropriate troubleshooting procedure.
HINT: If SRS warning light does not light up, perform the following troubleshooting:

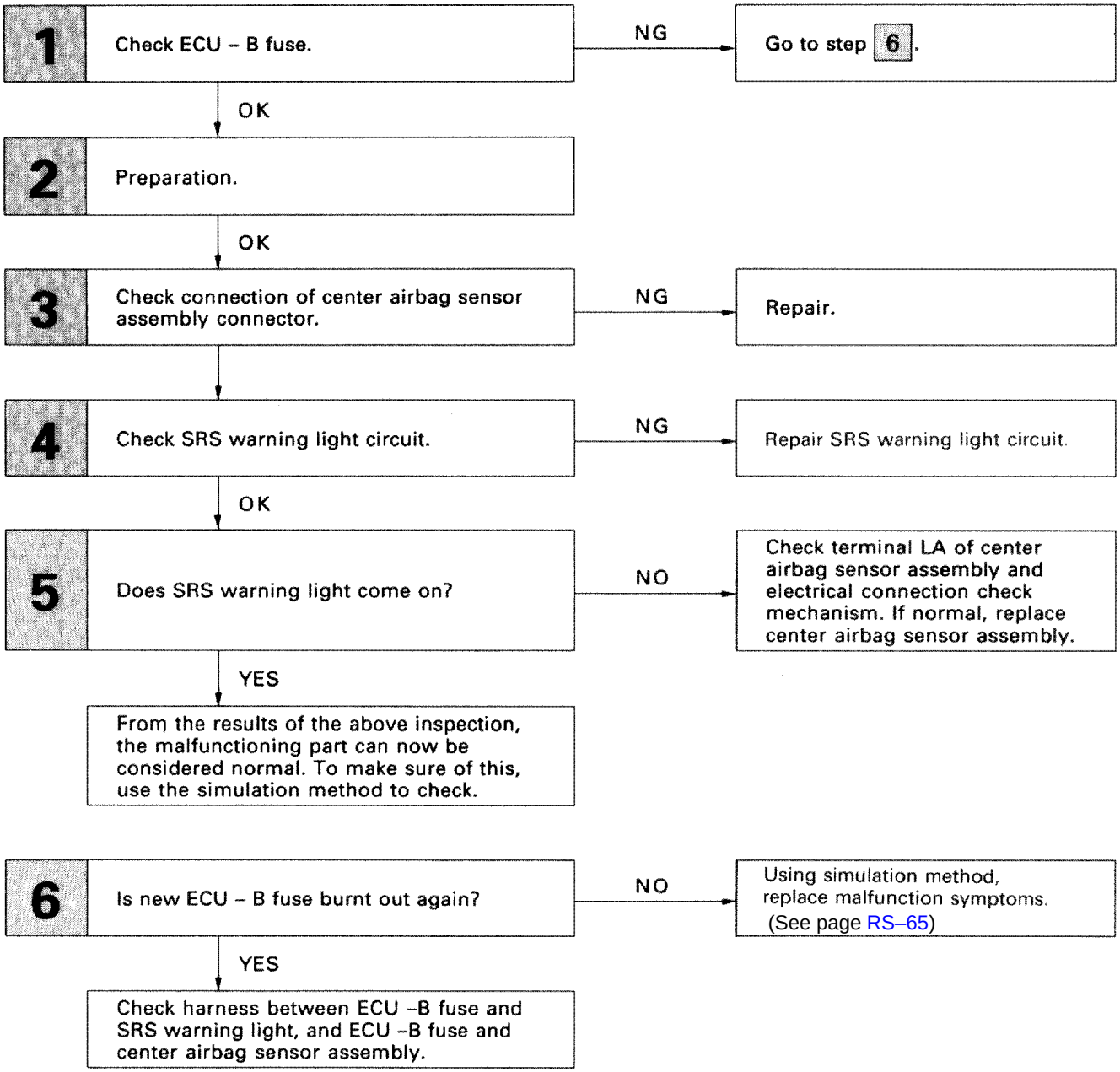

WhereEverybodyKnowsYourName

DIAGNOSTIC CHART

HINT: If diagnostic trouble code 22 is output, perform the following troubleshooting:

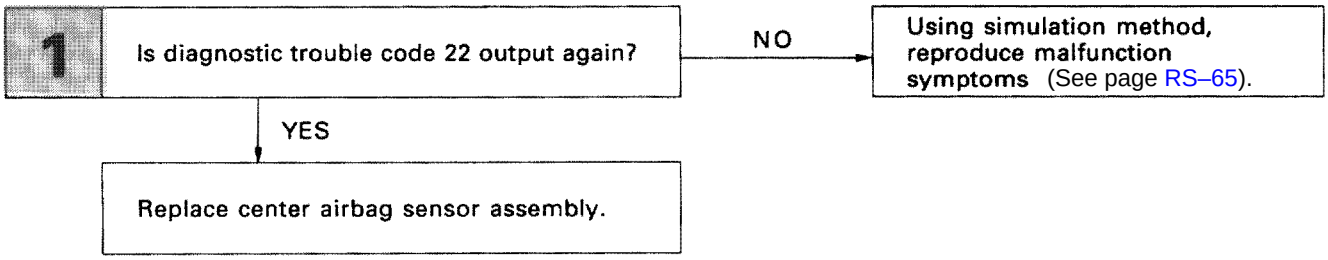

WIRING DIAGRAM

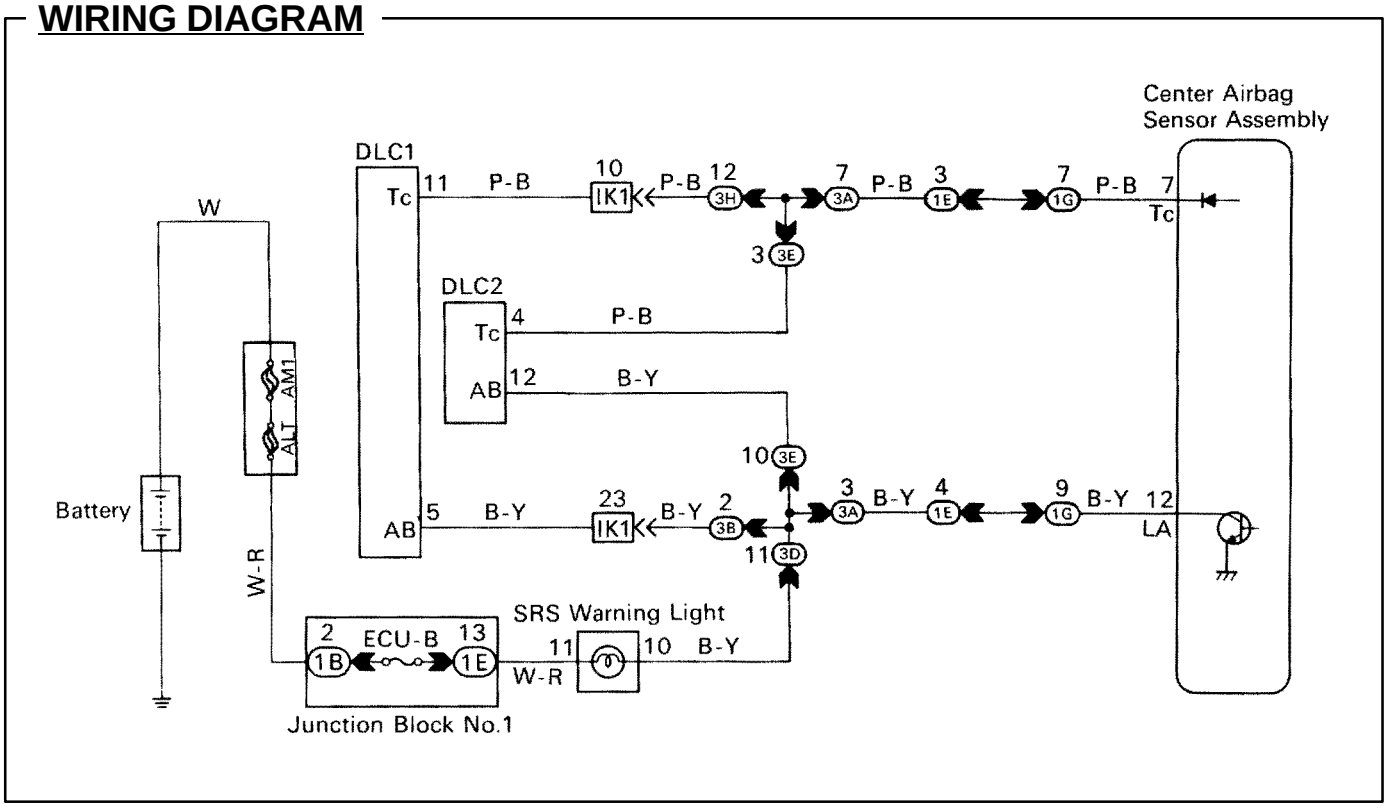

WhereEverybodyKnowsYourName

INSPECTION PROCEDURE

HINT: If SRS warning light does not light up, perform the following troubleshooting:

1	Check ECU–B fuse.

OK

NG → Go to step ▼

2	Preparation.

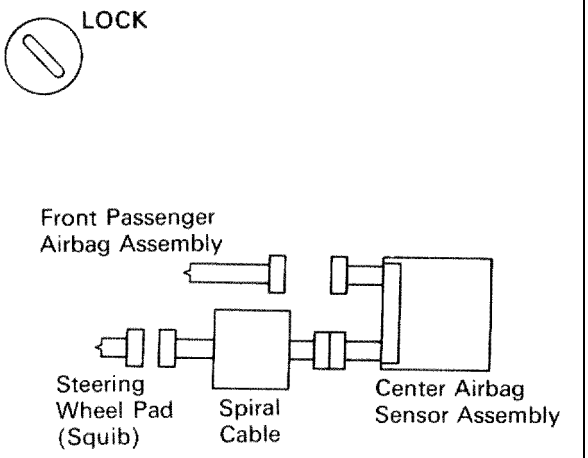

P

1. Disconnect battery negative (–) terminal cable, and wait at least 90 seconds.
2. Remove steering wheel pad (See page RS–19).
3. Disconnect connectors of front passenger airbag assembly (See page RS–32).

Caution: Store the steering wheel pad with the surface facing upward.

3	Check connection of center airbag sensor assembly connector.

OK

NG → Repair.

WhereEverybodyKnowsYourName

4 **Check SRS warning light circuit.**

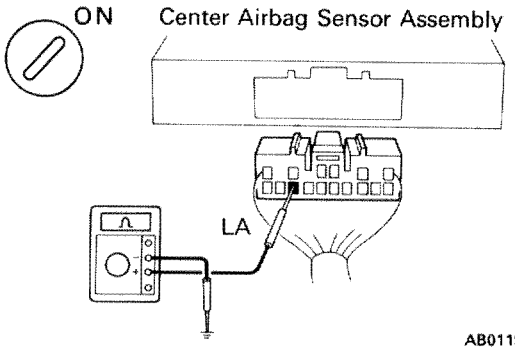

P
1. Disconnect center airbag sensor assembly.
2. Connect negative (–) terminal cable to battery.
3. Turn ignition switch ACC or ON.

C Measure voltage LA terminal of harness side connector of center airbag sensor assembly.

OK **Voltage: Battery positive voltage.**

OK

NG **Repair SRS warning light circuit.**

5 **Does SRS warning light come on?**

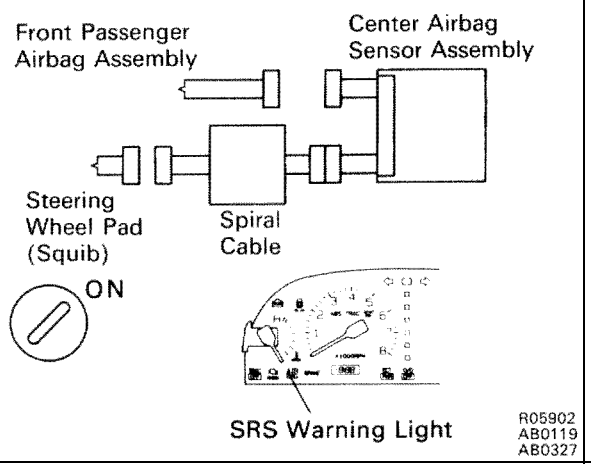

P
1. Disconnect negative (–) terminal cable from battery.
2. Connect center airbag sensor assembly.
3. Connect negative (–) terminal cable to battery.
4. Turn ignition switch ACC or ON.

C Check operation of SRS warning light.

OK **SRS warning light comes on.**

YES

NO **Check terminal LA of center airbag sensor assembly and electrical connection check mechanism. If normal, replace center airbag sensor assembly.**

From the results of the above inspection, the malfunctioning part can now be considered normal. To make sure of this, use the simulation method to check.

6 **Is new ECU–B fuse burnt out again?**

YES

NO **Using simulation method, reproduce malfunction symptoms (See page RS–65).**

Check harness between ECU–B fuse and SRS warning light, and ECU–B fuse and center airbag sensor assembly.

WhereEverybodyKnowsYourName

HINT: If diagnostic trouble code 22 is output, perform the following troubleshooting:

1	Is diagnostic trouble code 22 output again?
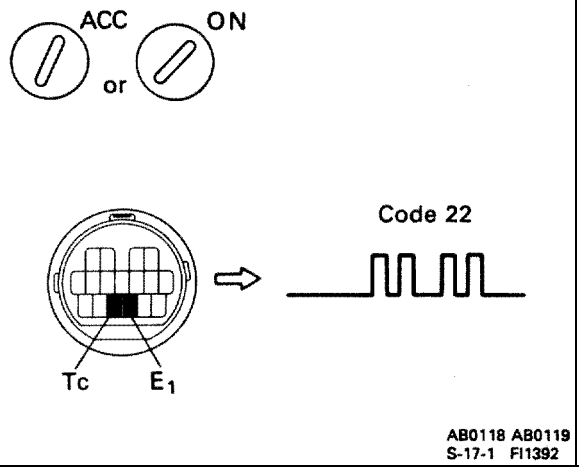	**P** Clear malfunction. **C** 1. Turn ignition switch LOCK, and wait at least 20 seconds. 2. Turn ignition switch ACC or ON, and wait at least 20 seconds. 3. Using SST, connect terminals Tc and E_1 of DLC2. SST 09843–18020 4. Check diagnostic trouble code.

YES

No → **Using simulation method, reproduce malfunction symptoms (See page RS–65).**

Replace center airbag sensor assembly.

WhereEverybodyKnowsYourName

DTC 31 Center Airbag Sensor Assembly Malfunction

CIRCUIT DESCRIPTION

The center airbag sensor assembly consists of center airbag sensor, safing sensors, ignition control and drive circuit, diagnosis circuit, etc.
It receives signals from the airbag sensors, judges whether or not the SRS must be deploy, and diagnoses system malfunction.
Diagnostic trouble code 31 is recorded when occurrence of a malfunction in the center airbag assembly is detected.

DTC No.	Trouble Area
31	▼Center airbag sensor assembly malfunction.

DIAGNOSTIC CHART

HINT: When a malfunction code other than code 31 is displayed at the same time, first repair the malfunction indicated by the malfunction code other than code 31.

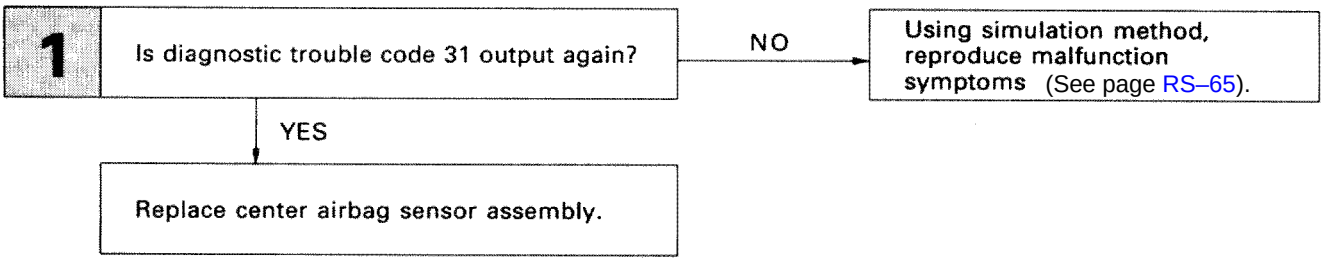

WhereEverybodyKnowsYourName

INSPECTION PROCEDURE

HINT: When a malfunction code other than code 31 is displayed at the same time, first repair the malfunction indicated by the malfunction code other than 31.

1	Is diagnostic rouble code 31 output again?
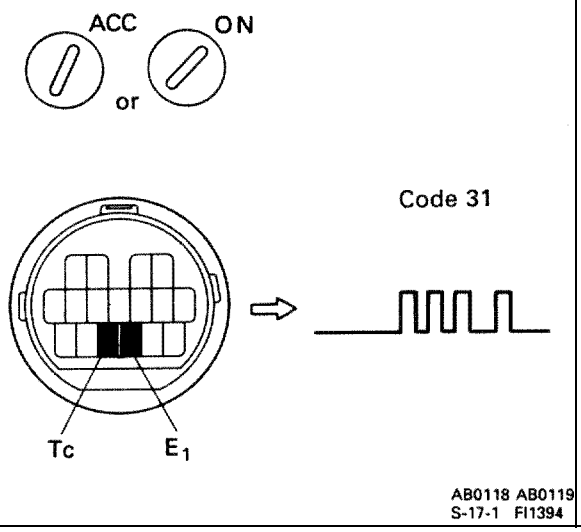	**P** Clear malfunction. **C** 1. Turn ignition switch LOCK, and wait at least 20 seconds. 2. Turn ignition switch ACC or ON, and wait at least 20 seconds. 3. Repeat operation in step (1) and (2) at least 5 times. 4. Using SST, connect terminals Tc and E_1 of DLC2. SST 09843–18020 5. Check diagnostic trouble code.

YES

NO **Using simulation method, reproduce malfunction symptoms (See page RS–65).**

Replace center airbag sensor assembly.

WhereEverybodyKnowsYourName

ASSEMBLY REMOVAL AND INSTALLATION

COMPONENTS

SA09A–07

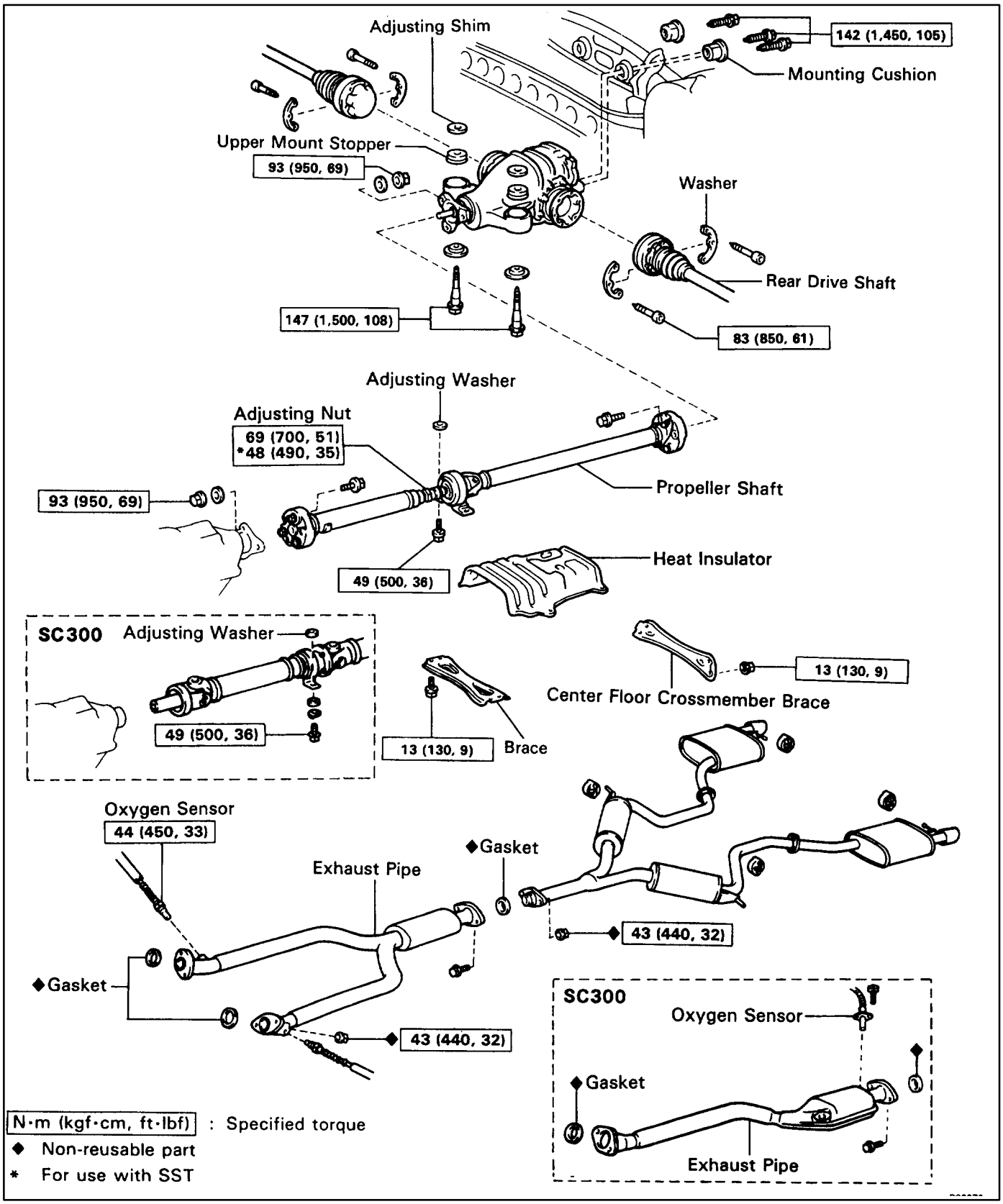

WhereEverybodyKnowsYourName

DIFFERENTIAL REMOVAL

SA0S6–05

1. REMOVE PROPELLER SHAFT
(See page PR–6 or 24)

2. DRAIN DIFFERENTIAL OIL

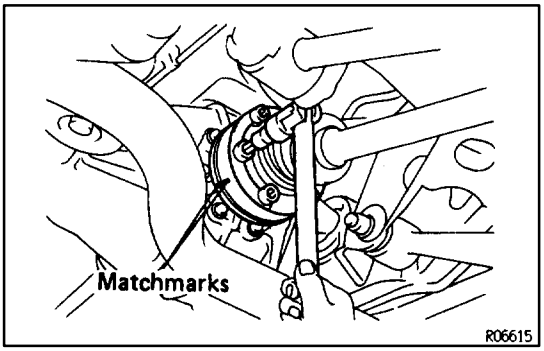

3. DISCONNECT REAR DRIVE SHAFTS

(a) Place matchmarks on the drive shafts and side gear shafts.

(b) Using a hexagon wrench, disconnect the drive shafts from the differential.

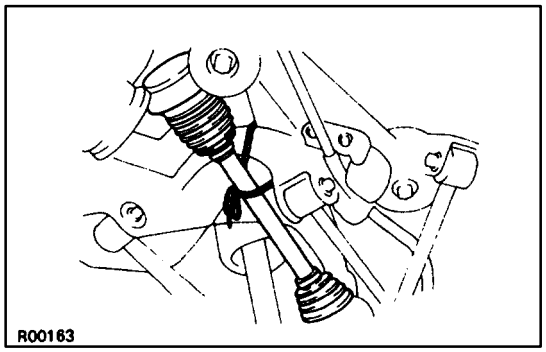

(c) Hang up the drive shafts using wire, etc.

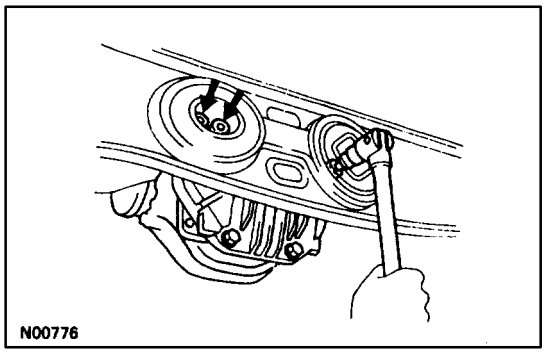

4. REMOVE DIFFERENTIAL

(a) Support the differential with a jack.

(b) Using a hexagon wrench, remove the 3 bolts.

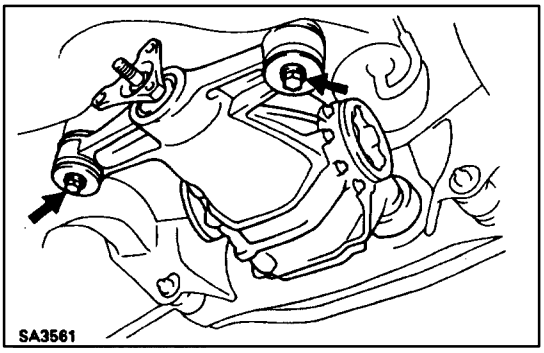

(c) Remove the 2 bolts and lower stoppers.

(d) Remove the differential.

WhereEverybodyKnowsYourName

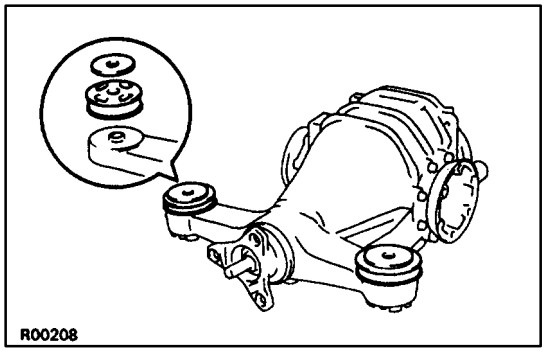

(e) Remove the upper mount stopper from the differential carrier.
HINT:
- Same vehicles have the adjusting shim for adjusting the propeller shaft joint angle installed on top of the upper mount stopper.
- Adjusting shim is not always as it is used upon need.

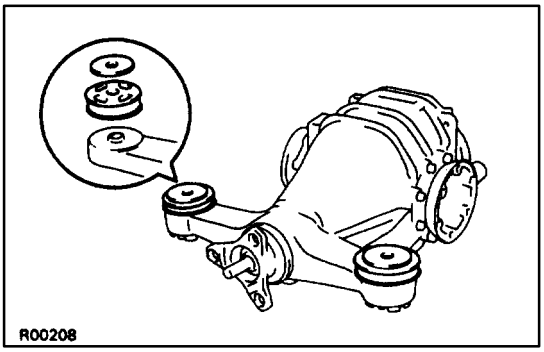

DIFFERENTIAL INSTALLATION

SA0S7–06

1. INSTALL DIFFERENTIAL

(a) Install the upper mount stopper on the differential carrier.
HINT:
- Use the upper mount stopper which was removed.
- On vehicles with the adjusting shim installed on top of the mount upper stopper, install that adjusting shim.
- Adjusting shim is not always as it is used upon need.

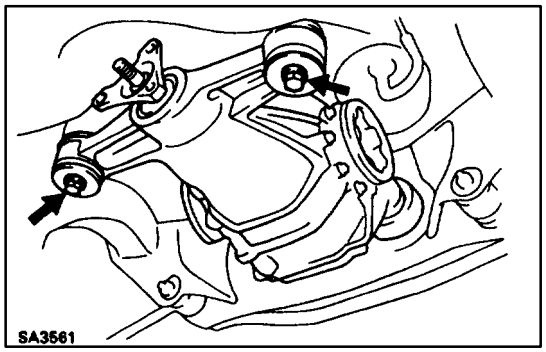

(b) Support the differential with a jack and install the lower stoppers and 2 new bolts.
Torque: 147 N·m (1,500 kgf·cm, 108 ft·lbf)

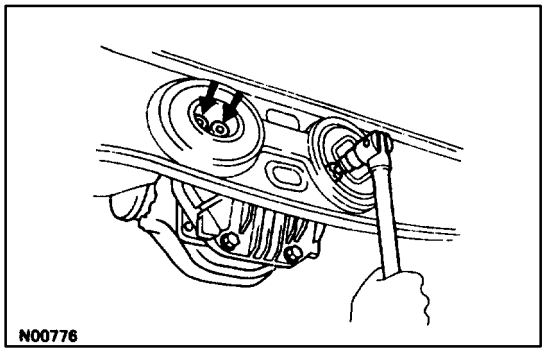

(c) Using a hexagon wrench, install 2 new LH mounting bolts.
Torque: 142 N·m (1,450 kgf·cm, 105 ft·lbf)

(d) Using a hexagon wrench, install a new RH mounting bolt.
Torque: 142 N·m (1,450 kgf·cm, 105 ft·lbf)

WhereEverybodyKnowsYourName

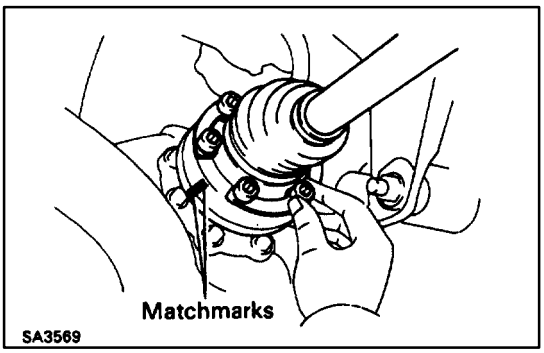

2. CONNECT REAR DRIVE SHAFTS

(a) Align the matchmarks on the side gear shaft and drive shafts.

(b) Apply a light coat of engine oil on the threads of the bolts.

(c) Temporarily install the 12 hexagon bolts and 4 washers.

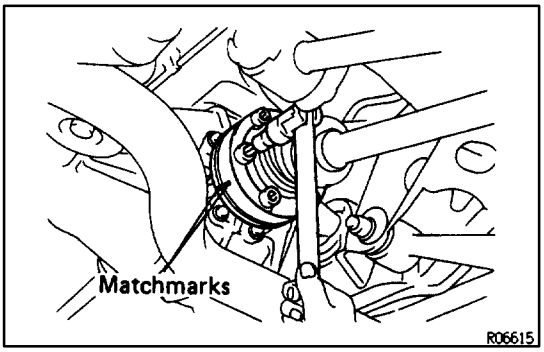

(d) Using a hexagon wrench, torque the bolts.
Torque: 83 N·m (850 kgf·cm, 61 ft·lbf)

3. INSTALL PROPELLER SHAFT
(See page PR–12 or 28)

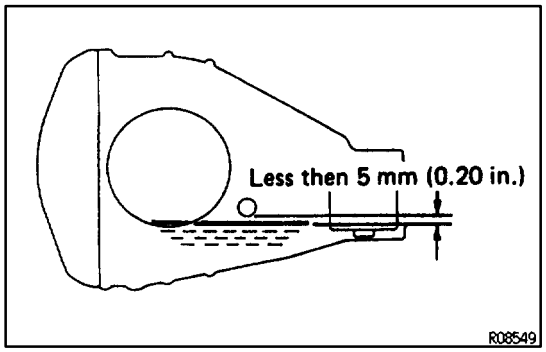

4. FILL DIFFERENTIAL WITH OIL

Oil grade:

API GL–5 Hypoid Gear Oil

Viscosity:

Above–18▼C (0▼F) SAE 90

Below–18▼C (0▼F) SAE 80W–90 or 80W

Capacity:

1.35 liters (1.42 US qts, 1.19 Imp qts)

WhereEverybodyKnowsYourName

DIFFERENTIAL CARRIER
COMPONENTS

SA0V2–01

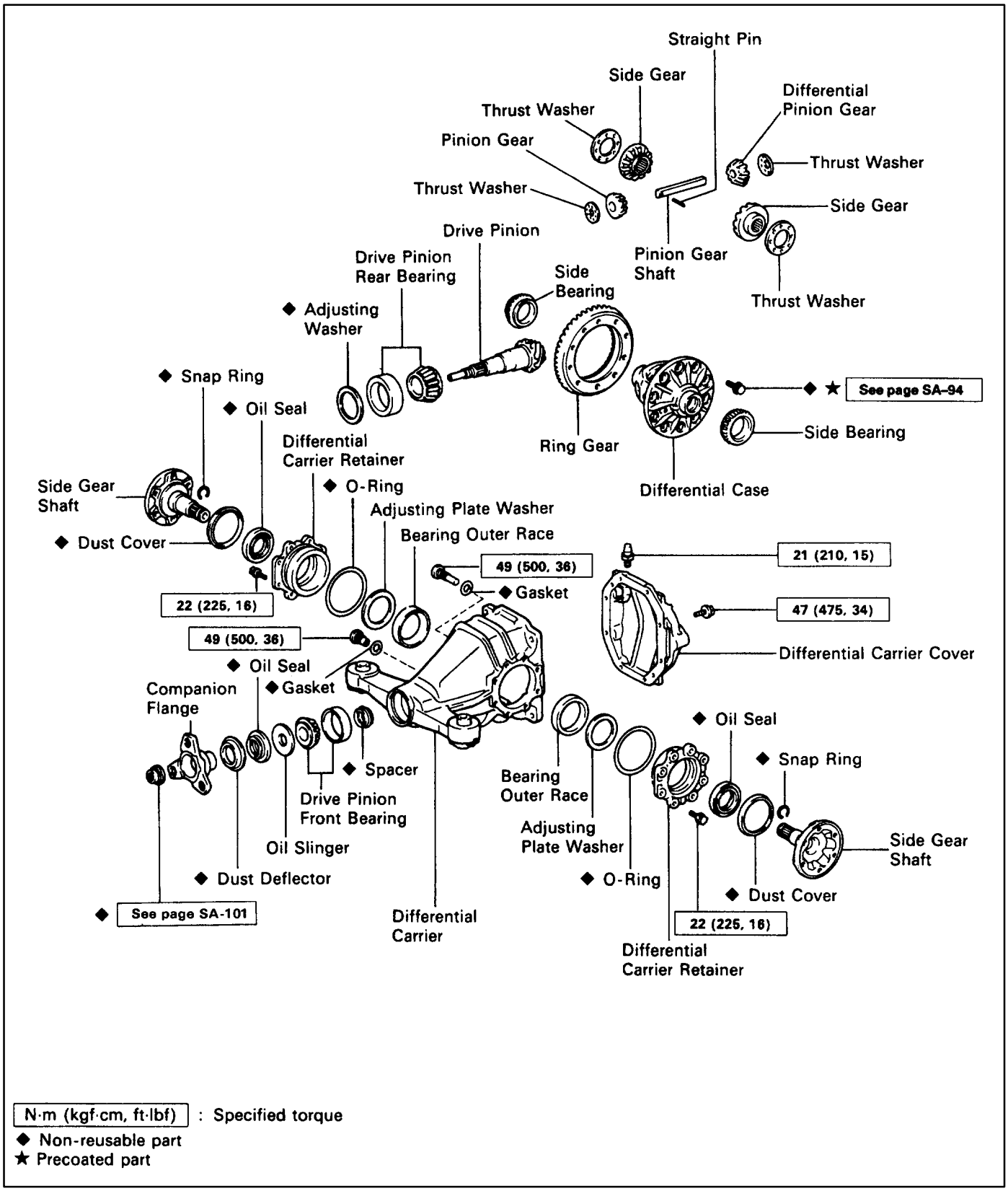

N·m (kgf·cm, ft·lbf) : Specified torque
◆ Non-reusable part
★ Precoated part

WhereEverybodyKnowsYourName

DIFFERENTIAL CARRIER INSPECTION

SA0V3–05

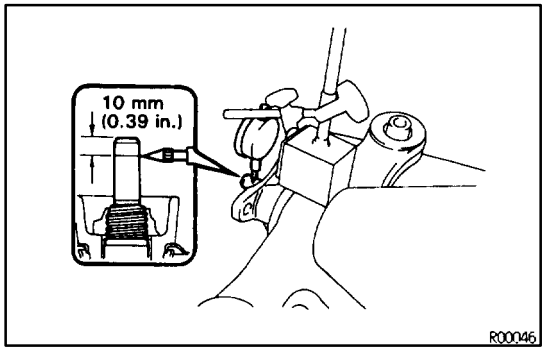

1. CHECK RUNOUT OF DRIVE PINION SHAFT

Measure the runout of the drive pinion shaft at a position pinion 10 mm (0.39 in.) from the end of the shaft.

Maximum runout:

0.08 mm (0.0031 in.)

If the runout is greater than the maximum, replace the drive pinion and ring gear.

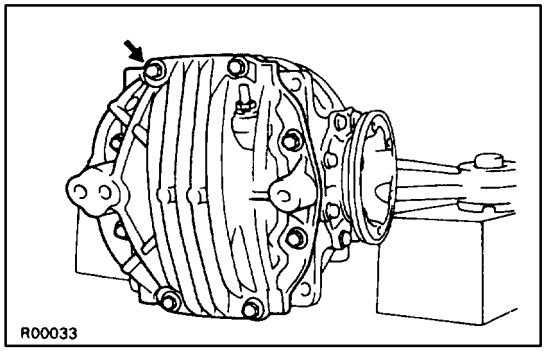

2. REMOVE DIFFERENTIAL CARRIER COVER

(a) Remove the 8 bolts from the carrier cover.

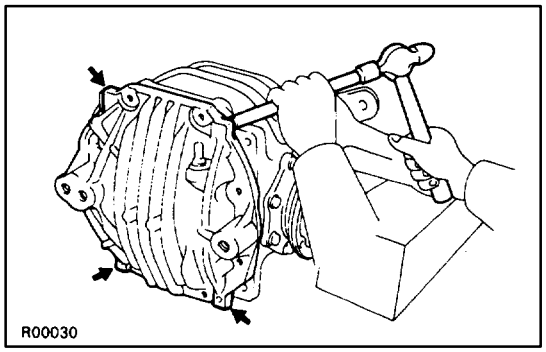

(b) Using a brass bar and hammer, separate the cover and carrier.

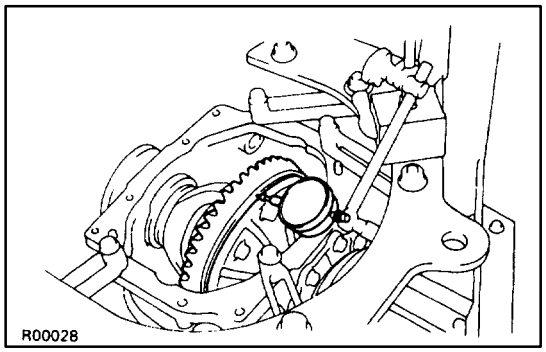

3. CHECK RING GEAR RUNOUT

Maximum runout:

0.05 mm (0.0020 in.)

If the runout is greater than the maximum, replace the drive pinion, ring gear and differential case.

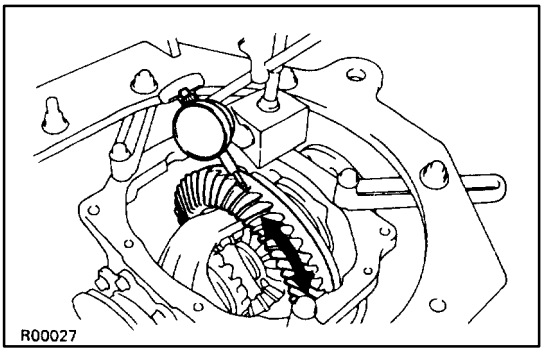

4. CHECK RING GEAR BACKLASH

Measure the backlash of the ring gear at 3 points at least and check that the average value is within the specification.

Backlash (average value):

0.08–0.13 mm (0.0031–0.0051 in.)

NOTICE: The difference between the maximum and minimum measured values must be less than 0.05 mm (0.0020 in.).

WhereEverybodyKnowsYourName

If the backlash is not within the specification, adjust the backlash. (See page SA–98)

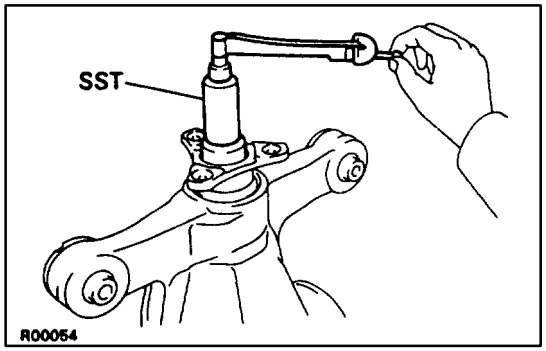

5. MEASURE DRIVE PINION PRELOAD

Using SST and a torque wrench, measure the drive pinion preload using the backlash of the drive pinion and ring gear.

Preload (at start):

0.5–0.8 N·m (5–8 kgf·cm, 4.3–6.9 in.·lbf)

HINT: With vehicles which have run less than 8,000 km (5,000 miles), the preload may be large.

SST 09229–55010

Maximum preload (at start):

1.8 N·m (18 kgf·cm, 16.0 in.·lbf)

6. CHECK TOTAL PRELOAD

Using SST and a torque wrench, measure the total preload.

SST 09229–55010

Total preload (at start):

In addition to drive pinion preload

0.5–0.8 N·m (5–8 kgf·cm, 4.3–6.9 in.·lbf)

If necessary, disassemble and inspect the differential.

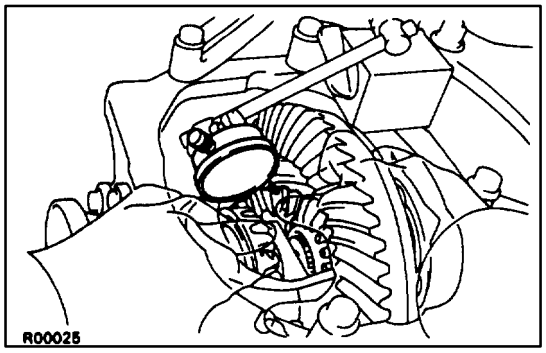

7. CHECK PINION GEAR BACKLASH

Measure the pinion gear backlash while holding one side gear toward the case.

Backlash:

0.05–0.02 mm (0.0020–0.0079 in.)

If the backlash is not within the specification, install the correct thrust washer. (See page SA–93)

8. CHECK TOOTH CONTACT PATTERN

(See page SA–99)

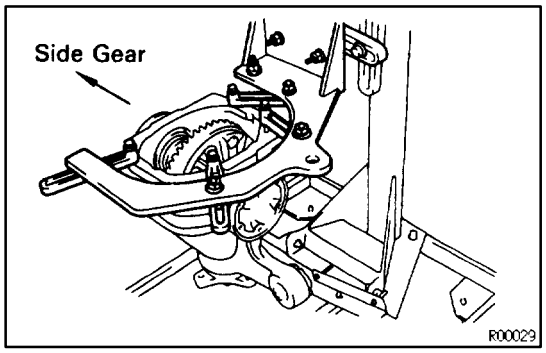

DIFFERENTIAL CARRIER DISASSEMBLY

SA0V4–02

HINT: When fastening the differential carrier to an overhaul stand, etc., fasten it at the 4 places on the ring gear side shown in the illustration.

WhereEverybodyKnowsYourName

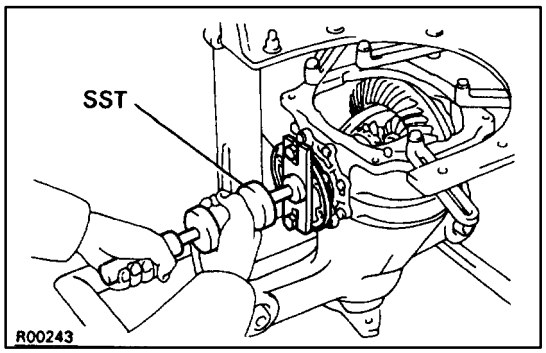

1. REMOVE SIDE GEAR SHAFT

Using SST, remove the side gear shaft.
SST 09520–24010

NOTICE: Be careful not to damage the oil seal.

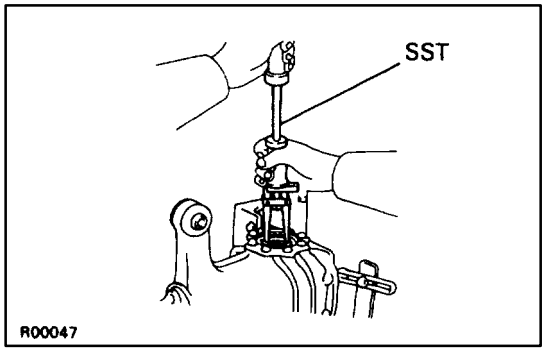

2. REMOVE SIDE GEAR SHAFT OIL SEALS

Using SST, remove the oil seals.
SST 09308–00010

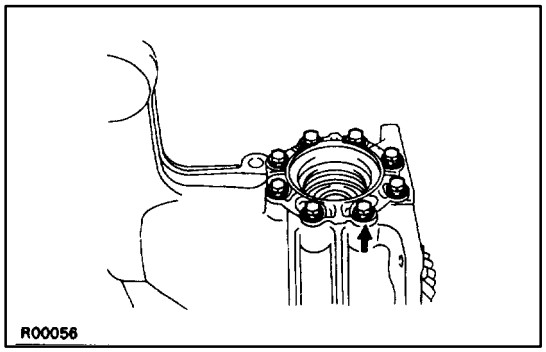

3. REMOVE DIFFERENTIAL CARRIER RETAINER

(a) Remove the 8 bolts.

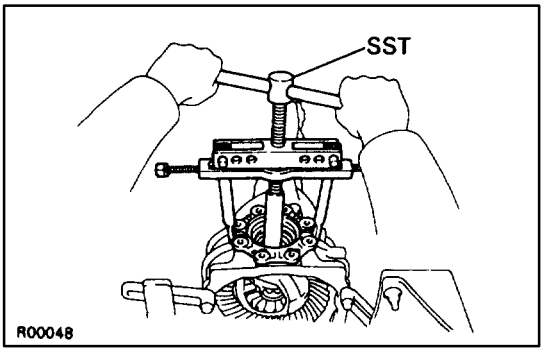

(b) Using SST, remove the carrier retainer.
SST 09950–20017

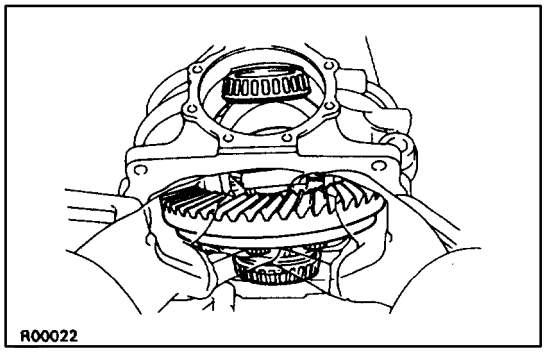

4. REMOVE DIFFERENTIAL CASE

Take the differential case out of the carrier while lifting the ring gear side, as shown in the illustration.

WhereEverybodyKnowsYourName

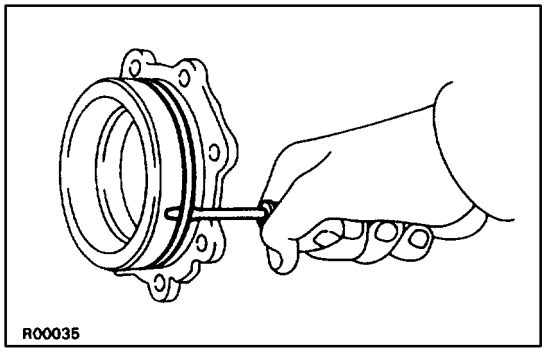

5. REMOVE O–RING FROM DIFFERENTIAL CARRIER RETAINER

Using a screwdriver, remove the O–ring.

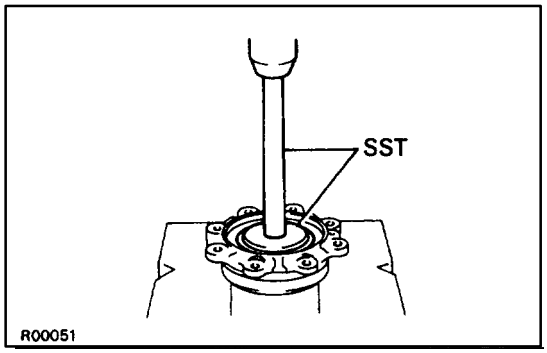

6. REMOVE SIDE BEARING OUTER RACE AND PLATE WASHER

Using SST and a press, press out the outer races and washers.

SST 09608–35014 (09608–06020, 09608–06110)

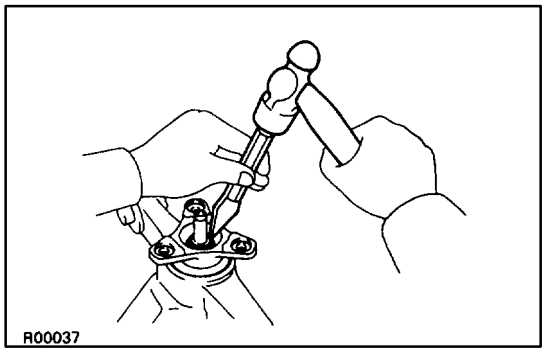

7. REMOVE DRIVE PINION, SPACER AND COMPANION FLANGE

(a) Using a hammer and chisel, loosen the staked part of the nut.

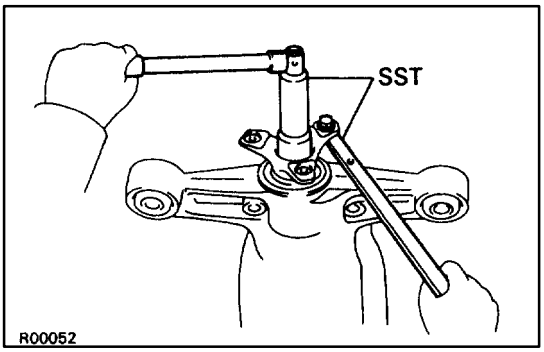

(b) Using SST, remove the nut.

SST 09229–55010, 09330–00021

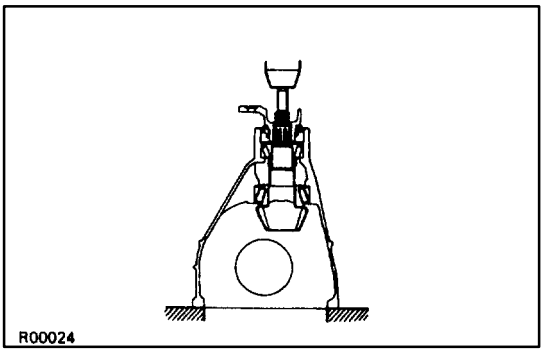

(c) Using a press, remove the drive pinion with the rear bearing and remove the companion flange.

NOTICE: Be careful not to drop the drive pinion.

WhereEverybodyKnowsYourName

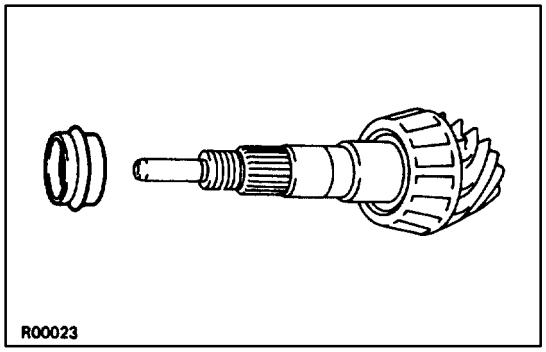

(d) Remove the spacer from the drive pinion.

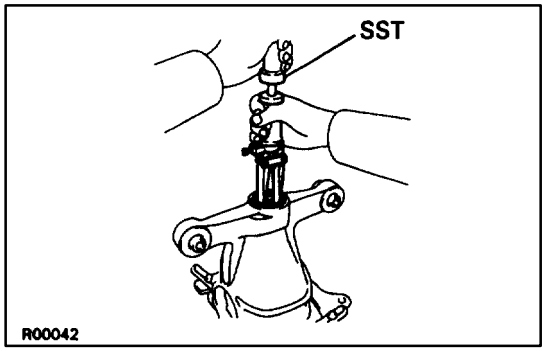

8. REMOVE OIL SEAL

Using SST, remove the oil seal.
SST 09308–00010

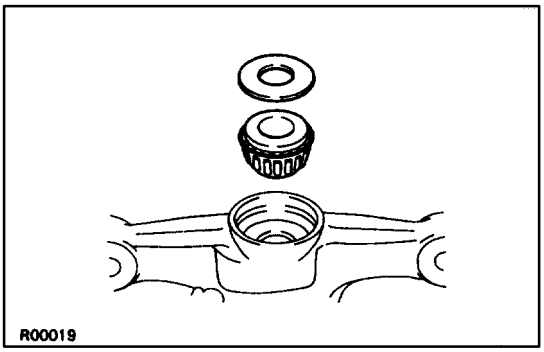

9. REMOVE OIL SLINGER AND FRONT BEARING

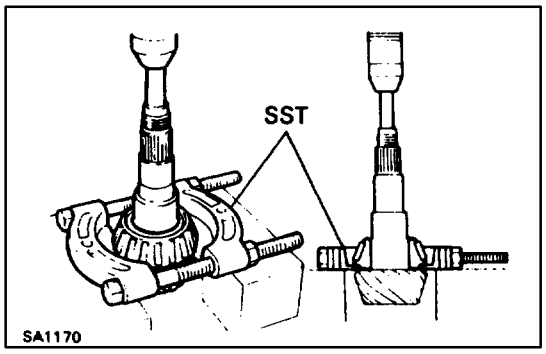

10. REMOVE REAR BEARING FROM DRIVE PINION

Using SST and a press, remove the rear bearing from the drive pinion.
SST 09950–00020

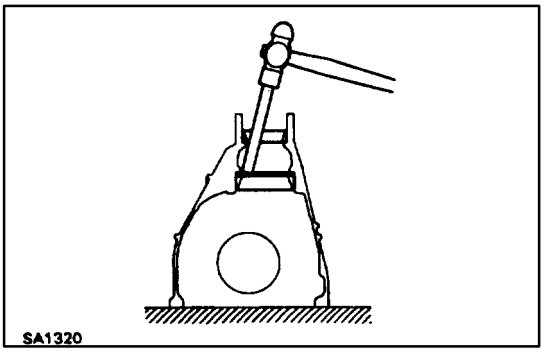

11. REMOVE FRONT AND REAR BEARING OUTER RACES AND ADJUSTING WASHER

NOTICE: Do not remove the outer race except when replacing the bearings.

Using a brass bar and hammer, drive out the outer races and adjusting washer from the differential carrier.
HINT: Measure the adjusting washer and note the thickness for reassembly.

WhereEverybodyKnowsYourName

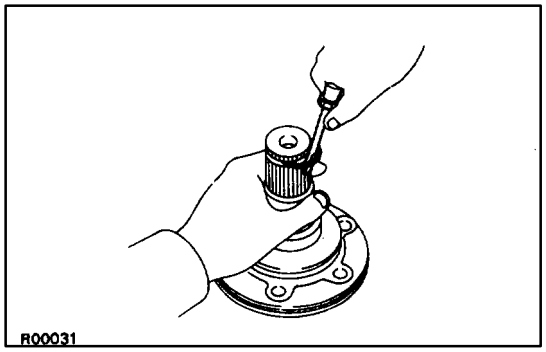

12. REMOVE LH AND RH SNAP RING FROM SIDE GEAR SHAFT

Using a screwdriver, remove the snap rings from the side gear shaft.

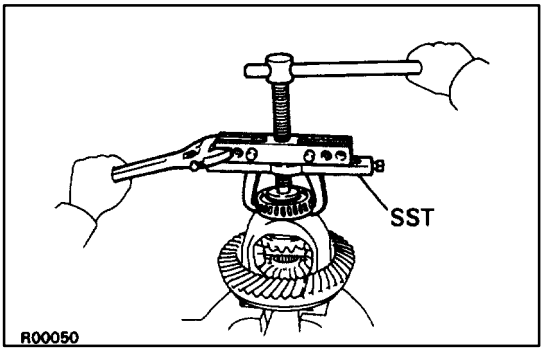

13. REMOVE SIDE BEARINGS

Using SST, remove the side bearings LH and RH from the differential case.

SST 09950–20017

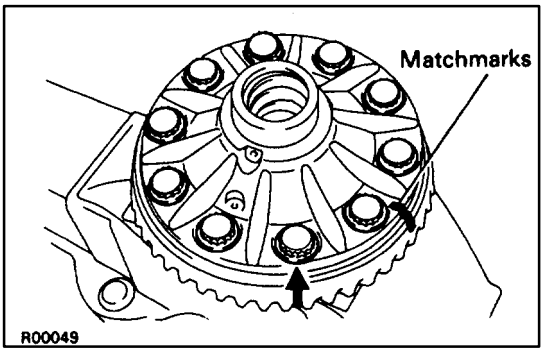

14. REMOVE RING GEAR

(a) Place matchmarks on the ring gear and differential case.

(b) Remove the 10 ring gear set bolts.

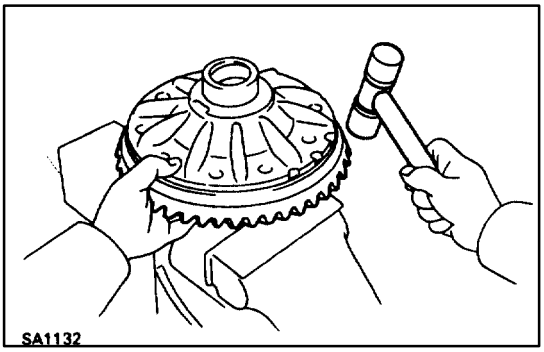

(c) Using a plastic hammer, tap on the ring gear to separate it from the differential case.

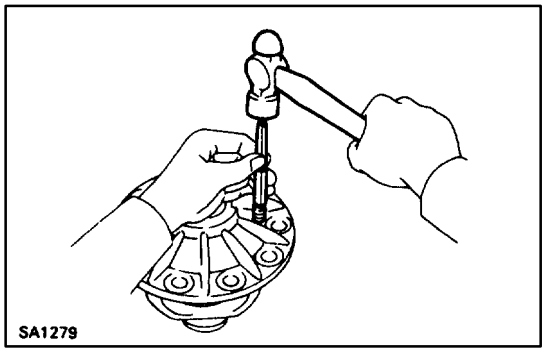

15. DISASSEMBLE DIFFERENTIAL CASE

(a) Using a hammer and punch, drive out the straight pin.

WhereEverybodyKnowsYourName

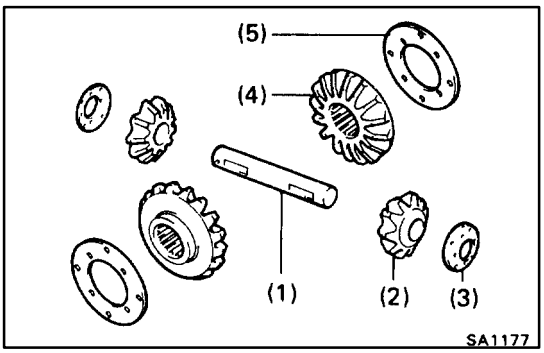

(b) Remove following parts from the differential case.
- Pinion shaft
- 2 differential pinions
- 2 pinion thrust washers
- 2 side gears
- 2 side gears thrust washers

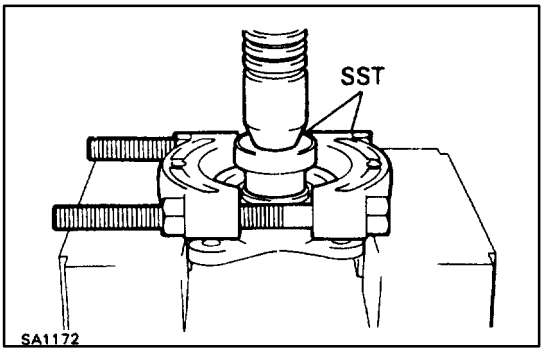

DUST DEFLECTOR AND DUST COVER REPLACEMENT

SA0V5–01

1. REPLACE COMPANION FLANGE DUST DEFLECTOR

(a) Using SST and a press, remove the dust deflector.
SST 09608–35014 (09608–06090), 09950–00020

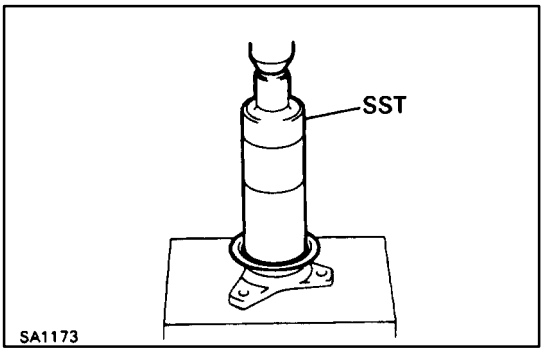

(b) Using SST and a press, install a new dust deflector.
SST 09316–60010 (09316–00010)

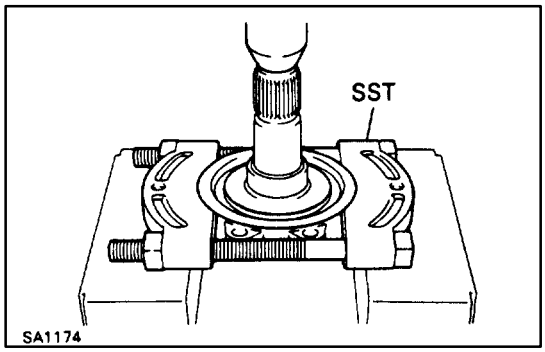

2. REPLACE SIDE GEAR SHAFT DUST COVER

(a) Using SST and a press, remove the dust cover.
SST 09950–00020

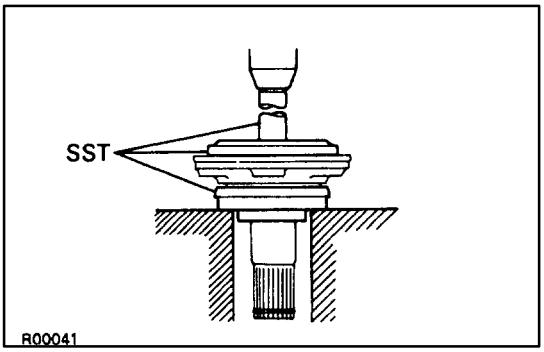

(b) Using SST and a press, install a new dust cover.
SST 09502–24010, 09608–35014 (09608–06020, 09608–06120)

WhereEverybodyKnowsYourName

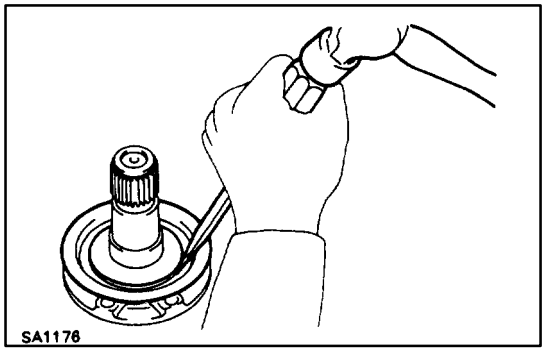

HINT: If the dust cover does not fit tightly against the flange of the side gear shaft, use a screwdriver to drive it down tight.

DIFFERENTIAL CARRIER ASSEMBLY

SA0V6–04

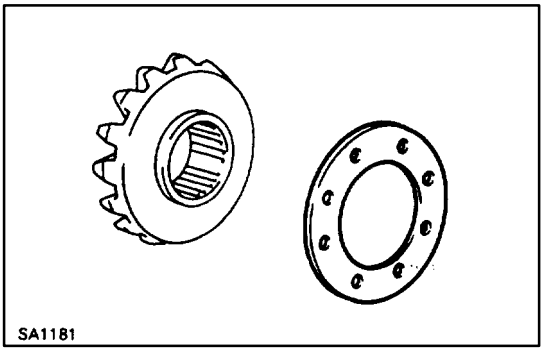

1. ADJUST DIFFERENTIAL PINION GEAR BACKLASH

(a) Install the proper thrust washers on the side gears.
HINT: Using the table below, select thrust washers which will ensure that the backlash is within specification.
Thrust washer thickness:

Thickness mm (in.)	Thickness mm (in.)
1.6 (0.063)	1.8 (0.071)
1.7 (0.067)	–

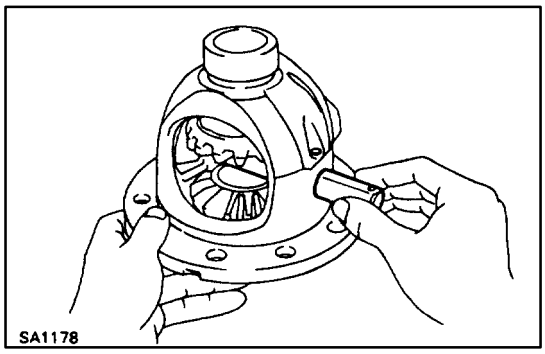

(b) Install the side gears, pinion gears, pinion gear thrust washers and pinion shaft in the differential case.
HINT: Align the holes of the differential case and pinion shaft.

(c) Push the side gear shafts gently into the differential case by hand and install them.

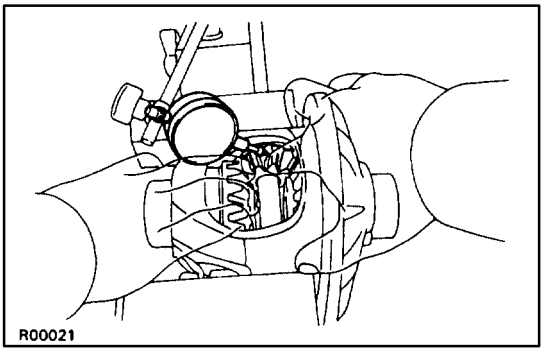

(d) Measure the pinion gear backlash while holding one side gear toward the case.
Backlash:
0.05–0.20 mm (0.0020–0.0079 in.)
If the backlash is not within the specification, install the side gear thrust washers with different thicknesses.

(e) Remove the side gear shaft.

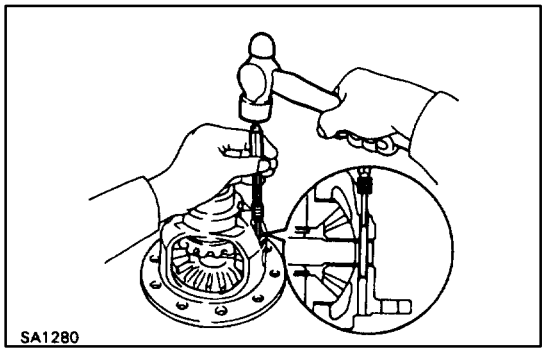

2. INSTALL RING GEAR ON DIFFERENTIAL CASE

(a) Using a hammer and punch, install the straight pin through the differential case and hole of the pinion shaft.

WhereEverybodyKnowsYourName

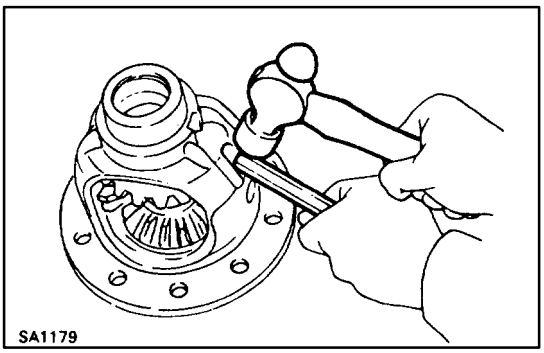

(b) Stake the differential case.

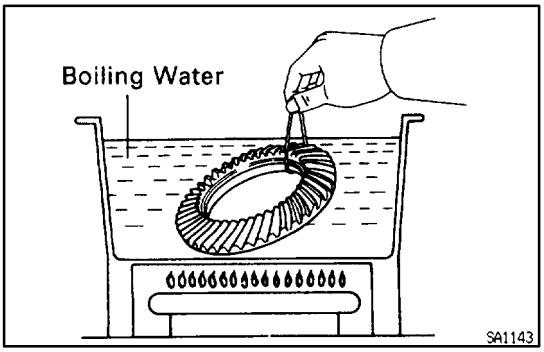

3. INSTALL RING GEAR ON DIFFERENTIAL CASE

(a) Clean the contact surfaces of the differential case and the threads of the ring gear and differential case.

(b) Heat the ring gear in boiling water.

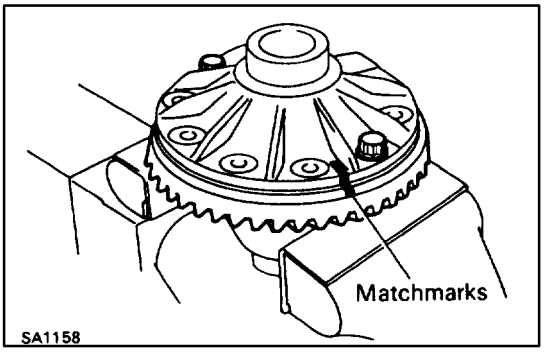

(c) After the moisture on the ring gear has completely evaporated, quickly install the ring gear to the differential case.
HINT: Align the matchmarks on the ring gear and the differential case.

(d) Tighten 2 of the bolts temporarily so that the bolt holes in the ring gear and differential case are not misaligned.
NOTICE: The ring gear set bolts should not be tightened until the ring gear has cooled sufficiently.

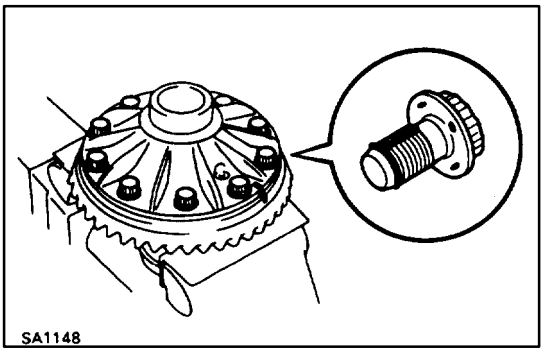

4. INSTALL RING GEAR SET BOLTS

(a) After the ring gear has cooled sufficiently, install 10 new ring gear set bolts to which thread lock has been applied.
Thread lock:
Part No. 08833–00100, THREE BOND 1360 K or equivalent.
NOTICE: New ring gear set bolts should be used in every case.

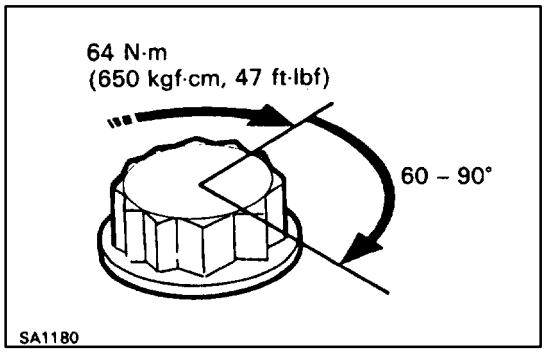

(b) Torque the 10 set bolts uniformly and a little at a time.
Torque: 64 N·m (650 kgf·cm, 47 ft·lbf)

(c) Tighten the bolts an additional 60–90▼
NOTICE: Tighten the bolts in diagonally opposite pairs.

WhereEverybodyKnowsYourName

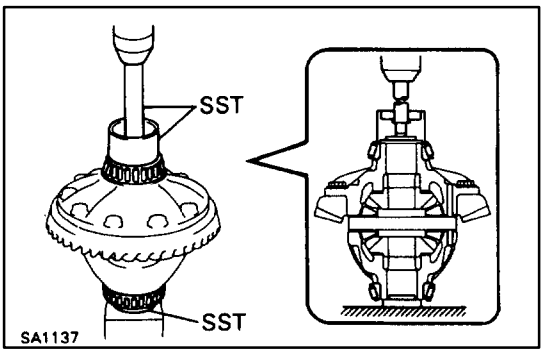

5. INSTALL SIDE BEARINGS

Using SST and a press, install the side bearings.
SST 09550–10012 (09252–10010, 09558–10010)
09710–30050

6. INSTALL DRIVE PINION BEARING OUTER RACES AND ADJUSTING WASHER

HINT: The adjusting washer is used for adjusting the tooth contact pattern. 42 types of washer with differential thicknesses are available.

First fit a washer with the same thickness as the washer which was removed, then after checking the tooth contact pattern, replace the washer with one of a different thickness if necessary.

When removing an adjusting washer, be sure to replace it with a new one.

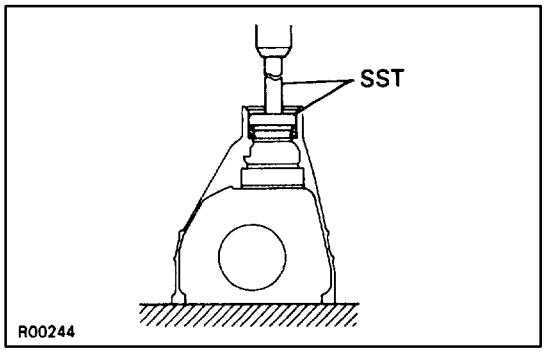

(a) Using SST and a press, install a new adjusting washer and the front bearing outer race.
SST 09250–10011 (09252–10010, 09255–10011)

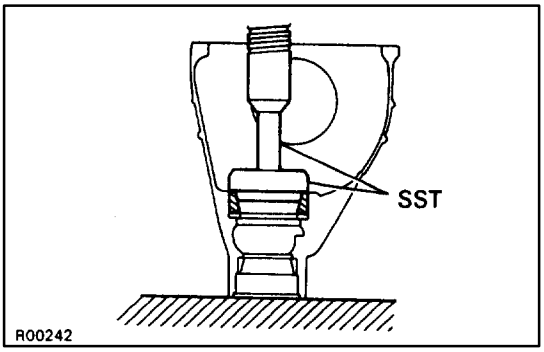

(b) Using SST and a press, install the rear bearing outer race.
SST 09608–30012 (09608–04020, 09608–04100)

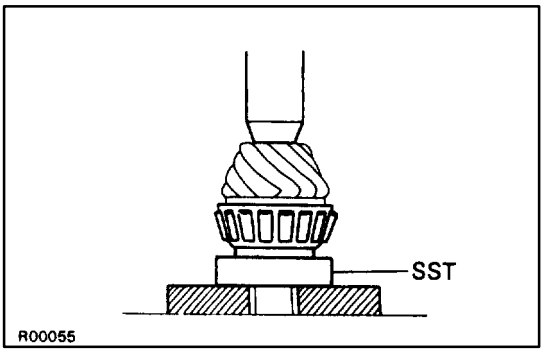

7. INSTALL REAR BEARING TO DRIVE PINION

Using SST and a press, install the rear bearing.
SST 09502–24010

WhereEverybodyKnowsYourName

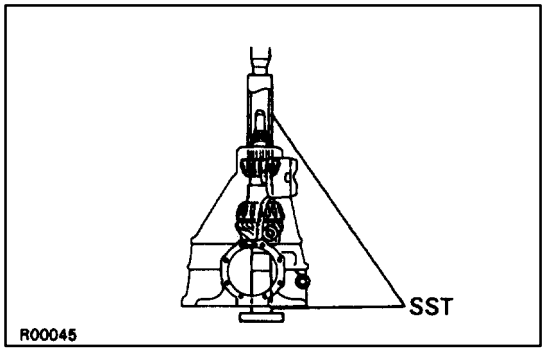

8. INSTALL DRIVE PINION AND FRONT BEARING

(a) Install the drive pinion in the differential carrier.

(b) Using SST and a press, install the front bearing on the drive pinion.
SST 09316–60010 (09316–00010), 09608–30012 (09608–04030)
HINT: Assemble the spacer and oil seal after adjusting the tooth contact pattern.

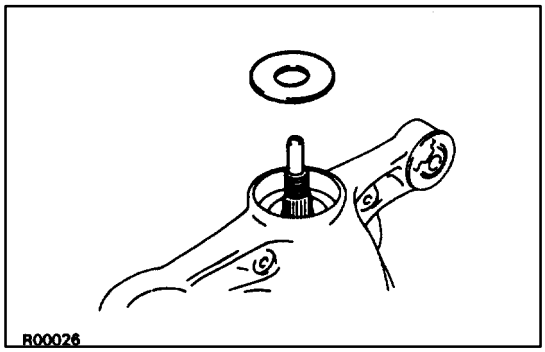

9. INSTALL OIL SLINGER AND COMPANION FLANGE

(a) Install the oil slinger.

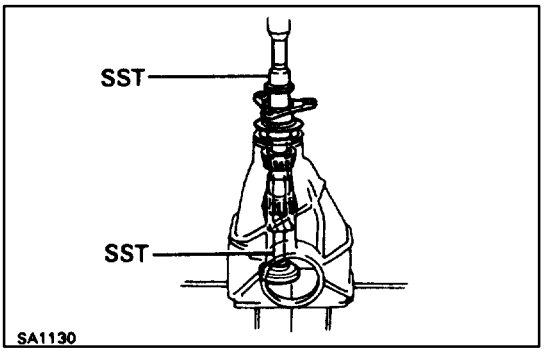

(b) Using SST and a press, install the companion flange.
SST 09223–63010, 09325–40010

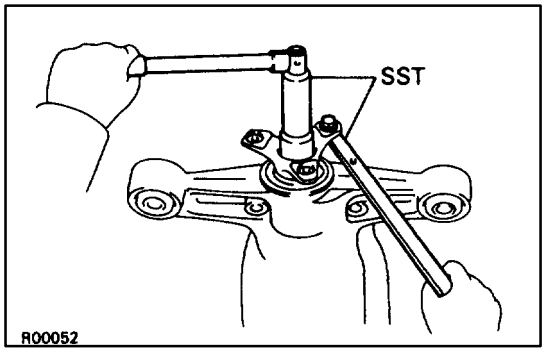

10. TEMPORARILY ADJUST DRIVE PINION PRELOAD

(a) Adjust the drive pinion preload by tightening the companion flange nut.
HINT: Using SST to hold the flange, tighten the nut.
SST 09229–55010, 09330–00021
NOTICE: As there is no spacer, tighten the nut a little at a time, being careful not to overtighten it.

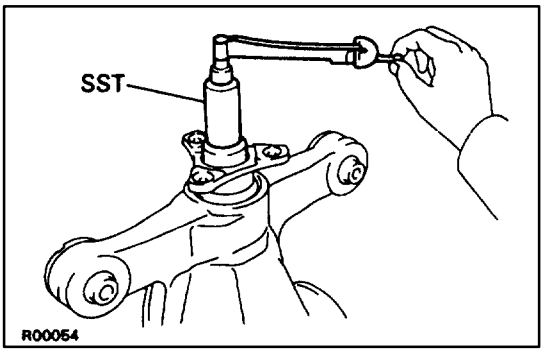

(b) Using SST and a torque wrench, measure the drive pinion preload.
SST 09229–55010
Preload (at start):
New bearing:
1.2–1.8 N·m (12.4–18.4 kgf·cm, 10.8–16.0 in.·lbf)
Reused bearing
0.5–0.8 N·m (5–8 kgf·cm, 4.3–6.9 in.·lbf)

WhereEverybodyKnowsYourName

HINT: For vehicle which have run 8,000 km (5,000 miles) or less, if the preload value measured disassembly is greater than the specification for a reused bearing, return the preload to the same as before disassembly.

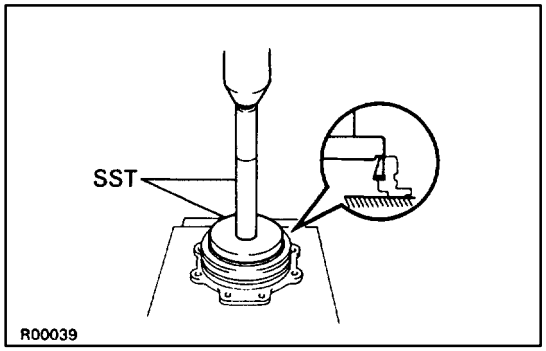

11. INSTALL SIDE BEARING OUTER RACE AND ADJUST WASHER

Using SST and a press, press the outer race and washer.
SST 09608–35014 (09608–06020, 09608–06210)

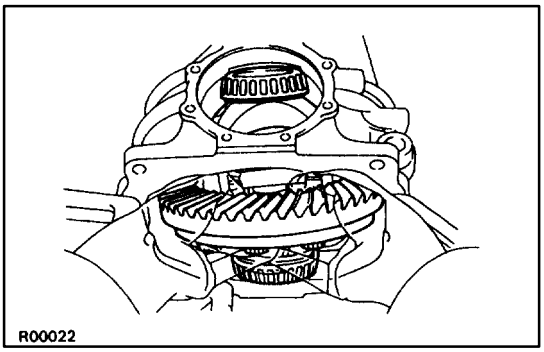

12. INSTALL DIFFERENTIAL CASE IN CARRIER

Install the drive side bearing in the differential carrier first, as shown in the illustration, then install the differential case.

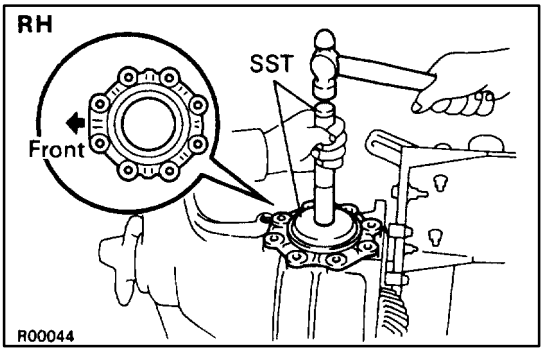

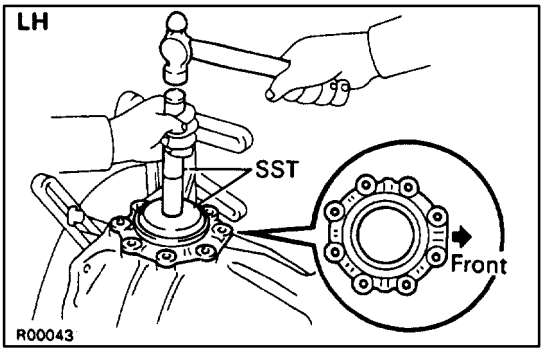

13. INSTALL DIFFERENTIAL CARRIER RETAINERS

(a) Using SST and hammer, install the bearing retainer.
SST 09608–35014 (09608–06020, 09608–06180)

WhereEverybodyKnowsYourName

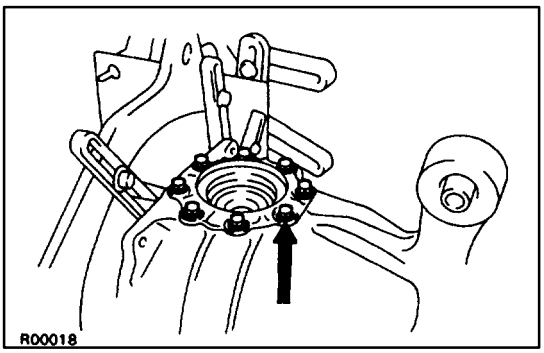

(b) Tighten the 8 bolts.
Torque: 22 N·m (225 kgf·cm, 16 ft·lbf)

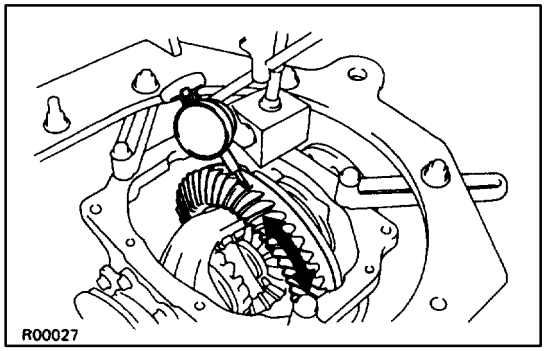

14. CHECK RING GEAR BACKLASH

Using dial gauge, measure the backlash of the ring gear at 3 positions at least.

Backlash (average value):

0.08–0.13 mm (0.0031–0.0051 in.)

NOTICE: The difference between the maximum and minimum measured values must be less than 0.05 mm (0.0020 in.)

HINT: The measured values should be used for reference when selecting washers, so make a memo of the values.

If the backlash is not within the specification replace the washer on the ring gear side with one of a different thickness using the following procedure.

Adjusting washer thickness: mm (in.)

No.	**Thickness**	No.	**Thickness**	**No.**	Thickness
02	2.02 (0.0795)	32	2.32 (0.0913)	62	2.62 (0.1031)
04	2.04 (0.0803)	34	2.34 (0.0921)	64	2.64 (0.1039)
06	2.06 (0.0811)	36	2.36 (0.0929)	66	2.66 (0.1047)
08	2.08 (0.0819)	38	2.38 (0.0937)	68	2.68 (0.1055)
10	2.10 (0.0827)	40	2.40 (0.0945)	70	2.70 (0.1063)
12	2.12 (0.0835)	42	2.42 (0.0953)	72	2.72 (0.1071)
14	2.14 (0.0843)	44	2.44 (0.0961)	74	2.74 (0.1079)
16	2.16 (0.0850)	46	2.46 (0.0969)	76	2.76 (0.1087)
18	2.18 (0.0858)	48	2.48 (0.0976)	78	2.78 (0.1094)
20	2.20 (0.0866)	50	2.50 (0.0984)	80	2.80 (0.1102)
22	2.22 (0.0974)	52	2.52 (0.0992)	82	2.82 (0.1110)
24	2.24 (0.0882)	54	2.54 (0.1000)	84	2.84 (0.1118)
26	2.26 (0.0890)	56	2.56 (0.1008)	86	2.86 (0.1126)
28	2.28 (0.0898)	58	2.58 (0.1016)		
30	2.30 (0.0906)	60	2.60 (0.1024)		

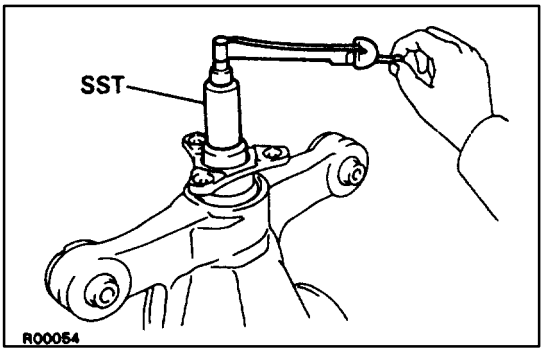

15. MEASURE TOTAL PRELOAD

Using SST and a torque wrench, measure the total preload.

SST 09229–55010

Total preload

In addition to drive pinion preload

0.5–0.8 N·m (5–8 kgf·cm, 4.3–6.9 in.·lbf)

WhereEverybodyKnowsYourName

If the measure preload is less than specification, replace the washer of the ring gear's tooth surface side with a thicker one.
If the preload is greater than the specification, replace the washer of the ring gear's tooth surface side with thinner one.
HINT: Changing the snap ring thickness by 0.02 mm (0.0008 in.) will change the total preload by approx. 0.1 N·m (1 kgf·cm, 0.9 in.·lbf)

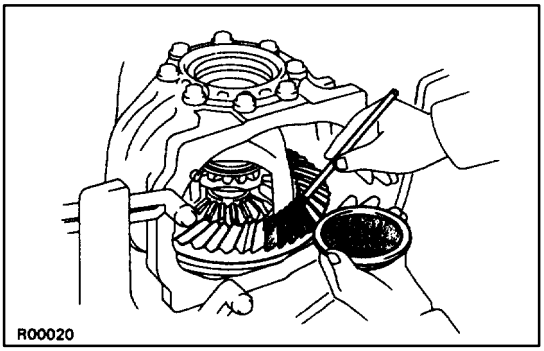

16. INSPECT TOOTH CONTACT PATTERN

(a) Coat 3 or 4 teeth at three different position on the ring gear with red lead.
(b) Hold the companion flange firmly and rotate the ring gear in both directions.
(c) Inspect the tooth contact pattern.

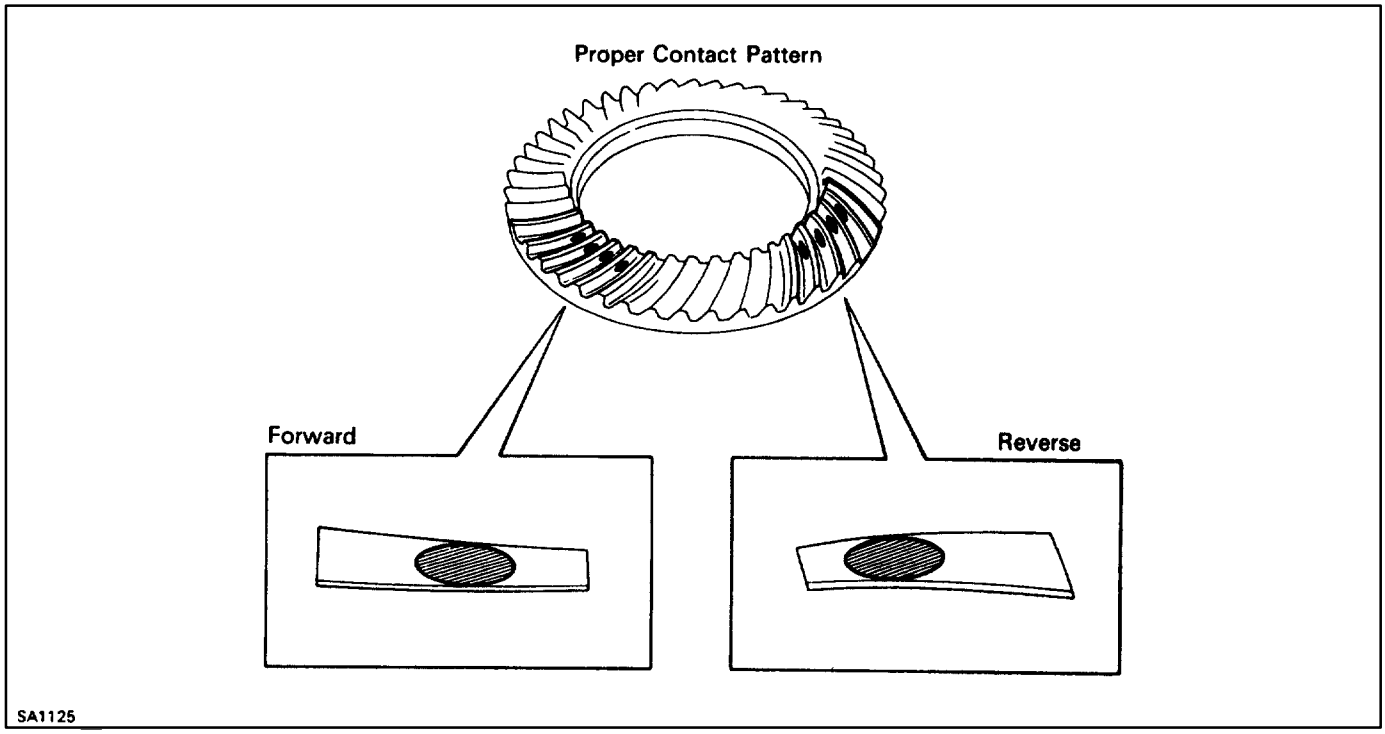

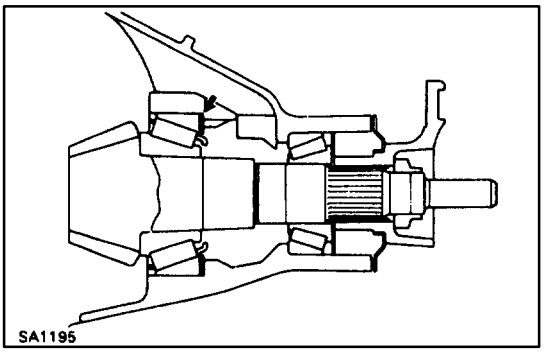

If tooth contact pattern is not correct, replace the adjusting washer installed on the front of the drive pinion rear bearing to adjust it.
NOTICE: Be sure to always use a new part when replacing adjusting washer.
HINT: Refer to the table below for selection of the adjusting washer.

WhereEverybodyKnowsYourName

Tooth contact pattern		Adjusting washer selection	
Forward	Reverse		
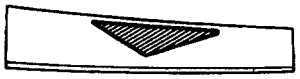 SA1117	SA1121	+ 0.08 mm (+ 0.0031 in.)	Replacing the washer with one 0.08 mm (0.0031 in.) thicker will give proper contact pattern.
SA1118	SA1124	+ 0.14 mm (+ 0.0055 in.)	Replacing the washer with one 0.14 mm (0.0055 in.) thicker will give proper contact pattern.
SA1119	SA1123	– 0.08 mm (– 0.0031 in.)	Replacing the washer with one 0.08 mm (0.0031 in.) thinner will give proper contact pattern.
SA1120	SA1122	– 0.14 mm (– 0.0055 in.)	Replacing the washer with one 0.14 mm (0.0055 in.) thinner will give proper contact pattern.

HINT: Adjust washer in 42 (different thicknesses in 0.01 mm (0.004 in.) unit are available.

Adjusting washer thickness: mm (in.)

No.	Thickness	No.	Thickness	No.	Thickness	No.	Thickness
87	1.87 (0.0736)	98	1.98 (0.0780)	09	2.09 (0.0823)	20	2.20 (0.0866)
89	1.89 (0.0744)	00	2.00 (0.0787)	11	2.11 (0.0831)	22	2.22 (0.0874)
90	1.90 (0.0748)	01	2.01 (0.0791)	12	2.12 (0.0835)	23	2.23 (0.0878)
91	1.91 (0.0752)	02	2.02 (0.0795)	13	2.13 (0.0839)	24	2.24 (0.0882)
92	1.92 (0.0756)	03	2.03 (0.0799)	14	2.14 (0.0843)	25	2.25 (0.0886)
93	1.93 (0.0760)	04	2.04 (0.0803)	15	2.15 (0.0846)	26	2.26 (0.0890)
94	1.94 (0.0764)	05	2.05 (0.0807)	16	2.16 (0.0850)	27	2.27 (0.0894)
95	1.95 (0.0768)	06	2.06 (0.0811)	17	2.17 (0.0854)	28	2.28 (0.0898)
96	1.96 (0.0772)	07	2.07 (0.0815)	18	2.18 (0.0858)		
97	1.97 (0.0776)	08	2.08 (0.0819)	19	2.19 (0.0862)		

17. **REMOVE DIFFERENTIAL RETAINER**
    (See page SA–88)
18. **REMOVE DIFFERENTIAL CASE**
    (See page SA–88)
19. **REMOVE DRIVE PINION**
    (See page SA–89)

WhereEverybodyKnowsYourName

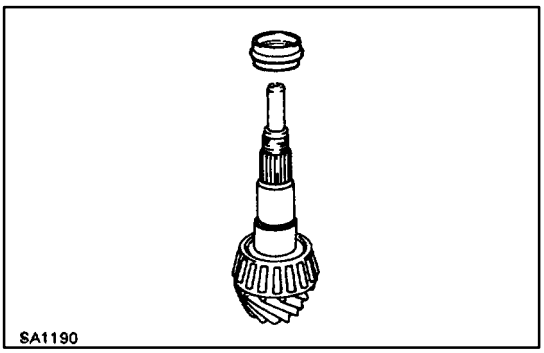

20. INSTALL SPACER ON DRIVE PINION

Install a new spacer on the drive pinion.

21. INSTALL DRIVE PINION AND FRONT BEARING

(See page SA–96)

22. INSTALL OIL SLINGER

(See page SA–96)

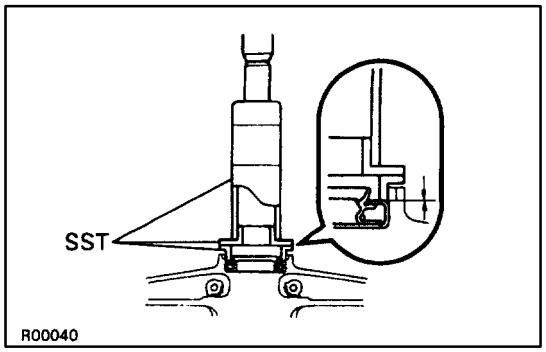

23. INSTALL OIL SEAL

(a) Apply the MP grease to a new oil seal lip.

(b) Using SST, install a new oil seal until its end is flash with the surface of the differential carrier.

SST 09316–60010 (09316–00010, 09316–00040)
09502–12010

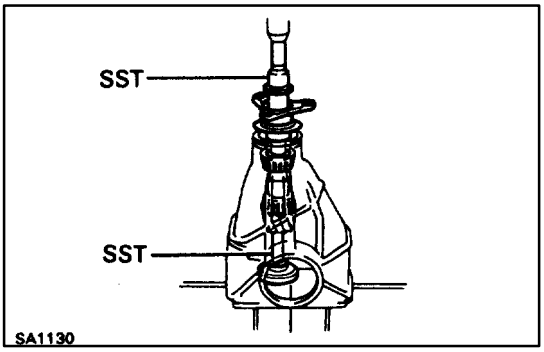

24. INSTALL COMPANION FLANGE

Using SST and a press, install the companion flange.

SST 09223–63010, 09325–40010

NOTICE: Be careful not to damage the oil seal.

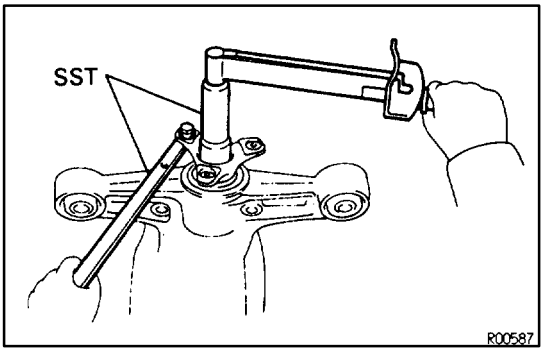

25. ADJUST DRIVE PINION PRELOAD

(a) Coat the threads and flange of a new nut with hypoid gear oil for LSD.

(b) Using SST, tighten the nut.

SST 09229–55010, 09330–00021

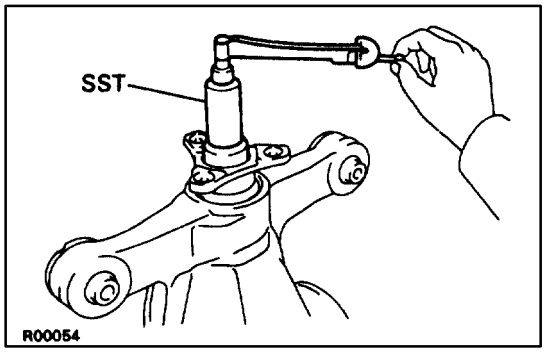

(c) Using SST and a torque wrench, measure the drive pinion preload.

SST 09229–55010

Preload (at starting):

New bearing

1.2 – 1.8 N·m (12.4 – 18.4 kgf·cm, 10.8 – 16.0 in.·lbf)

Reused bearing

0.5 – 0.8 N·m (5.10 – 8.0 kgf·cm, 4.3 – 6.9 in.·lbf)

WhereEverybodyKnowsYourName

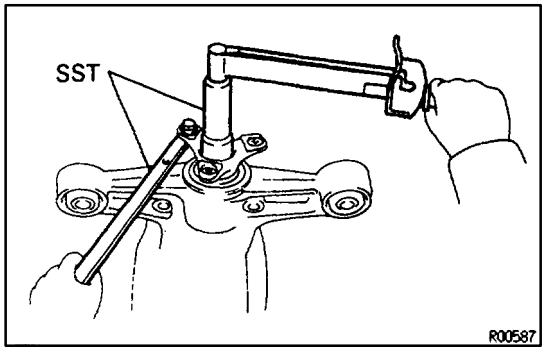

- If the preload is greater than the specification, replace the spacer.
- If the preload is less than the specification, retighten the nut 13 NVm (130 kgfVcm, 9 ftVlbf) at a time until the specified preload is reached.

Maximum torque:

490 N·m (5,000 kgf·cm, 362 ft·lbf)

If the maximum torque is exceeded while retightening the nut, replace the spacer and repeat the preload procedure. Do not back off the nut to reduce the preload.

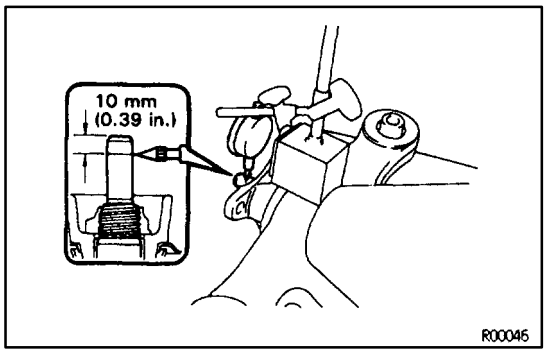

26. CHECK RUNOUT OF DRIVE PINION SHAFT

Measure the runout of the drive pinion shaft at a point 10 mm (0.39 in.) from the end of the shaft.

Maximum runout:

0.08 mm (0.0031 in.)

27. INSTALL DIFFERENTIAL CASE IN CARRIER

(See page SA–97)

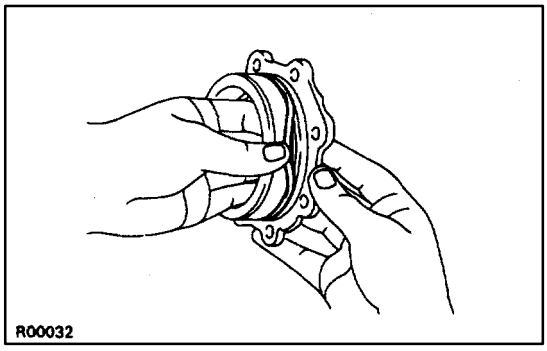

28. INSTALL O–RING

(a) Coat a new O–ring with hypoid gear oil.

(b) Install the O–ring to the carrier retainer.

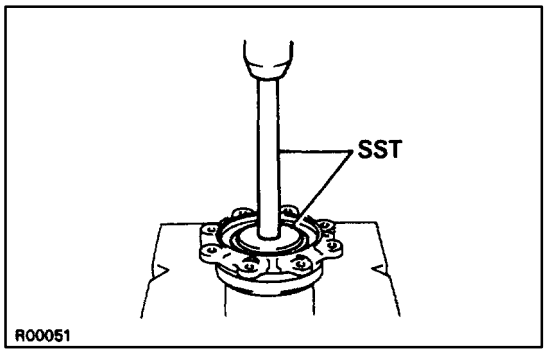

29. INSTALL OIL SEAL

(a) Using SST and a press, install a new oil seal to the carrier retainer.

SST 09608–32010, 09608–35014 (09608–06020)

(b) Coat the MP grease to the oil seal lip.

30. INSTALL SIDE BEARING RETAINER

(See page SA–97)

31. RECHECK BACKLASH, TOTAL PRELOAD AND TOOTH CONTACT PATTERN

WhereEverybodyKnowsYourName

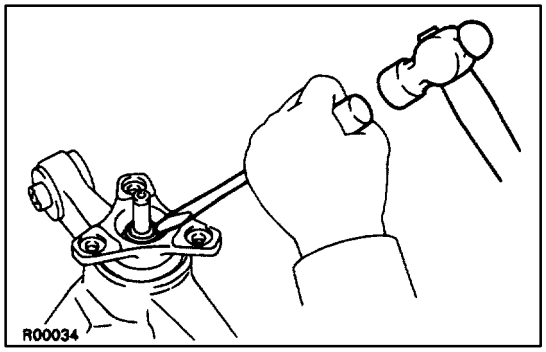

32. STAKE DRIVE PINION NUT

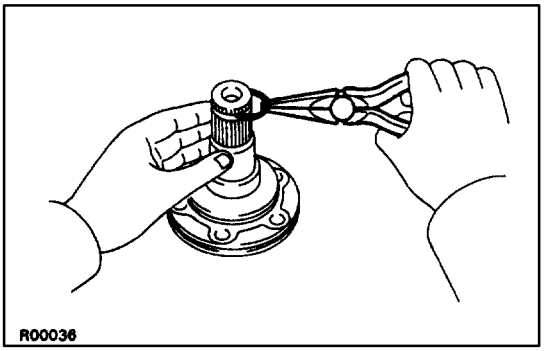

33. INSTALL SNAP RING TO SIDE GEAR SHAFT

(a) Install a new snap ring to the shaft.

(b) Coat the MP grease to the snap ring.

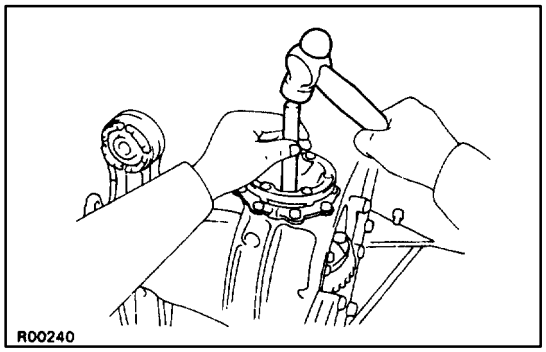

34. INSTALL SIDE GEAR SHAFTS

Using a hammer and brass bar install the side gear shafts.

HINT: Whether or not the side gear shaft is making contact with the pinion shaft can be known by the sound or feeling when driving it in.

NOTICE: Be careful not to damage the oil seal.

35. REMOVE DIFFERENTIAL CARRIER FROM OVERHAUL STAND, ETC.

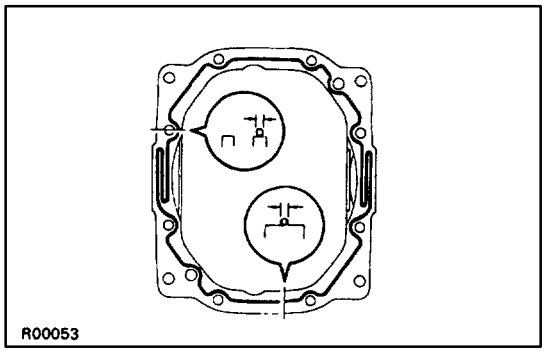

36. INSTALL DIFFERENTIAL CARRIER COVER

(a) Clean the contact surfaces of the carrier and cover of any residual packing material using cleaner.

(b) Coat the seal packing to the carrier or cover.

Seal packing:

Part No. 08826–00110, THREE BOND 1389 or equivalent

NOTICE: After installing the cover, wait at least 1 hour before filling it with oil or running the vehicle.

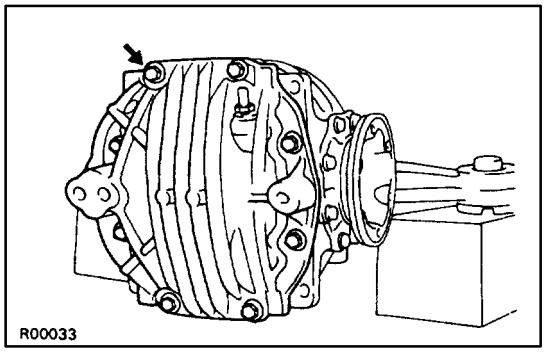

(c) Install the carrier cover to the carrier with the 8 bolts.

Torque: 47 N·m (475 kgf·cm, 34 ft·lbf)

(d) Install the breather plug.

Torque: 21 N·m (210 kgf·cm, 15 ft·lbf)

WhereEverybodyKnowsYourName

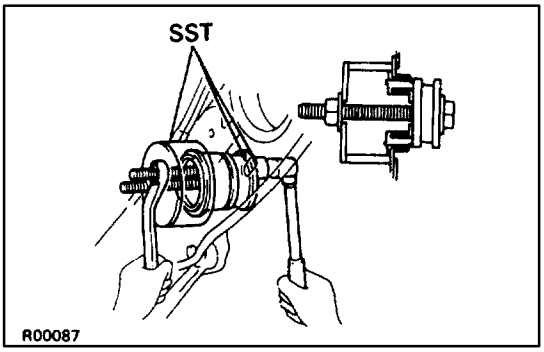

DIFFERENTIAL MOUNTING CUSHION DIFFERENTIAL MOUNT CUSHION REPLACEMENT

SA0V7–03

1. REMOVE DIFFERENTIAL
(See page SA–82)

2. REMOVE DIFFERENTIAL MOUNT CUSHION
Using SST, remove the differential mount cushion.
SST 09316–12010, 09570–24010

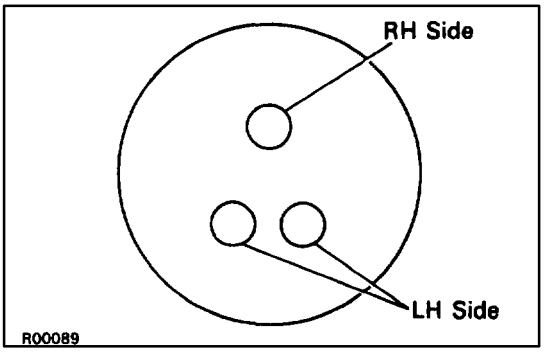

NOTICE:
- **When driving out the mount cushion, be careful not to touch the member with the SST.**
- **Align the SST straight so that the bolt of the SST parallels the center line of the mount cushion.**
- **When installing the bolts to the LH and RH differential mount cushions, make sure the bolts are passed through the correct holes in the SST, as shown in the illustration.**

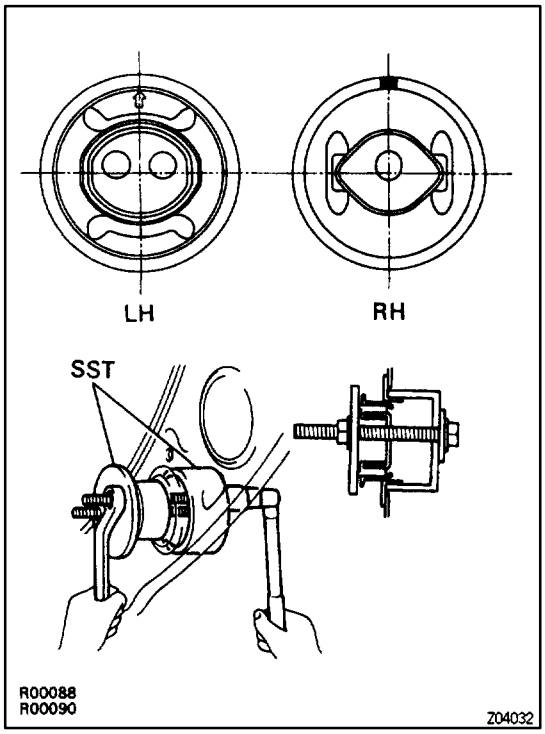

3. INSTALL DIFFERENTIAL MOUNT CUSHION
Using SST, install the cushion so that the marks are positioned, as shown in the illustration.
SST 09570–24010
NOTICE:
- Do not make a mistake with left and right sides or top and bottom.
- Set the SST after temporarily installing the differential mount cushion into the member so as not to be installed at an angle.
- To confirm that the differential mount cushion is aligned straight in relation to the member, check that the SST is fully in contact with all of the cushion.

4. INSTALL DIFFERENTIAL
(See page SA–83)

WhereEverybodyKnowsYourName

REAR SUSPENSION

SA0A4–07

DESCRIPTION

The suspension is double wishbone type at the rear. Optimal suspension geometry and wheel alignment are achieved through analysis of the component design, materials and characteristics to provide a high level of controllability and riding comfort.

The support rigidity of the suspension has been realized through the adoption of the rear subframe.

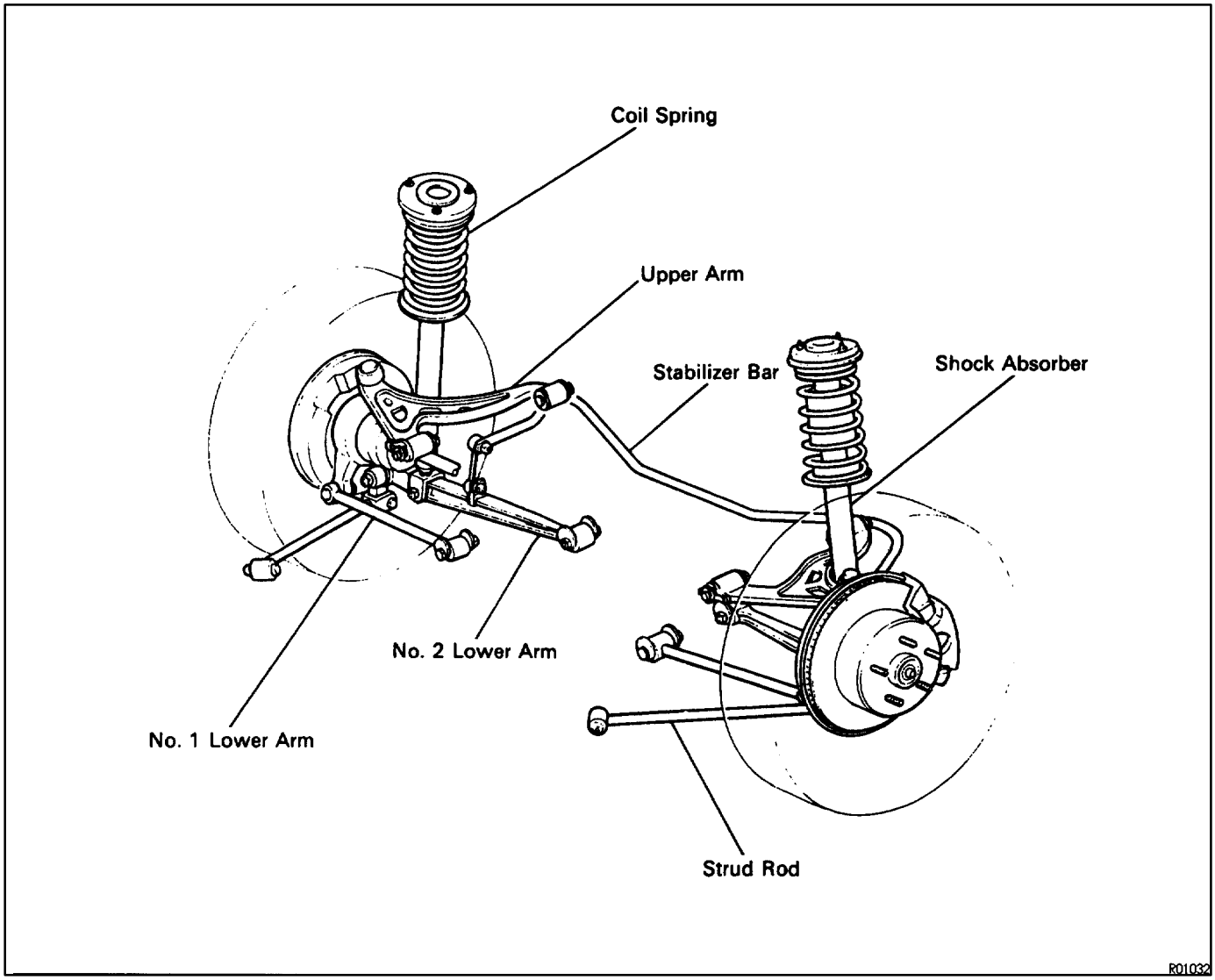

WhereEverybodyKnowsYourName

PREPARATION

SST (SPECIAL SERVICE TOOLS)

SA0A5–02

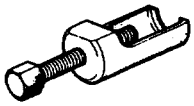	09610–20012	Pitman Arm Puller	
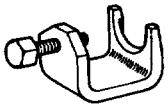	09628–10011	Ball Joint Puller	
	09628–62011	Ball Joint Puller	
	(09710–03110)	Rear Suspension Upper and Lower Arm Bushing Remover	
	(09710–03120)	Rear Suspension Upper & Lower Arm Bushing Removing Base	
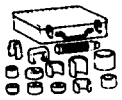	09710–30020	Suspension Bushing Tool Set	
	09727–30020	Coil Spring Compressor	

RECOMMENDED TOOLS

SA06X–03

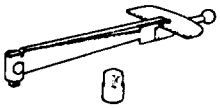	09025–00010	Small Torque Wrench	

EQUIPMENT

SA0A7–01

Torque wrench	

WhereEverybodyKnowsYourName

REAR SHOCK ABSORBER
COMPONENTS

SA0SB–05

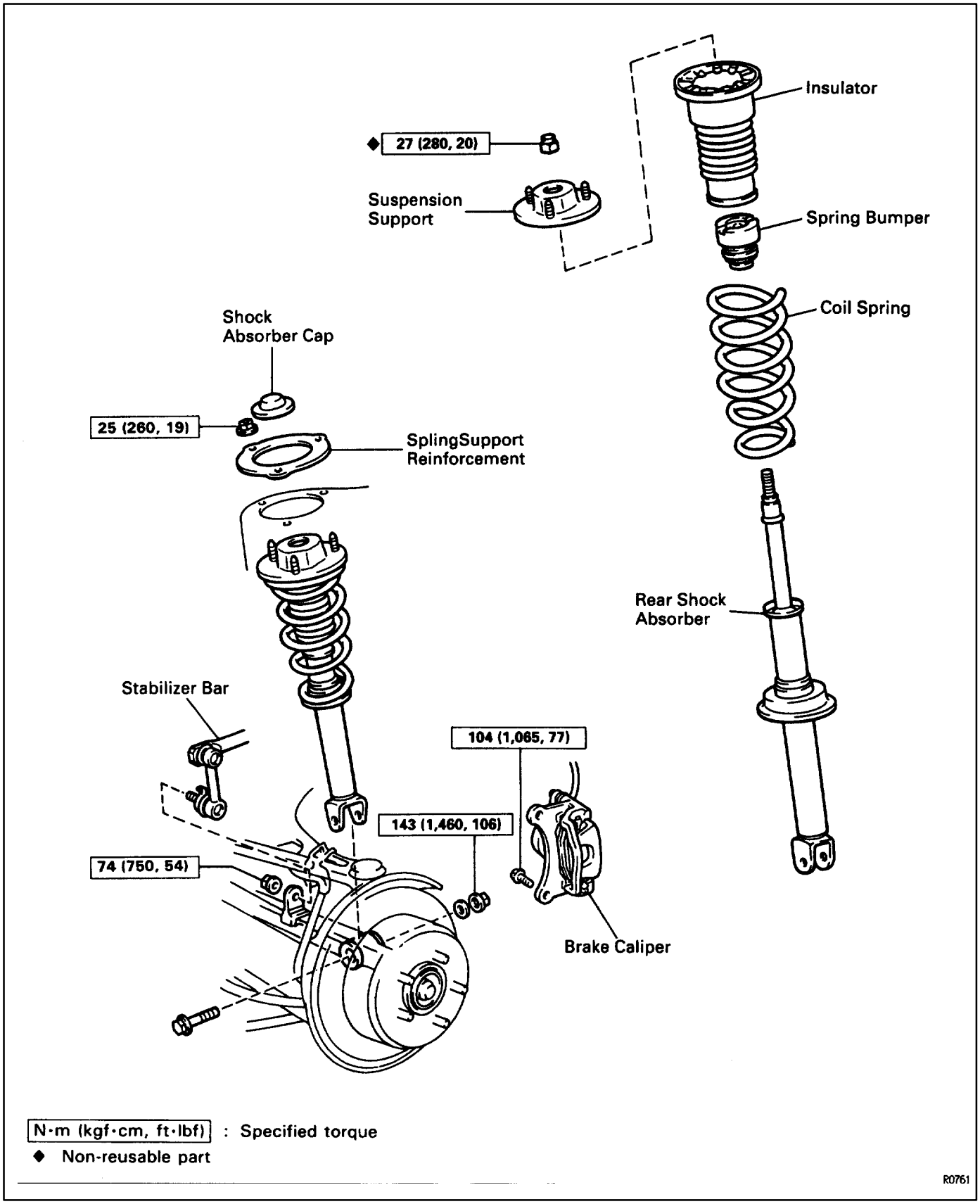

WhereEverybodyKnowsYourName

REAR SHOCK ABSORBER REMOVAL

SA0SC–02

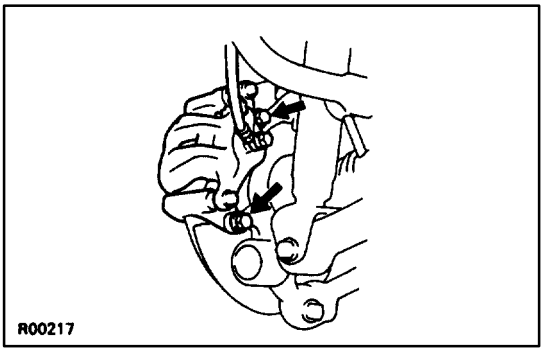

1. JACK UP VEHICLE AND REMOVE REAR WHEEL

2. REMOVE REAR BRAKE CALIPER

(a) Remove the 2 bolts and remove the brake caliper from the rear axle carrier.

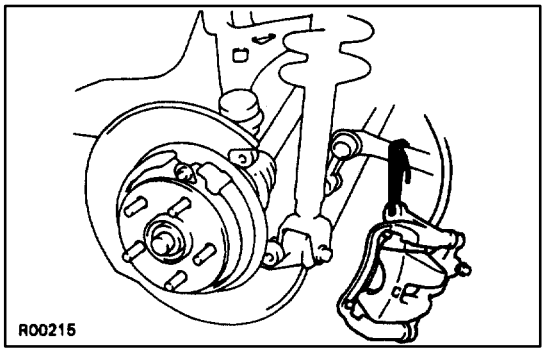

(b) Hang up the brake caliper using wire, etc.

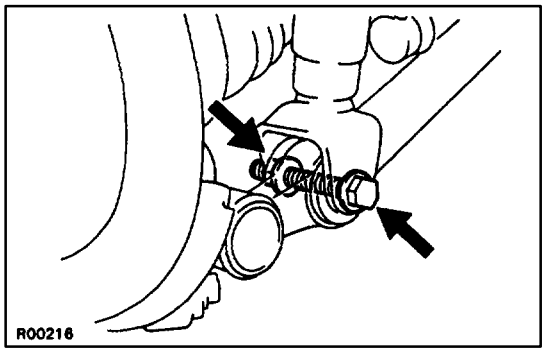

3. REMOVE SHOCK ABSORBER WITH COIL SPRING

(a) Remove the nut and bolt on lower side of the shock absorber.

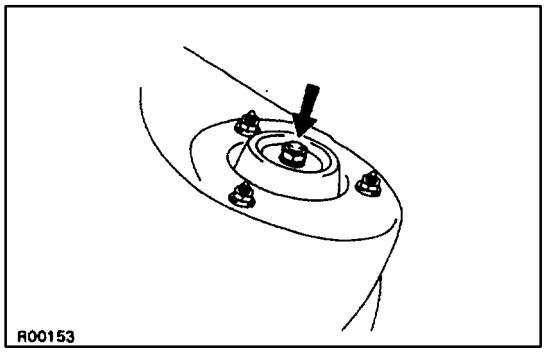

(b) Remove the absorber cap.

(c) Loosen the nut in the middle of the suspension support.
NOTICE: Only loosen the nut, do not remove it.

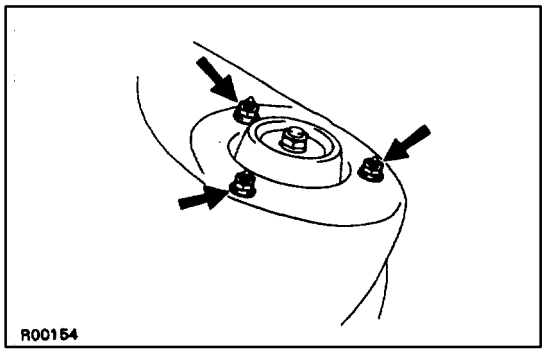

(d) Remove the 3 nuts and shock absorber with the coil spring.

WhereEverybodyKnowsYourName

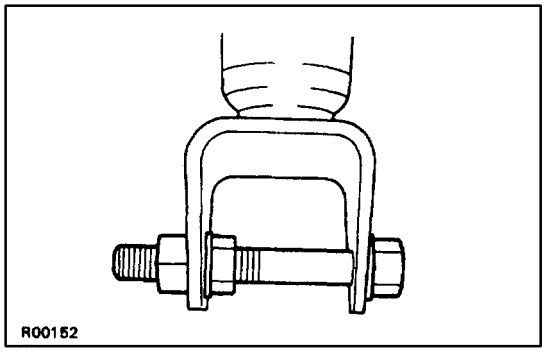

4. REMOVE SUSPENSION SUPPORT AND COIL SPRING

(a) Install a bolt and 2 nuts to the bracket at the lower portion of the shock absorber shell and secure it in a vise.

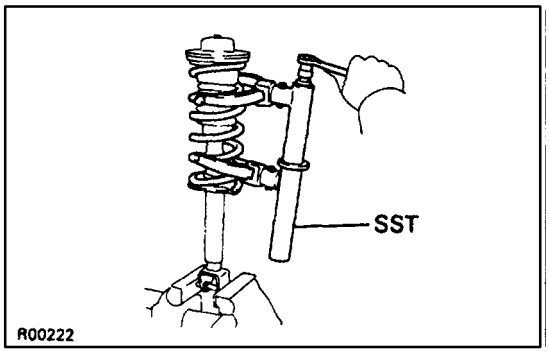

(b) Using SST, compress the coil spring.
SST 09727–30020
NOTICE: Do not use an impact wrench.
It will damage the SST.

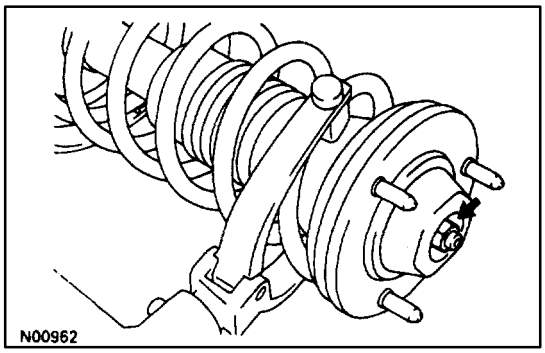

(c) Remove the suspension support nut.

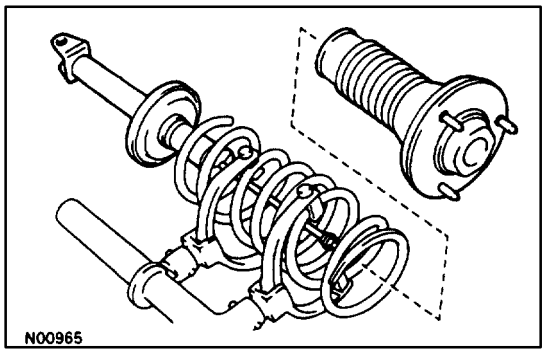

(d) Remove the suspension support, coil spring and insulator.

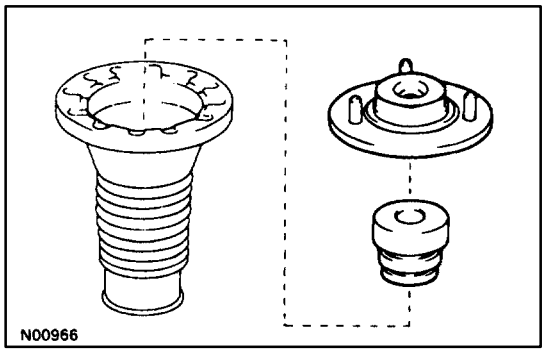

(e) Remove the insulator and spring bumper from the suspension support.

WhereEverybodyKnowsYourName

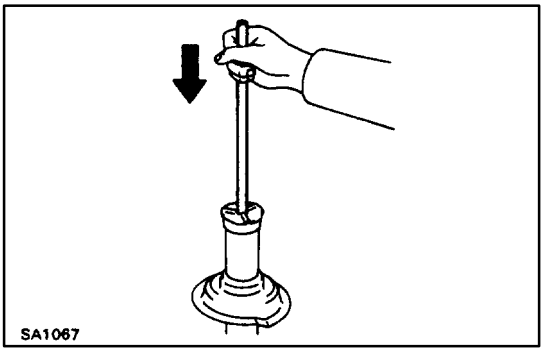

REAR SHOCK ABSORBER INSPECTION

SA0SD–03

INSPECT SHOCK ABSORBER

Compress and extend the shock absorber rod and check that there is no abnormal resistance or unusual operation sounds.

If there is any abnormality, replace the shock absorber with a new one.

NOTICE: When discarding the shock absorber, use the following procedure.

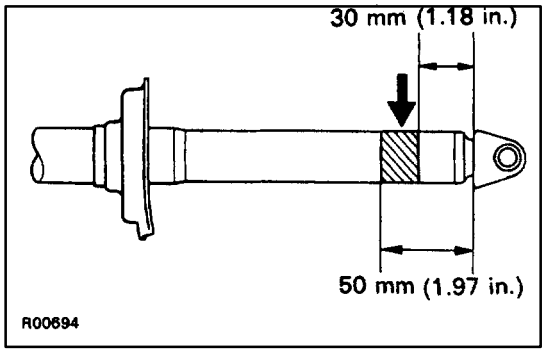

REAR SHOCK ABSORBER DISPOSAL

SA0SE–03

1. **FULLY EXTEND SHOCK ABSORBER ROD**
2. **DRILL HOLE TO REMOVE GAS FROM CYLINDER**

Using a drill, make a hole in the cylinder, as shown to remove the gas inside.

CAUTION: The gas coming out is harmless, but be careful of chips which may fly up when drilling.

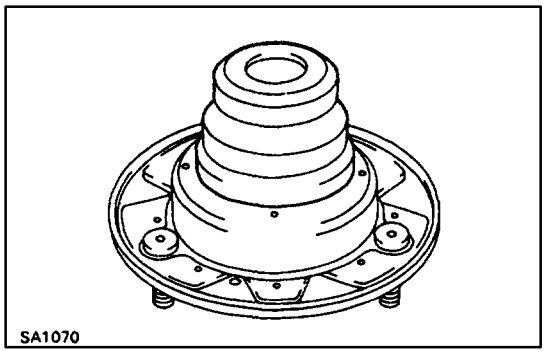

REAR SHOCK ABSORBER INSTALLATION

SA0WB–02

1. **INSTALL SUSPENSION SUPPORT AND COIL SPRING**

(a) Install the spring bumper to the suspension support.

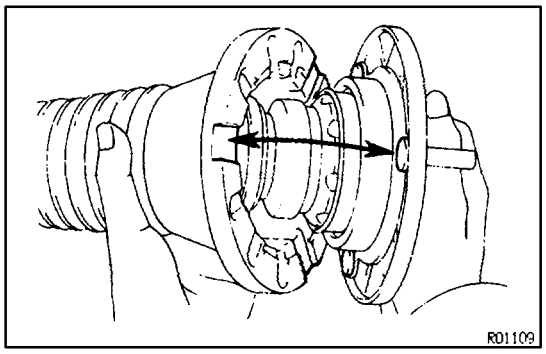

(b) Install the insulator to the suspension support.

HINT: Match the bolt of the suspension support with the cut–off part of the insulator.

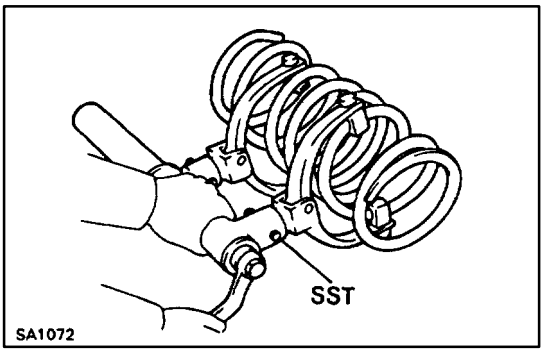

(c) Using SST, compress the coil spring.

SST 09727–30020

NOTICE: Do not use an impact wrench.
It will damage the SST.

WhereEverybodyKnowsYourName

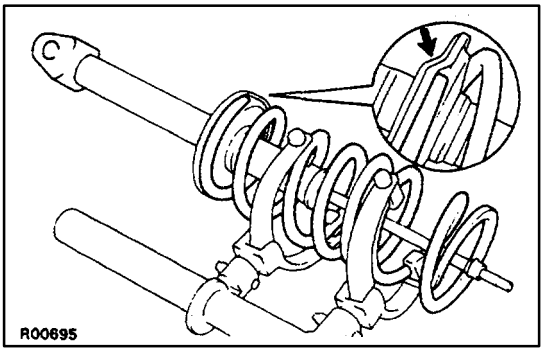

(d) Install the coil spring to the shock absorber.
HINT: Fit the lower end of the coil spring into the gap of the spring seat of the shock absorber.

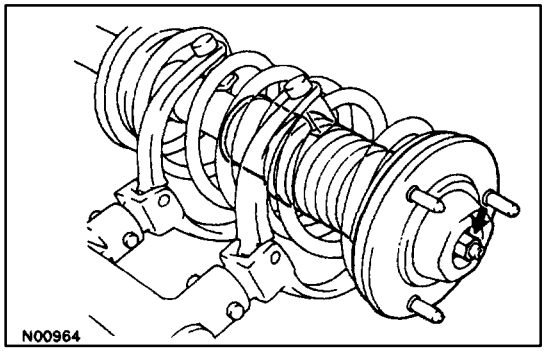

(e) Install the suspension support to the rod and temporarily tighten a new nut.

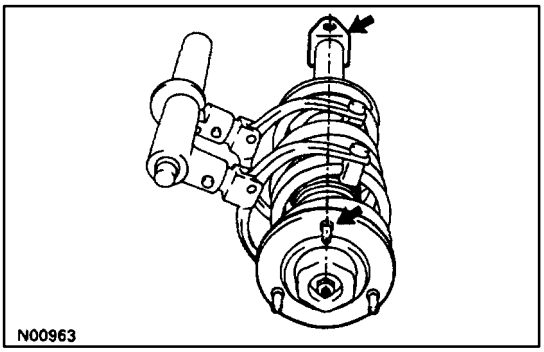

(f) Rotate the suspension support so that the rod and one of the bolts on suspension support are aligned with the lower bushing.
(g) Remove the SST.
HINT: After removing the SST, again check the direction of the suspension support.

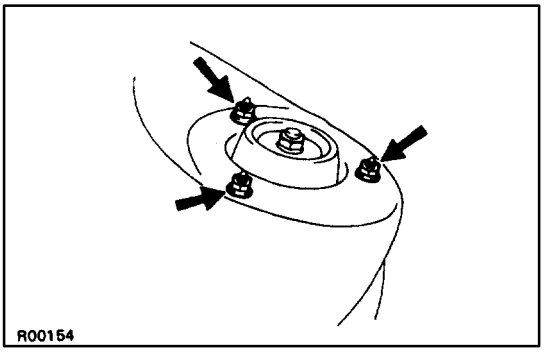

2. INSTALL SHOCK ABSORBER WITH COIL SPRING TO VEHICLE

(a) Install the shock absorber with the coil spring to the vehicle with the 3 nuts.
Torque: 25 N·m (260 kgf·cm, 19 ft·lbf)

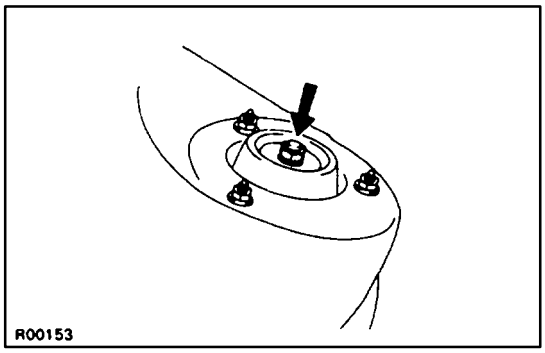

(b) Torque the temporarily tightened nut in the middle of the suspension support.
Torque: 27 N·m (280 kgf·cm, 20 ft·lbf)

WhereEverybodyKnowsYourName

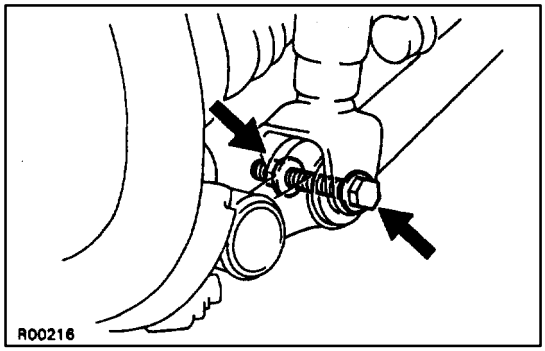

3. INSTALL SHOCK ABSORBER TO REAR AXLE CARRIER

(a) Install the bolt from the rear vehicle.

(b) Temporarily install the nut.

4. INSTALL REAR BRAKE CALIPER

Install the brake caliper to the rear axle carrier with the 2 bolts.

Torque: 104 N·m (1,065 kgf·cm, 77 ft·lbf)

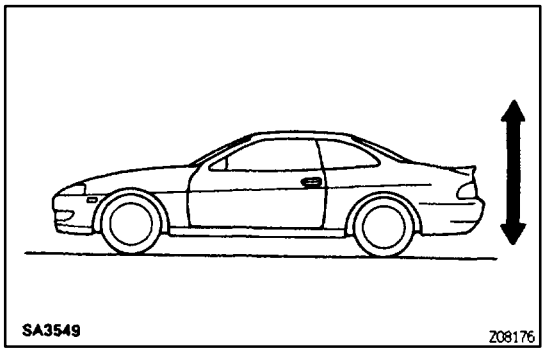

5. STABILIZE SUSPENSION

(a) Install the rear wheel and lower vehicle

(b) Bounce the vehicle up and down several times to stabilize the suspension.

(c) Jack up the vehicle and remove the rear wheel.

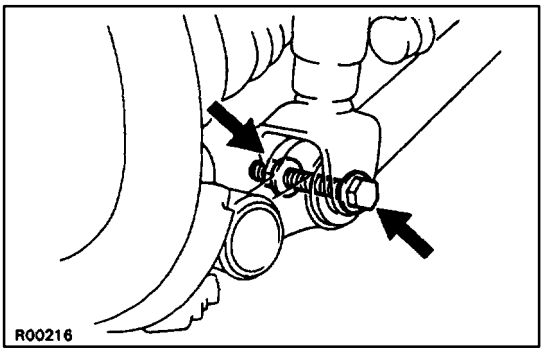

6. TIGHTEN BOLT AND NUT

(a) Support the lower arm with a jack.

(b) Tighten the bolt and nut.

Torque: 143 N·m (1,460 kgf·cm, 106 ft·lbf)

7. INSTALL REAR WHEEL AND LOWER VEHICLE

Torqre: 137 N·m (1,050 kgf·cm, 101 ft·lbf)

8. CHECK REAR WHEEL ALIGNMENT

(See page SA–10)

WhereEverybodyKnowsYourName

UPPER SUSPENSION ARM
COMPONENTS

SA0SG–04

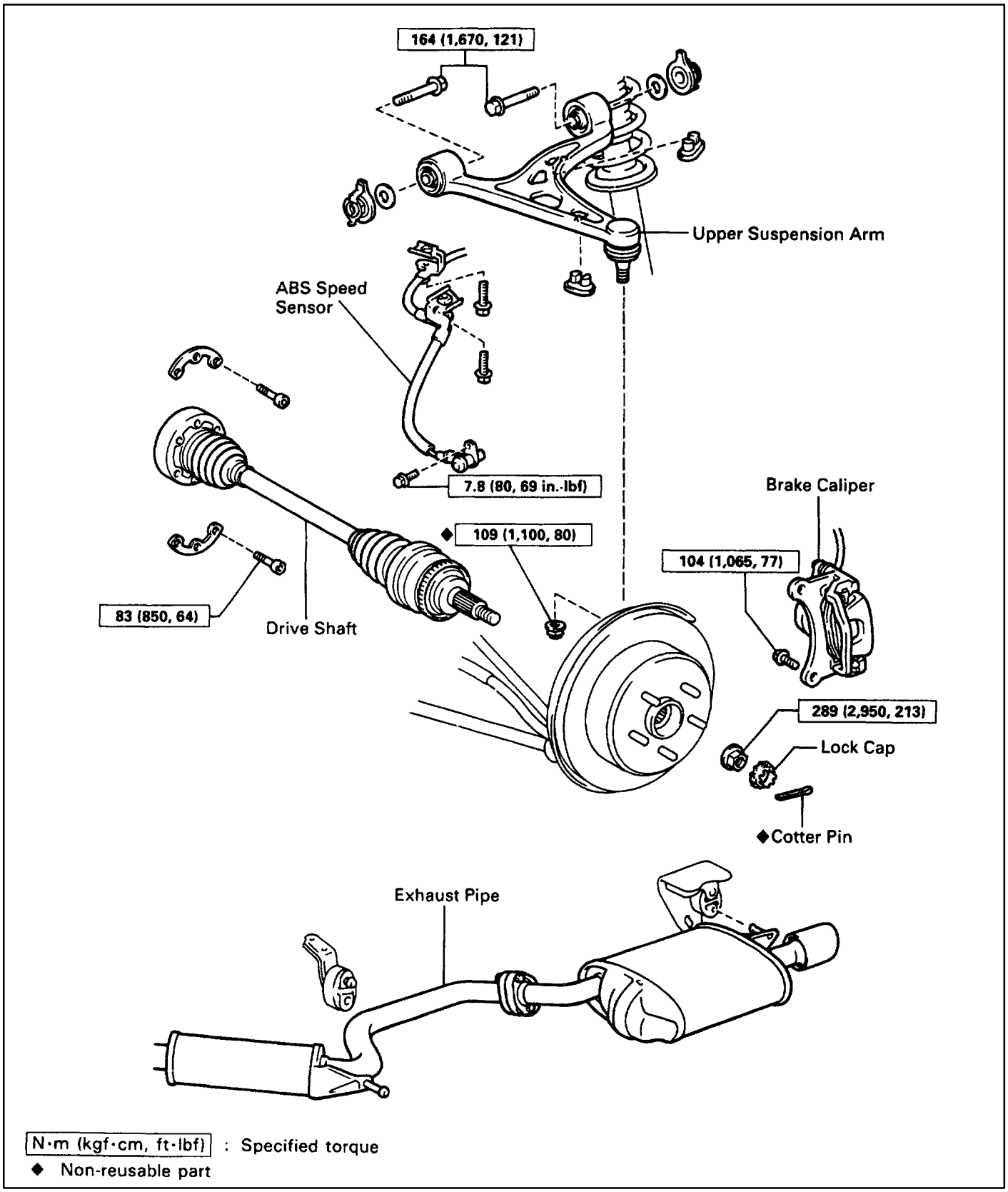

WhereEverybodyKnowsYourName

REAR UPPER ARM REMOVAL

SA1A6–01

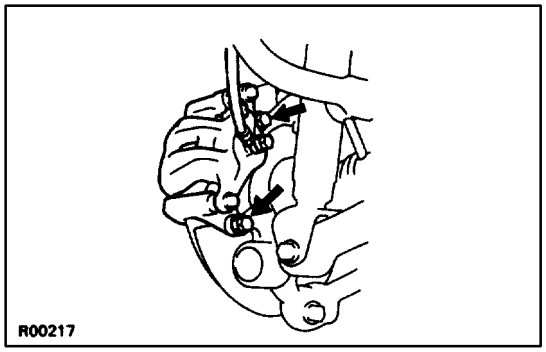

1. JACK UP VEHICLE AND REAR WHEEL

2. REMOVE REAR DRIVE SHAFT

(See page SA–66)

3. REMOVE REAR BRAKE CALIPER

(a) Remove the 2 bolts and brake caliper from the rear axle hub.

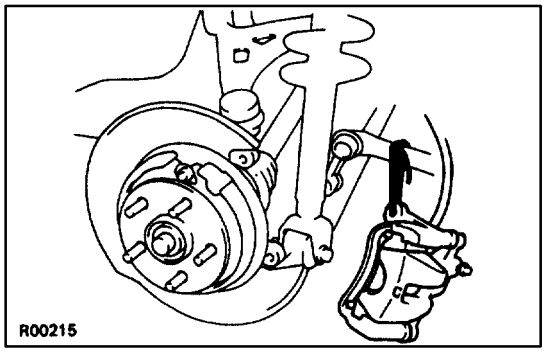

(b) Hang up the brake caliper using wire, etc.

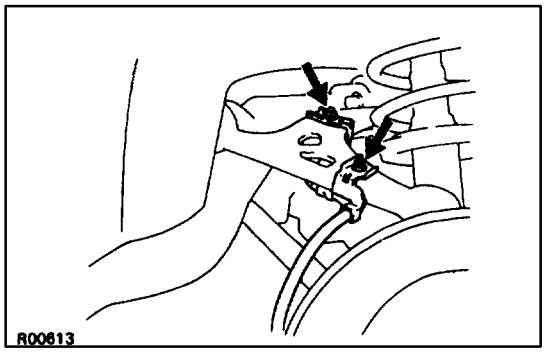

4. REMOVE ABS WIRE HARNESS CLAMP

Remove the 2 bolts and ABS wire harness clamp.

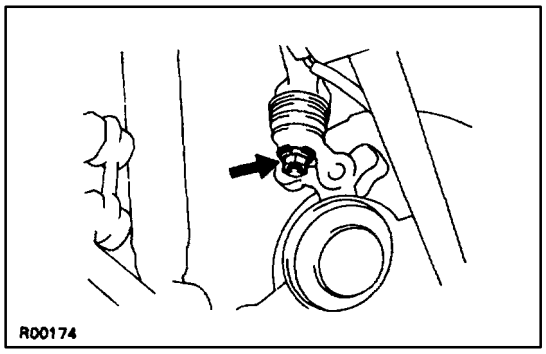

5. REMOVE UPPER ARM

(a) Remove the nut.

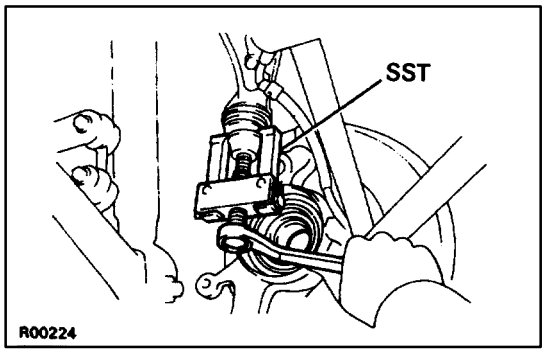

(b) Using SST, disconnect the upper arm to the axle carrier.

SST 09628–62011

NOTICE: Be careful not to damage the dust cover.

WhereEverybodyKnowsYourName

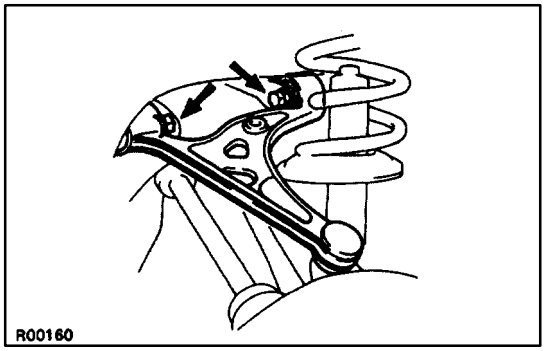

(c) Remove the bolts and nuts and the upper arm.

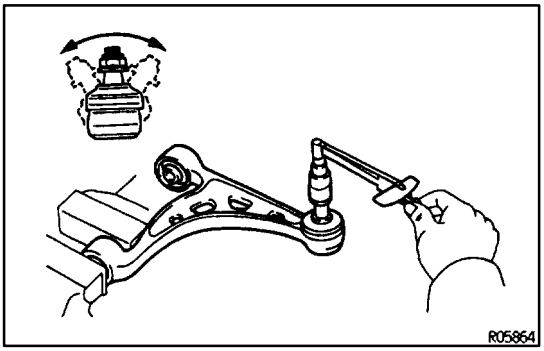

UPPER SUSPENSION ARM BALL JOINT INSPECTION

SA0SJ–04

INSPECT BALL JOINT FOR ROTATION CONDITION

(a) Flip the ball joint stud back and forth 5 times, as shown in the illustration, before installing the nut.

(b) Using torque wrench, turn the nut continuously one turn every 2–4 seconds and take the torque reading on the 5th turn.

Torque (turning):

1.0 – 3.4 N·m (10 – 35 kgf·cm, 9 – 30 in.·lbf)

If not with in specification, replace the upper suspension arm.

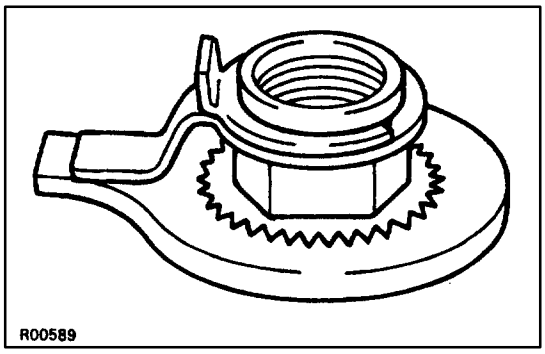

UPPER ARM INSTALLATION

SA1A7–01

HINT: If replace the nut, assemble the nut and E–ring to the washer with lock protrusion before install.

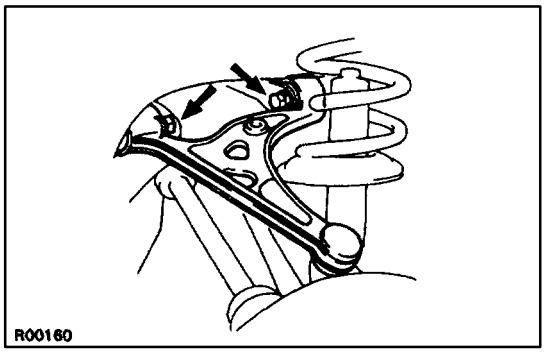

1. INSTALL UPPER ARM

(a) Install the upper arm to the body with the bolts and nuts.

HINT: Install the tip of the nut lock facing down.

Torque: 164 N·m (1,670 kgf·cm, 121 ft·lbf)

WhereEverybodyKnowsYourName

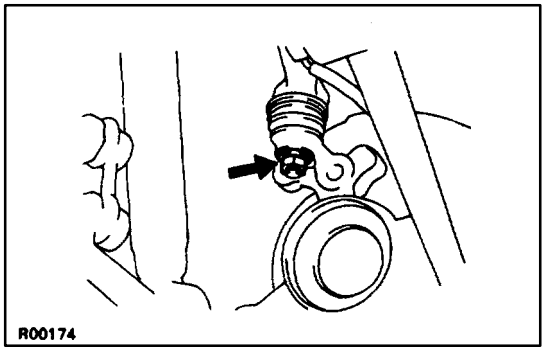

(b) Connect the upper arm to the axle carrier with a new nut.
Torque: 109 N·m (1,100 kgf·cm, 80 ft·lbf)

2. INSTALL REAR DRIVE SHAFT
(See page SA–66)

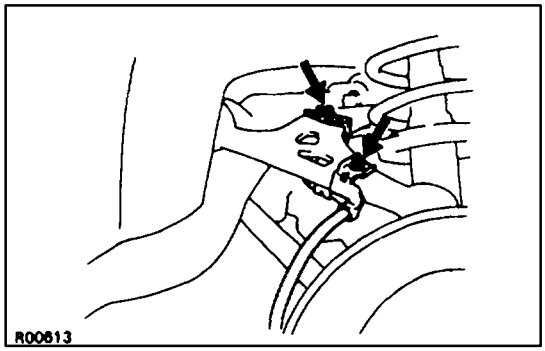

3. INSTALL ABS WIRE HARNESS CLAMP
Connect the ABS wire harness clamp to the upper arm with the two bolts.

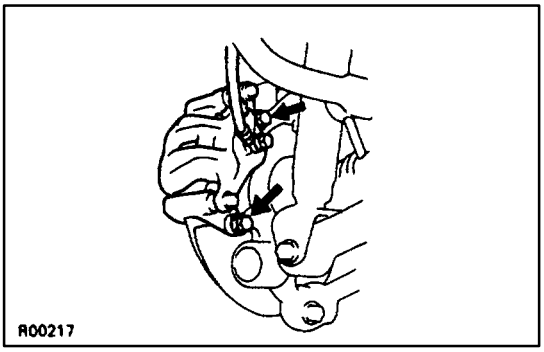

4. INSTALL BRAKE CALIPER
Install the brake caliper to the rear axle carrer with the 2 bolts.
Torque: 104 N·m (1,065 kgf·cm, 77 ft·lbf)

5. INSTALL REAR WHEEL AND LOWER VEHICLE

WhereEverybodyKnowsYourName

LOWER SUSPENSION ARM AND STRUT ROD

COMPONENTS

SA0SL–03

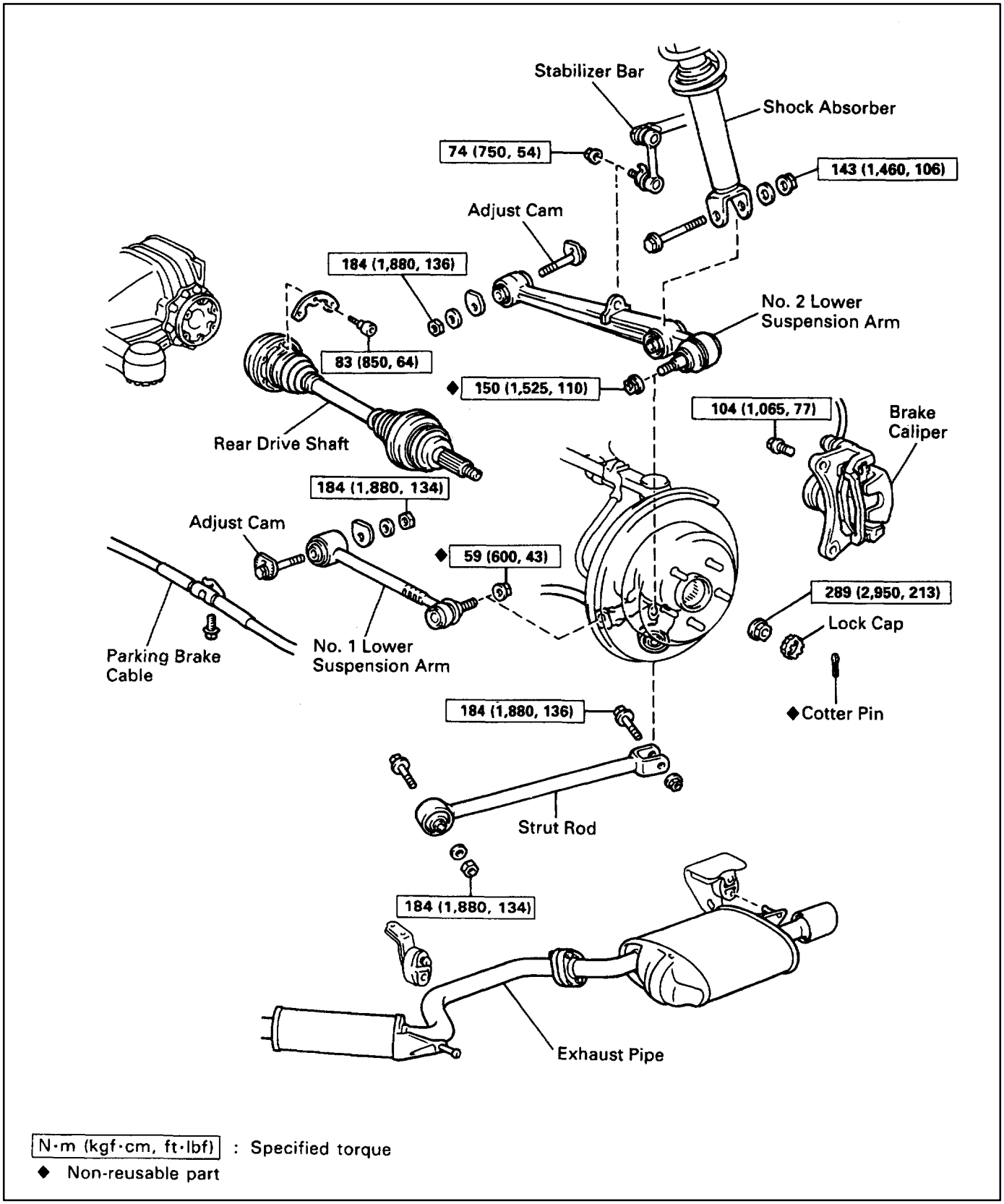

N·m (kgf·cm, ft·lbf) : Specified torque

◆ Non-reusable part

WhereEverybodyKnowsYourName

LOWER SUSPENSION ARMS AND STRUT ROD REMOVAL

SA1A8–01

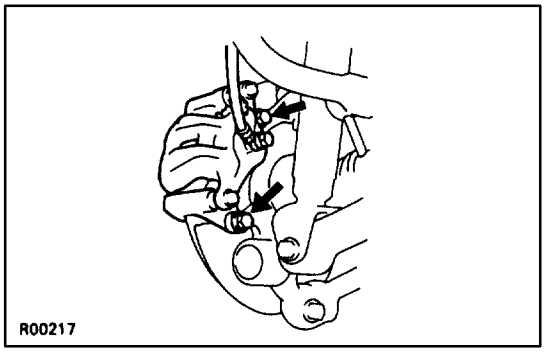

1. JACK UP VEHICLE AND REMOVE REAR WHEEL

2. REMOVE BRAKE CALIPER AND DISC

(a) Remove the 2 bolts and brake caliper from the axle hub.

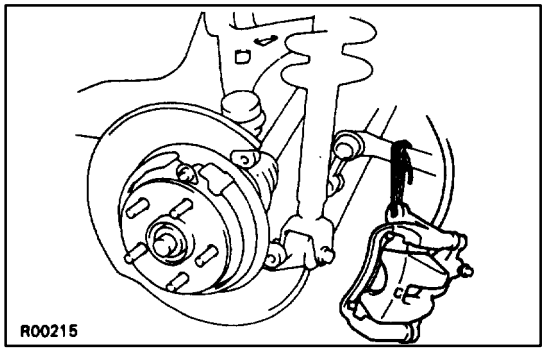

(b) Hang up the brake caliper using wire, etc.

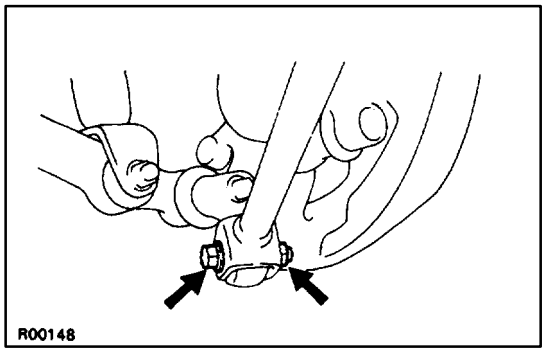

3. REMOVE STRUT ROD

(a) Remove the bolt and nut, disconnect the strut rod from the rear axle carrier.

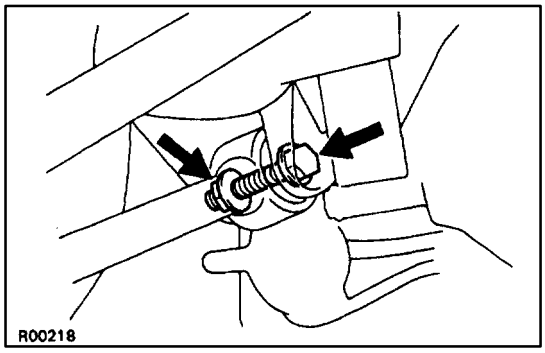

(b) Remove the bolt and nut and the strut rod.

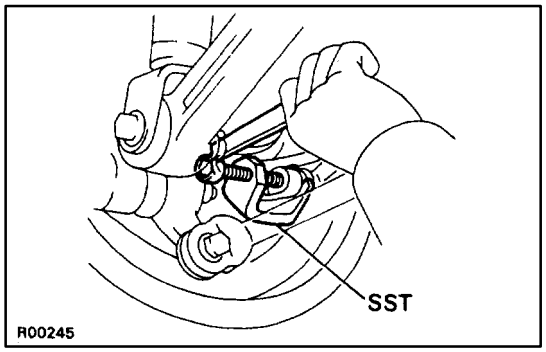

4. REMOVE NO.1 LOWER SUSPENSION ARM

(a) Remove the nut.

(b) Using SST, disconnect the lower suspension arm from the axle carrier.

SST 09628–10011

NOTICE: Be careful not to damage the dust boot.

WhereEverybodyKnowsYourName

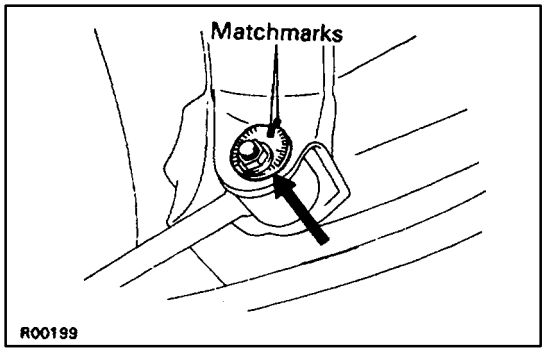

(c) Place matchmarks on the adjusting cam and body.
(d) Remove the adjusting cam and nut.
(e) Remove the lower suspension arm.

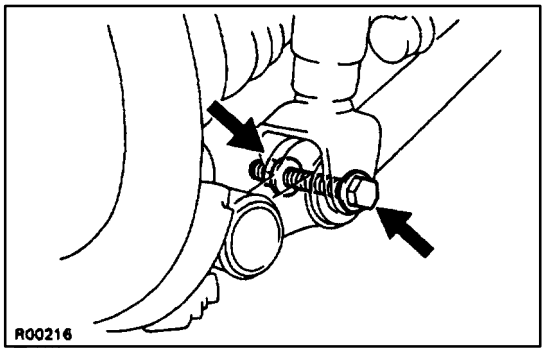

5. REMOVE NO.2 LOWER SUSPENSION ARM

(a) Remove the bolt and nut, disconnect the shock absorber.

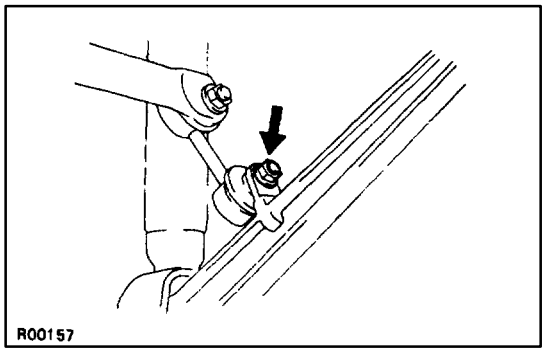

(b) Remove the nut and disconnect the stabilizer bar link.

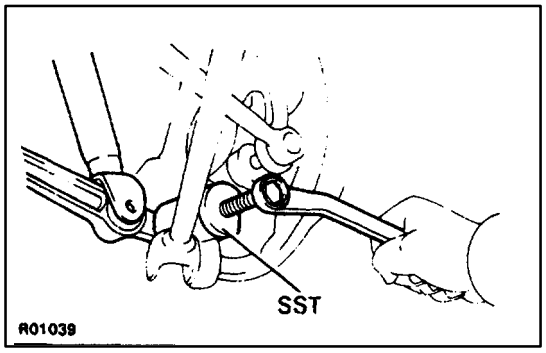

(c) Remove the nut.
(d) Using SST, disconnect the lower suspension arm from the axle carrier.
SST 09610–20012
NOTICE: Be careful not to damage the dust cover.

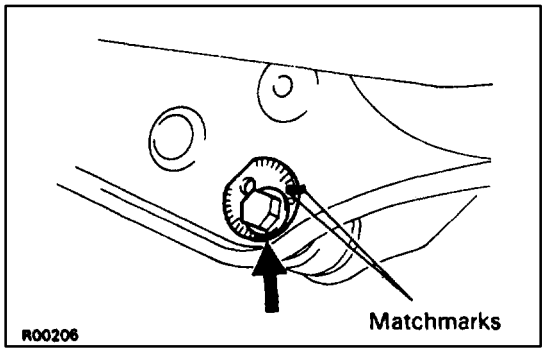

(e) Place matchmarks on the adjusting cam and body.
(f) Remove adjusting cam and nut and the lower suspension arm.

WhereEverybodyKnowsYourName

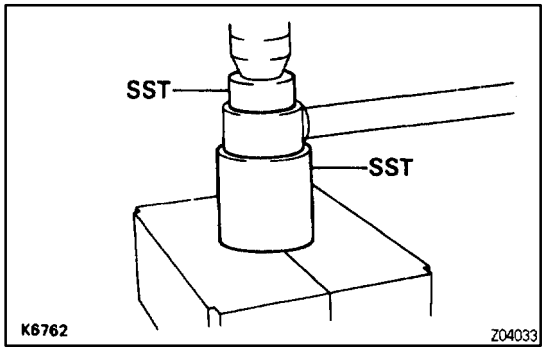

STRUT ROD BUSHING REPLACEMENT

SA0WC–01

REPLACE STRUT ROD BUSHING

Using SST, replace the strut rod bushing.

SST 09710–30020 (09710–03110, 09710–03120)

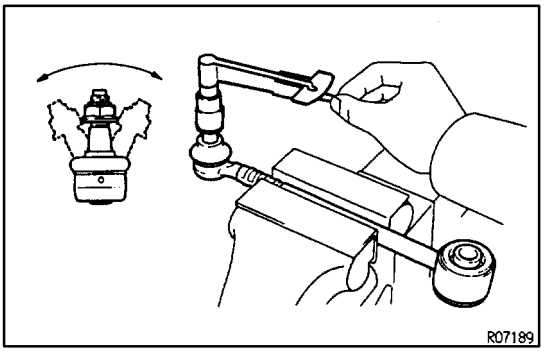

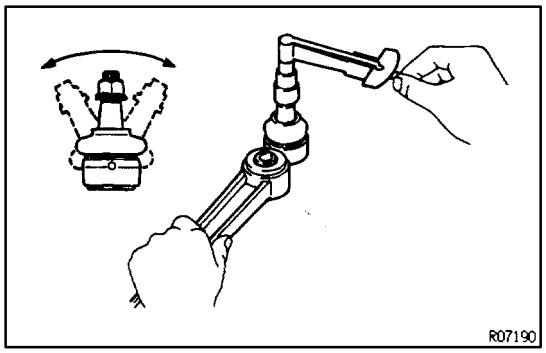

LOWER SUSPENSION ARM NO.1 AND NO. 2 BALL JOINT INSPECTION

SA0UP–02

INSPECT BALL JOINT FOR ROTATION CONDITION

(a) Flip the ball joint stud back and forth 5 times, before installing the nut.

(b) Using a torque wrench, turn the nut continuously one turn every 2–4 seconds and take the torque reading on the 5th turn.

Torque:

Lower suspension arm No.1

1.0 – 3.4 N·m (10 – 35 kgf·cm, 9 – 30 in.·lbf)

Lower suspension arm No.2

1.0 – 3.4 N·m (10 – 35 kgf·cm, 9 – 30 in.·lbf)

If not within specification, replace the lower suspension arm No.1 or/and No.2.

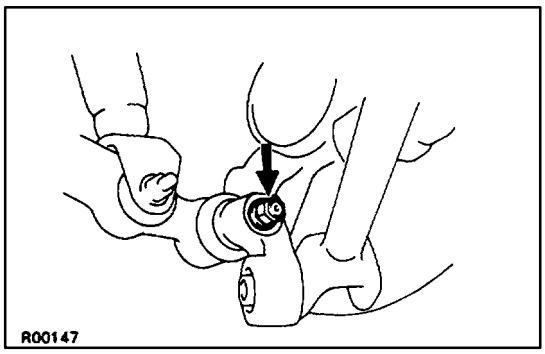

LOWER SUSPENSION ARMS AND STRUT ROD INSTALLATION

SA1A9–01

1. INSTALL NO.2 LOWER SUSPENSION ARM

(a) Install the lower suspension arm to the carrier with a new nut.
Torque: 150 N·m (1,525 kgf·cm, 110 ft·lbf)

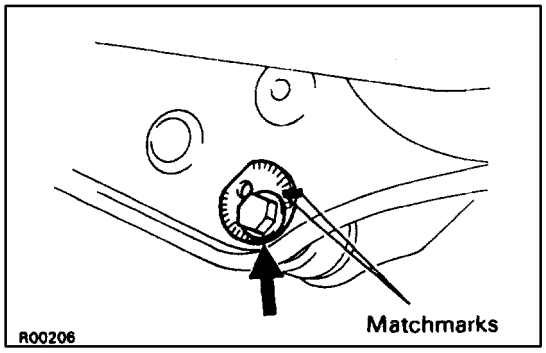

(b) Connect the lower suspension arm to the body.

(c) Temporarily install the adjusting cam and nut.

(d) Align matchmarks on the adjusting cam and body.

WhereEverybodyKnowsYourName

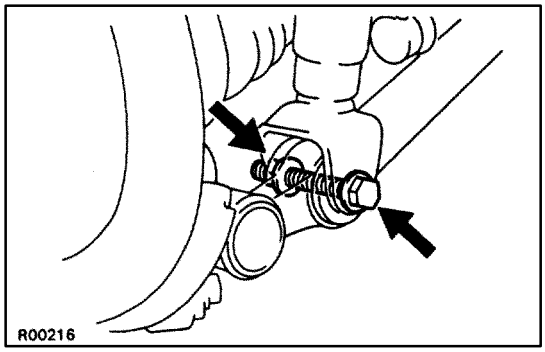

(e) Temporarily connect the shock absorber to the lower arm with the bolt and nut.

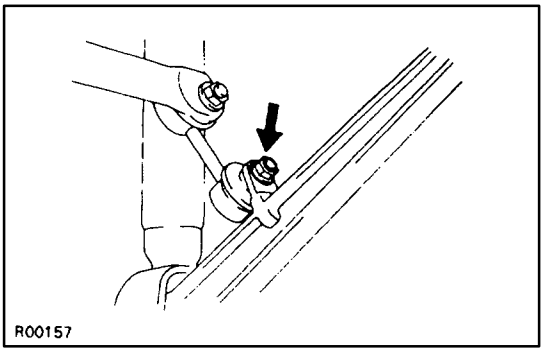

(f) Connect the stabilizer bar link to the lower suspension arm with the nut.
Torque: 74 N·m (750 kgf·cm, 54 ft·lbf)

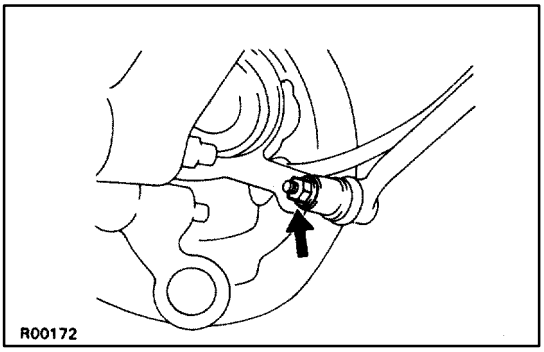

2. INSTALL NO.1 LOWER SUSPENSION ARM

(a) Install the lower suspension arm to the axle carrier with a new nut.
Torque: 59 N·m (600 kgf·cm, 43 ft·lbf)

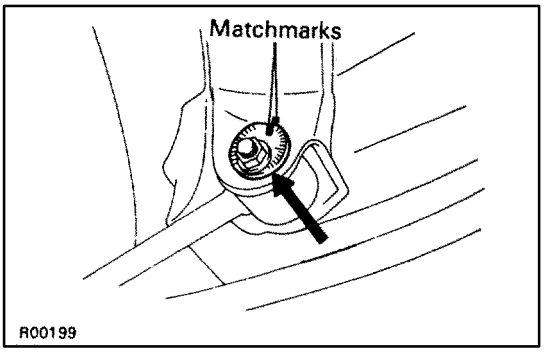

(b) Connect the lower suspension arm to the body.
(c) Temporarily install the adjusting cam and nut.
(d) Align the matchmarks on the adjusting cam and body.

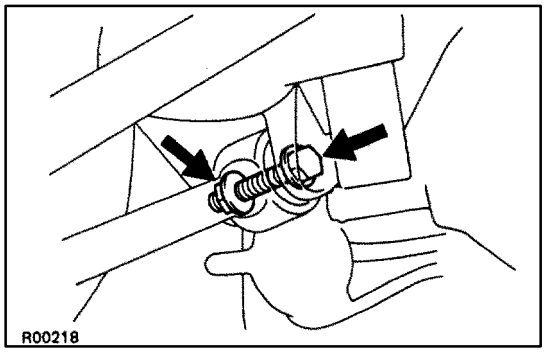

3. INSTALL STRUT ROD

(a) Temporarily install the strut rod to the body with the bolt and nut.

WhereEverybodyKnowsYourName

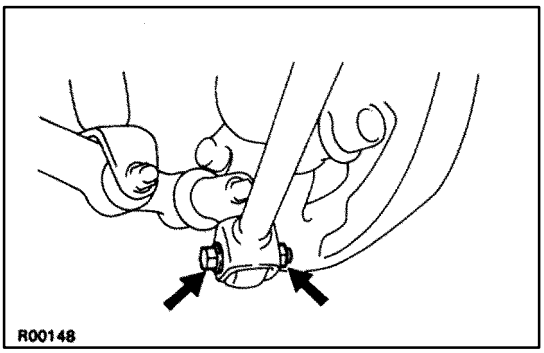

(b) Temporarily connect the strut rod to the axle carrier with the bolt and nut.

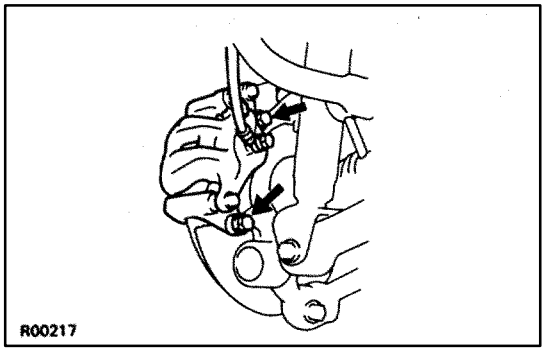

4. INSTALL BRAKE CALIPER

Install the brake caliper with the 2 bolts.

Torque: 104 N·m (1,065 kgf·cm, 77 ft·lbf)

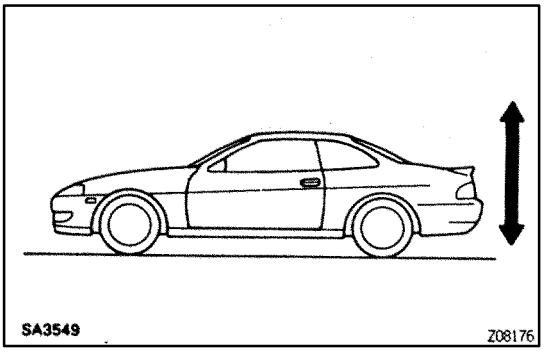

5. STABILIZE SUSPENSION

(a) Install the rear wheel and lower vehicle.

(b) Bounce the vehicle up and down several times to stabilize the suspension.

(c) Jack up the vehicle and remove rear wheel.

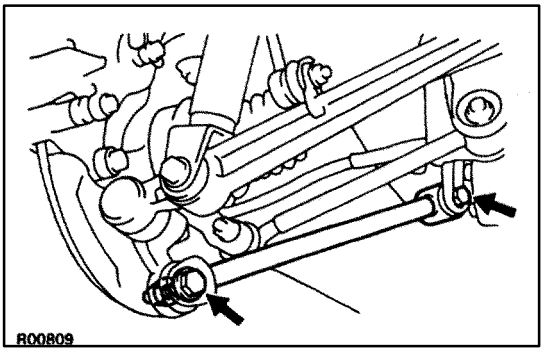

6. TORQUE BOLTS AND NUTS

(a) Support the rear axle carrier with a jack.

(b) Torque the bolts and nuts of the strut rod.

Torque: 184 N·m (1,880 kgf·cm, 136 ft·lbf)

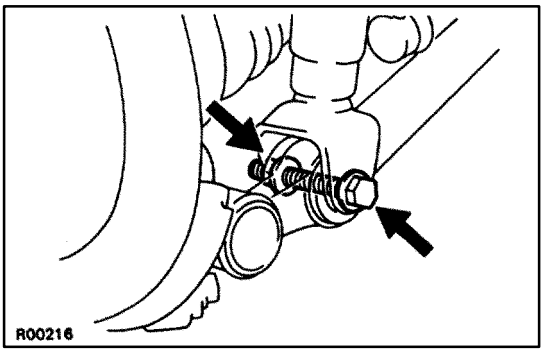

(c) Torque the nut.

Torque: 143 N·m (1,460 kgf·cm, 106 ft·lbf)

WhereEverybodyKnowsYourName

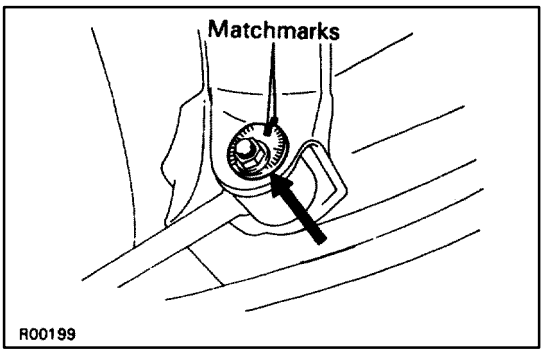

(d) Torque the nut on the body side of the No.1 lower suspension arm.
Torque: 184 N·m (1,880 kgf·cm, 136 ft·lbf)
HINT: Align the matchmarks on the adjusting cam and body.

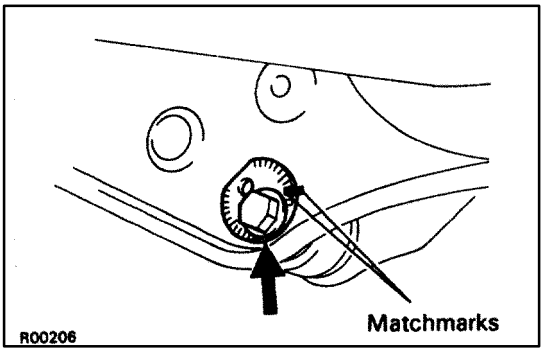

(e) Torque the nut on the body side of the No.2 lower suspension arm.
Torque: 184 N·m (1,880 kgf·cm, 136 ft·lbf)
HINT: Align the matchmarks on the adjusting cam and body.

7. INSTALL REAR WHEEL AND LOWER VEHICLE
Torque: 103 N·m (1,050 kgf·cm, 76 ft·lbf)

8. CHECK REAR WHEEL ALIGNMENT
(See page SA–10)

WhereEverybodyKnowsYourName

STABILIZER BAR
COMPONENTS

SA0AJ–04

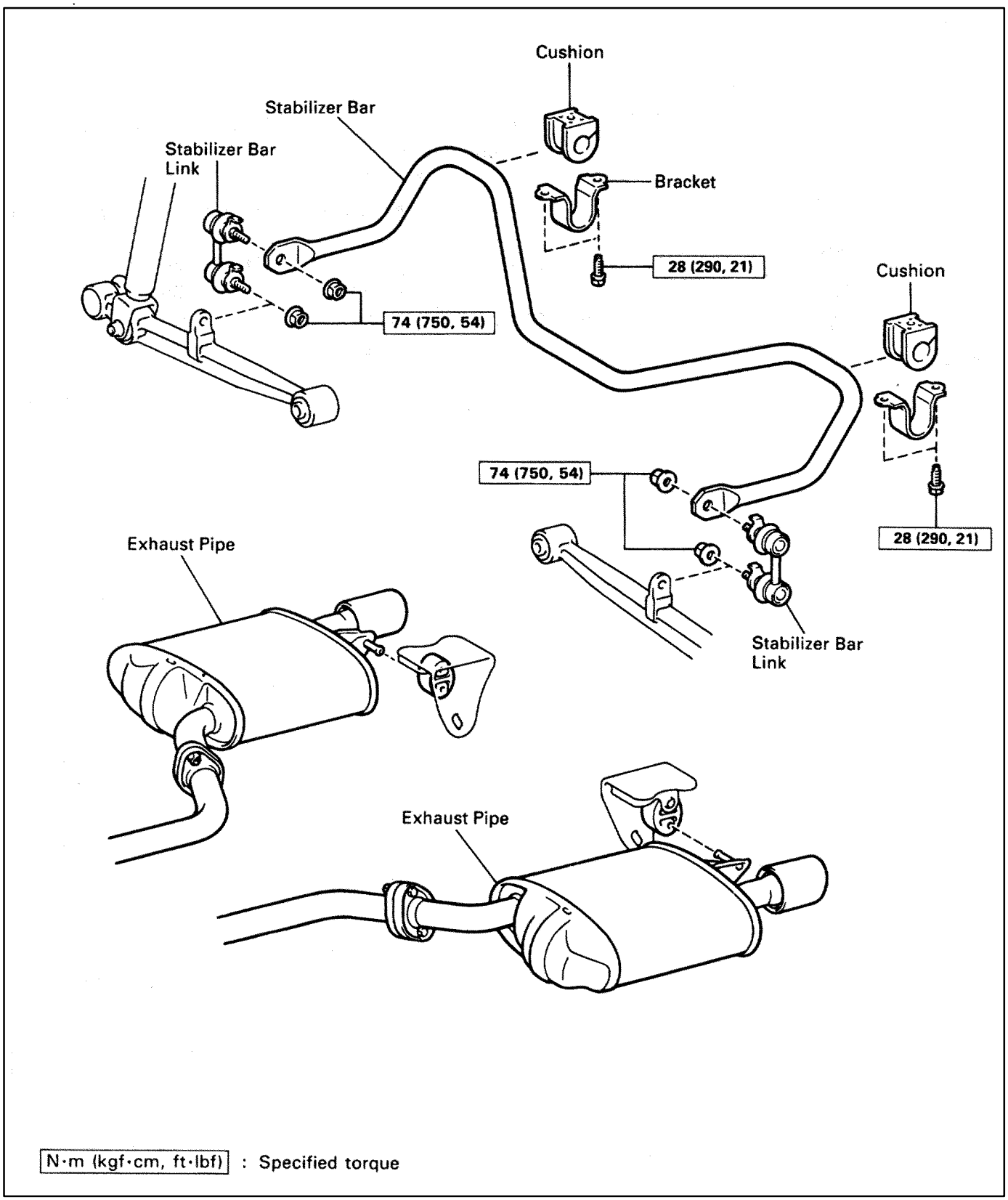

WhereEverybodyKnowsYourName

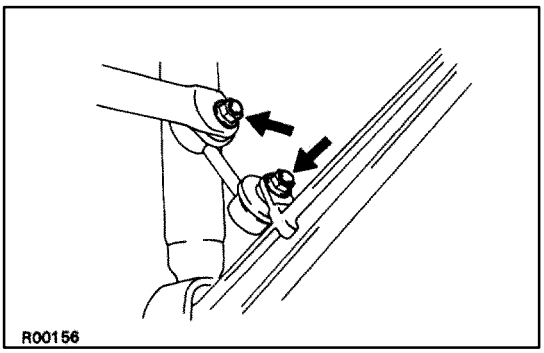

STABILIZER BAR REMOVAL

SA0WD–01

1. **DISCONNECT EXHAUST PIPE**
2. **REMOVE BOTH SIDE STABILIZER BAR LINKS**
   Remove the nuts and the stabilizer bar links.

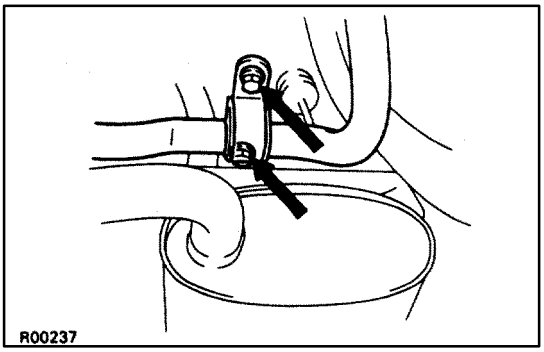

3. **REMOVE STABILIZER BAR**
   Remove both side the bolts and remove the stabilizer bar with the brackets, cushions and links.

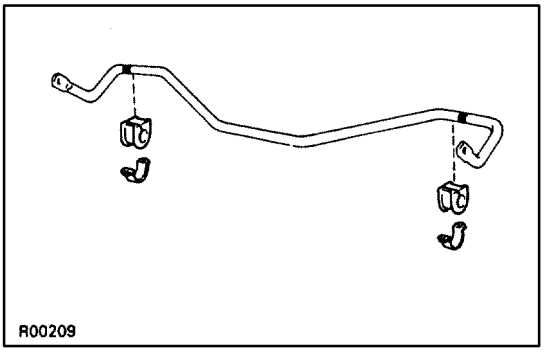

4. **REMOVE BOTH SIDE CUSHIONS AND BRACKETS**

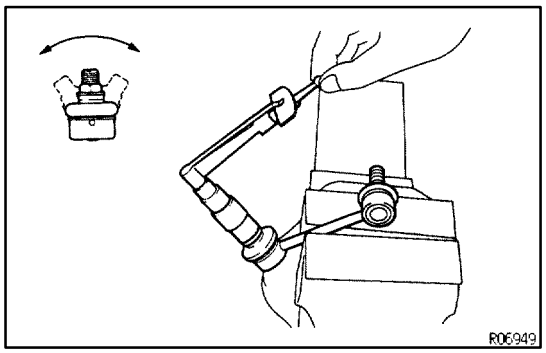

STABILIZER BAR LINK BALL JOINT INSPECTION

SA0UT–03

INSPECT BALL JOINT FOR ROTATION CONDITION

(a) Flip the ball joint stud back and forth 5 times, as shown in the illustration, before installing the nut.

(b) Using a torque wrench, turn the nut continuously one turn every 2–4 seconds and take the torque reading on the 5th turn.

Torque (turning):

0.05 – 1.0 N·m (0.5 – 10 kgf·cm, 2.6 – 8.7 in·lbf)

If not within specification, replace the stabilizer bar link.

WhereEverybodyKnowsYourName

STABILIZER BAR INSTALLATION

SA0WE–02

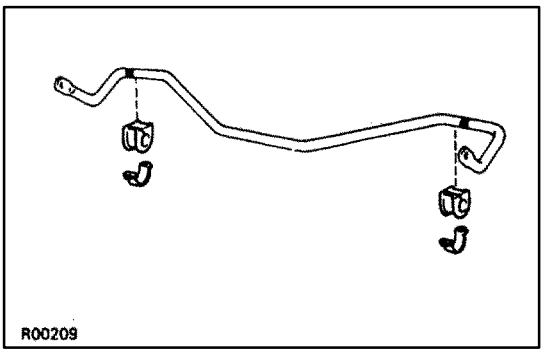

1. INSTALL BOTH SIDE CUSHIONS AND BRACKET

(a) Install the cushion so as to touch the line painted on the stabilizer bar.
HINT: Install the cushion to the outside of the line.

(b) Install the brackets.

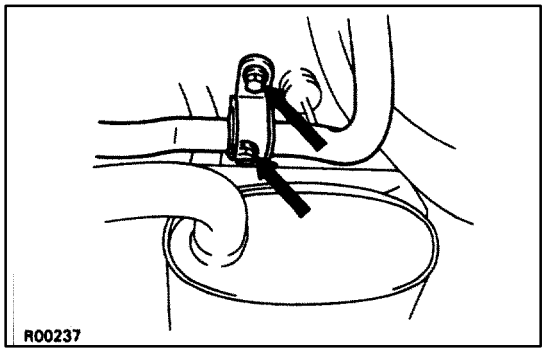

2. INSTALL STABILIZER BAR

Install the stabilizer bar with the brackets, cushions and bolts.
Torque: 28 N·m (290 kgf·cm, 21 ft·lbf)

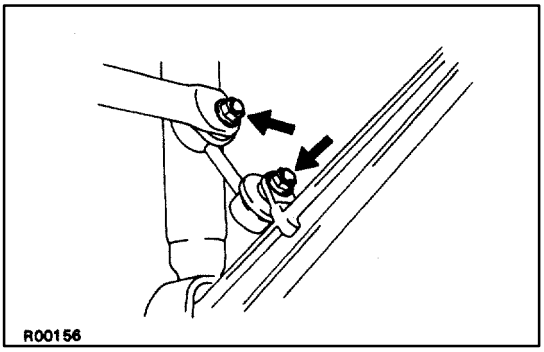

3. INSTALL BOTH SIDE STABILIZER BAR LINKS

Install the stabilizer bar links to the stabilizer bar and the No.2 lower suspension arm with the nuts.
Torque: 74 N·m (750 kgf·cm, 54 ft·lbf)

4. CONNECT EXHAUST PIPE

WhereEverybodyKnowsYourName

SA1AA–01

SERVICE SPECIFICATIONS
SERVICE DATA

Cold tire inflation pressure		Tire size	Front	Rear
	SC300	P215/60R15 94V or 93V	210 kPa (2.1 kgf/cm, 30 psi)	210 kPa (2.1 kgf/cm, 30 psi)
	SC400	P225/55R16 93V	220 kPa (2.2 kgf/cm, 32 psi)	220 kPa (2.2 kgf/cm, 32 psi)
Vehicle height		Tire size	Front	Rear
	SC300	P215/60R15	190.4 mm (7.496 in.)	247.7 mm (9.752 in.)
	SC400	P225/55R16	194.4 mm (7.654 in.)	251.7 mm (9.909 in.)

Front wheel alignment	Toe-in (total)		0.1° ± 0.2° (1 ± 2 mm, 0.04 ± 0.08 in.)
		Tie-rod end left-right error	1.5 mm (0.059 in.) or less
	Camber		0°01′ ± 45′
		Left-right error	30′ or less
	Caster		2°56′ ± 45′
		Left-right error	30′ or less
	Steering axis inclination		8°58′ ± 45′
		Left-right error	30′ or less
	Wheel angle (Max.)	Inside wheel	37°04′ $^{+1°}_{-2°}$
		Outside wheel	32°23′ (reference)
Front axle hub	Hub runout		0.05 mm (0.0020 in.)
	Hub axial play		0.05 mm (0.0020 in.)
Front suspension	Upper ball joint turning torque		1.0 – 3.4 N·m (10 – 35 kgf·cm, 9 – 30 in.·lbf)
	Lower ball joint turning torque		1.0 – 3.4 N·m (10 – 35 kgf·cm, 9 – 30 in.·lbf)
	Stabilizer bar link ball joint turning torque		0.05 – 1.5 N·m (0.5 – 15 kgf·cm, 0.4 – 13 in.·lbf)
Rear wheel alignment	Toe-in (total)		0.4° ± 0.2° (4.5 mm ± 2 mm, 0.18 ± 0.08 in.)
	Camber		– 0°53′ ± 45′
		Left-right error	30′ or less
Rear Axle hub	Hub runout		0.05 mm (0.0020 in.)
	Hub axial play		0.07 mm (0.0028 in.)
Rear suspension	Upper ball joint turning torque		1.0 – 3.4 N·m (10 – 35 kgf·cm, 9 – 30 in.·lbf)
	Lower ball joint turning torque	No.1	1.0 – 3.4 N·m (10 – 35 kgf·cm, 9 – 30 in.·lbf)
		No.2	1.0 – 3.4 N·m (10 – 35 kgf·cm, 9 – 30 in.·lbf)
	Stabilizer bar link ball joint turning torque		0.3 – 1.2 N·m (3 – 12 kgf·cm, 2.6 – 10.4 in.·lbf)
Rear drive shaft	LH standard length		553.5 mm (21.791 in.)
	RH standard length		599.5 mm (23.563 in.)

WhereEverybodyKnowsYourName

REAR DIFFERENTIAL

Rear differential	Drive pinion oil seal drive in depth				0 + 0.5 mm	
	Drive pinion shaft run out			Maximum	0.08 mm (0.0031 in.)	
	Ring gear runout			Maximum	0.05 mm (0.0020 in.)	
	Ring gear backlash				0.08 – 0.18 mm (0.0031 – 0.0051 in.)	
	Drive pinion preload				0.5–0.8 NVm (5–8 kgfVcm, 4.3–6.9 in.Vlbf)	
	Total preload (add drive pinion preload				0.5–0.8 NVm (5–8 kgfVcm, 4.3–6.9 in.Vlbf)	
	Pinion gear backlash (Conventional type)				0.05–0.20 mm (0.0020–0.0079 in.)	
	Pinion gear backlash adjusting thrust washer					
	1.6 mm (0.063 in.)		1.7 mm (0.067 in.)		1.8 mm (0.071 in.)	
	Ring gear backlash adjusting washer					
	No.	Thickness mm (in.)	No.	Thickness mm (in.)	No.	Thickness mm (in.)
	02	2.02 (0.0795)	32	2.32 (0.0913)	62	2.62 (0.1031)
	04	2.04 (0.0803)	34	2.34 (0.0921)	64	2.64 (0.1039)
	06	2.06 (0.0811)	36	2.36 (0.0929)	66	2.66 (0.1047)
	08	2.08 (0.0819)	38	2.33 (0.0937)	68	2.68 (0.1055)
	10	2.10 (0.0827)	40	2.40 (0.0945)	70	2.70 (0.1063)
	12	2.12 (0.0835)	42	2.42 (0.0953)	72	2.72 (0.1071)
	14	2.14 (0.0843)	44	2.44 (0.0961)	74	2.74 (0.1079)
	16	2.16 (0.0850)	46	2.46 (0.0969)	76	2.76 (0.1087)
	18	2.18 (0.0858)	48	2.48 (0.0976)	78	2.78 (0.1094)
	20	2.20 (0.0866)	50	2.50 (0.0984)	80	2.80 (0.1102)
	22	2.22 (0.0974)	52	2.52 (0.0992)	82	2.82 (0.1110)
	24	2.24 (0.0882)	54	2.54 (0.1000)	84	2.84 (0.1118)
	26	2.26 (0.0890)	56	2.56 (0.1008)	86	2.86 (0.1126)
	28	2.28 (0.0898)	58	2.58 (0.1016)		
	30	2.30 (0.0906)	60	2.60 (0.1024)		
	Tooth contact pattern adjusting washer					
	No.	Thickness mm (in.)	No.	Thickness mm (in.)	No.	Thickness mm (in.)
	87	1.87 (0.0736)	02	2.02 (0.0795)	17	2.17 (0.0854)
	88	1.88 (0.0740)	03	2.03 (0.0799)	18	2.18 (0.0858)
	89	1.89 (0.0744)	04	2.04 (0.0803)	19	2.19 (0.0862)
	90	1.90 (0.0748)	05	2.05 (0.0807)	20	2.20 (0.0866)
	91	1.91 (0.0752)	06	2.06 (0.0811)	21	2.21 (0.0870)
	92	1.92 (0.0756)	07	2.07 (0.0815)	22	2.22 (0.0874)
	93	1.93 (0.0760)	08	2.08 (0.0819)	23	2.23 (0.0878)
	94	1.94 (0.0764)	09	2.09 (0.0823)	24	2.24 (0.0882)
	95	1.95 (0.0768)	10	2.10 (0.0827)	25	2.25 (0.0886)
	96	1.96 (0.0772)	11	2.11 (0.0831)	26	2.26 (0.0890)
	97	1.97 (0.0776)	12	2.12 (0.0835)	27	2.27 (0.0894)
	98	1.98 (0.0780)	13	2.13 (0.0839)	28	2.28 (0.0898)
	99	1.99 (0.0783)	14	2.14 (0.0843)		
	00	2.00 (0.0787)	15	2.15 (0.0846)		
	01	2.01 (0.0791)	16	2.16 (0.0850)		

WhereEverybodyKnowsYourName

TORQUE SPECIFICATIONS

SA0WG–03

(FRONT)

Part tightened	N·m	kgf·cm	ft·lbf
Hub nut	103	1,050	76
Front and rear adjusting cam bolt	226	2,300	166
Axle hub lock nut	199	2,030	147
Lower ball joint X Steering knuckle	125	1,270	92
Tie rod end X Steering knuckle	49	500	36
Steering knuckle X Upper suspension arm	103	1,050	76
Lower ball foint X Lower suspension arm	127	1,300	94
Disc brake caliper X Steering knuckle	118	1,200	87
Speed sensor set bolt	103	80	76 in.·lbf
Front shock absorber X Body	35	360	26
Front shock absorber X Lower suspension arm	143	1,460	106
Upper suspension arm mounting nut	164	1,670	121
Piston rod lock nut	29	300	22
Stabilizer link X Lower suspension arm	74	750	54
Stabilizer link X Stabilizer bar	74	750	54
Stabilizer bar bracket X Body	18	180	13
Steering knuckle X Disc brake dust cover	19	195	14

(REAR)

Part tightened		N·m	kgf·cm	ft·lbf
Shock absorber X Lower suspension arm		143	1,460	106
Upper arm X Body		164	1,670	271
Rear axle carrier X Brake caliper		104	1,065	77
No. 1 lower arm X Rear axle carrier		59	600	43
No. 1 lower arm X Body		184	1,880	136
No. 2 lower arm X Rear axle carrier		150	1,525	110
No. 2 lower arm X Body		184	1,880	136
Strut rod X Rear axle carrier		184	1,880	136
Strut rod X Body		184	1,880	136
Rear drive shaft X Axle hub		289	2,950	213
Upper ball joint X Rear axle carrier		109	1,110	80
Parking brake backing plate X Rear axle carrier		26	260	19
Rear drive shaft X Differential		83	850	64
Differential mounting bolt	Front	147	1,500	108
	Rear	142	1,450	105
Differential carrier cover set bolt		47	475	34
Suspension support X Body		27	280	20
Suspension support X Shock absorber rod		27	280	20
Stabilizer bar link nut		74	750	54
Stabilizer bar bushing retainer bolt		28	290	21

WhereEverybodyKnowsYourName

–MEMO–

SUSPENSION AND AXLE

WhereEverybodyKnowsYourName

TROUBLESHOOTING

SA06G–02

Use the table below to help you find the cause of the problem.
The numbers indicate the priority of the likely cause of the problem. Check each part in order.
If necessary, replace these parts.

See Page / Parts Name / Trouble	Tires	Cold tire inflation pressure	Wheel alignment	Springs	Stabilizer bar	Shock absorber	Ball joint	Hub bearings	Steering linkage	Steering gear	Suspension parts	Overloaded	Wheel balance
See Page	SA–3	SA–3	SA–5	SA–27 SA–107	SA–45 SA–124	SA–27 SA–107	SA–35,40 SA–113,11	SA–16 SA–51	–	–	SA–25 SA–105	–	SA–3
Wander/pulls	1		2					4	3	5	6		
Bottoming				2		3						1	
Sways/pitches	1				2	3							
Front wheel shimmy	1		4			3	5	6	7	8			2
Abnormal tire wear		1	2			4					3		

WhereEverybodyKnowsYourName

GENERAL INSPECTION

SA19Y–01

1. INSPECT TIRE

(a) Check the tires for wear and for the proper inflation pressure.
Cold tire inflation pressure (SC400):

Tire size	Front kPa (kg/cm^2, psi)	Rear kPa (kg/cm^2, psi)
P225/55R16 93V	220 (2.2, 32)	220 (2.2, 32)

Cold tire inflation pressure (SC300):

Tire size	Front kPa (kg/cm^2, psi)	Rear kPa (kg/cm^2, psi)
P215/60R15 94V	210 (2.1, 30)	210 (2.1, 30)
P215/60R15 93V		

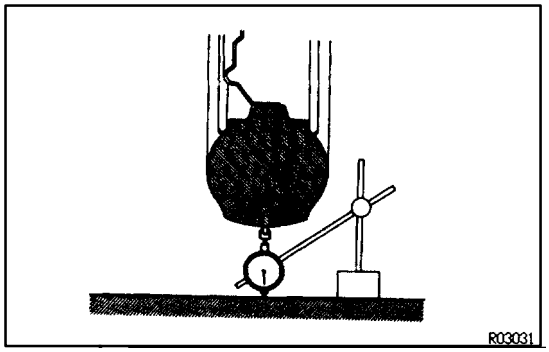

(b) Check the tire runout.
Tire runout:

SC400	Less then 1.4 mm (0.055 in.)
SC300	Less then 1.0 mm (0.039 in.)

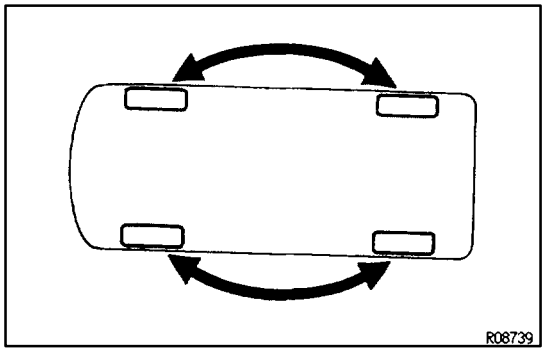

2. ROTATING TIRES

NOTICE: The wheel assemblies must be rotated only between the front and rear.

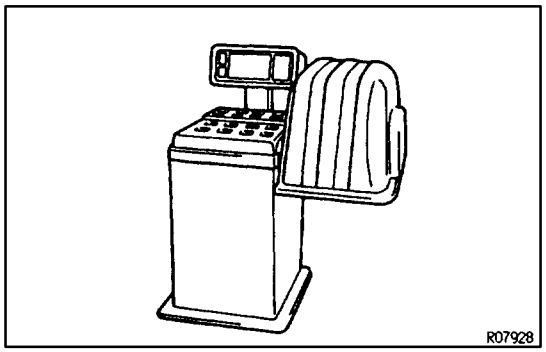

3. INSPECT WHEEL BALANCE

(a) Check and adjust the Off–the–car balance.

(b) If necessary, check and adjust the On–the–car balance.
Unbalance after adjustment:
8.0 g (0.018 lb) or less

WhereEverybodyKnowsYourName

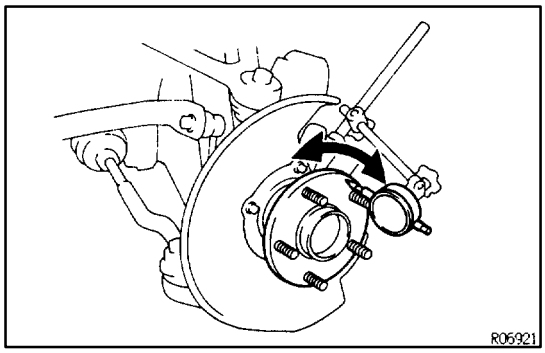

4. CHECK WHEEL BEARING LOOSENESS

(a) Check the backlash in bearing shaft direction.
Maximum: 0.05 mm (0.0020 in.)

(b) Check the axle hub deviation.
Maximum: 0.05 mm (0.0020 in.)

5. CHECK FRONT SUSPENSION FOR LOOSENESS

6. CHECK STEERING LINKAGE FOR LOOSENESS

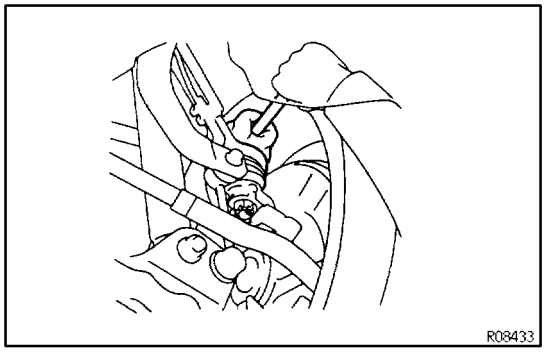

7. CHECK BALL JOINT FOR EXCESSIVE LOOSENESS

8. CHECK SHOCK ABSORBER WORK PROPERLY

- Check for oil leak
- Check mounting busings for wear
- Bounce front and rear of the vehicle

WhereEverybodyKnowsYourName

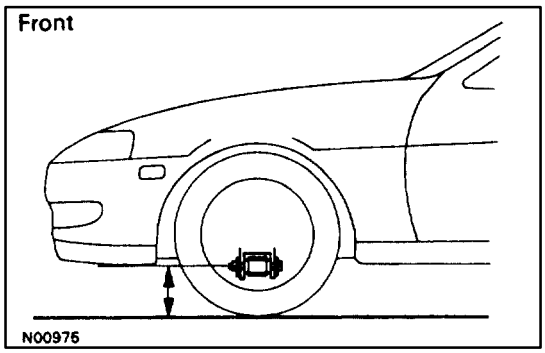

WHEEL ALIGNMENT

FRONT WHEEL ALIGNMENT

SA19Z–01

1. MEASURE VEHICLE HEIGHT

Front vehicle height (SC400):

Tire size	Front
P225/55R16	194.4 mm (7.654 in.)

Front vehicle height (SC300):

Tire size	Front
P215/60R15	190.4 mm (7.496 in.)

Measuring point:

Measure from the ground to the center of the lower suspension arm front mounting bolt.

NOTICE: Before inspecting the wheel alignment, adjust the vehicle height to specification.

If the vehicle height is not standard, try to adjust it by pushing down on or lifting the body.

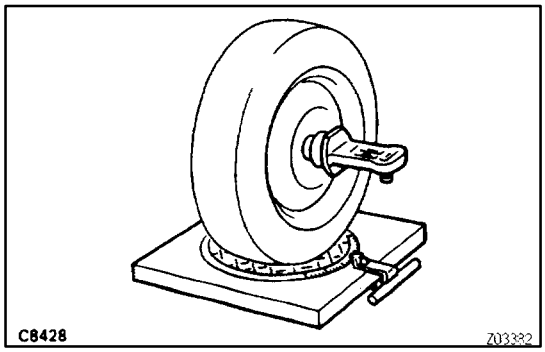

2. INSTALL CAMBER–CASTER–KINGPIN GAUGE OR ONTO WHEEL ALIGNMENT TESTER

Follow the specific instructions of the equipment manufacturer.

3. INSPECT CAMBER, CASTER AND STEERING AXIS INCLINATION

Specifications:

Camber Left–right error	0°01′ ± 45′ 30′ or less
Caster Left–right error	2°56′ ± 45′ 30′ or less
Steering axis inclination Left–right error	8°58′ ± 45′ 30′ or less

If the steering axis inclination is not as specified, after camber and caster have correctly adjusted, recheck the steering knuckle front wheel for bearing or looseness.

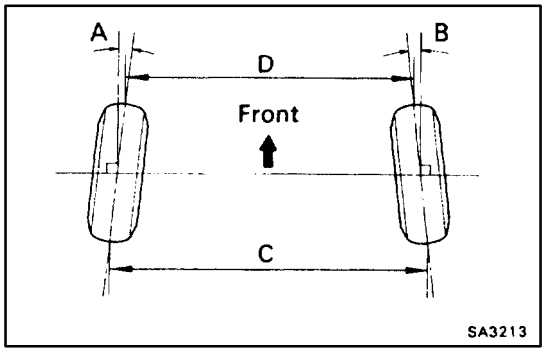

4. INSPECT TOE–IN

Toe–in (total):

A + B 0.1° ± 0.2°

C–D 1 ± 2 mm (0.04 ± 0.08 in.)

If toe–in is not within specification adjust by the tie rod end.

WhereEverybodyKnowsYourName

5. ADJUST CAMBER AND CASTER

Specifications:

Camber	0°01′ ± 30′
Left–right error	30′ or less
Caster	2°56′ ± 30′
Left–right error	30′ or less

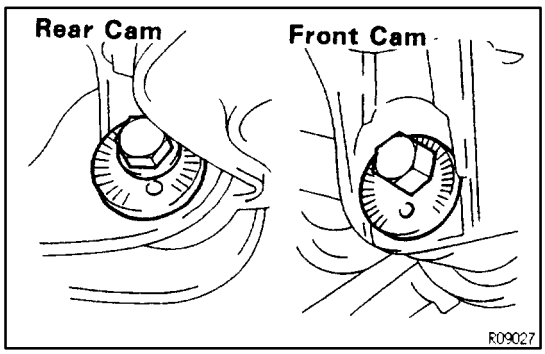

(a) Remove the engine under cover.
(b) Loosen the front and/or rear adjusting cam nuts.
(c) Adjust the camber and caster by front and/or rear adjusting cams.
(See adjustment chart)

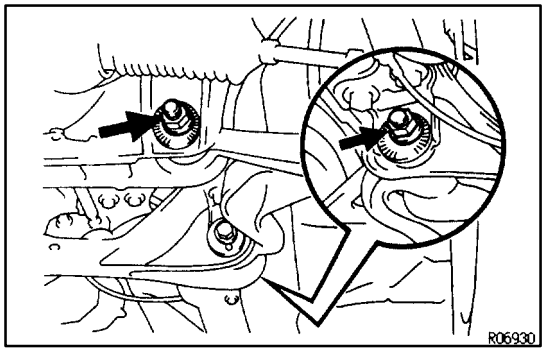

(d) Torque the front and/or rear adjusting cam nuts.
Torque: 226 N·m (2,300 kgf·cm, 166 ft·lbf)

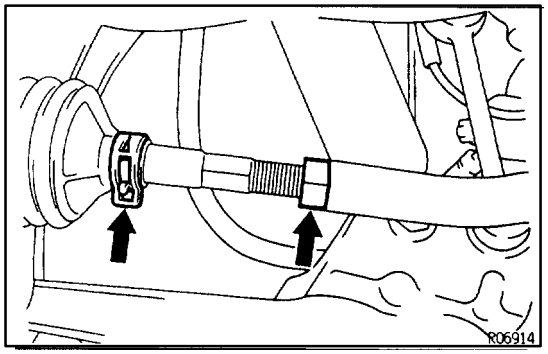

6. ADJUST TOE–IN

(a) Remove the boot clamps.
(b) Loosen the tie rod end lock nuts.

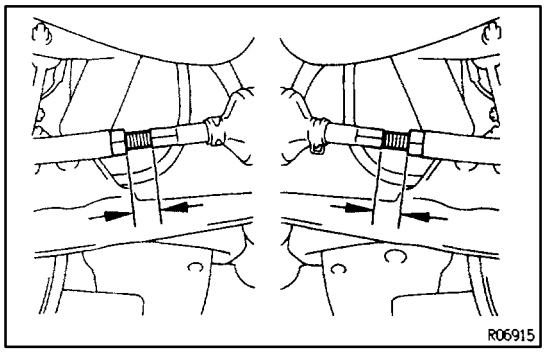

(c) Turn the left and right tie rod ends an amount to adjust the toe–in.
Toe–in (total):
A+B 0.1° ± 0.1°
C–D 1 ± 1 mm (0.04 ± 0.04 in.)
HINT: Insure that the lengths of the left and right tie rods are the same.
Tie rod end length left–right error:
Less than 1.5 mm (0.059 in.)

WhereEverybodyKnowsYourName

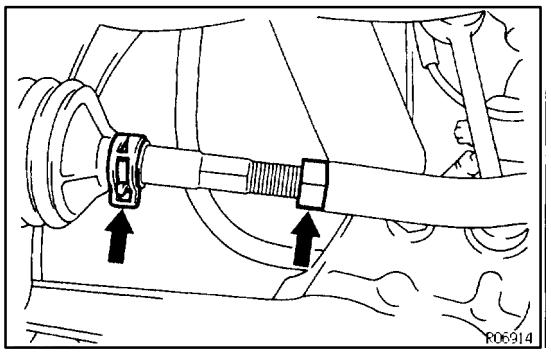

(d) Tighten the tie rod end lock nut.
Torque: 56 N·m (570 kgf·cm, 41 ft·lbf)

(e) Place the boot on the seat and clip it.
HINT: Insure that the boots are not twisted.

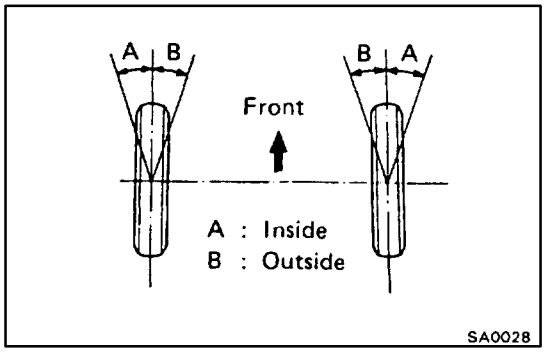

7. INSPECT WHEEL ANGLE
Wheel angle:

Inside wheel	37°04′ (35°04′ ~ 38°04′)
Outside wheel (reference)	32°23′

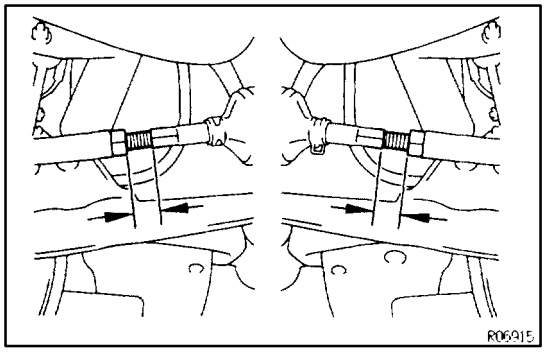

If wheel angle differ from the standard specifications, check to see if the lengths of the left and right tie rods are the same.
HINT: If the tie rods lengths are not equal, the wheel angle can not be adjusted properly.
Reinspect the toe–in after adjusting the tie rods lengths.

WhereEverybodyKnowsYourName

ADJUSTMENT CHART

SA155–04

HOW TO READ ADJUSTMENT CHART

(a) Mark on the graph the measurements taken from the vehicle.

Example:

Camber +0° 31′

Caster +3° 56′

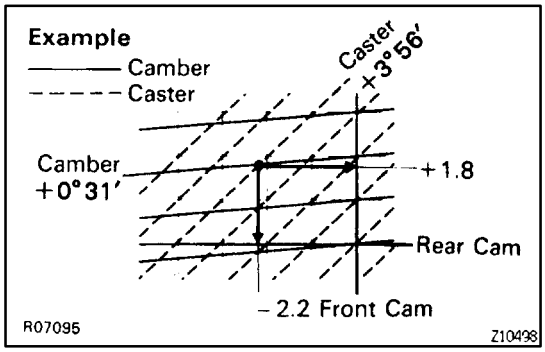

(b) As shown in the illustration, read from the graph the amounts by which the front and/or rear cams are to be adjusted.

Amount to turn adjusting cam (by graduation):

Front cam +(Longer) 1.8

Rear cam –(Shorter) 2.2

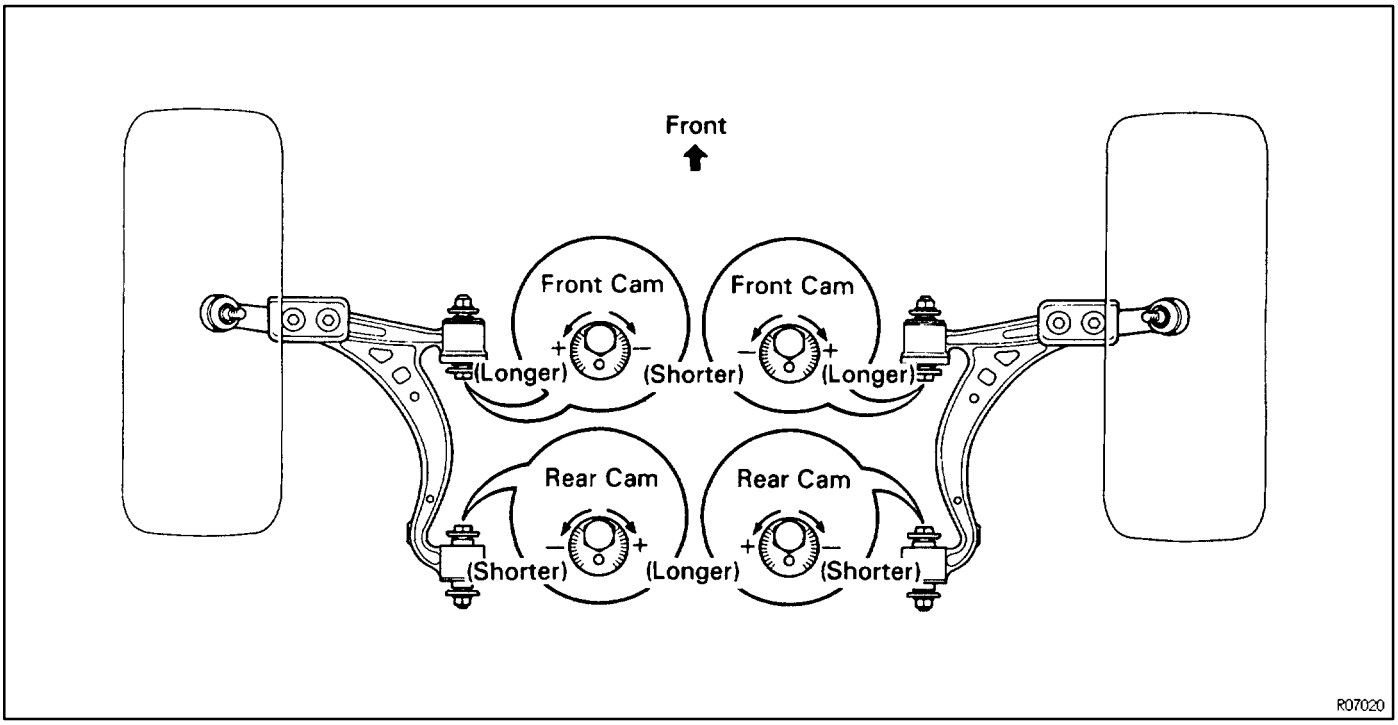

WhereEverybodyKnowsYourName

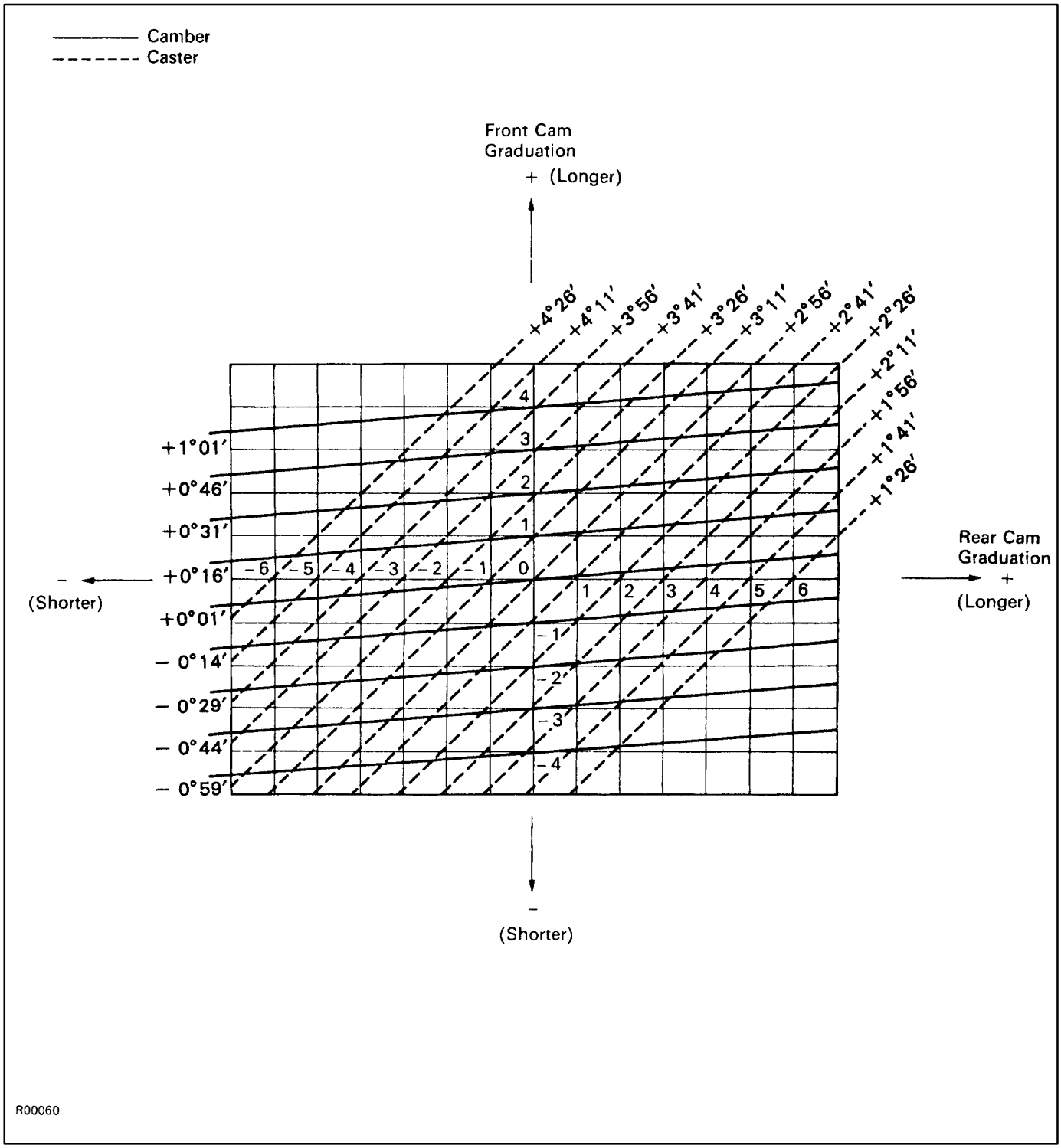

WhereEverybodyKnowsYourName

REAR WHEEL ALIGNMENT

SA1A0–01

1. MEASURE VEHICLE HEIGHT

Rear vehicle height (SC400):

Tire size	Rear
P225/55R16	251.7 mm (9.909 in.)

Rear vehicle height (SC300):

Tire size	Rear
P215/60R15	247.7 mm (9.752 in.)

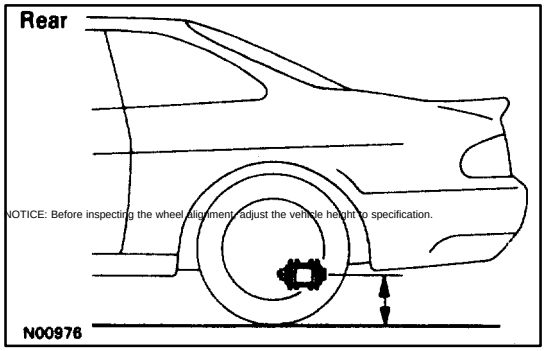

Measuring point:

Measure from the ground to the center of the lower suspension arm No.2 mounting bolt.

If the vehicle height is not standard, try to adjust it by pushing down on or lifting the body.

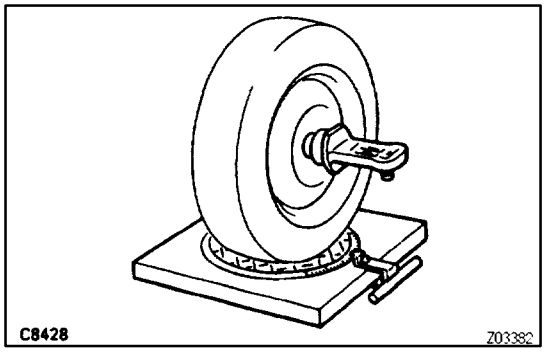

2. INSTALL CAMBER–CASTER–KINGPIN GAUGE OR ONTO WHEEL ALIGNMENT TESTER

Follow the specific instructions of the equipment manufacturer.

3. INSPECT CAMBER

Camber:

Camber	–0° 53′ ± 45′
Left–right error	30′ or less

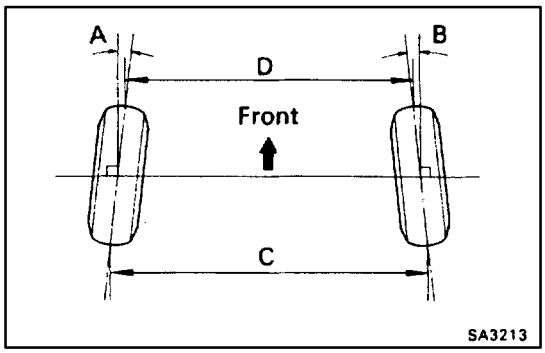

4. INSPECT TOE–IN

Toe–in (total):

A+B 0.4° ± 0.2°

C–D 4.5 ± 2 mm (0.18 ± 0.08 in.)

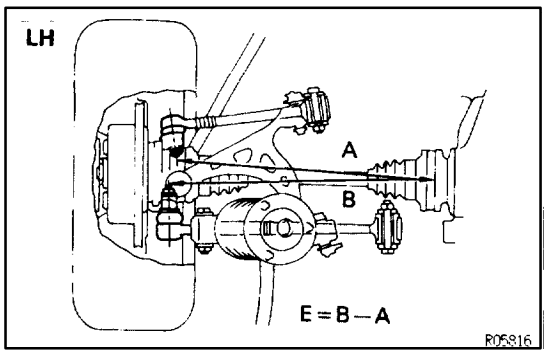

5. ADJUST CAMBER AND TOE–IN

(a) Measure the length of the lower suspension arm No.1 and No.2, as shown in the illustration.

WhereEverybodyKnowsYourName

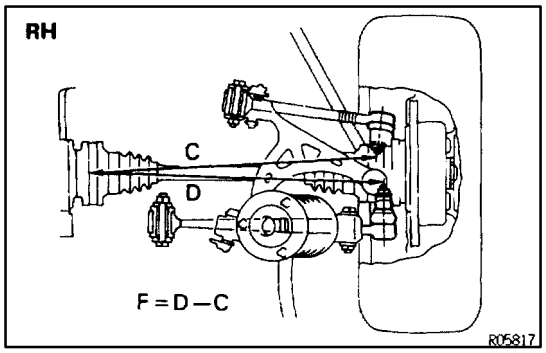

Length:

(E–F) or (F–E) should be less 4.0 mm.

If not, adjust the length of the arms by turning the adjusting cam, as shown, until (E–F) or (F–E) is less than 4.0 mm.

(b) Measure the camber and toe–in.

Specifications:

Camber Left–right error	–0°53′ ± 30′ 30’ or less
Toe–in	A+B 0.4° ± 0.1° C–D 4.5 ± 1 mm (0.18 ± 0.04 in.)

If the camber and toe–in are still not within the specification, adjust the camber and toe–in with the adjusting cam.

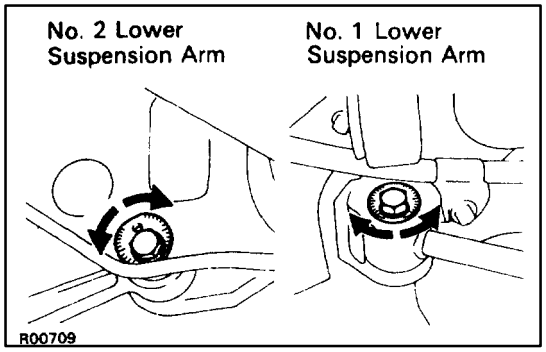

(c) Loosen and adjust the No.1 and/or No.2 cams.

(d) Adjust camber and toe–in by turning the No.1 and/ or No.2 cams.
(See adjustment chart)

(e) Torque the No.1 and/or No.2 cam nuts.
Torque: 184 N·m (1,880 kgf·cm, 134 ft·lbf)

WhereEverybodyKnowsYourName

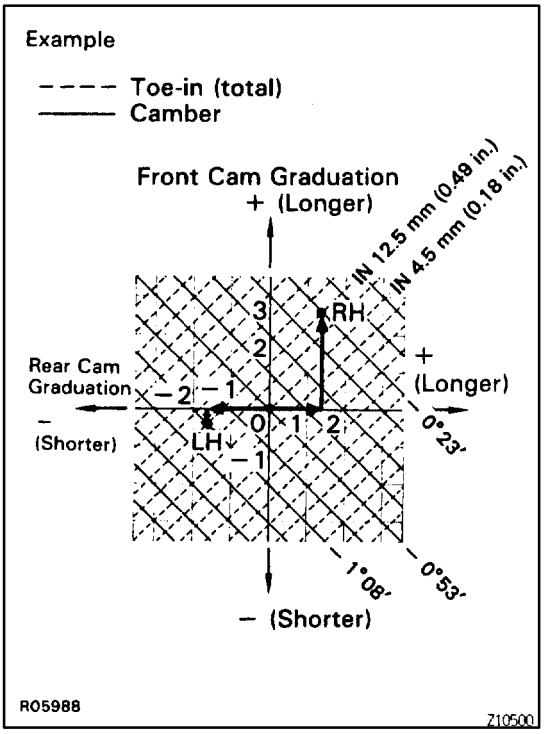

ADJUSTMENT CHART

SA0VA–09

HOW TO READ ADJUSTMENT CHART

(a) Mark on the graph the measurements taken from the vehicle.

Example:

Camber (LH) –1°08′

Camber (RH) –0°23′

Toe–in 12.5 mm (0.49 in.)

(b) As shown the illustration, from the graph the amounts by which the front and/or rear cam are to be adjusted.

Amount to turn adjusting cam (by graduation):

(LH Front cam)

Decrease 0.3 (Shorter)

(LH Rear cam)

Increase 1.7 (Longer)

(RH Front cam)

Increase 2.8 (Longer)

(RH Rear cam)

Increase 1.3 (Longer)

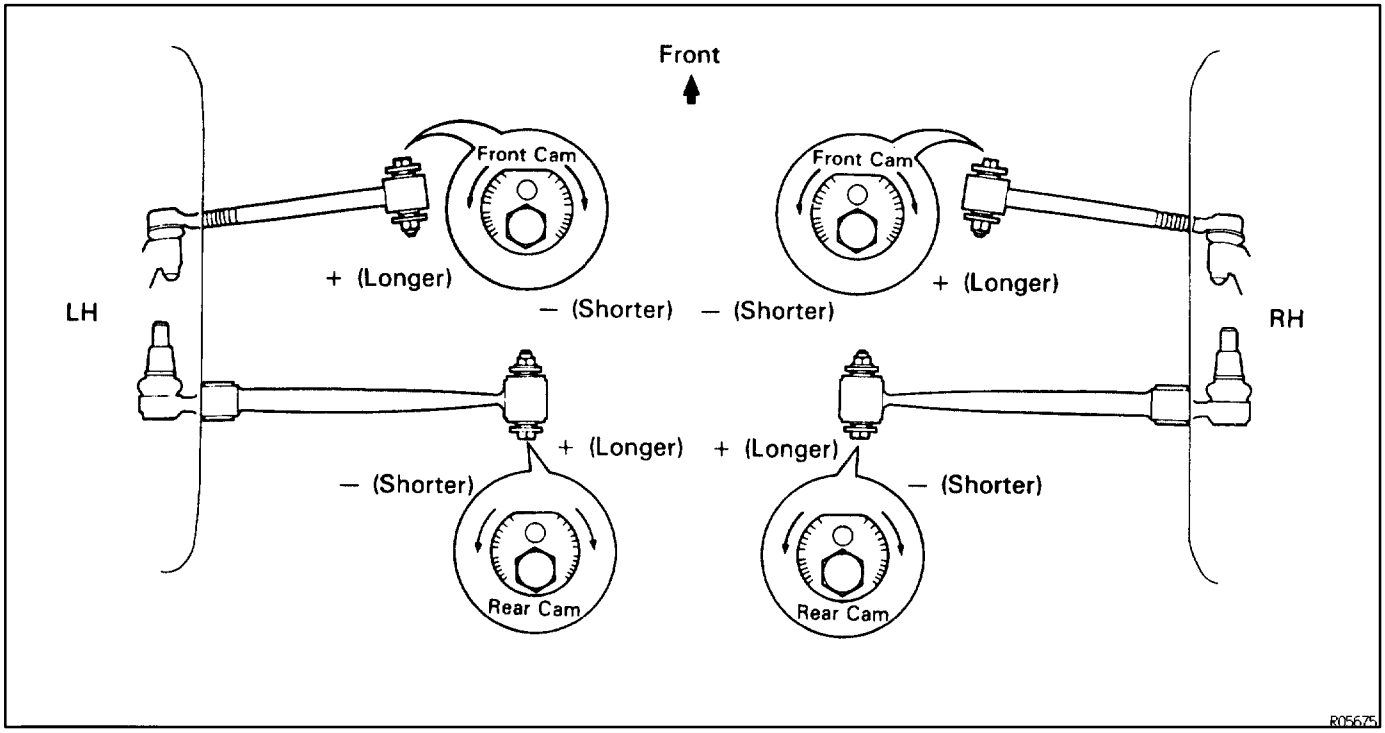

WhereEverybodyKnowsYourName

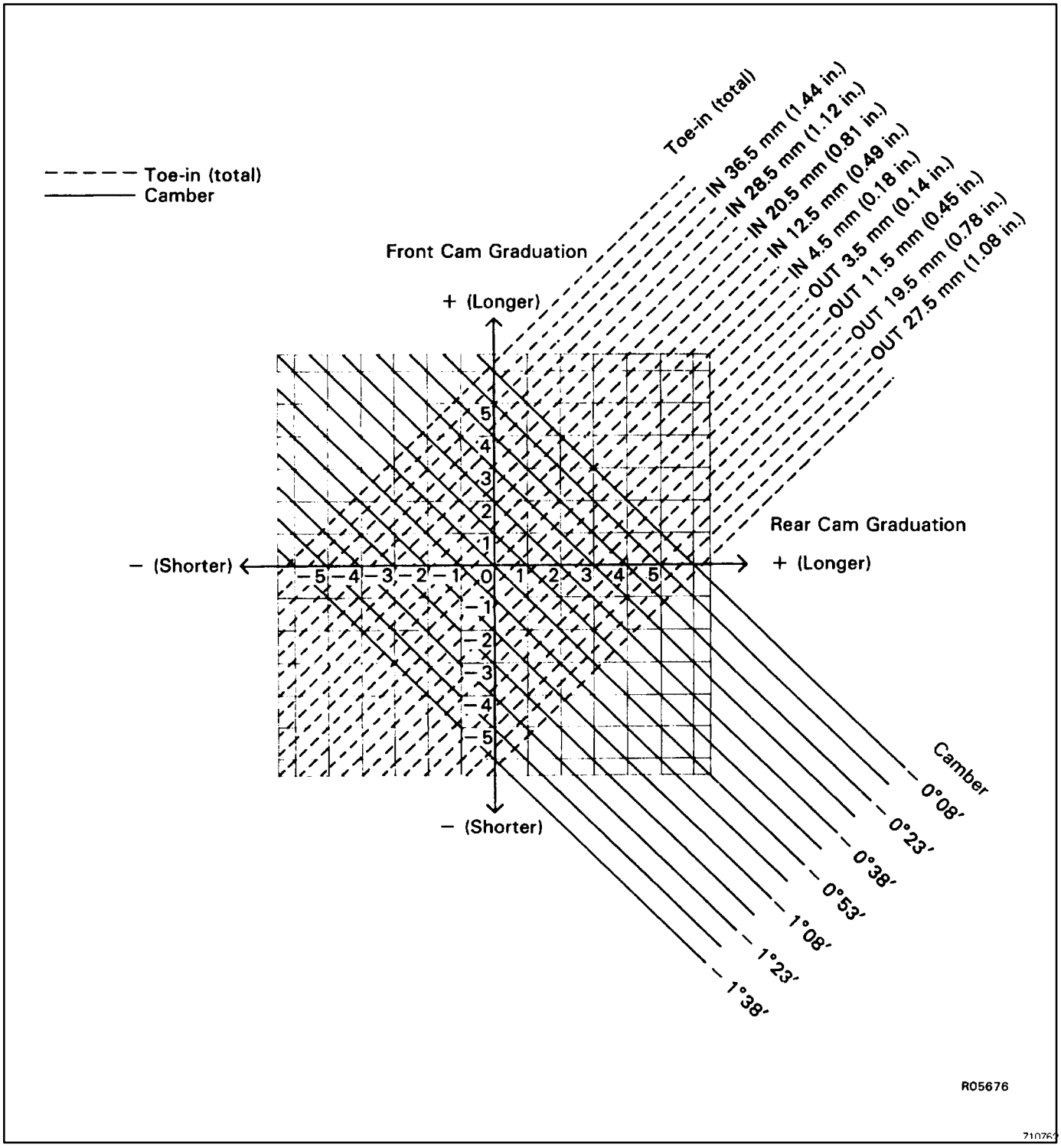

WhereEverybodyKnowsYourName

FRONT AXLE HUB

DESCRIPTION

SA002–06

The wheel bearings are double–row angular ball bearings having small rolling resistance and are free from maintenance.

The preload of the bearing can be determined only by tightening the axle hub nut at a specified torque, improving serviceability.

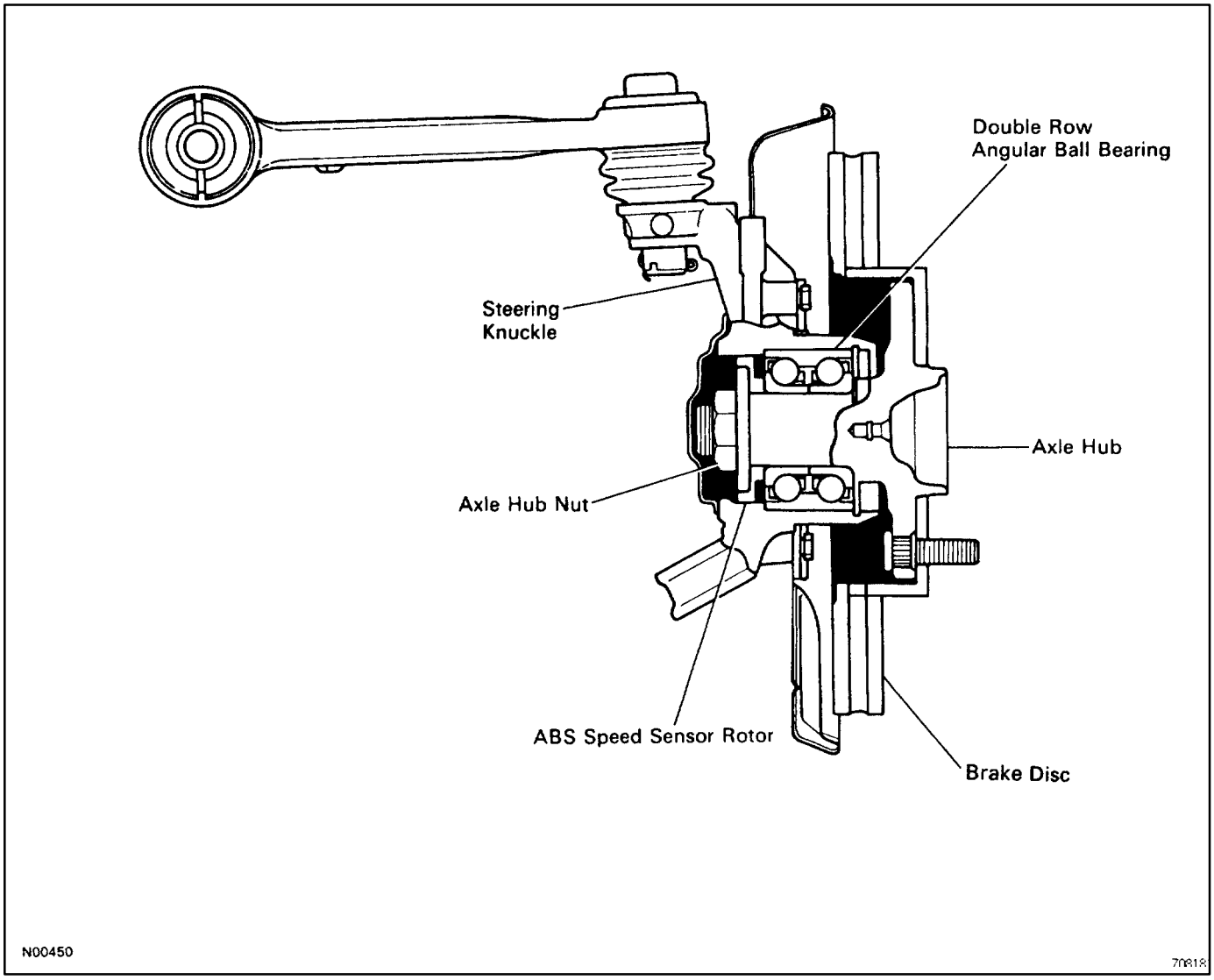

WhereEverybodyKnowsYourName

PREPARATION
SST (SPECIAL SERVICE TOOLS)

SA00K–03

	09308–00010	Oil Seal Puller	Steering knuckle oil seal
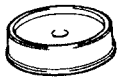	09608–32010	Steering Knuckle Oil Seal Replacer	
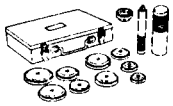	09608–35014	Axle Hub & Drive Pinion Bearing Tool Set	
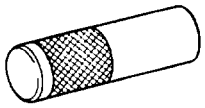	(09608–06040)	Front Hub Inner Bearing Cone Replacer	
	(09608–06100)	Front Hub Outer Bearing Replacer	
	(09608–06200)	Rear Axle Bearing Replacer	
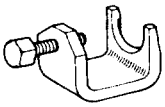	09628–10011	Ball Joint Puller	
	09628–62011	Ball Joint Puller	
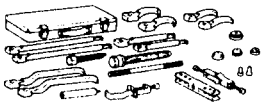	09950–20017	Universal Puller	

RECOMMENDED TOOLS

SA00L–02

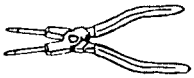	09905–00013	Snap Ring Pliers	Front axle hub bearing

EQUIPMENT

SA00M–01

Dial indicator	
Torque wrench	

WhereEverybodyKnowsYourName

FRONT AXLE HUB

COMPONENTS

SA003–0B

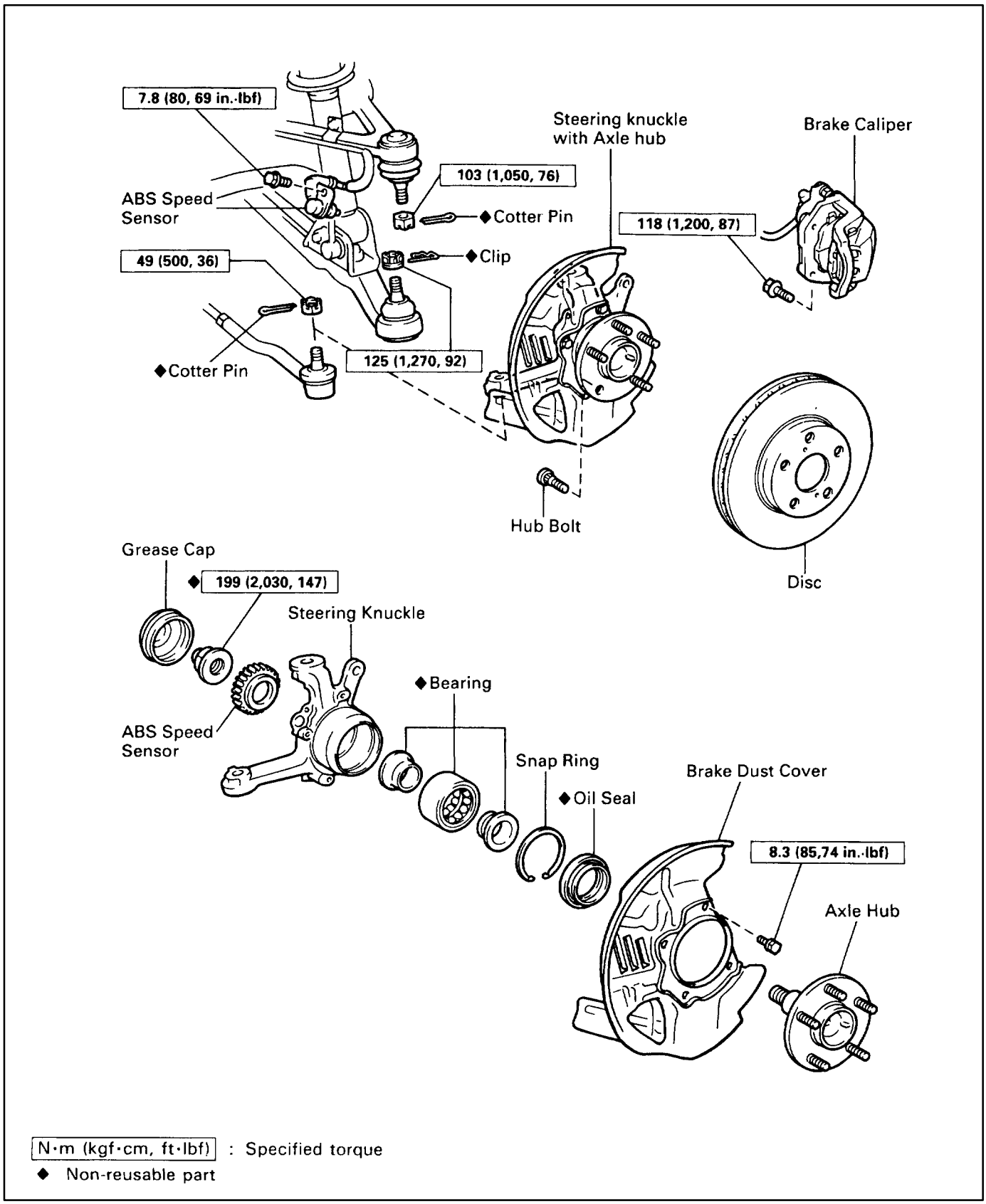

WhereEverybodyKnowsYourName

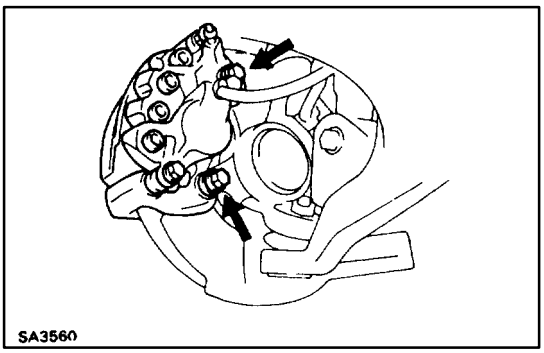

STEERING KNUCKLE WITH AXLE HUB REMOVAL

SA01Y–08

1. JACK UP VEHICLE AND REMOVE FRONT WHEEL

2. REMOVE FRONT BRAKE CALIPER AND BRAKE DISC

(a) Remove the 2 bolts and remove the brake caliper from the steering knuckle.

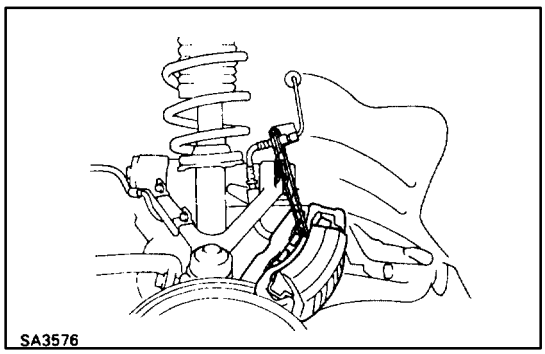

(b) Hang up the brake caliper using wire, etc.

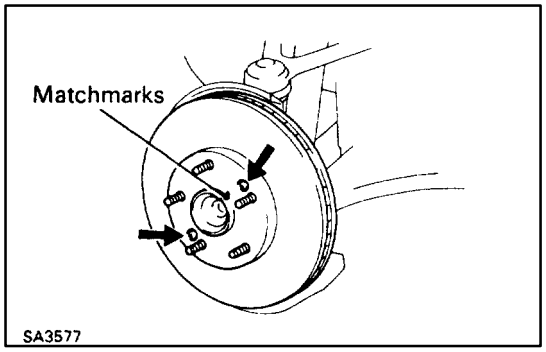

(c) Place matchmarks on the brake disc and axle hub.

(d) Remove the 2 screws and remove the brake disc.

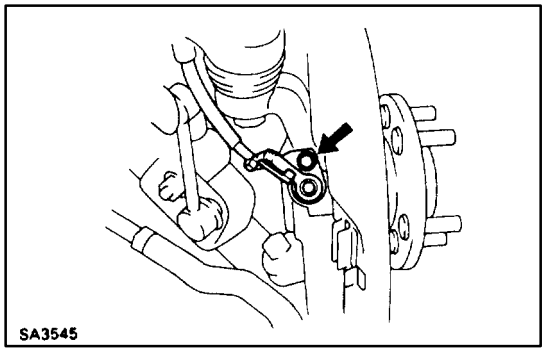

3. REMOVE ABS SPEED SENSOR FROM STEERING KNUCKLE

Remove the bolt and disconnect the sensor from the steering knuckle.

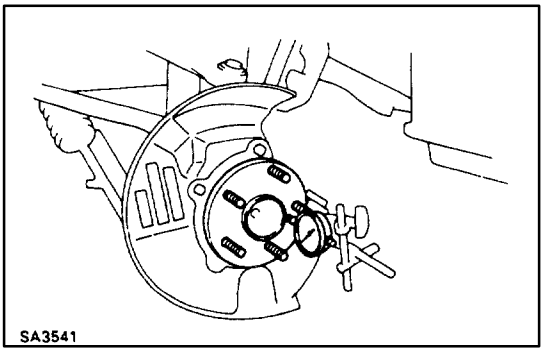

4. CHECK BACKLASH IN BEARING SHAFT DIRECTION

Place the dial indicator near the center of the axle hub and check the backlash in the bearing shaft direction.

Maximum:

0.05 mm (0.0020 in.)

If greater than the specified maximum, replace the bearing.

WhereEverybodyKnowsYourName

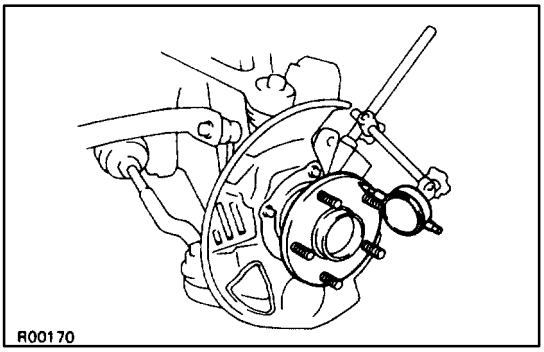

5. CHECK AXLE HUB DEVIATION

Using a dial indicator, check the deviation at the surface of the axle hub outside the hub bolt.

Maximum:

0.05 mm (0.0020 in.)

If greater than the specified maximum, replace the axle hub.

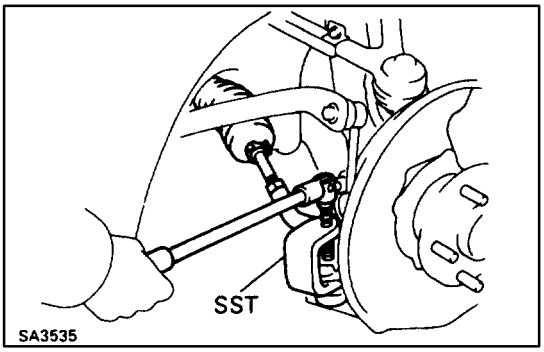

6. DISCONNECT TIE ROD END FROM STEERING KNUCKLE

(a) Remove the cotter pin and nut.

(b) Using SST, disconnect the tie rod end from the steering knuckle.
SST 09628–10011

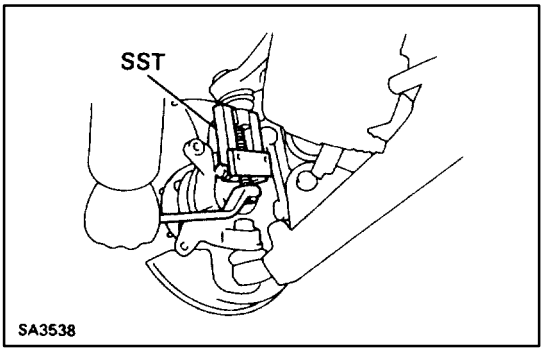

7. DISCONNECT STEERING KNUCKLE FROM UPPER SUSPENSION ARM

(a) Remove the cotter pin and nut.

(b) Using SST, disconnect the steering knuckle from the upper suspension arm.
SST 09628–62011

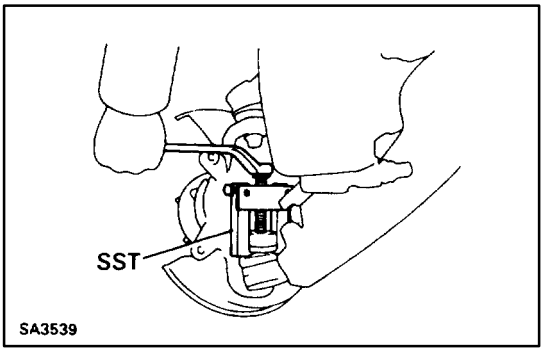

8. REMOVE STEERING KNUCKLE

(a) Remove the clip and nut.

(b) Using SST, remove the steering knuckle from the lower suspension arm.
SST 09628–62011

WhereEverybodyKnowsYourName

FRONT AXLE HUB DISASSEMBLY

SA0RL–04

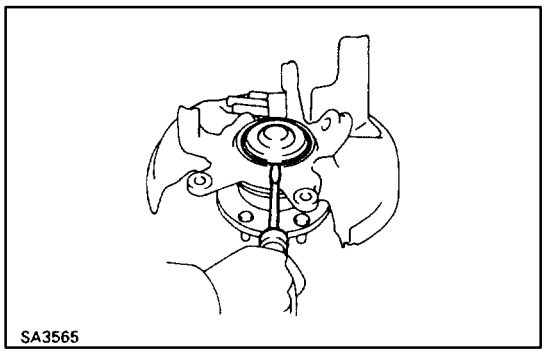

1. REMOVE HUB BEARING CAP

Using a screwdriver, remove the hub bearing cap from the steering knuckle.

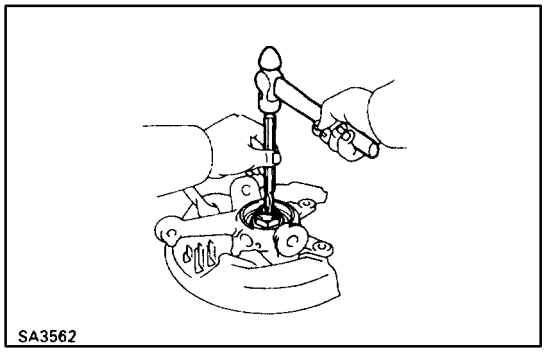

2. REMOVE FRONT AXLE HUB LOCK NUT AND ABS SPEED SENSOR ROTOR

(a) Clamp the axle hub in a soft jaw vise.
HINT: Close vise until it holds hub bolt do not tighten further.

(b) Using a hammer and chisel, loosen the staked part of the lock nut and remove it.

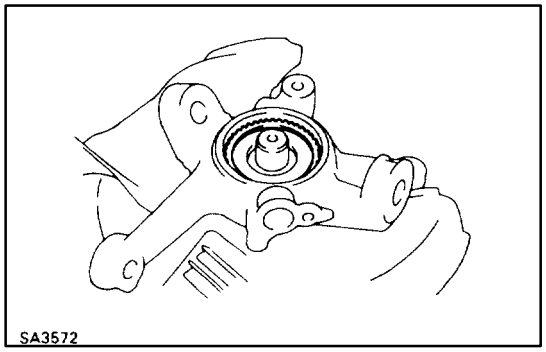

(c) Remove the sensor rotor.
NOTICE: Take care not to scratch the serrations of the sensor rotor.

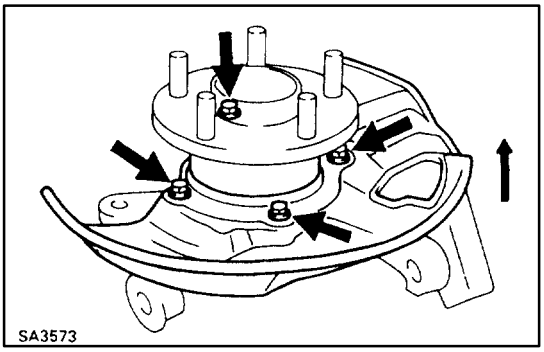

3. REMOVE AXLE SHAFT FROM STEERING KNUCKLE

(a) Remove the 4 bolts and shift the brake dust cover toward the hub side (outside).

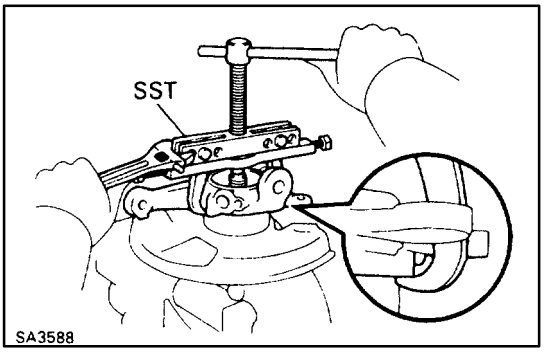

(b) Using SST, remove the axle shaft from the steering knuckle.
SST 09950–20017

WhereEverybodyKnowsYourName

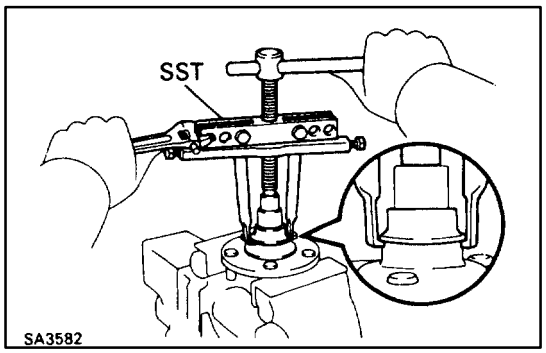

4. REMOVE INNER RACE (OUTSIDE) FROM AXLE SHAFT

Using SST, remove the inner race from the axle shaft.
SST 09950–20017

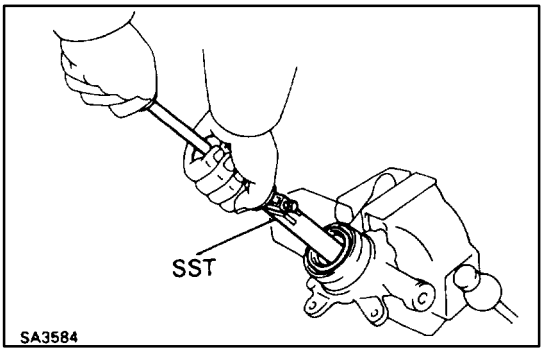

5. REMOVE OIL SEAL

Using SST, remove the oil seal from the steering knuckle.
SST 09308–00010

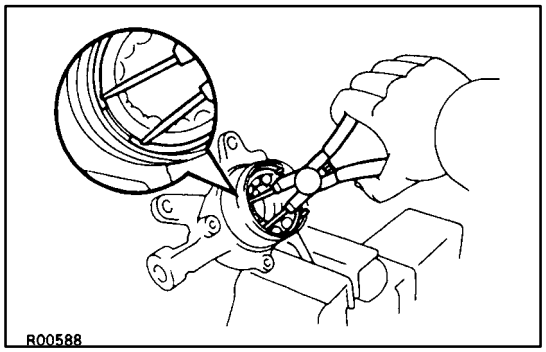

6. REMOVE BEARING FROM STEERING KNUCKLE

(a) Using snap ring pliers, remove the snap ring.

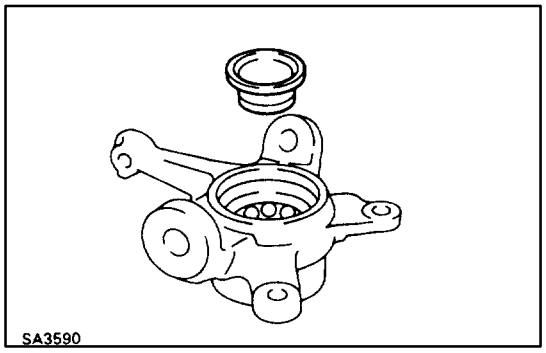

(b) Position the inner race above the bearing on the inner side.

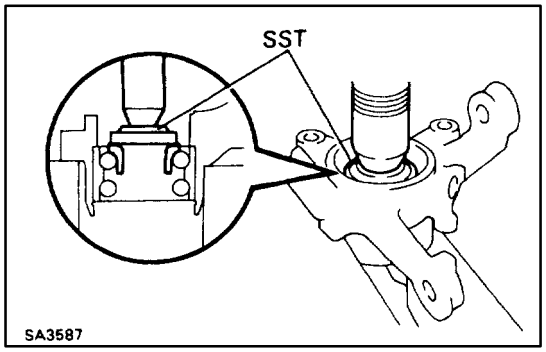

(c) Using SST and a press, remove the bearing from the steering knuckle.
SST 09608–35014 (09608–06100)

WhereEverybodyKnowsYourName

FRONT AXLE HUB ASSEMBLY

SA0W3–03

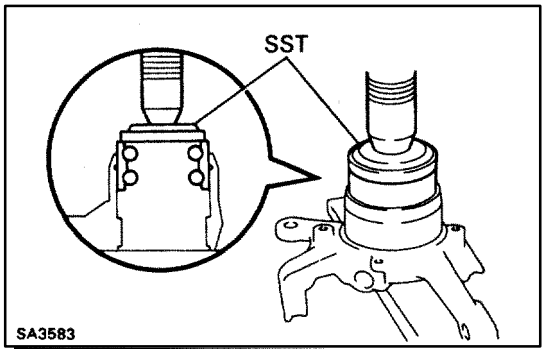

1. INSTALL BEARING

(a) Using SST, install a new bearing to steering knuckle.
SST 09608–35014 (09608–06200)
NOTICE: If the inner race and balls come loose from the bearing outer race, be sure to install them on the same side as before.

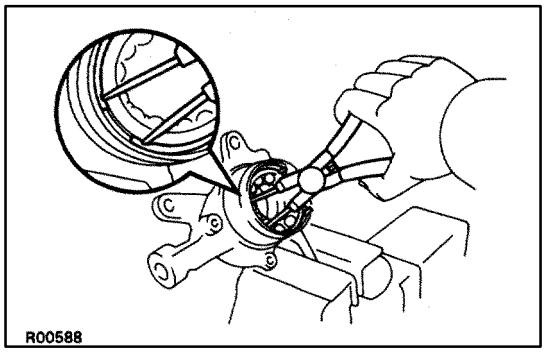

(b) Using snap ring pliers, install the snap ring.

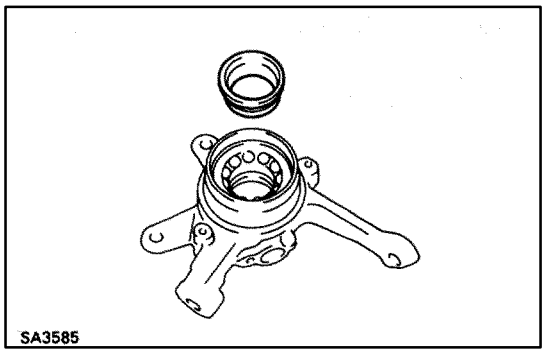

2. INSTALL OIL SEAL

(a) Install the inner race (outside).

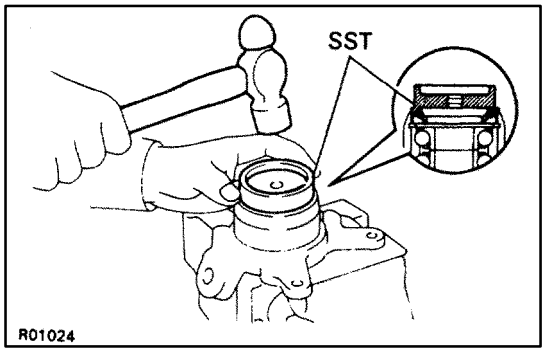

(b) Using SST and a hammer, tap in a new oil seal until it is flush with end surface of the steering knuckle.
SST 09608–32010

(c) Coat MP grease to the oil seal lip.

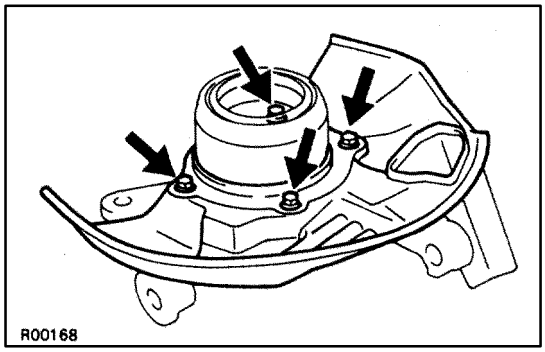

3. INSTALL AXLE HUB TO STEERING KNUCKLE

(a) Install the brake dust cover to the steering knuckle with the 4 bolts.
Torque: 8.3 N·m (85 kgf·cm, 74 in.·lbf)

WhereEverybodyKnowsYourName

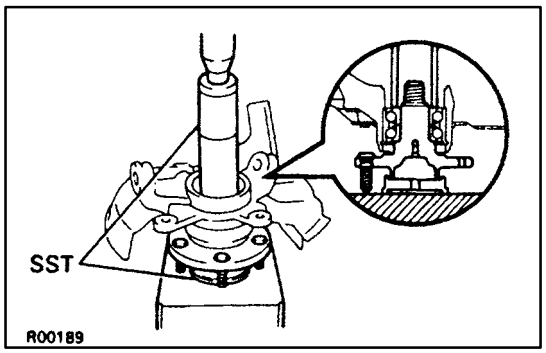

(b) Using SST and a press, press the axle hub to steering knuckle.
SST 09608–32010, 09608–35014 (09608–06040)

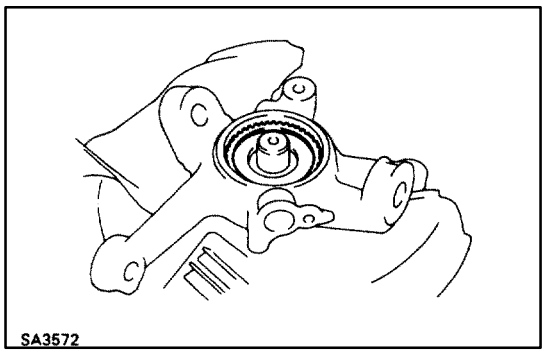

4. INSTALL ABS SPEED SENSOR ROTOR
NOTICE: Do not scratch the serrations of the sensor rotor.

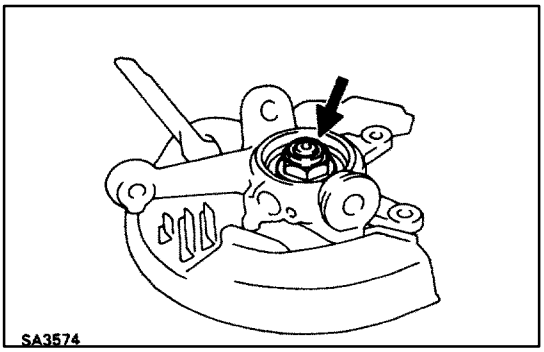

5. INSTALL AXLE HUB LOCK NUT
(a) Install and torque a new axle hub lock nut.
Torque: 199 N·m (2,030 kgf·cm, 147 ft·lbf)

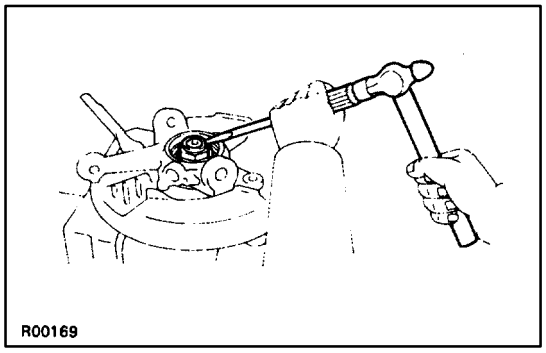

(b) Using a screwdriver and hammer, stake the lock nut.

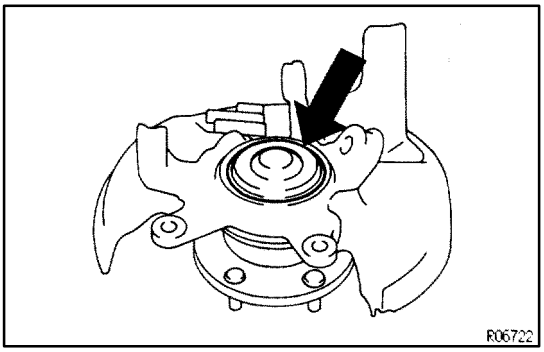

6. INSTALL HUB BEARING CAP
Using a screwdriver and hammer, install the hub bearing cap to the steering knuckle.

WhereEverybodyKnowsYourName

FRONT AXLE HUB INSTALLATION

SA040–06

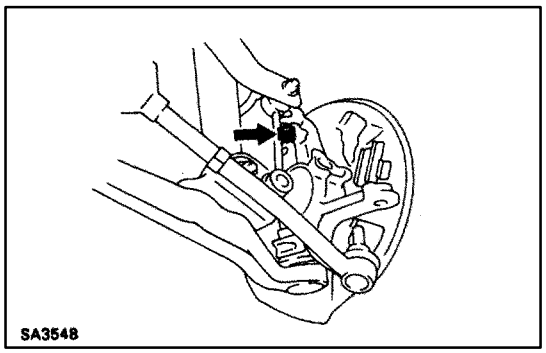

1. INSTALL STEERING KNUCKLE TO UPPER BALL JOINT

(a) Install the steering knuckle to the upper suspension arm with the nut.
Torque: 103 N·m (1,050 kgf·cm, 76 ft·lbf)

(b) Install a new cotter pin.

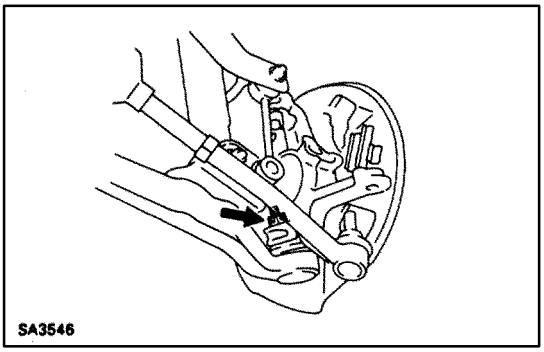

2. CONNECT STEERING KNUCKLE TO LOWER SUSPENSION ARM

(a) Connect the steering knuckle to the lower suspension arm with the nut.
Torque: 125 N·m (1,270 kgf·cm, 92 ft·lbf)

(b) Install a new clip.

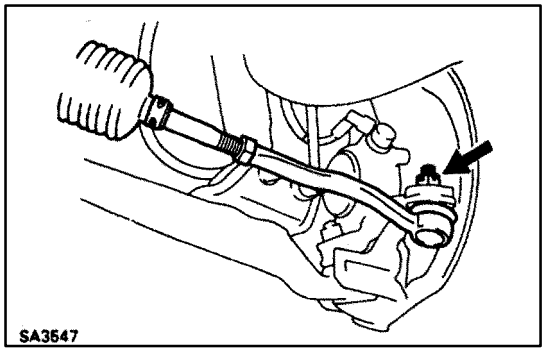

3. CONNECT TIE ROD END TO STEERING KNUCKLE

(a) Connect the tie rod end to the steering knuckle with the nut.
Torque: 49 N·m (500 kgf·cm, 36 ft·lbf)

(b) Install a new cotter pin.

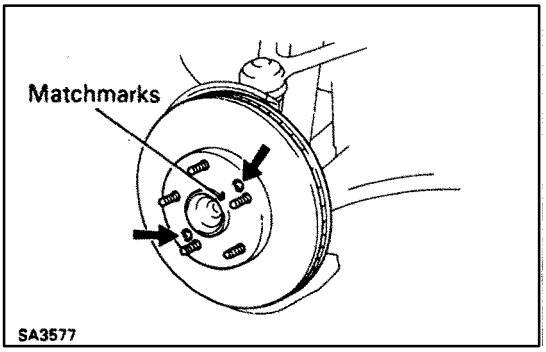

4. INSTALL FRONT BRAKE DISC AND CALIPER

(a) Align the matchmarks and install the brake disc to the axle hub with the 2 screws.

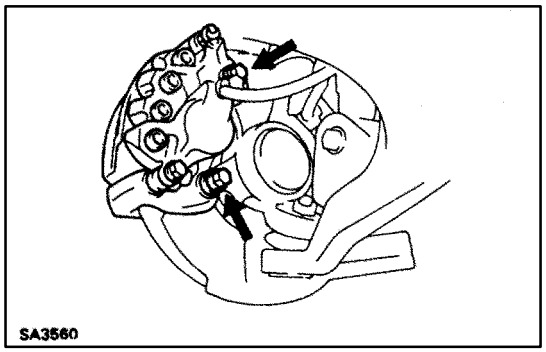

(b) Install the brake caliper to the steering knuckle with the 2 bolts.
Torque: 118 N·m (1,200 kgf·cm, 87 ft·lbf)

WhereEverybodyKnowsYourName

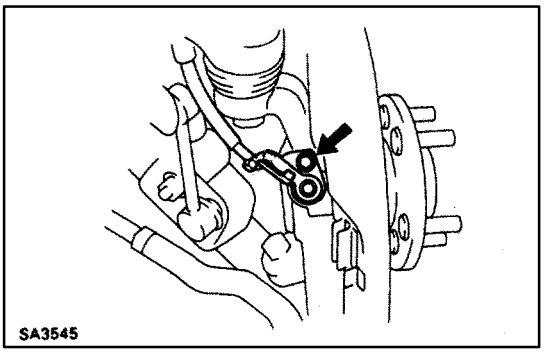

5. **CONNECT ABS SPEED SENSOR TO STEERING KNUCKLE**
   Connect the sensor to the steering knuckle with the bolt.
   Torque: 7.8 N·m (80 kgf·cm, 69 in.·lbf)
6. **INSTALL FRONT WHEEL AND LOWER VEHICLE**
   Torque: 103 N·m (1,050 kgf·cm, 76 ft·lbf)
7. **CHECK FRONT WHEEL ALIGNMENT**
   (See page SA–5)

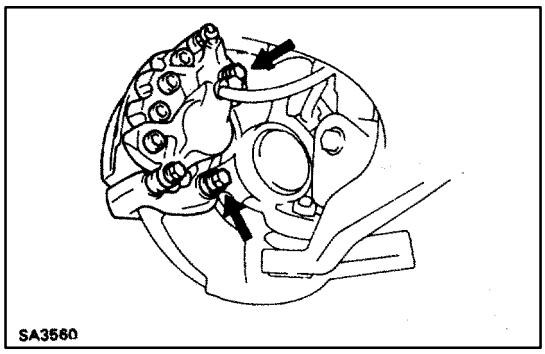

FRONT WHEEL HUB BOLT REPLACEMENT

SA1A1–01

1. **JACK UP VEHICLE AND REMOVE FRONT WHEEL**
2. **REMOVE FRONT BRAKE CALIPER AND DISC**
   (See page SA–30)

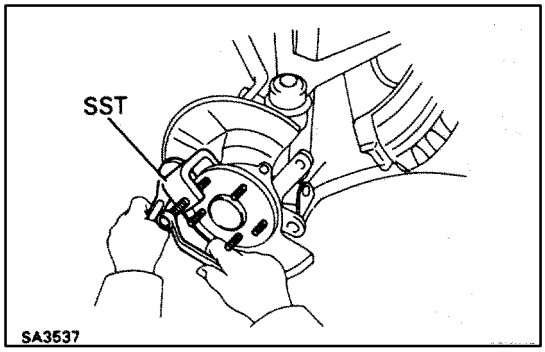

3. **REMOVE HUB BOLT**
   Using SST, remove the hub bolt.
   SST 09628–10011

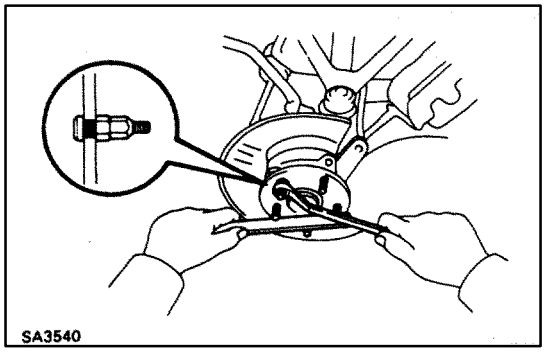

4. **INSTALL HUB BOLT**
   Install a washer and nut to the bolt, as shown in the illustration, and install a new hub bolt by torquing the nut.

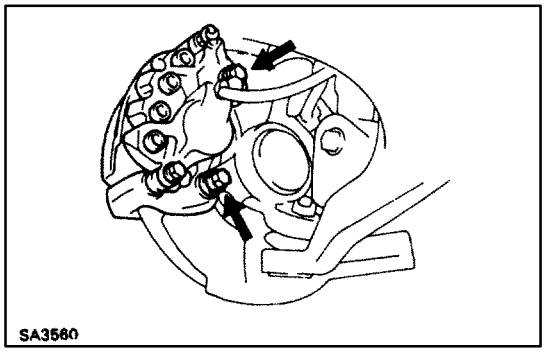

5. **INSTALL FRONT BRAKE DISC AND CALIPER**
   (See page SA–36)
6. **INSTALL FRONT WHEEL AND LOWER VEHICLE**
   Torque: 103 N·m (1,050 kgf·cm, 76 ft·lbf)

WhereEverybodyKnowsYourName

FRONT SUSPENSION

DESCRIPTION

SA008–04

A double wishbone type independent suspension is used. It ensures the greater design freedom, permits and ideal wheel alignment selection.

The result is an outstanding straight–forward stability at high speeds, turning and braking stability.

Suspension friction is also reduced at each portion of the suspension for good vehicle controllability, stability and riding comfort.

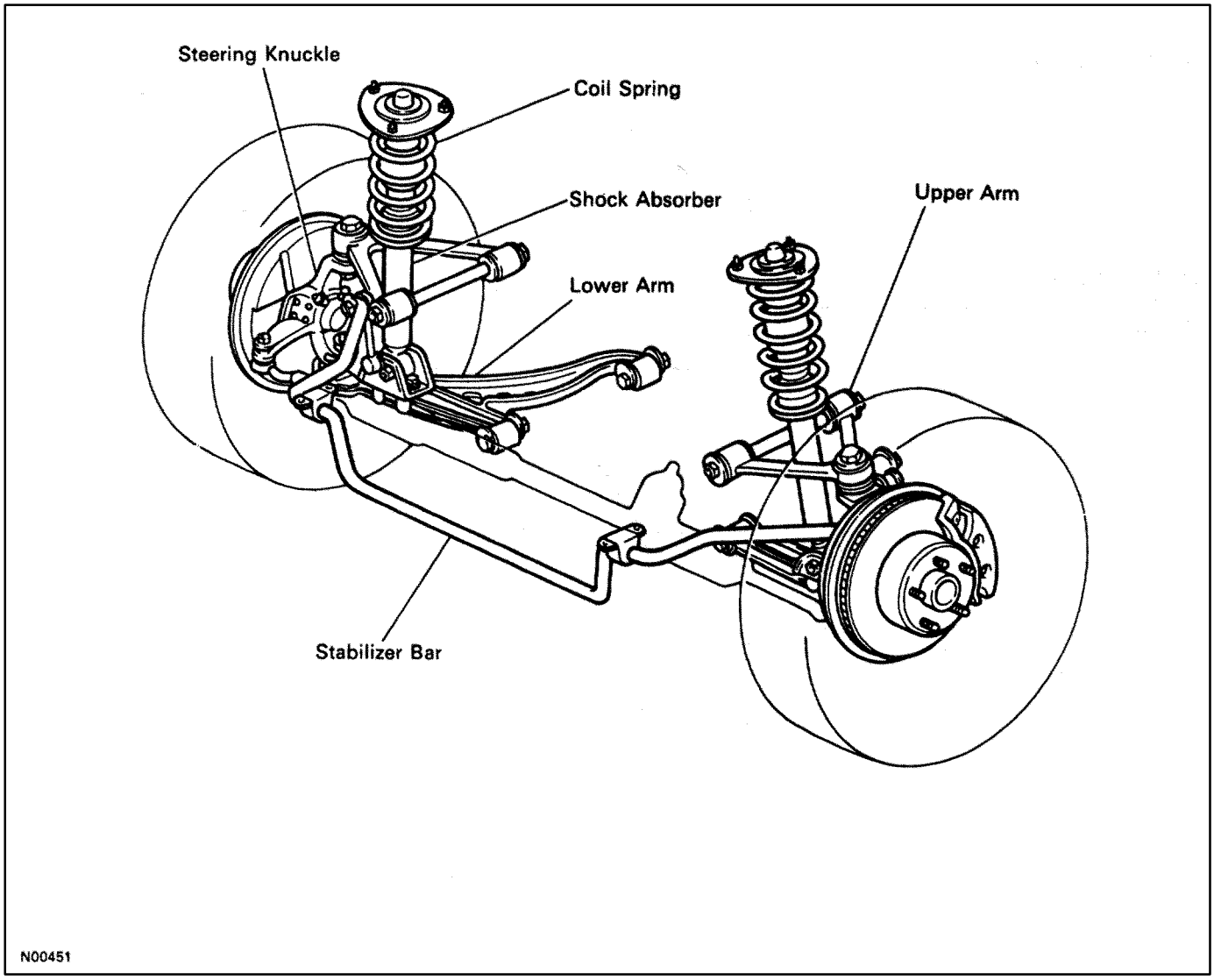

WhereEverybodyKnowsYourName

PREPARATION
SST (SPECIAL SERVICE TOOLS)

SA02Q–07

	09628–62011 Ball Joint Puller	
	09727–30020 Coil Spring Compressor	

RECOMMENDED TOOLS

SA06X–03

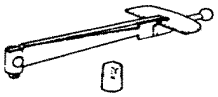	09025–00010 Small Torque Wrench	

EQUIPMENT

SA02S–02

Torque wrench	

WhereEverybodyKnowsYourName

FRONT SHOCK ABSORBER

COMPONENTS

SA00A–0A

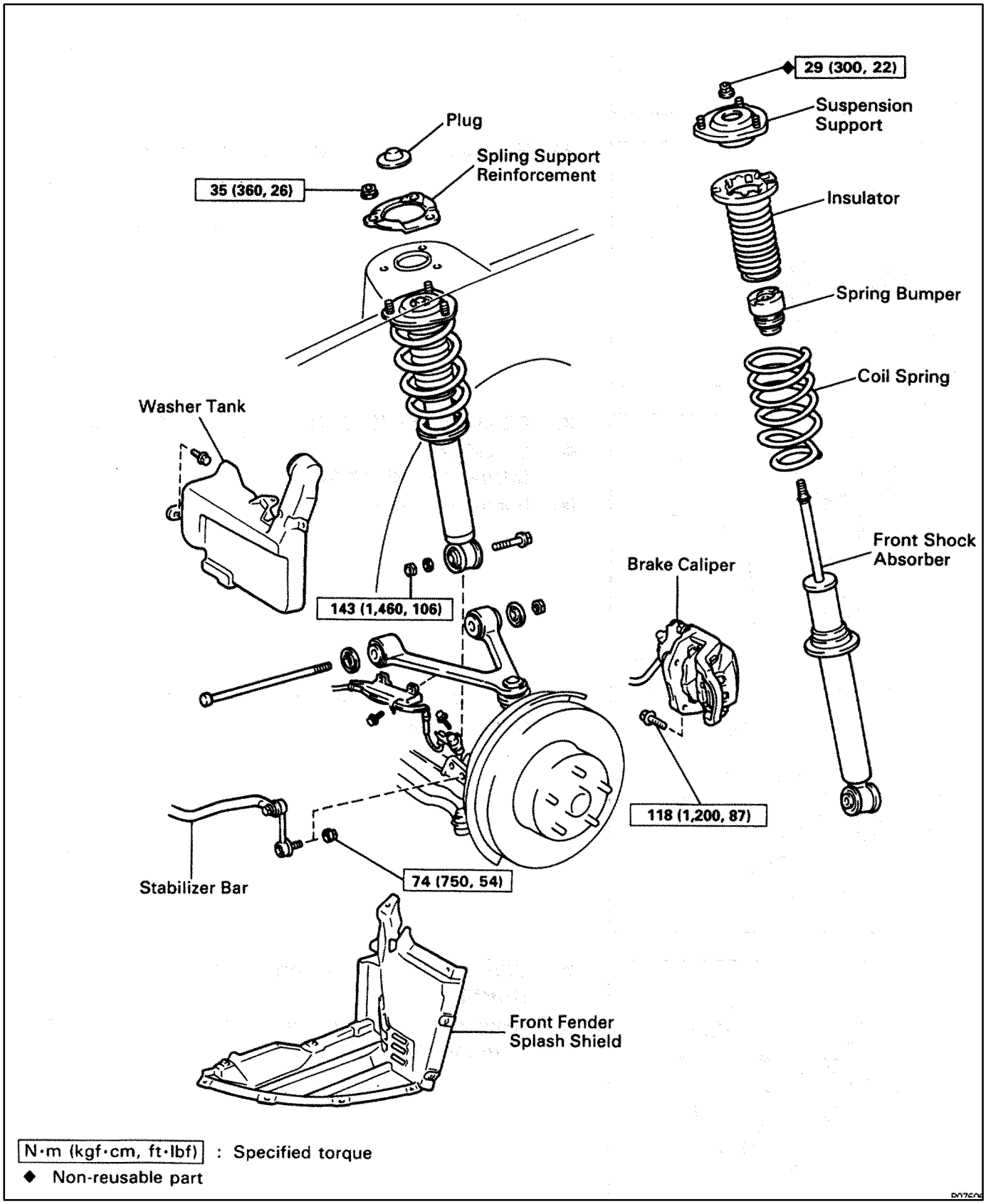

WhereEverybodyKnowsYourName

FRONT SHOCK ABSORBER REMOVAL

SA0RN–04

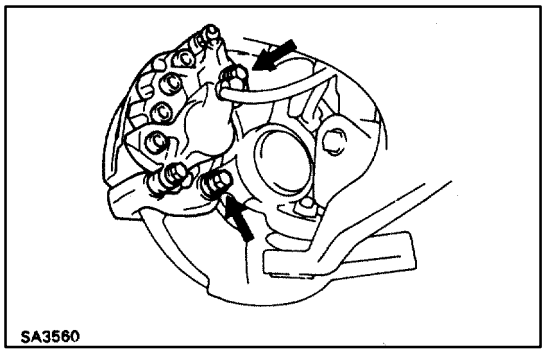

1. JACK UP VEHICLE AND REMOVE FRONT WHEEL

2. REMOVE BRAKE CALIPER

(a) Remove the 2 bolts and caliper from the steering knuckle.

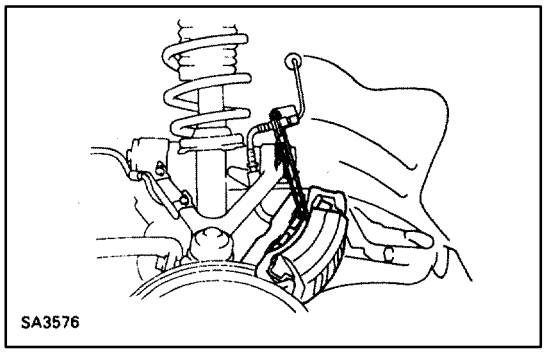

(b) Hang up the brake caliper using wire, etc.

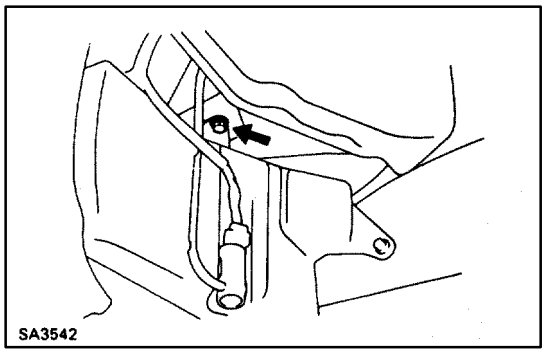

3. REMOVE FRONT FENDER SPLUSH SHIELD

4. LH side only:
MOVE WASHER TANK

(a) Remove the bolt.

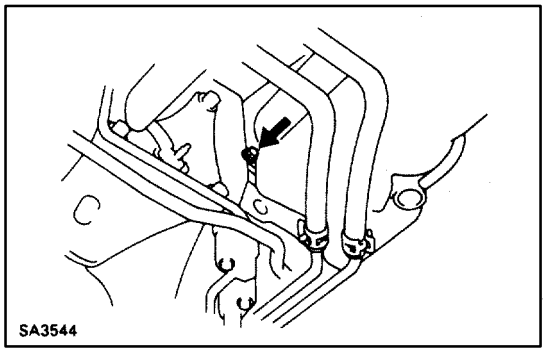

(b) Remove the bolt and move the washer tank away from the body.

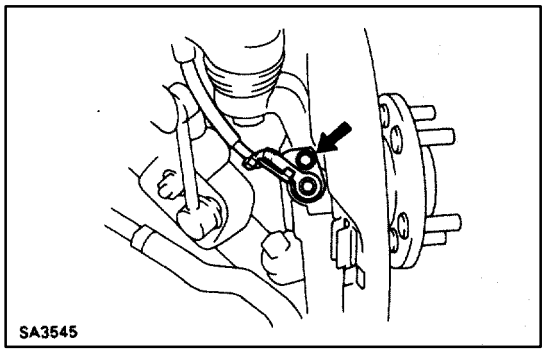

5. DISCONNECT ABS SPEED SENSOR AND WIRE HARNESS

(a) Remove the bolt and disconnect the speed sensor from the steering knuckle.

WhereEverybodyKnowsYourName

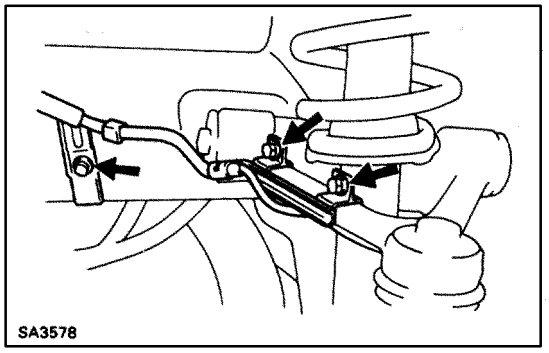

(b) Remove the 3 bolts and disconnect the wire harness clamp to prevent the wire harness being damaged when removing or installing the through bolt.

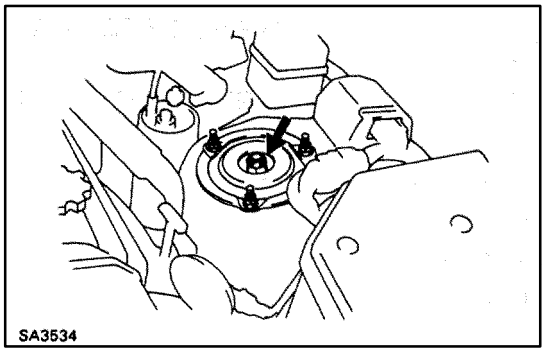

6. LOOSEN PISTON ROD LOCK NUT

(a) Remove the plug from the support.

(b) Loosen the lock nut in the middle of the suspension support.
NOTICE: Only loosen the nut, do not remove it.

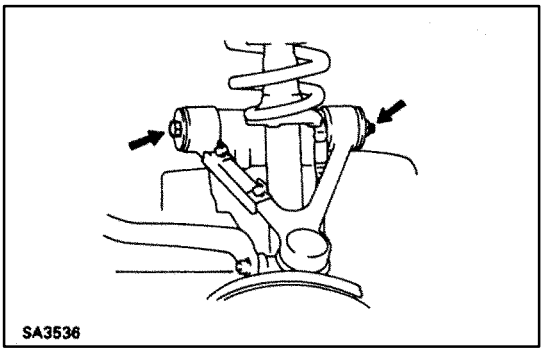

7. DISCONNECT UPPER SUSPENSION ARM

(a) Remove the bolt and nut and disconnect the upper suspension arm from the member.

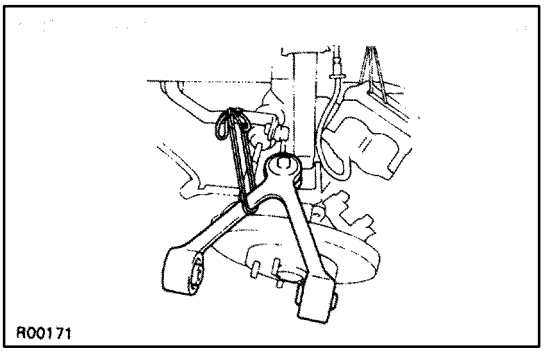

(b) Hang up the upper suspension arm using wire, etc.

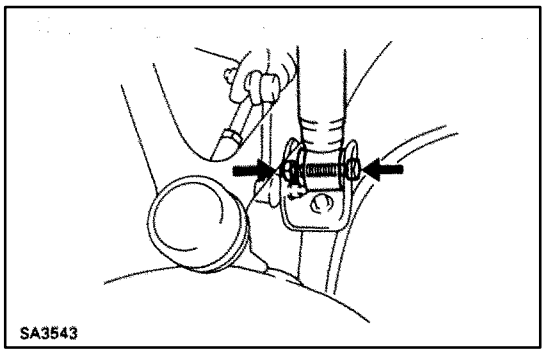

8. REMOVE SHOCK ABSORBER

(a) Remove the bolt and nut and disconnect the shock absorber from the lower suspension arm.

WhereEverybodyKnowsYourName

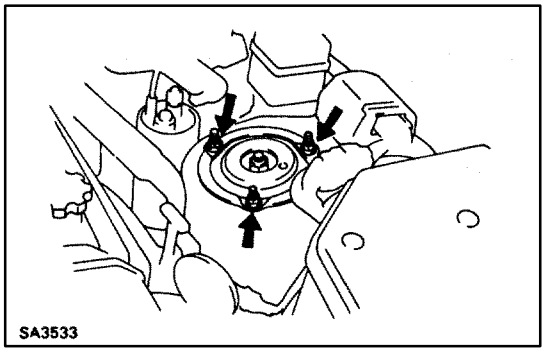

(b) Remove 3 nuts and shock absorber from the body.

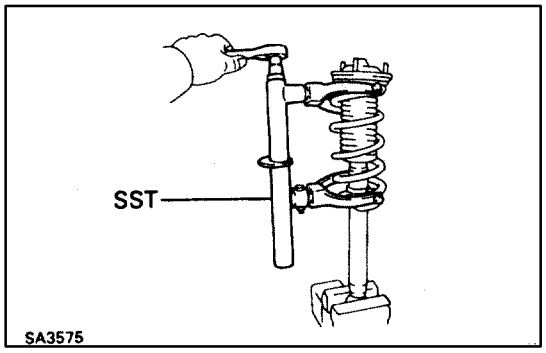

FRONT SHOCK ABSORBER DISASSEMBLY

SA0RP–04

1. REMOVE SUSPENSION SUPPORT AND COIL SPRING

(a) Using SST, compress the coil spring.
SST 09727–30020
NOTICE: Do not use an impact wrench.
It will damage the SST.

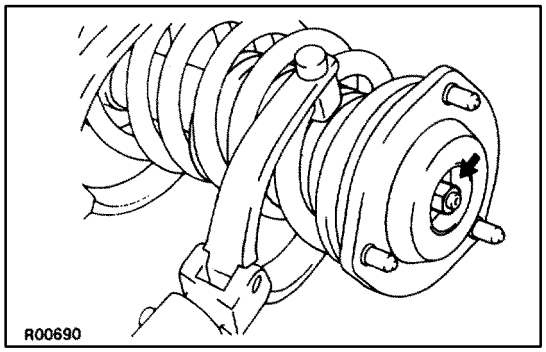

(b) Remove the suspension support center nut.

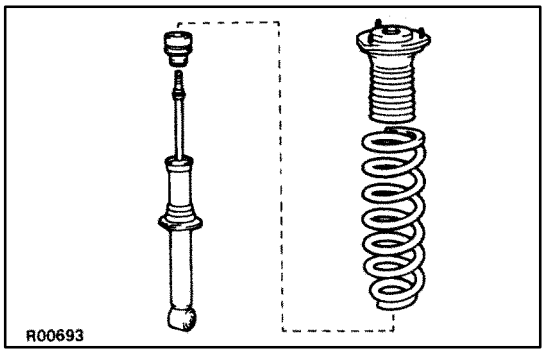

(c) Remove the suspension support, coil spring and spring bumper.

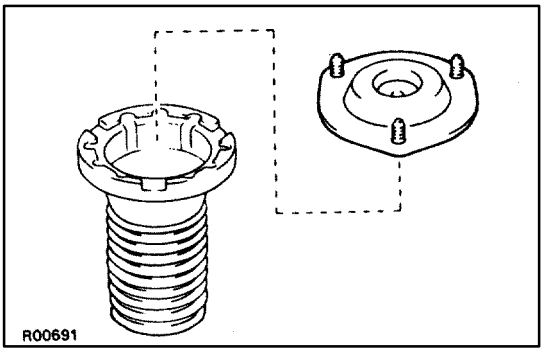

2. REMOVE INSULATOR FROM SUSPENSION SUPPORT

WhereEverybodyKnowsYourName

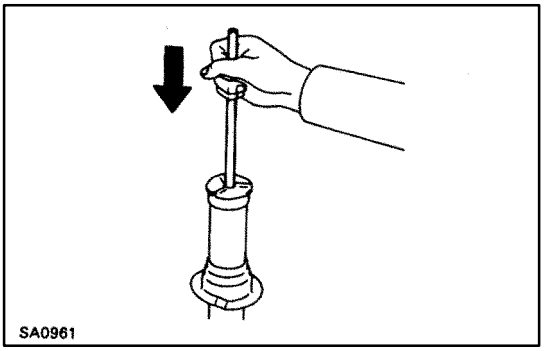

FRONT SHOCK ABSORBER INSPECTION

SA0RQ–03

INSPECT SHOCK ABSORBER

Compress and extend the shock absorber rod and check that there is no abnormal resistance or unusual operation sounds.

If there is any abnormality, replace the shock absorber with a new one.

NOTICE: When discarding the shock absorber, use the following procedure.

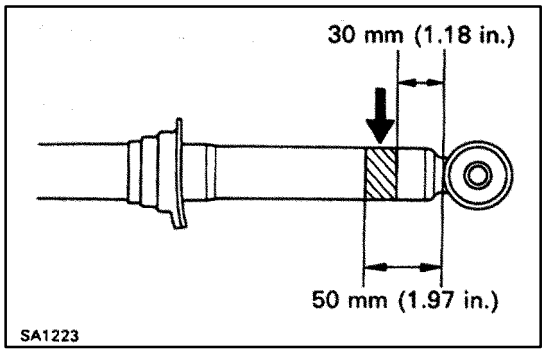

FRONT SHOCK ABSORBER DISPOSAL

SA0RR–03

1. **FULLY EXTEND SHOCK ABSORBER ROD**
2. **DRILL HOLE TO REMOVE GAS FROM CYLINDER**

   Using a drill, make a hole in the cylinder, as shown to remove the gas inside.

   CAUTION: The gas coming out is harmless, but be careful of chips which may fly up when drilling.

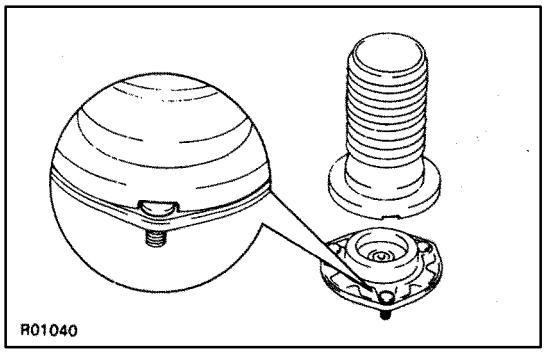

FRONT SHOCK ABSORBER ASSEMBLY

SA0RS–05

1. **INSTALL INSULATOR TO SUSPENSION SUPPORT**

   HINT: Match the bolt of the suspension support with the cut–out part of the insulator.

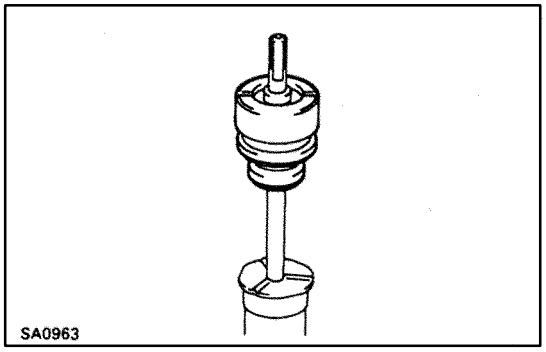

2. **INSTALL SPRING BUMPER TO SHOCK ABSORBER**

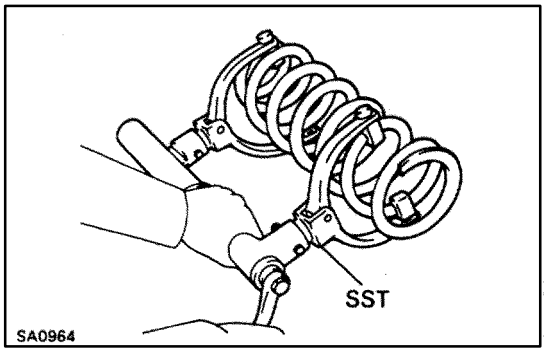

3. **INSTALL COIL SPRING TO SHOCK ABSORBER**

(a) Using SST, compress the coil spring.

SST 09727–30020

NOTICE: Do not use an impact wrench.
It will damage the SST.

WhereEverybodyKnowsYourName

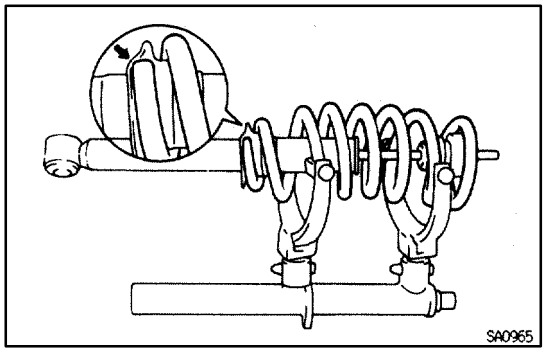

(b) Install the coil spring to the shock absorber.
HINT: Fit the lower end of the coil spring into the gap of the spring seat of the shock absorber.

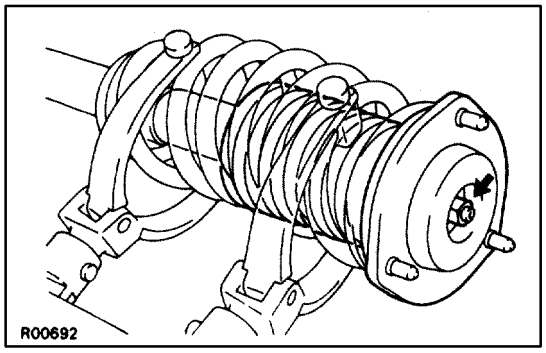

4. INSTALL SUSPENSION SUPPORT

(a) Install the suspension support to the rod.

(b) Temporarily tighten a new nut.

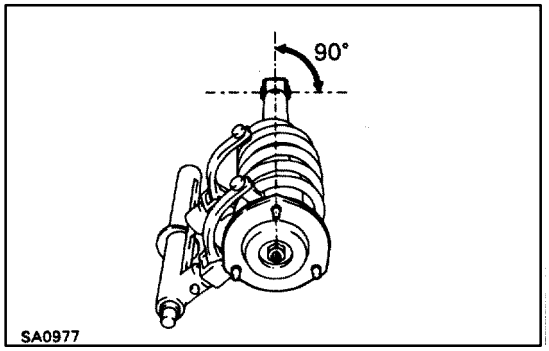

(c) Turn the suspension support so that one of the bolts on the suspension support faces the same direction, as shown in the illustration.
HINT: Align the bolt so that a line drawn between the rod and the bolt would be 90° to the direction of the lower bushing.

5. REMOVE SST
HINT: After removing the SST, again check the direction of the suspension support.

FRONT SHOCK ABSORBER INSTALLATION

SA063–05

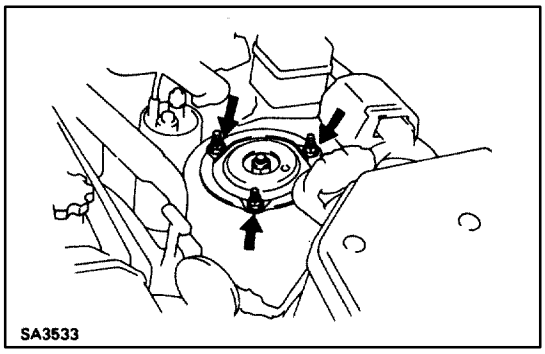

1. INSTALL SHOCK ABSORBER TO BODY

(a) Install the shock absorber with coil spring to the body with the 3 nuts.
Torque: 35 N·m (360 kgf·cm, 26 ft·lbf)

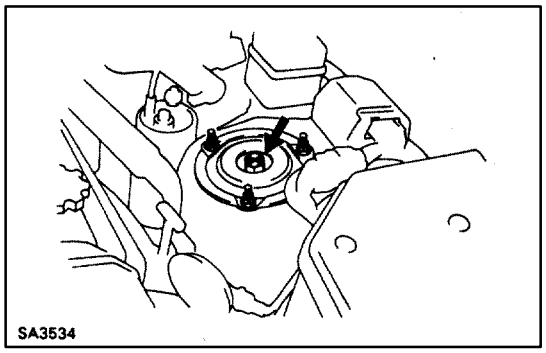

(b) Torque the temporarily tightened nut in the middle of the suspension support.
Torque: 29 N·m (300 kgf·cm, 22 ft·lbf)

(c) Install the plug to the suspension support.

WhereEverybodyKnowsYourName

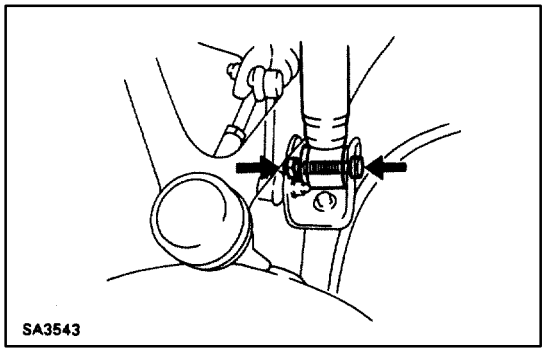

2. CONNECT SHOCK ABSORBER TO LOWER SUSPENSION ARM

(a) Connect the shock absorber to lower suspension arm.

(b) Install the bolt from the rear vehicle and temporarily tighten the nut.

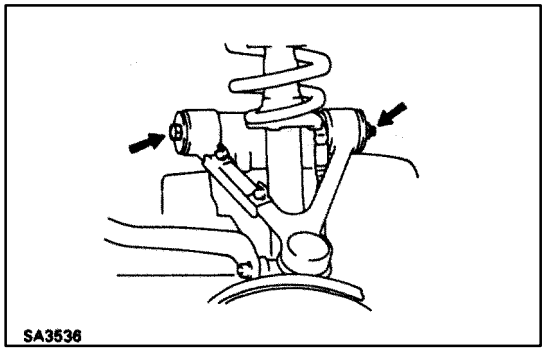

3. TEMPORARILY CONNECT UPPER SUSPENSION ARM TO MEMBER

(a) Connect the upper suspension arm to the suspension member.

(b) Install the bolt from the front vehicle and temporarily tighten the bolt and nut.

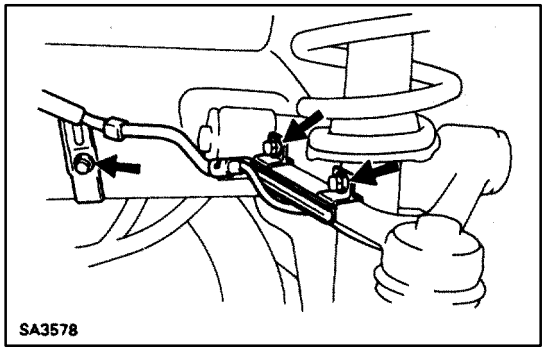

4. CONNECT ABS SPEED SENSOR AND WIRE HARNESS

(a) Clamp the wire harness to the upper suspension arm and body with the 3 bolts.

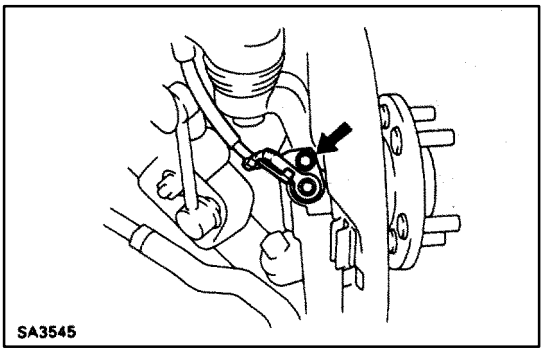

(b) Connect the speed sensor to the steering knuckle with the bolt.

Torque: 7.8 N·m (80 kgf·cm, 69 in.·lbf)

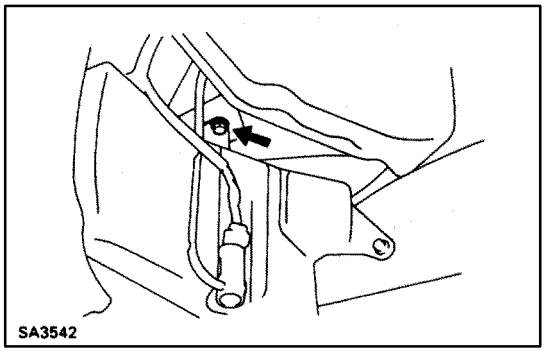

5. LH side only:
CONNECT WASHER TANK

(a) Install and tighten the bolt.

WhereEverybodyKnowsYourName

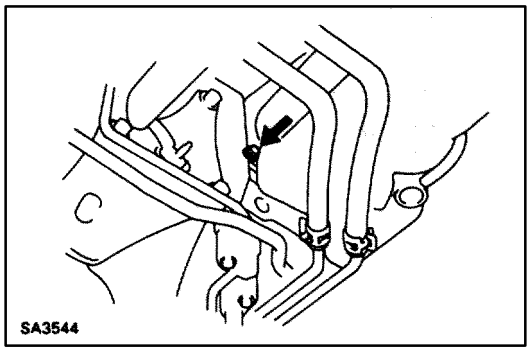

(b) Install and tighten the bolt.

6. INSTALL FRONT FENDER SPLASH SHIELD

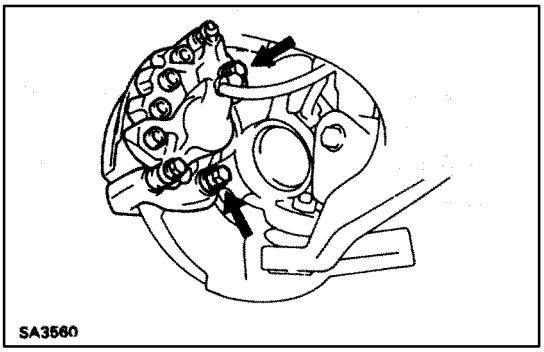

7. INSTALL DISC BRAKE CALIPER

Install the brake caliper to the steering knuckle with the 2 bolts.

Torque: 118 N·m (1,200 kgf·cm, 87 ft·lbf)

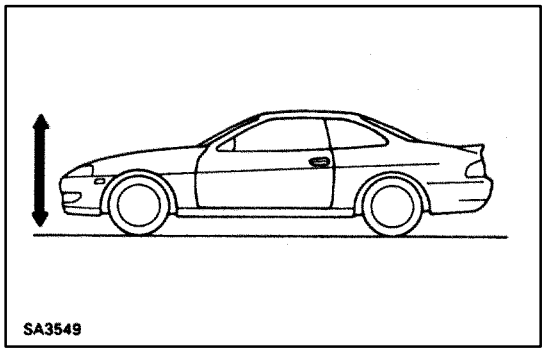

8. STABILIZE SUSPENSION

(a) Install the front wheel and lower vehicle.
Torque: 103 N·m (1,050 kgf·cm, 76 ft·lbf)

(b) Bounce the vehicle up and down several times to stabilize the suspension.

(c) Jack up vehicle and remove the front wheel.

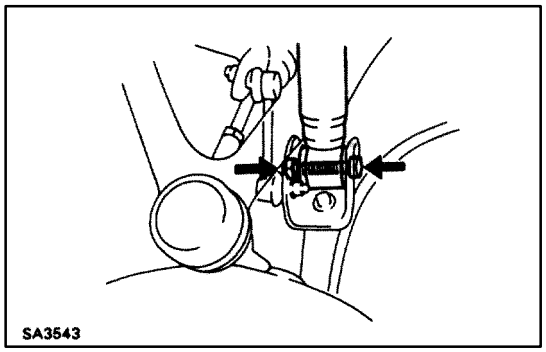

9. TIGHTEN BOLT AND NUT ON LOWER SIDE OF SHOCK ABSORBER

(a) Support the lower arm with a jack.

(b) Tighten the nut to the specified torque.
Torque: 143 N·m (1,460 kgf·cm, 106 ft·lbf)

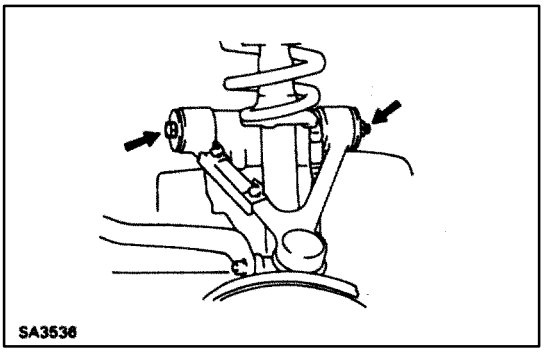

10. TIGHTEN BOLT AND NUT OF UPPER SUSPENSION ARM

Tighten the bolt and nut to the specified torque.
Torque: 164 N·m (1,670 kgf·cm, 121 ft·lbf)

11. INSTALL FRONT WHEEL AND LOWER VEHICLE
Torque: 103 N·m (1,050 kgf·cm, 76 ft·lbf)

12. CHECK FRONT WHEEL ALIGNMENT
(See page SA–5)

WhereEverybodyKnowsYourName

SA074–06

UPPER SUSPENSION ARM
COMPONENTS

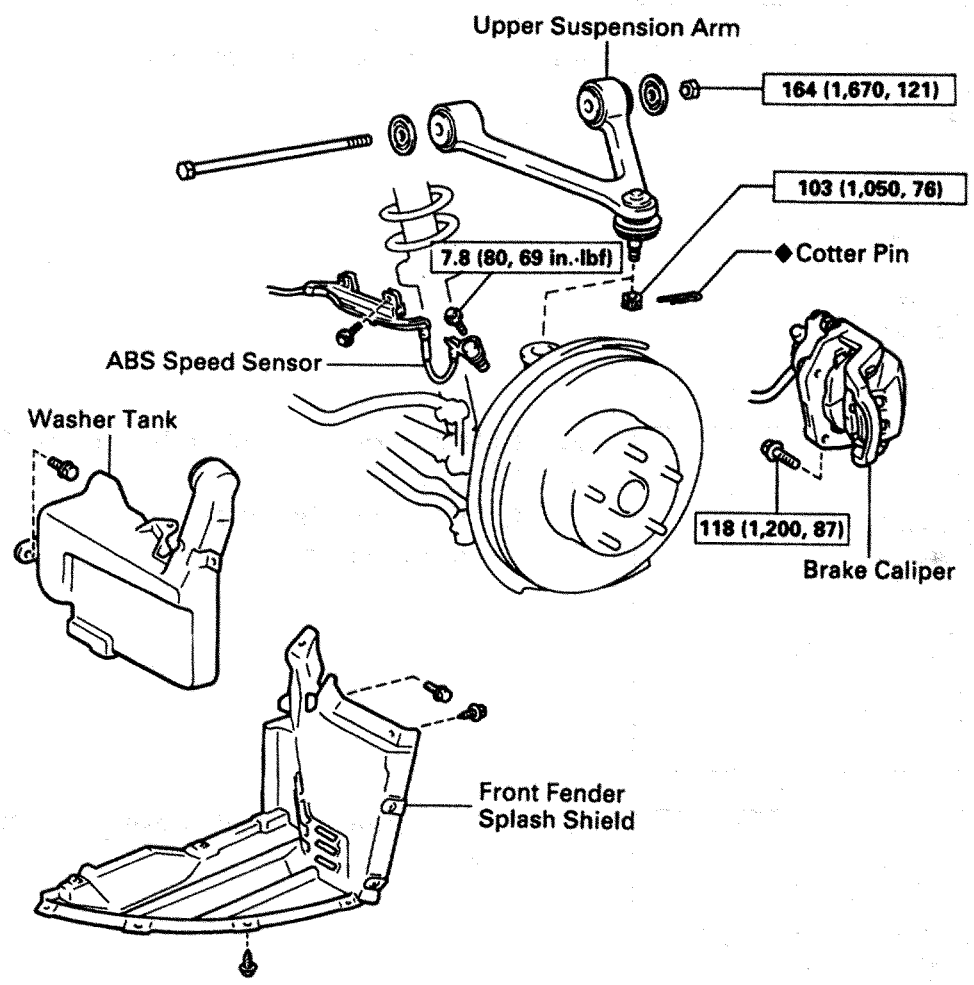

N·m (kgf·cm, ft·lbf) : Specified torque
◆ Non-reusable part

WhereEverybodyKnowsYourName

UPPER SUSPENSION ARM REMOVAL

SA1A2–01

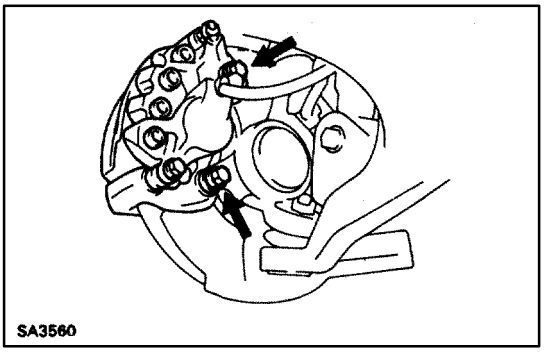

1. JACK UP VEHICLE AND REMOVE FRONT WHEEL

2. REMOVE FRONT BRAKE CALIPER AND DISC

(a) Remove the 2 bolts and brake caliper from the steering knuckle.

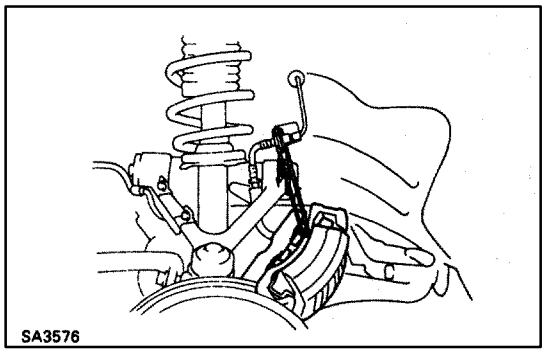

(b) Hang up the caliper using wire, etc.

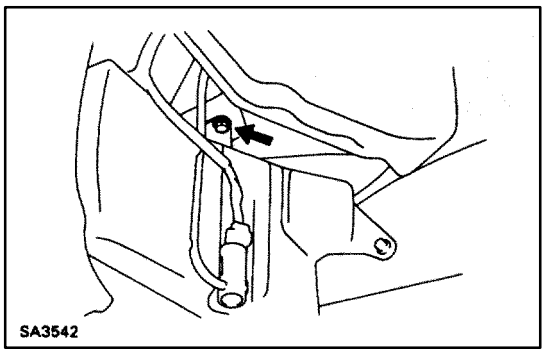

3. REMOVE FRONT FENDER SPLASH SHIELD

4. LH side only:
MOVE WASHER TANK

(a) Loosen the bolt.

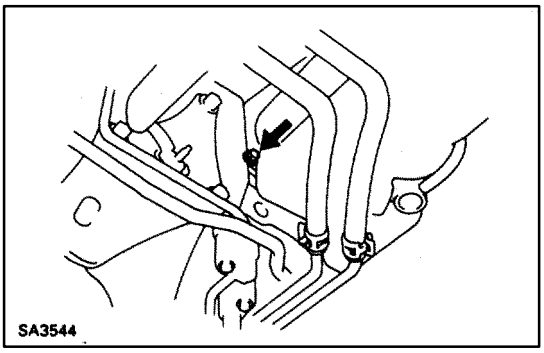

(b) Remove the bolt and move the washer tank away from the body.

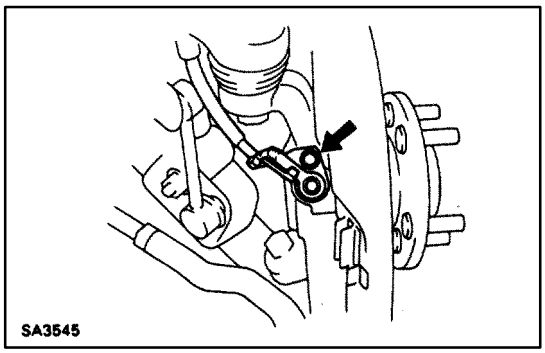

5. REMOVE ABS SPEED SENSOR AND WIRE HARNESS CLAMP

(a) Remove the bolt and disconnect the speed sensor from the steering knuckle.

WhereEverybodyKnowsYourName

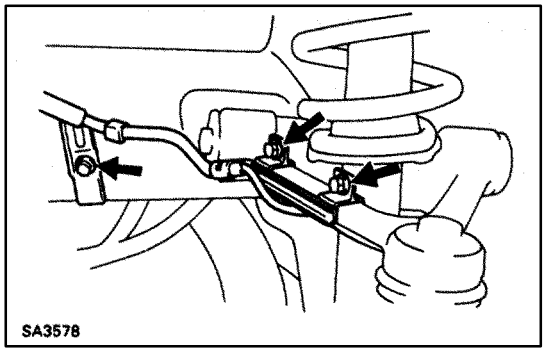

(b) Remove the 3 bolts and wire harness clamp to prevent the wire harness being damaged when removing or installing the through bolt.

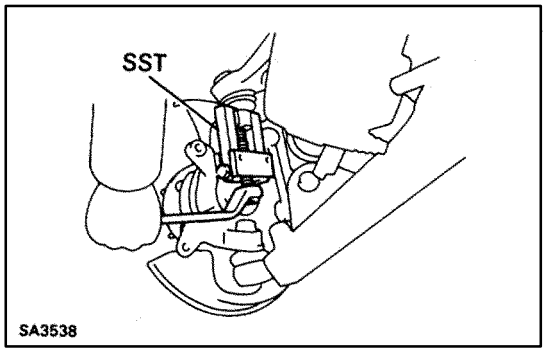

6. REMOVE UPPER SUSPENSION ARM

(a) Remove the cotter pin and the nut.

(b) Using SST, disconnect the upper suspension arm from the steering knuckle.
SST 09628–62011

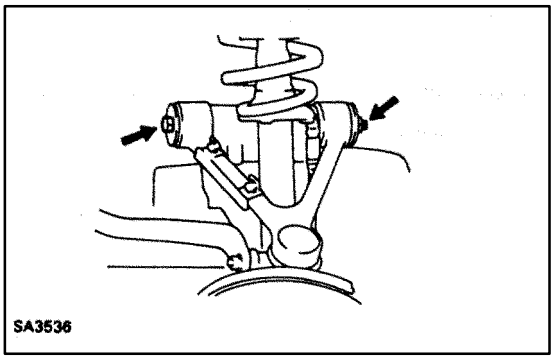

(c) Remove the bolt and nut.

(d) Remove the upper suspension arm.

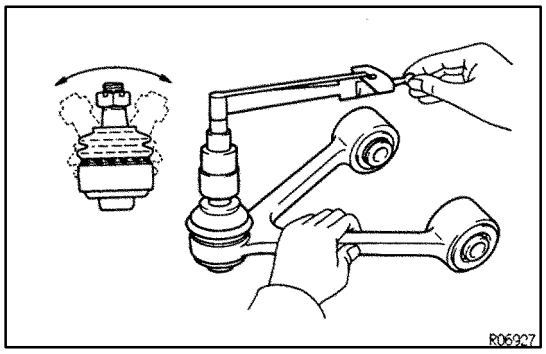

UPPER BALL JOINT INSPECTION

SA0RU–04

INSPECT BALL JOINT FOR ROTATION CONDITION

(a) As shown, flip the ball joint stud back and forth 5 times before installing the nut.

(b) Using a torque wrench, turn the nut continuously one turn every 2–4 seconds and take the torque reading on the 5th turn.

Torque (turning):

1.0–3.4 N·m (10–35 kgf·cm, 9–30 in.·lbf)

If not within specification, replace the upper suspension arm.

WhereEverybodyKnowsYourName

UPPER SUSPENSION ARM INSTALLATION

SA1A3–01

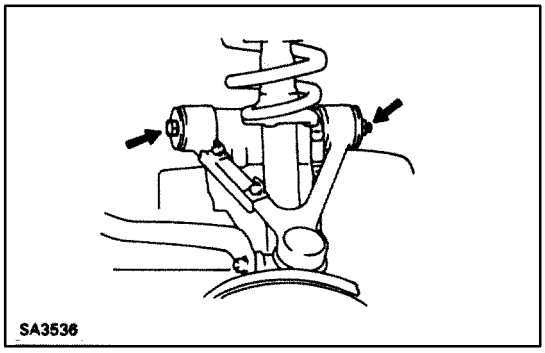

1. INSTALL UPPER SUSPENSION ARM

(a) Temporarily install the upper suspension arm to the member with the bolt and nut.

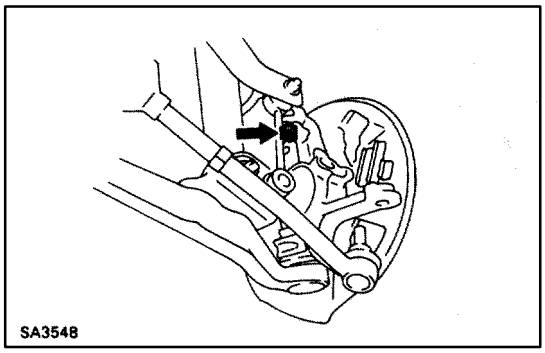

(b) Connect the upper suspension arm to the steering knuckle with the nut and a new cotter pin.
Torque: 103 N·m (1,050 kgf·cm, 76 ft·lbf)

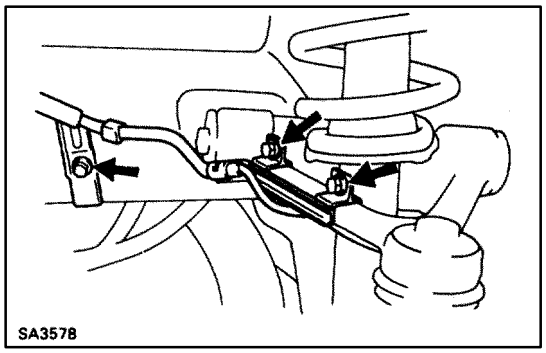

2. INSTALL ABS SPEED SENSOR AND WIRE HARNESS CLAMP

(a) Clamp the wire harness to the upper suspension arm and body with the 3 bolts.

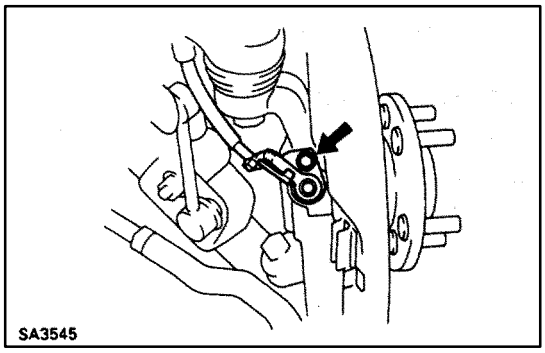

(b) Install the speed sensor to the steering knuckle with the bolt.
Torque: 7.8 N·m (80 kgf·cm, 69 in.·lbf)

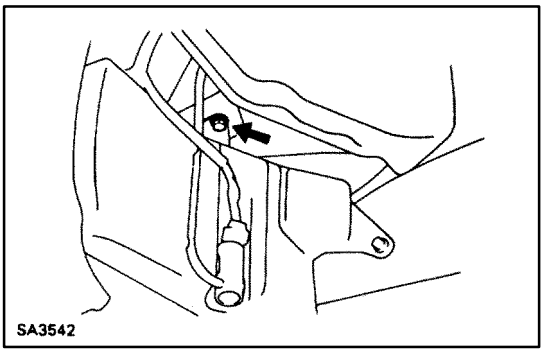

3. LH side only:
CONNECT WASHER TANK

(a) Tighten the bolt.

WhereEverybodyKnowsYourName

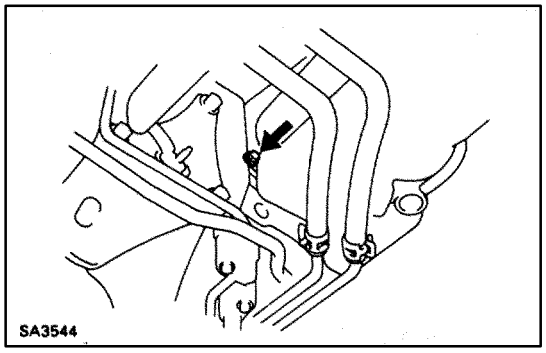

(b) Install and tighten the bolt.

4. INSTALL FRONT FENDER SPLASH SHEILD

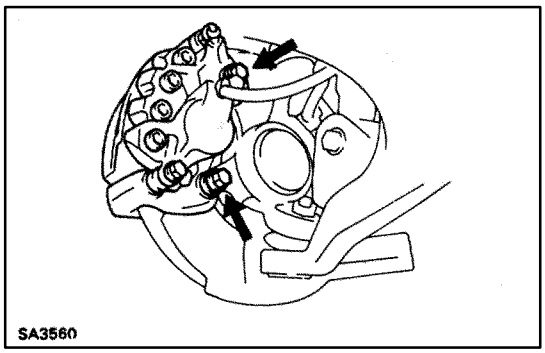

5. INSTALL BRAKE CALIPER

Install the brake caliper to the steering knuckle with the 2 bolts.

Torque: 118 N·m (1,200 kgf·cm, 87 ft·lbf)

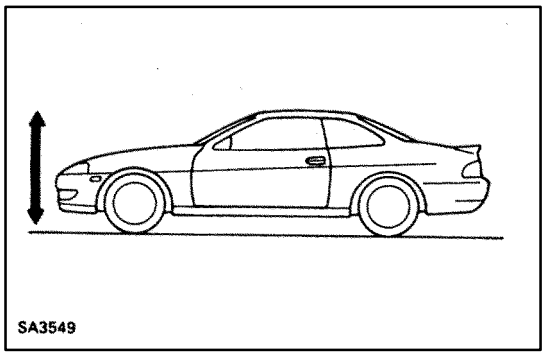

6. STABILIZE SUSPENSION

(a) Install the front wheel.

Torque: 103 N·m (1,050 kgf·cm, 76 ft·lbf)

(b) Bounce the vehicle up and down several times to stabilize the suspension.

(c) Jack up the vehicle and remove the front wheel.

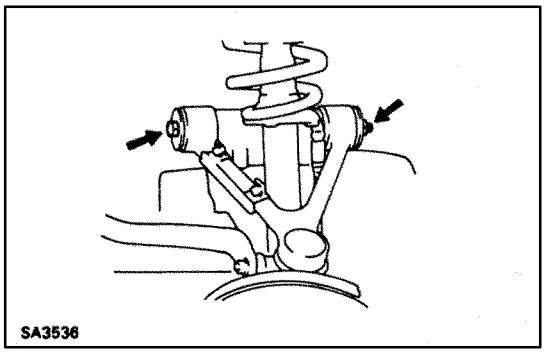

7. TIGHTEN BOLT AND NUT OF UPPER SUSPENSION ARM

(a) Support the lower arm with jack.

(b) Torque the bolt and nut the specified torque.

Torque: 164 N·m (1,670 kgf·cm, 121 ft·lbf)

8. INSTALL FRONT WHEEL AND LOWER VEHICLE

Torque: 103 N·m (1,050 kgf·cm, 76 ft·lbf)

9. CHECK FRONT WHEEL ALIGNMENT

(See page SA–5)

WhereEverybodyKnowsYourName

LOWER SUSPENSION ARM
COMPONENTS

SA00B–0C

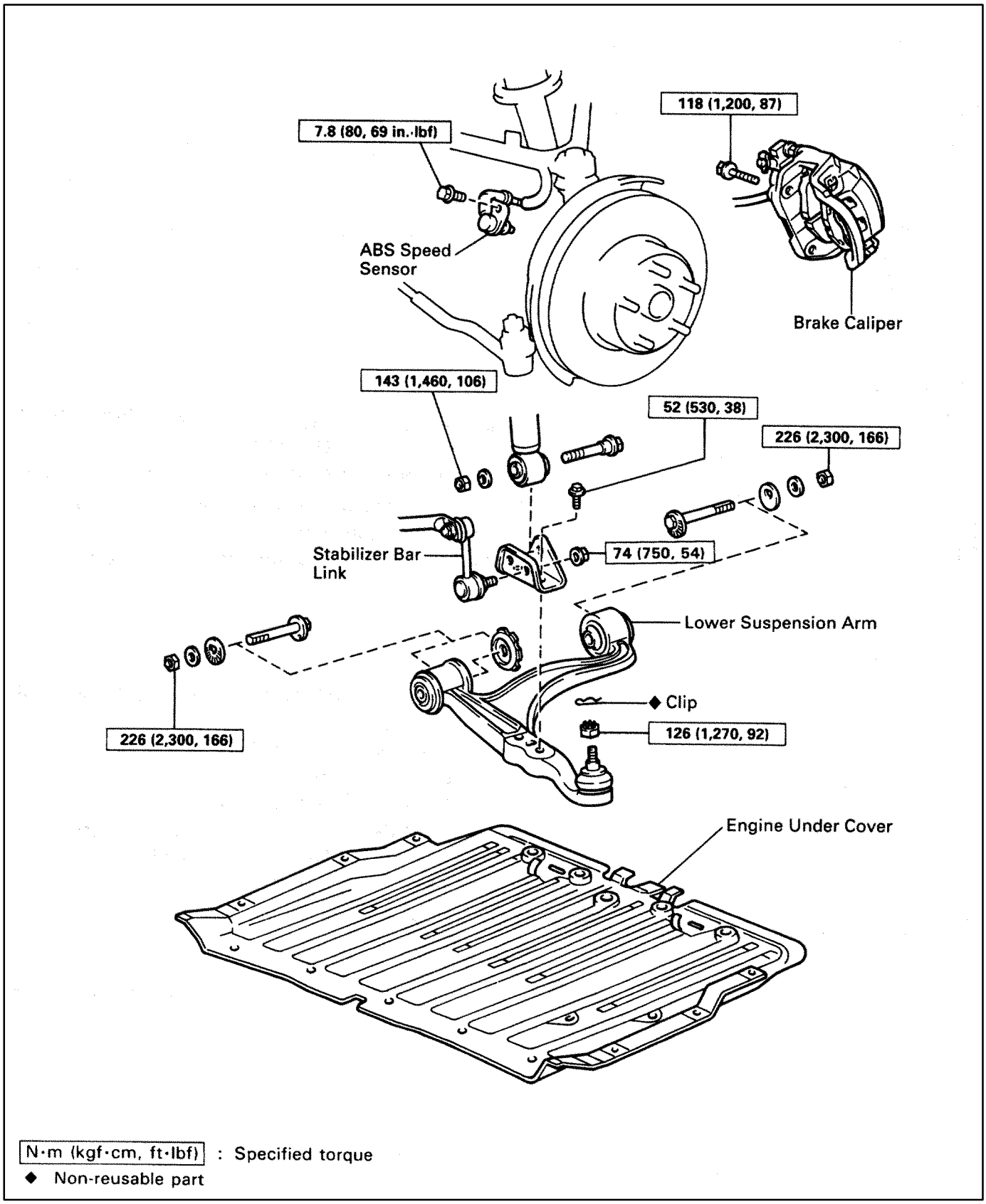

WhereEverybodyKnowsYourName

LOWER SUSPENSION ARM REMOVAL

SA1A4–01

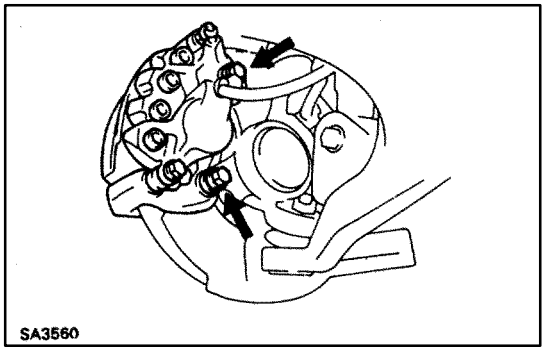

1. JACK UP VEHICLE AND REMOVE FRONT WHEEL
2. REMOVE ENGINE UNDER COVER
3. REMOVE FRONT BRAKE CALIPER

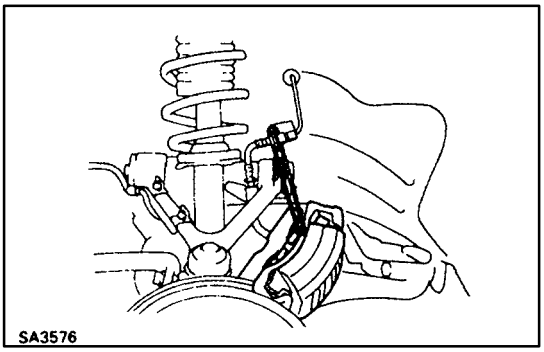

(b) Hang up the brake caliper using wire, etc.

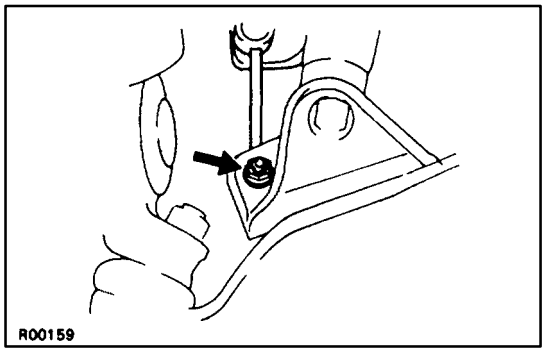

4. DISCONNECT STABILIZER BAR LINK FROM LOWER SUSPENSION ARM
Remove the nut and disconnect the link from the arm.

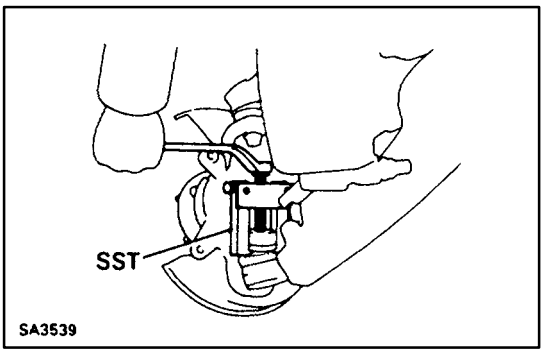

5. DISCONNECT STEERING KNUCKLE
(a) Remove the clip and nut.
(b) Using SST, disconnect the steering knuckle from the lower suspension arm.
SST 09628–62011

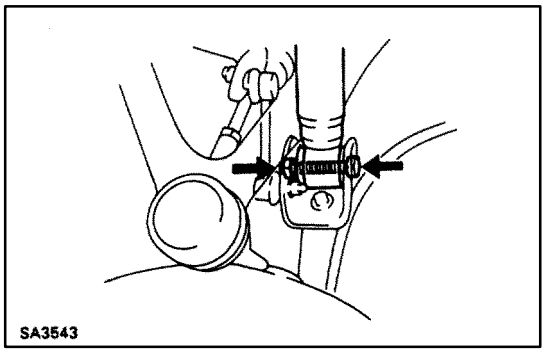

6. REMOVE LOWER SUSPENSION ARM
(a) Remove the bolt and nut and disconnect the lower suspension arm from the shock absorber.

WhereEverybodyKnowsYourName

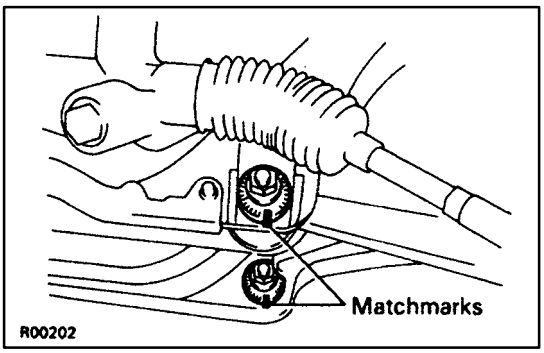

(b) Before loosening the adjusting cam, place matchmarks on the front and rear adjusting cams and body.

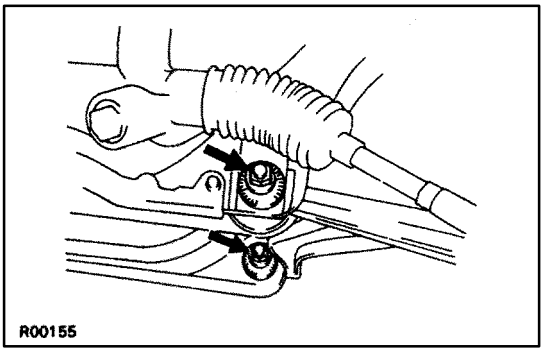

(c) Remove the nuts and adjusting cams and remove the lower suspension arm.

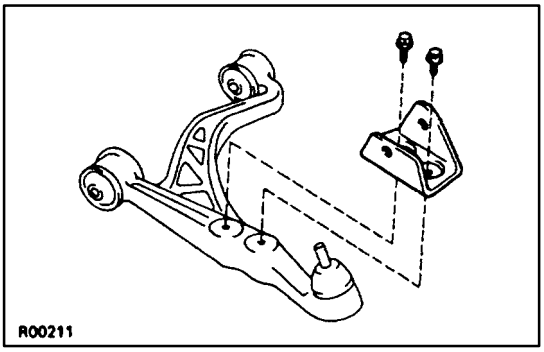

7. REMOVE SHOCK ABSORBER BRACKET FROM LOWER SUSPENSION ARM

Remove the 2 bolts and the bracket from the arm.

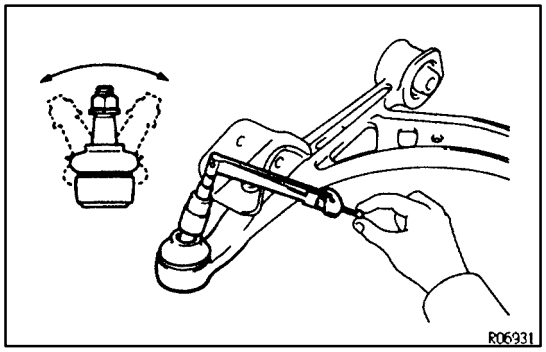

LOWER BALL JOINT INSPECTION

SA0RW–04

INSPECT BALL JOINT FOR ROTATION CONDITION

(a) As shown, flip the ball joint stud back and forth 5 times before installing the nut.

(b) Using torque wrench, turn the nut continuously one turn every 2–4 seconds and take the torque reading on the 5th turn.

Torque (turning):

1.0–3.4 N·m (10–35 kgf·cm, 9–30 in.·lbf)

If not within specification, replace the lower suspension arm.

WhereEverybodyKnowsYourName

LOWER SUSPENSION ARM INSTALLATION

SA1A5–01

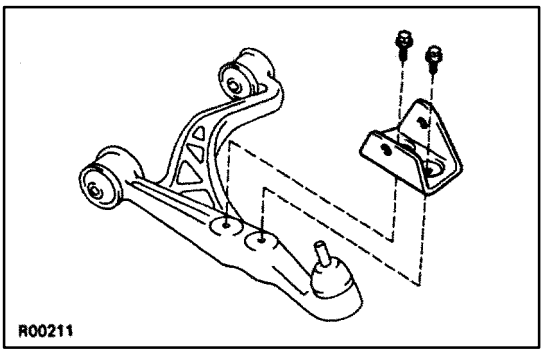

1. INSTALL SHOCK ABSORBER BRACKET TO LOWER SUSPENSION ARM

Install the bracket to the arm with the 2 bolts.

Torque: 52 N·m (530 kgf·cm, 38 ft·lbf)

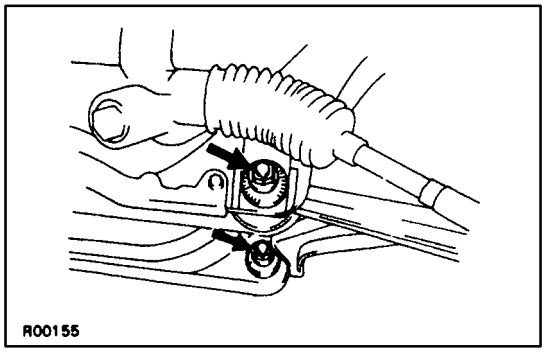

2. INSTALL LOWER SUSPENSION ARM

(a) Install the lower suspension arm to the body and temporarily install the adjusting cams and nut.

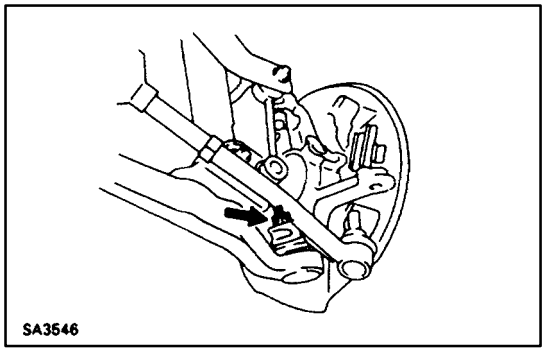

(b) Connect the lower suspension arm to the steering knuckle.
Torque: 125 N·m (1,270 kgf·cm, 92 ft·lbf)

(c) Install a new clip.

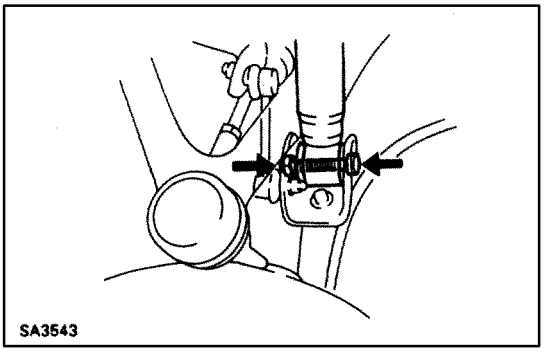

(d) Connect the shock absorber to the lower suspension arm with the bolt and nut.
Torque: 143 N·m (1,460 kgf·cm, 106 ft·lbf)

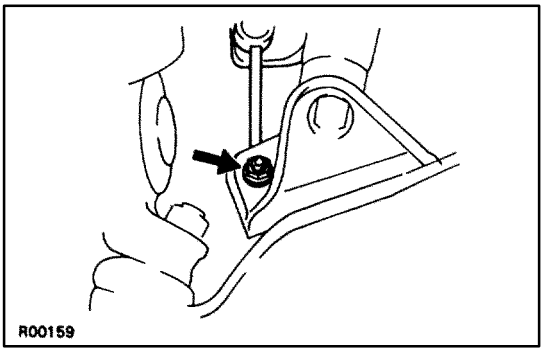

2. CONNECT STABILIZER BAR LINK

(a) Connect the stabilizer bar link to the lower suspension arm with the nut.
Torque: 74 N·m (750 kgf·cm, 54 ft·lbf)

WhereEverybodyKnowsYourName

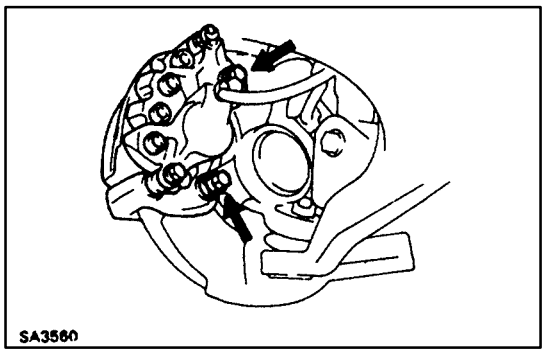

3. INSTALL BRAKE CALIPER

Install the brake caliper to the steering cnuckle with the 2 bolts.

Torque: 118 N·m (1,200 kgf·cm, 87 ft·lbf)

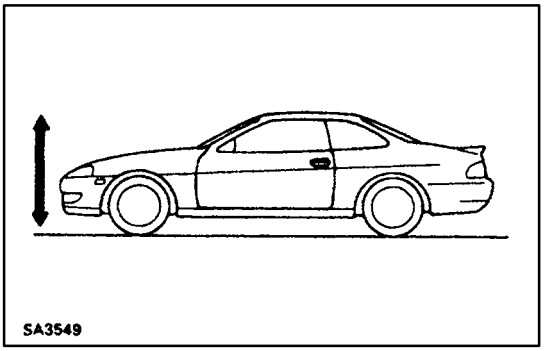

4. STABILIZE SUSPENSION

(a) Install the front wheel and jack down the vehicle.
Torque: 103 N·m (1,050 kgf·cm, 76 ft·lbf)

(b) Bounce the vehicle up and down several times to stabilize the suspension.

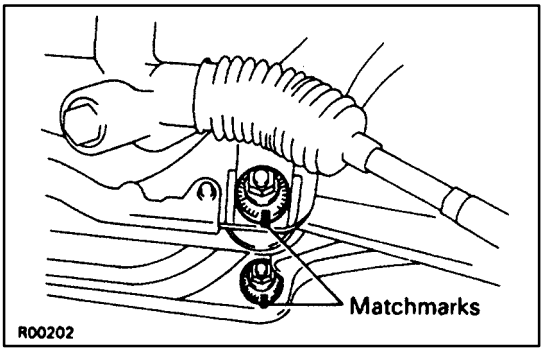

5. TORQUE ADJUSTING CAMS AND NUTS

(a) Jack up the vehicle and remove the front wheel.

(b) Support the lower arm with jack.

(c) Align the matchmarks and torque the adjusting cams and nuts with the vehicle weight on the suspension.
Torque: 226 N·m (2,300 kgf·cm, 166 ft·lbf)

6. INSTALL ENGINE UNDER COVER

7. INSTALL FRONT WHEEL
Torque: 103 N·m (1,050 kgf·cm, 76 ft·lbf)

8. CHECK FRONT WHEEL ALIGNMENT
(See page SA–5)

WhereEverybodyKnowsYourName

STABILIZER BAR
COMPONENTS

SA033–0B

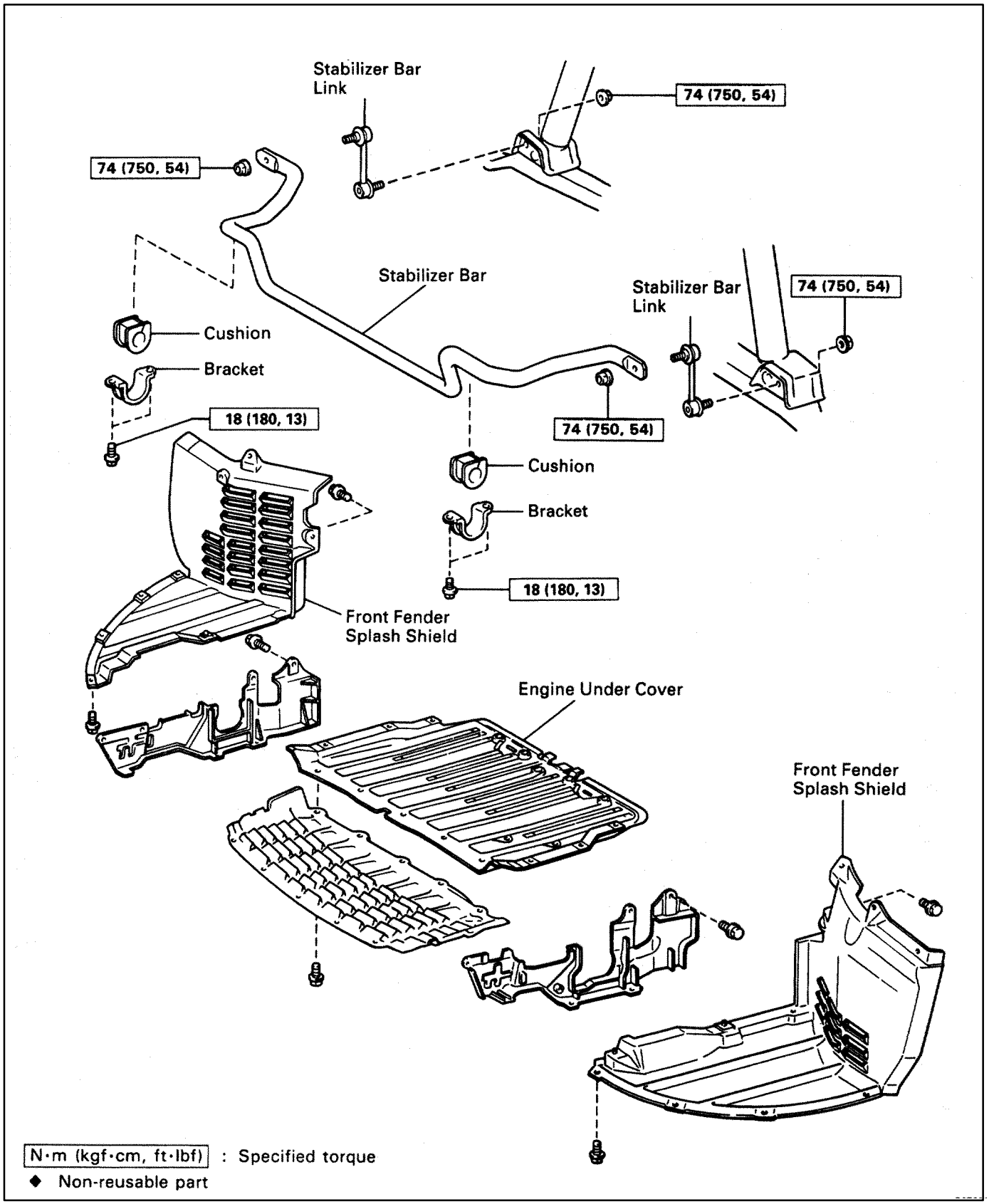

WhereEverybodyKnowsYourName

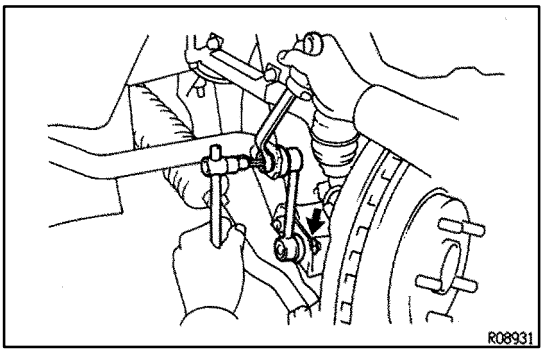

STABILIZER BAR AND LINK REMOVAL

SA0WH–02

1. **JACK UP VEHICLE AND REMOVE FRONT WHEELS**
2. **REMOVE ENGINE UNDER COVER**
3. **REMOVE BOTH SIDE STABILIZER BAR LINKS**
   Remove the nuts and the stabilizer bar links from the stabilizer bar and the lower suspension arm.

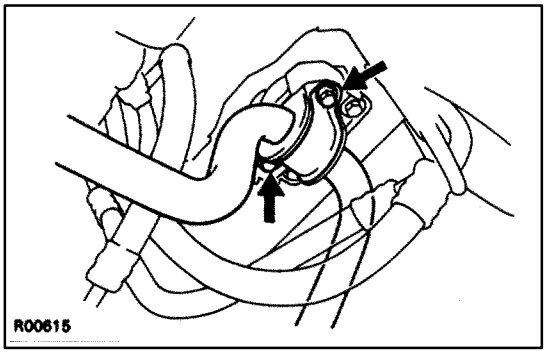

4. **REMOVE STABILIZER BAR**
   Remove the 4 bracket mounting bolts and the stabilizer bar with the cushions and brackets.

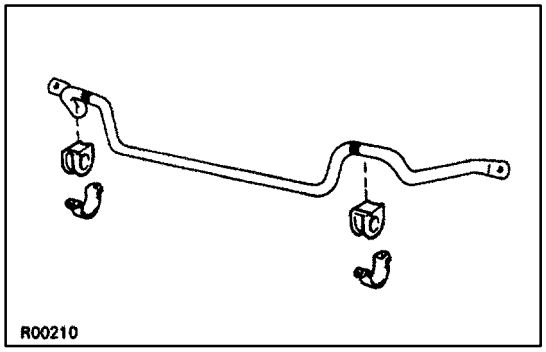

5. **REMOVE CUSHIONS AND BRACKETS**

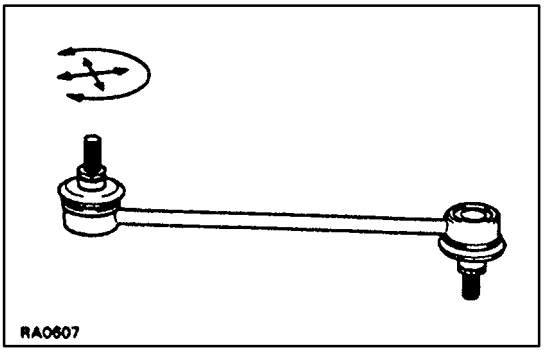

STABILIZER BAR LINK INSPECTION

SA035–0C

INSPECT BALL JOINT FOR ROTATION CONDITION

(a) As shown, flip the ball joint stud back and forth 5 times, before installing the nut.

(b) Using a torque wrench, turn the stud continuously one turn every 2–4 seconds and take the torque reading on the 5th turn.

Torque (turning):

0.05 – 1.5 N·m (0.5 – 15 kgf·cm, 0.4 – 13 in.·lbf)

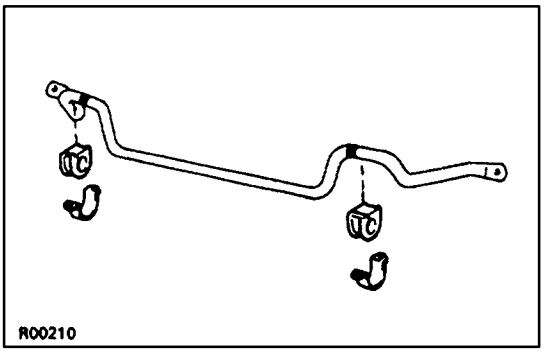

STABILIZER BAR AND LINK INSTALLATION

SA0WJ–02

1. **INSTALL CUSHIONS AND BRACKETS**

(a) Install the cushion so as to touch the line painted on the stabilizer bar.

HINT: Install the cushion to the inside of the line.

(b) Install the brackets.

WhereEverybodyKnowsYourName

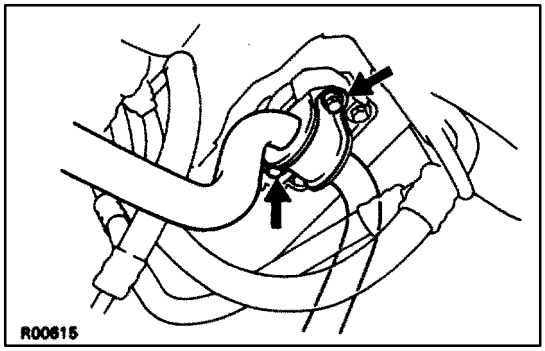

2. INSTALL STABILIZER BAR

Install the stabilizer bar to the body with the bolts.

Torque: 18 N·m (180 kgf·cm, 13 ft·lbf)

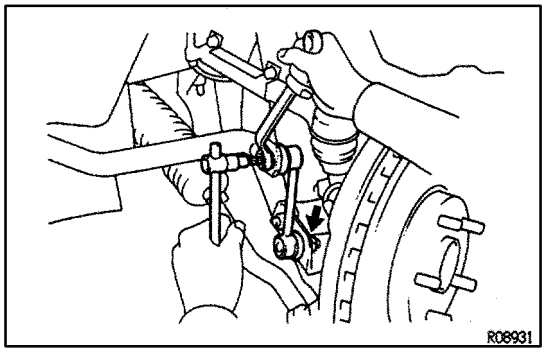

3. INSTALL BOTH SIDE STABILIZER BAR LINKS

Install the stabilizer bar links to the stabilizer bar and the lower suspension arm with the nuts.

Torque: 74 N·m (750 kgf·cm, 54 ft·lbf)

4. REMOVE ENGINE UNDER COVER

5. INSTALL FRONT WHEEL AND LOWER VEHICLE

Torque: 103 N·m (1,050 kgf·cm, 76 ft·lbf)

WhereEverybodyKnowsYourName

REAR AXLE HUB

DESCRIPTION

SA037–03

The rear axle also uses double–row angular ball bearings for wheel bearing as in the front axle. There is no need for bearing grease maintenance or preload adjustment.

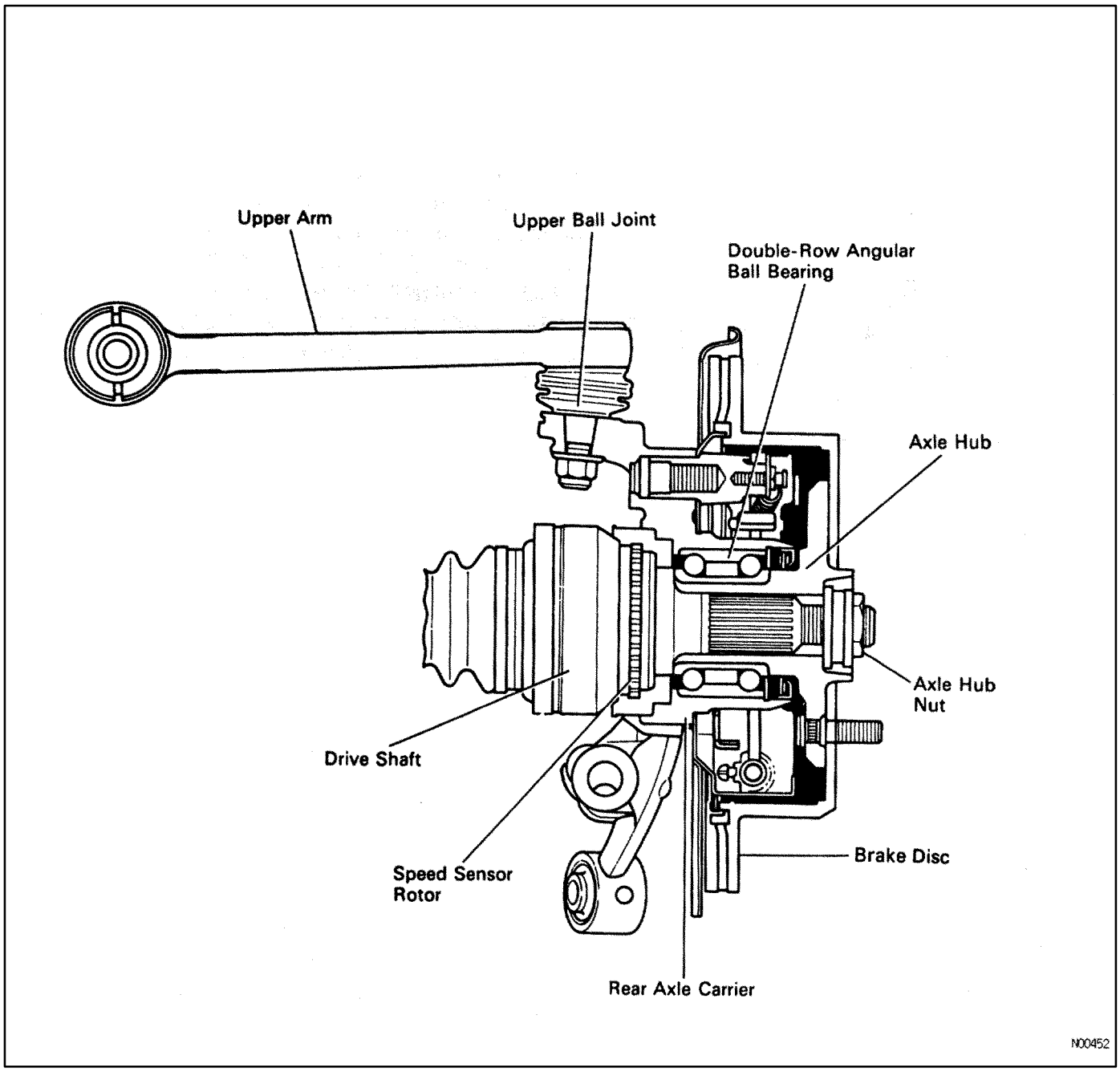

WhereEverybodyKnowsYourName

PREPARATION
SST (SPECIAL SERVICE TOOLS)

SA038–05

	09223–15020	Oil Seal & Bearing Replacer	Oil seal
	09308–00010	Oil Seal Puller	Axle hub oil seal
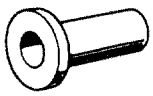	09309–36010	Transmission Rear Bearing Replacer	Wheel bearing
	09608–32010	Steering Knuckle Oil Seal Replacer	
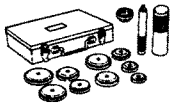	09608–35014	Axle Hub & Drive Pinion Bearing Tool Set	
	(09608–06020)	Handle	
	(09608–06100)	Front Hub Outer Bearing Replacer	
	(09608–06160)	Rear Hub Inner Bearing Cup Replacer	
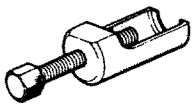	09610–20012	Pitman Arm Puller	
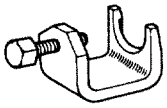	09628–10011	Ball Joint Puller	
	09628–62011	Ball Joint Puller	
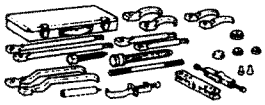	09950–20017	Universal Puller	

WhereEverybodyKnowsYourName

RECOMMENDED TOOLS

SA0W4–01

	09905–00013 Snap Ring Pliers	Rear axle hub bearing

EQUIPMENT

SA039–02

Dial indicator	
Torque wrench	

WhereEverybodyKnowsYourName

REAR AXLE HUB
COMPONENTS

SA03A–05

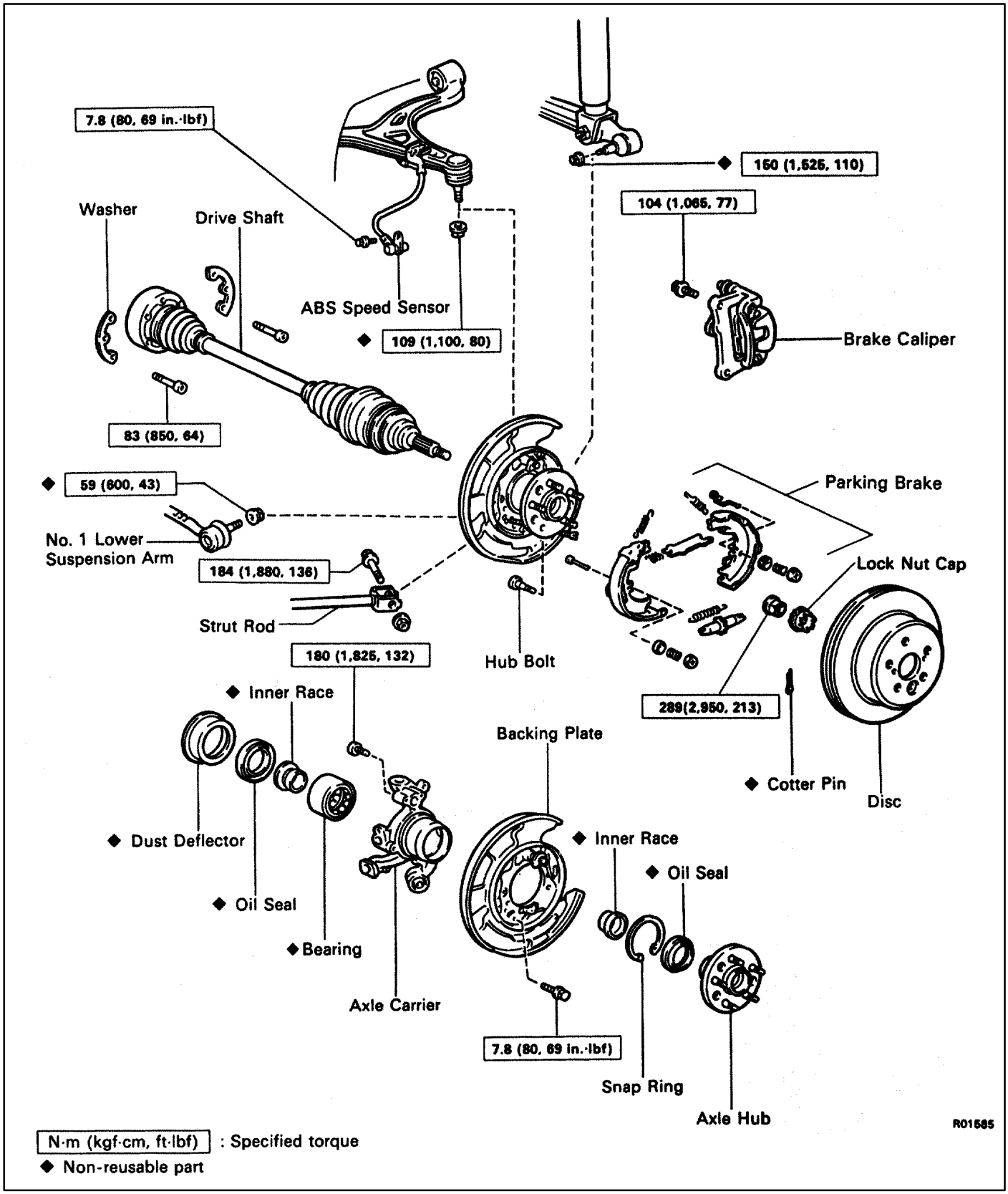

WhereEverybodyKnowsYourName

REAR AXLE CARRIER REMOVAL

SA0RY–03

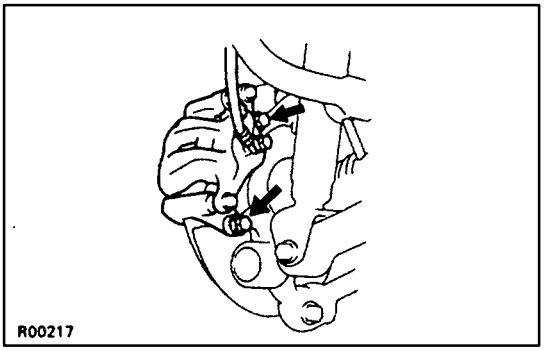

1. JACK UP VEHICLE AND REMOVE REAR WHEEL

2. REMOVE REAR BRAKE CALIPER AND BRAKE DISC

(a) Remove the 2 bolts and remove the brake caliper from the rear axle hub.

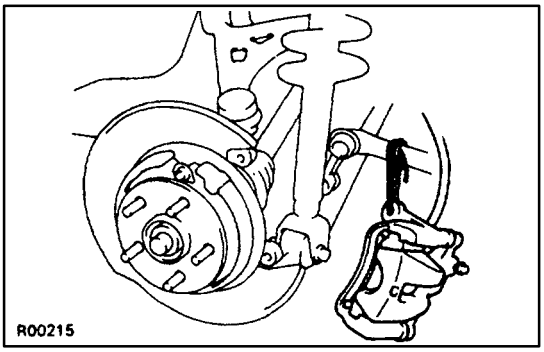

(b) Hang up the brake caliper using wire, etc.

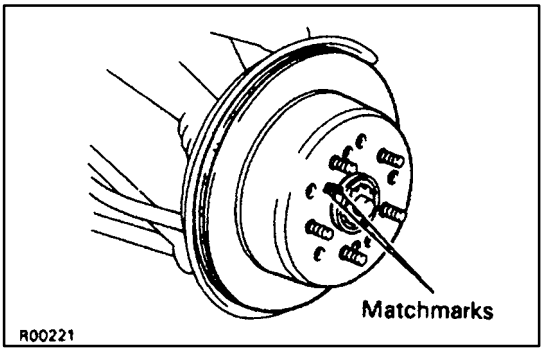

(c) Place matchmarks on the brake disc and axle hub.

(d) Remove the brake disc.

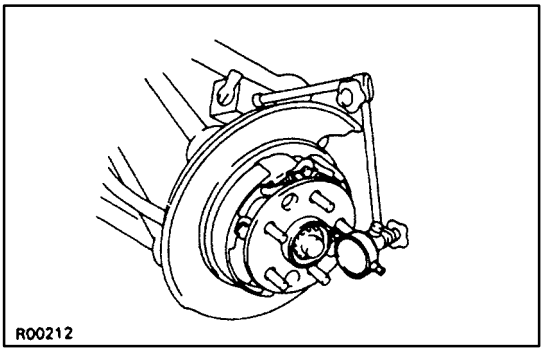

3. CHECK BACKLASH IN BEARING SHAFT DIRECTION

Place the dial indicator near the center of the axle hub and check the backlash in the bearing shaft direction.

Maximum:

0.05 mm (0.0020 in.)

If greater than the specified maximum, replace the bearing.

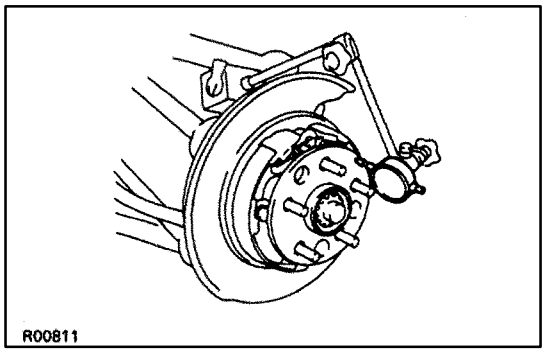

4. CHECK AXLE HUB DEVIATION

Using a dial indicator, check the deviation at the surface of the axle hub outside the hub bolt.

Maximum:

0.07 mm (0.0028 in.)

If greater than the specified maximum, replace the axle hub.

WhereEverybodyKnowsYourName

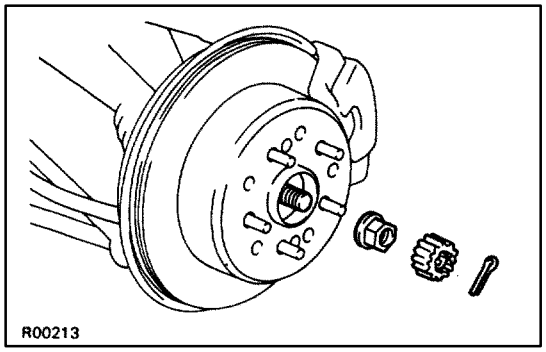

5. REMOVE DRIVE SHAFT LOCK NUT

(a) Install the brake disc and caliper.

(b) Remove the cotter pin and lock cap.

(c) While applying the brakes, remove the nut.

(d) Remove the brake caliper and disc.

6. REMOVE DRIVE SHAFT

(See page SA–66)

7. REMOVE PARKING BRAKE SHOE

(See page BR–44)

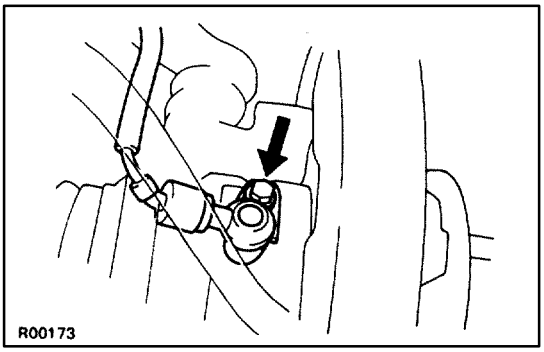

8. REMOVE ABS SPEED SENSOR

Remove the bolt and ABS speed sensor.

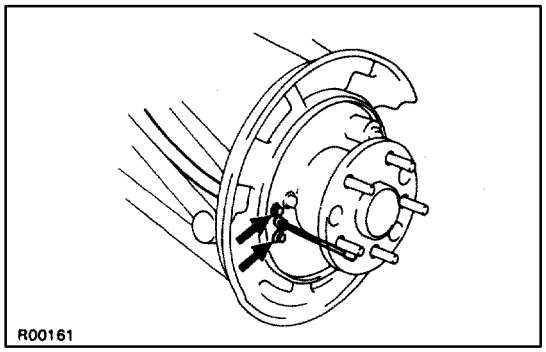

9. REMOVE REAR AXLE HUB WITH CARRIER

(a) Remove the 2 bolts.

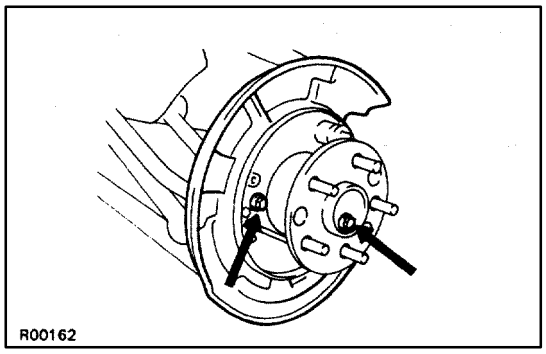

(b) Remove the 2 bolts.

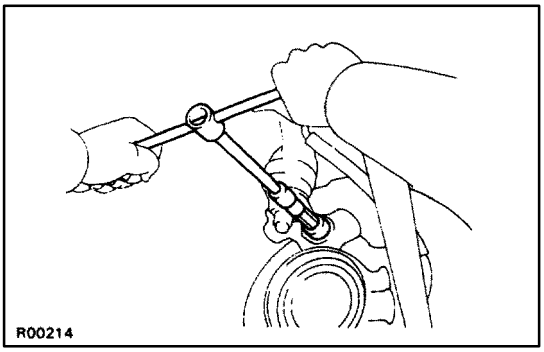

(c) Remove the hexagon bolt.

WhereEverybodyKnowsYourName

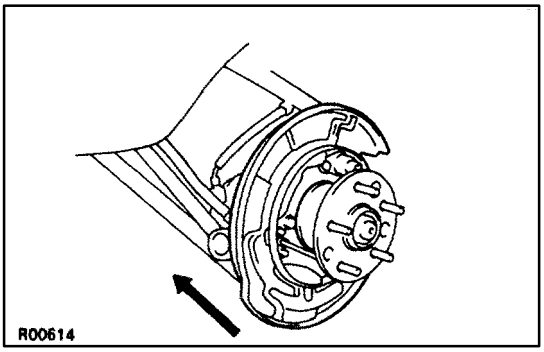

(d) Slide the backing plate to the outside and disconnect the parking brake cable.

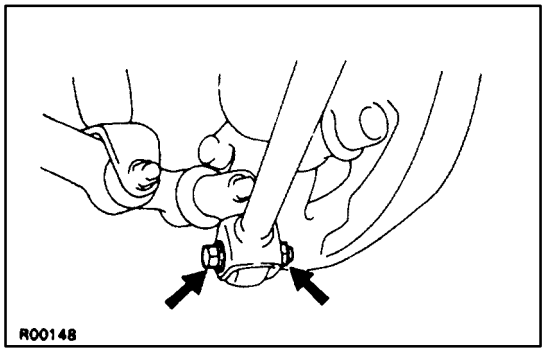

(e) Remove the bolt and nut and disconnect the strut rod.

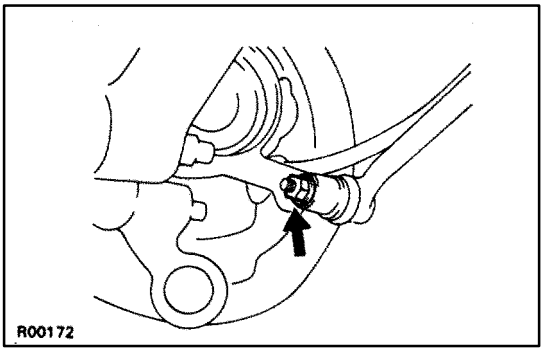

(f) Remove the nut.

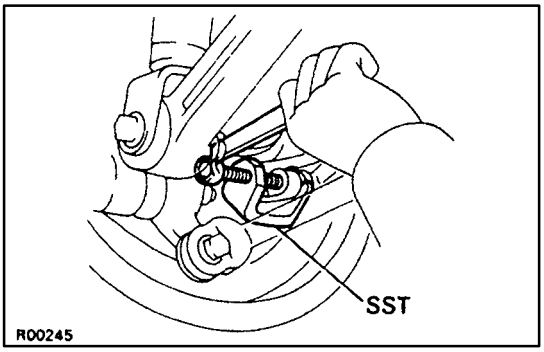

(g) Using SST, disconnect the No.1 lower suspension arm.
SST 09628–10011
NOTICE: Be careful not to damage the dust boot.

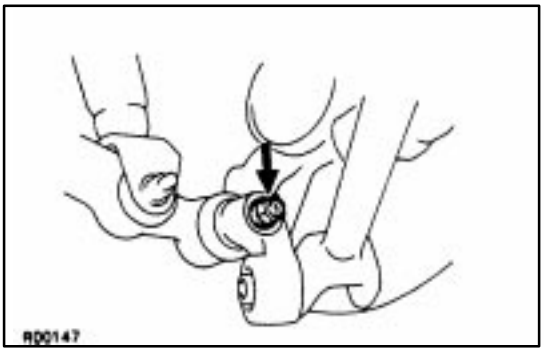

(h) Remove the nut.

WhereEverybodyKnowsYourName

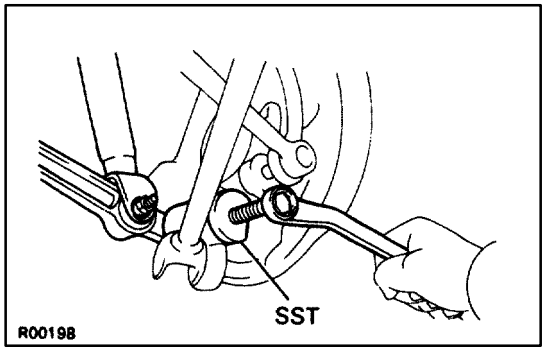

(i) Using SST, disconnect the No.2 lower suspension arm.
SST 09610–20012
NOTICE: Be careful not to damage the dust boot.

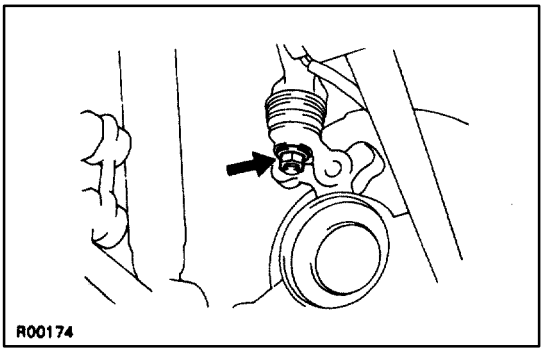

(j) Remove the nut.

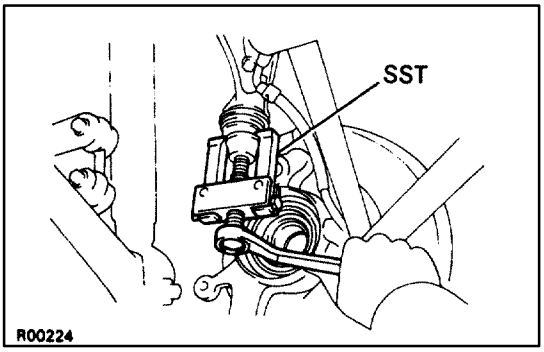

(k) Using SST, disconnect the upper arm and remove the axle carrier.
SST 09628–62011
NOTICE: Be careful nut to damage the dust boot.

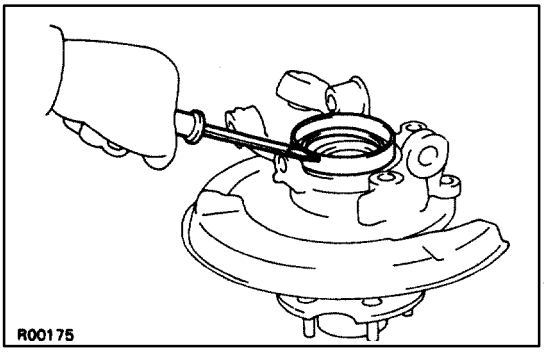

AXLE HUB DISASSEMBLY

SA0RZ–02

1. REMOVE DUST DEFLECTOR
Using a screwdriver, remove the dust deflector.

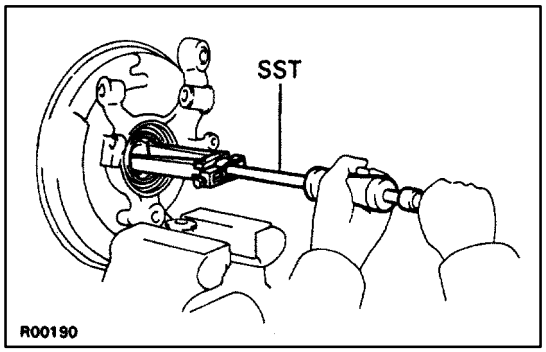

2. REMOVE OIL SEAL (INSIDE)
(a) Mount the axle carrier in a vise.
HINT: Use a set of soft jaws in the vise to protect the axle carrier.
NOTICE: Do not tighten the vise too tight.
(b) Using SST, remove the oil seal.
SST 09308–00010

WhereEverybodyKnowsYourName

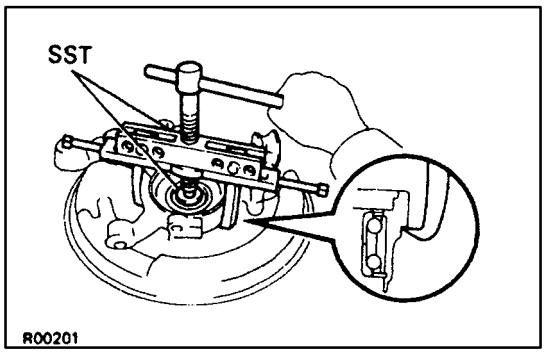

3. REMOVE AXLE HUB FROM AXLE CARRIER

(a) Using SST, remove the axle hub.
SST 09950–20017

(b) Remove the backing plate.

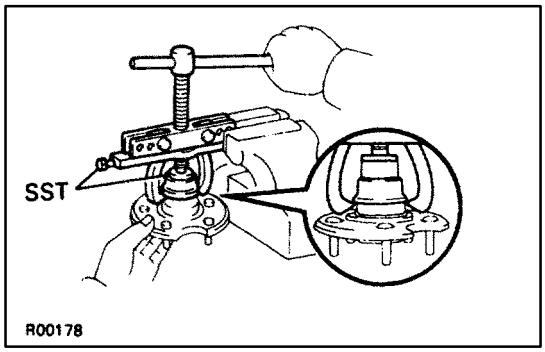

(c) Using SST, remove the inner race (outside) from the axle hub.
SST 09950–20017

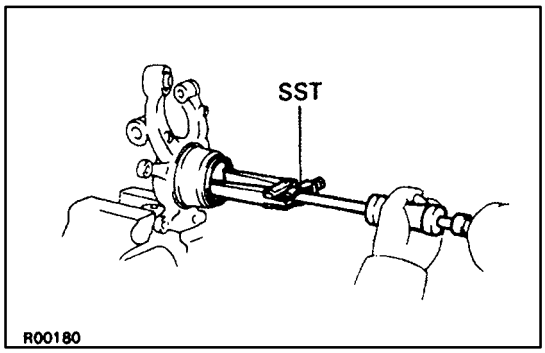

4. REMOVE OIL SEAL (OUTSIDE)

Using SST, remove the oil seal.
SST 09308–00010

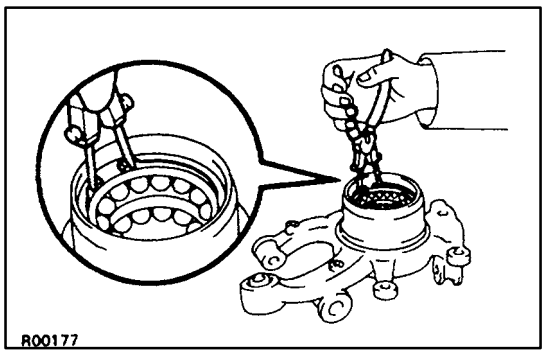

5. REMOVE BEARING

(a) Using snap ring pliers, remove the snap ring.

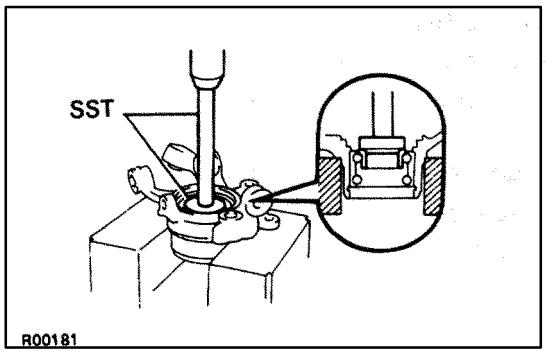

(b) Temporarily install the inner race (inside) to the bearing.

(c) Using SST and a press, remove the bearing.
SST 09608–35014 (09608–06020, 09608–06100)

WhereEverybodyKnowsYourName

AXLE HUB ASSEMBLY

SA0S0–03

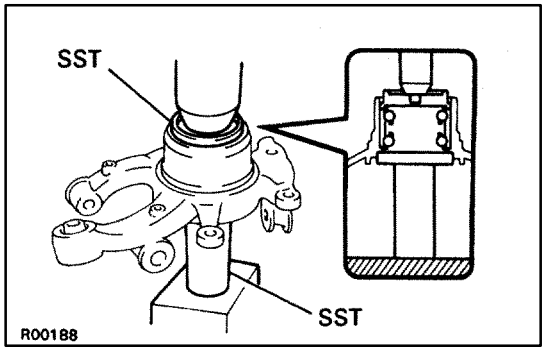

1. INSTALL BEARING

(a) Using SST, install the bearing to the axle carrier.
SST 09309–36010, 09608–32010
NOTICE: If the inner races come loose from the bearing outer race, be sure to install them on the same side as before.

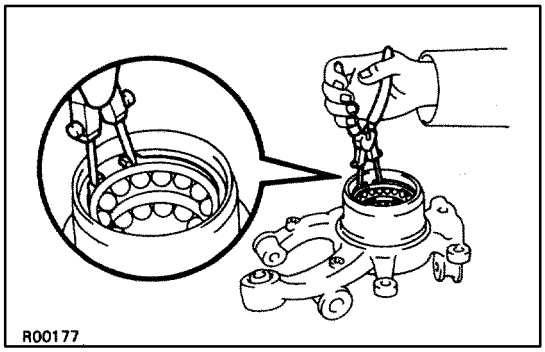

(b) Using snap ring pliers, install the snap ring.

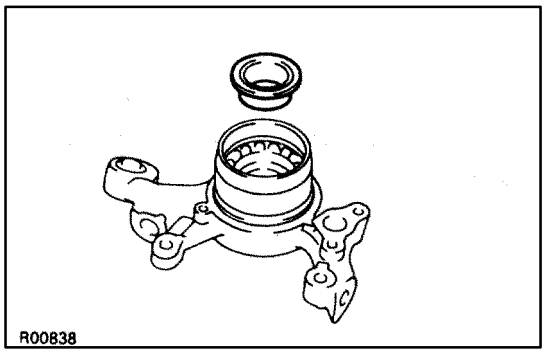

2. INSTALL OIL SEAL (OUTSIDE)

(a) Install the inner race (outside).

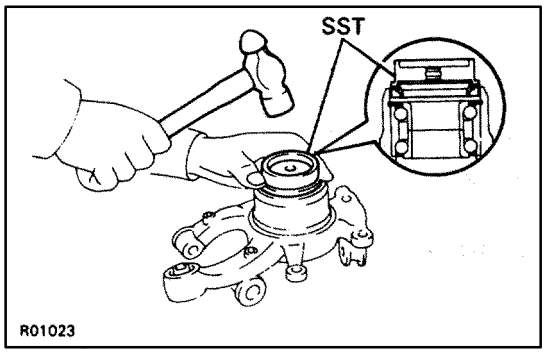

(b) Using SST, install a new oil seal.
SST 09608–32010

(c) Coat MP grease to the oil seal lip.
NOTICE: Be careful not to damage the oil seal.

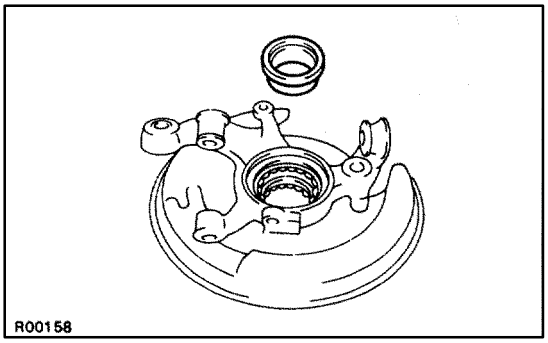

3. INSTALL AXLE HUB

(a) Temporarily install the backing plate.

(b) Install the inner race (inside).

WhereEverybodyKnowsYourName

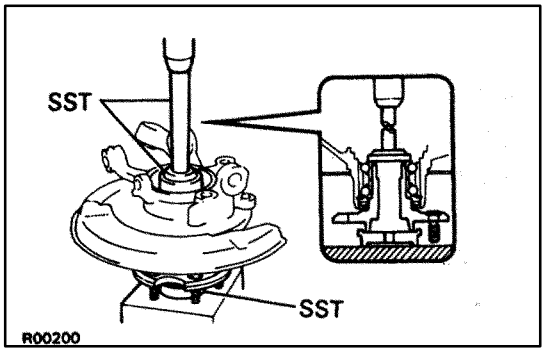

(c) Using SST and a press, install the axle hub.
SST 09608–32010, 09608–35014 (09608–06020, 09608–06100)

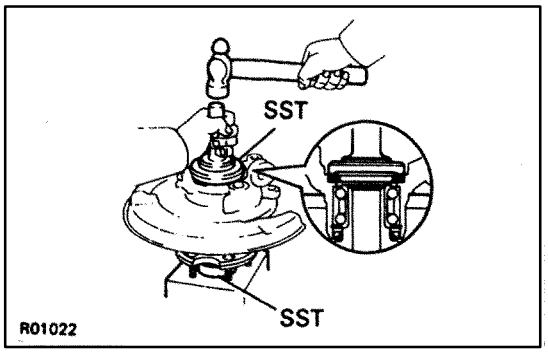

4. INSTALL OIL SEAL (INSIDE)

(a) Using SST and a hammer, install a new oil seal.
SST 09223–15020, 09608–32010, 09608–35014, (09608–06020)

(b) Coat MP grease to the oil seal lip.

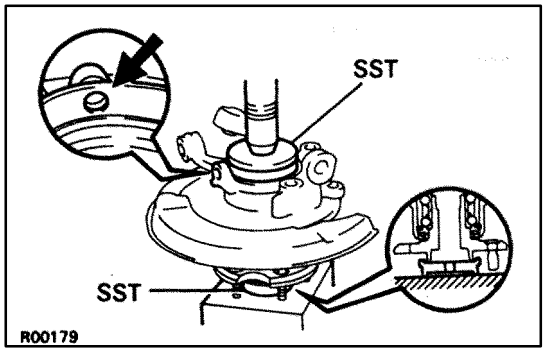

5. INSTALL DUST DEFLECTOR

Using SST and a press, install a new dust deflector.
SST 09608–32010, 09608–35014 (09608–06160)
HINT: Align the holes for the ABS speed sensor in the dust deflector and carrier.

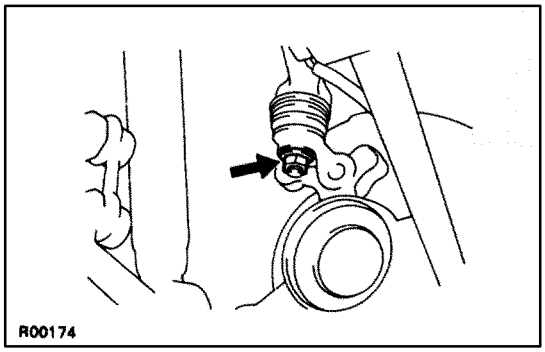

REAR AXLE CARRIER WITH UPPER ARM INSTALLATION

SA0S1–03

1. INSTALL REAR AXLE HUB WITH CARRIER

(a) Connect the upper arm to the axle carrier with a new nut.
Torque: 109 N·m (1,100 kgf·cm, 80 ft·lbf)

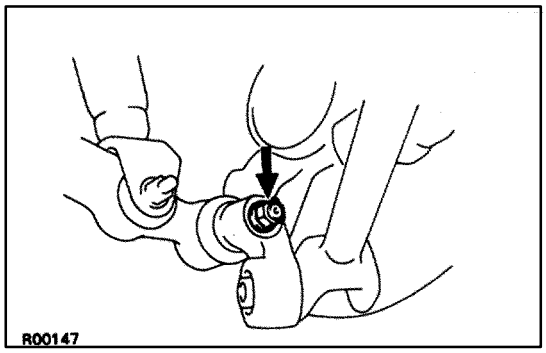

(b) Connect the No.2 lower suspension to the axle carrier with a new nut.
Torque: 150 N·m (1,525 kgf·cm, 110 ft·lbf)

WhereEverybodyKnowsYourName

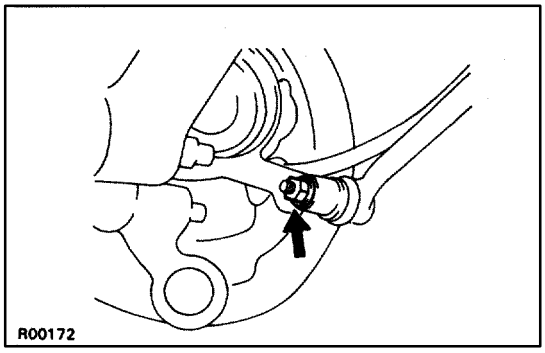

(c) Connect the No. 1 lower suspension arm to the axle carrier with a new nut.
Torque: 59 N·m (600 kgf·cm, 43 ft·lbf)

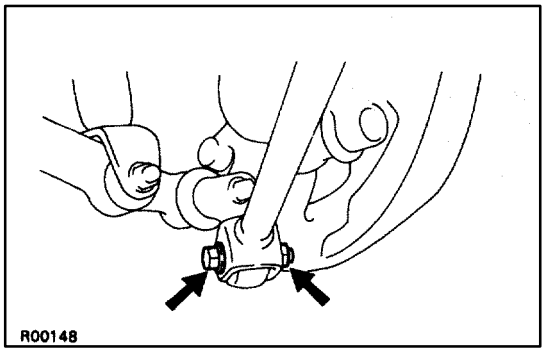

(d) Connect the strut rod to the axle carrier and temporarily install the bolt and nut.

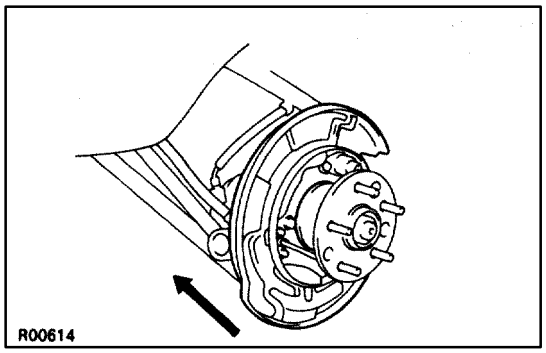

(e) Connect the parking brake cable.
(f) Slide the backing plate to the inside.

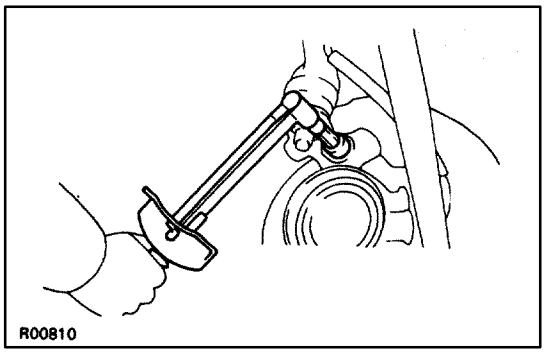

(g) Install the hexagon bolt.
Torque: 180 N·m (1,825 kgf·cm, 132 ft·lbf)

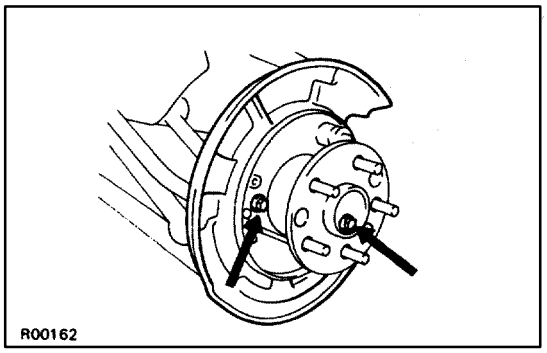

(h) Install the 2 bolts.
Torque: 26 N·m (260 kgf·cm, 19 ft·lbf)

WhereEverybodyKnowsYourName

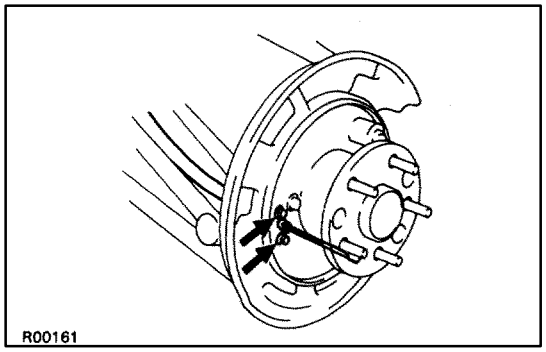

(i) Install the 2 bolts.
Torque: 7.8 N·m (80 kgf·cm, 69 in.·lbf)

2. INSTALL PARKING BRAKE SHOE
(See page BR–44)

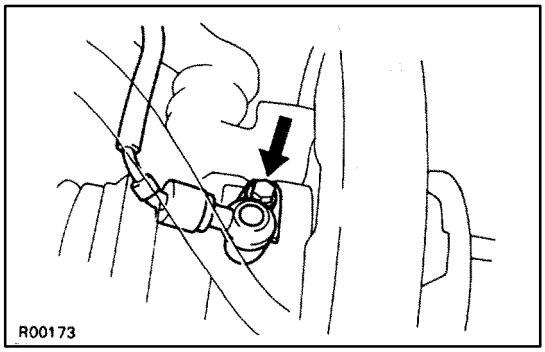

3. INSTALL ABS SPEED SENSOR
Install the sensor to the axle carrier with the bolt.
Torque: 7.8 N·m (80 kgf·cm, 69 in.·lbf)

4. INSTALL DRIVE SHAFT
(See page SA–67)

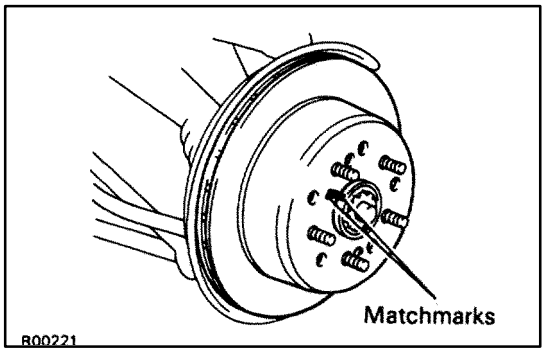

5. INSTALL BRAKE DISC AND BRAKE CALIPER
(a) Align the matchmarks and install the brake disc.

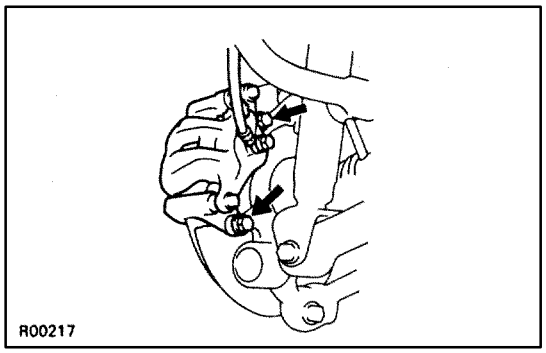

(b) Install the brake caliper with the 2 bolts.
Torque: 104 N·m (1,065 kgf·cm, 77 ft·lbf)

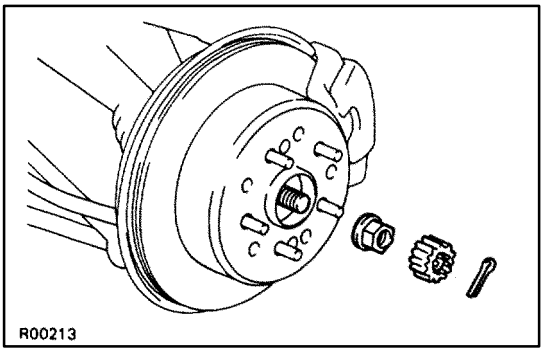

6. INSTALL DRIVE SHAFT LOCK NUT
(a) Torque the nut while applying the brakes.
Torque: 289 N·m (2,950 kgf·cm, 213 ft·lbf)
(b) Install the lock cap and a new cotter pin.

WhereEverybodyKnowsYourName

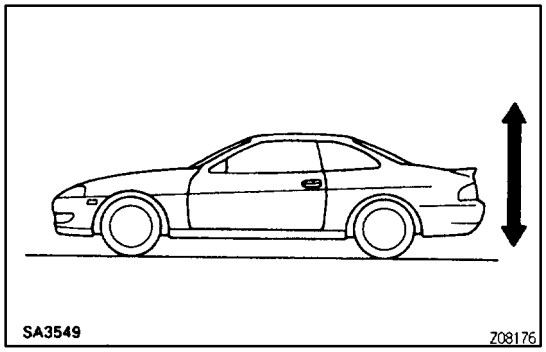

7. STABILIZE SUSPENSION

(a) Install the rear wheel and lower the vehicle.
Torque: 103 N·m (1,050 kgf·cm, 76 ft·lbf)

(b) Bounce the vehicle up and down several times to stabilize the suspension.

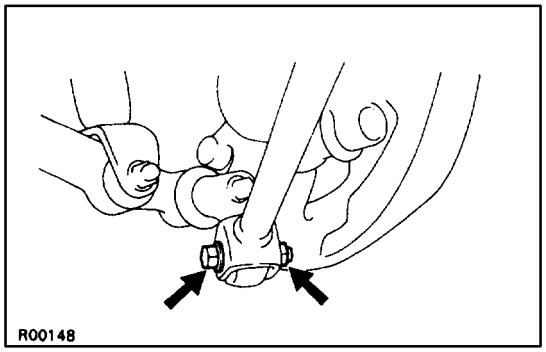

8. TORQUE BOLT AND NUTS

(a) Jack up the vehicle and remove the rear wheel.

(b) Support the axle carrier with jack.

(c) Torque the bolt and nuts.
Torque: 184 N·m (1,880 kgf·cm, 136 ft·lbf)

9. INSTALL REAR WHEEL AND LOWER VEHICLE
Torque: 103 N·m (1,050 kgf·cm, 76 ft·lbf)

10. CHECK REAR WHEEL ALIGNMENT
(See page SA–10)

HUB BOLT REPLACEMENT

SA03E–04

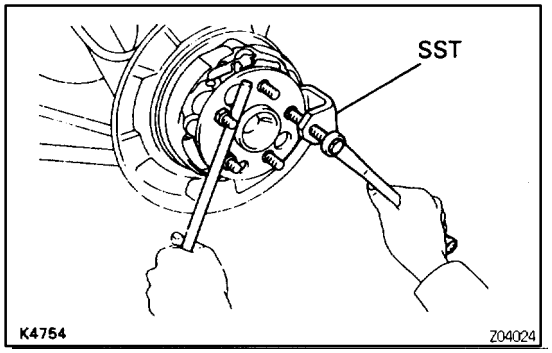

1. JACK UP VEHICLE AND REMOVE REAR WHEEL

2. REMOVE REAR BRAKE CALIPER AND BRAKE DISC
(See page SA–52)

3. REMOVE HUB BOLT
Using SST, remove the hub bolt.
SST 09628–10011

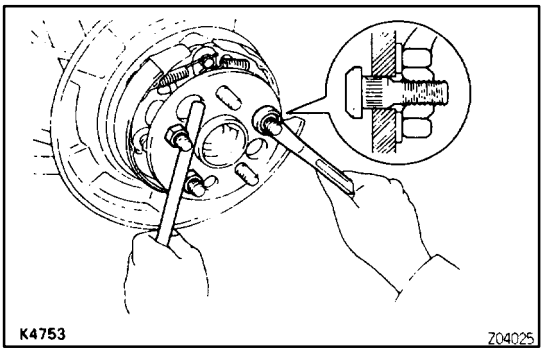

4. INSTALL HUB BOLT
Install washer and nut to the hub bolt, as shown in the illustration, and install the hub bolt with torquing the nut.

5. INSTALL REAR BRAKE DISC AND BRAKE CALIPER
(See page SA–60)

6. INSTALL REAR WHEEL AND LOWER VEHICLE
Torque: 103 N·m (1,050 kgf·cm, 76 ft·lbf)

WhereEverybodyKnowsYourName

REAR DRIVE SHAFT

DESCRIPTION

SA0S2–03

The drive shaft has cross–groove type joints on the differential side and on the wheel side.

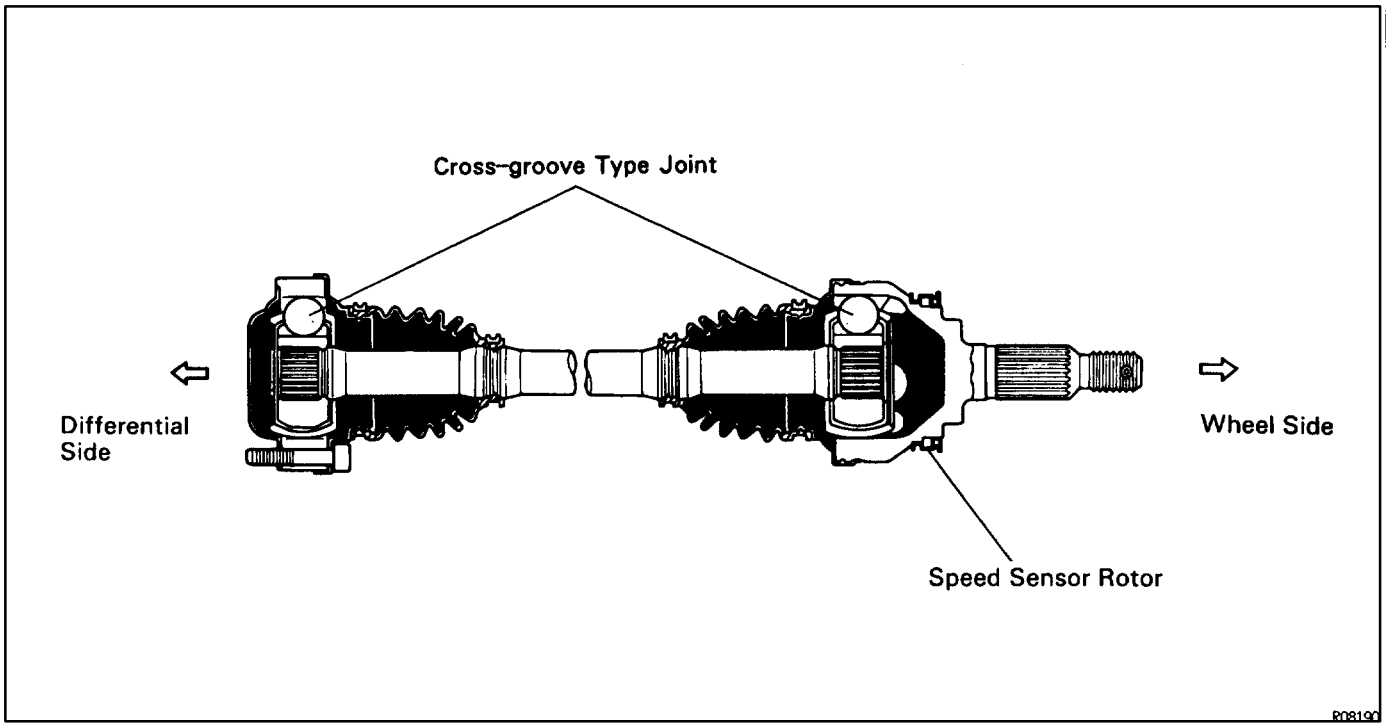

WhereEverybodyKnowsYourName

PREPARATION
SST (SPECIAL SERVICE TOOLS)

SA06B–02

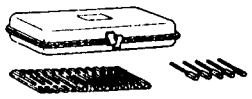	09240–00020	Wire Gauge Set	
	(09242–00080)	Wire Gauge	
	09521–24010	Drive Shaft Boot Clamping Tool	
	09726–10010	Lower Suspension Arm Bushing Remover & Replacer	Drive shaft inboard joint
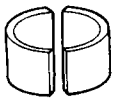	(09726–00030)	Spacer	

RECOMMENDED TOOLS

SA06C–02

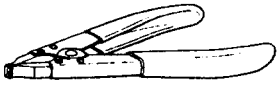	09905–00012	Snap Ring No. 1 Expander	For removing and installing snap ring

EQUIPMENT

SA06D–01

Torque wrench	

WhereEverybodyKnowsYourName

LUBRICANT

SA06E–02

Item	Capacity	Classification
Outboard Joint	100–105 g (0.22–0.23 lb, 3.5–3.7 oz.)	
Inboard Joint	100–105 g (0.22–0.23 lb, 3.5–3.7 oz.)	
End cover	50–55 g (0.11–0.12 lb, 1.8–1.9 oz.)	

SSM (SPECIAL SERVICE MATERIALS)

SA06F–01

08826–00090	Seal Packing 1281, THREE BOND 1281 or equivalent	Universal joint X End plate

WhereEverybodyKnowsYourName

REAR DRIVE SHAFT
COMPONENTS

SA0W5–01

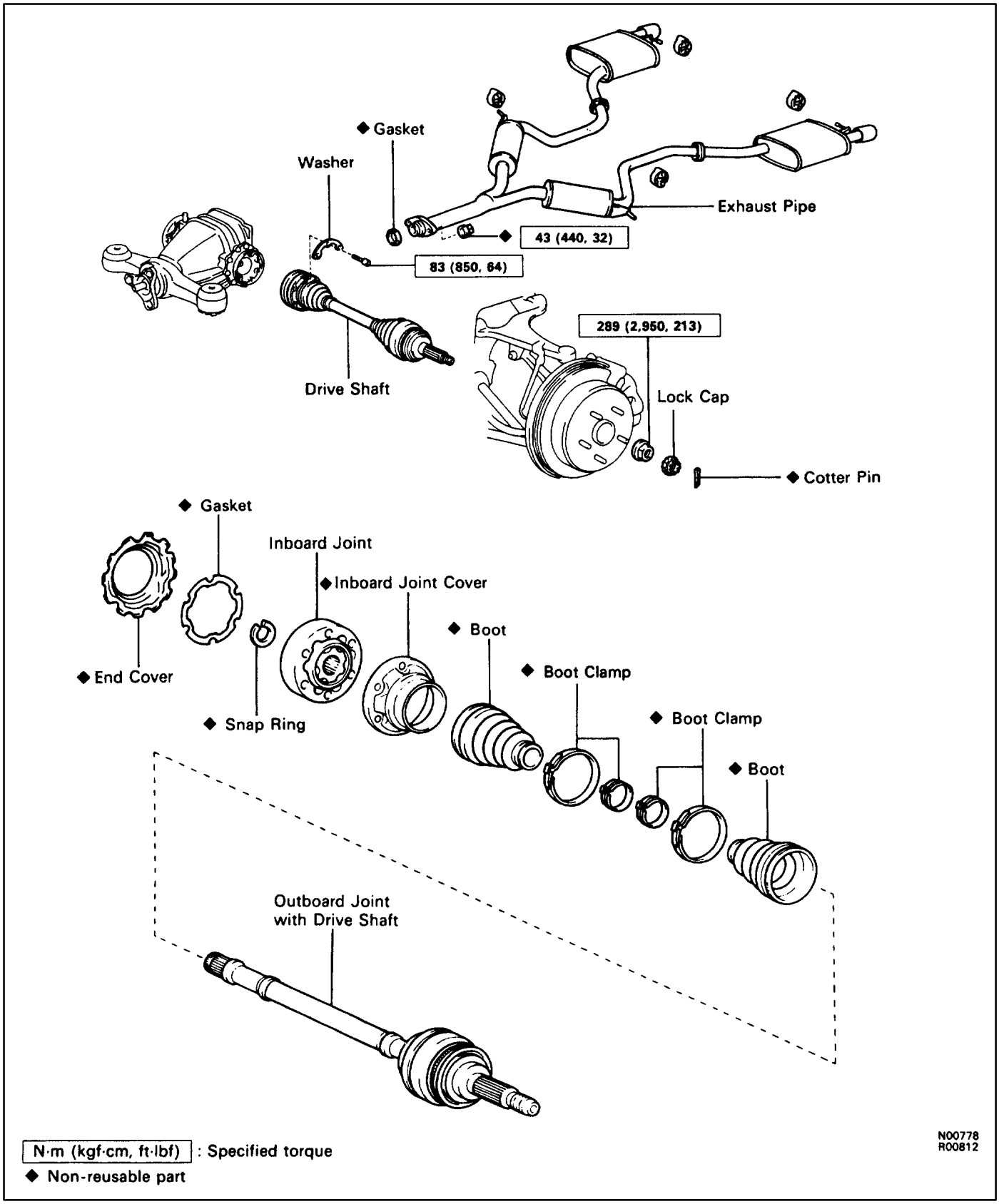

N·m (kgf·cm, ft·lbf) : Specified torque
◆ Non-reusable part

WhereEverybodyKnowsYourName

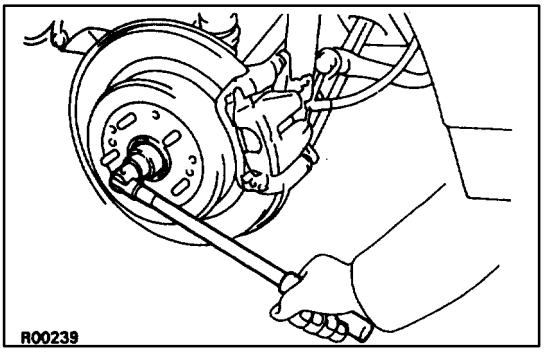

REAR DRIVE SHAFT REMOVAL

SA0S3–03

1. JACK UP VEHICLE AND REMOVE REAR WHEEL

2. REMOVE EXHAUST PIPE

3. REMOVE COTTER PIN, LOCK NUT CAP AND LOCK NUT

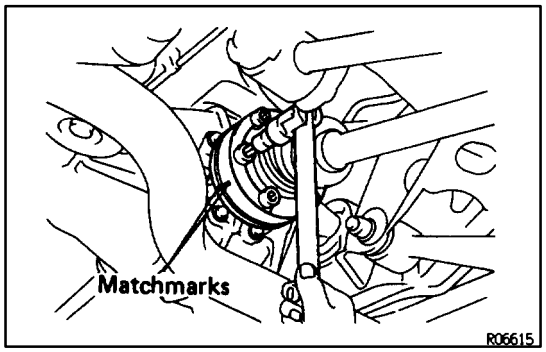

4. REMOVE REAR DRIVE SHAFT

(a) Place matchmarks on the drive shaft and side gear shaft.
NOTICE: Do not use a punch to mark the matchmarks. Use paint, etc.

(b) Using a 10 mm hexagon wrench, remove the 6 hexagon bolts and 2 washers while depressing the brake pedal.

(c) Hold the inboard joint side of the drive shaft so that the outboard joint side does not bend too much.

(d) Using a plastic–faced hammer, lightly tap the end of the drive shaft, disengage the axle hub and remove the drive shaft.
NOTICE:
- **Be careful not to damage the boots, end cover and speed sensor rotor of the drive shaft, and oil seal of the axle hub.**
- **Make sure the outboard joint side of the drive shaft does not bend too much.**

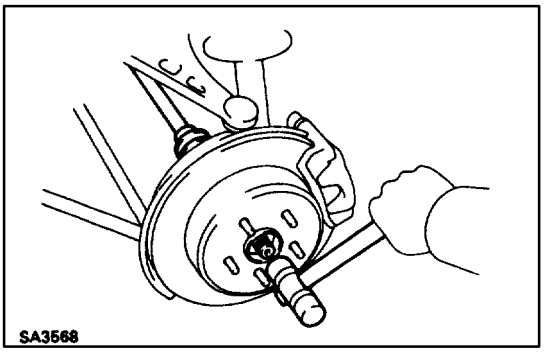

WhereEverybodyKnowsYourName

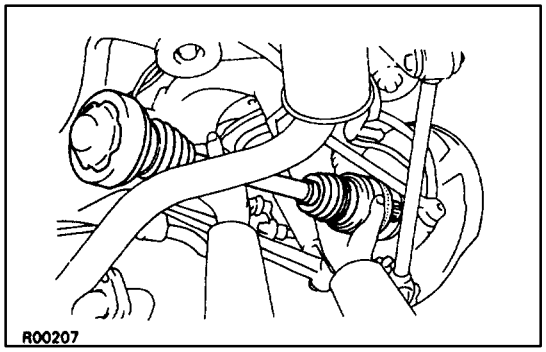

REAR DRIVE SHAFT INSTALLATION

SA0S4–02

1. INSTALL DRIVE SHAFT

(a) Insert the outboard joint side of the drive shaft to the axle hub.

NOTICE:

- **Be careful not to damage the boots, end cover and speed sensor rotor of the drive shaft, and oil seal of the axle hub.**
- **Make sure the outboard joint side of the drive shaft does not bend too much.**

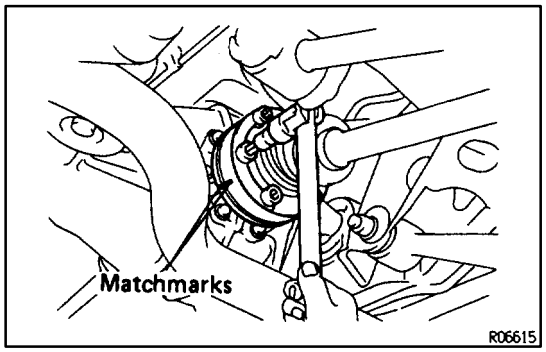

(b) Align the matchmarks on the side gear shaft and drive shaft.

(c) Apply a light coat of engine oil on the threads of the bolt.

(d) Install the 6 hexagon bolts and 2 washers.

(e) Using a 10 mm hexagon wrench, torque the bolts.

Torque: 83 N·m (850 kgf·cm, 64 ft·lbf)

2. INSTALL EXHAUST PIPE

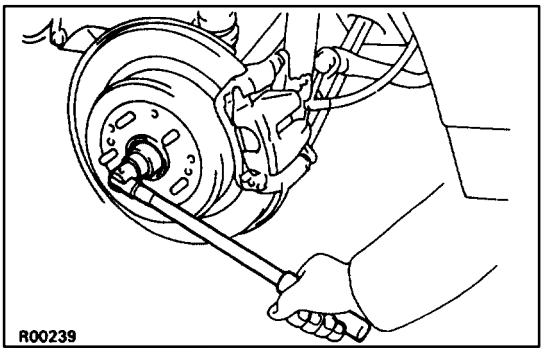

3. INSTALL LOCK NUT, LOCK CAP AND NEW COTTER PIN

Torque: 289 N·m (2,950 kgf·cm, 213 ft·lbf)

4. INSTALL REAR WHEEL AND LOWER VEHICLE

WhereEverybodyKnowsYourName

REAR DRIVE SHAFT DISASSEMBLY

SA0UY–05

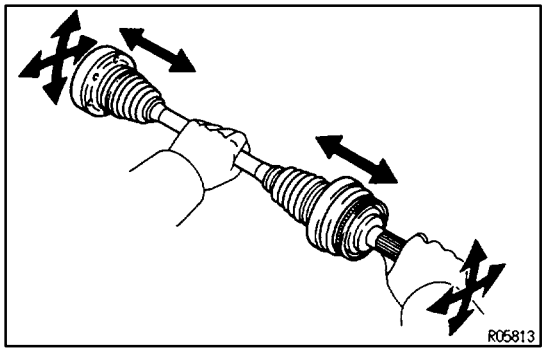

1. CHECK DRIVE SHAFT

(a) Check that operation of the joint is smooth within the sliding region in the axial direction.
HINT: If a large angle is used for the cross–groove type joint, the joint will feel like it is catching, but this does not indicate an abnormality.

(b) Check that there are no cracks, damage or grease leaks with the boots.

(c) Check that there are no scratches on the speed sensor rotor.

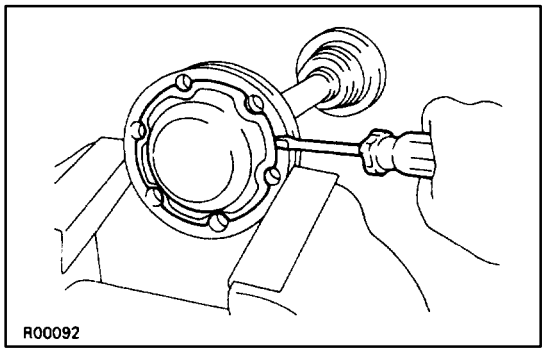

2. REMOVE END COVER

(a) Using a screwdriver, remove the end cover.

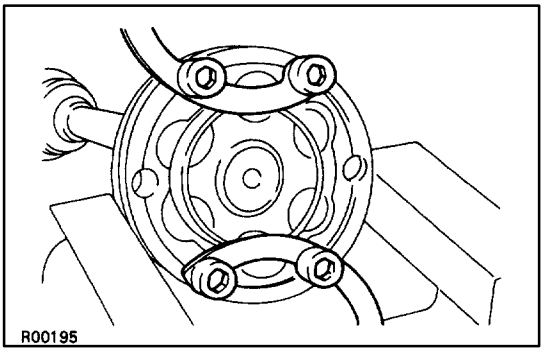

(b) Use bolts, nuts and washers to keep the inboard joint together.
NOTICE: Tighten the bolt by hand to avoid scratching the flange surface.

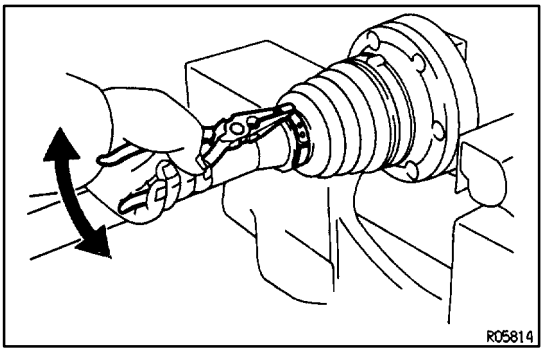

3. REMOVE BOOT CLAMPS

Using a side cutter or pliers, remove the clamps.

WhereEverybodyKnowsYourName

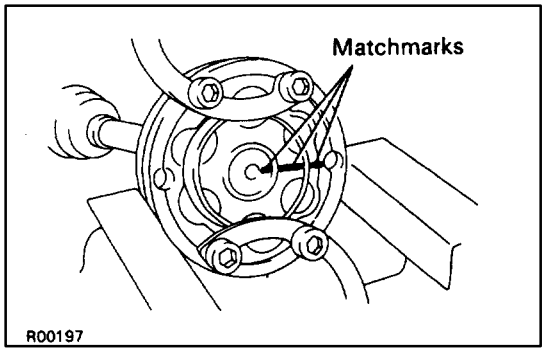

4. REMOVE INBOARD JOINT

(a) Place matchmarks on the inboard joint and drive shaft.
NOTICE: Do not punch the marks.

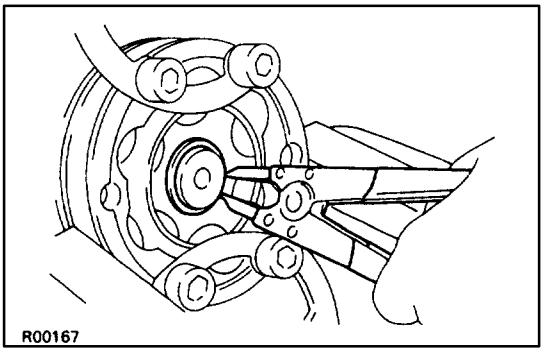

(b) Using a snap ring expander, remove the snap ring.

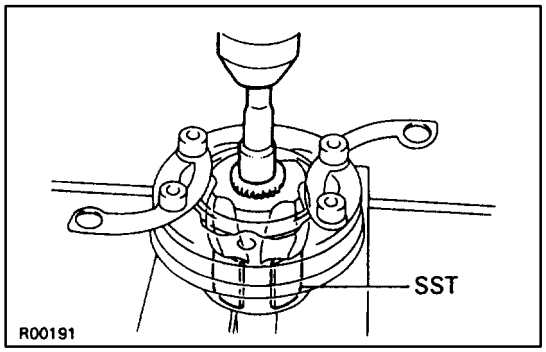

(c) Using SST, an extension bar and a press, press out the inboard joint from the drive shaft.
SST 09726–12022 (09726–01030)

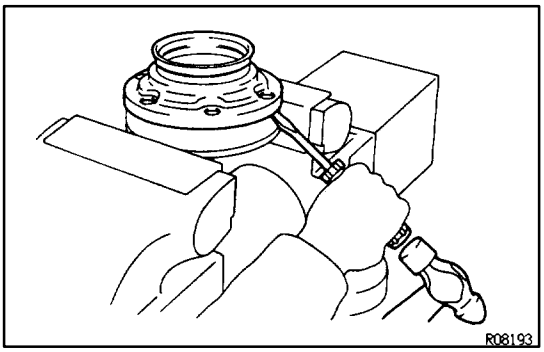

(d) Mount the inboard joint in a soft jaw vise.

(e) Using a screwdriver and hammer, tap out the inboard joint cover from the inboard joint.
NOTICE: Make sure the cage and inner race are not positioned too much to one side of the outer race.

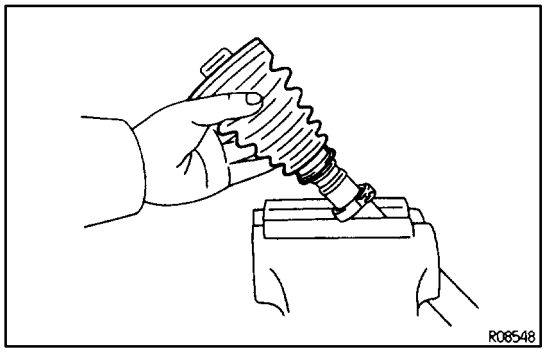

5. REMOVE BOOTS

Remove the inboard joint boot and outboard boot.

WhereEverybodyKnowsYourName

REAR DRIVE SHAFT ASSEMBLY

SA0UZ–05

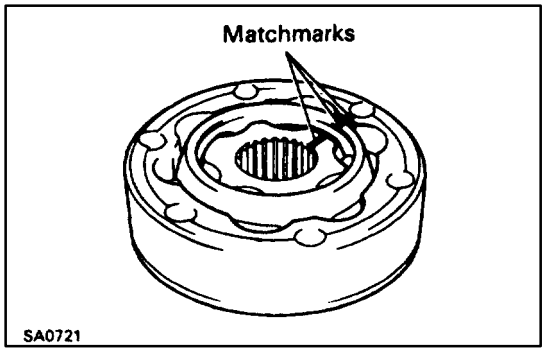

1. ASSEMBLE INBOARD JOINT

If the joint has come apart, reassemble it in the following order.

(a) Align the matchmarks placed before removal.

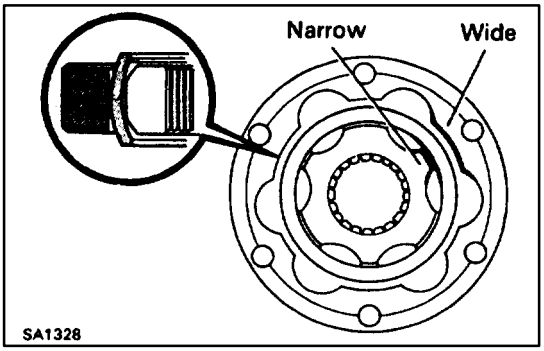

HINT: When the matchmarks have disappeared, perform the following procedure.

(1) Install the inner race to the cage so that the indented bevelled part of the inner race is on the opposite side to the bevelled top of the cage.

(2) Install the outer race so that the indented side of the outer race is facing the same side as the bevelled surface of the cage.

(3) Match the narrow projections of the inner race with the wide projections of the outer race.

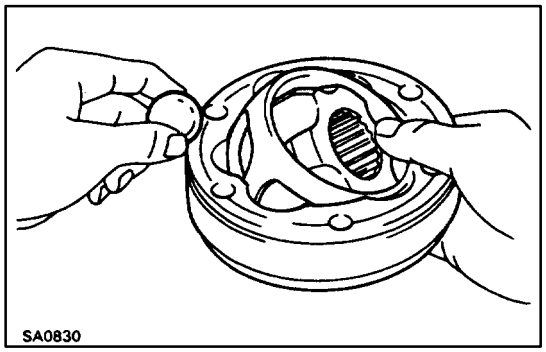

(b) Tilt the cage and inner race to the side and insert the balls one by one.

NOTICE: When the cage and inner race are tilted over, support the joint with your hand to prevent the balls from falling out.

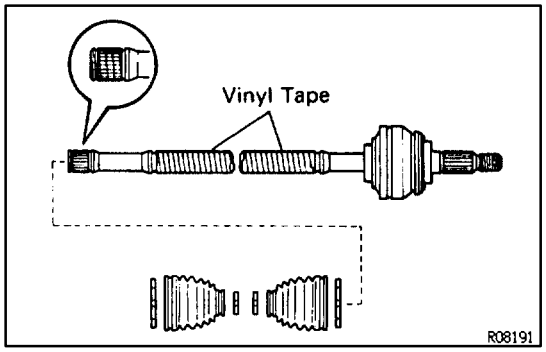

2. TEMPORARILY INSTALL NEW BOOTS AND NEW BOOT CLAMPS

(a) Place 4 new boot clamps to each boots.

HINT: Before installing the boots, wrap vinyl tape around the spline of the shaft to prevent damaging the boots.

(b) Install the 2 boots to the drive shaft.

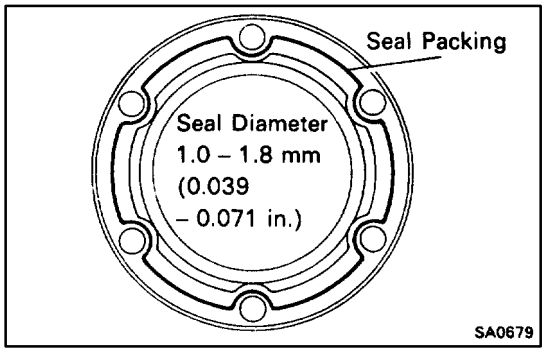

3. INSTALL INBOARD JOINT COVER

(a) Apply seal packing to the inboard joint cover as shown in the illustration.

Seal packing:

Part No.08826–00801, THREE BOND 1121 or equivalent

- Install a nozzle that has been cut to a 1 mm (0.04 in.) opening.

WhereEverybodyKnowsYourName

HINT: Avoid applying an excessive amount to the surface.

(b) Remove grease from the surface of the inboard joint facing the cover.

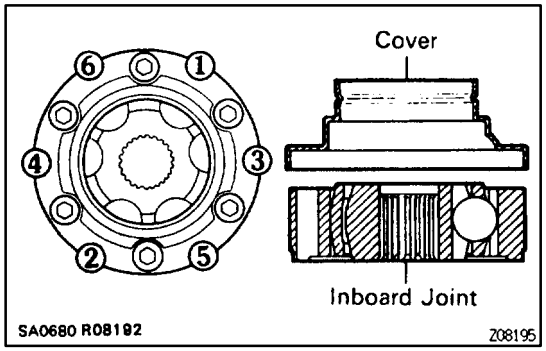

(c) Align the bolt holes of the cover with those of the inboard joint, then insert the hexagon bolts.

(d) Use a plastic–faced hammer to tap the rim of the inboard joint cover into place. Do this in the order shown, and repeat several times.

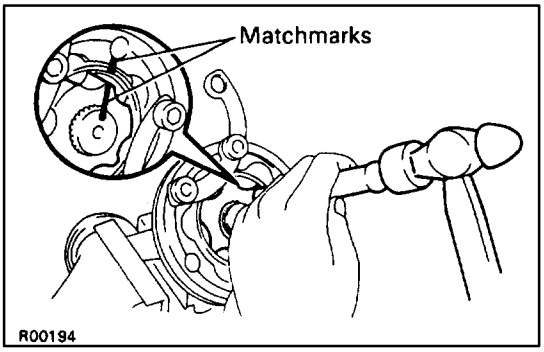

4. INSTALL INBOARD JOINT

(a) Align the matchmarks placed before removal.

(b) Using a brass bar and hammer, tap the inboard joint onto the drive shaft.

NOTICE: Check that the brass bar is touching the inner race, and not the cage.

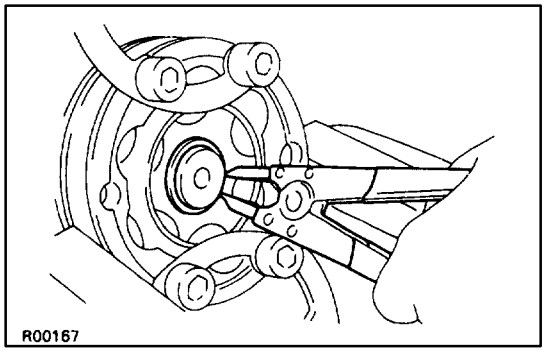

(c) Using a snap ring expander, install a new snap ring.

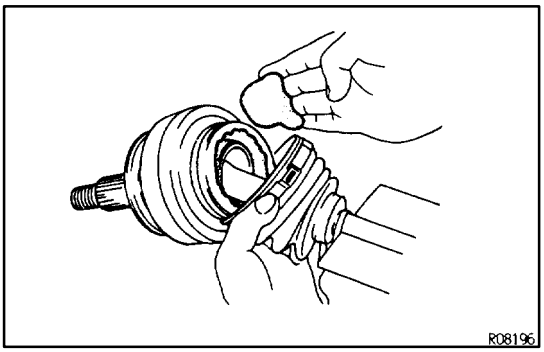

5. ASSEMBLE BOOT TO OUTBOARD JOINT

Before assembling the boot, pack with only the same amount of grease that was wiped off.

Grease capacity:

100 – 105 g (0.22 – 0.23 lb, 3.5 – 3.7 oz.)

HINT: Use the grease supplied in the boot kit.

NOTICE:

- **Keep grease off the joint connection groove of the boot.**

WhereEverybodyKnowsYourName

- **Pack with grease all over the ball contact surface inside the joint.**

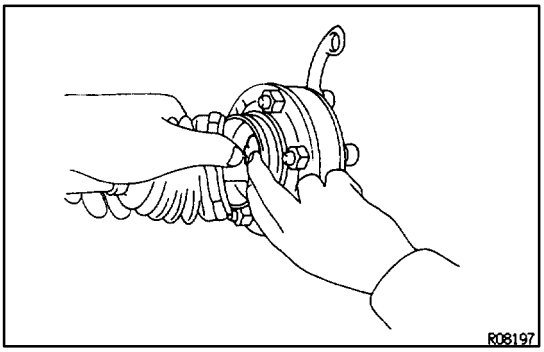

6. ASSEMBLE BOOT TO INBOARD JOINT

Before assembling the boot, pack with grease.

Grease capacity:

100–105 g (0.22–0.23 lb, 3.5–3.7 oz.)

HINT: Use the grease supplied in the boot kit.

NOTICE:

- Keep grease off the joint connection groove of the boot.
- Pack with grease all over the ball contact surface inside the joint.

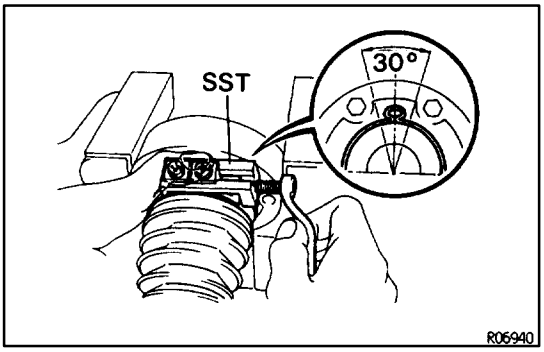

7. INSTALL NEW BOOT CLAMPS TO BOTH BOOTS

(a) Position the clamp onto the boot.

HINT: Pinch the inboard side of the boot clamp, as shown in the illustration.

(b) Place SST onto the clamp.

SST 09521–24010

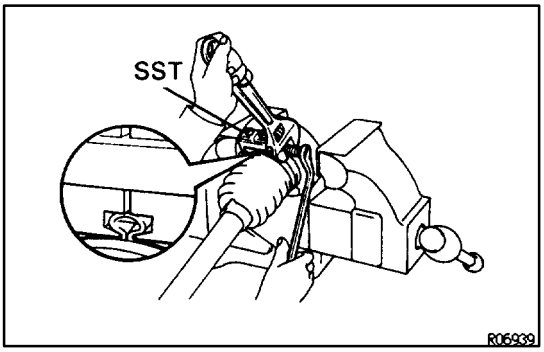

(c) Tighten SST so that the clamp is pinched.

NOTICE: Do not overtighten the SST.

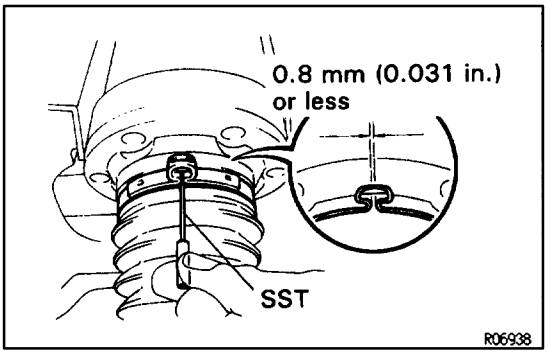

(d) Using SST, adjust the clearance of the clamp.

SST 09240–00020

Clearance:

0.8 mm (0.031 in.) or less

WhereEverybodyKnowsYourName

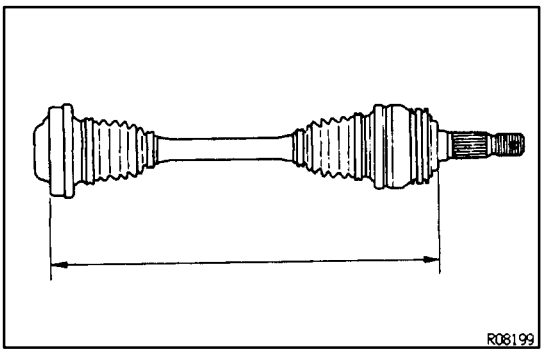

(e) The drive shaft is designed to move + 20 mm from the normal position.
Drive shaft standard length:
RH 598.5 mm (23.563 in.)
LH 553.5 mm (21.791 in.)

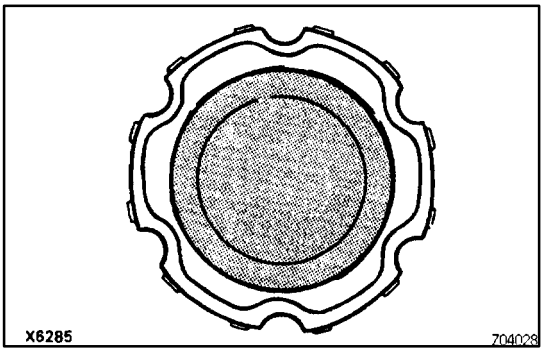

8. INSTALL NEW END COVER

(a) Pack grease into the end cover.
Grease capacity:
50–55 g (0.11–0.12 lb, 1.8–1.9 oz.)

(b) Remove grease from the surface of the inboard joint facing the cover.

(c) Glue on a new gasket, with the side with adhesive on it facing toward the outer race side of the inboard joint.

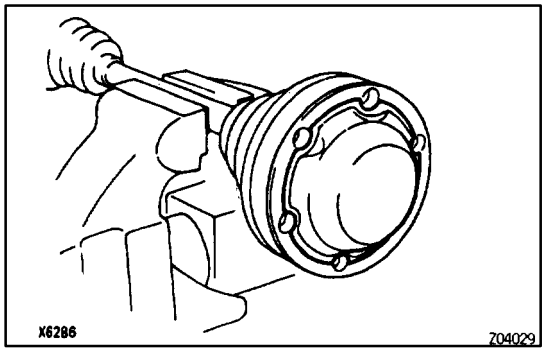

(d) Align the bolt holes of the cover with those of the inboard joint.

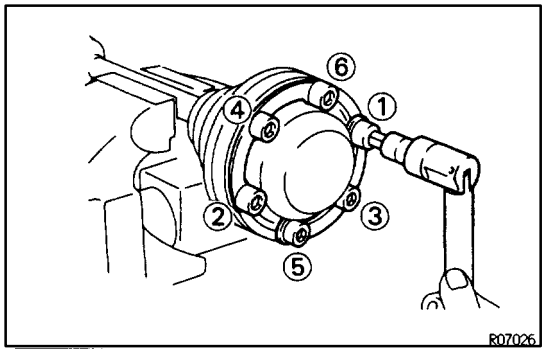

(e) Install the 6 hexagon bolts and washer from the end cover side.

(f) Install the 6 nuts to the boot side.

(g) Using a 10 mm hexagon wrench, tighten the bolts. Do this in the order shown, and repeat several times.

(h) Check that the claw of the end cover touches the inboard joint.

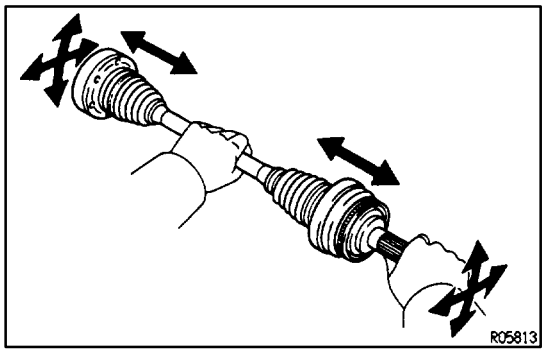

9. CHECK DRIVE SHAFT

Check that operation of the joint is smooth within the sliding region in the axial direction.
HINT: If a large angle is used for the cross–groove type joint, the joint will feel like it is catching, but this does not indicate an abnormality.

WhereEverybodyKnowsYourName

REAR DIFFERENTIAL

DESCRIPTION

SA091–07

The differential has an 8 inch ring gear to ensure accurate operation at high power output and high speed. The differential is carried by a rear suspension member via rubber mounts to suppress vibration and noise being transmitted to the body.

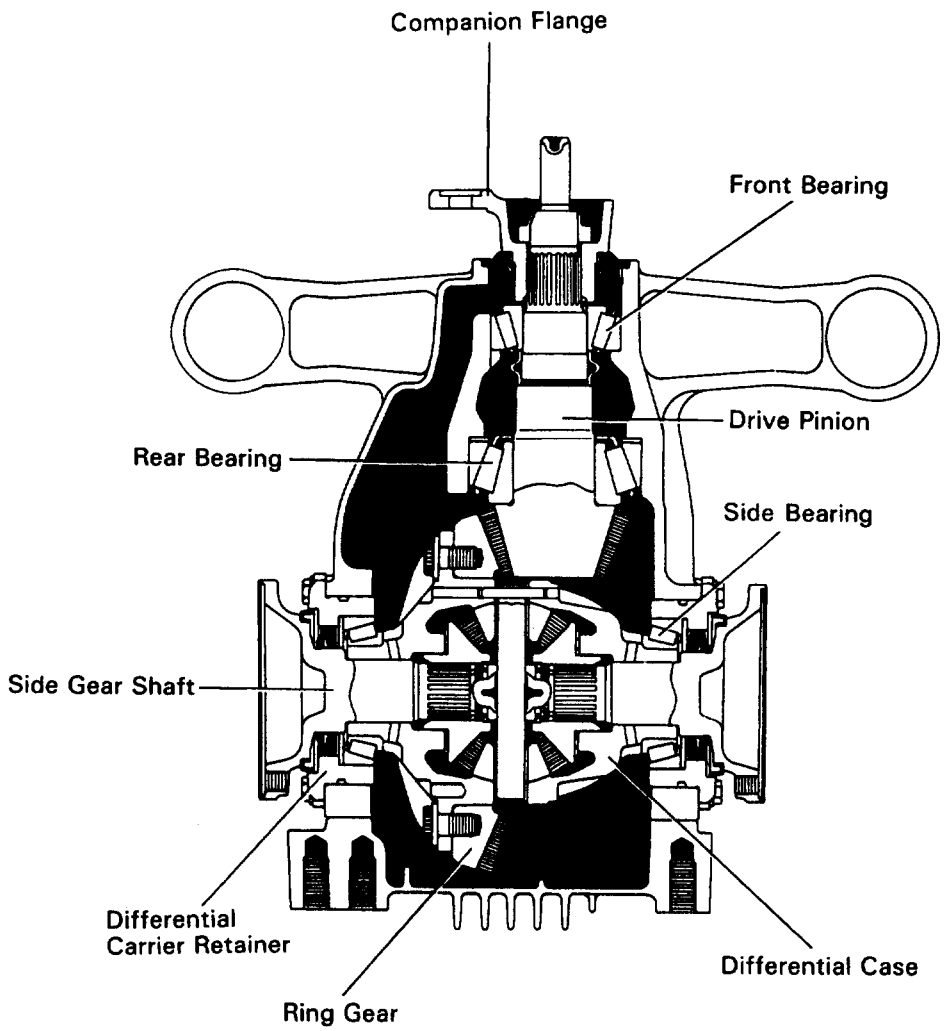

WhereEverybodyKnowsYourName

PREPARATION
SST (SPECIAL SERVICE TOOLS)

SA092–02

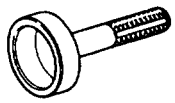	09223–63010	Crankshaft Rear Oil Seal Replacer
	09229–55010	Oil Cooler Relief Valve Wrench
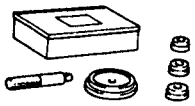	09250–10011	Replacer Set "A"
	(09252–10010)	No. 1 Replacer Handle
	(09255–10011)	Crankshaft Rear Bearing Remover & Replacer
	09308–00010	Oil Seal Puller
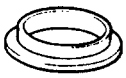	09316–12010	Transfer Bearing Replacer
	09316–60010	Transmission & Transfer Bearing Replacer
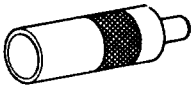	(09316–00010)	Replacer Pipe
	(09316–00040)	Replacer "C"
	09325–40010	Transmission Oil Plug
	09330–00021	Companion Flange Holding Tool
	09502–12010	Differential Bearing Replacer

WhereEverybodyKnowsYourName

	09502–24010	Bearing Replacer
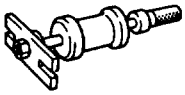	09520–24010	Differential Side Gear Shaft Puller
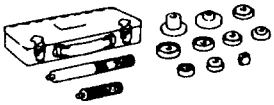	09550–10012	Replacer Set "B"
	(09252–10010)	No. 1 Replacer Handle
	(09558–10010)	Rear Axle Shaft Oil Seal Replacer
	09570–24010	Differential Mounting Cushion Remover & Replacer
	09608–30012	Front Hub & Drive Pinion Bearing Tool Set
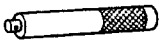	(09608–04020)	Handle
	(09608–04030)	Front Hub Inner Bearing Cone Replacer
	(09608–04100)	Drive Pinion Front Bearing Cup Replacer
	09608–32010	Steering Knuckle Oil Seal Replacer
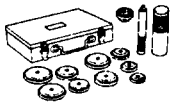	09608–35014	Axle Hub & Drive Pinion Bearing Tool Set
	(09608–06020)	Handle
	(09608–06090)	Front Hub Outer & Steering Worm Bearing Replacer

WhereEverybodyKnowsYourName

	(09608–06110)	Front Hub Inner & Drive Pinion Front Bearing Cup Replacer	
	(09608–06120)	Front Hub Outer Bearing Cup Replacer	
	(09608–06180)	Drive Pinion Rear Bearing Cup Replacer	
	(09608–06210)	Rear Axle Bearing Replacer	
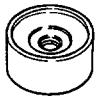	09710–30050	Suspension Arm Bushing Replacer	
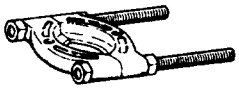	09950–00020	Bearing Remover	
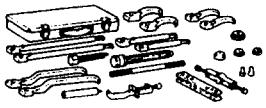	09950–20017	Universal Puller	

RECOMMENDED TOOLS

SA093–02

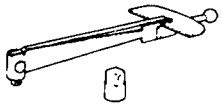	09025–00010	Small Torque Wrench	Differential preload
	09031–00030	Pin Punch	

EQUIPMENT

SA094–01

Dial indicator with magnetic base	
Micrometer	
Torque wrench	

WhereEverybodyKnowsYourName

SSM (SPECIAL SERVICE MATERIALS)

SA095–04

08826–00110	Seal packing 1389, THREE BOND 1389 or equivalent	Differential Carrier x Cover
08833–00100	THREE BOND 1360K or equivalent	Differential Case x Ring Gear

LUBRICANT

SA096–02

Item	Capacity	Classification
Differential oil	1.35 liters (1.43 US qts, 1.19 Imp. qts)	API GL–5 Hypoid Gear Oil [Above–18▼C (0▼F)] SAE 90 [Below–18▼C (0▼F)] SAE 80W or 80W–90

WhereEverybodyKnowsYourName

ON–VEHICLE REPAIR

COMPONENTS

SA097–02

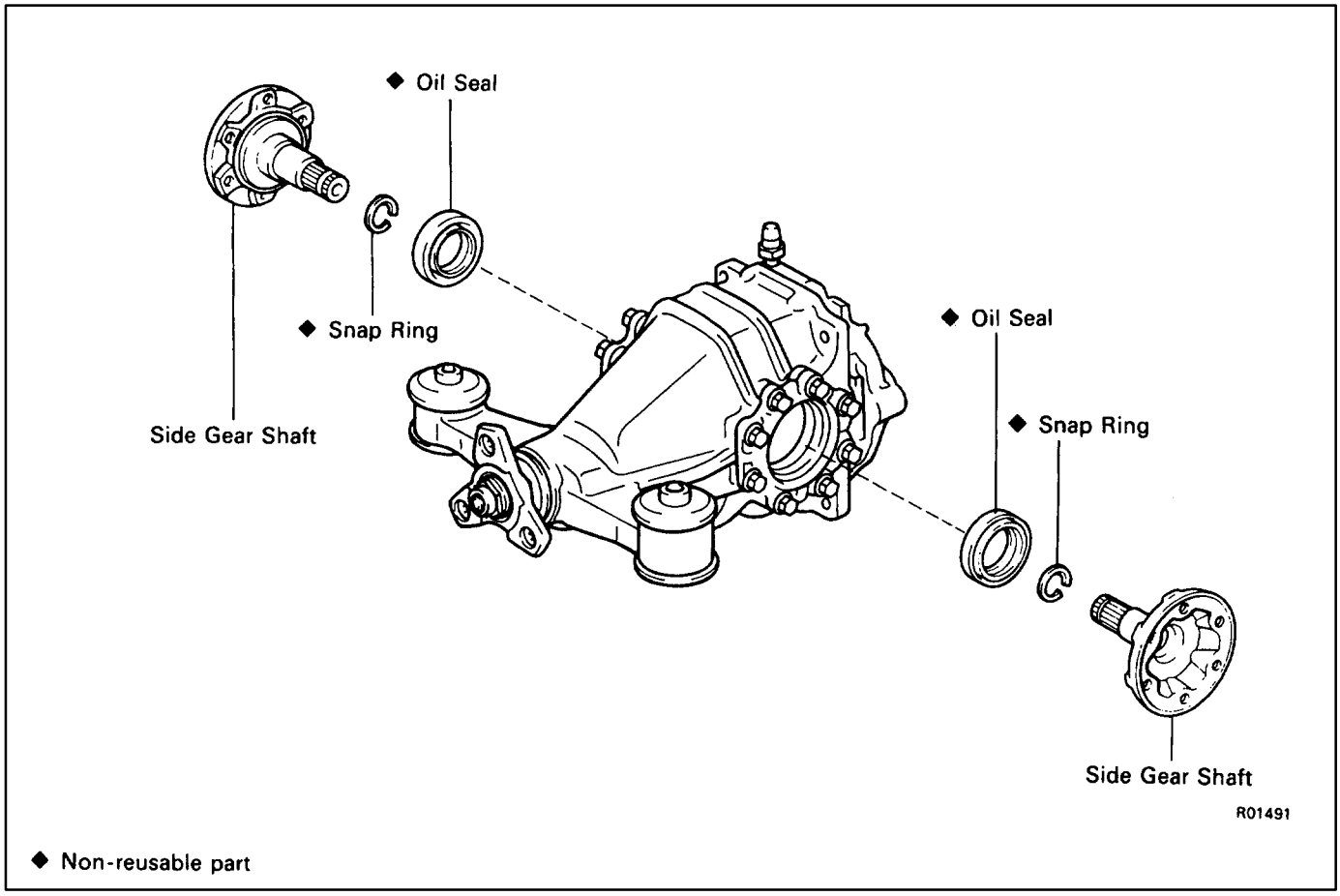

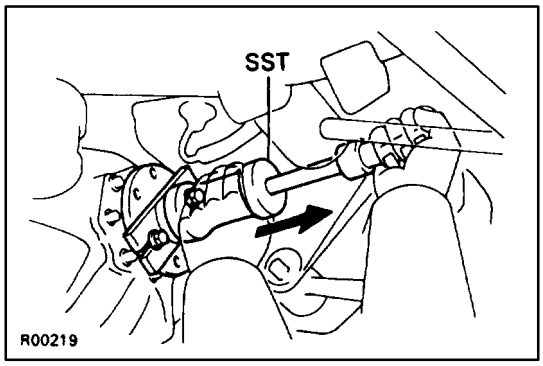

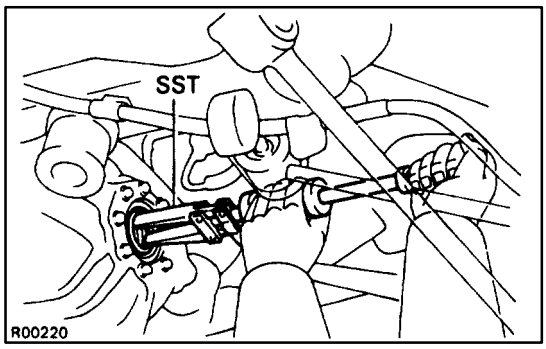

SIDE GEAR SHAFT OIL SEAL REPLACEMENT

SA0V1–04

1. DRAIN DIFFERENTIAL OIL

2. REMOVE REAR DRIVE SHAFT
(See page SA–65)

3. REMOVE SIDE GEAR SHAFT

(a) Using SST and 2 bolts, remove the side gear shaft.
SST 09520–22010

(b) Remove the snap ring from the side gear shaft.

4. REMOVE SIDE GEAR SHAFT OIL SEAL
Using SST, remove the oil seal.
SST 09308–00010

WhereEverybodyKnowsYourName

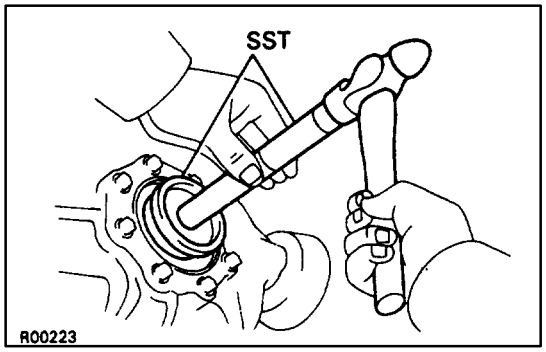

5. INSTALL SIDE GEAR SHAFT OIL SEAL

(a) Using SST and a hammer, drive in a new oil seal.
SST 09608–32010, 09608–35014 (09608–06020)

(b) Apply MP grease to the oil seal lip.

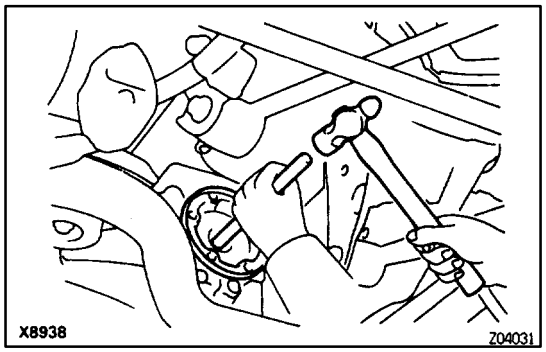

6. INSTALL SIDE GEAR SHAFT

(a) Install a new snap ring to the side gear shaft.

(b) Using a hammer and brass bar, tap in the side gear shaft to the differential.
NOTICE: Be careful not damage the side gear shaft and oil seal.

7. CHECK INSTALLATION OF SIDE GEAR SHAFT

(a) Check that there is 2–3 mm (0.08–0.12 in.) of play in axial direction.

(b) Check that the side gear shaft will not come out by trying to pull it out by hand.

8. INSTALL REAR DRIVE SHAFT
(See page SA–65)

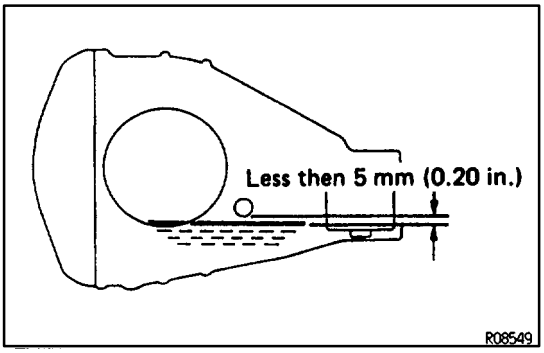

9. CHECK DIFFERENTIAL OIL LEVEL

Fill with hypoid gear oil if necessary.

Oil grade:

API GL–5 Hypoid Gear Oil

Viscosity:

Above–18▼C (0▼F) SAE 90

Below–18▼C (0▼F) SAE 80W–90 or 80W

Capacity:

1.35 liters (1.43 US qts, 1.19 Imp. qts)

WhereEverybodyKnowsYourName

ECU Power Source Circuit

CIRCUIT DESCRIPTION

When the ignition switch is turned on, battery voltage is applied to the terminal IG SW of the ECU, and the main relay control circuit in the ECU sends a signal to the terminal M–REL of the ECU, switching on the main relay. This signal causes current to flow to the coil, closing the contacts of the main relay and supplying power to the terminals +B and +B1 of the ECU.
If the ignition switch is turned off, the ECU continues to switch on the main relay for a maximum of 2 seconds for the initial setting of the ISC valve.

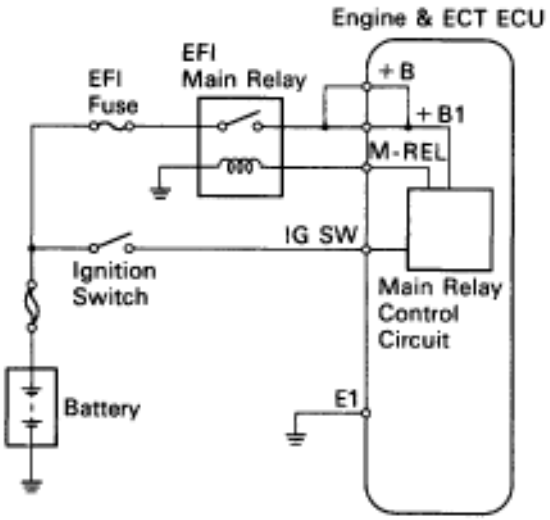

DIAGNOSTIC CHART

See next page for the DIAGNOSTIC CHART.

WIRING DIAGRAM

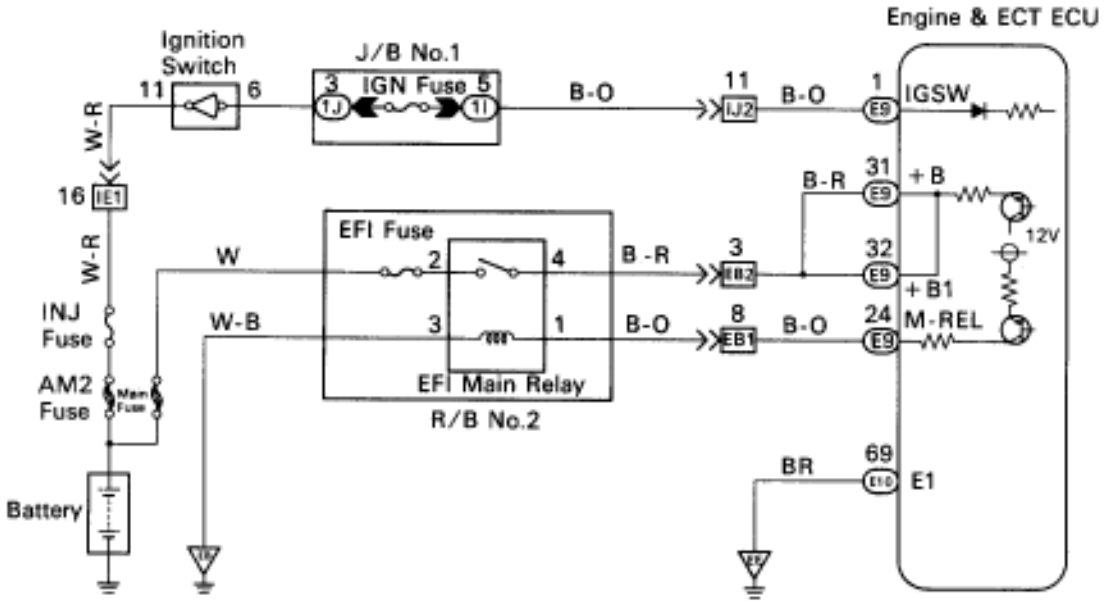

FI6477

WhereEverybodyKnowsYourName

DIAGNOSTIC CHART

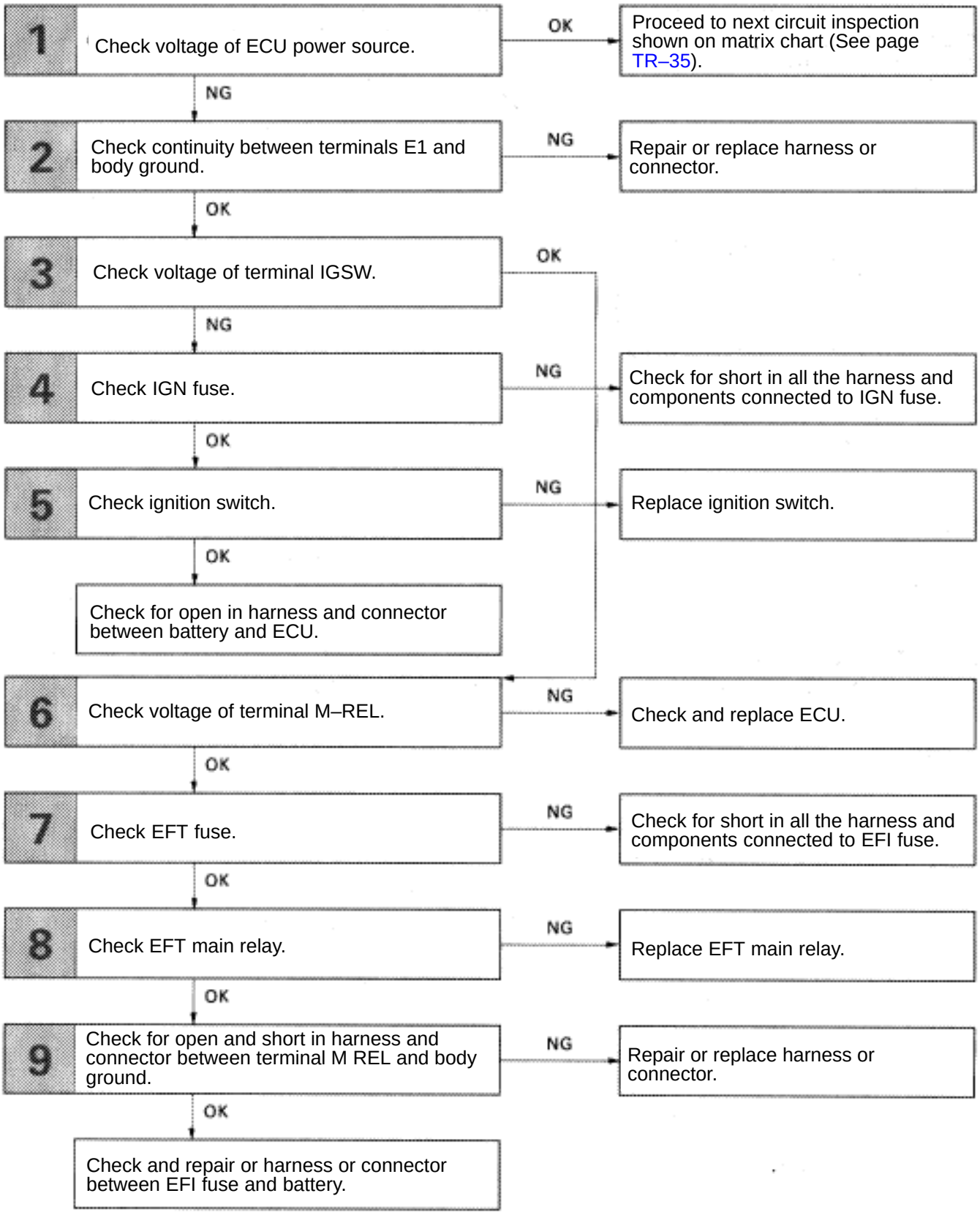

WhereEverybodyKnowsYourName

INSPECTION PROCEDURE

1 **Check voltage between terminals + B, + B1 and E1 of engine & ECT ECU connector.**

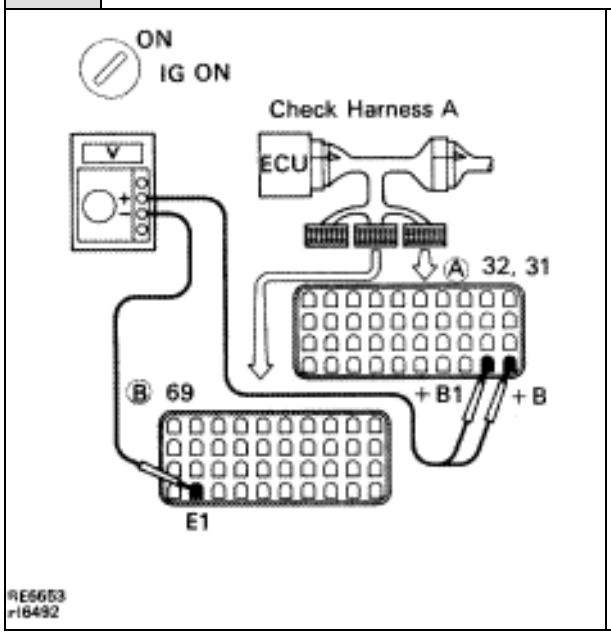

P (2) Connect the Check Harness A. (See page TR–30)

(2) Turn ignition switch on.

C Measure voltage between terminals + B, + B1 and E1 of engine & ECT ECU connector.

OK **Voltage: 10 – 14 V**

NG

OK **Proceed to next circuit inspection shown on matrix chart**

2 **Check for open in harness and connector between terminals E1 of engine & ECT ECU and body ground (See page IN–27).**

OK

NG **Repair or replace harness or connector.**

3 **Check voltage between terminal IG SW of engine & ECT ECU connector and body ground.**

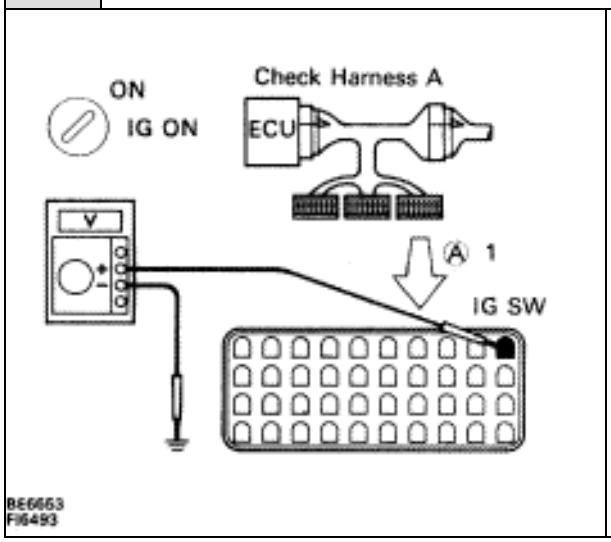

P Turn ignition switch on.

C Measure voltage between terminal IG SW of engine & ECT ECU connector and body ground.

OK **Voltage: 10 – 14 V**

NG

OK **Go to step 6.**

WhereEverybodyKnowsYourName

4 Check IGN Fuse.

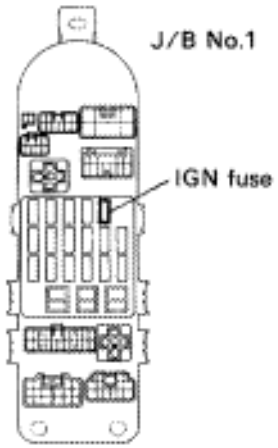

BE6624

P Remove IGN fuse from J/B No.1.

C Check continuity of IGN fuse.

OK **Continuity.**

OK

NG **Check for short in all the harness and components connected to IGN fuse (See attached wiring diagram).**

5 Check ignition switch.

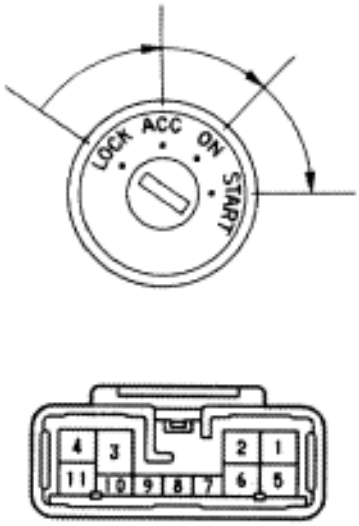

BE3582
eg-11-2

P Remove under cover and finish panel.

C Check continuity between terminals.

OK

○—○ continuity

Terminal / Switch position	2	3	4	5	6	11
LOCK						
ACC		○—○				
ON	○—○	○—○	○—○		○—○	○—○
START	○—○		○—○	○—○	○—○	○—○

OK

NG **Replace ignition switch.**

Check and repair harness and connector between battery and ignition switch, ignition switch and engine & ECT ECU.

WhereEverybodyKnowsYourName

6	Check voltage between terminal M–REL of engine & ECT ECU connector and body ground.

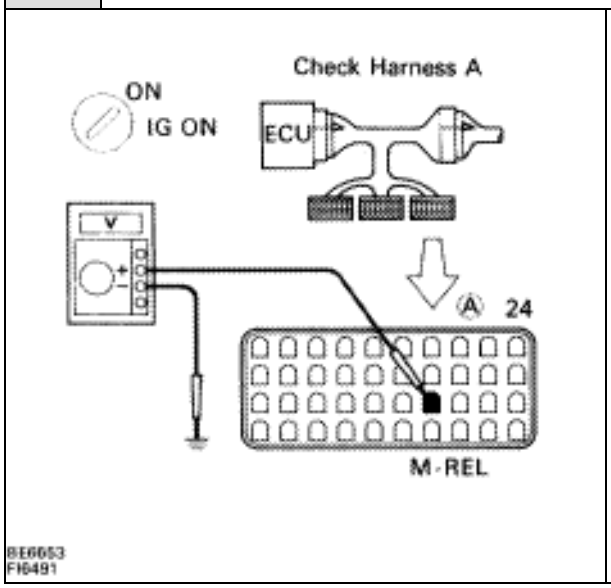

P Turn ignition switch on.

C Measure voltage between terminal M–REL of engine & ECT ECU connection and body ground.

OK **Voltage: 10 – 14 V**

OK

NG **Check and replace engine & ECT ECU.**

7	Check EFI

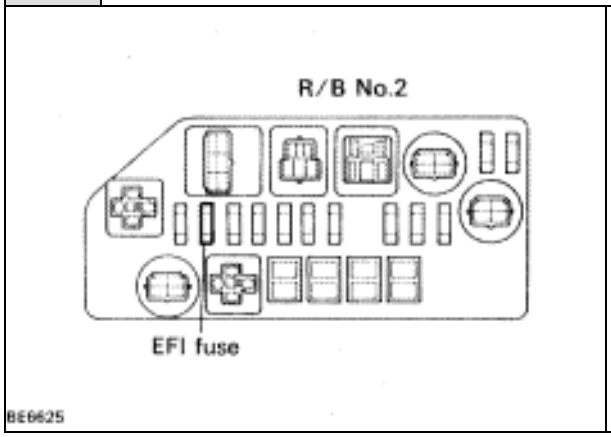

P Remove EFI fuse R/B No.2.

C Check continuity of EFI fuse.

OK **Continuity**

OK

NG **Rep**

WhereEverybodyKnowsYourName

8 **Check EFI main relay.**

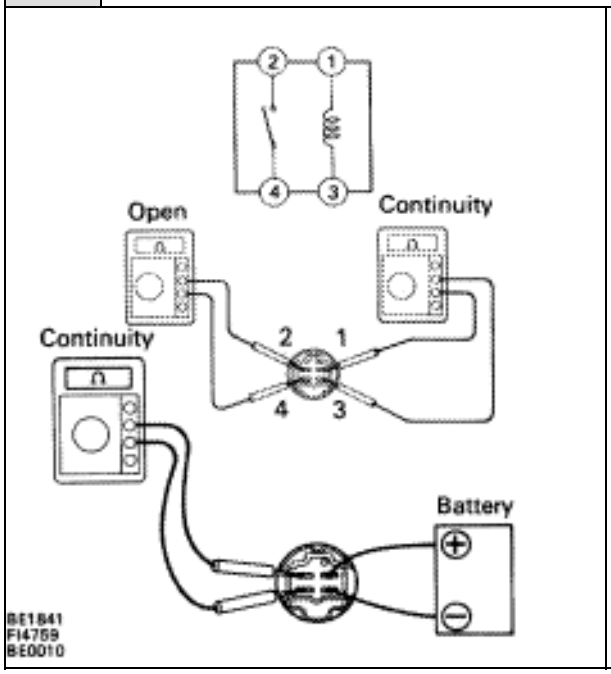

P Remove EFI main relay.

C Check continuity between terminals of EFI main relay shown below.

OK

Terminals 2 and 4	Open
Terminals 1 and 3	Continuity (Reference value 72 Ω)

C (2) Apply battery voltage between terminals 1 and 3.
(2) Check continuity between terminals 2 and 4.

OK

Terminals 2 and 4	Continuity

OK

NG → **Replace EFI main relay.**

9 **Check for open and short in harness and connector between terminal M–REL of engine & ECT ECU and body ground (See page IN–27).**

OK

NG → **Repair or replace harness or connector.**

Check and repair harness or connector between EFI fuse and battery.

WhereEverybodyKnowsYourName

Back Up Power Source Circuit

CIRCUIT DESCRIPTION

Battery voltage is supplied to terminal BATT of the ECU even when the ignition switch is off for use by the diagnostic code memory and air–fuel ratio adaptive control value memory, etc.

DIAGNOSTIC CHART

1. Check EFI fuse.
   - NG → Check for short in all the harness and components connected to EFI fuse.
   - OK ↓
2. Check voltage of terminal BATT.
   - NG → Check and repair harness or connector between battery, EFI fuse and ECU.
   - OK ↓
3. Check operation for the back–up.
   - NG → Check and replace fuse.
   - OK ↓

Proceed to next circuit inspection shown on matrix chart (See page TR–39).

WIRING DIAGRAM

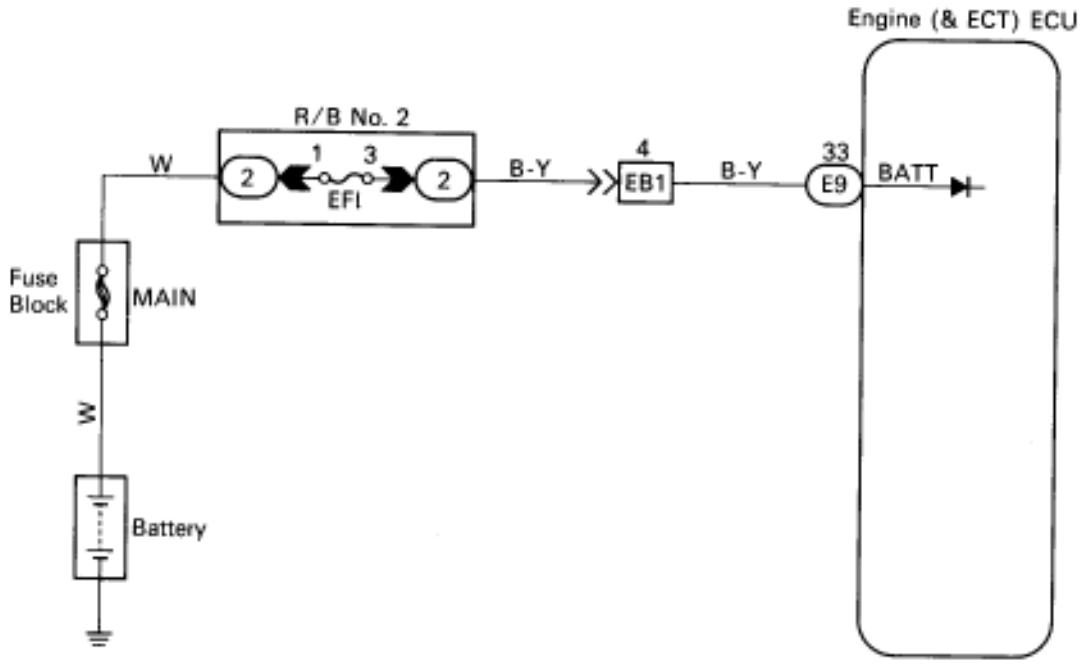

FI6628

WhereEverybodyKnowsYourName

INSPECTION PROCEDURE

1 **Check EFI fuse.**

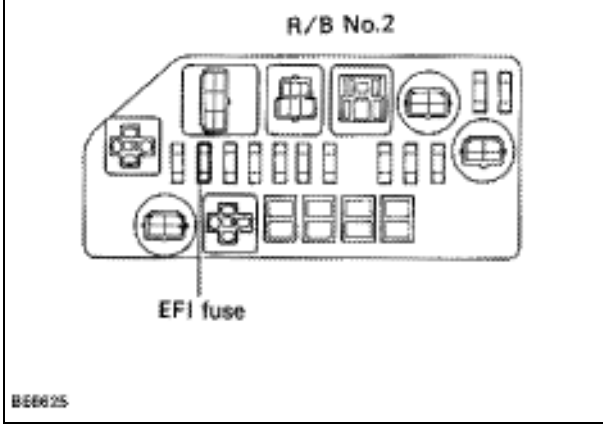

P Remove EFI fuse from R/B No. 2

C Check continuity of EFI fuse.

OK **Continuity**

OK

NG **Check for short in all the harness and components connected to EFI fuse (See attached wiring diagram).**

2 **Check voltage between terminal BATT of engine (& ECT) ECU connector and body ground.**

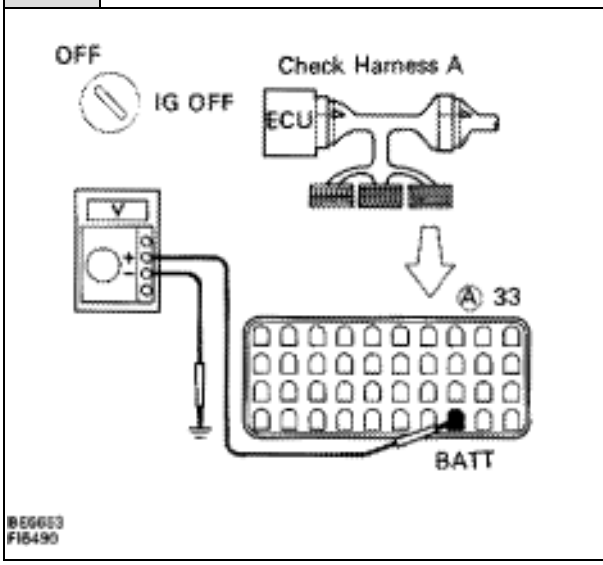

P Connect the Check Harness A. (See page TR–34)

C Measure voltage between terminal BATT of engine (& ECT) ECU connector and body ground.

OK **Voltage: 10 – 14 V**

OK

NG **Check and repair harness or connector between engine (& ECT) ECU and EFI fuse, EFI fuse and battery.**

3 **Are the diagnostic trouble codes still in the memory when the ignition switch is turned OFF?**

YES

NO **Check and replace engine (& ECT) ECU.**

Proceed to next circuit inspection shown on matrix chart (See page TR–39).

WhereEverybodyKnowsYourName

Injector Circuit

CIRCUIT DESCRIPTION

The injectors are provided to the intake manifold. They inject fuel into the cylinders based on the signals from the engine (& ECT) ECU.

Reference **INSPECTION USING OSCILLOSCOPE**

- With the engine idling measure between terminals #10 ~ 60 and E01 of engine (& ECT) ECU.

HINT: The correct waveform appears as shown in the illustration on the below.

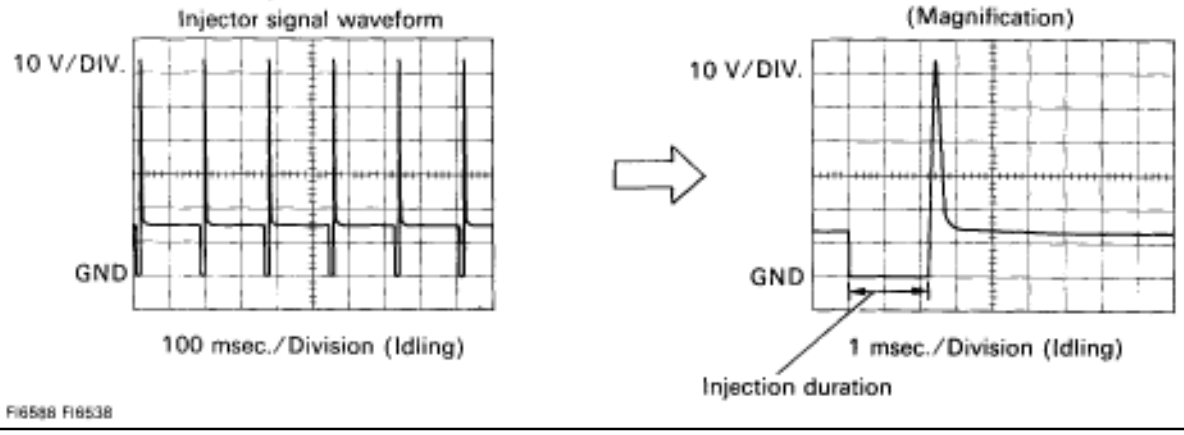

DIAGNOSTIC CHART

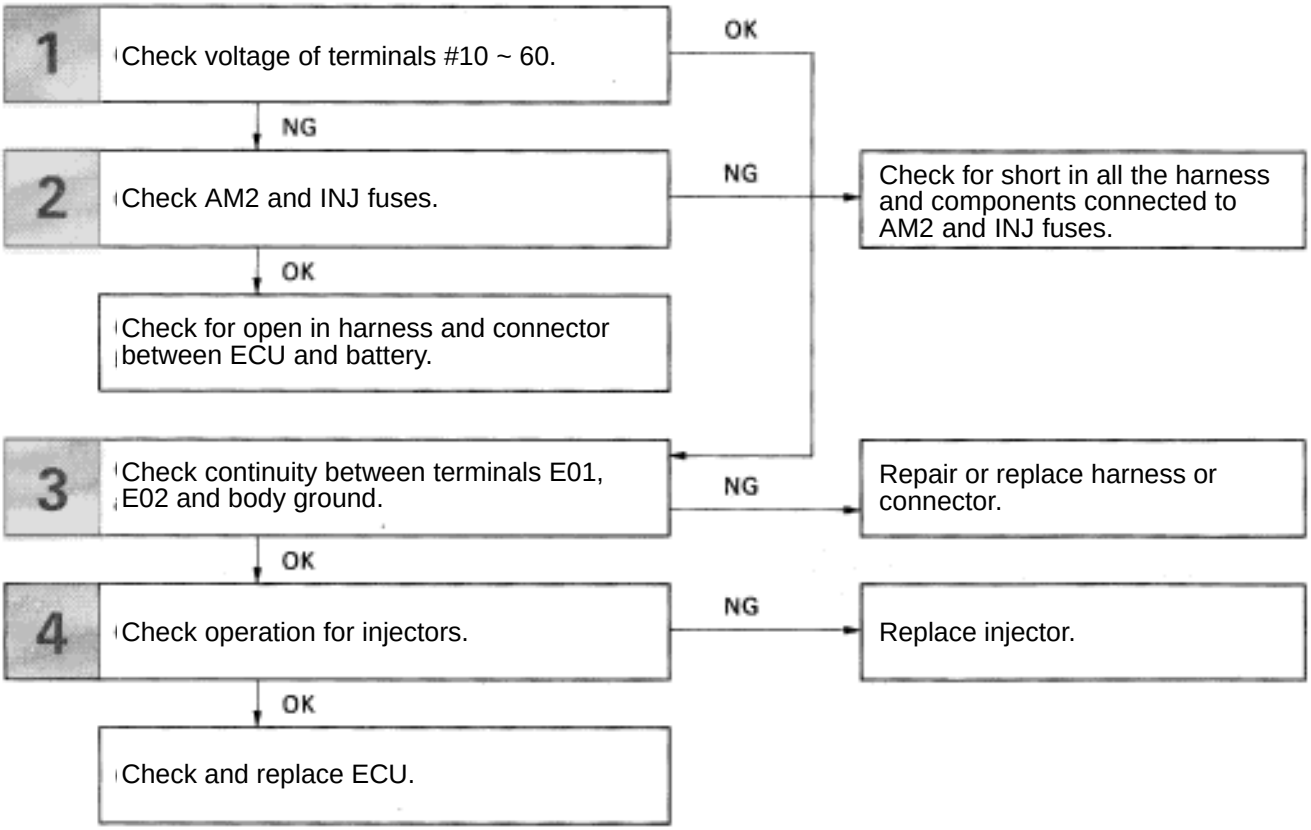

WhereEverybodyKnowsYourName

WIRING DIAGRAM

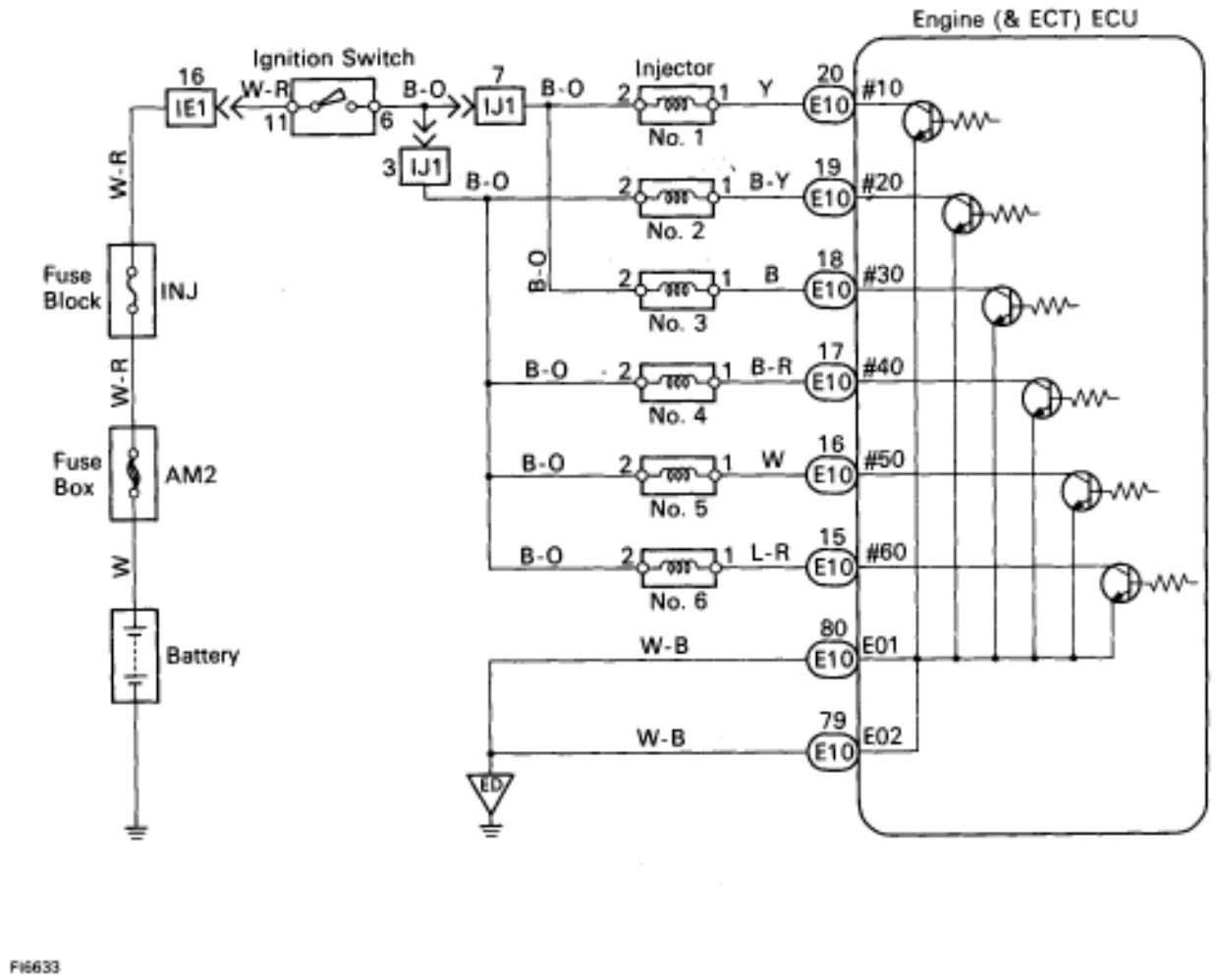

WhereEverybodyKnowsYourName

INSPECTION PROCEDURE

1	Check voltage between terminals #10 ↔ 60 of engine (& ECT) ECU and body ground.
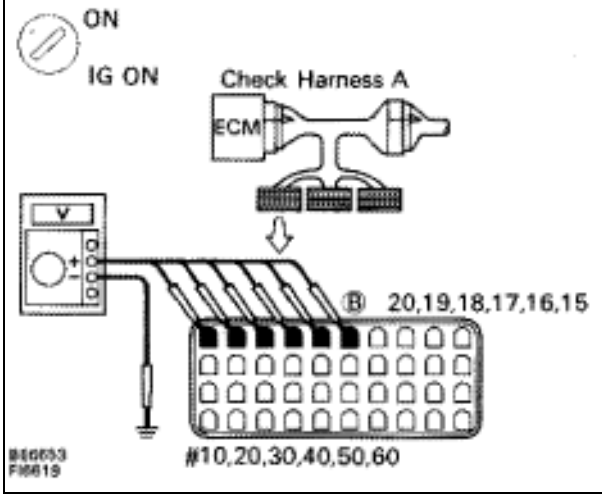	**P** (2) Connect the Check Harness A. (See page TR–34) (2) Turn ignition switch on. **C** Measure voltage between terminals #10 ~ 60 of engine (& ECT) ECU and body ground. **OK** **Voltage: 10 – 14 V**

NG

OK → **Go to step ▼.**

2	Check AM2 and INK fuses.
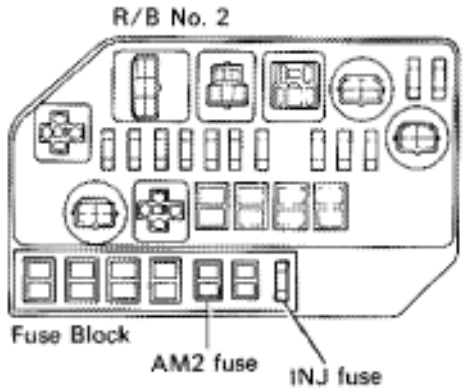	**P** Remove AM2 and INJ fuses from fuse block. **C** Check continuity of AM2 of INJ fuses. **OK** **Continuity**

OK

NG → **Check for short in all the harness and components connected to AM2 and INJ fuses.**

Check for open in harness and connector between engine (& ECT) ECU and battery.

WhereEverybodyKnowsYourName

3 **Check for open in harness and connector between terminals E01, E02 of engine (& ECT) ECU connector and body ground (See page IN–27).**

OK

NG → **Repair or replace harness or connector.**

4 **Check injectors.**

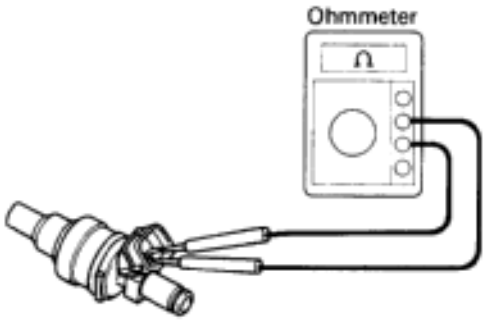

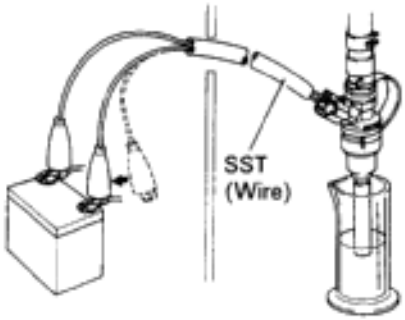

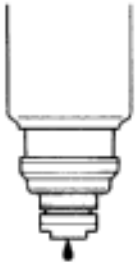

FI3183
FI2573
FI4849

P Disconnect injector connector (See page FI–26

C Measure resistance of injector.

OK **Resistance: 13.4 – 14.2 Ω at 20˚C (68˚F)**

C Check injection volume of injector (See page FI–30).

OK
- **Injection volume**
  70 – 88 cc/15 sec. (4.3 – 5.4 cu in.)
  Difference between each injector:
  Less than 9 cc (0.5 cu in.)
- **Leakage**
  Fuel drop: One drop or less per minute.

OK

NG → **Replace injector.**

Check and replace engine (& ECT) ECU.

WhereEverybodyKnowsYourName

Back Up Power Source Circuit

CIRCUIT DESCRIPTION

Battery voltage is supplied to terminal BATT of the ECU even when the ignition switch is off for use by the diagnostic code memory and air–fuel ratio adaptive control value memory, etc.

DIAGNOSTIC CHART

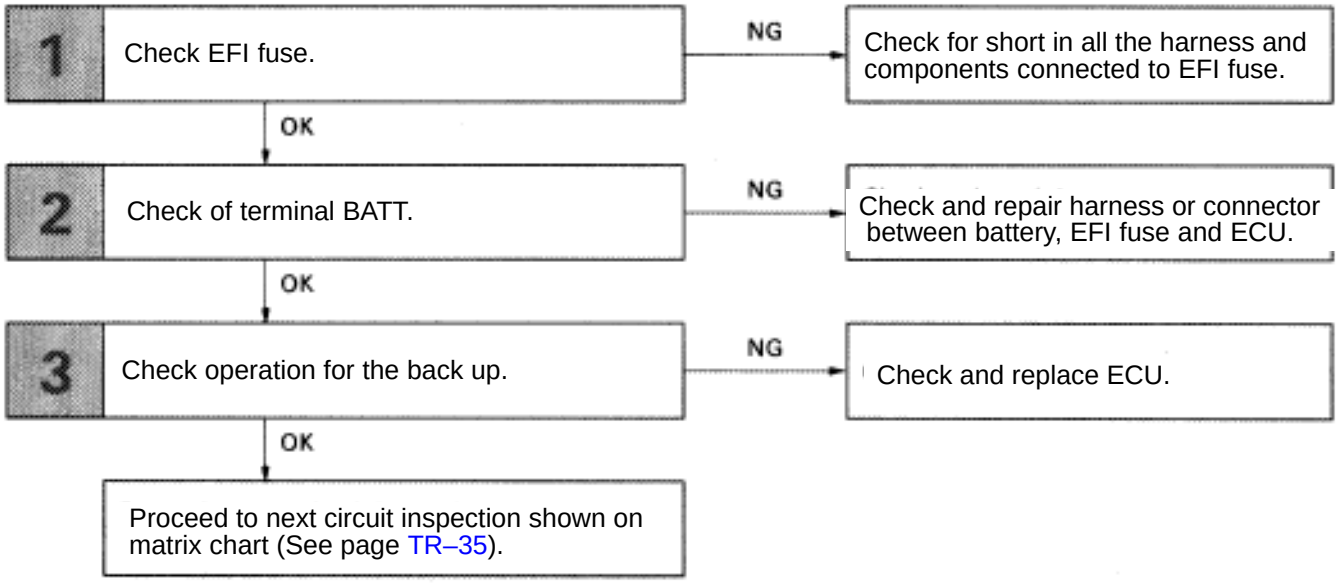

WIRING DIAGRAM

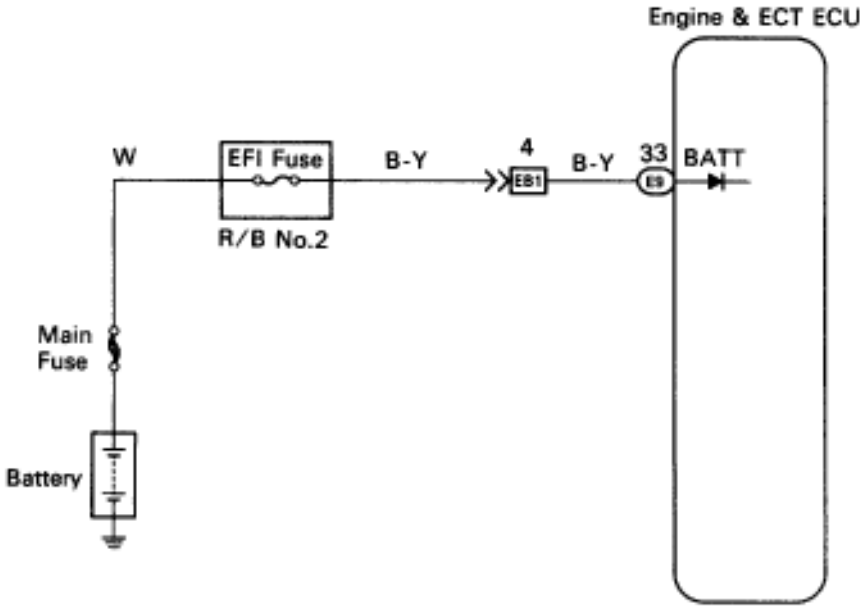

F16476

WhereEverybodyKnowsYourName

INSPECTION PROCEDURE

1 **Check EFI fuse.**

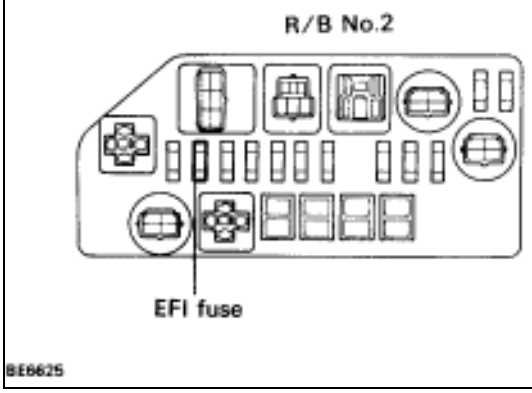

P Remove EFI fuse from R/B No.2.

C Check continuity of EFI fuse.

OK **Continuity**

OK

NG **Check for short in all the harness and components connected to EFI fuse (See attached wiring diagram).**

2 **Check voltage between terminal BATT of engine & ECT ECU connector and body ground.**

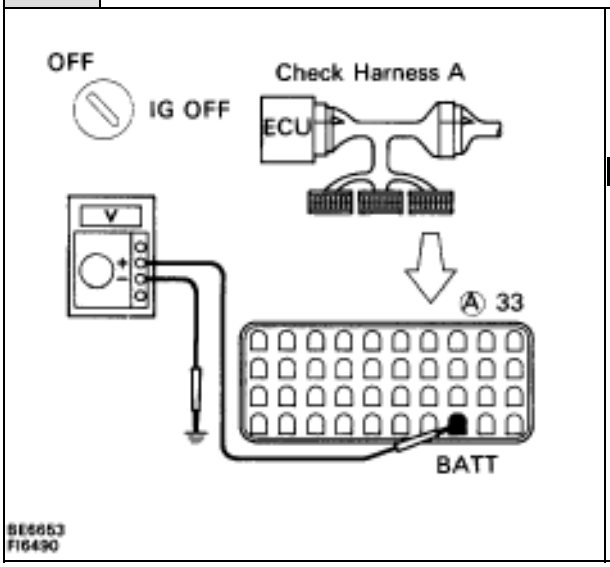

P Connect the Check Harness A.
(See page TR–30).

C Measure voltage between terminal BATT of engine & ECT ECU connector and body ground.

OK **Voltage: 10 – 14 V**

OK

NG **Check and repair harness or connector between engine & ECT ECU and EFI fuse, EFI fuse and battery.**

3 **Are the diagnostic codes still in the memory when the ignition switch is turned OFF?**

YES

NO **Check and replace engine & ECT ECU.**

Proceed to next circuit inspection shown on matrix chart (See page TR–35).

WhereEverybodyKnowsYourName

Injector Circuit

CIRCUIT DESCRIPTION

The injectors are provided to the intake manifold. They inject fuel into the cylinders based on the signals from the engine & ECT ECU.

DIAGNOSTIC CHART

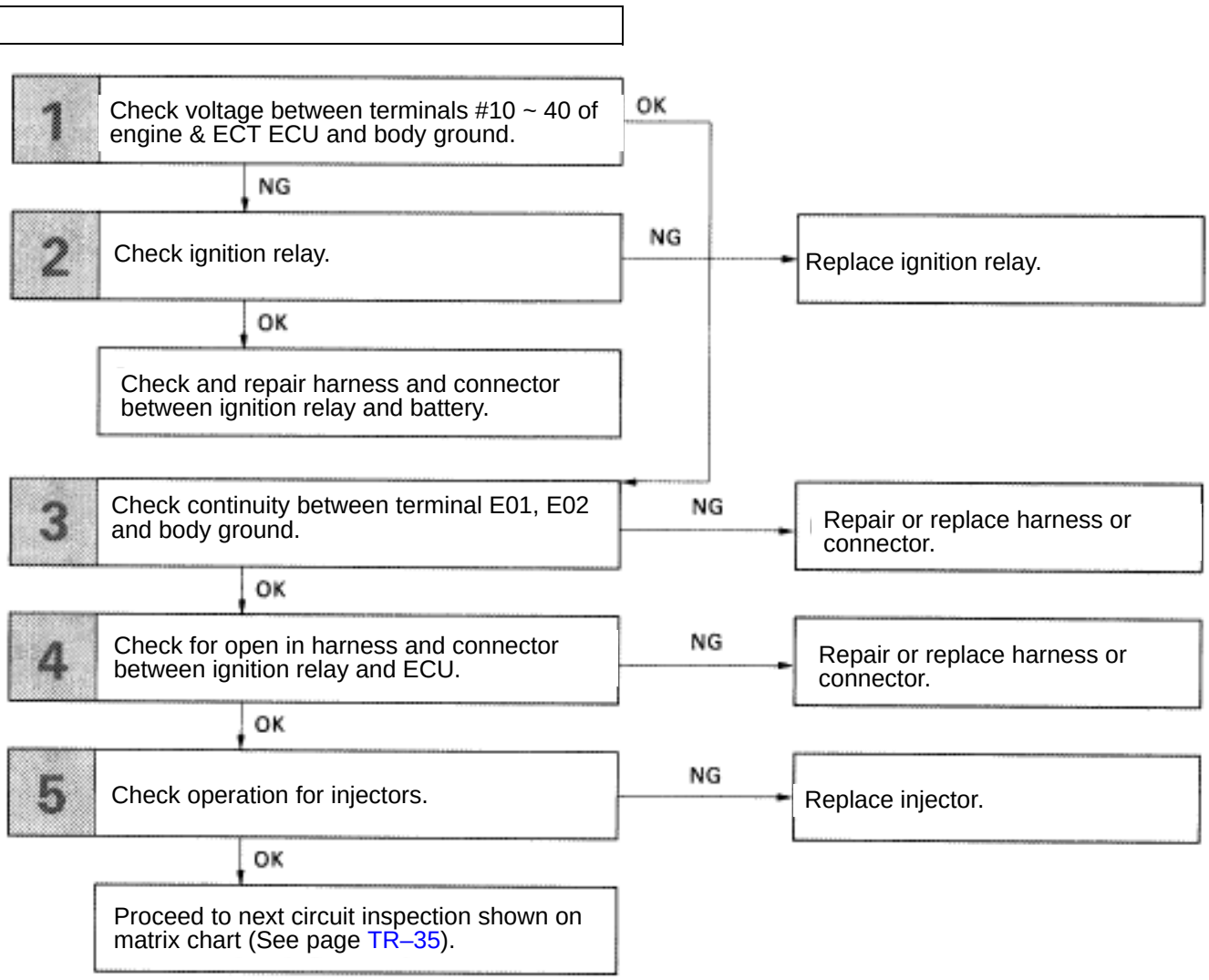

WhereEverybodyKnowsYourName

WIRING DIAGRAM

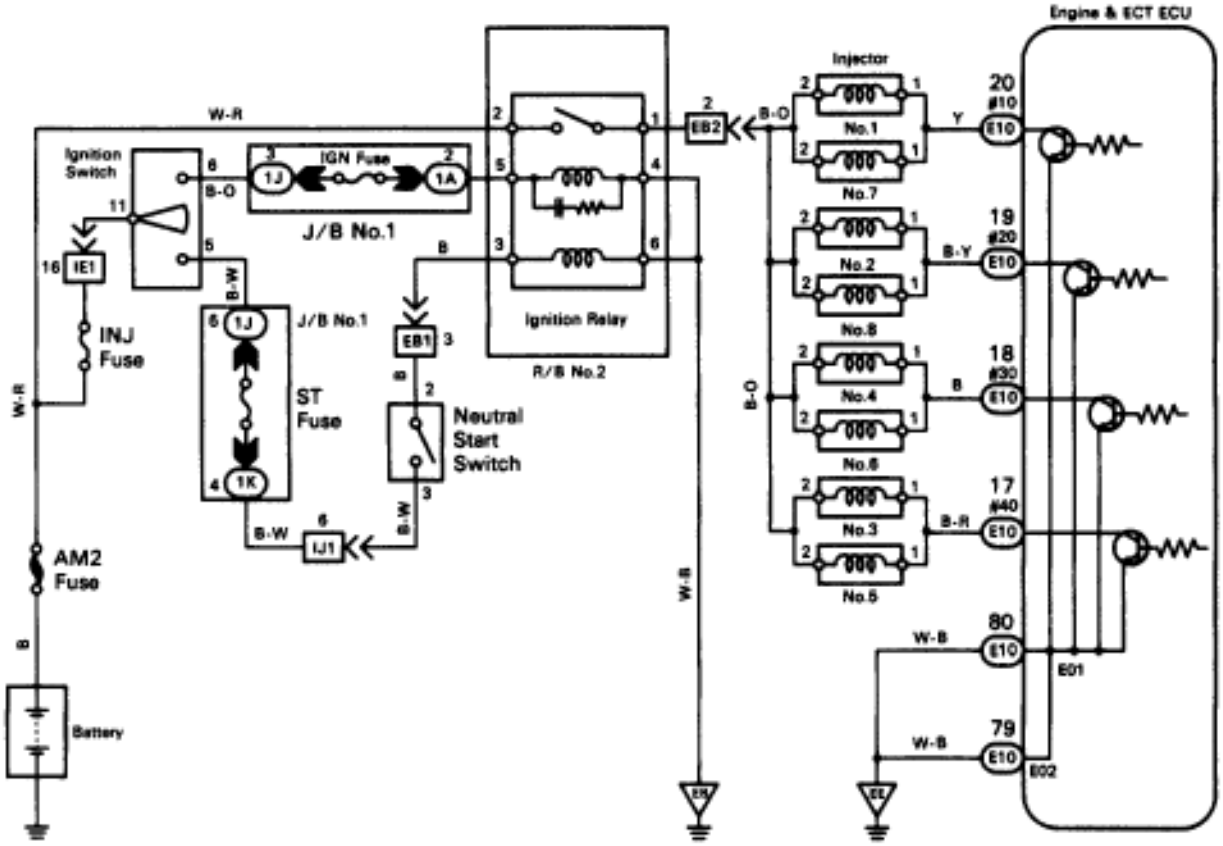

FI6487

WhereEverybodyKnowsYourName

INSPECTION PROCEDURE

1 **Check voltage between terminals #20 ~ 40 of engine & ECT ECU and body ground.**

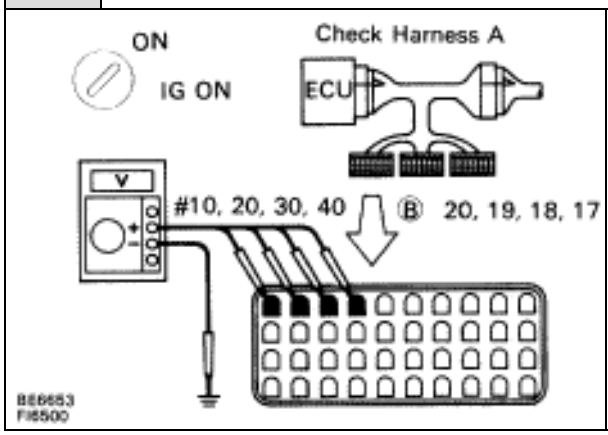

P (2) Connect the Check Harness A. (See page TR–30)

(2) Turn ignition switch on.

C Measure voltage between terminals #10 ~ 40 of engine & ECT ECU and body ground.

OK **Voltage: 10 – 14 V**

NG

OK **Go to step 3.**

2 **Check ignition relay.**

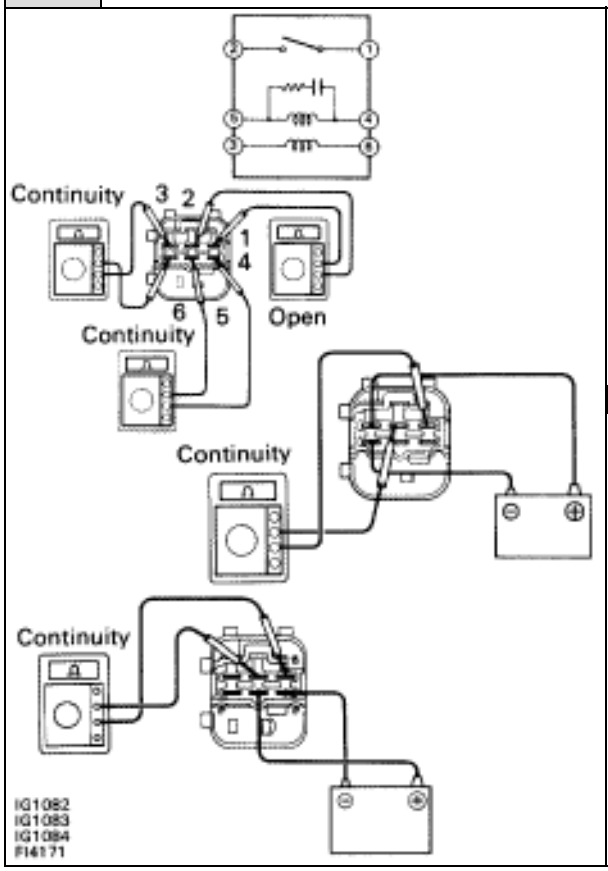

P Remove ignition relay from R/B No.2.

C Check continuity between terminals of ignition relay shown below.

OK

Terminals 1 and 2	Open
Terminals 3 and 6	Continuity (Reference value 22 Ω)
Terminals 4 and 5	Continuity (Reference value 107 Ω)

Hint (2) Apply battery voltage between terminals of ignition relay shown below.

(2) Check continuity between terminals 1 and 2.

Terminals 1 and 2	Continuity

OK

NG **Replace ignition relay.**

WhereEverybodyKnowsYourName

3	Check for open in harness and connector between terminal E01, E02 of engine & ECT ECU connector and body ground (See page IN–27).

OK

NG → Repair or replace harness or connector.

4	Check for open in harness and connector between ignition relay and injector, injector and engine & ECT ECU (See page IN–27).

OK

NG → Repair or replace harness or connector.

5	Check injectors.

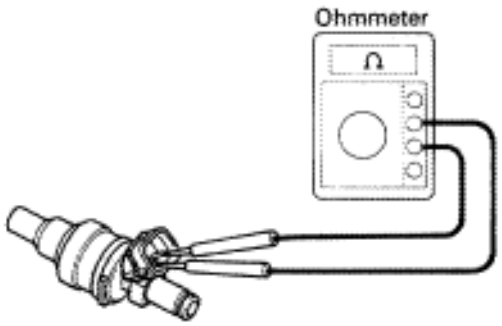

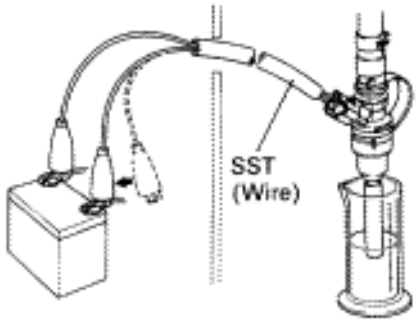

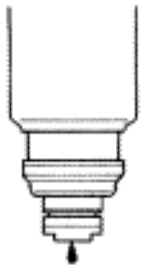

FI3183
FI2573
FI4849

P Disconnect injector connector (See page FI–50).

C Measure resistance of injector.

OK **Resistance: 13.4 – 14.2 at 20°C (68°F)**

C Check injection volume of injector (See page FI–52).

OK
- **Injection volume**
  55–70 cc/15 sec. (3.4–4.3 cu in.)
  Difference between each injector:
  Less than 10 cc (0.6 cu in.)
- **Leakage**
  Fuel drop: Once drop or less per minute.

OK

NG → Replace injector.

Proceed to next circuit inspection shown on matrix chart (See page TR–35).

WhereEverybodyKnowsYourName

Cold Start Injector Circuit

— CIRCUIT DESCRIPTION

The cold start injector is used to maintain the engine startability when it is cold. The injection volume, i,e, the length of time the injector is energized, is controlled by the ECU and the cold start injector time switch.
During a cold start, when the starter turns the contacts in the cold start injector time switch close. Thus current flows to the cold start injector coil, injecting fuel. At the same time, a bimetal in the heat coil is energized and heats up. This soon causes the contacts to open, cutting off the current flow to the injector coil and stopping fuel injection.
The injection duration of the cold start injector is determined by the coolant temperature and the length of time current flows to the heat coil. When the engine is warm, the contacts are opened by the bimetal and the cold start injector does not operate.
When the engine is hard to start and the starter is operated continuously, heat coil (2) heats up the bimetal keeping the contacts open to prevent spark plugs from becoming fouled, which is caused by the cold start injector operation when the open contacts close again.
When the engine is started at a coolant temperature of 22°C (72°F) or lower, the cold start injector operation time is controlled by the cold start injector time switch.
When the coolant temperature is in the normal temperature range 22°C (72°F) or higher, the contacts of the cold start injector time switch are open and the time switch is off, instead, the ECU controls the operating time of the cold start injector.
In this way, the CO and HC levels can be reduced while the engine is being started and the engine startability is maintained. Control by the ECU ends when the coolant temperature reaches 60°C (140°F).

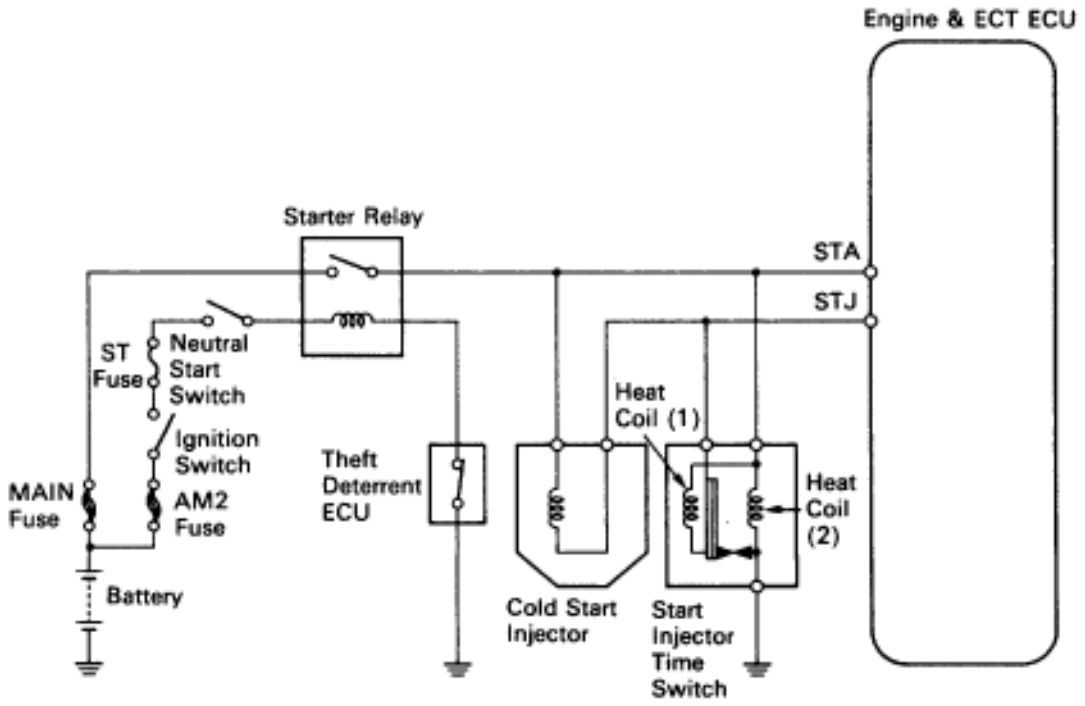

FI6483

WhereEverybodyKnowsYourName

DIAGNOSTIC CHART

1 Check voltage of cold start injector power source.
- OK → 3
- NG → 2

2 Check cold start injector.
- NG → Replace cold start injector.
- OK → Check for open in harness and connector between battery and ECU.

3 Check start injector time switch.
- NG → Replace start injector time switch.
- OK → 4

4 Check for open and short in harness and connector between cold start injector and start injector time switch.
- NG → Repair or replace harness or connector.
- OK → 5

5 Check fuel injection of cold start injector.
- NG → Replace cold start injector.
- OK → Proceed to next circuit inspection shown on matrix chart (See page TR–35).

WIRING DIAGRAM

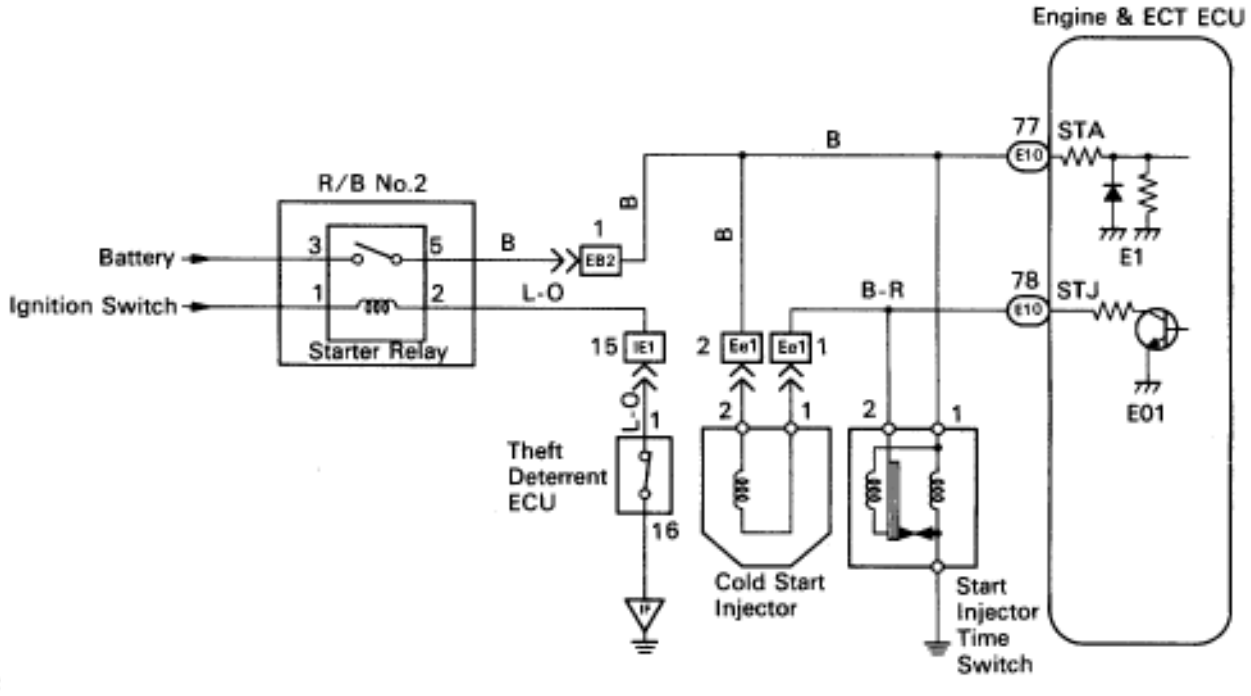

WhereEverybodyKnowsYourName

INSPECTION PROCEDURE

1	Check voltage between terminal STJ of engine & ECT ECU connector and body ground.
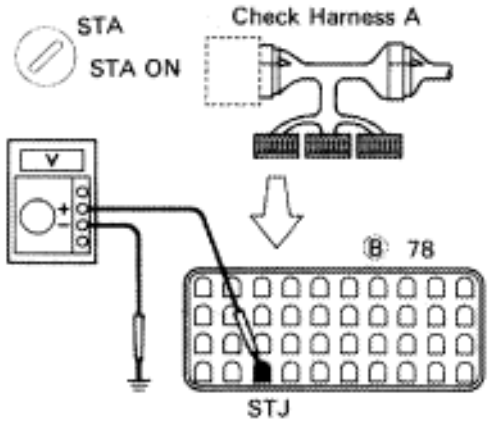	**P** Connect to the Check Harness A. (See page TR–30) **C** Disconnect start injector time switch connector. **OK** Disconnect engine & ECT ECU connector. Measure voltage between terminal STJ of engine & ECT ECU connector and body ground when ignition switch is turned to STA. 10 – 14 V **Hint**

NG

OK → **Go to step 3.**

2	Check resistance of cold start injector.
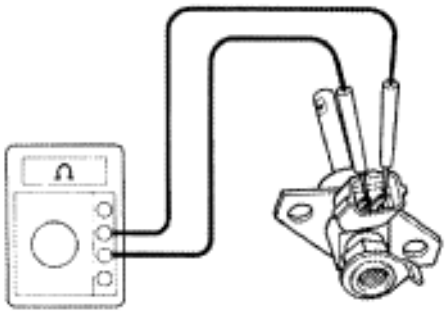	**P** Remove cold start injector (See page FI–27). **C** Measure resistance between terminals of cold start injector. **OK** **Resistance: 2 – 4 at 20°C (68°F)** **Hint**

OK

NG → **Replace cold start injector.**

Check and repair harness and connector between engine & ECT ECU and cold start injector, cold start injector and battery.

WhereEverybodyKnowsYourName

3 **Check start injector time switch.**

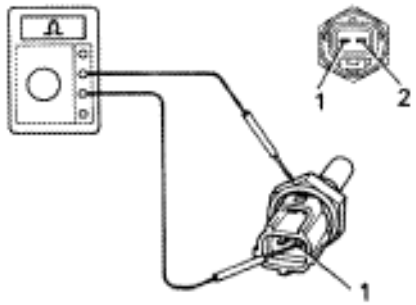

FI4175

P Remove start injector time switch (See page FI–88).

C Measure resistance between terminals shown below.

OK

Terminals	Resistance	Coolant temperature
1 – 2	25 – 45 Ω	below 15°C (59°F)
	65 – 85 Ω	above 30°C (86°F)
1-Ground	25 – 85 Ω	—

OK → **NG** → **Replace start injector time switch.**

4 **Check harness and connector between cold start injector and start injector time switch (See page IN–27).**

OK → **NG** → **Repair or replace harness or connector.**

5 **Check fuel injection of cold start injector.**

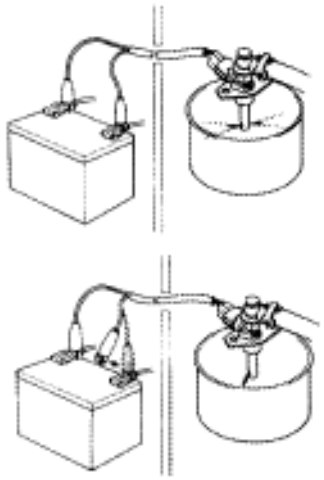

FI4104
FI4105

P Remove cold start injector (See page FI–27).

C (2) Check fuel injection of cold start injector (See page FI–33).

(2) Check fuel leakage of cold start injector (See page FI–34).

OK **(2) Fuel is injected normally.**

(2) Fuel leakage is less than one drop per minute.

Notice:

Perform this check within the shortest possible time.

OK → **NG** → **Repair or replace cold start injector.**

Proceed to next circuit inspection shown on matrix chart (See page TR–35).

WhereEverybodyKnowsYourName

ISC Valve Circuit

CIRCUIT DESCRIPTION

The ISC valve is provided on the intake air chamber and intake air bypassing the throttle valve is directed to the ISC valve through a hose.
A step motor is built into the ISC valve. It consists of four coils, the magnetic rotor, valve shaft and valve. When current flows to the coils due to signals from the ECU, the rotor turns and moves the valve shaft forward or backward, changing the clearance between the valve and the valve seat.
In this way the intake air volume bypassing the throttle valve is regulated, controlling the engine speed.
There are 125 possible positions to which the valve can be opened.

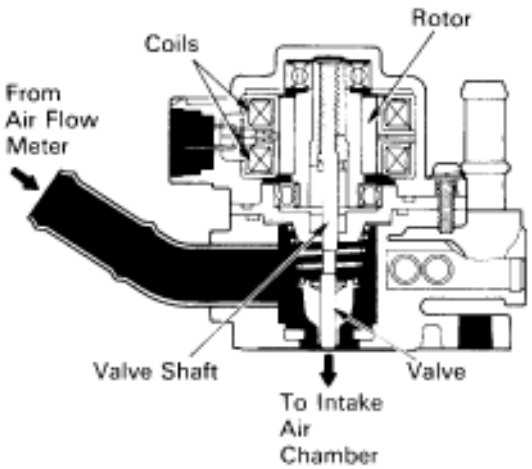

DIAGNOSTIC CHART

1 Check operation for ISC valve. — NG → Replace ISC valve.
OK ↓
2 Check harness and connector between EFI main relay, ISC valve and ECU. — NG → Repair or replace harness or connector.
OK ↓
Proceed to next circuit inspection shown on matrix chart (See page TR–35).

WIRING DIAGRAM

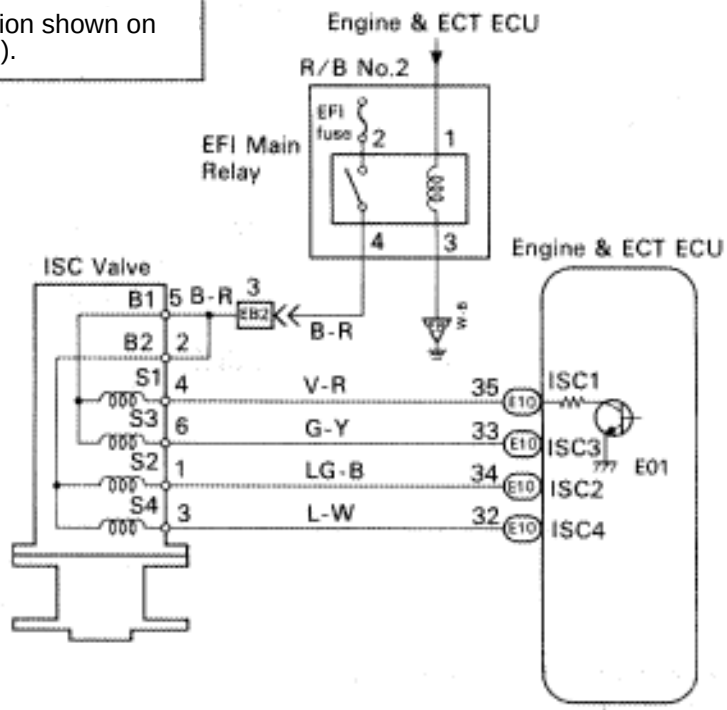

FI6475

WhereEverybodyKnowsYourName

INSPECTION PROCEDURE

1 **Check ISC value.**

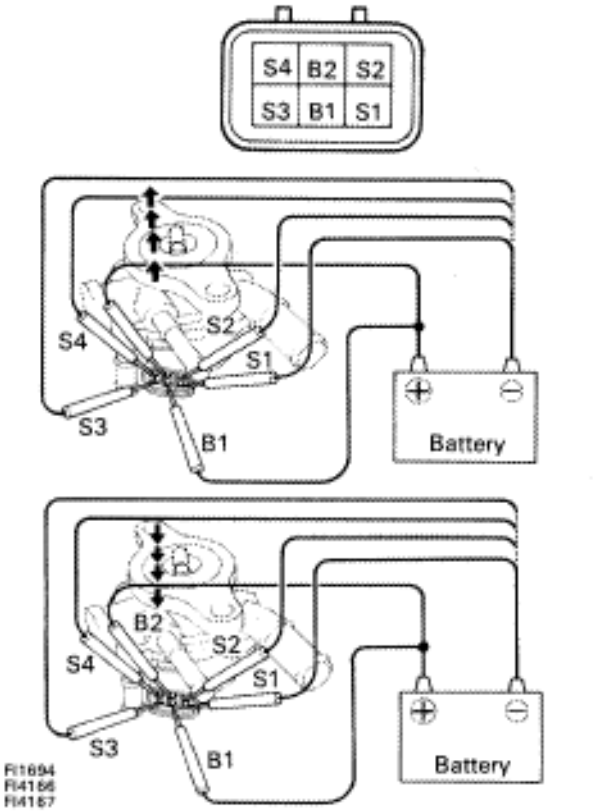

P Disconnect ISC connector.

C Measure resistance between terminals shown below.

OK

Terminal	Resistance
B1 – S1	10 Ω – 30 Ω
B1 – S3	10 Ω – 30 Ω
B2 – S2	10 Ω – 30 Ω
B2 – S4	10 Ω – 30 Ω

P Remove ISC Valve

C (2) Connect the battery positive lead to terminals B1 and B2, and the negative lead to terminals S1–S2–S3–S4 in that order.

(2) Connect the battery positive lead to terminals B1 and B2, and the negative lead to terminals S4–S3–S2–S1 in that order.

OK **(2) The valve moves in the closing direction.**

(2) The value moves in the opening direction.

OK

NG **Replace ISC valve.**

2 **Check for open and short in harness and connector between EFI main relay and ISC valve, ISC valve and engine & ECT ECU (See page IN–27).**

OK

NG **Repair or replace harness or connector.**

Proceed to next circuit inspection shown on matrix chart (See page TR–35).

WhereEverybodyKnowsYourName

Fuel Pressure Control VSV Circuit

CIRCUIT DESCRIPTION

The ECU turns on a VSV (Vacuum Switching Valve) to draw the air into the diaphragm chamber of the pressure regulator if it detects that the temperature of the coolant is too high during engine starting.
The air drawn into the chamber increases the fuel pressure to prevent fuel vapor lock at high engine temperature in order to help the engine start when it is warm.
Fuel pressure control ends approx. 100 secs. after the engine is started.

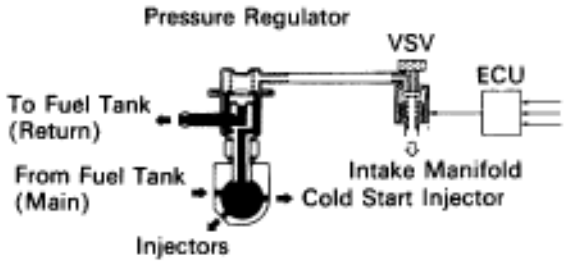

DIAGNOSTIC CHART

1	Check operation for fuel pressure control VSV.	NG →	Replace fuel pressure control VSV.
	OK ↓		
2	Check voltage of VSV power source.	OK →	Proceed to next circuit inspection shown on matrix chart (See page TR–35).
	NG ↓		
3	Check for open and short in harness and connector between main relay and ECU.	NG →	Repair or replace harness or connector.
	OK ↓		
	Check and replace ECU.		

WIRING DIAGRAM

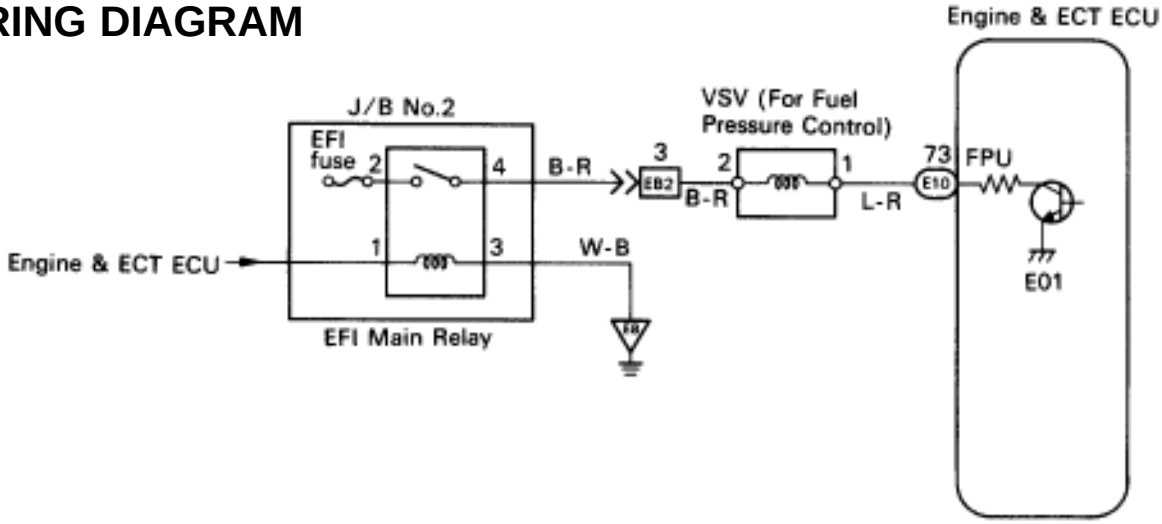

FI6473

WhereEverybodyKnowsYourName

INSPECTION PROCEDURE

1	Check fuel pressure control VSV.

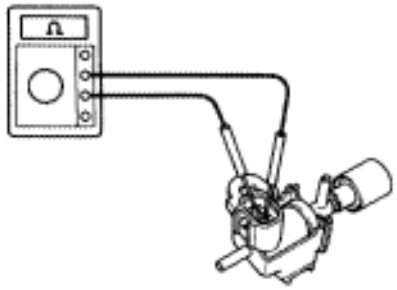

P (2) Remove fuel pressure control VSV.
(2) Disconnect fuel pressure control VSV connector.

C (2) Measure resistance between terminals.
(2) Measure resistance between each terminal and the body.

OK **1. Resistance: 30 – 50 at 20C (68F)**
2. Resistance: 1M or higher

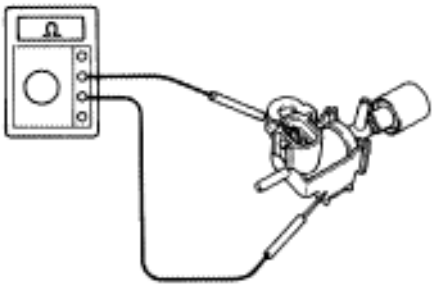

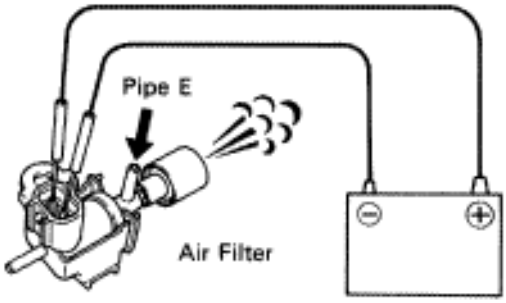

C Check operation of fuel pressure control VSV when battery voltage is applied to the terminals of fuel pressure control VSV connector or not.

OK **Battery voltage is applied:**
The air from pipe E is flowing out through the air filter.

Battery voltage is not applied:
The air from pipe E is flowing out through pipe G.

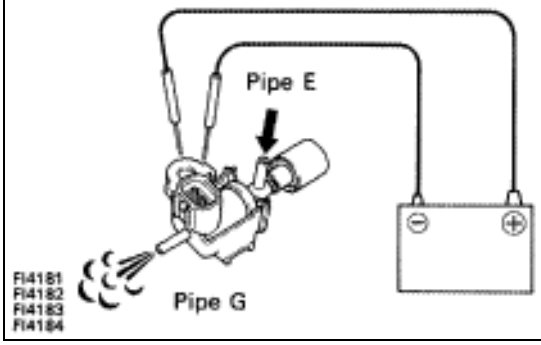

OK

NG **Replace fuel pressure control VSV.**

Go to step 2.

WhereEverybodyKnowsYourName

2	Check voltage between terminal FPU of engine & ECT ECU connector and body ground.

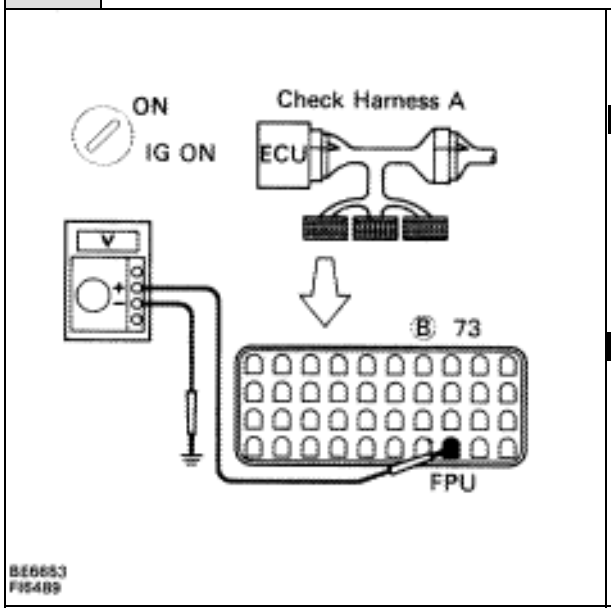

P (2) Connect the Check Harness A.

C (See page TR–30)

OK (2) Turn ignition switch on.

Measure voltage between terminal FPU of engine & ECT ECU connector and body ground.

Voltage: 10 – 14 V

Hint

NG

OK **Proceed to next circuit inspection shown on matrix chart (See page TR–35).**

3	Check for open and short in harness and connector between engine & ECT ECU and VSV, VSV and EFI main relay (See page IN–27).

OK

NG **Repair or replace harness or connector**

Check and replace engine & ECT ECU.

WhereEverybodyKnowsYourName

–MEMO–

WhereEverybodyKnowsYourName

TE1, TE2 Terminal Circuit

CIRCUIT DESCRIPTION

Terminal TE1 is located in the check connector in the engine compartment and terminals TE1 and TE2 are located in the TDCL in the cabin. When these terminals are connected with the E1 terminal, diagnostic codes in normal mode or test mode can be read from the ”CHECK” engine warning light on the combination meter.

DIAGNOSTIC CHART

HINT: If terminals TE1 and TE2 are connected with terminal E1, diagnostic code is not output or test mode is not activated.
Even though terminal TE1 is not connected with terminal E1, the ”CHECK” engine warning light blinks.
For the above phenomenon, the likely cause is an open or short in the wire harness, or malfunction inside the ECU.

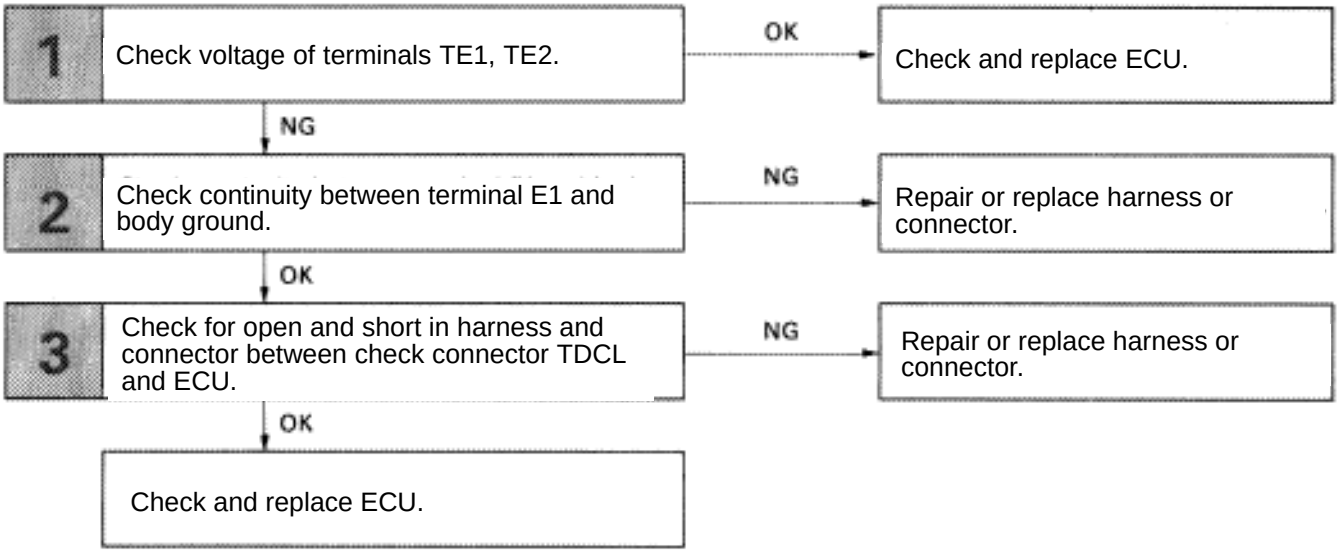

WIRING DIAGRAM

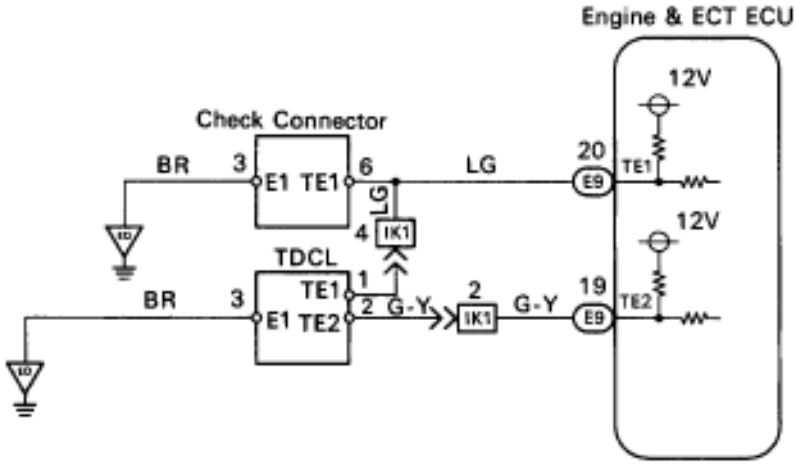

FI6516

WhereEverybodyKnowsYourName

INSPECTION PROCEDURE

1	Check voltage between terminals TE1, TE2 and E1 of check connector, TDCL.

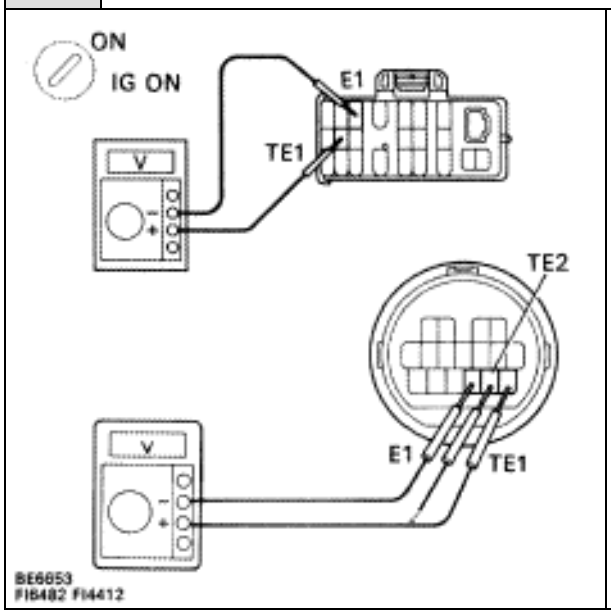

P Turn ignition switch on.

C Measure voltage between terminals TE1, TE2 and E1 of check connector, TDCL.

OK **Voltage: 10 – 14 V**

NG → **OK** → **Check and replace engine & ECT ECT.**

2	Check continuity between terminal E1 of check connector, TDCL and body ground.

OK → **NG** → **Repair or replace harness or connector.**

3	Check for open and short in harness and connector between engine & ECT ECU and check connector, TDCL (See page IN–27).

OK → **NG** → **Repair or replace harness or connector.**

Check and replace engine & ECT ECU.

WhereEverybodyKnowsYourName

ENGINE TROUBLESHOOTING

WhereEverybodyKnowsYourName

HOW TO PROCEED WITH TROUBLESHOOTING

The Engine Control System broadly consists of the sensors, ECU and actuators. The ECU receives signals from various sensors, judges the operating conditions and determines the optimum injection duration, timing, ignition timing and idle speed.
In general, the Engine Control System is considered to be a very intricate system to troubleshoot. But, the fact is that if you proceed to inspect the circuit one by one following the procedures directed in this manual, troubleshooting of this system is not complex.
This section explains the most ideal method of troubleshooting and tells how to carry out the necessary repairs.

[1] CUSTOMER PROBLEM ANALYSIS
Using the customer problem analysis check sheet for reference, ask the customer in as much details as possible about the problem.

[2] CHECK AND CLEAR DIAGNOSTIC CODE (PRECHECK)
Before confirming the problem symptom, first check the diagnostic code and make a note of any malfunction code which is output, then clear the code.
HINT: Output of the malfunction code indicates that there is a malfunction in the circuit indicated. However, it does not indicate whether the malfunction is still occurring or occurred in the past and returned to normal. In order to determine this, the problem symptoms should be confirmed in 4 first and the diagnostic code be rechecked in **[6]**.
Accordingly, if troubleshooting is begun based on the malfunction code only in diagnostic code check in **[2]**, it could result in a misdiagnosis, leading to troubleshooting of circuits which are normal and making it more difficult to locate the cause of the problem.

[3] SETTING THE TEST MODE DIAGNOSIS, [4] PROBLEM SYMPTOM CONFIRMATION, [5] SYMPTOM SIMULATION
In order to find out the trouble more quickly, set the diagnosis check in test mode and with higher sensing ability of the ECU, confirm the problem symptoms. If the trouble does not reappear, use the symptom simulation method to make sure the trouble is reproduced.

[6] DIAGNOSTIC CODE CHECK IN TEST MODE
Check the diagnostic code in test mode. If the malfunction code is output, proceed to ”step **[8]** Diagnostic Code Chart”. If the normal code is output, proceed to ”step **[7]** Basic Inspection”.

[7] BASIC INSPECTION
Carry out basic inspection such as the spark check and fuel pressure check, etc.

[8] DIAGNOSTIC CODE CHART
If the malfunction code is displayed, proceed to inspect the circuit indicated by the chart for each code.

[9] MATRIX CHART OF PROBLEM SYMPTOMS
If the normal code is displayed in the diagnosis in test mode, perform troubleshooting according to the inspection order in the Matrix Chart of Problem Symptoms.

[10] PARTS INSPECTION
When the Matrix Chart of Problem Symptoms instructs to check the parts, proceed to parts inspection section included in this manual.

[11] CIRCUIT INSPECTION
Determine if the malfunction is the sensor, actuator, wire harness, connector or the ECU.

WhereEverybodyKnowsYourName

[12] CHECK FOR MOMENTARY INTERRUPTION

By performing the check for momentary interruption, the place where momentary interruptions or momentary shorts are occurring due to poor contacts can be isolated.

[13] ADJUSTMENT, REPAIR

After the cause of the problem is located, perform adjustment or repairs by following the inspection and replacement procedures in this manual.

[14] CONFIRMATION TEST

After completing adjustment or repairs, confirm not only that the malfunction is eliminated, but also conduct a test drive, etc., to make sure the entire Engine Control System is operating normally.

WhereEverybodyKnowsYourName

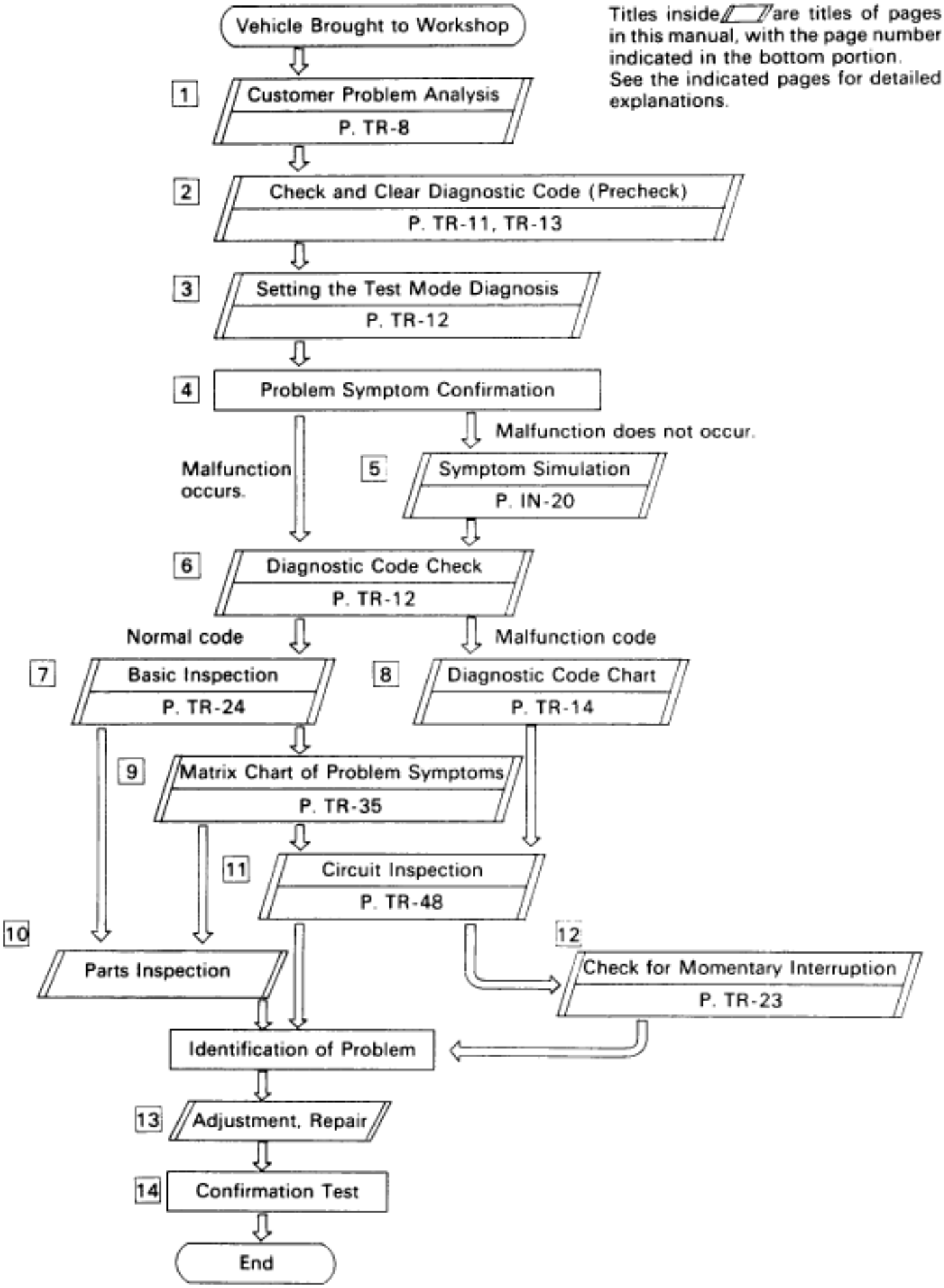

WhereEverybodyKnowsYourName

–MEMO–

WhereEverybodyKnowsYourName

How to Proceed with Troubleshooting Using Volt/Ohm Meter and TCCS Checker

For the explanation of steps [1] ~ [6], [8] and [10] ~ [16], see the explanation of steps with the same title on page TR–2.

[7] [9] CIRCUIT INSPECTION BY CHECKER

If the Normal code is displayed in the diagnostic code check, connect the checker to the vehicle and check all the circuits which can be inspected using the checker.

If a malfunctioning circuit is then detected, proceed to ”Circuit Inspection by Volt/Ohm Meter” and check the applicable circuit using a volt/ohm meter. Determine if the malfunction is in the sensor, actuator, wire harness, connector or the ECU. If the malfunctioning circuit cannot be detected using the checker, proceed to ”Basic Inspection” and perform troubleshooting.

If a malfunction code is displayed in the diagnostic code check, use the checker to inspect the circuit indicated by the diagnostic code chart for the displayed code.

For instructions on how to connect the checker to the vehicle and how to use the checker, please refer to the Instruction Manual for TCCS checker.

WhereEverybodyKnowsYourName

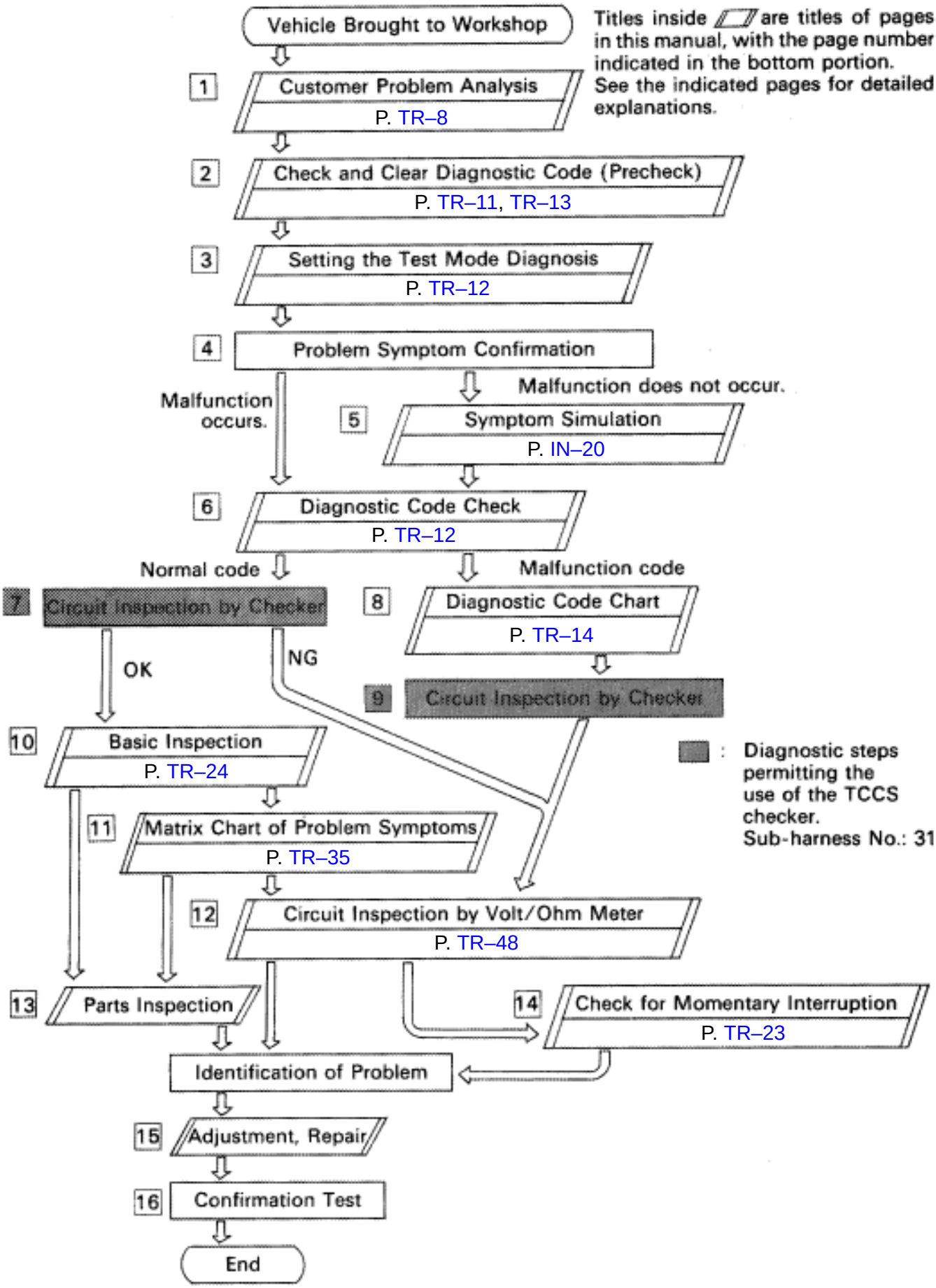

WhereEverybodyKnowsYourName

CUSTOMER PROBLEM ANALYSIS CHECK SHEET

ENGINE CONTROL System Check Sheet

Inspector's Name :

Customer's Name		Registration No.	
		Registration Year	/ /
		Frame No.	
Date Vehicle Brought In		Odometer Reading	km Miles

Date of Problem Occurrence		
Frequency of Problem Occurrence		☐ Constant ☐ Sometime (times per day/month) ☐ Once only ☐ Other ( )
Conditions at Time of Problem Occurrence	Weather	☐ Fine ☐ Cloudy ☐ Rainy ☐ Snowy ☐ Various/Other
	Outdoor Temperature	☐ Hot ☐ Warm ☐ Cool ☐ Cold (Approx. °F (°C))
	Place	☐ Highway ☐ Suburbs ☐ Inner City ☐ Hill (☐ Up, ☐ Down) ☐ Rough road ☐ Other ( )
	Engine Temp.	☐ Cold ☐ Warming up ☐ After warming up ☐ Any temp. ☐ Other
	Engine Operation	☐ Starting ☐ Just after starting ☐ Idling ☐ Racing without load ☐ Driving (☐ Constant speed ☐ Acceleration ☐ Deceleration ☐ Other ( ))

Problem Symptoms	☐ Engine does not Start	☐ Engine does not crank ☐ No initial combustion ☐ No complete combustion
	☐ Difficult to Start	☐ Engine cranks slowly ☐ Other ( )
	☐ Poor Idling	☐ Incorrect first idle ☐ Idling rpm is abnormal [☐ High ☐ Low (rpm)] ☐ Rough idling ☐ Other ( )
	☐ Poor Driveability	☐ Hesitation ☐ Back fire ☐ Muffler explosion (after fire) ☐ Surging ☐ Knocking ☐ Other ( )
	☐ Engine Stall	☐ Engine stall soon after starting ☐ After acceleration pedal depressed ☐ After acceleration pedal released ☐ During A/C operation ☐ When N to D shift ☐ Other ( )
	☐ Others	

Condition of "CHECK" Engine Warning Light		☐ Remains on ☐ Sometimes lights up ☐ Does not light up
Diagnostic Code Inspection	Normal Mode (Precheck)	☐ Normal code ☐ Malfunction code [code]
	Test Mode	☐ Normal code ☐ Malfunction code [code]

WhereEverybodyKnowsYourName

–MEMO–

WhereEverybodyKnowsYourName

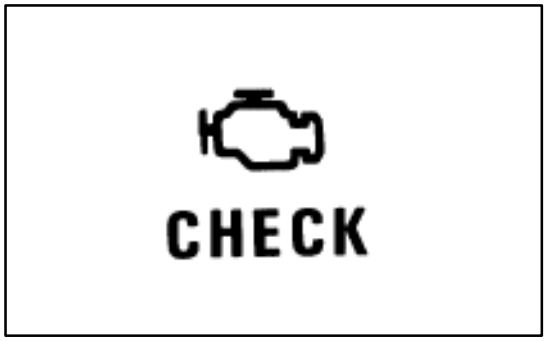

DIAGNOSIS SYSTEM

DESCRIPTION

The ECU contains a built–in self–diagnosis system by which troubles with the engine signal network are detected and a ”CHECK” engine warning light on the instrument panel lights up. By analyzing various signals as shown in the later table (See page TR–14) the Electronic Control Unit (ECU) detects system malfunctions relating to the sensors or actuators.

In the normal mode, the self–diagnosis system monitors 22 (USA specification vehicles with TRAC control) or 21 (USA (except for California) and Canadian specification vehicles with TRAC control) items, indicated by code No. as shown in TR–14. A ”CHECK” engine warning light informs the driver that a malfunction has been detected. The light goes off automatically when the malfunction has been repaired. But the diagnostic code(s) remains stored in the ECU memory (except for code Nos. 16 and 53). The ECU stores the code(s) until it is cleared by removing the EFI fuse with the ignition switch off.

The diagnostic code can be read by the number of blinks of the ”CHECK” engine warning light when TE1 and E1 terminals on the TDCL or check connector are connected. When 2 or more codes are indicated, the lowest number (code) will appear first.

In the test mode, 15 (USA specification vehicles with TRAC control) or 14 (USA (except for California) and Canadian specification vehicles with TRAC control) items, indicated by code No. as shown in TR–14 are monitored. If a malfunction is detected in any one of the systems indicated by code Nos. 13, 21, 22, 24, 25, 26, 27, 28, 29, 35, 41, 42, 47, 71 and 78 (USA specification vehicles) or 13, 21, 22, 24, 25, 26, 27, 28, 29, 35, 41, 42, 47 and 78 (USA (except for California) and Canadian specification vehicles) the ECU lights the ”CHECK” engine warning light to warn the technician that malfunction has been detected. In this case, TE2 and E1 terminals on the TDCL should be connected as shown later. (See page TR–12).

In the test mode, even if the malfunction is corrected, the malfunction code is stored in the ECU memory even when the ignition switch is off (except code Nos. 43 and 51). This also applies in the normal mode. The diagnostic mode (normal or test) and the output of the ”CHECK” engine warning light can be selected by connecting the TE1, TE2 and E1 terminals on the check connector or TDCL, as shown later.

A test mode function has been added to the functions of the self–diagnosis system of the normal mode for the purpose of detecting malfunctions such as poor contact, which are difficult to detect in the normal mode. This function fills up the selfdiagnosis system. The test mode can be implemented by the technician following the appropriate procedures of check terminal connection and operation described later. (See page TR–12)

WhereEverybodyKnowsYourName

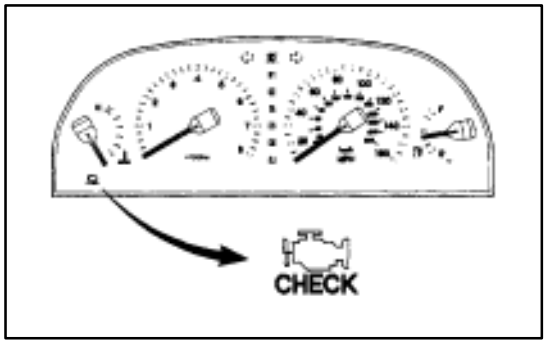

Diagnosis Inspection (Normal Mode) ”CHECK” ENGINE WARNING LIGHT CHECK

1. The ”CHECK” engine warning light will come on when the ignition switch is turned ON and the engine is not running.
   HINT: If the ”CHECK” engine warning light does not light up, proceed to troubleshooting of the combination meter (See page BE–146).
2. When the engine is started, the ”CHECK” engine warning light should go off.
   If the light remains on, the diagnosis system has detected a malfunction or abnormality in the system.

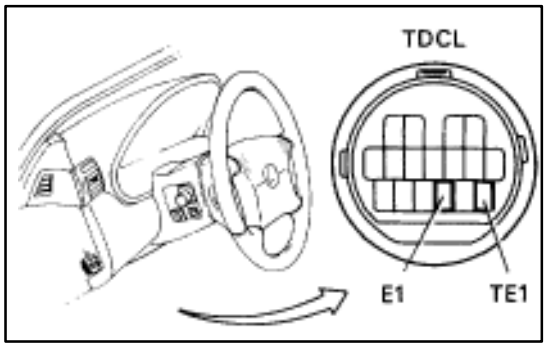

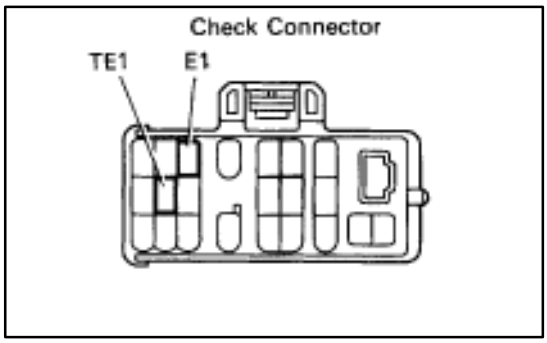

DIAGNOSTIC CODE CHECK

1. Turn ignition switch on.
2. Using SST, connect terminals between TE1 and E1 of TDCL or check connector.
   SST 09843–18020

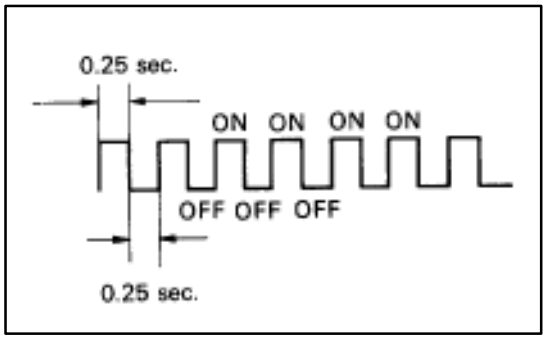

3. Read the diagnostic code from ”CHECK” engine warning light.
   HINT: If a diagnostic code is not output, check the TE1 terminal circuit (See page TR–146).

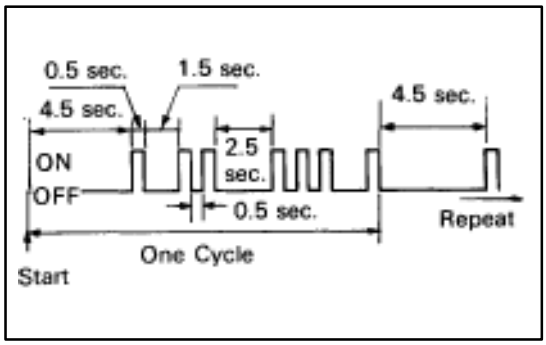

As an example, the blinking patterns for codes;normal, 12 and 31 are as shown on the illustration.

4. Check the details of the malfunction using the diagnostic code table on page TR–14.
5. After completing the check, disconnect terminals TE1 and E1, and turn off the display.
   HINT: In the event of 2 or more malfunction codes, indication will begin from the smaller numbered code and continue in order to the larger.

WhereEverybodyKnowsYourName

Diagnosis Inspection (Test Mode)

Compared to the normal mode, the test mode has high sensing ability to detect malfunctions.
It can also detect malfunctions in the starter signal circuit, the IDL contact signal of the throttle position sensor, air conditioner signal and neutral start switch signal.
Furthermore, the same diagnostic items which are detected in the normal mode can also be detected in the test mode.

DIAGNOSTIC CODE CHECK

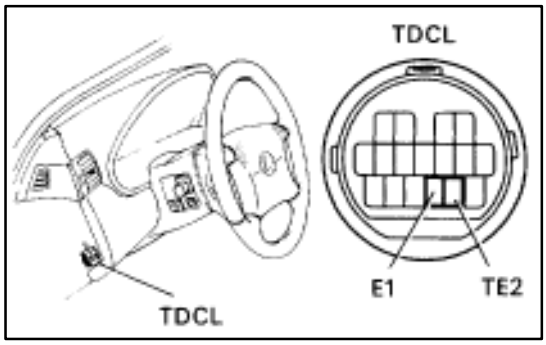

1. Initial conditions.
   (a) Battery voltage 11 V or more.
   (b) Throttle valve fully closed (throttle position sensor IDL points closed).
   (c) Transmission in neutral position.
   (d) Air conditioner switched off.
2. Turn ignition switch off.
3. Using SST, connect terminals TE2 and E1 of TDCL.
   SST 09843–18020

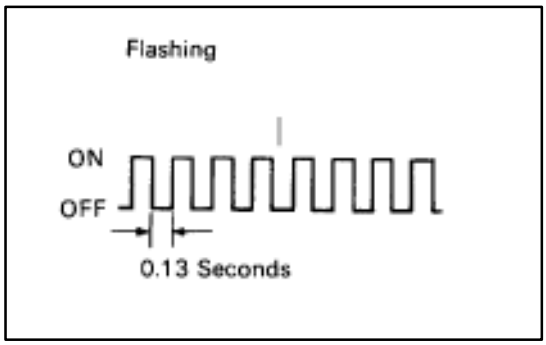

4. Turn ignition switch on.
   HINT:
   - To confirm that the test mode is operating, check that the ”CHECK” engine warning light flashes when the ignition switch is turned to ON.
   - If the ”CHECK” engine warning light does not flash, proceed to troubleshooting of the TE2 terminal circuit on page TR–146.
5. Start the engine.
6. Simulate the conditions of the malfunction described by the customer.

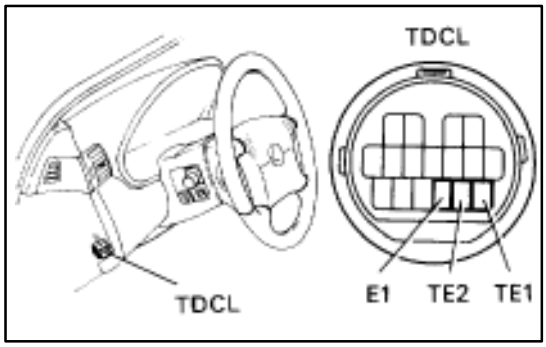

7. After the road test, using SST, connect terminals TE1 and E1 of TDCL or check connector.
   SST 09843–18020
8. Read the diagnostic code on ”CHECK” engine warning light on the combination meter (See page TR–11).
9. After completing the check, disconnect terminals TE1, TE2 and E1, and turn off the display.
   HINT:
   - The test mode will not start if terminals TE2 and E1 are connected after the ignition switch is turned on.
   - When the engine is not cranked, diag. codes ”43” (Starter signal) output, but this is not abnormal.
   - When the automatic transmission shift lever is in the ”D”, ”2”, ”L” or ”R” shift position, or when the air conditioner is on or when the accelerator pedal is depressed, code ”51” (Switch condition signal) is output, but this is not abnormal.

WhereEverybodyKnowsYourName

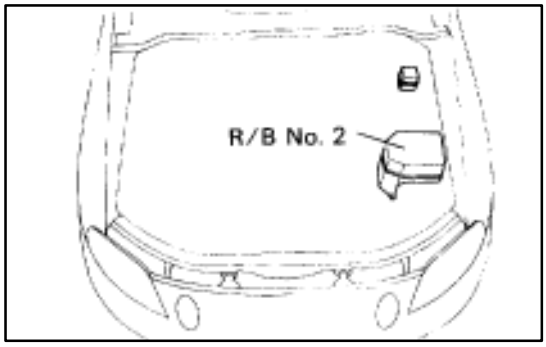

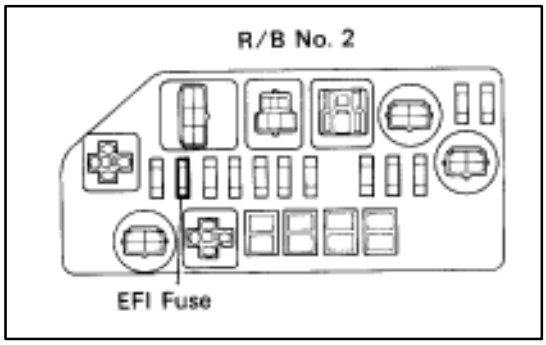

DIAGNOSTIC CODE CLEARANCE

1. After repair of the trouble areas, the diagnostic code retained in the ECU memory must be cleared out by removing the EFI fuse (30A) from R/B No. 2 for 10 seconds or more, with the ignition switch OFF.
   HINT:
   - Cancellation can also be done by removing the battery negative (–) terminal, but in this case, other memory systems (clock, etc.) will also be cancelled out.
   - If it is necessary to work on engine components requiring removal of the battery terminal, a check must first be made to see if a diagnostic code has been recorded.
2. After cancellation, road test the vehicle to check that a normal code is now read on the ”CHECK” engine warning light.
   If the same diagnostic code appears, it indicates that the trouble area has not been repaired thoroughly.

WhereEverybodyKnowsYourName

DIAGNOSTIC CODE CHART

HINT: Parameters listed in the chart may not be exactly same as your reading due to type of the instruments or other factors.

Code No.	Number of Check Engine Blinks	Circuit	Diagnostic Code Detecting Condition
–	BE3931	Normal	No code is recorded.
12	BE3931	RPM Signal	No "NE" or "G1" and "G2" signal to ECU within 2 sec. after cranking.
13	BE3931	RPM Signal	No NE signal to ECU for 0.1 sec. or more at 1,000 rpm or more.
			No 12 pulses of NE to ECU during the interval between G1 and G2 pulses.
			Deviation in G (G1, G2) and NE signal continues for 1 sec. during idling (throttle fully closed) after engine warmed up.
14	BE3931	Ignition No. 1 Signal	No IGF1 signal to ECU for 8-11 consecutive IGT1 signal.
15	BE3931	Ignition No. 2 Signal	No IGF2 signal to ECU for 8-11 consecutive IGT2 signal.
16	BE3931	ECT Control Signal	Fault in communications between the engine CPU and ECT CPU in the ECU.
21	BE3932	Main Oxygen Sensor Signal (on left bank)	(1) Open or short in heater circuit of main oxygen sensor for 0.5 sec. or more.
			(2) Main oxygen sensor signal voltage is reduced to between 0.35 V and 0.70 V for 60 sec. under conditions (a) ~ (d). (2 trip detection logic) *4 (a) Coolant temp. : Between 70°C (158°F) and 95°C (203°F). (b) Engine speed : 1,500 rpm or more. (c) Load driving (EX. ECT in 4th speed, A/C ON, Flat road, 50 mph <80 km/h>) (d) Main oxygen sensor signal voltage : Alternating above and below 0.45 V.

*4: See page TR–21.

WhereEverybodyKnowsYourName

If a malfunction code is displayed during the diagnostic code check in test mode, check the circuit for that code listed in the table below (Proceed to the page given for that circuit).

Trouble Area	"CHECK" Engine Warning Light *▼		Memory*2	See Page
	Normal Mode	Test Mode		
———————	——	——	———	———
• Open or short in engine speed sensor, No. 1, No. 2 cam position sensor circuit. • Engine speed sensor • No. 1, No. 2 cam position sensor • Starter • ECU	ON	N.A.	10	TR–48
• Open or short in engine speed sensor circuit. • Engine speed sensor • ECU	ON	N.A.	10	TR–52
• Open or short in engine speed sensor circuit. • Mechanical system malfunction (skipping teeth of timing • belt, belt stretched) • Engine speed sensor • ECU	N.A.	ON		
• Mechanical system malfunction (skipping teeth of • timing belt, belt stretched) • No. 1, No. 2 cam position sensor • ECU	ON	N.A.		
• Open or short in IGF1 circuit from igniter No. 1–ECU. • Igniter No. 1 • ECU	ON	N.A.	10	TR–54
• Open or short in IGF2 circuit from igniter No. 2–ECU. • Igniter No. 2 • ECU	ON	N.A.	10	TR–54
• ECU	ON	N.A.	X	TR–61
• Open or short in heater circuit of main oxygen sensor. • Main oxygen sensor heater • ECU	ON	N.A.	10	TR–62
• Main oxygen sensor circuit • Main oxygen sensor	ON	ON		

*1, 2: See page TR–20.

WhereEverybodyKnowsYourName

DIAGNOSTIC CODE CHART (Cont'd)

Code No.	Number of Check Engine Blinks	Circuit	Diagnostic Code Detecting Condition
22	BE3932	Water Temp. Sensor Signal	Open or short in water temp. sensor circuit for 0.5 sec. or more.
24	BE3932	Intake Air Temp. Sensor Signal	Open or short in intake air temp. sensor circuit for 0.5 sec. or more.
25 (26)	BE3932	Air-Fuel Ratio Lean (Rich) Malfunction	(1) Main oxygen sensor voltage is 0.45 V or less (lean) for 90 sec. under conditions (a) and (b). (2 trip detection logic)*4 (a) Coolant temp. : 60°C (140°F) or more. (b) Engine speed : 1,500 rpm or more.
			(2)*3 Main oxygen sensor voltage is alternating above and below 0.45 V at 5 times par second or more under conditions (a) and (b). (2 trip detection logic)*4 (a) Engine speed : Idling (b) Coolant temp. : Between 60°C (140°F) and 95°C (203°F).
			(3)*3 Difference of air-fuel ratio feedback compensation value between right and left banks is more than 10 percentage for 30 sec. or more under conditions (a) and (b). (2 trip detection logic)*4 (a) Engine speed : 2,000 rpm or more. (b) Coolant temp. : Between 60°C (140°F) and 95°C (203°F).
27	BE3932	Sub-Oxygen Sensor Signal (on left bank)	(1) Open or short in heater circuit of sub-oxygen sensor for 0.5 sec. or more.
			(2) Main oxygen sensor signal is 0.45 V or more and sub-oxygen sensor signal is 0.45 V or less under conditions (a) and (b). (2 trip detection logic)*4 (a) Coolant temp. : 80°C (176°F) or more. (b) Accel-pedal : Full depressed for 2 sec. or more.
28	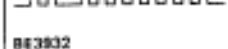 BE3932	Main Oxygen Sensor Signal (on right back)	Same as (1) of Code No. 21
			Same as (2) of Code No. 21
29	BE3932	Sub-Oxygen Sensor Signal (on right bank)	Same as (1) of Code No. 27
			Same as (2) of Code No. 27

* 3, 4: See page TR–20, 21.

WhereEverybodyKnowsYourName

Trouble Area	"CHECK" Engine Warning Light *▼		Memory*2	See Page
	Normal Mode	Test Mode		
• Open or short in water temp. sensor circuit. • Water temp. sensor • ECU	ON	ON	10	TR–68
• Open or short in intake air temp. sensor circuit. • Intake air temp. sensor • ECU	OFF ON*3	ON	10	TR–72
• Open or short in main oxygen sensor circuit. • Main oxygen sensor • Ignition system • Water temp. sensor	ON	ON	10	TR–74
• Open or short in injector circuit. • Fuel line pressure (injector blockage) • Air flow meter (air intake) • Engine ground bolt loose • Foreign object caught in valve				
• Fuel line pressure (injector leak, blockage) • Mechanical system malfunction • (skipping teeth of timing belt) • Ignition system				
• Open or short in heater circuit of sub–oxygen sensor. • Sub–oxygen sensor heater. • ECU	ON	N.A.	10	TR–82
• Open or short in sub–oxygen sensor circuit. • Sub–oxygen sensor • ECU	ON	ON		
• Same as (1) of Code No. 21	ON	N.A.	10	TR–62
• Same as (2) of Code No. 21	ON	ON		
• Same as (1) of Code No. 27	ON	N.A.	10	TR–82
• Same as (2) of Code No. 27	ON	ON		

*1, 2, 3: See page TR–20.

WhereEverybodyKnowsYourName

DIAGNOSTIC CODE CHART (Cont'd)

Code No.	Number of Check Engine Blinks	Circuit	Diagnostic Code Detecting Condition
31	BE3933	Air Flow Meter Signal	All conditions below are detected. (a) No air-flow meter signal to ECU for 2 sec. when engine speed is above 300 rpm. (b) Engine stall.
35	BE3933	HAC Sensor Signal	Open or short in HAC sensor circuit for 0.5 sec. or more.
41	BE3934	Throttle Position Sensor Signal	(1) Open or short in throttle position sensor circuit (VTA1) for 0.5 sec. or more. (2) IDL1 contact is ON and VTA1 output exceeds 1.5 V for 0.5 sec. or more.
42	BE3934	Vehicle Speed Sensor Signal	All conditions below are detected continuously for 8 sec. or more. (a) Vehicle speed signal : 0 mph (b) Engine speed : 1,500 rpm or more (c) Neutral start switch (NSW) : OFF
43	BE3934	Starter Signal	No starter signal to ECU.
47	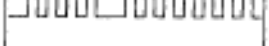 BE3934	Sub-Throttle Position Sensor Signal	(1) Open or short in sub-throttle position sensor circuit (VTA2) for 0.5 sec. or more. (2) IDL2 contact is ON and VTA2 output exceeds 1.5 V for 0.5 sec. or more.
52	BE3935	No. 1 Knock Sensor Signal	No No. 1 knock sensor signal to ECU for 3 crank revolutions with engine speed between 1,600 rpm ~ 5,200 rpm.
53	BE3935	Knock Control Signal	Engine control computer (for knock control) malfunction at engine speed between 650 rpm and 5,200 rpm.
55	BE3935	No. 2 Knock Sensor Signal	No No. 2 knock sensor signal to ECU for 3 crank revolutions with engine speed between 1,600 rpm ~ 5,200 rpm.

WhereEverybodyKnowsYourName

Trouble Area	"CHECK" Engine Warning Light *▼		Memory*2	See Page
	Normal Mode	Test Mode		
• Open or short in air flow meter circuit. • Air flow meter • ECU	ON	N.A.	10	TR–88
• ECU	ON	ON	10	TR–92
• Open or short in throttle position sensor circuit. • Throttle position sensor • ECU	ON	ON	10	TR–94
• No. 1 speed sensor • Combination meter • Open or short in No. 1 speed sensor circuit. • ECU	ON	ON	10	TR–98
• Open or short in starter signal circuit. • Open or short in ignition switch or main relay circuit. • ECU	N.A.	OFF	X	TR–100
• Open or short in sub–throttle position sensor circuit. • Sub–throttle position sensor • ECU	OFF	ON	10	TR–94
• Open or short in No. 1 knock sensor circuit. • No. 1 knock sensor (looseness) • ECU	ON	N.A.	10	TR–102
• ECU	ON	N.A.	X	
• Open or short in No. 2 knock sensor circuit. • No. 2 knock sensor (looseness) • ECU	ON	N.A.	10	

*1, 2: See page TR–20.

WhereEverybodyKnowsYourName

DIAGNOSTIC CODE CHART (Cont'd)

Code No.	Number of Check Engine Blinks	Circuit	Diagnostic Code Detecting Condition
71 *3	BE3937	EGR System Malfunction	(1) Open or short in EGR step motor circuit for 1 sec. or more.
			(2) EGR gas temp. is 65°C (149°F) or below for 1 ~ 4 min. under conditions (a) and (b). (2 trip detection logic)*4 (a) Coolant temp. : 65°C (149°F) or more. (b) EGR operation possible (EX. ECT in 3rd speed, A/C ON, 60 mph <96 km/h>, Flat road).
78	BE3937	Fuel Pump Control Signal	(1) Open or short in fuel pump circuit for 1 sec. or more with engine speed 1,000 rpm or less. (2 trip detection logic)*4
			(2) Open in input circuit of fuel pump ECU (FPC) with engine speed 1,000 rpm or less. (2 trip detection logic)*4
			(3) Open or short in diagnostic signal line (DI) of fuel pump ECU with engine speed 1,000 rpm or less. (2 trip detection logic)*4
51	BE3935	Switch Condition Signal	(1) 3 sec. or more after engine starts, idle switch OFF (IDL1). (2) Neutral start switch OFF (NSW). (Shift position in "R", "D", "2" or "1" ranges). (3) A/C switch ON.

*1: "ON" displayed in the diagnosis mode column indicates that the "CHECK" Engine Warning Light is lighted up when a malfunction is detected. "OFF" indicates that the "CHECK" does not light up during malfunction diagnosis, even if a malfunction is detected. "N.A." indicates that the item is not included in malfunction diagnosis.

*2: "O" in the memory column indicates that a diagnostic code is recorded in the ECU memory when a malfunction occurs. "X" indicates that a diagnostic code is not recorded in the ECU memory even if a malfunction occurs. Accordingly, output of diagnostic results in normal or test mode is performed with the IG switch ON.

*3: Only for USA specification vehicles.

WhereEverybodyKnowsYourName

Trouble Area	"CHECK" Engine Warning Light*▼		Memory*2	See Page
	Normal Mode	Test Mode		
• Open or short in EGR step motor circuit. • ECU	ON	N.A.	10	TR–108
• Open in EGR gas temp. sensor circuit. • ECU	ON	ON		
• Open or short in fuel pump ECU circuit. • Fuel pump ECU • Engine & ECT ECU power source circuit. • Fuel pump • Engine & ECT ECU	ON	ON	10	TR–114
• A/C switch circuit • Throttle position sensor IDL circuit • Neutral start switch circuit. • Accelerator pedal and cable • ECU	N.A.	OFF	X	TR–118

*4: This indicates items for which "2 trip detection logic" is used. With this logic, when a logic malfunction is first detected, the malfunction is temporarily stored in the ECU memory. If the same case is detected again during the second drive test, this second detection causes the "CHECK" Engine Warning Light to light up. The 2 trip repeats the same mode a 2nd time. (However, the IG switch must be turned OFF between the 1st trip and 2nd trip).
In the Test Mode, the "CHECK" Engine Warning Light lights up the 1st trip a malfunction is detected.

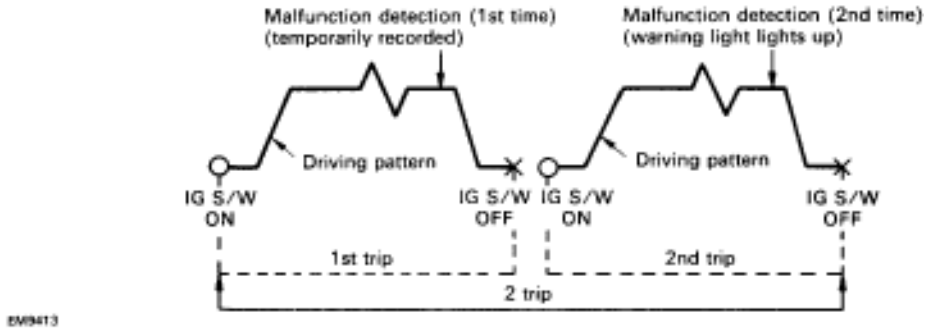

WhereEverybodyKnowsYourName

FAIL–SAFE CHART

If any of the following codes is recorded, the ECU enters fail–safe mode.

Code No.	Fail–Safe Operation	Fail–Safe Deactivation Conditions
14	Fuel cut	1 IGF1 detected in consecutive 8 ignitions.
15	Fuel cut	1 IGF2 detected in consecutive 8 ignitions.
16	Torque control prohibited.	Returned to normal condition.
22	THW is fixed at 80°C (176°F).	Returned to normal condition.
24	THA is fixed at 20°C (68°F).	Returned to normal condition.
31	Ignition timing controlled between 10° ~ 30° BTDC, Injection time controlled between 3 msec. ~ 30 m sec., in relation to: • Engine rpm • Throttle angle • ISC step value	KS input 15 times/sec. or more.
35	Atmospheric pressure is fixed at 760 mmHg.	Returned to normal condition.
41	VTA1 is fixed at 0°	The following 1 or 2 must be repeated at least 2 times consecutively. 1 When IDL is ON 0.25 V ≦ VTA1 ≦ 0.95 V 2 When IDL is OFF 0.25 V ≦ VTA1 ≦ 4.9 V
47	Value of VTA1 is used.	The following 1 or 2 must be repeated at least 2 times consecutively. 1 When IDL2 is ON 0.25 V ≦ VTA2 ≦ 0.95 V 2 When IDL2 is OFF 0.25 V ≦ VTA2 ≦ 4.9 V
52	Max. timeing retardation.	IG switch OFF.
53	Max. timeing retardation.	Returned to normal condition.
55	Max. timeing retardation.	IG switch OFF.

Back–Up Function

If there is trouble with the program in the ECU and the ignition signals (IGT) are not output, the ECU controls fuel injection and ignition timing at predetermined levels as a back–up function to make it possible to continue to operate the vehicle.

Furthermore, the injection duration is calculated from the satrting signal (STA) and the throttle position signal (IDL). Also, the ignition timing is fixed at the initial ignition timing, 5° BTDC, without relation to the engine speed.

HINT: If the engine is controlled by the back–up function, the CHECK ENGINE light lights up to warn the driver of the malfunction but the diagnostic code is not output.

WhereEverybodyKnowsYourName

CHECK FOR MOMENTARY INTERRUPTION

As described in the preceding paragraph, abnormality detection ability in the test mode is increased compared to that in the normal mode, so that when momentary interruptions or momentary shorts occur in the ECU signal circuits (G1, G2, NE, THW, THA, VTA1, VTA2) shown in the table below, the appropriate diagnostic code is output.

Accordingly, when the diagnostic codes shown in the table below (13, 22, 24, 41, 47) are output during the diagnostic code check, and inspection of the appropriate circuits reveals no abnormality, perform the check for momentary interruption as described below. By performing the check for momentary interruption, the place where momentary interruptions or momentary shorts are occurring due to poor contacts can be isolated.

Diag. Code	Circuit
13	RPM signal circuit (No. 2)
22	Water temp. sensor circuit
24	Intake air temp. sensor circuit
41	Throttle position sensor circuit
47	Sub-throttle position sensor circuit

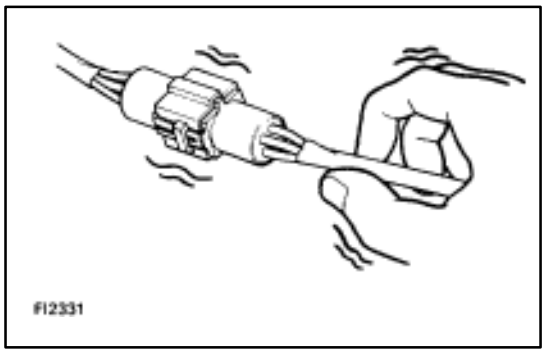

CLEAR DIAGNOSTIC CODES

See page TR–13.

SET TEST MODE

1. With the ignition switch off, using SST, connect the terminals TE2 and E1 of the TDCL.
   SST 09843–18020
2. Start the engine and check to see the ”CHECK” engine warning light to go off.

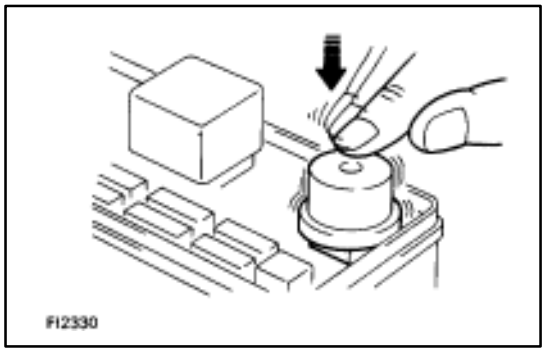

PERFORM A SIMULATION TEST

Using the symptom simulation (See page IN–20), apply vibration to and pull lightly on the wire harness, connector or terminals in the circuit indicated by the malfunction code.

In this test, if the ”CHECK” engine warning light lights up, it indicates that the place where the wire harness, connector or terminals being pulled or vibrated has faulty contact. Check that point for loose connections, dirt on the terminals, poor fit or other problems and repair as necessary.

HINT: After cancelling out the diagnostic code in memory and set the test mode, if the ”CHECK” engine warning light does not go off after the engine is started, check thoroughly for faulty contact, etc., then try the check again. If the ”CHECK” engine warning light still does not go off, check and replace ECU.

WhereEverybodyKnowsYourName

BASIC INSPECTION

When the normal code is displayed in the diagnostic code check, troubleshooting should be performed in the order for all possible circuits to be considered as the causes of the problems.
In many cases, by carrying out the basic engine check shown in the following flow chart, the location causing the problem can be found quickly and efficiently. Therefore, use of this check is essential in engine troubleshooting.

1	**Is battery voltage 11 V or more when engine is stopped?**

YES

NO — **Charge or replace battery.**

2	**Is engine cracnked?**

YES

NO — **Proceed to matrix to matrix chart of problem symptoms on page TR–35.**

3	**Does engine start?**

YES

NO — **Go to step [7]**

4	**Check air filter**

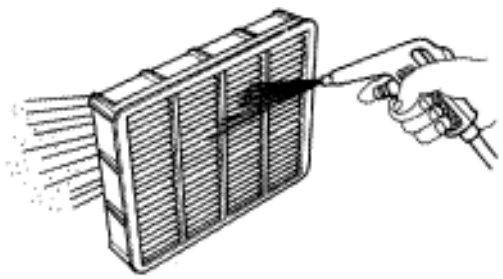

P Remove air filter

C Visially check that the air cleaner element is not excessively damaged or oily.

Hint If necessary, clean element with compressed air. First blow from inside thoroughly, then blow off outside of element.

OK

NG — **Repair or replace**

Go to Step [5].

WhereEverybodyKnowsYourName

5 **Check idle speed.**

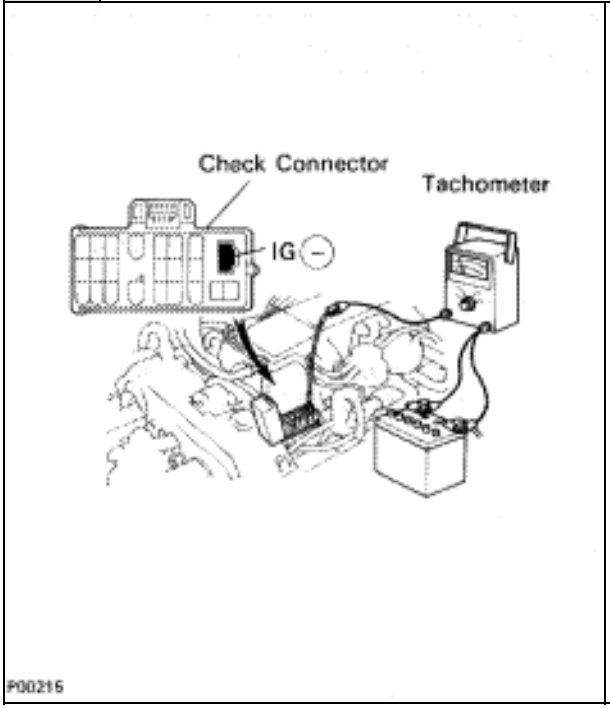

P (1) Warm up engine at normal operating temperature.
(2) Switched off all accessories.
(3) Switched off air conditioner.
(4) Shift transmission into “N” range.
(5) Connect tachometer test probe to terminal IG ± of check connector, and set the tachometer to the 4–cylinder range.

C Check idle speed.

OK **Idle speed: 650 ~ 750 rpm**

Caution:

▼ **NEVER allow tachometer test probe to touch ground as it could result in damage to igniter and/or coil.**

▼ **As some tachometers are not compatible with this ignition system, we recommended that you confirm compatibility of your unit before use.**

OK

NG **Proceed to matrix chart of problem symptoms on page TR–35.**

6 **Check ignition timing.**

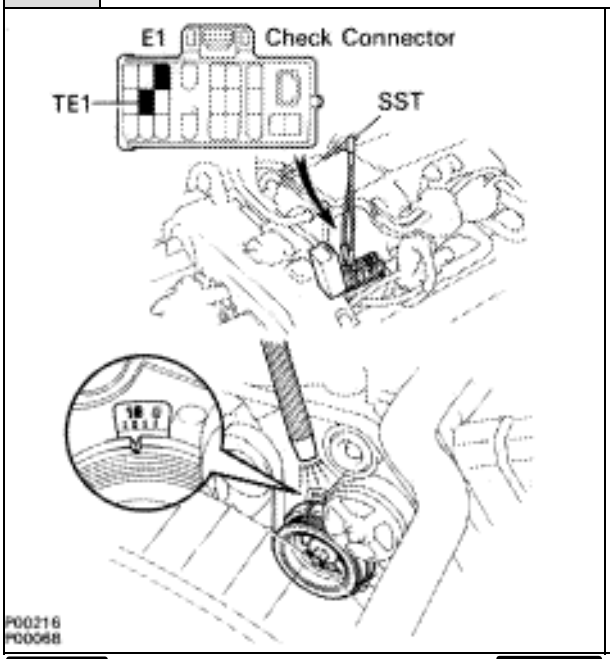

P (1) Warm up engine at normal operating temperture.
(2) Shift transmission into “N” range.
(3) Keep the engine speed at idle.
(4) Using SST, connect terminals TE1 and E1 of check connector.

SST 09843–18020

(5) Using a timing light. connect the tester to No. 6 high–tension cord.

C Check ignition timing.

OK **Ignition Timing: 8–12° BTDC at idle**

OK

NG **Proceed to page IG–28 and continue to troubleshoot.**

Proceed to matix chart of problem symptoms on page TR–35.

WhereEverybodyKnowsYourName

7 **Check fuel pressure.**

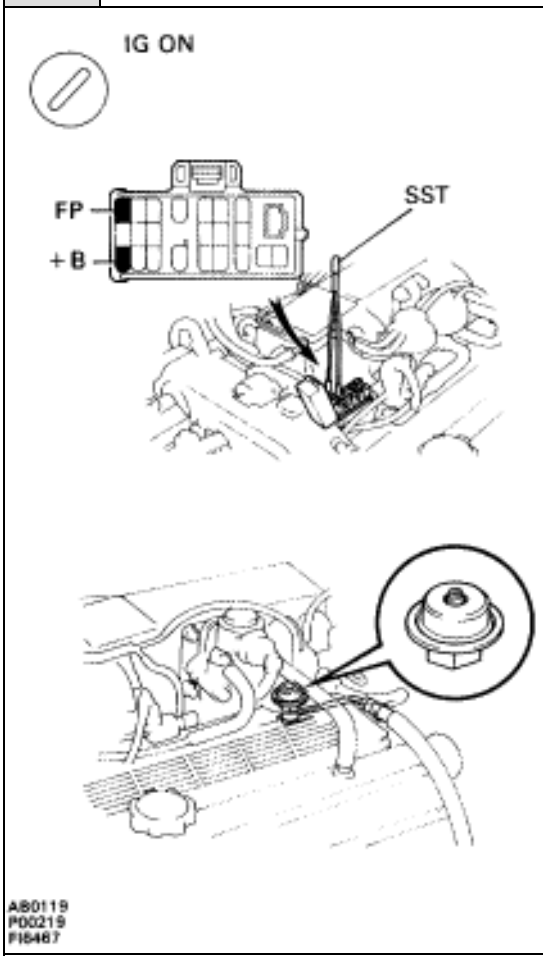

P (1) Be sure that fuel is enough in tank.
(2) Turn ignition switch on.
(3) Using SST, connect terminals FP and + B of check connector.
SST 09843–18020

C Check that pulsation damper screw rises up when terminals are connected.

Caution:

Never make a mistake with the terminal connection position as this will cause a malfunction.

OK

NG **Proceed to page FI–18 and continue to troubleshoot.**

8 **Check for spark.**

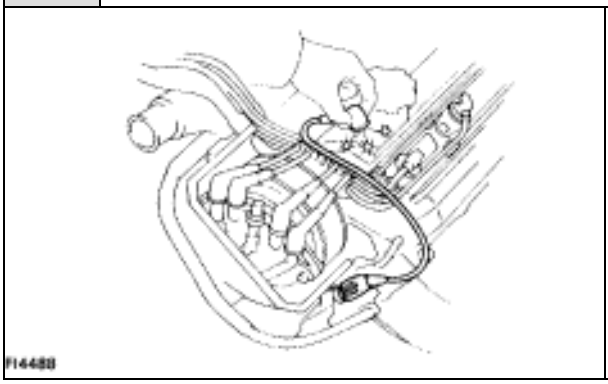

C Disconnect the high–tension cord from the distributor and, hold the end about 12.5 mm (1/2”) from the ground, see if spark occurs while the engine is being cranked.

Hint To prevent excessive fuel injected from the injectors during this test, Don’t crank the engine for more than 1 – 2 seconds at a time.

OK

NG **Proceed to the page IG–6 and continue to troubleshoot.**

Proceed to matix chart of problem systems on page TR–35.

WhereEverybodyKnowsYourName

FAIL–SAFE CHART

If any of the following codes is recorded, the ECU enters fail–safe mode.

Code No.	Fail–Safe Operation	Fail–Safe Deactivation Conditions
14	Fuel cut	1 IGF detected in consecutive 3 ignitions.
16	Torque control prohibited.	Returned to normal condition.
22	THW is fixed at 80°C (176°F).	Returned to normal condition.
24	THA is fixed at 20°C (68°F).	Returned to normal condition.
31	2 Ignition timing fixed at 10° BTDC. 2 Injection time fixed Starting ¿ 9 m sec. IDL ON ¿ 3.6 m sec. IDL OFF ¿ 6.7 m sec.	KS input 15 times/sec. or more.
35	Atmospheric pressure is fixed at 101.3 kPa (760 mmHg, 29.92 in.Hg).	Returned to normal condition.
41	VTA1 is fixed at 0°.	The following must each be repeated at least 2 time consecutively. (w/o TRAC) 2 0.1 V ? VTA ? 0.95 V 2 IDL : ON (w/ TRAC) 2 0.25 V ? VTA ? 0.95 V 2 IDL : ON
52	Max. timing retardation.	IG switch OFF.
53	Max. timing retardation.	Returned to normal condition.
55	Max. timing retardation.	IG switch OFF.

Back–Up Function

If there is trouble with the program in the ECU and the ignition signals (IGT) are not output, the ECU controls fuel injection and ignition timing at predetermined levels as a back–up function to make it possible to continue to operate the vehicle.

Furthermore, the injection duration is calculated from the starting signal (STA) and the throttle position signal (IDL). Also, the ignition timing is fixed at the initial ignition timing, 10° BTDC, without relation to the engine speed.

HINT: If the engine is controlled by the back–up function, the ”CHECK” engine warning light lights up to warn the driver of the malfunction but the diagnostic code is not output.

WhereEverybodyKnowsYourName

PARTS LOCATION

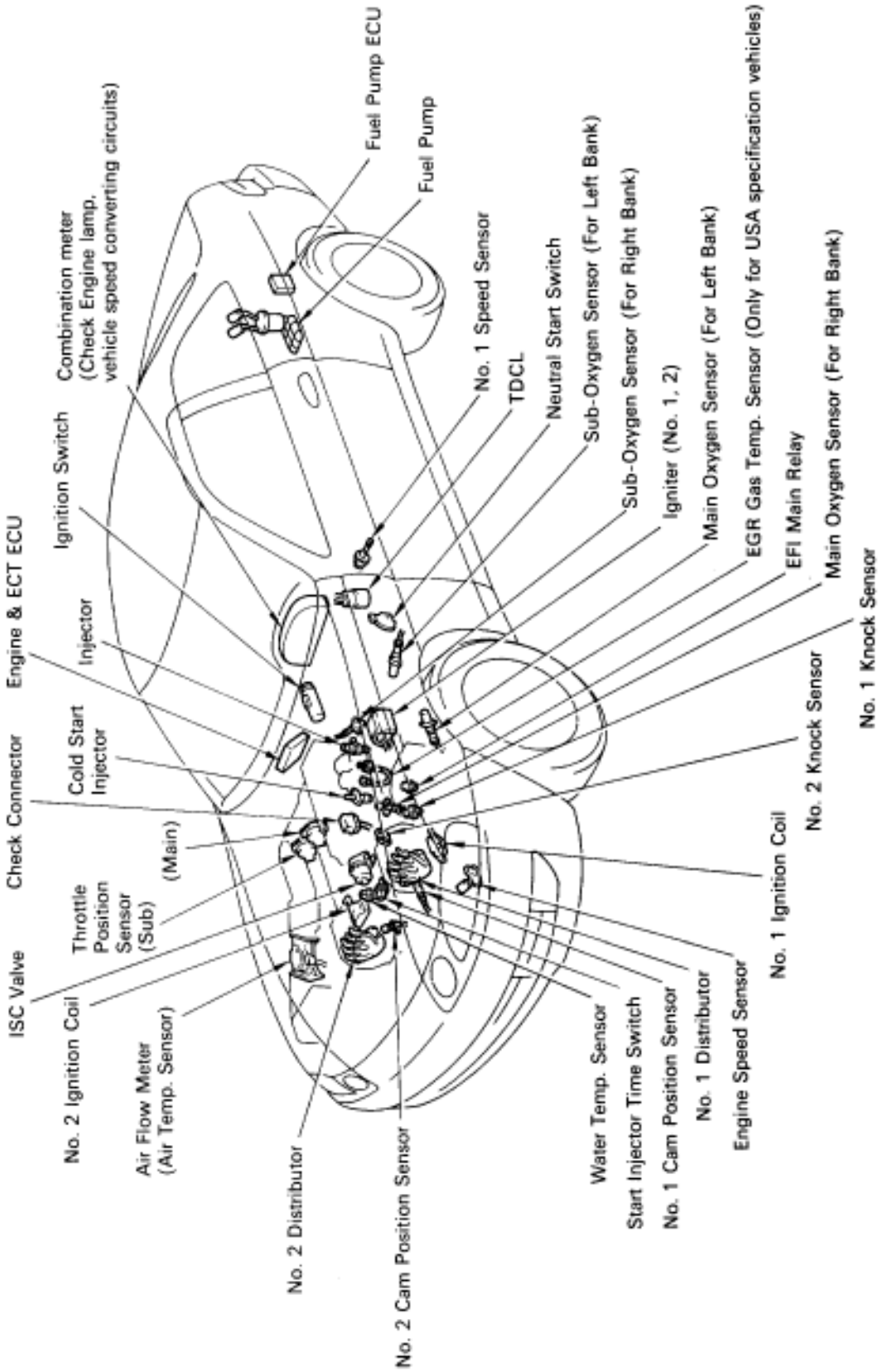

FI6521

WhereEverybodyKnowsYourName

WIRING DIAGRAM

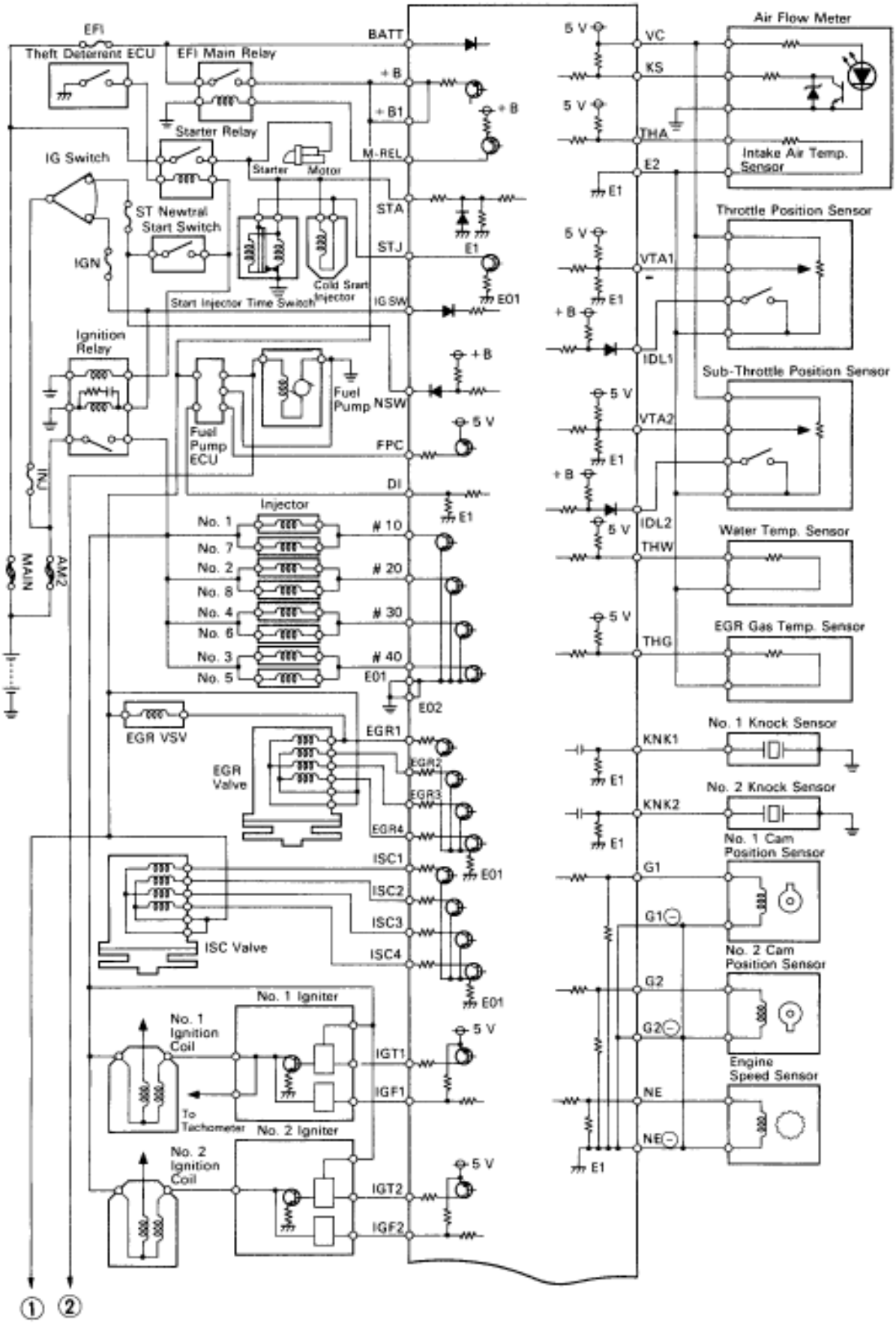

WhereEverybodyKnowsYourName

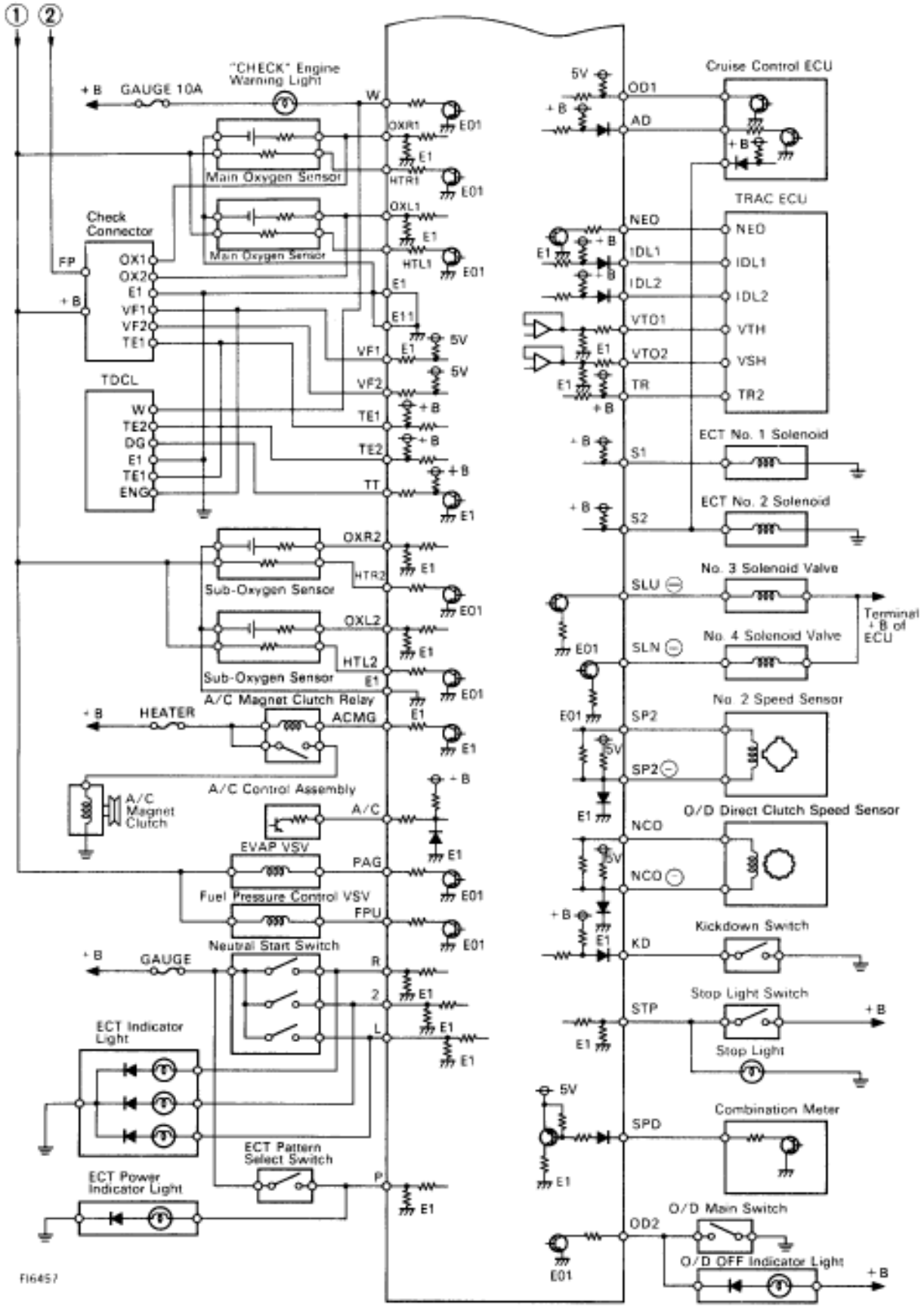

WhereEverybodyKnowsYourName

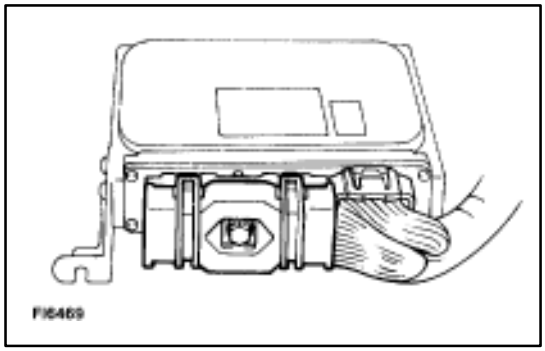

TERMINALS OF ECU

Connectors of the engine & ECT ECU are water–proof and are the bolt type.
For water proof type connectors, in order to measure the voltage of ECU terminals and the resistance of connected parts, connect the inspection sub wire harness between the ECU and vehicle wire harness, then perform the inspection. The inspection method of inserting a tester probe from the other side of connector noticeably reduces the water–proof ability.
Disconnect the connector by fully loosening the bolt.

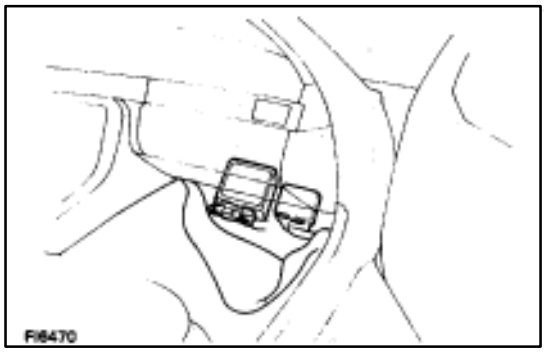

PREPARATION

1. Turn the ignition switch to LOCK position.
2. Turn up the passenger side floor mat.
3. Remove the ECU protector.
4. Disconnect the connector from the ECU.
   After completely loosening the bolt, the two parts of the connector can be separated.
   NOTICE:
   - **Do not pully the wire harness when disconnecting the connector.**
   - **When disconnecting the connector, the ECU's backup power source is cut off, so the malfunction codes, etc. recorded in the ECU memory are cancelled.**
   - **Never insert a tester probe or male terminal used for inspection purposes into the female terminal of the vehicle wire harness. Otherwise, the female terminal may be widened, which can result in faulty connection.**

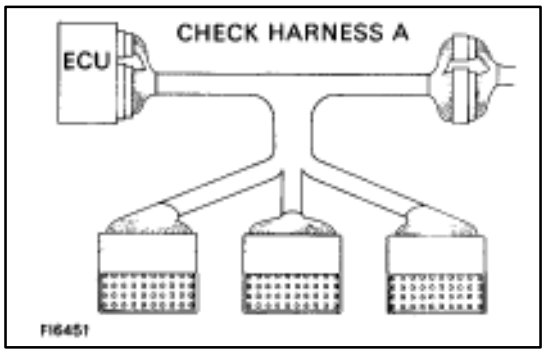

5. Connect the Check Harness A between ECU and connector of vehicle wire harness.
   SST 09990–01000
   HINT: The arrangement of the check connector terminals are the same as those of the ECU.
   See page TR–31
6. Disconnect the Check Harness A.
7. Reconnect the connector to the ECU.
   (a) Match the male connector correctly with the female connector, then press them together.
   (b) Tighten the bolt
   Make sure the connector is completely connected, by tightening the bolt until there is a clearance of less than 1 mm (0.04 in.) between bottom of the male connector and end of the female connector.
8. Install the ECU protector and floor mat.

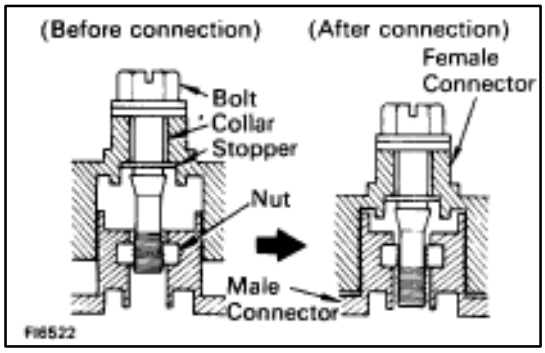

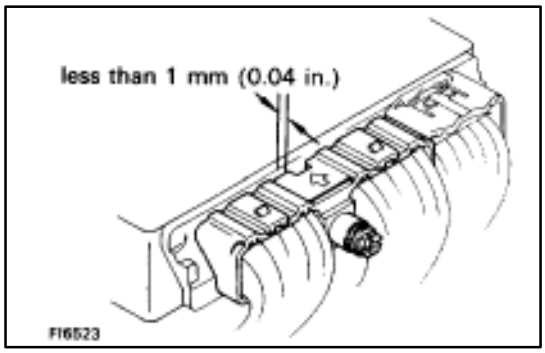

WhereEverybodyKnowsYourName

TERMINALS OF ECU

ECU Terminals

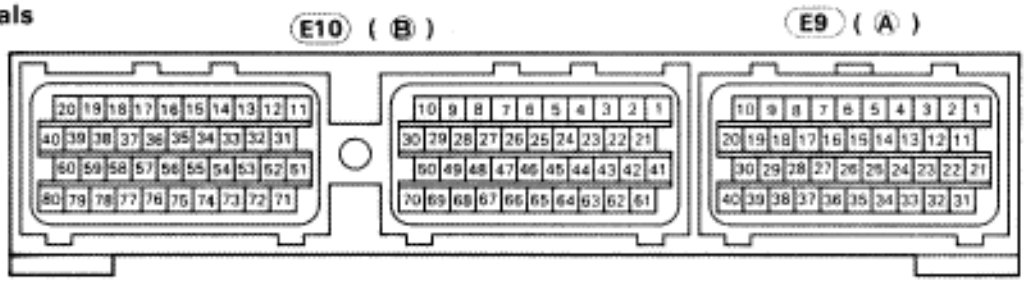

FI8460

Terminal No.	Symbol	Connection	Terminal No.	Symbol	Connection
E9 – 1	IGSW	Ignition switch	E9 – 31	+B	EFI main relay
2	SPD	Speed sensor No. 1	32	+B1	EFI main relay
3	KD	Kick-down switch	33	BATT	Battery
4	STP	Stop light switch	34	A/C	A/C control assembly
5	—	—	35	—	—
6	W	"CHECK" engine warning light	36	—	—
7	R	Neutral start switch	37	TR	TRAC ECU
8	—	—	38	NEO	TRAC ECU
9	2	Neutral start switch	39	VTO2	TRAC ECU
10	L	Neutral start switch	40	VTO1	TRAC ECU
11	AD	Cruise control ECU	E10 – 1	NCO⊖	T/M input speed sensor
12	OD1	Cruise control ECU	2	—	—
13	—	—	3	SP2⊖	Speed sensor No. 2 (for ECT)
14	—	—	4	E11	ECU ground
15	—	—	5	G2⊖	Cam position sensor
16	—	—	6	G1⊖	Cam position sensor
17	TT	TDCL	7	NE⊖	Engine speed sensor
18	P	ECT pattern select switch	8	—	—
19	TE2	Check connector	9	S2	ECT solenoid
20	TE1	Check connector	10	S1	ECT solenoid
21	DI	Fuel pump ECU	11	—	—
22	FPC	Fuel pump ECU	12	—	—
23	ACMG	A/C magnet clutch relay	13	SLN⊖	ECT solenoid No. 4
24	M-REL	EFI main relay	14	SLU⊖	ECT solenoid No. 3
25	—	—	15	—	—
26	—	—	16	—	—
27	—	—	17	# 40	Injectors (No. 3 and No. 5)
28	OD2	O/D main switch	18	# 30	Injectors (No. 4 and No. 6)
29	—	—	19	# 20	Injectors (No. 2 and No. 8)
30	—	—	20	# 10	Injectors (No. 1 and No. 7)

WhereEverybodyKnowsYourName

TERMINALS OF ECU (Cont'd)

ECU Terminals

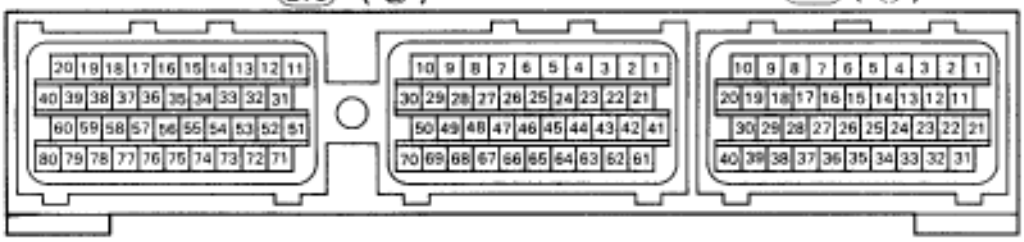

Terminal No.	Symbol	Connection	Terminal No.	Symbol	Connection
E10 – 21	NCO	T/M input speed sensor	E10 – 51	—	———
22	—	———	52	HTL2	Sub-oxygen sensor heater (on left bank)
23	SP2	Speed sensor No. 2 (for ECT)	53	HTR2	Sub-oxygen sensor heater (on right bank)
24	—	———	54	—	———
25	G2	No. 2 cam position sensor	55	—	———
26	G1	No. 1 cam position sensor	56	IGT2	No. 2 igniter
27	NE	Engine speed sensor	57	IGT1	No. 1 igniter
28	VF2	Check connector	58	IGF1	No. 1 igniter
29	VF1	Check connector	59	IGF2	No. 2 igniter
30	—	———	60	—	———
31	—	———	61	—	———
32	ISC4	ISC valve	62	—	———
33	ISC3	ISC valve	63	IDL2	Sub-throttle position sensor
34	ISC2	ISC valve	64	IDL1	Throttle position sensor
35	ISC1	ISC valve	65	E2	Sensor ground
36	EGR4*	EGR valve	66	KS	Air flow meter
37	EGR3*	EGR valve	67	OXR2	Sub-oxygen sensor (on right bank)
38	EGR2*	EGR valve	68	OXL2	Sub-oxygen sensor (on left bank)
39	EGR1	EGR valve (or VSV)	69	E1	ECU ground
40	—	———	70	—	———
41	VC	Throttle position sensor. Air flow meter.	71	HTL1	Main oxygen sensor heater (on left bank)
42	VTA2	Sub-throttle position sensor	72	HTR1	Main oxygen sensor heater (on right bank)
43	VTA1	Throttle position sensor	73	FPU	Fuel pressure up VSV
44	THW	Water temp. sensor	74	PAG	EVAP purge VSV
45	THA	Intake air temp. sensor	75	—	———
46	THG*	EGR gas temp. sensor	76	NSW	Neutral start switch
47	OXR1	Main oxygen sensor (on right bank)	77	STA	Starter relay
48	OXL1	Main oxygen sensor (on left bank)	78	STJ	Cold start injector
49	KNK2	No. 2 knock sensor	79	EO2	Power ground
50	KNK1	No. 1 knock sensor	80	EO1	Power ground

WhereEverybodyKnowsYourName

PARTS LOCATION

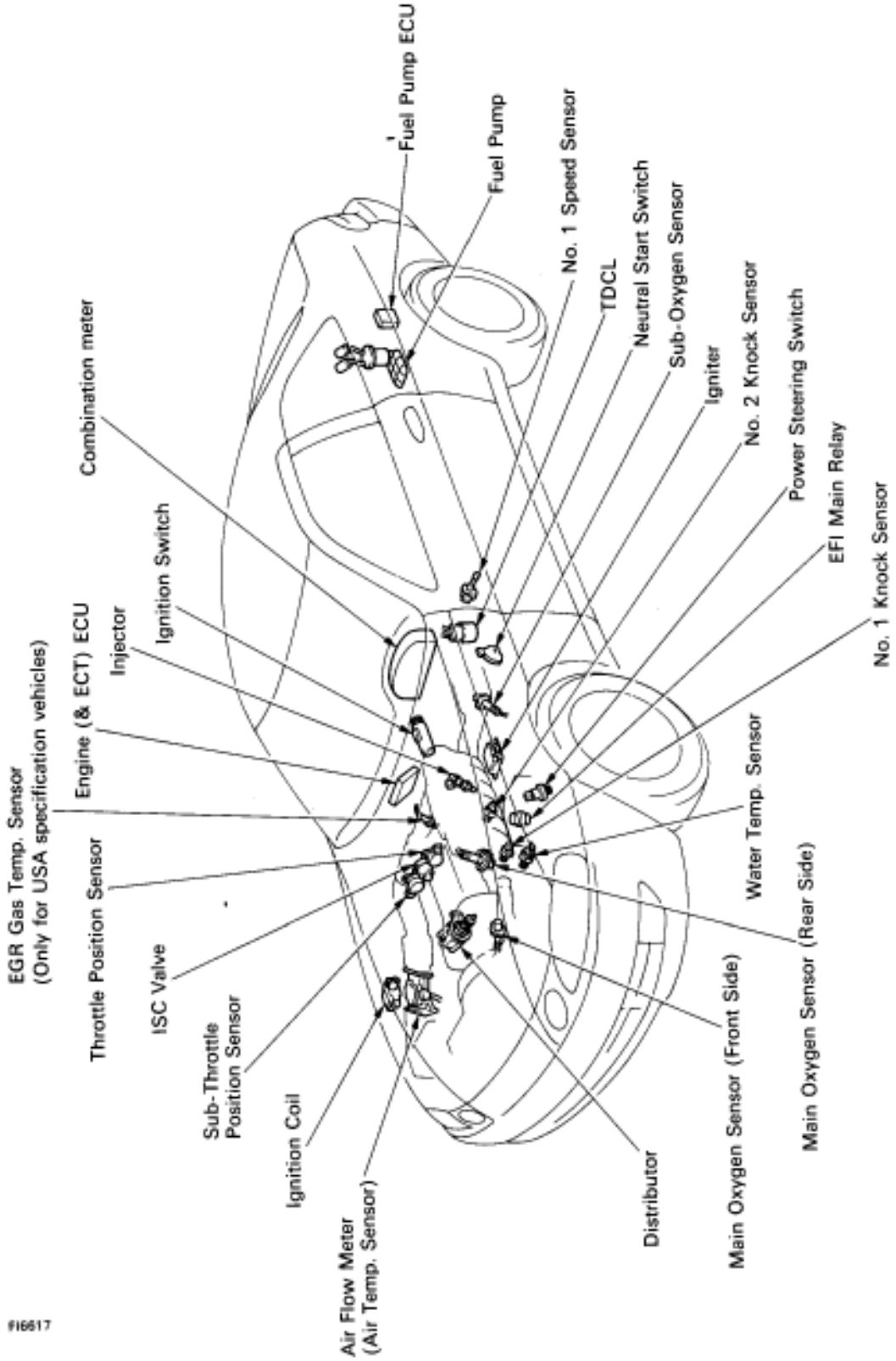

WhereEverybodyKnowsYourName

WIRING DIAGRAM

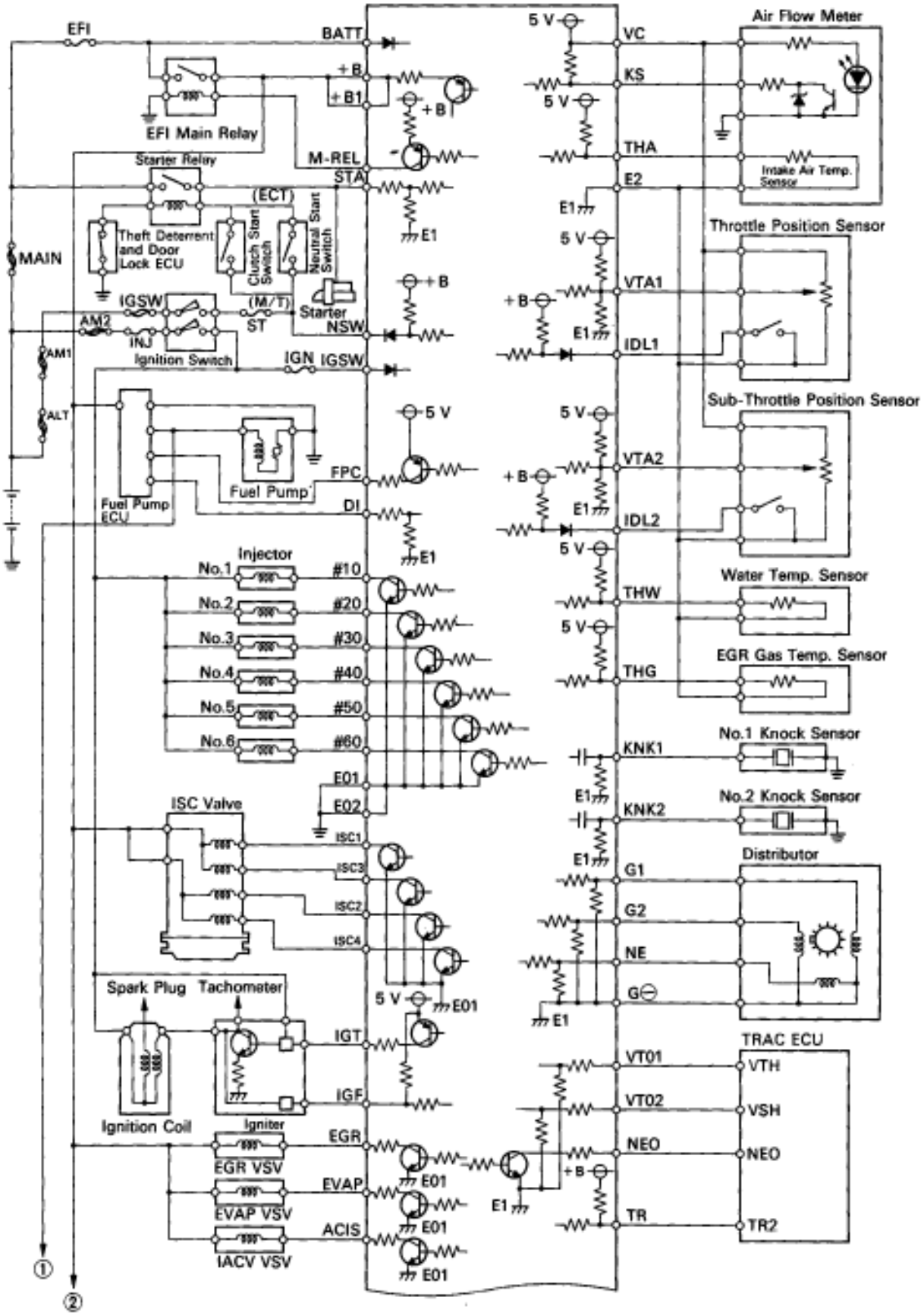

WhereEverybodyKnowsYourName

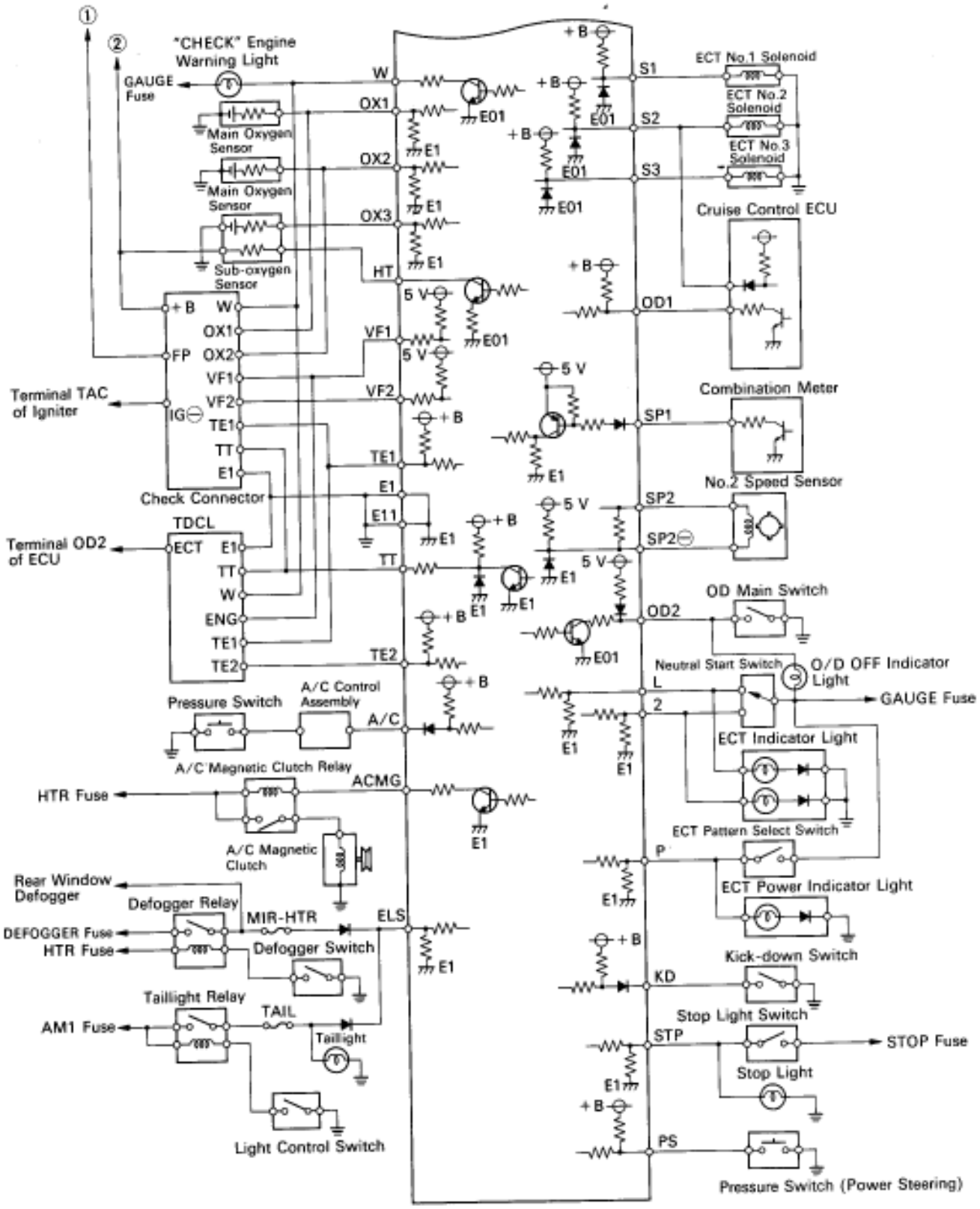

FI8641

WhereEverybodyKnowsYourName

STANDARD VALUE OF ECU TERMINALS

(※ : A=(E9), B=(E10))

※ Symbols (Terminals No.)	STD Voltage (V)	Condition
BATT (A33) – E1 (B69)	10 ~ 14	Always
IGSW (A1) + B (A31) + B1 (A32) – E1 (B69)	10 ~ 14	IG switch ON
VC (B41)–E2 (B65)	4.0 ~ 6.0	IG switch ON
IDL1 (B64) IDL2 (B63) – E2 (B65)	Below 1.0	IG switch ON Main or sub throttle valve fully closed.
	10 ~ 14	IG switch ON Main or sub throttle valve fully open.
VTA1 (B43) VTA2 (B42) – E2 (B65)	0.1 ~ 1.0	IG switch ON Throttle valve fully closed.
	3.0 ~ 6.0	IG switch ON Throttle valve fully open.
KS (B66) – E1 (B69)	Pulse generation (0 and 4 ~ 6)	Idling
THA (B45) – E2 (B65)	1.0 ~ 3.0	Idling, Intake air temp. 20°C (68°F).
THW (B44) – E2 (B65)	0.1 ~ 1.0	Idling, Water temp. 80°C (176°F).
STA (B77) – E1 (B69)	6.0 or more	Cranking
#10 (B20), #20 (B19) #30 (B18), #40 (B17) – E01 (B80)	10 ~ 14	IG switch ON
	Pulse generation	Idling
IGT1 (B57), IGT2 (B56) – E1 (B69)	Pulse generation (0 and 4 ~ 6)	Idling
IGF1 (B58), IGF2 (B59) – E1 (B69)	Below 1.0	IG switch ON
	Pulse generation (0 and 4 ~ 6)	Idling
G1 (B26), G2 (B25) – G1± (B6)	Pulse generation (–1.0 ~ +1.0 or higher)	Idling
NE (B27) – NE± (B7)	Pulse generation (–0.8 ~ +0.8 or higher)	Idling
MREL (A24) – E1 (B69)	10 ~ 14	IG switch ON
FPC (A22) – E1 (B69)	4.2 ~ 6.0	Cranking, Sudden racing (6,000 rpm)
	Pulse generation (0 and 4 ~ 6)	Idling
DI (A21) – E1 (B69)	7.5 or more	Idling
FPU (B73) – E1 (B69)	10 ~ 14	IG switch ON
	Below 2.0	Restarting high temp.
PAG (B74) – E1 (B69)	10 ~ 14	Idling

WhereEverybodyKnowsYourName

STANDARD VALUE OF ECU TERMINALS (Cont'd)

(※: A=(E9), B=(E10))

※ Symbols (Terminals No.)	STD Voltage (V)	Condition
ISC1 (B35), ISC2 (B34) ISC3 (B33), ISC4 (B32) –E1 (B69)	10 ~ 14	IG switch ON
VF1 (B29), VF2 (B28) – E1 (B69)	1.0 ~ 4.0	Maintain engine speed at 2,500 rpm for two minutes after warming up then return to idling.
OXL1 (B48), OXR1 (B47) – E1 (B69)	Pulse generation (0 ~ 1.0)	Maintain engine speed at 2,500 rpm for two minutes after warming up.
HTL1 (B71), HTR1 (B72) HTL2 (B52), HTR2 (B53) – E01 (B80)	Below 2.0	Idling
	10 ~ 14	IG switch ON
EGR1 (B39), EGR2 (B38) EGR3 (B37), EGR4 (B36) – E1 (B69)*	10 ~ 14	IG switch ON
EGR (B39) – E1 (B69)	10 ~ 14	IG switch ON
KNK1 (B50), KNK2 (B49) – E1 (B69)	Pulse generation (Frequency : 6.6 KHz)	Idling
NSW (B76) – E1 (B69)	10 ~ 14	IG switch ON Other shift position in "P", "N" ranges.
	Below 1.0	IG switch ON Shift position in "P", "N" ranges.
SPD (A2)–E1 (B69)	Pulse generation (0 and 10 ~ 14)	IG switch ON Rotate driving wheel slowly.
TE1 (A20) – E1 (B69)	10 ~ 14	IG switch ON
TE2 (A19) – E1 (B69)	10 ~ 14	IG switch ON
W (A6)–E1 (B69)	10 ~ 14	Idling
	Below 2.0	IG switch ON
AD (A11) – E1 (B69)	10 ~ 14	Idling
ODI (A12) – E1 (B69)	4.0 ~ 6.0	IG switch ON
A/C (A34) – E1 (B69)	Bellow 2.0	A/C switch ON (At idling)
	10 ~ 14	A/C switch OFF
ACMG (A23)–E1 (B69)	Below 2.0	A/C switch ON (At idling)
	10 ~ 14	A/C switch OFF
TR (A37) – E1 (B69)	10 ~ 14	IG switch ON
VTO1 (A40) VTO2 (A39) – E2 (B65)	Below 1.0	IG switch ON Main or sub throttle valve fully closed.
	3.0 ~ 5.5	IG switch ON Main or sub throttle valve fully open.
NEO (A38) – E1 (B69)	4.0 ~ 6.0	IG switch ON

* Only for USA specification vehicles.

WhereEverybodyKnowsYourName

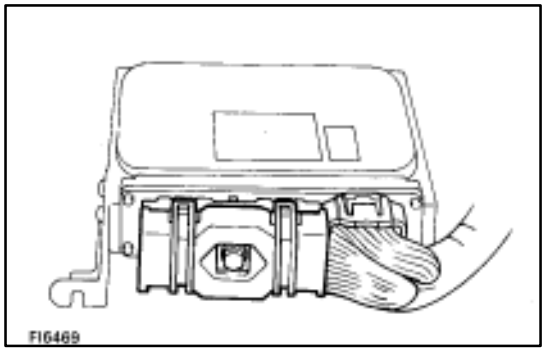

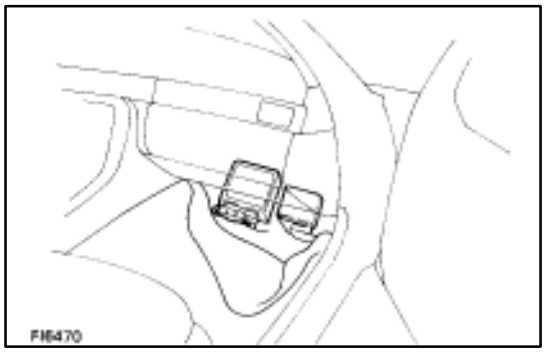

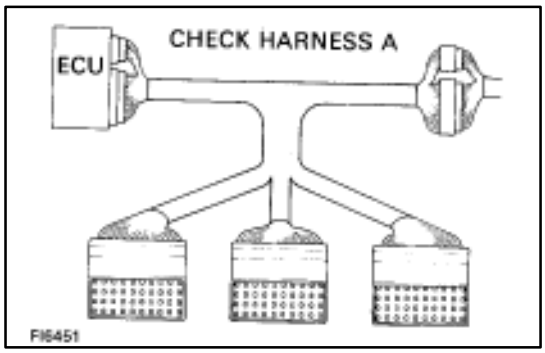

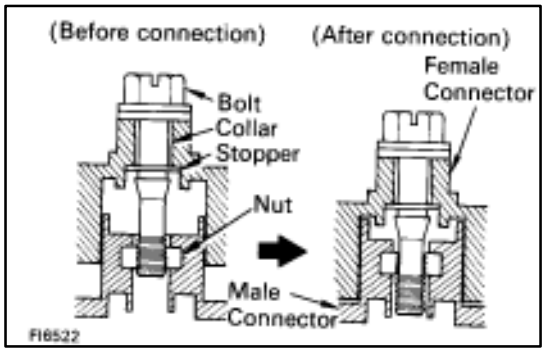

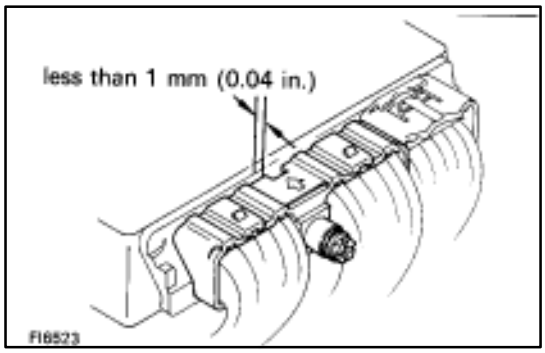

TERMINALS OF ECU

Connectors of the engine (& ECT) ECU are water–proof and are the bolt type.

For water proof type connectors, in order to measure the voltage of ECU terminals and the resistance of connected parts, connect the inspection sub wire harness between the ECU and vehicle wire harness, then perform the inspection.

The inspection method of inserting a tester probe from the other side of connector noticeably reduces the water–proof ability.

Disconnect the connector by fully loosening the bolt.

PREPARATION

1. Turn the ignition switch to LOCK position.
2. Turn up the passenger side floor mat.
3. Remove the ECU protector.
4. Disconnect the connector from the ECU.
   After completely loosening the bolt, the two parts of the connector can be separated.
   NOTICE:
   - **Do not pully the wire harness when disconnecting the connector.**
   - **When disconnecting the connector, the ECU's backup power source is cut off, so the malfunction codes, etc. recorded in the ECU memory are cancelled.**
   - **Never insert a tester probe or male terminal used for inspection purposes into the female terminal of the vehicle wire harness. Otherwise, the female terminal may be widened, which can result in faulty connection.**
5. **Connect the Check Harness A between ECU and connector of vehicle wire harness.**
   SST 09990–01000
   HINT: The arrangement of the check connector terminals are the same as those of the ECU.
   See page TR–35
6. Disconnect the Check Harness A.
7. Reconnect the connector to the ECU.
   (a) Match the male connector correctly with the female connector, then press them together.
   (b) Tighten the bolt
   Make sure the connector is completely connected, by tightening the bolt until there is a clearance of less than 1 mm (0.04 in.) between bottom of the male connector and end of the female connector.
8. Install the ECU protector and floor mat.

WhereEverybodyKnowsYourName

TERMINALS OF ECU

ECU Terminals

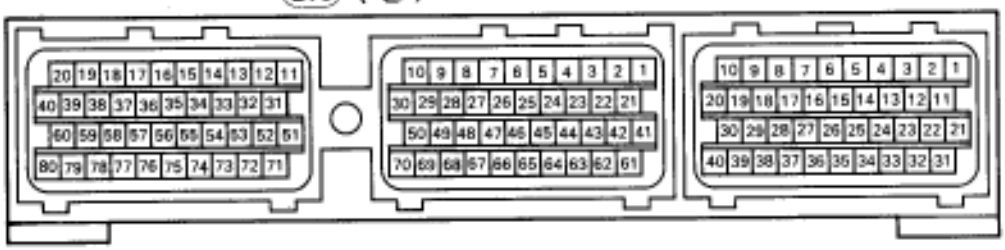

FI6460

Terminal No.	Symbol	Connection	Terminal No.	Symbol	Connection
E9 – 1	IGSW	Ignition switch	E9 – 31	+B	EFI main relay
2	SP1	Speed sensor No. 1	32	+B1	EFI main relay
3	KD*1	Kick-down switch	33	BATT	Battery
4	STP	Stop light switch	34	A/C	A/C control assembly
5	—	———	35	PS*1	PS pressure switch
6	W	"CHECK" engine warning light	36	—	———
7	—	———	37	TR	TRAC ECU
8	—	———	38	NEO	TRAC ECU
9	2*1	Neutral start switch	39	VTO2	TRAC ECU
10	L*1	Neutral start switch	40	VTO1	TRAC ECU
11	—	———	E10 – 1	—	———
12	OD1*1	Cruise control ECU	2	—	———
13	—	———	3	SP2⊖*1	No. 2 speed sensor
14	—	———	4	E11	ECU ground
15	ELS	Defogger relay, Taillight relay	5	—	———
16	—	———	6	—	———
17	TT*1	TDCL	7	G⊖	Distributor
18	P*1	ECT pattern select switch	8	S3*1	ECT No. 3 solenoid
19	TE2	Check connector	9	S2*1	ECT No. 2 solenoid
20	TE1	Check connector	10	S1*1	ECT No. 1 solenoid
21	DI	Fuel pump ECU	11	—	———
22	FPC	Fuel pump ECU	12	—	———
23	ACMG	A/C magnet clutch relay	13	—	———
24	M-REL	EFI main relay	14	—	———
25	—	———	15	# 60	No. 6 injector
26	—	———	16	# 50	No. 5 injector
27	—	———	17	# 40	No. 4 injector
28	OD2*1	O/D main switch	18	# 30	No. 3 injector
29	—	———	19	# 20	No. 2 injector
30	—	———	20	# 10	No. 1 injector

*1: Only vehicles with ECT.

WhereEverybodyKnowsYourName

TERMINALS OF ECU (Cont'd)

ECU Terminals

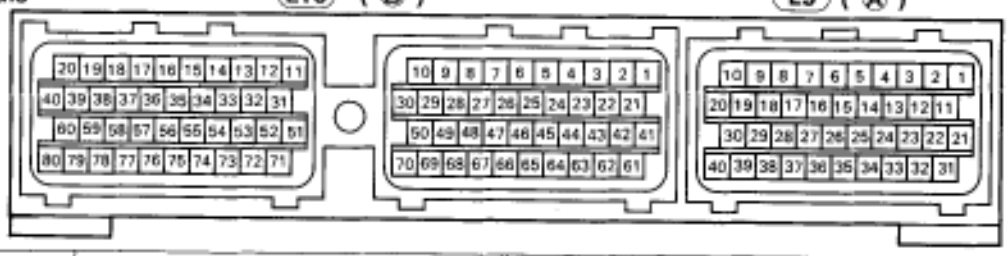

Terminal No.	Symbol	Connection	Terminal No.	Symbol	Connection
E10 – 21	—	———	E10 – 51	—	———
22	—	———	52	—	———
23	SP2*1	No. 2 speed sensor	53	—	———
24	—	———	54	—	———
25	G2	Distributor	55	—	———
26	G1	Distributor	56	—	———
27	NE	Distributor	57	IGT	igniter
28	VF2	Check connector	58	IGF	igniter
29	VF1	Check connector	59	—	———
30	—	———	60	—	———
31	—	———	61	OX3*2	Sub-oxygen sensor
32	ISC4	ISC valve	62	—	———
33	ISC3	ISC valve	63	IDL2	Sub-throttle position sensor
34	ISC2	ISC valve	64	IDL1	Throttle position sensor
35	ISC1	ISC valve	65	E2	Sensor ground
36	—	———	66	KS	Air flow meter
37	—	———	67	—	———
38	—	———	68	—	———
39	ACIS	VSV (intake air control valve)	69	E1	ECU ground
40	—	———	70	—	———
41	VC	Throttle position sensor, Air flow meter.	71	HT*2	Sub-oxygen sensor heater
42	VTA2	Sub-throttle position sensor	72	—	———
43	VTA1	Throttle position sensor	73	—	———
44	THW	Water temp. sensor	74	EVAP	EVAP purge VSV
45	THA	Intake air temp. sensor	75	EGR	EGR VSV
46	THG*2	EGR gas temp. sensor	76	NSW	Neutral start switch
47	OX2	Main oxygen sensor (rear side)	77	STA	Starter relay
48	OX1	Main oxygen sensor (front side)	78	—	———
49	KNK2	No. 2 knock sensor (rear side)	79	EO2	Power ground
50	KNK1	No. 1 knock sensor (front side)	80	EO1	Power ground

*1: Only vehicles with ECT.
*2: Only for USA specification vehicles.

WhereEverybodyKnowsYourName

MATRIX CHART OF PROBLEM SYMPTOMS

When the malfunction code is not confirmed in the diagnostic code check and the problem still can not be confirmed in the basic inspection, then proceed to this step and perform troubleshooting according to the numbered order given in the table below.

The circuits indicated by on the matrix chart can be inspected using the TCCS checker.

	See page	TR–88	TR–10	TR–108	TR–11	TR–12	TR–12	TR–13	TR–13	TR–13	TR–14	TR–11	TR–14	AC–84	ST–24	IG–6	IG–7	IG–9	IG–24	EM–30	AT–66	BE–381	IN–32
	Suspect area	※	※			※			※		※												
	Symptom	Air flow meter circuit	Starter signal circuit	EGR System	Switch condition signal circuit	Neutral start switch circuit	ECU power source circuit	Back up power source circuit	Injector circuit	Cold start injector circuit	ISC valve circuit	Fuel pump control circuit	Fuel pressure control VSV circuit	A/C signal circuit (Compressor circuit)	Starter and Starter relay	Ignition signal circuit (Spark test)	Spark plug	Ignition coil	Distributor	Compression	ECT faulty	Theft deterrent ECU	Engine & ECT ECU
Does not start	Engine does not crank					2									1							3	
	No initial combustion						1		5	6		3				2	4						
	No complete combustion								6	7		1				5	4	2	3				
Difficult to start	Difficult to start normally		1						8	9	2	3					6	4	5	7			
	Difficult to start cold		1						5	3	2	4					8	6	7				
	Difficult to start hot		1						5	6	2	4	3				9	7	8				
Poor Idling	Incorrect first idle				1						2												
	High engine idle speed				1	5	4	6			2			3									
	Low engine idle speed	7			3	4		8	6		1	5		2									
	Rough idling	3		5	1			12	4	13	2	8				6	11	9	10	7			
	Hunting	3			1		4				2	5											
Poor Driveability	Hesitation/Poor acceleration	2			1				3			4				5	8	6	7		9		
	Muffler explosion (after fire)				1				5								4	2	3				
	Surging				1				5			2					4		3				
Engine Stall	Engine stalls soon after starting	2								4	3	1											
	After acceleration pedal depressed	2			1					3													
	After acceleration pedal released								1	3	2												4
	During A/C operation										1			2									3
	When N to D shift					1				3	2												

WhereEverybodyKnowsYourName

LOCATION OF CONNECTORS

Location of Connectors in Engine Compartment

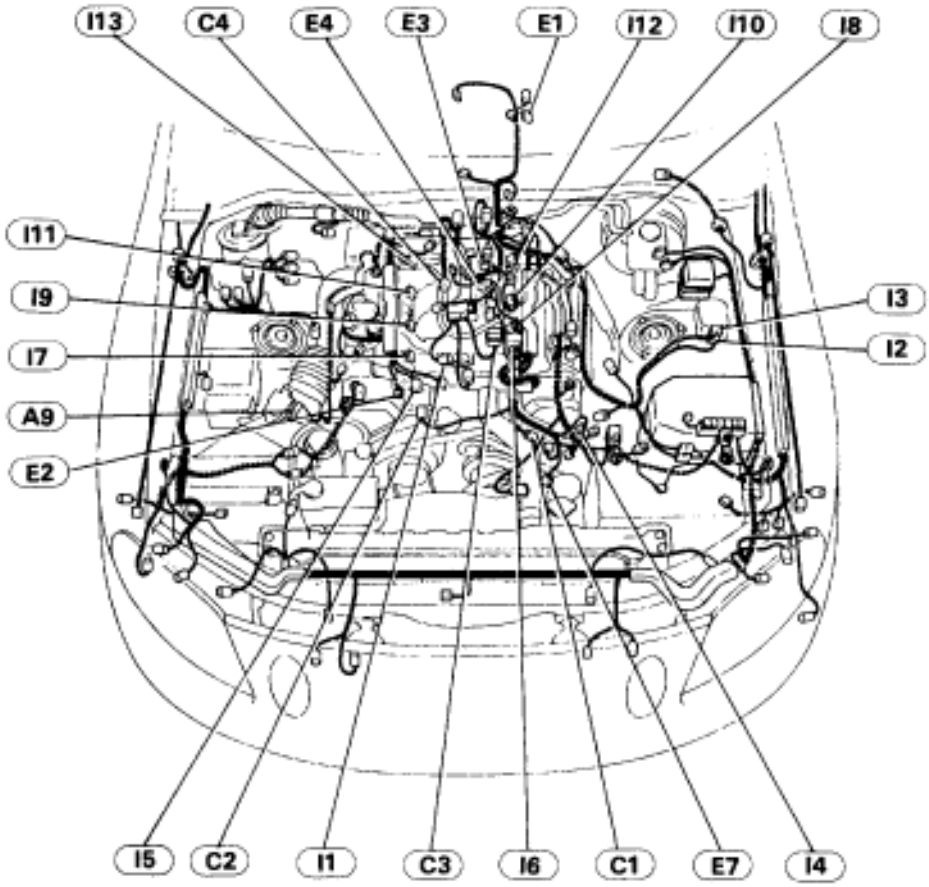

A9
Intake Air Temp. Sensor

IS-5-1

C1
No. 1 Cam Position sensor

Ie-2-1-D

C2
No. 2 Cam Position Sensor

Ie-2-1-E

C3
Check Connector

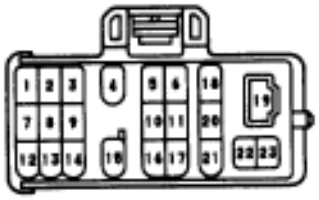

Iej-23-1

C4
Cold Start Injector

IS-2-1-I

E1
ECT No. 1, 2, 3, 4 Solenoid Valve

Ie-6-1

WhereEverybodyKnowsYourName

E2
Water Temp. Sensor

V-2-1-C

E3
EGR Gas Temp. Sensor

Ie-2-1-C

E4
EGR Valve

Ie-6-1-D

E7
Engine Speed Sensor

Ie-2-1-b

I1
ISC Valve

Ie-6-1-D

I2
No. 1 Igniter

Ie-5-1-B

I3
No. 2 Igniter

Ie-5-1-B

I4
No. 1 Ignition Coil

IS-2-1-L

I5
No. 2 Ignition Coil

IS-2-1-L

I6 I7 I8 I9
I10 I11 I12 I13
Injector

Ie-2-1-a

WhereEverybodyKnowsYourName

Location of Connectors in Engine Compartment (Cont'd)

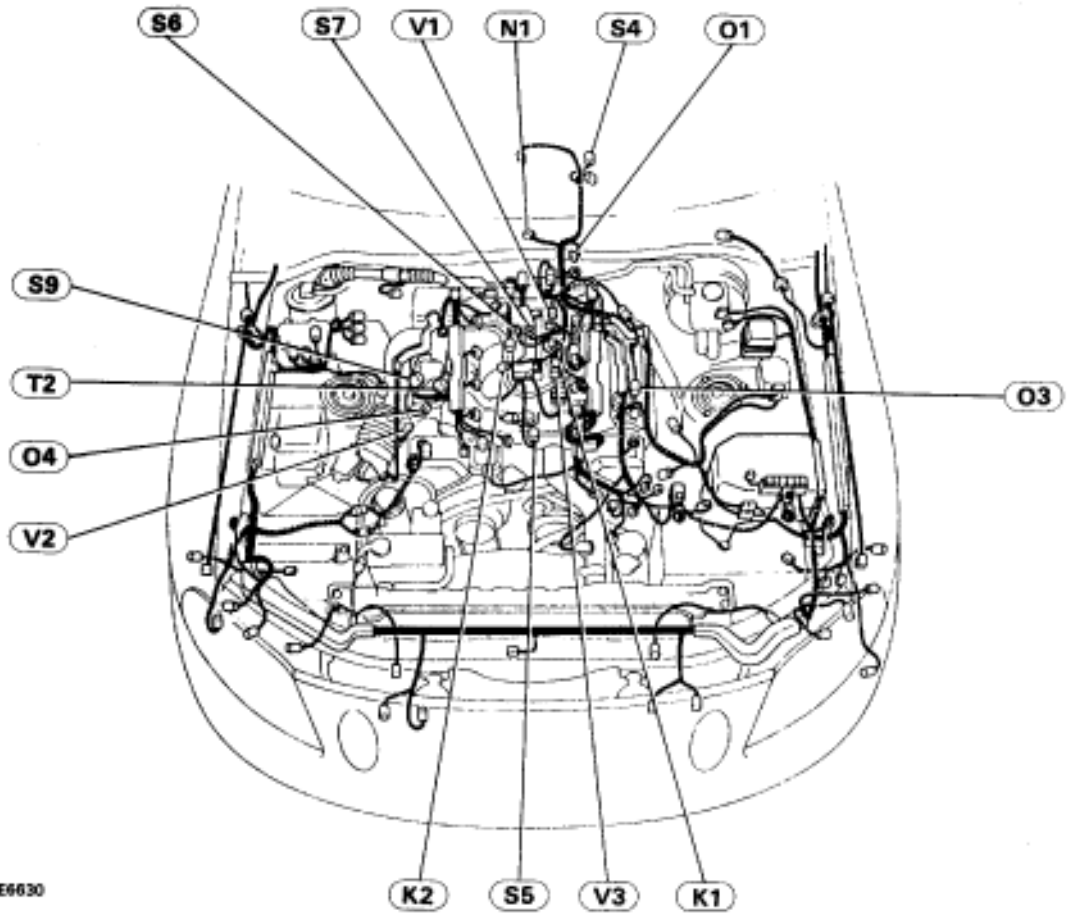

K1 K2
No. 1, 2 Knock Sensor

Ie-1-1-B

N1
Neutral Start Switch

SH-9-1-A

O1
O/D Direct Clutch Speed Sensor

Ie-2-1-X

O3
Main Oxygen Sensor

Ie-4-1-B

O4
Main Oxygen Sensor

Ie-4-1-B

S4
No. 2 Speed Sensor

Ie-2-1-X

WhereEverybodyKnowsYourName

S5

Start Injector Time Switch

V-2-1-A

S6

Starter Motor

H-1-1

S9

Sub-Throttle Position Sensor

IV-4-1

T2

Throttle Position Sensor

IS-4-1-C

S7

Starter Motor

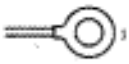

A-A

V1 **V2**

EGR VSV
EVAP VSV

Ie-2-1-X

V3

Fuel Pressure Control VSV

Ie-2-1-W

WhereEverybodyKnowsYourName

Location of Connectors in Engine Compartment (Cont'd)

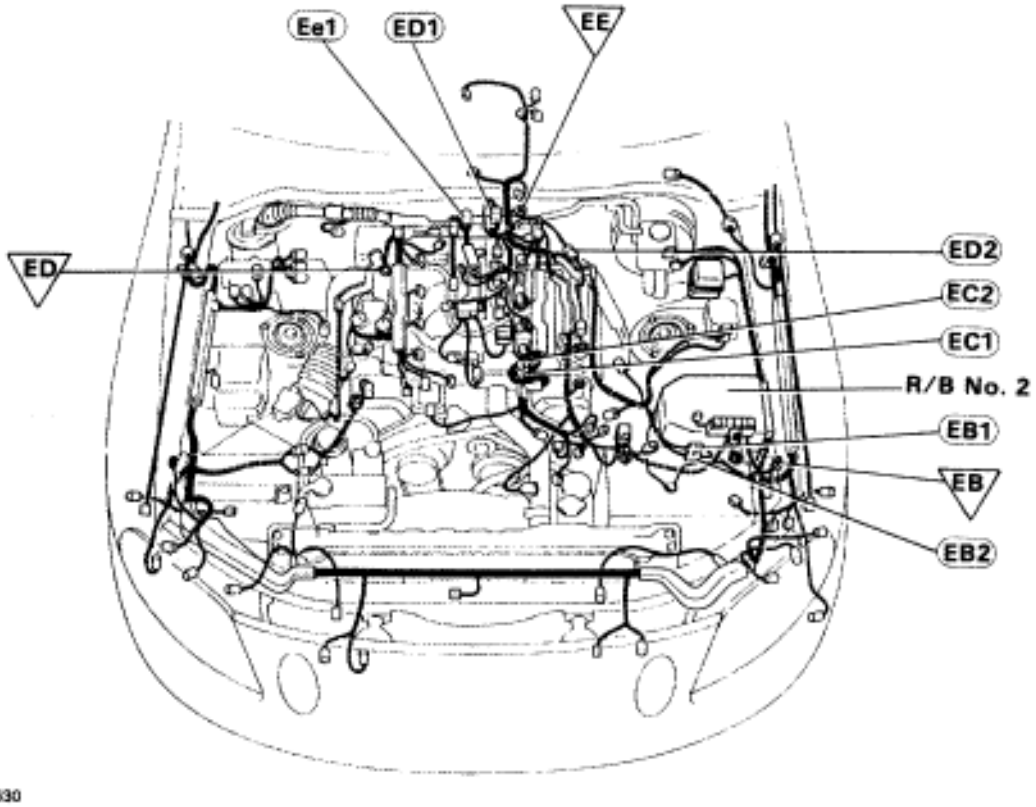

WhereEverybodyKnowsYourName

EB1

Ie-8-1-A

Ie-8-2-A

EB2

Ig-3-1-A

Ig-3-2-A

EC1

Ie-6-1-E

Ie-6-2-E

EC2

Ie-4-1-C

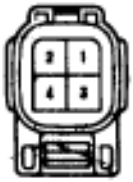

Ie-4-2-C

ED1

Ie-8-1-A

Ie-8-2-A

ED2

Ie-2-1-M

Ie-2-2-M

Ee1

Ie-2-1-K

Ie-2-2-K

R/B No. 2

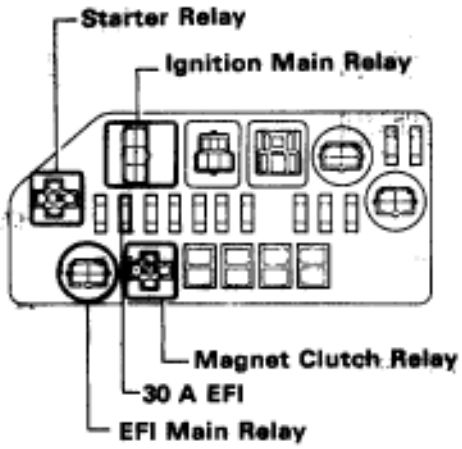

BE6625

WhereEverybodyKnowsYourName

Location of Connectors in Instrument Panel

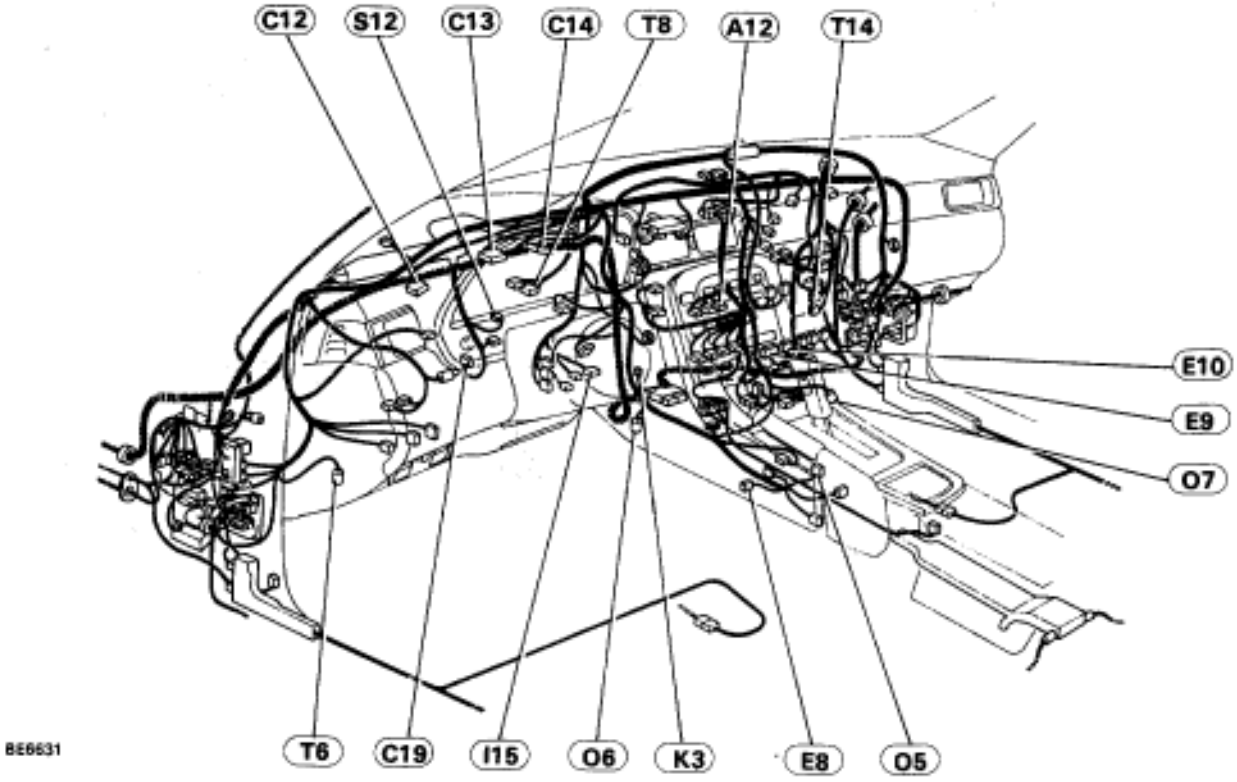

A12

A/C Control Assembly

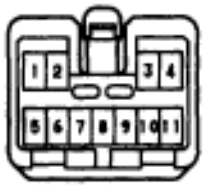

h-11-1

C12

Combination Meter
"CHECK" Engine Warning Light

eh-23-1

C13

"CHECK" Engine Warning Light

e-18-1

C14

ECT Indicator Light

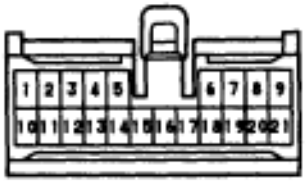

h-21-1

C19

Cruise Control ECU

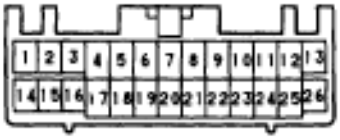

Vd-2b-1-8

E8

ECT Pattern Select Switch

e-4-1

WhereEverybodyKnowsYourName

E9
EFI ECU

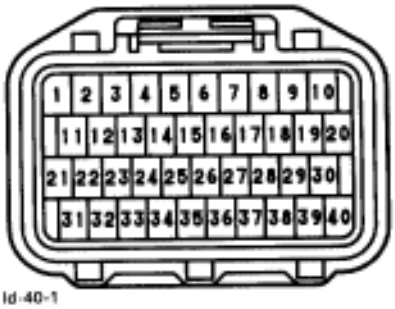

Id-40-1

E10
EFI ECU

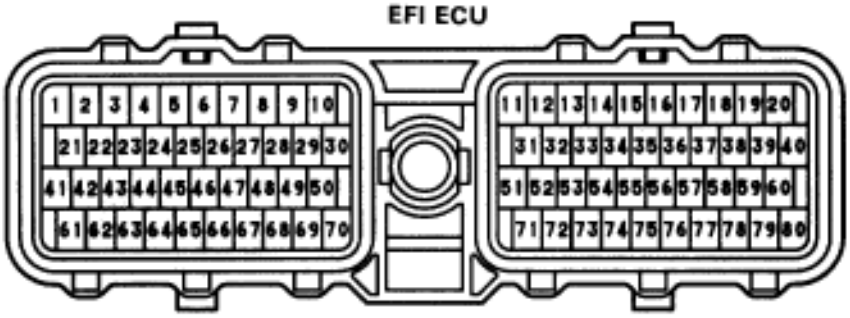

Id-80-1

I15
IG Switch

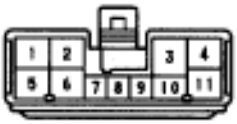

eg-11-1

K3
Kickdown Switch

Ia-2-1-X

O5
O/D Main Switch

e-2-1

O6 O7
Sub-Oxygen Sensor

Ie-4-1-D

S12
Stop Light Switch

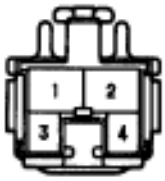

eg-4-1

T6
TDCL

S-17-1

T8
Theft Deterrent ECU

e-20-1

T14
TRAC ECU

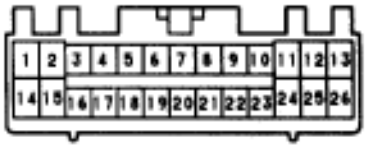

Vd-26-1

WhereEverybodyKnowsYourName

Location of Connectors in Instrument Panel (Cont'd)

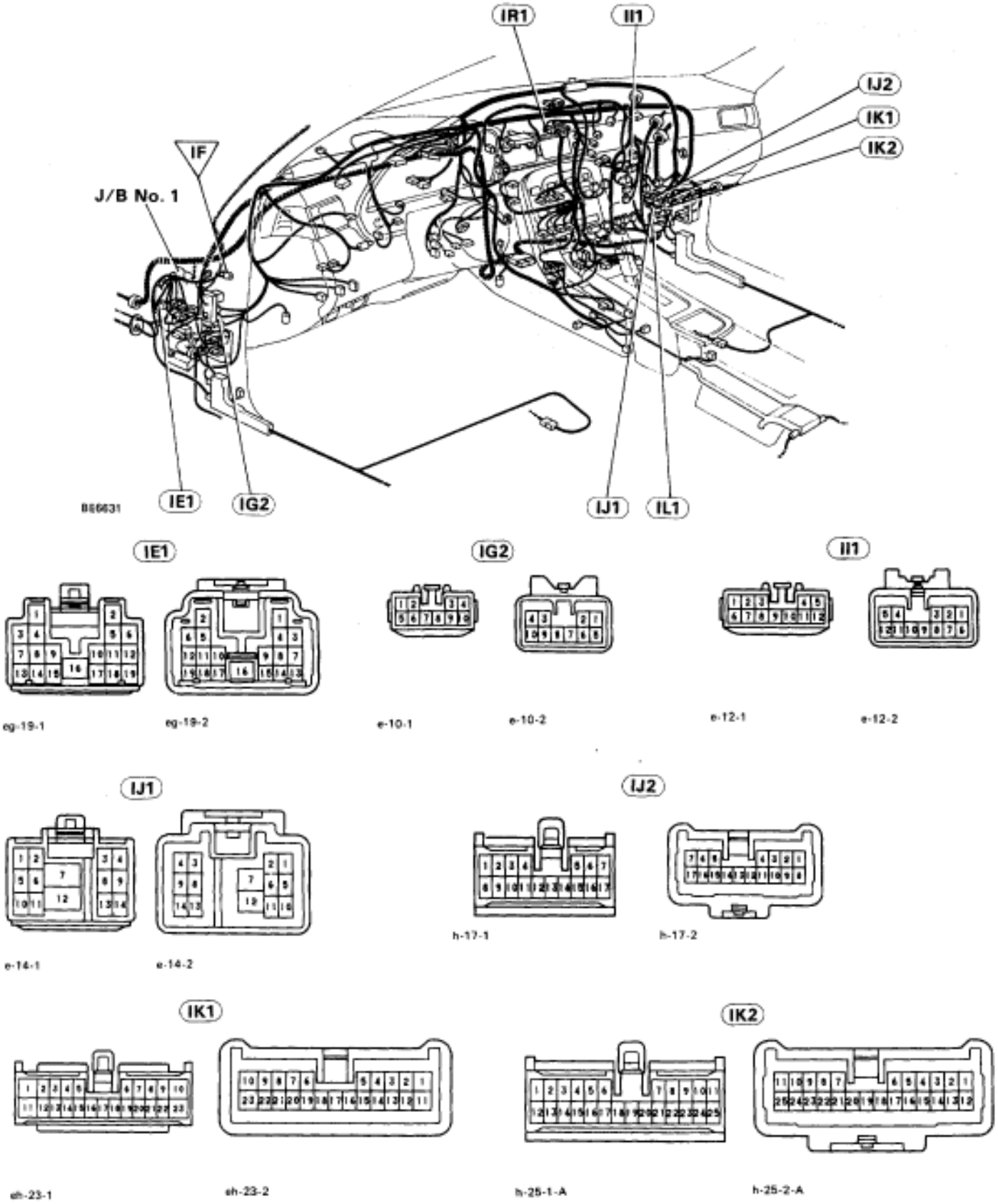

WhereEverybodyKnowsYourName

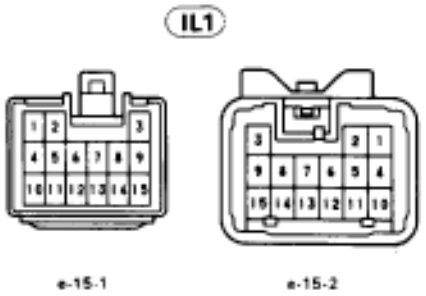

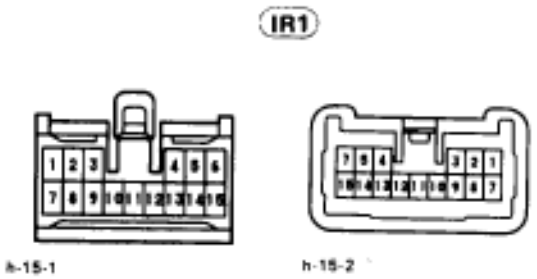

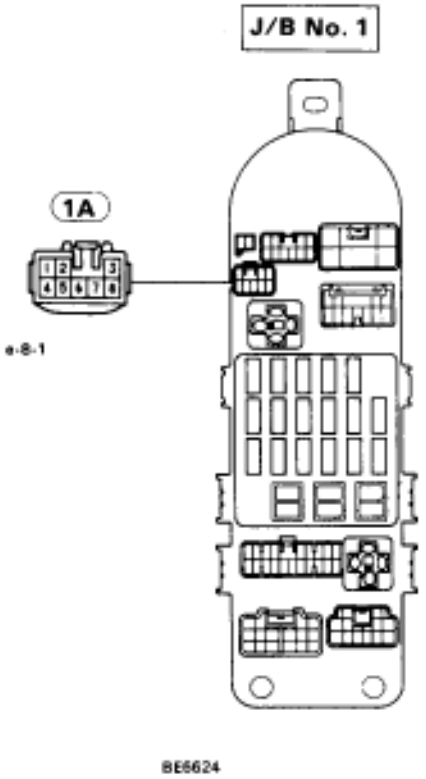

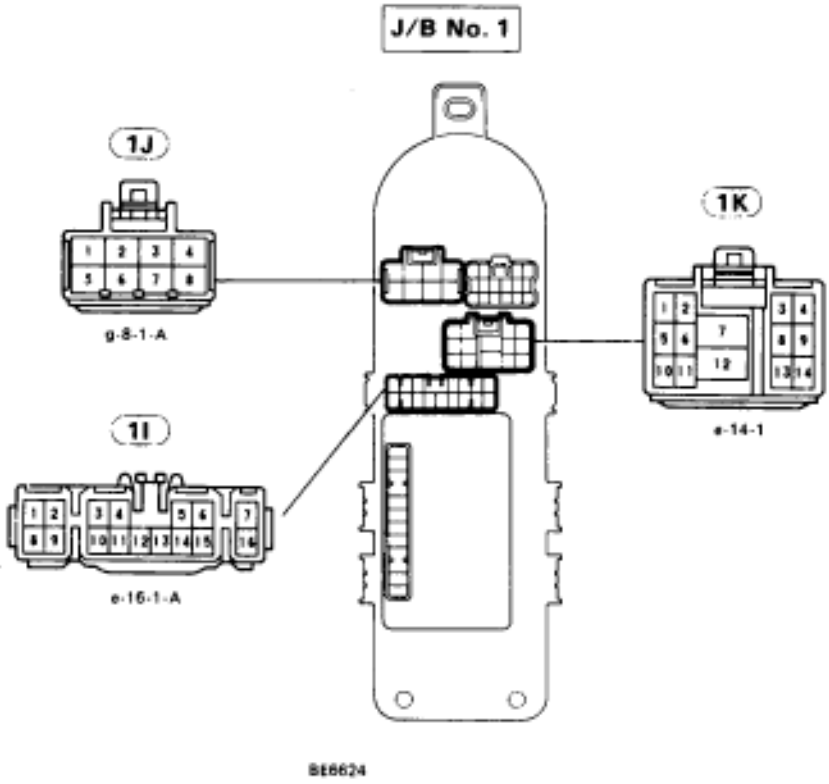

WhereEverybodyKnowsYourName

Location of Connectors in Body

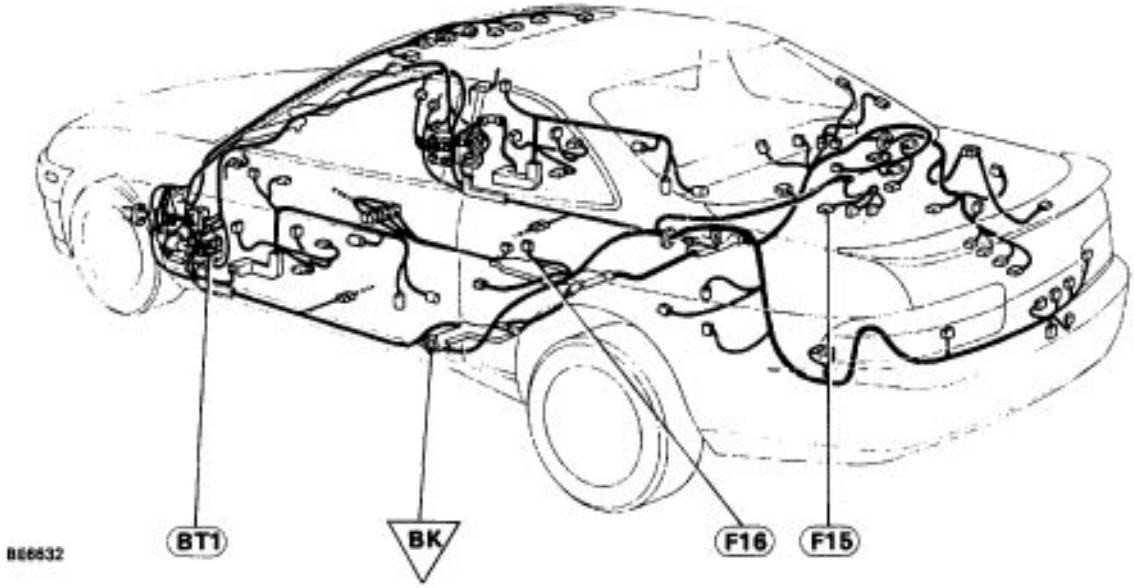

F15
Fuel Pump

g-2-1

F16
Fuel Pump ECU

e-5-1

BT1

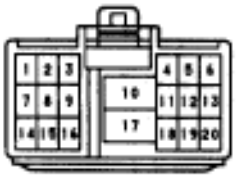

e-20-1-B

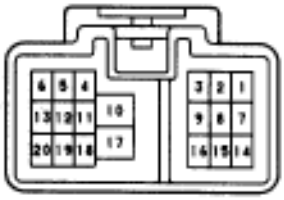

e-20-2-B

WhereEverybodyKnowsYourName

–MEMO –

WhereEverybodyKnowsYourName

STANDARD VALUE OF ECU TERMINALS

(※ : A = (E9), B = (E10))

※ Symbols (Terminals No.)	STD Voltage (V)	Condition
BATT (A33) – E1 (B69)	10 ~ 14	Always
IGSW (A1) + B (A31) + B1 (A32) – E1 (B69)	10 ~ 14	IG switch ON
VC (B41) – E2 (B65)	4.0 ~ 6.0	IG switch ON
IDL1 (B64) IDL2 (B63) – E2 (B65)	Below 1.0	IG switch ON Main or sub throttle valve fully closed.
	10 ~ 14	IG switch ON Main or sub throttle valve fully open.
VTA1 (B43) VTA2 (B42) – E2 (B65)	0.1 ~ 1.0	IG switch ON Throttle valve fully closed.
	3.0 ~ 6.0	IG switch ON Throttle valve fully open.
KS (B66) – E1 (B69)	Pulse generation (0 and 4 ~ 6)	Idling
THA (B45) – E2 (B65)	1.0 ~ 3.0	Idling, Intake air temp. 20°C (68°F).
THW (B44) – E2 (B65)	0.1 ~ 1.0	Idling, Engine coolant temp. 80°C (176°F).
STA (B77) – E1 (B69)	6.0 or more	Cranking
#10 (B20), #20 (B19) #30 (B18), #40 (B17) – E01 (B80) #50 (B16), #60 (B15)	10 ~ 14	IG switch ON
	Pulse generation	Idling
IGT (B57) – E1 (B69)	Pulse generation (0 and 4 ~ 6)	Idling
IGF (B58) – E1 (B69)	Below 1.0	IG switch ON
	Pulse generation (0 and 4 ~ 6)	Idling
G1 (B26), G2 (B25) – G⊖ (B6)	Pulse generation (Positive voltage peak 1.3 or higher)	Idling
NE (B27) – G⊖ (B6)	Pulse generation (Positive voltage peak 0.6 or higher)	Idling
M-REL (A24) – E1 (B69)	10 ~ 14	IG switch ON
FPC (A22) – E1 (B69)	4.2 ~ 6.0	Cranking, Sudden racing (6,000 rpm)
	Pulse generation (0 and 4 ~ 6)	Idling
DI (A21) – E1 (B69)	7.5 or more	Idling
ACIS (B39) – E01 (B80)	10 ~ 14	IG switch ON
EVAP (B74) – E01 (B80)	10 ~ 14	IG switch ON
EGR (B75) – E01 (B80)	Below 2.0	Idling
	10 ~ 14	Engine speed at 3,500 rpm

WhereEverybodyKnowsYourName

STANDARD VALUE OF ECM TERMINALS

(※ : A = (E9), B = (E10))

※ Symbols (Terminals No.)	STD Voltage (V)	Condition
ISC1 (B35), ISC2 (B34) ISC3 (B33), ISC4 (B32) – E01 (B80)	10 ~ 14	IG switch ON
VF1 (B29), VF2 (B28) – E1 (B69)	1.0 ~ 4.0	Maintain engine speed at 2,500 rpm for two minutes after warming up then return to idling.
OX1 (B48), OX2 (B47) – E1 (B69)	Pulse generation (0 ~ 1.0)	Maintain engine speed at 2,500 rpm for two minutes after warming up.
HT (B71) – E01 (B80)*	Below 2.0	Idling
	10 ~ 14	IG switch ON
KNK1 (B50), KNK2 (B49) – E1 (B69)	Pulse generation (Frequency : 8.1 KHz)	Idling
NSW (B76) – E1 (B69)	10 ~ 14	IG switch ON Other shift position in "P", "N" positions.
	Below 1.0	IG switch ON Shift position in "P", "N" positions.
SP1 (A2) – E1 (B69)	Pulse generation (0 and 4 ~ 6)	IG switch ON Rotate driving wheel slowly.
TE1 (A20) – E1 (B69)	10 ~ 14	IG switch ON
TE2 (A19) – E1 (B69)	10 ~ 14	IG switch ON
W (A6) – E1 (B69)	10 ~ 14	Idling
	Below 2.0	IG switch ON
ODI (A12) – E1 (B69)	10 ~ 14	IG switch ON
A/C (A34) – E1 (B69)	Bellow 2.0	A/C switch ON (At idling)
	10 ~ 14	A/C switch OFF
ACMG (A23) – E1 (B69)	Below 2.0	A/C switch ON (At idling)
	10 ~ 14	A/C switch OFF
TR (A37) – E1 (B69)	10 ~ 14	IG switch ON
VTO1 (A40) VTO2 (A39) – E2 (B65)	Below 1.0	IG switch ON Main or sub throttle valve fully closed.
	3.0 ~ 5.5	IG switch ON Main or sub throttle valve fully open.
NEO (A38) – E1 (B69)	4.0 ~ 6.0	IG switch ON

* Only for USA specification vehicles.

WhereEverybodyKnowsYourName

MATRIX CHART OF PROBLEM SYMPTOMS

When the malfunction code is not confirmed in the diagnostic trouble code check and the problem still can not be confirmed in the basic inspection, then proceed to this step and perform troubleshooting according to the numbered order given in the table below.
The circuits indicated by on the matrix chart can be inspected using the TCCS checker.

	See page	TR–82	TR–96	TR–104	TR–114	TR–118	TR–120	TR–126	TR–128	TR–132	TR–110	AC–68	ST–13 14	IG–6	IG–7	IG–10	IG–10	EM–22	AT–68	BE–398	IN–32
	Suspect area	※ Volume air flow meter circuit	※ Starter signal circuit	EGR System	Switch condition signal circuit	※ Park/Neutral position switch circuit	ECM power source circuit	Back up power source circuit	※ Injector circuit	※ IAC valve circuit	Fuel pump control circuit	A/C signal circuit (Compressor circuit)	Starter and Starter relay	Ignition signal circuit (Spark test)	Spark plug	Ignition coil	Distributor	Compression	Electronic Controlled Transmission faulty	Theft deterrent ECU	ECM
	Symptom																				
Does not start	Engine does not crank					2							1							3	
	No initial combustion						1		5		3			2	4						
	No complete combustion								6		1			5	4	2	3				
Difficult to start	Difficult to start normally		1						8	2	3				6	4	5	7			
	Difficult to start cold		1						4	2	3				7	5	6				
	Difficult to start hot		1						4	2	3				7	5	6				
Poor Idling	Incorrect first idle				1					2											
	High engine idle speed				1	5	4	6		2		3									
	Low engine idle speed	7			3	4		8	6	1	5	2									
	Rough idling	3		5	1			12	4	2	8			6	11	9	10	7			
	Hunting	3			1		4			2	5										
Poor Driveability	Hesitation/Poor acceleration	2			1				3		4			5	8	6	7		9		
	Muffler explosion (after fire)				1				5						4	2	3				
	Surging				1				5		2				4		3				
Engine Stall	Engine stalls soon after starting	2								3	1										
	After acceleration pedal depressed	2			1																
	After acceleration pedal released								1	2											3
	During A/C operation									1		2									3
	When N to D shift					1				2											

WhereEverybodyKnowsYourName

LOCATION OF CONNECTORS

Location of Connectors in Engine Compartment

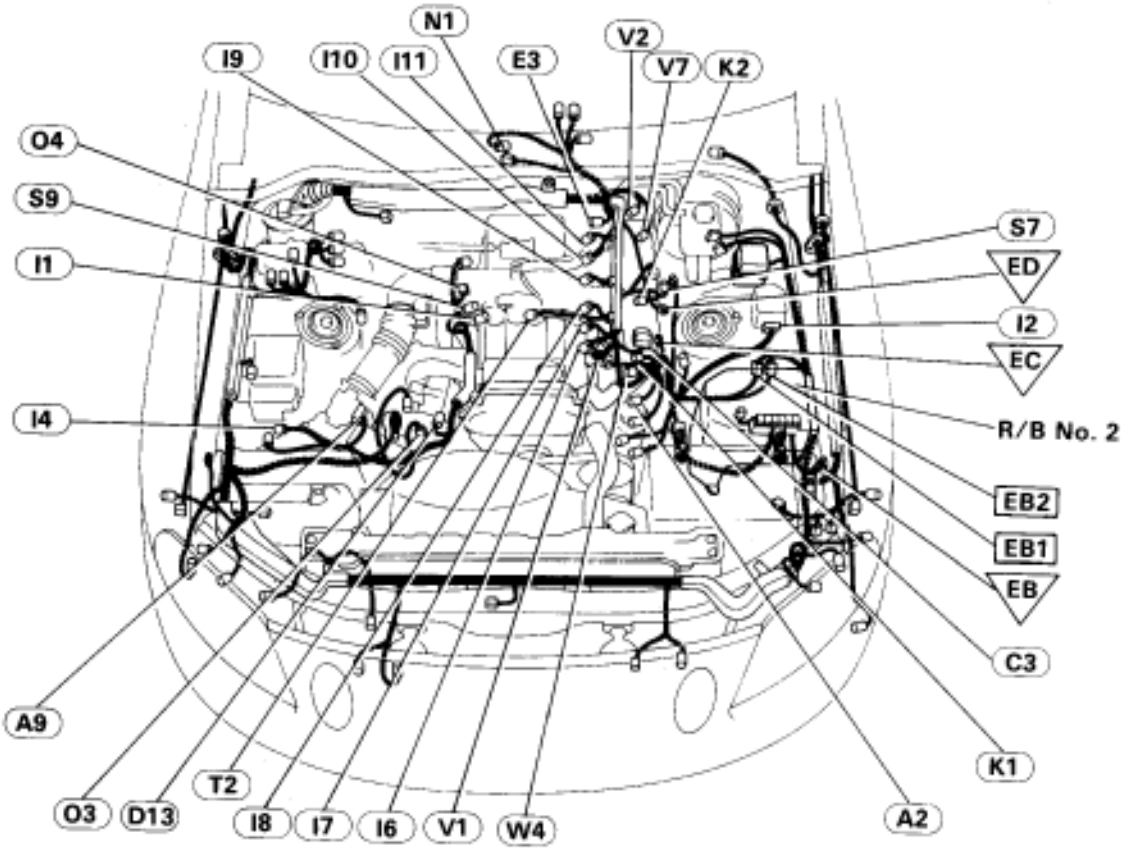

BE6673

A2

A/C Magnet Clutch

Ie-4-1

A9

Intake Air Temp. Sensor

IS-5-1

C3

Check Connector

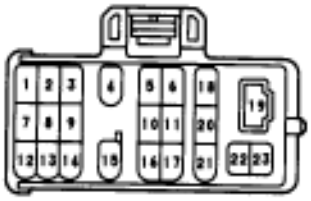

Iej-23-1

D13

Distributor

Ie-4-1-E

E3

EGR Gas Temp. Sensor

Ie-2-1-C

I1

ISC Valve

Ie-6-1-D

I2

Igniter

Ie-5-1

WhereEverybodyKnowsYourName

I4
Ignition Coil

IS-2-1-L

I6 I8 I10
Injector
(Gray)

Ie-2-1-a

I7 I9 I11
Injector
(Dark gray)

Ie-2-1-a

K1 K2
No. 1, 2 Knock Sensor

Ie-1-1-B

N1
Neutral Start Switch

SH-9-1-A

O3 O4
Main Oxygen Sensor

Ie-4-1-B

S7
Starter Motor

H-1-1

S9
Sub-Throttle Position
Sensor

IS-4-1-E

T2
Throttle Position Sensor

IS-4-1-E

V1
EGR VSV

Ie-2-1-W

V2
EVAP VSV

Ie-2-1-X

V7
VSV
(For Intake Control Valve)

Ie-2-1-W

W4
Water Temp. Sensor

V-2-1-C

EB1

Ie-8-1-A

Ie-8-2-A

EB2

Ig-3-1-A

Ig-3-2-A

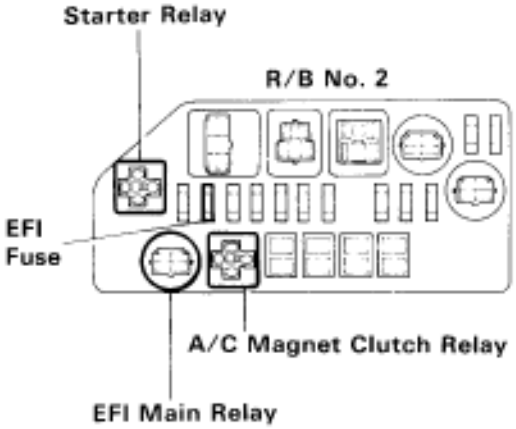

WhereEverybodyKnowsYourName

Location of Connectors in Instrument Panel

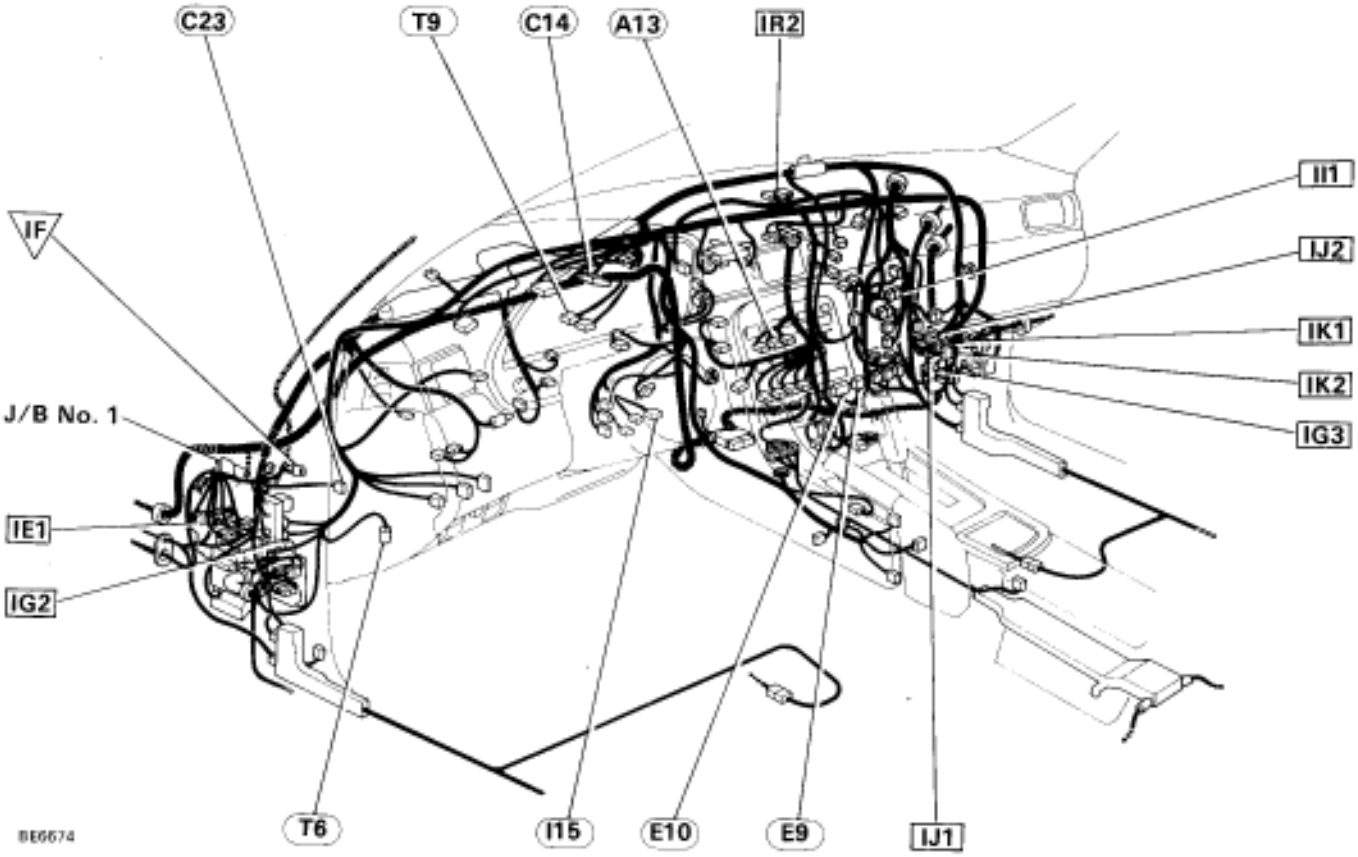

A13
A/C Control Assembly

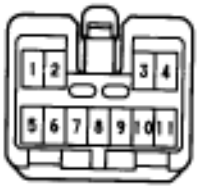

C14
Combination Meter

C23
Clutch Start Switch

E9
Engine and ECT ECU

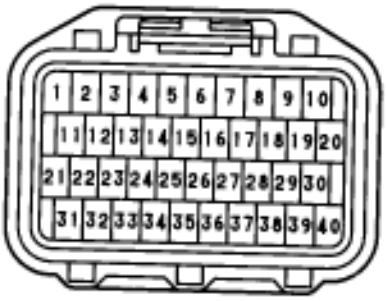

E10
Engine and ECT ECU

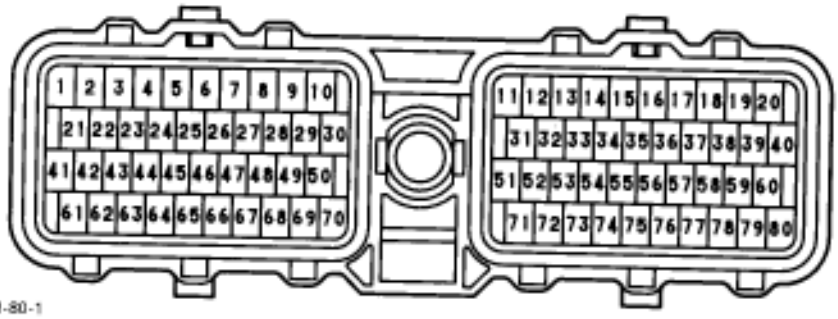

WhereEverybodyKnowsYourName

I15

IG Switch

eg-11-1

T6

TDCL

S-17-1

T9

e-20-1

IE1

eg-19-1

eg-19-2

IG2

e-10-1

e-10-2

IG3

e-15-1

e-15-2

II1

e-12-1

e-12-2

IJ1

e-14-1

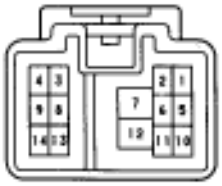

e-14-2

IJ2

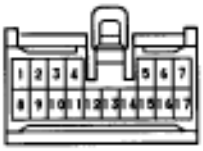

h-17-1

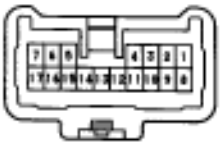

h-17-2

WhereEverybodyKnowsYourName

Location of Connectors in Instrument Panel (Cont'd)

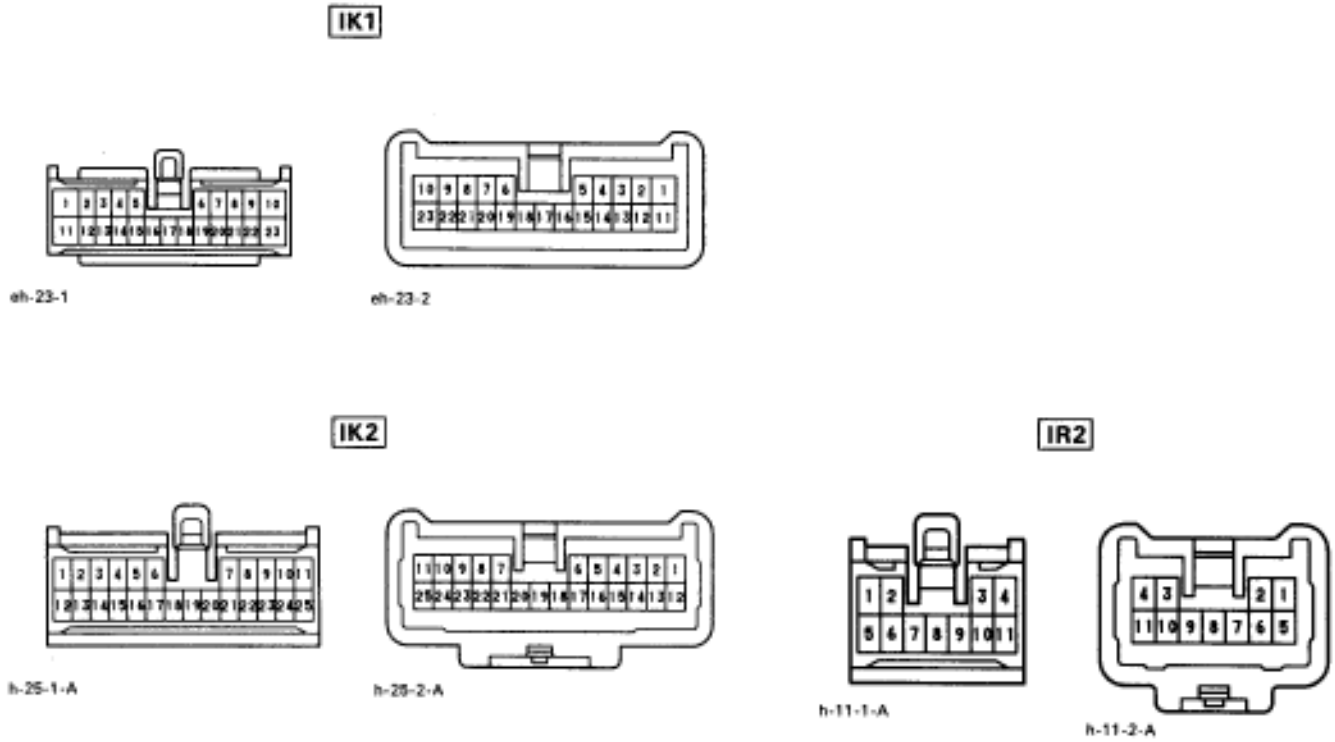

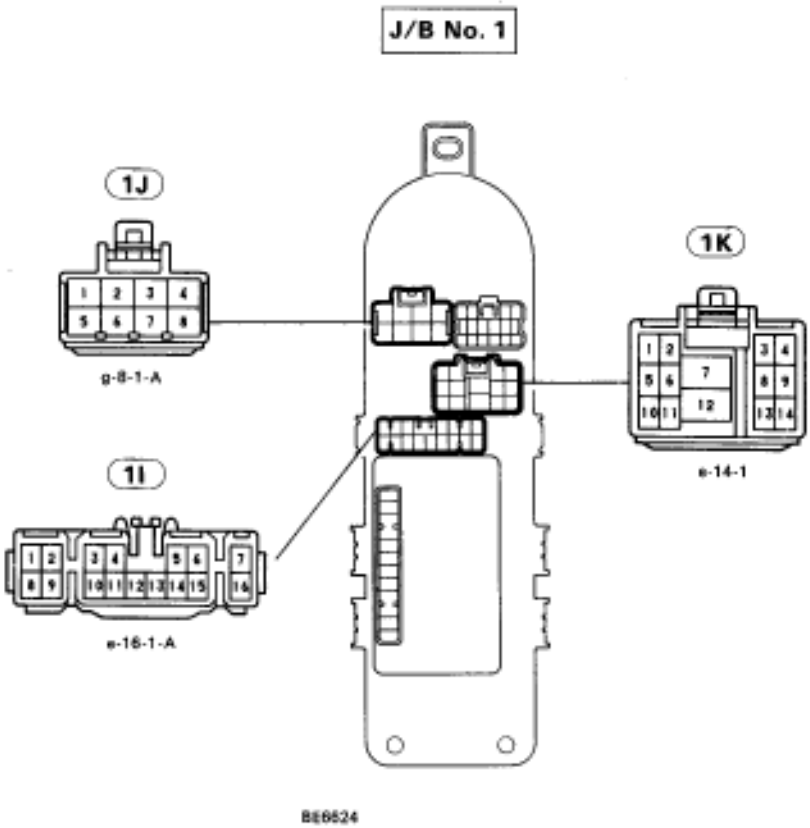

WhereEverybodyKnowsYourName

Location of Connectors in Body

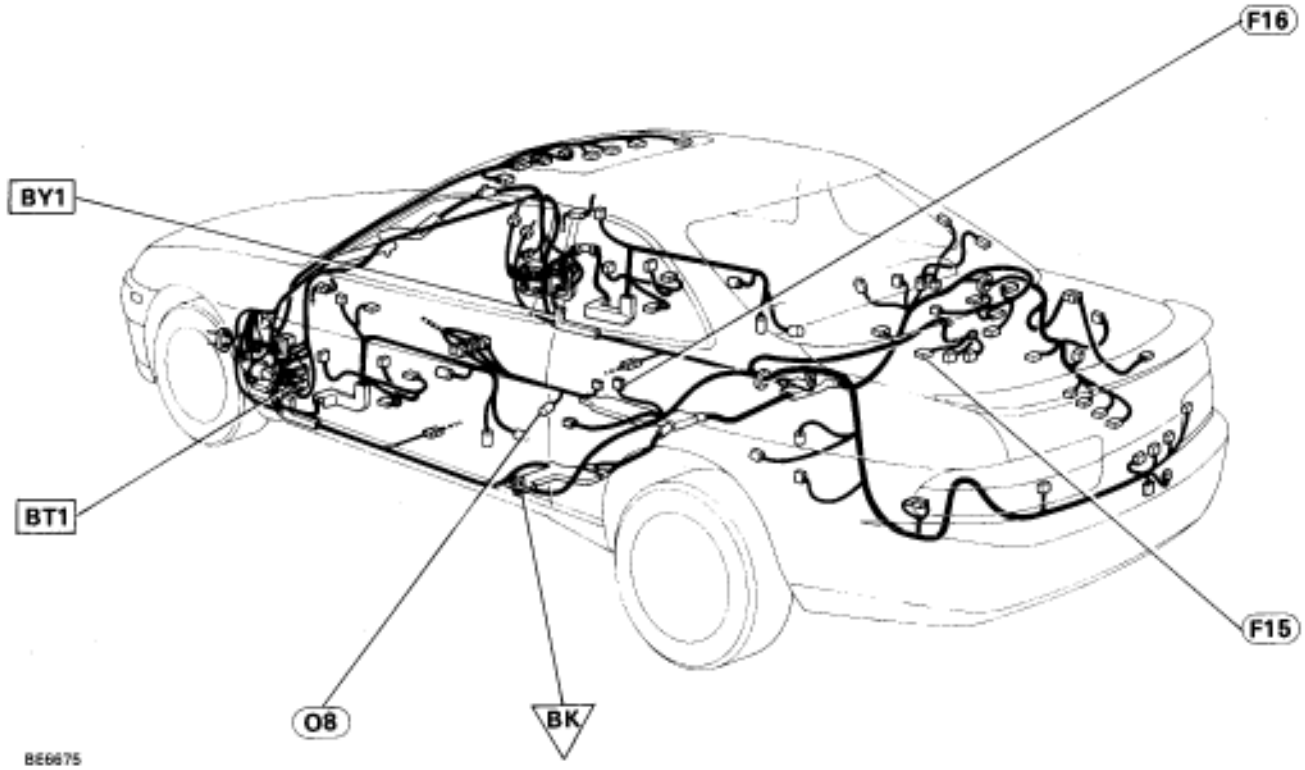

F15
Fuel Pump

g-2-1

F16
Fuel Pump ECU

e-5-1

O8
Sub-Oxygen Sensor

le-4-1-D

BT1

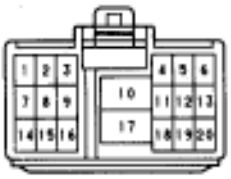

e-20-1-B

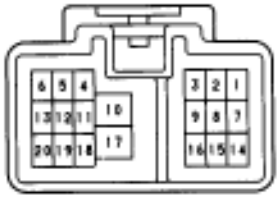

e-20-2-B

BY1

e-10-1

e-10-2

WhereEverybodyKnowsYourName

CIRCUIT INSPECTION

Diag. Code 12	RPM Signal Circuit (No. 1)

CIRCUIT DESCRIPTION

The distributor in the Engine Control System contains three pick–up coils (G1, G2 and NE).
The G1, G2 signals inform the ECU of the standard crankshaft angle.
The NE signals inform the ECU of the crankshaft angle and the engine speed.

Code No.	Diagnostic Code Detecting Condition	Trouble Area
12	No ”NE” or ”G1” and ”G2” signal to ECU within 2 sec. after cranking.	▼ Open or short in NE, G circuit. ▼ Distributor ▼ Open or short in STA circuit. ▼ ECU
	Open in ”G” ± circuit.	

WhereEverybodyKnowsYourName

DIAGNOSTIC CHART

1 Check resistance of each pickup coils in distributor
- NG → Replace distributor.
- OK ↓

2 Check for open and short in harness and connector between ECU and distributor.
- NG → Repair or rep lace harness or connector.
- OK ↓

3 Check air gap.
- NG → Replace distributor
- OK ↓

Check and replace ECU.

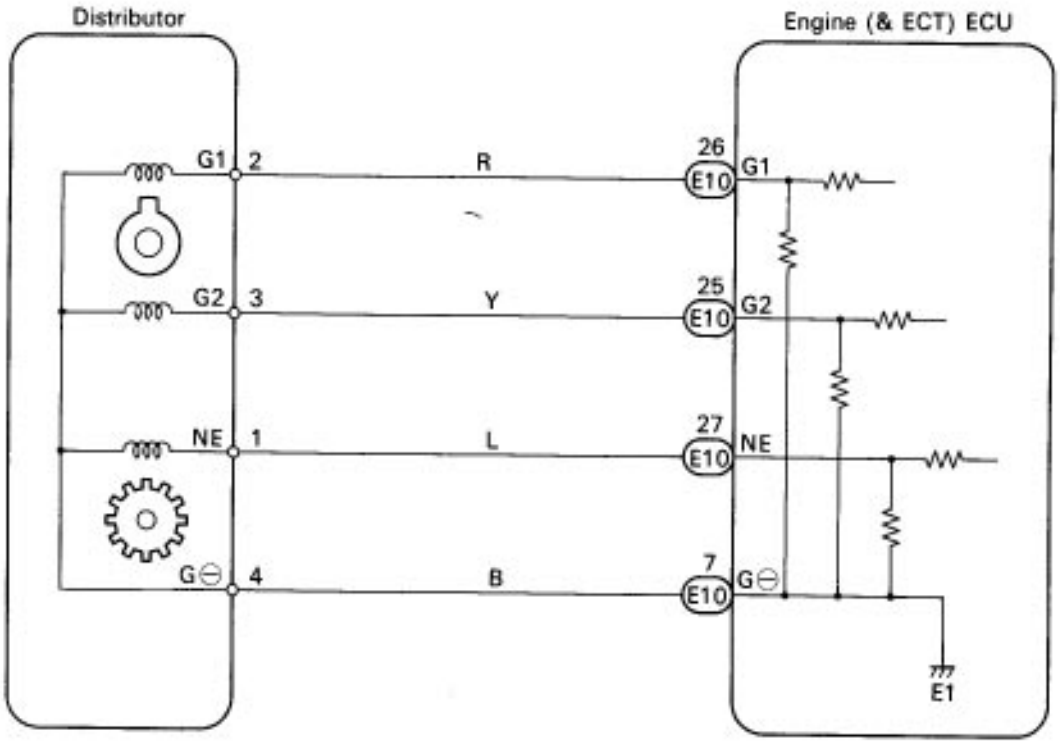

FI6543

WhereEverybodyKnowsYourName

INSPECTION PROCEDURE

1 Check resistance of each picup coils in distributor.

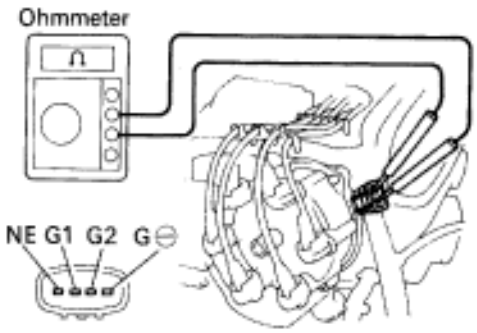

FI6631

P Disconnect distributor connector.

C Measure resistance between each terminal shown in table below.

OK

	Terminals	Resistance
G1 pickup coil (Cold)	G1 – G⊖	125 – 190 Ω
G2 pickup coil (Cold)	G2 – G⊖	125 – 190 Ω
NE pickup coil (Cold)	NE – G⊖	155 – 240 Ω

Reference INSPECTION USING OSCILLOSCOPE

G, NE signal waveforms

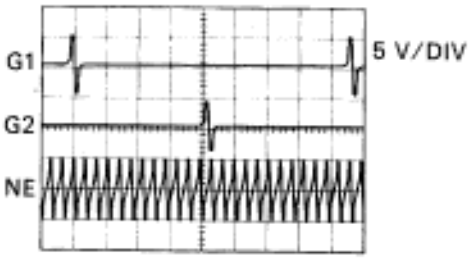

20 m sec/Division (Idling)

FI6519

▼ During cranking or idling, check between terminals G1, G2, NE and G⊥ of engine (&ECT) ECU.

HINT: The correct waveforms appears as shown in the illustration on the left.

OK → **NG** → **Replace distributor.**

2 Check for open and short in harness and connector between engine (&ECT) ECU and distributor (See page IN–27

OK → **NG** → **Repair or replace harness or connector.**

WhereEverybodyKnowsYourName

3 Check air gap.

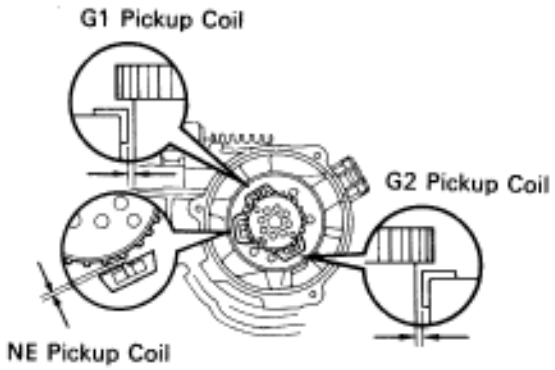

P Remove distributor cap & rotor.

C Using SST (G1 and G2 pickups) and a thikness gauge (NE pickup). measure the air gap between the signal rotor projection and pickup coil.
SST 09240–00020 fro G1 and G2 pickups

OK **Air gap: 0.2–0.4 mm (0.008–0.016 in.)**

OK

NG **Replace distributor.**

Check and replace engine (& ECT) ECU.

WhereEverybodyKnowsYourName

CIRCUIT INSPECTION

Diag. Code 12	RPM Signal Circuit (No.1)

— CIRCUIT DESCRIPTION

Cam position sensors (G1 and G2 signals) and engine speed sensor (NE signal) consist of a signal plate and a pick up coil.
The G1, G2 signal plates have one tooth each on its outer circumference and are mounted on the left and right bank camshafts.
When the camshafts rotate, the protrusion on the signal plate and the air gap on the pick up coil change, causing fluctuations in the magnetic field and generating an electromotive force in the pick up coil.
The NE signal plate has 12 teeth and is mounted on the crankshaft. The NE signal sensor generates 12 NE signals per engine revolution. The ECU detects the standard crankshaft angle based on the G1, G2 signals, and the actual crankshaft angle and the engine speed by the NE signals.

Code No.	Diagnostic Code Detecting Condition	Trouble Area
12	No ”NE” or ”G1” and ”G2” signal to ECU within 2 sec. after cranking.	• Open or short in engine speed sensor, No. 1, No. 2 cam position sensor circuit • Engine speed sensor • No. 1, No. 2 cam position sensor • Starter • ECU

WhereEverybodyKnowsYourName

DIAGNOSTIC CHART

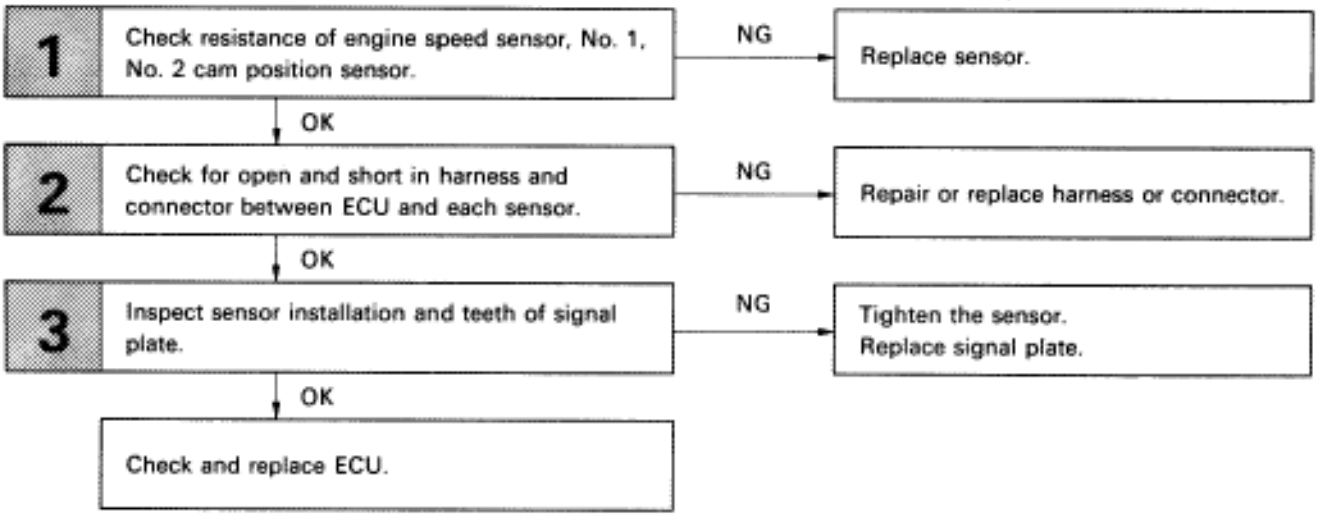

WIRING DIAGRAM

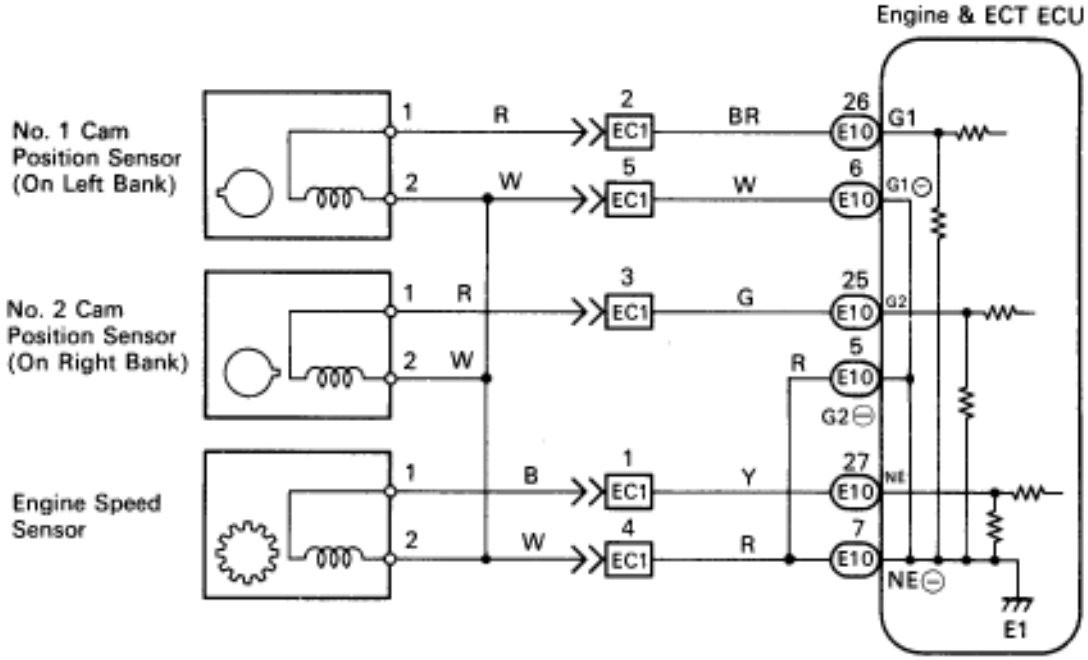

WhereEverybodyKnowsYourName

INSPECTION PROCEDURE

1 Check engine speed sensor, No. 1, No. 2 cam position sensor

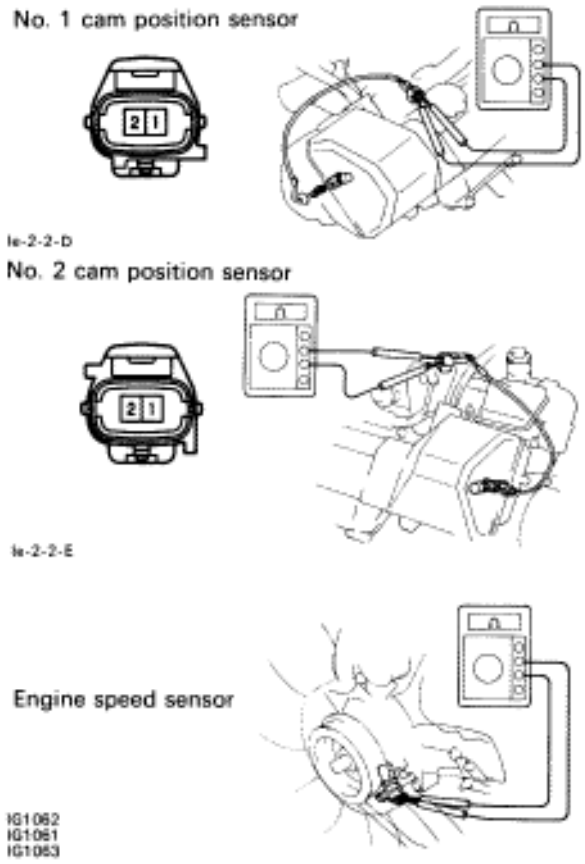

P For engine speed sensor.

(2) Remove engine under cover.

(2) Disconnected engine speed sensor connector.

For No.1, No. 2 cam position sensor,

(2) Disconnect No. 1, No. 2 cam poisition sensor connectors.

C Measure resistance of engine speed sencor, No. 1 and No. 2 cam position sensor.

OK

	Resistance
No. 1 cam position sensor	950 ~ 1,250 Ω
No. 2 cam position sensor	950 ~ 1,250 Ω
Engine speed sensor	950 ~ 1,250 Ω

Reference INSPECTION USING OSCILLOSCOPE

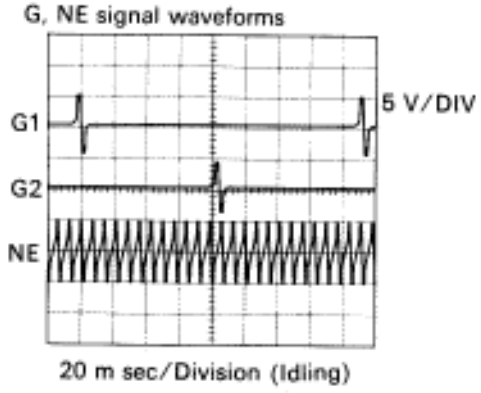

- During cranking or idling, check between terminals G1, G2 and G1⊖, NE and NE⊖ of engine & ECT ECU.

HINT: The correct waveforms appear as shown in the illustration on the left.

OK

NG **Replace engine speed sensor, No. 1, No. 2 cam poistion sensor.**

WhereEverybodyKnowsYourName

2	**Check for open and short in harness and connector between engine & ECT ECU and each sensor (See page IN–27).**

OK

NG → **Repair or replace harness or connector.**

3	**Inspect sensor installation and teeth of signal plate.**

OK

NG → **Tighen the sensor.**
Replace signal plate.

Check and replace engine and ECT ECU.

WhereEverybodyKnowsYourName

Diag. Code 13	RPM Signal Circuit (No. 2)

CIRCUIT DESCRIPTION

Refer to RPM signal circuit (No. 1) on page TR–46.

Code No.	Diagnostic Code Detecting Condition	Trouble Area
13	No NE signal to ECU for 0.1 sec. or more at 1,000 rpm or more.	▼ Open or short in NE circuit ▼ Distributor ▼ ECU
	No 12 pulses of NE to ECU during the interval between G1 and G2 pulses.	

DIAGNOSTIC CHART

This code indicates that a momentary interruption of the RPM signal from the distributor to the ECU has occurred, but that it is returned to normal. Note that although this problem may not necessarily appear at the time of inspection, it cannot be ignored because this diagnostic code is output, indicating that there is or was a malfunction in the RPM signal circuit; this ”malfunction” is usually a loose connector.
The distributor connector and the NE terminal of the ECU connector must therefore be checked for the following:

1. Loose connectors
2. Dirty connector terminals
3. Loose connector terminals

WhereEverybodyKnowsYourName

Diag. Code 13 | RPM Signal Circuit (No.2)

CIRCUIT DESCRIPTION

Refer to RPM signal circuit (No. 1) on page TR–48.

Code No.	Diagnostic Code Detecting Condition	Trouble Area
13	No NE signal to ECU for 0.1 sec. or more at 1,000 rpm or more.	• Open or short in engine speed sensor circuit. • Engine speed sensor • ECU
	No 12 pulses of NE to ECU during the interval between G1 and G2 pulses.	• Open or short in engine speed sensor circuit. • Mechanical system malfunction (skipping teeth of timing belt, belt stretched) • Engine speed sensor • ECU
	Deviation in G (G1, G2) and NE signal continues for 1 sec. during idling (throttle fully closed) after engine warmed up.	• Mechanical system malfunction (skipping teeth of timing belt, belt stretched) • No. 1, No. 2 cam position sensor • ECU

DIAGNOSTIC CHART

HINT: Perform troubleshooting of diag. code 12 first. If no trouble is found, troubleshoot the following mechanical systems.

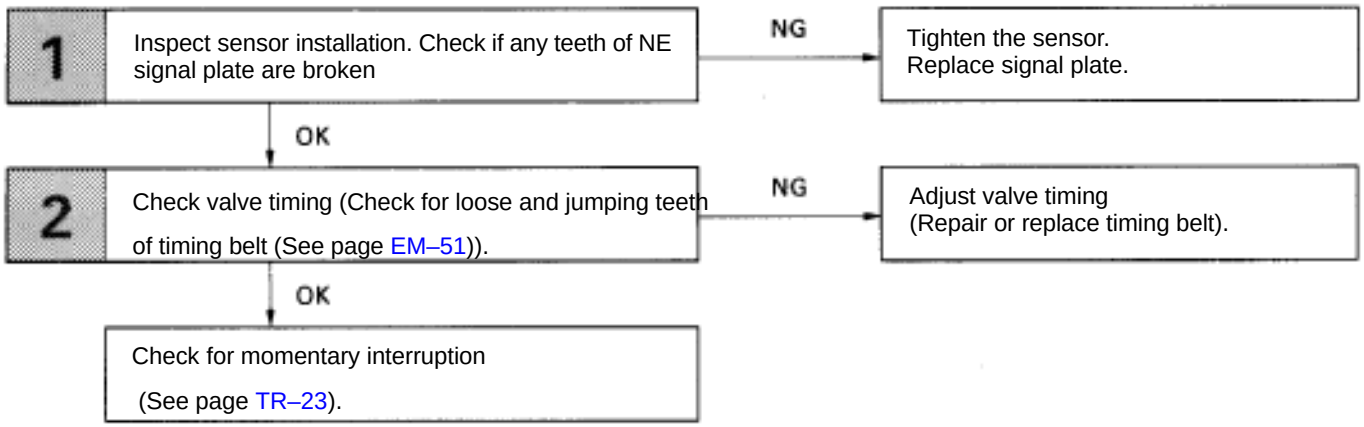

WhereEverybodyKnowsYourName

MEMO –

WhereEverybodyKnowsYourName

Diag. Code 14, 15 | Ignition Signal Circuit

— CIRCUIT DESCRIPTION

The ECU determines the ignition timing, turns on Tr1 at a predetermined angle (°CA) before the desired ignition timing and outputs an ignition signal (IGT) ”1” to the igniter.
Since the width of the IGT signal is constant, the dwell angle control circuit in the igniter determines the time the control circuit starts primary current flow to the ignition coil based on the engine rpm and ignition timing one revolution ago, that is, the time the Tr2 turns on.
When it reaches the ignition timing, the ECU turns Tr1 off and outputs the IGT signal ”O”.
This turns Tr2 off, interrupting the primary current flow and generating a high voltage in the secondary coil which causes the spark plug to spark. Also, by the counter electromotive force generated when the primary current is interrupted, the igniter sends an ignition confirmation signal (IGF) to the ECU.
The ECU stops fuel injection as a fail safe function when the IGF signal is not input to the ECU.

Code No.	Diagnostic Code Detecting Condition	Trouble Area
14	No IGF1 signal to ECU for 8–11 consecutive IGT1 signal.	• Open or short in IGF1 and IGT1 circuit from No. 1 igniter – ECU. • No. 1 igniter • ECU
15	No IGF2 signal to ECU for 8–11 consecutive IGT2 signal.	• Open or short in IGF2 and IGT2 circuit from No. 2 igniter – ECU. • No. 2 igniter • ECU

HINT: No. 1 igniter is for left bank and No. 2 igniter is for right bank.

WIRING DIAGRAM

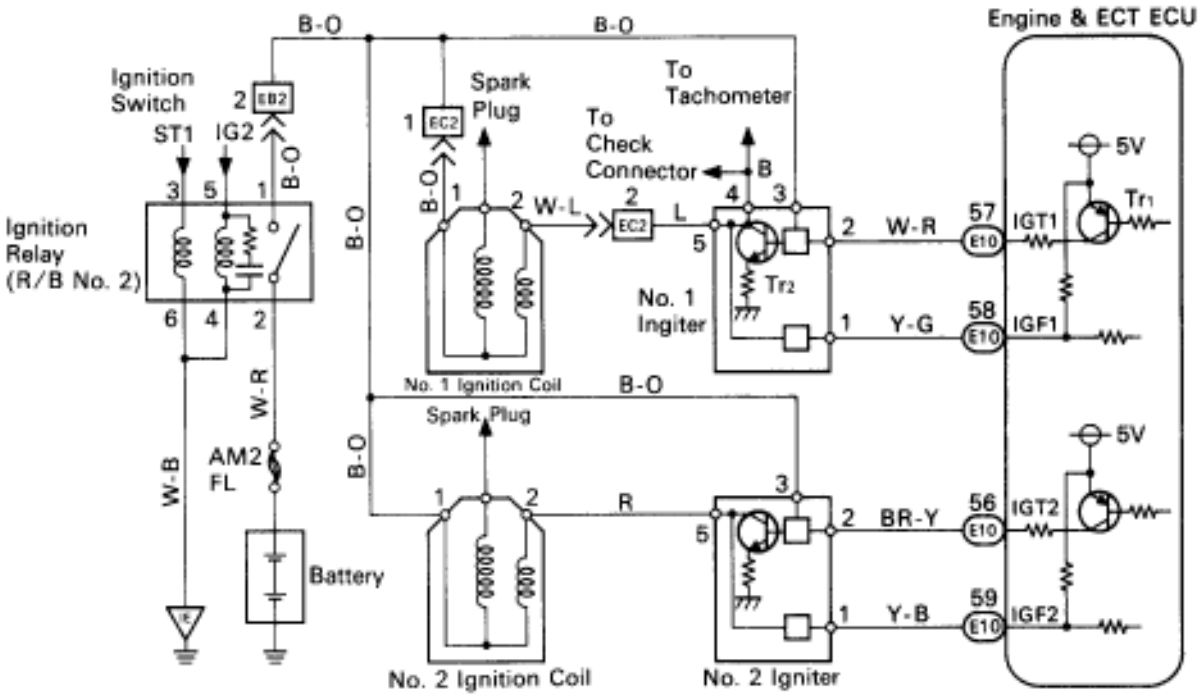

FI6479

WhereEverybodyKnowsYourName

DIAGNOSTIC CHART

Refer to inspection procedure in details.
HINT: If diag. code 14 is displayed, check No. 1 igniter circuit.
If diag. code 15 is displayed, check No. 2 igniter circuit.

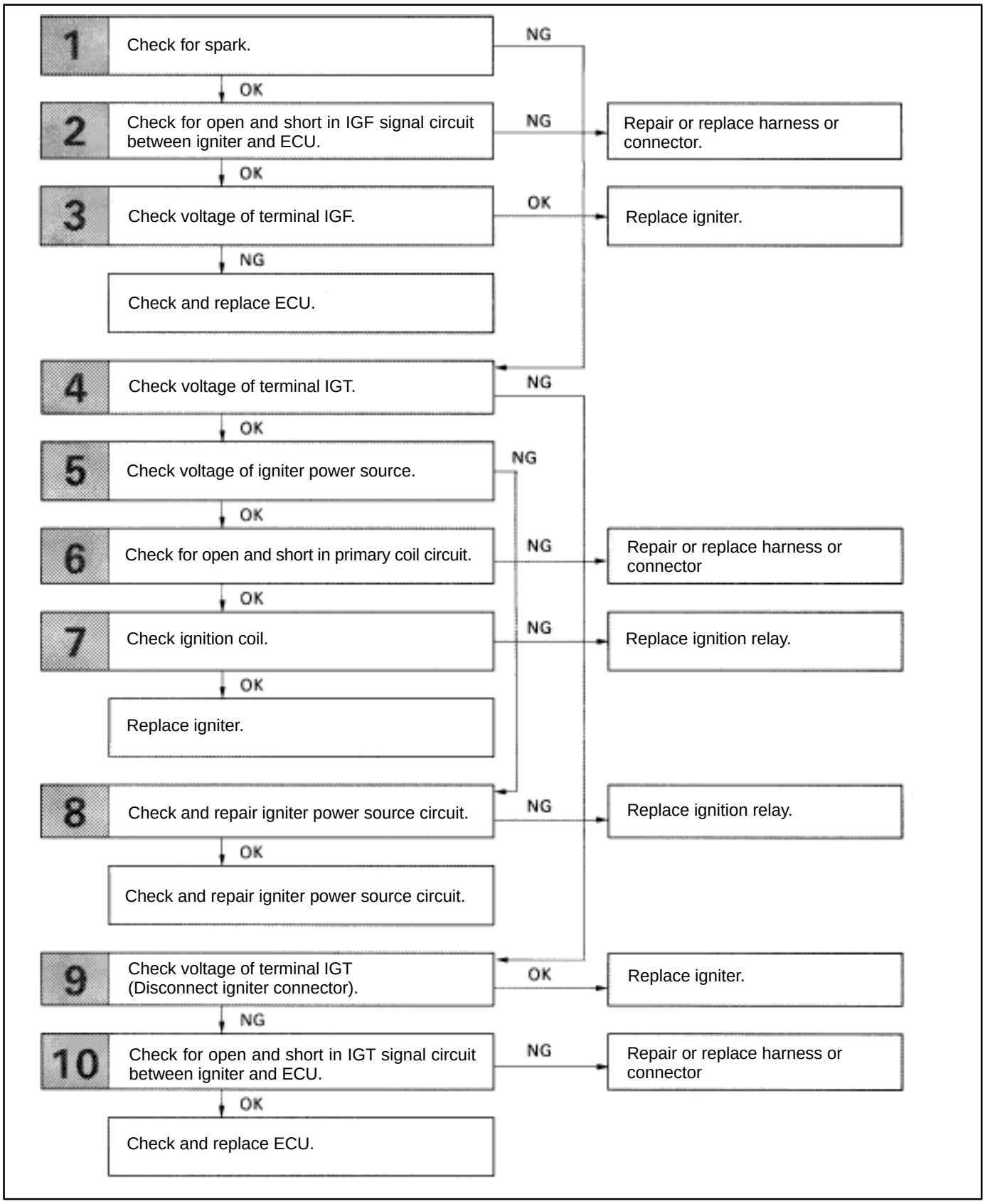

WhereEverybodyKnowsYourName

INSPECTION PROCEDURE

HINT: If diag. code 14 is displayed, check No. 1 igniter circuit.
If diag. code 15 is displayed, check No. 2 igniter circuit.

1	Check for Spark.
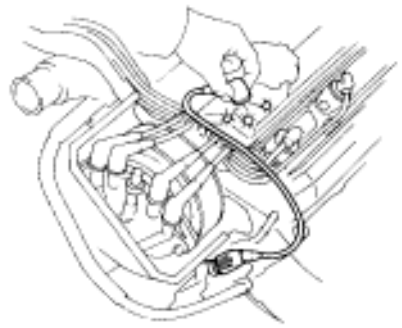	**C** Disconnect the high–tension cord from the distributor, hold its end about 12.5 mm (1/2”) from the ground, see if spark occurs while the engine is being cranked. **OK** **Spark should be generated.** **Hint** To prevent excessive fuel injected from the injectors during the check. Don’t crank the engine for more than 1–2 seconds at a time.

F14488

OK

NG **Go to step [4].**

2	Check for open and short in harness and connector in the IGF and IGT signal circuit between engine & ECT ECU and igniter (See page IN–27)

OK

NG **Repair or replace harness or connector.**

#	Disconnect igniter sonnector and check voltage between terminals IGF1, 2 of engine & ECT ECU connector and body ground.
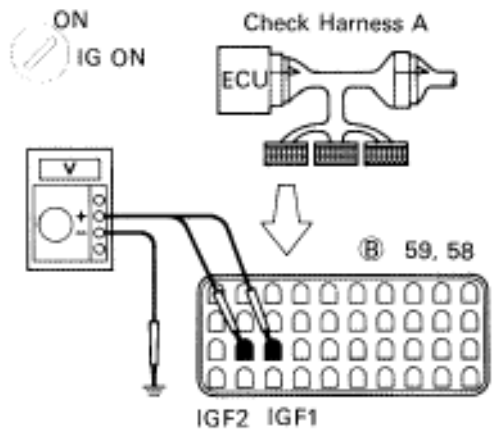	**P** (2) Disconnect igniter connector. (2) Connect the Check Harness A. (See page TR–30). (2) Turn ignition switch on. **C** Measure Voltage between terminals IGF1, 2 or engine & ECT ECU connector and body ground. **OK** **Voltage: 4 – 6 V**

BE6653
FI6501

OK

NG **Replace igniter.*1**

Check and replace engine & ECT ECU.	*1: When dia. code 14 is displayed, replace the igniter with 5 wire harness. (extra wire is for tachometer). When diag. code 15 is displayed, replace the igniter with 4 wire harness.

WhereEverybodyKnowsYourName

4 **Check voltage between terminals IGT1, 2 of engine and & ECT ECU connector and body ground.**

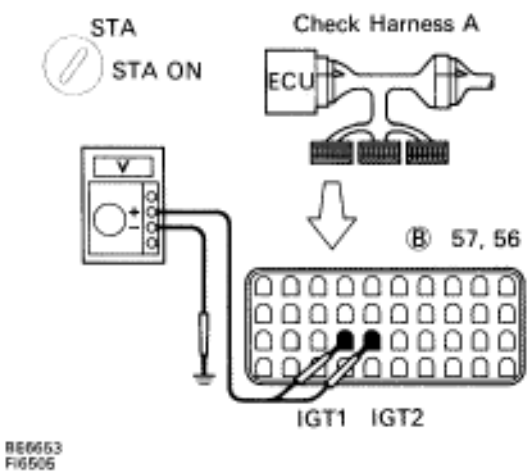

P Connect the Check Harness A.
(See page TR–30).

C Measure voltage between terminals IGT1, 2 of engine & ECT ECU connector and body ground when engine is cranked.

OK **Voltage:** **0.5 – 1.0 V**
(Neither 0 V nor 5 V)

Reference **INSPECTION USING OSCILLOSCOPE**

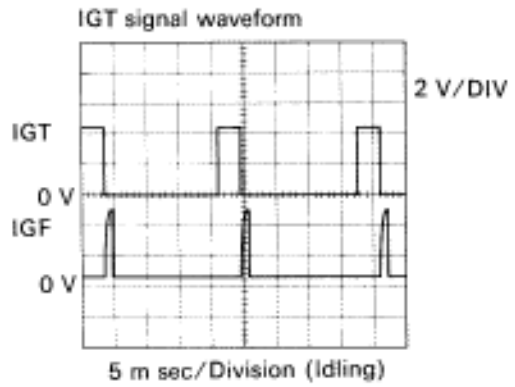

- During cranking or idling, check waveform between terminals IGT1, IGT2 and E1 of engine & ECT ECU.

HINT: The correct waveform appears as shown in the illustration on the left, with rectangle waves.

OK

NG **Go to step [9].**

5 **Check voltage between terminal 3 of No. 1, No. 2 igniter connectors and body ground.**

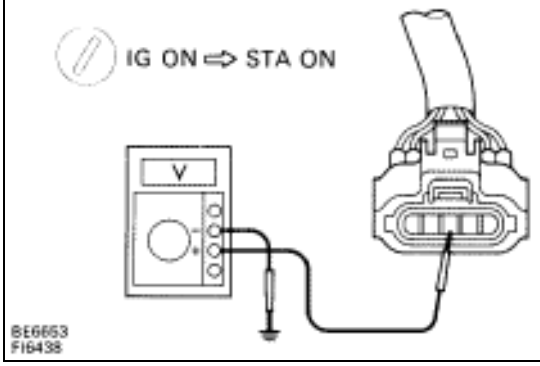

P Disconnect igniter connector.

C Mesure voltage between terminal 3 of No. 1, No. 2 igniter connectors and body ground, when ignitino switch is turned to “ON” and “STA” position.

OK **Voltage:** **10 – 14 V**

OK

NG **Go to step [8].**

WhereEverybodyKnowsYourName

6	**Check for open and short in harness and connector between ignition relay and ignition coil, ignition coil and igniter (See page IN–27).**

OK → **NG** → **Repair or replace harness or connector**

#	**Check ignition coil.**

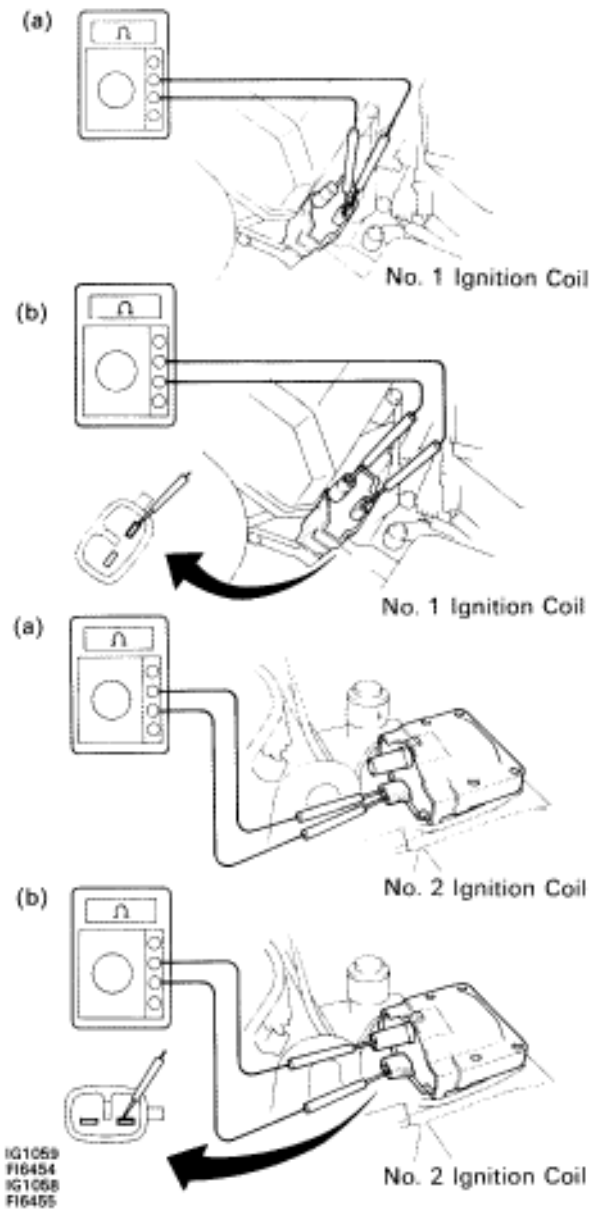

P Disconnect ignition coil connector.
(For No. 1 ignition coil (on left bank), remove the battery)

C (2) Check primary coil.
Measure resistance between terminals of ignition coil connector.

(2) Check secondary coil.
Measure resistance between terminal 1 of ignition coil connector and high–tension terminal.

OK

	Resistance
(a) Primary Coil (Cold)	0.40 – 0.50 Ω
(b) Secondary Coil (Cold)	10.2 – 13.8 kΩ

OK → **NG** → **Replace ignition coil.**

Replace Igniter. *1	*1: When diag. code 14 is displayed, replace the igniter with 5 wire harness. (extra wire is for tachometer). When diag. code 15 is displayed, replace the igniter with 4 wire harness

WhereEverybodyKnowsYourName

8 Check Ignition Relay.

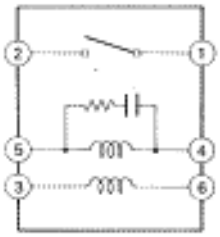

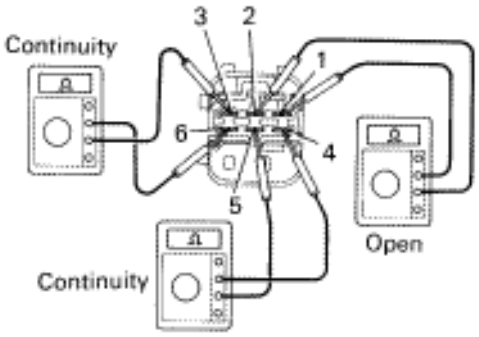

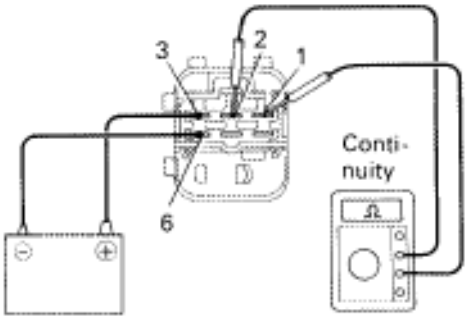

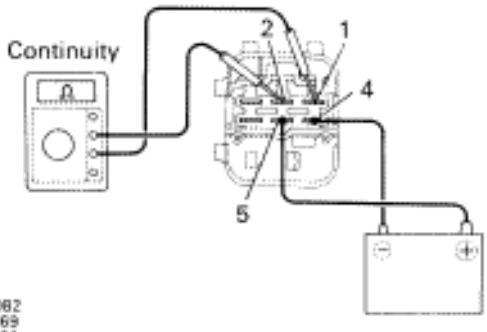

IG1082
FI4169
FI4170
FI4171

P Remove ignition relay.

C Check continuity between terminals of ignition relay shown below.

OK

Terminals 1 and 2	Open
Terminals 3 and 6	Continuity (Reference value 22 Ω)
Terminals 4 and 5	Continuity (Reference value 107 Ω)

C (2) Apply battery voltage between terminals 3 and 6, 4 and 5.

(2) Check continuity between terminals 1 and 2.

OK

Terminals 1 and 2	Continuity

OK

NG **Replace ignition relay.**

Check and repair harness or connector between battery and ignition relay, ignition relay and igniter.

WhereEverybodyKnowsYourName

9	Disconnect igniter connector and check voltage between terminals IGT1, 2 of engine & ECT ECU connector and body ground.

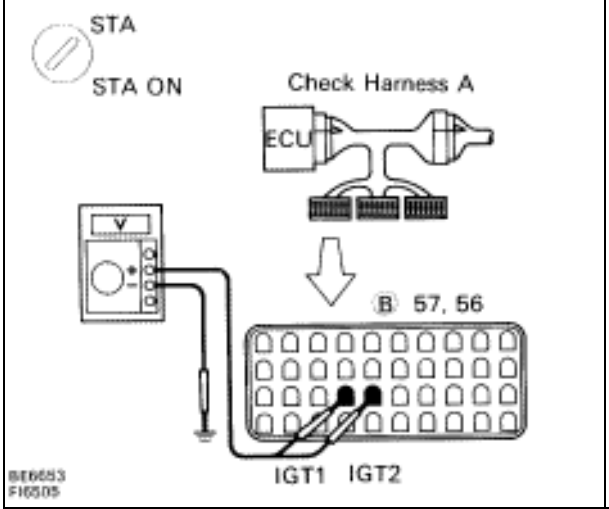

P Disconnect igniter connector.
Connect engine & ECT ECU connector.

C Measure voltage between terminals IGT1, 2 of engine & ECT ECU connector and body ground when engine is cranked.

OK **Voltage:** **0.5 – 1.0 V (Neither 0 V nor 5 V)**

Reference **INSPECTION USING OSCILLOSCOPE**

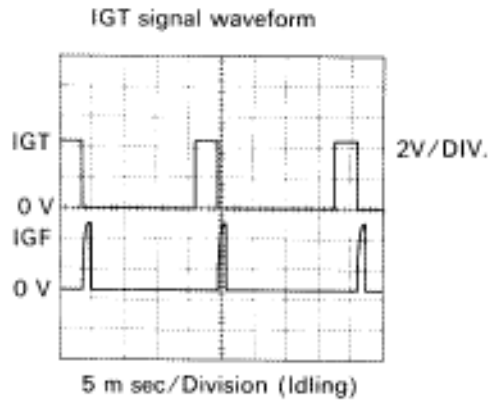

- During cranking or idling, measure between terminals IGT1, IGT2 and E1 of engine & ECT ECU.

HINT: The correct waveform appears as shown in the illustration on the left, with rectangle waves.

NG → **OK** → **Replace igniter .*1**

10	Check for Open and short in harness and connector in IGT signal circuit between engine & ECT ECU and igniter (See page IN–27).

OK → **NG** → **Repair or replace harness or connector.**

Check and replace engine & ECT ECU.	*1: When diag. code 14 is displayed, replace the igniter with 5 wire harness. (extra wire is for tachometer). When diag. code 15 is displayed, replace the igniter with 4 wire harness

WhereEverybodyKnowsYourName

Diag. Code 16	ECT Control Signal Malfunction

CIRCUIT DESCRIPTION

The signal from the ECT CPU retards the ignition timing of the engine during ECT gear shifting, thus momentarily reducing torque output of the engine for smooth clutch operation inside the transmission and reduced shift shock.
If the ECU records the diagnostic code ”16” in memory, it prohibits the torque control of the ECT which performs smooth gear shifting.

DTC No.	DTC Detecting Condition	Trouble Area
16	Fault in communications between the engine CPU and ECT CPU in the ECU.	▼ECU

If the ECU records the diagnostic trouble code ”16” in memory, it prohibits the torque control of the ECT which performs smooth gear shifting.

DIAGNOSTIC CHART

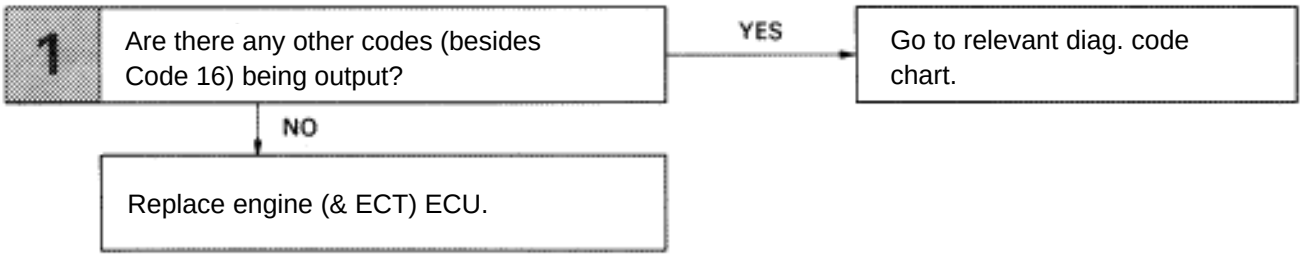

WhereEverybodyKnowsYourName

Diag. Code 21, 28 | Main Oxygen Sensor Circuit

— CIRCUIT DESCRIPTION

To obtain a high purification rate for the CO, HC and NOx components of the exhaust gas, a three–way catalyst is used, but for most efficient use of the three–way catalyst, the air–fuel ratio must be precisely controlled so that it is always close to the stoichiometric air–fuel ratio.
The oxygen sensor has the characteristic whereby its output voltage changes suddenly in the vicinity of the stoichiometric air–fuel ratio. This characteristic is used to detect the oxygen concentration in the exhaust gas and provide feedback to the computer for control of the air–fuel ratio.
When the air–fuel ratio becomes LEAN, the oxygen concentration in the exhaust increases and the oxygen sensor informs the ECU of the LEAN condition (small electromotive force: 0 V).
When the air–fuel ratio is RICHER than the stoichiometric air–fuel ratio the oxygen concentration in the exhaust gas is reduced and the oxygen sensor informs the ECU of the RICH condition (large electromotive force: 1V).
The ECU judges by the electromotive force from the oxygen sensor whether the air–fuel ratio is RICH or LEAN and controls the injection time accordingly. However, if malfunction of the oxygen sensor causes output of abnormal electromotive force, the ECU is unable to perform accurate air–fuel ratio control.

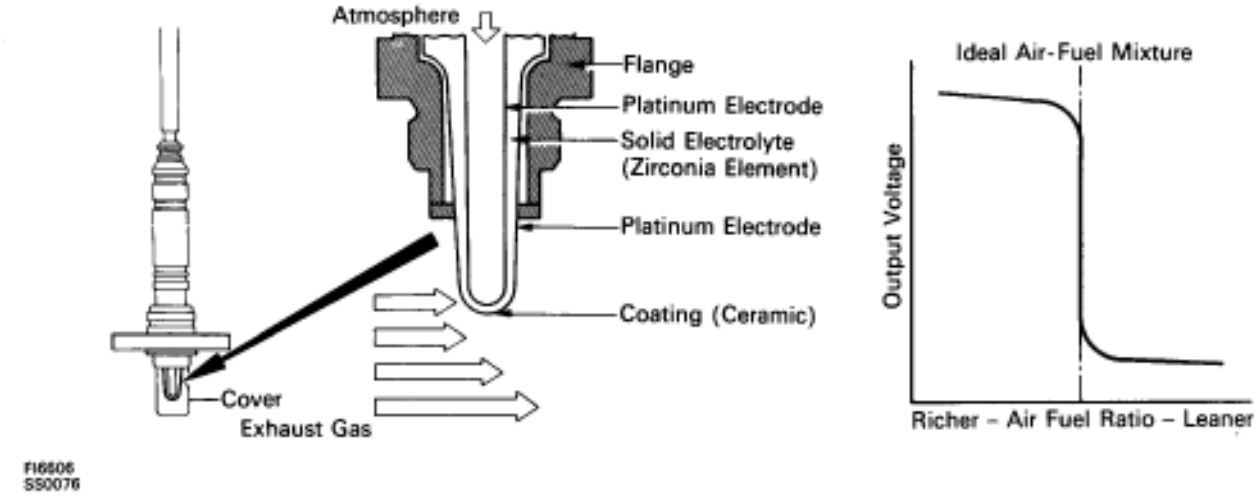

DTC No.	DTC Detecting Condition	Trouble Area
21 . 28	(1) Main oxygen sensor signal voltage is reduced to tbetween 0.35 V and 0.70 V for 60 sec. under conditions (a) ≦ (d). (2 trip detection logic)* (a) Coolant temp.: Between 80°C (176°F) and 95°C (203°F). (b) Engine speed: 1,500 rpm or more (c) Load driving (EX. ECT in 4th (5th for M/T) speed, A/C ON, Flat road, 50 mph (80km/h)). (d) Main oxygen sensor signal voltage: Alternating above and below 0.45 V.	▼Main oxygen sensor circuit ▼Main oxygen sensor
	(2) Main oxygen sensor signal voltage exceeds 0.70 V for 3 sec. or more during fuel cut.	

*: See page TR–25..
HINT: Diag. trouble code 21 is for the front side main oxygen sensor circuit. Diag. trouble code 28 is for the rear side main oxygen sensor circuit.

WhereEverybodyKnowsYourName

CIRCUIT DESCRIPTION (Cont'd)

DIAGNOSIS CODE DETECTION DRIVING PATTERN

Purpose of the driving pattern.

(a) To simulate diag. code detecting condition after diag. code is recorded.

(b) To check that the malfunction is corrected when the repair is completed confirming that diag. code is no longer detected.

Malfunction: Main Oxygen Sensor Deterioration

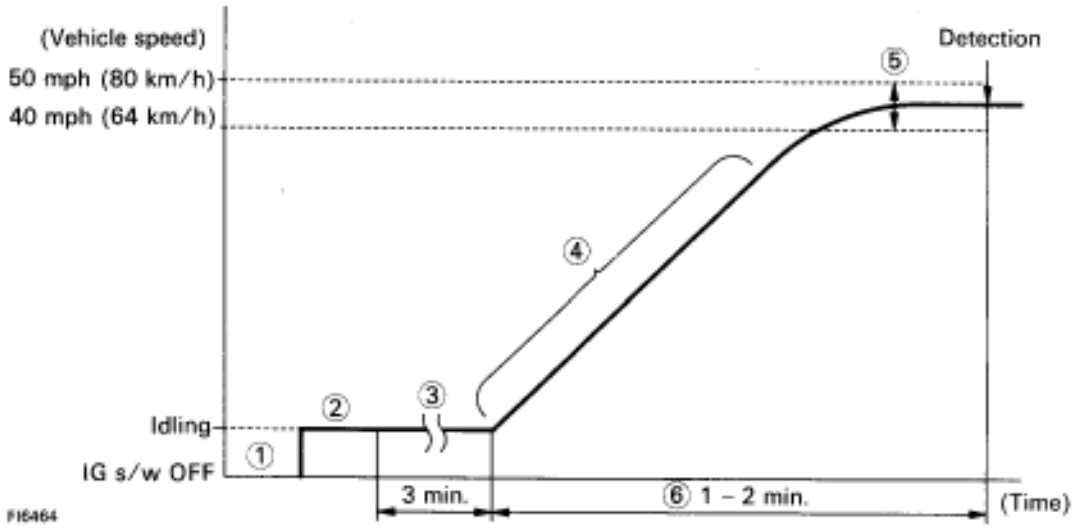

❷ Disconnect the EFI fuse (15 A) for 10 sec. or more, with IG switch OFF.
Initiate test mode (Connect terminal TE2 and E1 of check connector or TDCL with IG switch OFF).

→ Start the engine and warm up with all ACC switch OFF.

❹ After the engine is warmed up, let it idle for 3 min.

③ After performing the idling in , perform gradual acceleration with in the range 1,300 1,700 rpm (centered around 1,500 rpm) with the A/C switch ON and D range for A/T (5th for M/T).
(Take care that the engine speed does not fall below 1,200 rpm when shifting. Gradually depress the accelerator pedal and kept it. Steady so that engine braking does not occur).

⑤ Maintain the vehicle speed at 40–50 mph (64–80 km/h).

⑤ Keep the vehicle running for 1–2 min. after starting acceleration.

HINT: If a malfunction exists, the "CHECK" engine warning light will light up after approx. 60 sec. from the start of acceleration.

NOTICE: If the conditions in this test are not strictly followed, detection of the malfunction will not be possible.

WhereEverybodyKnowsYourName

DIAGNOSTIC CHART

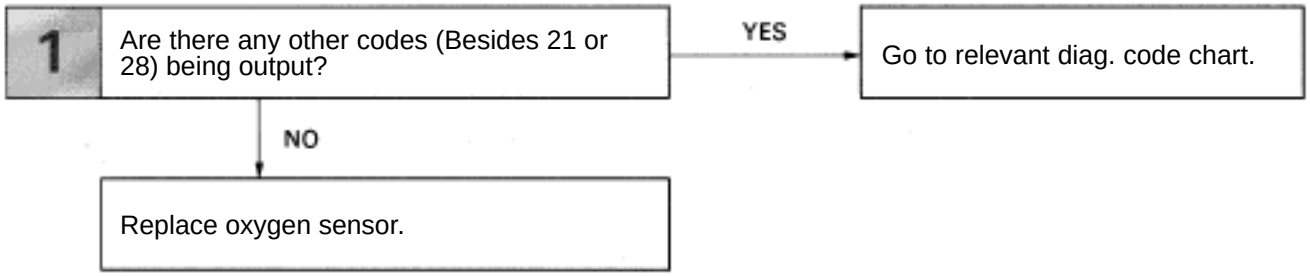

HINT: If diag. code 21 is output, replace the front side main oxygen sensor.
If diag. code 28 is output, replace the rear side main oxygen sensor.

WIRING DIAGRAM

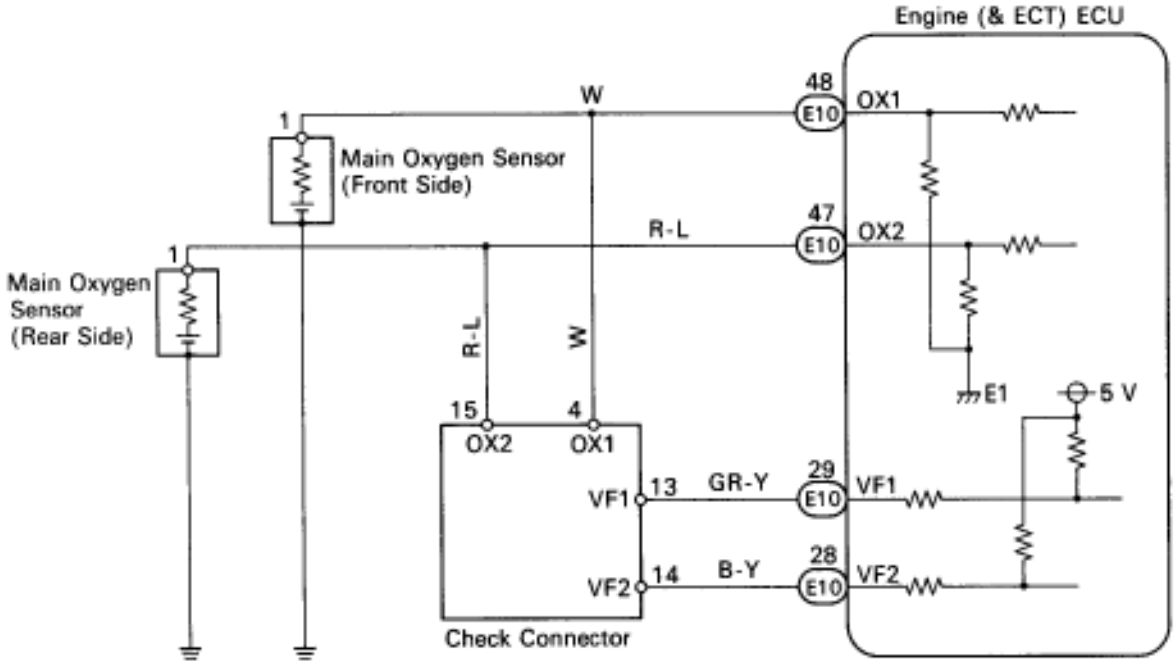

WhereEverybodyKnowsYourName

Reference INSPECTION USING OSCILLOSCOPE

Ox signal waveform

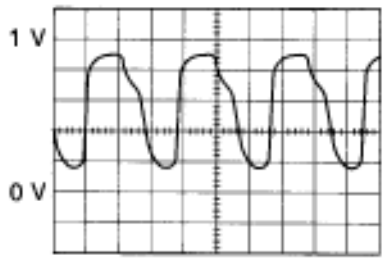

200 m sec./Division

- With the engine racing (4,000 rpm) measure between terminals OX1, OX2 and E1 of engine (& ECT) ECU.

HINT: The correct waveform appears as shown in the illustration on the left, oscillating between approx. 0.1 V and 0.9 V

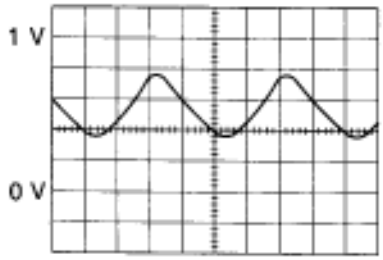

200 m sec./Division

If the oxygen sensor is deteriorated, the amplitude of the voltage is reduced as shown on the left.

FI6514
FI6515

WhereEverybodyKnowsYourName

Diag. Code 16 — ECT Control Signal Malfunction

CIRCUIT DESCRIPTION

The signal from the ECT CPU retards the ignition timeing of the engine during ECT gear shifting, thus momentarily reducing torque output of the engine for smooth clutch operation inside the transmission and reduced shift shock.

Code No.	Diagnostic Code Detecting Condition	Trouble Area
16	Fault in communications between the engine CPU and ECT CPU in the ECU.	ECU

If the ECU records the diagnostic code “16” in memory, it prohibits the torque control of the ECT which performs smooth gear shifting.

DIAGNOSTIC CHART

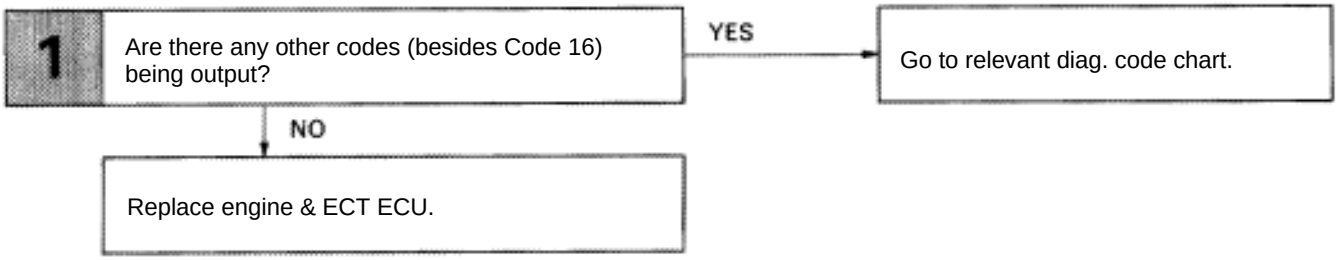

WhereEverybodyKnowsYourName

Diag. Code 21, 28 | Main Oxygen Sensor Circuit

— CIRCUIT DESCRIPTION

To obtain a high purification rate for the CO, HC and NOx components of the exhaust gas, a three–way catalyst is used, but for most efficient use of the three–way catalyst, the air–fuel ratio must be precisely controlled so that it is always close to the stoichiometric air–fuel ratio.
The oxygen sensor has the characteristic whereby its output voltage changes suddenly in the vicinity of the stoichiometric air–fuel ratio. This characteristic is used to detect the oxygen concentration in the exhaust gas and provide feedback to the computer for control of the air–fuel ratio.
When the air–fuel ratio becomes LEAN, the oxygen concentration in the exhaust increases and the oxygen sensor informs the ECU of the LEAN condition (small electromotive force: O V).
When the air–fuel ratio is RICHER than the stoichiometric air–fuel ratio the oxygen concentration in the exhaust gas is reduced and the oxygen sensor informs the ECU of the RICH condition (large electromotive force: 1V).
The ECU judges by the electromotive force from the oxygen sensor whether the air–fuel ratio is RICH or LEAN and controls the injection time accordingly. However, if malfunction of the oxygen sensor causes output of abnormal electromotive force, the ECU is unable to perform accurate air–fuel ratio control.
The main oxygen sensors include a heater which heats the Zirconia element. The heater is controlled by the ECU. When the intake air volume is low (the temperature of the exhaust gas is low) current flows to the heater to heat the sensor for accurate oxygen concentration detection.

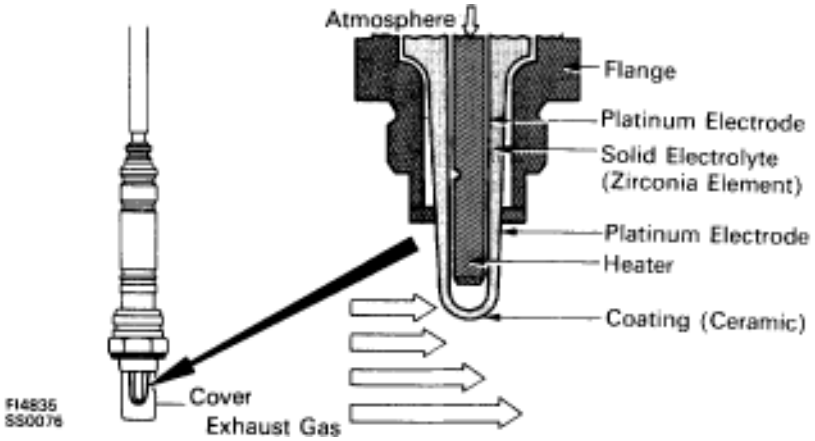

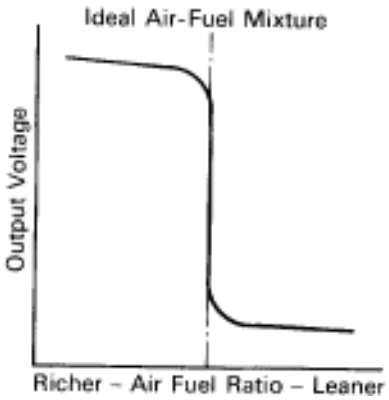

Code No.	Diagnostic Code Detecting Condition	Trouble Area
21 . 28	(1) Open or short in heater circuit of main oxygen sensor for 0.5 sec. or more.	▼Open or short in heater circuit of main oxygen sensor. ▼Main oxygen sensor heater ▼ECU
	(2) Main oxygen sensor signal voltage is reduced to between 0.35 V and 0.70 V for 60 sec. under conditions (a) ~ (d). (2 trip detection logic)* (a) Coolant temp.: Between 70°C (158°F) and 95°C (203°F). (b) Engine speed: 1,500 rpm or more. (c) Load driving (EX. ECT in 4th speed, A/C ON, Flat road, 50 mph (80km/h)). (d) Main oxygen sensor signal voltage: Alternating above and below 0.45 V.	▼Main oxygen sensor circuit ▼Main oxygen sensor

*: See page TR–21.

HINT: Diag. code 21 is for the left bank main oxygen sensor circuit. Diag. code 28 is for the right bank main oxygen sensor circuit.

WhereEverybodyKnowsYourName

— CIRCUIT DESCRIPTION (Cont'd) —

DIAGNOSIS CODE DETECTION DRIVING PATTERN

Purpose of the driving pattern.

(a) To simulate diag. code detecting condition after diag. code is recorded.

(b) To check that the malfunction is corrected when the repair is completed confirming that diag. code is no longer detected.

Malfunction: Main Oxygen Sensor Deterioration

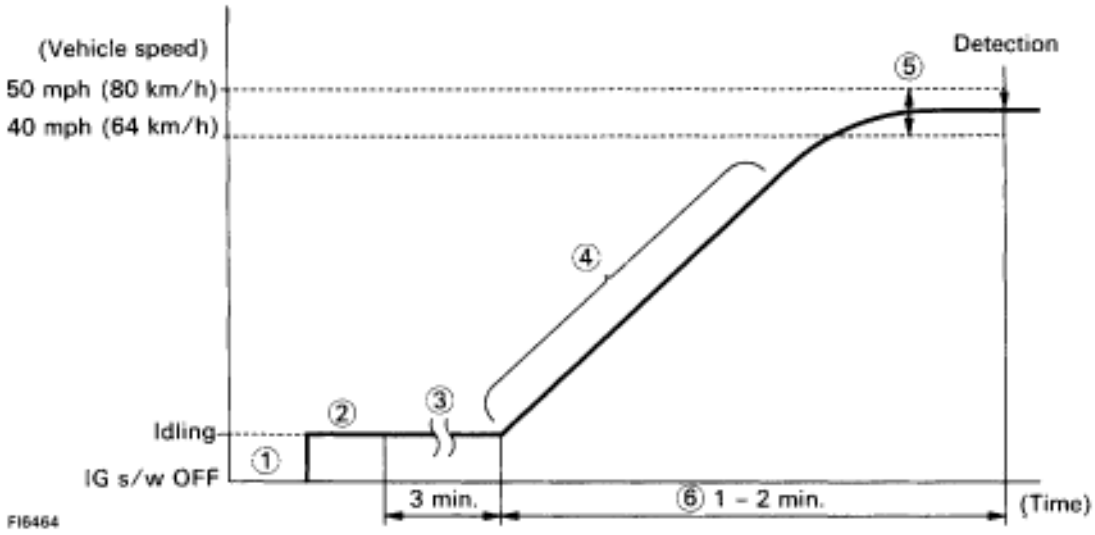

→ Initiate test mode (See page TR–12).

❹ Start engine and warm up.

③ After engine is warmed up, let it idle for 3 min.

⑤ With the A/C ON and the transmission in D range (O/D ON), perform gradual acceleration with in the range 1,300 – 1,700 rpm (centered around 1,500 rpm).
(Take care that the engine speed does not fall below 1,200 rpm when shifting. Gradually depress the accelerator pedal and kept it. Steady so that engine braking does not occur.)

⑤ Maintain the vehicle speed at 40 – 50 mph (64 – 80 km/h).

⑦ Keep the vehicle running for 1 – 2 min. after starting acceleration.

HINT: If a malfunction exists, the "CHECK" engine warning light will light up after approx. 60 sec. from the start of acceleration.

NOTICE: If the conditions in this test are not strictly followed, detection of the malfunction will not be possible.

WhereEverybodyKnowsYourName

DIAGNOSTIC CHART

HINT: If diag. code ”21” is output, check the left bank main oxygen sensor circuit. If diag. code ”28” is output, check the right bank main oxygen sensor circuit.

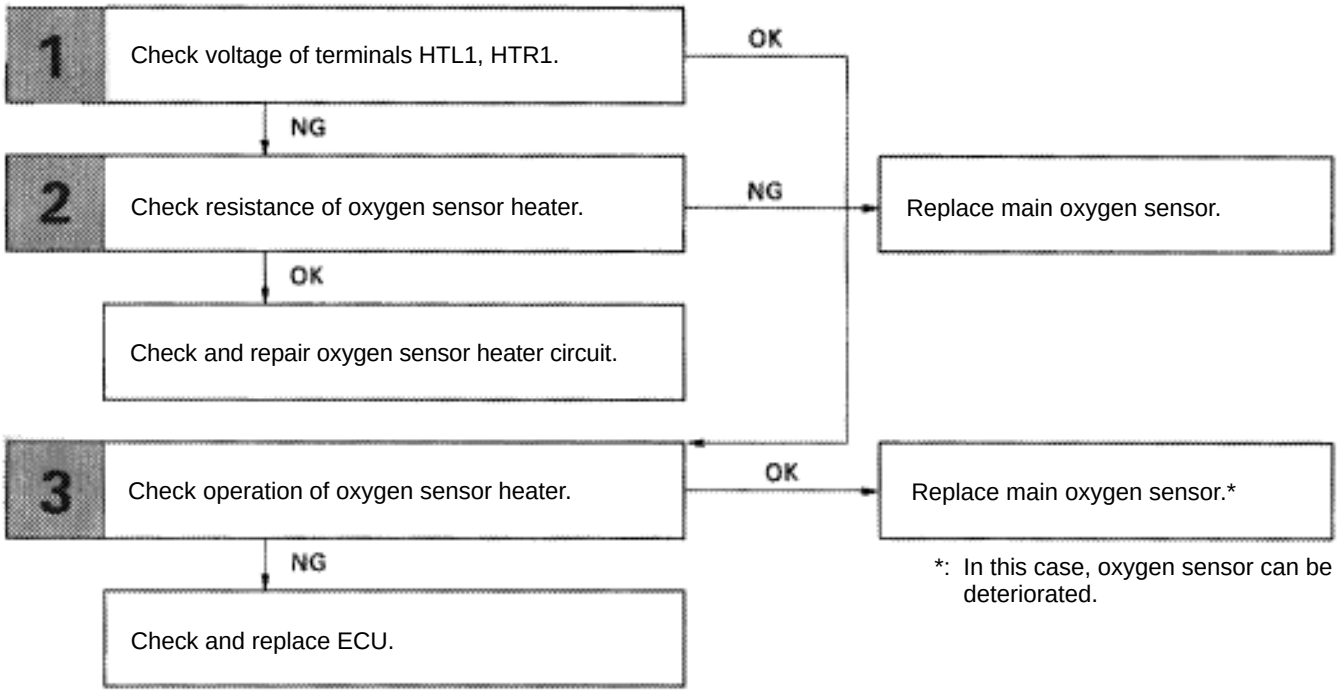

*: In this case, oxygen sensor can be deteriorated.

WIRING DIAGRAM

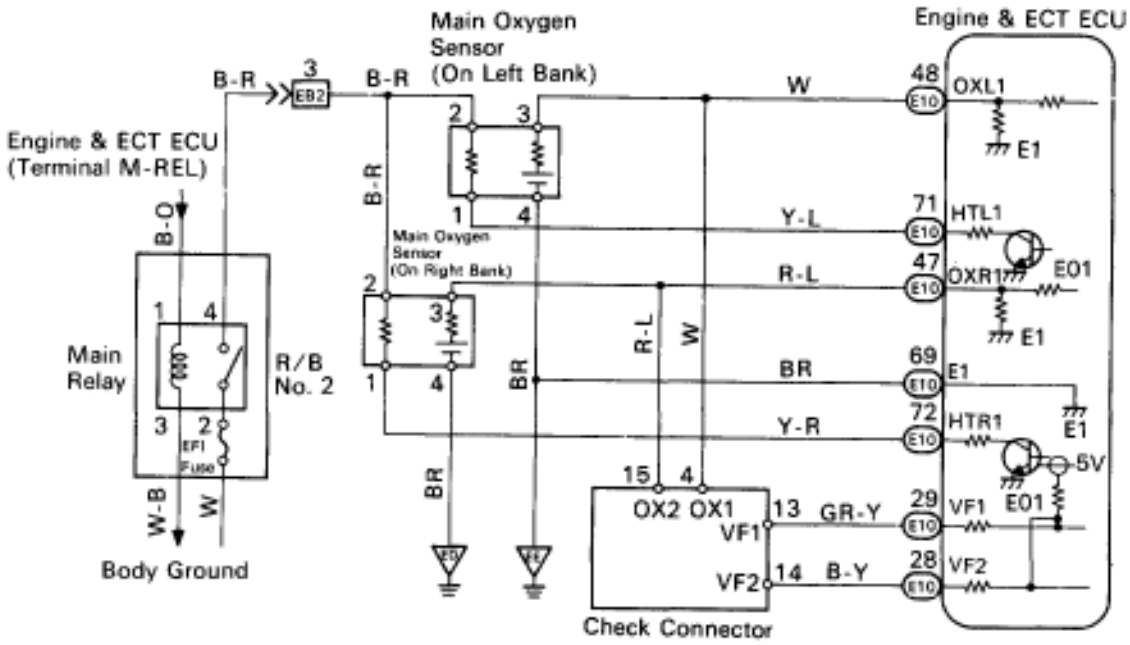

WhereEverybodyKnowsYourName

INSPECTION PROCEDURE

1	Disconnect the engine & ECT ECU connector, check voltage between terminals HTL1, HTR1 of engine & ECT ECU connector and body ground.

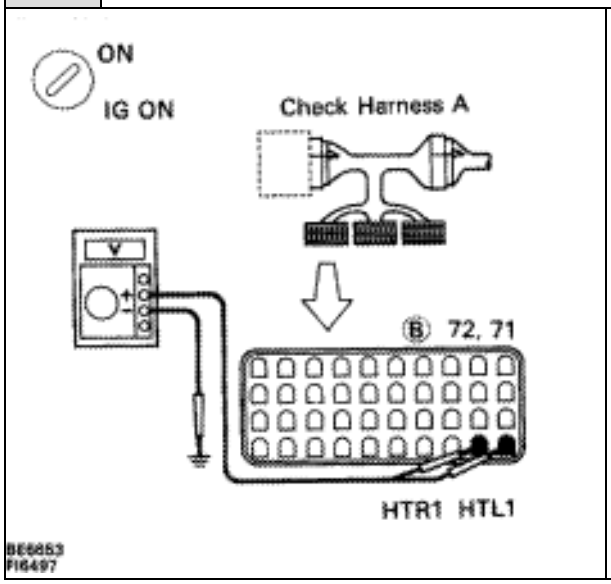

P (2) Connect the Check Harness A.
(See page TR–30)
(2) Disconnect engine & ECT ECU connector.
(2) Turn ignition switch on.

C Measure voltage beween terminals HTL1, HTR1 of engine & ECT ECU connector and body ground.

OK **Voltage: 10 – 14 V**

OK

NG **Go to step [3].**

2	Check main oxygen sensor heater.

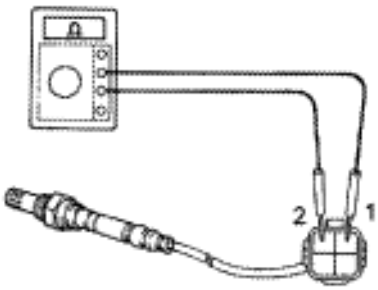

P Disconnect main oxygen sensor connector.

C Measure resistance between terminals 1 and 2 of main oxygen sensor connector.

OK **Resistance: 5.1 – 6.3 at 20°C (68°F)**

OK

NG **Replace main oxygen sensor.**

Check and repair harness or connector between main relay and main oxygen sensor, main oxygen sensor and engine & ECT ECU.

WhereEverybodyKnowsYourName

3 **Check voltage between terminals HTL1, HTR1 of engine & ECT ECU connector and body ground.**

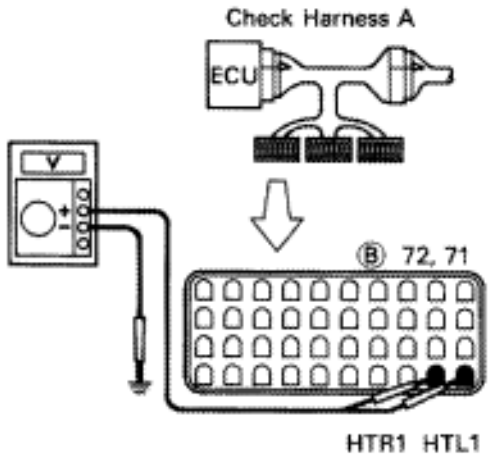

P (1) Connect engine & ECT ECU connector.
(2) Warm up engine to normal operating temperature.

C Measure voltage between terminals of HTL1, HTR1 of engine & ECT ECU connector and body ground, when engine is idling and racing at 4,000 rpm.

OK

	Voltage
Idling	0 V
Racing at 4,000 rpm	10 – 14 V

Hint In the 4,000 rpm racing check, continue engine racing at 4,000rpm for approx. 20 seconds or more.

OK

NG **Replace main oxygen sensor.***

*: In this case, oxygen sensor can be deteriorated.

Check and replace engine & ECT ECU.

Reference | INSPECTION USING OSCILLOSCOPE

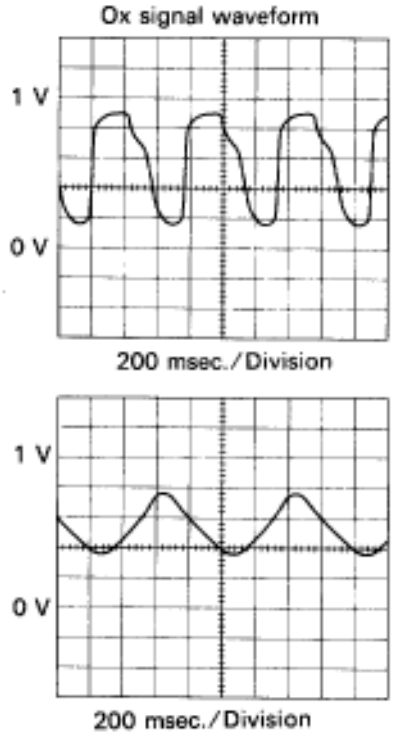

- With the engine racing (4,000 rpm) measure between terminals OXL1, OXR2 and E1 of engine & ECT ECU.

HINT: The correct waveform appears as shown in the illustration on the left, oscillating between approx. 0.1 V and 0.9 V

If the oxygen sensor is deteriorated, the amplitude of the voltage is reduced as shown on the left.

WhereEverybodyKnowsYourName

–MEMO–

WhereEverybodyKnowsYourName

Diag. Code 22 | Water Temp. Sensor Circuit

CIRCUIT DESCRIPTION

The water temperature sensor senses the coolant temperature. A thermistor built in the sensor changes the resistance value according to the coolant temperature. The lower the coolant temperature, the greater the thermistor resistance value, and the higher the coolant temperature, the lower the thermistor resistance value (See Fig. 1.).
The water temperature sensor is connected to the ECU (See next page). The 5 V power source voltage in the ECU is applied to the water temperature sensor from the terminal THW via a resistor R. That is, the resistor R and the water temperature sensor are connected in series. When the resistance value of the water temperature sensor changes in accordance with changes in the coolant temperature, the potential at the terminal THW also changes. Based on this signal, the ECU increases the fuel injection volume to improve driveability during cold engine operation. If the ECU records the diagnostic code 22, it operates the fail safe function, keeping the coolant temperature at a constant 80˚C (176˚F).

(fig-1)

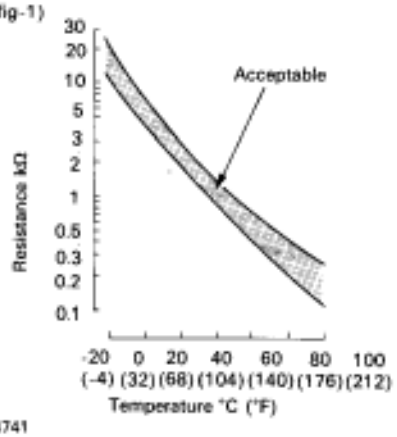

< Reference >

Water Temp. ˚C (˚F)	Resistance (k)	Voltage (V)
–20 (–4)	16.0	4.3
0 (32)	5.9	3.4
20 (68)	2.5	2.4
40 (104)	1.2	1.5
60 (140)	0.6	0.9
80 (176)	0.3	0.5
100 (212)	0.2	0.3

Code No.	Diagnostic Code Detecting System	Trouble Area
22	Open or short in water temp. sensor circuit for 0.5 sec. or more.	▼Open or short in water temp. sensor circuit ▼Water temp. sensor ▼ECU

WhereEverybodyKnowsYourName

DIAGNOSTIC CHART

HINT: If diagnostic codes ”22” (water temperature sensor circuit), ”24” (intake air temperature sensor circuit) and ”41” (throttle position sensor circuit) are output simultaneously, E2 (sensor ground) may be open.

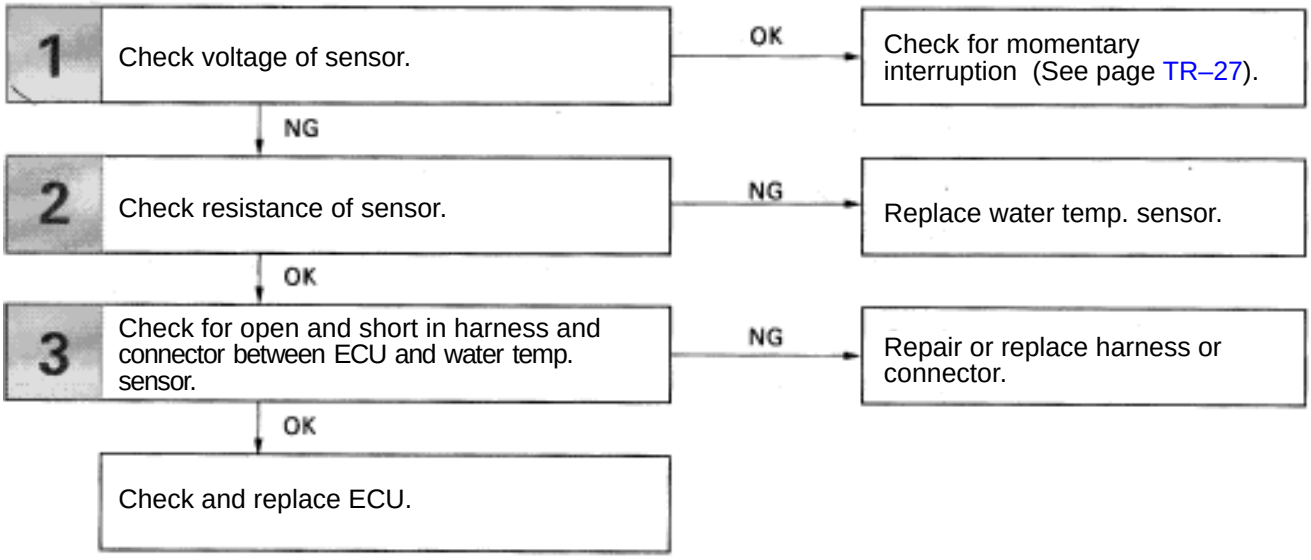

WIRING DIAGRAM

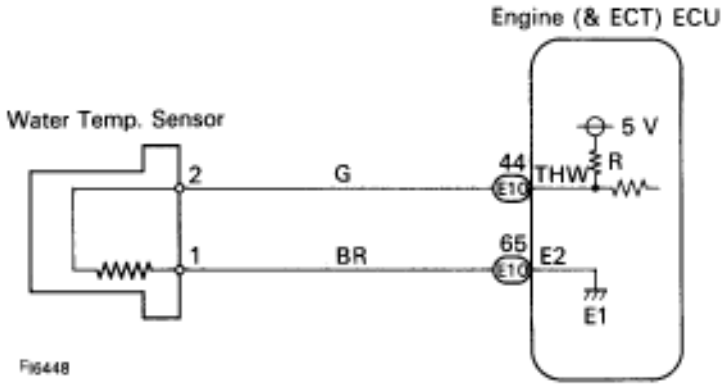

WhereEverybodyKnowsYourName

INSPECTION PROCEDURE

HINT: If diagnostic codes ”22” (water temperature sensor circuit), ”24” (intake air temperature sensor circuit) and ”41” (throttle position sensor circuit) are output simultaneously, E2 (sensor ground) may be open.

1 Check voltage between terminals THW and E2 of engine (&ECT) ECU connector.

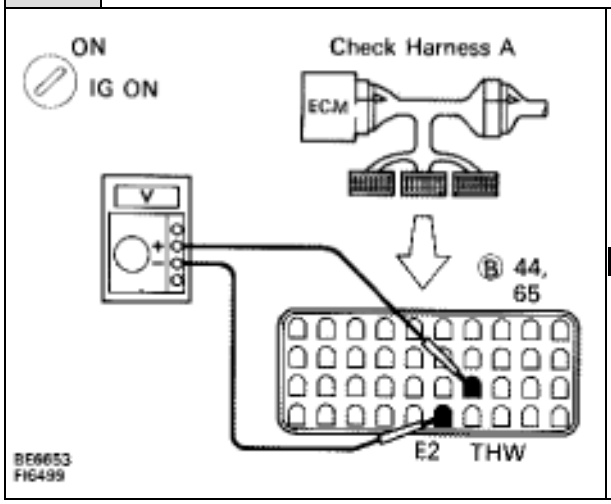

P 1. Connect the Check Harness A. (See page TR–34)
2. Turn ignition switch on.

C Measure voltage between terminals THW and E2 of engine (& ECT) ECU connector.

OK

Engine Coolant Temp. °C (°F)	Voltage
20 (68) (Engine is cool)	1 – 3 V
80 (176) (Engine is hot)	0.1 – 1.0 V

NG

OK **Check for momentary interruption (See page TR–27).**

2 Check water temp. sensor.

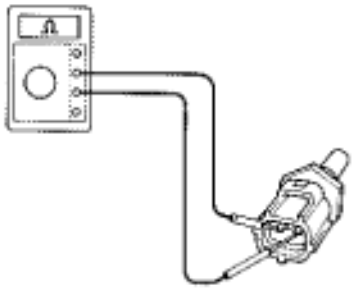

P Disconnect the water temp. sensor connector.

C Measure resistance between terminals.

OK **Resistance is within Acceptable Zone on chart.**

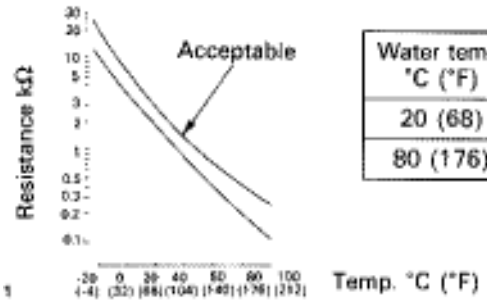

Water temp. °C (°F)	Resistance
20 (68)	2 – 3 kΩ
80 (176)	0.2 – 0.4 kΩ

OK

NG **Replace water temp. sensor.**

3 Check for open and short in harness and connector between engine (& ECT) ECU and water temp. sensor (See page IN–27).

OK

NG **Repair or replace harness or connector.**

Check and replace engine (& ECT) ECU.

WhereEverybodyKnowsYourName

Diag. Code 22 | Water Temp. Sensor Circuit

— CIRCUIT DESCRIPTION

The water temperature sensor senses the coolant temperature. A thermistor built in the sensor changes the resistance value according to the coolant temperature. The lower the coolant temperature, the greater the thermistor resistance value, and the higher the coolant temperature, the lower the thermistor resistance value (See Fig. 1.).
The water temperature sensor is connected to the ECU (See next page). The 5 V power source voltage in the ECU is applied to the water temperature sensor from the terminal THW via a resistor R. That is, the resistor R and the water temperature sensor are connected in series. When the resistance value of the water temperature sensor changes in accordance with changes in the coolant temperature, the potential at the terminal THW also changes. Based on this signal, the ECU increases the fuel injection volume to improve driveability during cold engine operation. If the ECU records the diagnostic code 22, it operates the fail safe function, keeping the coolant temperature at a constant 80°C (176°F).

(fig-1)

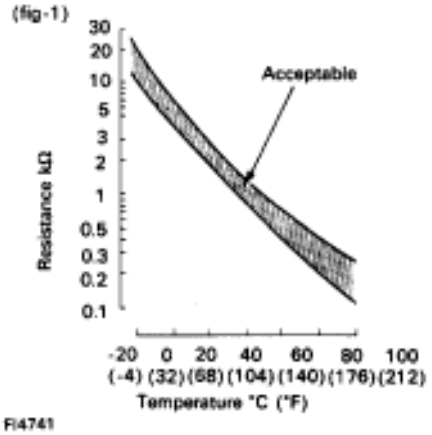

< Reference >

Water Temp. °C (°F)	Resistance (kΩ)	Voltage (V)
-20 (-4)	16.0	4.3
0 (32)	5.9	3.4
20 (68)	2.5	2.4
40 (104)	1.2	1.5
60 (140)	0.6	0.9
80 (176)	0.3	0.5
100 (212)	0.2	0.3

Code No.	Diagnostic Code Detecting Condition	Trouble Area
22	Open or short in water temp. sensor circuit for 0.5 sec. or more.	• Open or short in water temp. sensor circuit • Water temp. sensor • ECU

WhereEverybodyKnowsYourName

DIAGNOSTIC CHART

HINT: If diagnostic codes ”22” (water temperature sensor circuit), ”24” (intake air temperature sensor circuit) and ”41” (throttle position sensor circuit) are output simultaneously, E2 (sensor ground) may be open.

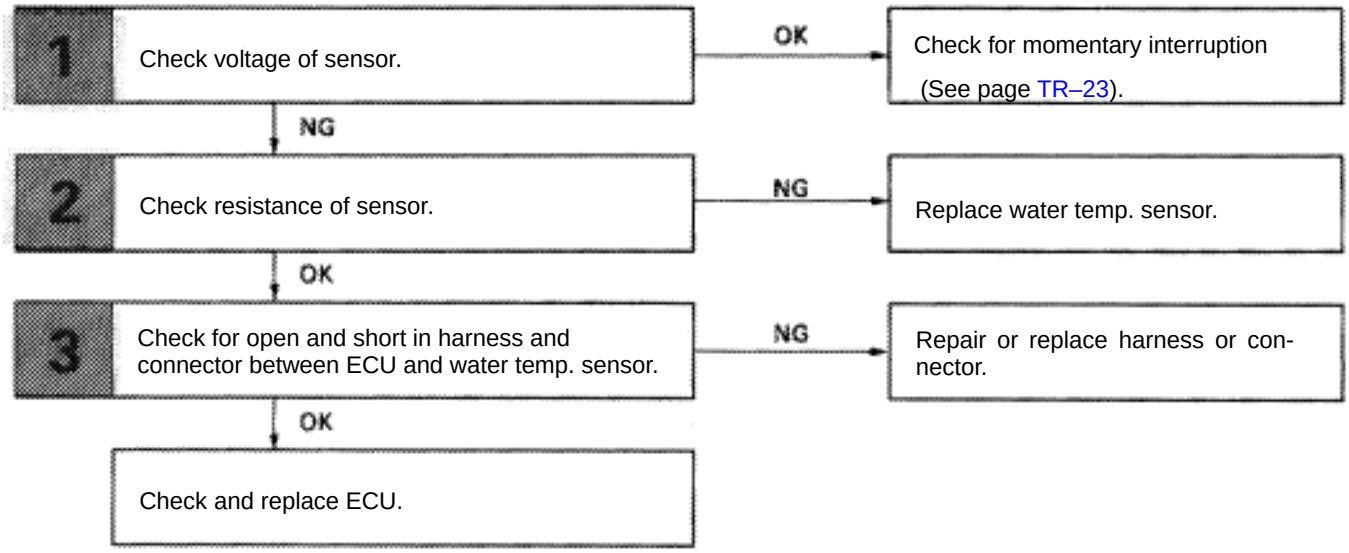

WIRING DIAGRAM

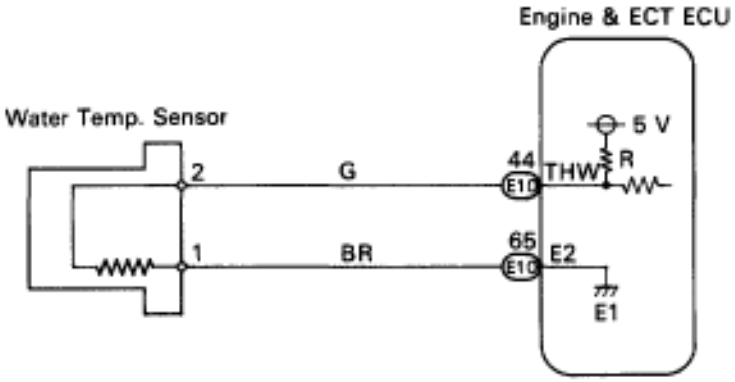

F6448

WhereEverybodyKnowsYourName

INSPECTION PROCEDURE

HINT: If diagnostic codes ”22” (water temperature sensor circuit), ”24” (intake air temperature sensor circuit) and ”41” (throttle position sensor circuit) are output simultaneously, E2 (sensor ground) may be open.

1 **Check voltage between terminals THW and E2 of engine & ECT ECU connector.**

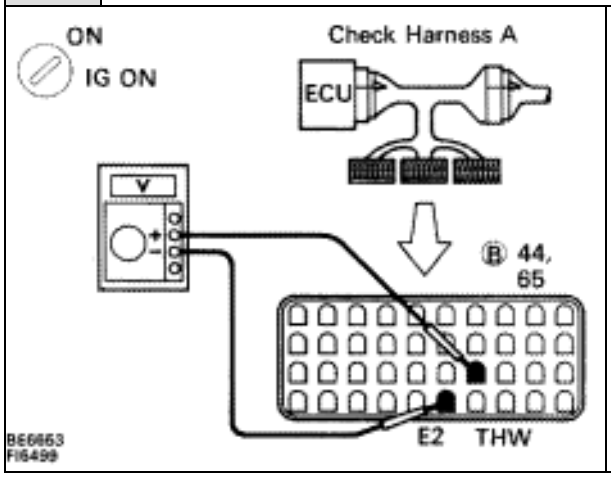

P (2) Connect the Check Harness A. (See page TR–30)

(2) Turn ignition switch on.

C Measure voltage between terminals THW and E2 and engine & ECT ECU connector.

OK

Water Temp. °C (°F)	Voltage
20 (68) (Engine is cool)	1 – 3 V
80 (176) (Engine is hot)	0.1 – 1.0 V

NG

OK **Check for momentary interruption (See Page TR–23).**

2 **Check water temp. sensor.**

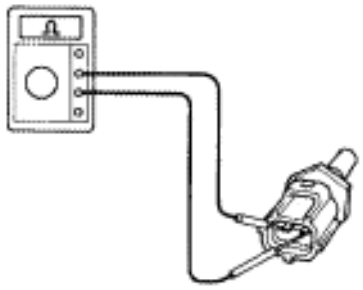

P Disconnect the water temp. sensor connector. (See page FI–99).

C Measure resistance between terminals.

OK **Resistance is within Acceptable Zone on chart.**

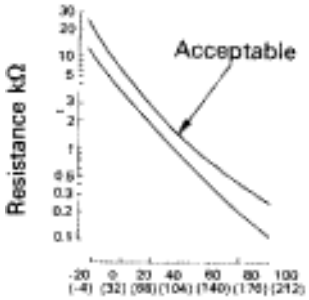

Water temp. °C (°F)	Resistance
20 (68)	2 – 3 kΩ
80 (176)	0.2 – 0.4 kΩ

OK

NG **Replace water temp. sensor.**

3 **Check for open and short in harness and connector between engine & ECT ECU and water temp. sensor (See page IN–27).**

OK

NG **Repair or replace harness or connector.**

Check and replace engine & ECT ECU.

WhereEverybodyKnowsYourName

–MEMO–

WhereEverybodyKnowsYourName

Diag. Code 25, 26	Air–Fuel Ratio Lean Malfunction Air–Fuel Ratio Rich Malfunction

CIRCUIT DESCRIPTION

Refer to page TR–62 for the circuit description.

Code No.	Diagnostic Code Detecting System	Trouble Area
25	(1) Main oxygen sensor voltage is 0.45 V or less (lean) for 90 sec. under conditions (a) and (b). (2 trip detection logic)*2 (a) Coolant temp.: 70˚C (158˚F) or more. (b) Engine speed: 1,500 rpm or more.	6 Open or short in main oxygen sensor circuit 6 Main oxygen sensor 6 Ignition system 6 ECU
	(2)*1 Difference of air–fuel ratio feedback compensation value between front (No. 1 3 cylinders) and rear (No. 4 6 cylinders) is more than 15 percentage for 20 sec. or more under conditions (a) and (b). (2 trip detection logic)*2 (a) Engine speed: 2,000 rpm or more. (b) Coolant temp.: Between 60˚C (140˚F) and 95˚C (203˚F).	6 Open and short in injector circuit. 6 Fuel line pressure (injector leak, blockage) 6 Mechanical system malfunction (skipping teeth of timing belt) 6 Ignition system 6 Compression pressure (foreign object caught in valve) 6 Air flow meter (air intake) 6 ECU
	(3)*1 Engine speed varies by more than 15 rpm over the preceding crank angle period during a period of 20 sec. or more under conditions (a) and (b). (2 trip detection logic)*2 (a) Engine speed: Idling (b) Coolant temp.: Between 60˚C (140˚F) and 95˚C (203˚F).	6 Open and short in injector circuit. 6 Fuel line pressure (injector leak, blockage) 6 Mechanical system malfunction (skipping teeth of timing belt) 6 Ignition system 6 Compression pressure (foreign object caught in valve) 6 Air flow meter (air intake) 6 ECU
26*1	(1) Difference of air–fuel ratio feedback compensation value between front (No. 1 3 cylinders) and rear (No.4 6 cylinders) is more than 15 percentage for 20 sec. or more under conditions (a) and (b). (2 trip detection logic)*2 (a) Engine speed: 2,000 rpm or more. (b) Coolant temp.: Between 60˚C (140˚F) and 95˚C (203˚F).	6 Open and short in injector circuit. 6 Fuel line pressure (injector leak, blockage) 6 Mechanical system malfunction (skipping teeth of timing belt) 6 Ignition system 6 Compression pressure (foreign object caught in valve) 6 Air flow meter (air intake) 6 ECU
	(2) Engine speed varies by more than 15 rpm over the preceding crank angle period during a period of 20 sec. or more under conditions (a) and (b). (2 trip detection logic)*2 (a) Engine speed: Idling (b) Coolant temp.: Between 60˚C (140˚F) and 95˚C (203˚F).	6 Open and short in injector circuit. 6 Fuel line pressure (injector leak, blockage) 6 Mechanical system malfunction (skipping teeth of timing belt) 6 Ignition system 6 Compression pressure (foreign object caught in valve 6 Air flow meter (air intake) 6 ECU

*1: Only for USA specification vehicles.
*2: See page TR–25.

WhereEverybodyKnowsYourName

CIRCUIT DESCRIPTION (Cont'd)

DIAGNOSIS CODE DETECTION DRIVING PATTERN

Purpose of the driving pattern.

(a) To simulate diag. code detecting condition after diag. code is recorded.

(b) To check that the malfunction is corrected when the repair is completed confirming that diag. code is no longer detected.

Malfunction: Open or Short in Injector circuit, Injector Leak or Blockage

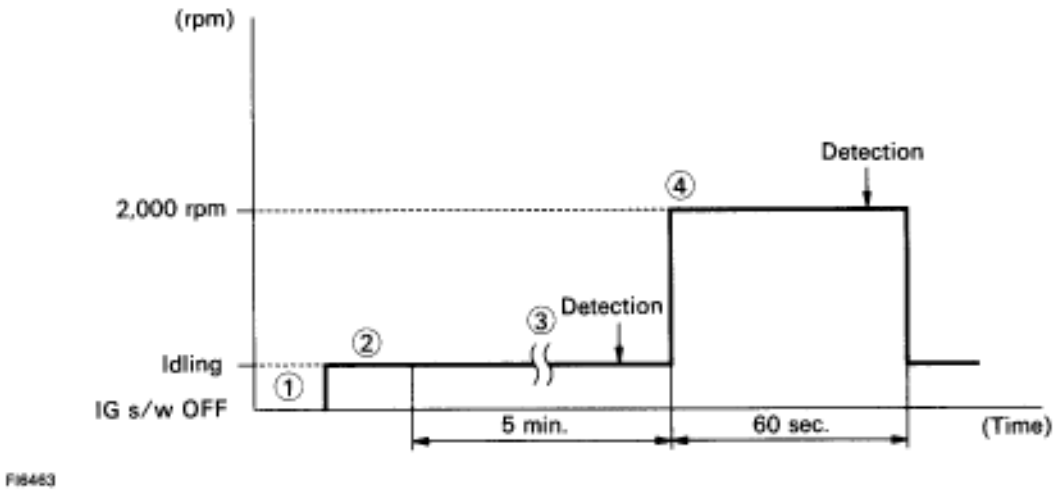

❷ Disconnect the EFI fuse (15 A) for 10 sec. or more. with IG switch OFF.
Initiate test mode (Connect terminal TE2 and E1 of check connector or TDCL with IG switch OFF).

→ Start engine and warm up with all ACC switch OFF.

❹ After engine is warmed up, let it idle for 5 min.
(After the engine is started, do not depress the accelerator pedal.)

③ If the malfunction is not detected during idling, perform racing without any load at approx. 2,000 rpm for 60 sec.

HINT: If a malfunction exists, the "CHECK" engine warning light will light up during the 5 min. idling period or within 60 sec. of starting racing.

NOTICE: If the conditions in this test are not strictly followed, detection of the malfunction will not be possible.

WhereEverybodyKnowsYourName

DIAGNOSTIC CHART

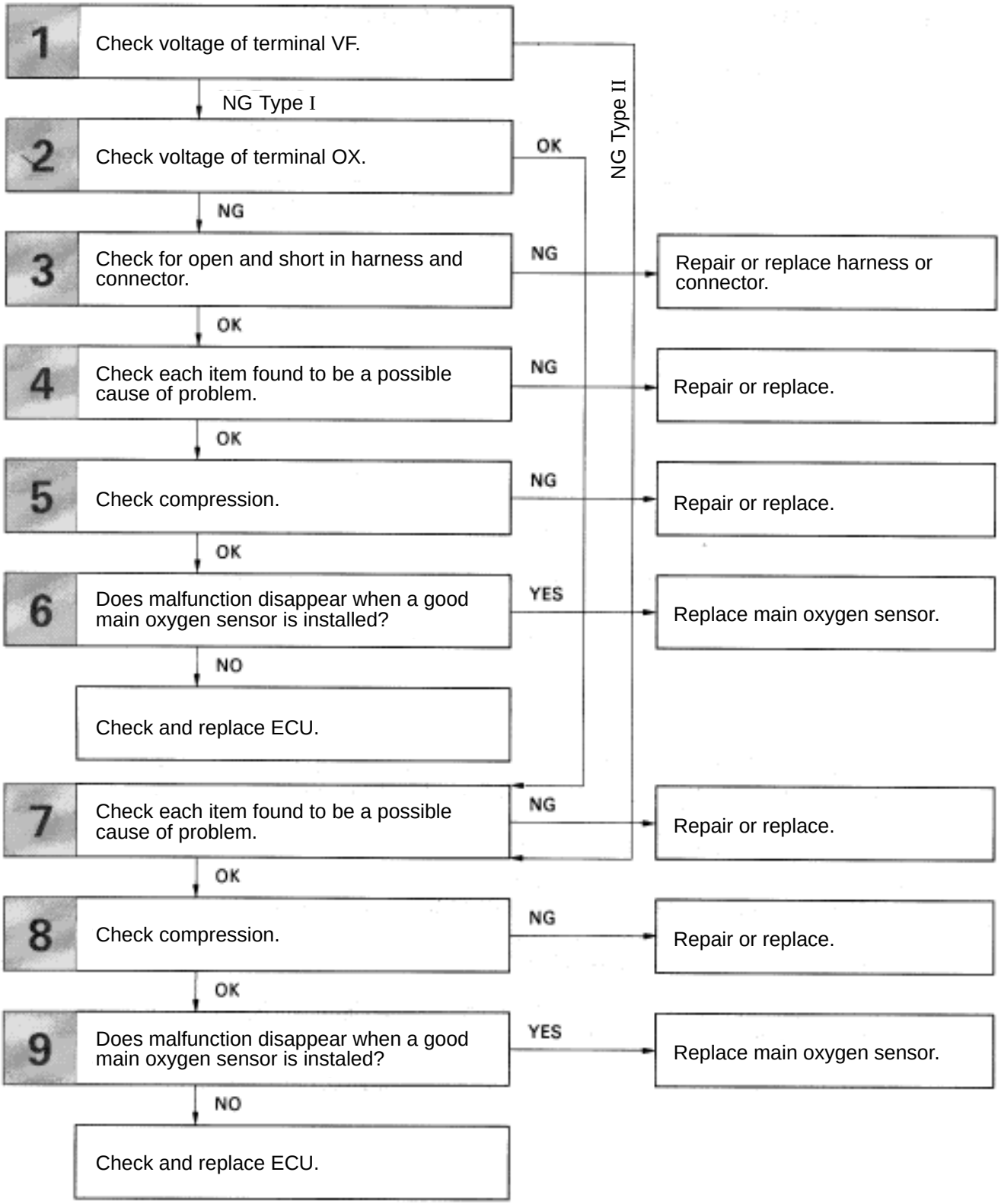

WIRING DIAGRAM

Refer to page TR–62 for the WIRING DIAGRAM.

WhereEverybodyKnowsYourName

INSPECTION PROCEDURE

1 Check voltage between terminals VF1, VF2 and E1 of check connector.

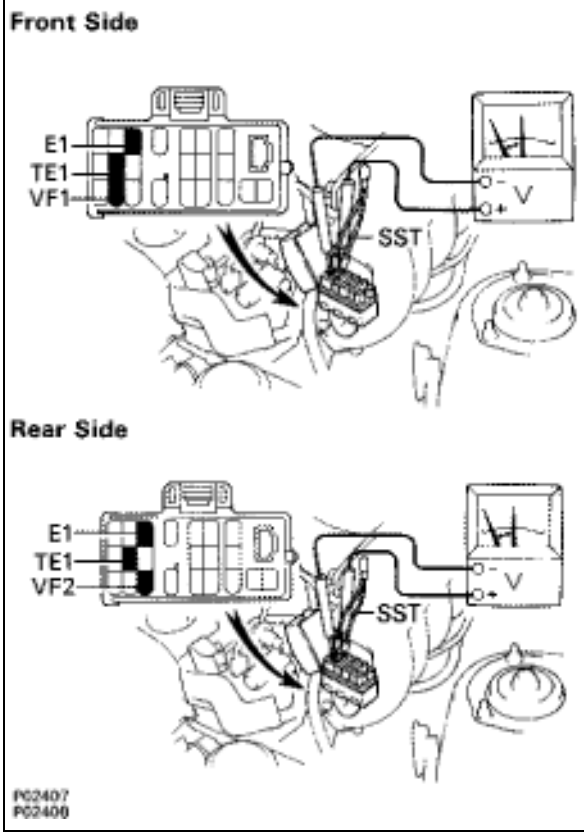

P
1. Warm up engine at normal operating temperature
2. Connect terminals TE1 and E1 of check connector.
3. Connect positive prove to terminal VF1, VF2 and negative prove to terminal E1 of check connector.

C
1. Warm up the oxygen sensor by running engine at 2,500 rpm for about 2 minutes.
2. Then, maintaining engine at 2,500 rpm, count how many times needle of voltmeter fluctuates between 0 and 5 V.

Caution

Result	
Needle fluctuates of 8 times for every ten seconds	OK
Continue at 0 V	NG Type I
Continue at 5 V	NG Type II

NG Type I

NG Type II → **Go to step 2 .**

2 Check voltage between terminals OX1, OX2 and E1 of check connector.

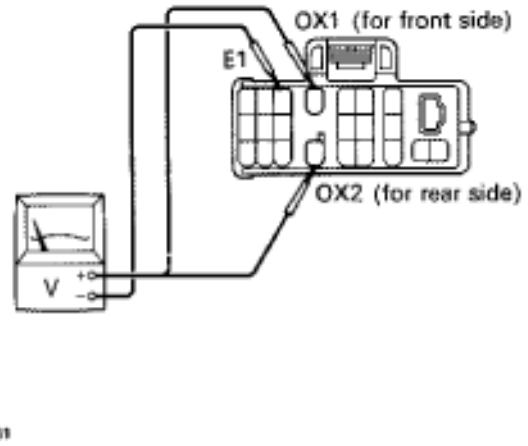

P Warm up engine at normal operating temperature.

C Measure voltage between terminals OX1, OX2 and E1 of check connector when engine is suddenly raced to full throttle.

OK **The voltage should be 0.5 V or higher at least once.**

Hint Perform inspection within 1 second.

NG

OK → **Go to step 2 .**

WhereEverybodyKnowsYourName

3	**Check for open and short in harness and connector between engine (& ECT) ECU and main oxygen sensor, engine (& ECT) ECU and check connector (See page IN–27).**

OK

NG → **Repair or replace harness or connector.**

4	**Check each item found to be a possible cause of problem.**

Check each circuit found to be a possible cause of trouble according to the results of the check in ▼ or ⑩. The numbers in the table below show the order in which the checks should be performed.

Main oxygen sensor signal from either side continues at 0 V.	Main oxygen sensor signals from both sides continue at 0 V.	Possible Cause	See page
1		Faulty sensor installation.	–
3		Injector circuit	TR–128
2	3	Misfire	IG–6
4		Valve timing	EM–22
	1	Air leakage	FI–7
	2	Fuel system	TR–110
	6	Characteristics deviation in air flow meter.	TR–82
	4	Characteristics deviation in water temp. sensor.	TR–64
	5	Characteristics deviation in intake air temp. sensor.	TR–68

OK

NG → **Repair or replace.**

5	**Check compression (See page EM–22).**

OK

NG → **Repair or replace.**

6	**Does malfunction disappear when a good main oxygen sensor is installed?**

NG

YES → **Replace main oxygen sensor.**

Check and replace engine (& ECT) ECU.

WhereEverybodyKnowsYourName

7 **Check each item found to be a possible cause of problem.**

Check each circuit found to be a possible cause of trouble according to the results of the check in ▼. The numbers in the table below show the order in which the checks should be performed.

Main oxygen sensor signal from either side continues at 5 V.	Main oxygen sensor signals from both sides continue at 5 V.	Main oxygen sensor signals from both sides are normal.	Possible Cause	See page
1		7	Injector circuit	TR–128
		3	Misfire	IG–6
2		4	Valve timing	EM–22
		1	Air leakage	FI–7
	1	2	Fuel system	TR–110
	4	8	Characteristics deviation in air flow meter.	TR–82
	2	5	Characteristics deviation in water temp. sensor.	TR–64
	3	6	Characteristics deviation in intake air temp. sensor.	TR–68

OK

NG **Repair or replace.**

8 **Check compression (See page EM–22).**

OK

NG **Repair or replace.**

9 **Does malfunction disappear when a good main oxygen sensor is installed?**

NG

YES **Replace main oxygen sensor.**

Check and replace engine (& ECT) ECU.

WhereEverybodyKnowsYourName

Diag. Code 24 | Intake Air Temp. Sensor Circuit

CIRCUIT DESCRIPTION

The intake air temp. sensor is built into the air flow meter and senses the intake air temperature.
The structure of the sensor and connection to the ECU is the same as in the water temp. sensor shown on page TR–68.
If the ECU records the diagnostic code ”24”, it operates the fail safe function, keeping the intake air temperature at a constant 20°C (68°F).

Code No.	Diagnostic Code Detecting Condition	Trouble Area
24	Open or short in intake air temp. sensor circuit for 0.5 sec. or more.	▼Open or short in intake air temp. sensor circuit. ▼Intake air temp. sensor ▼ECU

DIAGNOSTIC CHART

HINT: If diagnostic codes ”22” (water temperature sensor circuit), ”24” (intake air temperature sensor circuit) and ”41” (throttle position sensor circuit) are output simultaneously, E2 (sensor ground) may be open.

1. Check voltage of sensor.
   - OK → Check for momentary interruption (See page TR–23).
   - NG ↓
2. Check resistance of sensor.
   - NG → Replace water temp. sensor.
   - OK ↓
3. Check for open and short in harness and connector between ECU and water temp. sensor.
   - NG → Repair or replace harness or connector.
   - OK ↓

Check and replace ECU.

WIRING DIAGRAM

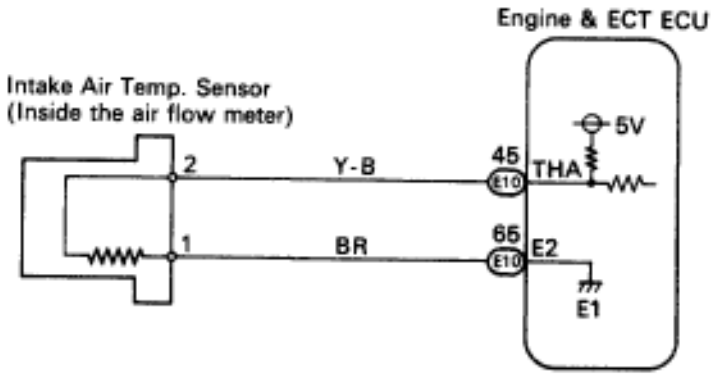

FI6448

WhereEverybodyKnowsYourName

INSPECTION PROCEDURE

1 **Check voltage between terminals THA and E2 of engine & ECT ECU connector.**

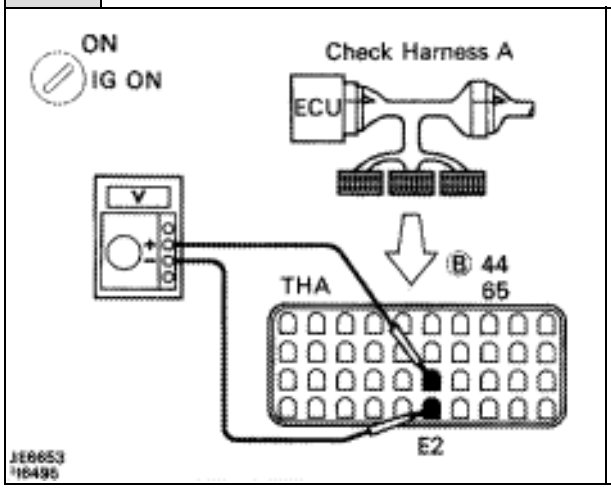

P (2) Connect the Check Harness A. (See page TR–30)

(2) Turn ignition switch on.

C Measure voltage between terminals THA and E2 and engine & ECT ECU connector.

OK

Intake air temp. °C (°F)	Voltage
20 (68)	1 – 3 V
60 (140)	0.5 – 1.0 V

NG

OK **Check for momentary Intertuption (See page TR–23).**

2 **Check intake air temp. sensor.**

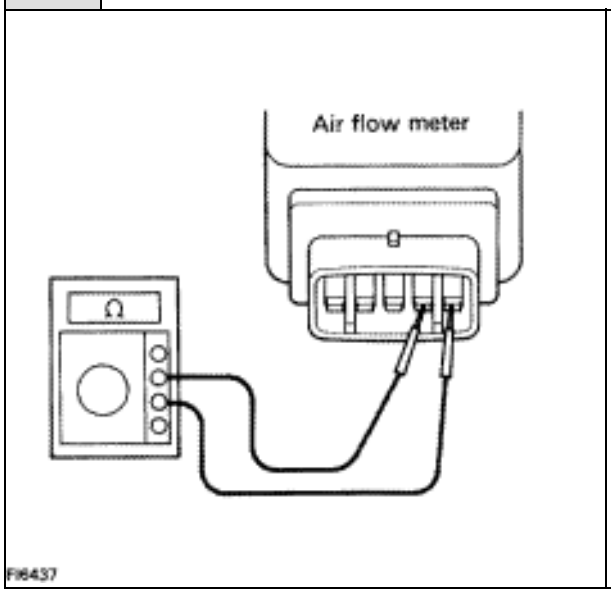

P Disconnect the air flow meter connector.

C Measure resistance between terminals 1 and 2 of air flow meter connector.

OK **Resistance is within Acceptable Zone on chart.**

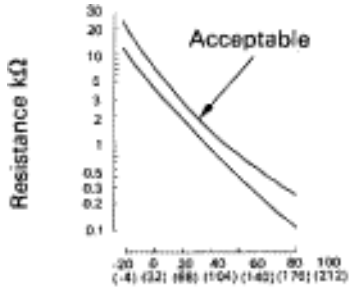

Intake air temp. °C (°F)	Resistance
20 (68)	2 – 3 kΩ
60 (140)	0.4 – 0.7 kΩ

OK

NG **Replace intake air temp. sensor (Replace air flow meter).**

3 **Check for open and short in harness and connector between engine & ECT ECU and intake air temp. sensor (See page IN–27).**

OK

NG **Repair or replace harness or connector.**

Check and replace engine & ECT ECU.

WhereEverybodyKnowsYourName

Diag. Code	25	Air–Fuel Ratio Lean Malfunction
	26	Air–Fuel Ratio Rich Malfunction

CIRCUIT DESCRIPTION

Refer to page TR–62 for the circuit description.

Code No.	Diagnostic Code Detecting Condition	Trouble Area
25 · 26	(1) Main oxygen sensor voltage is 0.45 V or less (lean) for 90 sec. under conditions (a) and (b). (2 trip detection logic)* (a) Coolant temp.: 60°C (140°F) or more. (b) Engine speed: 1,500 rpm or more.	▼Open or short in main oxygen sensor circuit ▼Main oxygen sensor ▼Ignition system ▼Water temp. sensor
	(2) Main oxygen sensor voltage is alternating above and below 0.45 V at 5 times par second or more under conditions (a) and (b). (2 trip detection logic)* (a) Engine speed: Idling (b) Coolant temp.: Between 60°C (140°F) and 95°C (203°F)	▼Open or short in injector circuit. ▼Fuel line pressure (injector blockage) ▼Air flow meter (air intake) ▼Engine ground bolt loose ▼Foreign object caught in valve
	(3) Difference of air–fuel ratio feedback compensation value between right and left banks is more than 10 percentage for 30 sec. or more under conditions (a) and (b). (2 trip detection logic)* (a) Engine speed : 2,000 rpm or more. (b) Coolant temp.: Between 60°C (140°F) and 95°C (203°F)	▼Fuel line pressure (injector leak, blockage) ▼Mechanical system malfunction (skipping teeth of timing belt) ▼Ignition system

*: See page TR–21.

WhereEverybodyKnowsYourName

— CIRCUIT DESCRIPTION (Cont'd) —

DIAGNOSIS CODE DETECTION DRIVING PATTERN

Purpose of the driving pattern.

(a) To simulate diag. code detecting condition after diag. code is recorded.

(b) To check that the malfunction is corrected when the repair is completed confirming that diag. code is no longer detected.

Malfunction: Open or Short in Main Oxygen Sensor

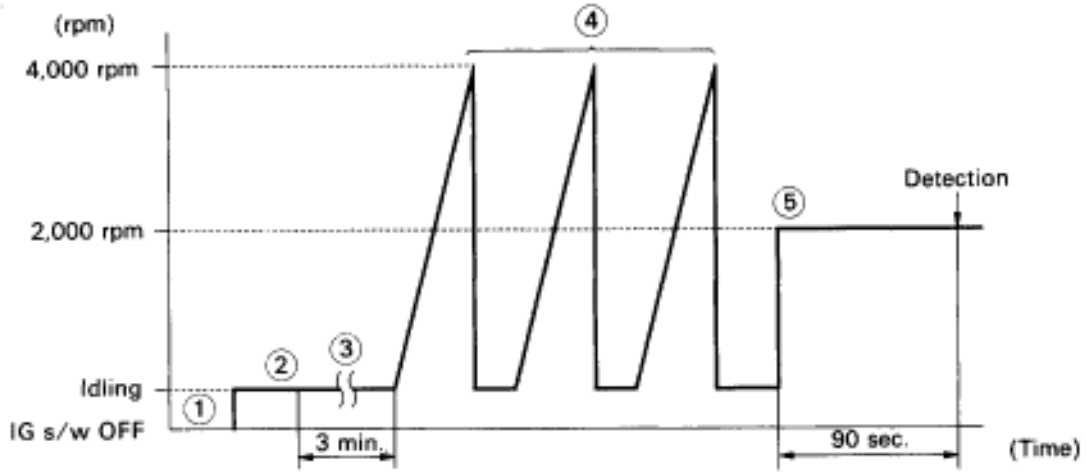

FI6465

❷ Initiate test mode (See page TR–12).

→ Start engine and warm up.

❹ After engine is warmed up, let it idle for 3 min.

③ Perform quick racing to 4,000 rpm three times by accelerator pedal.

⑤ After performing the racing in (4), perform racing at 2,000 rpm for 90 sec.

HINT: If a malfunction exists, the "CHECK" engine warning light will light up after 90 sec. from the start of racing.

NOTICE: If the conditions in this test are not strictly followed, detection of the malfunction will not be possible.

WhereEverybodyKnowsYourName

— CIRCUIT DESCRIPTION (Cont'd) —

DIAGNOSIS CODE DETECTION DRIVING PATTERN

Purpose of the driving pattern.

(a) To simulate diag. code detecting condition after diag. code is recorded.

(b) To check that the malfunction is corrected when the repair is completed confirming that diag. code is no longer detected.

Malfunction: Open or Short in Injector circuit, Injector Leak or Blockage, Loose E/G Earth Bolt.

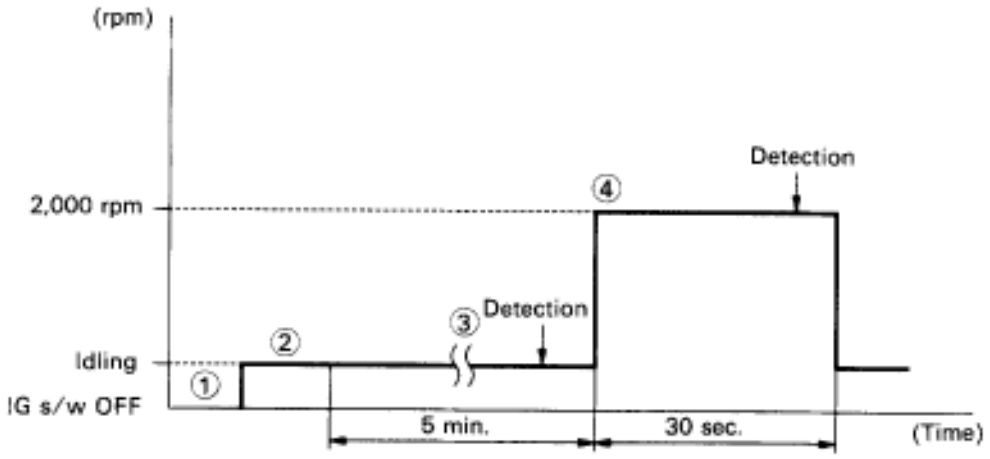

FI6483

❷ Initiate test mode (See page TR–12).

⑤ Start engine and warm up.

⑦ After engine is warmed up, let it idle for 5 min.
(After the engine is started, do not depress the accelerator pedal.)
If the malfunction is not detected during idling, perform racing without any load at approx. 2,000 rpm for 30 sec.

HINT: If a malfunction exists, the "CHECK" engine warning light will light up during the 5 min. idling period or within 30 sec. of starting racing.

NOTICE: If the conditions in this test are not strictly followed, detection of the malfunction will not be possible.

WhereEverybodyKnowsYourName

DIAGNOSTIC CHART

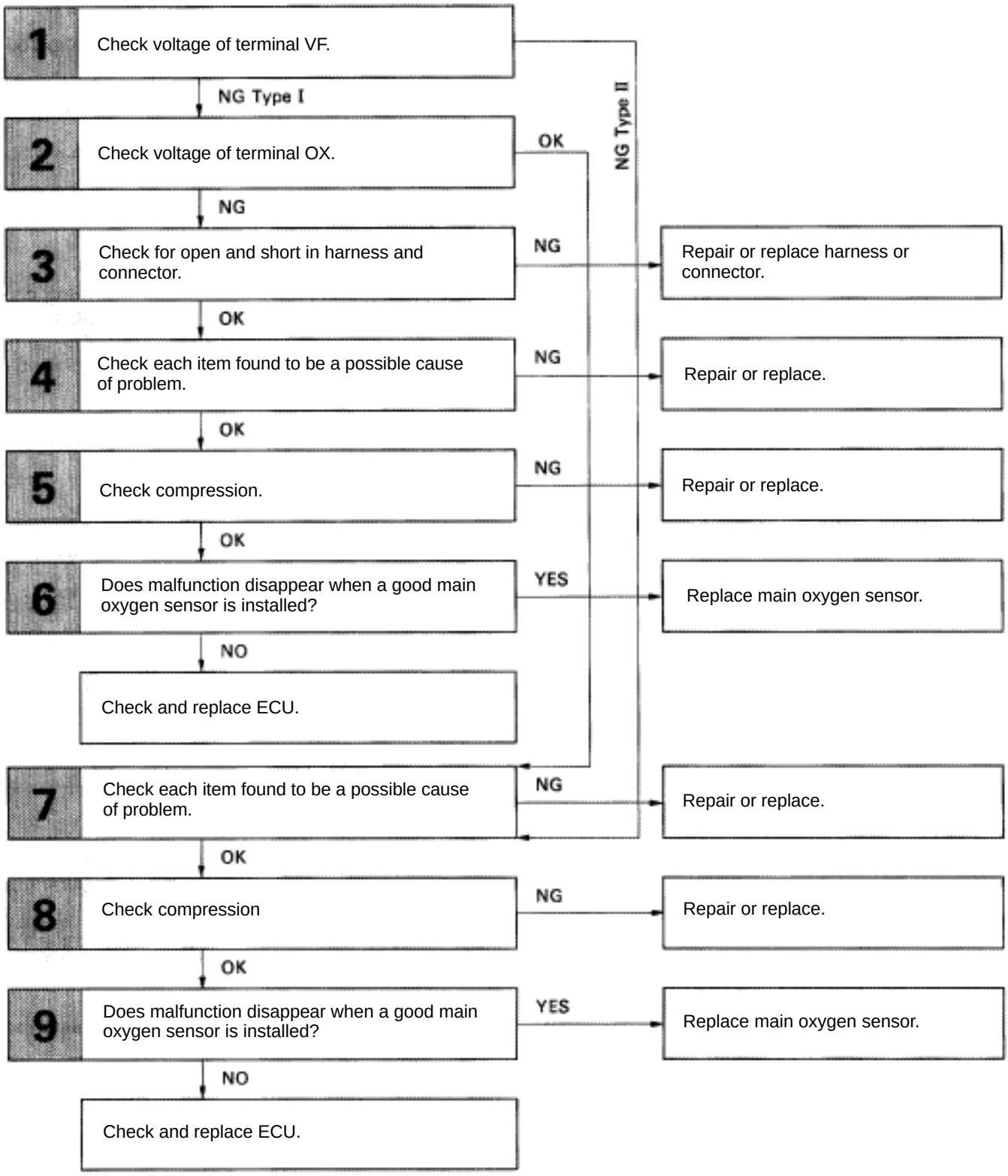

WIRING DIAGRAM

Refer to page TR–64 for the WIRING DIAGRAM.

WhereEverybodyKnowsYourName

INSPECTION PROCEDURE

1 **Check voltage between terminals VF1, VF2 and E1 of check connector.**

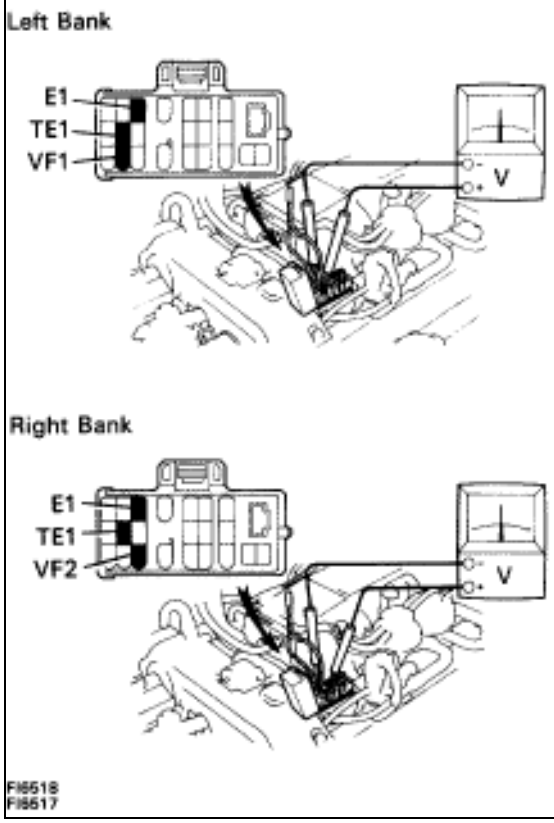

P (2) Warm up engine at normal operating temperature.
(2) Connect terminals TE1 and E1 of check connector.
(2) Connect positive prove to terminal VF1, VF2 and negative prove to terminal E1 of check connector.

C (2) Warm up the oxygen sensor by running engine at 2,500 rpm for about 2 minutes.
(2) Then, maintaining engine at 2,500 rpm, count how many times needle of voltmeter fluctuates between 0 and 5 V

Result:

Result	
Needle fluctuates of 8 times for every ten seconds	OK
Continue at 0 V	NG Type I
Continue at 5 V	NG Type II

NG Type I

NG Type II **Go to step [7].**

2 **Check voltage beween terminals OX1, OX2 and E1 of check connector.**

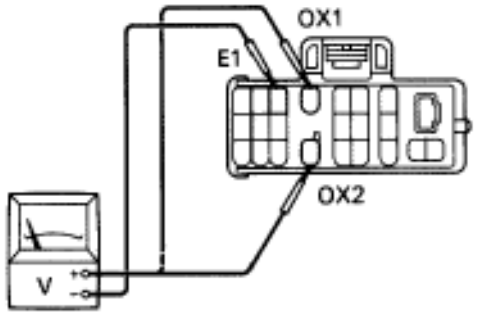

P Warm up engine at normal operating temperature.

C Measure voltage between terminals OX1, OX2 and E1 of check connector when sngine is suddenly raced to full throttle.

OK **The Voltage should be 0.5 V or higher at least once.**

Hint Perform inspection within 1 second

NG

OK **Go to step [7].**

WhereEverybodyKnowsYourName

3 **Check for open and short in harness and connector between engine & ECT ECU and main oxygen sensor, engine & ECT ECU and check connector (See page IN–27).**

OK

NG **Repair or replace harness or connector.**

4 **Check each item found to be a possible cause of problem.**

Check each circuit found to be a possible cause of trouble according to the results of the check in **1** or **2**. The numbers in the table below show the order in which the checks should be preformed.

Main oxygen sensor signal from either side continues at 0 V.	Main oxygen sensor signals from both sides continue at 0 V.	Possible Cause	See page
1		Faulty sensor installation.	–
3		Injector circuit	TR–132
2	3	Misfire	TR–6
4		Valve timing	TR–51
	1	Air leakage	TR–13
	2	Fuel system	TR–114
	6	Characteristics deviation in air flow meter.	TR–88
	4	Characteristics deviation in water temp. sensor.	TR–68
	5	Characteristics deviation in intake air temp. sensor.	TR–72

OK

NG **Repair or replace.**

5 **Check comparession (See page EM–30).**

OK

NG **Repair or replace.**

6 **Does malfunction disappear when a good main oxygen sensor is installed?**

NO

YES **Replace main oxygen sensor.**

check and replace engine & ECT ECU.

WhereEverybodyKnowsYourName

7 **Check each item found to be a possible cause of problem.**

Check each ciruit found to be a possible cause of trouble according to the results of the check in **1**. The numbers in the table below show the order in the which the checks should be performed.

Main oxygen sensor signal from either side continues at 5.0 V.	Main oxygen sensor signals from both sides continue at 5.0 V.	Main oxygen sensor signals from both sides are normal.	Possible Cause	See page
1		7	Injector circuit	TR–132
		3	Misfire	TR–6
2		4	Valve timing	TR–51
		1	Air leakage	TR–13
	1	2	Fuel system	TR–114
3	4		Cold start injector circuit	TR–88
	5	8	Characteristics deviation in air flow meter.	TR–68
	2	5	Characteristics deviation in water temp. sensor.	TR–72
	3	6	Characteristics deviation in intake air temp. sensor.	TR–72

OK

NG **Repair or replace.**

8 **Check compression (See page EM–30).**

OK

NG **Repair or replace.**

9 **Does malfunction disappear when a good main oxygen sensor is installed?**

NO

YES **Replace main oxygen sensor.**

Check and replace engine & ECT ECU.

WhereEverybodyKnowsYourName

–MEMO–

WhereEverybodyKnowsYourName

Diag. Code 27	Sub–Oxygen Sensor Circuit (Only for USA spec.)

CIRCUIT DESCRIPTION

The sub–oxygen sensor is installed on the exhaust pipe. Its construction and operation is the same as the main oxygen sensor on page TR–60.

Code No.	Diagnostic Code Detecting Condition	Trouble Area
27	(1) Open or short in heater circuit of sub–oxygen sensor for 0.5 sec. or more.	2 Open or short in heater circuit of sub–oxygen sensor. 2 Sub–oxygen sensor heater. 2 ECU
	(2) Main oxygen sensor signal is 0.45 V or more and sub–oxygen sensor signal is 0.45 V or less under conditions (a) (c). (2 trip detection logic) * (a) Coolant temp.: 80˚C (176˚F) or more. (b) Engine speed: 1,500 rpm or more. (c) Accel. pedal: Fully depressed for 2 sec. or more.	2 Open or short in sub–oxygen sensor circuit. 2 Sub–oxygen sensor 2 ECU

* : See page TR–25.

WhereEverybodyKnowsYourName

CIRCUIT DESCRIPTION (Cont'd)

DIAGNOSIS CODE DETECTION DRIVING PATTERN

Purpose of the driving pattern.

(a) To simulate diag. code detecting condition after diag. code is recorded.

(b) To check that the malfunction is corrected when the repair is completed confirming that diag. code is no longer detected.

Malfunction: Open or Short in Sub–Oxygen Sensor

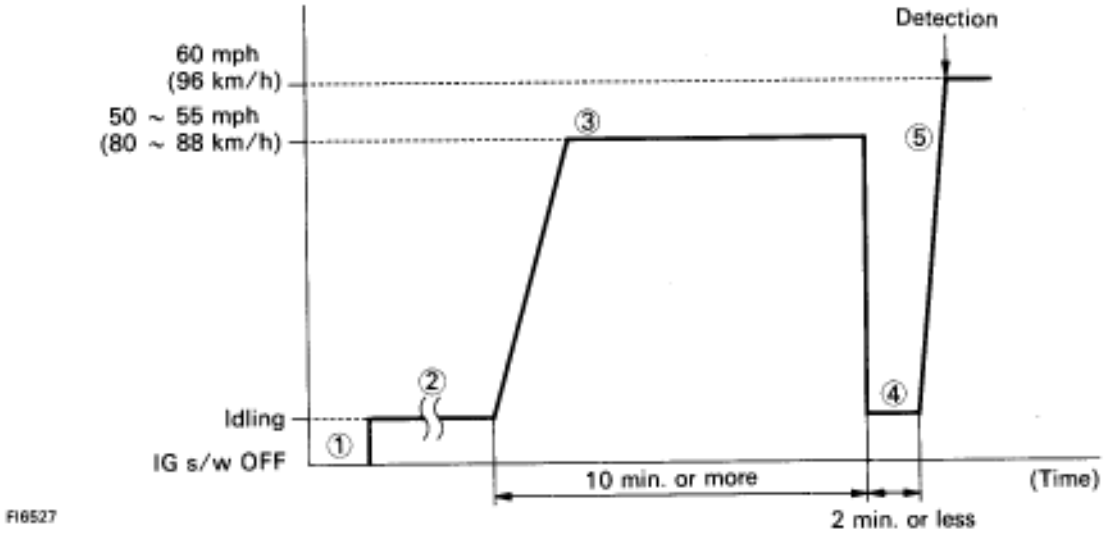

❷ Disconnect the EFI fuse (15 A) for 10 sec. or more, with IG switch OFF.
Initiate test mode (Connect terminal TE2 and E1 of check connector with IG switch OFF).

→ Start the engine and warm up with all ACC switch OFF.

❹ After the engine is warmed up, let it drive at 50 55 mph (80 88 km/h) for 10 min. or more.

③ After driving, stop at a safe place and perform idling for 2 min. or less.

⑤ After performing the idling in , perform acceleration to 60 mph (96 km/h) with the throttle valve fully open.

HINT: If a malfunction exists, the "CHECK" engine warning light will light up during step ⑤.

NOTICE: If the conditions in this test are not strictly followed, detection of the malfunction will not be possible.

WhereEverybodyKnowsYourName

DIAGNOSTIC CHART

HINT: When other codes are output in addition to 27 at the same time, check the circuits for other codes first.

1 Check voltage between terminal HT.
- OK → Check operation of sub–oxygen sensor heater (4)
- NG ↓

2 Check resistance of sub–oxygen sensor heater.
- NG → Replace sub–oxygen sensor.
- OK ↓

3 Check for open and short in harness and connector between EFI main relay and ECU.
- NG → Repair or replace harness or connector.
- OK ↓

Check and replace ECU.

4 Check operation of sub–oxygen sensor heater.
- OK → Replace sub–oxygen sensor.*
- NG ↓

Check and replace ECU.

*: In this case, oxygen sensor can be deteriorated.

WIRING DIAGRAM

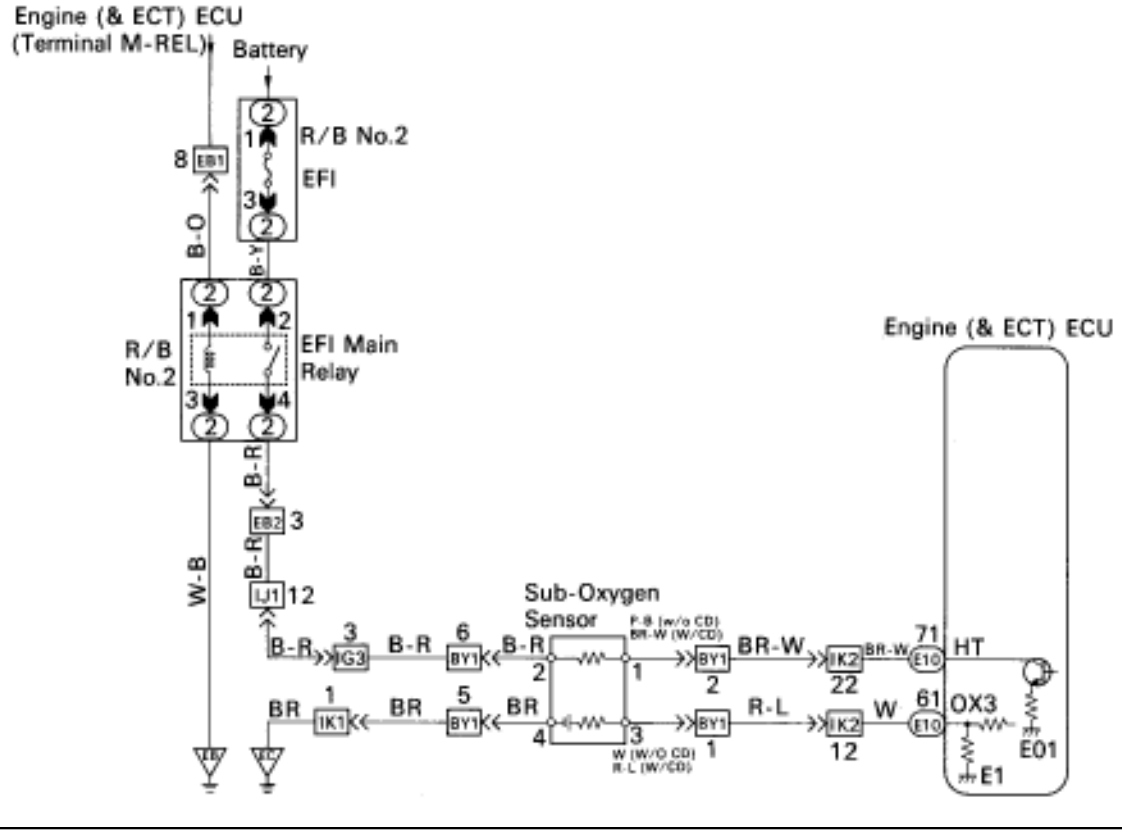

WhereEverybodyKnowsYourName

INSPECTION PROCEDURE

1	Check voltage between terminal HT of engine (&ECT) ECU connector and body ground.
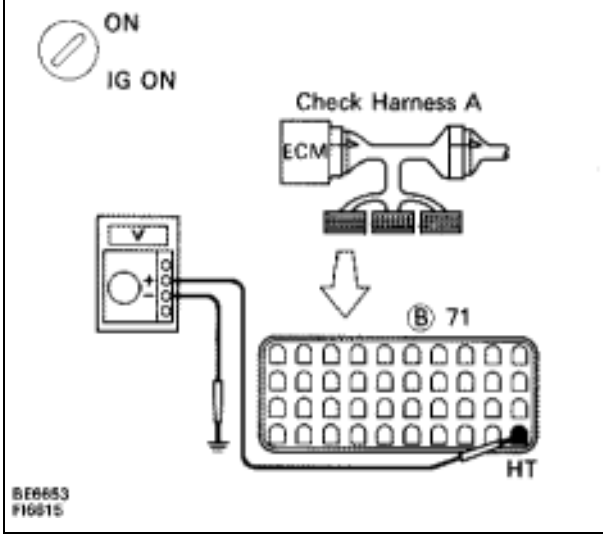	**P** 1. Connect the Check Harness A. (See page TR–34). 2. Turn ignition switch on. **C** Measure voltage between terminal HT of engine (& ECT) ECU connector and body ground. **OK** **Voltage: 10 – 14 V**

NG

OK → **Go to step ▼.**

2	Check sub–oxygen sensor heater.
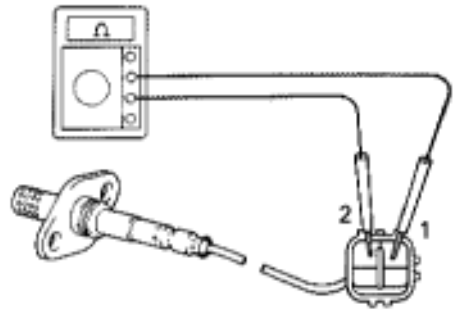	**P** Disconnect sub–oxygen sensor connector. (See page FI–78). **C** Measure resistance between terminals 1 and 2 of sub–oxygen sensor connector. **OK** **Resistance: 5.1 – 6.3 ? 20°C (68°F)**

OK

NG → **Replace sub–oxygen sensor.**

WhereEverybodyKnowsYourName

3	Check for open and short in harness and connector between EFI main relay and engine (& ECT) ECU (See page IN–27).

OK

NG → Repair or replace harness or connector.

Check and replace engine (& ECT) ECU.

4	Check voltage between terminal HT of engine (& ECT) ECU connector and body ground.

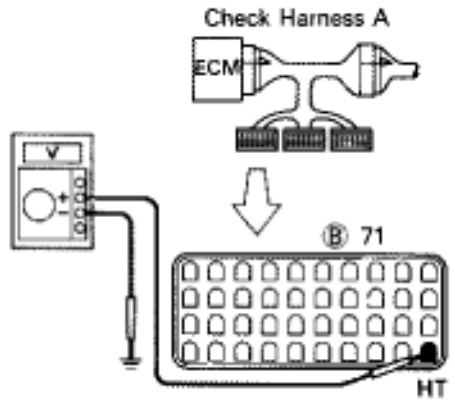

FI6615

P Warm up engine to normal operating temperature.

C Measure voltage between terminal HT of engine (& ECT) ECU connector and body ground, when engine is idling and racing at 3,500 rpm.

OK

	Voltage
Idling	0 V
Racing at 3,500 rpm	10 – 14 V

NG

OK → Replace sub–oxygen sensor.*
*: In this case, oxygen sensor can be deteriorated.

Check and replace engine (& ECT) ECU.

WhereEverybodyKnowsYourName

Diag. Code 27, 29 | Sub–Oxygen Sensor Circuit

— CIRCUIT DESCRIPTION

The sub–oxygen sensor is installed on the exhaust pipe. Its construction and operation is the same as the main oxygen sensor on page TR–62.

Code No.	Diagnostic Code Detecting Condition	Trouble Area
27 ▼ 29	(1) Open or short in heater circuit of sub–oxygen sensor for 0.5 sec. or more.	▼Open or short in heater circuit of sub–oxygen sensor ▼Sub–oxygen sensor heater. ▼ECU
	(2) Main oxygen sensor signal is 0.45 V or more and sub–oxygen sensor signal is 0.45 V or less under sonditions (a) and (b). (2 trip detection logic) * (a) Coolant temp.: 80°C (176°F) or more. (b) Accel. pedal: Fully depressed for 2 sec. or more.	▼Open or short in sub–oxygen sensor circuit. ▼Sub–oxygen sensor ▼ECU

*: See page TR–21.

HINT: Diag. code 27 is for the left bank sub–oxygen sensor circuit.
Diag. code 29 is for the right bank sub–oxygen sensor circuit.

WhereEverybodyKnowsYourName

— CIRCUIT DESCRIPTION (Cont'd) —

DIAGNOSIS CODE DETECTION DRIVING PATTERN

Purpose of the driving pattern.

(a) To simulate diag. code detecting condition after diag. code is recorded.

(b) To check that the malfunction is corrected when the repair is completed confirming that diag. code is no longer detected.

Malfunction: Open or Short in Sub–Oxygen Sensor

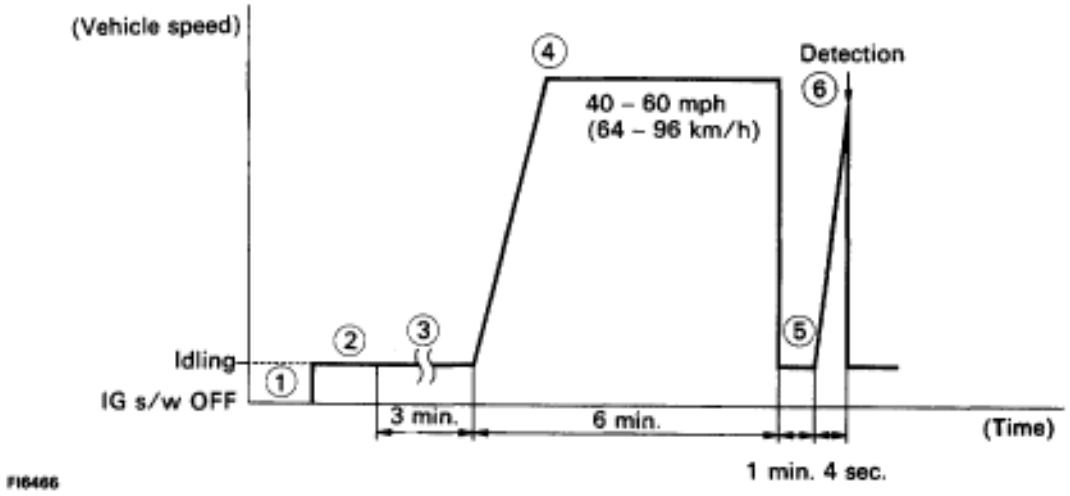

❷ Initiate test mode (See page TR–12).

→ Start engine and warm up.

❹ After engine is warmed up, let it idle for 3 min.

③ With the A/C ON and the transmission in D range (O/D OFF), drive at 40 –60 mph (64–96 km/h) for 6 min.

⑤ After the driving in , stop the vehicle.

⑤ Once the vehicle is stopped, within the next minute apply acceleration with the throttle fully open for 4 sec.

HINT: If a malfunction exists, the "CHECK" engine warning light will light up after full acceleration for 4 sec.

NOTICE: If the conditions in this test are not strictly followed, detection of the malfunction will not be possible.

WhereEverybodyKnowsYourName

DIAGNOSTIC CHART

HINT:

- When other codes are output in addition to 27 and 29 at the same time, check the circuits for other codes first.
- If diag. code 27 is displayed, check left bank sub–oxygen sensor circuit, and if 29 is displayed, check right bank sub–oxygen sensor circuit.

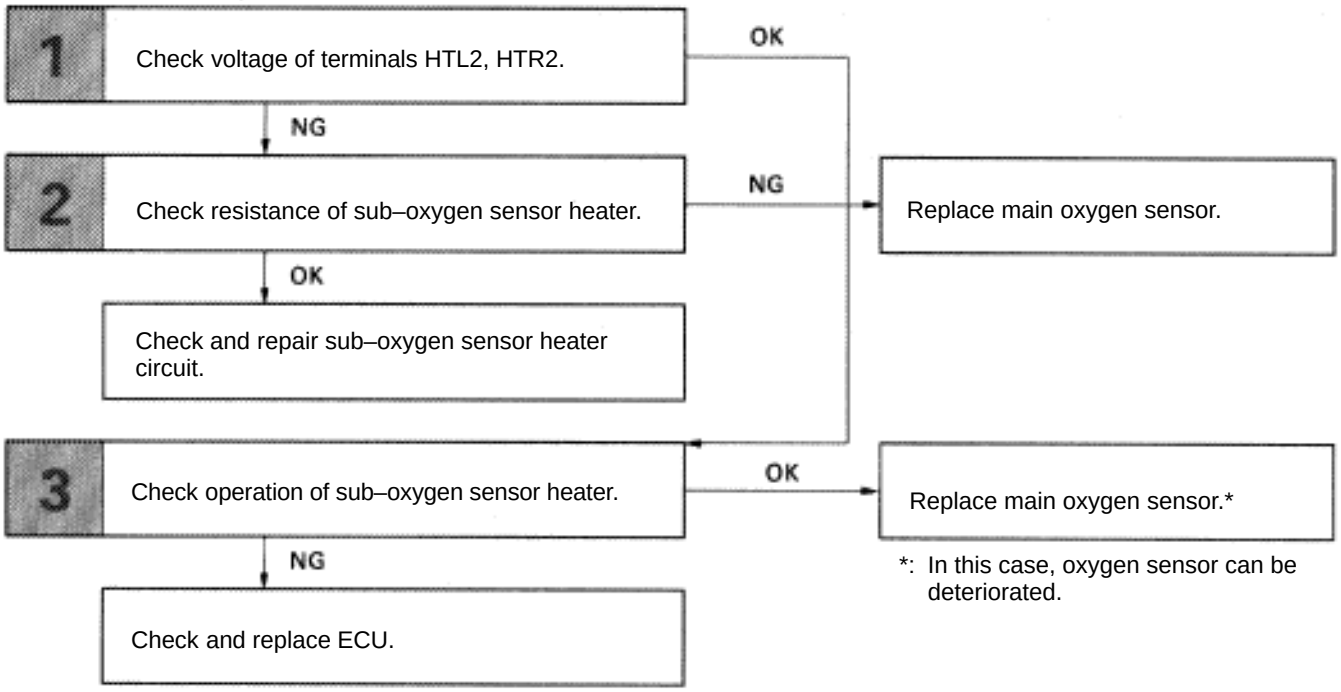

*: In this case, oxygen sensor can be deteriorated.

WIRING DIAGRAM

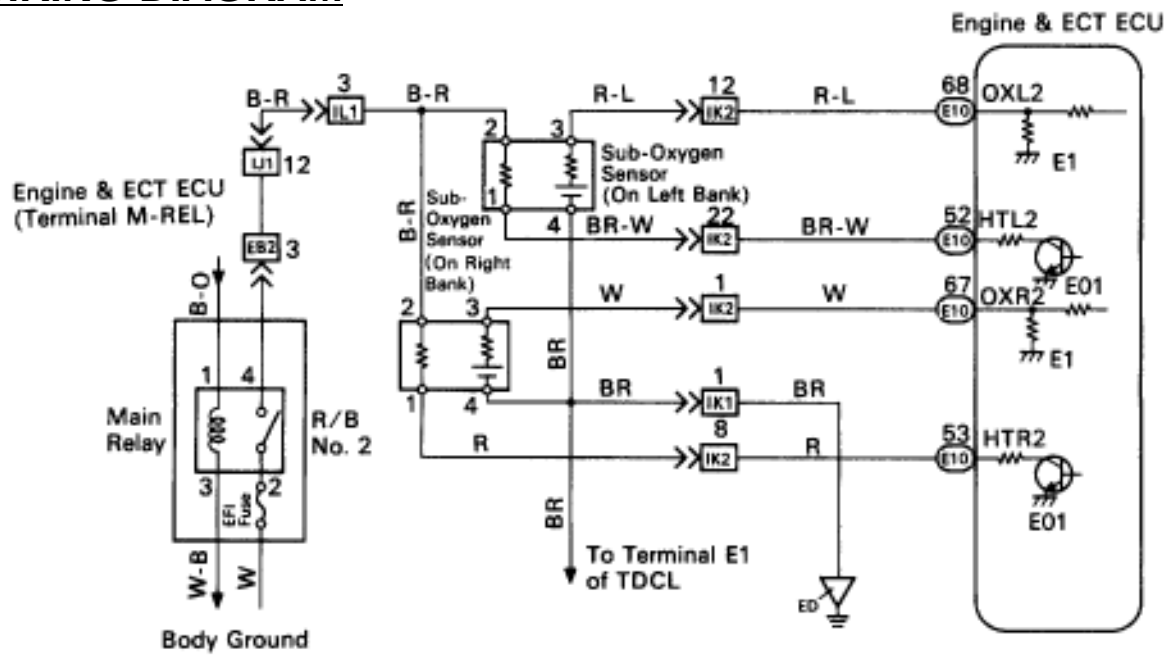

FI6453

WhereEverybodyKnowsYourName

INSPECTION PROCEDURE

1	Disconnect the engine & ECT ECU connector.

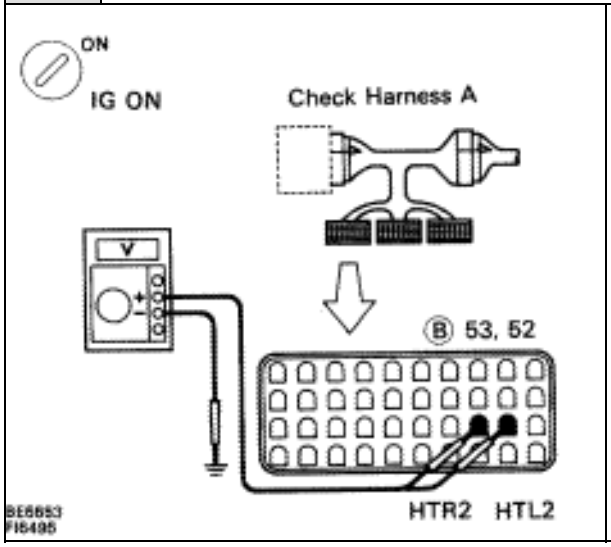

P (2) Connect the Check Harness A.
(See page TR–30)
(2) Disconnect engine & ECT ECU connector.
(2) Turn ignition switch on.

C Measure voltage between terminals HTL2, HTR2 of engine & ECT ECU connector and body ground.

OK **Voltage: 10 – 14 V**

NG

OK **Go to step [3].**

2	Check sub–oxygen sensor heater.

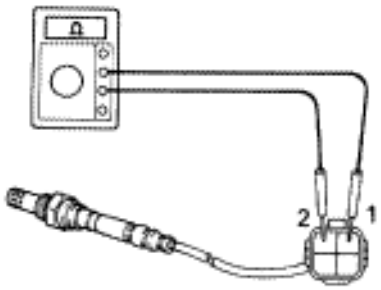

P Disconnect sub–oxygen sensor connector.

C Measure resistance between terminals 1 and 2 of sub–oxygen sensor connector.

OK **Resistance: 5.1 – 6.3 20°C (68°F)**

OK

NG **Replace sub–oxygen sensor.**

Check and repair harness or connector between main relay and sub–oxygen sensor, sub–oxygen sensor and engine & ECT ECU.

WhereEverybodyKnowsYourName

3 **Check voltage between terminals HTL2, HTR2 of engine & ECT ECU connector and body ground.**

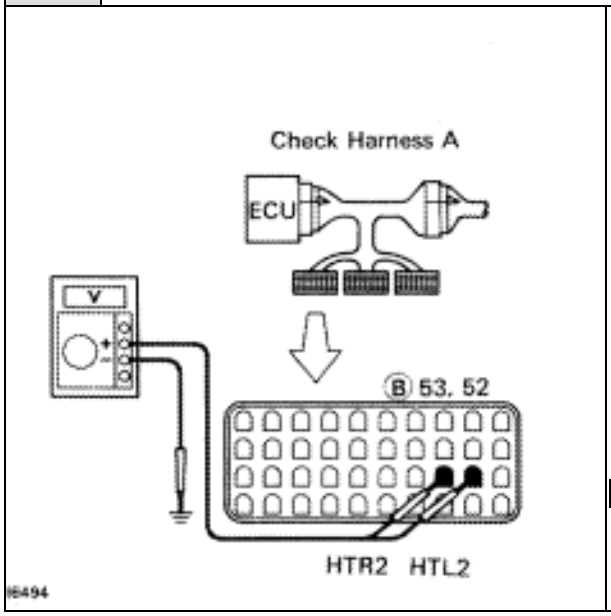

P (2) Connect engine & ECT ECU connector.
(2) Warm up engine to normal operating temperature.

C Measure voltage between terminals HTL2, HTR2 of engine & ECT ECU connector and body ground, when engine is idling and racing at 4,000 rpm.

OK

	Voltage
Idling	0 V
Racing at 4,000 rpm	10 – 14 V

Hint In the 4,000 rpm racing check , continue engine racing at 4,000 prm for approx. 20 seconds or more.

NG → **Check and replace engine & ECT ECU.**

OK → **Replace sub–oxygen sensor.***

*: In this case, oxygen sensor can be deteriorated.

WhereEverybodyKnowsYourName

–MEMO–

WhereEverybodyKnowsYourName

Diag. Code 35	High Altitude Compensator Sensor (HAC Sensor) Circuit

CIRCUIT DESCRIPTION

The HAC sensor is built into the ECU. This is a semiconductor pressure sensor with properties which cause its electrical resistance to change when stress is applied to the sensor's crystal (silicon) (piezo-electric effect). This sensor is used to detect the atmospheric (absolute) pressure and outputs corresponding electrical signals. Fluctuations in the air pressure cause changes in the intake air density, which can cause deviations in the air–fuel ratio. The signals from HAC sensor are used to make corrections for these fluctuations. If the ECU records diagnostic code "35", the fail safe function operates and the atmospheric pressure is set at a constant 101.3 kPa (760 mmHg, 29.92 in.Hg).

Code No.	Diagnostic Code Detecting Condition	Trouble Area
35	Open or short in HAC sensor circuit for 0.5 sec. or more.	ECU

DIAGNOSTIC CHART

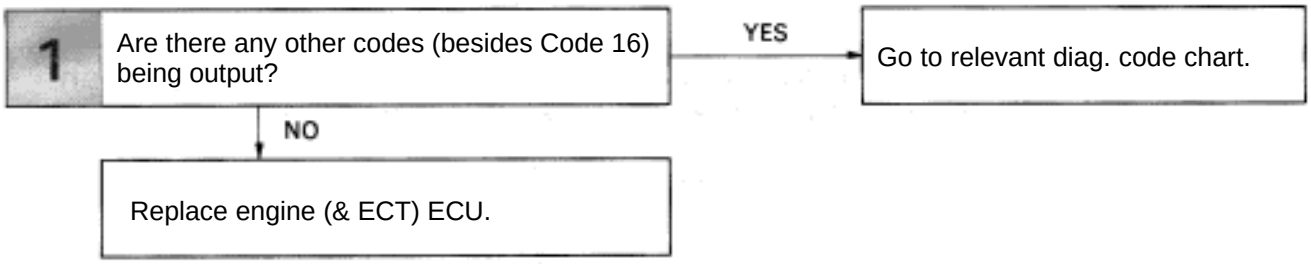

WhereEverybodyKnowsYourName

Diag. Code 31 | Air Flow Meter Circuit

CIRCUIT DESCRIPTION

As shown in the figure at right, when a pillar (Vortex generating body) is placed in the path of a uniform flow, vortices called Karman–Vortex are generated downstream of the object. Using this principle, a vortex generator is placed inside the air flow meter. By measuring the frequency of the vortices generated, the ECU can determine the volume of air flowing through the air flow meter. The vortices are detected by their exerting pressure on thin metal foil (mirror) surfaces and a light emitting element and light receptor (LED and photo transistor) positioned opposite the mirror which senses the vibrations in the mirror optically. The ECU uses these signals mainly for calculation of the basic injection volume and the basic ignition advance angle.

FI4504

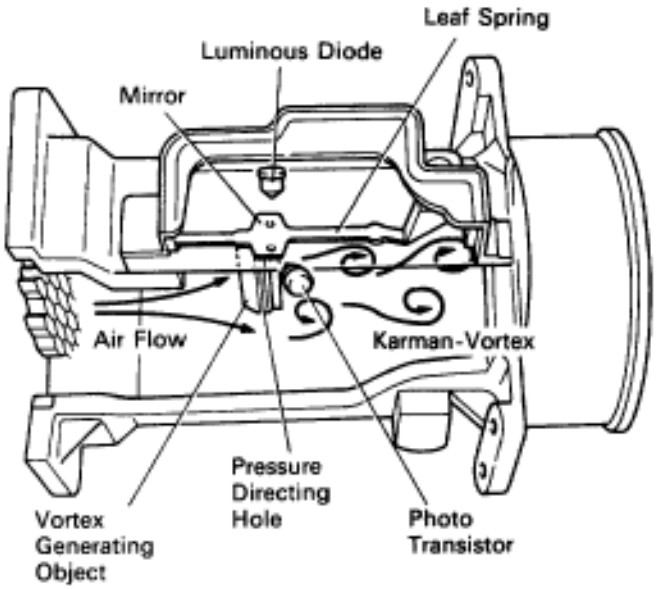

FI3045

Code No.	Diagnostic Code Detecting Condition	Trouble Area
31	All conditions below are detected. (a) No air-flow meter signal to ECU for 2 sec. when engine speed is above 300 rpm. (b) Engine stall.	• Open or short in air flow meter circuit • Air flow meter • ECU

If the ECU records diagnostic code ”31”, it enters fail safe mode (See page TR–22).

WhereEverybodyKnowsYourName

DIAGNOSTIC CHART

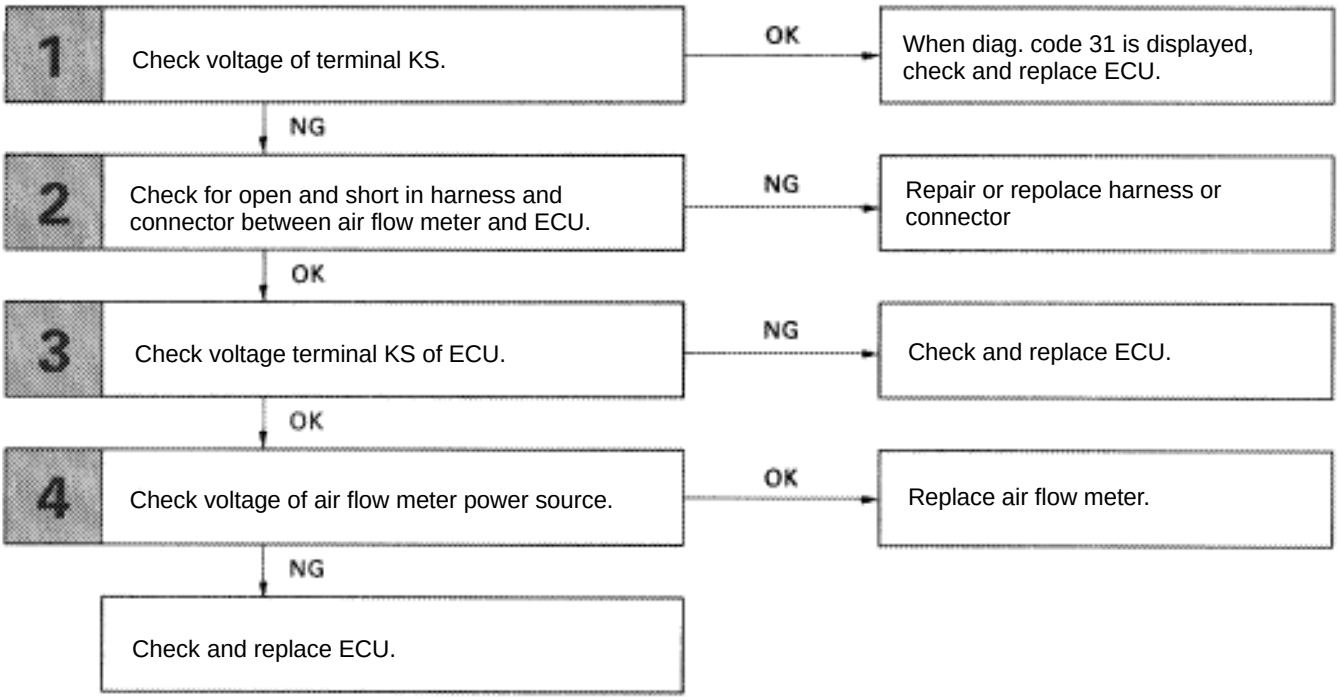

WIRING DIAGRAM

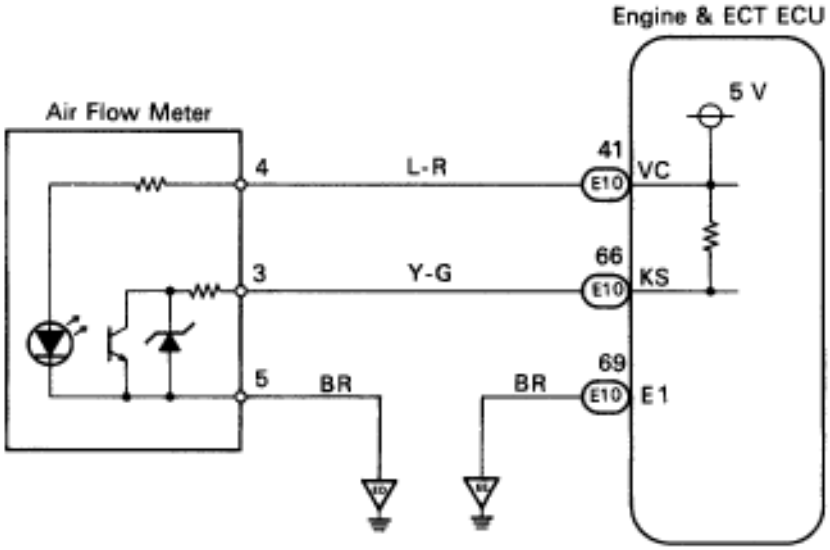

FI5458

WhereEverybodyKnowsYourName

INSPECTION PROCEDURE

1 **Check voltage between terminals KS and E1 of engine & ECT ECU connector.**

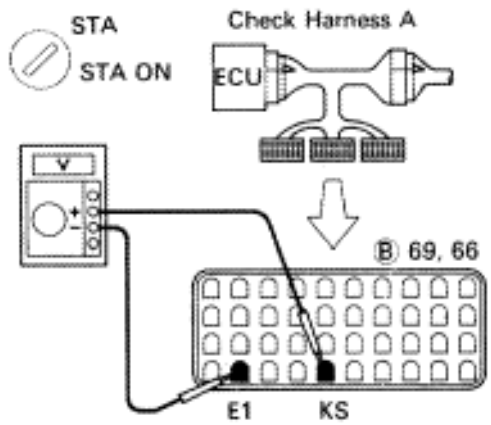

P Connect the check harness A.
(See page TR–30)

C Measure voltage between terminals KS and E1 of engine & ECT ECU connector while engine is cranked.

OK **Voltage:** **2.0 – 4.0 V**
(Neither 0 V nor 5 V)

Reference **INSPECTION USING OSCILLOSCOPE**

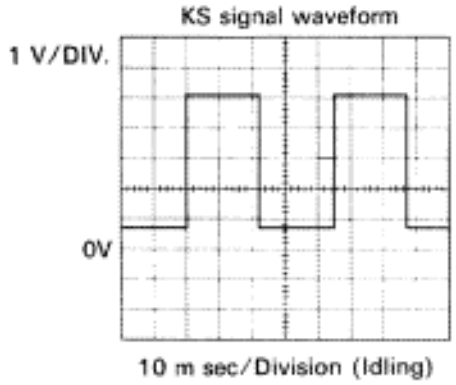

- During cranking or idling, measure between terminals KS and E1 of engine & ECT ECU.

HINT: The correct waveform appears as shown in the illustration on the left, with rectangle waves.

NG

OK **When diag. code 31 is displayed, check and replace engine & ECT ECU.**

2 **Check for open and short in harness and connector between engine & ECT ECU and air flow meter (See page IN–27).**

OK

NG **Repair or replace harness or connector.**

WhereEverybodyKnowsYourName

3	Disconnect air flow meter connector and check voltage between terminals KS and E1 of engine & ECT ECU.

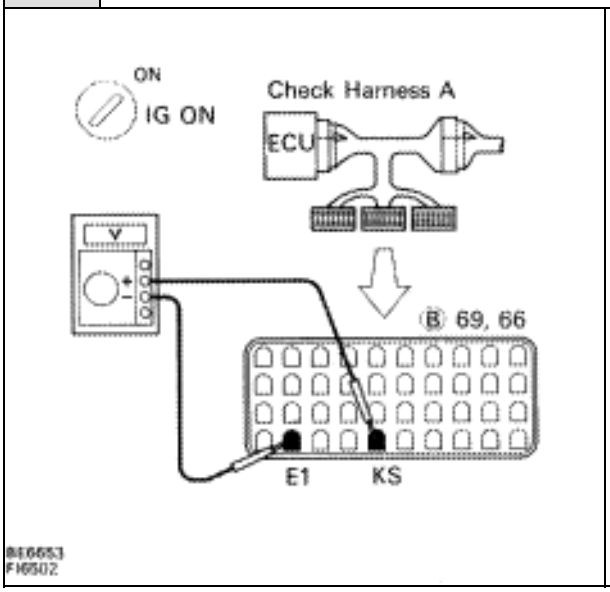

P Diconnect the air flow meter connector.
Turn ignition switch on.

C Measure voltage between terminals KS and E1 of engine & ECT ECU.

OK **Voltage: 4 – 6 V**

OK

NG → **Check and replace ECU.**

4	Diconnect air flow meter connector and check voltage between terminals VC and E1 of engine & ECT ECU.

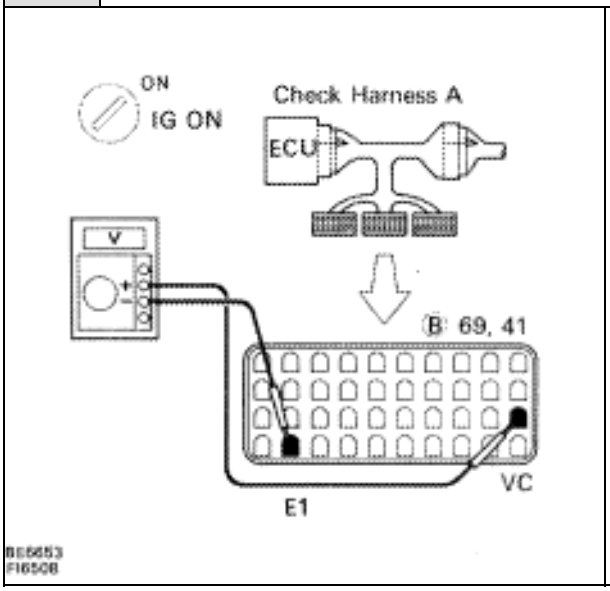

P Diconnect the air flow meter connector.
Turn ignition switch on.

C Measure voltage between terminals VC and E1 of engine & ECT ECU.

OK **Voltage: 4 – 6 V**

NG

OK → **Replace air flow meter.**

Check and replace engine & ECT ECU.

WhereEverybodyKnowsYourName

Diag. Code 35	High Altitude Compensator Sensor (HAC Sensor) Circuit

CIRCUIT DESCRIPTION

The HAC sensor is built into the ECU. This is a semiconductor pressure sensor with properties which cause its electrical resistance to change when stress is applied to the sensor's crystal (silicon) (piezoelectric effect). This sensor is used to detect the atmospheric (absolute) pressure and outputs corresponding electrical signals. Fluctuations in the air pressure cause changes in the intake air density, which can cause deviations in the air–fuel ratio. The signals from HAC sensor are used to make corrections for these fluctuations. If the ECU records diagnostic code "35", the fail safe function operates and the atmospheric pressure is set at a constant 760 mmHg.

Code No.	Diagnostic Code Detecting Condition	Trouble Area
35	Open or short detected in HAC sensor circuit for 0.5 sec. or more.	▼ECU

DIAGNOSTIC CHART

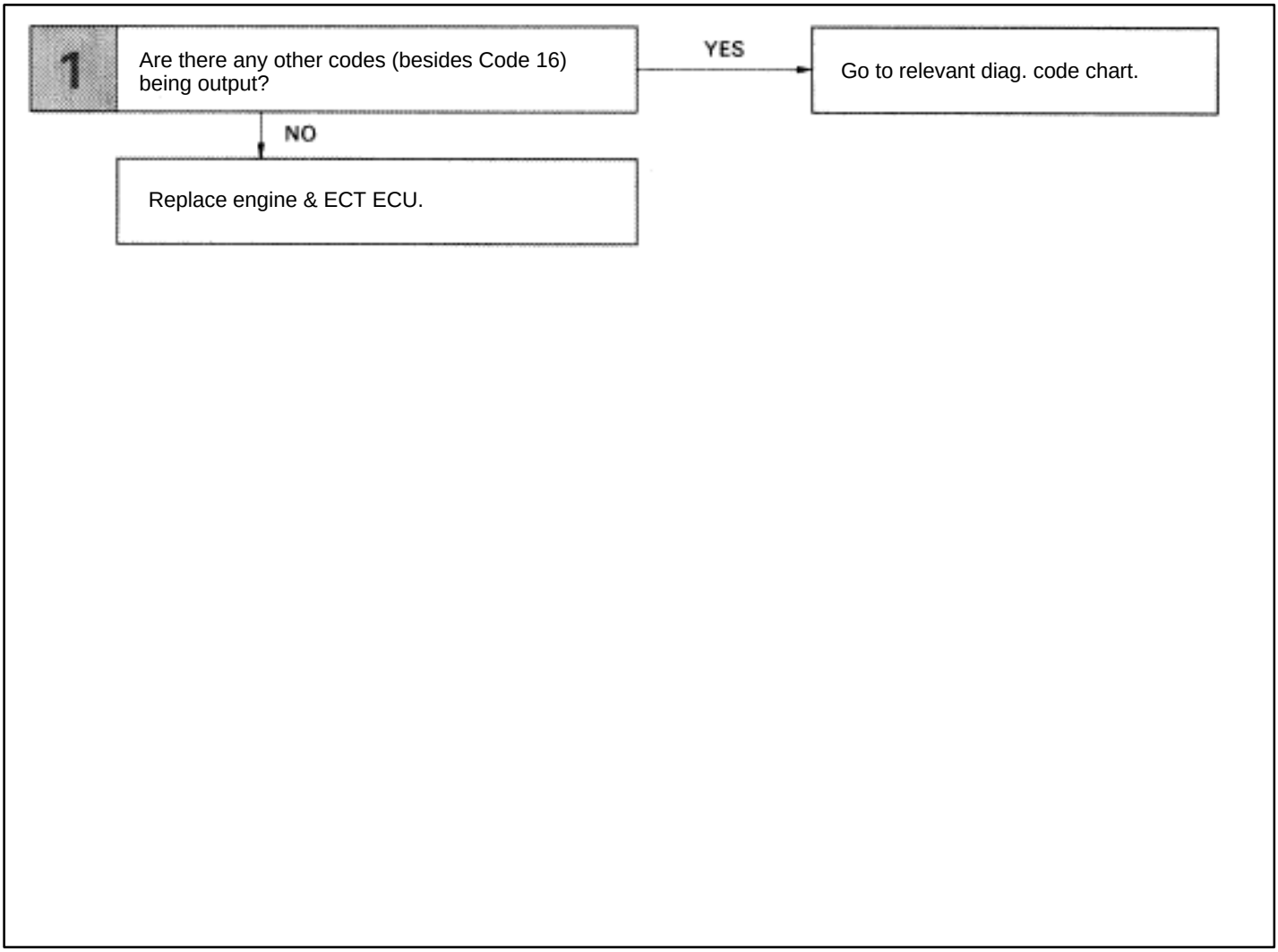

WhereEverybodyKnowsYourName

–MEMO–

WhereEverybodyKnowsYourName

Diag. Code 41, 47 (Sub–) Throttle Position Sensor Circuit

— CIRCUIT DESCRIPTION

The throttle position sensor is mounted in the throttle body and detects the throttle valve opening angle. When the throttle valve is fully closed, the IDL contacts in the throttle position sensor are on, so the voltage at the terminal IDL of the ECU become 0 V. At this time, a voltage of approximately 0.7 V is applied to the terminal VTA of the ECU. When the throttle valve is opened, the IDL contacts go off and thus the power source voltage of approximately 12 V in the ECU is applied to the terminal IDL of the ECU. The voltage applied to the terminal VTA of the ECU increases in proportion to the opening angle of the throttle valve and becomes approximately 3.5–5.0 V when the throttle valve is fully opened. The ECU judges the vehicle driving conditions from these signals input from the terminals VTA and IDL, and uses them as one of the conditions for deciding the air–fuel ratio correction, power increase correction and fuel–cut control etc. The sub–throttle position sensor is built and operates in the same way as the main throttle position sensor. This sensor is used for traction control. The sub–throttle valve is opened and closed by the sub–throttle actuator according to signals from the TRAC ECU to control the engine output.

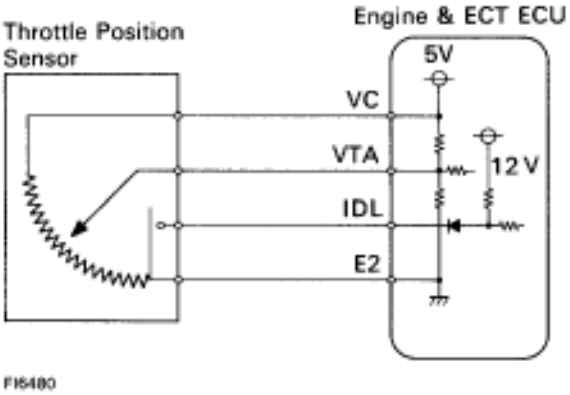

Code No.	Diagnostic Code Detecting Condition	Trouble Area
41	(1) Open or short in throttle position sensor circuit (VTA1) for 0.5 sec. or more.	▼Open or short in throttle position sensor circuit.
	(2) IDL1 contact is ON and VTA1 output exceeds 1.5 V for 0.5 sec. or more.	▼Throttle position sensor ▼ECU
47	(1) Open or short in sub–throttle position sensor circuit (VTA2) for 0.5 sec. or more.	▼Open or short in sub–throttle position sensor circuit.
	(2) IDL2 contact is ON and VTA2 output exceeds 1.5 V for 0.5 sec. or more.	▼Sub–throttle position sensor ▼ECU

HINT:

Diag. code 41 is for the throttle position sensor circuit.
Diag. code 47 is for the sub–throttle position sensor circuit.

- When the connector for the (sub–) throttle position sensor is disconnected, diagnostic code 41 or 47 is not displayed. Diagnostic code 41 or 47 is displayed only when there is an open or short in the VTA signal circuit of the (sub–) throttle position sensor.
- Signals from the (sub–) throttle position sensor are also input to the TRAC ECU, So when a malfunction occurs on the TRAC side, code 41 or 47 may be displayed.

WhereEverybodyKnowsYourName

DIAGNOSTIC CHART

HINT:

- If diag. code 41 is displayed, check throttle position sensor circuit; if diag. code 47 is displayed, check sub–throttle position sensor circuit.
- If diag. codes ”22” (water temperature sensor circuit), ”24” (intake air temperature sensor circuit) and ”41” (throttle position sensor circuit) are output simultaneously, E2 (sensor ground) may be open.

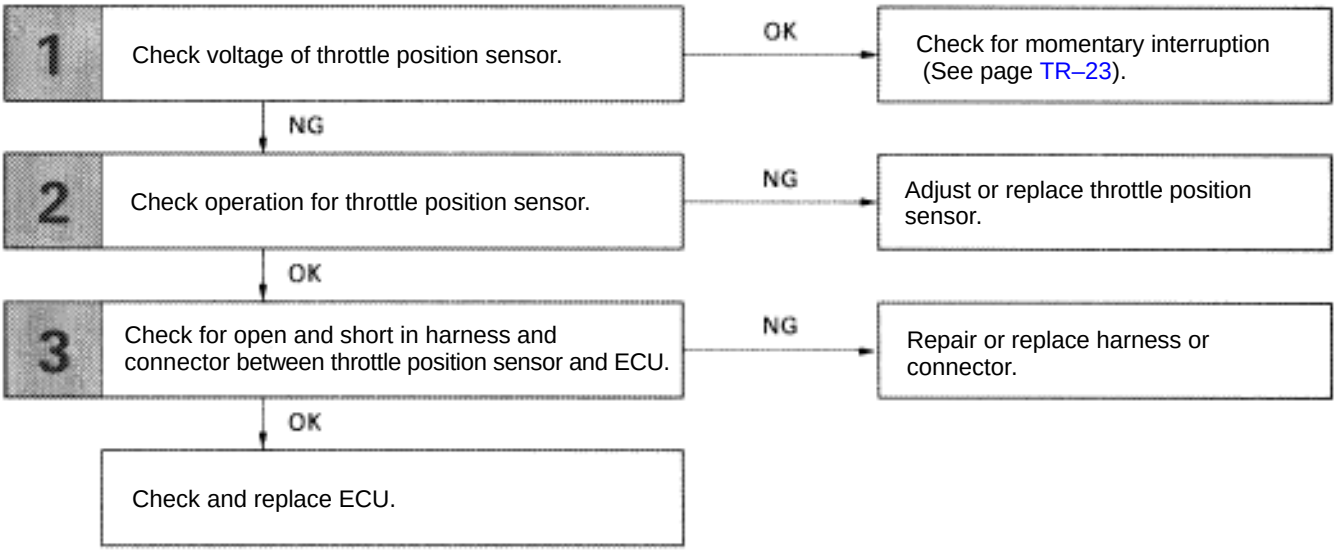

WIRING DIAGRAM

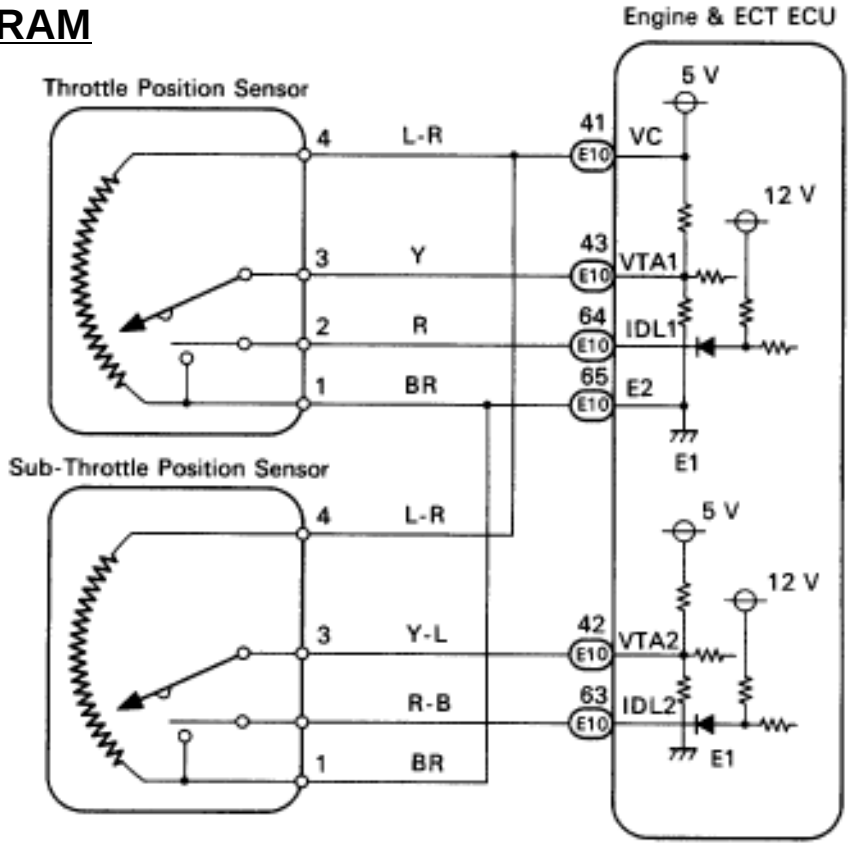

FI6478

WhereEverybodyKnowsYourName

INSPECTION PROCEDURE

HINT:

- If diag. code 41 is displayed, check throttle position sensor circuit. If diag. code 47 is displayed, check sub–throttle position sensor circuit.
- If diag. codes ”22” (water temperature sensor circuit), ”24” (intake air temperature sensor circuit) and ”41” (throttle position sensor circuit) are output simultaneously, E2 (sensor ground) may be open.

 # Check voltage between terminals VTA1, 2, IDL1, 2 and E2 of engine & ECT ECU connector.

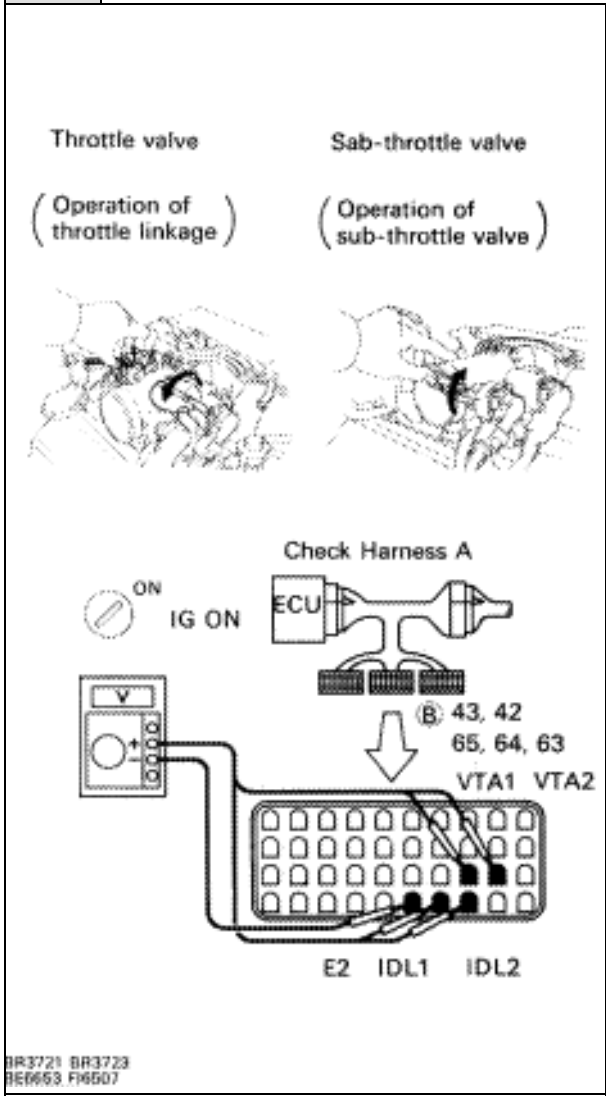

P (2) Connect the Check Harness A. (See page TR–30).

(2) Turn ignition switch on.

(2) For sub–throttle position sensor, remove intake air duct and disconnect sub–throttle valve step motor connector.

C Measure voltage between terminals VTA1, 2, IDL1, 2 and E2 of engine & ECT ECU connector when the (sub–) throttle valve is opened gradually from the closed condition.

OK

Terminal / Throttle Valve	VTA1, 2	IDL1, 2
Fully Closed	0.1 – 1.0 V	Below 1.0 V
Fully Open	3 – 5 V	10 – 14 V

Hint The voltage should increase steadily in proportion to the throttle valve opening angle.

NG

OK **Check for Momentary interruption (See page TR–23).**

Go to step [2].

WhereEverybodyKnowsYourName

2 **Check (sub–) throttle position sensor.**

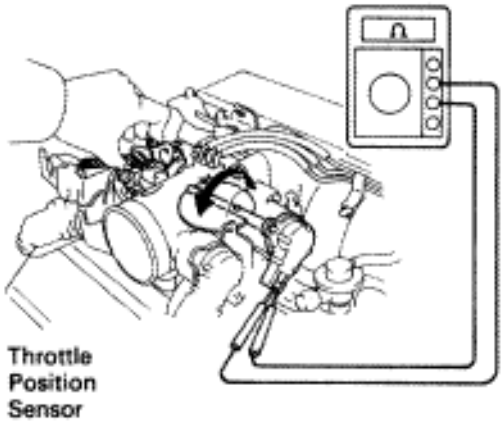

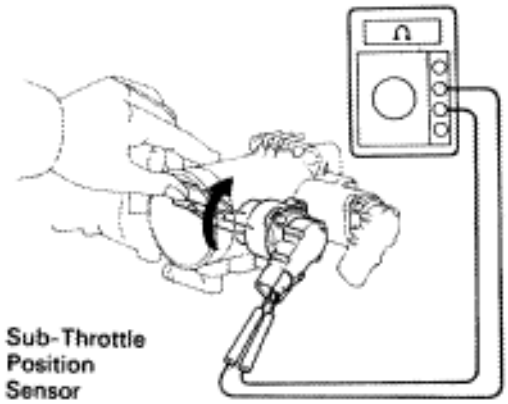

FI4746
FI4745

P (2) Remove intake air duct.

(2) Disconnect (sub–) throttle position sensor connector.

C Measure resistance between terminals 3, 2, and 1 of (sub–) throttle position sensor connector when the throttle valve is opened gradually from the closed condition.

OK

Terminal / Throttle Valve	3 – 1	2 – 1
Fully Closed	0.2 – 0.8 kΩ	Less than 0.5 kΩ
Fully Open	2.8 – 8.0 kΩ	1 MΩ or higher

Hint Resistance between terminals 3 and 1 should increase gradually in accordance with the throttle valve opening angle.

OK

NG **Adjust or replace (sub–) throttle position sensor (See page FI–73).**

3 **Check for open and short in harness and connector between engine & ECT ECU and (sub–) throttle position sensor (See page IN–27).**

OK

NG **Repair or replace harness or connector.**

Check and replace engine & ECT ECU.

WhereEverybodyKnowsYourName

Diag. Code 43 | Starter Signal Circuit

CIRCUIT DESCRIPTION

When the engine is cranked, the intake air flow is slow, so fuel vaporization is poor. A rich mixture is therefore necessary in order to achieve good startability. While the engine is being cranked, the battery voltage is applied to terminal STA of the ECU. The starter signal is mainly used to increase the fuel injection volume for the starting injection control and after–start injection control.

DTC No.	DTC Detecting Condition	Trouble Area
43	No starter signal to ECU.	▼Open or short in starter signal circuit. ▼Open or short in ignition switch or starter relay circuit. ▼ECU

DIAGNOSTIC CHART

HINT: This diagnostic chart is based on the premise that the engine is cranked normally. If the engine is not cranked, proceed to the matrix chart of problem symptoms on page TR–39.

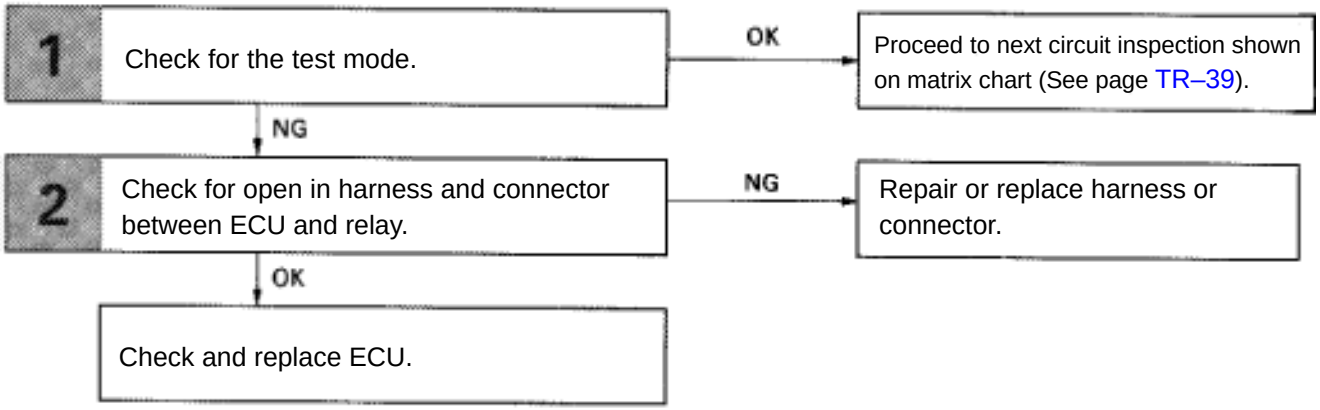

WIRING DIAGRAM

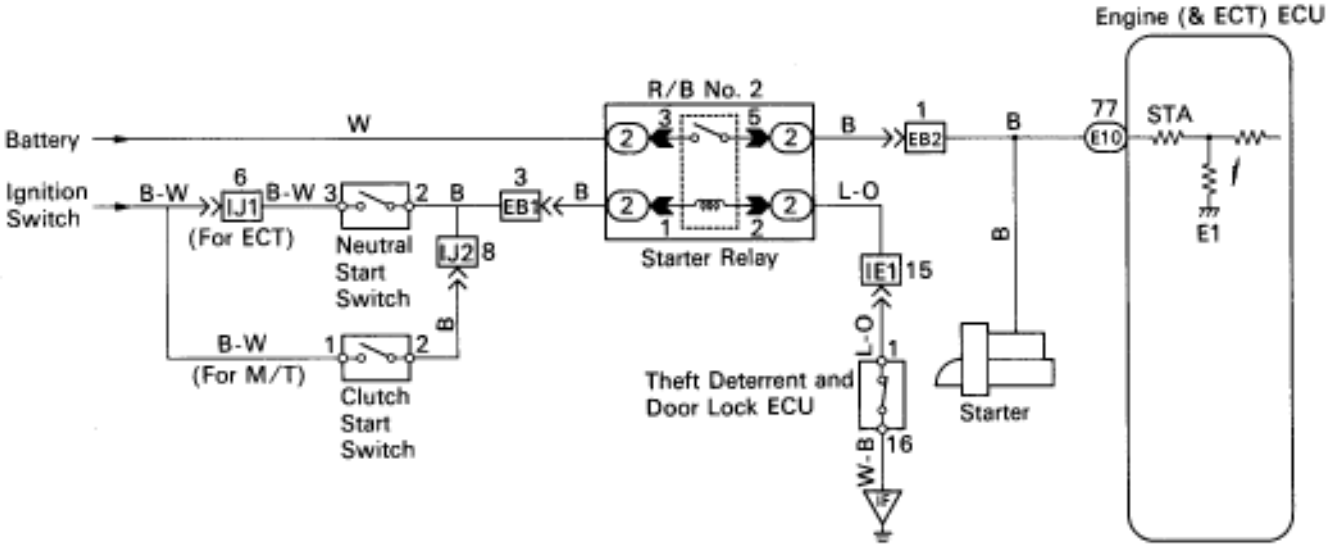

WhereEverybodyKnowsYourName

INSPECTION PROCEDURE

1 Check output condition of diag. code 43

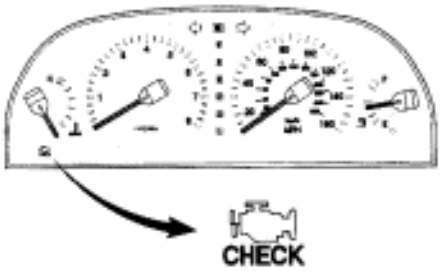

FI6433

P Setting the test mode.

6. Turn ignition switch OFF.
7. Connect terminals TE2 and E1 of TDCL.
8. Turn ignition switch ON.
   (Don't start the engine)
9. Connect terminals TE1 and E1 of TDCL.

C Check if code "43" is output by the "CHECK" engine warning light.

OK **Code "43" is output.**

C Start the engine.
Check if the code "43" disappear.

OK **Code "43" is not output.**

NG

OK **Proceed to next circuit inspection shown on matrix chart (See page TR–39).**

2 Check for open in harness and connector between engine (& ECT) ECU and starter relay (See page IN–27)

OK

NG **Repair or replace harness or connector.**

Check and replace engine (& ECT) ECU.

WhereEverybodyKnowsYourName

Diag. Code 42 — Vehicle Speed Sensor Signal Circuit

CIRCUIT DESCRIPTION

The No. 1 speed sensor outputs a 20–pulse signal for every revolution of the rotor shaft, which is rotated by the transmission output shaft via the driven gear. This signal is converted in the combination meter to 4–pulse signal by the pulse conversion circuit and then sent to the Engine & ECT ECU. The ECU determines the vehicle speed based on the frequency of these pulse signals.

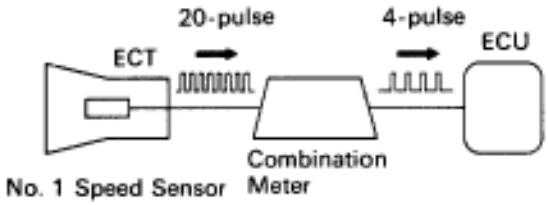

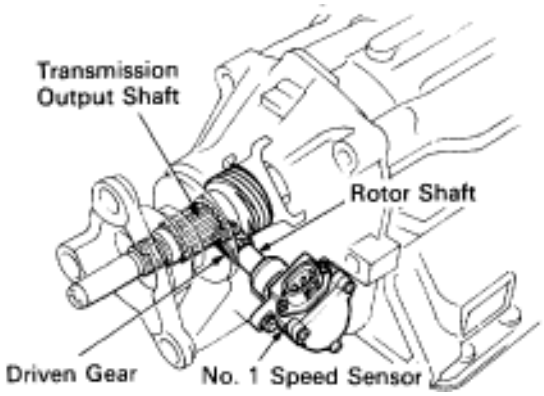

Code No.	Diagnostic Code Detecting Condition	Trouble Area
42	All conditions below are detected continuously for 8 sec. or more. (a) Vehicle speed signal: 0 km/h (0 mph) (b) Engine speed: 1,500 rpm or more (c) Neutral start switch (NSW): OFF	▼No. 1 speed sensor. ▼Combination meter. ▼Open or short in No. 1 speed sensor circuit. ▼ECU

HINT: In test mode, diag. code 42 is output when vehicle speed is 5 km/h (3 mph) or below.

DIAGNOSTIC CHART

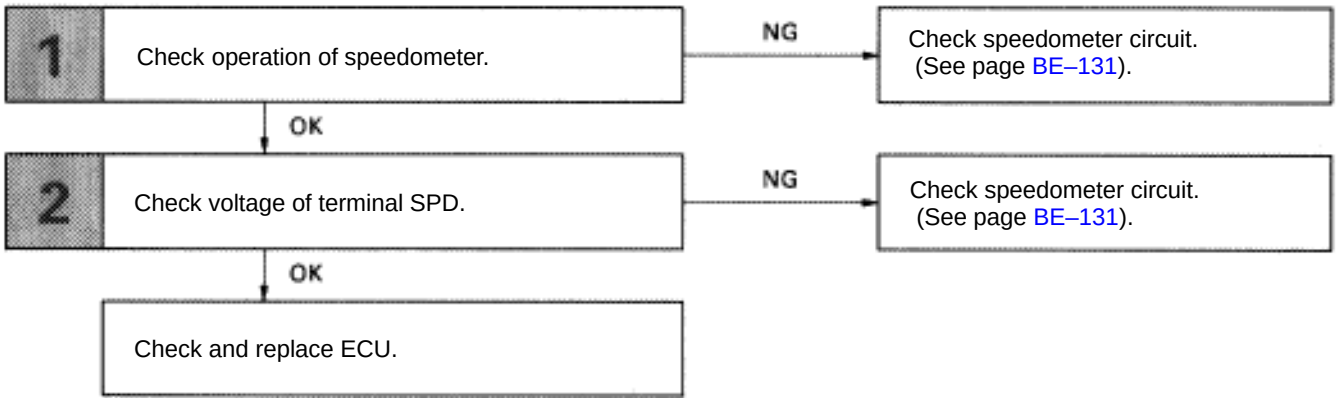

WIRING DIAGRAM

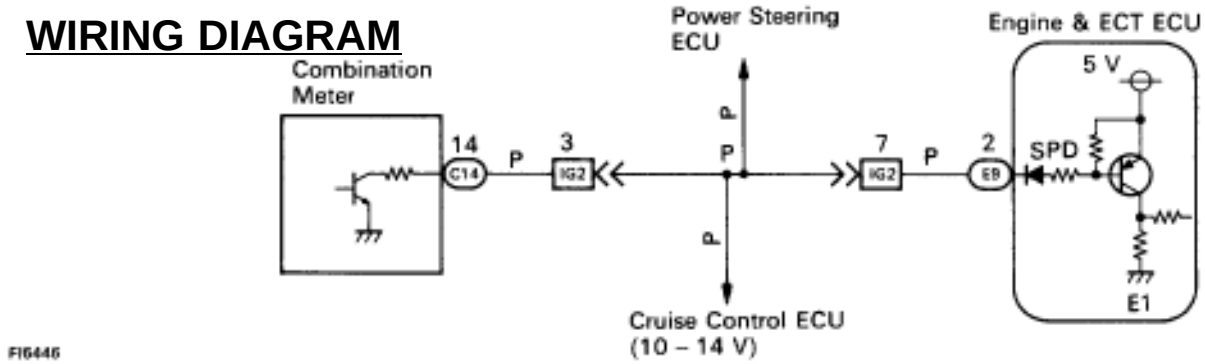

WhereEverybodyKnowsYourName

1	**Check operation of speedometer.**
C	Drive the vehicle and check if the operation of the speedometer in the combination meter is normal.
Hint	The No. 1 speed sensor is operating normally if the speedometer display is normal.

OK

NG **Check speedometer circuit. See combination meter troubleshooting on page BE–131.**

2	**Check voltage between terminal SPD of engine & ECT ECU connector and body ground.**

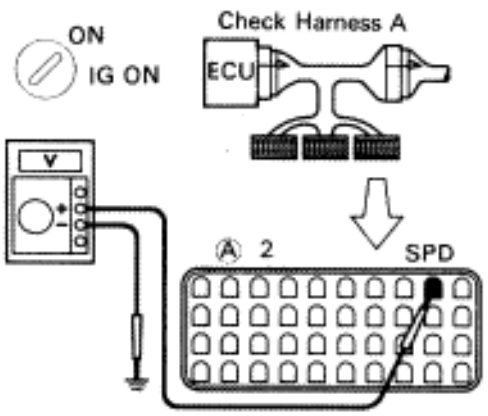

P
(2) Shift the shift level to N range.
(2) Jack up a read wheel on one side.
(2) Connect the Check Harness A. (See page TR–30)
(2) Turn ignition switch on.

C Measure voltage between terminal SPD of engine & ECT ECU connector and body ground when the wheel is turned slowly.

OK **Voltage is generated intermittently.**

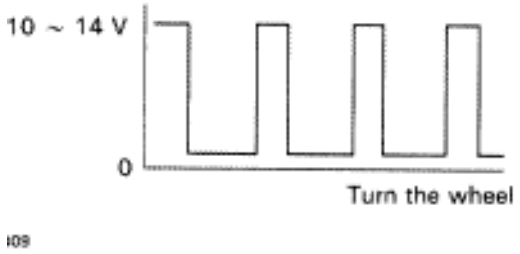

OK

NG **Check speedometer circuit. See combination meter troubleshooting on page BE–131.**

Check and replace engine & ECT ECU.

WhereEverybodyKnowsYourName

Diag. Code 43	Starter Signal Circuit

CIRCUIT DESCRIPTION

When the engine is cranked, the intake air flow is slow, so fuel vaporization is poor. A rich mixture is therefore necessary in order to achieve good startability. While the engine is being cranked, the battery voltage is applied to terminal STA of the ECU. The starter signal is mainly used to increase the fuel injection volume for the starting injection control and after–start injection control.

Code No.	Diagnostic Code Detecting Condition	Trouble Area
43	No starter signal to ECU	▼Open or short in starter signal circuit. ▼Open or short in ignition switch or main relay circuit. ▼ECU

DIAGNOSTIC CHART

HINT: This diagnostic chart is based on the premise that the engine is cranked normally. If the engine is not cranked, proceed to the matrix chart of problem symptoms on page TR–35.

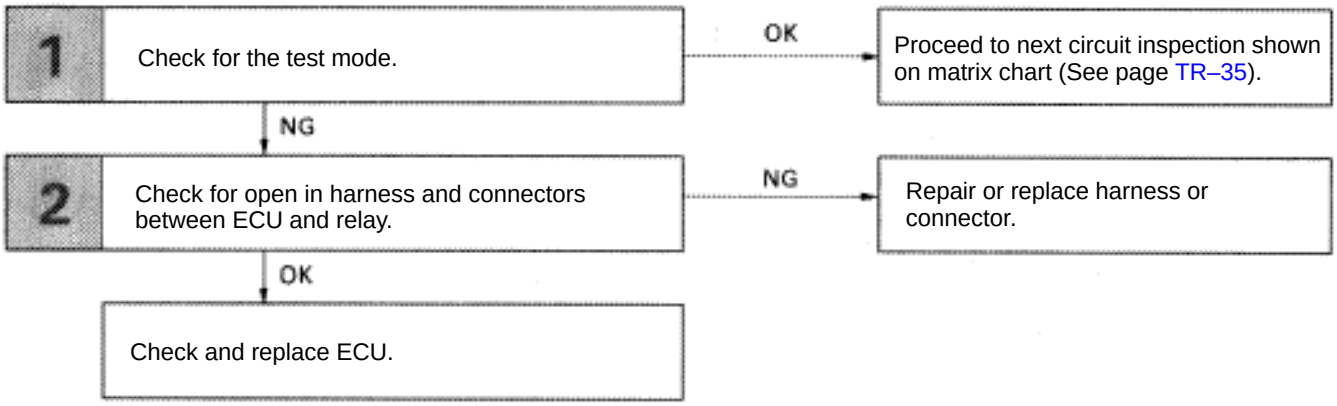

WIRING DIAGRAM

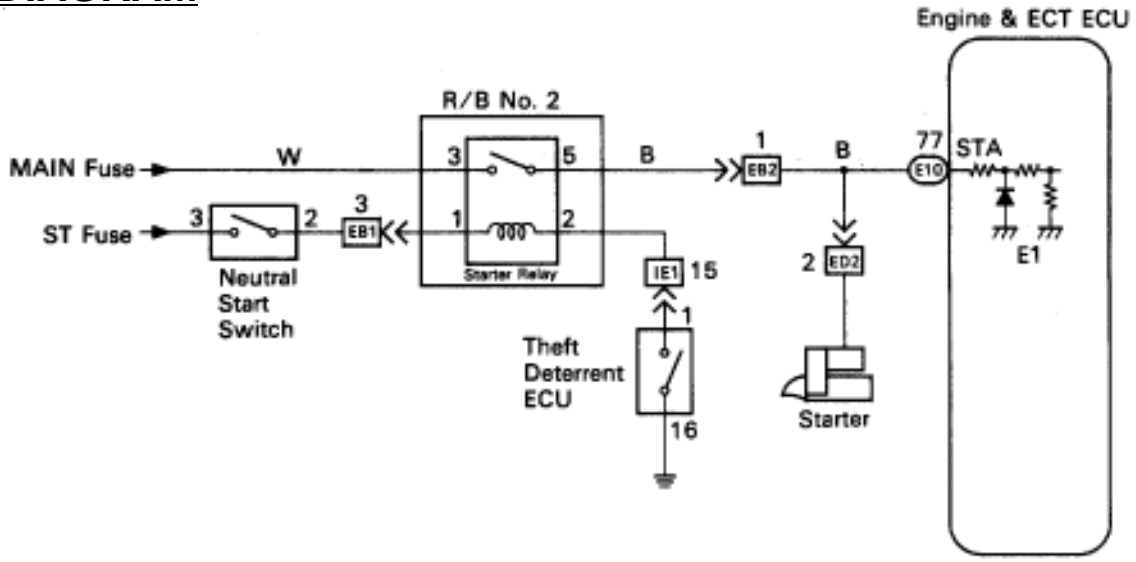

WhereEverybodyKnowsYourName

INSPECTION PROCEDURE

1	Check output condition of diag. code 43.

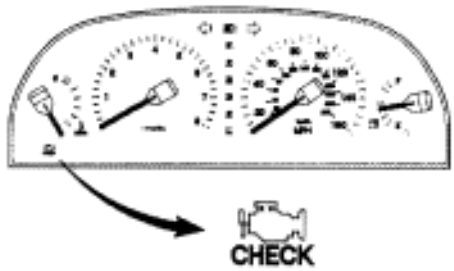

FI6433

P Setting the test mode.
(2) Turn ignition switch OFF.
(2) Connect terminals TE2 and E1 of TDCL.
(2) Turn ignition switch ON.
(Don't start the engine)
(2) Connect terminals TE1 and E1 of TDCL.

C Check if code "43" is output by the "CHECK" engine warning light.

OK **Code "43" is output.**

C Start the engine.
Check if the code "43" disapears.

OK **Code "43" is not output.**

NG

OK **Proceed to next circuit inspection shown on maxtric chart (See page TR–35).**

2	Check for open in harness and connectors between engine & ECT ECU and starter relay (See page IN–27).

OK

NG **Repair or replace harness or connector.**

Check and replace engine & ECT ECU.

WhereEverybodyKnowsYourName

Diag. Code 52,53,55 Knock Sensor Circuit

— CIRCUIT DESCRIPTION

Knock sensors are fitted one each to the right bank and left bank of the cylinder block to detect engine knocking. This sensor contains a piezoelectric element which generates a voltage when it becomes deformed, which occurs when the cylinder block vibrates due to knocking. If engine knocking occurs, ignition timing is retarded to suppress it.

Code No.	Diagnostic Code Detecting Condition	Trouble Area
52	No No. 1 knock sensor signal to ECU for 3 crank revolutions with engine speed between 1,600 rpm 5,200 rpm.	▼Open or short in No. 1 knock sensor circuit. ▼No. 1 knock sensor (looseness) ▼ECU
53	Engine control computer (for knock control) malfunction at engine speed between 650 rpm and 5,200 rpm.	▼ECU
55	No No. 2 knock sensor signal to ECU for 3 crank revolutions with engine speed between 1,600 rpm 5,200 rpm.	▼Open or short in No. 2 knock sensor circuit. ▼No. 2 knock sensor (looseness) ▼ECU

If the ECU detects the above diagnosis conditions, it operates the fail safe function in which the corrective retard angle value is set to the maximum value.

WhereEverybodyKnowsYourName

— CIRCUIT DESCRIPTION (Cont'd)

DIAGNOSIS CODE DETECTION DRIVING PATTERN

Purpose of the driving pattern.

(a) To simulate diag. code detecting condition after diag. code is recorded.

(b) To check that the malfunction is corrected when the repair is completed confirming that diag. code is no longer detected.

Malfunction: Open or Short in Knock Sensor

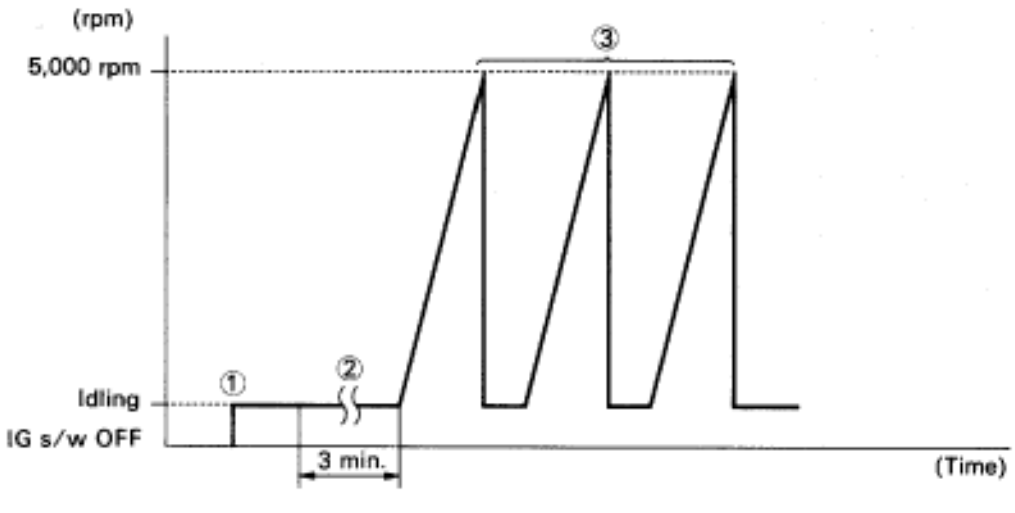

❷ Start engine and warm up.

→ After engine is warmed up, let it idle for 3 min.

❹ With the A/C ON, perform quick racing (5,000 rpm) three times.
(Rapidly depress the accelerator pedal and suddenly release it.)

HINT: If a malfunction exists, the "CHECK" engine warning light will light up when sudden racing is performed.

NOTICE: If the conditions in this test are not strictly followed, detection of the malfunction will not be possible.

WhereEverybodyKnowsYourName

DIAGNOSTIC CHART

HINT: If diag. code 52 is displayed, check No. 1 knock sensor (for left bank) circuit.
If diag. code 55 is displayed, check No. 2 knock sensor (for right bank) circuit.
If diag. code 53 is displayed, replace engine & ECT ECU.

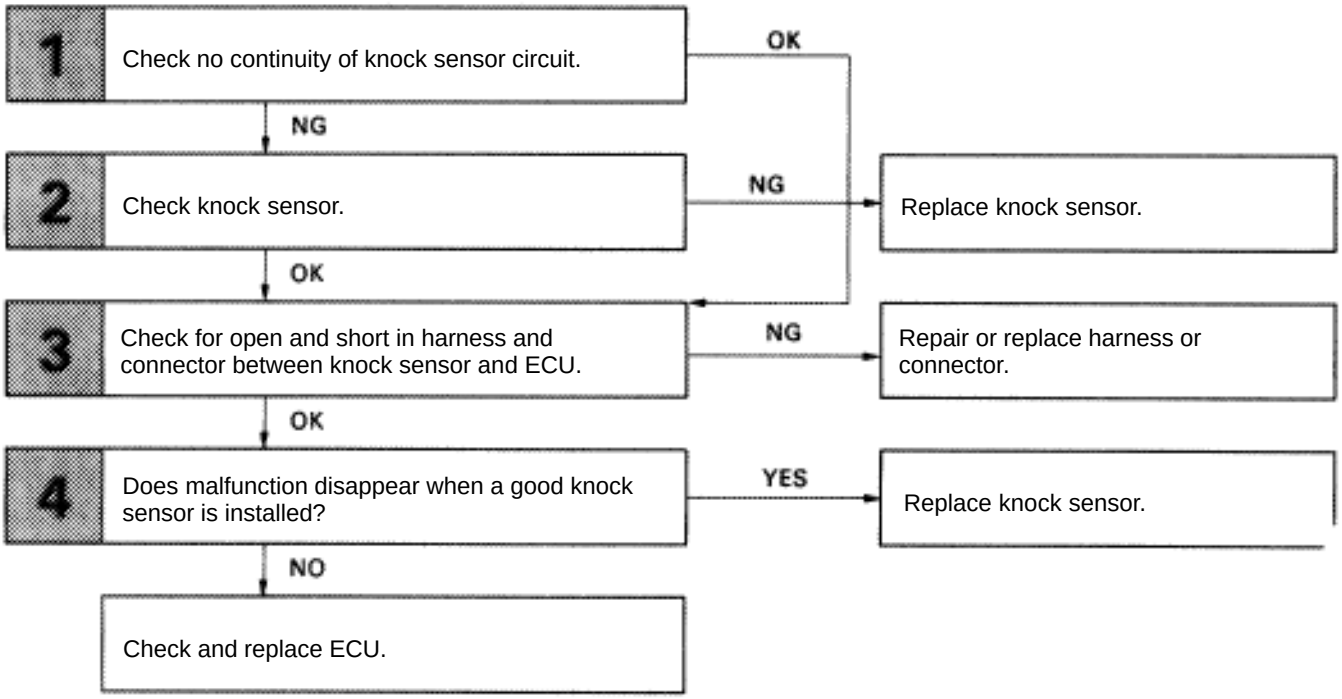

WIRING DIAGRAM

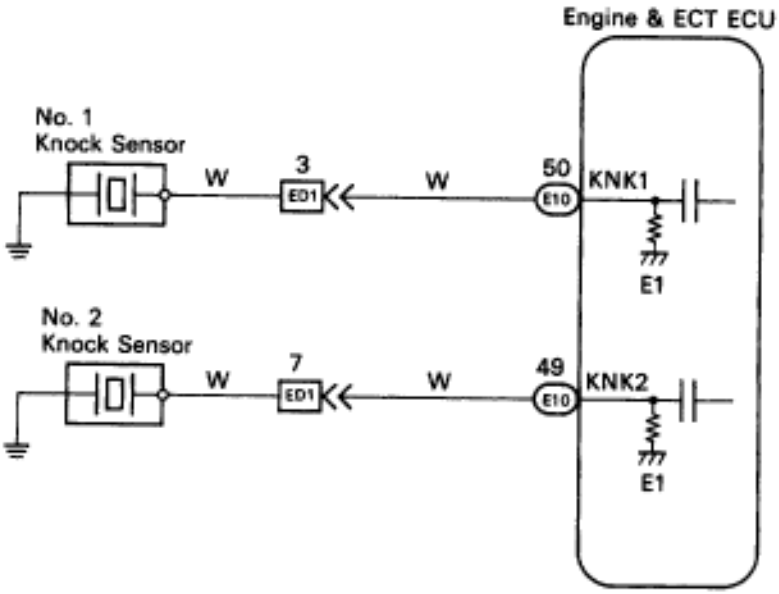

FI6449

WhereEverybodyKnowsYourName

INSPECTION PROCEDURE

1	Check continuity between terminals KNK1, KNK2 of engine & ECT ECU connector and body ground.

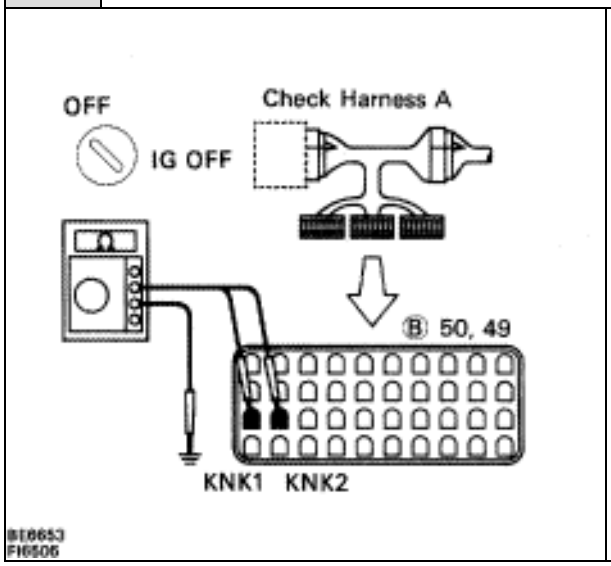

P (2) Connect the Check Harness A.
(See page TR–30)
(2) Disconnect the engine & ECT ECU connector.

C Measure resistance between terminals KNK1, KNK2 of engine & ECT ECU connector and body ground.

OK **Resistance: 1 M or higher**

NG

OK **Go to step 3.**

2	Check knock sensor.

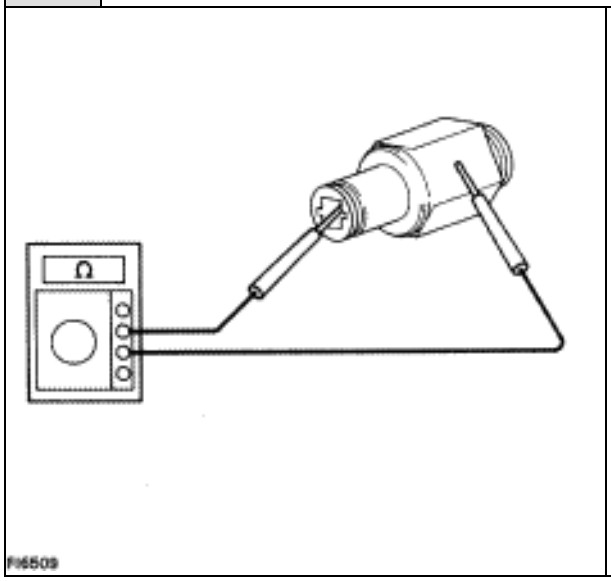

P Disconnect knock sensor connector.

C Measure resistance between the knock sensor terminal and body.

OK **Resistance: 1 M or higher**

OK

NG **Replace knock sensor (See page FI–108).**

WhereEverybodyKnowsYourName

3	**Check for open and short in harness and connectors between engine & ECT ECU and knock sensor (See page IN–27)**

OK

NG → **Repair or replace harness or connector.**

4	**Does malfunction disappear when a good knock sensor is installed?**

NO

YES → **Replace knock sensor (See page FI–108).**

Check and replace engine & ECT ECU.

Reference | INSPECTION USING OSCILLOSCOPE

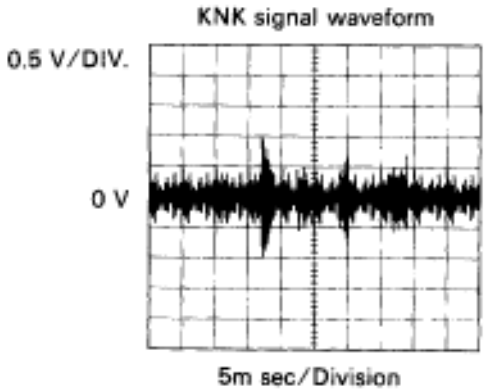

- With the engine racing (4,000 rpm) measure between terminals KNK1, KNK2 of engine & ECT ECU and body ground.

HINT: The correct waveform appears as shown in the Illustration on the left.

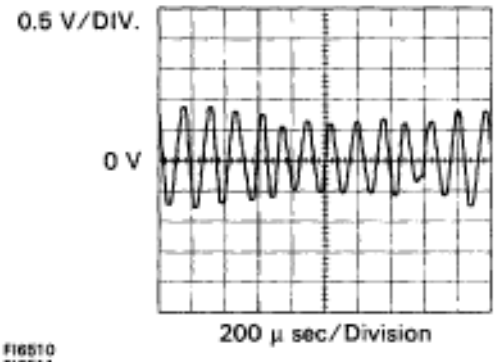

FI6510
FI6511

- Spread the time on the horizontal axis, and confirm that period of the wave is 151 sec.
  (Normal mode vibration frequency of knock sensor: 6.6 KHz).

HINT: If normal mode vibration frequency is not 6.6 KHz, the sensor is malfunctioning.

WhereEverybodyKnowsYourName

–MEMO–

WhereEverybodyKnowsYourName

Diag. Code 71	EGR System Malfunction (Only for USA spec.)

CIRCUIT DESCRIPTION

The EGR system is designed to recirculate the exhaust gas properly controlled according to the driving condition back into the intake air–fuel mixture. It helps to slow down combustion in the cylinder and thus lower the combustion temperature which, in turn, reduces the amount of NOx emission. The amount of EGR is regulated by the EGR vacuum modulator according to the engine load.

If even one of the following conditions is fulfilled, the VSV is turned ON by a signal from the ECU. This results in atmospheric air acting on the EGR valve, closing the EGR valve and shutting off the exhaust gas (EGR cut–OFF).

- Coolant temp. below 50°C (122°F)
- During deceleration (throttle valve closed)
- Light engine load (amount of intake air very small).
- Engine speed over 5,200 rpm.

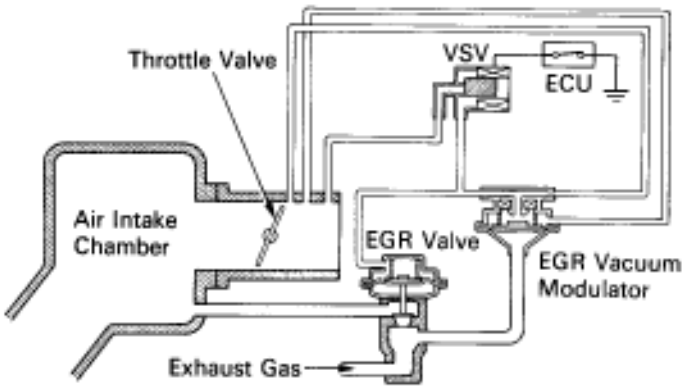

Code No.	Diagnostic Code Detecting Condition	Trouble Area
71	EGR gas temp. is 70°C (158°F) or below for 1 4 min. under conditions (a) and (b). (2 trip detection logic)* (a) Coolant temp.: 63°C (145°F) or more. (b) EGR operation possible (EX. ECT in 3rd speed (5th for M/T), A/C ON, 60 mph (96 km/h), Flat road).	• Open in EGR gas temp. sensor circuit. • Short in VSV circuit for EGR. • EGR hose disconnected, valve stuck. • Clogged EGR gas passage. • ECU

*: See page TR–25.

WhereEverybodyKnowsYourName

CIRCUIT DESCRIPTION (Cont'd)

DIAGNOSIS TROUBLE CODE DETECTION DRIVING PATTERN

Purpose of the driving pattern.

(a) To simulate diag. trouble code detecting condition after diag. trouble code is recorded.

(b) To check that the malfunction is corrected when the repair is completed confirming that diag. trouble code is no longer detected.

Malfunction: Open in EGR gas temp. sensor circuit

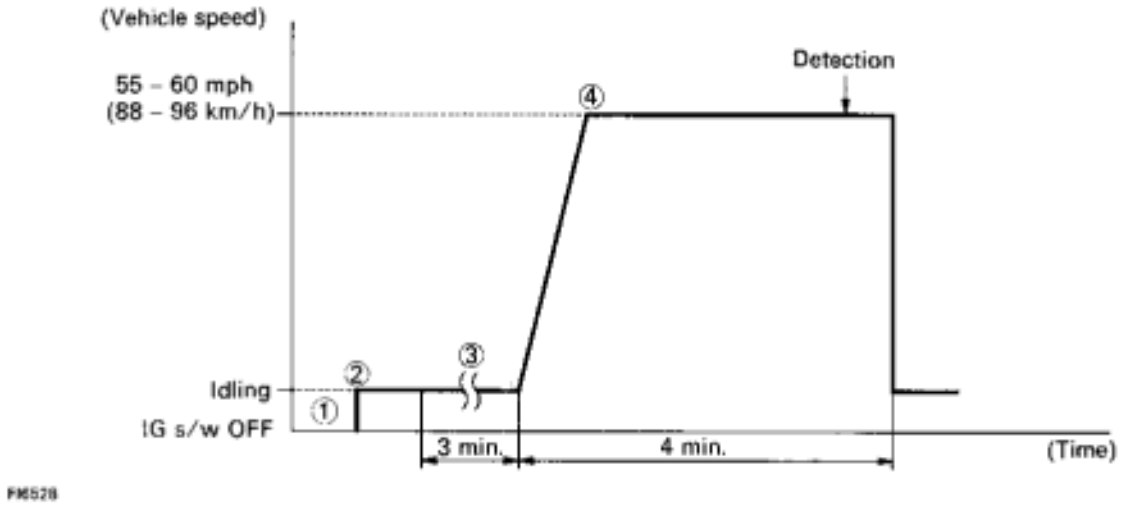

① Disconnect the EFI fuse (15 A) for 10 sec. or more, with IG switch OFF.
Initiate test mode (Connect terminal TE2 and E1 of check connector or TDCL with IG switch OFF).

② Start the engine and warm up.

③ After the engine is warmed up, let it idle for 3 min.

④ With the A/C ON and transmission in 5th gear (ECT in 3rd speed) drive at 55 ~ 60 mph (88 ~ 96 km/h) for 4 min or less.

HINT: If a malfunction exists, the "CHECK" engine warning light will light up during step .

NOTICE: If the conditions in this test are not strictly followed, detection of the malfunction will not be possible.

WhereEverybodyKnowsYourName

DIAGNOSTIC CHART

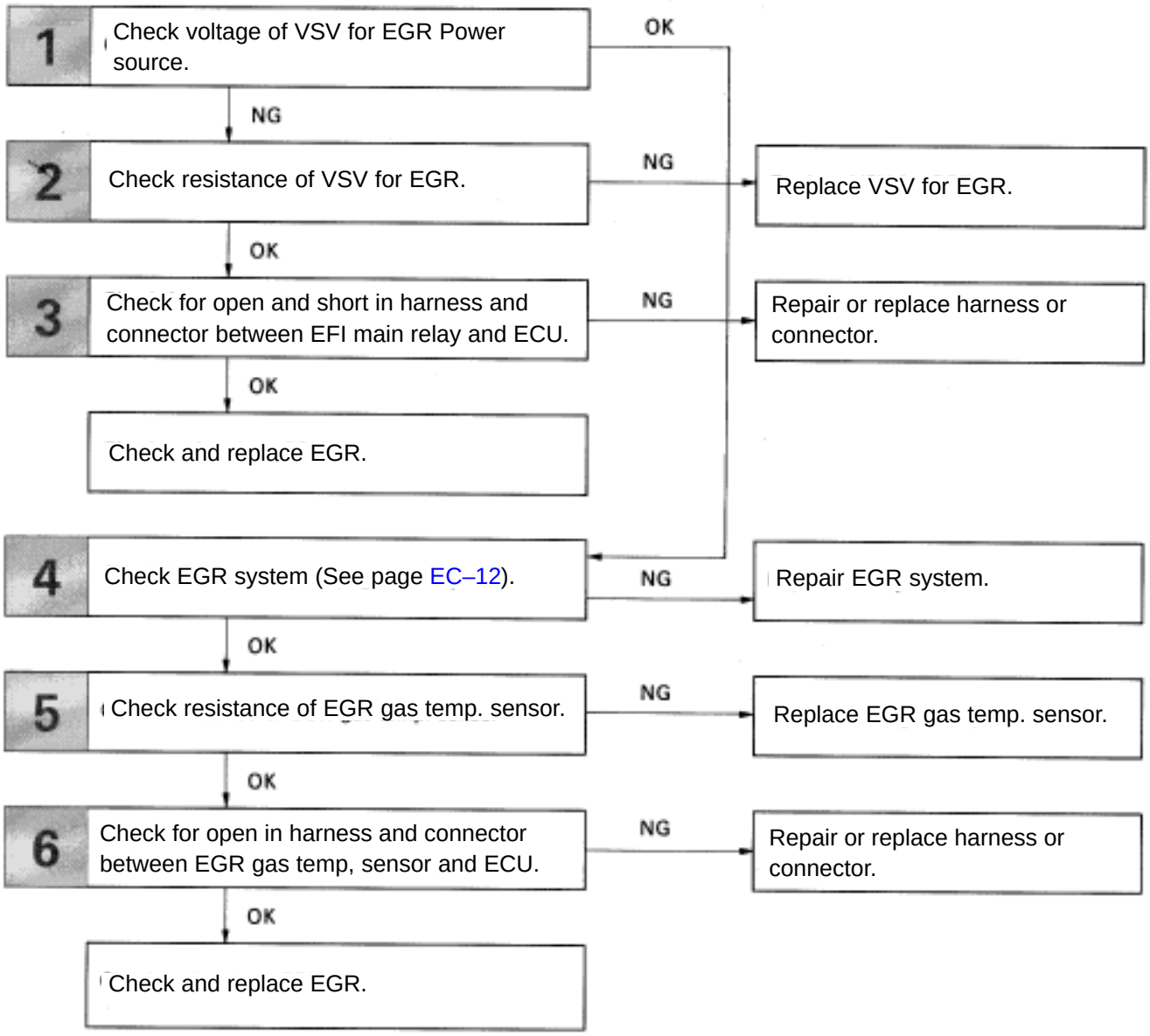

WhereEverybodyKnowsYourName

WIRING DIAGRAM

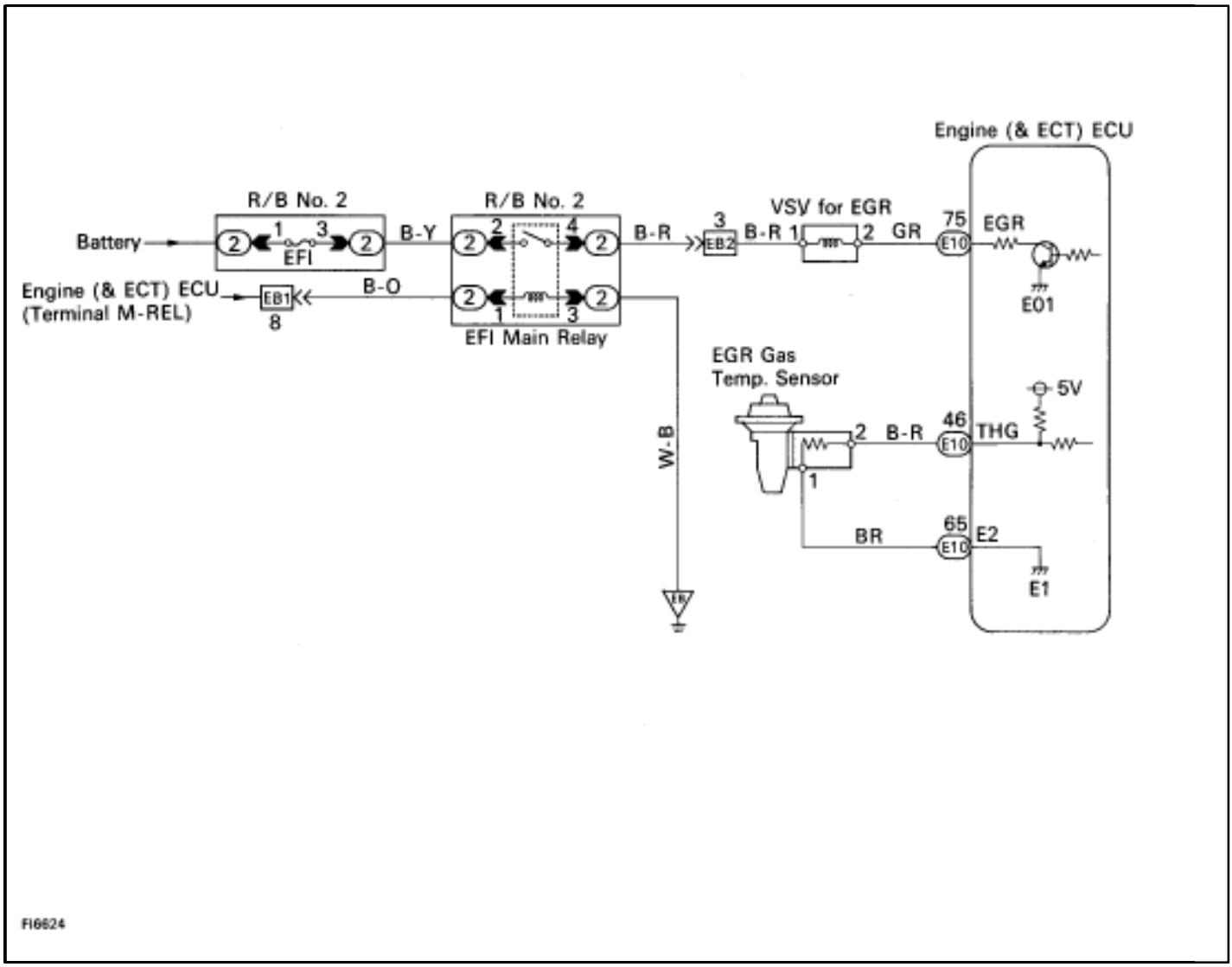

WhereEverybodyKnowsYourName

INSPECTION PROCEDURE

1	Check voltage between terminal EGR of ECM connector and body ground.

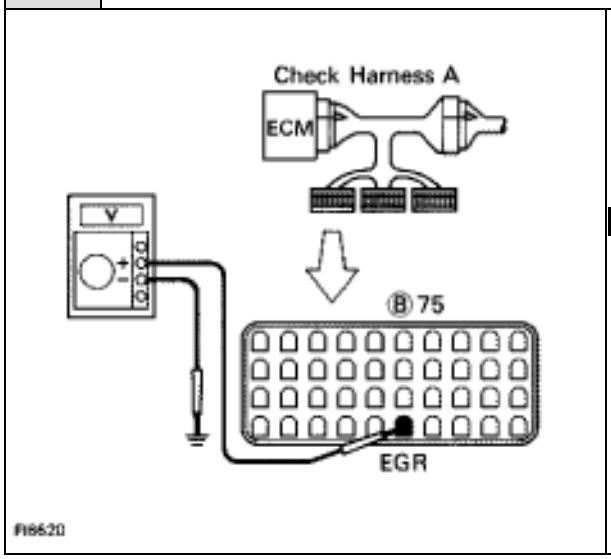

P 1. Connect the Check Harness A. (See page TR–34).
2. Warm up engine to normal operating temperature.

C Measure voltage between terminal EGR of engine (& ECT) ECU connector and body ground.

OK **Voltage:**

NG

OK **Go to step ▼.**

2	Check resistance between terminals of VSV for EGR.

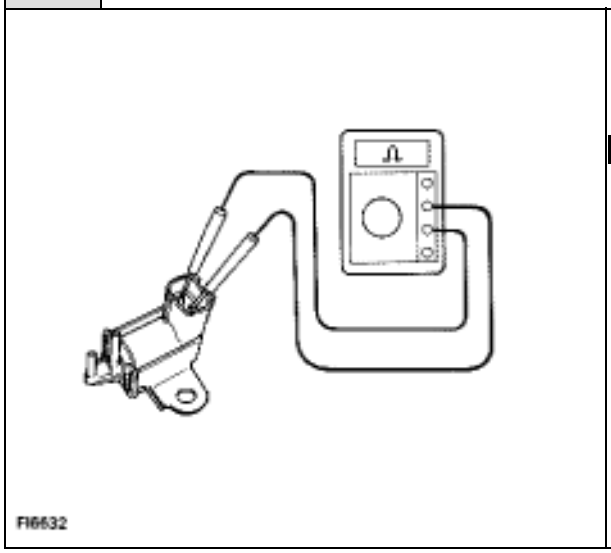

P Remove VSV for EGR. (See page EC–13).

C Measure resistance between terminals of VSV for EGR.

OK **Resistance: 38.5 – 44.5 at 20 C (68 F)**

OK

NG **Replace VSV for EGR.**

3	Check for open and short in harness and connector between EFI main relay and VSV for EGR, VSV for EGR and engine (& ECT) ECU. (See page IN–27)

OK

NG **Repair or replace harness or connector.**

Check and replace engine (& ECT) ECU.

WhereEverybodyKnowsYourName

4	Check EGR system (See page EC–12).

OK

NG → Repair EGR system.

5	Check resistance of EGR gas temp. sensor.

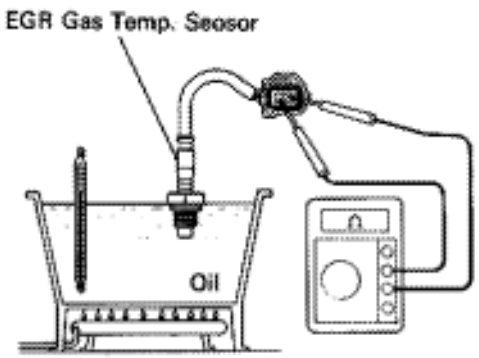

P03193

P Remove EGR gas temp. sensor.

C Measure resistance between terminals of EGR gas temp. sensor connector.

OK **Resistance:** **69 – 89 k at 50°C (122°F)**
12 – 15 k at 100°C (212°F)
2 – 4 k at 150°C (302°F)

OK

NG → Replace EGR gas temp. sensor.

6	Check for open in harness and connector between EGR gas temp. sensor and engine (& ECT) ECU. (See page IN–27).

OK

NG → Repair or replace harness or connector.

Check and replace engine (& ECT) ECU.

WhereEverybodyKnowsYourName

Diag. Code 71	EGR System Malfunction (Only for USA spec.)

— CIRCUIT DESCRIPTION

The EGR system recirculates exhaust gas, which is controlled to the proper quantity to suit the driving conditions, into the intake air mixture to slow down combustion, reduce the combustion temperature and reduce NOx emissions.
The lift amount of the EGR valve is controlled by a step motor operated by the ECU. The ECU operates the motor only a preprogrammed amount in response to the engine operating conditions (engine rpm, intake air volume to adjust the EGR volume to the target valve.)
Under the following conditions, EGR is cut to maintain driveability.

- Coolant temp. below 535C (127.45F)
- During deceleration (throttle valve closed)
- Light engine load (amount of intake air very small)
- Engine speed over 4,000 rpm
- Engine idling
- Neutral start switch on

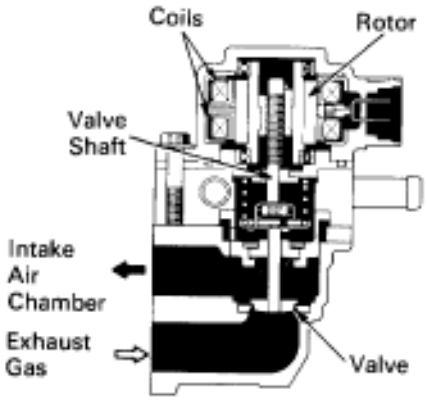

Code No.	Diagnostic Code Detecting Condition	Trouble Area
71	(1) Open or short in EGR step motor circuit for 1 sec. or more.	▼Open or short in EGR step motor circuit ▼ECU
	(2) EGR gas temp. is 65°C (149°F) or below for 1 ~ 4 min. under conditions (a) and(b). (2 trip detection logic)* (a) Coolant temp.: 65°C (149°F) or more. (b) EGR operation possible (EX. ECT in 3rd speed, A/C ON, 60 mph (96 km/h), Flat road).	▼Open in EGR gas temp. sensor circuit ▼ECU

*: See page TR–21.

WhereEverybodyKnowsYourName

— CIRCUIT DESCRIPTION (Cont'd) —

DIAGNOSIS CODE DETECTION DRIVING PATTERN

Purpose of the driving pattern.

(a) To simulate diag. code detecting condition after diag. code is recorded.

(b) To check that the malfunction is corrected when the repair is completed confirming that diag. code is no longer detected.

Malfunction: Open in EGR gas temp. sensor circuit

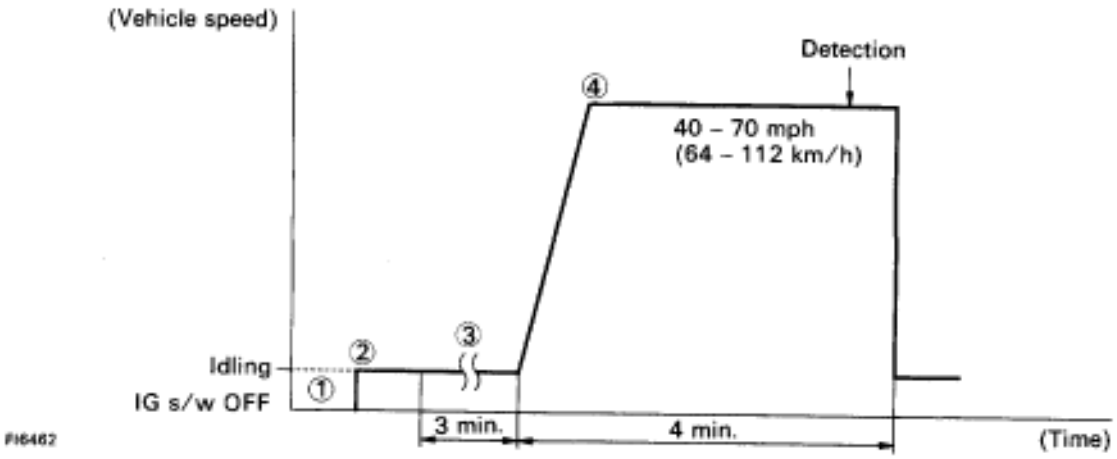

❷ Initiate test mode (See page TR–12).

→ Start engine and warm up.

❹ After engine is warmed up, let it idle for 3 min.

③ With the A/C ON and transmission in D range (O/D OFF), drive at 40–70 mph for 4 min.

HINT: If a malfunction exists, the "CHECK" engine warning light will light up at 1–4 min. of driving at 40–70 mph (64–112 km/h).

NOTICE: If the conditions in this test are not strictly followed, detection of the malfunction will not be possible.

WhereEverybodyKnowsYourName

DIAGNOSTIC CHART

1 Check voltage of terminal EGR 1 ~ 4.
- OK → 5
- NG ↓

2 Check voltage of EGR Step motor power source.
- NG → Check for ECU power source circuit.
- OK ↓

3 Check resistance of EGR step motor.
- NG → Replace EGR step motor.
- OK ↓

4 Check for open and short in harness and connector between EGR step motor and ECU.
- NG → Repair or replace harness or connector.
- OK ↓

Check and replace ECU.

5 Check operation for EGR step motor.
- NG → Replace EGR step motor.
- OK ↓

6 Check resistance of EGR gas temp. sensor.
- NG → Replace EGR gas temp. sensor.
- OK ↓

7 Check for open and short in harness and connector between EGR gas temp. sensor and ECU.
- NG → Repair or replace harness or connector.
- OK ↓

Check and replace ECU.

WIRING DIAGRAM

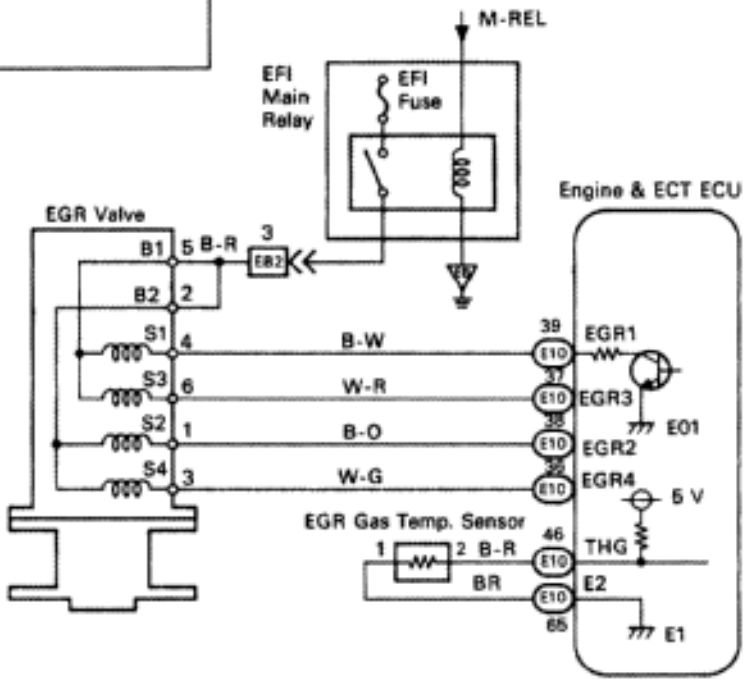

WhereEverybodyKnowsYourName

INSPECTION PROCEDURE

1	Check voltage between terminals EGR 1 ~ 4 of engine & ECT ECU connector and body ground.
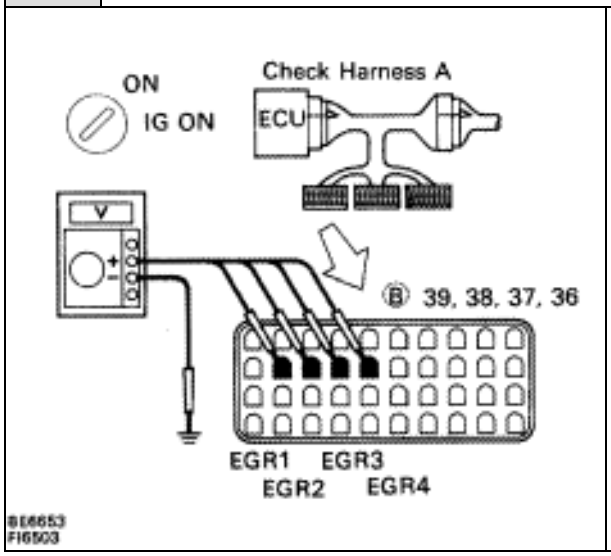	**P** (2) Connect the Check Harness A. (See page TR–30). (2) Turn ignition switch on. **C** Measure voltage between terminals EGR 1 ~ 4 of engine & ECT ECU connector and body ground. **OK** **Voltage: 10 – 14 V**

NG

OK → **Go to step 5.**

2	Check voltage between terminals B1 and B2 of EGR step motor connector and body ground.
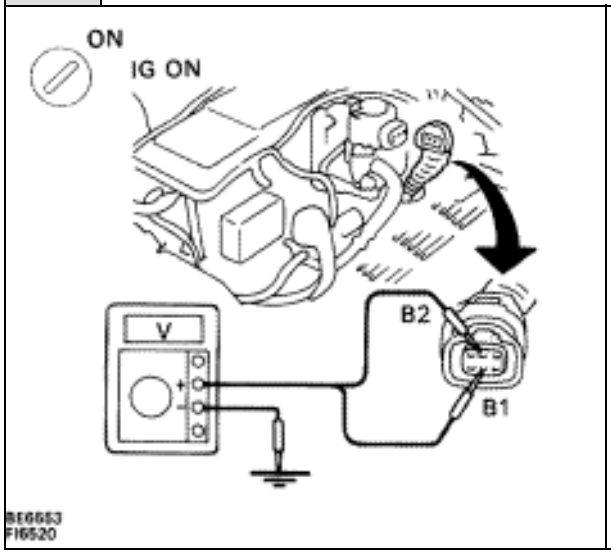	**P** (2) Disconnect EGR step motor connector. (2) Turn ignition switch on. **C** Measure voltage between terminals B1 and B2 of EGR step motor connector and body ground. **OK** **Voltage: 10 – 14 V**

OK

NG → **Check for ECU power source circuit (See page TR–124).**

WhereEverybodyKnowsYourName

3 **Check resistance of EGR step motor.**

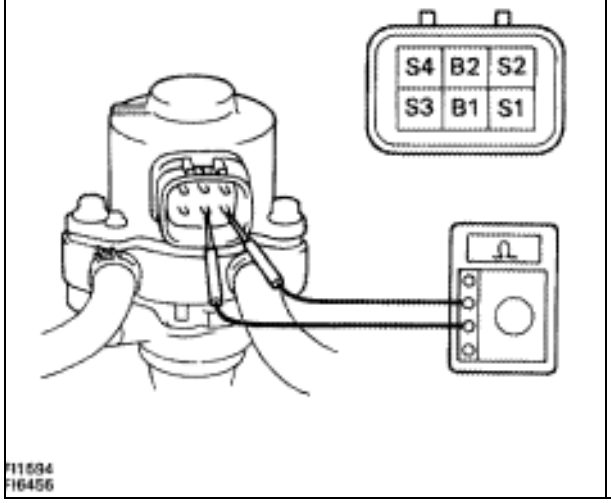

P Disconnect EGR step motor connector.

C Measure resistance between terminals shown below.

OK

Terminal	Resistance
B1 – S1	10 Ω – 30 Ω
B1 – S3	10 Ω – 30 Ω
B2 – S2	10 Ω – 30 Ω
B2 – S4	10 Ω – 30 Ω

OK → **NG** → **Replace EGR step motor.**

4 **Check for open and short in harness and connector between EGR step motor and engine & ECT ECU (See page IN–27).**

OK → **NG** → **Repair or replace harness or connector.**

Check and replace engine & ECT ECU.

5 **Check operation for EGR step motor.**

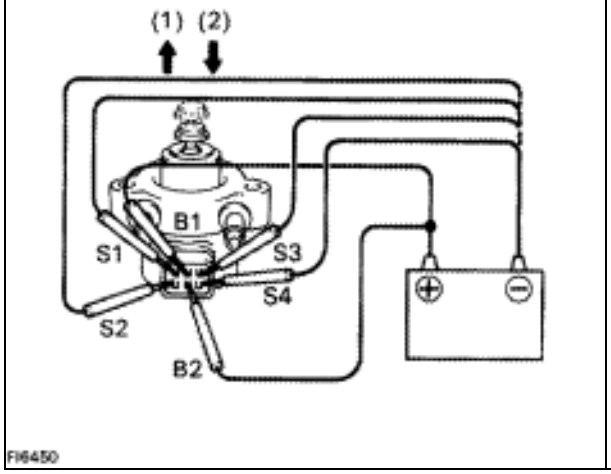

P Remove EGR step motor.

C (2) Connect the battery positive lead to terminals B1 and B2, and the negative lead to terminals S1 – S2 – S3 – S4 in that order.

(2) Connect the battery positive lead to terminals B1 and B2, and the negative lead to terminals S4 – S3 – S2 – S1 in that order.

OK **(2) The valve moves in the closing direction.**

(2) The valve moves in the opening direction.

OK → **NG** → **Replace EGR step motor.**

WhereEverybodyKnowsYourName

6	Check resistance of EGR gas temp. sensor.
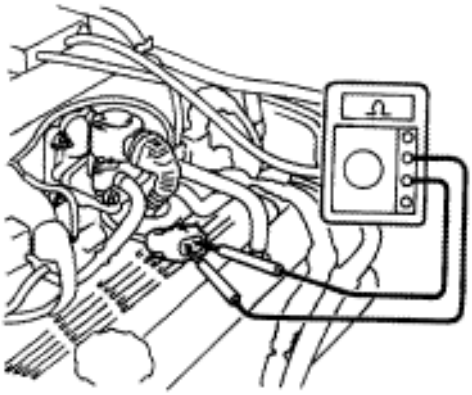 FI6486	**P** Disconnect EGR gas temp. sensor connector (See page FI–103). **C** Measure resistance between terminals of EGR gas temp. sensor connector. **OK** **Resistance: 69 – 89 k at 50°C (122°F)** **12 – 15 k at 100°C (212°F)** **2 – 4 k at 150°C (302°F)**

OK

NG **Replace EGR gas temp. sensor.**

7	Check for open and short in harness and connector between EGR gas temp. sensor and engine & ECT ECU (See IN–27).

OK

NG **Repair or replace harness or connector.**

Check and replace engine & ECT ECU.

WhereEverybodyKnowsYourName

Diag. Code 78 | Fuel Pump Control Circuit

— CIRCUIT DESCRIPTION

The fuel pump speed is controlled at two steps (high speed, low speed) by the condition of the engine (starting, light load, heavy load), when the engine starts (STA ON), the engine (& ECT) ECU sends a Hi signal to the fuel pump ECU (FPC terminal).
The fuel pump ECU then outputs Hi voltage (battery voltage) to the fuel pump so that the fuel pump operates at high speed.
After the engine starts, during idling or light loads, the engine (& ECT) ECU outputs a High Low signal to the fuel pump ECU, the fuel pump ECU outputs Lo battery voltage (about 9V) to the fuel pump and causes the fuel pump to operate at low speed.
If the intake air volume increases (high engine load), the engine (& ECT) ECU sends a Hi signal to the fuel pump ECU and causes the fuel pump to operate at high speed.

DTC No.	DTC Detecting Condition	Trouble Area
78	(1) Open or short in fuel pump circuit for 1 sec. or more with engine speed 1,000 rpm or less. (2 trip detection logic)*	■Open or short in fuel pump ECU circuit. ■Fuel pump ECU ■Engine (& ECT) ECU power source circuit. ■Fuel pump ■Engine (& ECT) ECU
	(2) Open in input circuit of fuel pump ECU (FPC) with engine speed 1,000 rpm or less. (2 trip detection logic)*	
	(3) Open or short in diagnostic signal line (DI) of fuel pump ECU with engine speed 1,000 rpm or less. (2 trip detection logic)*	

*: See page TR–25.

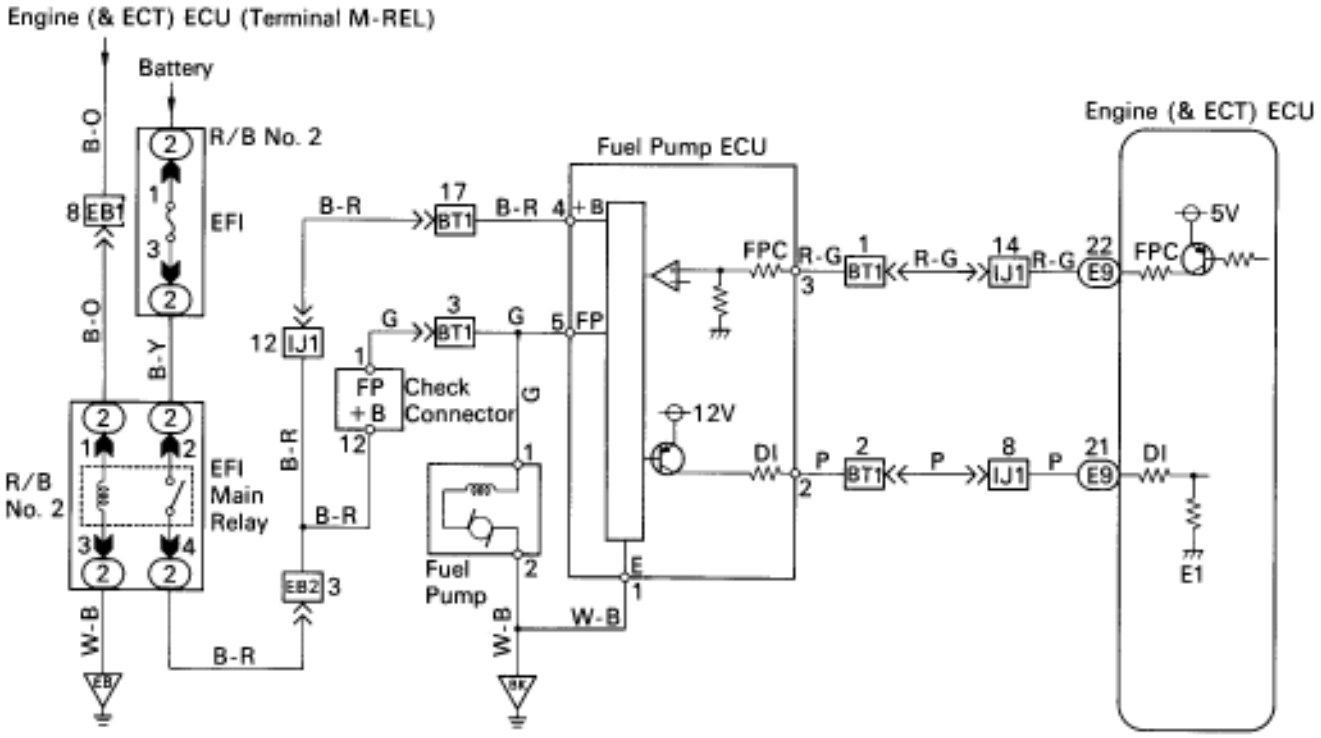

WhereEverybodyKnowsYourName

DIAGNOSTIC CHART

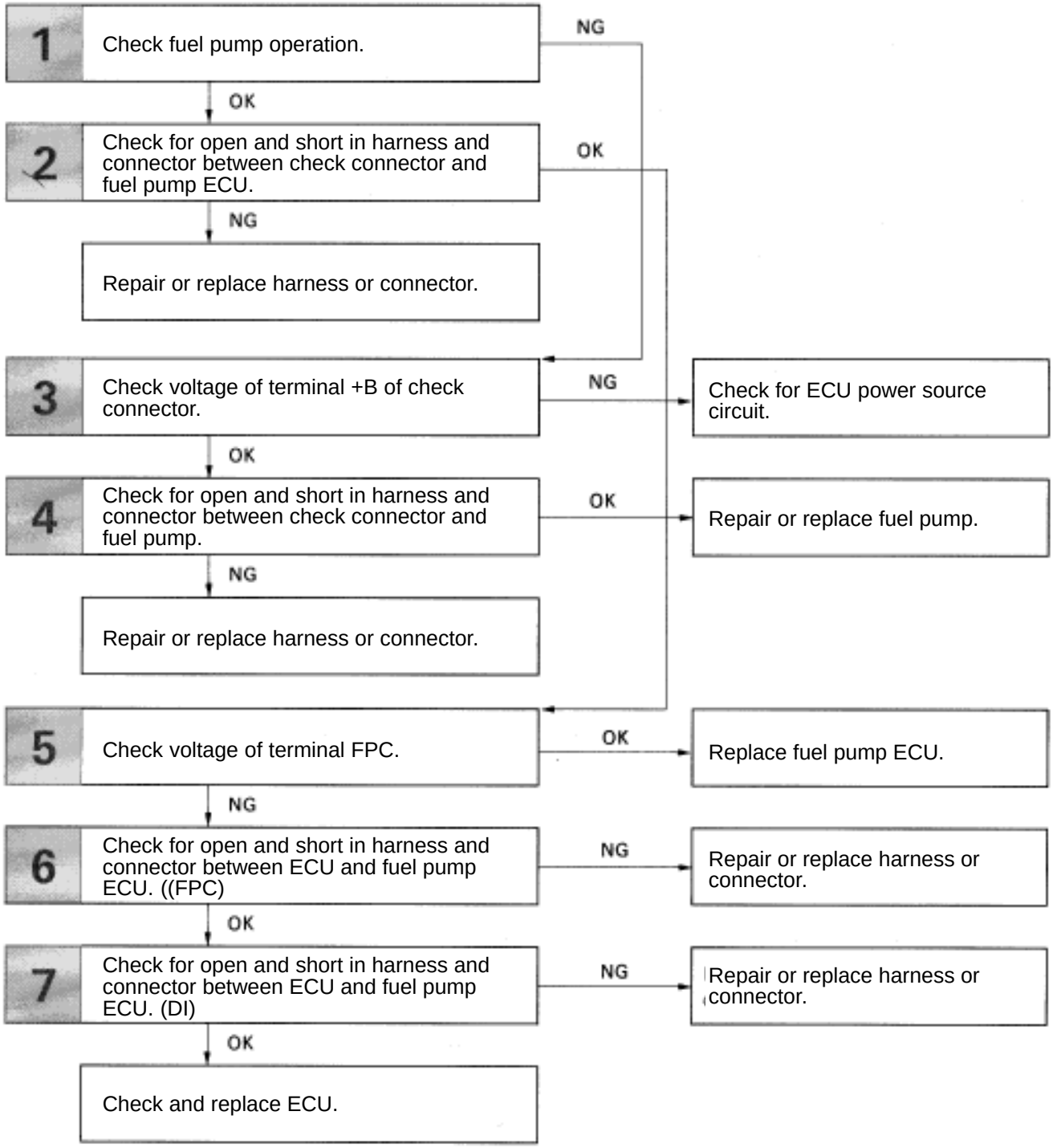

WhereEverybodyKnowsYourName

INSPECTION PROCEDURE

1 **Check fuel pump operation.**

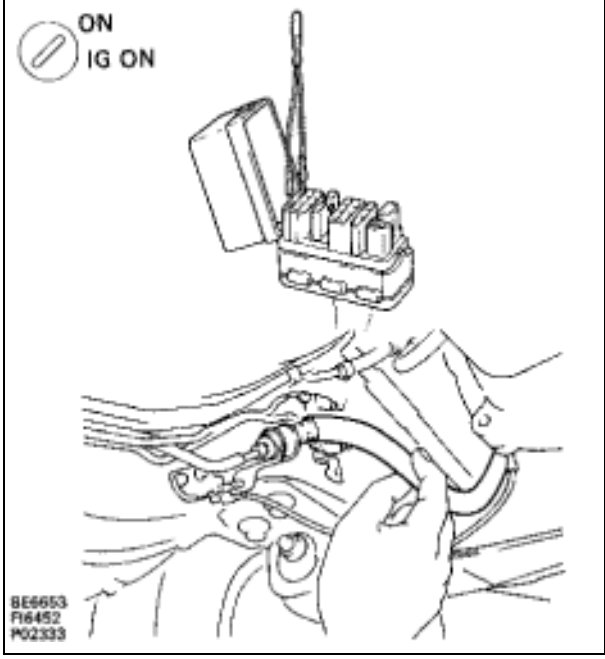

P 1. Turn ignition switch ON.
2. Using SST, connect terminals +B and FP of check connector.

SST 09843–18020

C Check that there is pressure in the hose from the fuel filter.

OK **Fuel pressure can be felt.**

OK

NG **Go to step ▼.**

2 **Check for open and short in harness and connector between terminals +B ↔ +B, FP ↔ FP of the check connector and fuel pump ECU (See page IN–27).**

NG

OK **Go to step 2 .**

Repair or replace harness or connector.

3 **Check voltage of terminal +B of check connector.**

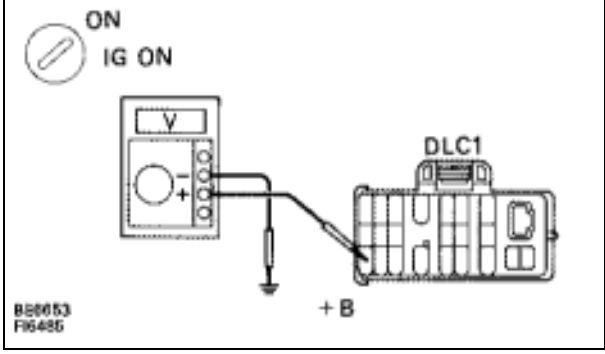

P Turn ignition switch ON.

C Measure voltage between terminal +B of check connector and body ground.

OK **Voltage: 10 – 14 V**

OK

NG **Check for ECU power source circuit (See page TR–120), and check for open in harness and connector between terminal +B of check connector and main relay.**

WhereEverybodyKnowsYourName

4	Check for open and short in harness and connector between terminal FP of check connector, fuel pump and body ground (See page IN–27).

NG → Repair or replace harness or connector.

OK → Repair or replace fuel pump.

5	Check voltage between terminals FPC and E of fuel pump ECU connector.

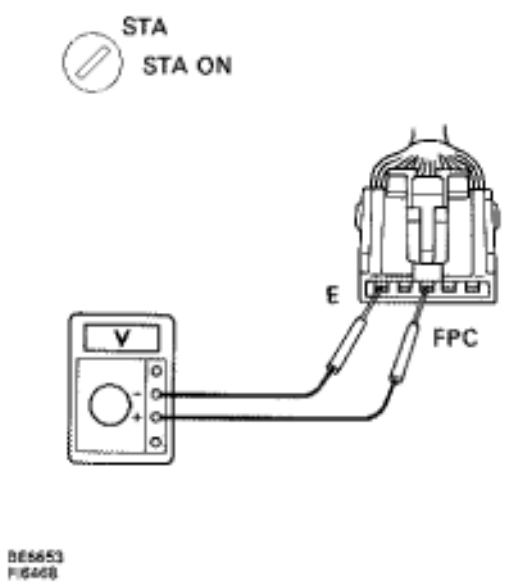

P
1. Remove the LH quarter trim panel. (See page FI–81)
2. Disconnect fuel pump ECU connector.

C
Measure voltage between terminals FPC and E of fuel pump ECU connector when ignition switch is turned to start.

OK
Voltage: 4 – 6 V

NG → Check and replace engine (& ECT) ECU.

OK → Replace fuel pump ECU.

6	Check for open in harness and connector between terminal FPC of engine (& ECT) ECU and terminal FPC of fuel pump ECU, terminal E of fuel pump ECU and body ground (See page IN–27).

OK → Check and replace engine (& ECT) ECU.

NG → Repair or replace harness or connector.

7	Check for open and short in harness and connector between terminal DI of engine (& ECT) ECU and terminal DI of fuel pump ECU (See page IN–27).

OK → Check and replace engine (& ECT) ECU.

NG → Repair or replace harness or connector.

WhereEverybodyKnowsYourName

Diag. Code 78 | Fuel Pump Control Circuit

— CIRCUIT DESCRIPTION

The fuel pump speed is controlled at two steps (high speed, low speed) by the condition of the engine (starting, light load, heavy load), when the engine starts (STA ON), the engine & ECT ECU sends a Hi signal to the fuel pump ECU (FPC terminal).
The fuel pump ECU then outputs Hi voltage (battery voltage) to the fuel pump so that the fuel pump operates at high speed.
After the engine starts, during idling or light loads, the engine & ECT ECU outputs a High Low signal to the fuel pump ECU, the fuel pump ECU outputs Lo battery voltage (about 9V) to the fuel pump and causes the fuel pump to operate at low speed.
If the intake air volume increases (high engine load), the engine & ECT ECU sends a Hi signal to the fuel pump ECU and causes the fuel pump to operate at high speed.

Code No.	Diagnostic Code Detecting Condition	Trouble Area
78	(1) Open or short in fuel pump circuit for 1 sec. or more with engine speed 1,000 rpm or less. (2 trip detection logic)*	▼Open or short in fuel pump ECU circuit. ▼Fuel pump ECU ▼Engine & ECT ECU power source circuit. ▼Fuel pump ▼Engine & ECT ECU
	(2) Open in input circuit of fuel pump ECU(FPC) with engine speed 1,000 rpm or less. (2 trip detection logic)*	
	(3) Open or short in diagnostic signal line (DI) of fuel pump ECU with engine speed 1,000 rpm or less. (2 trip detection logic)*	

*: See page TR–21.

WIRING DIAGRAM

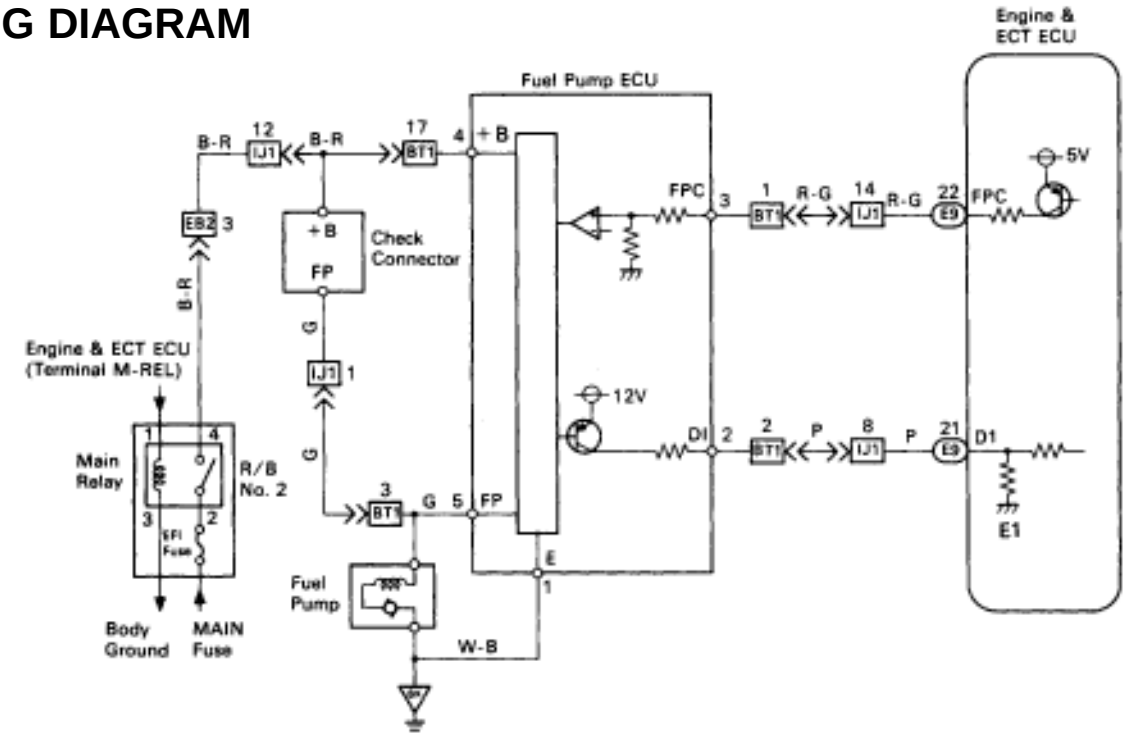

WhereEverybodyKnowsYourName

DIAGNOSTIC CHART

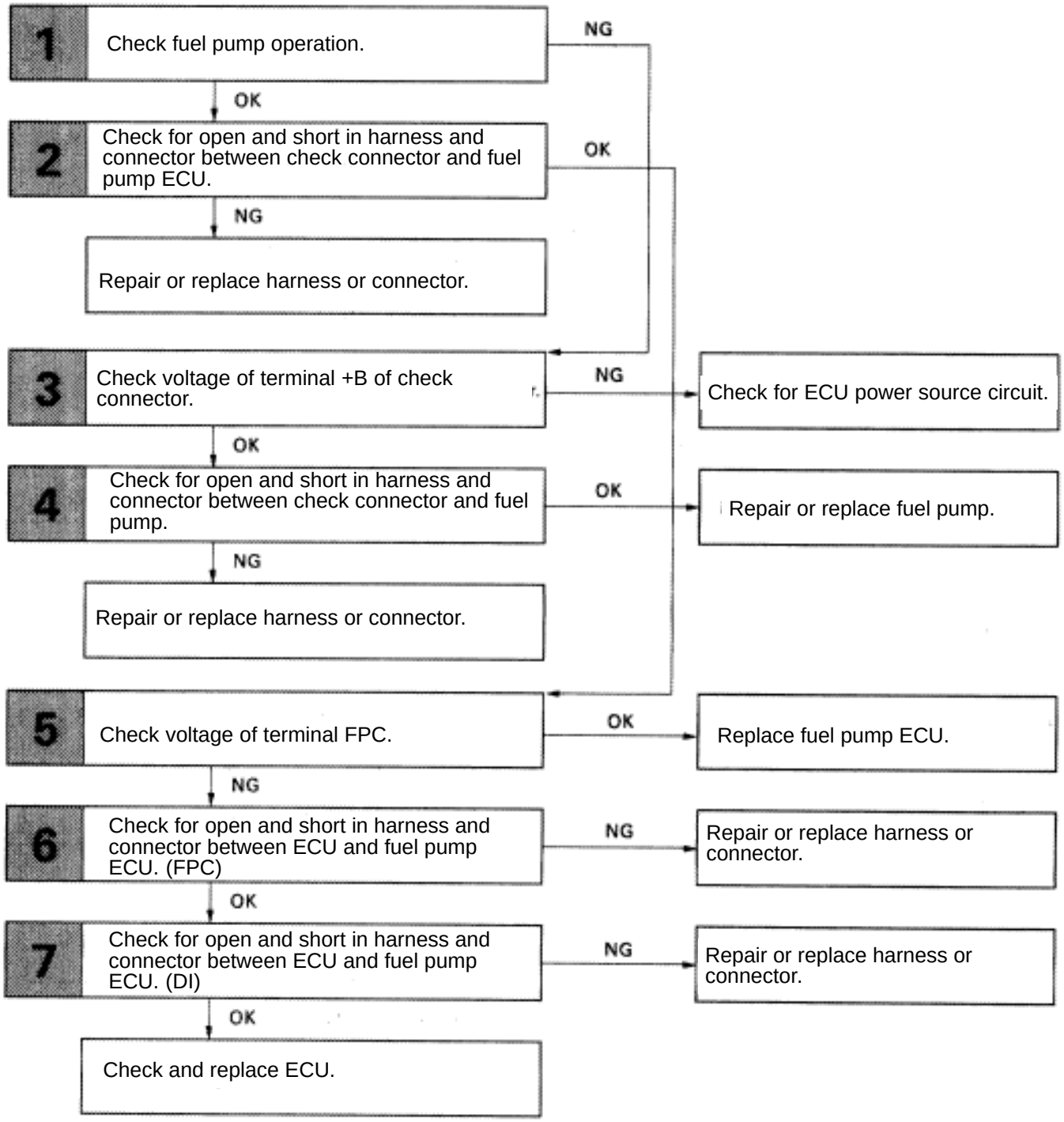

WhereEverybodyKnowsYourName

INSPECTION PROCEDURE

1 **Check fuel pump operation.**

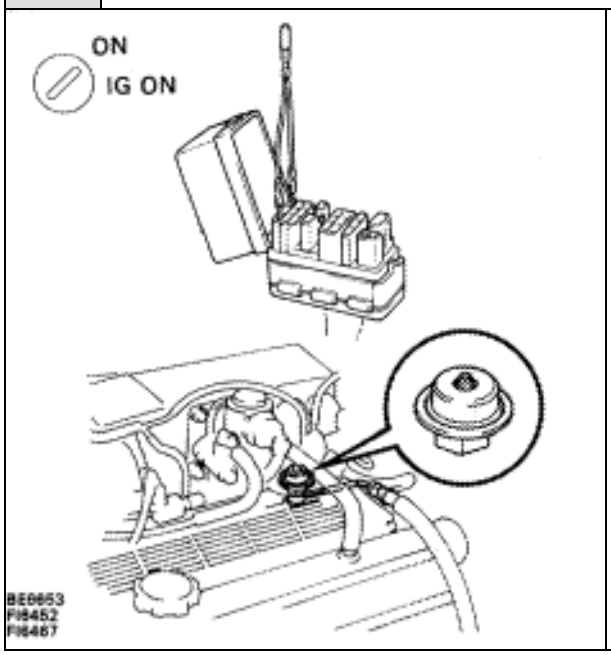

P (2) Turn ignition switch ON.

(2) Using SST. connect terminals + B and FP of check connector.

SST 09843–18020

C Check that there is projection of the head of the pulsation damper screw.

OK **Projection of the head of the pulsation damper screw.**

OK → **NG** → **Go to step 3.**

2 **Check for open and short in harness and connector between terminals + B ↔ + B FP ↔ FP of the check connector and fuel pump ECU (See page IN–27).**

NG → **OK** → **Go to step 5.**

Repair or replace harness or connector.

3 **Check voltage or terminal + B of check connector.**

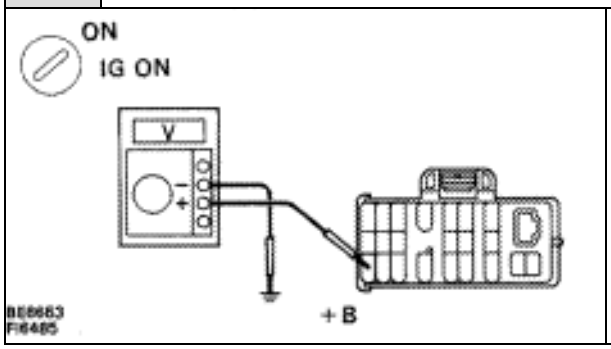

P Turn ignition switch ON.

C Measure voltage between terminal + B of check connector and body ground.

OK **Voltage: 10 – 14 V**

OK → **NG** → **Check for ECU power source circuit (See page TR–124), and check for open in harness and connector between terminal + B of check connector and main relay.**

WhereEverybodyKnowsYourName

4	Check for open and short in harness and connector between terminal FP of check connector, fuel pump and body ground (See page IN–27).

NG → Repair or replace harness or connector.

OK → Repair or replace fuel pump.

5	check voltage between terminals FPC and E of fuel pump ECU connector.

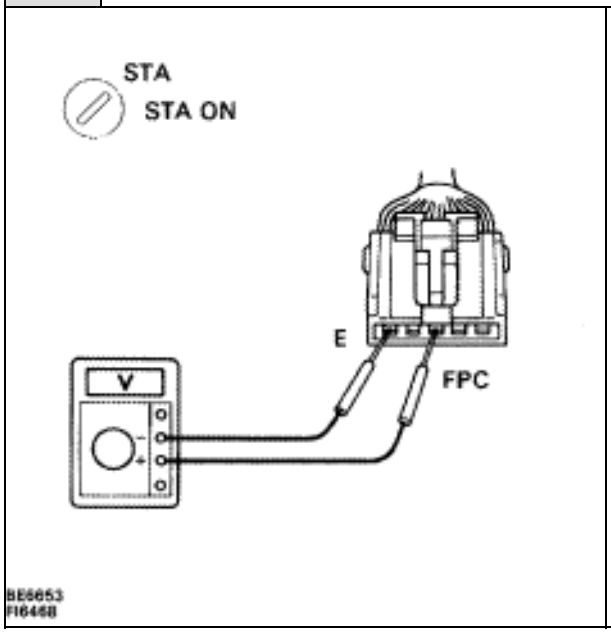

P (2) Remove the LH quarter trim panel. (See page BO–123)

(2) Disconnect fuel pump ECU connector.

C Measure voltage between terminals FPC and E of fuel pump ECU connector when ignition switch is turned to start.

OK **Voltage: 4 – 6 V**

NG → Replace fuel pump ECU.

OK → Replace fuel pump ECU.

6	Check for open in harness and connector between terminal FPC of engine & ECT ECU and terminal FPC of fuel pump ECU, terminal E of fuel pump ECU and body ground (See page IN–27).

OK → Check and replace engine & ECT ECU.

NG → Repair or replace harness or connector.

7	Check for open in harness and connector between terminal DI of engine & ECT ECU and terminal DI of fuel pump ECU (See page IN–27).

OK → Check and replace engine & ECT ECU.

NG → Repair or replace harness or connector.

WhereEverybodyKnowsYourName

Diag. Code 51 | Switch Condition Signal Circuit

CIRCUIT DESCRIPTION

Neutral Start Switch Signal

The ECU uses the signals from the neutral start switch to determine whether the transmission is in park or neutral, or in some other gear.

Air Conditioner Switch Signal

The ECU uses the output from the air conditioner switch to determine whether or not the air conditioner is operating so that it can increase the idling speed of the engine if necessary.

Throttle Position Sensor IDL Signal

The IDL contacts are mounted in the throttle position sensor, and detects the idle condition.

Code No.	Diagnostic Code Detecting Condition	Trouble Area
51	(1) 3 sec. or more after engine startsidle switch OFF (IDL1). (2) Neutral start switch OFF (NSW).(Shift position i n ”R”, ”D”, ”2”or ”1” ranges). (3) A/C switch ON.	▼Throttle position sensor IDL circuit ▼Accelerator pedal and cable ▼Neutral start switch circuit ▼A/C switch circuit ▼ECU

HINT: In this circuit, diagnosis can only be made in the test mode.

DIAGNOSTIC CHART

See next page for DIAGNOSTIC CHART

WIRING DIAGRAM

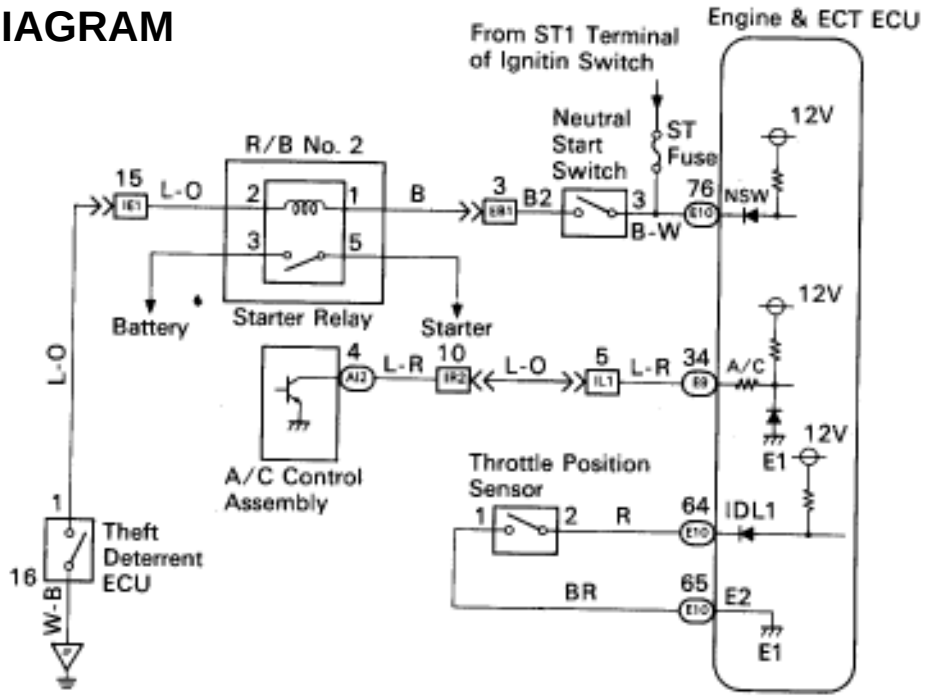

FI6484

WhereEverybodyKnowsYourName

DIAGNOSTIC CHART

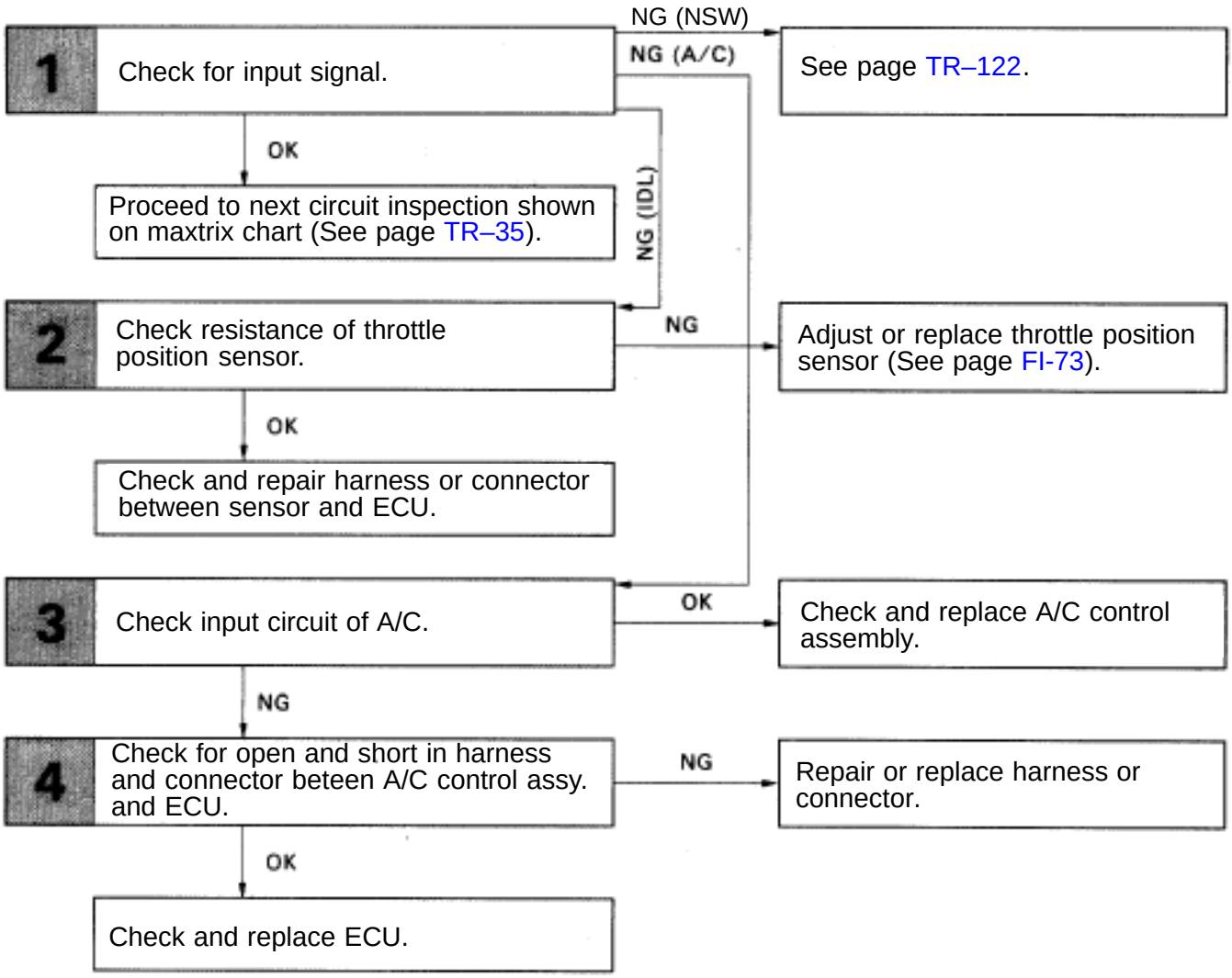

WhereEverybodyKnowsYourName

INSPECTION PROCEDURE

1 Check output condition of diag. code 51.

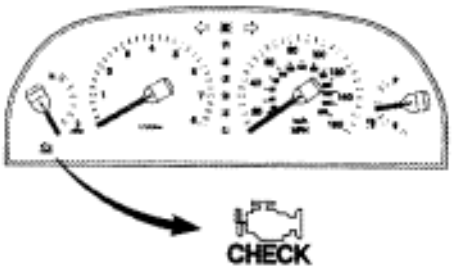

FI8433

P Setting the test mode.

(2) Turn ignition switch OFF.

(2) Connect terminals TE2 and E1 and TDCL.

(2) Turn ignition switch ON.
(For checking terminal A/C, start the engine.)

(2) Connect terminals TE1 and E1 of TDCL.

C Check if code “51” is output by the “CHECK” engine warning light.

OK

	Condition	Code
Neutral Start Switch (NSW)	P or N range	Normal*
	R,D,2 or L range	51*
Throttle Position Sensor (IDL1)	Accelerator pedal released	Normal*
	Accelerator pedal depressed	51*
A/C Switch (A/C)	A/C SW ON	51
	A/C SW OFF	Normal

*: Before the STA signal is input (ST is not ON), diagnostic code 43 is also output.

Hint Diag. code 42 is output with vehicle speed 5 km/h (3 mph) or below

OK

NG **IDL1 .... Go to step 2** **NSW ... Go to page TR–22.**
A/C ..... Go to step 3

Proceed to next circuit inspection shown on maxtrix chart (See page TR–35).

2 Check throttle position sensor.

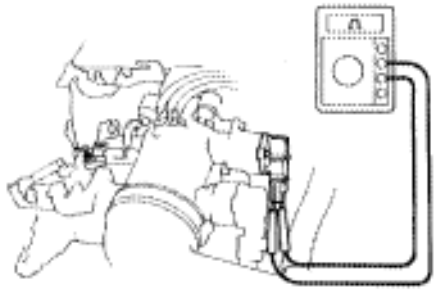

FI4755

P Disconnect throttle position sensor connector.

C Measure resistance between terminals IDL1 and E2 of throttle position sensor connector.

OK

Throttle Valve	Resistance
Fully closed	Less than 0.5 kΩ
Opened	1 MΩ or higher

OK

NG **Adjust or replace throttle position sensor See page FI–73).**

Check and repair harness or connector between engine & ECT ECU and throttle position sensor.

WhereEverybodyKnowsYourName

3	Disconnect A/C control assembly connector, check voltage between terminal MGC of A/C control assembly connector and body ground.

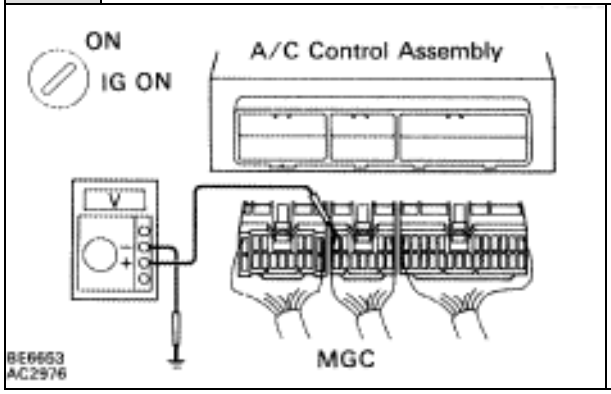

P (2) Remove air conditioner control assembly.

(2) Disconnect air conditioner control assembly connector.

(2) Turn ignition switch on.

C Measure voltage between terminal MGC of air conditioner control assembly connector and body ground.

OK **Voltage: 10 – 14 V**

NG → **OK** → **Check and replace A/C control assembly.**

4	Check for open and short in harness and connector between engine & ECT ECU and A/C control assembly (See page IN–27)

OK → **NG** → **Repair or replace harness or connector.**

Check and replace engine & ECT ECU.

WhereEverybodyKnowsYourName

ECU Power Source Circuit

CIRCUIT DESCRIPTION

When the ignition switch is turned on, battery voltage is applied to the terminal IGSW of the ECU, and the main relay control circuit in the ECU sends a signal to the terminal M–REL of the ECU, switching on the main relay. This signal causes current to flow to the coil, closing the contacts of the main relay and supplying power to the terminals +B and +B1 of the ECU.
If the ignition switch is turned off, the ECU continues to switch on the main relay for a maximum of 2 seconds for the initial setting of the ISC valve.

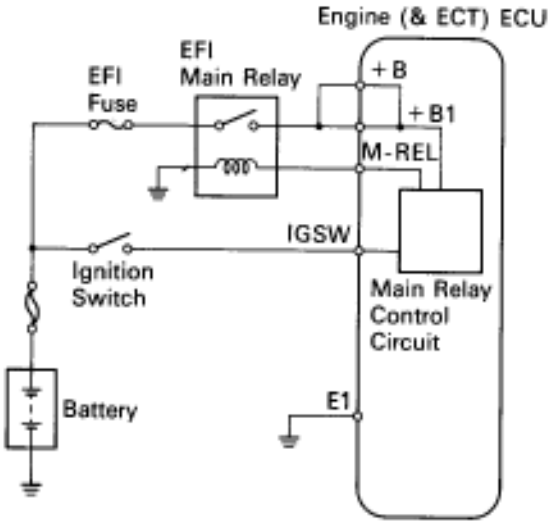

DIAGNOSTIC CHART

See next page for the DIAGNOSTIC CHART.

WIRING DIAGRAM

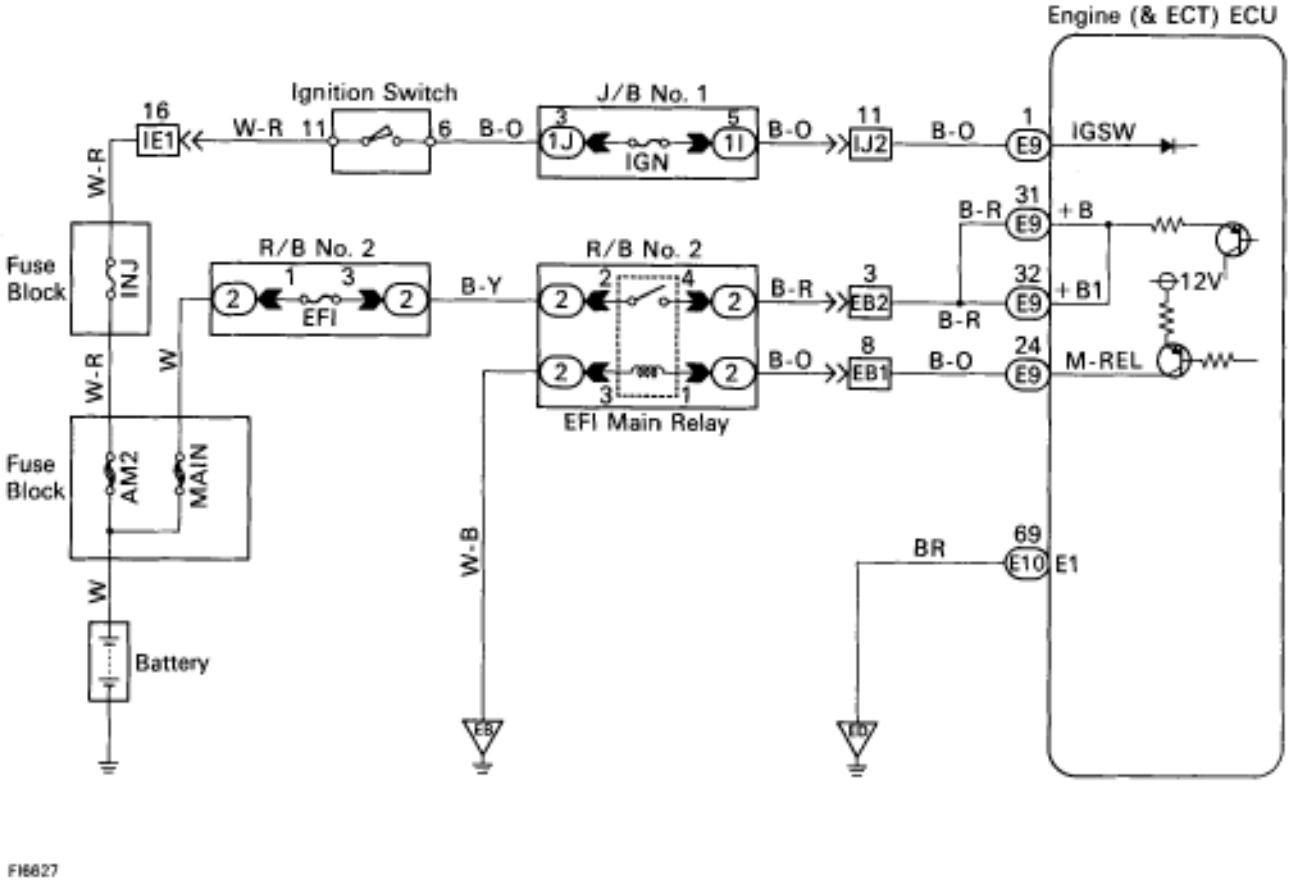

WhereEverybodyKnowsYourName

DIAGNOSTIC CHART

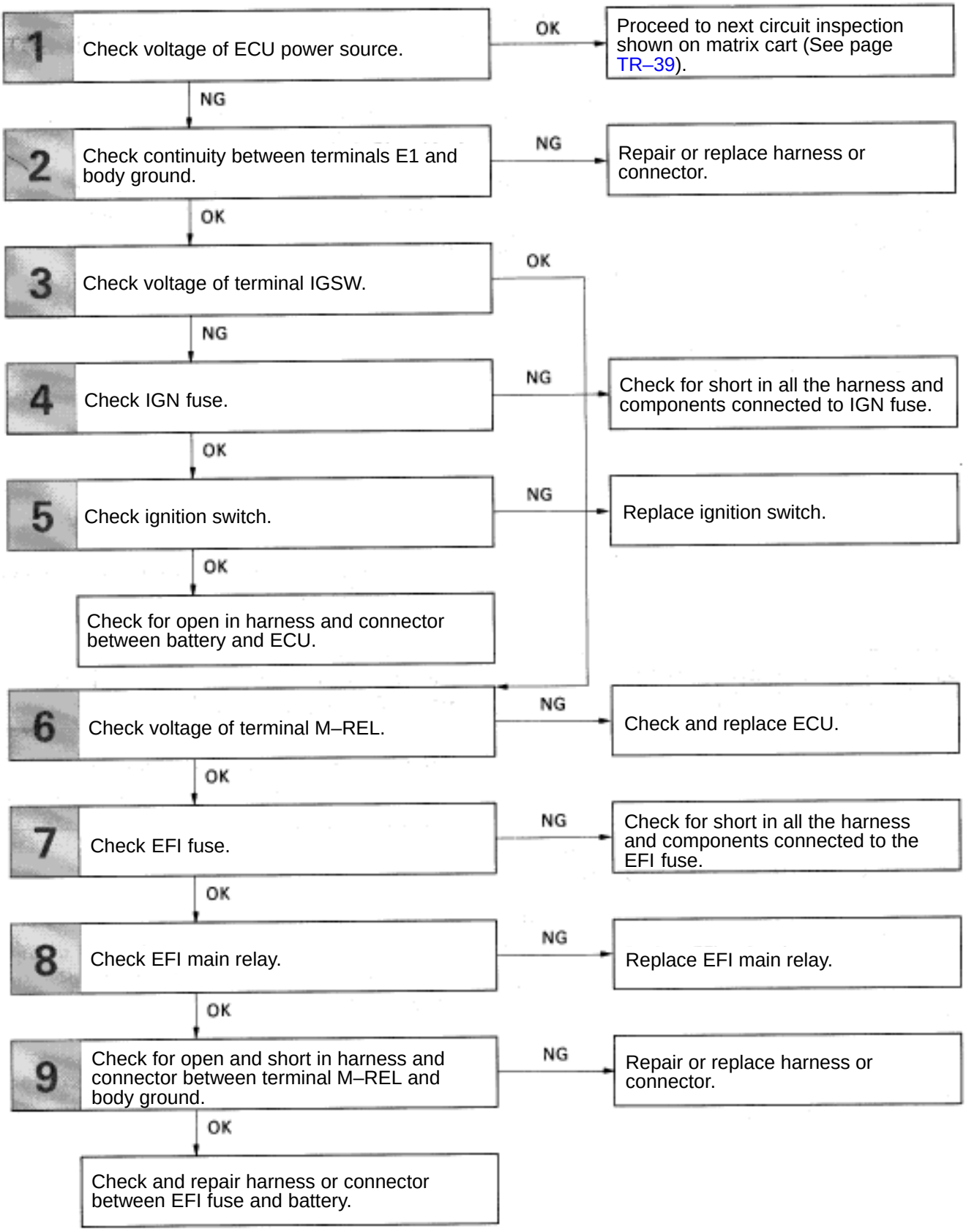

WhereEverybodyKnowsYourName

INSPECTION PROCEDURE

1 **Check voltage between terminals +B, +B1 and E1 of engine (& ECT) ECU connector.**

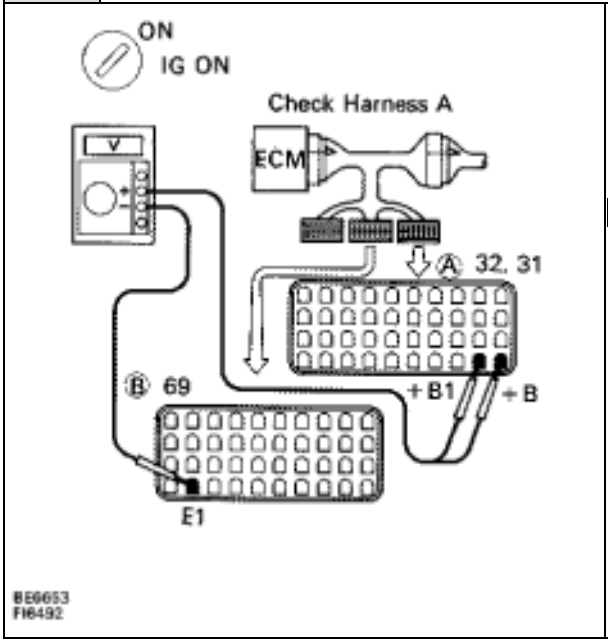

P 1. Connect the Check Harness A. (See page TR–34)
2. Turn ignition switch on.

C Measure voltage between terminals +B, +B1 and E1 of engine (& ECT) ECU connector.

OK **Voltage: 10 – 14 V**

NG

OK **Proceed to next circuit inspection shown on matrix chart (See page TR–39).**

2 **Check for open in harness and connector between terminal E1 of engine (& ECT) ECU and body ground. (See page IN–27).**

OK

NG **Repair or replace harness or connector.**

3 **Check voltage between terminal IGSW of engine (& ECT) ECU connector and body ground.**

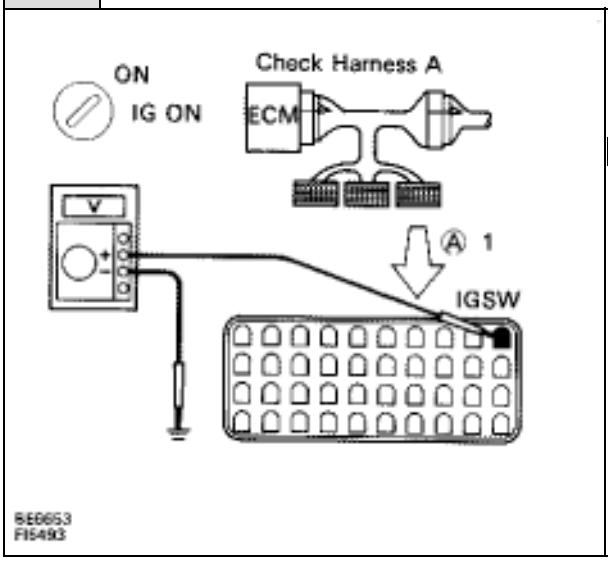

P Turn ignition switch on.

C Measure voltage between terminal IGSW of engine (& ECT) ECU connector and body ground.

OK **Voltage: 10 – 14 V**

NG

OK **Go to step ▼.**

WhereEverybodyKnowsYourName

4 Check IGN fuse.

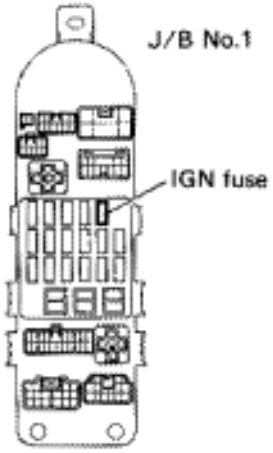

BE6624

P Remove IGN fuse from J/B No. 1.

C Check continuity of IGN fuse.

OK **Continuity**

OK

NG **Check for short in all the harness and components connected to IGN fuse (See attached wiring diagram).**

5 Check ignition switch.

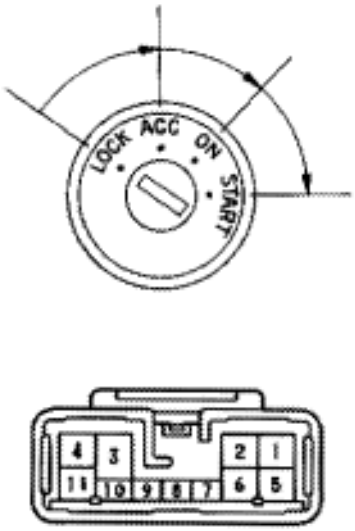

BE3582
eg-11-2

P Remove under cover and finish panel.

C Check continuity between terminals.

OK

Terminal / Switch position	2	3	4	5	6	11
LOCK						
ACC		○—○				
ON	○—○	○	○		○—○	
START	○	—	○	○—○	○	○

OK

NG **Replace ignition switch.**

Check and repair harness and connector between battery and ignition switch, ignition switch and engine (& ECT) ECU.

WhereEverybodyKnowsYourName

6	Check voltage between terminal M–REL of engine (& ECT) ECU connector and body ground.
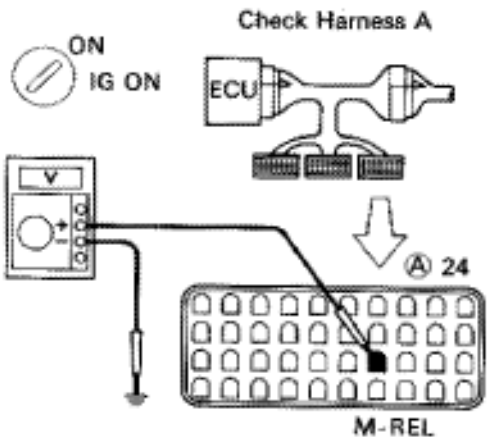	**P** Turn ignition switch on. **C** Measure voltage between terminal M–REL of engine (& ECT) ECU connector and body ground. **OK** **Voltage: 10 – 14 V**

OK

NG → **Check and replace engine (& ECT) ECU.**

7	Check EFI fuse.
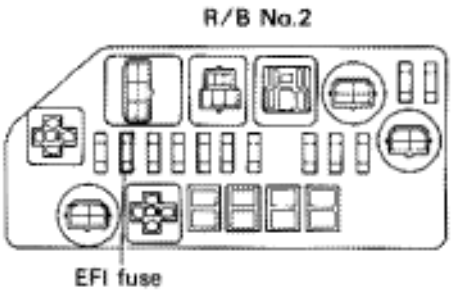	**P** Remove EFI fuse from R/B No. 2. **C** Check continuity of EFI fuse. **OK** **Continuity**

OK

NG → **Check for short in all the harness and components connected to EFI fuse (See attached wiring diagram).**

WhereEverybodyKnowsYourName

8 **Check EFI main relay.**

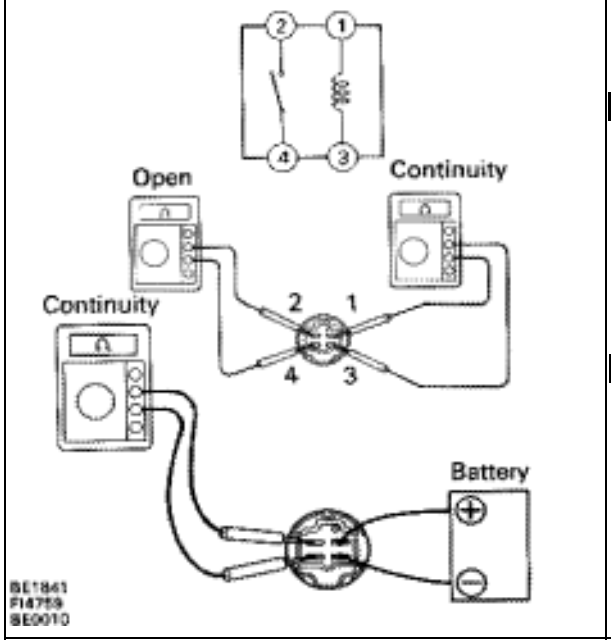

P Remove EFI main relay.

C Check continuity between terminals of EFI main relay shown below.

OK

Terminals 2 and 4	Open
Terminals 1 and 3	Continuity (Reference value 72 Ω)

C
1. Apply battery positive voltage between terminals 1 and 3.
2. Check continuity between terminals 2 and 4.

OK

Terminals 2 and 4	Continuity

OK

NG **Replace EFI main relay.**

9 **Check for open and short in harness and connector between terminal M–REL of engine (& ECT) ECU and body ground (See page IN–27).**

OK

NG **Repair or replace harness or connector.**

Check and repair harness or connector between EFI fuse and battery.

WhereEverybodyKnowsYourName

Neutral Start Switch Circuit

CIRCUIT DESCRIPTION

The neutral start switch goes on when the shift lever is in the N or P shift position. When it goes on the terminal NSW of the ECU is grounded to body ground via the starter relay and theft deterrent ECU, thus the terminal NSW voltage becomes 0V. When the shift lever is in the D, 2, L or R position, the neutral start switch goes off, so the voltage of ECU terminal NSW becomes battery voltage, the voltage of the ECU internal power source. If the shift lever is moved from the N range to the D range, this signal is used for air–fuel ratio correction and for idle speed control (estimated control), etc.
When the neutral start switch is off, code ”51” is output in the test mode diagnosis. (This is not abnormal.)

DIAGNOSTIC CHART

HINT: This diagnosis chart is based on premise that the engine is cranked normally. If the engine is not cranked, proceed to the matrix chart of problem symptoms on page TR–35.

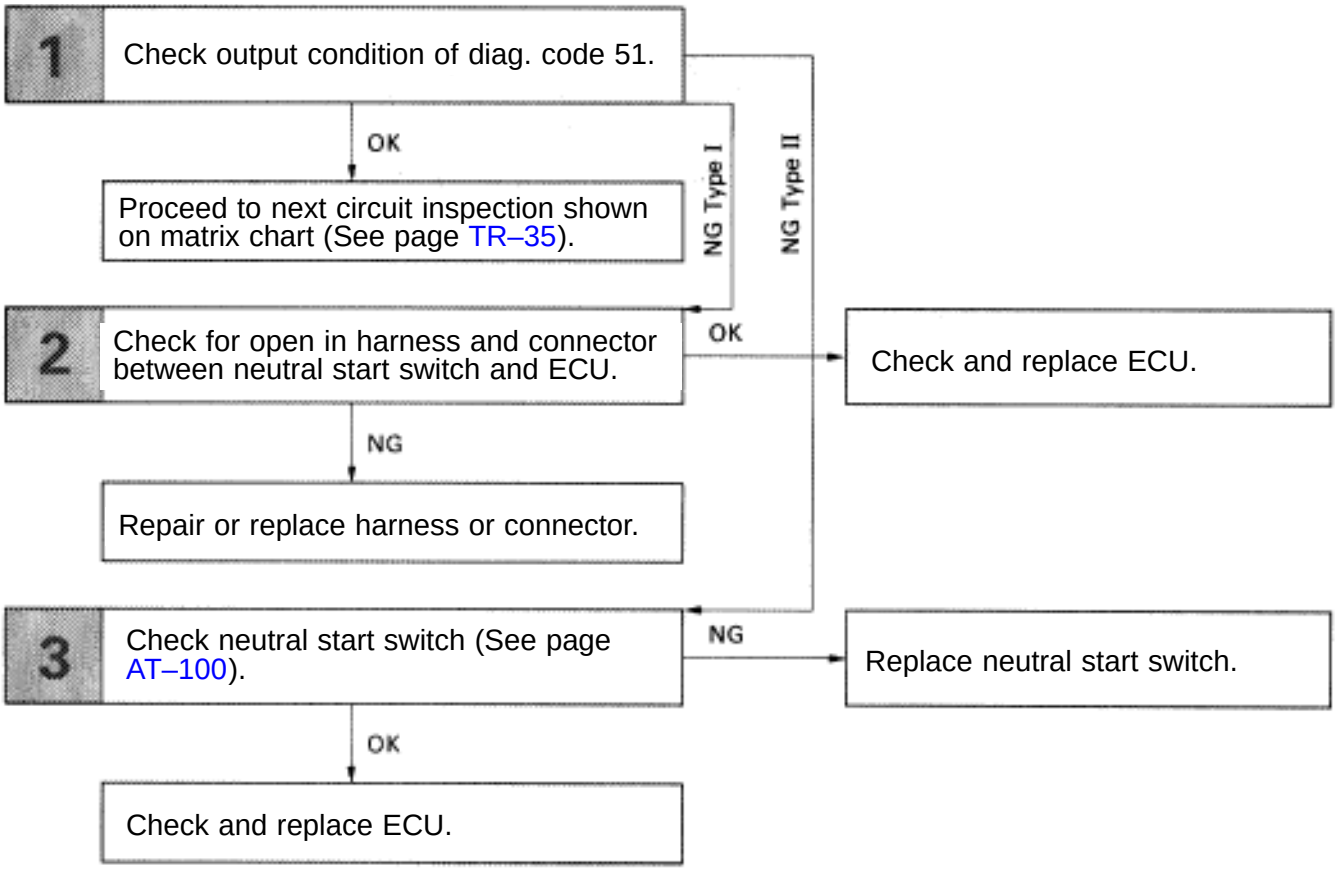

WIRING DIAGRAM

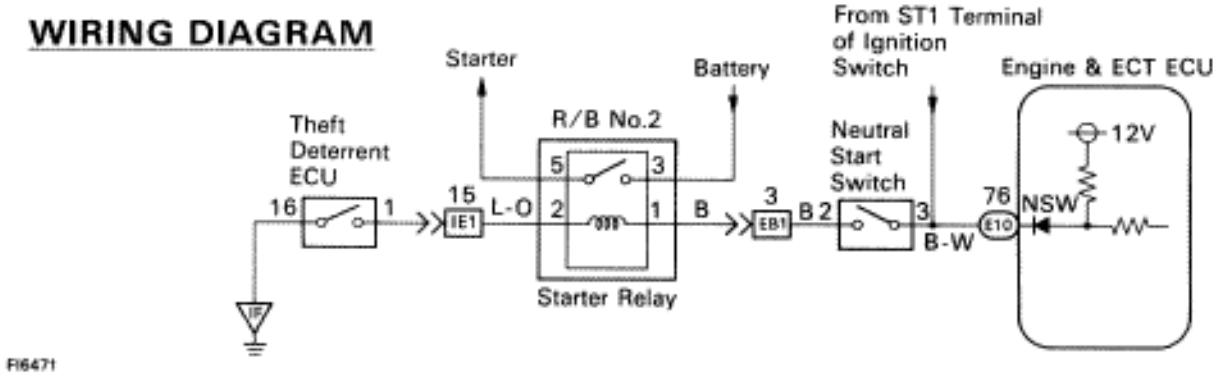

WhereEverybodyKnowsYourName

INSPECTION PROCEDURE

1 **Check output condition of diag. code 51.**

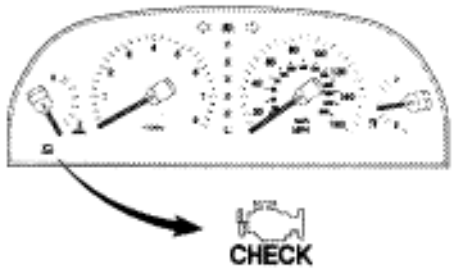

F06433

P
(2) Connect terminals TE2 and E1 of TDCL.
(2) Turn ignition switch on.
(2) Crank the engine.
(2) Connect terminal TE1 and E1 of TDCL.

C Check if diagnostic code “51” is output when then shift level is in the P and D shift positions.

Result:

Shift Position	Result		
	OK	NG Type I	NG Type II
"P"	Normal Code	Code 51	Normal Code
"D"	Code 51	Code 51	Normal Code

OK → **Proceed to next circuit inspection shown on matrix chart (See page TR–35).**

NG Type I → **Go to step 2.**

NG Type II → **Go to step 3.**

2 **Check for open in harness and connector between engine & ECT ECU and neutral start switch (See page IN–27).**

NG → **Repair or replace harness or connector.**

OK → **Check and replace engine & ECT ECU.**

3 **Check neutral start switch (See page AT–100).**

OK → **Check and replace engine & ECT ECU.**

NG → **Replace neutral start switch.**

WhereEverybodyKnowsYourName

ECU Power Source Circuit

CIRCUIT DESCRIPTION

When the ignition switch is turned on, battery voltage is applied to the terminal IG SW of the ECU, and the main relay control circuit in the ECU sends a signal to the terminal M–REL of the ECU, switching on the main relay. This signal causes current to flow to the coil, closing the contacts of the main relay and supplying power to the terminals +B and +B1 of the ECU.
If the ignition switch is turned off, the ECU continues to switch on the main relay for a maximum of 2 seconds for the initial setting of the ISC valve.

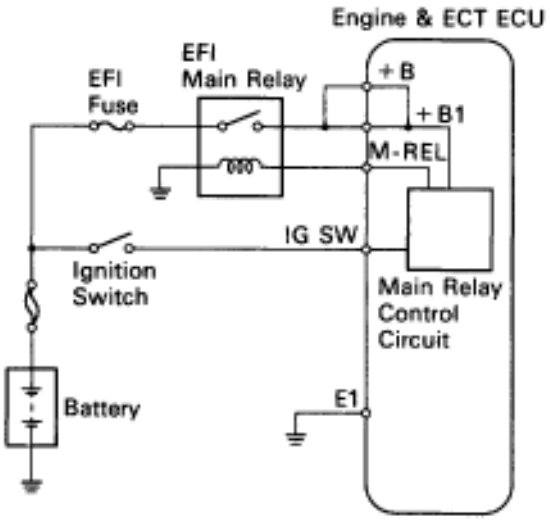

DIAGNOSTIC CHART

See next page for the DIAGNOSTIC CHART.

WIRING DIAGRAM

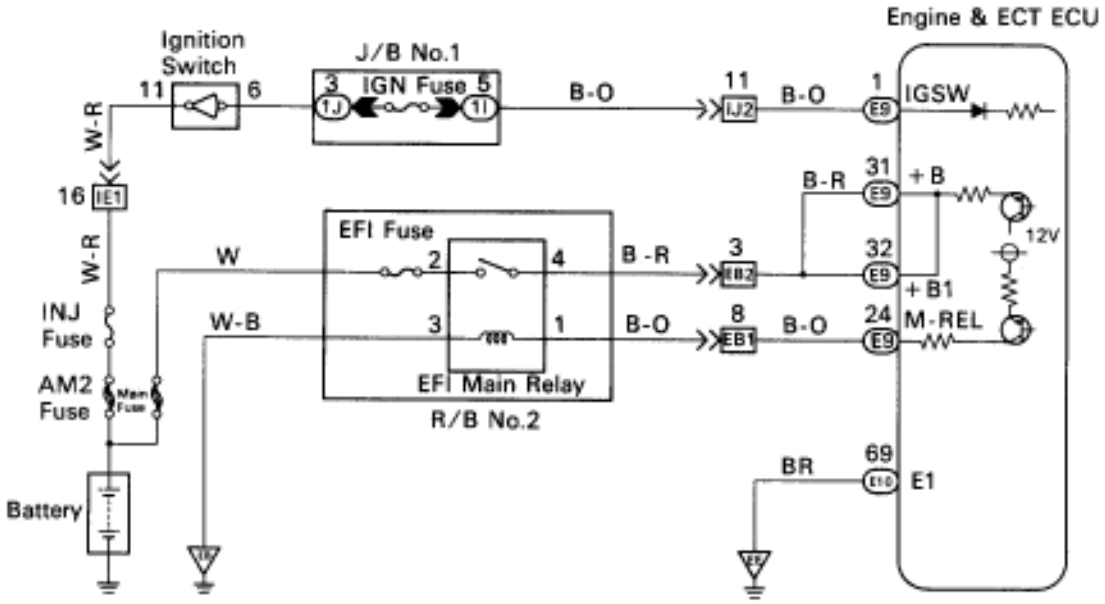

FI6477

WhereEverybodyKnowsYourName

DIAGNOSTIC CHART

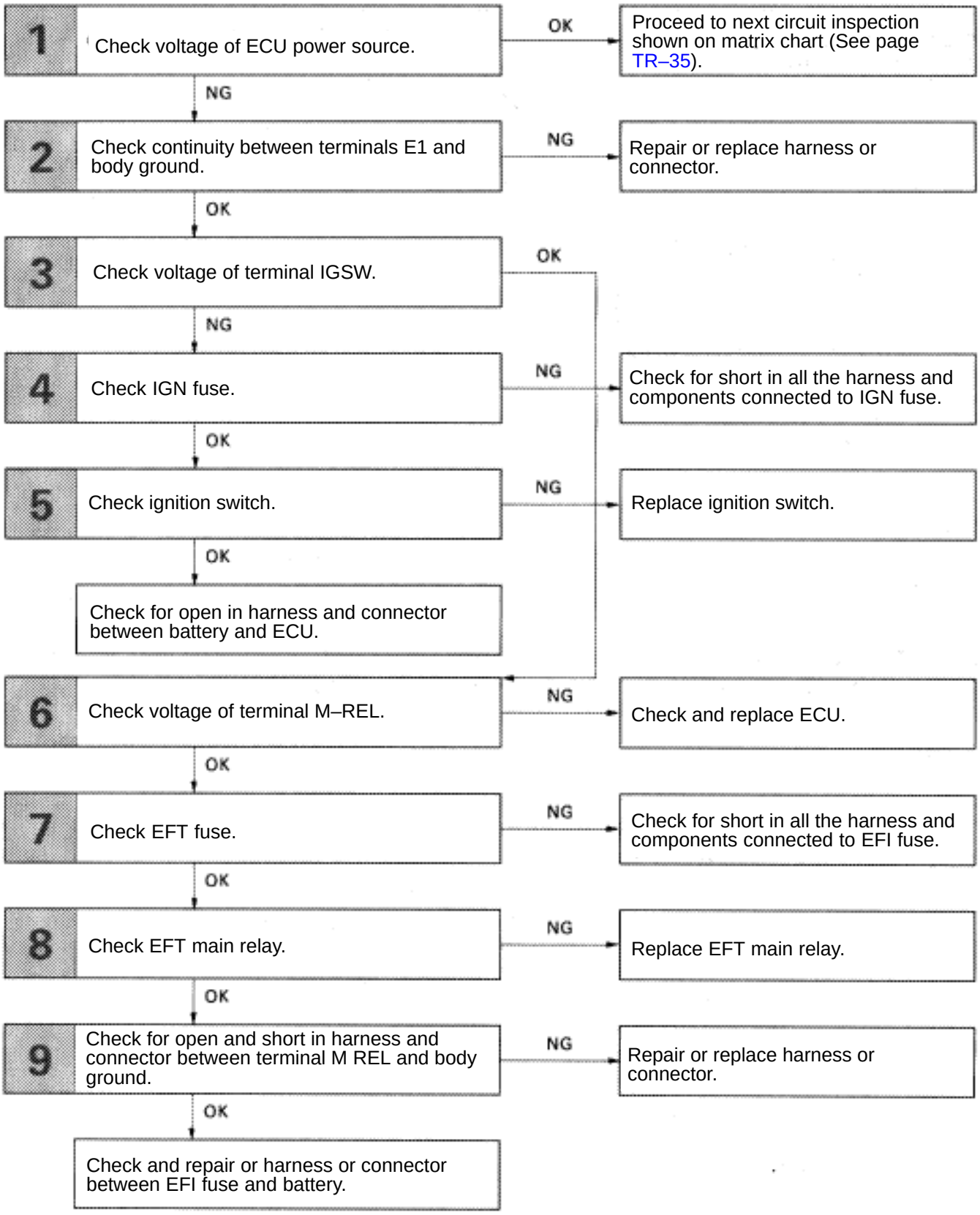

WhereEverybodyKnowsYourName

INSPECTION PROCEDURE

1 **Check voltage between terminals + B, + B1 and E1 of engine & ECT ECU connector.**

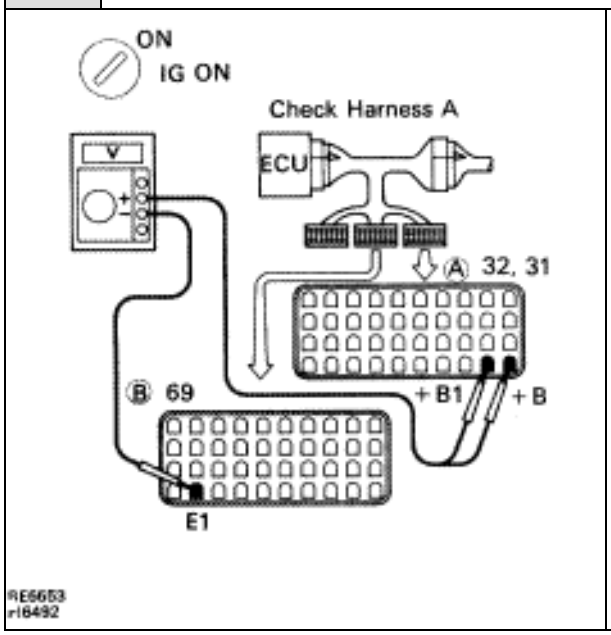

P (2) Connect the Check Harness A. (See page TR–30)

(2) Turn ignition switch on.

C Measure voltage between terminals + B, + B1 and E1 of engine & ECT ECU connector.

OK **Voltage: 10 – 14 V**

NG

OK **Proceed to next circuit inspection shown on matrix chart**

2 **Check for open in harness and connector between terminals E1 of engine & ECT ECU and body ground (See page IN–27).**

OK

NG **Repair or replace harness or connector.**

3 **Check voltage between terminal IG SW of engine & ECT ECU connector and body ground.**

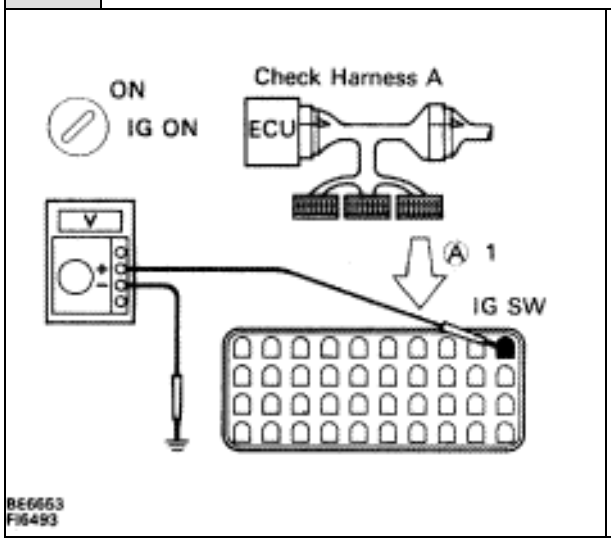

P Turn ignition switch on.

C Measure voltage between terminal IG SW of engine & ECT ECU connector and body ground.

OK **Voltage: 10 – 14 V**

NG

OK **Go to step 6.**

WhereEverybodyKnowsYourName

4 Check IGN Fuse.

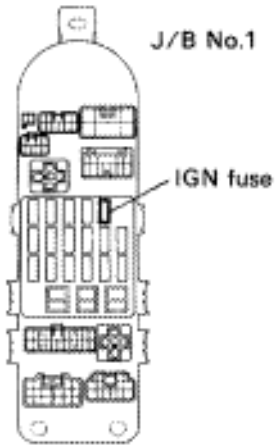

BE6624

P Remove IGN fuse from J/B No.1.

C Check continuity of IGN fuse.

OK **Continuity.**

OK

NG **Check for short in all the harness and components connected to IGN fuse (See attached wiring diagram).**

5 Check ignition switch.

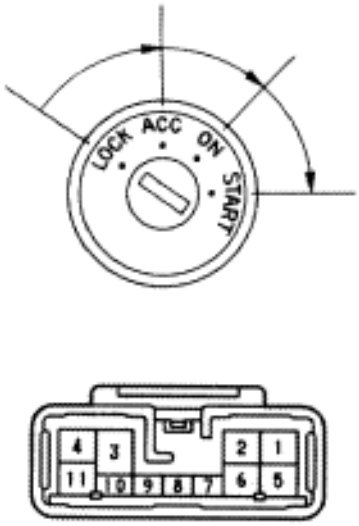

BE3582
eg-11-2

P Remove under cover and finish panel.

C Check continuity between terminals.

OK

○—○ continuity

Terminal / Switch position	2	3	4	5	6	11
LOCK						
ACC		○—○				
ON	○—○	○—○	○—○		○—○	○—○
START	○—○		○—○	○—○	○—○	○—○

OK

NG **Replace ignition switch.**

Check and repair harness and connector between battery and ignition switch, ignition switch and engine & ECT ECU.

WhereEverybodyKnowsYourName

6	Check voltage between terminal M–REL of engine & ECT ECU connector and body ground.

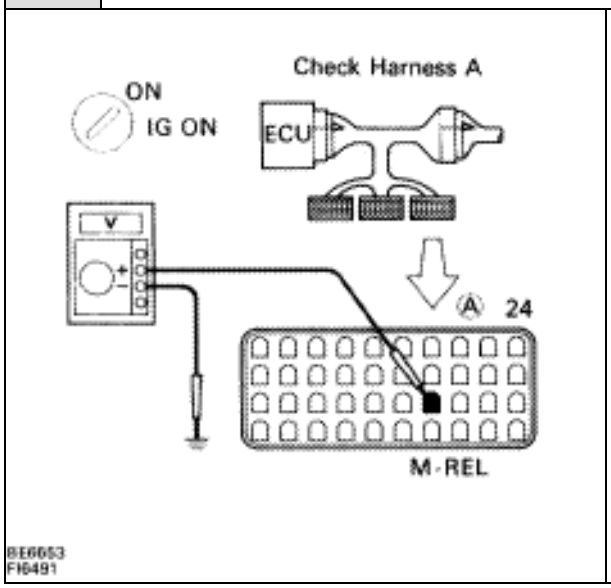

P Turn ignition switch on.

C Measure voltage between terminal M–REL of engine & ECT ECU connection and body ground.

OK **Voltage: 10 – 14 V**

OK

NG **Check and replace engine & ECT ECU.**

7	Check EFI

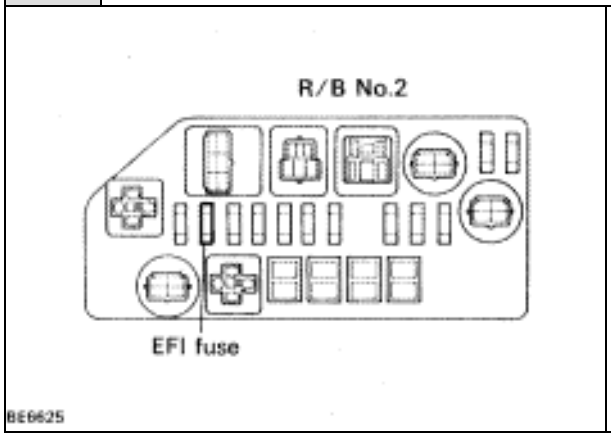

P Remove EFI fuse R/B No.2.

C Check continuity of EFI fuse.

OK **Continuity**

OK

NG **Rep**

WhereEverybodyKnowsYourName

8 **Check EFI main relay.**

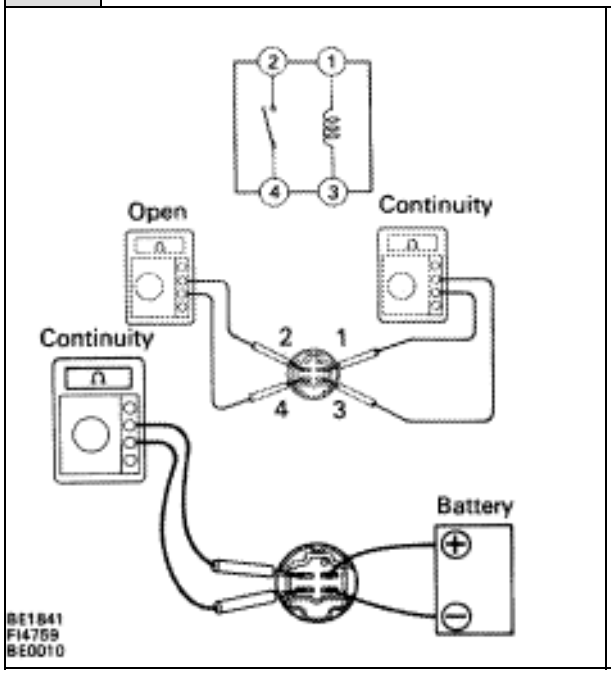

P Remove EFI main relay.

C Check continuity between terminals of EFI main relay shown below.

OK

Terminals 2 and 4	Open
Terminals 1 and 3	Continuity (Reference value 72 Ω)

C (2) Apply battery voltage between terminals 1 and 3.
(2) Check continuity between terminals 2 and 4.

OK

Terminals 2 and 4	Continuity

OK

NG → **Replace EFI main relay.**

9 **Check for open and short in harness and connector between terminal M–REL of engine & ECT ECU and body ground (See page IN–27).**

OK

NG → **Repair or replace harness or connector.**

Check and repair harness or connector between EFI fuse and battery.

WhereEverybodyKnowsYourName

Back Up Power Source Circuit

CIRCUIT DESCRIPTION

Battery voltage is supplied to terminal BATT of the ECU even when the ignition switch is off for use by the diagnostic code memory and air–fuel ratio adaptive control value memory, etc.

DIAGNOSTIC CHART

1. Check EFI fuse.
   - NG → Check for short in all the harness and components connected to EFI fuse.
   - OK ↓
2. Check voltage of terminal BATT.
   - NG → Check and repair harness or connector between battery, EFI fuse and ECU.
   - OK ↓
3. Check operation for the back–up.
   - NG → Check and replace fuse.
   - OK ↓

Proceed to next circuit inspection shown on matrix chart (See page TR–39).

WIRING DIAGRAM

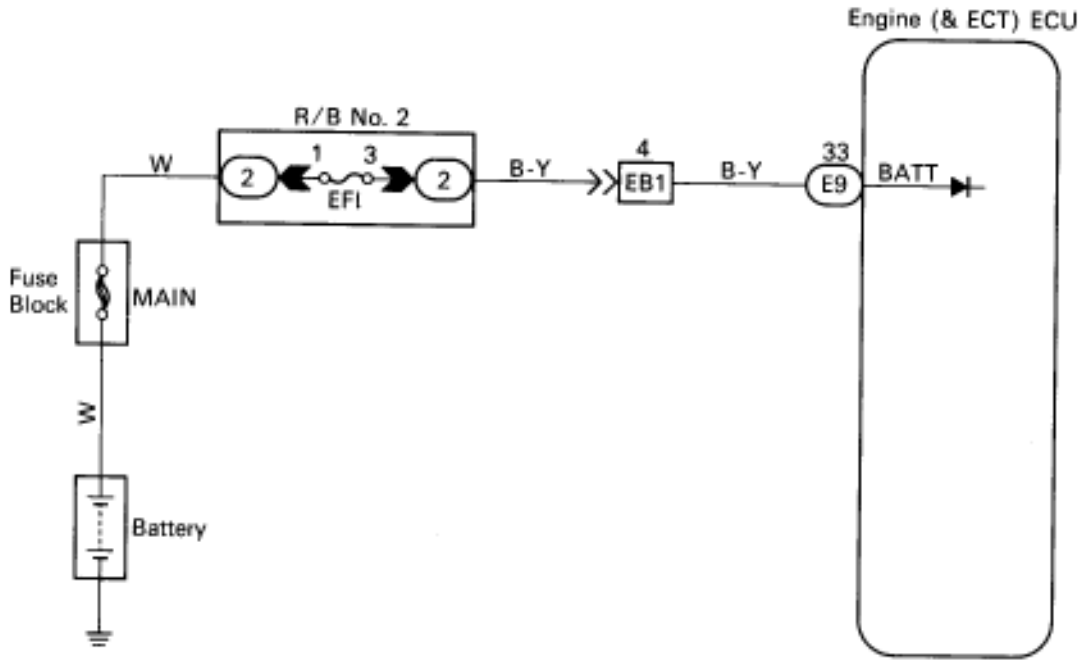

FI6628

WhereEverybodyKnowsYourName

INSPECTION PROCEDURE

1 **Check EFI fuse.**

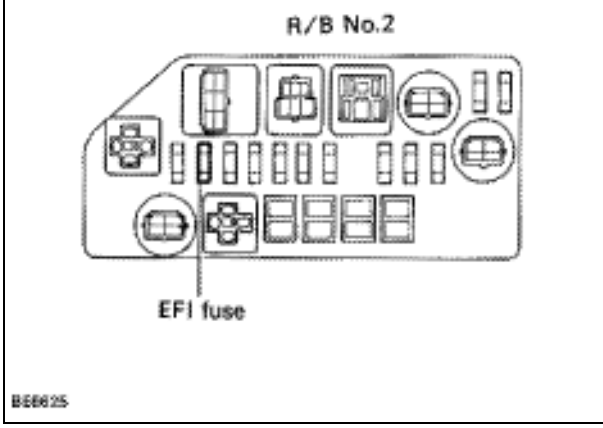

P Remove EFI fuse from R/B No. 2

C Check continuity of EFI fuse.

OK **Continuity**

OK

NG **Check for short in all the harness and components connected to EFI fuse (See attached wiring diagram).**

2 **Check voltage between terminal BATT of engine (& ECT) ECU connector and body ground.**

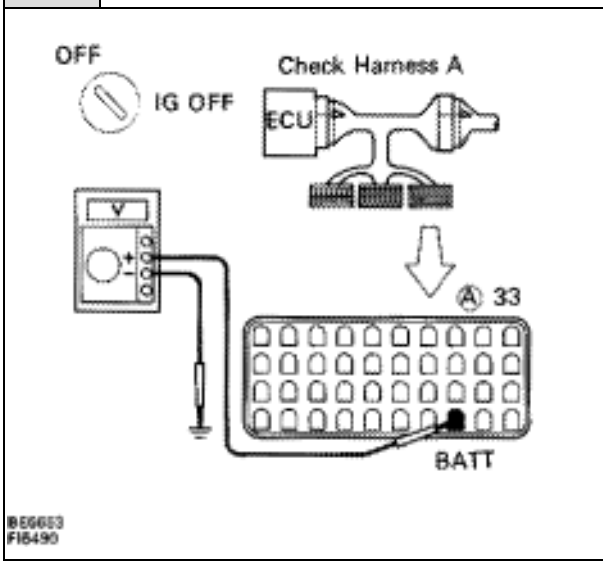

P Connect the Check Harness A. (See page TR–34)

C Measure voltage between terminal BATT of engine (& ECT) ECU connector and body ground.

OK **Voltage: 10 – 14 V**

OK

NG **Check and repair harness or connector between engine (& ECT) ECU and EFI fuse, EFI fuse and battery.**

3 **Are the diagnostic trouble codes still in the memory when the ignition switch is turned OFF?**

YES

NO **Check and replace engine (& ECT) ECU.**

Proceed to next circuit inspection shown on matrix chart (See page TR–39).

WhereEverybodyKnowsYourName

Injector Circuit

CIRCUIT DESCRIPTION

The injectors are provided to the intake manifold. They inject fuel into the cylinders based on the signals from the engine (& ECT) ECU.

Reference **INSPECTION USING OSCILLOSCOPE**

- With the engine idling measure between terminals #10 ~ 60 and E01 of engine (& ECT) ECU.

HINT: The correct waveform appears as shown in the illustration on the below.

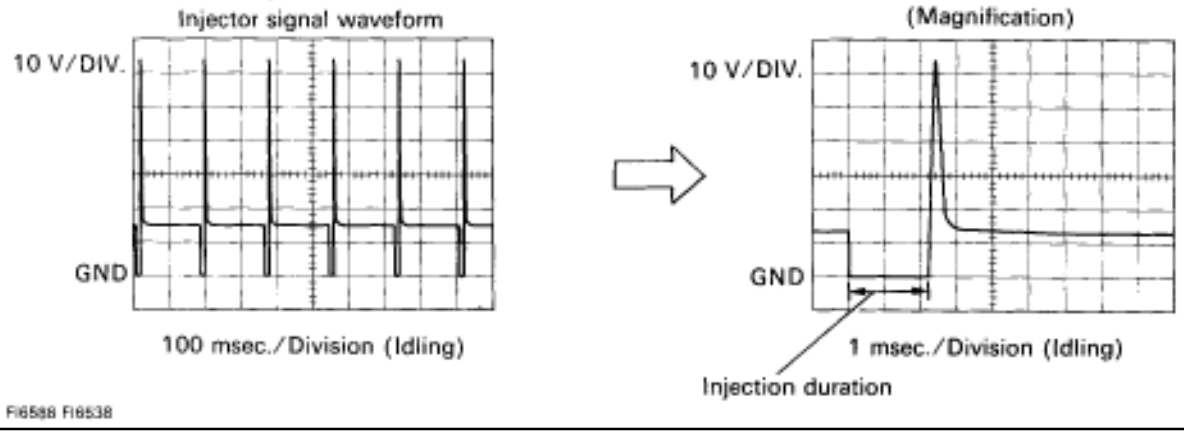

DIAGNOSTIC CHART

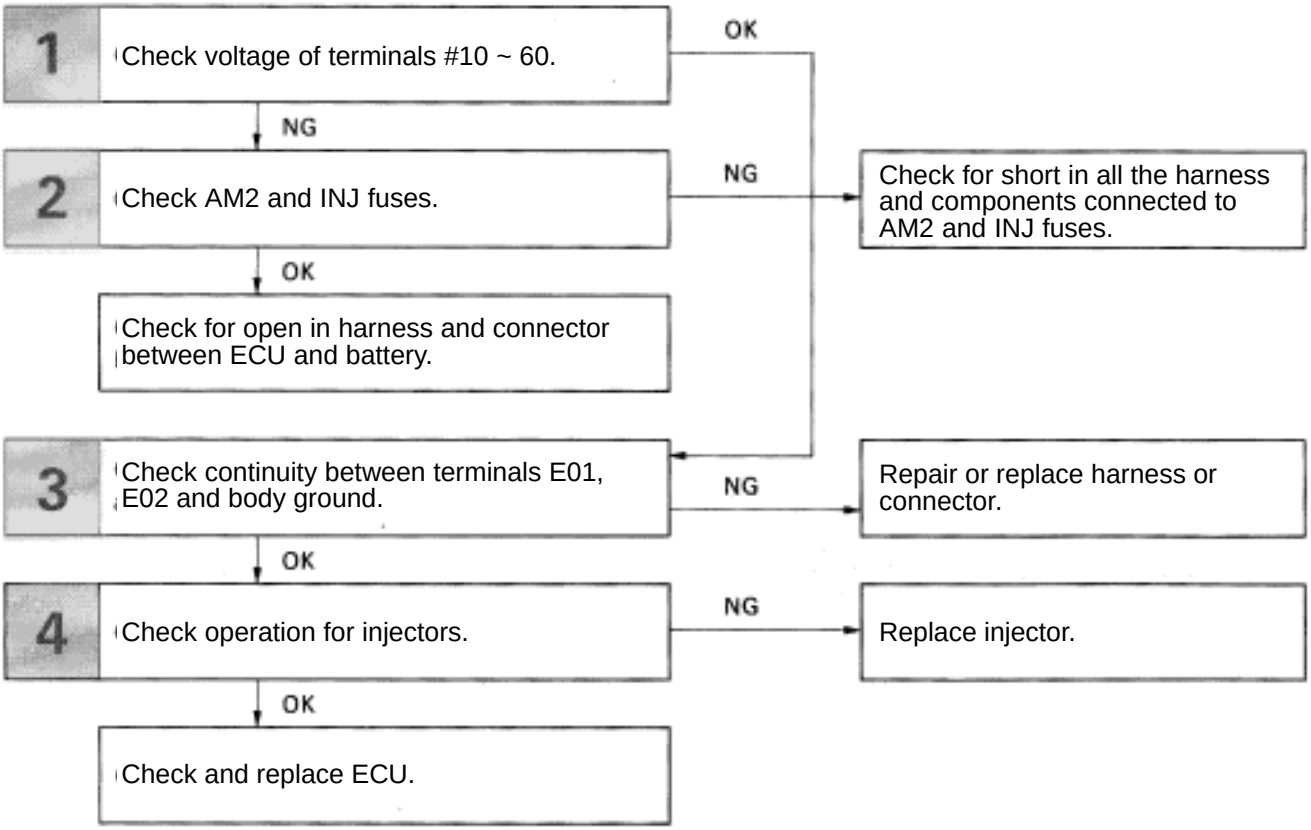

WhereEverybodyKnowsYourName

WIRING DIAGRAM

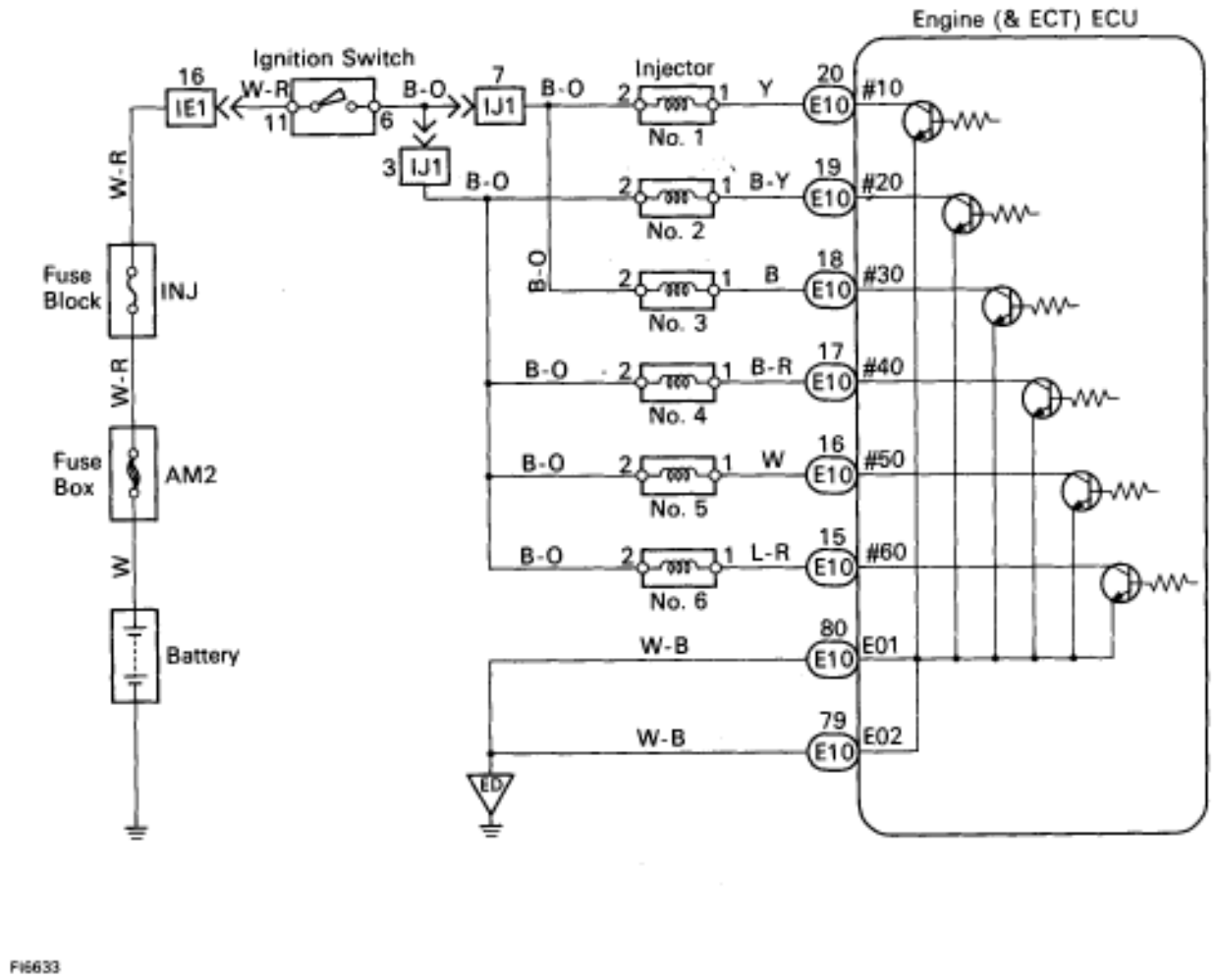

WhereEverybodyKnowsYourName

INSPECTION PROCEDURE

1	Check voltage between terminals #10 ↔ 60 of engine (& ECT) ECU and body ground.
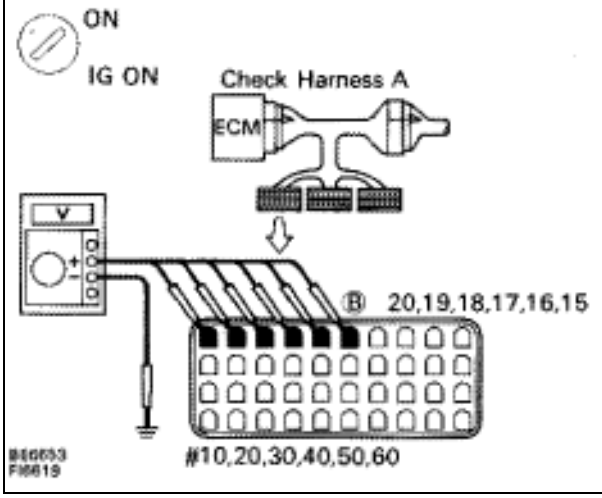	**P** (2) Connect the Check Harness A. (See page TR–34) (2) Turn ignition switch on. **C** Measure voltage between terminals #10 ~ 60 of engine (& ECT) ECU and body ground. **OK** **Voltage: 10 – 14 V**

NG

OK → **Go to step ▼.**

2	Check AM2 and INK fuses.
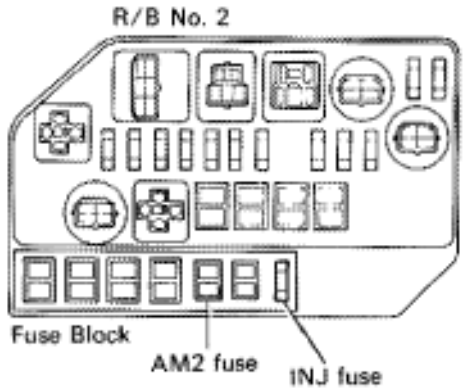	**P** Remove AM2 and INJ fuses from fuse block. **C** Check continuity of AM2 of INJ fuses. **OK** **Continuity**

OK

NG → **Check for short in all the harness and components connected to AM2 and INJ fuses.**

Check for open in harness and connector between engine (& ECT) ECU and battery.

WhereEverybodyKnowsYourName

3 **Check for open in harness and connector between terminals E01, E02 of engine (& ECT) ECU connector and body ground (See page IN–27).**

OK

NG → **Repair or replace harness or connector.**

4 **Check injectors.**

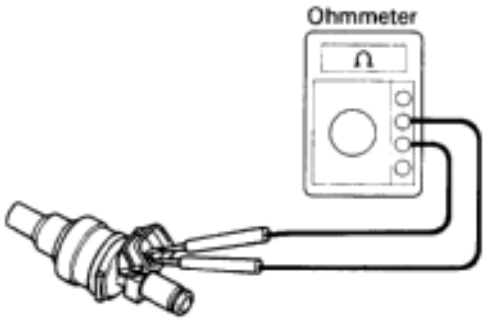

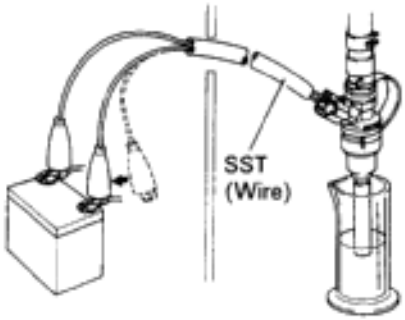

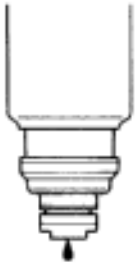

FI3183
FI2573
FI4849

P Disconnect injector connector (See page FI–26

C Measure resistance of injector.

OK **Resistance: 13.4 – 14.2 Ω at 20˚C (68˚F)**

C Check injection volume of injector (See page FI–30).

OK
- **Injection volume**
  70 – 88 cc/15 sec. (4.3 – 5.4 cu in.)
  Difference between each injector:
  Less than 9 cc (0.5 cu in.)
- **Leakage**
  Fuel drop: One drop or less per minute.

OK

NG → **Replace injector.**

Check and replace engine (& ECT) ECU.

WhereEverybodyKnowsYourName

Back Up Power Source Circuit

CIRCUIT DESCRIPTION

Battery voltage is supplied to terminal BATT of the ECU even when the ignition switch is off for use by the diagnostic code memory and air–fuel ratio adaptive control value memory, etc.

DIAGNOSTIC CHART

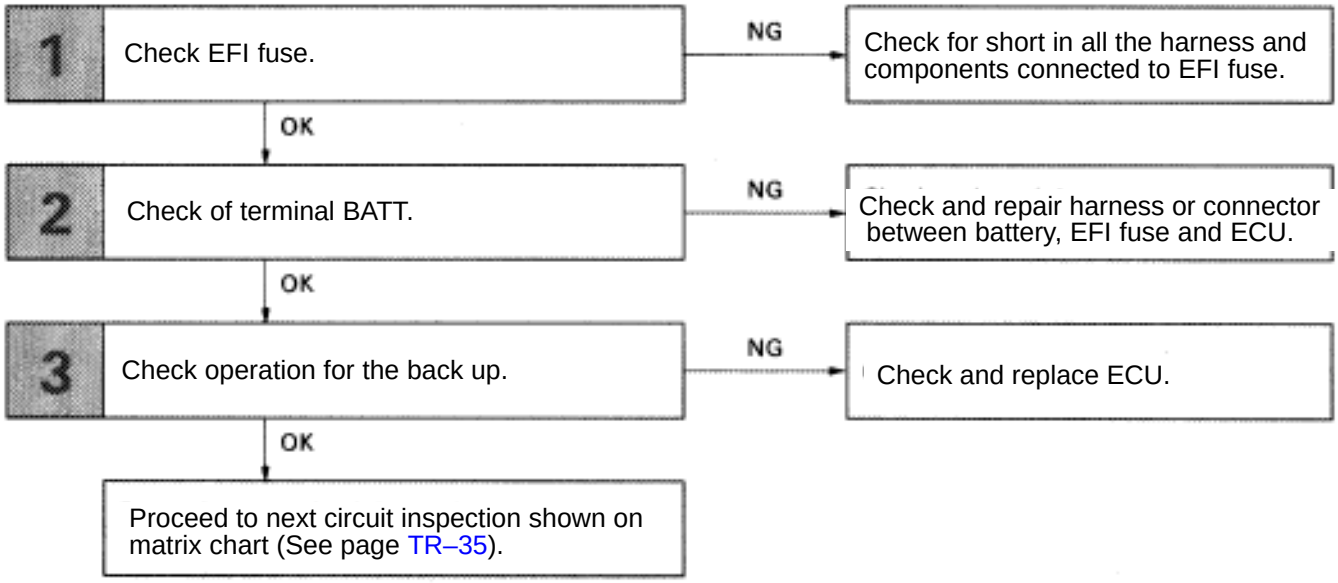

WIRING DIAGRAM

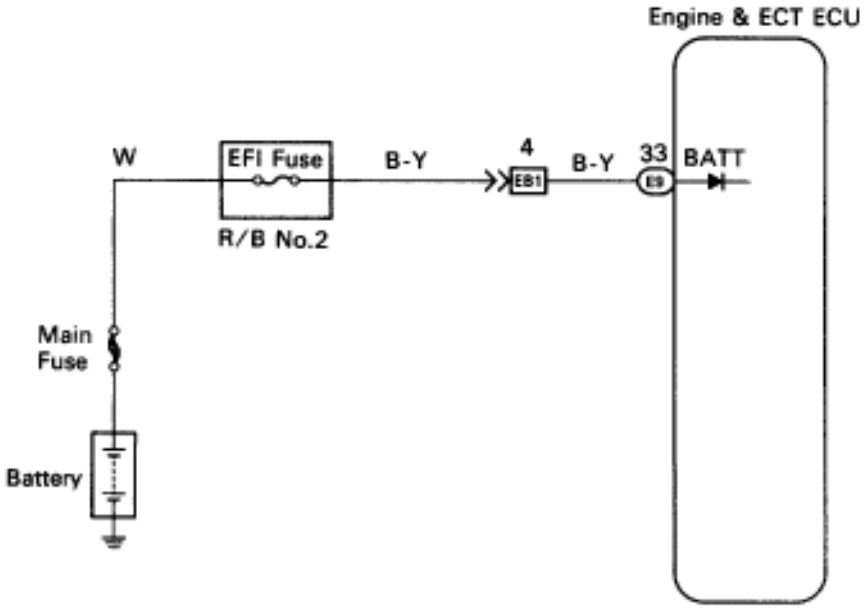

F16476

WhereEverybodyKnowsYourName

INSPECTION PROCEDURE

1 **Check EFI fuse.**

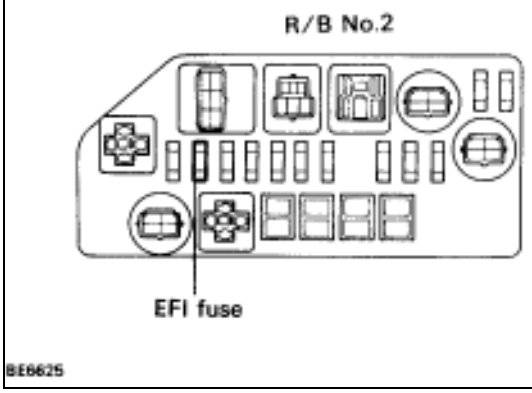

P Remove EFI fuse from R/B No.2.

C Check continuity of EFI fuse.

OK **Continuity**

OK

NG **Check for short in all the harness and components connected to EFI fuse (See attached wiring diagram).**

2 **Check voltage between terminal BATT of engine & ECT ECU connector and body ground.**

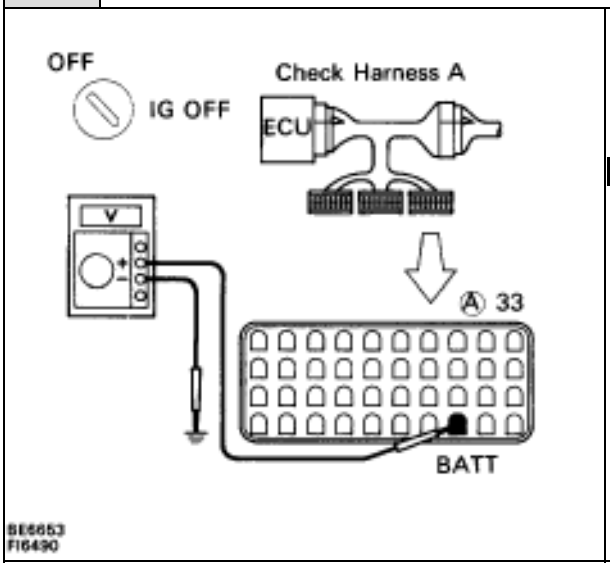

P Connect the Check Harness A.
(See page TR–30).

C Measure voltage between terminal BATT of engine & ECT ECU connector and body ground.

OK **Voltage: 10 – 14 V**

OK

NG **Check and repair harness or connector between engine & ECT ECU and EFI fuse, EFI fuse and battery.**

3 **Are the diagnostic codes still in the memory when the ignition switch is turned OFF?**

YES

NO **Check and replace engine & ECT ECU.**

Proceed to next circuit inspection shown on matrix chart (See page TR–35).

WhereEverybodyKnowsYourName

Injector Circuit

CIRCUIT DESCRIPTION

The injectors are provided to the intake manifold. They inject fuel into the cylinders based on the signals from the engine & ECT ECU.

DIAGNOSTIC CHART

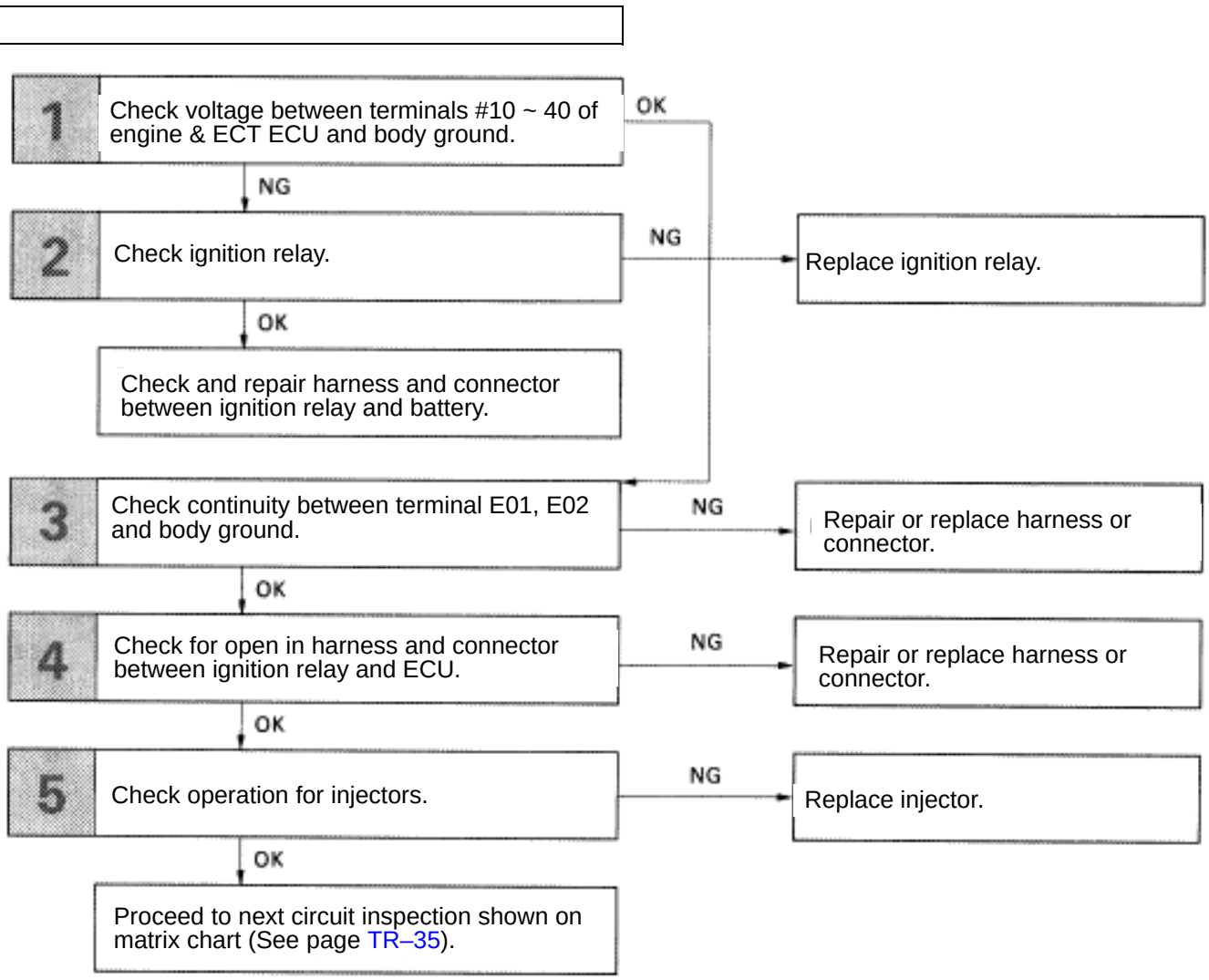

WhereEverybodyKnowsYourName

WIRING DIAGRAM

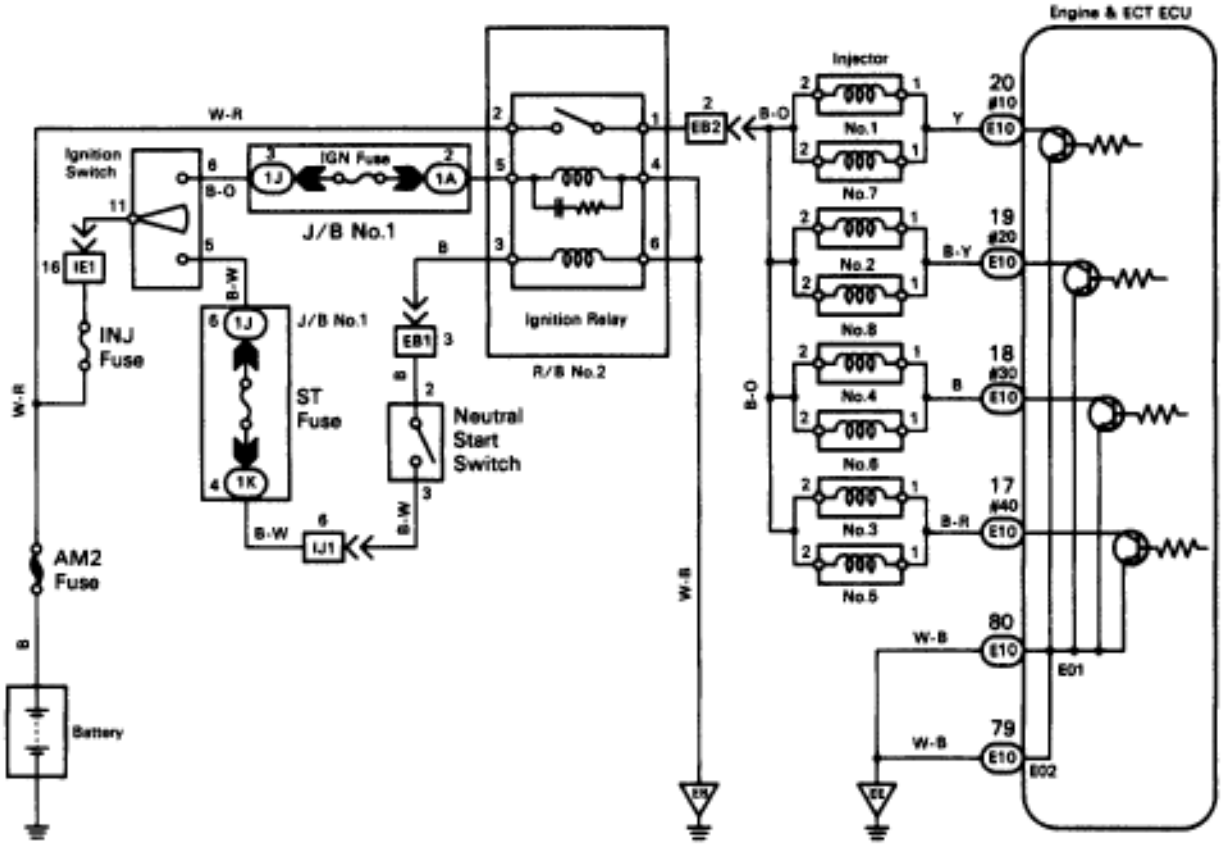

FI6487

WhereEverybodyKnowsYourName

INSPECTION PROCEDURE

1 **Check voltage between terminals #20 ~ 40 of engine & ECT ECU and body ground.**

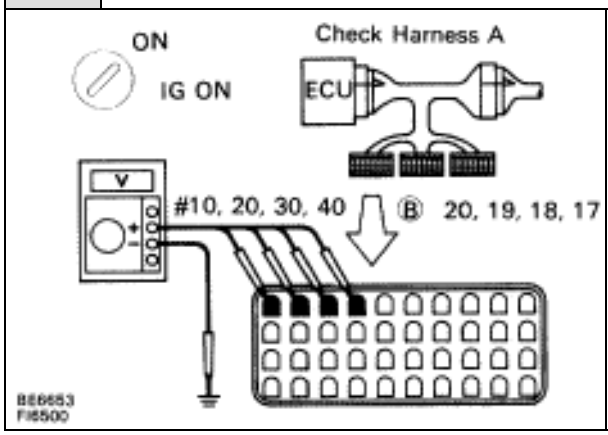

P (2) Connect the Check Harness A. (See page TR–30)

(2) Turn ignition switch on.

C Measure voltage between terminals #10 ~ 40 of engine & ECT ECU and body ground.

OK **Voltage: 10 – 14 V**

NG

OK **Go to step 3.**

2 **Check ignition relay.**

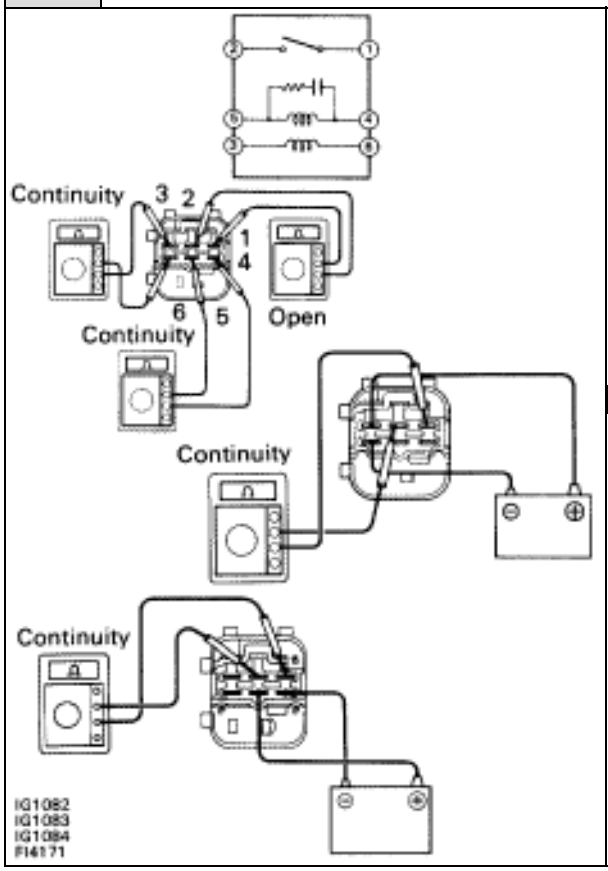

P Remove ignition relay from R/B No.2.

C Check continuity between terminals of ignition relay shown below.

OK

Terminals 1 and 2	Open
Terminals 3 and 6	Continuity (Reference value 22 Ω)
Terminals 4 and 5	Continuity (Reference value 107 Ω)

Hint (2) Apply battery voltage between terminals of ignition relay shown below.

(2) Check continuity between terminals 1 and 2.

Terminals 1 and 2	Continuity

OK

NG **Replace ignition relay.**

WhereEverybodyKnowsYourName

3	Check for open in harness and connector between terminal E01, E02 of engine & ECT ECU connector and body ground (See page IN–27).

OK

NG → Repair or replace harness or connector.

4	Check for open in harness and connector between ignition relay and injector, injector and engine & ECT ECU (See page IN–27).

OK

NG → Repair or replace harness or connector.

5	Check injectors.

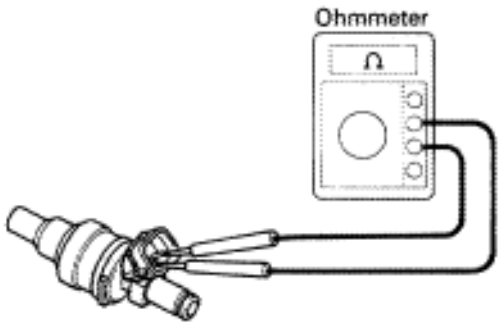

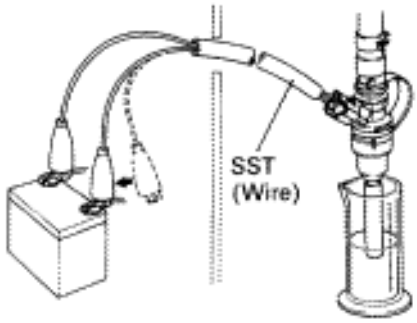

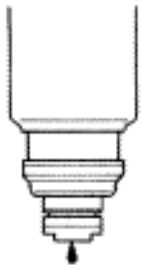

FI3183
FI2573
FI4849

P Disconnect injector connector (See page FI–50).

C Measure resistance of injector.

OK **Resistance: 13.4 – 14.2 at 20°C (68°F)**

C Check injection volume of injector (See page FI–52).

OK
- **Injection volume**
  55–70 cc/15 sec. (3.4–4.3 cu in.)
  Difference between each injector:
  Less than 10 cc (0.6 cu in.)
- **Leakage**
  Fuel drop: Once drop or less per minute.

OK

NG → Replace injector.

Proceed to next circuit inspection shown on matrix chart (See page TR–35).

WhereEverybodyKnowsYourName

Cold Start Injector Circuit

— CIRCUIT DESCRIPTION

The cold start injector is used to maintain the engine startability when it is cold. The injection volume, i,e, the length of time the injector is energized, is controlled by the ECU and the cold start injector time switch.
During a cold start, when the starter turns the contacts in the cold start injector time switch close. Thus current flows to the cold start injector coil, injecting fuel. At the same time, a bimetal in the heat coil is energized and heats up. This soon causes the contacts to open, cutting off the current flow to the injector coil and stopping fuel injection.
The injection duration of the cold start injector is determined by the coolant temperature and the length of time current flows to the heat coil. When the engine is warm, the contacts are opened by the bimetal and the cold start injector does not operate.
When the engine is hard to start and the starter is operated continuously, heat coil (2) heats up the bimetal keeping the contacts open to prevent spark plugs from becoming fouled, which is caused by the cold start injector operation when the open contacts close again.
When the engine is started at a coolant temperature of 22°C (72°F) or lower, the cold start injector operation time is controlled by the cold start injector time switch.
When the coolant temperature is in the normal temperature range 22°C (72°F) or higher, the contacts of the cold start injector time switch are open and the time switch is off, instead, the ECU controls the operating time of the cold start injector.
In this way, the CO and HC levels can be reduced while the engine is being started and the engine startability is maintained. Control by the ECU ends when the coolant temperature reaches 60°C (140°F).

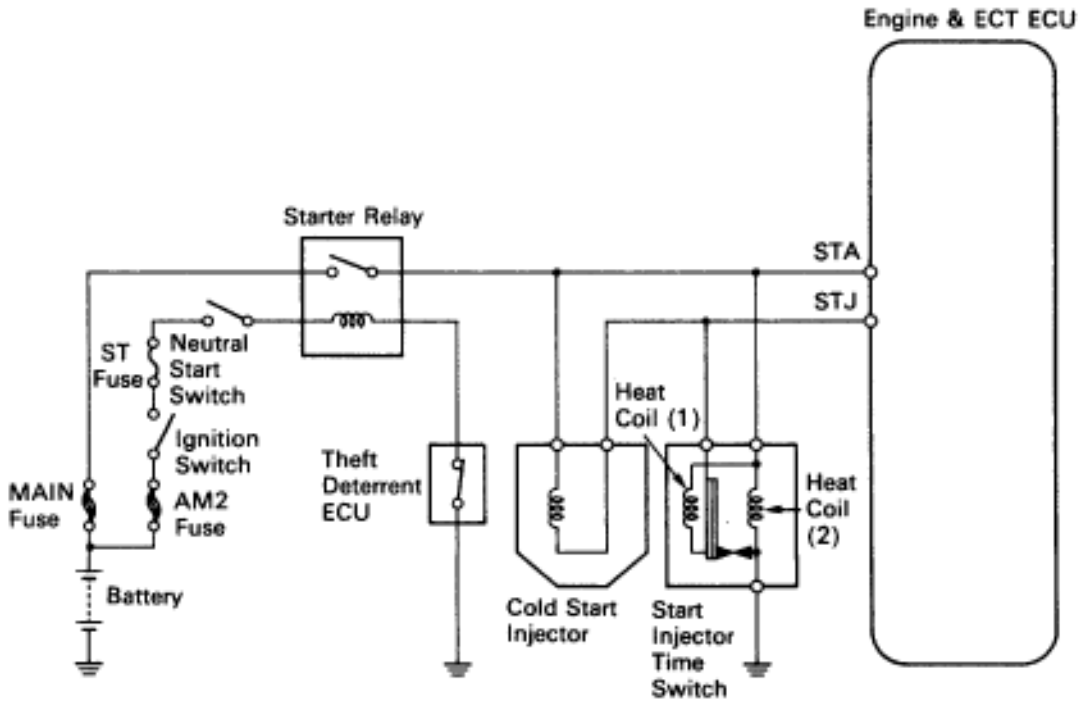

FI6483

WhereEverybodyKnowsYourName

DIAGNOSTIC CHART

1 Check voltage of cold start injector power source.
- OK → 3
- NG → 2

2 Check cold start injector.
- NG → Replace cold start injector.
- OK → Check for open in harness and connector between battery and ECU.

3 Check start injector time switch.
- NG → Replace start injector time switch.
- OK → 4

4 Check for open and short in harness and connector between cold start injector and start injector time switch.
- NG → Repair or replace harness or connector.
- OK → 5

5 Check fuel injection of cold start injector.
- NG → Replace cold start injector.
- OK → Proceed to next circuit inspection shown on matrix chart (See page TR–35).

WIRING DIAGRAM

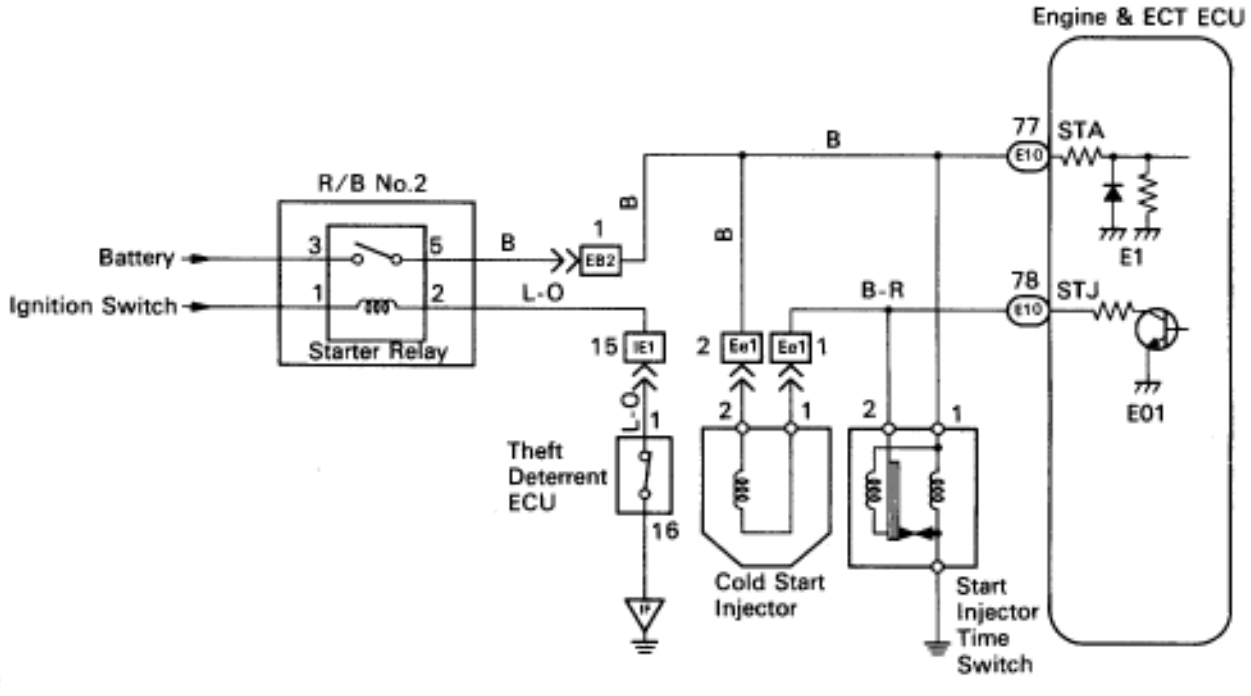

WhereEverybodyKnowsYourName

INSPECTION PROCEDURE

1	Check voltage between terminal STJ of engine & ECT ECU connector and body ground.
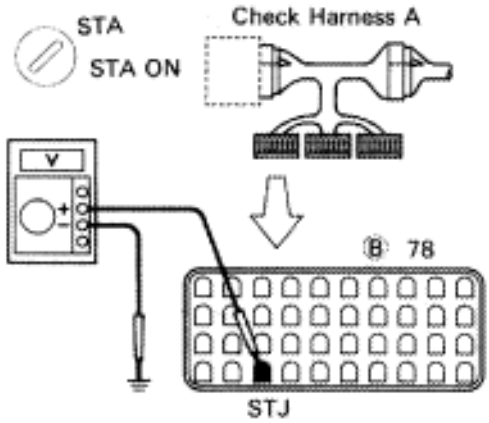	**P** Connect to the Check Harness A. (See page TR–30) **C** Disconnect start injector time switch connector. **OK** Disconnect engine & ECT ECU connector. Measure voltage between terminal STJ of engine & ECT ECU connector and body ground when ignition switch is turned to STA. 10 – 14 V **Hint**

NG

OK → **Go to step 3.**

2	Check resistance of cold start injector.
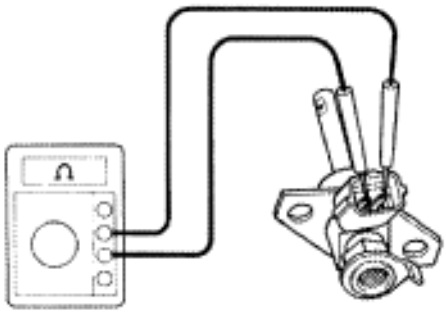	**P** Remove cold start injector (See page FI–27). **C** Measure resistance between terminals of cold start injector. **OK** **Resistance: 2 – 4 at 20°C (68°F)** **Hint**

OK

NG → **Replace cold start injector.**

Check and repair harness and connector between engine & ECT ECU and cold start injector, cold start injector and battery.

WhereEverybodyKnowsYourName

3 **Check start injector time switch.**

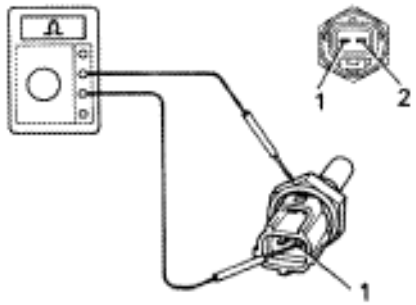

FI4175

P Remove start injector time switch (See page FI–88).

C Measure resistance between terminals shown below.

OK

Terminals	Resistance	Coolant temperature
1 – 2	25 – 45 Ω	below 15°C (59°F)
	65 – 85 Ω	above 30°C (86°F)
1-Ground	25 – 85 Ω	—

OK → **NG** → **Replace start injector time switch.**

4 **Check harness and connector between cold start injector and start injector time switch (See page IN–27).**

OK → **NG** → **Repair or replace harness or connector.**

5 **Check fuel injection of cold start injector.**

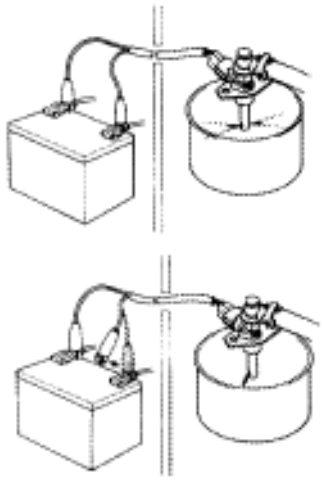

FI4104
FI4105

P Remove cold start injector (See page FI–27).

C (2) Check fuel injection of cold start injector (See page FI–33).

(2) Check fuel leakage of cold start injector (See page FI–34).

OK **(2) Fuel is injected normally.**

(2) Fuel leakage is less than one drop per minute.

Notice:

Perform this check within the shortest possible time.

OK → **NG** → **Repair or replace cold start injector.**

Proceed to next circuit inspection shown on matrix chart (See page TR–35).

WhereEverybodyKnowsYourName

ISC Valve Circuit

CIRCUIT DESCRIPTION

The ISC valve is provided on the intake air chamber and intake air bypassing the throttle valve is directed to the ISC valve through a hose.
A step motor is built into the ISC valve. It consists of four coils, the magnetic rotor, valve shaft and valve. When current flows to the coils due to signals from the ECU, the rotor turns and moves the valve shaft forward or backward, changing the clearance between the valve and the valve seat.
In this way the intake air volume bypassing the throttle valve is regulated, controlling the engine speed.
There are 125 possible positions to which the valve can be opened.

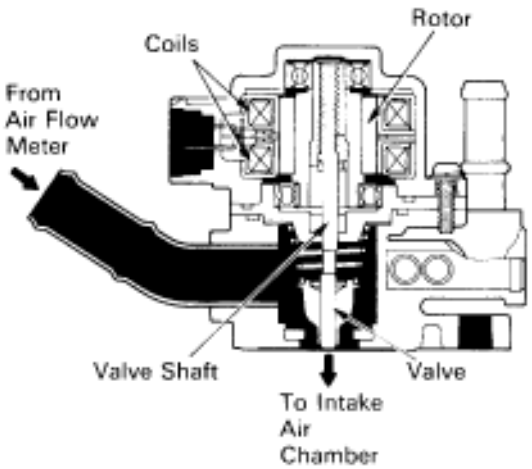

DIAGNOSTIC CHART

1 Check operation for ISC valve. — NG → Replace ISC valve.
OK ↓
2 Check harness and connector between EFI main relay, ISC valve and ECU. — NG → Repair or replace harness or connector.
OK ↓
Proceed to next circuit inspection shown on matrix chart (See page TR–35).

WIRING DIAGRAM

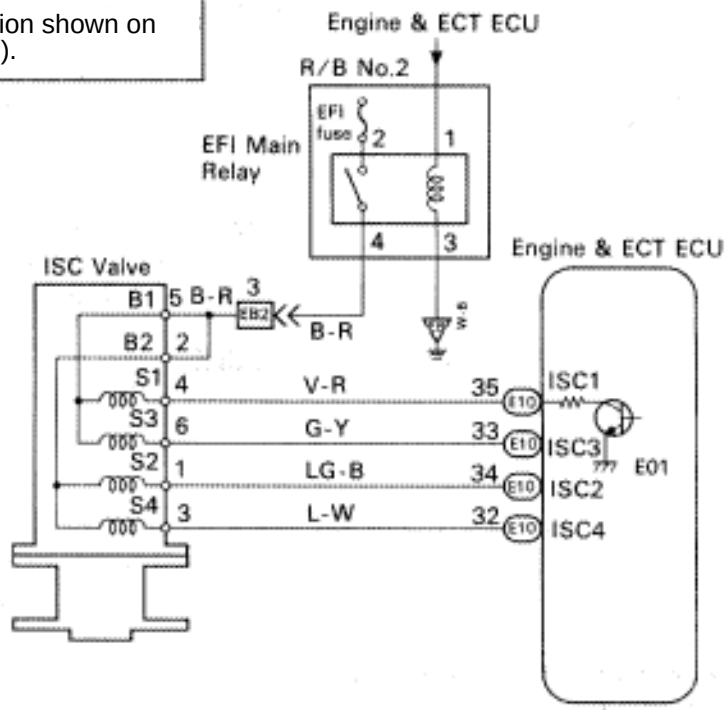

FI6475

WhereEverybodyKnowsYourName

INSPECTION PROCEDURE

1 **Check ISC value.**

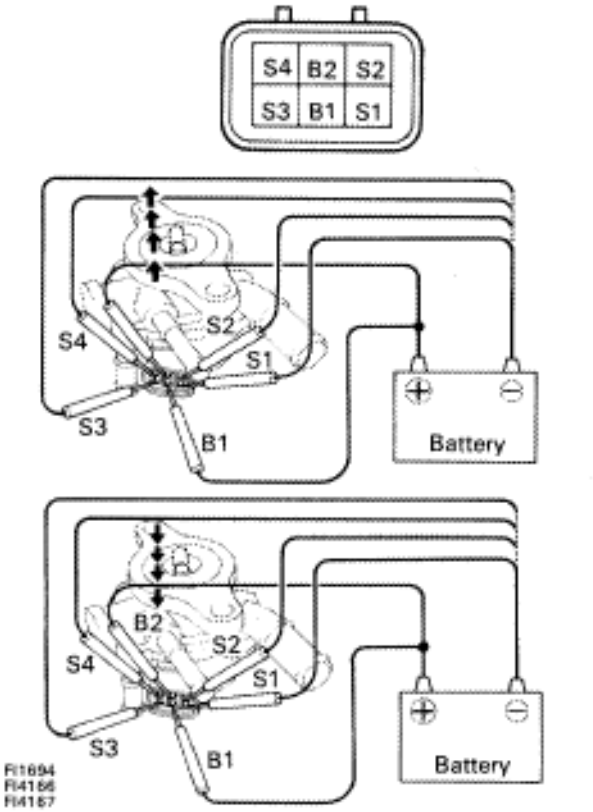

P Disconnect ISC connector.

C Measure resistance between terminals shown below.

OK

Terminal	Resistance
B1 – S1	10 Ω – 30 Ω
B1 – S3	10 Ω – 30 Ω
B2 – S2	10 Ω – 30 Ω
B2 – S4	10 Ω – 30 Ω

P Remove ISC Valve

C (2) Connect the battery positive lead to terminals B1 and B2, and the negative lead to terminals S1–S2–S3–S4 in that order.

(2) Connect the battery positive lead to terminals B1 and B2, and the negative lead to terminals S4–S3–S2–S1 in that order.

OK **(2) The valve moves in the closing direction.**

(2) The value moves in the opening direction.

OK

NG **Replace ISC valve.**

2 **Check for open and short in harness and connector between EFI main relay and ISC valve, ISC valve and engine & ECT ECU (See page IN–27).**

OK

NG **Repair or replace harness or connector.**

Proceed to next circuit inspection shown on matrix chart (See page TR–35).

WhereEverybodyKnowsYourName

Fuel Pressure Control VSV Circuit

CIRCUIT DESCRIPTION

The ECU turns on a VSV (Vacuum Switching Valve) to draw the air into the diaphragm chamber of the pressure regulator if it detects that the temperature of the coolant is too high during engine starting.
The air drawn into the chamber increases the fuel pressure to prevent fuel vapor lock at high engine temperature in order to help the engine start when it is warm.
Fuel pressure control ends approx. 100 secs. after the engine is started.

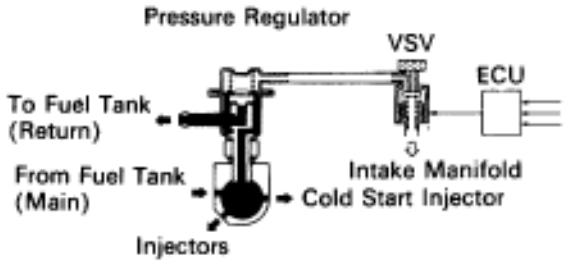

DIAGNOSTIC CHART

1	Check operation for fuel pressure control VSV.	NG →	Replace fuel pressure control VSV.
	OK ↓		
2	Check voltage of VSV power source.	OK →	Proceed to next circuit inspection shown on matrix chart (See page TR–35).
	NG ↓		
3	Check for open and short in harness and connector between main relay and ECU.	NG →	Repair or replace harness or connector.
	OK ↓		
	Check and replace ECU.		

WIRING DIAGRAM

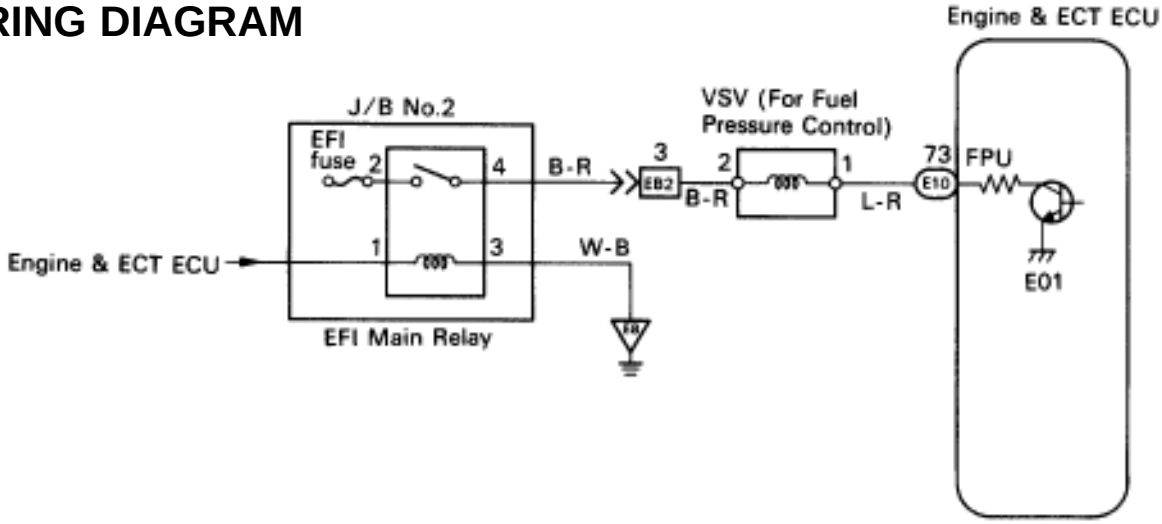

FI6473

WhereEverybodyKnowsYourName

INSPECTION PROCEDURE

1	Check fuel pressure control VSV.

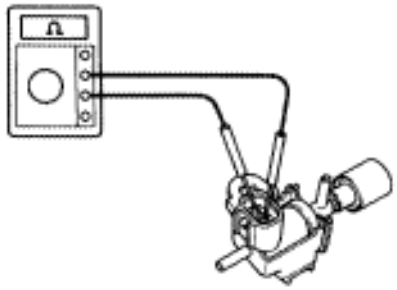

P (2) Remove fuel pressure control VSV.
(2) Disconnect fuel pressure control VSV connector.

C (2) Measure resistance between terminals.
(2) Measure resistance between each terminal and the body.

OK **1. Resistance: 30 – 50 at 20C (68F)**
2. Resistance: 1M or higher

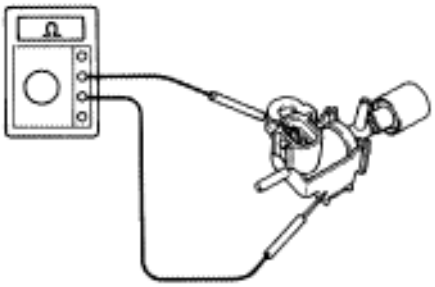

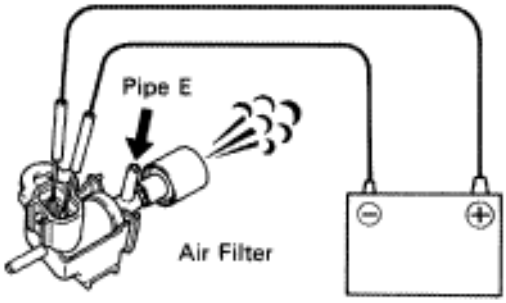

C Check operation of fuel pressure control VSV when battery voltage is applied to the terminals of fuel pressure control VSV connector or not.

OK **Battery voltage is applied:**
The air from pipe E is flowing out through the air filter.

Battery voltage is not applied:
The air from pipe E is flowing out through pipe G.

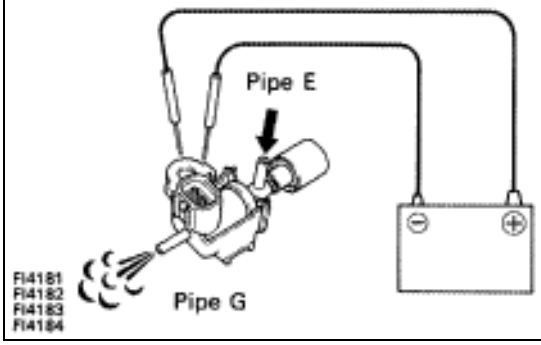

OK

NG **Replace fuel pressure control VSV.**

Go to step 2.

WhereEverybodyKnowsYourName

2	Check voltage between terminal FPU of engine & ECT ECU connector and body ground.

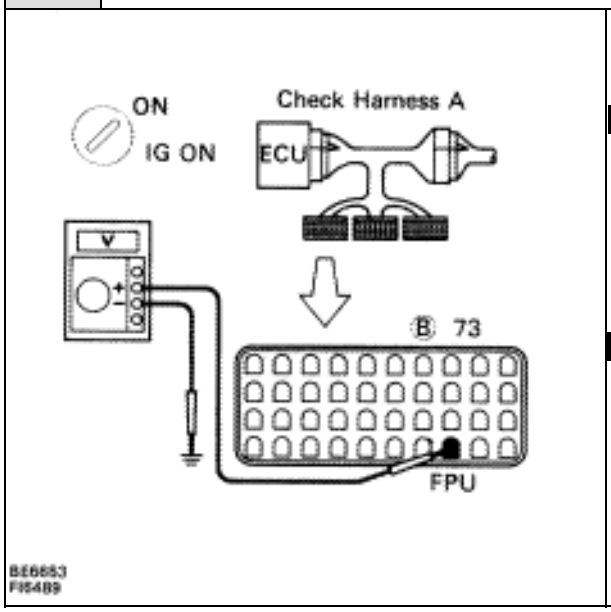

P (2) Connect the Check Harness A.

C (See page TR–30)

OK (2) Turn ignition switch on.

Measure voltage between terminal FPU of engine & ECT ECU connector and body ground.

Voltage: 10 – 14 V

Hint

NG

OK **Proceed to next circuit inspection shown on matrix chart (See page TR–35).**

3	Check for open and short in harness and connector between engine & ECT ECU and VSV, VSV and EFI main relay (See page IN–27).

OK

NG **Repair or replace harness or connector**

Check and replace engine & ECT ECU.

WhereEverybodyKnowsYourName

–MEMO–

WhereEverybodyKnowsYourName

TE1, TE2 Terminal Circuit

CIRCUIT DESCRIPTION

Terminal TE1 is located in the check connector in the engine compartment and terminals TE1 and TE2 are located in the TDCL in the cabin. When these terminals are connected with the E1 terminal, diagnostic codes in normal mode or test mode can be read from the ”CHECK” engine warning light on the combination meter.

DIAGNOSTIC CHART

HINT: If terminals TE1 and TE2 are connected with terminal E1, diagnostic code is not output or test mode is not activated.
Even though terminal TE1 is not connected with terminal E1, the ”CHECK” engine warning light blinks.
For the above phenomenon, the likely cause is an open or short in the wire harness, or malfunction inside the ECU.

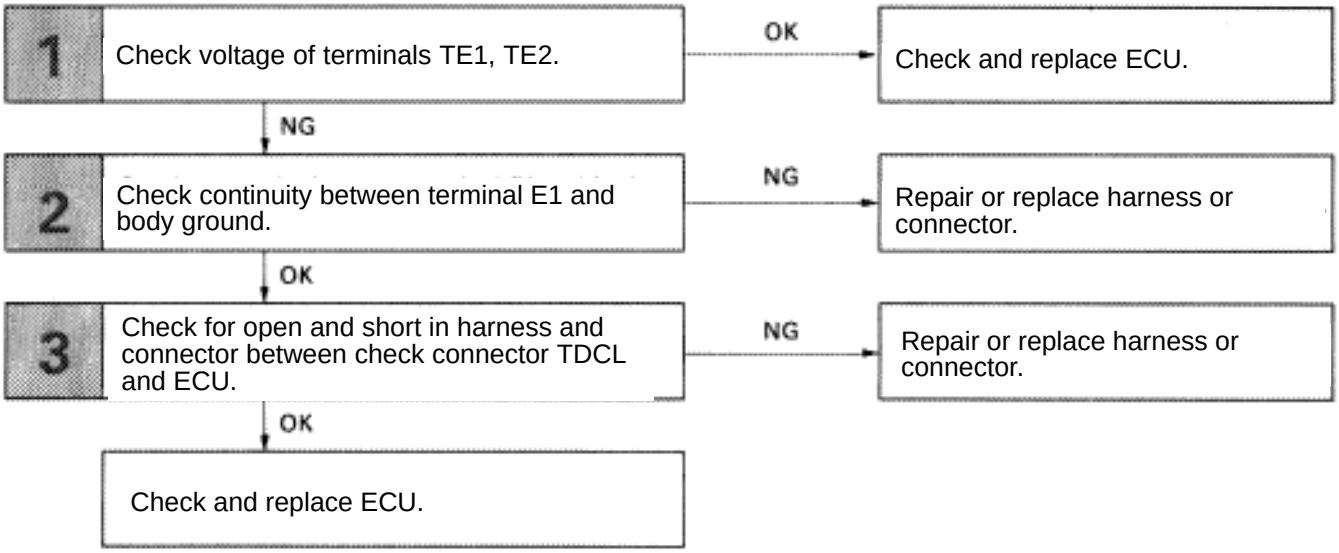

WIRING DIAGRAM

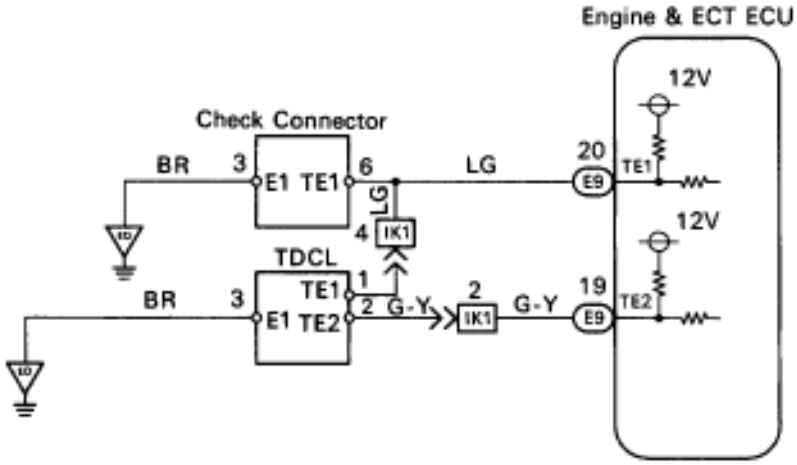

FI6516

WhereEverybodyKnowsYourName

INSPECTION PROCEDURE

1	Check voltage between terminals TE1, TE2 and E1 of check connector, TDCL.

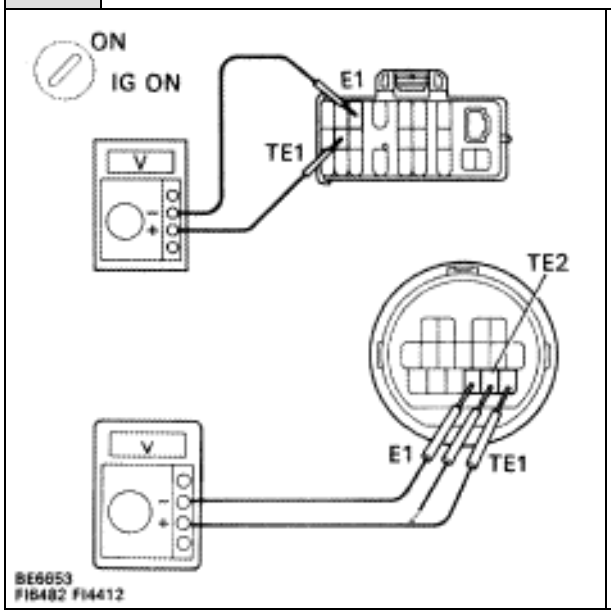

P Turn ignition switch on.

C Measure voltage between terminals TE1, TE2 and E1 of check connector, TDCL.

OK **Voltage: 10 – 14 V**

NG → **OK** → **Check and replace engine & ECT ECT.**

2	Check continuity between terminal E1 of check connector, TDCL and body ground.

OK → **NG** → **Repair or replace harness or connector.**

3	Check for open and short in harness and connector between engine & ECT ECU and check connector, TDCL (See page IN–27).

OK → **NG** → **Repair or replace harness or connector.**

Check and replace engine & ECT ECU.

WhereEverybodyKnowsYourName

ENGINE TROUBLESHOOTING

WhereEverybodyKnowsYourName

HOW TO PROCEED WITH TROUBLESHOOTING

The Engine Control System broadly consists of the sensors, ECU and actuators. The ECU receives signals from various sensors, judges the operating conditions and determines the optimum injection duration, timing, ignition timing and idle speed.
In general, the Engine Control System is considered to be a very intricate system to troubleshoot. But, the fact is that if you proceed to inspect the circuit one by one following the procedures directed in this manual, troubleshooting of this system is not complex.
This section explains the most ideal method of troubleshooting and tells how to carry out the necessary repairs.

[1] CUSTOMER PROBLEM ANALYSIS
Using the customer problem analysis check sheet for reference, ask the customer in as much details as possible about the problem.

[2] CHECK AND CLEAR DIAGNOSTIC CODE (PRECHECK)
Before confirming the problem symptom, first check the diagnostic code and make a note of any malfunction code which is output, then clear the code.
HINT: Output of the malfunction code indicates that there is a malfunction in the circuit indicated. However, it does not indicate whether the malfunction is still occurring or occurred in the past and returned to normal. In order to determine this, the problem symptoms should be confirmed in 4 first and the diagnostic code be rechecked in **[6]**.
Accordingly, if troubleshooting is begun based on the malfunction code only in diagnostic code check in **[2]**, it could result in a misdiagnosis, leading to troubleshooting of circuits which are normal and making it more difficult to locate the cause of the problem.

[3] SETTING THE TEST MODE DIAGNOSIS, [4] PROBLEM SYMPTOM CONFIRMATION, [5] SYMPTOM SIMULATION
In order to find out the trouble more quickly, set the diagnosis check in test mode and with higher sensing ability of the ECU, confirm the problem symptoms. If the trouble does not reappear, use the symptom simulation method to make sure the trouble is reproduced.

[6] DIAGNOSTIC CODE CHECK IN TEST MODE
Check the diagnostic code in test mode. If the malfunction code is output, proceed to ”step **[8]** Diagnostic Code Chart”. If the normal code is output, proceed to ”step **[7]** Basic Inspection”.

[7] BASIC INSPECTION
Carry out basic inspection such as the spark check and fuel pressure check, etc.

[8] DIAGNOSTIC CODE CHART
If the malfunction code is displayed, proceed to inspect the circuit indicated by the chart for each code.

[9] MATRIX CHART OF PROBLEM SYMPTOMS
If the normal code is displayed in the diagnosis in test mode, perform troubleshooting according to the inspection order in the Matrix Chart of Problem Symptoms.

[10] PARTS INSPECTION
When the Matrix Chart of Problem Symptoms instructs to check the parts, proceed to parts inspection section included in this manual.

[11] CIRCUIT INSPECTION
Determine if the malfunction is the sensor, actuator, wire harness, connector or the ECU.

WhereEverybodyKnowsYourName

[12] CHECK FOR MOMENTARY INTERRUPTION

By performing the check for momentary interruption, the place where momentary interruptions or momentary shorts are occurring due to poor contacts can be isolated.

[13] ADJUSTMENT, REPAIR

After the cause of the problem is located, perform adjustment or repairs by following the inspection and replacement procedures in this manual.

[14] CONFIRMATION TEST

After completing adjustment or repairs, confirm not only that the malfunction is eliminated, but also conduct a test drive, etc., to make sure the entire Engine Control System is operating normally.

WhereEverybodyKnowsYourName

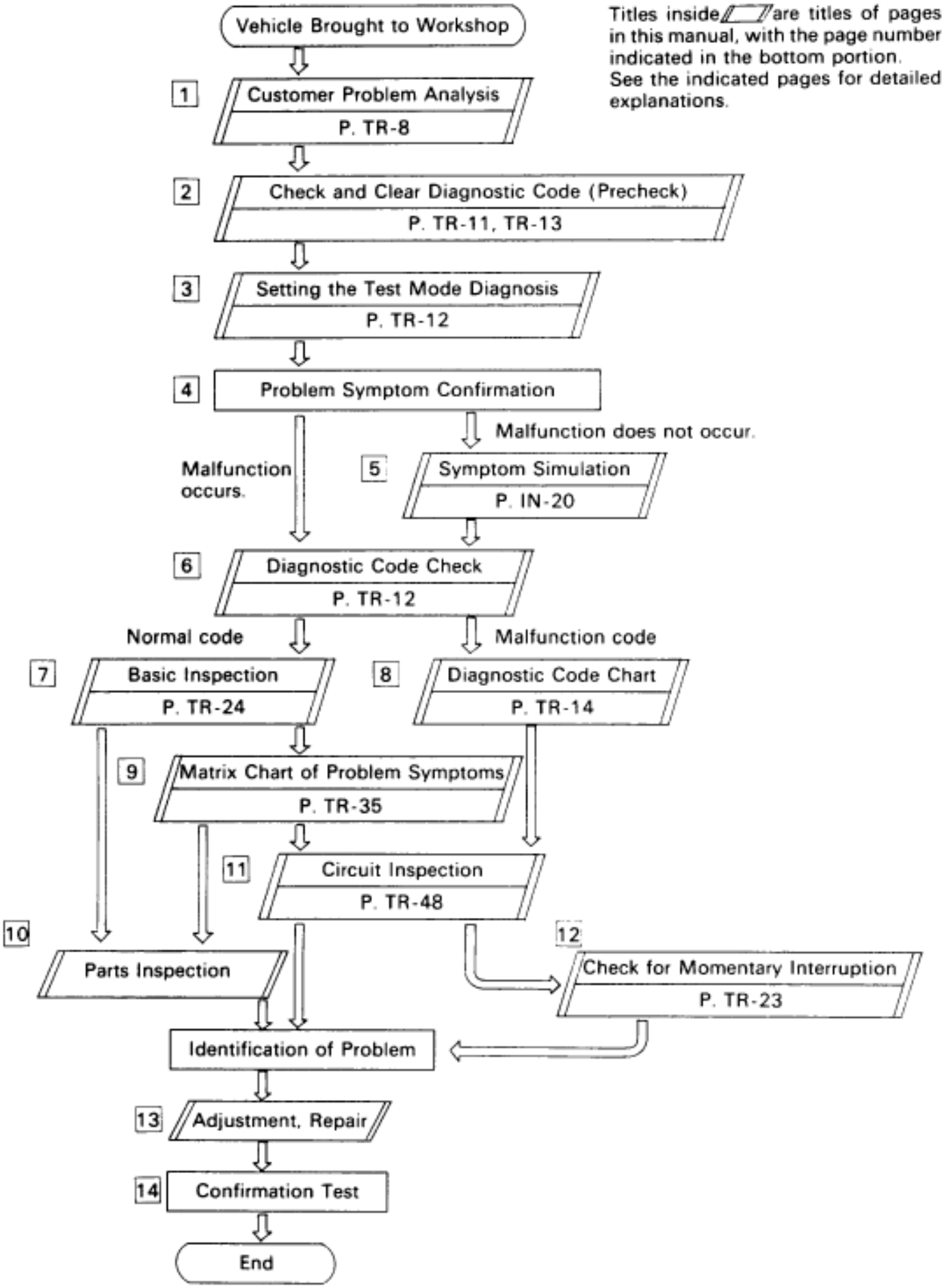

WhereEverybodyKnowsYourName

–MEMO–

WhereEverybodyKnowsYourName

How to Proceed with Troubleshooting Using Volt/Ohm Meter and TCCS Checker

For the explanation of steps [1] ~ [6], [8] and [10] ~ [16], see the explanation of steps with the same title on page TR–2.

[7] [9] CIRCUIT INSPECTION BY CHECKER

If the Normal code is displayed in the diagnostic code check, connect the checker to the vehicle and check all the circuits which can be inspected using the checker.

If a malfunctioning circuit is then detected, proceed to ”Circuit Inspection by Volt/Ohm Meter” and check the applicable circuit using a volt/ohm meter. Determine if the malfunction is in the sensor, actuator, wire harness, connector or the ECU. If the malfunctioning circuit cannot be detected using the checker, proceed to ”Basic Inspection” and perform troubleshooting.

If a malfunction code is displayed in the diagnostic code check, use the checker to inspect the circuit indicated by the diagnostic code chart for the displayed code.

For instructions on how to connect the checker to the vehicle and how to use the checker, please refer to the Instruction Manual for TCCS checker.

WhereEverybodyKnowsYourName

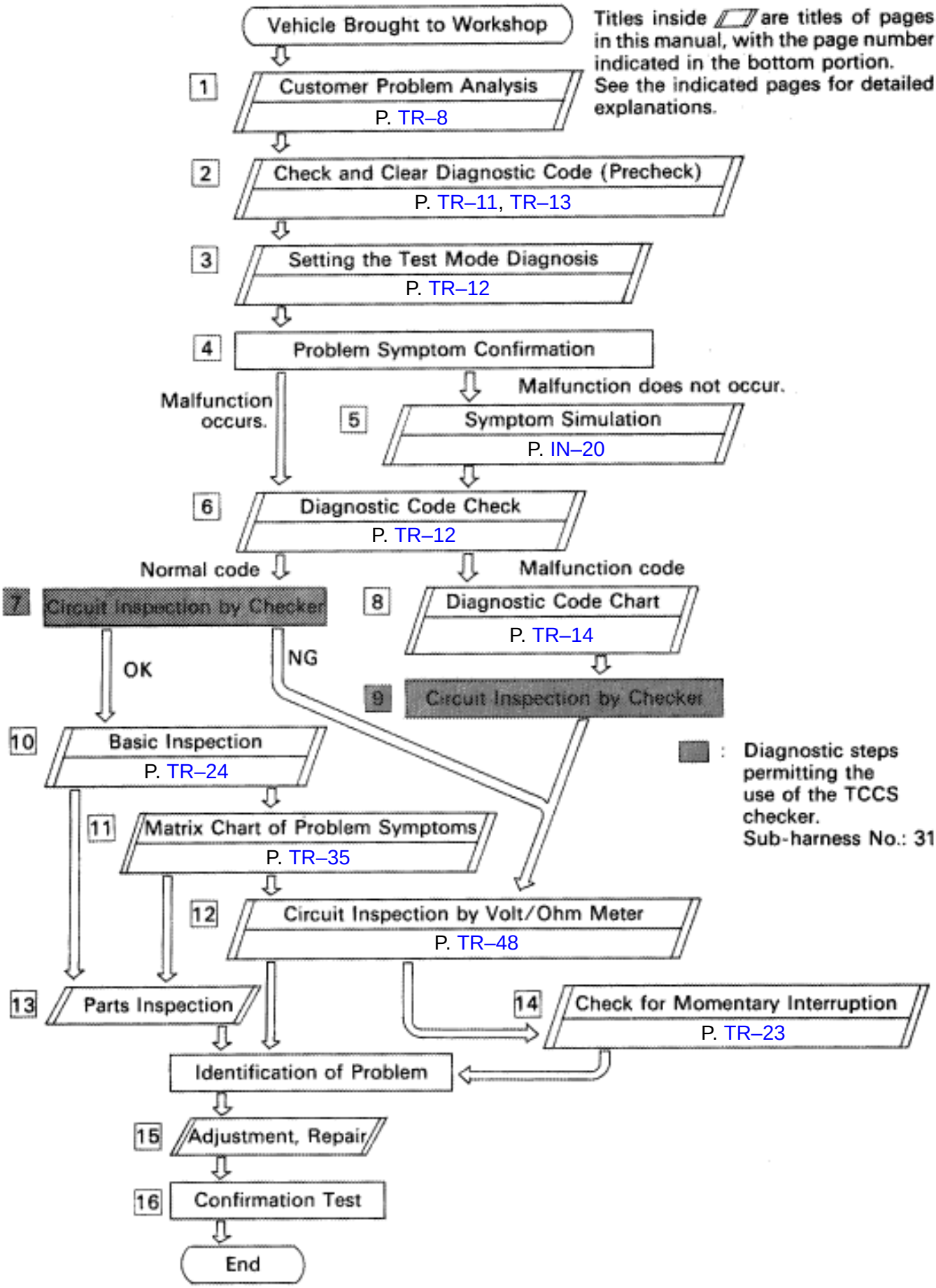

WhereEverybodyKnowsYourName

CUSTOMER PROBLEM ANALYSIS CHECK SHEET

ENGINE CONTROL System Check Sheet

Inspector's Name :

Customer's Name		Registration No.	
		Registration Year	/ /
		Frame No.	
Date Vehicle Brought In		Odometer Reading	km Miles

Date of Problem Occurrence		
Frequency of Problem Occurrence		☐ Constant ☐ Sometime (times per day/month) ☐ Once only ☐ Other ( )
Conditions at Time of Problem Occurrence	Weather	☐ Fine ☐ Cloudy ☐ Rainy ☐ Snowy ☐ Various/Other
	Outdoor Temperature	☐ Hot ☐ Warm ☐ Cool ☐ Cold (Approx. °F (°C))
	Place	☐ Highway ☐ Suburbs ☐ Inner City ☐ Hill (☐ Up, ☐ Down) ☐ Rough road ☐ Other ( )
	Engine Temp.	☐ Cold ☐ Warming up ☐ After warming up ☐ Any temp. ☐ Other
	Engine Operation	☐ Starting ☐ Just after starting ☐ Idling ☐ Racing without load ☐ Driving (☐ Constant speed ☐ Acceleration ☐ Deceleration ☐ Other ( ))

Problem Symptoms	☐ Engine does not Start	☐ Engine does not crank ☐ No initial combustion ☐ No complete combustion
	☐ Difficult to Start	☐ Engine cranks slowly ☐ Other ( )
	☐ Poor Idling	☐ Incorrect first idle ☐ Idling rpm is abnormal [☐ High ☐ Low (rpm)] ☐ Rough idling ☐ Other ( )
	☐ Poor Driveability	☐ Hesitation ☐ Back fire ☐ Muffler explosion (after fire) ☐ Surging ☐ Knocking ☐ Other ( )
	☐ Engine Stall	☐ Engine stall soon after starting ☐ After acceleration pedal depressed ☐ After acceleration pedal released ☐ During A/C operation ☐ When N to D shift ☐ Other ( )
	☐ Others	

Condition of "CHECK" Engine Warning Light		☐ Remains on ☐ Sometimes lights up ☐ Does not light up
Diagnostic Code Inspection	Normal Mode (Precheck)	☐ Normal code ☐ Malfunction code [code]
	Test Mode	☐ Normal code ☐ Malfunction code [code]

WhereEverybodyKnowsYourName

–MEMO–

WhereEverybodyKnowsYourName

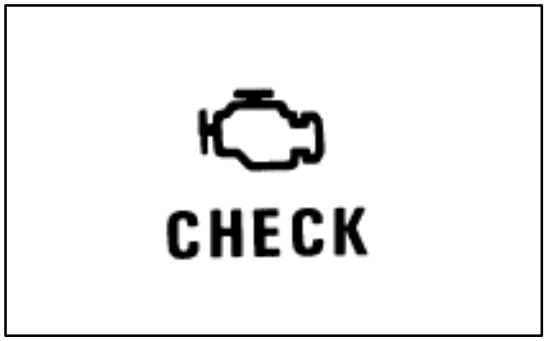

DIAGNOSIS SYSTEM

DESCRIPTION

The ECU contains a built–in self–diagnosis system by which troubles with the engine signal network are detected and a ”CHECK” engine warning light on the instrument panel lights up. By analyzing various signals as shown in the later table (See page TR–14) the Electronic Control Unit (ECU) detects system malfunctions relating to the sensors or actuators.

In the normal mode, the self–diagnosis system monitors 22 (USA specification vehicles with TRAC control) or 21 (USA (except for California) and Canadian specification vehicles with TRAC control) items, indicated by code No. as shown in TR–14. A ”CHECK” engine warning light informs the driver that a malfunction has been detected. The light goes off automatically when the malfunction has been repaired. But the diagnostic code(s) remains stored in the ECU memory (except for code Nos. 16 and 53). The ECU stores the code(s) until it is cleared by removing the EFI fuse with the ignition switch off.

The diagnostic code can be read by the number of blinks of the ”CHECK” engine warning light when TE1 and E1 terminals on the TDCL or check connector are connected. When 2 or more codes are indicated, the lowest number (code) will appear first.

In the test mode, 15 (USA specification vehicles with TRAC control) or 14 (USA (except for California) and Canadian specification vehicles with TRAC control) items, indicated by code No. as shown in TR–14 are monitored. If a malfunction is detected in any one of the systems indicated by code Nos. 13, 21, 22, 24, 25, 26, 27, 28, 29, 35, 41, 42, 47, 71 and 78 (USA specification vehicles) or 13, 21, 22, 24, 25, 26, 27, 28, 29, 35, 41, 42, 47 and 78 (USA (except for California) and Canadian specification vehicles) the ECU lights the ”CHECK” engine warning light to warn the technician that malfunction has been detected. In this case, TE2 and E1 terminals on the TDCL should be connected as shown later. (See page TR–12).

In the test mode, even if the malfunction is corrected, the malfunction code is stored in the ECU memory even when the ignition switch is off (except code Nos. 43 and 51). This also applies in the normal mode. The diagnostic mode (normal or test) and the output of the ”CHECK” engine warning light can be selected by connecting the TE1, TE2 and E1 terminals on the check connector or TDCL, as shown later.

A test mode function has been added to the functions of the self–diagnosis system of the normal mode for the purpose of detecting malfunctions such as poor contact, which are difficult to detect in the normal mode. This function fills up the selfdiagnosis system. The test mode can be implemented by the technician following the appropriate procedures of check terminal connection and operation described later. (See page TR–12)

WhereEverybodyKnowsYourName

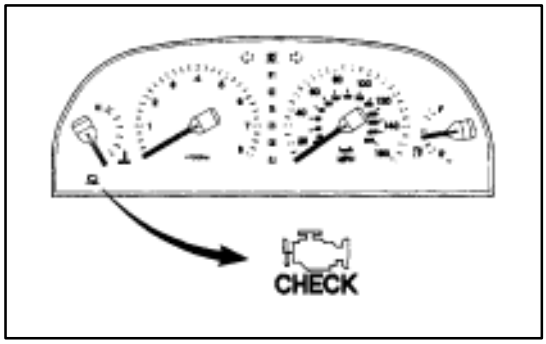

Diagnosis Inspection (Normal Mode) ”CHECK” ENGINE WARNING LIGHT CHECK

1. The ”CHECK” engine warning light will come on when the ignition switch is turned ON and the engine is not running.
   HINT: If the ”CHECK” engine warning light does not light up, proceed to troubleshooting of the combination meter (See page BE–146).
2. When the engine is started, the ”CHECK” engine warning light should go off.
   If the light remains on, the diagnosis system has detected a malfunction or abnormality in the system.

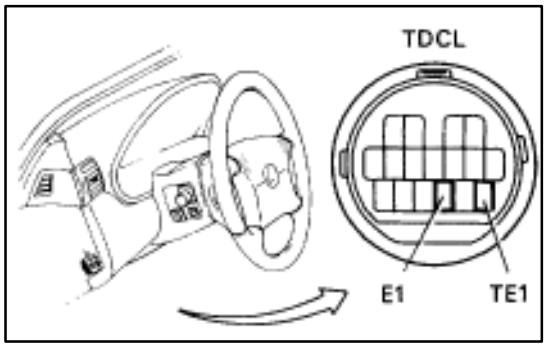

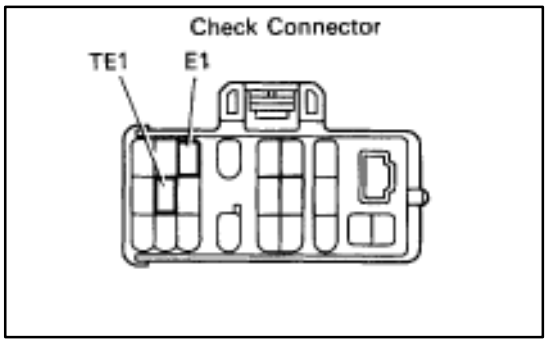

DIAGNOSTIC CODE CHECK

1. Turn ignition switch on.
2. Using SST, connect terminals between TE1 and E1 of TDCL or check connector.
   SST 09843–18020

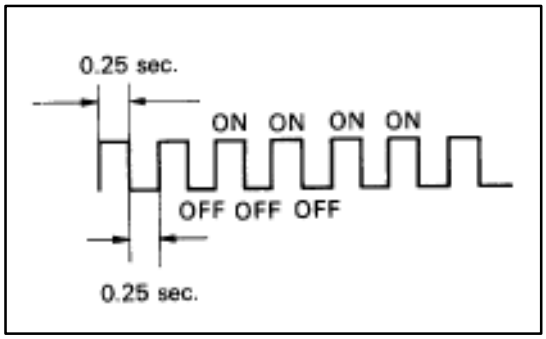

3. Read the diagnostic code from ”CHECK” engine warning light.
   HINT: If a diagnostic code is not output, check the TE1 terminal circuit (See page TR–146).

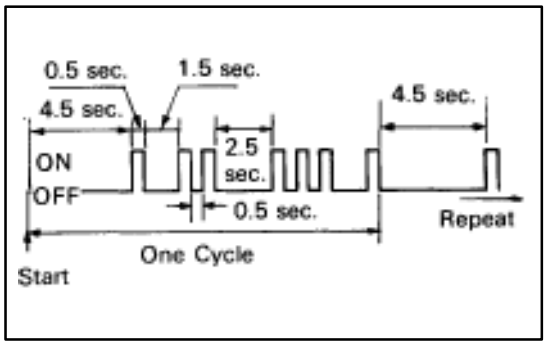

As an example, the blinking patterns for codes;normal, 12 and 31 are as shown on the illustration.

4. Check the details of the malfunction using the diagnostic code table on page TR–14.
5. After completing the check, disconnect terminals TE1 and E1, and turn off the display.
   HINT: In the event of 2 or more malfunction codes, indication will begin from the smaller numbered code and continue in order to the larger.

WhereEverybodyKnowsYourName

Diagnosis Inspection (Test Mode)

Compared to the normal mode, the test mode has high sensing ability to detect malfunctions.
It can also detect malfunctions in the starter signal circuit, the IDL contact signal of the throttle position sensor, air conditioner signal and neutral start switch signal.
Furthermore, the same diagnostic items which are detected in the normal mode can also be detected in the test mode.

DIAGNOSTIC CODE CHECK

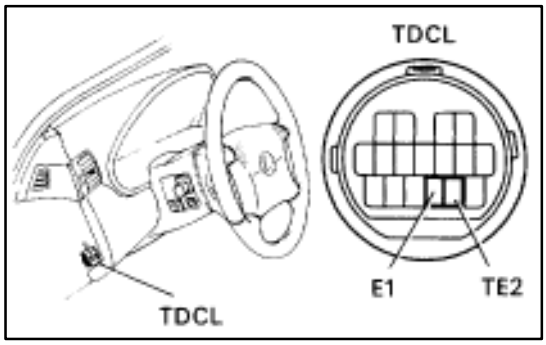

1. Initial conditions.
   (a) Battery voltage 11 V or more.
   (b) Throttle valve fully closed (throttle position sensor IDL points closed).
   (c) Transmission in neutral position.
   (d) Air conditioner switched off.
2. Turn ignition switch off.
3. Using SST, connect terminals TE2 and E1 of TDCL.
   SST 09843–18020

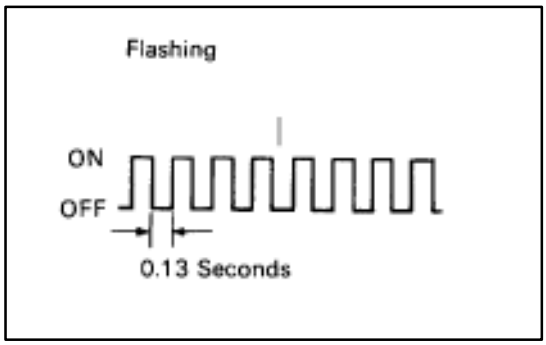

4. Turn ignition switch on.
   HINT:
   - To confirm that the test mode is operating, check that the ”CHECK” engine warning light flashes when the ignition switch is turned to ON.
   - If the ”CHECK” engine warning light does not flash, proceed to troubleshooting of the TE2 terminal circuit on page TR–146.
5. Start the engine.
6. Simulate the conditions of the malfunction described by the customer.

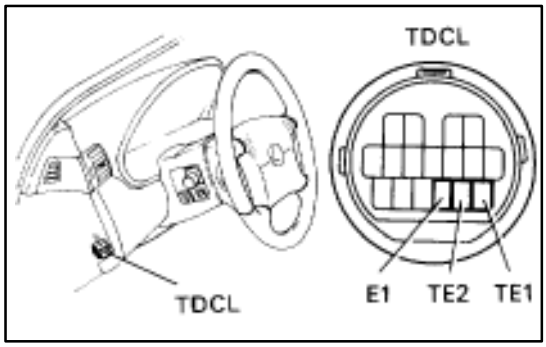

7. After the road test, using SST, connect terminals TE1 and E1 of TDCL or check connector.
   SST 09843–18020
8. Read the diagnostic code on ”CHECK” engine warning light on the combination meter (See page TR–11).
9. After completing the check, disconnect terminals TE1, TE2 and E1, and turn off the display.
   HINT:
   - The test mode will not start if terminals TE2 and E1 are connected after the ignition switch is turned on.
   - When the engine is not cranked, diag. codes ”43” (Starter signal) output, but this is not abnormal.
   - When the automatic transmission shift lever is in the ”D”, ”2”, ”L” or ”R” shift position, or when the air conditioner is on or when the accelerator pedal is depressed, code ”51” (Switch condition signal) is output, but this is not abnormal.

WhereEverybodyKnowsYourName

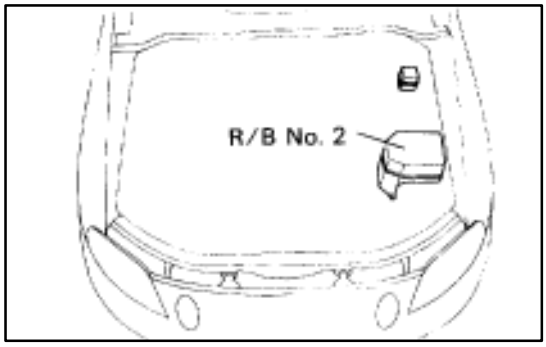

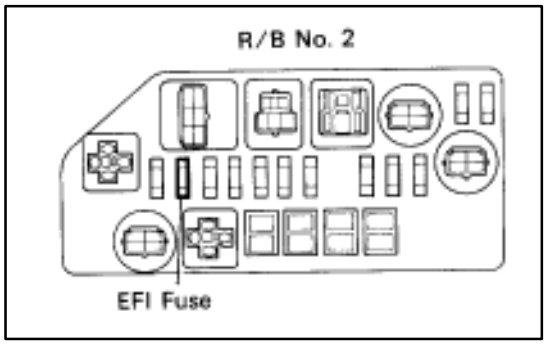

DIAGNOSTIC CODE CLEARANCE

1. After repair of the trouble areas, the diagnostic code retained in the ECU memory must be cleared out by removing the EFI fuse (30A) from R/B No. 2 for 10 seconds or more, with the ignition switch OFF.
   HINT:
   - Cancellation can also be done by removing the battery negative (–) terminal, but in this case, other memory systems (clock, etc.) will also be cancelled out.
   - If it is necessary to work on engine components requiring removal of the battery terminal, a check must first be made to see if a diagnostic code has been recorded.
2. After cancellation, road test the vehicle to check that a normal code is now read on the ”CHECK” engine warning light.
   If the same diagnostic code appears, it indicates that the trouble area has not been repaired thoroughly.

WhereEverybodyKnowsYourName

DIAGNOSTIC CODE CHART

HINT: Parameters listed in the chart may not be exactly same as your reading due to type of the instruments or other factors.

Code No.	Number of Check Engine Blinks	Circuit	Diagnostic Code Detecting Condition
–	BE3931	Normal	No code is recorded.
12	BE3931	RPM Signal	No "NE" or "G1" and "G2" signal to ECU within 2 sec. after cranking.
13	BE3931	RPM Signal	No NE signal to ECU for 0.1 sec. or more at 1,000 rpm or more.
			No 12 pulses of NE to ECU during the interval between G1 and G2 pulses.
			Deviation in G (G1, G2) and NE signal continues for 1 sec. during idling (throttle fully closed) after engine warmed up.
14	BE3931	Ignition No. 1 Signal	No IGF1 signal to ECU for 8-11 consecutive IGT1 signal.
15	BE3931	Ignition No. 2 Signal	No IGF2 signal to ECU for 8-11 consecutive IGT2 signal.
16	BE3931	ECT Control Signal	Fault in communications between the engine CPU and ECT CPU in the ECU.
21	BE3932	Main Oxygen Sensor Signal (on left bank)	(1) Open or short in heater circuit of main oxygen sensor for 0.5 sec. or more.
			(2) Main oxygen sensor signal voltage is reduced to between 0.35 V and 0.70 V for 60 sec. under conditions (a) ~ (d). (2 trip detection logic) *4 (a) Coolant temp. : Between 70°C (158°F) and 95°C (203°F). (b) Engine speed : 1,500 rpm or more. (c) Load driving (EX. ECT in 4th speed, A/C ON, Flat road, 50 mph <80 km/h>) (d) Main oxygen sensor signal voltage : Alternating above and below 0.45 V.

*4: See page TR–21.

WhereEverybodyKnowsYourName

If a malfunction code is displayed during the diagnostic code check in test mode, check the circuit for that code listed in the table below (Proceed to the page given for that circuit).

Trouble Area	"CHECK" Engine Warning Light *▼		Memory*2	See Page
	Normal Mode	Test Mode		
———————	——	——	———	———
• Open or short in engine speed sensor, No. 1, No. 2 cam position sensor circuit. • Engine speed sensor • No. 1, No. 2 cam position sensor • Starter • ECU	ON	N.A.	10	TR–48
• Open or short in engine speed sensor circuit. • Engine speed sensor • ECU	ON	N.A.	10	TR–52
• Open or short in engine speed sensor circuit. • Mechanical system malfunction (skipping teeth of timing • belt, belt stretched) • Engine speed sensor • ECU	N.A.	ON		
• Mechanical system malfunction (skipping teeth of • timing belt, belt stretched) • No. 1, No. 2 cam position sensor • ECU	ON	N.A.		
• Open or short in IGF1 circuit from igniter No. 1–ECU. • Igniter No. 1 • ECU	ON	N.A.	10	TR–54
• Open or short in IGF2 circuit from igniter No. 2–ECU. • Igniter No. 2 • ECU	ON	N.A.	10	TR–54
• ECU	ON	N.A.	X	TR–61
• Open or short in heater circuit of main oxygen sensor. • Main oxygen sensor heater • ECU	ON	N.A.	10	TR–62
• Main oxygen sensor circuit • Main oxygen sensor	ON	ON		

*1, 2: See page TR–20.

WhereEverybodyKnowsYourName

DIAGNOSTIC CODE CHART (Cont'd)

Code No.	Number of Check Engine Blinks	Circuit	Diagnostic Code Detecting Condition
22	BE3932	Water Temp. Sensor Signal	Open or short in water temp. sensor circuit for 0.5 sec. or more.
24	BE3932	Intake Air Temp. Sensor Signal	Open or short in intake air temp. sensor circuit for 0.5 sec. or more.
25 (26)	BE3932	Air-Fuel Ratio Lean (Rich) Malfunction	(1) Main oxygen sensor voltage is 0.45 V or less (lean) for 90 sec. under conditions (a) and (b). (2 trip detection logic)*4 (a) Coolant temp. : 60°C (140°F) or more. (b) Engine speed : 1,500 rpm or more.
			(2)*3 Main oxygen sensor voltage is alternating above and below 0.45 V at 5 times par second or more under conditions (a) and (b). (2 trip detection logic)*4 (a) Engine speed : Idling (b) Coolant temp. : Between 60°C (140°F) and 95°C (203°F).
			(3)*3 Difference of air-fuel ratio feedback compensation value between right and left banks is more than 10 percentage for 30 sec. or more under conditions (a) and (b). (2 trip detection logic)*4 (a) Engine speed : 2,000 rpm or more. (b) Coolant temp. : Between 60°C (140°F) and 95°C (203°F).
27	BE3932	Sub-Oxygen Sensor Signal (on left bank)	(1) Open or short in heater circuit of sub-oxygen sensor for 0.5 sec. or more.
			(2) Main oxygen sensor signal is 0.45 V or more and sub-oxygen sensor signal is 0.45 V or less under conditions (a) and (b). (2 trip detection logic)*4 (a) Coolant temp. : 80°C (176°F) or more. (b) Accel-pedal : Full depressed for 2 sec. or more.
28	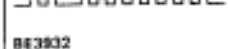 BE3932	Main Oxygen Sensor Signal (on right back)	Same as (1) of Code No. 21
			Same as (2) of Code No. 21
29	BE3932	Sub-Oxygen Sensor Signal (on right bank)	Same as (1) of Code No. 27
			Same as (2) of Code No. 27

* 3, 4: See page TR–20, 21.

WhereEverybodyKnowsYourName

Trouble Area	"CHECK" Engine Warning Light *▼		Memory*2	See Page
	Normal Mode	Test Mode		
• Open or short in water temp. sensor circuit. • Water temp. sensor • ECU	ON	ON	10	TR–68
• Open or short in intake air temp. sensor circuit. • Intake air temp. sensor • ECU	OFF ON*3	ON	10	TR–72
• Open or short in main oxygen sensor circuit. • Main oxygen sensor • Ignition system • Water temp. sensor	ON	ON	10	TR–74
• Open or short in injector circuit. • Fuel line pressure (injector blockage) • Air flow meter (air intake) • Engine ground bolt loose • Foreign object caught in valve				
• Fuel line pressure (injector leak, blockage) • Mechanical system malfunction • (skipping teeth of timing belt) • Ignition system				
• Open or short in heater circuit of sub–oxygen sensor. • Sub–oxygen sensor heater. • ECU	ON	N.A.	10	TR–82
• Open or short in sub–oxygen sensor circuit. • Sub–oxygen sensor • ECU	ON	ON		
• Same as (1) of Code No. 21	ON	N.A.	10	TR–62
• Same as (2) of Code No. 21	ON	ON		
• Same as (1) of Code No. 27	ON	N.A.	10	TR–82
• Same as (2) of Code No. 27	ON	ON		

*1, 2, 3: See page TR–20.

WhereEverybodyKnowsYourName

DIAGNOSTIC CODE CHART (Cont'd)

Code No.	Number of Check Engine Blinks	Circuit	Diagnostic Code Detecting Condition
31	BE3933	Air Flow Meter Signal	All conditions below are detected. (a) No air-flow meter signal to ECU for 2 sec. when engine speed is above 300 rpm. (b) Engine stall.
35	BE3933	HAC Sensor Signal	Open or short in HAC sensor circuit for 0.5 sec. or more.
41	BE3934	Throttle Position Sensor Signal	(1) Open or short in throttle position sensor circuit (VTA1) for 0.5 sec. or more. (2) IDL1 contact is ON and VTA1 output exceeds 1.5 V for 0.5 sec. or more.
42	BE3934	Vehicle Speed Sensor Signal	All conditions below are detected continuously for 8 sec. or more. (a) Vehicle speed signal : 0 mph (b) Engine speed : 1,500 rpm or more (c) Neutral start switch (NSW) : OFF
43	BE3934	Starter Signal	No starter signal to ECU.
47	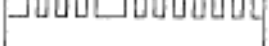 BE3934	Sub-Throttle Position Sensor Signal	(1) Open or short in sub-throttle position sensor circuit (VTA2) for 0.5 sec. or more. (2) IDL2 contact is ON and VTA2 output exceeds 1.5 V for 0.5 sec. or more.
52	BE3935	No. 1 Knock Sensor Signal	No No. 1 knock sensor signal to ECU for 3 crank revolutions with engine speed between 1,600 rpm ~ 5,200 rpm.
53	BE3935	Knock Control Signal	Engine control computer (for knock control) malfunction at engine speed between 650 rpm and 5,200 rpm.
55	BE3935	No. 2 Knock Sensor Signal	No No. 2 knock sensor signal to ECU for 3 crank revolutions with engine speed between 1,600 rpm ~ 5,200 rpm.

WhereEverybodyKnowsYourName

Trouble Area	"CHECK" Engine Warning Light *▼		Memory*2	See Page
	Normal Mode	Test Mode		
• Open or short in air flow meter circuit. • Air flow meter • ECU	ON	N.A.	10	TR–88
• ECU	ON	ON	10	TR–92
• Open or short in throttle position sensor circuit. • Throttle position sensor • ECU	ON	ON	10	TR–94
• No. 1 speed sensor • Combination meter • Open or short in No. 1 speed sensor circuit. • ECU	ON	ON	10	TR–98
• Open or short in starter signal circuit. • Open or short in ignition switch or main relay circuit. • ECU	N.A.	OFF	X	TR–100
• Open or short in sub–throttle position sensor circuit. • Sub–throttle position sensor • ECU	OFF	ON	10	TR–94
• Open or short in No. 1 knock sensor circuit. • No. 1 knock sensor (looseness) • ECU	ON	N.A.	10	TR–102
• ECU	ON	N.A.	X	
• Open or short in No. 2 knock sensor circuit. • No. 2 knock sensor (looseness) • ECU	ON	N.A.	10	

*1, 2: See page TR–20.

WhereEverybodyKnowsYourName

DIAGNOSTIC CODE CHART (Cont'd)

Code No.	Number of Check Engine Blinks	Circuit	Diagnostic Code Detecting Condition
71 *3	BE3937	EGR System Malfunction	(1) Open or short in EGR step motor circuit for 1 sec. or more.
			(2) EGR gas temp. is 65°C (149°F) or below for 1 ~ 4 min. under conditions (a) and (b). (2 trip detection logic)*4 (a) Coolant temp. : 65°C (149°F) or more. (b) EGR operation possible (EX. ECT in 3rd speed, A/C ON, 60 mph <96 km/h>, Flat road).
78	BE3937	Fuel Pump Control Signal	(1) Open or short in fuel pump circuit for 1 sec. or more with engine speed 1,000 rpm or less. (2 trip detection logic)*4
			(2) Open in input circuit of fuel pump ECU (FPC) with engine speed 1,000 rpm or less. (2 trip detection logic)*4
			(3) Open or short in diagnostic signal line (DI) of fuel pump ECU with engine speed 1,000 rpm or less. (2 trip detection logic)*4
51	BE3935	Switch Condition Signal	(1) 3 sec. or more after engine starts, idle switch OFF (IDL1). (2) Neutral start switch OFF (NSW). (Shift position in "R", "D", "2" or "1" ranges). (3) A/C switch ON.

*1: "ON" displayed in the diagnosis mode column indicates that the "CHECK" Engine Warning Light is lighted up when a malfunction is detected. "OFF" indicates that the "CHECK" does not light up during malfunction diagnosis, even if a malfunction is detected. "N.A." indicates that the item is not included in malfunction diagnosis.

*2: "O" in the memory column indicates that a diagnostic code is recorded in the ECU memory when a malfunction occurs. "X" indicates that a diagnostic code is not recorded in the ECU memory even if a malfunction occurs. Accordingly, output of diagnostic results in normal or test mode is performed with the IG switch ON.

*3: Only for USA specification vehicles.

WhereEverybodyKnowsYourName

Trouble Area	"CHECK" Engine Warning Light*▼		Memory*2	See Page
	Normal Mode	Test Mode		
• Open or short in EGR step motor circuit. • ECU	ON	N.A.	10	TR–108
• Open in EGR gas temp. sensor circuit. • ECU	ON	ON		
• Open or short in fuel pump ECU circuit. • Fuel pump ECU • Engine & ECT ECU power source circuit. • Fuel pump • Engine & ECT ECU	ON	ON	10	TR–114
• A/C switch circuit • Throttle position sensor IDL circuit • Neutral start switch circuit. • Accelerator pedal and cable • ECU	N.A.	OFF	X	TR–118

*4: This indicates items for which "2 trip detection logic" is used. With this logic, when a logic malfunction is first detected, the malfunction is temporarily stored in the ECU memory. If the same case is detected again during the second drive test, this second detection causes the "CHECK" Engine Warning Light to light up. The 2 trip repeats the same mode a 2nd time. (However, the IG switch must be turned OFF between the 1st trip and 2nd trip).
In the Test Mode, the "CHECK" Engine Warning Light lights up the 1st trip a malfunction is detected.

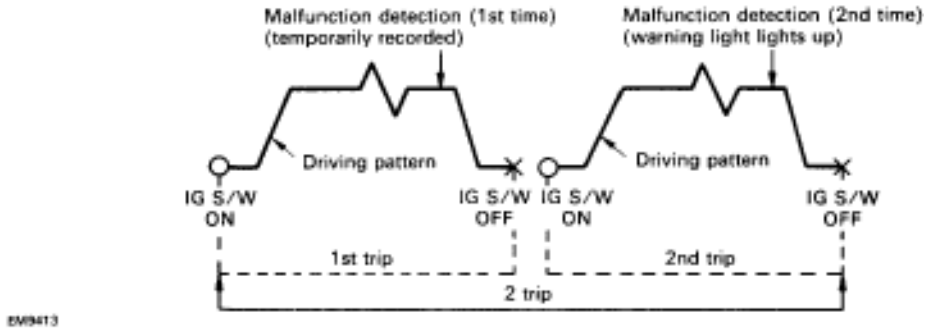

WhereEverybodyKnowsYourName

FAIL–SAFE CHART

If any of the following codes is recorded, the ECU enters fail–safe mode.

Code No.	Fail–Safe Operation	Fail–Safe Deactivation Conditions
14	Fuel cut	1 IGF1 detected in consecutive 8 ignitions.
15	Fuel cut	1 IGF2 detected in consecutive 8 ignitions.
16	Torque control prohibited.	Returned to normal condition.
22	THW is fixed at 80°C (176°F).	Returned to normal condition.
24	THA is fixed at 20°C (68°F).	Returned to normal condition.
31	Ignition timing controlled between 10° ~ 30° BTDC, Injection time controlled between 3 msec. ~ 30 m sec., in relation to: • Engine rpm • Throttle angle • ISC step value	KS input 15 times/sec. or more.
35	Atmospheric pressure is fixed at 760 mmHg.	Returned to normal condition.
41	VTA1 is fixed at 0°	The following 1 or 2 must be repeated at least 2 times consecutively. 1 When IDL is ON 0.25 V ≦ VTA1 ≦ 0.95 V 2 When IDL is OFF 0.25 V ≦ VTA1 ≦ 4.9 V
47	Value of VTA1 is used.	The following 1 or 2 must be repeated at least 2 times consecutively. 1 When IDL2 is ON 0.25 V ≦ VTA2 ≦ 0.95 V 2 When IDL2 is OFF 0.25 V ≦ VTA2 ≦ 4.9 V
52	Max. timeing retardation.	IG switch OFF.
53	Max. timeing retardation.	Returned to normal condition.
55	Max. timeing retardation.	IG switch OFF.

Back–Up Function

If there is trouble with the program in the ECU and the ignition signals (IGT) are not output, the ECU controls fuel injection and ignition timing at predetermined levels as a back–up function to make it possible to continue to operate the vehicle.

Furthermore, the injection duration is calculated from the satrting signal (STA) and the throttle position signal (IDL). Also, the ignition timing is fixed at the initial ignition timing, 5° BTDC, without relation to the engine speed.

HINT: If the engine is controlled by the back–up function, the CHECK ENGINE light lights up to warn the driver of the malfunction but the diagnostic code is not output.

WhereEverybodyKnowsYourName

CHECK FOR MOMENTARY INTERRUPTION

As described in the preceding paragraph, abnormality detection ability in the test mode is increased compared to that in the normal mode, so that when momentary interruptions or momentary shorts occur in the ECU signal circuits (G1, G2, NE, THW, THA, VTA1, VTA2) shown in the table below, the appropriate diagnostic code is output.

Accordingly, when the diagnostic codes shown in the table below (13, 22, 24, 41, 47) are output during the diagnostic code check, and inspection of the appropriate circuits reveals no abnormality, perform the check for momentary interruption as described below. By performing the check for momentary interruption, the place where momentary interruptions or momentary shorts are occurring due to poor contacts can be isolated.

Diag. Code	Circuit
13	RPM signal circuit (No. 2)
22	Water temp. sensor circuit
24	Intake air temp. sensor circuit
41	Throttle position sensor circuit
47	Sub-throttle position sensor circuit

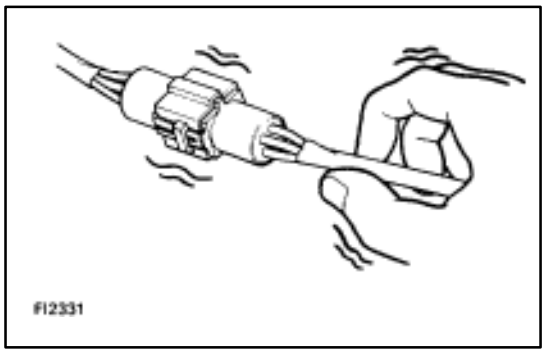

CLEAR DIAGNOSTIC CODES

See page TR–13.

SET TEST MODE

1. With the ignition switch off, using SST, connect the terminals TE2 and E1 of the TDCL.
   SST 09843–18020
2. Start the engine and check to see the ”CHECK” engine warning light to go off.

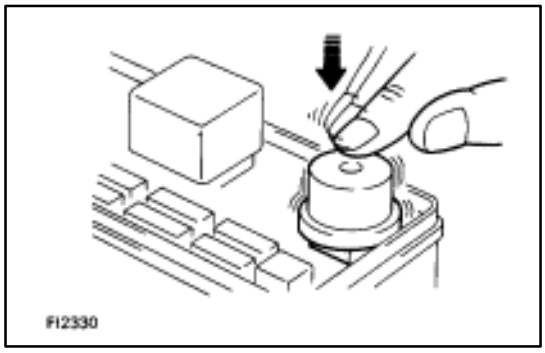

PERFORM A SIMULATION TEST

Using the symptom simulation (See page IN–20), apply vibration to and pull lightly on the wire harness, connector or terminals in the circuit indicated by the malfunction code.

In this test, if the ”CHECK” engine warning light lights up, it indicates that the place where the wire harness, connector or terminals being pulled or vibrated has faulty contact. Check that point for loose connections, dirt on the terminals, poor fit or other problems and repair as necessary.

HINT: After cancelling out the diagnostic code in memory and set the test mode, if the ”CHECK” engine warning light does not go off after the engine is started, check thoroughly for faulty contact, etc., then try the check again. If the ”CHECK” engine warning light still does not go off, check and replace ECU.

WhereEverybodyKnowsYourName

BASIC INSPECTION

When the normal code is displayed in the diagnostic code check, troubleshooting should be performed in the order for all possible circuits to be considered as the causes of the problems.
In many cases, by carrying out the basic engine check shown in the following flow chart, the location causing the problem can be found quickly and efficiently. Therefore, use of this check is essential in engine troubleshooting.

1	**Is battery voltage 11 V or more when engine is stopped?**

YES

NO — **Charge or replace battery.**

2	**Is engine cracnked?**

YES

NO — **Proceed to matrix to matrix chart of problem symptoms on page TR–35.**

3	**Does engine start?**

YES

NO — **Go to step [7]**

4	**Check air filter**

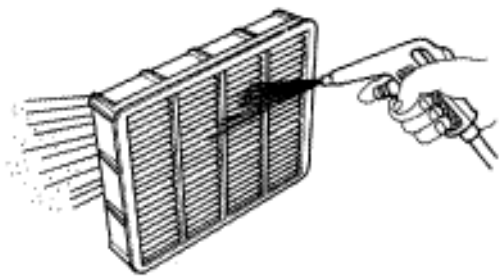

P Remove air filter

C Visially check that the air cleaner element is not excessively damaged or oily.

Hint If necessary, clean element with compressed air. First blow from inside thoroughly, then blow off outside of element.

OK

NG — **Repair or replace**

Go to Step [5].

WhereEverybodyKnowsYourName

5 **Check idle speed.**

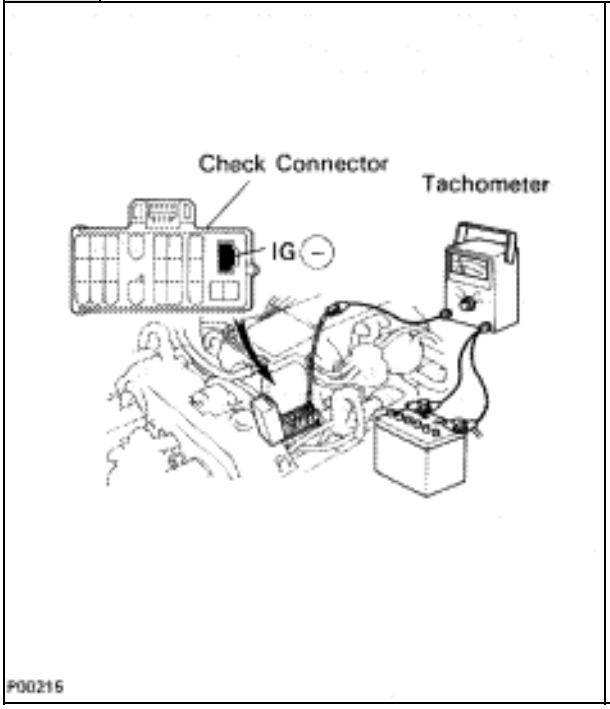

P (1) Warm up engine at normal operating temperature.
(2) Switched off all accessories.
(3) Switched off air conditioner.
(4) Shift transmission into “N” range.
(5) Connect tachometer test probe to terminal IG ± of check connector, and set the tachometer to the 4–cylinder range.

C Check idle speed.

OK **Idle speed: 650 ~ 750 rpm**

Caution:

▼ **NEVER allow tachometer test probe to touch ground as it could result in damage to igniter and/or coil.**

▼ **As some tachometers are not compatible with this ignition system, we recommended that you confirm compatibility of your unit before use.**

OK

NG **Proceed to matrix chart of problem symptoms on page TR–35.**

6 **Check ignition timing.**

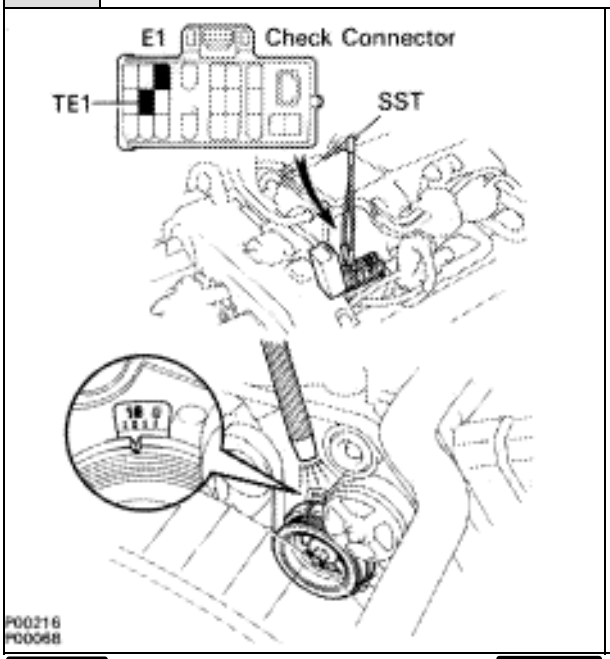

P (1) Warm up engine at normal operating temperture.
(2) Shift transmission into “N” range.
(3) Keep the engine speed at idle.
(4) Using SST, connect terminals TE1 and E1 of check connector.

SST 09843–18020

(5) Using a timing light. connect the tester to No. 6 high–tension cord.

C Check ignition timing.

OK **Ignition Timing: 8–12° BTDC at idle**

OK

NG **Proceed to page IG–28 and continue to troubleshoot.**

Proceed to matix chart of problem symptoms on page TR–35.

WhereEverybodyKnowsYourName

7 **Check fuel pressure.**

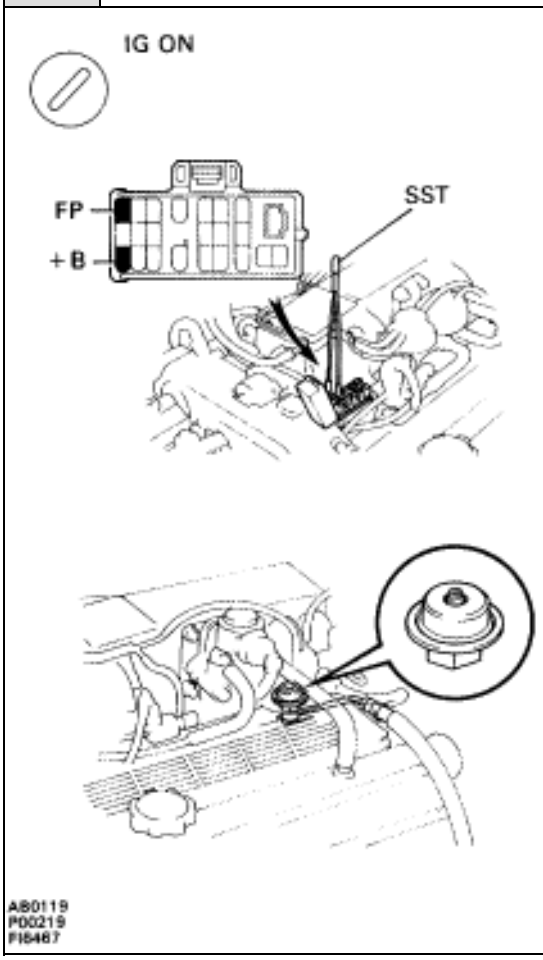

P (1) Be sure that fuel is enough in tank.
(2) Turn ignition switch on.
(3) Using SST, connect terminals FP and + B of check connector.
SST 09843–18020

C Check that pulsation damper screw rises up when terminals are connected.

Caution:

Never make a mistake with the terminal connection position as this will cause a malfunction.

OK

NG **Proceed to page FI–18 and continue to troubleshoot.**

8 **Check for spark.**

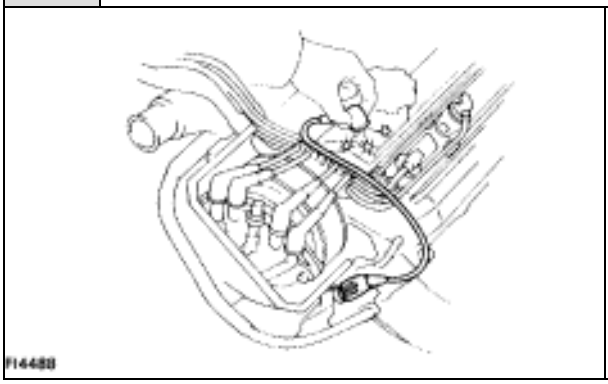

C Disconnect the high–tension cord from the distributor and, hold the end about 12.5 mm (1/2”) from the ground, see if spark occurs while the engine is being cranked.

Hint To prevent excessive fuel injected from the injectors during this test, Don’t crank the engine for more than 1 – 2 seconds at a time.

OK

NG **Proceed to the page IG–6 and continue to troubleshoot.**

Proceed to matix chart of problem systems on page TR–35.

WhereEverybodyKnowsYourName

FAIL–SAFE CHART

If any of the following codes is recorded, the ECU enters fail–safe mode.

Code No.	Fail–Safe Operation	Fail–Safe Deactivation Conditions
14	Fuel cut	1 IGF detected in consecutive 3 ignitions.
16	Torque control prohibited.	Returned to normal condition.
22	THW is fixed at 80°C (176°F).	Returned to normal condition.
24	THA is fixed at 20°C (68°F).	Returned to normal condition.
31	2 Ignition timing fixed at 10° BTDC. 2 Injection time fixed Starting ¿ 9 m sec. IDL ON ¿ 3.6 m sec. IDL OFF ¿ 6.7 m sec.	KS input 15 times/sec. or more.
35	Atmospheric pressure is fixed at 101.3 kPa (760 mmHg, 29.92 in.Hg).	Returned to normal condition.
41	VTA1 is fixed at 0°.	The following must each be repeated at least 2 time consecutively. (w/o TRAC) 2 0.1 V ? VTA ? 0.95 V 2 IDL : ON (w/ TRAC) 2 0.25 V ? VTA ? 0.95 V 2 IDL : ON
52	Max. timing retardation.	IG switch OFF.
53	Max. timing retardation.	Returned to normal condition.
55	Max. timing retardation.	IG switch OFF.

Back–Up Function

If there is trouble with the program in the ECU and the ignition signals (IGT) are not output, the ECU controls fuel injection and ignition timing at predetermined levels as a back–up function to make it possible to continue to operate the vehicle.

Furthermore, the injection duration is calculated from the starting signal (STA) and the throttle position signal (IDL). Also, the ignition timing is fixed at the initial ignition timing, 10° BTDC, without relation to the engine speed.

HINT: If the engine is controlled by the back–up function, the ”CHECK” engine warning light lights up to warn the driver of the malfunction but the diagnostic code is not output.

WhereEverybodyKnowsYourName

PARTS LOCATION

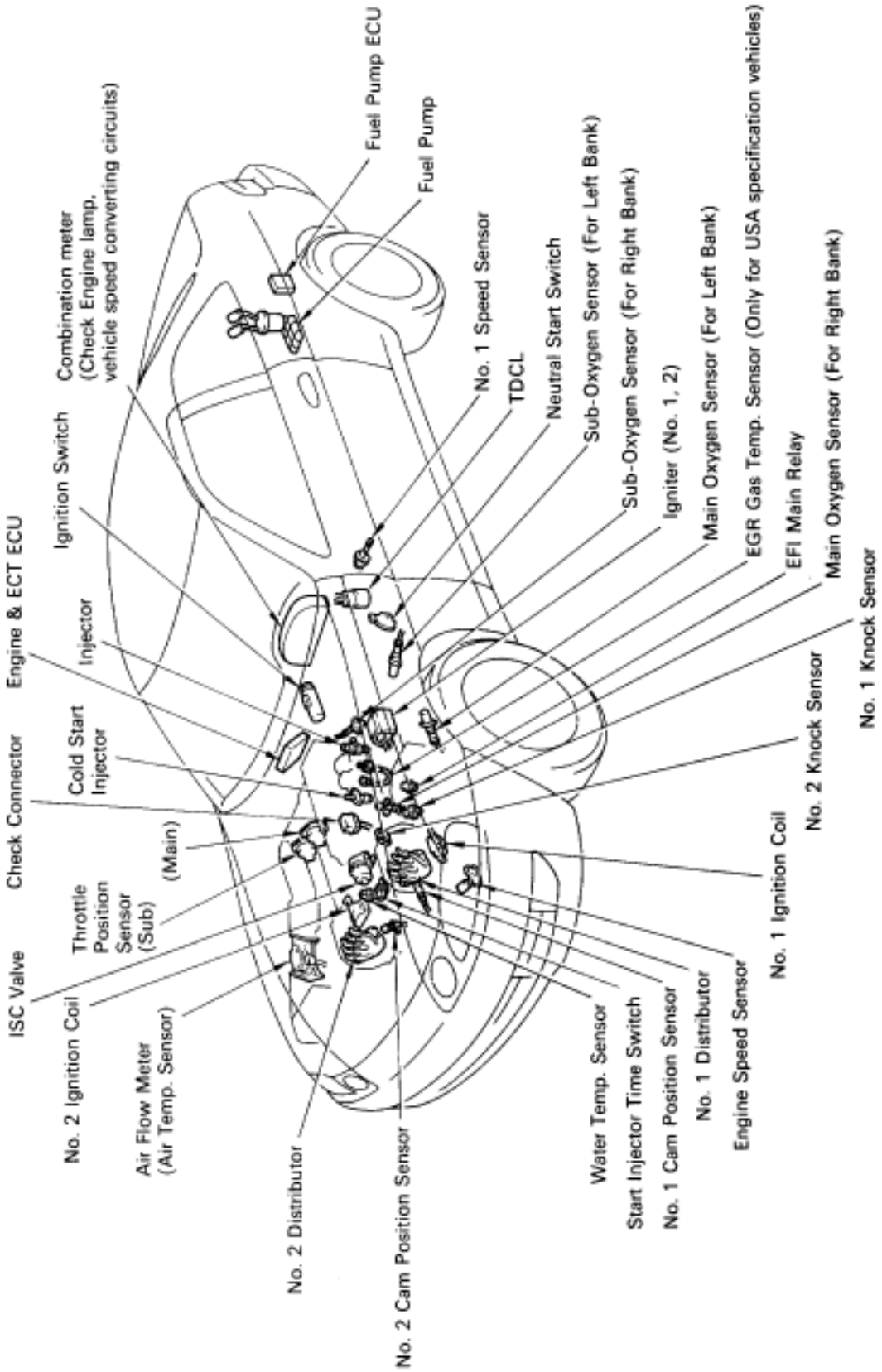

FI6521

WhereEverybodyKnowsYourName

WIRING DIAGRAM

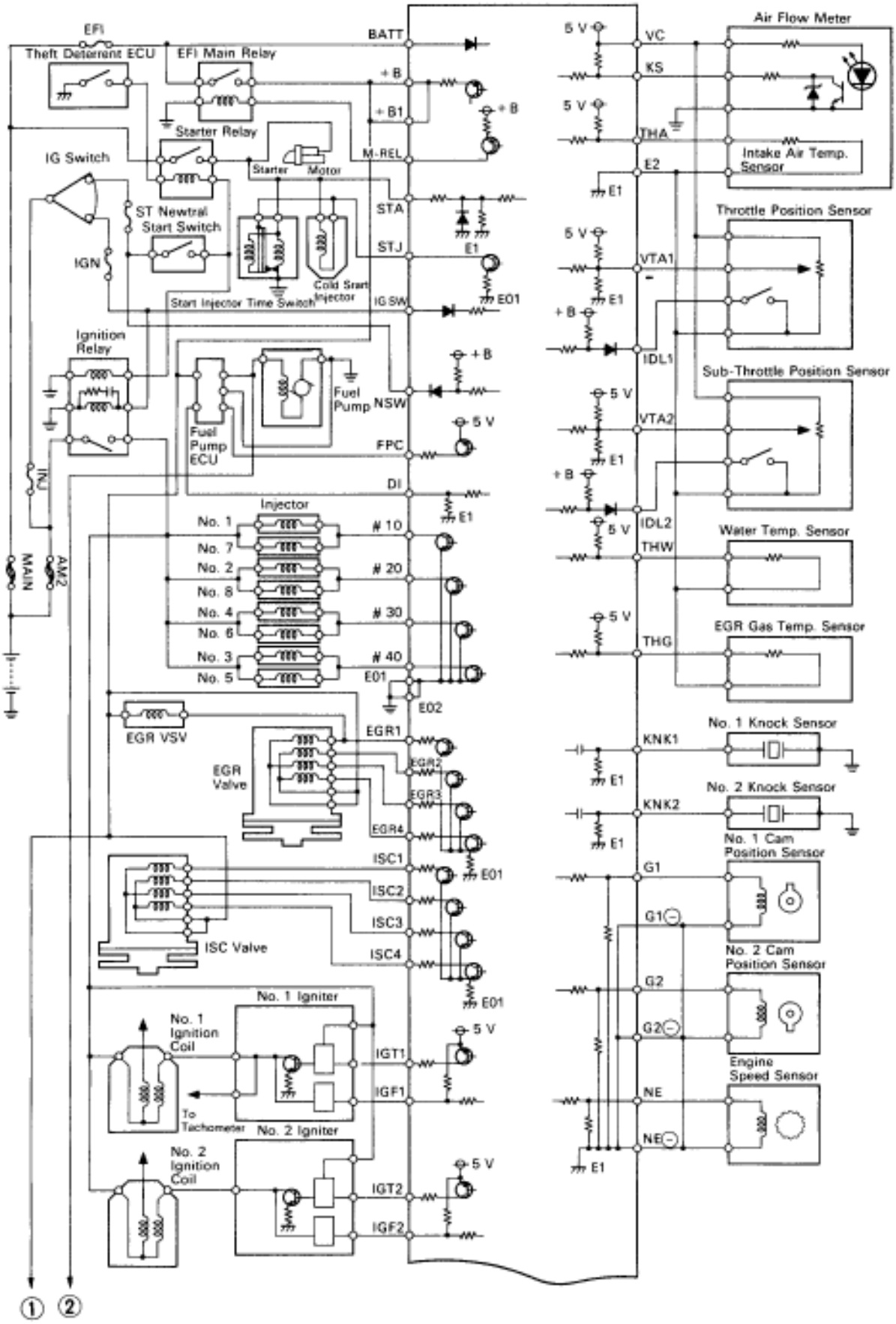

WhereEverybodyKnowsYourName

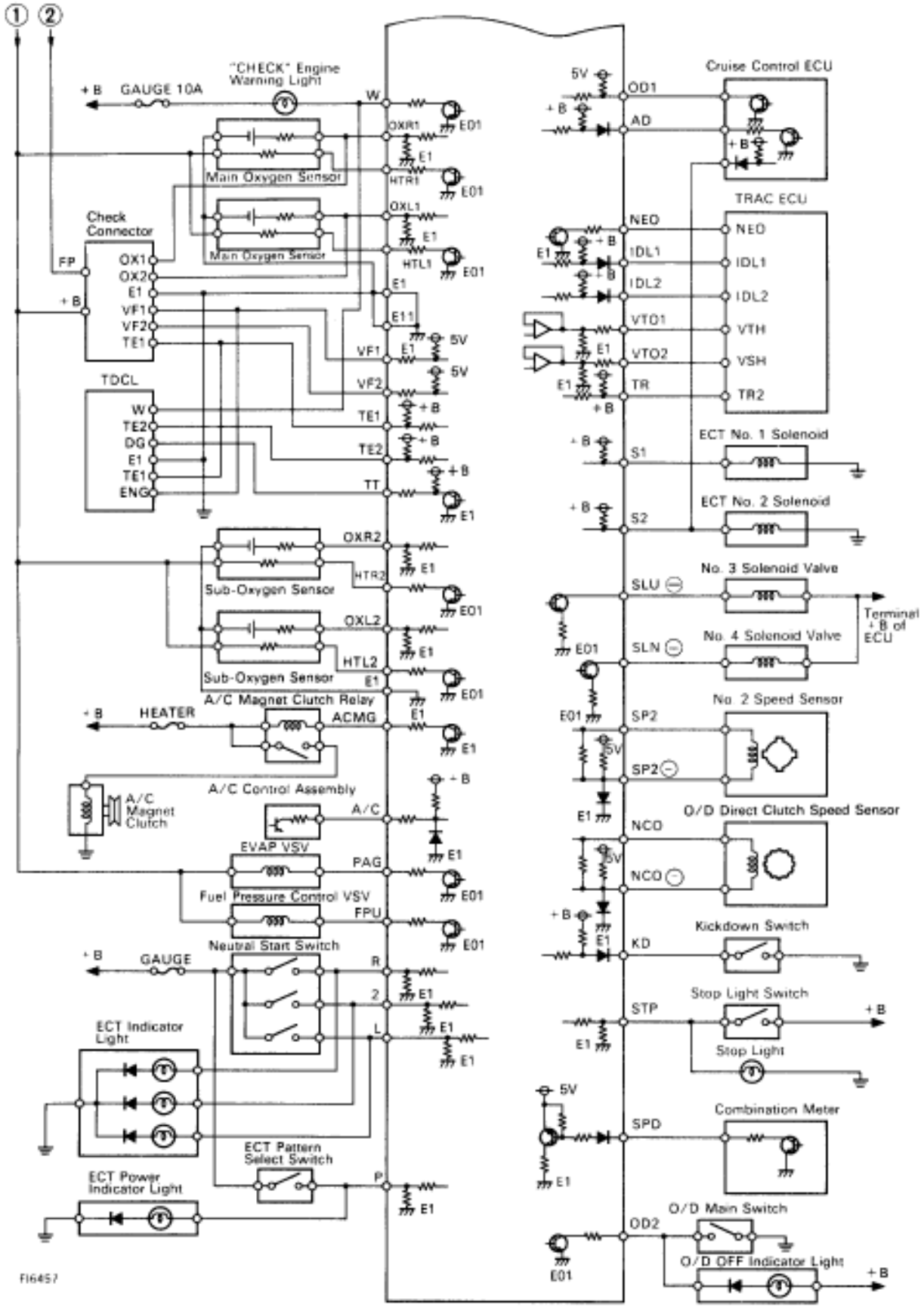

WhereEverybodyKnowsYourName

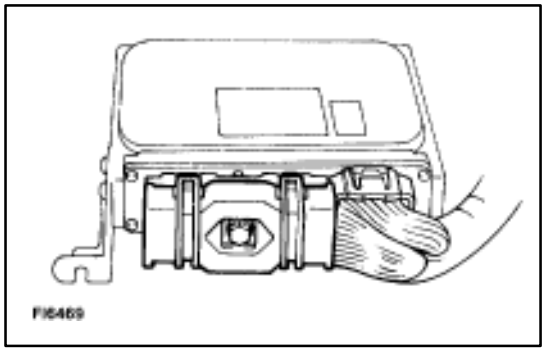

TERMINALS OF ECU

Connectors of the engine & ECT ECU are water–proof and are the bolt type.
For water proof type connectors, in order to measure the voltage of ECU terminals and the resistance of connected parts, connect the inspection sub wire harness between the ECU and vehicle wire harness, then perform the inspection. The inspection method of inserting a tester probe from the other side of connector noticeably reduces the water–proof ability.
Disconnect the connector by fully loosening the bolt.

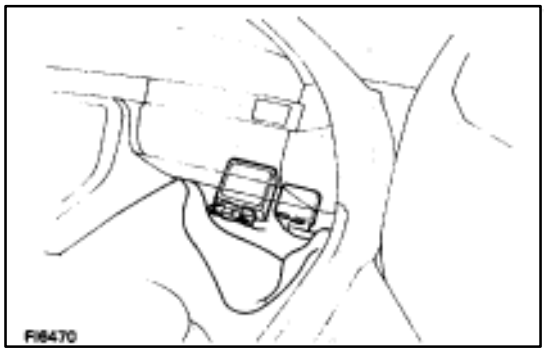

PREPARATION

1. Turn the ignition switch to LOCK position.
2. Turn up the passenger side floor mat.
3. Remove the ECU protector.
4. Disconnect the connector from the ECU.
   After completely loosening the bolt, the two parts of the connector can be separated.
   NOTICE:
   - **Do not pully the wire harness when disconnecting the connector.**
   - **When disconnecting the connector, the ECU's backup power source is cut off, so the malfunction codes, etc. recorded in the ECU memory are cancelled.**
   - **Never insert a tester probe or male terminal used for inspection purposes into the female terminal of the vehicle wire harness. Otherwise, the female terminal may be widened, which can result in faulty connection.**

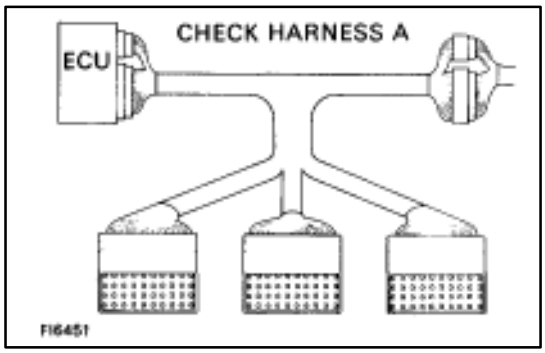

5. Connect the Check Harness A between ECU and connector of vehicle wire harness.
   SST 09990–01000
   HINT: The arrangement of the check connector terminals are the same as those of the ECU.
   See page TR–31
6. Disconnect the Check Harness A.
7. Reconnect the connector to the ECU.
   (a) Match the male connector correctly with the female connector, then press them together.
   (b) Tighten the bolt
   Make sure the connector is completely connected, by tightening the bolt until there is a clearance of less than 1 mm (0.04 in.) between bottom of the male connector and end of the female connector.
8. Install the ECU protector and floor mat.

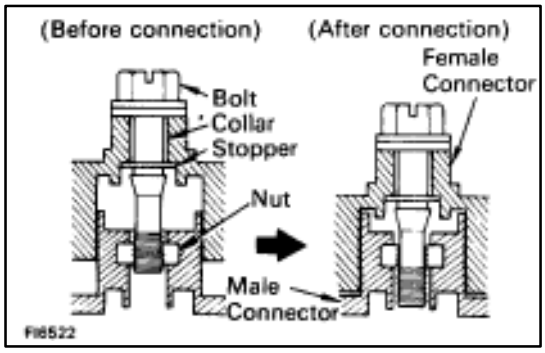

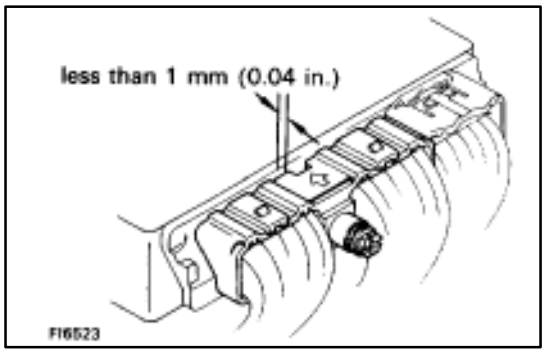

WhereEverybodyKnowsYourName

TERMINALS OF ECU

ECU Terminals

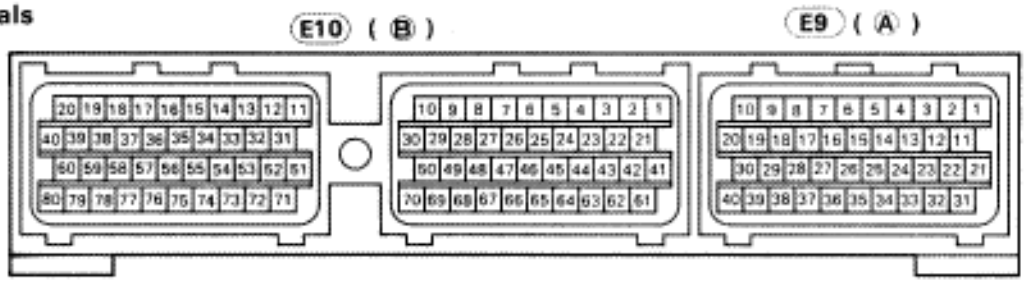

FI8460

Terminal No.	Symbol	Connection	Terminal No.	Symbol	Connection
E9 – 1	IGSW	Ignition switch	E9 – 31	+B	EFI main relay
2	SPD	Speed sensor No. 1	32	+B1	EFI main relay
3	KD	Kick-down switch	33	BATT	Battery
4	STP	Stop light switch	34	A/C	A/C control assembly
5	—	—	35	—	—
6	W	"CHECK" engine warning light	36	—	—
7	R	Neutral start switch	37	TR	TRAC ECU
8	—	—	38	NEO	TRAC ECU
9	2	Neutral start switch	39	VTO2	TRAC ECU
10	L	Neutral start switch	40	VTO1	TRAC ECU
11	AD	Cruise control ECU	E10 – 1	NCO⊖	T/M input speed sensor
12	OD1	Cruise control ECU	2	—	—
13	—	—	3	SP2⊖	Speed sensor No. 2 (for ECT)
14	—	—	4	E11	ECU ground
15	—	—	5	G2⊖	Cam position sensor
16	—	—	6	G1⊖	Cam position sensor
17	TT	TDCL	7	NE⊖	Engine speed sensor
18	P	ECT pattern select switch	8	—	—
19	TE2	Check connector	9	S2	ECT solenoid
20	TE1	Check connector	10	S1	ECT solenoid
21	DI	Fuel pump ECU	11	—	—
22	FPC	Fuel pump ECU	12	—	—
23	ACMG	A/C magnet clutch relay	13	SLN⊖	ECT solenoid No. 4
24	M-REL	EFI main relay	14	SLU⊖	ECT solenoid No. 3
25	—	—	15	—	—
26	—	—	16	—	—
27	—	—	17	# 40	Injectors (No. 3 and No. 5)
28	OD2	O/D main switch	18	# 30	Injectors (No. 4 and No. 6)
29	—	—	19	# 20	Injectors (No. 2 and No. 8)
30	—	—	20	# 10	Injectors (No. 1 and No. 7)

WhereEverybodyKnowsYourName

TERMINALS OF ECU (Cont'd)

ECU Terminals

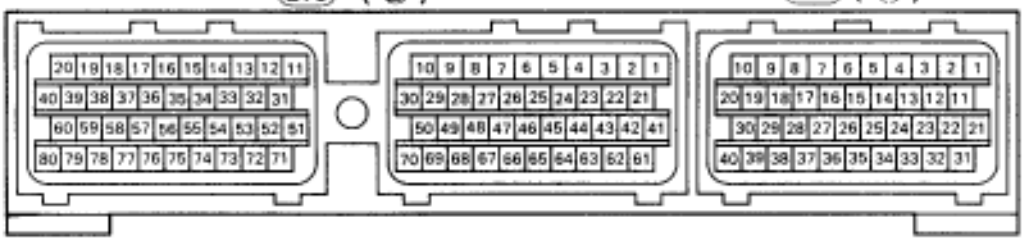

Terminal No.	Symbol	Connection	Terminal No.	Symbol	Connection
E10 – 21	NCO	T/M input speed sensor	E10 – 51	—	———
22	—	———	52	HTL2	Sub-oxygen sensor heater (on left bank)
23	SP2	Speed sensor No. 2 (for ECT)	53	HTR2	Sub-oxygen sensor heater (on right bank)
24	—	———	54	—	———
25	G2	No. 2 cam position sensor	55	—	———
26	G1	No. 1 cam position sensor	56	IGT2	No. 2 igniter
27	NE	Engine speed sensor	57	IGT1	No. 1 igniter
28	VF2	Check connector	58	IGF1	No. 1 igniter
29	VF1	Check connector	59	IGF2	No. 2 igniter
30	—	———	60	—	———
31	—	———	61	—	———
32	ISC4	ISC valve	62	—	———
33	ISC3	ISC valve	63	IDL2	Sub-throttle position sensor
34	ISC2	ISC valve	64	IDL1	Throttle position sensor
35	ISC1	ISC valve	65	E2	Sensor ground
36	EGR4*	EGR valve	66	KS	Air flow meter
37	EGR3*	EGR valve	67	OXR2	Sub-oxygen sensor (on right bank)
38	EGR2*	EGR valve	68	OXL2	Sub-oxygen sensor (on left bank)
39	EGR1	EGR valve (or VSV)	69	E1	ECU ground
40	—	———	70	—	———
41	VC	Throttle position sensor. Air flow meter.	71	HTL1	Main oxygen sensor heater (on left bank)
42	VTA2	Sub-throttle position sensor	72	HTR1	Main oxygen sensor heater (on right bank)
43	VTA1	Throttle position sensor	73	FPU	Fuel pressure up VSV
44	THW	Water temp. sensor	74	PAG	EVAP purge VSV
45	THA	Intake air temp. sensor	75	—	———
46	THG*	EGR gas temp. sensor	76	NSW	Neutral start switch
47	OXR1	Main oxygen sensor (on right bank)	77	STA	Starter relay
48	OXL1	Main oxygen sensor (on left bank)	78	STJ	Cold start injector
49	KNK2	No. 2 knock sensor	79	EO2	Power ground
50	KNK1	No. 1 knock sensor	80	EO1	Power ground

WhereEverybodyKnowsYourName

PARTS LOCATION

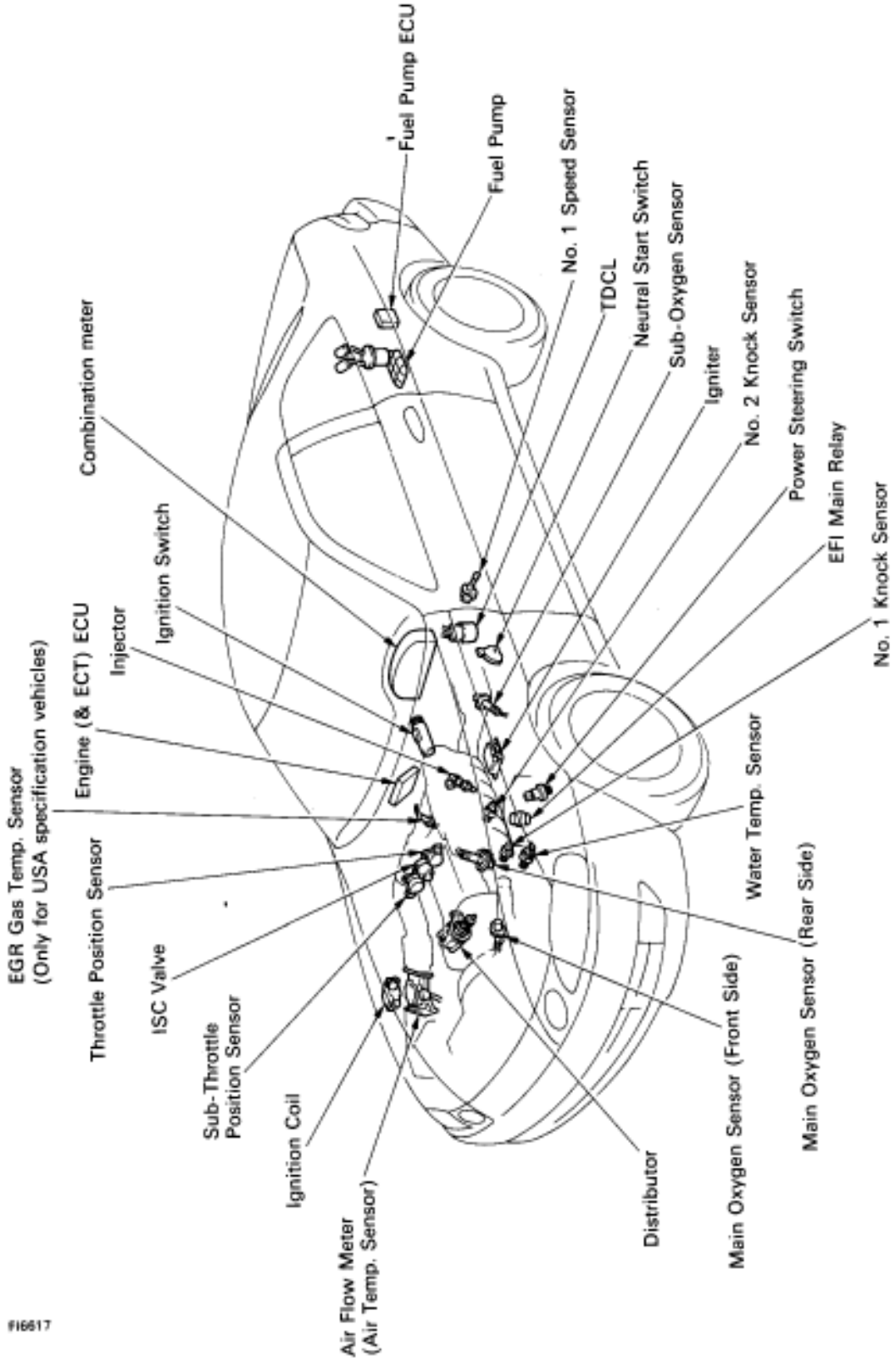

WhereEverybodyKnowsYourName

WIRING DIAGRAM

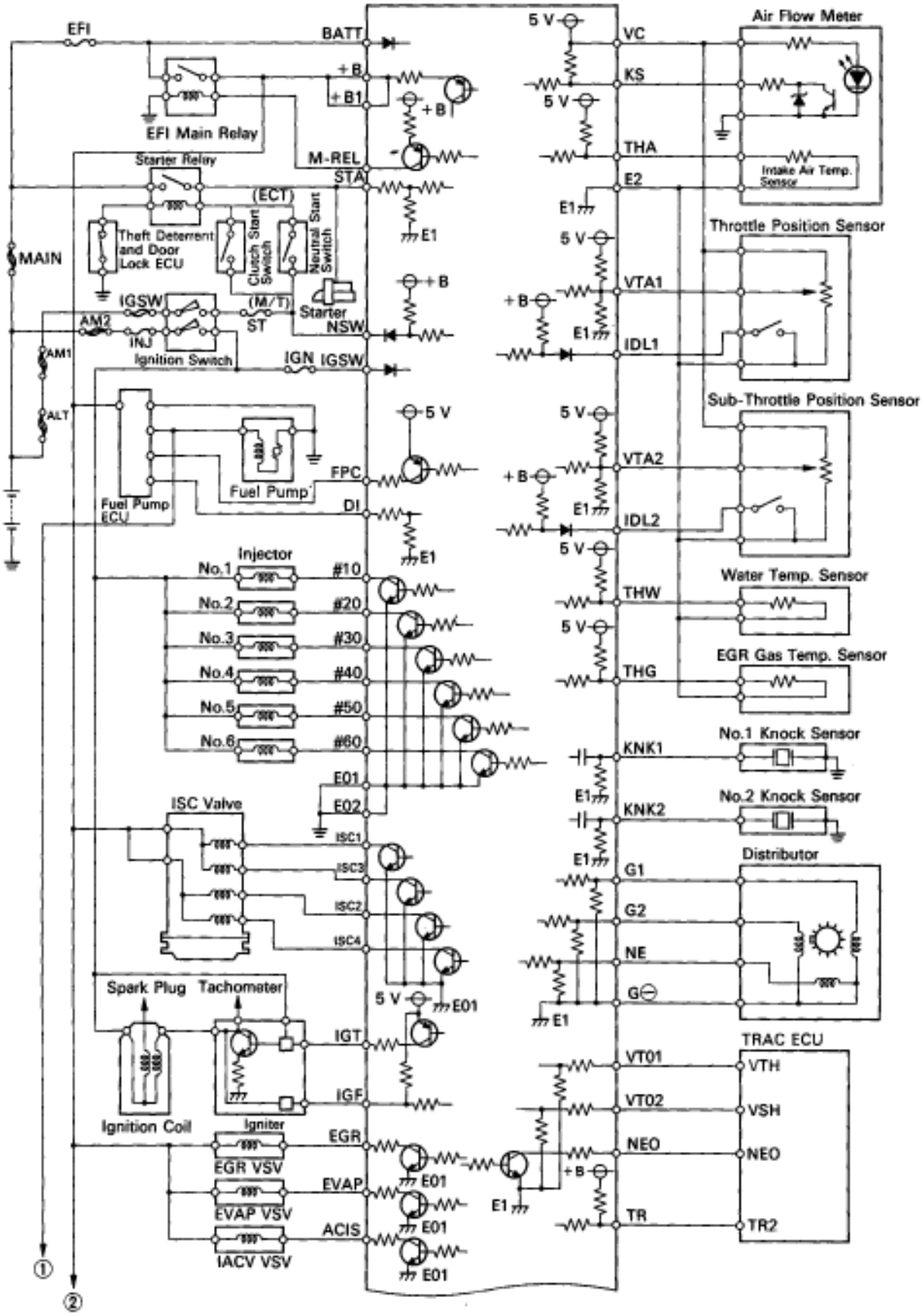

WhereEverybodyKnowsYourName

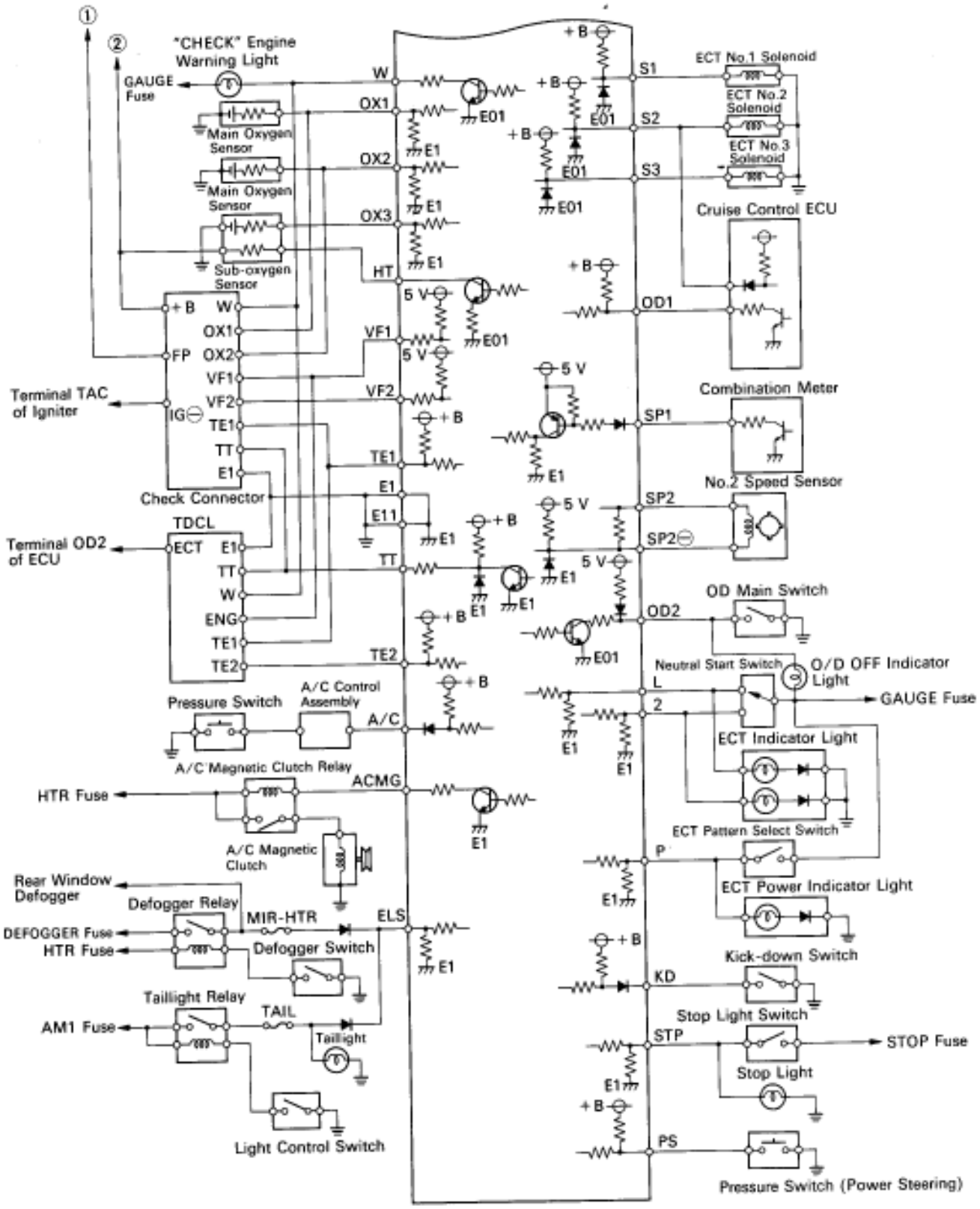

FI8641

WhereEverybodyKnowsYourName

STANDARD VALUE OF ECU TERMINALS

(※ : A=(E9), B=(E10))

※ Symbols (Terminals No.)	STD Voltage (V)	Condition
BATT (A33) – E1 (B69)	10 ~ 14	Always
IGSW (A1) + B (A31) + B1 (A32) – E1 (B69)	10 ~ 14	IG switch ON
VC (B41)–E2 (B65)	4.0 ~ 6.0	IG switch ON
IDL1 (B64) IDL2 (B63) – E2 (B65)	Below 1.0	IG switch ON Main or sub throttle valve fully closed.
	10 ~ 14	IG switch ON Main or sub throttle valve fully open.
VTA1 (B43) VTA2 (B42) – E2 (B65)	0.1 ~ 1.0	IG switch ON Throttle valve fully closed.
	3.0 ~ 6.0	IG switch ON Throttle valve fully open.
KS (B66) – E1 (B69)	Pulse generation (0 and 4 ~ 6)	Idling
THA (B45) – E2 (B65)	1.0 ~ 3.0	Idling, Intake air temp. 20°C (68°F).
THW (B44) – E2 (B65)	0.1 ~ 1.0	Idling, Water temp. 80°C (176°F).
STA (B77) – E1 (B69)	6.0 or more	Cranking
#10 (B20), #20 (B19) #30 (B18), #40 (B17) – E01 (B80)	10 ~ 14	IG switch ON
	Pulse generation	Idling
IGT1 (B57), IGT2 (B56) – E1 (B69)	Pulse generation (0 and 4 ~ 6)	Idling
IGF1 (B58), IGF2 (B59) – E1 (B69)	Below 1.0	IG switch ON
	Pulse generation (0 and 4 ~ 6)	Idling
G1 (B26), G2 (B25) – G1± (B6)	Pulse generation (–1.0 ~ +1.0 or higher)	Idling
NE (B27) – NE± (B7)	Pulse generation (–0.8 ~ +0.8 or higher)	Idling
MREL (A24) – E1 (B69)	10 ~ 14	IG switch ON
FPC (A22) – E1 (B69)	4.2 ~ 6.0	Cranking, Sudden racing (6,000 rpm)
	Pulse generation (0 and 4 ~ 6)	Idling
DI (A21) – E1 (B69)	7.5 or more	Idling
FPU (B73) – E1 (B69)	10 ~ 14	IG switch ON
	Below 2.0	Restarting high temp.
PAG (B74) – E1 (B69)	10 ~ 14	Idling

WhereEverybodyKnowsYourName

STANDARD VALUE OF ECU TERMINALS (Cont'd)

(※: A=(E9), B=(E10))

※ Symbols (Terminals No.)	STD Voltage (V)	Condition
ISC1 (B35), ISC2 (B34) ISC3 (B33), ISC4 (B32) –E1 (B69)	10 ~ 14	IG switch ON
VF1 (B29), VF2 (B28) – E1 (B69)	1.0 ~ 4.0	Maintain engine speed at 2,500 rpm for two minutes after warming up then return to idling.
OXL1 (B48), OXR1 (B47) – E1 (B69)	Pulse generation (0 ~ 1.0)	Maintain engine speed at 2,500 rpm for two minutes after warming up.
HTL1 (B71), HTR1 (B72) HTL2 (B52), HTR2 (B53) – E01 (B80)	Below 2.0	Idling
	10 ~ 14	IG switch ON
EGR1 (B39), EGR2 (B38) EGR3 (B37), EGR4 (B36) – E1 (B69)*	10 ~ 14	IG switch ON
EGR (B39) – E1 (B69)	10 ~ 14	IG switch ON
KNK1 (B50), KNK2 (B49) – E1 (B69)	Pulse generation (Frequency : 6.6 KHz)	Idling
NSW (B76) – E1 (B69)	10 ~ 14	IG switch ON Other shift position in "P", "N" ranges.
	Below 1.0	IG switch ON Shift position in "P", "N" ranges.
SPD (A2)–E1 (B69)	Pulse generation (0 and 10 ~ 14)	IG switch ON Rotate driving wheel slowly.
TE1 (A20) – E1 (B69)	10 ~ 14	IG switch ON
TE2 (A19) – E1 (B69)	10 ~ 14	IG switch ON
W (A6)–E1 (B69)	10 ~ 14	Idling
	Below 2.0	IG switch ON
AD (A11) – E1 (B69)	10 ~ 14	Idling
ODI (A12) – E1 (B69)	4.0 ~ 6.0	IG switch ON
A/C (A34) – E1 (B69)	Bellow 2.0	A/C switch ON (At idling)
	10 ~ 14	A/C switch OFF
ACMG (A23)–E1 (B69)	Below 2.0	A/C switch ON (At idling)
	10 ~ 14	A/C switch OFF
TR (A37) – E1 (B69)	10 ~ 14	IG switch ON
VTO1 (A40) VTO2 (A39) – E2 (B65)	Below 1.0	IG switch ON Main or sub throttle valve fully closed.
	3.0 ~ 5.5	IG switch ON Main or sub throttle valve fully open.
NEO (A38) – E1 (B69)	4.0 ~ 6.0	IG switch ON

* Only for USA specification vehicles.

WhereEverybodyKnowsYourName

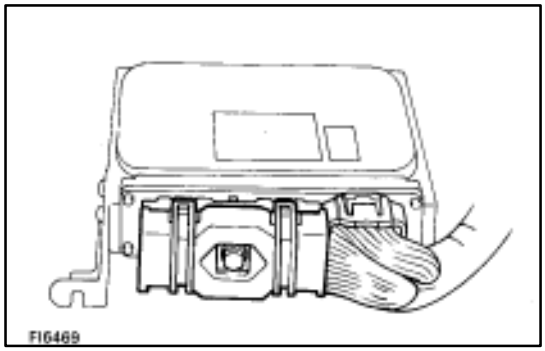

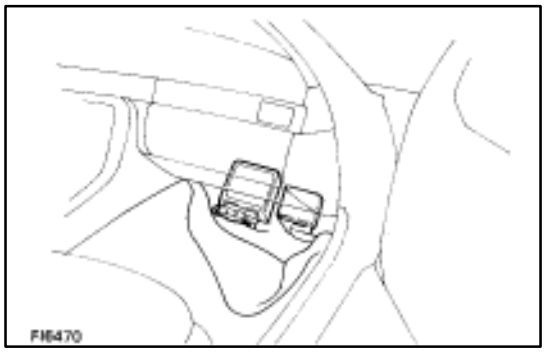

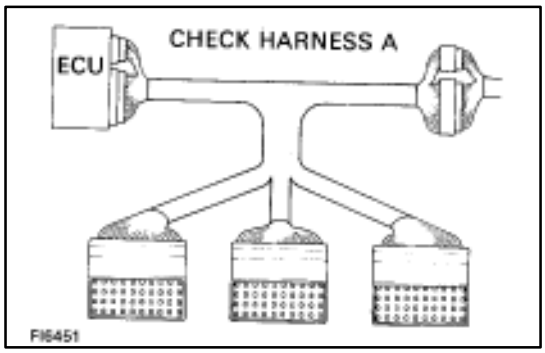

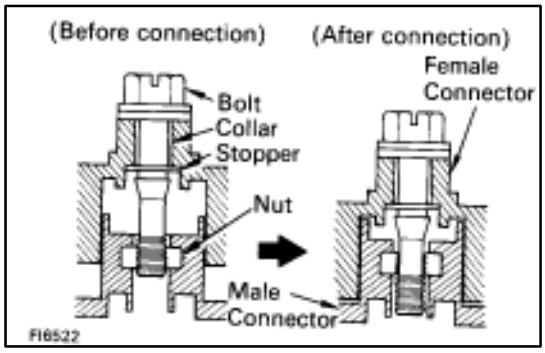

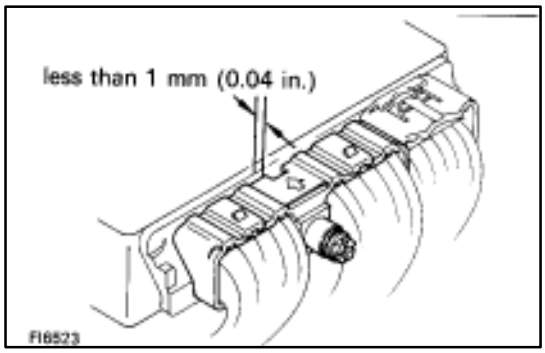

TERMINALS OF ECU

Connectors of the engine (& ECT) ECU are water–proof and are the bolt type.

For water proof type connectors, in order to measure the voltage of ECU terminals and the resistance of connected parts, connect the inspection sub wire harness between the ECU and vehicle wire harness, then perform the inspection.

The inspection method of inserting a tester probe from the other side of connector noticeably reduces the water–proof ability.

Disconnect the connector by fully loosening the bolt.

PREPARATION

1. Turn the ignition switch to LOCK position.
2. Turn up the passenger side floor mat.
3. Remove the ECU protector.
4. Disconnect the connector from the ECU.
   After completely loosening the bolt, the two parts of the connector can be separated.
   NOTICE:
   - **Do not pully the wire harness when disconnecting the connector.**
   - **When disconnecting the connector, the ECU's backup power source is cut off, so the malfunction codes, etc. recorded in the ECU memory are cancelled.**
   - **Never insert a tester probe or male terminal used for inspection purposes into the female terminal of the vehicle wire harness. Otherwise, the female terminal may be widened, which can result in faulty connection.**
5. **Connect the Check Harness A between ECU and connector of vehicle wire harness.**
   SST 09990–01000
   HINT: The arrangement of the check connector terminals are the same as those of the ECU.
   See page TR–35
6. Disconnect the Check Harness A.
7. Reconnect the connector to the ECU.
   (a) Match the male connector correctly with the female connector, then press them together.
   (b) Tighten the bolt
   Make sure the connector is completely connected, by tightening the bolt until there is a clearance of less than 1 mm (0.04 in.) between bottom of the male connector and end of the female connector.
8. Install the ECU protector and floor mat.

WhereEverybodyKnowsYourName

TERMINALS OF ECU

ECU Terminals

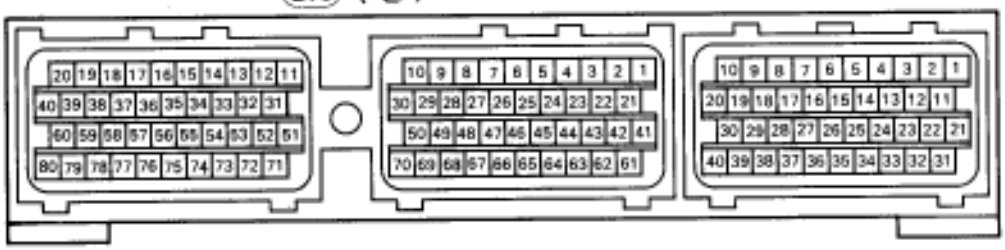

FI6460

Terminal No.	Symbol	Connection	Terminal No.	Symbol	Connection
E9 – 1	IGSW	Ignition switch	E9 – 31	+B	EFI main relay
2	SP1	Speed sensor No. 1	32	+B1	EFI main relay
3	KD*1	Kick-down switch	33	BATT	Battery
4	STP	Stop light switch	34	A/C	A/C control assembly
5	—	———	35	PS*1	PS pressure switch
6	W	"CHECK" engine warning light	36	—	———
7	—	———	37	TR	TRAC ECU
8	—	———	38	NEO	TRAC ECU
9	2*1	Neutral start switch	39	VTO2	TRAC ECU
10	L*1	Neutral start switch	40	VTO1	TRAC ECU
11	—	———	E10 – 1	—	———
12	OD1*1	Cruise control ECU	2	—	———
13	—	———	3	SP2⊖*1	No. 2 speed sensor
14	—	———	4	E11	ECU ground
15	ELS	Defogger relay, Taillight relay	5	—	———
16	—	———	6	—	———
17	TT*1	TDCL	7	G⊖	Distributor
18	P*1	ECT pattern select switch	8	S3*1	ECT No. 3 solenoid
19	TE2	Check connector	9	S2*1	ECT No. 2 solenoid
20	TE1	Check connector	10	S1*1	ECT No. 1 solenoid
21	DI	Fuel pump ECU	11	—	———
22	FPC	Fuel pump ECU	12	—	———
23	ACMG	A/C magnet clutch relay	13	—	———
24	M-REL	EFI main relay	14	—	———
25	—	———	15	# 60	No. 6 injector
26	—	———	16	# 50	No. 5 injector
27	—	———	17	# 40	No. 4 injector
28	OD2*1	O/D main switch	18	# 30	No. 3 injector
29	—	———	19	# 20	No. 2 injector
30	—	———	20	# 10	No. 1 injector

*1: Only vehicles with ECT.

WhereEverybodyKnowsYourName

TERMINALS OF ECU (Cont'd)

ECU Terminals

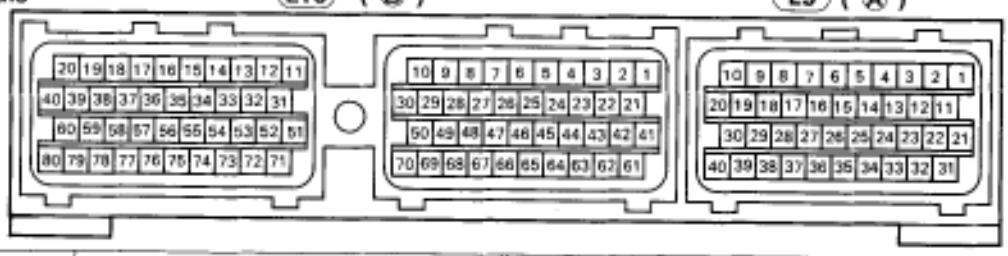

Terminal No.	Symbol	Connection	Terminal No.	Symbol	Connection
E10 – 21	—	———	E10 – 51	—	———
22	—	———	52	—	———
23	SP2*1	No. 2 speed sensor	53	—	———
24	—	———	54	—	———
25	G2	Distributor	55	—	———
26	G1	Distributor	56	—	———
27	NE	Distributor	57	IGT	igniter
28	VF2	Check connector	58	IGF	igniter
29	VF1	Check connector	59	—	———
30	—	———	60	—	———
31	—	———	61	OX3*2	Sub-oxygen sensor
32	ISC4	ISC valve	62	—	———
33	ISC3	ISC valve	63	IDL2	Sub-throttle position sensor
34	ISC2	ISC valve	64	IDL1	Throttle position sensor
35	ISC1	ISC valve	65	E2	Sensor ground
36	—	———	66	KS	Air flow meter
37	—	———	67	—	———
38	—	———	68	—	———
39	ACIS	VSV (intake air control valve)	69	E1	ECU ground
40	—	———	70	—	———
41	VC	Throttle position sensor, Air flow meter.	71	HT*2	Sub-oxygen sensor heater
42	VTA2	Sub-throttle position sensor	72	—	———
43	VTA1	Throttle position sensor	73	—	———
44	THW	Water temp. sensor	74	EVAP	EVAP purge VSV
45	THA	Intake air temp. sensor	75	EGR	EGR VSV
46	THG*2	EGR gas temp. sensor	76	NSW	Neutral start switch
47	OX2	Main oxygen sensor (rear side)	77	STA	Starter relay
48	OX1	Main oxygen sensor (front side)	78	—	———
49	KNK2	No. 2 knock sensor (rear side)	79	EO2	Power ground
50	KNK1	No. 1 knock sensor (front side)	80	EO1	Power ground

*1: Only vehicles with ECT.
*2: Only for USA specification vehicles.

WhereEverybodyKnowsYourName

MATRIX CHART OF PROBLEM SYMPTOMS

When the malfunction code is not confirmed in the diagnostic code check and the problem still can not be confirmed in the basic inspection, then proceed to this step and perform troubleshooting according to the numbered order given in the table below.

The circuits indicated by on the matrix chart can be inspected using the TCCS checker.

	See page	TR–88	TR–10	TR–108	TR–11	TR–12	TR–12	TR–13	TR–13	TR–13	TR–14	TR–11	TR–14	AC–84	ST–24	IG–6	IG–7	IG–9	IG–24	EM–30	AT–66	BE–381	IN–32
	Suspect area	※	※			※			※		※												
	Symptom	Air flow meter circuit	Starter signal circuit	EGR System	Switch condition signal circuit	Neutral start switch circuit	ECU power source circuit	Back up power source circuit	Injector circuit	Cold start injector circuit	ISC valve circuit	Fuel pump control circuit	Fuel pressure control VSV circuit	A/C signal circuit (Compressor circuit)	Starter and Starter relay	Ignition signal circuit (Spark test)	Spark plug	Ignition coil	Distributor	Compression	ECT faulty	Theft deterrent ECU	Engine & ECT ECU
Does not start	Engine does not crank					2									1							3	
	No initial combustion						1		5	6		3				2	4						
	No complete combustion								6	7		1				5	4	2	3				
Difficult to start	Difficult to start normally		1						8	9	2	3					6	4	5	7			
	Difficult to start cold		1						5	3	2	4					8	6	7				
	Difficult to start hot		1						5	6	2	4	3				9	7	8				
Poor Idling	Incorrect first idle				1						2												
	High engine idle speed				1	5	4	6			2			3									
	Low engine idle speed	7			3	4		8	6		1	5		2									
	Rough idling	3		5	1			12	4	13	2	8				6	11	9	10	7			
	Hunting	3			1		4				2	5											
Poor Driveability	Hesitation/Poor acceleration	2			1				3			4				5	8	6	7		9		
	Muffler explosion (after fire)				1				5								4	2	3				
	Surging				1				5			2					4		3				
Engine Stall	Engine stalls soon after starting	2								4	3	1											
	After acceleration pedal depressed	2			1					3													
	After acceleration pedal released								1	3	2												4
	During A/C operation										1			2									3
	When N to D shift					1				3	2												

WhereEverybodyKnowsYourName

LOCATION OF CONNECTORS

Location of Connectors in Engine Compartment

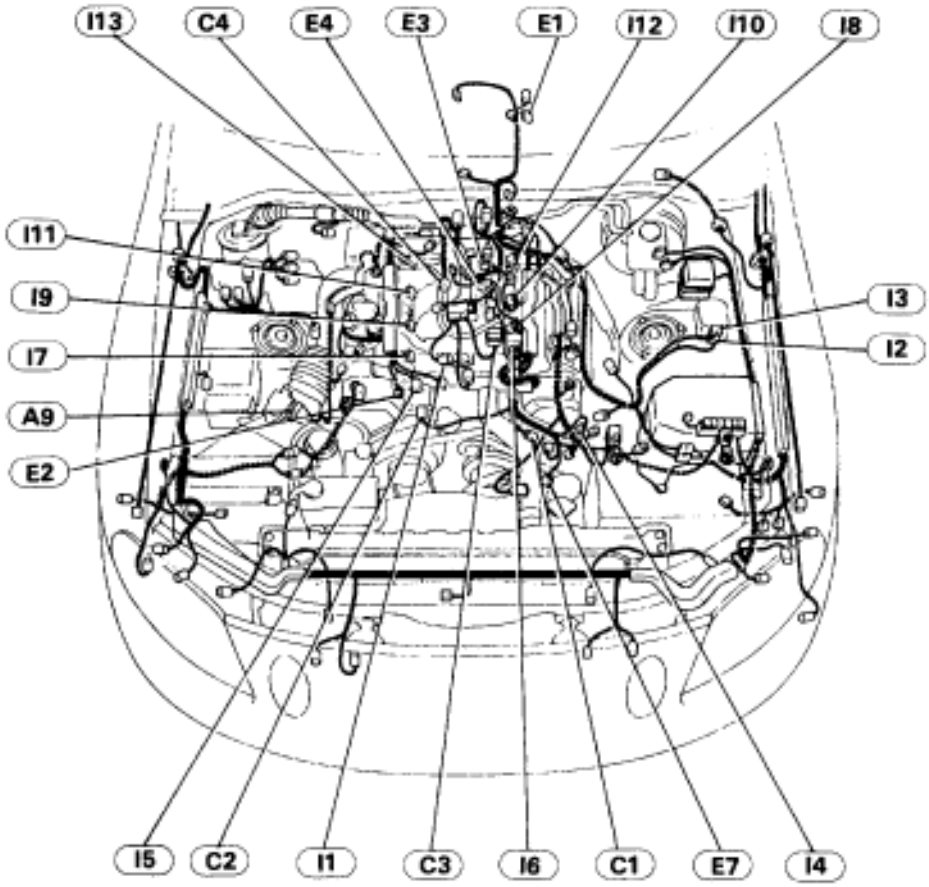

A9
Intake Air Temp. Sensor

IS-5-1

C1
No. 1 Cam Position sensor

Ie-2-1-D

C2
No. 2 Cam Position Sensor

Ie-2-1-E

C3
Check Connector

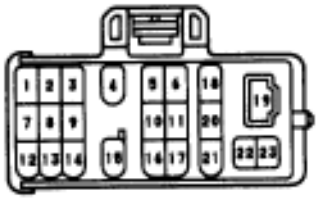

Iej-23-1

C4
Cold Start Injector

IS-2-1-I

E1
ECT No. 1, 2, 3, 4 Solenoid Valve

Ie-6-1

WhereEverybodyKnowsYourName

E2
Water Temp. Sensor

V-2-1-C

E3
EGR Gas Temp. Sensor

Ie-2-1-C

E4
EGR Valve

Ie-6-1-D

E7
Engine Speed Sensor

Ie-2-1-b

I1
ISC Valve

Ie-6-1-D

I2
No. 1 Igniter

Ie-5-1-B

I3
No. 2 Igniter

Ie-5-1-B

I4
No. 1 Ignition Coil

IS-2-1-L

I5
No. 2 Ignition Coil

IS-2-1-L

I6 I7 I8 I9
I10 I11 I12 I13
Injector

Ie-2-1-a

WhereEverybodyKnowsYourName

Location of Connectors in Engine Compartment (Cont'd)

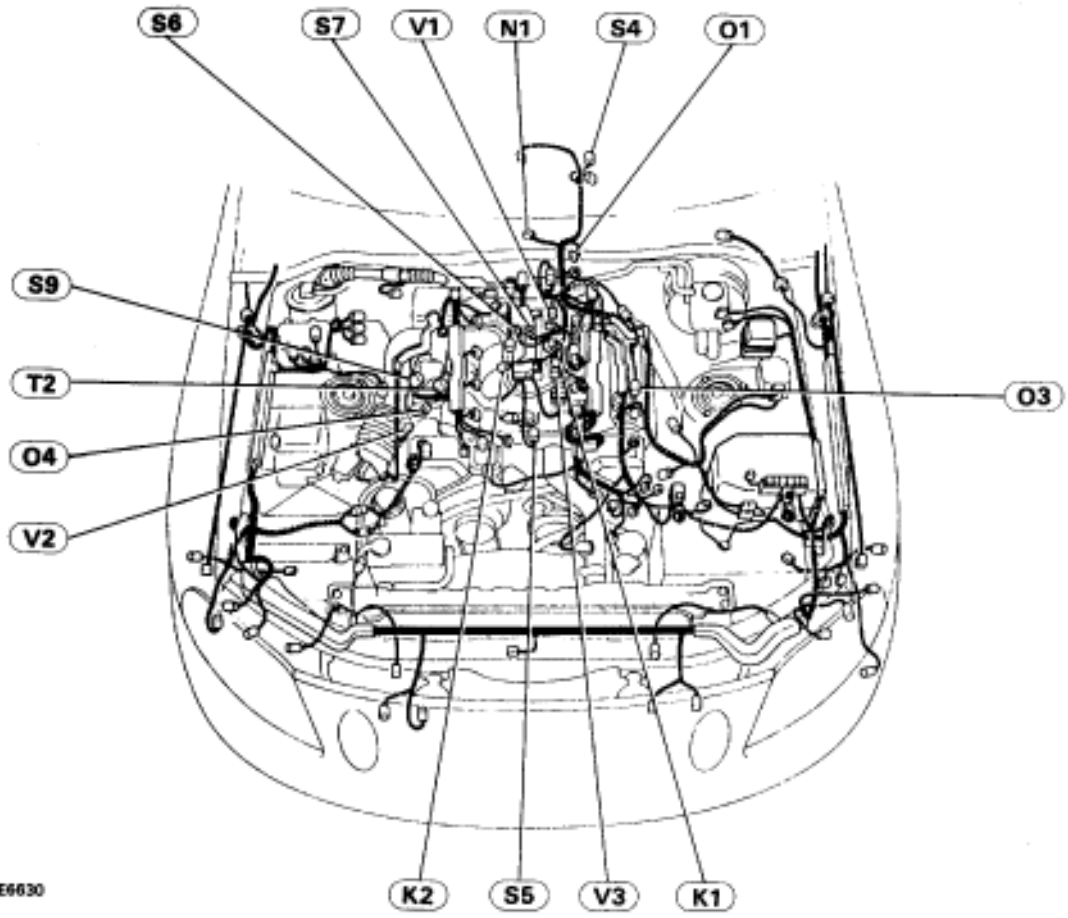

K1 K2
No. 1, 2 Knock Sensor

Ie-1-1-B

N1
Neutral Start Switch

SH-9-1-A

O1
O/D Direct Clutch Speed Sensor

Ie-2-1-X

O3
Main Oxygen Sensor

Ie-4-1-B

O4
Main Oxygen Sensor

Ie-4-1-B

S4
No. 2 Speed Sensor

Ie-2-1-X

WhereEverybodyKnowsYourName

S5

Start Injector Time Switch

V-2-1-A

S6

Starter Motor

H-1-1

S9

Sub-Throttle Position Sensor

IV-4-1

T2

Throttle Position Sensor

IS-4-1-C

S7

Starter Motor

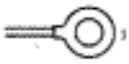

A-A

V1 **V2**

EGR VSV
EVAP VSV

Ie-2-1-X

V3

Fuel Pressure Control VSV

Ie-2-1-W

WhereEverybodyKnowsYourName

Location of Connectors in Engine Compartment (Cont'd)

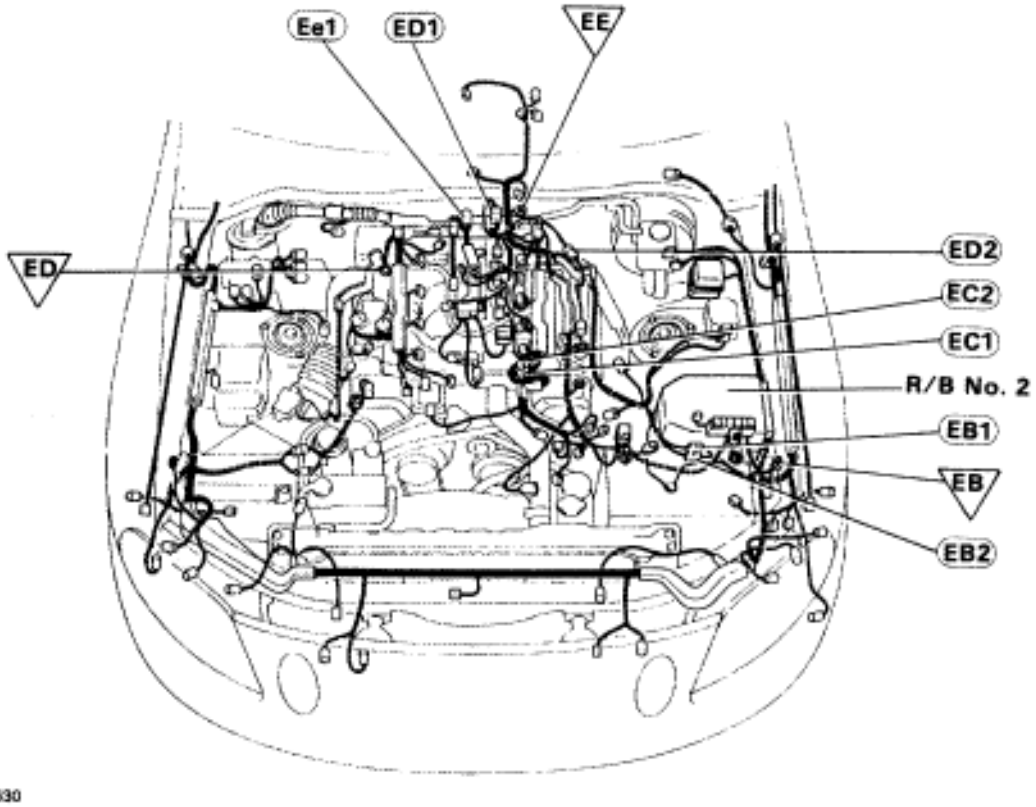

WhereEverybodyKnowsYourName

EB1

Ie-8-1-A

Ie-8-2-A

EB2

Ig-3-1-A

Ig-3-2-A

EC1

Ie-6-1-E

Ie-6-2-E

EC2

Ie-4-1-C

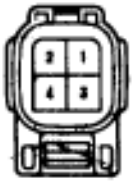

Ie-4-2-C

ED1

Ie-8-1-A

Ie-8-2-A

ED2

Ie-2-1-M

Ie-2-2-M

Ee1

Ie-2-1-K

Ie-2-2-K

R/B No. 2

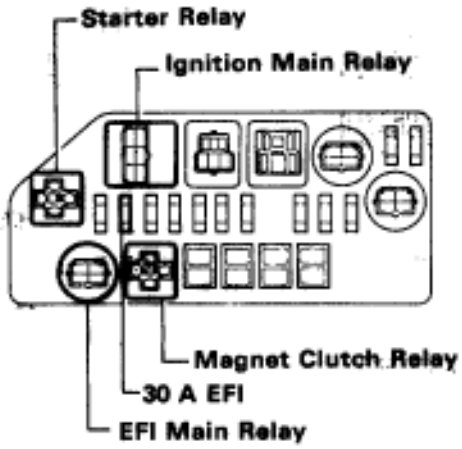

BE6625

WhereEverybodyKnowsYourName

Location of Connectors in Instrument Panel

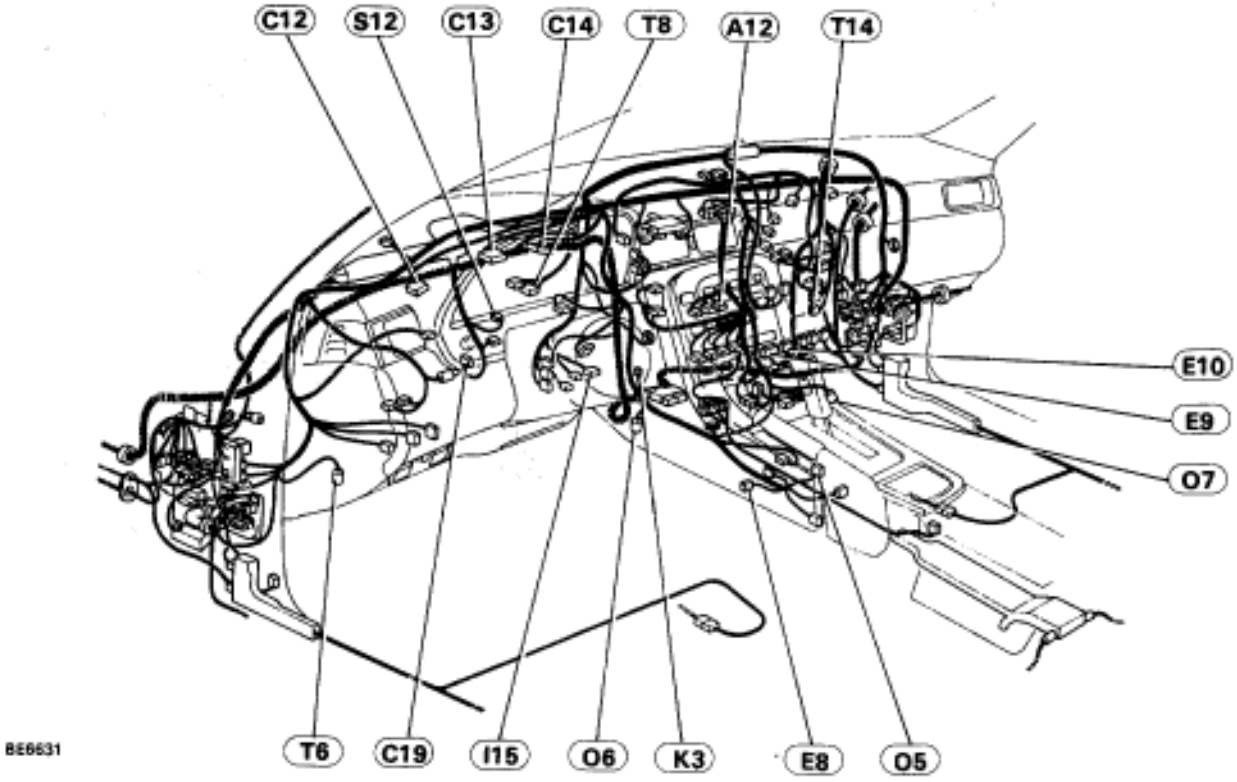

A12

A/C Control Assembly

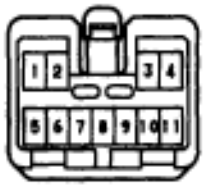

h-11-1

C12

Combination Meter
"CHECK" Engine Warning Light

eh-23-1

C13

"CHECK" Engine Warning Light

e-18-1

C14

ECT Indicator Light

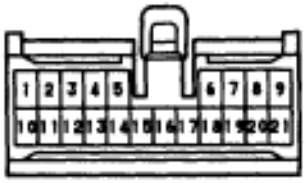

h-21-1

C19

Cruise Control ECU

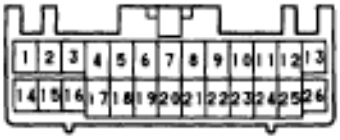

Vd-2b-1-8

E8

ECT Pattern Select Switch

e-4-1

WhereEverybodyKnowsYourName

E9
EFI ECU

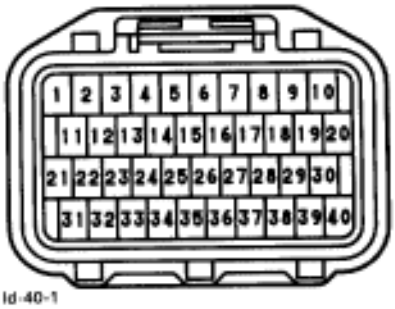

Id-40-1

E10
EFI ECU

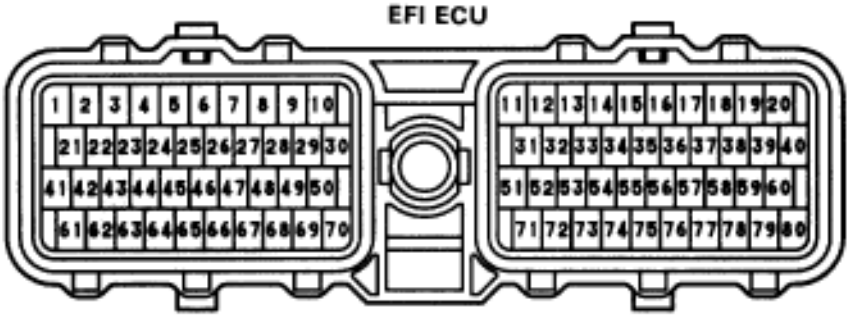

Id-80-1

I15
IG Switch

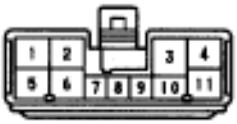

eg-11-1

K3
Kickdown Switch

Ia-2-1-X

O5
O/D Main Switch

e-2-1

O6 O7
Sub-Oxygen Sensor

Ie-4-1-D

S12
Stop Light Switch

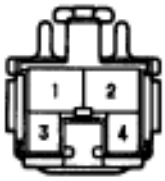

eg-4-1

T6
TDCL

S-17-1

T8
Theft Deterrent ECU

e-20-1

T14
TRAC ECU

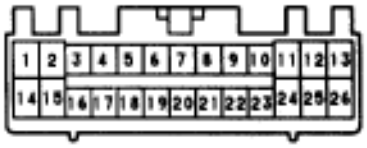

Vd-26-1

WhereEverybodyKnowsYourName

Location of Connectors in Instrument Panel (Cont'd)

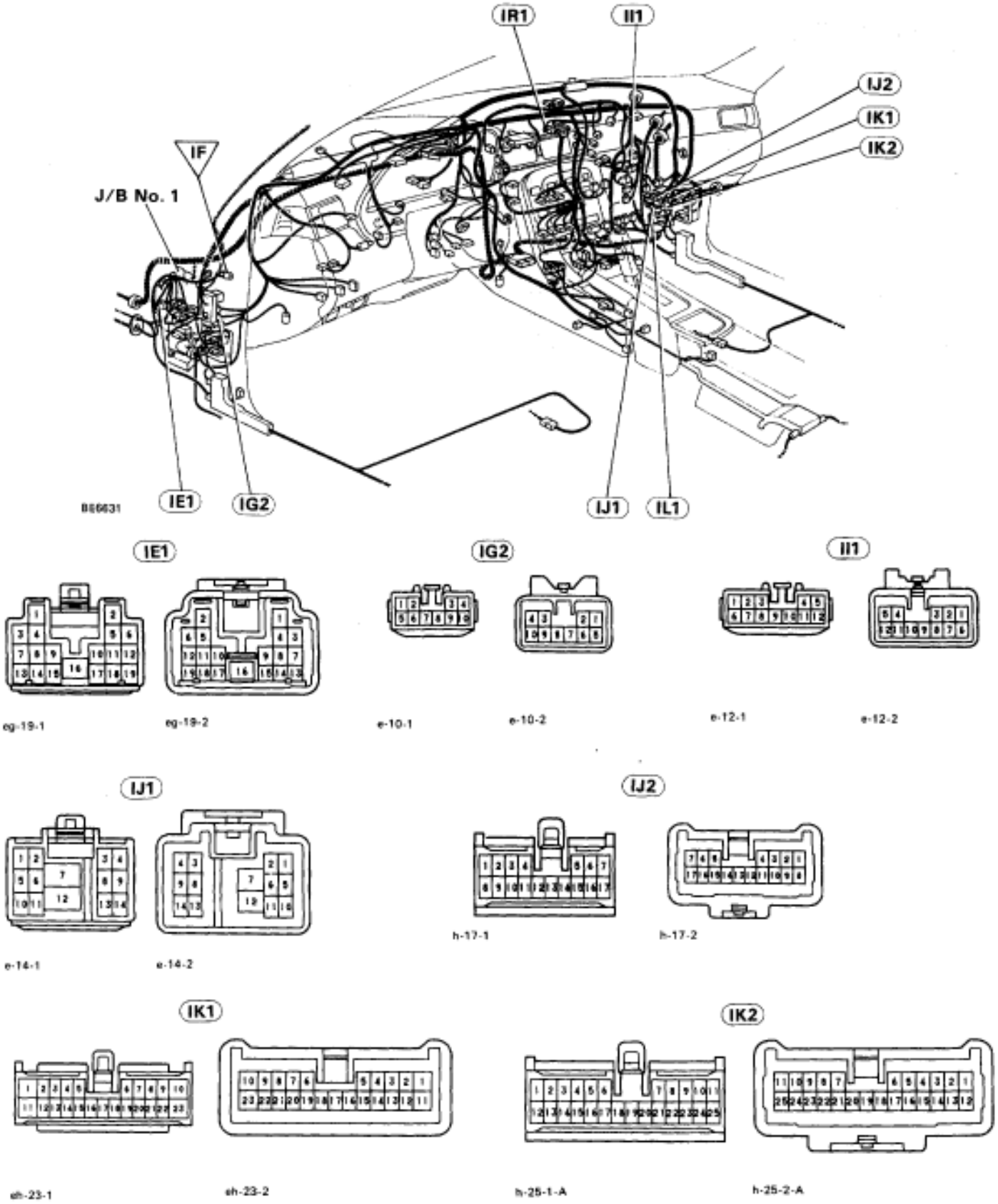

WhereEverybodyKnowsYourName

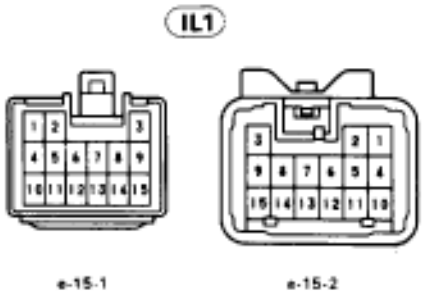

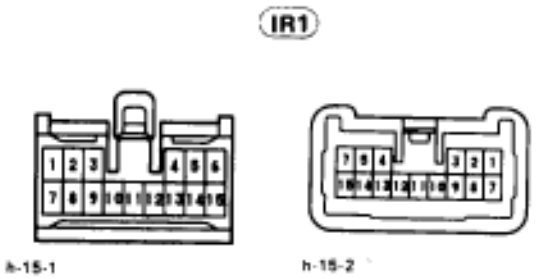

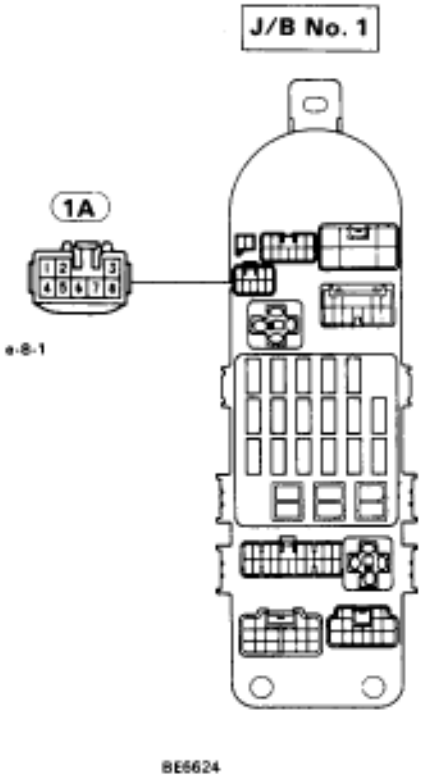

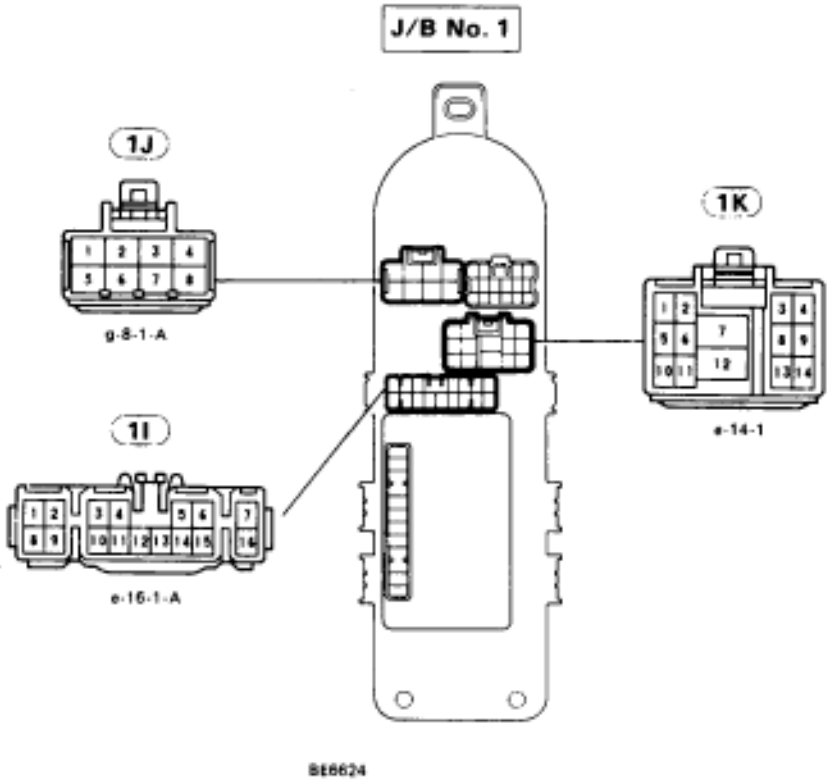

WhereEverybodyKnowsYourName

Location of Connectors in Body

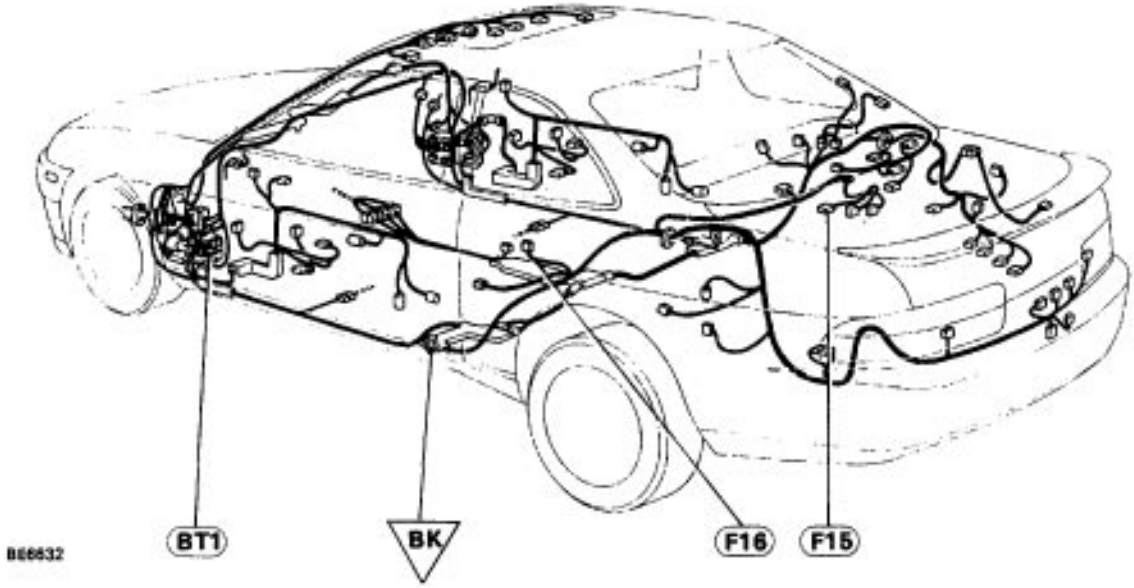

F15
Fuel Pump

g-2-1

F16
Fuel Pump ECU

e-5-1

BT1

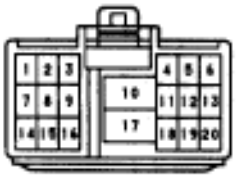

e-20-1-B

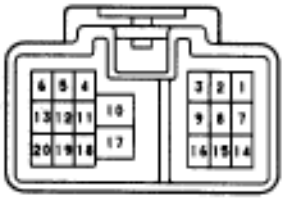

e-20-2-B

WhereEverybodyKnowsYourName

–MEMO –

WhereEverybodyKnowsYourName

STANDARD VALUE OF ECU TERMINALS

(※ : A = (E9), B = (E10))

※ Symbols (Terminals No.)	STD Voltage (V)	Condition
BATT (A33) – E1 (B69)	10 ~ 14	Always
IGSW (A1) + B (A31) + B1 (A32) – E1 (B69)	10 ~ 14	IG switch ON
VC (B41) – E2 (B65)	4.0 ~ 6.0	IG switch ON
IDL1 (B64) IDL2 (B63) – E2 (B65)	Below 1.0	IG switch ON Main or sub throttle valve fully closed.
	10 ~ 14	IG switch ON Main or sub throttle valve fully open.
VTA1 (B43) VTA2 (B42) – E2 (B65)	0.1 ~ 1.0	IG switch ON Throttle valve fully closed.
	3.0 ~ 6.0	IG switch ON Throttle valve fully open.
KS (B66) – E1 (B69)	Pulse generation (0 and 4 ~ 6)	Idling
THA (B45) – E2 (B65)	1.0 ~ 3.0	Idling, Intake air temp. 20°C (68°F).
THW (B44) – E2 (B65)	0.1 ~ 1.0	Idling, Engine coolant temp. 80°C (176°F).
STA (B77) – E1 (B69)	6.0 or more	Cranking
#10 (B20), #20 (B19) #30 (B18), #40 (B17) – E01 (B80) #50 (B16), #60 (B15)	10 ~ 14	IG switch ON
	Pulse generation	Idling
IGT (B57) – E1 (B69)	Pulse generation (0 and 4 ~ 6)	Idling
IGF (B58) – E1 (B69)	Below 1.0	IG switch ON
	Pulse generation (0 and 4 ~ 6)	Idling
G1 (B26), G2 (B25) – G⊖ (B6)	Pulse generation (Positive voltage peak 1.3 or higher)	Idling
NE (B27) – G⊖ (B6)	Pulse generation (Positive voltage peak 0.6 or higher)	Idling
M-REL (A24) – E1 (B69)	10 ~ 14	IG switch ON
FPC (A22) – E1 (B69)	4.2 ~ 6.0	Cranking, Sudden racing (6,000 rpm)
	Pulse generation (0 and 4 ~ 6)	Idling
DI (A21) – E1 (B69)	7.5 or more	Idling
ACIS (B39) – E01 (B80)	10 ~ 14	IG switch ON
EVAP (B74) – E01 (B80)	10 ~ 14	IG switch ON
EGR (B75) – E01 (B80)	Below 2.0	Idling
	10 ~ 14	Engine speed at 3,500 rpm

WhereEverybodyKnowsYourName

STANDARD VALUE OF ECM TERMINALS

(※ : A = (E9), B = (E10))

※ Symbols (Terminals No.)	STD Voltage (V)	Condition
ISC1 (B35), ISC2 (B34) ISC3 (B33), ISC4 (B32) – E01 (B80)	10 ~ 14	IG switch ON
VF1 (B29), VF2 (B28) – E1 (B69)	1.0 ~ 4.0	Maintain engine speed at 2,500 rpm for two minutes after warming up then return to idling.
OX1 (B48), OX2 (B47) – E1 (B69)	Pulse generation (0 ~ 1.0)	Maintain engine speed at 2,500 rpm for two minutes after warming up.
HT (B71) – E01 (B80)*	Below 2.0	Idling
	10 ~ 14	IG switch ON
KNK1 (B50), KNK2 (B49) – E1 (B69)	Pulse generation (Frequency : 8.1 KHz)	Idling
NSW (B76) – E1 (B69)	10 ~ 14	IG switch ON Other shift position in "P", "N" positions.
	Below 1.0	IG switch ON Shift position in "P", "N" positions.
SP1 (A2) – E1 (B69)	Pulse generation (0 and 4 ~ 6)	IG switch ON Rotate driving wheel slowly.
TE1 (A20) – E1 (B69)	10 ~ 14	IG switch ON
TE2 (A19) – E1 (B69)	10 ~ 14	IG switch ON
W (A6) – E1 (B69)	10 ~ 14	Idling
	Below 2.0	IG switch ON
ODI (A12) – E1 (B69)	10 ~ 14	IG switch ON
A/C (A34) – E1 (B69)	Bellow 2.0	A/C switch ON (At idling)
	10 ~ 14	A/C switch OFF
ACMG (A23) – E1 (B69)	Below 2.0	A/C switch ON (At idling)
	10 ~ 14	A/C switch OFF
TR (A37) – E1 (B69)	10 ~ 14	IG switch ON
VTO1 (A40) VTO2 (A39) – E2 (B65)	Below 1.0	IG switch ON Main or sub throttle valve fully closed.
	3.0 ~ 5.5	IG switch ON Main or sub throttle valve fully open.
NEO (A38) – E1 (B69)	4.0 ~ 6.0	IG switch ON

* Only for USA specification vehicles.

WhereEverybodyKnowsYourName

MATRIX CHART OF PROBLEM SYMPTOMS

When the malfunction code is not confirmed in the diagnostic trouble code check and the problem still can not be confirmed in the basic inspection, then proceed to this step and perform troubleshooting according to the numbered order given in the table below.
The circuits indicated by on the matrix chart can be inspected using the TCCS checker.

	See page	TR–82	TR–96	TR–104	TR–114	TR–118	TR–120	TR–126	TR–128	TR–132	TR–110	AC–68	ST–13 14	IG–6	IG–7	IG–10	IG–10	EM–22	AT–68	BE–398	IN–32
	Suspect area	※ Volume air flow meter circuit	※ Starter signal circuit	EGR System	Switch condition signal circuit	※ Park/Neutral position switch circuit	ECM power source circuit	Back up power source circuit	※ Injector circuit	※ IAC valve circuit	Fuel pump control circuit	A/C signal circuit (Compressor circuit)	Starter and Starter relay	Ignition signal circuit (Spark test)	Spark plug	Ignition coil	Distributor	Compression	Electronic Controlled Transmission faulty	Theft deterrent ECU	ECM
	Symptom																				
Does not start	Engine does not crank					2							1							3	
	No initial combustion						1		5		3			2	4						
	No complete combustion								6		1			5	4	2	3				
Difficult to start	Difficult to start normally		1						8	2	3				6	4	5	7			
	Difficult to start cold		1						4	2	3				7	5	6				
	Difficult to start hot		1						4	2	3				7	5	6				
Poor Idling	Incorrect first idle				1					2											
	High engine idle speed				1	5	4	6		2		3									
	Low engine idle speed	7			3	4		8	6	1	5	2									
	Rough idling	3		5	1			12	4	2	8			6	11	9	10	7			
	Hunting	3			1		4			2	5										
Poor Driveability	Hesitation/Poor acceleration	2			1				3		4			5	8	6	7		9		
	Muffler explosion (after fire)				1				5						4	2	3				
	Surging				1				5		2				4		3				
Engine Stall	Engine stalls soon after starting	2								3	1										
	After acceleration pedal depressed	2			1																
	After acceleration pedal released								1	2											3
	During A/C operation									1		2									3
	When N to D shift					1				2											

WhereEverybodyKnowsYourName

LOCATION OF CONNECTORS

Location of Connectors in Engine Compartment

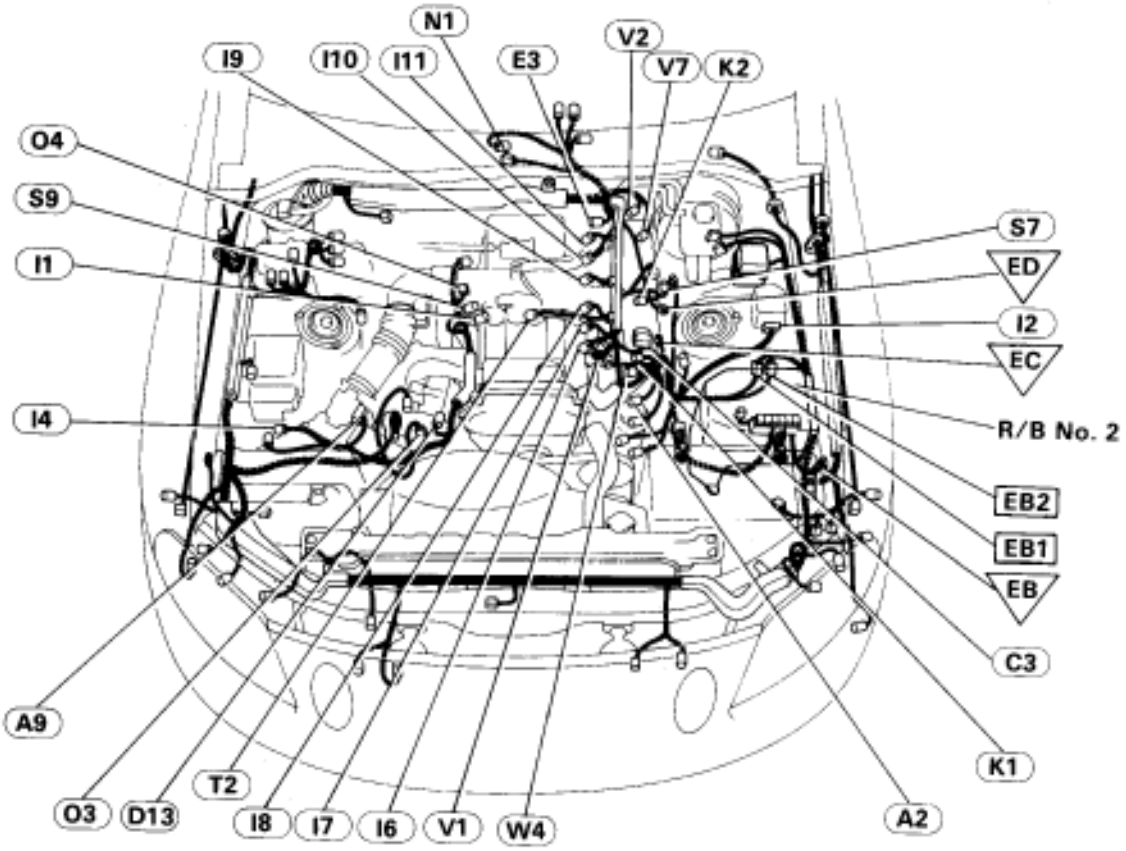

BE6673

A2

A/C Magnet Clutch

Ie-4-1

A9

Intake Air Temp. Sensor

IS-5-1

C3

Check Connector

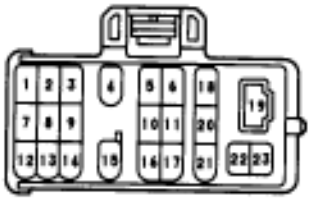

Iej-23-1

D13

Distributor

Ie-4-1-E

E3

EGR Gas Temp. Sensor

Ie-2-1-C

I1

ISC Valve

Ie-6-1-D

I2

Igniter

Ie-5-1

WhereEverybodyKnowsYourName

I4
Ignition Coil

IS-2-1-L

I6 I8 I10
Injector
(Gray)

Ie-2-1-a

I7 I9 I11
Injector
(Dark gray)

Ie-2-1-a

K1 K2
No. 1, 2 Knock Sensor

Ie-1-1-B

N1
Neutral Start Switch

SH-9-1-A

O3 O4
Main Oxygen Sensor

Ie-4-1-B

S7
Starter Motor

H-1-1

S9
Sub-Throttle Position
Sensor

IS-4-1-E

T2
Throttle Position Sensor

IS-4-1-E

V1
EGR VSV

Ie-2-1-W

V2
EVAP VSV

Ie-2-1-X

V7
VSV
(For Intake Control Valve)

Ie-2-1-W

W4
Water Temp. Sensor

V-2-1-C

EB1

Ie-8-1-A

Ie-8-2-A

EB2

Ig-3-1-A

Ig-3-2-A

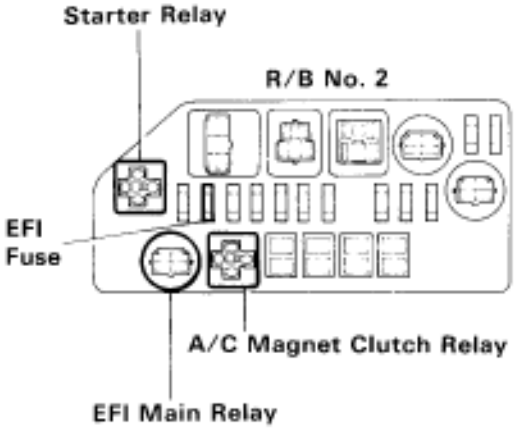

WhereEverybodyKnowsYourName

Location of Connectors in Instrument Panel

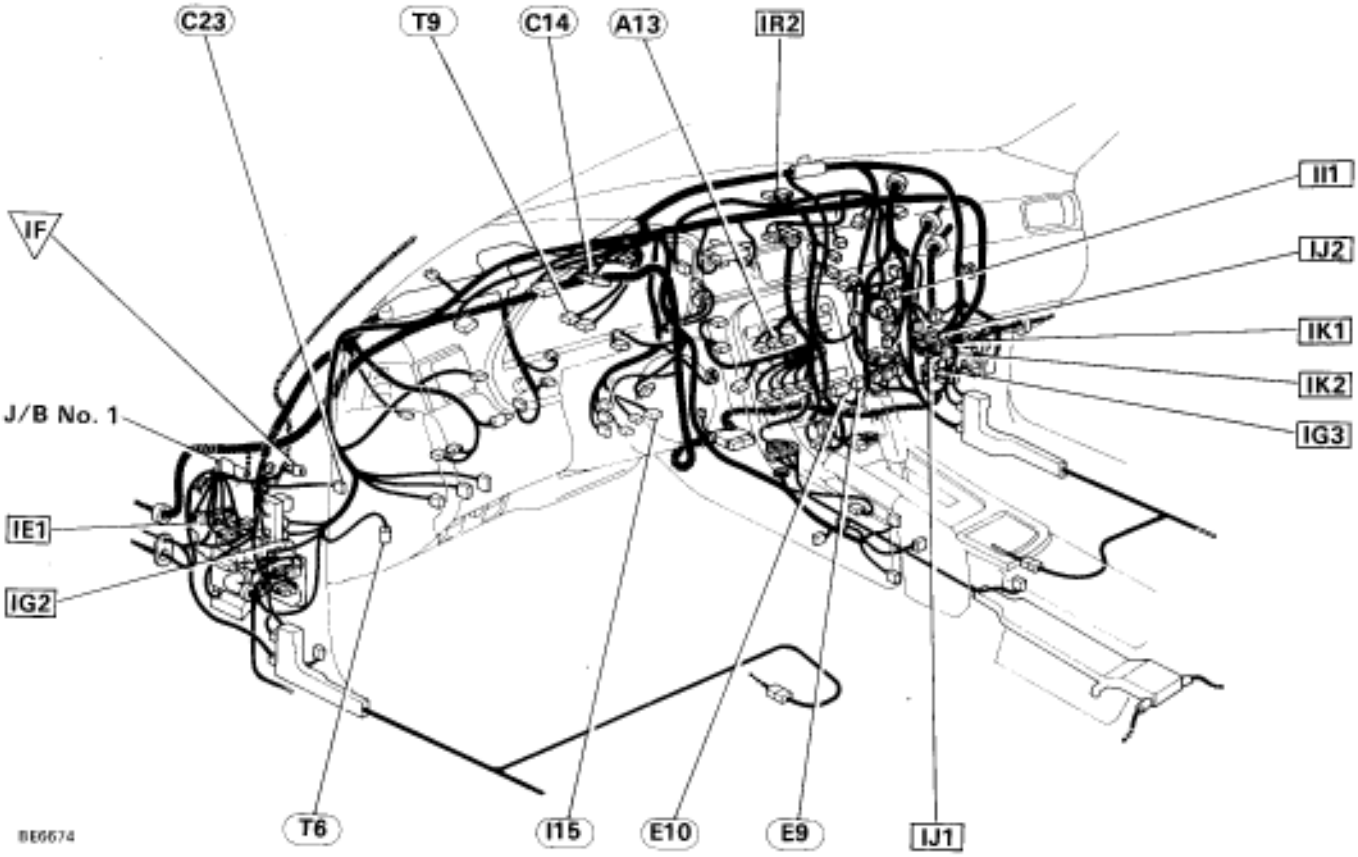

A13
A/C Control Assembly

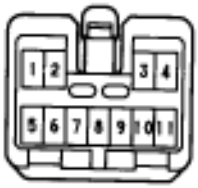

C14
Combination Meter

C23
Clutch Start Switch

E9
Engine and ECT ECU

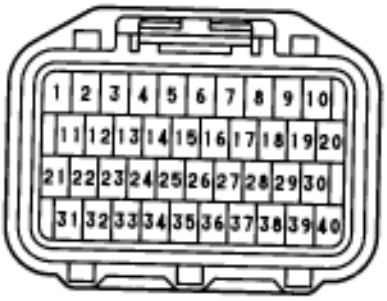

E10
Engine and ECT ECU

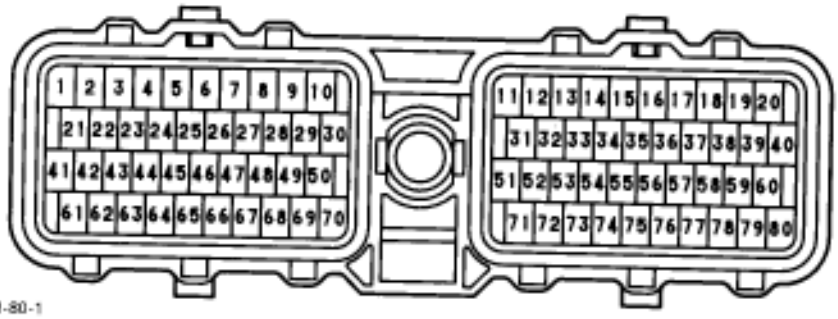

WhereEverybodyKnowsYourName

I15

IG Switch

eg-11-1

T6

TDCL

S-17-1

T9

e-20-1

IE1

eg-19-1

eg-19-2

IG2

e-10-1

e-10-2

IG3

e-15-1

e-15-2

II1

e-12-1

e-12-2

IJ1

e-14-1

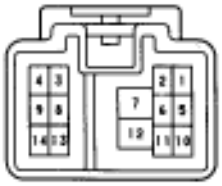

e-14-2

IJ2

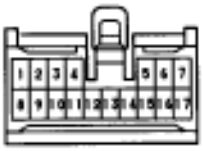

h-17-1

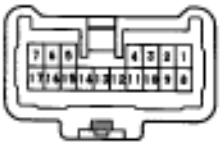

h-17-2

WhereEverybodyKnowsYourName

Location of Connectors in Instrument Panel (Cont'd)

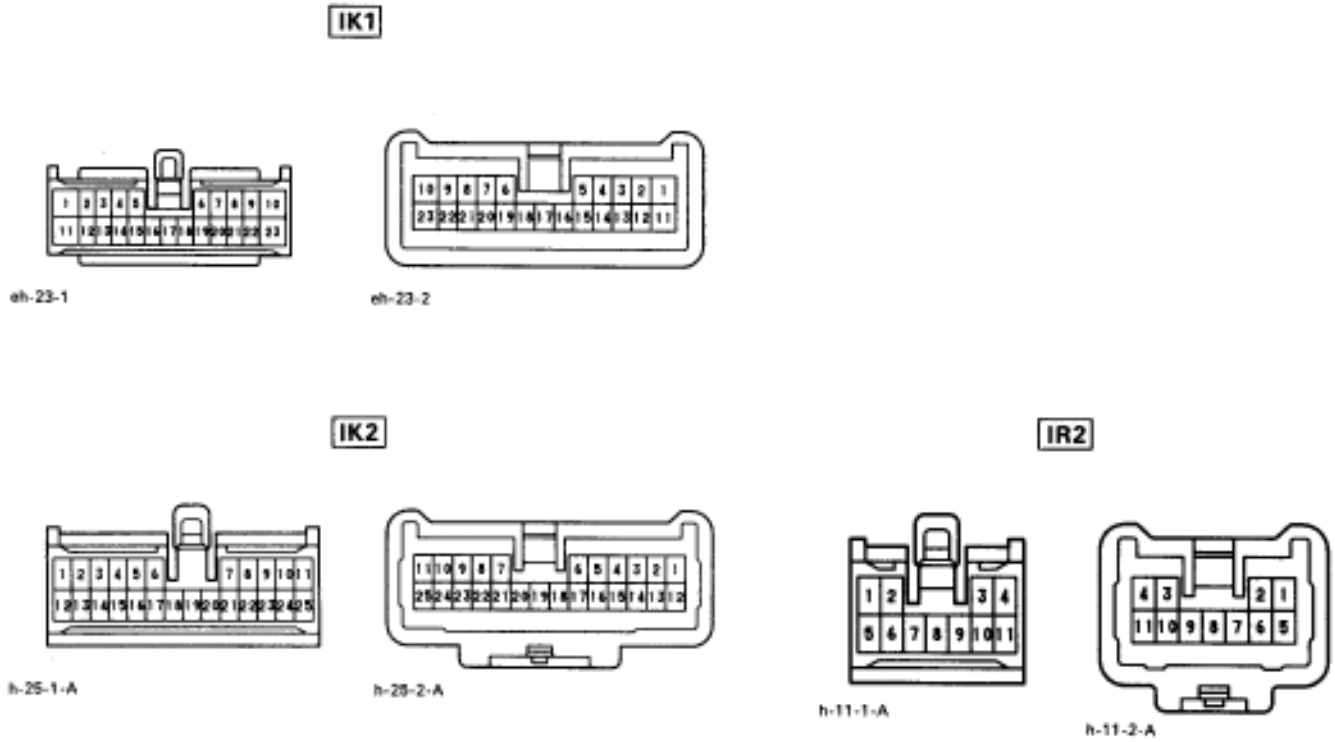

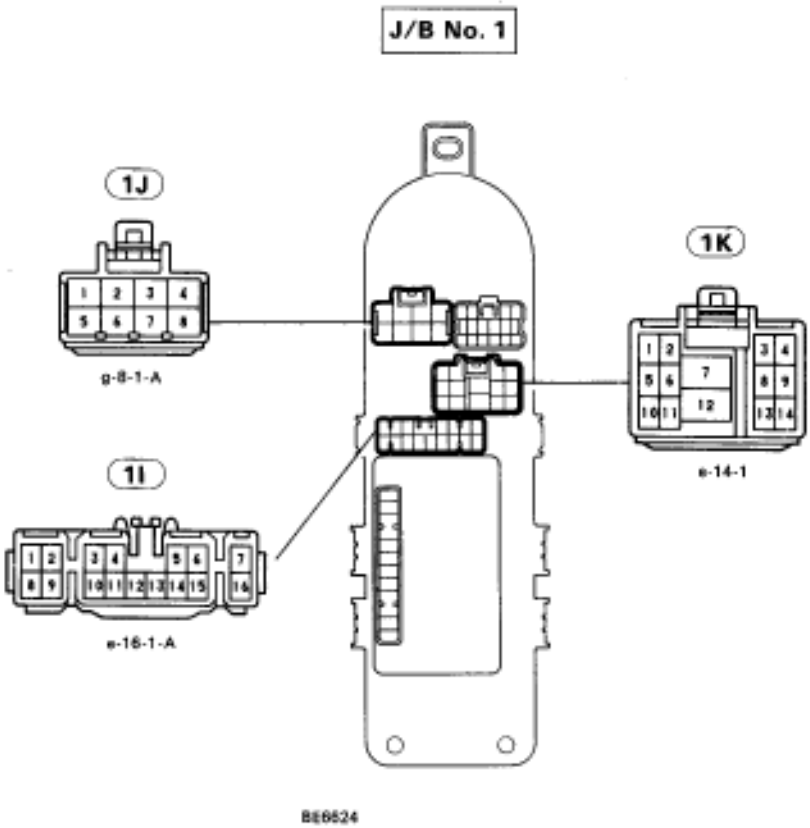

WhereEverybodyKnowsYourName

Location of Connectors in Body

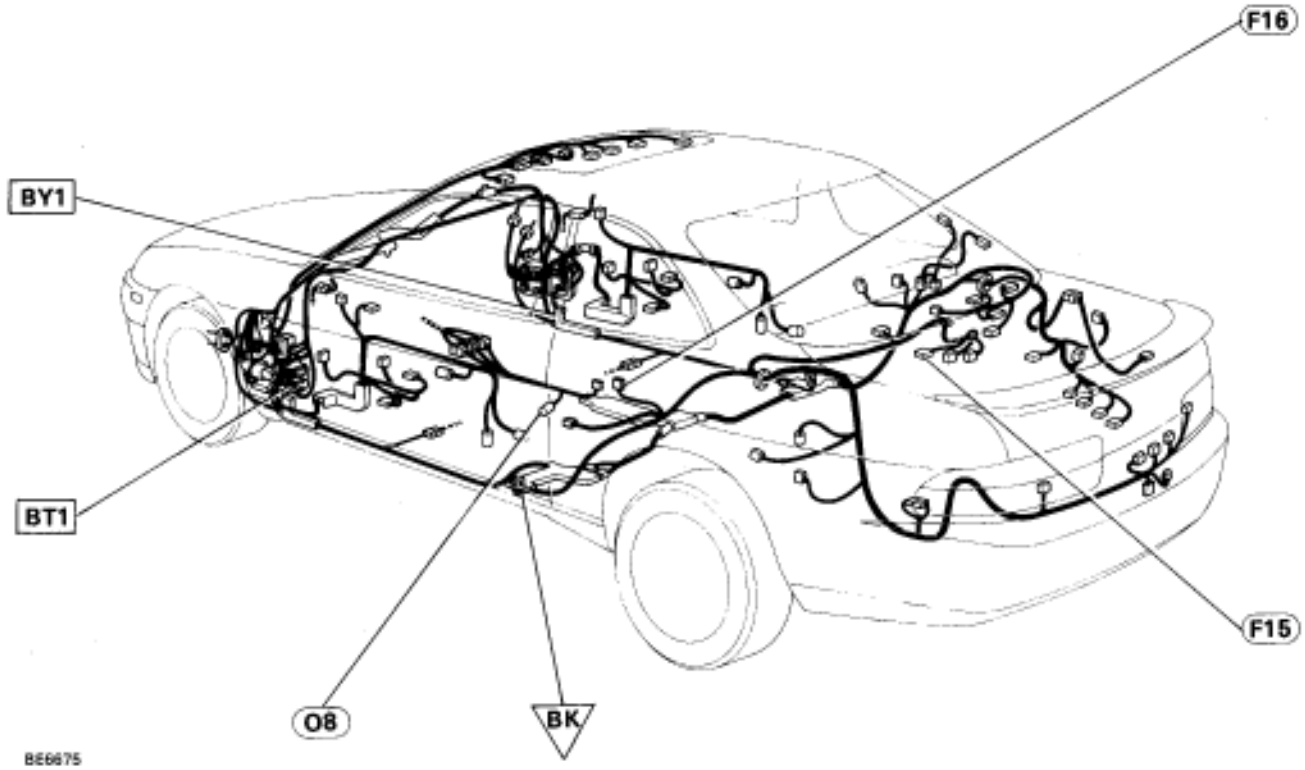

F15
Fuel Pump

g-2-1

F16
Fuel Pump ECU

e-5-1

O8
Sub-Oxygen Sensor

le-4-1-D

BT1

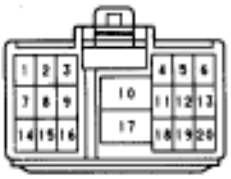

e-20-1-B

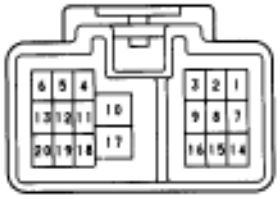

e-20-2-B

BY1

e-10-1

e-10-2

WhereEverybodyKnowsYourName

CIRCUIT INSPECTION

Diag. Code 12	RPM Signal Circuit (No. 1)

CIRCUIT DESCRIPTION

The distributor in the Engine Control System contains three pick–up coils (G1, G2 and NE).
The G1, G2 signals inform the ECU of the standard crankshaft angle.
The NE signals inform the ECU of the crankshaft angle and the engine speed.

Code No.	Diagnostic Code Detecting Condition	Trouble Area
12	No ”NE” or ”G1” and ”G2” signal to ECU within 2 sec. after cranking.	▼ Open or short in NE, G circuit. ▼ Distributor ▼ Open or short in STA circuit. ▼ ECU
	Open in ”G” ± circuit.	

WhereEverybodyKnowsYourName

DIAGNOSTIC CHART

1 Check resistance of each pickup coils in distributor
- NG → Replace distributor.
- OK ↓

2 Check for open and short in harness and connector between ECU and distributor.
- NG → Repair or rep lace harness or connector.
- OK ↓

3 Check air gap.
- NG → Replace distributor
- OK ↓

Check and replace ECU.

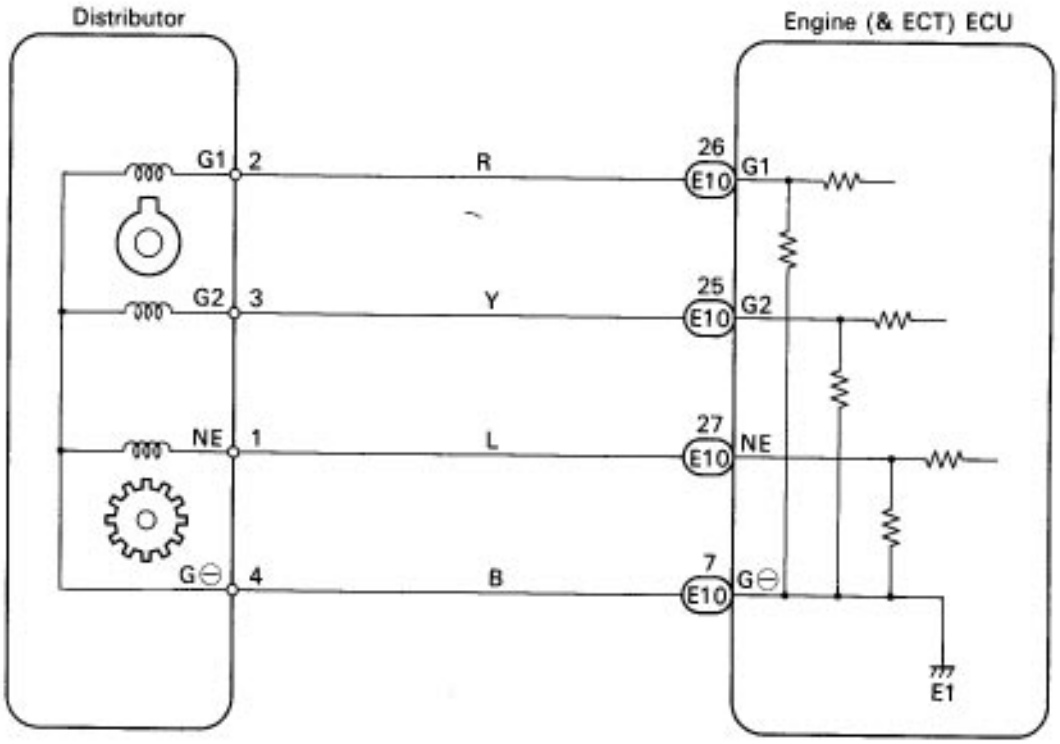

FI6543

WhereEverybodyKnowsYourName

INSPECTION PROCEDURE

1 Check resistance of each picup coils in distributor.

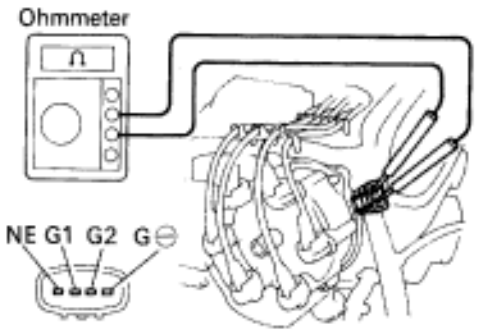

FI6631

P Disconnect distributor connector.

C Measure resistance between each terminal shown in table below.

OK

	Terminals	Resistance
G1 pickup coil (Cold)	G1 – G⊖	125 – 190 Ω
G2 pickup coil (Cold)	G2 – G⊖	125 – 190 Ω
NE pickup coil (Cold)	NE – G⊖	155 – 240 Ω

Reference INSPECTION USING OSCILLOSCOPE

G, NE signal waveforms

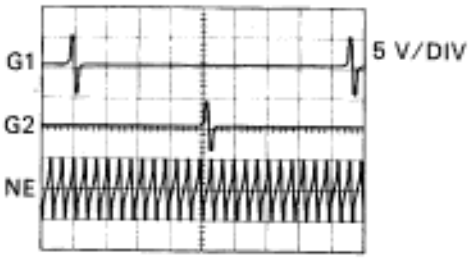

20 m sec/Division (Idling)

FI6519

▼ During cranking or idling, check between terminals G1, G2, NE and G⊥ of engine (&ECT) ECU.

HINT: The correct waveforms appears as shown in the illustration on the left.

OK → **NG** → **Replace distributor.**

2 Check for open and short in harness and connector between engine (&ECT) ECU and distributor (See page IN–27

OK → **NG** → **Repair or replace harness or connector.**

WhereEverybodyKnowsYourName

3 Check air gap.

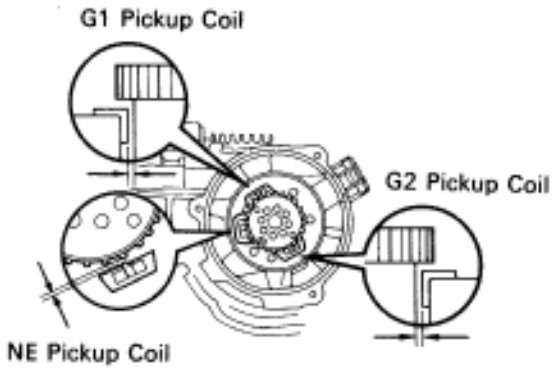

P Remove distributor cap & rotor.

C Using SST (G1 and G2 pickups) and a thikness gauge (NE pickup). measure the air gap between the signal rotor projection and pickup coil.
SST 09240–00020 fro G1 and G2 pickups

OK **Air gap: 0.2–0.4 mm (0.008–0.016 in.)**

OK

NG **Replace distributor.**

Check and replace engine (& ECT) ECU.

WhereEverybodyKnowsYourName

CIRCUIT INSPECTION

Diag. Code 12	RPM Signal Circuit (No.1)

— CIRCUIT DESCRIPTION

Cam position sensors (G1 and G2 signals) and engine speed sensor (NE signal) consist of a signal plate and a pick up coil.
The G1, G2 signal plates have one tooth each on its outer circumference and are mounted on the left and right bank camshafts.
When the camshafts rotate, the protrusion on the signal plate and the air gap on the pick up coil change, causing fluctuations in the magnetic field and generating an electromotive force in the pick up coil.
The NE signal plate has 12 teeth and is mounted on the crankshaft. The NE signal sensor generates 12 NE signals per engine revolution. The ECU detects the standard crankshaft angle based on the G1, G2 signals, and the actual crankshaft angle and the engine speed by the NE signals.

Code No.	Diagnostic Code Detecting Condition	Trouble Area
12	No ”NE” or ”G1” and ”G2” signal to ECU within 2 sec. after cranking.	• Open or short in engine speed sensor, No. 1, No. 2 cam position sensor circuit • Engine speed sensor • No. 1, No. 2 cam position sensor • Starter • ECU

WhereEverybodyKnowsYourName

DIAGNOSTIC CHART

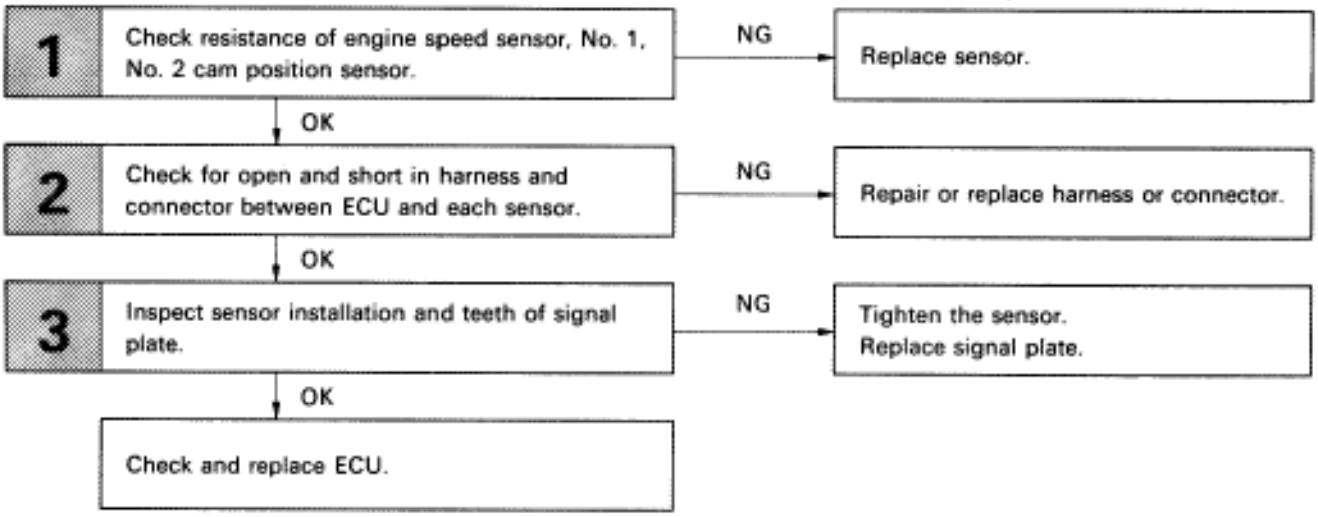

WIRING DIAGRAM

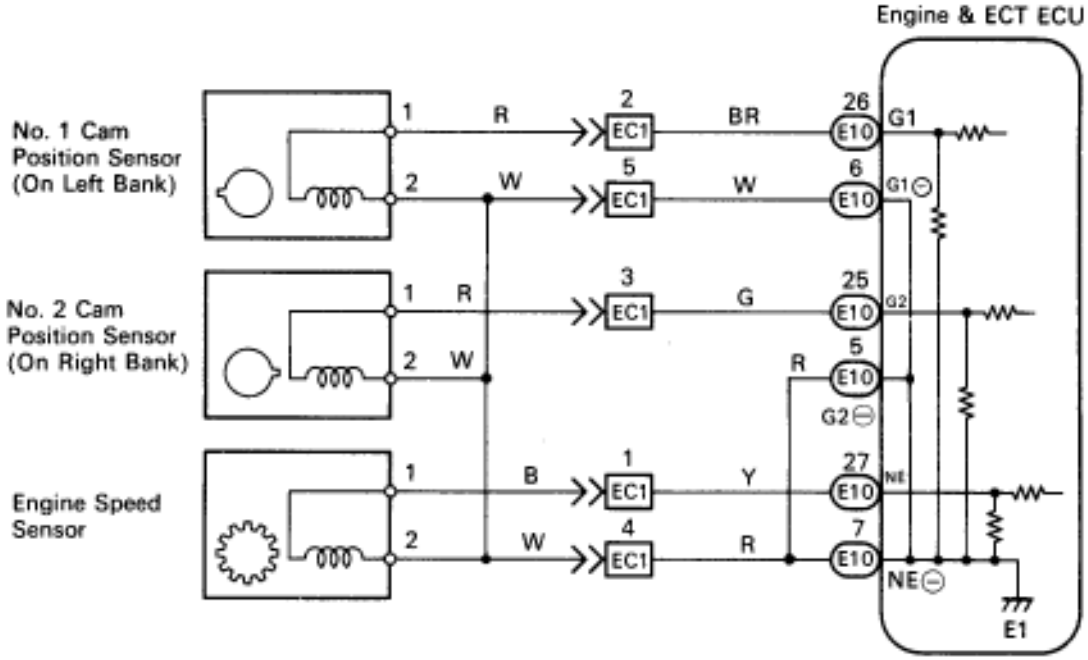

WhereEverybodyKnowsYourName

INSPECTION PROCEDURE

1 Check engine speed sensor, No. 1, No. 2 cam position sensor

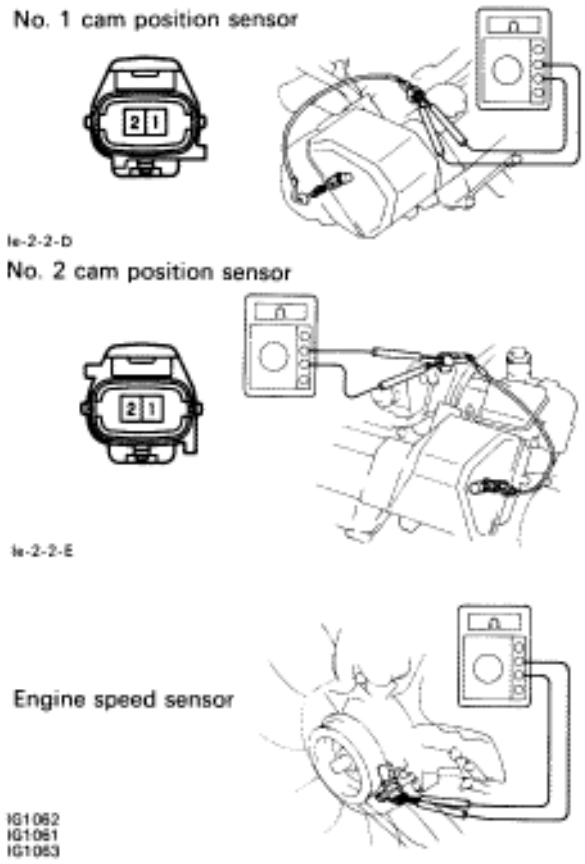

P For engine speed sensor.

(2) Remove engine under cover.

(2) Disconnected engine speed sensor connector.

For No.1, No. 2 cam position sensor,

(2) Disconnect No. 1, No. 2 cam poisition sensor connectors.

C Measure resistance of engine speed sencor, No. 1 and No. 2 cam position sensor.

OK

	Resistance
No. 1 cam position sensor	950 ~ 1,250 Ω
No. 2 cam position sensor	950 ~ 1,250 Ω
Engine speed sensor	950 ~ 1,250 Ω

Reference INSPECTION USING OSCILLOSCOPE

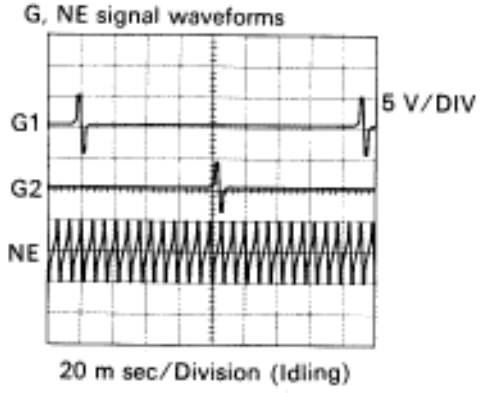

- During cranking or idling, check between terminals G1, G2 and G1⊖, NE and NE⊖ of engine & ECT ECU.

HINT: The correct waveforms appear as shown in the illustration on the left.

OK

NG **Replace engine speed sensor, No. 1, No. 2 cam poistion sensor.**

WhereEverybodyKnowsYourName

2	**Check for open and short in harness and connector between engine & ECT ECU and each sensor (See page IN–27).**

OK

NG → **Repair or replace harness or connector.**

3	**Inspect sensor installation and teeth of signal plate.**

OK

NG → **Tighen the sensor.**
Replace signal plate.

Check and replace engine and ECT ECU.

WhereEverybodyKnowsYourName

Diag. Code 13	RPM Signal Circuit (No. 2)

CIRCUIT DESCRIPTION

Refer to RPM signal circuit (No. 1) on page TR–46.

Code No.	Diagnostic Code Detecting Condition	Trouble Area
13	No NE signal to ECU for 0.1 sec. or more at 1,000 rpm or more.	▼ Open or short in NE circuit ▼ Distributor ▼ ECU
	No 12 pulses of NE to ECU during the interval between G1 and G2 pulses.	

DIAGNOSTIC CHART

This code indicates that a momentary interruption of the RPM signal from the distributor to the ECU has occurred, but that it is returned to normal. Note that although this problem may not necessarily appear at the time of inspection, it cannot be ignored because this diagnostic code is output, indicating that there is or was a malfunction in the RPM signal circuit; this ”malfunction” is usually a loose connector.
The distributor connector and the NE terminal of the ECU connector must therefore be checked for the following:

1. Loose connectors
2. Dirty connector terminals
3. Loose connector terminals

WhereEverybodyKnowsYourName

Diag. Code 13 | RPM Signal Circuit (No.2)

CIRCUIT DESCRIPTION

Refer to RPM signal circuit (No. 1) on page TR–48.

Code No.	Diagnostic Code Detecting Condition	Trouble Area
13	No NE signal to ECU for 0.1 sec. or more at 1,000 rpm or more.	• Open or short in engine speed sensor circuit. • Engine speed sensor • ECU
	No 12 pulses of NE to ECU during the interval between G1 and G2 pulses.	• Open or short in engine speed sensor circuit. • Mechanical system malfunction (skipping teeth of timing belt, belt stretched) • Engine speed sensor • ECU
	Deviation in G (G1, G2) and NE signal continues for 1 sec. during idling (throttle fully closed) after engine warmed up.	• Mechanical system malfunction (skipping teeth of timing belt, belt stretched) • No. 1, No. 2 cam position sensor • ECU

DIAGNOSTIC CHART

HINT: Perform troubleshooting of diag. code 12 first. If no trouble is found, troubleshoot the following mechanical systems.

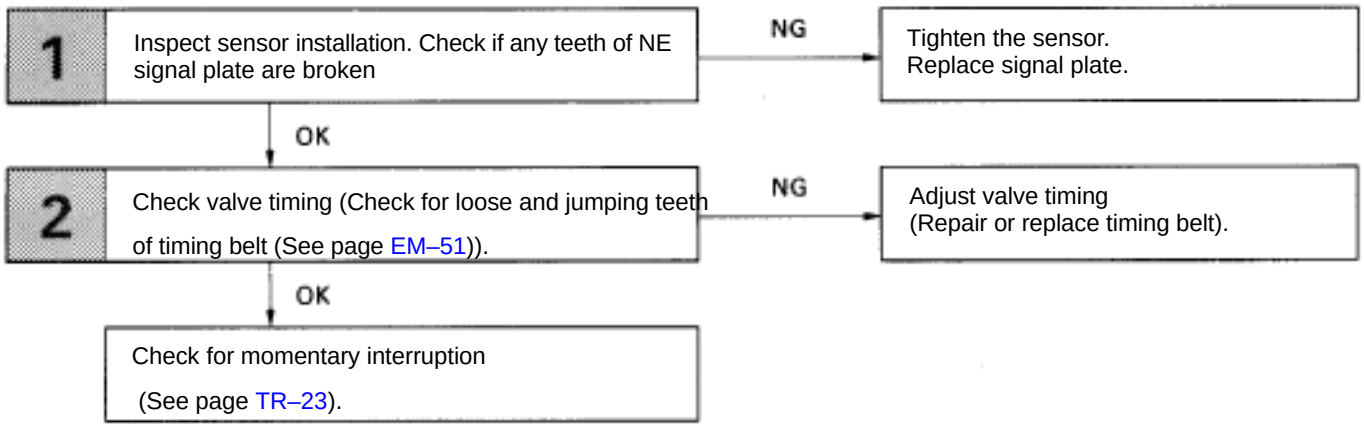

WhereEverybodyKnowsYourName

MEMO –

WhereEverybodyKnowsYourName

Diag. Code 14, 15 | Ignition Signal Circuit

— CIRCUIT DESCRIPTION

The ECU determines the ignition timing, turns on Tr1 at a predetermined angle (°CA) before the desired ignition timing and outputs an ignition signal (IGT) ”1” to the igniter.
Since the width of the IGT signal is constant, the dwell angle control circuit in the igniter determines the time the control circuit starts primary current flow to the ignition coil based on the engine rpm and ignition timing one revolution ago, that is, the time the Tr2 turns on.
When it reaches the ignition timing, the ECU turns Tr1 off and outputs the IGT signal ”O”.
This turns Tr2 off, interrupting the primary current flow and generating a high voltage in the secondary coil which causes the spark plug to spark. Also, by the counter electromotive force generated when the primary current is interrupted, the igniter sends an ignition confirmation signal (IGF) to the ECU.
The ECU stops fuel injection as a fail safe function when the IGF signal is not input to the ECU.

Code No.	Diagnostic Code Detecting Condition	Trouble Area
14	No IGF1 signal to ECU for 8–11 consecutive IGT1 signal.	• Open or short in IGF1 and IGT1 circuit from No. 1 igniter – ECU. • No. 1 igniter • ECU
15	No IGF2 signal to ECU for 8–11 consecutive IGT2 signal.	• Open or short in IGF2 and IGT2 circuit from No. 2 igniter – ECU. • No. 2 igniter • ECU

HINT: No. 1 igniter is for left bank and No. 2 igniter is for right bank.

WIRING DIAGRAM

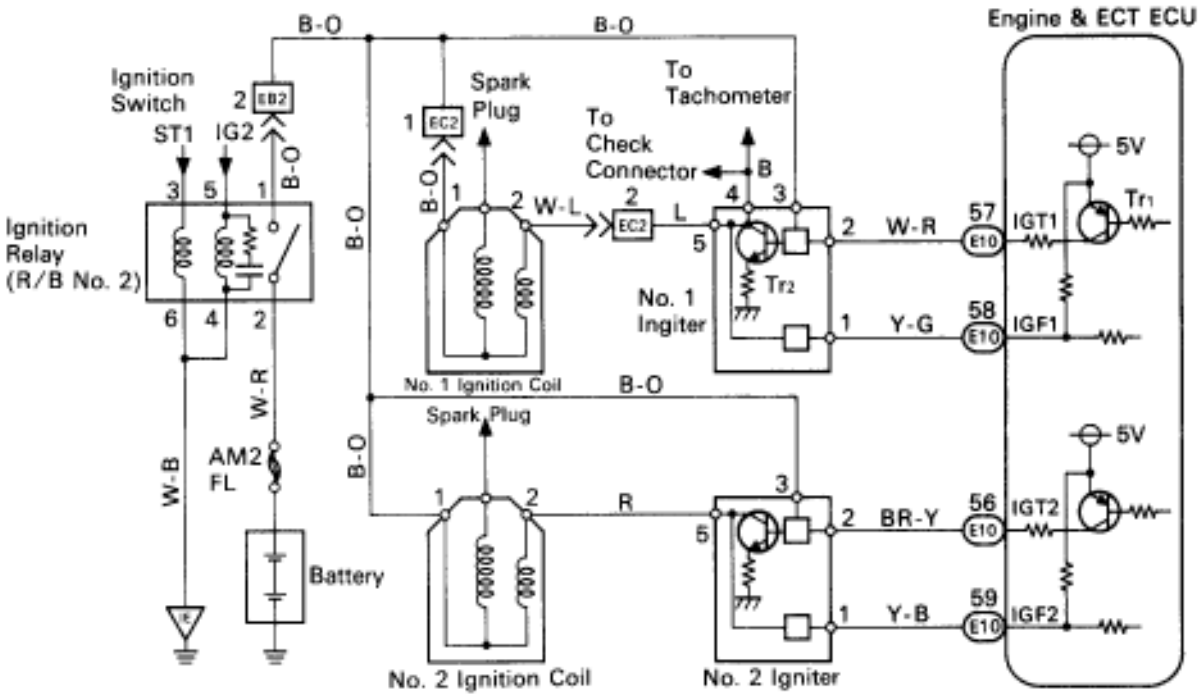

FI6479

WhereEverybodyKnowsYourName

DIAGNOSTIC CHART

Refer to inspection procedure in details.
HINT: If diag. code 14 is displayed, check No. 1 igniter circuit.
If diag. code 15 is displayed, check No. 2 igniter circuit.

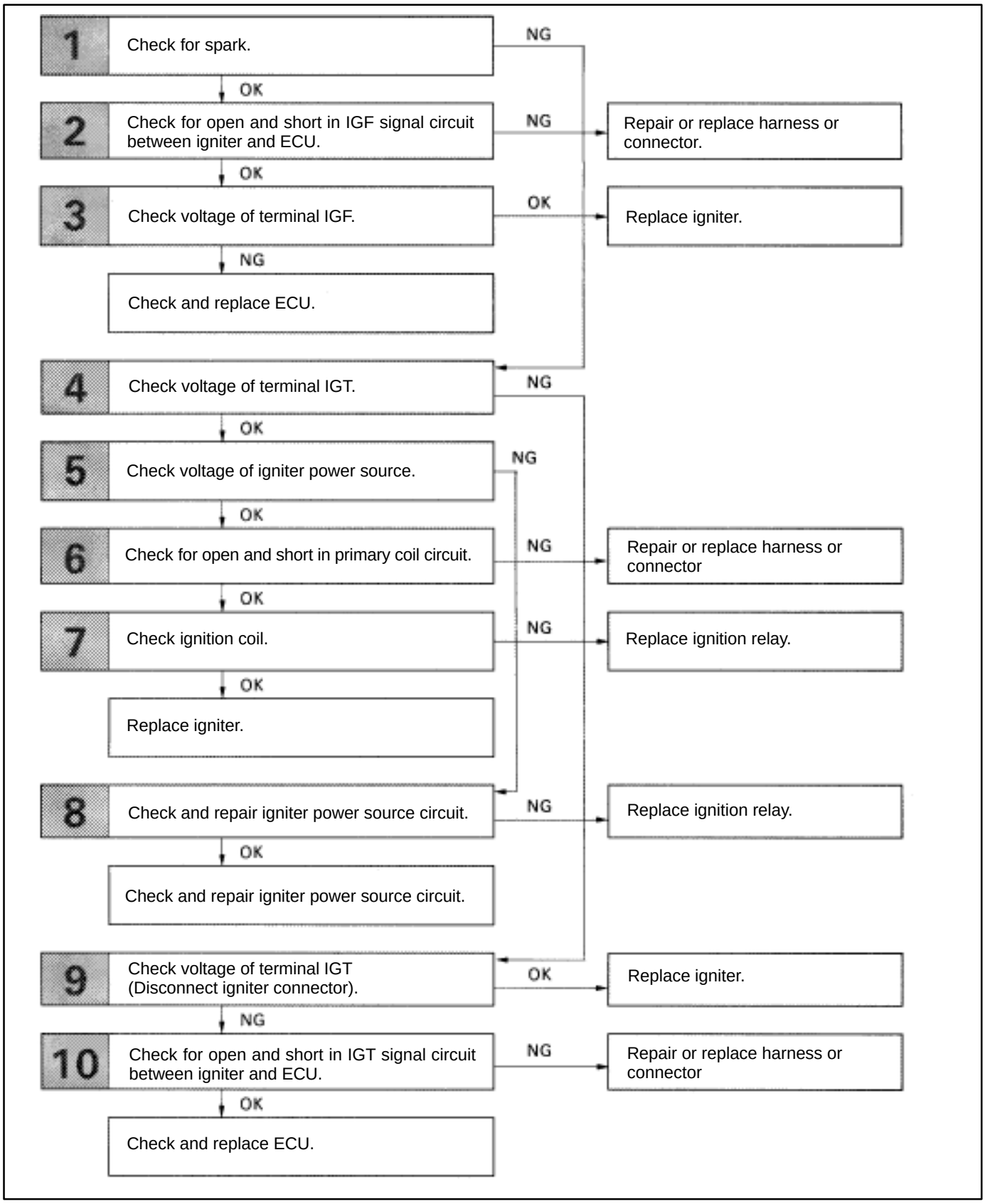

WhereEverybodyKnowsYourName

INSPECTION PROCEDURE

HINT: If diag. code 14 is displayed, check No. 1 igniter circuit.
If diag. code 15 is displayed, check No. 2 igniter circuit.

1	Check for Spark.
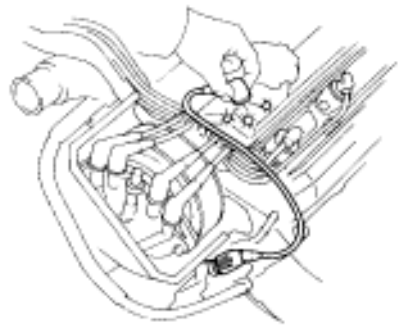	**C** Disconnect the high–tension cord from the distributor, hold its end about 12.5 mm (1/2”) from the ground, see if spark occurs while the engine is being cranked. **OK** **Spark should be generated.** **Hint** To prevent excessive fuel injected from the injectors during the check. Don’t crank the engine for more than 1–2 seconds at a time.

F14488

OK

NG **Go to step [4].**

2	Check for open and short in harness and connector in the IGF and IGT signal circuit between engine & ECT ECU and igniter (See page IN–27)

OK

NG **Repair or replace harness or connector.**

#	Disconnect igniter sonnector and check voltage between terminals IGF1, 2 of engine & ECT ECU connector and body ground.
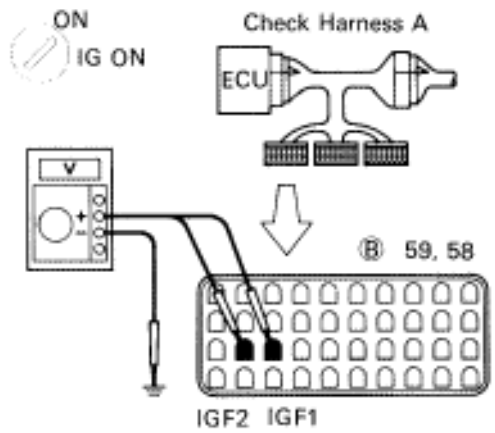	**P** (2) Disconnect igniter connector. (2) Connect the Check Harness A. (See page TR–30). (2) Turn ignition switch on. **C** Measure Voltage between terminals IGF1, 2 or engine & ECT ECU connector and body ground. **OK** **Voltage: 4 – 6 V**

BE6653
FI6501

OK

NG **Replace igniter.*1**

Check and replace engine & ECT ECU.	*1: When dia. code 14 is displayed, replace the igniter with 5 wire harness. (extra wire is for tachometer). When diag. code 15 is displayed, replace the igniter with 4 wire harness.

WhereEverybodyKnowsYourName

4 **Check voltage between terminals IGT1, 2 of engine and & ECT ECU connector and body ground.**

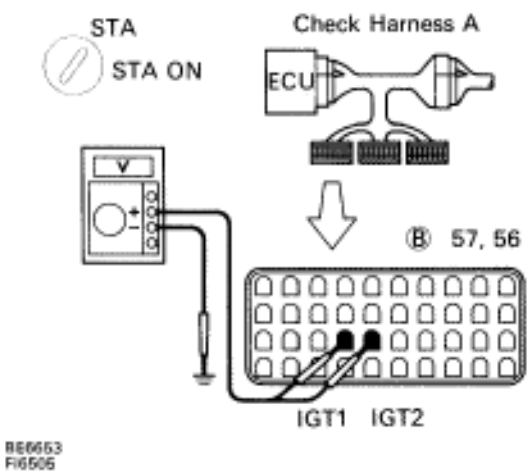

P Connect the Check Harness A.
(See page TR–30).

C Measure voltage between terminals IGT1, 2 of engine & ECT ECU connector and body ground when engine is cranked.

OK **Voltage:** **0.5 – 1.0 V**
(Neither 0 V nor 5 V)

Reference **INSPECTION USING OSCILLOSCOPE**

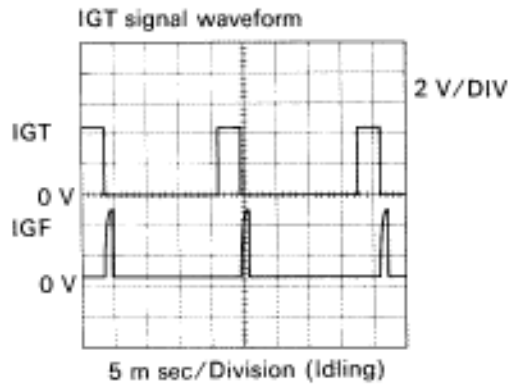

- During cranking or idling, check waveform between terminals IGT1, IGT2 and E1 of engine & ECT ECU.

HINT: The correct waveform appears as shown in the illustration on the left, with rectangle waves.

OK

NG **Go to step [9].**

5 **Check voltage between terminal 3 of No. 1, No. 2 igniter connectors and body ground.**

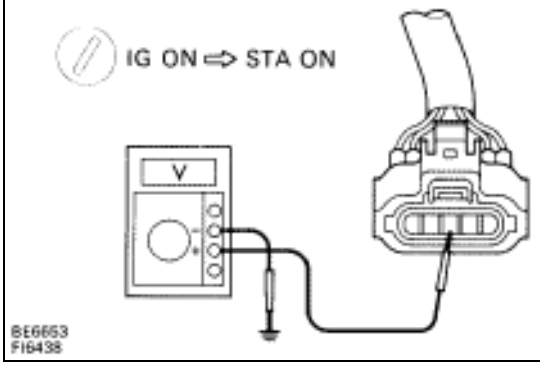

P Disconnect igniter connector.

C Mesure voltage between terminal 3 of No. 1, No. 2 igniter connectors and body ground, when ignitino switch is turned to “ON” and “STA” position.

OK **Voltage:** **10 – 14 V**

OK

NG **Go to step [8].**

WhereEverybodyKnowsYourName

6	**Check for open and short in harness and connector between ignition relay and ignition coil, ignition coil and igniter (See page IN–27).**

OK → **NG** → **Repair or replace harness or connector**

#	**Check ignition coil.**

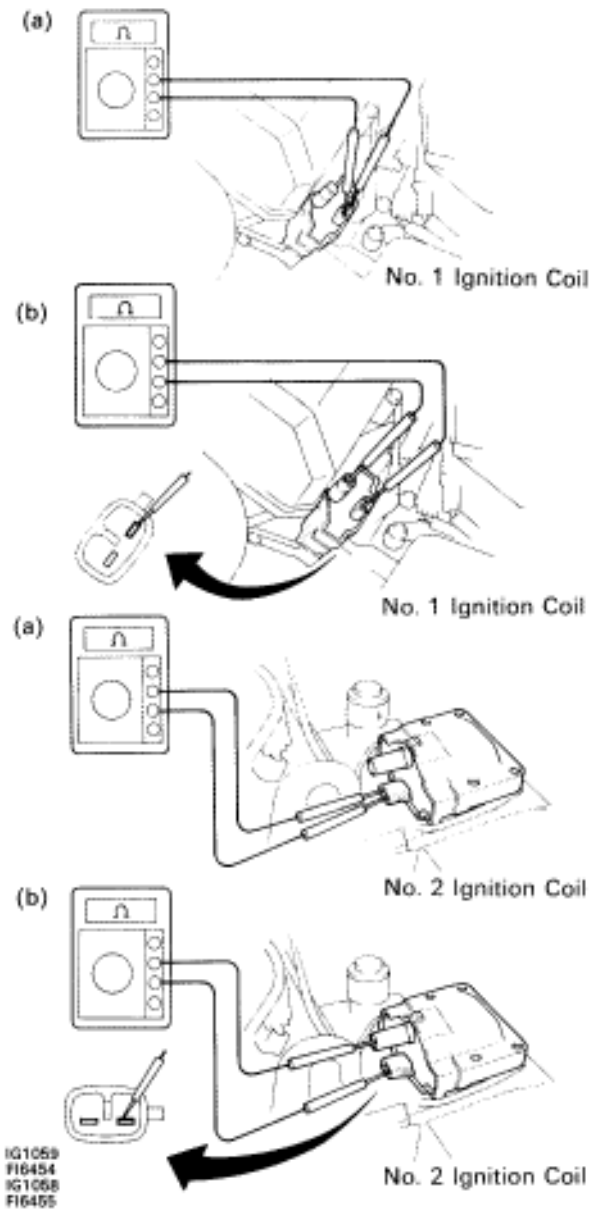

P Disconnect ignition coil connector.
(For No. 1 ignition coil (on left bank), remove the battery)

C (2) Check primary coil.
Measure resistance between terminals of ignition coil connector.

(2) Check secondary coil.
Measure resistance between terminal 1 of ignition coil connector and high–tension terminal.

OK

	Resistance
(a) Primary Coil (Cold)	0.40 – 0.50 Ω
(b) Secondary Coil (Cold)	10.2 – 13.8 kΩ

OK → **NG** → **Replace ignition coil.**

Replace Igniter. *1	*1: When diag. code 14 is displayed, replace the igniter with 5 wire harness. (extra wire is for tachometer). When diag. code 15 is displayed, replace the igniter with 4 wire harness

WhereEverybodyKnowsYourName

8 Check Ignition Relay.

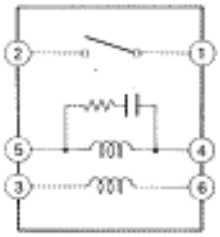

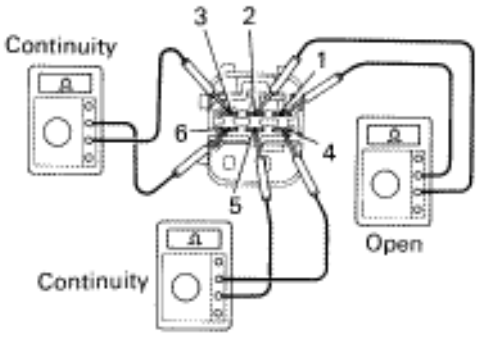

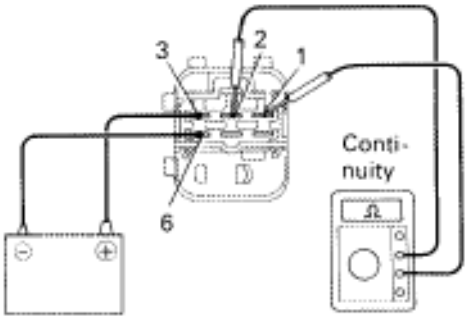

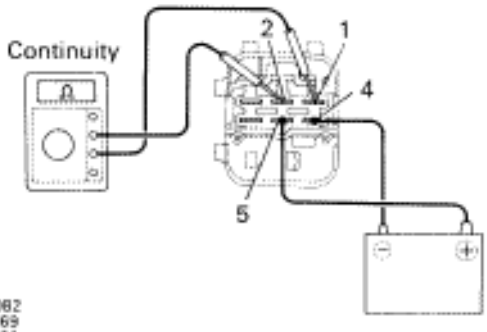

IG1082
FI4169
FI4170
FI4171

P Remove ignition relay.

C Check continuity between terminals of ignition relay shown below.

OK

Terminals 1 and 2	Open
Terminals 3 and 6	Continuity (Reference value 22 Ω)
Terminals 4 and 5	Continuity (Reference value 107 Ω)

C (2) Apply battery voltage between terminals 3 and 6, 4 and 5.

(2) Check continuity between terminals 1 and 2.

OK

Terminals 1 and 2	Continuity

OK

NG **Replace ignition relay.**

Check and repair harness or connector between battery and ignition relay, ignition relay and igniter.

WhereEverybodyKnowsYourName

9	Disconnect igniter connector and check voltage between terminals IGT1, 2 of engine & ECT ECU connector and body ground.

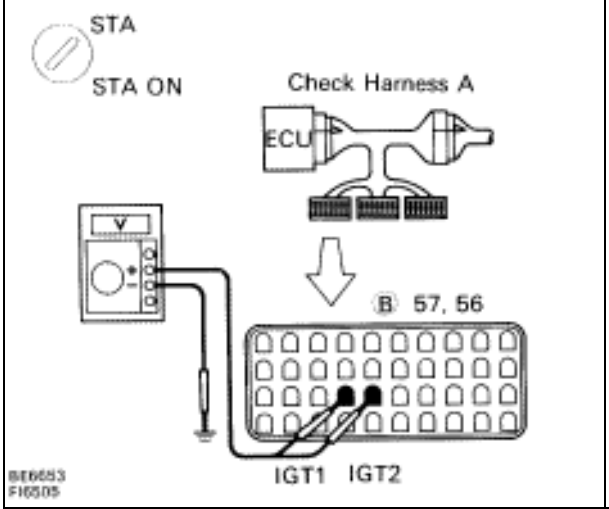

P Disconnect igniter connector.
Connect engine & ECT ECU connector.

C Measure voltage between terminals IGT1, 2 of engine & ECT ECU connector and body ground when engine is cranked.

OK **Voltage:** **0.5 – 1.0 V (Neither 0 V nor 5 V)**

Reference **INSPECTION USING OSCILLOSCOPE**

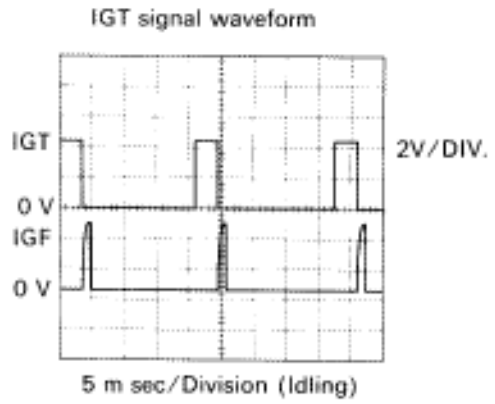

- During cranking or idling, measure between terminals IGT1, IGT2 and E1 of engine & ECT ECU.

HINT: The correct waveform appears as shown in the illustration on the left, with rectangle waves.

NG → **OK** → **Replace igniter .*1**

10	Check for Open and short in harness and connector in IGT signal circuit between engine & ECT ECU and igniter (See page IN–27).

OK → **NG** → **Repair or replace harness or connector.**

Check and replace engine & ECT ECU.	*1: When diag. code 14 is displayed, replace the igniter with 5 wire harness. (extra wire is for tachometer). When diag. code 15 is displayed, replace the igniter with 4 wire harness

WhereEverybodyKnowsYourName

Diag. Code 16	ECT Control Signal Malfunction

CIRCUIT DESCRIPTION

The signal from the ECT CPU retards the ignition timing of the engine during ECT gear shifting, thus momentarily reducing torque output of the engine for smooth clutch operation inside the transmission and reduced shift shock.
If the ECU records the diagnostic code ”16” in memory, it prohibits the torque control of the ECT which performs smooth gear shifting.

DTC No.	DTC Detecting Condition	Trouble Area
16	Fault in communications between the engine CPU and ECT CPU in the ECU.	▼ECU

If the ECU records the diagnostic trouble code ”16” in memory, it prohibits the torque control of the ECT which performs smooth gear shifting.

DIAGNOSTIC CHART

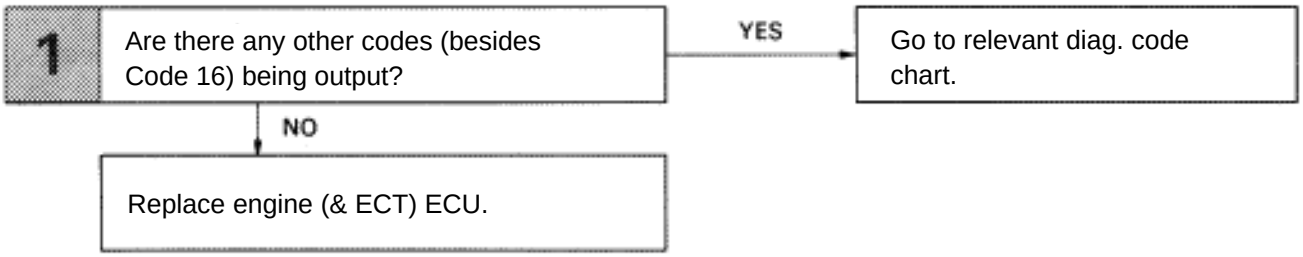

WhereEverybodyKnowsYourName

Diag. Code 21, 28 | Main Oxygen Sensor Circuit

— CIRCUIT DESCRIPTION

To obtain a high purification rate for the CO, HC and NOx components of the exhaust gas, a three–way catalyst is used, but for most efficient use of the three–way catalyst, the air–fuel ratio must be precisely controlled so that it is always close to the stoichiometric air–fuel ratio.
The oxygen sensor has the characteristic whereby its output voltage changes suddenly in the vicinity of the stoichiometric air–fuel ratio. This characteristic is used to detect the oxygen concentration in the exhaust gas and provide feedback to the computer for control of the air–fuel ratio.
When the air–fuel ratio becomes LEAN, the oxygen concentration in the exhaust increases and the oxygen sensor informs the ECU of the LEAN condition (small electromotive force: 0 V).
When the air–fuel ratio is RICHER than the stoichiometric air–fuel ratio the oxygen concentration in the exhaust gas is reduced and the oxygen sensor informs the ECU of the RICH condition (large electromotive force: 1V).
The ECU judges by the electromotive force from the oxygen sensor whether the air–fuel ratio is RICH or LEAN and controls the injection time accordingly. However, if malfunction of the oxygen sensor causes output of abnormal electromotive force, the ECU is unable to perform accurate air–fuel ratio control.

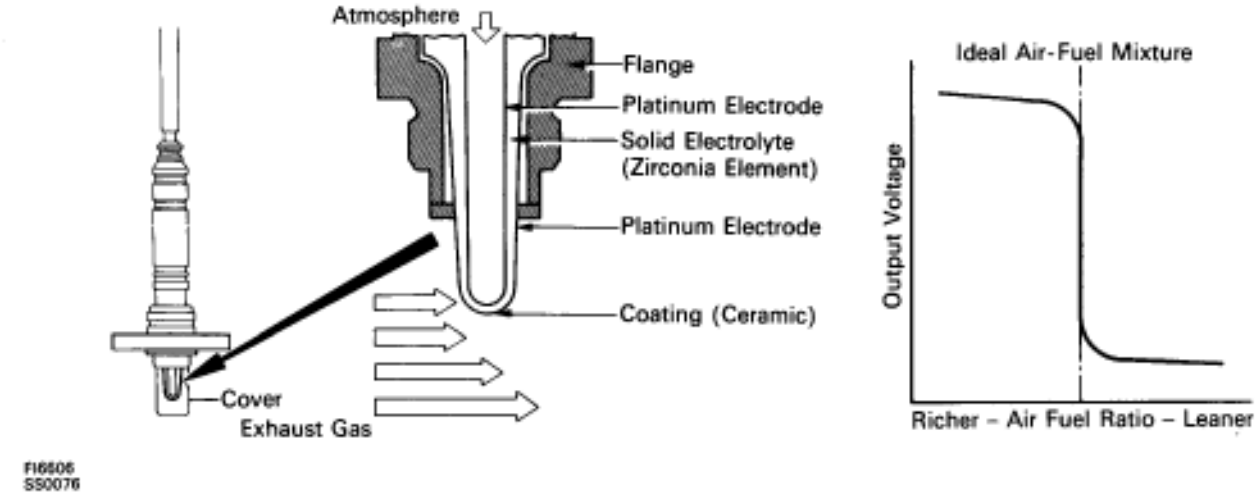

DTC No.	DTC Detecting Condition	Trouble Area
21 . 28	(1) Main oxygen sensor signal voltage is reduced to tbetween 0.35 V and 0.70 V for 60 sec. under conditions (a) ≦ (d). (2 trip detection logic)* (a) Coolant temp.: Between 80°C (176°F) and 95°C (203°F). (b) Engine speed: 1,500 rpm or more (c) Load driving (EX. ECT in 4th (5th for M/T) speed, A/C ON, Flat road, 50 mph (80km/h)). (d) Main oxygen sensor signal voltage: Alternating above and below 0.45 V.	▼Main oxygen sensor circuit ▼Main oxygen sensor
	(2) Main oxygen sensor signal voltage exceeds 0.70 V for 3 sec. or more during fuel cut.	

*: See page TR–25..
HINT: Diag. trouble code 21 is for the front side main oxygen sensor circuit. Diag. trouble code 28 is for the rear side main oxygen sensor circuit.

WhereEverybodyKnowsYourName

CIRCUIT DESCRIPTION (Cont'd)

DIAGNOSIS CODE DETECTION DRIVING PATTERN

Purpose of the driving pattern.

(a) To simulate diag. code detecting condition after diag. code is recorded.

(b) To check that the malfunction is corrected when the repair is completed confirming that diag. code is no longer detected.

Malfunction: Main Oxygen Sensor Deterioration

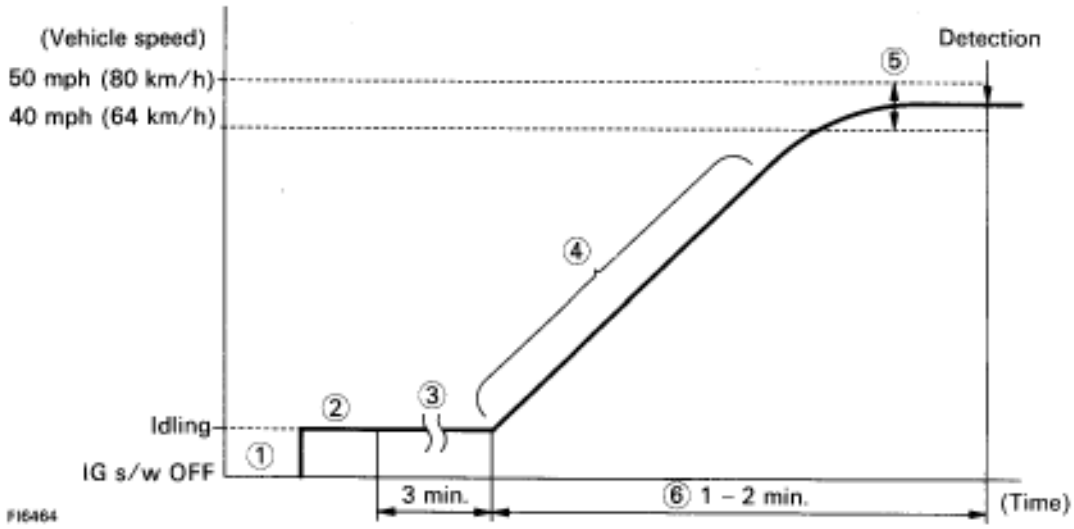

❷ Disconnect the EFI fuse (15 A) for 10 sec. or more, with IG switch OFF.
Initiate test mode (Connect terminal TE2 and E1 of check connector or TDCL with IG switch OFF).

→ Start the engine and warm up with all ACC switch OFF.

❹ After the engine is warmed up, let it idle for 3 min.

③ After performing the idling in , perform gradual acceleration with in the range 1,300 1,700 rpm (centered around 1,500 rpm) with the A/C switch ON and D range for A/T (5th for M/T).
(Take care that the engine speed does not fall below 1,200 rpm when shifting. Gradually depress the accelerator pedal and kept it. Steady so that engine braking does not occur).

⑤ Maintain the vehicle speed at 40–50 mph (64–80 km/h).

⑤ Keep the vehicle running for 1–2 min. after starting acceleration.

HINT: If a malfunction exists, the "CHECK" engine warning light will light up after approx. 60 sec. from the start of acceleration.

NOTICE: If the conditions in this test are not strictly followed, detection of the malfunction will not be possible.

WhereEverybodyKnowsYourName

DIAGNOSTIC CHART

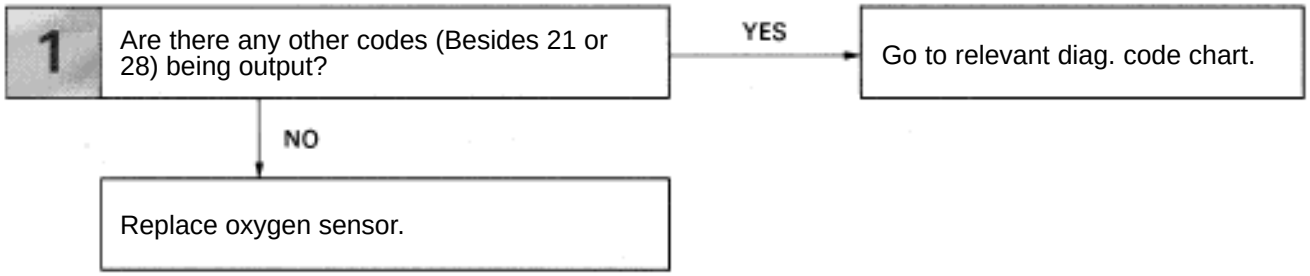

HINT: If diag. code 21 is output, replace the front side main oxygen sensor.
If diag. code 28 is output, replace the rear side main oxygen sensor.

WIRING DIAGRAM

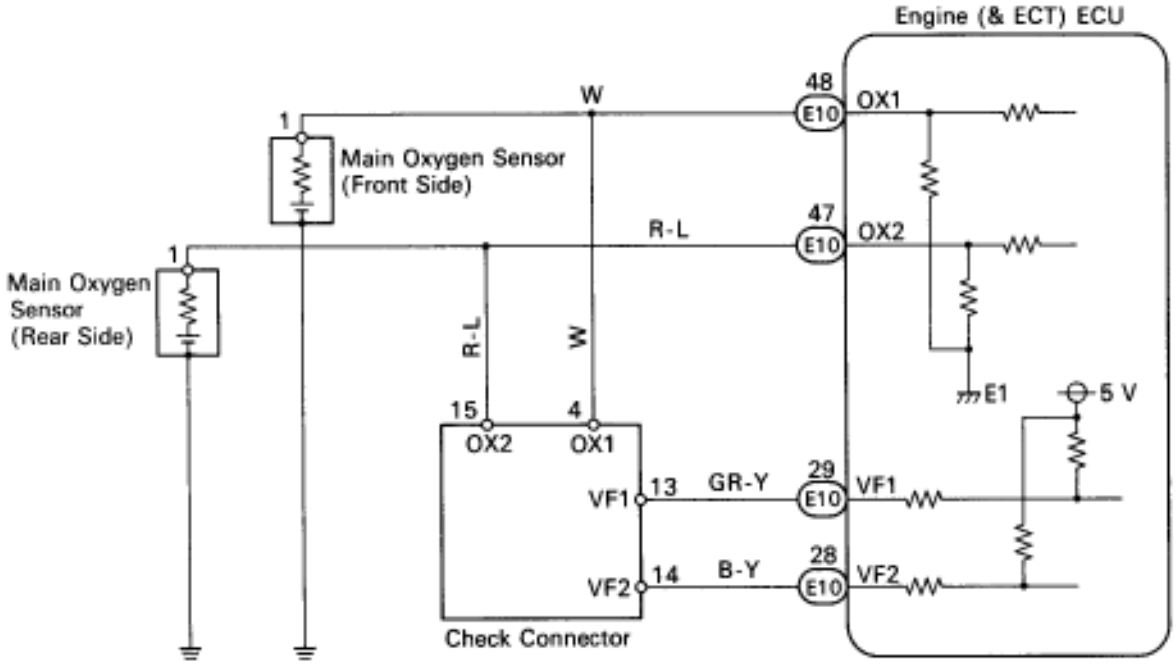

WhereEverybodyKnowsYourName

Reference INSPECTION USING OSCILLOSCOPE

Ox signal waveform

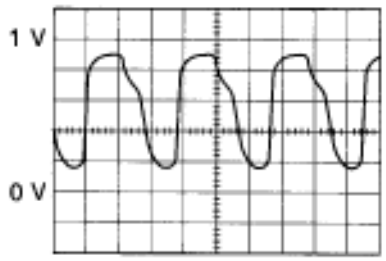

200 m sec./Division

- With the engine racing (4,000 rpm) measure between terminals OX1, OX2 and E1 of engine (& ECT) ECU.

HINT: The correct waveform appears as shown in the illustration on the left, oscillating between approx. 0.1 V and 0.9 V

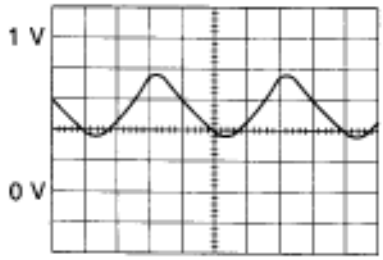

200 m sec./Division

If the oxygen sensor is deteriorated, the amplitude of the voltage is reduced as shown on the left.

FI6514
FI6515

WhereEverybodyKnowsYourName

Diag. Code 16 — ECT Control Signal Malfunction

CIRCUIT DESCRIPTION

The signal from the ECT CPU retards the ignition timeing of the engine during ECT gear shifting, thus momentarily reducing torque output of the engine for smooth clutch operation inside the transmission and reduced shift shock.

Code No.	Diagnostic Code Detecting Condition	Trouble Area
16	Fault in communications between the engine CPU and ECT CPU in the ECU.	ECU

If the ECU records the diagnostic code “16” in memory, it prohibits the torque control of the ECT which performs smooth gear shifting.

DIAGNOSTIC CHART

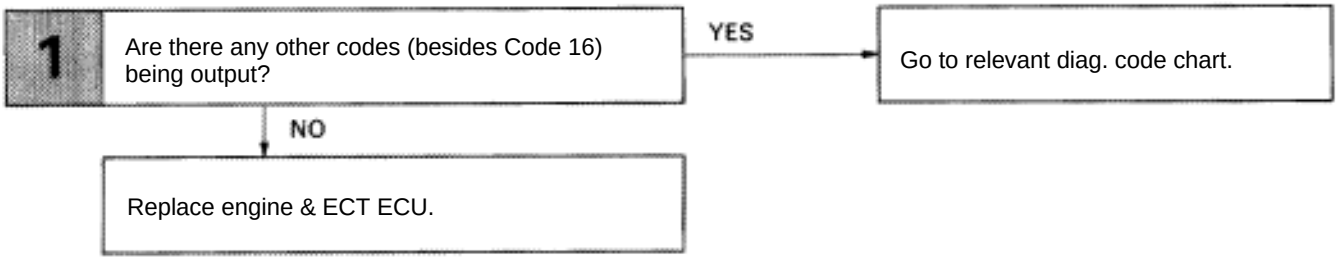

WhereEverybodyKnowsYourName

Diag. Code 21, 28 | Main Oxygen Sensor Circuit

— CIRCUIT DESCRIPTION

To obtain a high purification rate for the CO, HC and NOx components of the exhaust gas, a three–way catalyst is used, but for most efficient use of the three–way catalyst, the air–fuel ratio must be precisely controlled so that it is always close to the stoichiometric air–fuel ratio.
The oxygen sensor has the characteristic whereby its output voltage changes suddenly in the vicinity of the stoichiometric air–fuel ratio. This characteristic is used to detect the oxygen concentration in the exhaust gas and provide feedback to the computer for control of the air–fuel ratio.
When the air–fuel ratio becomes LEAN, the oxygen concentration in the exhaust increases and the oxygen sensor informs the ECU of the LEAN condition (small electromotive force: O V).
When the air–fuel ratio is RICHER than the stoichiometric air–fuel ratio the oxygen concentration in the exhaust gas is reduced and the oxygen sensor informs the ECU of the RICH condition (large electromotive force: 1V).
The ECU judges by the electromotive force from the oxygen sensor whether the air–fuel ratio is RICH or LEAN and controls the injection time accordingly. However, if malfunction of the oxygen sensor causes output of abnormal electromotive force, the ECU is unable to perform accurate air–fuel ratio control.
The main oxygen sensors include a heater which heats the Zirconia element. The heater is controlled by the ECU. When the intake air volume is low (the temperature of the exhaust gas is low) current flows to the heater to heat the sensor for accurate oxygen concentration detection.

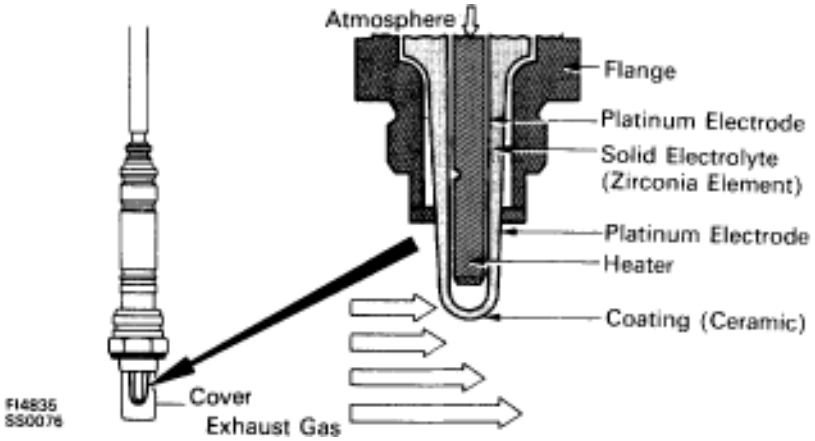

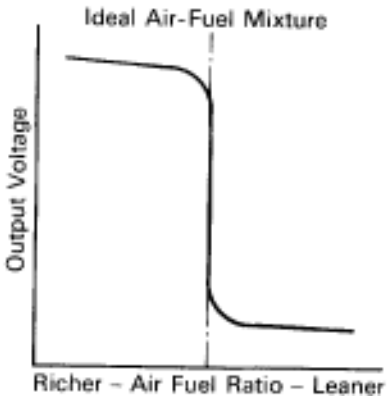

Code No.	Diagnostic Code Detecting Condition	Trouble Area
21 . 28	(1) Open or short in heater circuit of main oxygen sensor for 0.5 sec. or more.	▼Open or short in heater circuit of main oxygen sensor. ▼Main oxygen sensor heater ▼ECU
	(2) Main oxygen sensor signal voltage is reduced to between 0.35 V and 0.70 V for 60 sec. under conditions (a) ~ (d). (2 trip detection logic)* (a) Coolant temp.: Between 70°C (158°F) and 95°C (203°F). (b) Engine speed: 1,500 rpm or more. (c) Load driving (EX. ECT in 4th speed, A/C ON, Flat road, 50 mph (80km/h)). (d) Main oxygen sensor signal voltage: Alternating above and below 0.45 V.	▼Main oxygen sensor circuit ▼Main oxygen sensor

*: See page TR–21.

HINT: Diag. code 21 is for the left bank main oxygen sensor circuit. Diag. code 28 is for the right bank main oxygen sensor circuit.

WhereEverybodyKnowsYourName

— CIRCUIT DESCRIPTION (Cont'd) —

DIAGNOSIS CODE DETECTION DRIVING PATTERN

Purpose of the driving pattern.

(a) To simulate diag. code detecting condition after diag. code is recorded.

(b) To check that the malfunction is corrected when the repair is completed confirming that diag. code is no longer detected.

Malfunction: Main Oxygen Sensor Deterioration

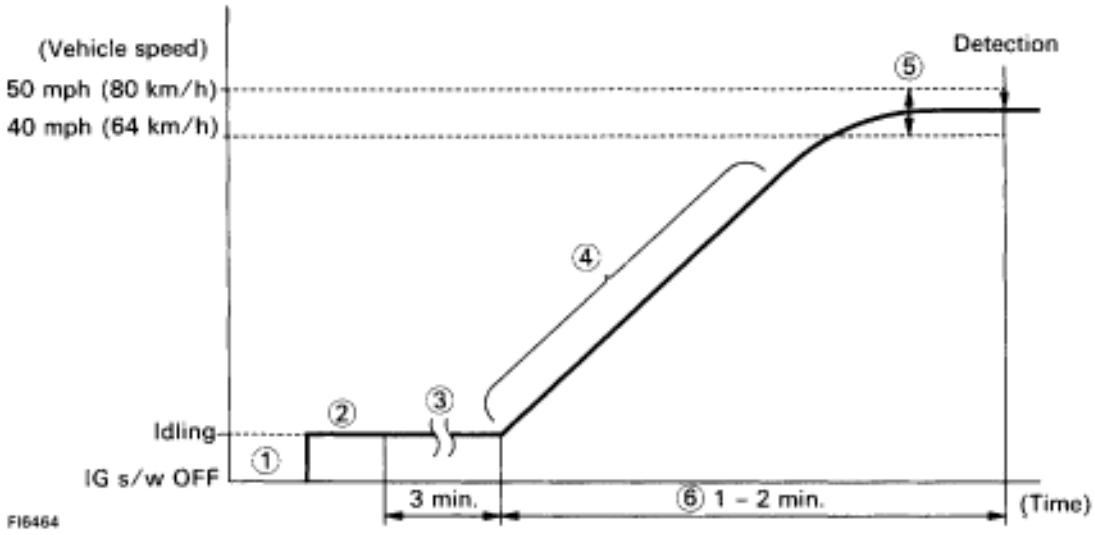

→ Initiate test mode (See page TR–12).

❹ Start engine and warm up.

③ After engine is warmed up, let it idle for 3 min.

⑤ With the A/C ON and the transmission in D range (O/D ON), perform gradual acceleration with in the range 1,300 – 1,700 rpm (centered around 1,500 rpm).
(Take care that the engine speed does not fall below 1,200 rpm when shifting. Gradually depress the accelerator pedal and kept it. Steady so that engine braking does not occur.)

⑤ Maintain the vehicle speed at 40 – 50 mph (64 – 80 km/h).

⑦ Keep the vehicle running for 1 – 2 min. after starting acceleration.

HINT: If a malfunction exists, the "CHECK" engine warning light will light up after approx. 60 sec. from the start of acceleration.

NOTICE: If the conditions in this test are not strictly followed, detection of the malfunction will not be possible.

WhereEverybodyKnowsYourName

DIAGNOSTIC CHART

HINT: If diag. code ”21” is output, check the left bank main oxygen sensor circuit. If diag. code ”28” is output, check the right bank main oxygen sensor circuit.

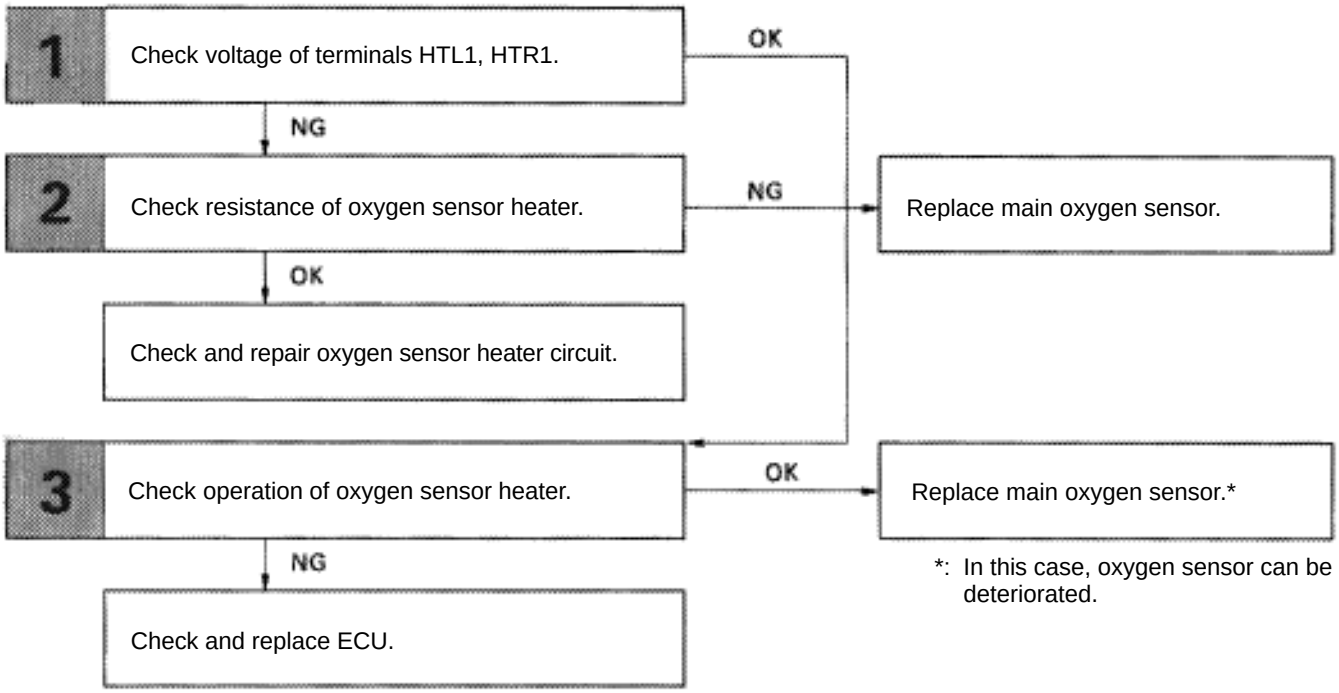

*: In this case, oxygen sensor can be deteriorated.

WIRING DIAGRAM

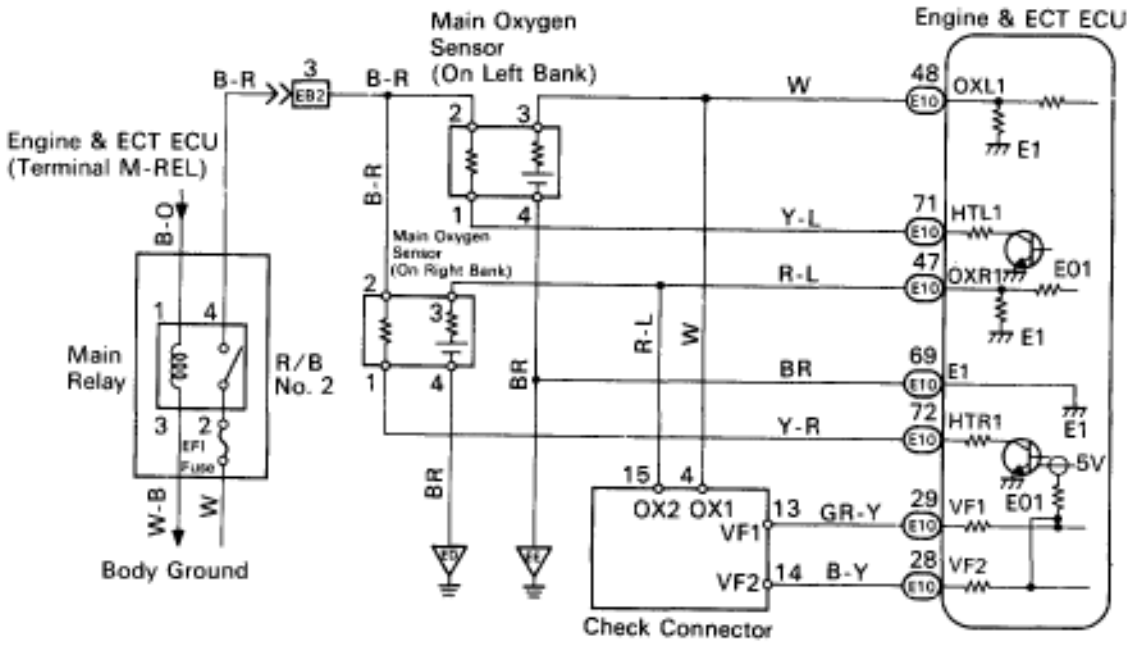

WhereEverybodyKnowsYourName

INSPECTION PROCEDURE

1	Disconnect the engine & ECT ECU connector, check voltage between terminals HTL1, HTR1 of engine & ECT ECU connector and body ground.

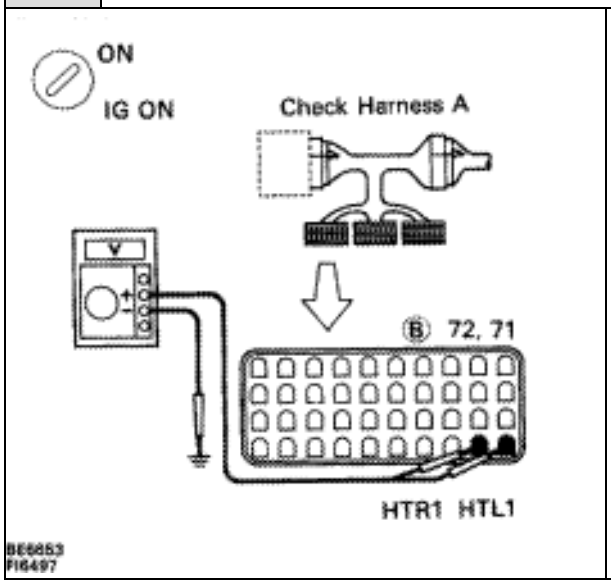

P (2) Connect the Check Harness A.
(See page TR–30)
(2) Disconnect engine & ECT ECU connector.
(2) Turn ignition switch on.

C Measure voltage beween terminals HTL1, HTR1 of engine & ECT ECU connector and body ground.

OK **Voltage: 10 – 14 V**

OK

NG **Go to step [3].**

2	Check main oxygen sensor heater.

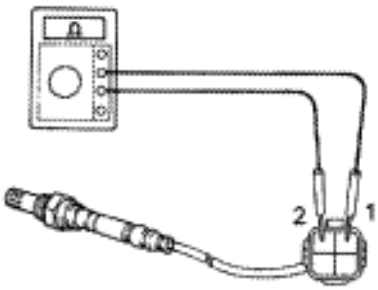

P Disconnect main oxygen sensor connector.

C Measure resistance between terminals 1 and 2 of main oxygen sensor connector.

OK **Resistance: 5.1 – 6.3 at 20°C (68°F)**

OK

NG **Replace main oxygen sensor.**

Check and repair harness or connector between main relay and main oxygen sensor, main oxygen sensor and engine & ECT ECU.

WhereEverybodyKnowsYourName

3 **Check voltage between terminals HTL1, HTR1 of engine & ECT ECU connector and body ground.**

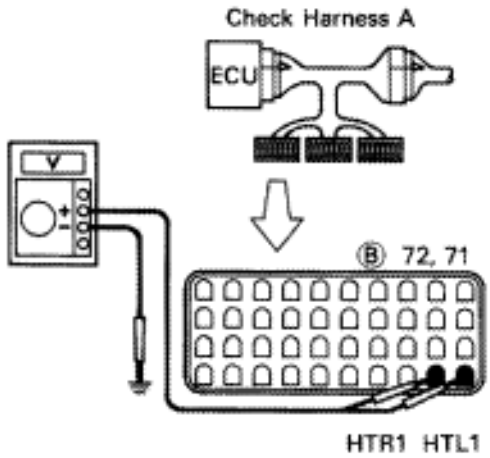

P (1) Connect engine & ECT ECU connector.
(2) Warm up engine to normal operating temperature.

C Measure voltage between terminals of HTL1, HTR1 of engine & ECT ECU connector and body ground, when engine is idling and racing at 4,000 rpm.

OK

	Voltage
Idling	0 V
Racing at 4,000 rpm	10 – 14 V

Hint In the 4,000 rpm racing check, continue engine racing at 4,000rpm for approx. 20 seconds or more.

OK

NG **Replace main oxygen sensor.***

*: In this case, oxygen sensor can be deteriorated.

Check and replace engine & ECT ECU.

Reference | INSPECTION USING OSCILLOSCOPE

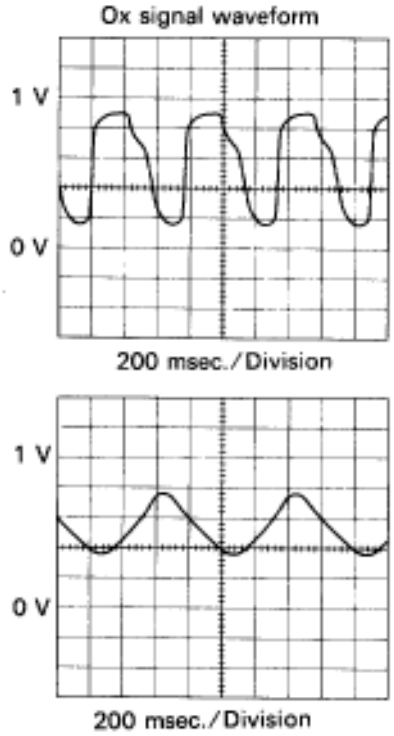

- With the engine racing (4,000 rpm) measure between terminals OXL1, OXR2 and E1 of engine & ECT ECU.

HINT: The correct waveform appears as shown in the illustration on the left, oscillating between approx. 0.1 V and 0.9 V

If the oxygen sensor is deteriorated, the amplitude of the voltage is reduced as shown on the left.

WhereEverybodyKnowsYourName

–MEMO–

WhereEverybodyKnowsYourName

Diag. Code 22 | Water Temp. Sensor Circuit

CIRCUIT DESCRIPTION

The water temperature sensor senses the coolant temperature. A thermistor built in the sensor changes the resistance value according to the coolant temperature. The lower the coolant temperature, the greater the thermistor resistance value, and the higher the coolant temperature, the lower the thermistor resistance value (See Fig. 1.).
The water temperature sensor is connected to the ECU (See next page). The 5 V power source voltage in the ECU is applied to the water temperature sensor from the terminal THW via a resistor R. That is, the resistor R and the water temperature sensor are connected in series. When the resistance value of the water temperature sensor changes in accordance with changes in the coolant temperature, the potential at the terminal THW also changes. Based on this signal, the ECU increases the fuel injection volume to improve driveability during cold engine operation. If the ECU records the diagnostic code 22, it operates the fail safe function, keeping the coolant temperature at a constant 80˚C (176˚F).

(fig-1)

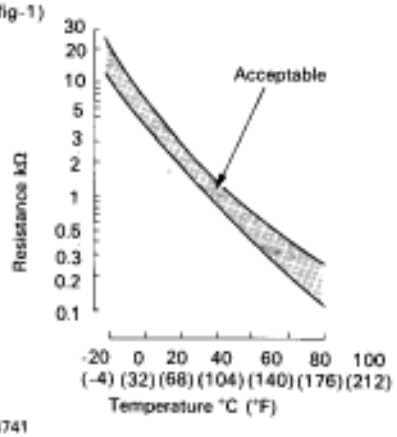

< Reference >

Water Temp. ˚C (˚F)	Resistance (k)	Voltage (V)
–20 (–4)	16.0	4.3
0 (32)	5.9	3.4
20 (68)	2.5	2.4
40 (104)	1.2	1.5
60 (140)	0.6	0.9
80 (176)	0.3	0.5
100 (212)	0.2	0.3

Code No.	Diagnostic Code Detecting System	Trouble Area
22	Open or short in water temp. sensor circuit for 0.5 sec. or more.	▼Open or short in water temp. sensor circuit ▼Water temp. sensor ▼ECU

WhereEverybodyKnowsYourName

DIAGNOSTIC CHART

HINT: If diagnostic codes ”22” (water temperature sensor circuit), ”24” (intake air temperature sensor circuit) and ”41” (throttle position sensor circuit) are output simultaneously, E2 (sensor ground) may be open.

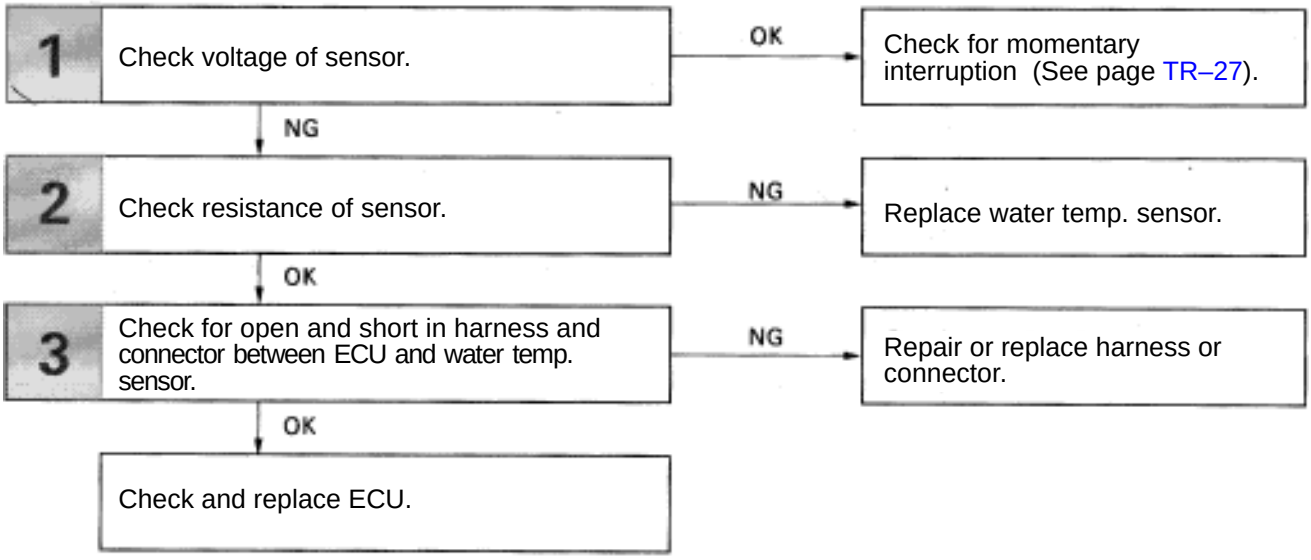

WIRING DIAGRAM

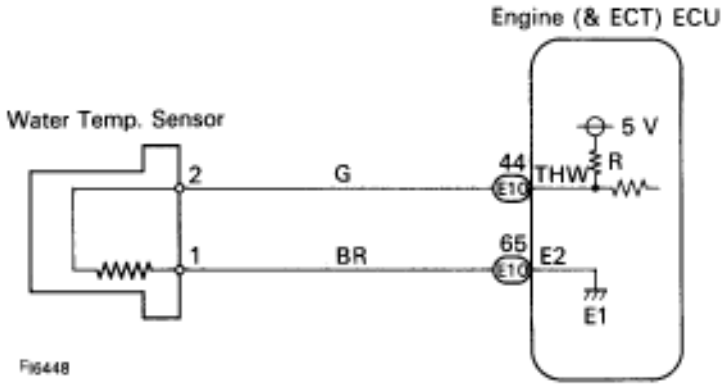

WhereEverybodyKnowsYourName

INSPECTION PROCEDURE

HINT: If diagnostic codes ”22” (water temperature sensor circuit), ”24” (intake air temperature sensor circuit) and ”41” (throttle position sensor circuit) are output simultaneously, E2 (sensor ground) may be open.

1 Check voltage between terminals THW and E2 of engine (&ECT) ECU connector.

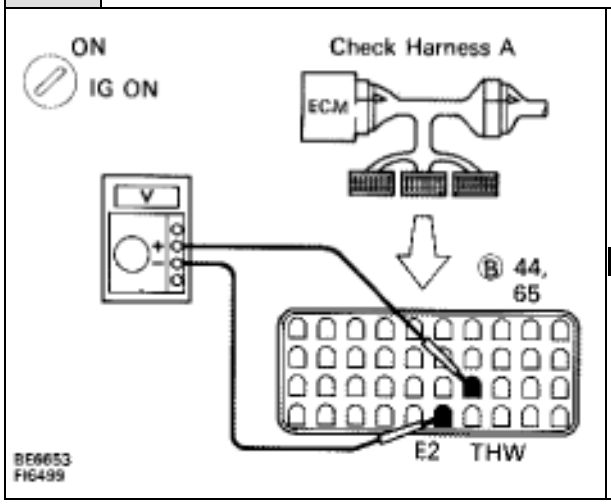

P 1. Connect the Check Harness A. (See page TR–34)
2. Turn ignition switch on.

C Measure voltage between terminals THW and E2 of engine (& ECT) ECU connector.

OK

Engine Coolant Temp. °C (°F)	Voltage
20 (68) (Engine is cool)	1 – 3 V
80 (176) (Engine is hot)	0.1 – 1.0 V

NG

OK **Check for momentary interruption (See page TR–27).**

2 Check water temp. sensor.

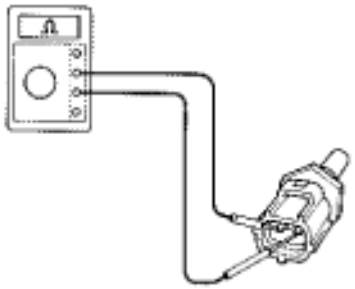

P Disconnect the water temp. sensor connector.

C Measure resistance between terminals.

OK **Resistance is within Acceptable Zone on chart.**

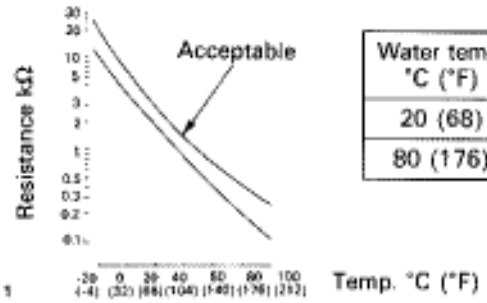

Water temp. °C (°F)	Resistance
20 (68)	2 – 3 kΩ
80 (176)	0.2 – 0.4 kΩ

OK

NG **Replace water temp. sensor.**

3 Check for open and short in harness and connector between engine (& ECT) ECU and water temp. sensor (See page IN–27).

OK

NG **Repair or replace harness or connector.**

Check and replace engine (& ECT) ECU.

WhereEverybodyKnowsYourName

Diag. Code 22 | Water Temp. Sensor Circuit

— CIRCUIT DESCRIPTION

The water temperature sensor senses the coolant temperature. A thermistor built in the sensor changes the resistance value according to the coolant temperature. The lower the coolant temperature, the greater the thermistor resistance value, and the higher the coolant temperature, the lower the thermistor resistance value (See Fig. 1.).
The water temperature sensor is connected to the ECU (See next page). The 5 V power source voltage in the ECU is applied to the water temperature sensor from the terminal THW via a resistor R. That is, the resistor R and the water temperature sensor are connected in series. When the resistance value of the water temperature sensor changes in accordance with changes in the coolant temperature, the potential at the terminal THW also changes. Based on this signal, the ECU increases the fuel injection volume to improve driveability during cold engine operation. If the ECU records the diagnostic code 22, it operates the fail safe function, keeping the coolant temperature at a constant 80°C (176°F).

(fig-1)

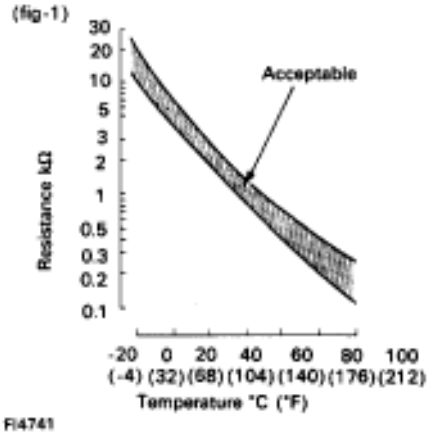

< Reference >

Water Temp. °C (°F)	Resistance (kΩ)	Voltage (V)
-20 (-4)	16.0	4.3
0 (32)	5.9	3.4
20 (68)	2.5	2.4
40 (104)	1.2	1.5
60 (140)	0.6	0.9
80 (176)	0.3	0.5
100 (212)	0.2	0.3

Code No.	Diagnostic Code Detecting Condition	Trouble Area
22	Open or short in water temp. sensor circuit for 0.5 sec. or more.	• Open or short in water temp. sensor circuit • Water temp. sensor • ECU

WhereEverybodyKnowsYourName

DIAGNOSTIC CHART

HINT: If diagnostic codes ”22” (water temperature sensor circuit), ”24” (intake air temperature sensor circuit) and ”41” (throttle position sensor circuit) are output simultaneously, E2 (sensor ground) may be open.

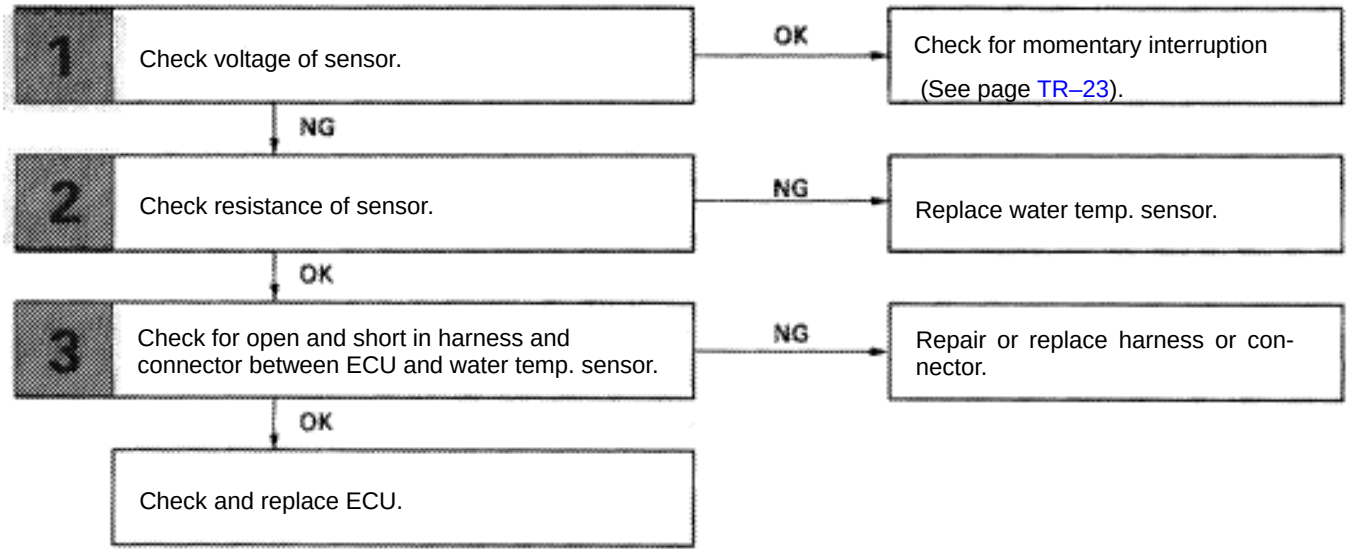

WIRING DIAGRAM

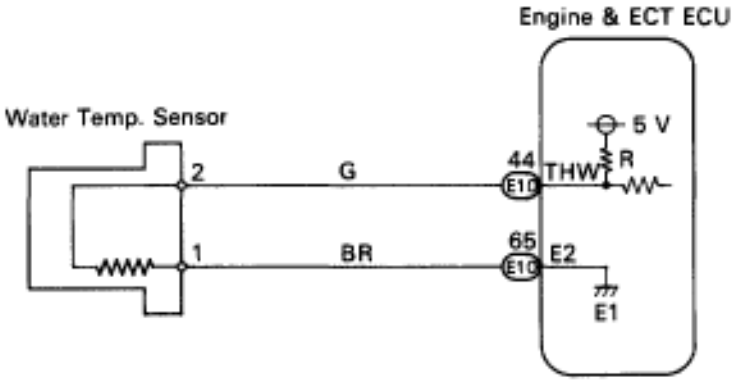

F6448

WhereEverybodyKnowsYourName

INSPECTION PROCEDURE

HINT: If diagnostic codes ”22” (water temperature sensor circuit), ”24” (intake air temperature sensor circuit) and ”41” (throttle position sensor circuit) are output simultaneously, E2 (sensor ground) may be open.

1 **Check voltage between terminals THW and E2 of engine & ECT ECU connector.**

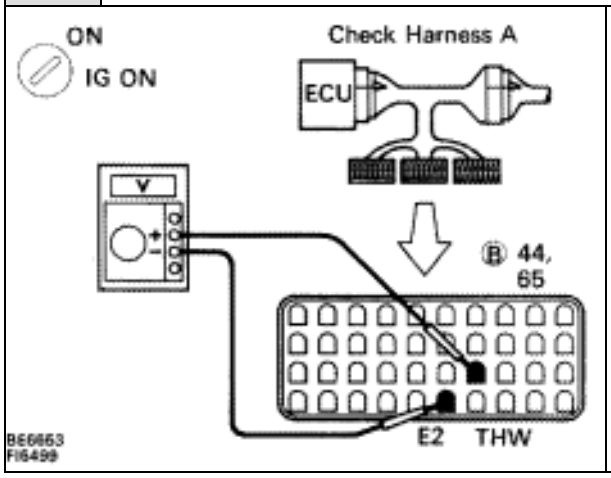

P (2) Connect the Check Harness A. (See page TR–30)

(2) Turn ignition switch on.

C Measure voltage between terminals THW and E2 and engine & ECT ECU connector.

OK

Water Temp. °C (°F)	Voltage
20 (68) (Engine is cool)	1 – 3 V
80 (176) (Engine is hot)	0.1 – 1.0 V

NG

OK **Check for momentary interruption (See Page TR–23).**

2 **Check water temp. sensor.**

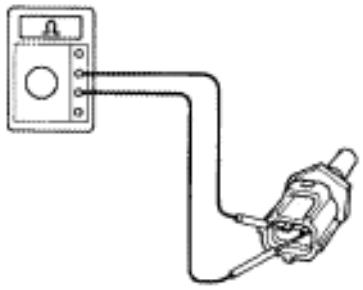

P Disconnect the water temp. sensor connector. (See page FI–99).

C Measure resistance between terminals.

OK **Resistance is within Acceptable Zone on chart.**

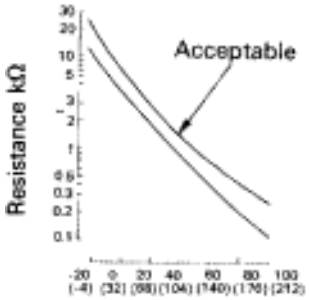

Water temp. °C (°F)	Resistance
20 (68)	2 – 3 kΩ
80 (176)	0.2 – 0.4 kΩ

OK

NG **Replace water temp. sensor.**

3 **Check for open and short in harness and connector between engine & ECT ECU and water temp. sensor (See page IN–27).**

OK

NG **Repair or replace harness or connector.**

Check and replace engine & ECT ECU.

WhereEverybodyKnowsYourName

–MEMO–

WhereEverybodyKnowsYourName

Diag. Code 25, 26	Air–Fuel Ratio Lean Malfunction Air–Fuel Ratio Rich Malfunction

CIRCUIT DESCRIPTION

Refer to page TR–62 for the circuit description.

Code No.	Diagnostic Code Detecting System	Trouble Area
25	(1) Main oxygen sensor voltage is 0.45 V or less (lean) for 90 sec. under conditions (a) and (b). (2 trip detection logic)*2 (a) Coolant temp.: 70˚C (158˚F) or more. (b) Engine speed: 1,500 rpm or more.	6 Open or short in main oxygen sensor circuit 6 Main oxygen sensor 6 Ignition system 6 ECU
	(2)*1 Difference of air–fuel ratio feedback compensation value between front (No. 1 3 cylinders) and rear (No. 4 6 cylinders) is more than 15 percentage for 20 sec. or more under conditions (a) and (b). (2 trip detection logic)*2 (a) Engine speed: 2,000 rpm or more. (b) Coolant temp.: Between 60˚C (140˚F) and 95˚C (203˚F).	6 Open and short in injector circuit. 6 Fuel line pressure (injector leak, blockage) 6 Mechanical system malfunction (skipping teeth of timing belt) 6 Ignition system 6 Compression pressure (foreign object caught in valve) 6 Air flow meter (air intake) 6 ECU
	(3)*1 Engine speed varies by more than 15 rpm over the preceding crank angle period during a period of 20 sec. or more under conditions (a) and (b). (2 trip detection logic)*2 (a) Engine speed: Idling (b) Coolant temp.: Between 60˚C (140˚F) and 95˚C (203˚F).	6 Open and short in injector circuit. 6 Fuel line pressure (injector leak, blockage) 6 Mechanical system malfunction (skipping teeth of timing belt) 6 Ignition system 6 Compression pressure (foreign object caught in valve) 6 Air flow meter (air intake) 6 ECU
26*1	(1) Difference of air–fuel ratio feedback compensation value between front (No. 1 3 cylinders) and rear (No.4 6 cylinders) is more than 15 percentage for 20 sec. or more under conditions (a) and (b). (2 trip detection logic)*2 (a) Engine speed: 2,000 rpm or more. (b) Coolant temp.: Between 60˚C (140˚F) and 95˚C (203˚F).	6 Open and short in injector circuit. 6 Fuel line pressure (injector leak, blockage) 6 Mechanical system malfunction (skipping teeth of timing belt) 6 Ignition system 6 Compression pressure (foreign object caught in valve) 6 Air flow meter (air intake) 6 ECU
	(2) Engine speed varies by more than 15 rpm over the preceding crank angle period during a period of 20 sec. or more under conditions (a) and (b). (2 trip detection logic)*2 (a) Engine speed: Idling (b) Coolant temp.: Between 60˚C (140˚F) and 95˚C (203˚F).	6 Open and short in injector circuit. 6 Fuel line pressure (injector leak, blockage) 6 Mechanical system malfunction (skipping teeth of timing belt) 6 Ignition system 6 Compression pressure (foreign object caught in valve 6 Air flow meter (air intake) 6 ECU

*1: Only for USA specification vehicles.
*2: See page TR–25.

WhereEverybodyKnowsYourName

CIRCUIT DESCRIPTION (Cont'd)

DIAGNOSIS CODE DETECTION DRIVING PATTERN

Purpose of the driving pattern.

(a) To simulate diag. code detecting condition after diag. code is recorded.

(b) To check that the malfunction is corrected when the repair is completed confirming that diag. code is no longer detected.

Malfunction: Open or Short in Injector circuit, Injector Leak or Blockage

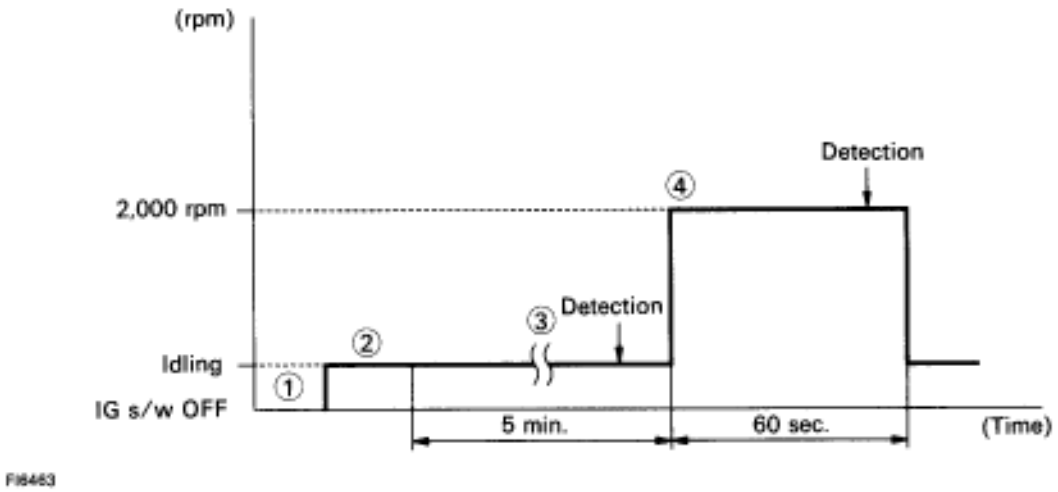

❷ Disconnect the EFI fuse (15 A) for 10 sec. or more. with IG switch OFF.
Initiate test mode (Connect terminal TE2 and E1 of check connector or TDCL with IG switch OFF).

→ Start engine and warm up with all ACC switch OFF.

❹ After engine is warmed up, let it idle for 5 min.
(After the engine is started, do not depress the accelerator pedal.)

③ If the malfunction is not detected during idling, perform racing without any load at approx. 2,000 rpm for 60 sec.

HINT: If a malfunction exists, the "CHECK" engine warning light will light up during the 5 min. idling period or within 60 sec. of starting racing.

NOTICE: If the conditions in this test are not strictly followed, detection of the malfunction will not be possible.

WhereEverybodyKnowsYourName

DIAGNOSTIC CHART

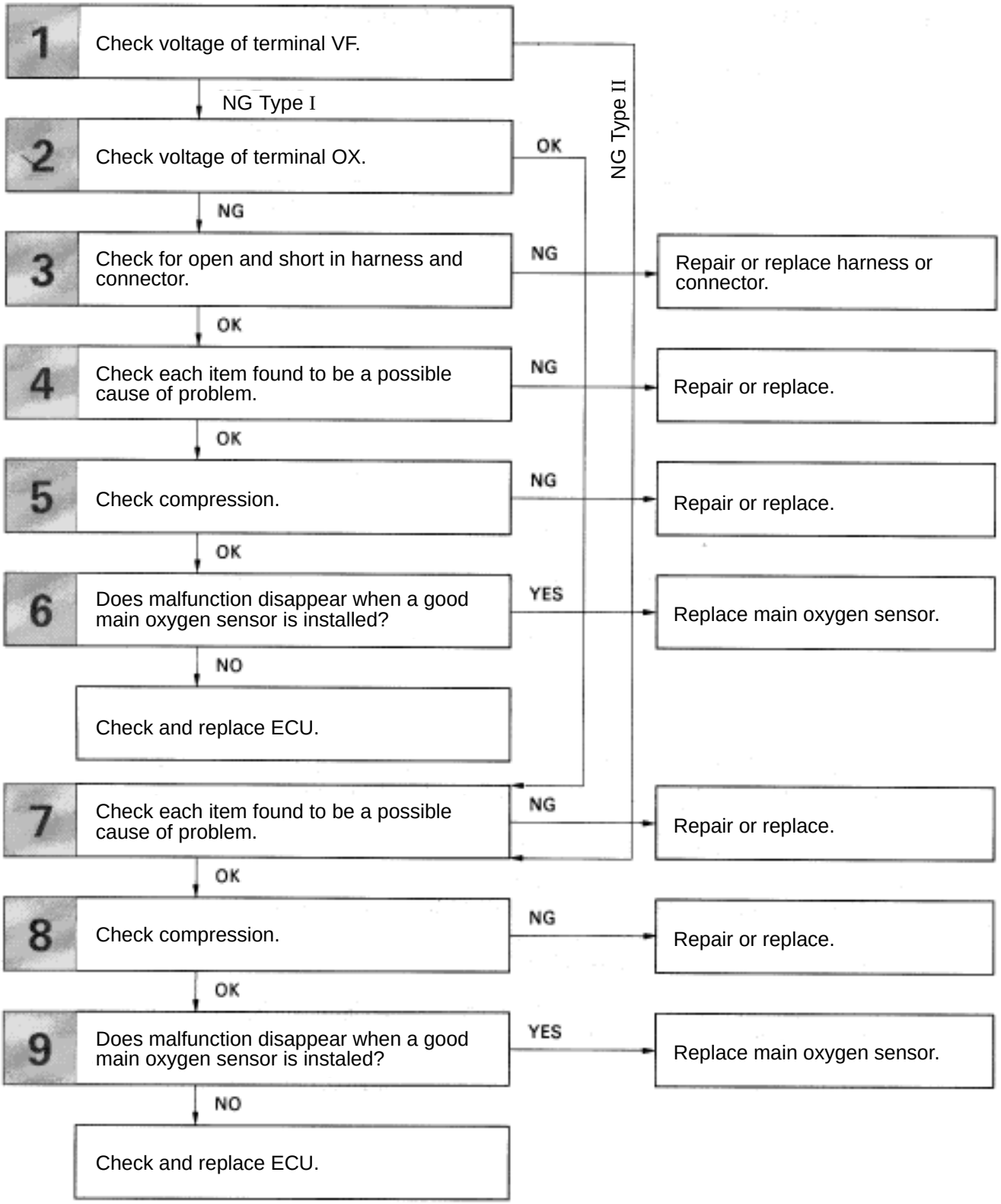

WIRING DIAGRAM

Refer to page TR–62 for the WIRING DIAGRAM.

WhereEverybodyKnowsYourName

INSPECTION PROCEDURE

1 Check voltage between terminals VF1, VF2 and E1 of check connector.

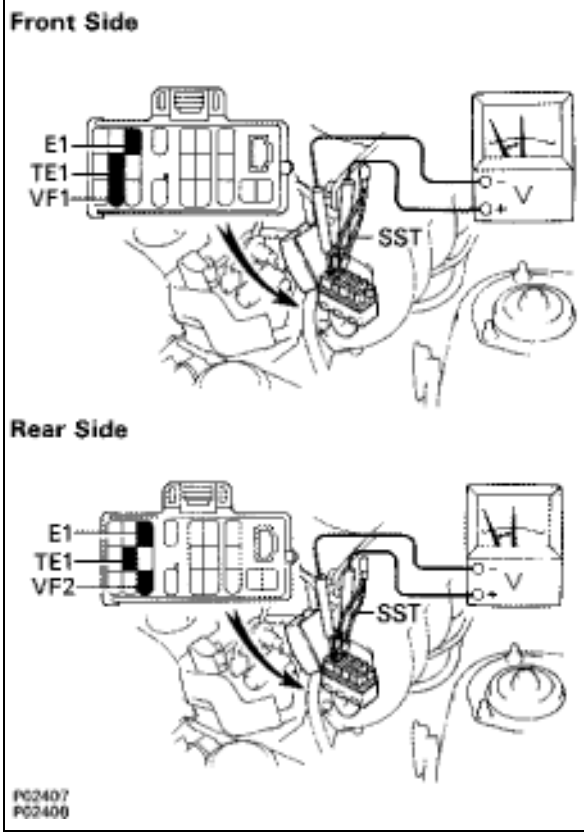

P
1. Warm up engine at normal operating temperature
2. Connect terminals TE1 and E1 of check connector.
3. Connect positive prove to terminal VF1, VF2 and negative prove to terminal E1 of check connector.

C
1. Warm up the oxygen sensor by running engine at 2,500 rpm for about 2 minutes.
2. Then, maintaining engine at 2,500 rpm, count how many times needle of voltmeter fluctuates between 0 and 5 V.

Caution

Result	
Needle fluctuates of 8 times for every ten seconds	OK
Continue at 0 V	NG Type I
Continue at 5 V	NG Type II

NG Type I

NG Type II → **Go to step 2 .**

2 Check voltage between terminals OX1, OX2 and E1 of check connector.

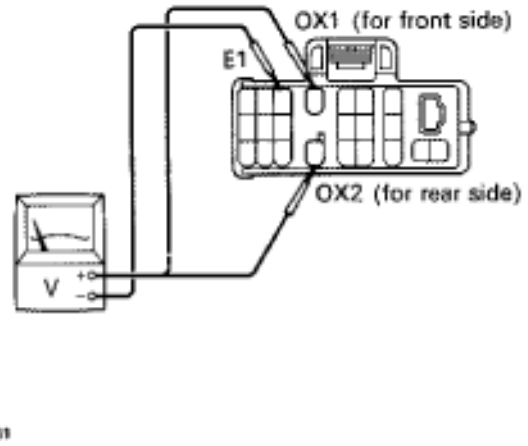

P Warm up engine at normal operating temperature.

C Measure voltage between terminals OX1, OX2 and E1 of check connector when engine is suddenly raced to full throttle.

OK **The voltage should be 0.5 V or higher at least once.**

Hint Perform inspection within 1 second.

NG

OK → **Go to step 2 .**

WhereEverybodyKnowsYourName

3	**Check for open and short in harness and connector between engine (& ECT) ECU and main oxygen sensor, engine (& ECT) ECU and check connector (See page IN–27).**

OK

NG → **Repair or replace harness or connector.**

4	**Check each item found to be a possible cause of problem.**

Check each circuit found to be a possible cause of trouble according to the results of the check in ▼ or ⑩. The numbers in the table below show the order in which the checks should be performed.

Main oxygen sensor signal from either side continues at 0 V.	Main oxygen sensor signals from both sides continue at 0 V.	Possible Cause	See page
1		Faulty sensor installation.	–
3		Injector circuit	TR–128
2	3	Misfire	IG–6
4		Valve timing	EM–22
	1	Air leakage	FI–7
	2	Fuel system	TR–110
	6	Characteristics deviation in air flow meter.	TR–82
	4	Characteristics deviation in water temp. sensor.	TR–64
	5	Characteristics deviation in intake air temp. sensor.	TR–68

OK

NG → **Repair or replace.**

5	**Check compression (See page EM–22).**

OK

NG → **Repair or replace.**

6	**Does malfunction disappear when a good main oxygen sensor is installed?**

NG

YES → **Replace main oxygen sensor.**

Check and replace engine (& ECT) ECU.

WhereEverybodyKnowsYourName

7 **Check each item found to be a possible cause of problem.**

Check each circuit found to be a possible cause of trouble according to the results of the check in ▼. The numbers in the table below show the order in which the checks should be performed.

Main oxygen sensor signal from either side continues at 5 V.	Main oxygen sensor signals from both sides continue at 5 V.	Main oxygen sensor signals from both sides are normal.	Possible Cause	See page
1		7	Injector circuit	TR–128
		3	Misfire	IG–6
2		4	Valve timing	EM–22
		1	Air leakage	FI–7
	1	2	Fuel system	TR–110
	4	8	Characteristics deviation in air flow meter.	TR–82
	2	5	Characteristics deviation in water temp. sensor.	TR–64
	3	6	Characteristics deviation in intake air temp. sensor.	TR–68

OK

NG **Repair or replace.**

8 **Check compression (See page EM–22).**

OK

NG **Repair or replace.**

9 **Does malfunction disappear when a good main oxygen sensor is installed?**

NG

YES **Replace main oxygen sensor.**

Check and replace engine (& ECT) ECU.

WhereEverybodyKnowsYourName

Diag. Code 24 | Intake Air Temp. Sensor Circuit

CIRCUIT DESCRIPTION

The intake air temp. sensor is built into the air flow meter and senses the intake air temperature.
The structure of the sensor and connection to the ECU is the same as in the water temp. sensor shown on page TR–68.
If the ECU records the diagnostic code ”24”, it operates the fail safe function, keeping the intake air temperature at a constant 20°C (68°F).

Code No.	Diagnostic Code Detecting Condition	Trouble Area
24	Open or short in intake air temp. sensor circuit for 0.5 sec. or more.	▼Open or short in intake air temp. sensor circuit. ▼Intake air temp. sensor ▼ECU

DIAGNOSTIC CHART

HINT: If diagnostic codes ”22” (water temperature sensor circuit), ”24” (intake air temperature sensor circuit) and ”41” (throttle position sensor circuit) are output simultaneously, E2 (sensor ground) may be open.

1. Check voltage of sensor.
   - OK → Check for momentary interruption (See page TR–23).
   - NG ↓
2. Check resistance of sensor.
   - NG → Replace water temp. sensor.
   - OK ↓
3. Check for open and short in harness and connector between ECU and water temp. sensor.
   - NG → Repair or replace harness or connector.
   - OK ↓

Check and replace ECU.

WIRING DIAGRAM

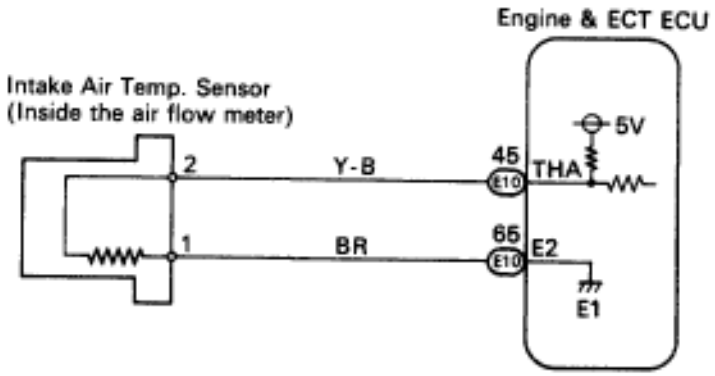

FI6448

WhereEverybodyKnowsYourName

INSPECTION PROCEDURE

1 **Check voltage between terminals THA and E2 of engine & ECT ECU connector.**

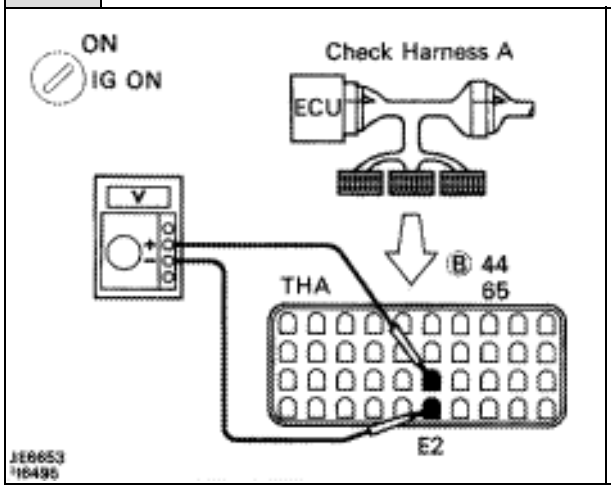

P (2) Connect the Check Harness A. (See page TR–30)

(2) Turn ignition switch on.

C Measure voltage between terminals THA and E2 and engine & ECT ECU connector.

OK

Intake air temp. °C (°F)	Voltage
20 (68)	1 – 3 V
60 (140)	0.5 – 1.0 V

NG

OK **Check for momentary Intertuption (See page TR–23).**

2 **Check intake air temp. sensor.**

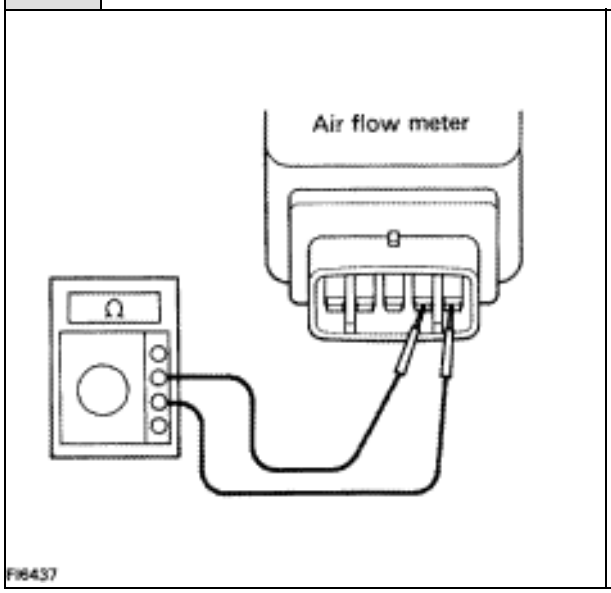

P Disconnect the air flow meter connector.

C Measure resistance between terminals 1 and 2 of air flow meter connector.

OK **Resistance is within Acceptable Zone on chart.**

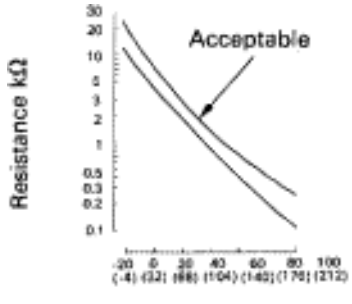

Intake air temp. °C (°F)	Resistance
20 (68)	2 – 3 kΩ
60 (140)	0.4 – 0.7 kΩ

OK

NG **Replace intake air temp. sensor (Replace air flow meter).**

3 **Check for open and short in harness and connector between engine & ECT ECU and intake air temp. sensor (See page IN–27).**

OK

NG **Repair or replace harness or connector.**

Check and replace engine & ECT ECU.

WhereEverybodyKnowsYourName

Diag. Code	25	Air–Fuel Ratio Lean Malfunction
	26	Air–Fuel Ratio Rich Malfunction

CIRCUIT DESCRIPTION

Refer to page TR–62 for the circuit description.

Code No.	Diagnostic Code Detecting Condition	Trouble Area
25 · 26	(1) Main oxygen sensor voltage is 0.45 V or less (lean) for 90 sec. under conditions (a) and (b). (2 trip detection logic)* (a) Coolant temp.: 60°C (140°F) or more. (b) Engine speed: 1,500 rpm or more.	▼Open or short in main oxygen sensor circuit ▼Main oxygen sensor ▼Ignition system ▼Water temp. sensor
	(2) Main oxygen sensor voltage is alternating above and below 0.45 V at 5 times par second or more under conditions (a) and (b). (2 trip detection logic)* (a) Engine speed: Idling (b) Coolant temp.: Between 60°C (140°F) and 95°C (203°F)	▼Open or short in injector circuit. ▼Fuel line pressure (injector blockage) ▼Air flow meter (air intake) ▼Engine ground bolt loose ▼Foreign object caught in valve
	(3) Difference of air–fuel ratio feedback compensation value between right and left banks is more than 10 percentage for 30 sec. or more under conditions (a) and (b). (2 trip detection logic)* (a) Engine speed : 2,000 rpm or more. (b) Coolant temp.: Between 60°C (140°F) and 95°C (203°F)	▼Fuel line pressure (injector leak, blockage) ▼Mechanical system malfunction (skipping teeth of timing belt) ▼Ignition system

*: See page TR–21.

WhereEverybodyKnowsYourName

— CIRCUIT DESCRIPTION (Cont'd) —

DIAGNOSIS CODE DETECTION DRIVING PATTERN

Purpose of the driving pattern.

(a) To simulate diag. code detecting condition after diag. code is recorded.

(b) To check that the malfunction is corrected when the repair is completed confirming that diag. code is no longer detected.

Malfunction: Open or Short in Main Oxygen Sensor

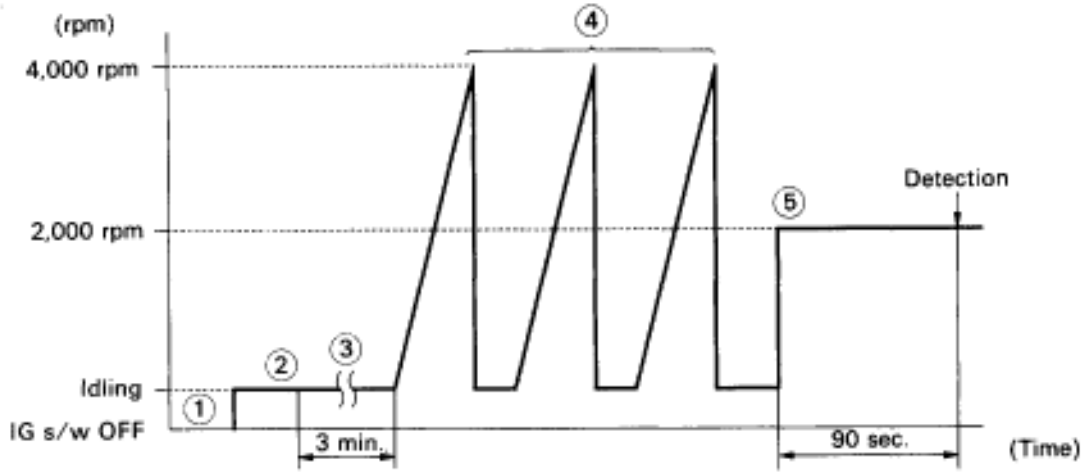

FI6465

❷ Initiate test mode (See page TR–12).

→ Start engine and warm up.

❹ After engine is warmed up, let it idle for 3 min.

③ Perform quick racing to 4,000 rpm three times by accelerator pedal.

⑤ After performing the racing in (4), perform racing at 2,000 rpm for 90 sec.

HINT: If a malfunction exists, the "CHECK" engine warning light will light up after 90 sec. from the start of racing.

NOTICE: If the conditions in this test are not strictly followed, detection of the malfunction will not be possible.

WhereEverybodyKnowsYourName

— CIRCUIT DESCRIPTION (Cont'd) —

DIAGNOSIS CODE DETECTION DRIVING PATTERN

Purpose of the driving pattern.

(a) To simulate diag. code detecting condition after diag. code is recorded.

(b) To check that the malfunction is corrected when the repair is completed confirming that diag. code is no longer detected.

Malfunction: Open or Short in Injector circuit, Injector Leak or Blockage, Loose E/G Earth Bolt.

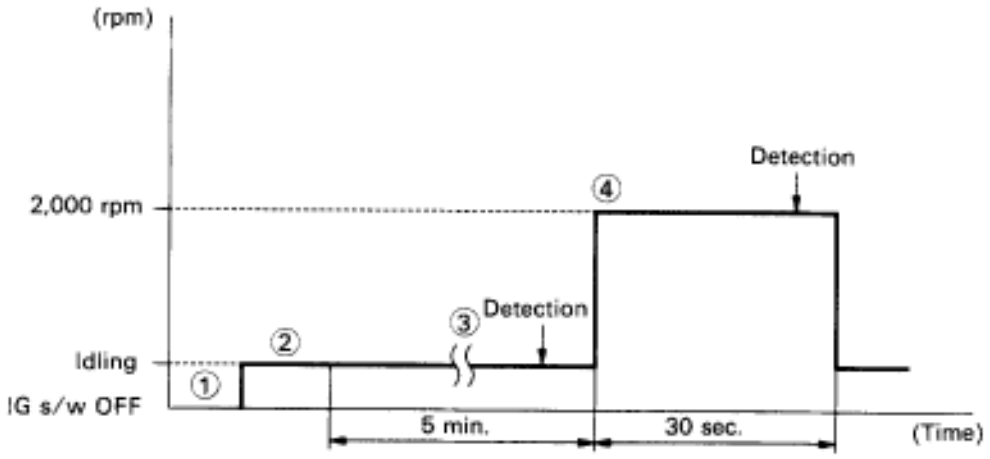

FI6483

❷ Initiate test mode (See page TR–12).

⑤ Start engine and warm up.

⑦ After engine is warmed up, let it idle for 5 min.
(After the engine is started, do not depress the accelerator pedal.)
If the malfunction is not detected during idling, perform racing without any load at approx. 2,000 rpm for 30 sec.

HINT: If a malfunction exists, the "CHECK" engine warning light will light up during the 5 min. idling period or within 30 sec. of starting racing.

NOTICE: If the conditions in this test are not strictly followed, detection of the malfunction will not be possible.

WhereEverybodyKnowsYourName

DIAGNOSTIC CHART

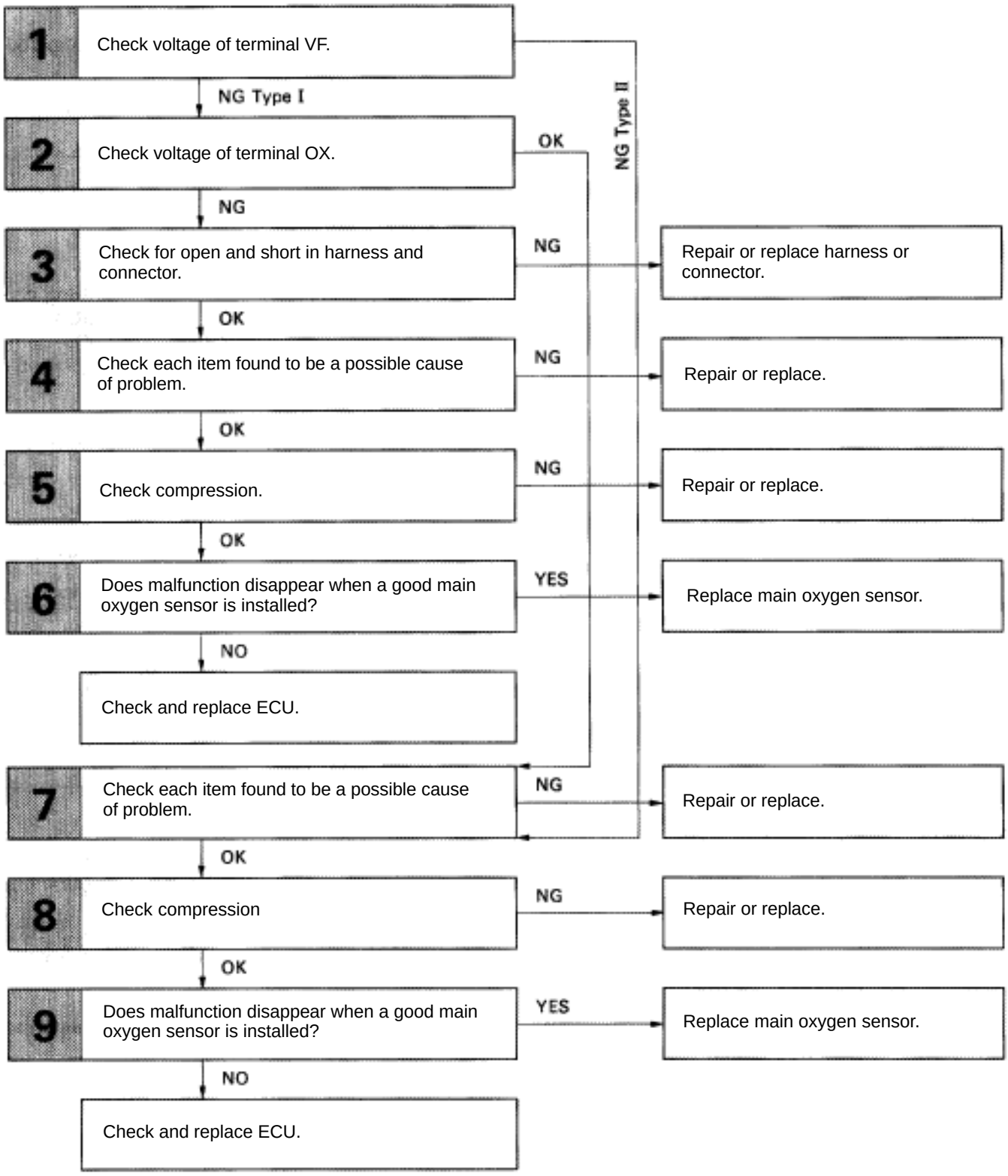

WIRING DIAGRAM

Refer to page TR–64 for the WIRING DIAGRAM.

WhereEverybodyKnowsYourName

INSPECTION PROCEDURE

1 **Check voltage between terminals VF1, VF2 and E1 of check connector.**

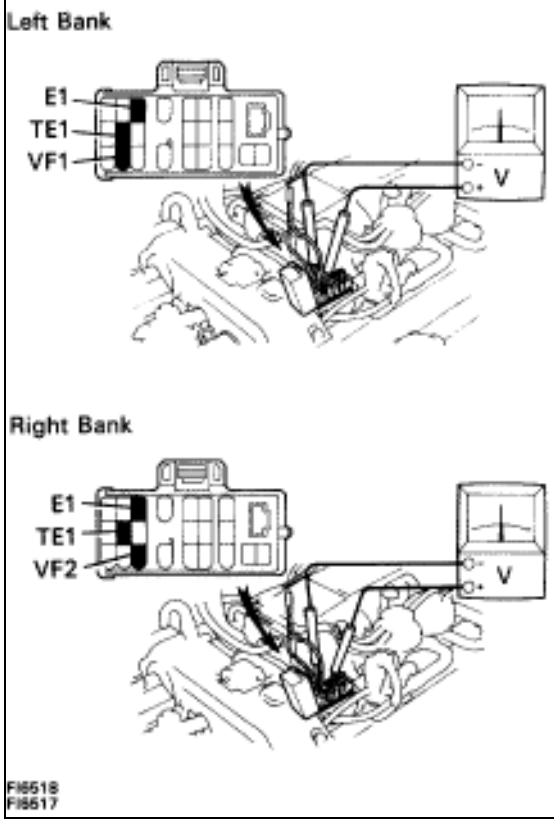

P (2) Warm up engine at normal operating temperature.
(2) Connect terminals TE1 and E1 of check connector.
(2) Connect positive prove to terminal VF1, VF2 and negative prove to terminal E1 of check connector.

C (2) Warm up the oxygen sensor by running engine at 2,500 rpm for about 2 minutes.
(2) Then, maintaining engine at 2,500 rpm, count how many times needle of voltmeter fluctuates between 0 and 5 V

Result:

Result	
Needle fluctuates of 8 times for every ten seconds	OK
Continue at 0 V	NG Type I
Continue at 5 V	NG Type II

NG Type I

NG Type II **Go to step [7].**

2 **Check voltage beween terminals OX1, OX2 and E1 of check connector.**

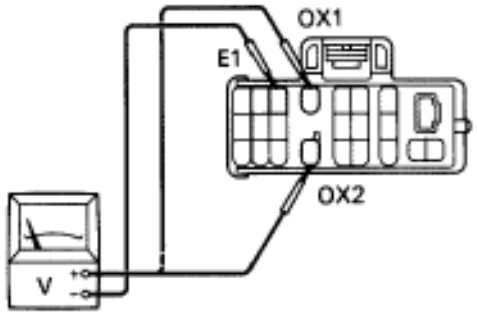

P Warm up engine at normal operating temperature.

C Measure voltage between terminals OX1, OX2 and E1 of check connector when sngine is suddenly raced to full throttle.

OK **The Voltage should be 0.5 V or higher at least once.**

Hint Perform inspection within 1 second

NG

OK **Go to step [7].**

WhereEverybodyKnowsYourName

3 **Check for open and short in harness and connector between engine & ECT ECU and main oxygen sensor, engine & ECT ECU and check connector (See page IN–27).**

OK

NG **Repair or replace harness or connector.**

4 **Check each item found to be a possible cause of problem.**

Check each circuit found to be a possible cause of trouble according to the results of the check in **1** or **2**. The numbers in the table below show the order in which the checks should be preformed.

Main oxygen sensor signal from either side continues at 0 V.	Main oxygen sensor signals from both sides continue at 0 V.	Possible Cause	See page
1		Faulty sensor installation.	–
3		Injector circuit	TR–132
2	3	Misfire	TR–6
4		Valve timing	TR–51
	1	Air leakage	TR–13
	2	Fuel system	TR–114
	6	Characteristics deviation in air flow meter.	TR–88
	4	Characteristics deviation in water temp. sensor.	TR–68
	5	Characteristics deviation in intake air temp. sensor.	TR–72

OK

NG **Repair or replace.**

5 **Check comparession (See page EM–30).**

OK

NG **Repair or replace.**

6 **Does malfunction disappear when a good main oxygen sensor is installed?**

NO

YES **Replace main oxygen sensor.**

check and replace engine & ECT ECU.

WhereEverybodyKnowsYourName

7 **Check each item found to be a possible cause of problem.**

Check each ciruit found to be a possible cause of trouble according to the results of the check in **1**. The numbers in the table below show the order in the which the checks should be performed.

Main oxygen sensor signal from either side continues at 5.0 V.	Main oxygen sensor signals from both sides continue at 5.0 V.	Main oxygen sensor signals from both sides are normal.	Possible Cause	See page
1		7	Injector circuit	TR–132
		3	Misfire	TR–6
2		4	Valve timing	TR–51
		1	Air leakage	TR–13
	1	2	Fuel system	TR–114
3	4		Cold start injector circuit	TR–88
	5	8	Characteristics deviation in air flow meter.	TR–68
	2	5	Characteristics deviation in water temp. sensor.	TR–72
	3	6	Characteristics deviation in intake air temp. sensor.	TR–72

OK

NG **Repair or replace.**

8 **Check compression (See page EM–30).**

OK

NG **Repair or replace.**

9 **Does malfunction disappear when a good main oxygen sensor is installed?**

NO

YES **Replace main oxygen sensor.**

Check and replace engine & ECT ECU.

WhereEverybodyKnowsYourName

–MEMO–

WhereEverybodyKnowsYourName

Diag. Code 27	Sub–Oxygen Sensor Circuit (Only for USA spec.)

CIRCUIT DESCRIPTION

The sub–oxygen sensor is installed on the exhaust pipe. Its construction and operation is the same as the main oxygen sensor on page TR–60.

Code No.	Diagnostic Code Detecting Condition	Trouble Area
27	(1) Open or short in heater circuit of sub–oxygen sensor for 0.5 sec. or more.	2 Open or short in heater circuit of sub–oxygen sensor. 2 Sub–oxygen sensor heater. 2 ECU
	(2) Main oxygen sensor signal is 0.45 V or more and sub–oxygen sensor signal is 0.45 V or less under conditions (a) (c). (2 trip detection logic) * (a) Coolant temp.: 80˚C (176˚F) or more. (b) Engine speed: 1,500 rpm or more. (c) Accel. pedal: Fully depressed for 2 sec. or more.	2 Open or short in sub–oxygen sensor circuit. 2 Sub–oxygen sensor 2 ECU

* : See page TR–25.

WhereEverybodyKnowsYourName

CIRCUIT DESCRIPTION (Cont'd)

DIAGNOSIS CODE DETECTION DRIVING PATTERN

Purpose of the driving pattern.

(a) To simulate diag. code detecting condition after diag. code is recorded.

(b) To check that the malfunction is corrected when the repair is completed confirming that diag. code is no longer detected.

Malfunction: Open or Short in Sub–Oxygen Sensor

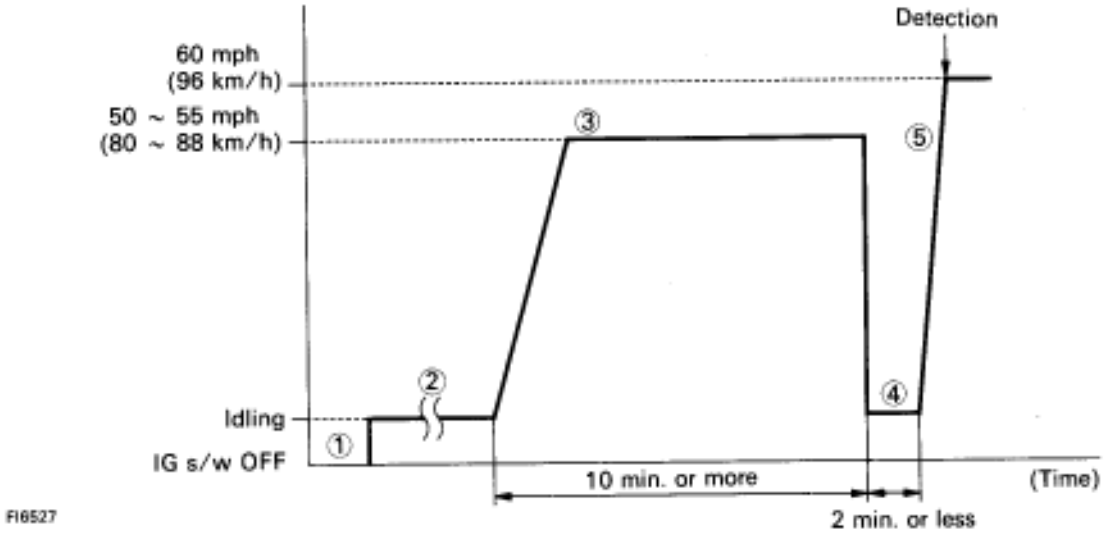

❷ Disconnect the EFI fuse (15 A) for 10 sec. or more, with IG switch OFF.
Initiate test mode (Connect terminal TE2 and E1 of check connector with IG switch OFF).

→ Start the engine and warm up with all ACC switch OFF.

❹ After the engine is warmed up, let it drive at 50 55 mph (80 88 km/h) for 10 min. or more.

③ After driving, stop at a safe place and perform idling for 2 min. or less.

⑤ After performing the idling in , perform acceleration to 60 mph (96 km/h) with the throttle valve fully open.

HINT: If a malfunction exists, the "CHECK" engine warning light will light up during step ⑤.

NOTICE: If the conditions in this test are not strictly followed, detection of the malfunction will not be possible.

WhereEverybodyKnowsYourName

DIAGNOSTIC CHART

HINT: When other codes are output in addition to 27 at the same time, check the circuits for other codes first.

1 Check voltage between terminal HT.
- OK → Check operation of sub–oxygen sensor heater (4)
- NG ↓

2 Check resistance of sub–oxygen sensor heater.
- NG → Replace sub–oxygen sensor.
- OK ↓

3 Check for open and short in harness and connector between EFI main relay and ECU.
- NG → Repair or replace harness or connector.
- OK ↓

Check and replace ECU.

4 Check operation of sub–oxygen sensor heater.
- OK → Replace sub–oxygen sensor.*
- NG ↓

Check and replace ECU.

*: In this case, oxygen sensor can be deteriorated.

WIRING DIAGRAM

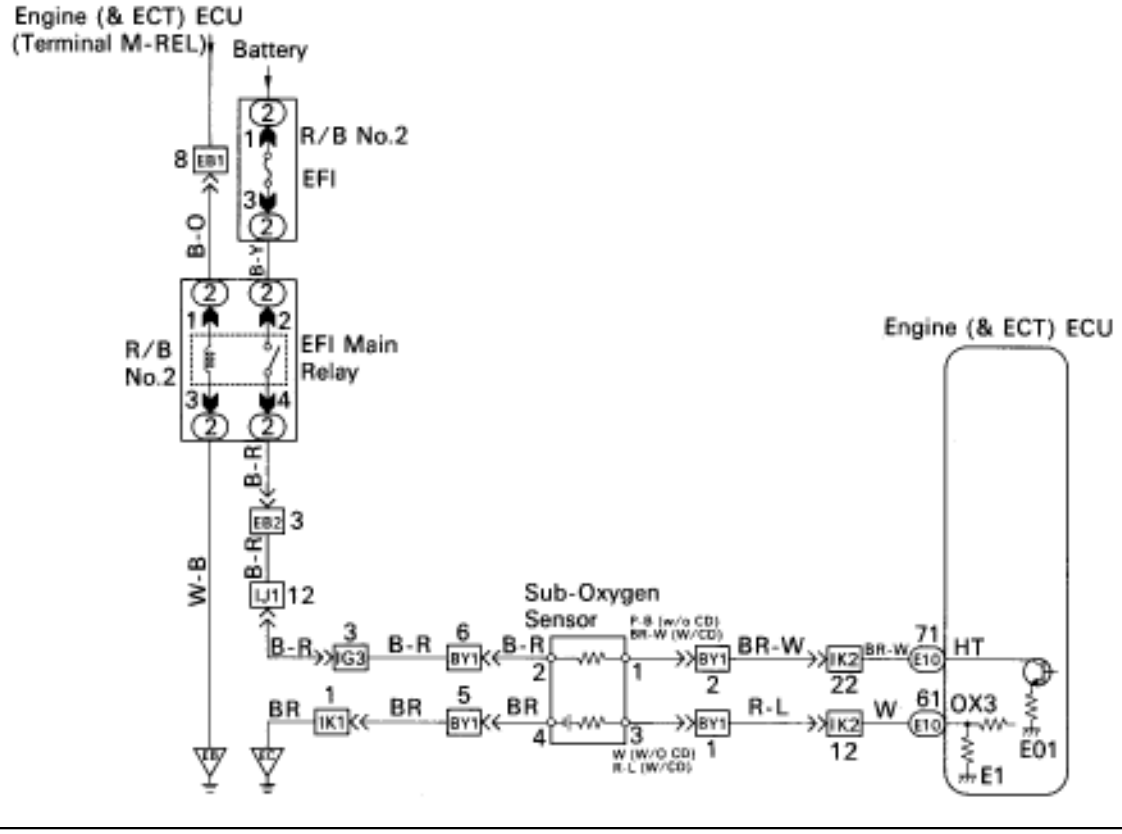

WhereEverybodyKnowsYourName

INSPECTION PROCEDURE

1	Check voltage between terminal HT of engine (&ECT) ECU connector and body ground.
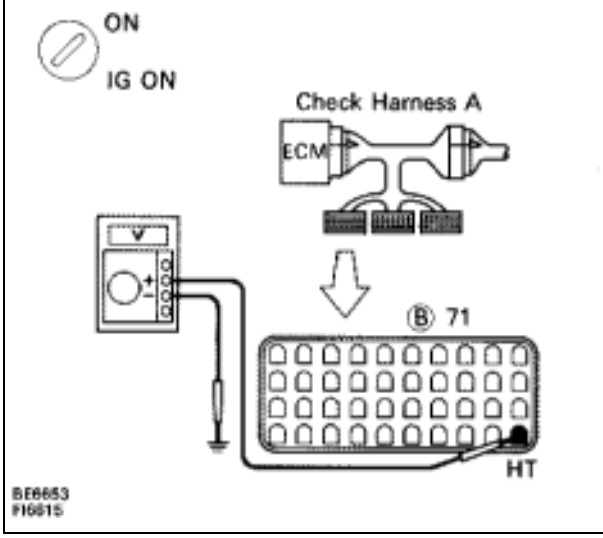	**P** 1. Connect the Check Harness A. (See page TR–34). 2. Turn ignition switch on. **C** Measure voltage between terminal HT of engine (& ECT) ECU connector and body ground. **OK** **Voltage: 10 – 14 V**

NG

OK → **Go to step ▼.**

2	Check sub–oxygen sensor heater.
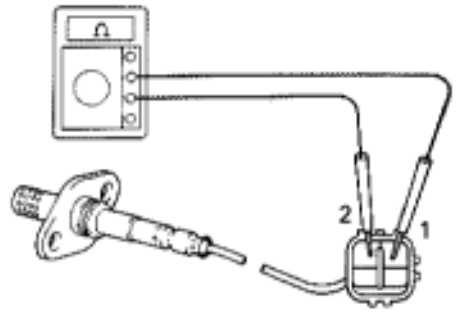	**P** Disconnect sub–oxygen sensor connector. (See page FI–78). **C** Measure resistance between terminals 1 and 2 of sub–oxygen sensor connector. **OK** **Resistance: 5.1 – 6.3 ? 20°C (68°F)**

OK

NG → **Replace sub–oxygen sensor.**

WhereEverybodyKnowsYourName

3	Check for open and short in harness and connector between EFI main relay and engine (& ECT) ECU (See page IN–27).

OK

NG → Repair or replace harness or connector.

Check and replace engine (& ECT) ECU.

4	Check voltage between terminal HT of engine (& ECT) ECU connector and body ground.

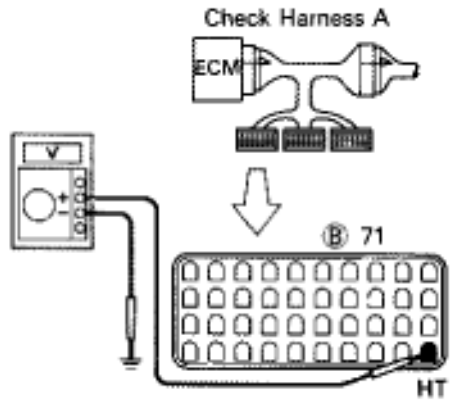

FI6615

P Warm up engine to normal operating temperature.

C Measure voltage between terminal HT of engine (& ECT) ECU connector and body ground, when engine is idling and racing at 3,500 rpm.

OK

	Voltage
Idling	0 V
Racing at 3,500 rpm	10 – 14 V

NG

OK → Replace sub–oxygen sensor.*
*: In this case, oxygen sensor can be deteriorated.

Check and replace engine (& ECT) ECU.

WhereEverybodyKnowsYourName

Diag. Code 27, 29 | Sub–Oxygen Sensor Circuit

— CIRCUIT DESCRIPTION

The sub–oxygen sensor is installed on the exhaust pipe. Its construction and operation is the same as the main oxygen sensor on page TR–62.

Code No.	Diagnostic Code Detecting Condition	Trouble Area
27 ▼ 29	(1) Open or short in heater circuit of sub–oxygen sensor for 0.5 sec. or more.	▼Open or short in heater circuit of sub–oxygen sensor ▼Sub–oxygen sensor heater. ▼ECU
	(2) Main oxygen sensor signal is 0.45 V or more and sub–oxygen sensor signal is 0.45 V or less under sonditions (a) and (b). (2 trip detection logic) * (a) Coolant temp.: 80°C (176°F) or more. (b) Accel. pedal: Fully depressed for 2 sec. or more.	▼Open or short in sub–oxygen sensor circuit. ▼Sub–oxygen sensor ▼ECU

*: See page TR–21.

HINT: Diag. code 27 is for the left bank sub–oxygen sensor circuit.
Diag. code 29 is for the right bank sub–oxygen sensor circuit.

WhereEverybodyKnowsYourName

— CIRCUIT DESCRIPTION (Cont'd) —

DIAGNOSIS CODE DETECTION DRIVING PATTERN

Purpose of the driving pattern.

(a) To simulate diag. code detecting condition after diag. code is recorded.

(b) To check that the malfunction is corrected when the repair is completed confirming that diag. code is no longer detected.

Malfunction: Open or Short in Sub–Oxygen Sensor

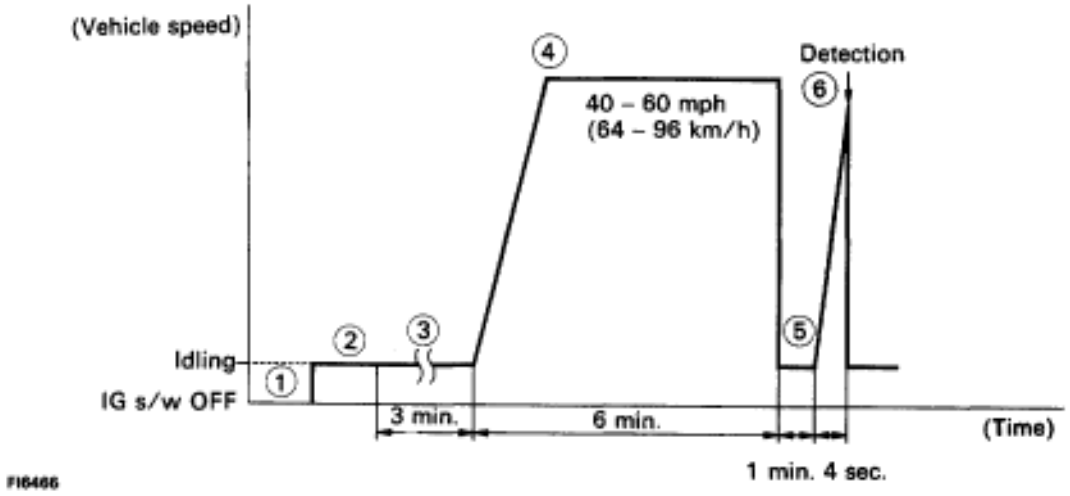

❷ Initiate test mode (See page TR–12).

→ Start engine and warm up.

❹ After engine is warmed up, let it idle for 3 min.

③ With the A/C ON and the transmission in D range (O/D OFF), drive at 40 –60 mph (64–96 km/h) for 6 min.

⑤ After the driving in , stop the vehicle.

⑤ Once the vehicle is stopped, within the next minute apply acceleration with the throttle fully open for 4 sec.

HINT: If a malfunction exists, the "CHECK" engine warning light will light up after full acceleration for 4 sec.

NOTICE: If the conditions in this test are not strictly followed, detection of the malfunction will not be possible.

WhereEverybodyKnowsYourName

DIAGNOSTIC CHART

HINT:

- When other codes are output in addition to 27 and 29 at the same time, check the circuits for other codes first.
- If diag. code 27 is displayed, check left bank sub–oxygen sensor circuit, and if 29 is displayed, check right bank sub–oxygen sensor circuit.

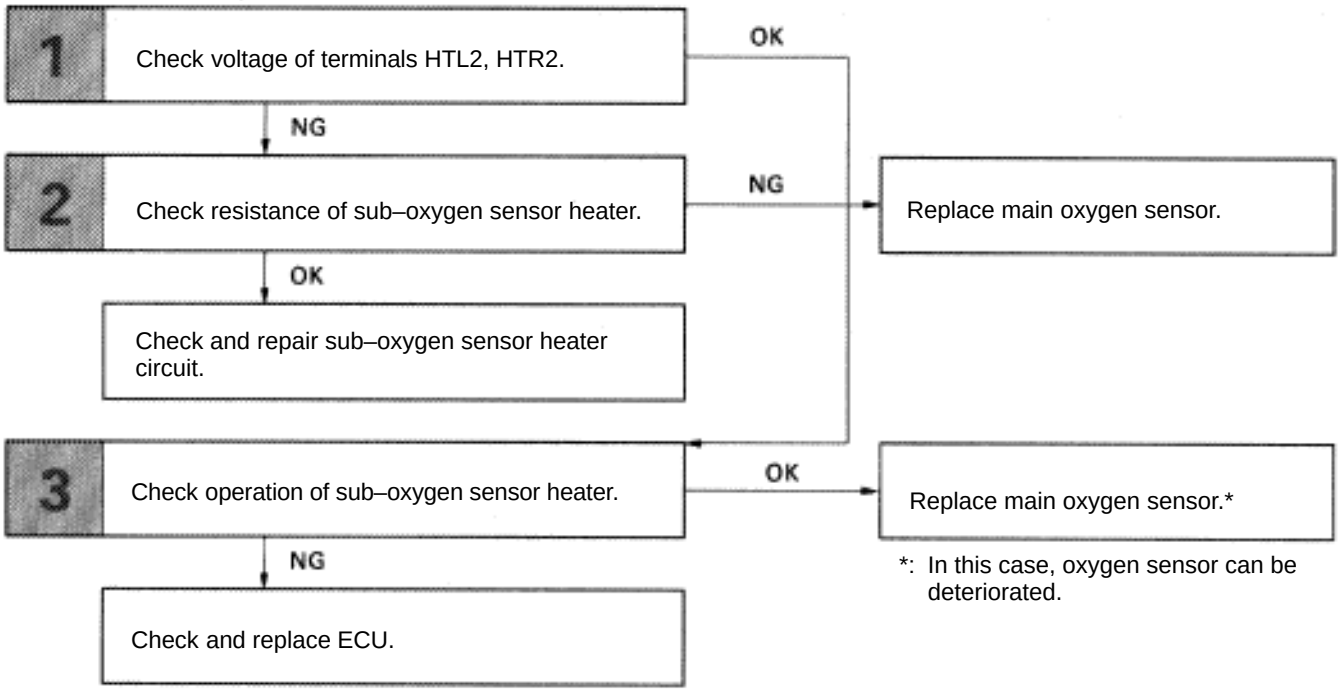

*: In this case, oxygen sensor can be deteriorated.

WIRING DIAGRAM

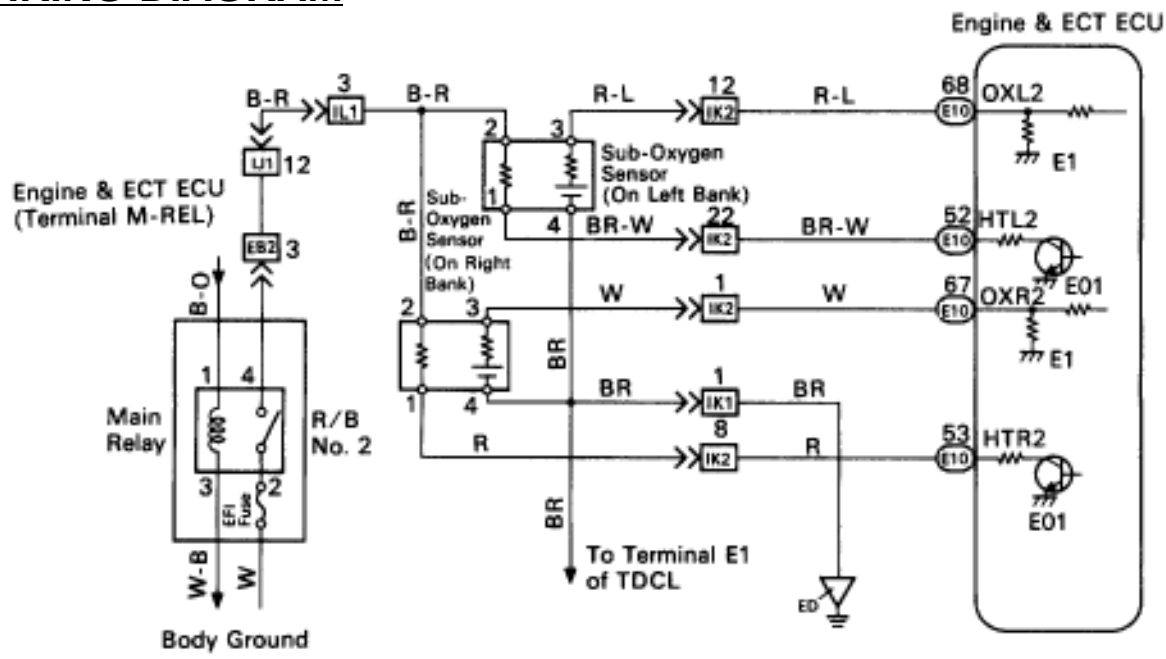

FI6453

WhereEverybodyKnowsYourName

INSPECTION PROCEDURE

1	Disconnect the engine & ECT ECU connector.

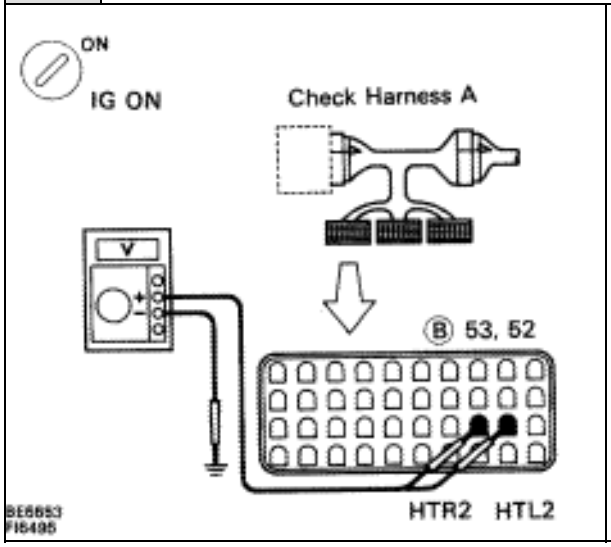

P (2) Connect the Check Harness A.
(See page TR–30)
(2) Disconnect engine & ECT ECU connector.
(2) Turn ignition switch on.

C Measure voltage between terminals HTL2, HTR2 of engine & ECT ECU connector and body ground.

OK **Voltage: 10 – 14 V**

NG

OK **Go to step [3].**

2	Check sub–oxygen sensor heater.

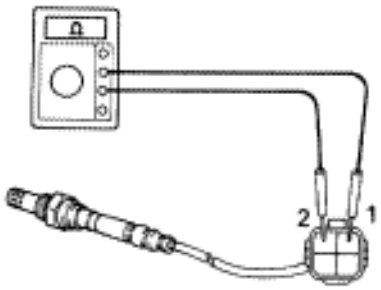

P Disconnect sub–oxygen sensor connector.

C Measure resistance between terminals 1 and 2 of sub–oxygen sensor connector.

OK **Resistance: 5.1 – 6.3 20°C (68°F)**

OK

NG **Replace sub–oxygen sensor.**

Check and repair harness or connector between main relay and sub–oxygen sensor, sub–oxygen sensor and engine & ECT ECU.

WhereEverybodyKnowsYourName

3 **Check voltage between terminals HTL2, HTR2 of engine & ECT ECU connector and body ground.**

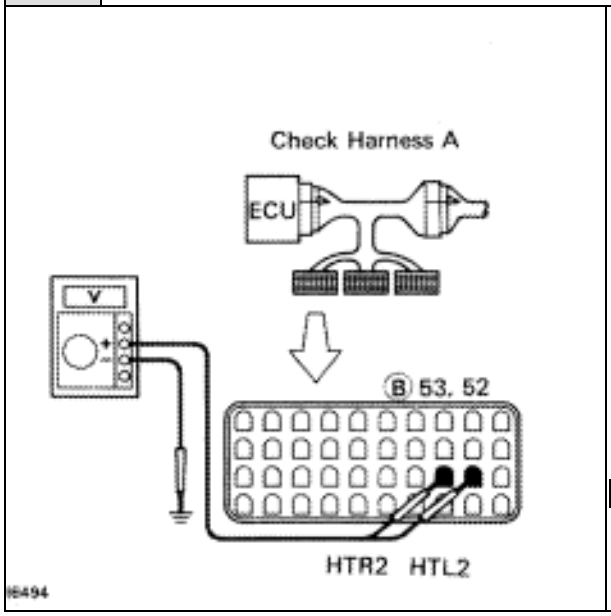

P (2) Connect engine & ECT ECU connector.
(2) Warm up engine to normal operating temperature.

C Measure voltage between terminals HTL2, HTR2 of engine & ECT ECU connector and body ground, when engine is idling and racing at 4,000 rpm.

OK

	Voltage
Idling	0 V
Racing at 4,000 rpm	10 – 14 V

Hint In the 4,000 rpm racing check , continue engine racing at 4,000 prm for approx. 20 seconds or more.

NG → **Check and replace engine & ECT ECU.**

OK → **Replace sub–oxygen sensor.***

*: In this case, oxygen sensor can be deteriorated.

WhereEverybodyKnowsYourName

–MEMO–

WhereEverybodyKnowsYourName

Diag. Code 35	High Altitude Compensator Sensor (HAC Sensor) Circuit

CIRCUIT DESCRIPTION

The HAC sensor is built into the ECU. This is a semiconductor pressure sensor with properties which cause its electrical resistance to change when stress is applied to the sensor's crystal (silicon) (piezo-electric effect). This sensor is used to detect the atmospheric (absolute) pressure and outputs corresponding electrical signals. Fluctuations in the air pressure cause changes in the intake air density, which can cause deviations in the air–fuel ratio. The signals from HAC sensor are used to make corrections for these fluctuations. If the ECU records diagnostic code "35", the fail safe function operates and the atmospheric pressure is set at a constant 101.3 kPa (760 mmHg, 29.92 in.Hg).

Code No.	Diagnostic Code Detecting Condition	Trouble Area
35	Open or short in HAC sensor circuit for 0.5 sec. or more.	ECU

DIAGNOSTIC CHART

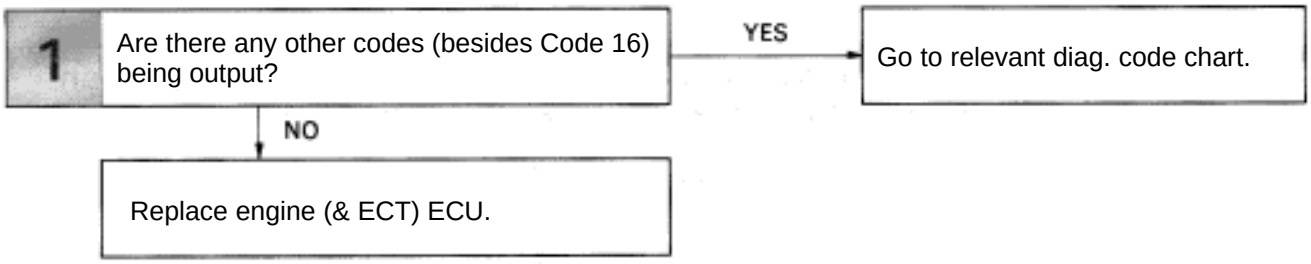

WhereEverybodyKnowsYourName

Diag. Code 31 | Air Flow Meter Circuit

CIRCUIT DESCRIPTION

As shown in the figure at right, when a pillar (Vortex generating body) is placed in the path of a uniform flow, vortices called Karman–Vortex are generated downstream of the object. Using this principle, a vortex generator is placed inside the air flow meter. By measuring the frequency of the vortices generated, the ECU can determine the volume of air flowing through the air flow meter. The vortices are detected by their exerting pressure on thin metal foil (mirror) surfaces and a light emitting element and light receptor (LED and photo transistor) positioned opposite the mirror which senses the vibrations in the mirror optically. The ECU uses these signals mainly for calculation of the basic injection volume and the basic ignition advance angle.

FI4504

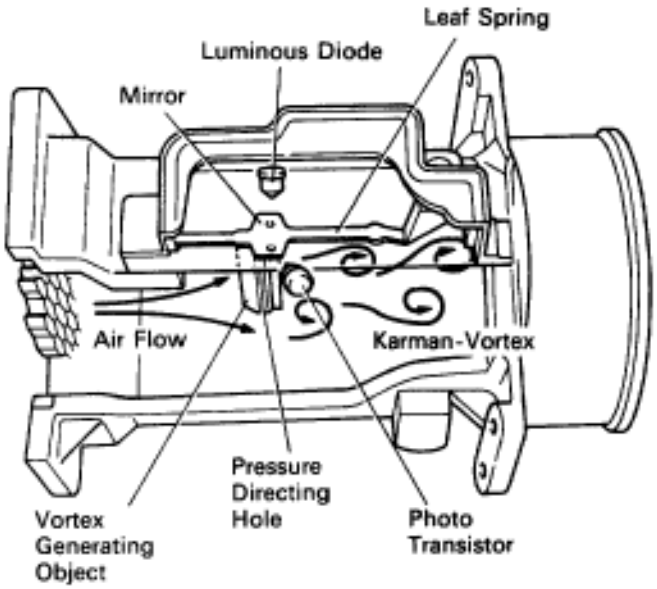

FI3045

Code No.	Diagnostic Code Detecting Condition	Trouble Area
31	All conditions below are detected. (a) No air-flow meter signal to ECU for 2 sec. when engine speed is above 300 rpm. (b) Engine stall.	• Open or short in air flow meter circuit • Air flow meter • ECU

If the ECU records diagnostic code ”31”, it enters fail safe mode (See page TR–22).

WhereEverybodyKnowsYourName

DIAGNOSTIC CHART

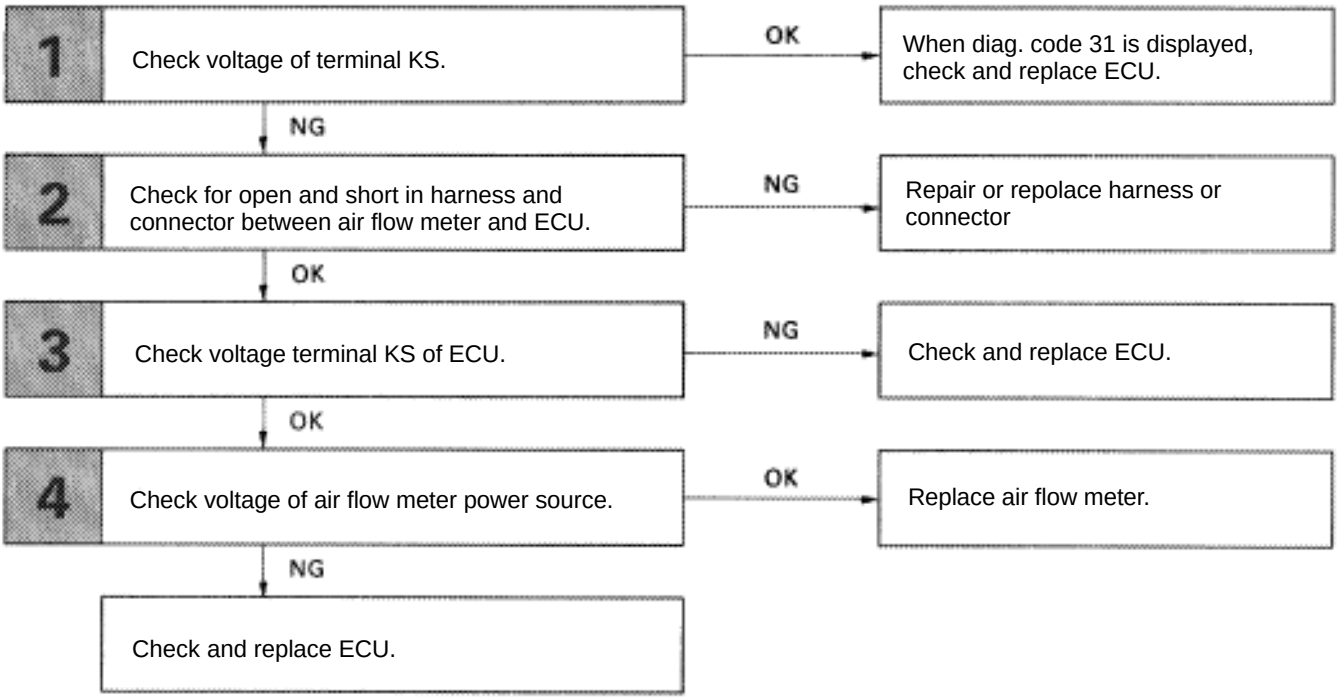

WIRING DIAGRAM

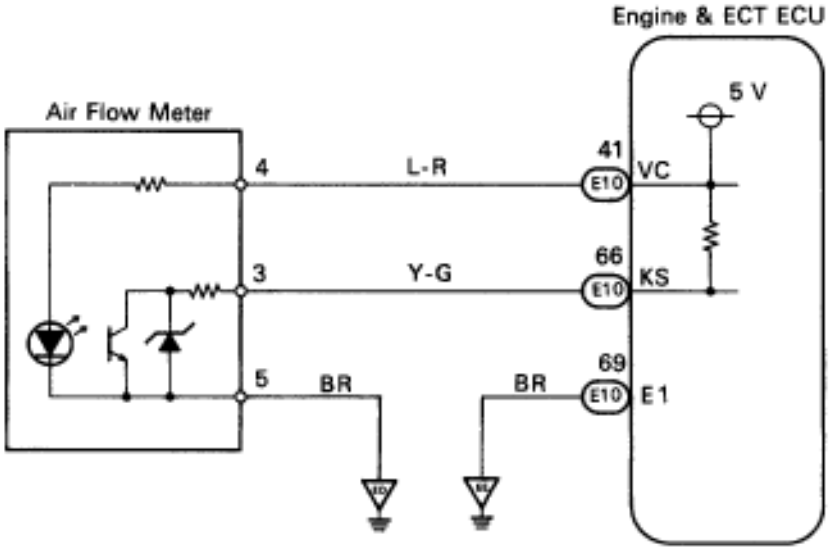

FI5458

WhereEverybodyKnowsYourName

INSPECTION PROCEDURE

1 **Check voltage between terminals KS and E1 of engine & ECT ECU connector.**

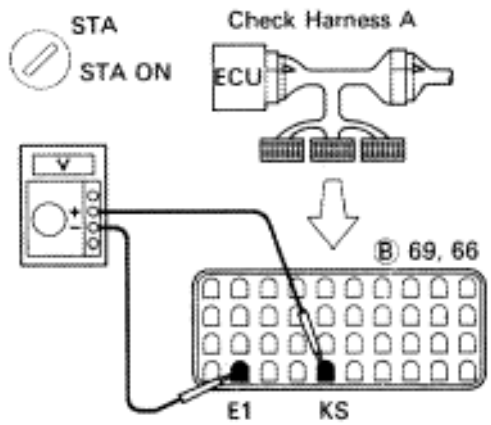

P Connect the check harness A.
(See page TR–30)

C Measure voltage between terminals KS and E1 of engine & ECT ECU connector while engine is cranked.

OK **Voltage:** **2.0 – 4.0 V**
(Neither 0 V nor 5 V)

Reference **INSPECTION USING OSCILLOSCOPE**

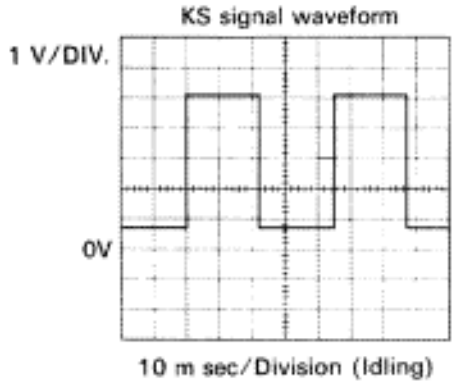

- During cranking or idling, measure between terminals KS and E1 of engine & ECT ECU.

HINT: The correct waveform appears as shown in the illustration on the left, with rectangle waves.

NG

OK **When diag. code 31 is displayed, check and replace engine & ECT ECU.**

2 **Check for open and short in harness and connector between engine & ECT ECU and air flow meter (See page IN–27).**

OK

NG **Repair or replace harness or connector.**

WhereEverybodyKnowsYourName

3	Disconnect air flow meter connector and check voltage between terminals KS and E1 of engine & ECT ECU.

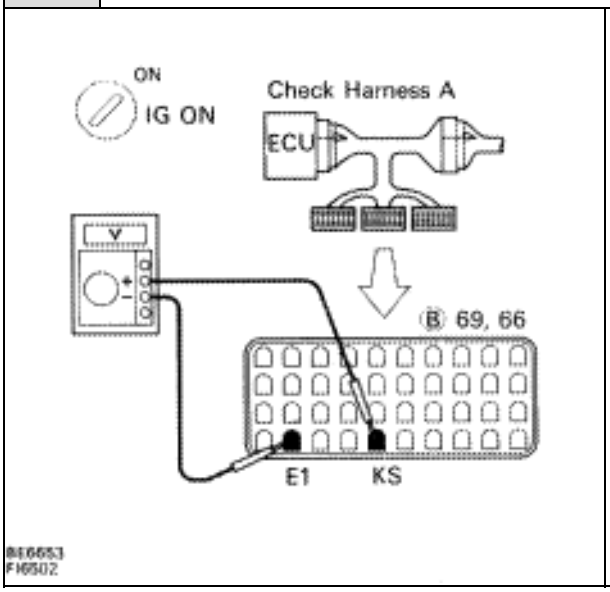

P Diconnect the air flow meter connector.
Turn ignition switch on.

C Measure voltage between terminals KS and E1 of engine & ECT ECU.

OK **Voltage: 4 – 6 V**

OK

NG → **Check and replace ECU.**

4	Diconnect air flow meter connector and check voltage between terminals VC and E1 of engine & ECT ECU.

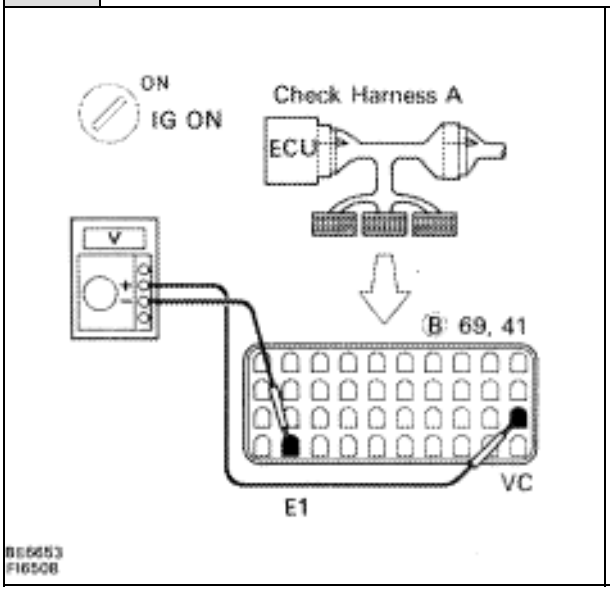

P Diconnect the air flow meter connector.
Turn ignition switch on.

C Measure voltage between terminals VC and E1 of engine & ECT ECU.

OK **Voltage: 4 – 6 V**

NG

OK → **Replace air flow meter.**

Check and replace engine & ECT ECU.

WhereEverybodyKnowsYourName

Diag. Code 35	High Altitude Compensator Sensor (HAC Sensor) Circuit

CIRCUIT DESCRIPTION

The HAC sensor is built into the ECU. This is a semiconductor pressure sensor with properties which cause its electrical resistance to change when stress is applied to the sensor's crystal (silicon) (piezoelectric effect). This sensor is used to detect the atmospheric (absolute) pressure and outputs corresponding electrical signals. Fluctuations in the air pressure cause changes in the intake air density, which can cause deviations in the air–fuel ratio. The signals from HAC sensor are used to make corrections for these fluctuations. If the ECU records diagnostic code "35", the fail safe function operates and the atmospheric pressure is set at a constant 760 mmHg.

Code No.	Diagnostic Code Detecting Condition	Trouble Area
35	Open or short detected in HAC sensor circuit for 0.5 sec. or more.	▼ECU

DIAGNOSTIC CHART

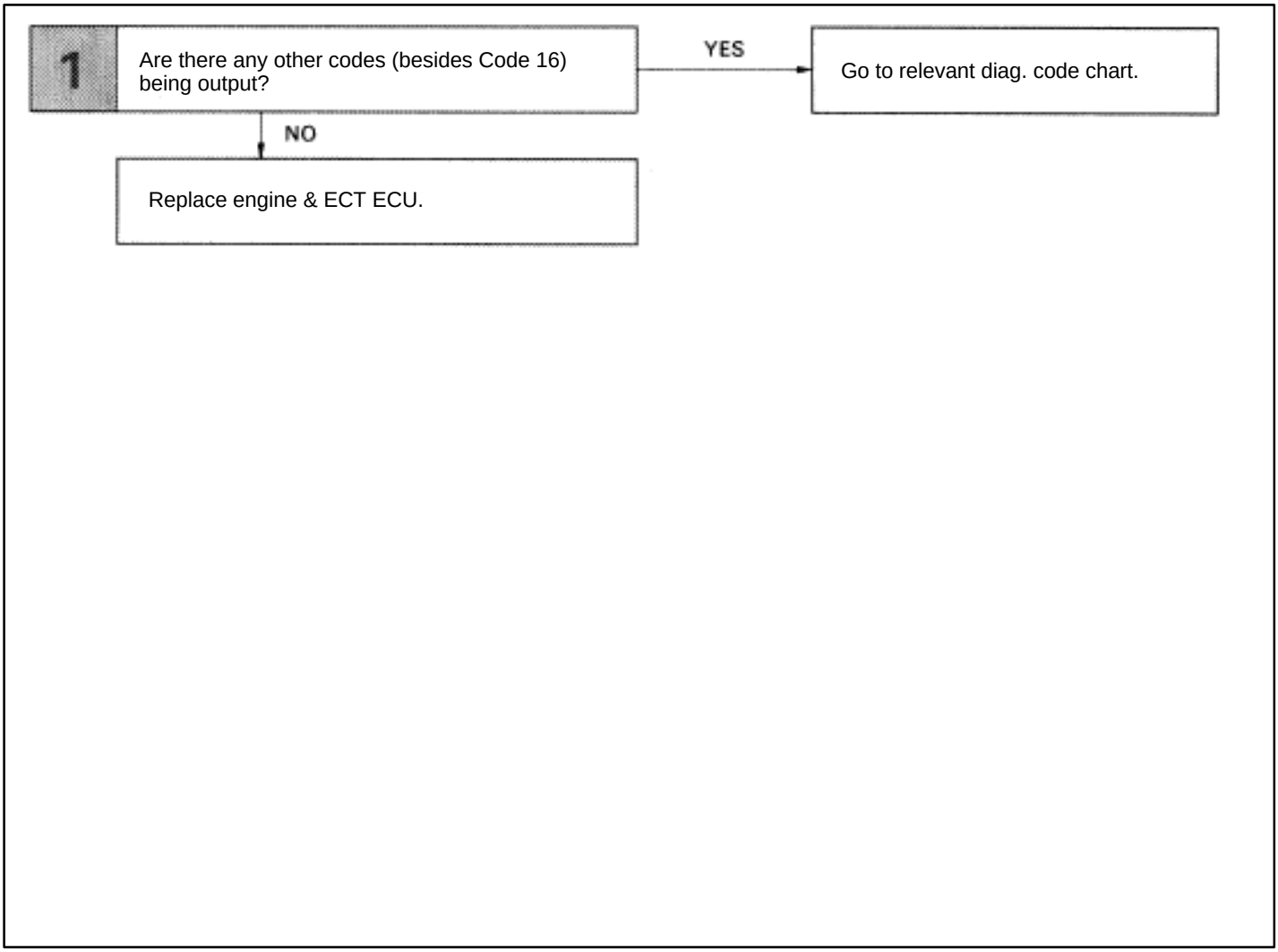

WhereEverybodyKnowsYourName

–MEMO–

WhereEverybodyKnowsYourName

Diag. Code 41, 47 (Sub–) Throttle Position Sensor Circuit

— CIRCUIT DESCRIPTION

The throttle position sensor is mounted in the throttle body and detects the throttle valve opening angle. When the throttle valve is fully closed, the IDL contacts in the throttle position sensor are on, so the voltage at the terminal IDL of the ECU become 0 V. At this time, a voltage of approximately 0.7 V is applied to the terminal VTA of the ECU. When the throttle valve is opened, the IDL contacts go off and thus the power source voltage of approximately 12 V in the ECU is applied to the terminal IDL of the ECU. The voltage applied to the terminal VTA of the ECU increases in proportion to the opening angle of the throttle valve and becomes approximately 3.5–5.0 V when the throttle valve is fully opened. The ECU judges the vehicle driving conditions from these signals input from the terminals VTA and IDL, and uses them as one of the conditions for deciding the air–fuel ratio correction, power increase correction and fuel–cut control etc. The sub–throttle position sensor is built and operates in the same way as the main throttle position sensor. This sensor is used for traction control. The sub–throttle valve is opened and closed by the sub–throttle actuator according to signals from the TRAC ECU to control the engine output.

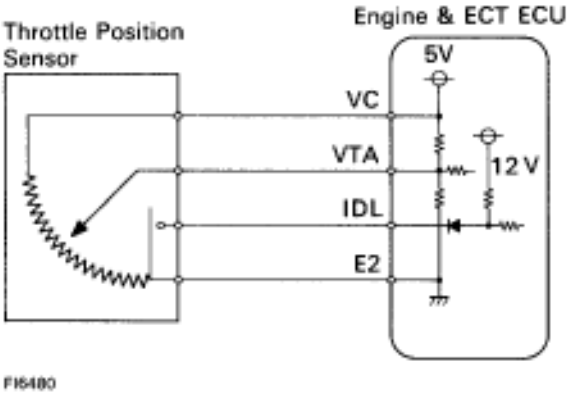

Code No.	Diagnostic Code Detecting Condition	Trouble Area
41	(1) Open or short in throttle position sensor circuit (VTA1) for 0.5 sec. or more.	▼Open or short in throttle position sensor circuit.
	(2) IDL1 contact is ON and VTA1 output exceeds 1.5 V for 0.5 sec. or more.	▼Throttle position sensor ▼ECU
47	(1) Open or short in sub–throttle position sensor circuit (VTA2) for 0.5 sec. or more.	▼Open or short in sub–throttle position sensor circuit.
	(2) IDL2 contact is ON and VTA2 output exceeds 1.5 V for 0.5 sec. or more.	▼Sub–throttle position sensor ▼ECU

HINT:

Diag. code 41 is for the throttle position sensor circuit.
Diag. code 47 is for the sub–throttle position sensor circuit.

- When the connector for the (sub–) throttle position sensor is disconnected, diagnostic code 41 or 47 is not displayed. Diagnostic code 41 or 47 is displayed only when there is an open or short in the VTA signal circuit of the (sub–) throttle position sensor.
- Signals from the (sub–) throttle position sensor are also input to the TRAC ECU, So when a malfunction occurs on the TRAC side, code 41 or 47 may be displayed.

WhereEverybodyKnowsYourName

DIAGNOSTIC CHART

HINT:

- If diag. code 41 is displayed, check throttle position sensor circuit; if diag. code 47 is displayed, check sub–throttle position sensor circuit.
- If diag. codes ”22” (water temperature sensor circuit), ”24” (intake air temperature sensor circuit) and ”41” (throttle position sensor circuit) are output simultaneously, E2 (sensor ground) may be open.

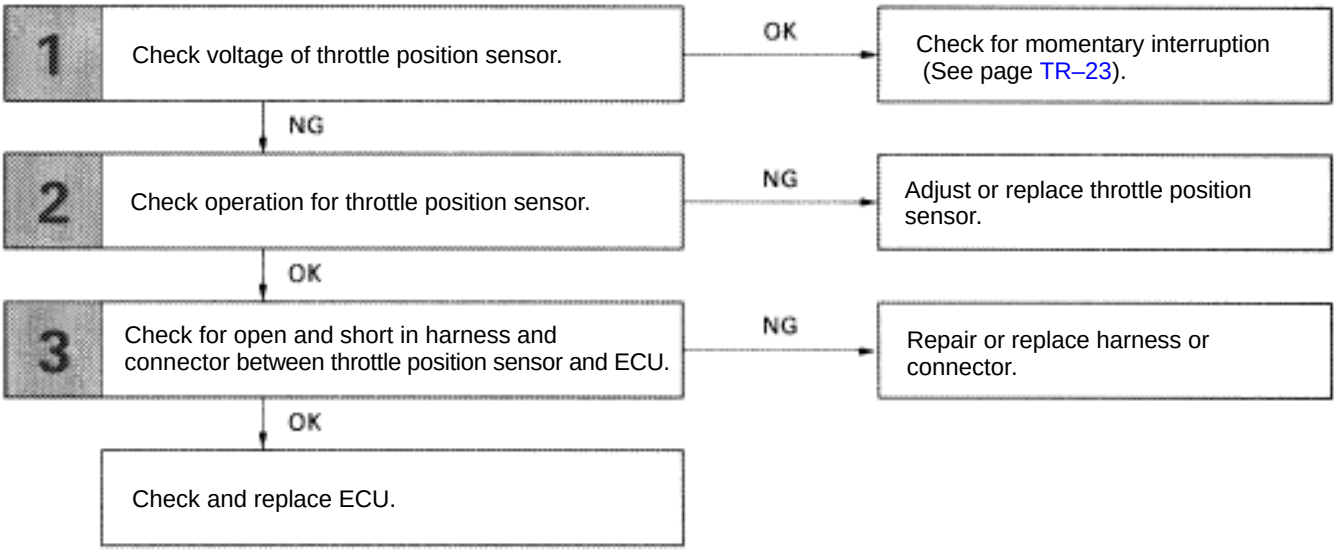

WIRING DIAGRAM

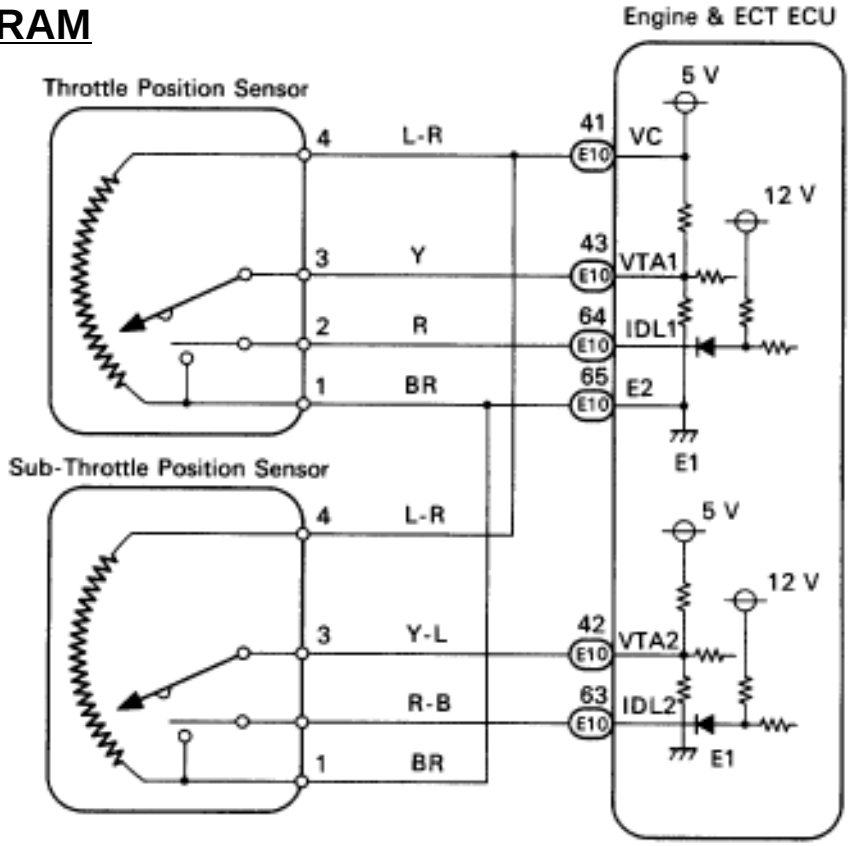

FI6478

WhereEverybodyKnowsYourName

INSPECTION PROCEDURE

HINT:

- If diag. code 41 is displayed, check throttle position sensor circuit. If diag. code 47 is displayed, check sub–throttle position sensor circuit.
- If diag. codes ”22” (water temperature sensor circuit), ”24” (intake air temperature sensor circuit) and ”41” (throttle position sensor circuit) are output simultaneously, E2 (sensor ground) may be open.

 # Check voltage between terminals VTA1, 2, IDL1, 2 and E2 of engine & ECT ECU connector.

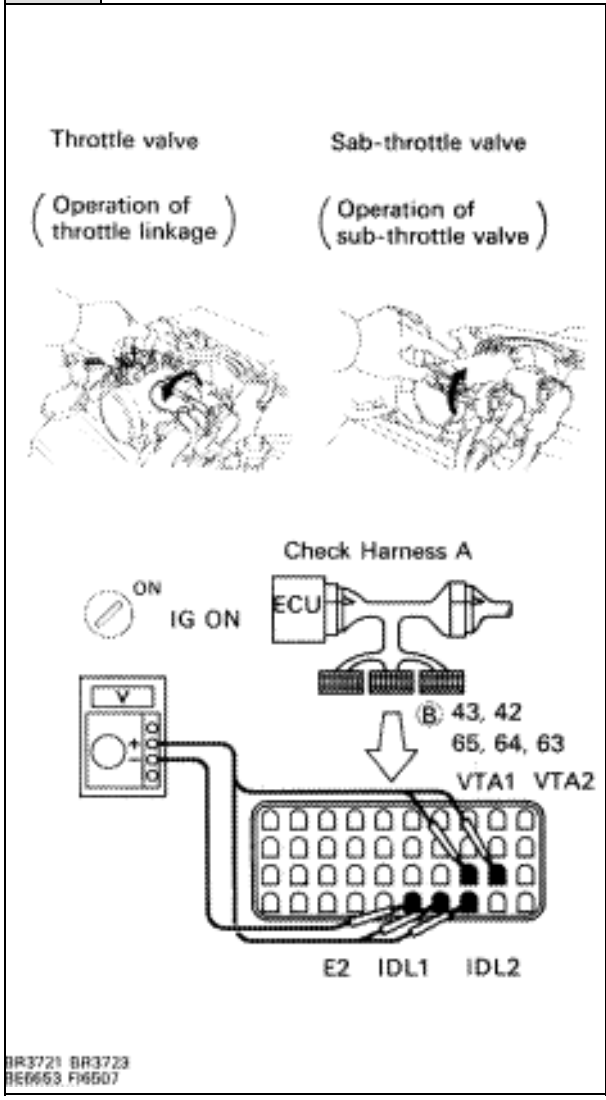

P (2) Connect the Check Harness A. (See page TR–30).

(2) Turn ignition switch on.

(2) For sub–throttle position sensor, remove intake air duct and disconnect sub–throttle valve step motor connector.

C Measure voltage between terminals VTA1, 2, IDL1, 2 and E2 of engine & ECT ECU connector when the (sub–) throttle valve is opened gradually from the closed condition.

OK

Terminal / Throttle Valve	VTA1, 2	IDL1, 2
Fully Closed	0.1 – 1.0 V	Below 1.0 V
Fully Open	3 – 5 V	10 – 14 V

Hint The voltage should increase steadily in proportion to the throttle valve opening angle.

NG

OK **Check for Momentary interruption (See page TR–23).**

Go to step [2].

WhereEverybodyKnowsYourName

2 **Check (sub–) throttle position sensor.**

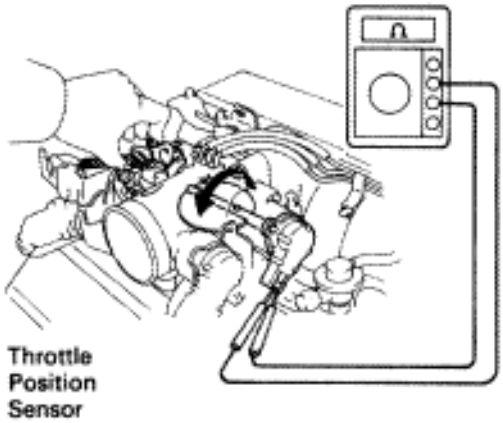

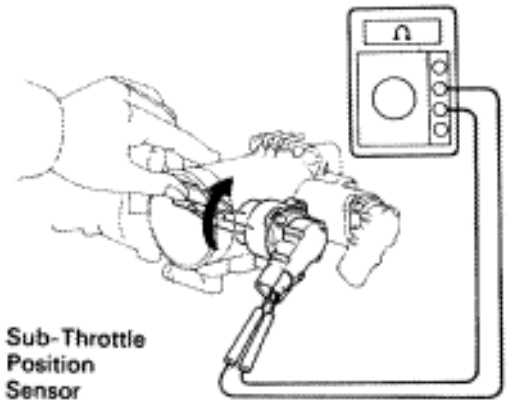

FI4746
FI4745

P (2) Remove intake air duct.

(2) Disconnect (sub–) throttle position sensor connector.

C Measure resistance between terminals 3, 2, and 1 of (sub–) throttle position sensor connector when the throttle valve is opened gradually from the closed condition.

OK

Terminal / Throttle Valve	3 – 1	2 – 1
Fully Closed	0.2 – 0.8 kΩ	Less than 0.5 kΩ
Fully Open	2.8 – 8.0 kΩ	1 MΩ or higher

Hint Resistance between terminals 3 and 1 should increase gradually in accordance with the throttle valve opening angle.

OK

NG **Adjust or replace (sub–) throttle position sensor (See page FI–73).**

3 **Check for open and short in harness and connector between engine & ECT ECU and (sub–) throttle position sensor (See page IN–27).**

OK

NG **Repair or replace harness or connector.**

Check and replace engine & ECT ECU.

WhereEverybodyKnowsYourName

Diag. Code 43 | Starter Signal Circuit

CIRCUIT DESCRIPTION

When the engine is cranked, the intake air flow is slow, so fuel vaporization is poor. A rich mixture is therefore necessary in order to achieve good startability. While the engine is being cranked, the battery voltage is applied to terminal STA of the ECU. The starter signal is mainly used to increase the fuel injection volume for the starting injection control and after–start injection control.

DTC No.	DTC Detecting Condition	Trouble Area
43	No starter signal to ECU.	▼Open or short in starter signal circuit. ▼Open or short in ignition switch or starter relay circuit. ▼ECU

DIAGNOSTIC CHART

HINT: This diagnostic chart is based on the premise that the engine is cranked normally. If the engine is not cranked, proceed to the matrix chart of problem symptoms on page TR–39.

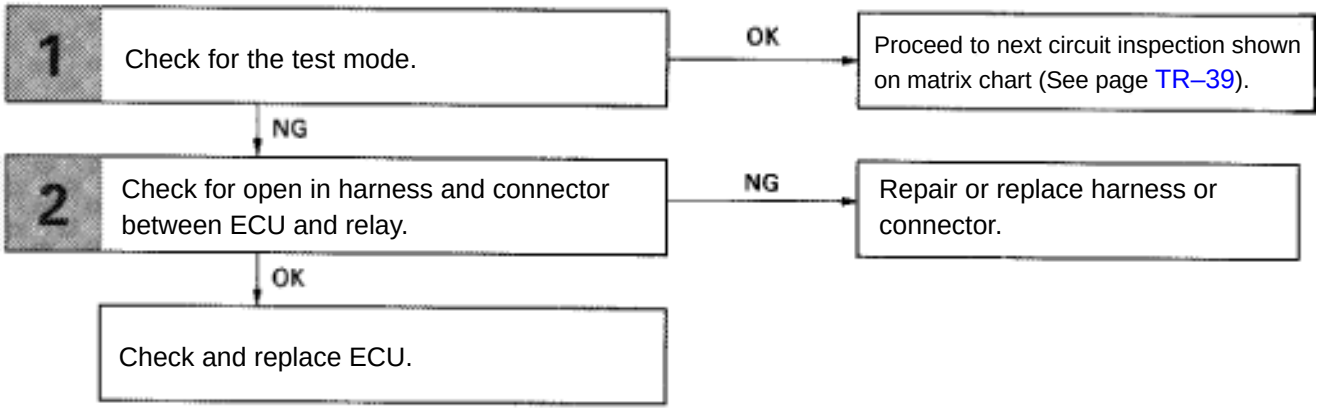

WIRING DIAGRAM

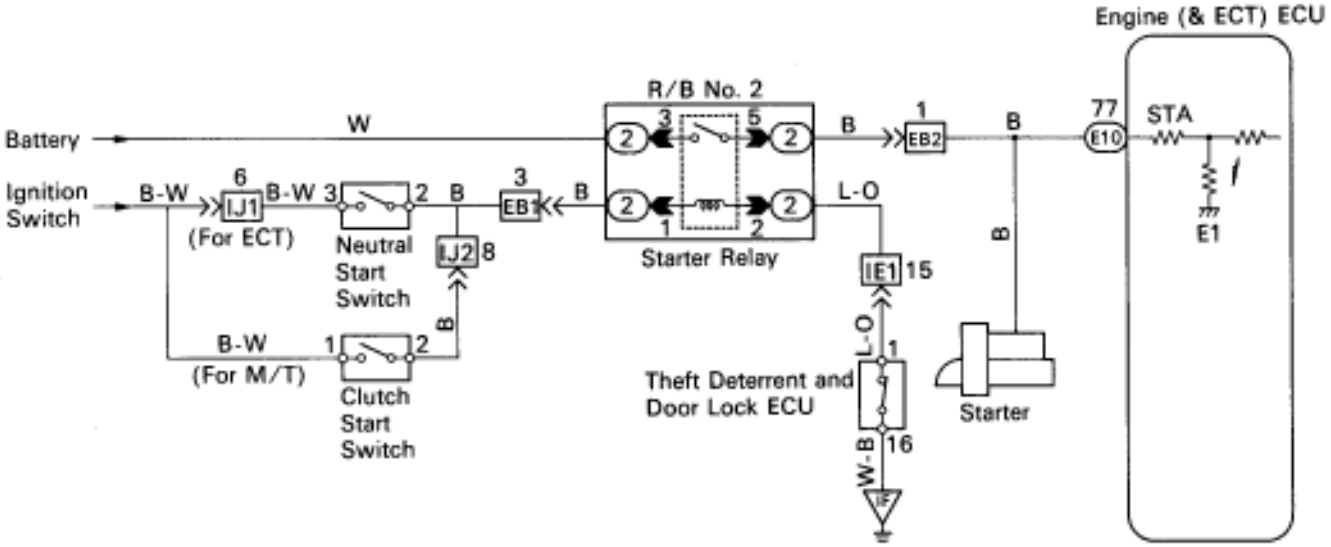

WhereEverybodyKnowsYourName

INSPECTION PROCEDURE

1 Check output condition of diag. code 43

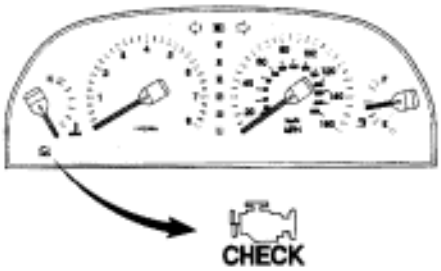

FI6433

P Setting the test mode.

6. Turn ignition switch OFF.
7. Connect terminals TE2 and E1 of TDCL.
8. Turn ignition switch ON.
   (Don't start the engine)
9. Connect terminals TE1 and E1 of TDCL.

C Check if code "43" is output by the "CHECK" engine warning light.

OK **Code "43" is output.**

C Start the engine.
Check if the code "43" disappear.

OK **Code "43" is not output.**

NG

OK **Proceed to next circuit inspection shown on matrix chart (See page TR–39).**

2 Check for open in harness and connector between engine (& ECT) ECU and starter relay (See page IN–27)

OK

NG **Repair or replace harness or connector.**

Check and replace engine (& ECT) ECU.

WhereEverybodyKnowsYourName

Diag. Code 42 — Vehicle Speed Sensor Signal Circuit

CIRCUIT DESCRIPTION

The No. 1 speed sensor outputs a 20–pulse signal for every revolution of the rotor shaft, which is rotated by the transmission output shaft via the driven gear. This signal is converted in the combination meter to 4–pulse signal by the pulse conversion circuit and then sent to the Engine & ECT ECU. The ECU determines the vehicle speed based on the frequency of these pulse signals.

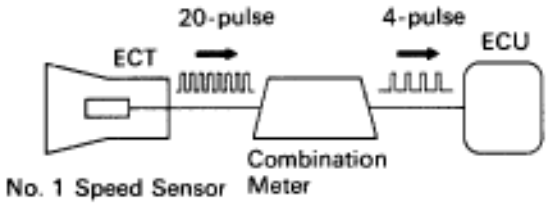

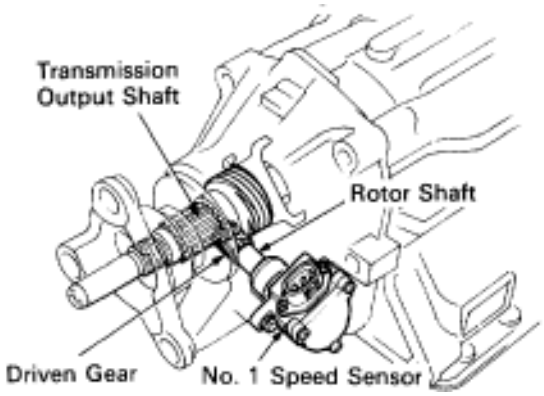

Code No.	Diagnostic Code Detecting Condition	Trouble Area
42	All conditions below are detected continuously for 8 sec. or more. (a) Vehicle speed signal: 0 km/h (0 mph) (b) Engine speed: 1,500 rpm or more (c) Neutral start switch (NSW): OFF	▼No. 1 speed sensor. ▼Combination meter. ▼Open or short in No. 1 speed sensor circuit. ▼ECU

HINT: In test mode, diag. code 42 is output when vehicle speed is 5 km/h (3 mph) or below.

DIAGNOSTIC CHART

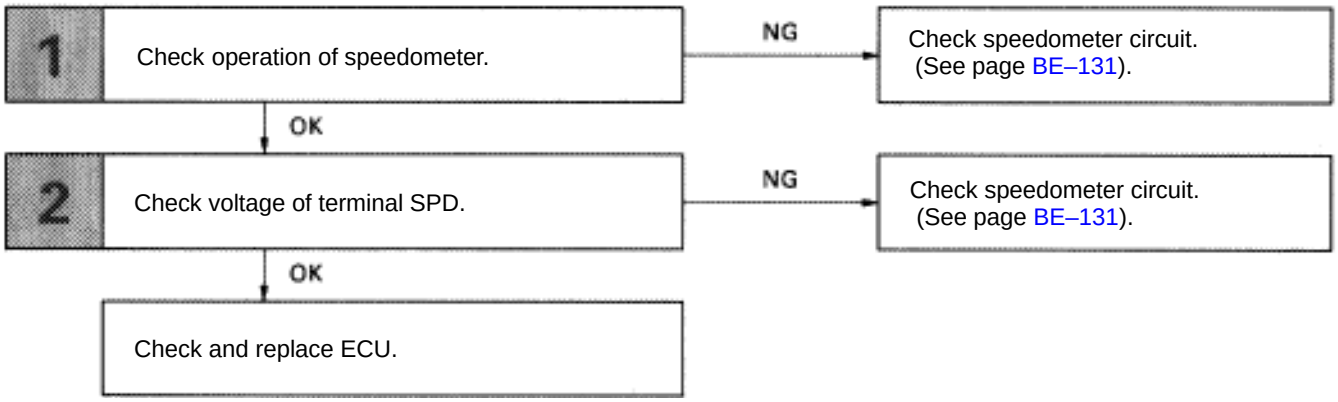

WIRING DIAGRAM

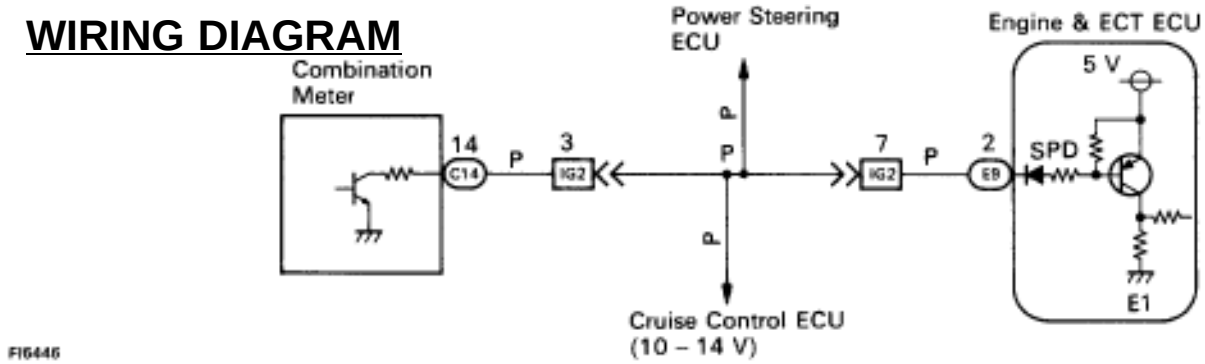

WhereEverybodyKnowsYourName

1	**Check operation of speedometer.**
C	Drive the vehicle and check if the operation of the speedometer in the combination meter is normal.
Hint	The No. 1 speed sensor is operating normally if the speedometer display is normal.

OK

NG **Check speedometer circuit. See combination meter troubleshooting on page BE–131.**

2	**Check voltage between terminal SPD of engine & ECT ECU connector and body ground.**

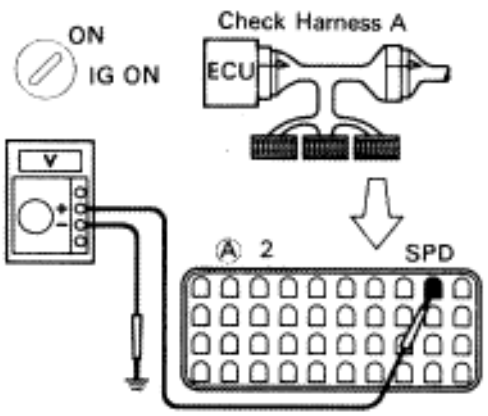

P
(2) Shift the shift level to N range.
(2) Jack up a read wheel on one side.
(2) Connect the Check Harness A. (See page TR–30)
(2) Turn ignition switch on.

C Measure voltage between terminal SPD of engine & ECT ECU connector and body ground when the wheel is turned slowly.

OK **Voltage is generated intermittently.**

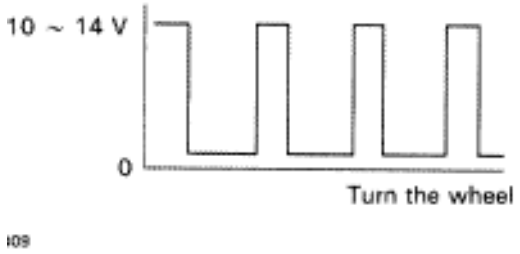

OK

NG **Check speedometer circuit. See combination meter troubleshooting on page BE–131.**

Check and replace engine & ECT ECU.

WhereEverybodyKnowsYourName

Diag. Code 43	Starter Signal Circuit

CIRCUIT DESCRIPTION

When the engine is cranked, the intake air flow is slow, so fuel vaporization is poor. A rich mixture is therefore necessary in order to achieve good startability. While the engine is being cranked, the battery voltage is applied to terminal STA of the ECU. The starter signal is mainly used to increase the fuel injection volume for the starting injection control and after–start injection control.

Code No.	Diagnostic Code Detecting Condition	Trouble Area
43	No starter signal to ECU	▼Open or short in starter signal circuit. ▼Open or short in ignition switch or main relay circuit. ▼ECU

DIAGNOSTIC CHART

HINT: This diagnostic chart is based on the premise that the engine is cranked normally. If the engine is not cranked, proceed to the matrix chart of problem symptoms on page TR–35.

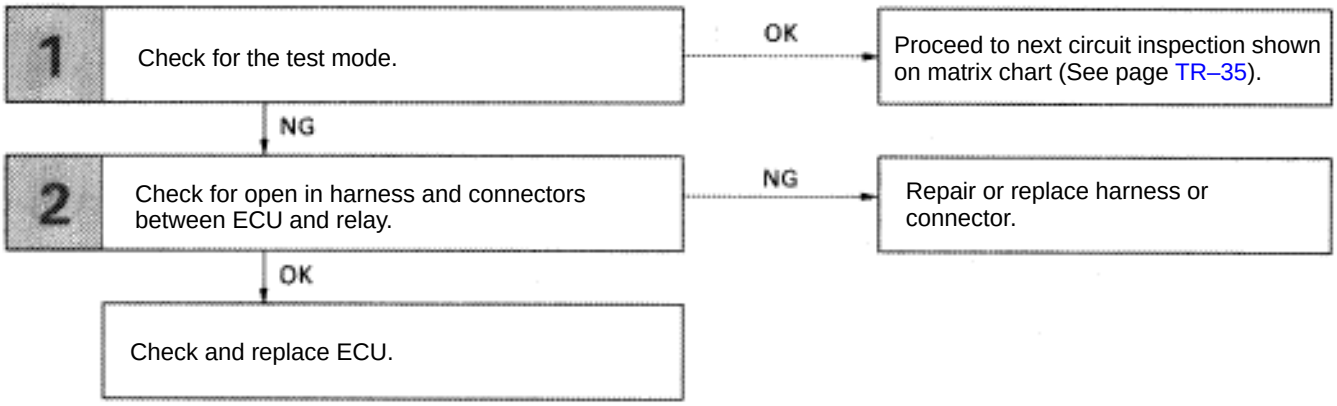

WIRING DIAGRAM

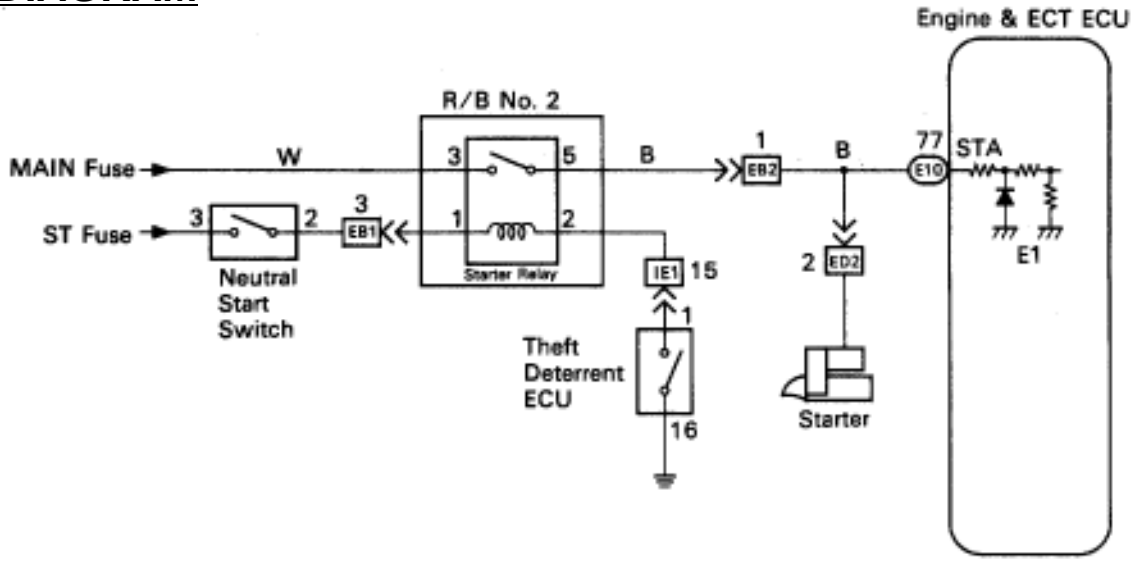

WhereEverybodyKnowsYourName

INSPECTION PROCEDURE

1	Check output condition of diag. code 43.

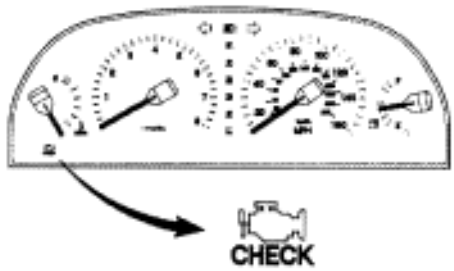

FI6433

P Setting the test mode.
(2) Turn ignition switch OFF.
(2) Connect terminals TE2 and E1 of TDCL.
(2) Turn ignition switch ON.
(Don't start the engine)
(2) Connect terminals TE1 and E1 of TDCL.

C Check if code "43" is output by the "CHECK" engine warning light.

OK **Code "43" is output.**

C Start the engine.
Check if the code "43" disapears.

OK **Code "43" is not output.**

NG

OK **Proceed to next circuit inspection shown on maxtric chart (See page TR–35).**

2	Check for open in harness and connectors between engine & ECT ECU and starter relay (See page IN–27).

OK

NG **Repair or replace harness or connector.**

Check and replace engine & ECT ECU.

WhereEverybodyKnowsYourName

Diag. Code 52,53,55 Knock Sensor Circuit

— CIRCUIT DESCRIPTION

Knock sensors are fitted one each to the right bank and left bank of the cylinder block to detect engine knocking. This sensor contains a piezoelectric element which generates a voltage when it becomes deformed, which occurs when the cylinder block vibrates due to knocking. If engine knocking occurs, ignition timing is retarded to suppress it.

Code No.	Diagnostic Code Detecting Condition	Trouble Area
52	No No. 1 knock sensor signal to ECU for 3 crank revolutions with engine speed between 1,600 rpm 5,200 rpm.	▼Open or short in No. 1 knock sensor circuit. ▼No. 1 knock sensor (looseness) ▼ECU
53	Engine control computer (for knock control) malfunction at engine speed between 650 rpm and 5,200 rpm.	▼ECU
55	No No. 2 knock sensor signal to ECU for 3 crank revolutions with engine speed between 1,600 rpm 5,200 rpm.	▼Open or short in No. 2 knock sensor circuit. ▼No. 2 knock sensor (looseness) ▼ECU

If the ECU detects the above diagnosis conditions, it operates the fail safe function in which the corrective retard angle value is set to the maximum value.

WhereEverybodyKnowsYourName

— CIRCUIT DESCRIPTION (Cont'd)

DIAGNOSIS CODE DETECTION DRIVING PATTERN

Purpose of the driving pattern.

(a) To simulate diag. code detecting condition after diag. code is recorded.

(b) To check that the malfunction is corrected when the repair is completed confirming that diag. code is no longer detected.

Malfunction: Open or Short in Knock Sensor

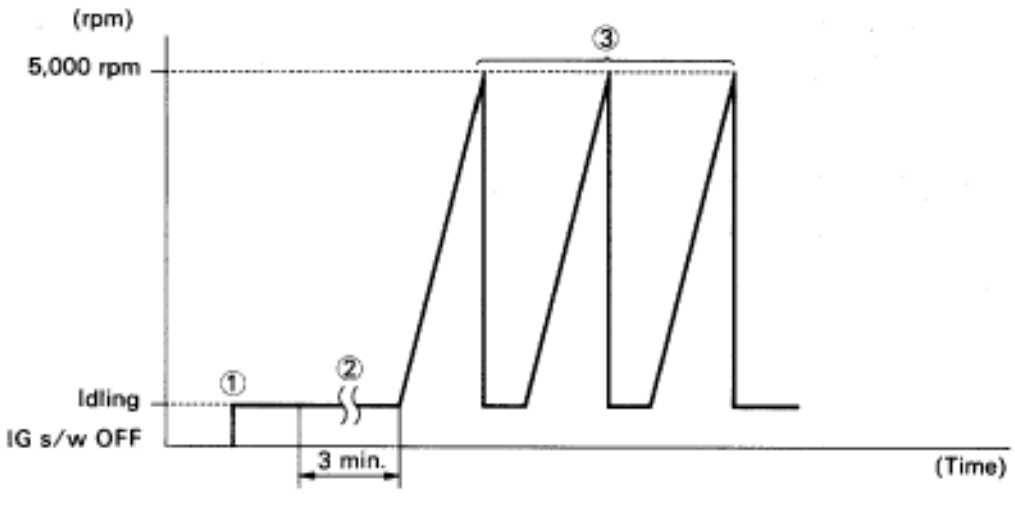

❷ Start engine and warm up.

→ After engine is warmed up, let it idle for 3 min.

❹ With the A/C ON, perform quick racing (5,000 rpm) three times.
(Rapidly depress the accelerator pedal and suddenly release it.)

HINT: If a malfunction exists, the "CHECK" engine warning light will light up when sudden racing is performed.

NOTICE: If the conditions in this test are not strictly followed, detection of the malfunction will not be possible.

WhereEverybodyKnowsYourName

DIAGNOSTIC CHART

HINT: If diag. code 52 is displayed, check No. 1 knock sensor (for left bank) circuit.
If diag. code 55 is displayed, check No. 2 knock sensor (for right bank) circuit.
If diag. code 53 is displayed, replace engine & ECT ECU.

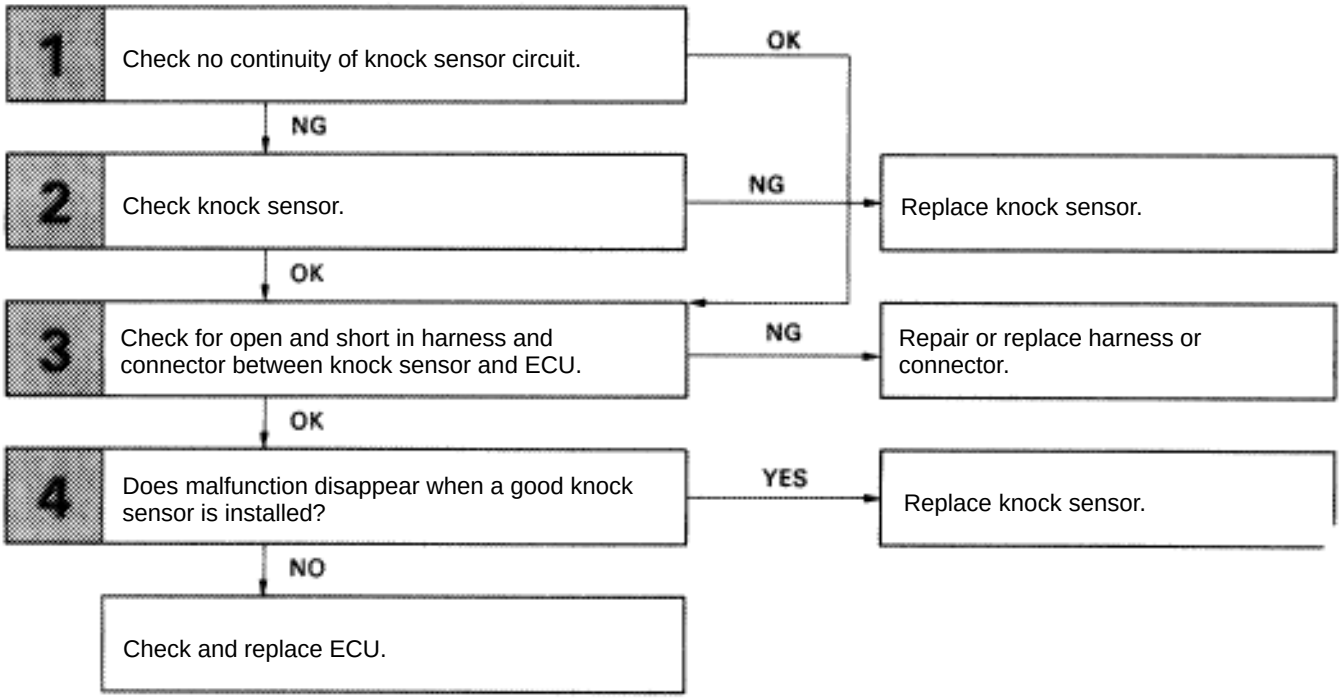

WIRING DIAGRAM

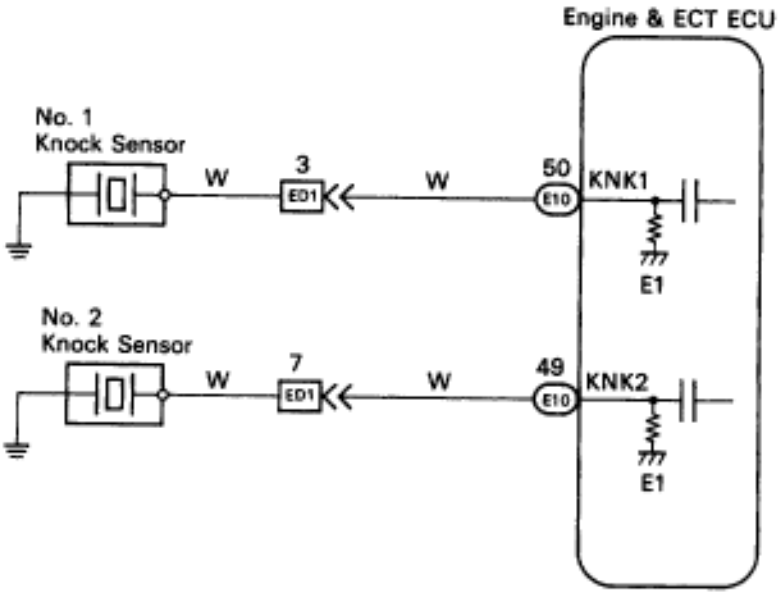

FI6449

WhereEverybodyKnowsYourName

INSPECTION PROCEDURE

1	Check continuity between terminals KNK1, KNK2 of engine & ECT ECU connector and body ground.

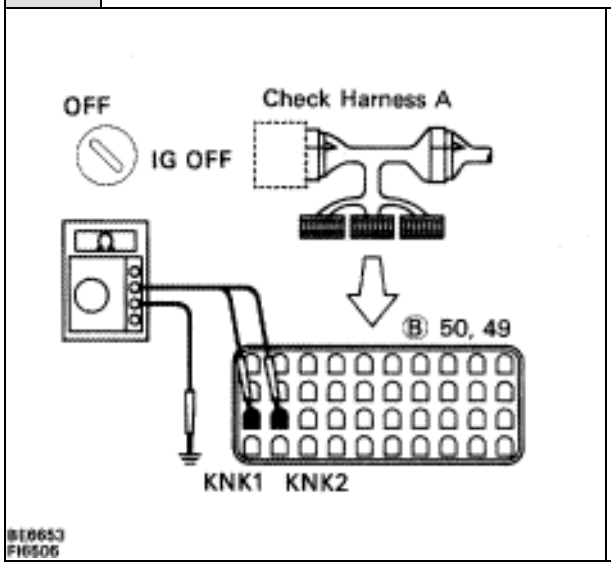

P (2) Connect the Check Harness A.
(See page TR–30)
(2) Disconnect the engine & ECT ECU connector.

C Measure resistance between terminals KNK1, KNK2 of engine & ECT ECU connector and body ground.

OK **Resistance: 1 M or higher**

NG

OK **Go to step 3.**

2	Check knock sensor.

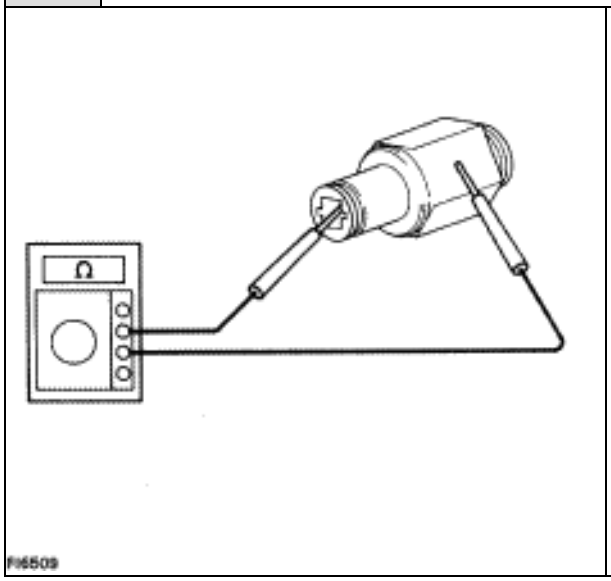

P Disconnect knock sensor connector.

C Measure resistance between the knock sensor terminal and body.

OK **Resistance: 1 M or higher**

OK

NG **Replace knock sensor (See page FI–108).**

WhereEverybodyKnowsYourName

3	**Check for open and short in harness and connectors between engine & ECT ECU and knock sensor (See page IN–27)**

OK

NG → **Repair or replace harness or connector.**

4	**Does malfunction disappear when a good knock sensor is installed?**

NO

YES → **Replace knock sensor (See page FI–108).**

Check and replace engine & ECT ECU.

Reference | INSPECTION USING OSCILLOSCOPE

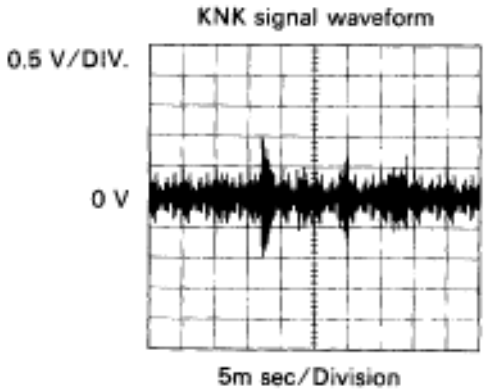

- With the engine racing (4,000 rpm) measure between terminals KNK1, KNK2 of engine & ECT ECU and body ground.

HINT: The correct waveform appears as shown in the Illustration on the left.

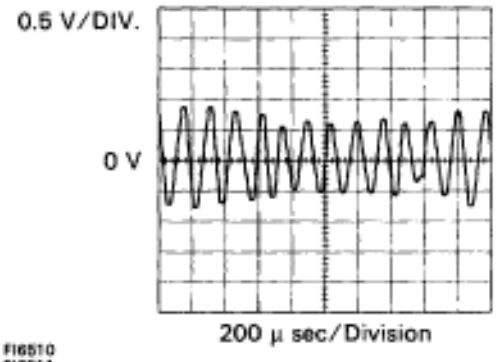

FI6510
FI6511

- Spread the time on the horizontal axis, and confirm that period of the wave is 151 sec.
  (Normal mode vibration frequency of knock sensor: 6.6 KHz).

HINT: If normal mode vibration frequency is not 6.6 KHz, the sensor is malfunctioning.

WhereEverybodyKnowsYourName

–MEMO–

WhereEverybodyKnowsYourName

Diag. Code 71	EGR System Malfunction (Only for USA spec.)

CIRCUIT DESCRIPTION

The EGR system is designed to recirculate the exhaust gas properly controlled according to the driving condition back into the intake air–fuel mixture. It helps to slow down combustion in the cylinder and thus lower the combustion temperature which, in turn, reduces the amount of NOx emission. The amount of EGR is regulated by the EGR vacuum modulator according to the engine load.

If even one of the following conditions is fulfilled, the VSV is turned ON by a signal from the ECU. This results in atmospheric air acting on the EGR valve, closing the EGR valve and shutting off the exhaust gas (EGR cut–OFF).

- Coolant temp. below 50°C (122°F)
- During deceleration (throttle valve closed)
- Light engine load (amount of intake air very small).
- Engine speed over 5,200 rpm.

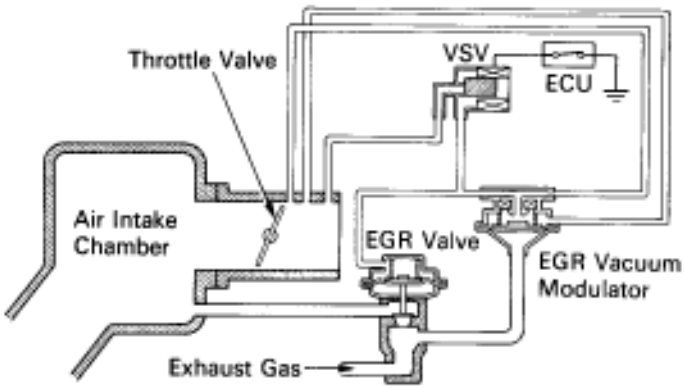

Code No.	Diagnostic Code Detecting Condition	Trouble Area
71	EGR gas temp. is 70°C (158°F) or below for 1 4 min. under conditions (a) and (b). (2 trip detection logic)* (a) Coolant temp.: 63°C (145°F) or more. (b) EGR operation possible (EX. ECT in 3rd speed (5th for M/T), A/C ON, 60 mph (96 km/h), Flat road).	• Open in EGR gas temp. sensor circuit. • Short in VSV circuit for EGR. • EGR hose disconnected, valve stuck. • Clogged EGR gas passage. • ECU

*: See page TR–25.

WhereEverybodyKnowsYourName

CIRCUIT DESCRIPTION (Cont'd)

DIAGNOSIS TROUBLE CODE DETECTION DRIVING PATTERN

Purpose of the driving pattern.

(a) To simulate diag. trouble code detecting condition after diag. trouble code is recorded.

(b) To check that the malfunction is corrected when the repair is completed confirming that diag. trouble code is no longer detected.

Malfunction: Open in EGR gas temp. sensor circuit

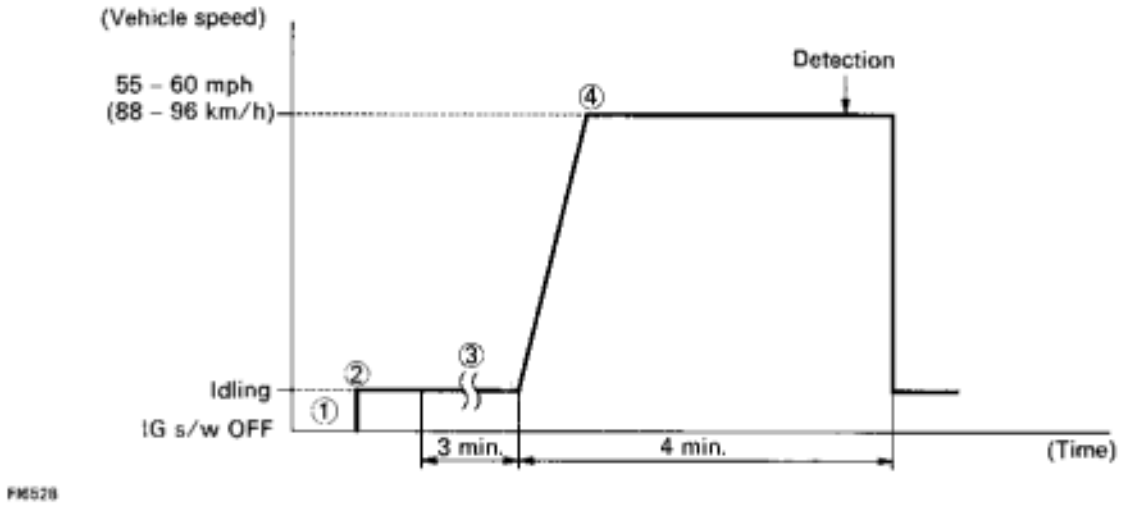

① Disconnect the EFI fuse (15 A) for 10 sec. or more, with IG switch OFF.
Initiate test mode (Connect terminal TE2 and E1 of check connector or TDCL with IG switch OFF).

② Start the engine and warm up.

③ After the engine is warmed up, let it idle for 3 min.

④ With the A/C ON and transmission in 5th gear (ECT in 3rd speed) drive at 55 ~ 60 mph (88 ~ 96 km/h) for 4 min or less.

HINT: If a malfunction exists, the "CHECK" engine warning light will light up during step .

NOTICE: If the conditions in this test are not strictly followed, detection of the malfunction will not be possible.

WhereEverybodyKnowsYourName

DIAGNOSTIC CHART

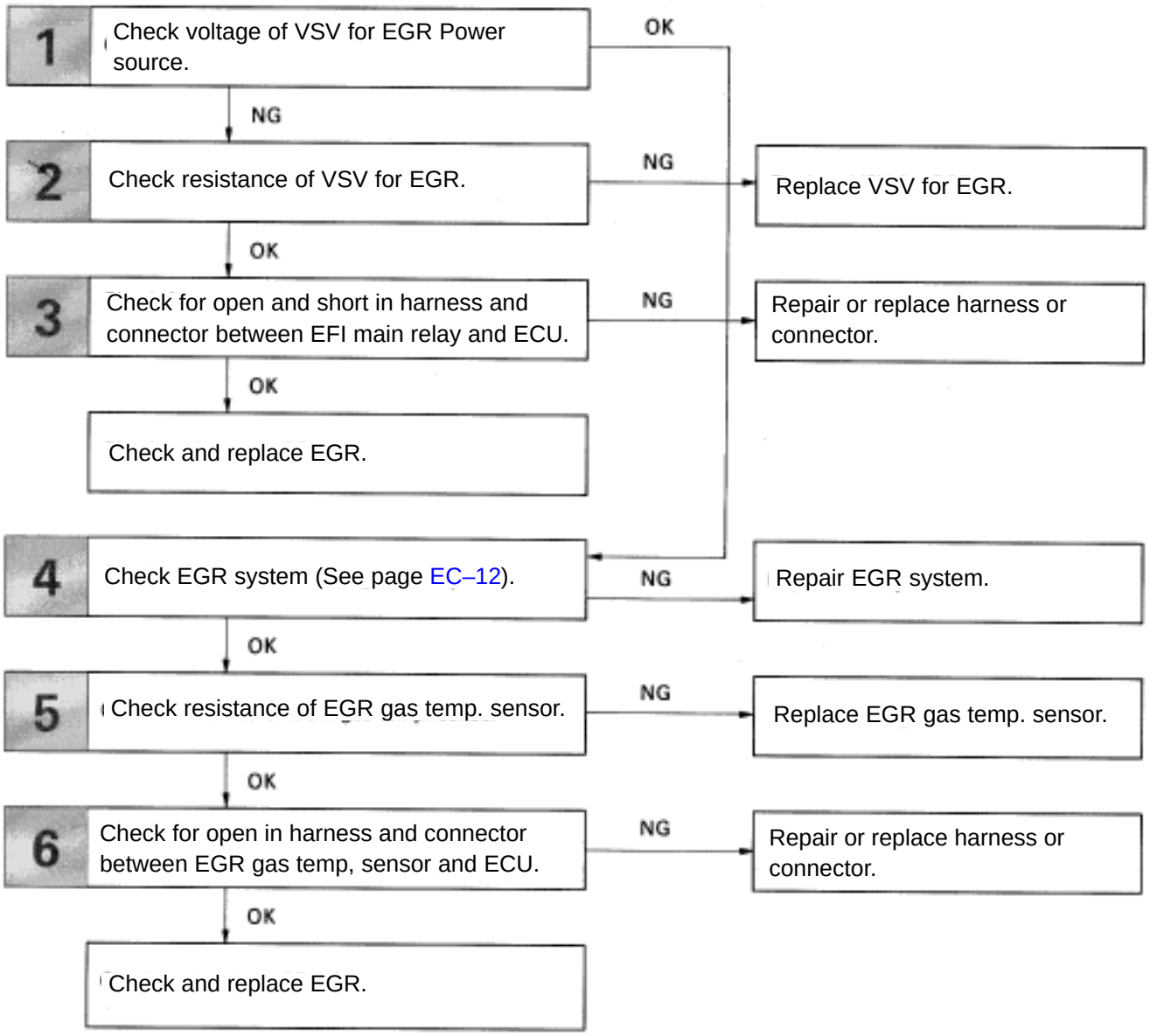

WhereEverybodyKnowsYourName

WIRING DIAGRAM

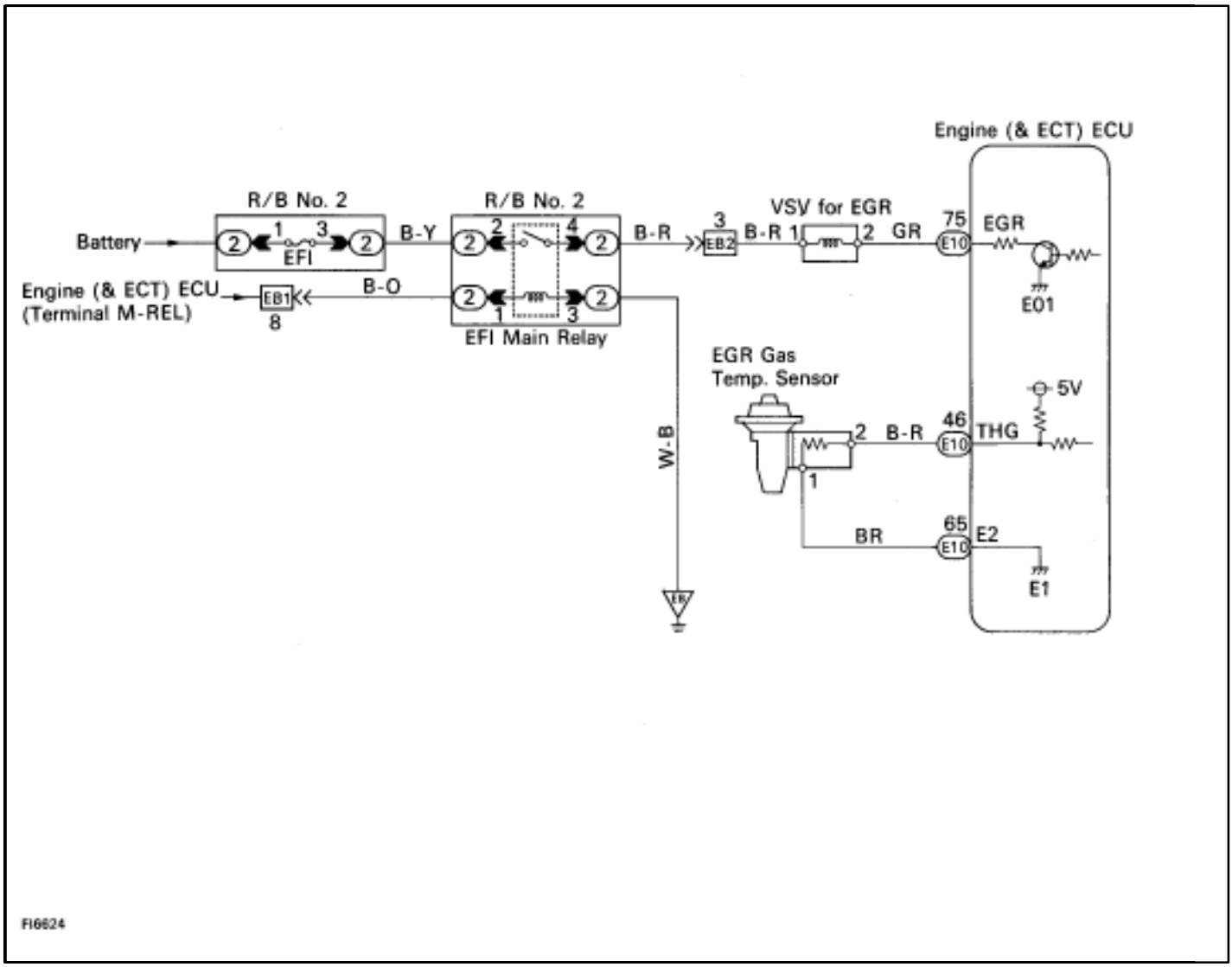

WhereEverybodyKnowsYourName

INSPECTION PROCEDURE

1	Check voltage between terminal EGR of ECM connector and body ground.

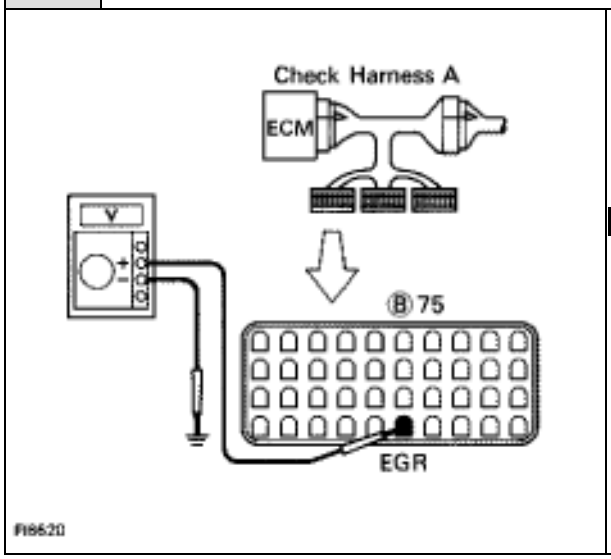

P 1. Connect the Check Harness A. (See page TR–34).
2. Warm up engine to normal operating temperature.

C Measure voltage between terminal EGR of engine (& ECT) ECU connector and body ground.

OK **Voltage:**

NG

OK **Go to step ▼.**

2	Check resistance between terminals of VSV for EGR.

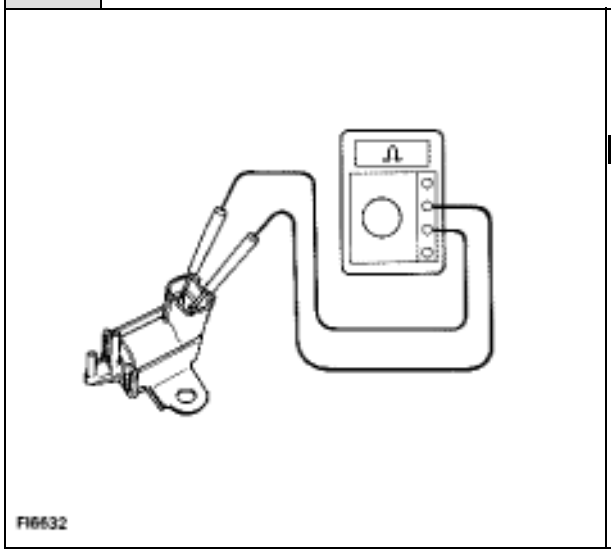

P Remove VSV for EGR. (See page EC–13).

C Measure resistance between terminals of VSV for EGR.

OK **Resistance: 38.5 – 44.5 at 20 C (68 F)**

OK

NG **Replace VSV for EGR.**

3	Check for open and short in harness and connector between EFI main relay and VSV for EGR, VSV for EGR and engine (& ECT) ECU. (See page IN–27)

OK

NG **Repair or replace harness or connector.**

Check and replace engine (& ECT) ECU.

WhereEverybodyKnowsYourName

4	Check EGR system (See page EC–12).

OK

NG → Repair EGR system.

5	Check resistance of EGR gas temp. sensor.

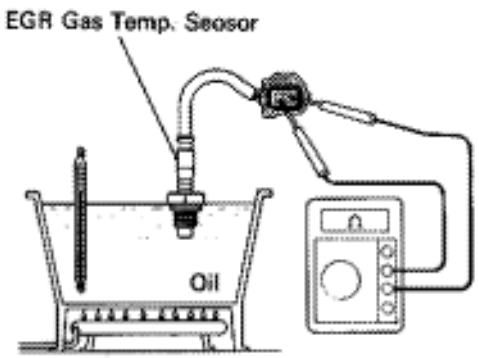

P03193

P Remove EGR gas temp. sensor.

C Measure resistance between terminals of EGR gas temp. sensor connector.

OK **Resistance:** **69 – 89 k at 50°C (122°F)**
12 – 15 k at 100°C (212°F)
2 – 4 k at 150°C (302°F)

OK

NG → Replace EGR gas temp. sensor.

6	Check for open in harness and connector between EGR gas temp. sensor and engine (& ECT) ECU. (See page IN–27).

OK

NG → Repair or replace harness or connector.

Check and replace engine (& ECT) ECU.

WhereEverybodyKnowsYourName

Diag. Code 71	EGR System Malfunction (Only for USA spec.)

— CIRCUIT DESCRIPTION

The EGR system recirculates exhaust gas, which is controlled to the proper quantity to suit the driving conditions, into the intake air mixture to slow down combustion, reduce the combustion temperature and reduce NOx emissions.
The lift amount of the EGR valve is controlled by a step motor operated by the ECU. The ECU operates the motor only a preprogrammed amount in response to the engine operating conditions (engine rpm, intake air volume to adjust the EGR volume to the target valve.)
Under the following conditions, EGR is cut to maintain driveability.

- Coolant temp. below 535C (127.45F)
- During deceleration (throttle valve closed)
- Light engine load (amount of intake air very small)
- Engine speed over 4,000 rpm
- Engine idling
- Neutral start switch on

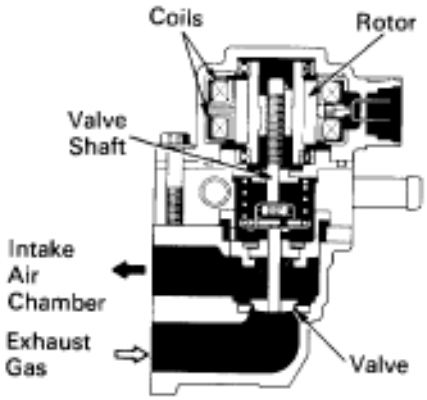

Code No.	Diagnostic Code Detecting Condition	Trouble Area
71	(1) Open or short in EGR step motor circuit for 1 sec. or more.	▼Open or short in EGR step motor circuit ▼ECU
	(2) EGR gas temp. is 65°C (149°F) or below for 1 ~ 4 min. under conditions (a) and(b). (2 trip detection logic)* (a) Coolant temp.: 65°C (149°F) or more. (b) EGR operation possible (EX. ECT in 3rd speed, A/C ON, 60 mph (96 km/h), Flat road).	▼Open in EGR gas temp. sensor circuit ▼ECU

*: See page TR–21.

WhereEverybodyKnowsYourName

— CIRCUIT DESCRIPTION (Cont'd) —

DIAGNOSIS CODE DETECTION DRIVING PATTERN

Purpose of the driving pattern.

(a) To simulate diag. code detecting condition after diag. code is recorded.

(b) To check that the malfunction is corrected when the repair is completed confirming that diag. code is no longer detected.

Malfunction: Open in EGR gas temp. sensor circuit

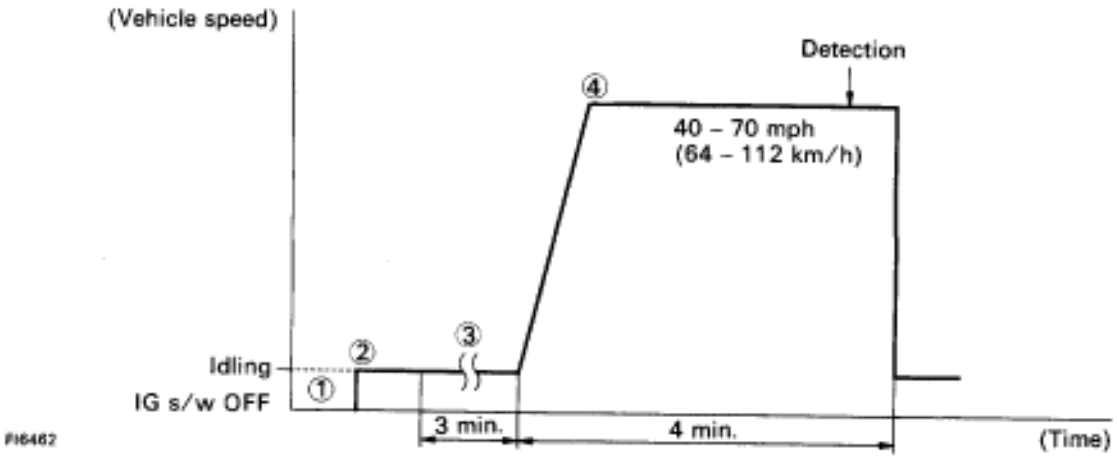

❷ Initiate test mode (See page TR–12).

→ Start engine and warm up.

❹ After engine is warmed up, let it idle for 3 min.

③ With the A/C ON and transmission in D range (O/D OFF), drive at 40–70 mph for 4 min.

HINT: If a malfunction exists, the "CHECK" engine warning light will light up at 1–4 min. of driving at 40–70 mph (64–112 km/h).

NOTICE: If the conditions in this test are not strictly followed, detection of the malfunction will not be possible.

WhereEverybodyKnowsYourName

DIAGNOSTIC CHART

1 Check voltage of terminal EGR 1 ~ 4.
- OK → 5
- NG ↓

2 Check voltage of EGR Step motor power source.
- NG → Check for ECU power source circuit.
- OK ↓

3 Check resistance of EGR step motor.
- NG → Replace EGR step motor.
- OK ↓

4 Check for open and short in harness and connector between EGR step motor and ECU.
- NG → Repair or replace harness or connector.
- OK ↓

Check and replace ECU.

5 Check operation for EGR step motor.
- NG → Replace EGR step motor.
- OK ↓

6 Check resistance of EGR gas temp. sensor.
- NG → Replace EGR gas temp. sensor.
- OK ↓

7 Check for open and short in harness and connector between EGR gas temp. sensor and ECU.
- NG → Repair or replace harness or connector.
- OK ↓

Check and replace ECU.

WIRING DIAGRAM

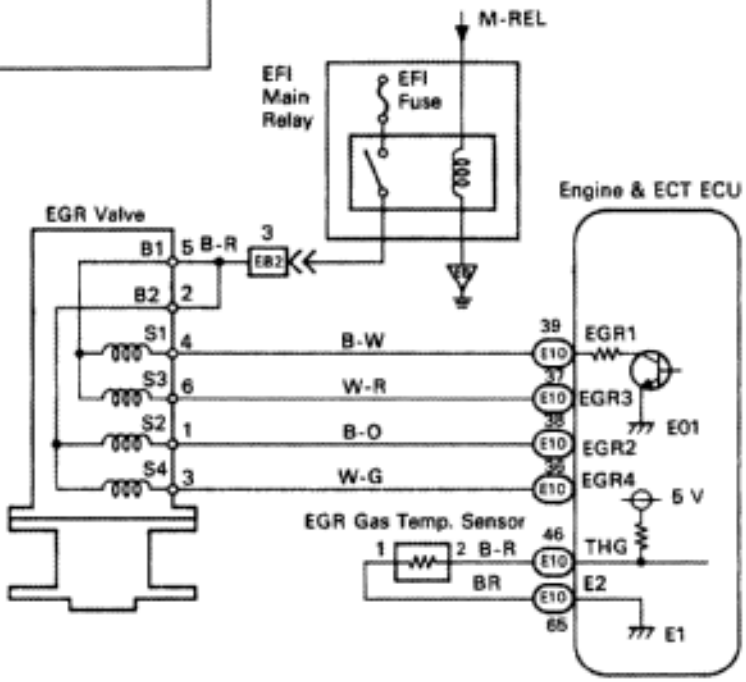

WhereEverybodyKnowsYourName

INSPECTION PROCEDURE

1	Check voltage between terminals EGR 1 ~ 4 of engine & ECT ECU connector and body ground.
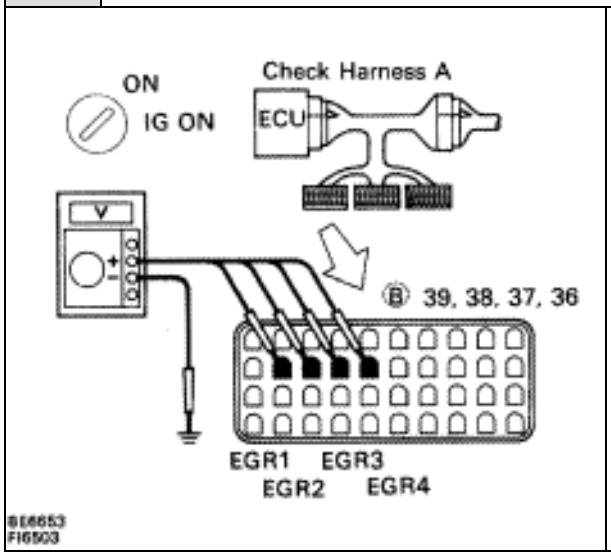	**P** (2) Connect the Check Harness A. (See page TR–30). (2) Turn ignition switch on. **C** Measure voltage between terminals EGR 1 ~ 4 of engine & ECT ECU connector and body ground. **OK** **Voltage: 10 – 14 V**

NG

OK → **Go to step 5.**

2	Check voltage between terminals B1 and B2 of EGR step motor connector and body ground.
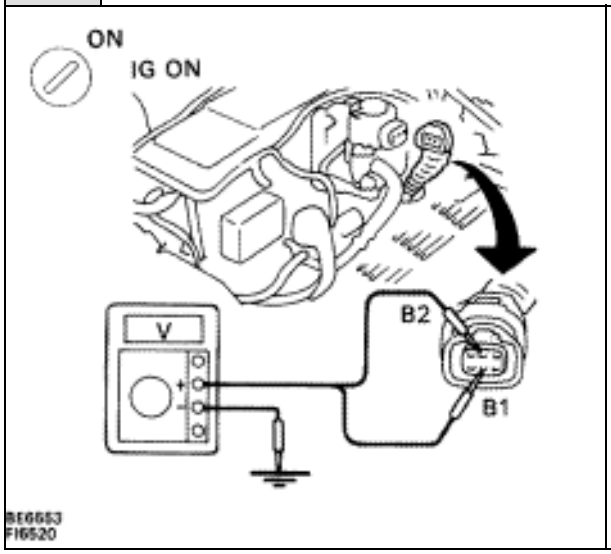	**P** (2) Disconnect EGR step motor connector. (2) Turn ignition switch on. **C** Measure voltage between terminals B1 and B2 of EGR step motor connector and body ground. **OK** **Voltage: 10 – 14 V**

OK

NG → **Check for ECU power source circuit (See page TR–124).**

WhereEverybodyKnowsYourName

3 **Check resistance of EGR step motor.**

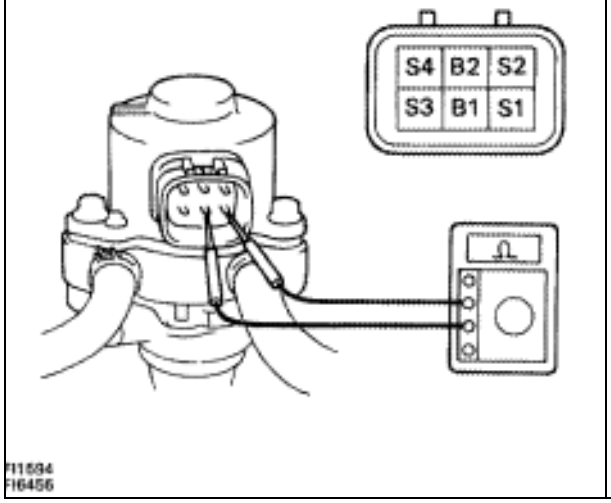

P Disconnect EGR step motor connector.

C Measure resistance between terminals shown below.

OK

Terminal	Resistance
B1 – S1	10 Ω – 30 Ω
B1 – S3	10 Ω – 30 Ω
B2 – S2	10 Ω – 30 Ω
B2 – S4	10 Ω – 30 Ω

OK → **NG** → **Replace EGR step motor.**

4 **Check for open and short in harness and connector between EGR step motor and engine & ECT ECU (See page IN–27).**

OK → **NG** → **Repair or replace harness or connector.**

Check and replace engine & ECT ECU.

5 **Check operation for EGR step motor.**

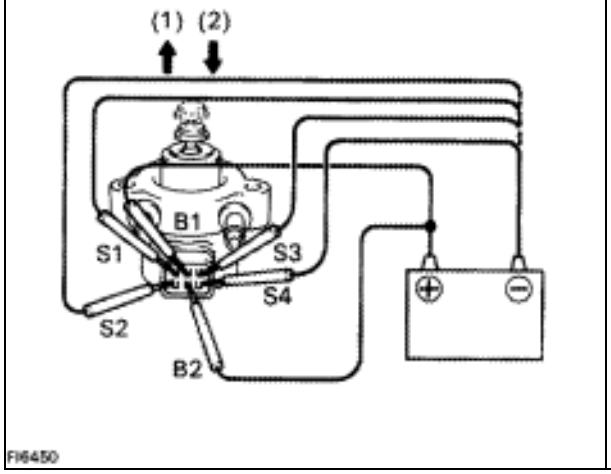

P Remove EGR step motor.

C (2) Connect the battery positive lead to terminals B1 and B2, and the negative lead to terminals S1 – S2 – S3 – S4 in that order.

(2) Connect the battery positive lead to terminals B1 and B2, and the negative lead to terminals S4 – S3 – S2 – S1 in that order.

OK **(2) The valve moves in the closing direction.**

(2) The valve moves in the opening direction.

OK → **NG** → **Replace EGR step motor.**

WhereEverybodyKnowsYourName

6	Check resistance of EGR gas temp. sensor.
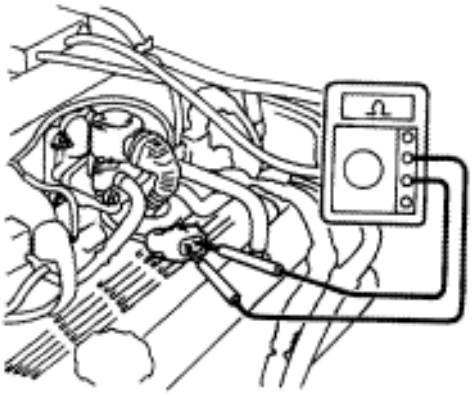 FI6486	**P** Disconnect EGR gas temp. sensor connector (See page FI–103). **C** Measure resistance between terminals of EGR gas temp. sensor connector. **OK** **Resistance: 69 – 89 k at 50°C (122°F)** **12 – 15 k at 100°C (212°F)** **2 – 4 k at 150°C (302°F)**

OK

NG **Replace EGR gas temp. sensor.**

7	Check for open and short in harness and connector between EGR gas temp. sensor and engine & ECT ECU (See IN–27).

OK

NG **Repair or replace harness or connector.**

Check and replace engine & ECT ECU.

WhereEverybodyKnowsYourName

Diag. Code 78 | Fuel Pump Control Circuit

— CIRCUIT DESCRIPTION

The fuel pump speed is controlled at two steps (high speed, low speed) by the condition of the engine (starting, light load, heavy load), when the engine starts (STA ON), the engine (& ECT) ECU sends a Hi signal to the fuel pump ECU (FPC terminal).
The fuel pump ECU then outputs Hi voltage (battery voltage) to the fuel pump so that the fuel pump operates at high speed.
After the engine starts, during idling or light loads, the engine (& ECT) ECU outputs a High Low signal to the fuel pump ECU, the fuel pump ECU outputs Lo battery voltage (about 9V) to the fuel pump and causes the fuel pump to operate at low speed.
If the intake air volume increases (high engine load), the engine (& ECT) ECU sends a Hi signal to the fuel pump ECU and causes the fuel pump to operate at high speed.

DTC No.	DTC Detecting Condition	Trouble Area
78	(1) Open or short in fuel pump circuit for 1 sec. or more with engine speed 1,000 rpm or less. (2 trip detection logic)*	■Open or short in fuel pump ECU circuit. ■Fuel pump ECU ■Engine (& ECT) ECU power source circuit. ■Fuel pump ■Engine (& ECT) ECU
	(2) Open in input circuit of fuel pump ECU (FPC) with engine speed 1,000 rpm or less. (2 trip detection logic)*	
	(3) Open or short in diagnostic signal line (DI) of fuel pump ECU with engine speed 1,000 rpm or less. (2 trip detection logic)*	

*: See page TR–25.

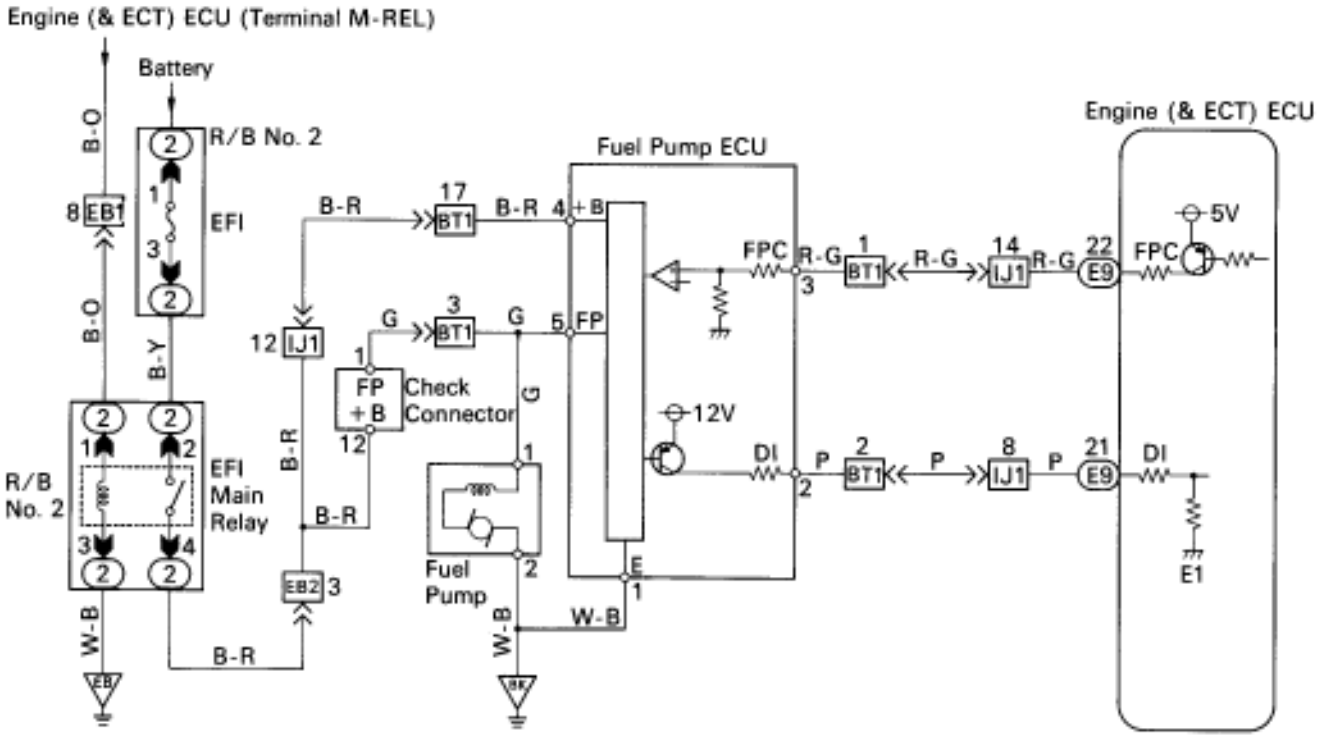

WhereEverybodyKnowsYourName

DIAGNOSTIC CHART

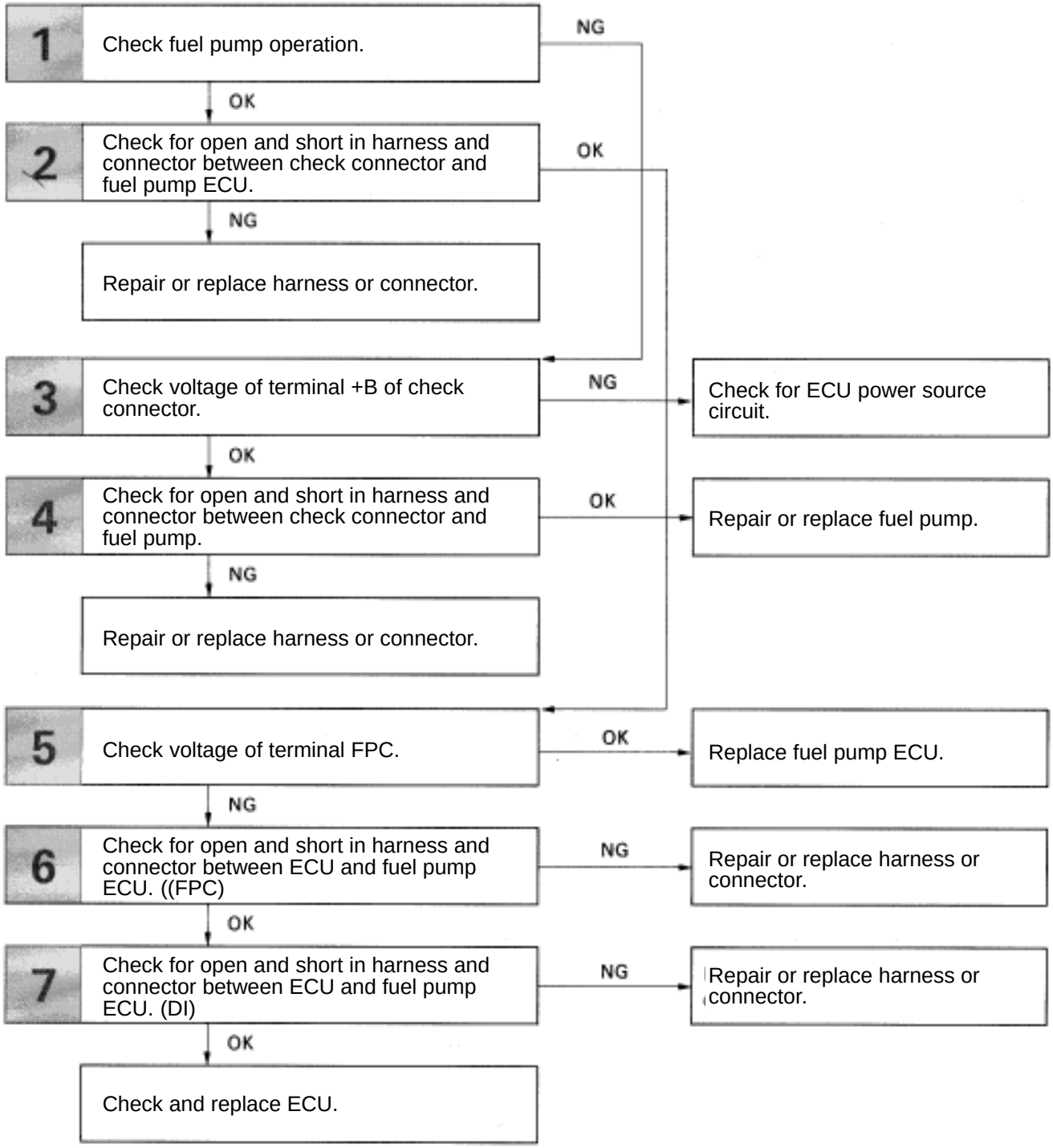

WhereEverybodyKnowsYourName

INSPECTION PROCEDURE

1 **Check fuel pump operation.**

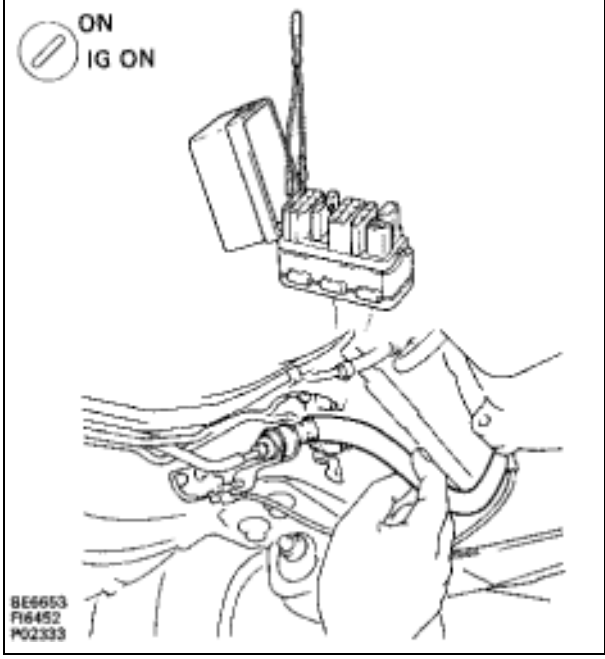

P 1. Turn ignition switch ON.
2. Using SST, connect terminals +B and FP of check connector.

SST 09843–18020

C Check that there is pressure in the hose from the fuel filter.

OK **Fuel pressure can be felt.**

OK

NG **Go to step ▼.**

2 **Check for open and short in harness and connector between terminals +B ↔ +B, FP ↔ FP of the check connector and fuel pump ECU (See page IN–27).**

NG

OK **Go to step 2 .**

Repair or replace harness or connector.

3 **Check voltage of terminal +B of check connector.**

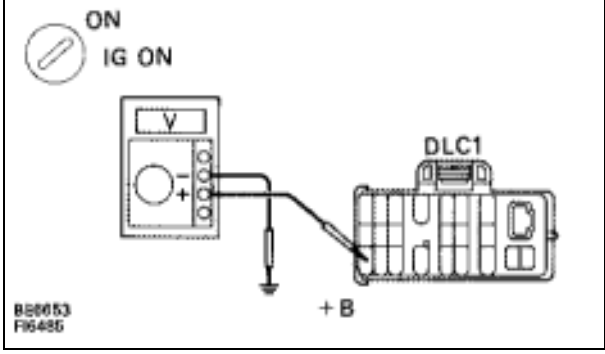

P Turn ignition switch ON.

C Measure voltage between terminal +B of check connector and body ground.

OK **Voltage: 10 – 14 V**

OK

NG **Check for ECU power source circuit (See page TR–120), and check for open in harness and connector between terminal +B of check connector and main relay.**

WhereEverybodyKnowsYourName

4	Check for open and short in harness and connector between terminal FP of check connector, fuel pump and body ground (See page IN–27).

NG → Repair or replace harness or connector.

OK → Repair or replace fuel pump.

5	Check voltage between terminals FPC and E of fuel pump ECU connector.

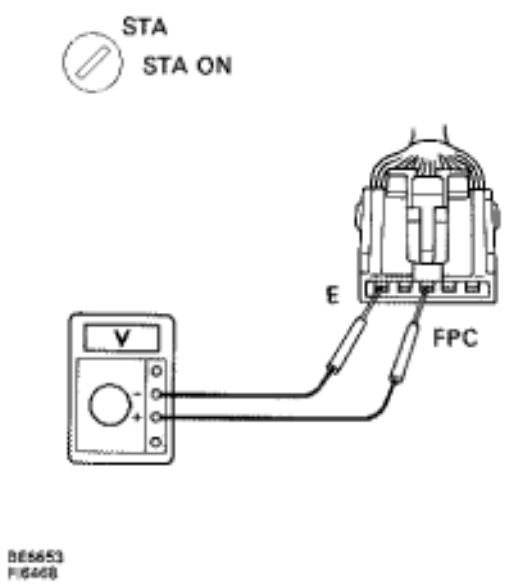

P
1. Remove the LH quarter trim panel. (See page FI–81)
2. Disconnect fuel pump ECU connector.

C
Measure voltage between terminals FPC and E of fuel pump ECU connector when ignition switch is turned to start.

OK
Voltage: 4 – 6 V

NG → Check and replace engine (& ECT) ECU.

OK → Replace fuel pump ECU.

6	Check for open in harness and connector between terminal FPC of engine (& ECT) ECU and terminal FPC of fuel pump ECU, terminal E of fuel pump ECU and body ground (See page IN–27).

OK → Check and replace engine (& ECT) ECU.

NG → Repair or replace harness or connector.

7	Check for open and short in harness and connector between terminal DI of engine (& ECT) ECU and terminal DI of fuel pump ECU (See page IN–27).

OK → Check and replace engine (& ECT) ECU.

NG → Repair or replace harness or connector.

WhereEverybodyKnowsYourName

Diag. Code 78 | Fuel Pump Control Circuit

— CIRCUIT DESCRIPTION

The fuel pump speed is controlled at two steps (high speed, low speed) by the condition of the engine (starting, light load, heavy load), when the engine starts (STA ON), the engine & ECT ECU sends a Hi signal to the fuel pump ECU (FPC terminal).
The fuel pump ECU then outputs Hi voltage (battery voltage) to the fuel pump so that the fuel pump operates at high speed.
After the engine starts, during idling or light loads, the engine & ECT ECU outputs a High Low signal to the fuel pump ECU, the fuel pump ECU outputs Lo battery voltage (about 9V) to the fuel pump and causes the fuel pump to operate at low speed.
If the intake air volume increases (high engine load), the engine & ECT ECU sends a Hi signal to the fuel pump ECU and causes the fuel pump to operate at high speed.

Code No.	Diagnostic Code Detecting Condition	Trouble Area
78	(1) Open or short in fuel pump circuit for 1 sec. or more with engine speed 1,000 rpm or less. (2 trip detection logic)*	▼Open or short in fuel pump ECU circuit. ▼Fuel pump ECU ▼Engine & ECT ECU power source circuit. ▼Fuel pump ▼Engine & ECT ECU
	(2) Open in input circuit of fuel pump ECU(FPC) with engine speed 1,000 rpm or less. (2 trip detection logic)*	
	(3) Open or short in diagnostic signal line (DI) of fuel pump ECU with engine speed 1,000 rpm or less. (2 trip detection logic)*	

*: See page TR–21.

WIRING DIAGRAM

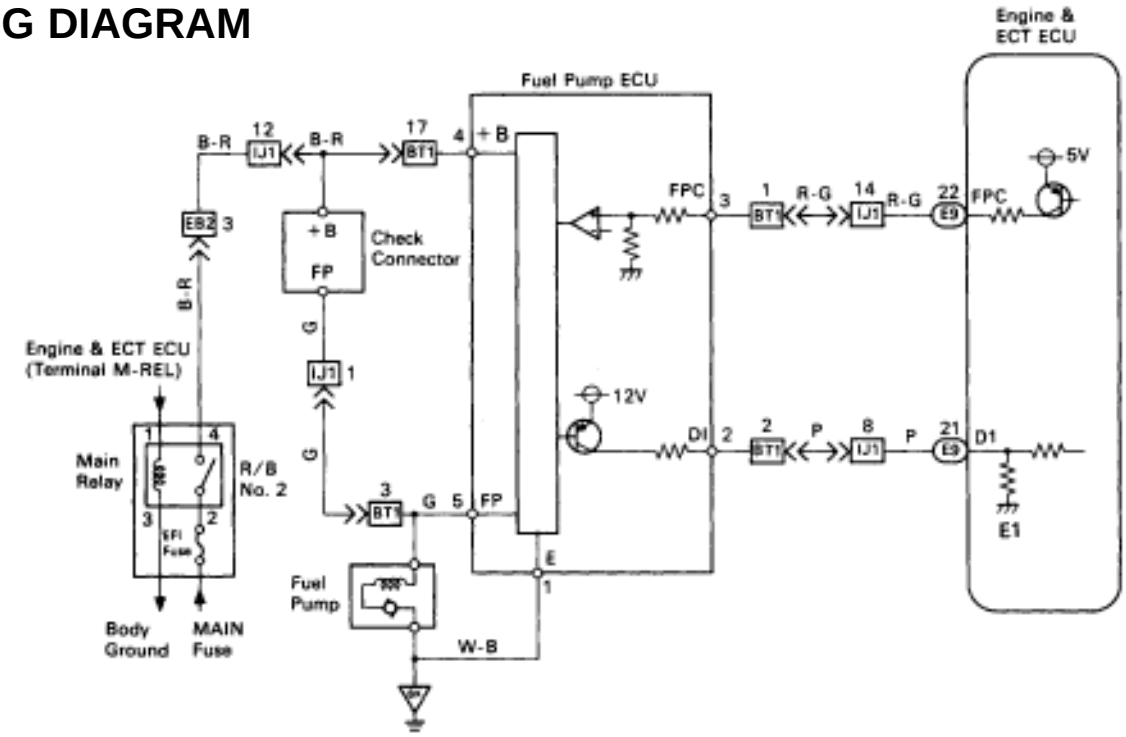

WhereEverybodyKnowsYourName

DIAGNOSTIC CHART

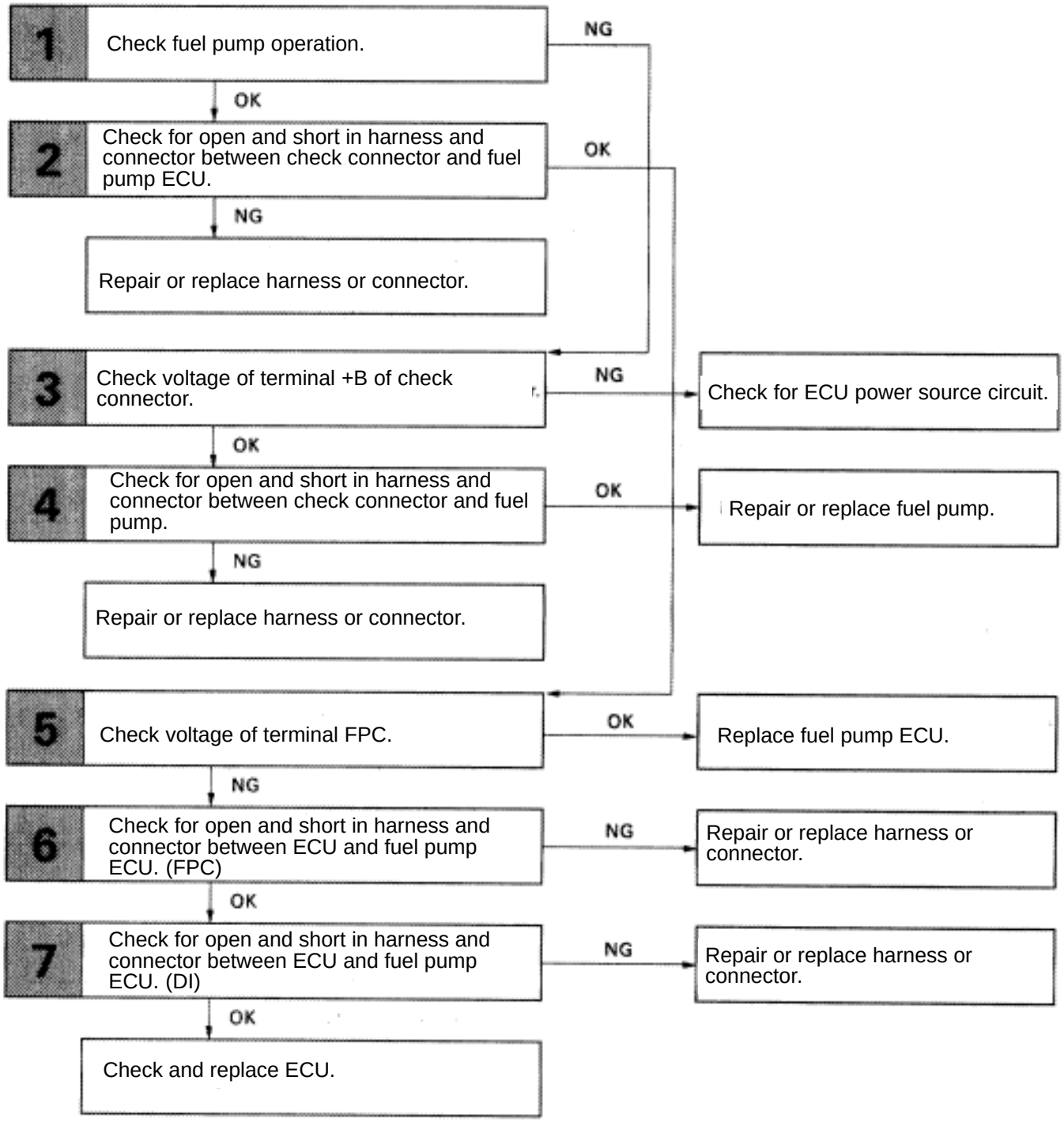

WhereEverybodyKnowsYourName

INSPECTION PROCEDURE

1 **Check fuel pump operation.**

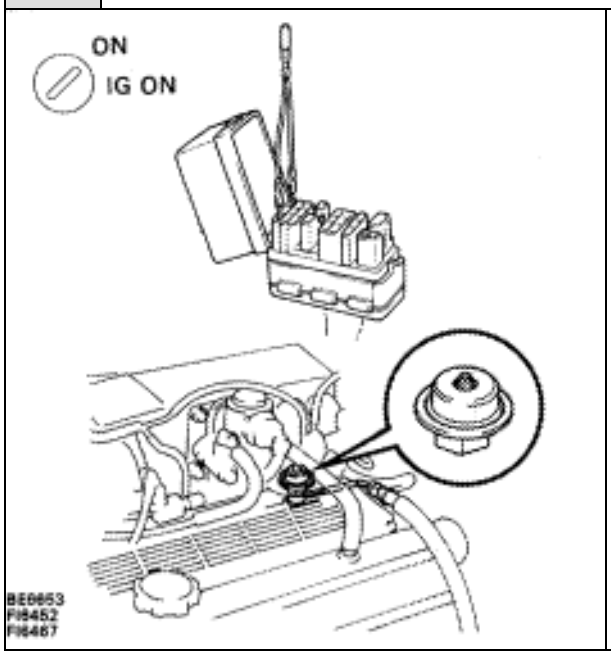

P (2) Turn ignition switch ON.

(2) Using SST. connect terminals + B and FP of check connector.

SST 09843–18020

C Check that there is projection of the head of the pulsation damper screw.

OK **Projection of the head of the pulsation damper screw.**

OK → **NG** → **Go to step 3.**

2 **Check for open and short in harness and connector between terminals + B ↔ + B FP ↔ FP of the check connector and fuel pump ECU (See page IN–27).**

NG → **OK** → **Go to step 5.**

Repair or replace harness or connector.

3 **Check voltage or terminal + B of check connector.**

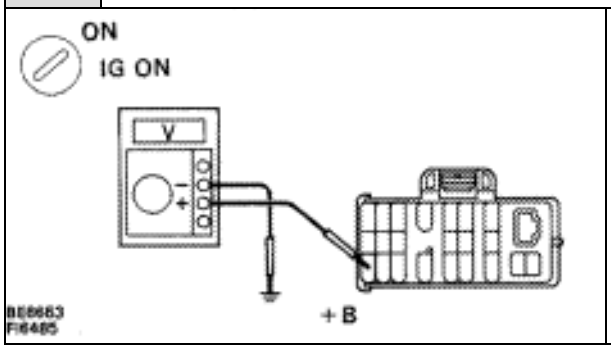

P Turn ignition switch ON.

C Measure voltage between terminal + B of check connector and body ground.

OK **Voltage: 10 – 14 V**

OK → **NG** → **Check for ECU power source circuit (See page TR–124), and check for open in harness and connector between terminal + B of check connector and main relay.**

WhereEverybodyKnowsYourName

4	Check for open and short in harness and connector between terminal FP of check connector, fuel pump and body ground (See page IN–27).

NG → Repair or replace harness or connector.

OK → Repair or replace fuel pump.

5	check voltage between terminals FPC and E of fuel pump ECU connector.

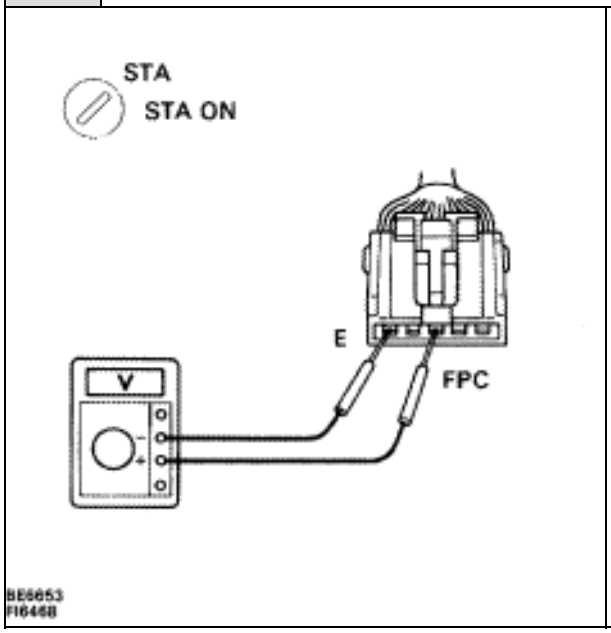

P (2) Remove the LH quarter trim panel. (See page BO–123)

(2) Disconnect fuel pump ECU connector.

C Measure voltage between terminals FPC and E of fuel pump ECU connector when ignition switch is turned to start.

OK **Voltage: 4 – 6 V**

NG → Replace fuel pump ECU.

OK → Replace fuel pump ECU.

6	Check for open in harness and connector between terminal FPC of engine & ECT ECU and terminal FPC of fuel pump ECU, terminal E of fuel pump ECU and body ground (See page IN–27).

OK → Check and replace engine & ECT ECU.

NG → Repair or replace harness or connector.

7	Check for open in harness and connector between terminal DI of engine & ECT ECU and terminal DI of fuel pump ECU (See page IN–27).

OK → Check and replace engine & ECT ECU.

NG → Repair or replace harness or connector.

WhereEverybodyKnowsYourName

Diag. Code 51 | Switch Condition Signal Circuit

CIRCUIT DESCRIPTION

Neutral Start Switch Signal

The ECU uses the signals from the neutral start switch to determine whether the transmission is in park or neutral, or in some other gear.

Air Conditioner Switch Signal

The ECU uses the output from the air conditioner switch to determine whether or not the air conditioner is operating so that it can increase the idling speed of the engine if necessary.

Throttle Position Sensor IDL Signal

The IDL contacts are mounted in the throttle position sensor, and detects the idle condition.

Code No.	Diagnostic Code Detecting Condition	Trouble Area
51	(1) 3 sec. or more after engine startsidle switch OFF (IDL1). (2) Neutral start switch OFF (NSW).(Shift position i n ”R”, ”D”, ”2”or ”1” ranges). (3) A/C switch ON.	▼Throttle position sensor IDL circuit ▼Accelerator pedal and cable ▼Neutral start switch circuit ▼A/C switch circuit ▼ECU

HINT: In this circuit, diagnosis can only be made in the test mode.

DIAGNOSTIC CHART

See next page for DIAGNOSTIC CHART

WIRING DIAGRAM

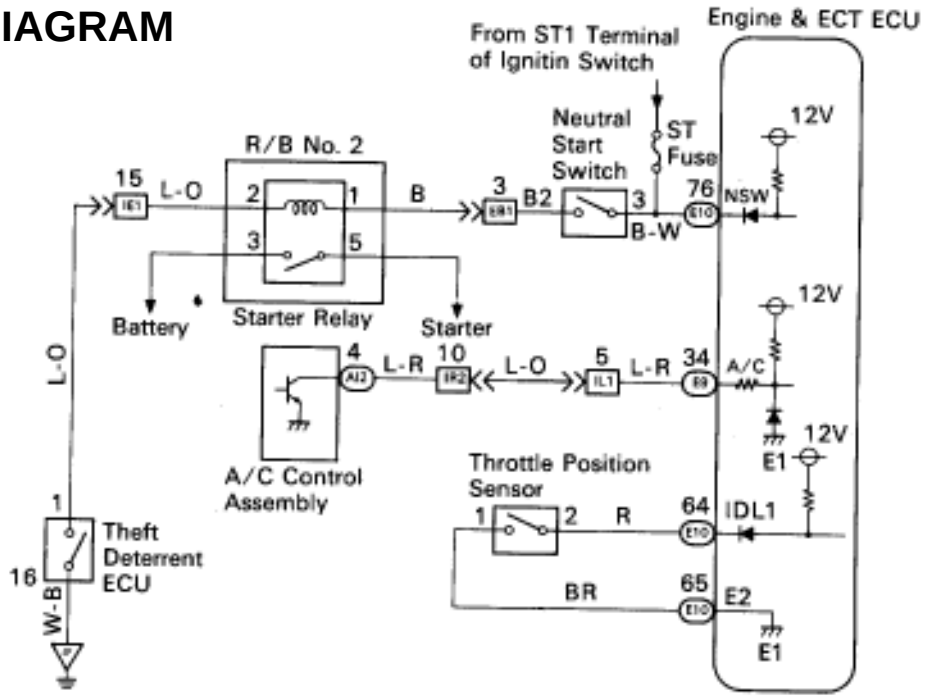

FI6484

WhereEverybodyKnowsYourName

DIAGNOSTIC CHART

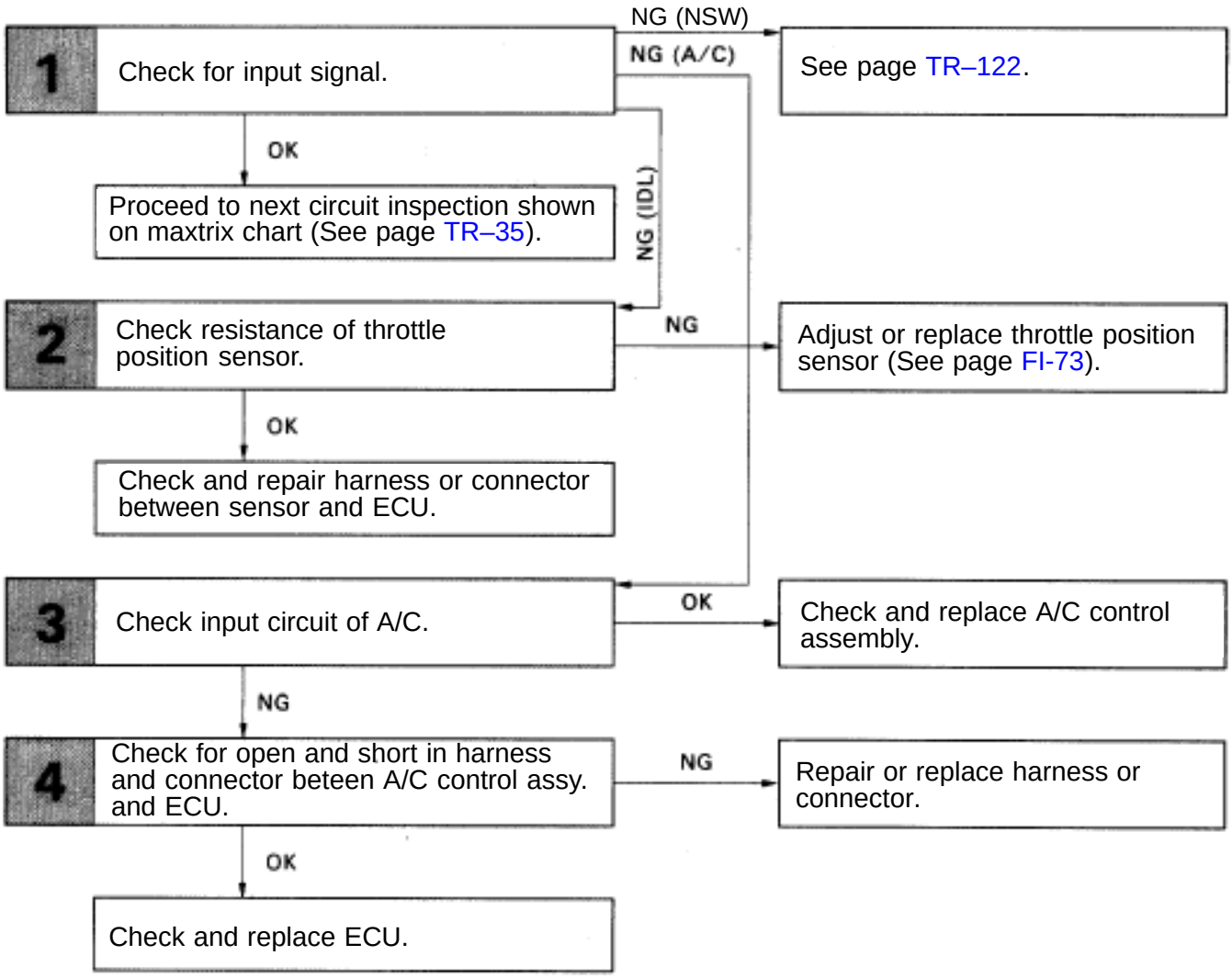

WhereEverybodyKnowsYourName

INSPECTION PROCEDURE

1 Check output condition of diag. code 51.

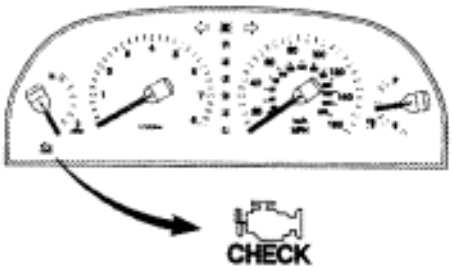

FI8433

P Setting the test mode.

(2) Turn ignition switch OFF.

(2) Connect terminals TE2 and E1 and TDCL.

(2) Turn ignition switch ON.
(For checking terminal A/C, start the engine.)

(2) Connect terminals TE1 and E1 of TDCL.

C Check if code “51” is output by the “CHECK” engine warning light.

OK

	Condition	Code
Neutral Start Switch (NSW)	P or N range	Normal*
	R,D,2 or L range	51*
Throttle Position Sensor (IDL1)	Accelerator pedal released	Normal*
	Accelerator pedal depressed	51*
A/C Switch (A/C)	A/C SW ON	51
	A/C SW OFF	Normal

*: Before the STA signal is input (ST is not ON), diagnostic code 43 is also output.

Hint Diag. code 42 is output with vehicle speed 5 km/h (3 mph) or below

OK

NG **IDL1 .... Go to step 2** **NSW ... Go to page TR–22.**
A/C ..... Go to step 3

Proceed to next circuit inspection shown on maxtrix chart (See page TR–35).

2 Check throttle position sensor.

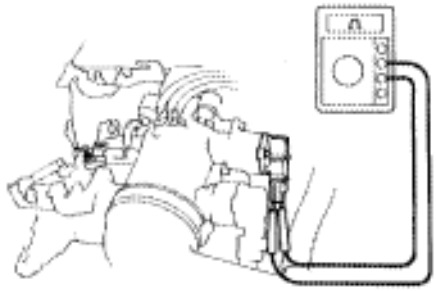

FI4755

P Disconnect throttle position sensor connector.

C Measure resistance between terminals IDL1 and E2 of throttle position sensor connector.

OK

Throttle Valve	Resistance
Fully closed	Less than 0.5 kΩ
Opened	1 MΩ or higher

OK

NG **Adjust or replace throttle position sensor See page FI–73).**

Check and repair harness or connector between engine & ECT ECU and throttle position sensor.

WhereEverybodyKnowsYourName

3	Disconnect A/C control assembly connector, check voltage between terminal MGC of A/C control assembly connector and body ground.

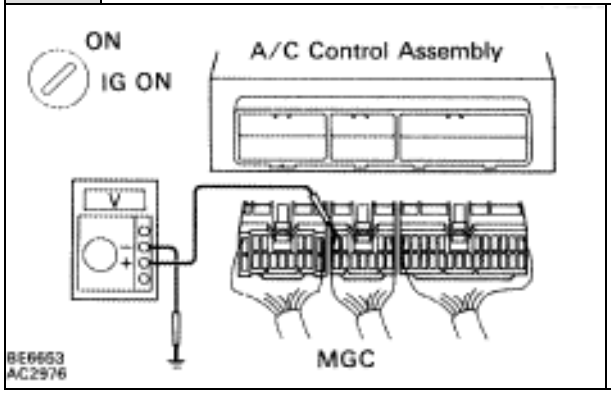

P (2) Remove air conditioner control assembly.

(2) Disconnect air conditioner control assembly connector.

(2) Turn ignition switch on.

C Measure voltage between terminal MGC of air conditioner control assembly connector and body ground.

OK **Voltage: 10 – 14 V**

NG → **OK** → **Check and replace A/C control assembly.**

4	Check for open and short in harness and connector between engine & ECT ECU and A/C control assembly (See page IN–27)

OK → **NG** → **Repair or replace harness or connector.**

Check and replace engine & ECT ECU.

WhereEverybodyKnowsYourName

ECU Power Source Circuit

CIRCUIT DESCRIPTION

When the ignition switch is turned on, battery voltage is applied to the terminal IGSW of the ECU, and the main relay control circuit in the ECU sends a signal to the terminal M–REL of the ECU, switching on the main relay. This signal causes current to flow to the coil, closing the contacts of the main relay and supplying power to the terminals +B and +B1 of the ECU.
If the ignition switch is turned off, the ECU continues to switch on the main relay for a maximum of 2 seconds for the initial setting of the ISC valve.

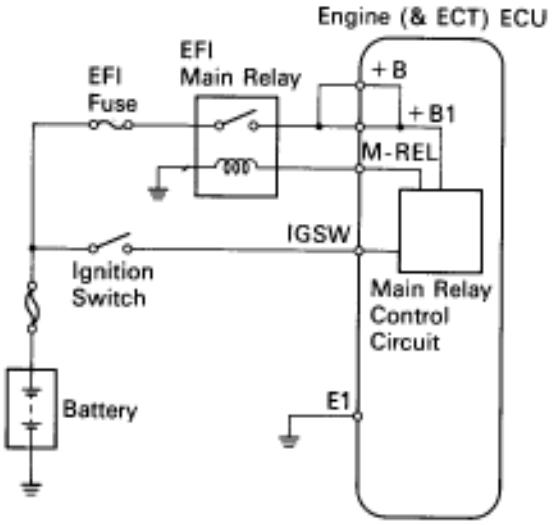

DIAGNOSTIC CHART

See next page for the DIAGNOSTIC CHART.

WIRING DIAGRAM

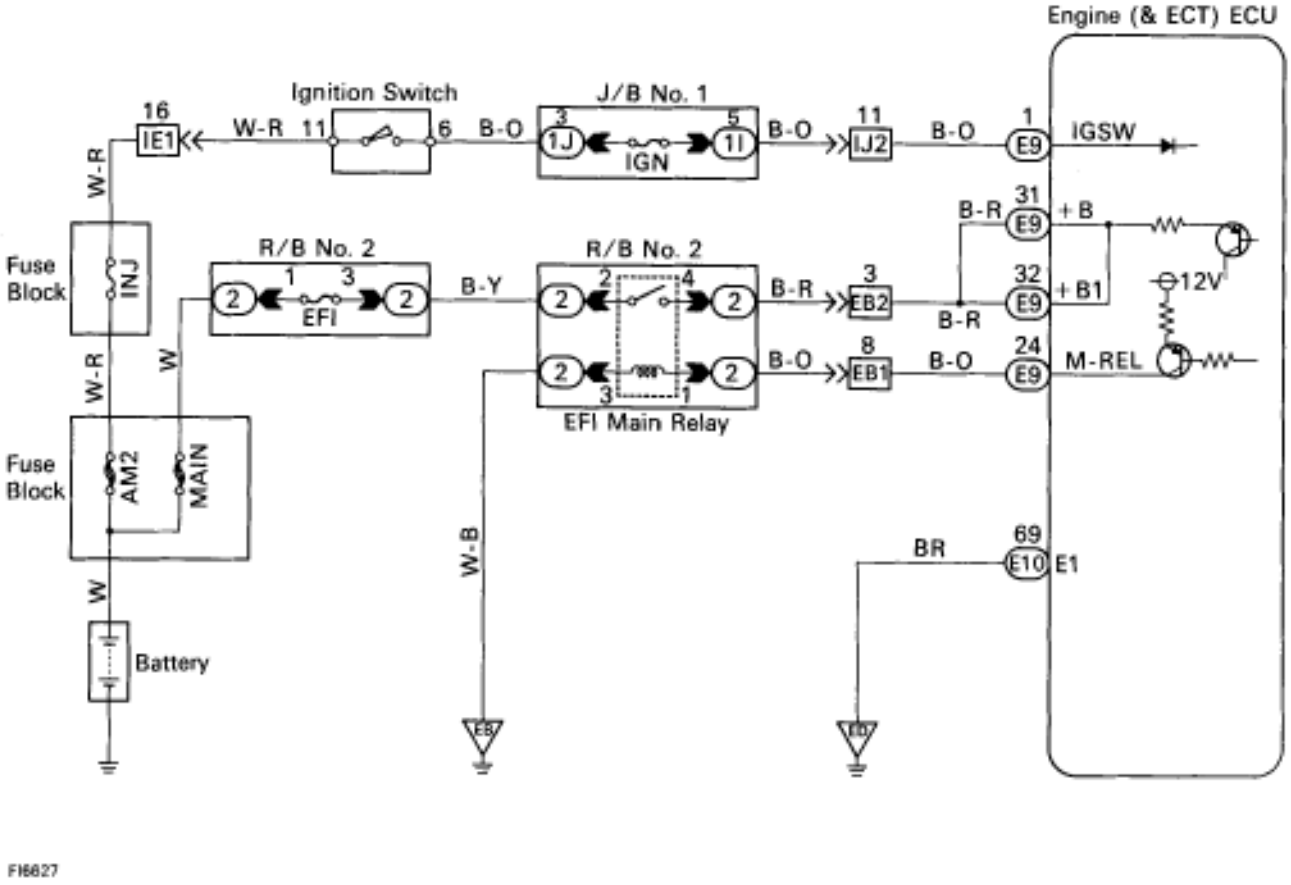

WhereEverybodyKnowsYourName

DIAGNOSTIC CHART

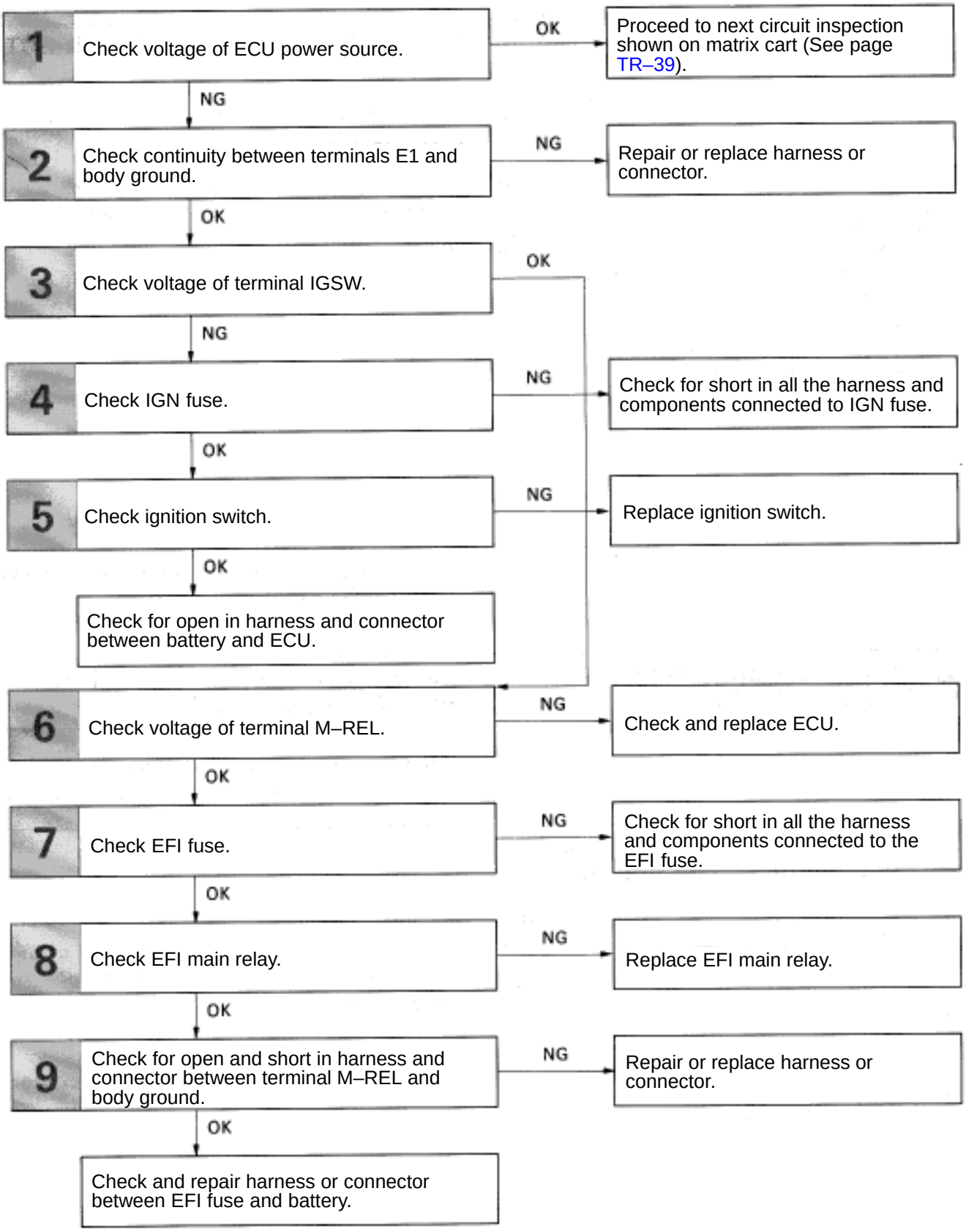

WhereEverybodyKnowsYourName

INSPECTION PROCEDURE

1 **Check voltage between terminals +B, +B1 and E1 of engine (& ECT) ECU connector.**

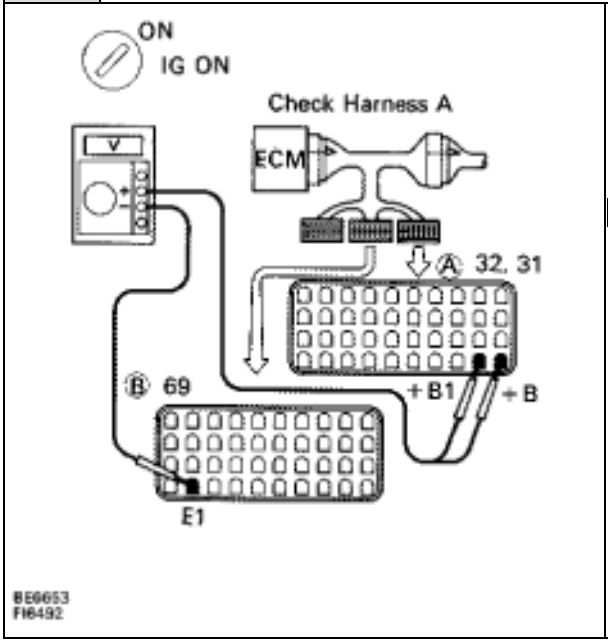

P 1. Connect the Check Harness A. (See page TR–34)
2. Turn ignition switch on.

C Measure voltage between terminals +B, +B1 and E1 of engine (& ECT) ECU connector.

OK **Voltage: 10 – 14 V**

NG

OK **Proceed to next circuit inspection shown on matrix chart (See page TR–39).**

2 **Check for open in harness and connector between terminal E1 of engine (& ECT) ECU and body ground. (See page IN–27).**

OK

NG **Repair or replace harness or connector.**

3 **Check voltage between terminal IGSW of engine (& ECT) ECU connector and body ground.**

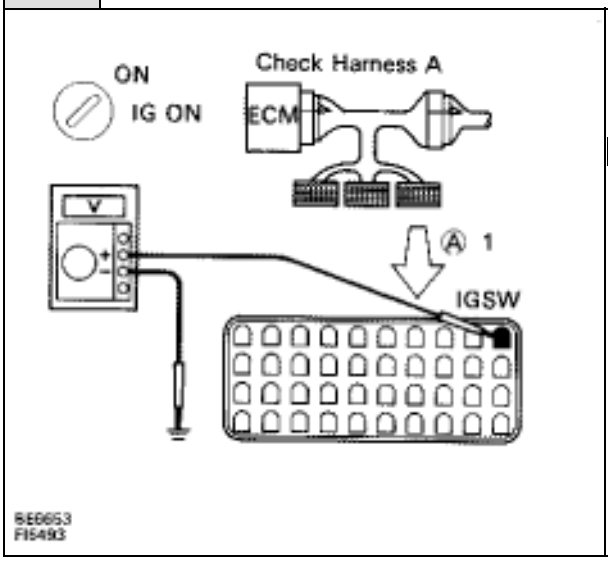

P Turn ignition switch on.

C Measure voltage between terminal IGSW of engine (& ECT) ECU connector and body ground.

OK **Voltage: 10 – 14 V**

NG

OK **Go to step ▼.**

WhereEverybodyKnowsYourName

4 Check IGN fuse.

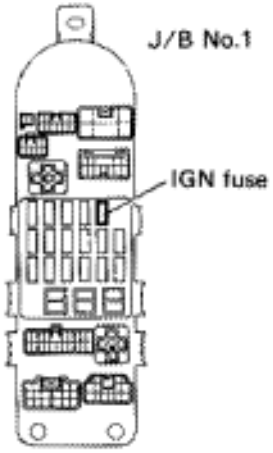

BE6624

P Remove IGN fuse from J/B No. 1.

C Check continuity of IGN fuse.

OK **Continuity**

OK

NG **Check for short in all the harness and components connected to IGN fuse (See attached wiring diagram).**

5 Check ignition switch.

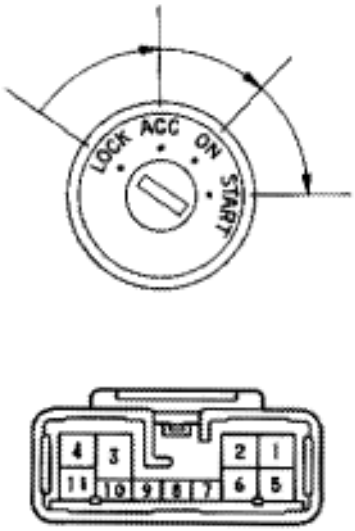

BE3582
eg-11-2

P Remove under cover and finish panel.

C Check continuity between terminals.

OK

Terminal / Switch position	2	3	4	5	6	11
LOCK						
ACC		○—○				
ON	○—○	○	○		○—○	
START	○	—	○	○—○	○	○

OK

NG **Replace ignition switch.**

Check and repair harness and connector between battery and ignition switch, ignition switch and engine (& ECT) ECU.

WhereEverybodyKnowsYourName

6	Check voltage between terminal M–REL of engine (& ECT) ECU connector and body ground.
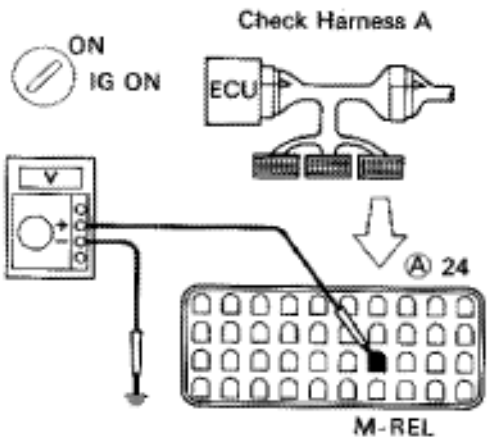	**P** Turn ignition switch on. **C** Measure voltage between terminal M–REL of engine (& ECT) ECU connector and body ground. **OK** **Voltage: 10 – 14 V**

OK

NG → **Check and replace engine (& ECT) ECU.**

7	Check EFI fuse.
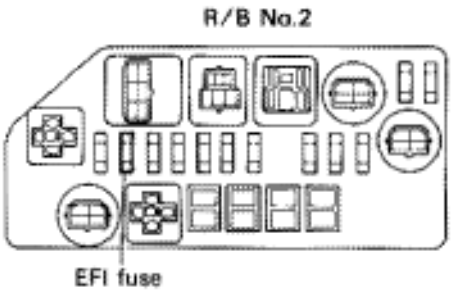	**P** Remove EFI fuse from R/B No. 2. **C** Check continuity of EFI fuse. **OK** **Continuity**

OK

NG → **Check for short in all the harness and components connected to EFI fuse (See attached wiring diagram).**

WhereEverybodyKnowsYourName

8 **Check EFI main relay.**

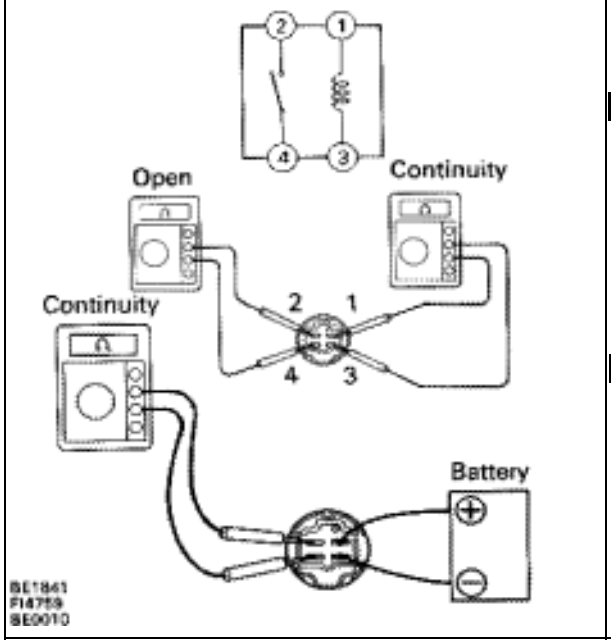

P Remove EFI main relay.

C Check continuity between terminals of EFI main relay shown below.

OK

Terminals 2 and 4	Open
Terminals 1 and 3	Continuity (Reference value 72 Ω)

C
1. Apply battery positive voltage between terminals 1 and 3.
2. Check continuity between terminals 2 and 4.

OK

Terminals 2 and 4	Continuity

OK

NG **Replace EFI main relay.**

9 **Check for open and short in harness and connector between terminal M–REL of engine (& ECT) ECU and body ground (See page IN–27).**

OK

NG **Repair or replace harness or connector.**

Check and repair harness or connector between EFI fuse and battery.

WhereEverybodyKnowsYourName

Neutral Start Switch Circuit

CIRCUIT DESCRIPTION

The neutral start switch goes on when the shift lever is in the N or P shift position. When it goes on the terminal NSW of the ECU is grounded to body ground via the starter relay and theft deterrent ECU, thus the terminal NSW voltage becomes 0V. When the shift lever is in the D, 2, L or R position, the neutral start switch goes off, so the voltage of ECU terminal NSW becomes battery voltage, the voltage of the ECU internal power source. If the shift lever is moved from the N range to the D range, this signal is used for air–fuel ratio correction and for idle speed control (estimated control), etc.
When the neutral start switch is off, code ”51” is output in the test mode diagnosis. (This is not abnormal.)

DIAGNOSTIC CHART

HINT: This diagnosis chart is based on premise that the engine is cranked normally. If the engine is not cranked, proceed to the matrix chart of problem symptoms on page TR–35.

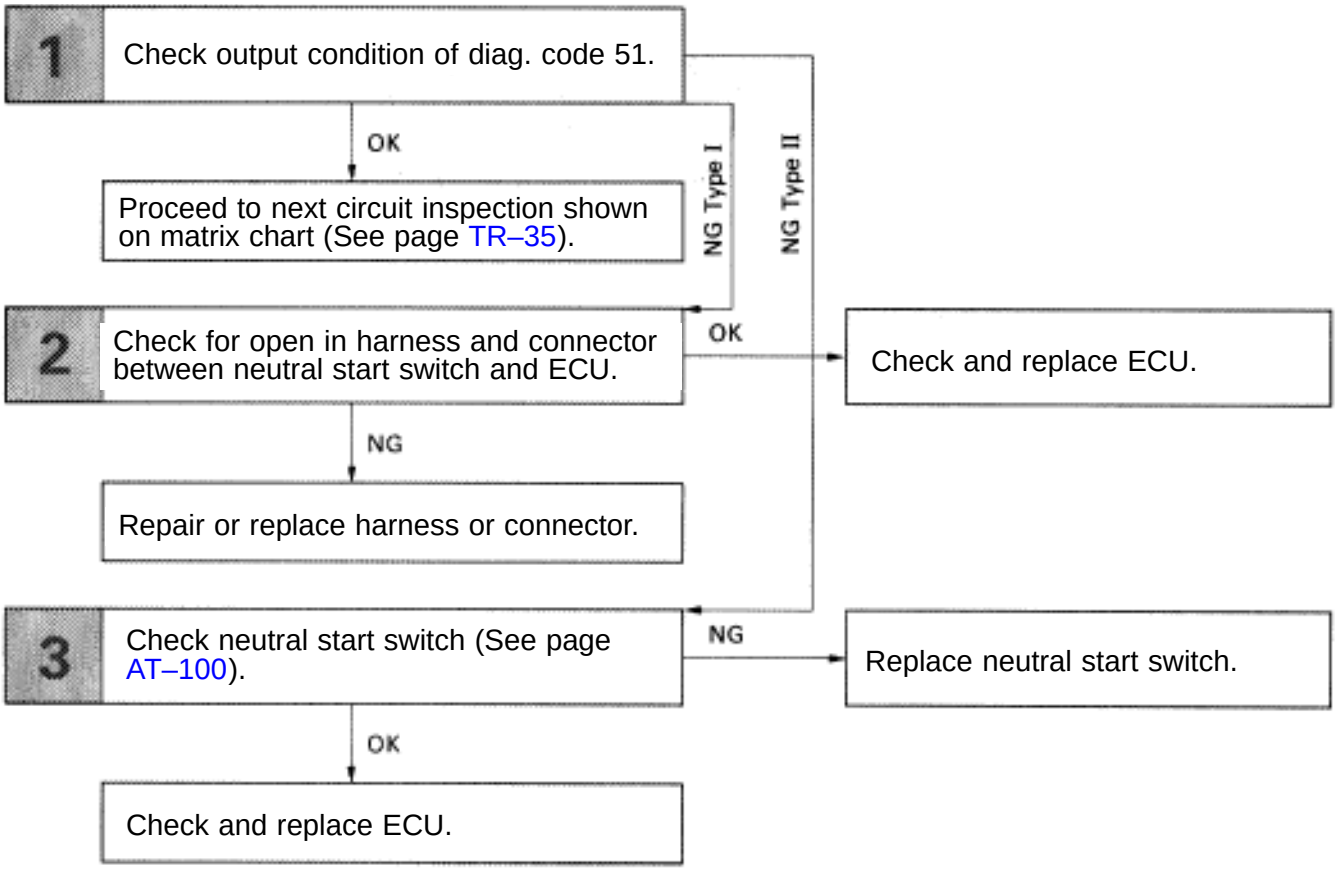

WIRING DIAGRAM

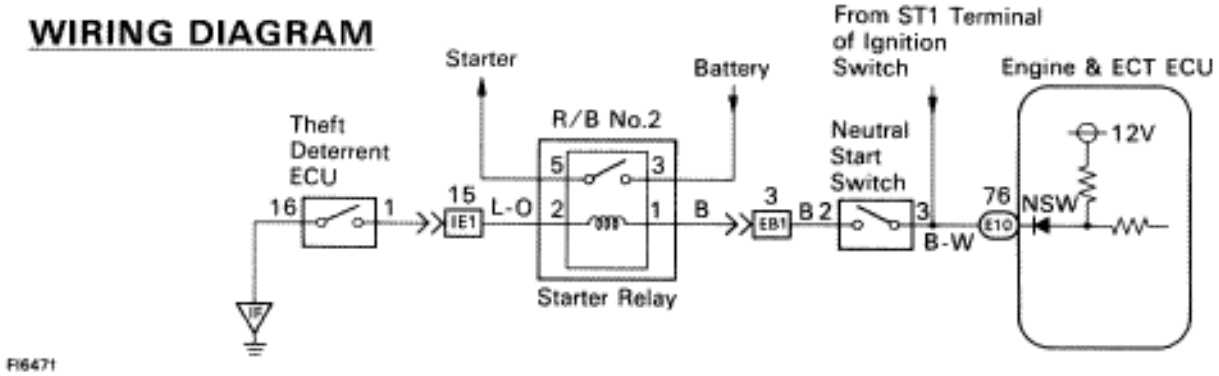

WhereEverybodyKnowsYourName

INSPECTION PROCEDURE

1 **Check output condition of diag. code 51.**

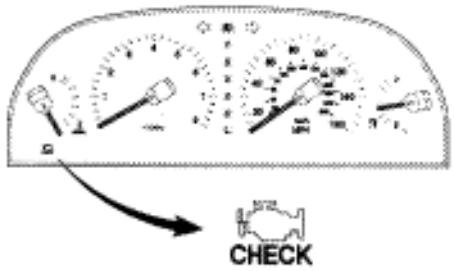

F06433

P
(2) Connect terminals TE2 and E1 of TDCL.
(2) Turn ignition switch on.
(2) Crank the engine.
(2) Connect terminal TE1 and E1 of TDCL.

C Check if diagnostic code “51” is output when then shift level is in the P and D shift positions.

Result:

Shift Position	Result		
	OK	NG Type I	NG Type II
"P"	Normal Code	Code 51	Normal Code
"D"	Code 51	Code 51	Normal Code

OK → **Proceed to next circuit inspection shown on matrix chart (See page TR–35).**

NG Type I → **Go to step 2.**

NG Type II → **Go to step 3.**

2 **Check for open in harness and connector between engine & ECT ECU and neutral start switch (See page IN–27).**

NG → **Repair or replace harness or connector.**

OK → **Check and replace engine & ECT ECU.**

3 **Check neutral start switch (See page AT–100).**

OK → **Check and replace engine & ECT ECU.**

NG → **Replace neutral start switch.**

WhereEverybodyKnowsYourName

Title **VALVE CLEARANCE ADJUSTING TOOL SET**

The Valve Lifter Press has undergone two modifications that will improve service procedures on UZ and VZ series engines.

1. Due to space limitations on these engines, the thickness of the valve lifter press jaws and its connecting rivet have been reduced. This reduction will allow proper compression of the cam follower and spring without the tool slipping out of position.

2. The front jaw angle on the valve lifter press has also been modified. This change will allow easier installation of the tool between the camshaft and the follower, and also provide improved leverage for the compression of the cam follower and spring.

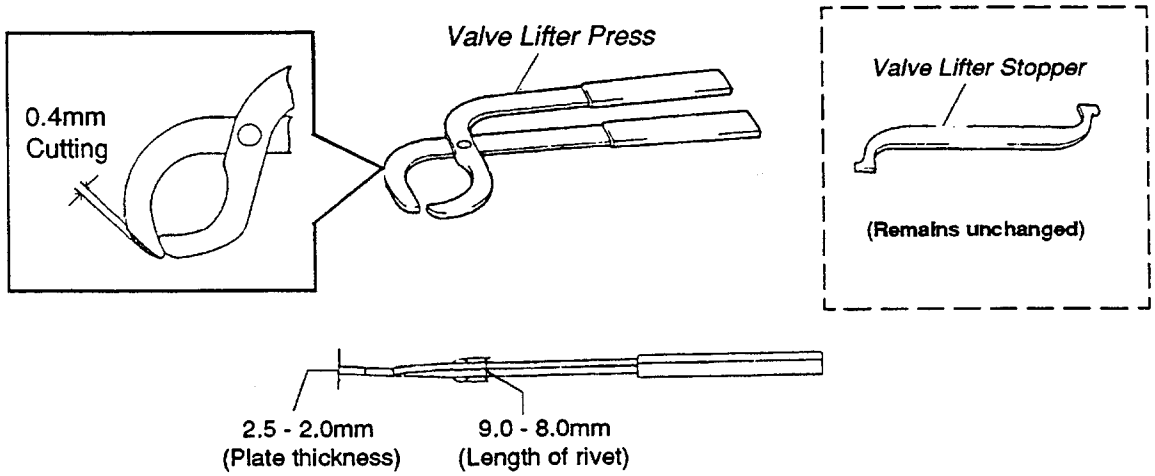

The updated tool set, Part Number 09248–55020, supersedes your previous 09248–55010 tool set. This new tool set will service all current Lexus engines.

WhereEverybodyKnowsYourName

Title **A/C COMPRESSOR OIL APPLICATIONS**

Care must be taken to use **only** refrigerant oil which is compatible to the vehicle's system. Following are A/C oil application charts for both R–12 and HFC–134a systems:

R–12 SYSTEMS

MODEL	OIL TYPE	PART NUMBER	QUANTITY
All Models	ND–Oil 6 (or Equivalent)	P/N (88899–28040) P/N (07117–68040)	60 cc 500 cc

HFC–134A SYSTEMS

MODEL	OIL TYPE	PART NUMBER	QUANTITY
All Models	ND–Oil 8	P/N (08885–09109) P/N (08885–09107)	40 cc 250 cc

WhereEverybodyKnowsYourName

Title **1992 - 1995 SC 300/400 A/C CONTROL ASSEMBLY SERVICE PARTS**

To allow repairs to the A/C Control Assembly, service parts are now available. The following information on parts and troubleshooting will aid you in addressing complaints with the LCD display, night illumination or switch indicators.

PREVIOUSLY AVAILABLE PARTS:

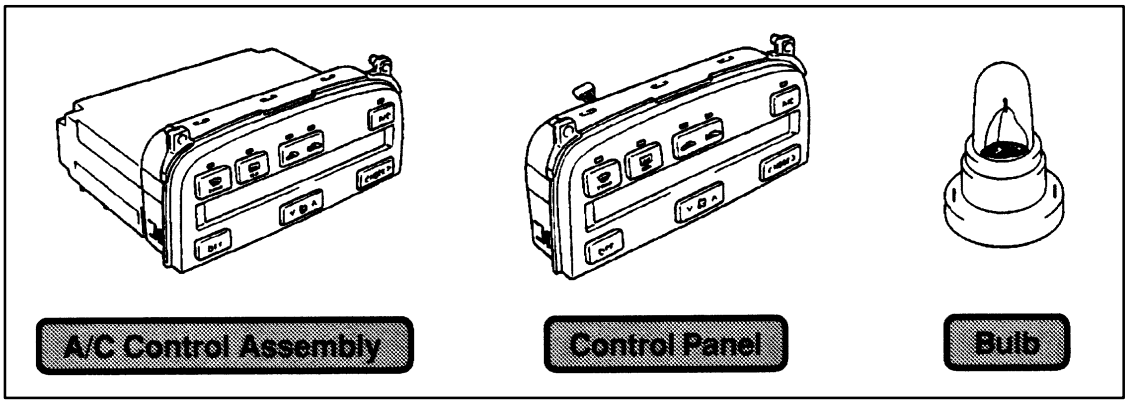

CURRENTLY AVAILABLE PARTS:

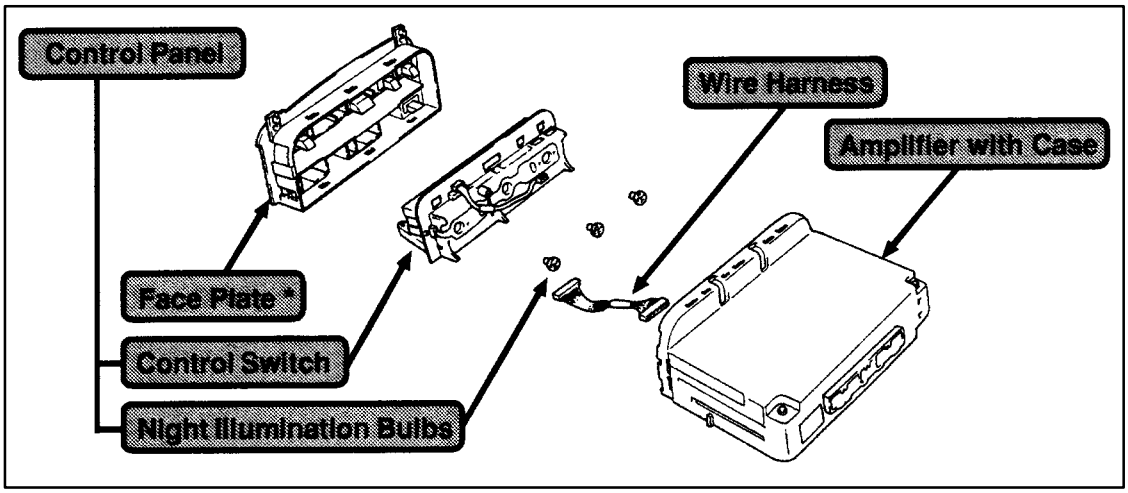

* Face Plate is not available as a separate part.

WhereEverybodyKnowsYourName

TROUBLE SHOOTING:

Use the matrix chart below as a guide to repairs. Verify necessary inputs to the A/C Control Assembly from the vehicle prior to disassembly. Use the repair manual, A/C system section, to validate such as B+, ILL+, ground, etc..

SYMPTOM	SUSPECT AREA			
	Control Panel	Bulb Switch	Switch Control	Indicator Lamp Circuit
Night Illumination does not come on		●		
LCD back lighting does not come on	●[1]			
Indicator lamps of all switches are off			●	●
Indicator lamp of all switches are on			●	
LCD is faulty	●			

NOTE: If symptoms still exist after the suspect areas have been tested and found not to be faulty, replace the amplifier.

[1] LCD illumination bulbs are not serviceable, Control Switch must be replaced if illumination does not occur.

AIR CONDITIONING CONTROL DISASSEMBLY:

1. Remove Air Conditioning Control Assembly.

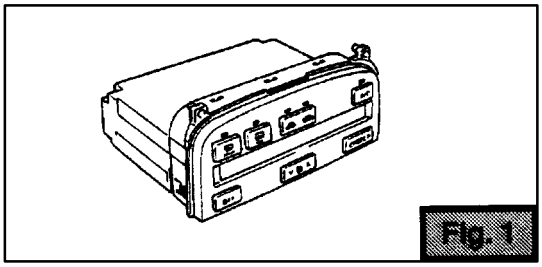

2. Separate Control Panel from case.

   a. Cut the cloth tape on both sides of the case (See Fig. 2).

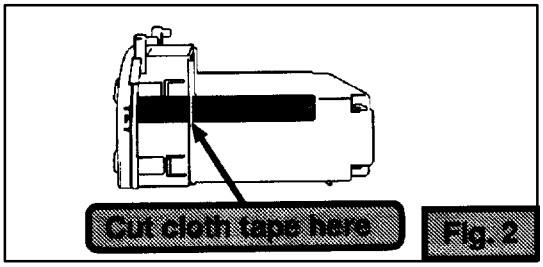

AIR CONDITIONING CONTROL DISASSEMBLY (Cont'd):

b. Remove 2 screws and release the 6 clips to separate the Control Panel from the case.

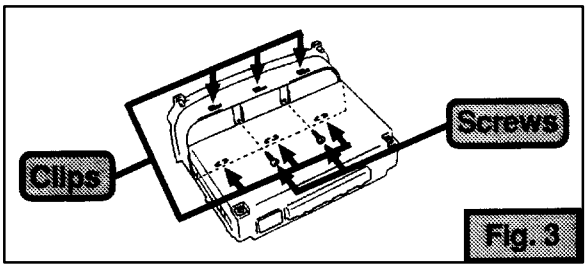

Fig. 3

c. Disconnect 2 connectors to separate the Control Panel from the case.

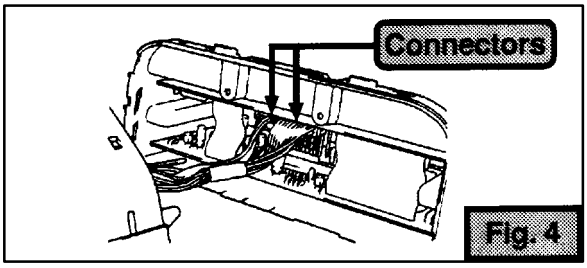

Fig. 4

d. Remove the wire harness (See Fig. 5).

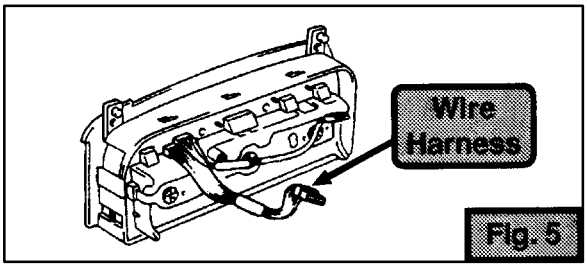

Fig. 5

3. Remove Control Switch.

a. To replace the Control Switch remove 2 screws and release 4 clips (See Fig. 6).

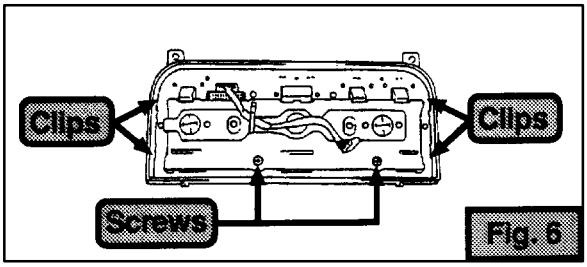

Fig. 6

b. Separate Control Switch from face plate.

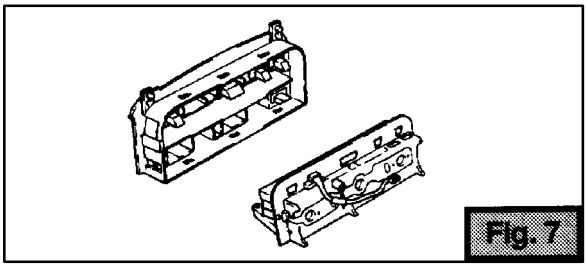
Fig. 7

4. Replace the Night Illumination Bulb.

Using a flat–bladed screwdriver, remove and replace the Night Illumination Bulb.

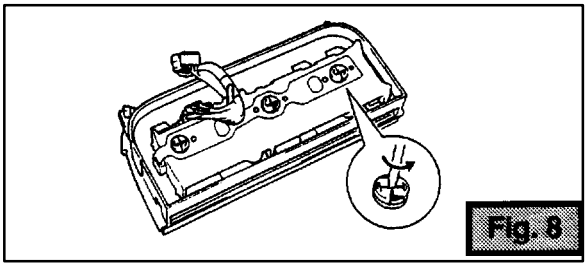
Fig. 8

INSPECTION PROCEDURE:

1. Bulb Circuit:

   - *Bulb Inspection* – Perform the following test on suspect Night Illumination Bulbs. Check for continuity as shown. Replace the bulb if there is no continuity.

   - *Bulb Circuit Inspection* – Verify continuity between terminals 22 and 24. If there is no continuity, replace Control Switch.

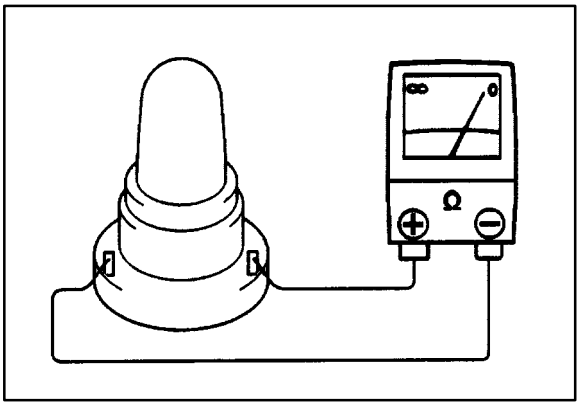

2. Switch Circuit:

   - *Switch Continuity Inspection* – Check that there is continuity between the terminals while the switch is pressed.

   - If there is no continuity between even one pair of terminals, replace the Control Switch.

SWITCH	INSPECTION TERMINALS
A/C	13 - 17
MODE/R>	13 - 16
MODE/L<	13 - 15
REAR - DEF	12 - 17
FRONT - DEF	12 - 16
FRESH	12 - 15
RECIRC	12 - 14
OFF	11 - 17
FAN - DOWN	11 - 16
FAN - UP	11 - 15

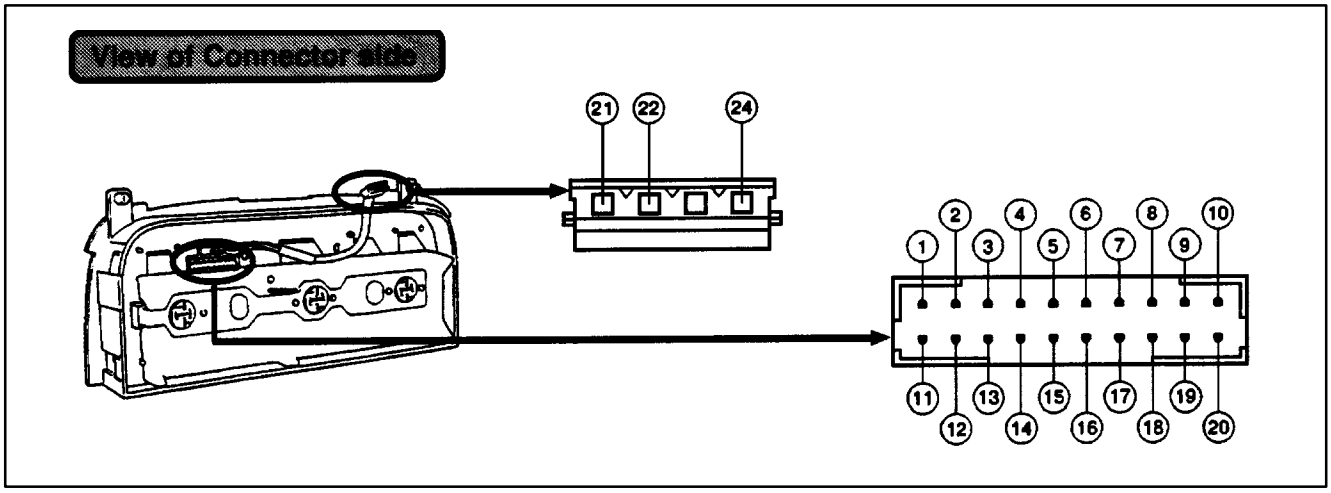

INSPECTION PROCEDURE (Cont'd):

3. Indicator Lamp Circuit:

- Connect two 1.5 v dry cell batteries in series. Using the table, check that each suspect indicator lamp illuminates.

NOTE: Since the indicator lamps are LEDs, do not mix the "+" and "–" terminals of the test batteries or apply power to them for more than 3 seconds at a time.

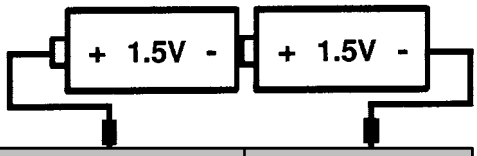

INDICATOR	TERMINAL TO CONNECT "+"	TERMINAL TO CONNECT "-"
A/C	10	18
REAR - DEF	20	18
FRONT - DEF	20	8
FRESH	19	18
RECIRC	19	8

- If a suspect LED does not illuminate when tested, replace the Control Switch.

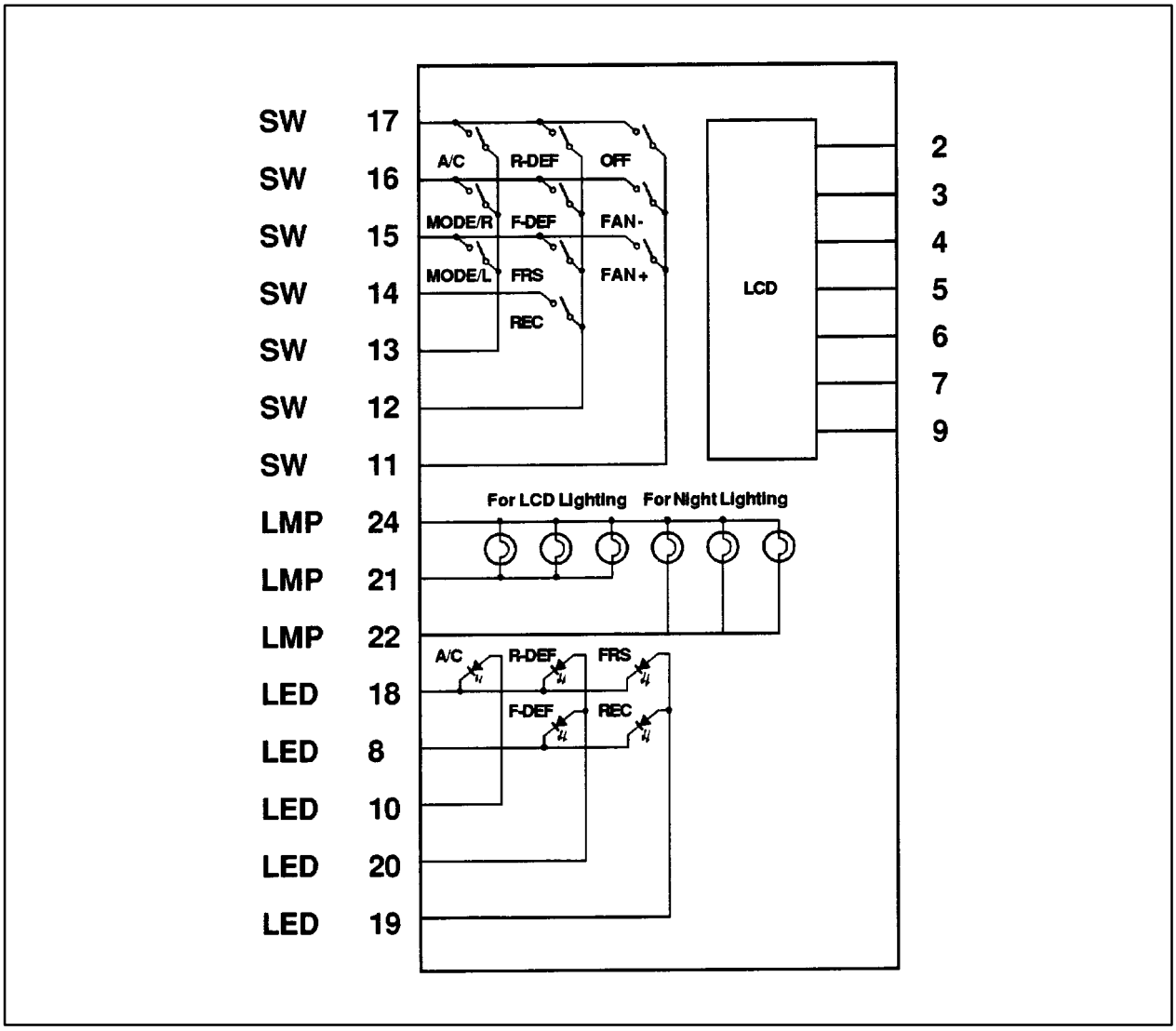

PART NUMBER INFORMATION:

PART NAME	PART NUMBER	MODEL YEAR	MODEL APPLICATION	QTY
Control Panel	55902-24010	‘92-‘94	SC 300/SC 400	1
	55902-24020	‘95	SC 300/SC 400	1
Control Switch	88601-24020	‘92-‘94	SC 300/SC 400	1
	88601-24030	‘95	SC 300/SC 400	1
Bulb	84999-60360	‘92-‘94	SC 300/SC 400	3
	84999-60340	‘95	SC 300/SC 400	3
Amplifier with Case	88650-24150	‘92	SC 300	1
	88650-24160	‘92	SC 400	1
	88650-24190	‘93-‘94	SC 300	1
	88650-24200	‘93-‘94	SC 400	1
	88650-24231	‘95	SC 300/SC 400	1
Wire Harness	88484-24010	‘92-‘95	SC 300/SC 400	1
Screws	90094-90416	‘92-‘95	SC 300/SC 400	*

* Screw Replacement not required for repair

WARRANTY INFORMATION:

OPCODE	DESCRIPTION	TIME*	OPN	T1	T2
883851	A/C Control Assy, R&R	0.6	55900-XXXXX	**	**
Combo “A”	Control Panel R&R	0.2	22902-XXXXX	**	**
Combo “C”	Bulbs R&R	0.2	84999-XXXXX	**	**
Combo “D”	Amplifier with Case R&R	0.2	88650-XXXXX	**	**
Combo “E”	Wire Harness R&R	0.2	88484-XXXXX	**	**
Combo “G”	Control Switch R&R	0.2	88601-XXXXX	**	**

* Listed time for sub–operations are to be added to base operation to R&R the A/C control Assembly and include all necessary checks and tests.

** As applicable per the Lexus Universal Flat Rate Manual.

WhereEverybodyKnowsYourName

Title:

AIR CONDITIONING EVAPORATOR ODOR

Models:

'92–96 ES 300, '93–'94 LS 400, All GS 300, SC 300/400, LX 450.

Introduction

A musty odor may be emitted from the air conditioning system of some vehicles which are usually operated in areas with high temperature and humidity. It is most noticeable when the air conditioner is first turned "ON" after the vehicle has been parked for several hours. The odor could result from one or more of the following conditions:

1. Blockage of the evaporator housing drain pipe, resulting in the build up of condensation.

2. Microbial growth in the evaporator, arising from dampness in the evaporator housing where the cooling air flow is dehumidified.

To address excessive air conditioning evaporator odor, check the evaporator housing drain pipe for blockage. If no problems are found, the evaporator and housing should be cleaned and disinfected using the general procedure given on page 2, and the model specific procedure on the pages indicated in the Table of Contents at the bottom of this page.

Affected Vehicles

- While this procedure may be used on any Lexus vehicle, this bulletin gives details specifically for the **'92–'96 ES 300, all GS 300, '93–'94 LS 400, all SC 300/400 and the LX 450.**

Tools & Materials

PART NUMBER	DESCRIPTION OF TOOLS & MATERIALS	QUANTITY	SOURCE
08821–00810–01	Spray Gun Kit	1	OTC
08821–00811–01	Spray Gun (replacement)	(1)	OTC
08821–00812–01	Spray Gun Nozzle (replacement)	(1)	OTC
08821–00813–01	Freshener Mixing Container (replacement)	(1)	OTC
08821–00801–DS	Air Conditioning Freshener	1 per vehicle	TMS

CAUTION:
Wear safety glasses, protective mask, and gloves while working with the freshener.

Warranty Information

OPCODE	DESCRIPTION	TIME	OPN	T1	T2
N/A	No applicable warranty information	–	–	–	–

Table of Contents

MODEL	PAGE	MODEL	PAGE	MODEL	PAGE	MODEL	PAGE
GENERAL	2	ES 300	3	GS 300	5	LS 400	7
		SC 300	9	SC 400	9	LX 450	11
General Procedure applies to all models and model years. The Specific Model Sections cover only the listed "affected models."							

WhereEverybodyKnowsYourName

General Procedure

1. Preparation of freshener solution:

   (a) Invert freshener container and shake vigorously for 30 seconds.
   (b) Mix 3.4 fl. oz. of freshener (1 container) with 30 fl. oz. to make 1 qt. of solution.

2. Drying the evaporator:
   - Dry the evaporator for 10 minutes with the following settings:
     A/C: . . . . . Off
     Air Outlet: . . . . . Foot
     Mode: . . . . . Recirc.
     Blower: . . . . . High
     Temp: . . . . . Max Warm

3. Evaporator Treatment Preparation:

   (a) Ensure availability of 30–45 psi compressed air to be used with spray gun for application of freshener.
   (b) Place a tray under the evaporator housing drain hose to collect used cleaning solution.
   (c) Place shop cloth under the evaporator housing in the vehicle to prevent cleaning solution from dripping onto the floor mat.

4. Vehicle Preparation: **See specific model section.**

5. Evaporator treatment:

   (a) Set HVAC mode as follows:
   A/C: . . . . . Off
   Air Outlet: . . . . . Face
   Mode: . . . . . Fresh
   Blower: . . . . . High
   Temp: . . . . . Max Warm
   Windows: . . . . . Open
   (b) Insert spray nozzle into the filter inlet and spray the entire quantity (1 qt.) of freshener solution into the evaporator while moving the nozzle around to cover the complete evaporator surface.
   (c) Turn the blower OFF.

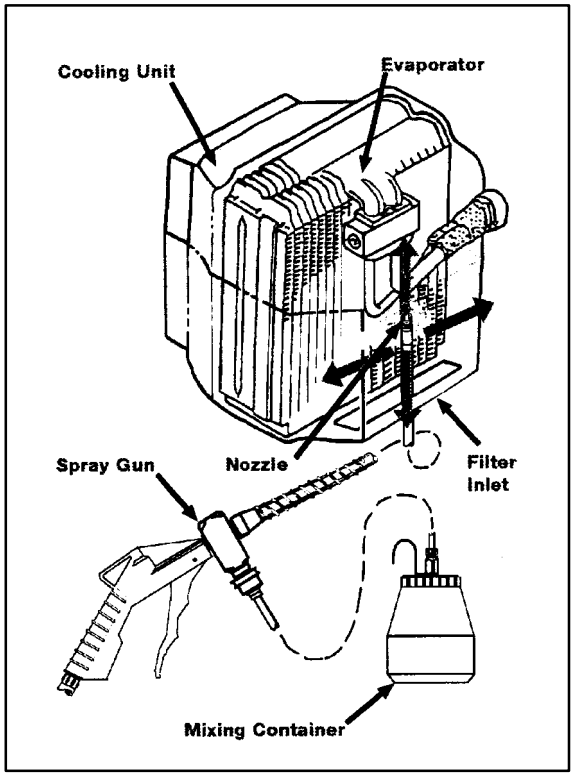

6. Reinstallation of Parts.

7. Completion of Treatment.

   (a) Dry the evaporator for 30 minutes with the following settings:
   A/C: . . . . . Off
   Air Outlet: . . . . . Foot
   Mode: . . . . . Recirc.
   Blower: . . . . . High
   Temp: . . . . . Max Warm
   Windows: . . . . . Closed
   (b) If the vehicle still has alcohol smell, open windows for ventilation. Do not turn on the AC switch until the evaporator is completely dry as this can reduce the effectiveness of the solution.

CAUTION
Do not get into the vehicle during this drying operation.

WhereEverybodyKnowsYourName

ES 300 ('92–'96)

1. Removal of parts.

   (a) Pull down the carpet from the center console as indicated by red arrow in the illustration.

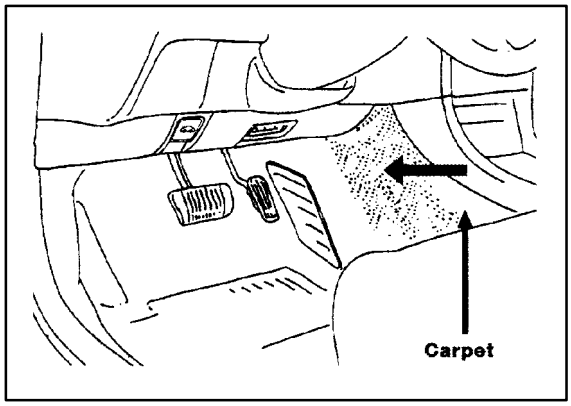

   (b) Remove the plate on the side of the heater unit using steps ① and ❷, indicated with red arrows to show direction, in the illustration.

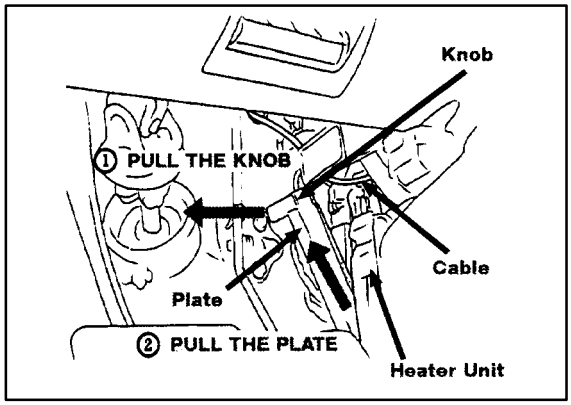

CAUTION:
Do not bend the cable.

NOTE:
The Plate will be reused.

   (c) Remove the filter.

   (d) Remove the blower controller.

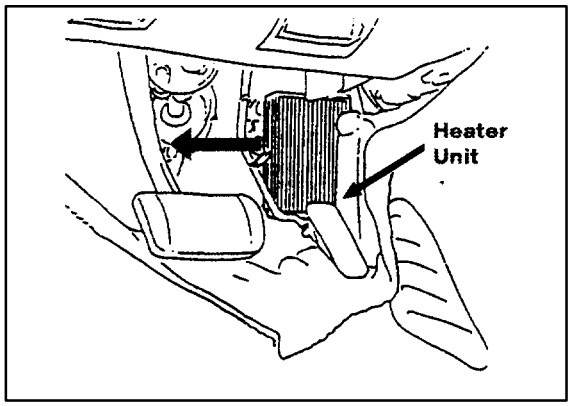

2. Clean the Evaporator.

   - Follow the general procedures given on page 2.

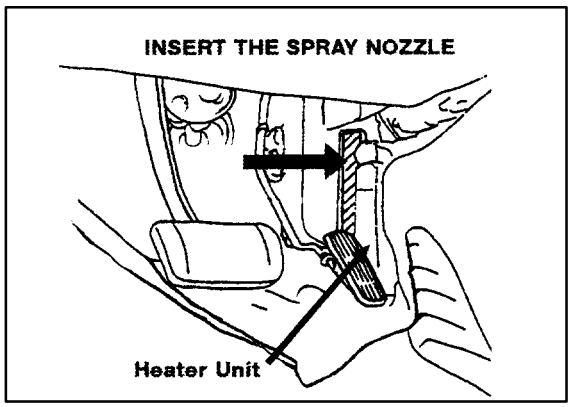

NOTE:
Location for insertion of spray nozzle is indicated by the red arrow in the illustration.

WhereEverybodyKnowsYourName

ES 300 ('92–'96) (Continued)

3. Reinstallation of parts.

(a) Insert the filter (up side) into the heater unit following the numbered steps shown in the illustration.

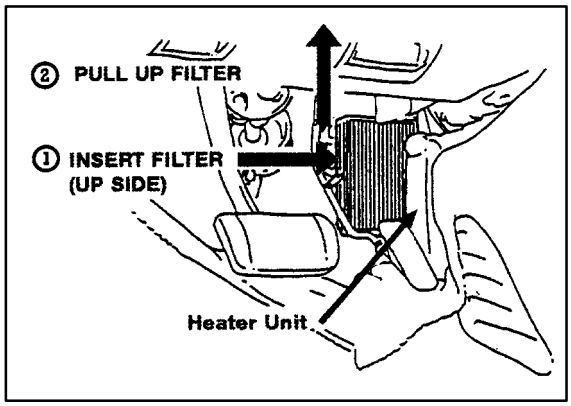

(b) Insert the filter (down side) into the heater unit.

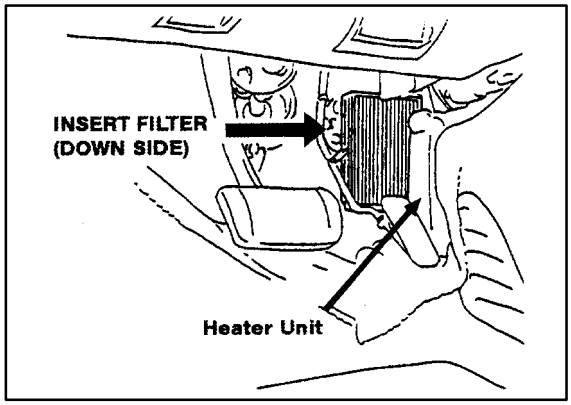

(c) Reinstall the plate on the side of the heater unit using steps ① and ❷, indicated with **red** arrows to show direction, in the illustration.

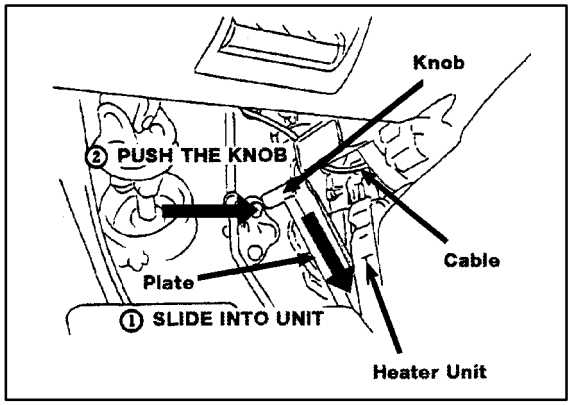

> **CAUTION:**
> **Confirm that the plate is secure.**

(d) Restore the carpet to its original position taking care not to bend the cable.

WhereEverybodyKnowsYourName

GS 300 1. Removal of parts.

(a) Remove the undercover.

> **NOTE:**
> **Pull down the clip areas (3 places) of the Undercover to remove.**

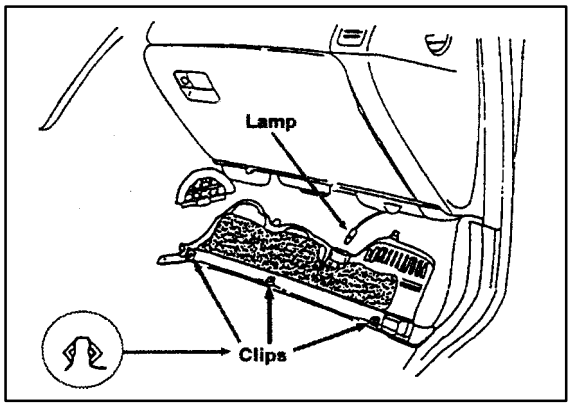

(b) Remove the lamp.

(c) Remove the (2) wing nuts and the plate on the bottom of the cooling unit.

> **CAUTION:**
> **The plate and wing nuts will be reused.**

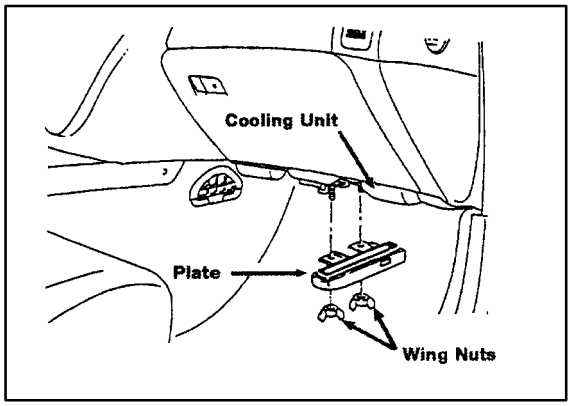

(d) Remove the (2) filters from the cooling unit.

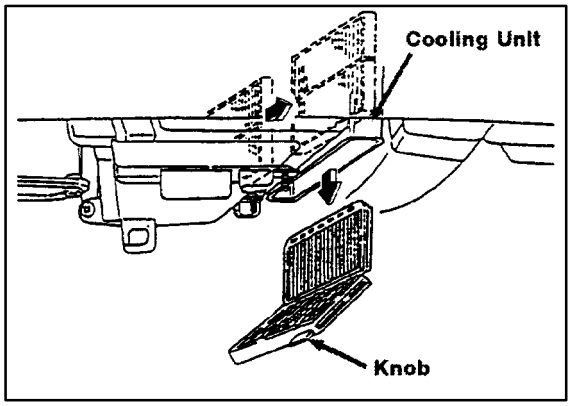

2. Clean the Evaporator.

- Follow the general procedures given on page 2.

> **NOTE:**
> **Location for insertion of spray nozzle is indicated by the red arrow in the illustration.**

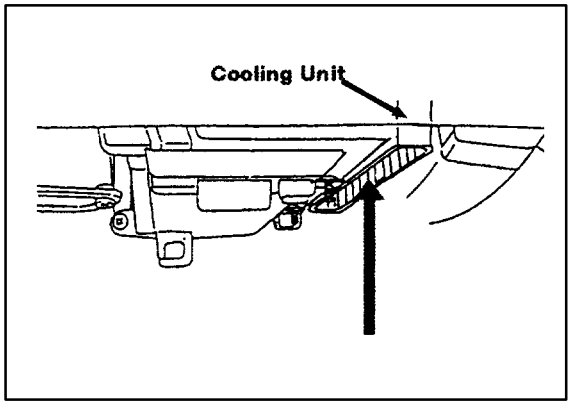

WhereEverybodyKnowsYourName

GS 300 (Continued)

3. Reinstallation of parts.

(a) Insert the (2) filters into the cooling unit as shown in the illustration.

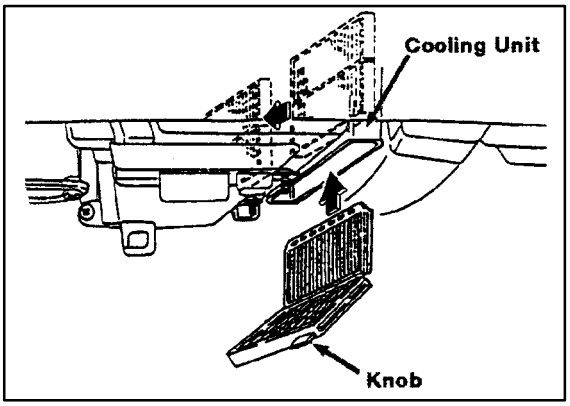

NOTE:
Insert a clean air filter with it's knob facing downwards, then slide it forward and install the second filter in the same manner.

(b) Assemble the rubber insulator on the plate.

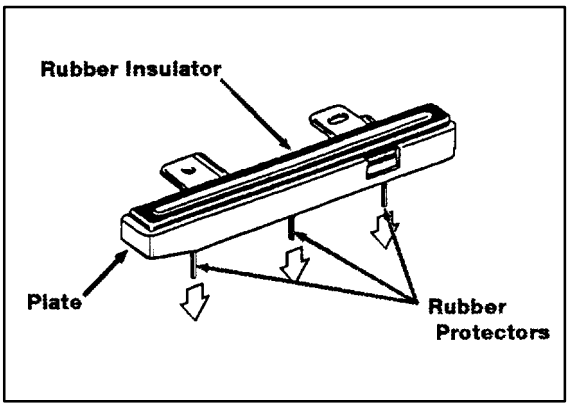

CAUTION:
To prevent the cooling unit from leaking water, pull the three rubber projections from the other side of the plate to make sure that the rubber insulator seals properly against the plate.

(c) Install the plate on the cooling unit and secure with the (2) wing nuts.

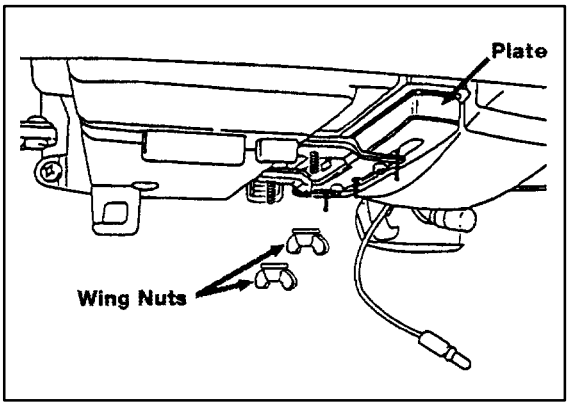

CAUTION:
To prevent water leaks, verify that the cooling unit and plate are fully secure before tightening the wing nuts.

NOTE:
Before installing the plate on the cooling unit, coat the rubber insulator with water for easier assembly.

(d) Reinstall the lamp.

(e) Reassemble the Undercover.

WhereEverybodyKnowsYourName

LS 400 ('93–'94)

1. Removal of parts.

   (a) Remove the undercover.

> **NOTE:**
> - **Remove the front of "A" clips.**
> - **Pull down the three "B" clip areas of the Undercover to remove.**

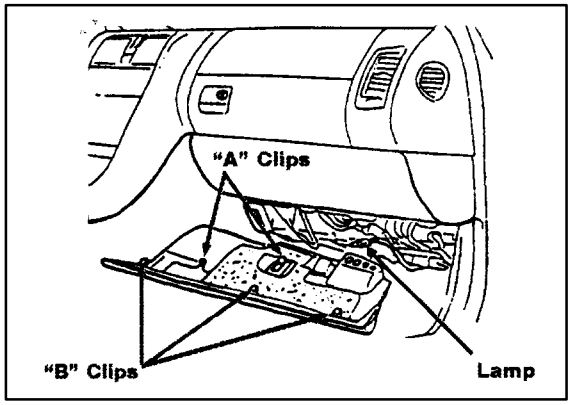

   (b) Remove the lamp.

   (c) Remove the (2) wing nuts and the plate on the bottom of the cooling unit.

> **CAUTION:**
> **The plate and wing nuts will be reused.**

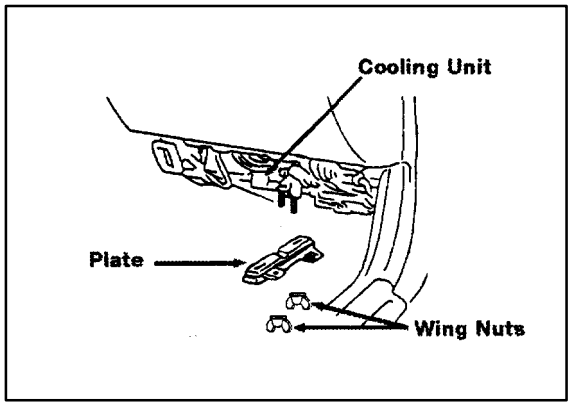

   (d) Remove the (2) filters from the cooling unit.

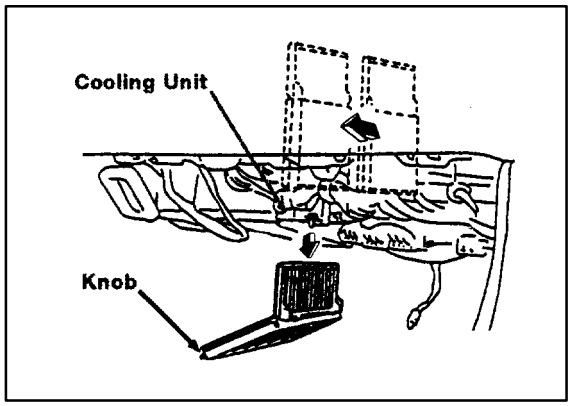

2. Clean the Evaporator

   - Follow the general procedures given on page 2.

> **NOTE:**
> **Location for the insertion of spray nozzle is indicated by the red arrow in the illustration.**

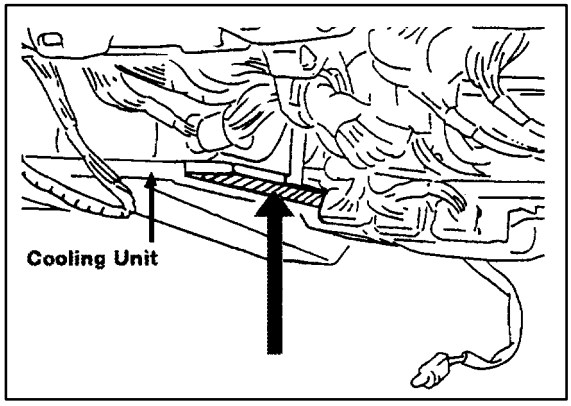

WhereEverybodyKnowsYourName

LS 400 ('93–'94) (Continued)

3. Reinstallation of parts.

(a) Insert the (2) filters into the cooling unit as shown in the illustration.

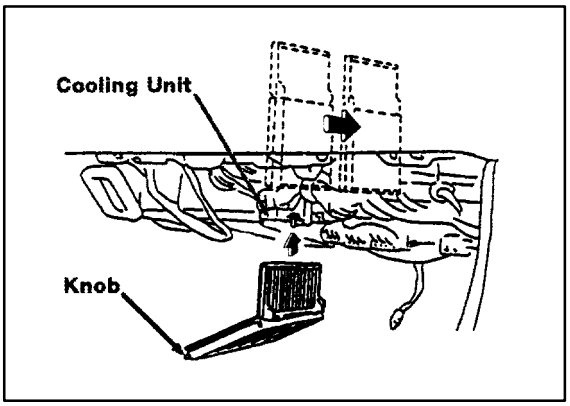

NOTE:
Insert a clean air filter with it's knob facing downwards, then slide it forward and install the second filter in the same manner.

(b) Assemble the rubber insulator on the plate.

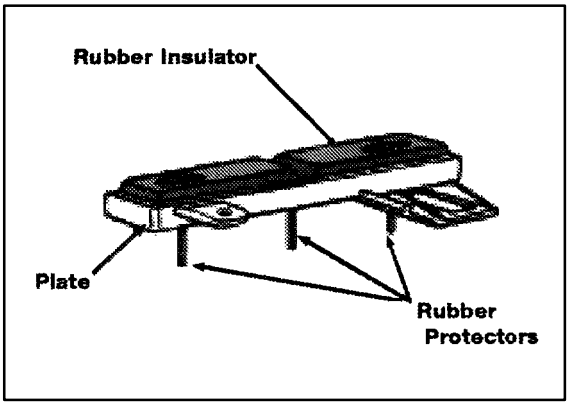

CAUTION:
To prevent the cooling unit from leaking water, pull the three rubber projections from the other side of the plate to make sure that the rubber insulator seals properly against the plate.

(c) Install the plate on the cooling unit and secure with the (2) wing nuts.

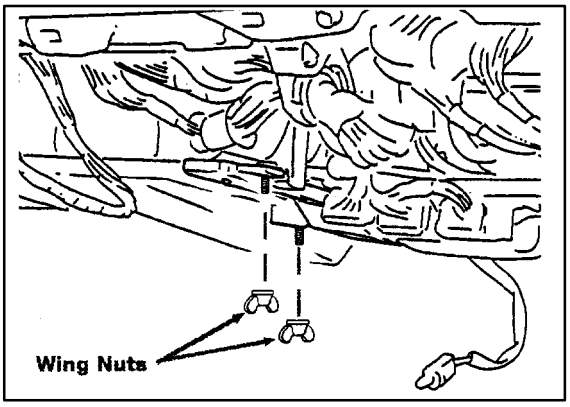

CAUTION:
To prevent water leaks, verify that the cooling unit and plate are fully secure before tightening the wing nuts.

NOTE:
Before installing the plate on the cooling unit, coat the rubber insulator with water for easier assembly.

(d) Reinstall the lamp.

(e) Reassemble the Undercover.

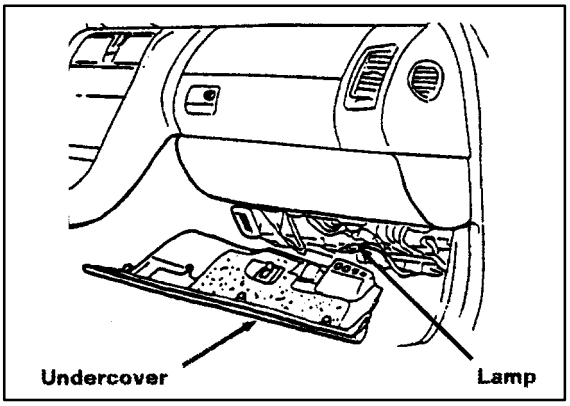

WhereEverybodyKnowsYourName

SC 300
SC 400

1. Removal of parts.

   (a) Remove two clips using the clip remover then remove the undercover.

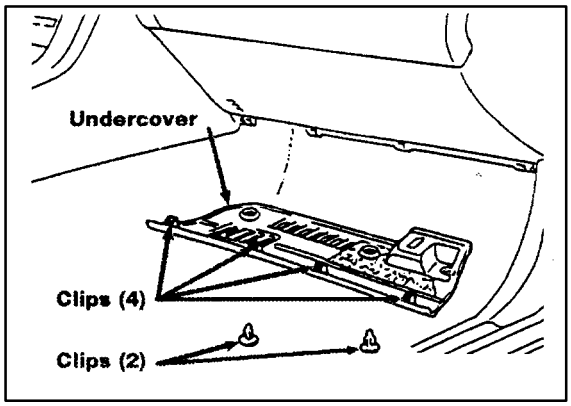

> **NOTE:**
> **Pull down the clip areas (4 places) of the Undercover to remove.**

   (b) Remove the (2) wing nuts and the plate on the bottom of the cooling unit.

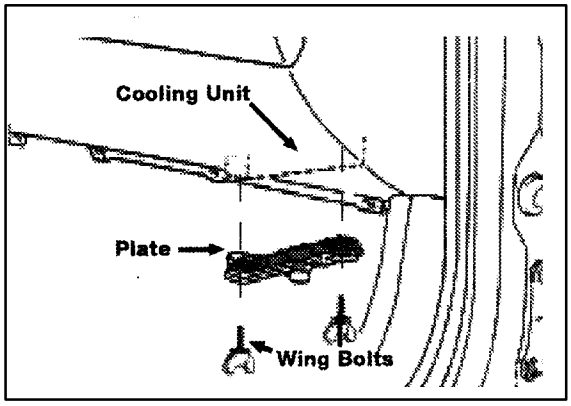

> **CAUTION:**
> **The plate and wing nuts will be reused.**

   (c) Remove the (2) filters from the cooling unit.

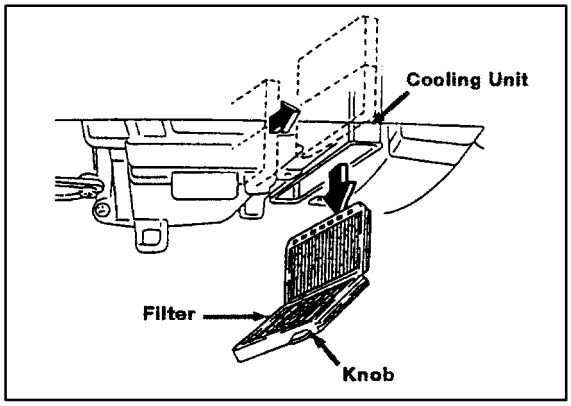

2. Clean the Evaporator

   - Follow the general procedures given on page 2.

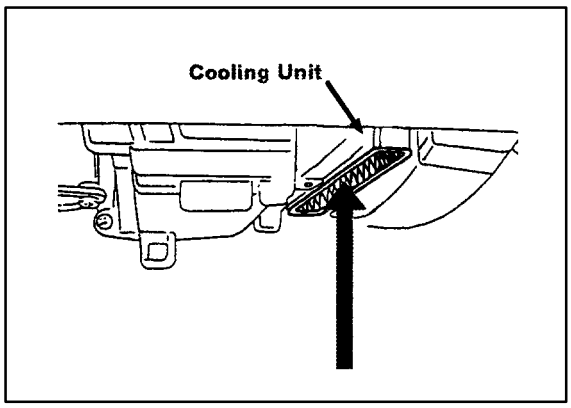

> **NOTE:**
> **Location for the insertion of spray nozzle is indicated by the red arrow in the illustration.**

WhereEverybodyKnowsYourName

SC 300
SC 400
(Continued)

3. Reinstallation of parts.

(a) Insert the (2) filters into the cooling unit as shown in the illustration.

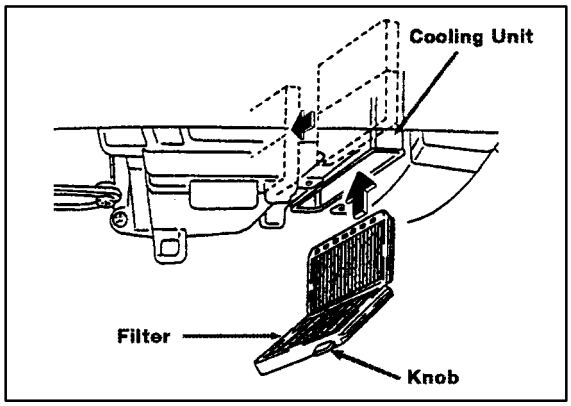

NOTE:
Insert a clean air filter with it's knob facing downwards, then slide it forward and install the second filter in the same manner.

(b) Assemble the rubber insulator on the plate.

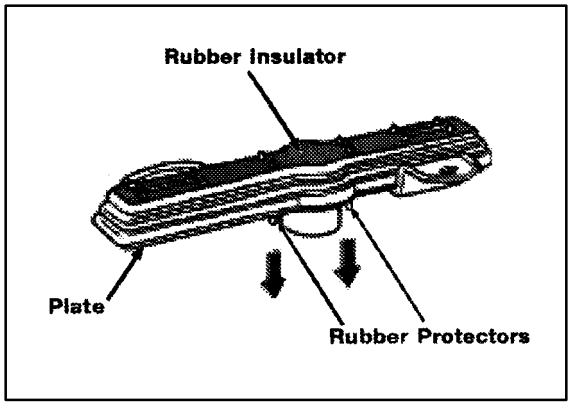

CAUTION:
To prevent the cooling unit from leaking water, pull the three rubber projections from the other side of the plate to make sure that the rubber insulator seals properly against the plate.

(c) Install the plate on the cooling unit and secure with the (2) wing nuts.

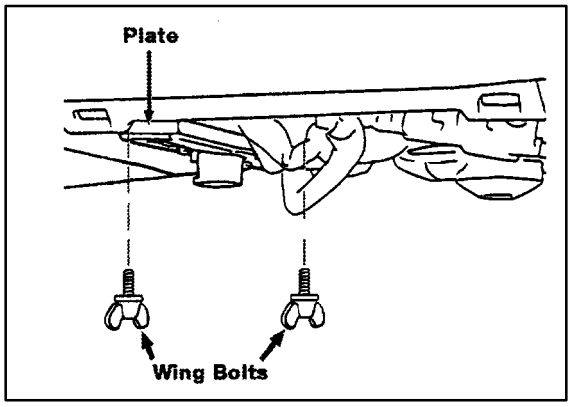

CAUTION:
To prevent water leaks, verify that the cooling unit and plate are fully secure before tightening the wing nuts.

NOTE:
Before installing the plate on the cooling unit, coat the rubber insulator with water for easier assembly.

(d) Reassemble the Undercover.

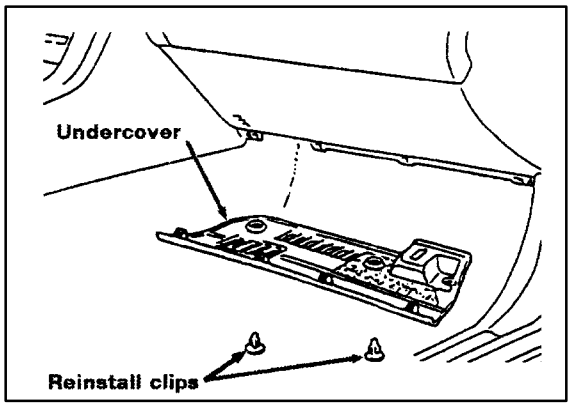

WhereEverybodyKnowsYourName

LX 450 1. Removal of parts.

(a) Remove the glove compartment door.
(b) Remove the A/C Amplifier.
(c) Remove power transistor.

2. Clean the Evaporator

- Follow the general procedures given on page 2.

3. Reinstallation of parts.

- Reinstall the parts in reverse order of removal described in step 1.

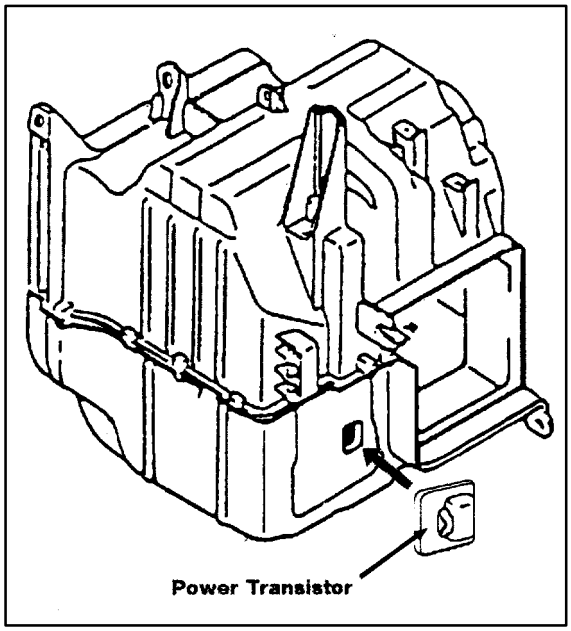

WhereEverybodyKnowsYourName

LEXUS

Technical Service Information Bulletin

December 16, 2004

TSIB

Title:

SENSOR INSPECTION FOR AIR CONDITIONING SYSTEM

Models:

'90 – Current All Models

Introduction

This service bulletin contains inspection procedures to more precisely confirm proper operation of the following temperature sensors of the air conditioning system. Follow the procedures in this service bulletin when inspecting these sensors. These contents will be reflected in future repair manuals.

- Room Temperature Sensor
- Ambient Temperature Sensor
- Air Duct Sensor
- Evaporator Temperature Sensor
- Solar Sensor
- Room Humidity Sensor

Applicable Vehicles

- **All 1990 – Current** model year **Lexus** vehicles.

Warranty Information

OP CODE	DESCRIPTION	TIME	OFP	T1	T2
N/A	Not Applicable to Warranty	–	–	–	–

WhereEverybodyKnowsYourName

Inspection Procedure

1. Inspect Room Temperature Sensor.

A. Measure the sensor resistance.

Resistance Value at 77°F (25°C)	1700 +/– 85Ω

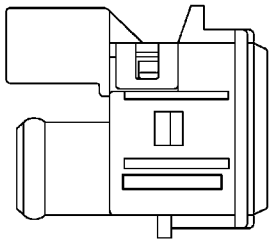

NOTE:

- **Even slightly touching the sensor may change the resistance value. Be sure to hold the connector of the sensor.**
- **When measuring, the sensor temperature must be the same as the ambient temperature.**

HINT:

As the temperature increases, the resistance decreases.

TEMPERATURE °F (°C)	SPECIFICATION kΩ
50 (10)	3.00 to 3.73
59 (15)	2.45 to 2.88
68 (20)	1.95 to 2.30
77 (25)	1.60 to 1.80
86 (30)	1.28 to 1.47
95 (35)	1.00 to 1.22
104 (40)	0.80 to 1.00
113 (45)	0.65 to 0.85
122 (50)	0.50 to 0.70
131 (55)	0.44 to 0.60
140 (60)	0.36 to 0.50

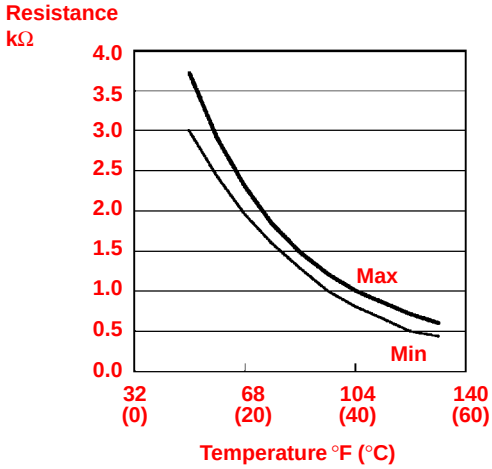

WhereEverybodyKnowsYourName

Inspection Procedure (Continued)

2. Inspect Ambient Temperature Sensor.

A. Measure the sensor resistance according to the selected graph (specification).

Resistance Value at 77°F (25°C)	1700 +/– 85Ω

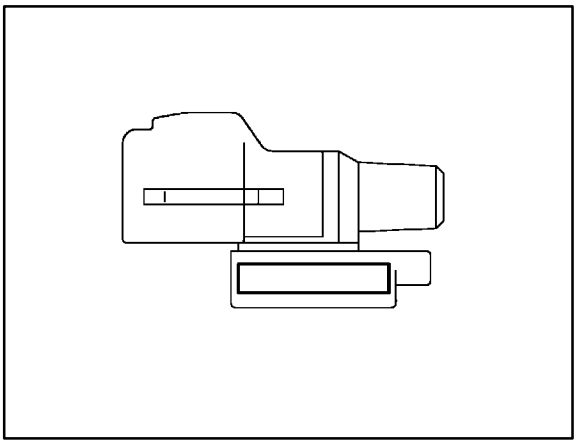

NOTE:

- **Even slightly touching the sensor may change the resistance value. Be sure to hold the connector of the sensor.**
- **When measuring, the sensor temperature must be the same as the ambient temperature.**

HINT:

As the temperature increases, the resistance decreases.

TEMPERATURE °F (°C)	SPECIFICATION kΩ
50 (10)	3.00 to 3.73
59 (15)	2.45 to 2.88
68 (20)	1.95 to 2.30
77 (25)	1.60 to 1.80
86 (30)	1.28 to 1.47
95 (35)	1.00 to 1.22
104 (40)	0.80 to 1.00
113 (45)	0.65 to 0.85
122 (50)	0.50 to 0.70
131 (55)	0.44 to 0.60
140 (60)	0.36 to 0.50

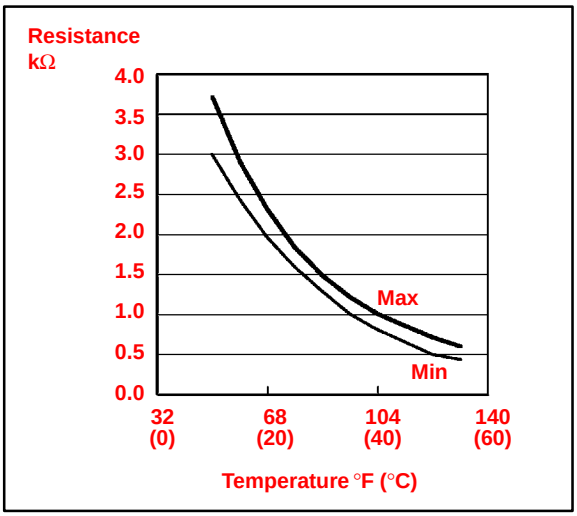

WhereEverybodyKnowsYourName

Inspection Procedure (Continued)

3. Inspect Air Duct Sensor.

A. Measure the sensor resistance according to the table and graph (specification).

NOTE:

- **Even slightly touching the sensor may change the resistance value. Be sure to hold the connector of the sensor.**
- **When measuring, the sensor temperature must be the same as the ambient temperature.**

HINT:

As the temperature increases, the resistance decreases.

TEMPERATURE °F (°C)	SPECIFICATION kΩ
50 (10)	9.48 to 10.49
59 (15)	7.50 to 8.28
68 (20)	5.95 to 6.57
77 (25)	4.77 to 5.25
86 (30)	3.85 to 4.21
95 (35)	3.12 to 3.40
104 (40)	2.53 to 2.79
113 (45)	2.06 to 2.30
122 (50)	1.69 to 1.91
131 (55)	1.39 to 1.59
140 (60)	1.15 to 1.33

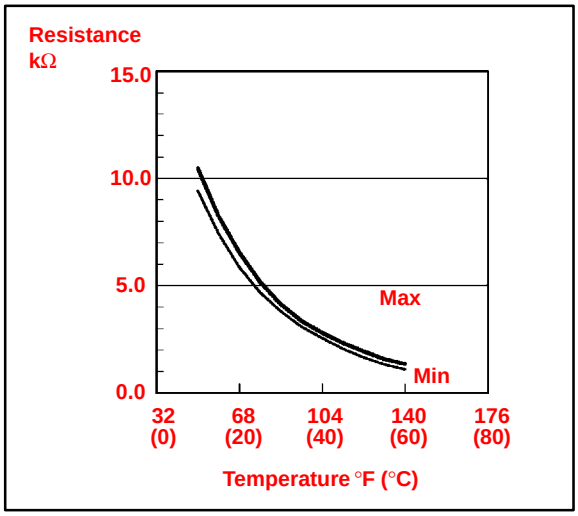

WhereEverybodyKnowsYourName

Inspection Procedure (Continued)

4. Inspect Evaporator Temperature Sensor.

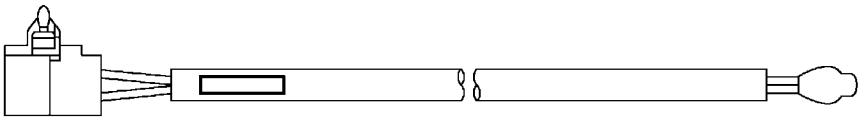

Select the appropriate graph (specification) using the following table.

NOTE:
Please inspect the sensors for model years not indicated by this bulletin, according to the instructions in the applicable repair manual.

MODEL	MODEL YEAR	COMMENTS	PART NUMBER	GRAPH
ES 300	1992 – 2001		88625–33070	2
ES 300/330	2002 – 2003		88625–17130	2
	2003		88625–33170	3
GS 300	1993 – 1997		88625–3A020	2
GS 300/400/430	1998 – 2002		88625–3A120	2
GX 470	2003 – 2005	Thermistor No. 1	88625–35050	3
		Thermistor No. 2	88625–16210	2
IS 300	2000 – 2001		88625–48010	2
LS 400	1990 – 1992		88625–32040	2
	1993 – 1994		88625–50100	2
	1995 – 2000		88625–50140	2
LS 430	2001 – 2005		88625–50160	2
LX 450	1996 – 1997		88625–60060	2
LX 470	1998 – 2000	Thermistor No. 2	88625–60140	2
	1998 – 2002	Thermistor No. 1	88625–60130	2
	2003 – 2005		88625–47011	2
RX 300	1998 – 2003		88625–48010	2
RX 330	2004	CBU	88625–48050	1
	2004 – 2005	CBU	88625–48060	3
		NAP		
SC 300/400	1991 – 2000		88625–32040	2

WhereEverybodyKnowsYourName

Inspection Procedure (Continued)

A. Measure the sensor resistance according to the selected graph (specification).

NOTE:

- **Even slightly touching the sensor may change the resistance value. Be sure to hold the connector of the sensor.**
- **When measuring, the sensor temperature must be the same as the ambient temperature.**

HINT:

As the temperature increases, the resistance decreases.

Graph 1:

TEMPERATURE °F (°C)	SPECIFICATION kΩ
14 (–10)	7.30 to 9.10
23 (–5)	5.65 to 6.95
32 (0)	4.40 to 5.35
41 (5)	3.40 to 4.15
50 (10)	2.70 to 3.25
59 (15)	2.14 to 2.58
68 (20)	1.71 to 2.05
77 (25)	1.38 to 1.64
86 (30)	1.11 to 1.32

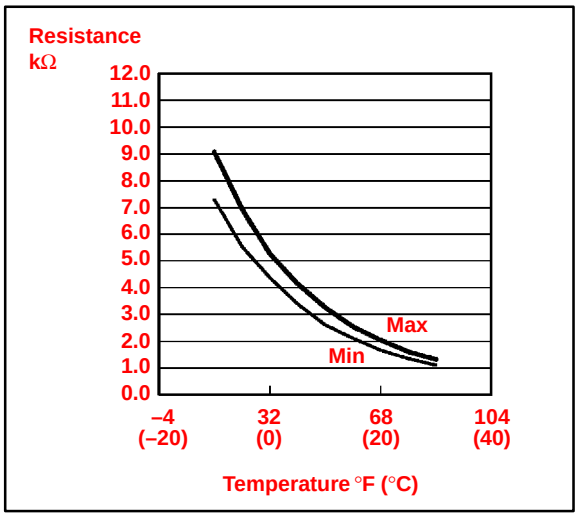

Graph 2:

TEMPERATURE °F (°C)	SPECIFICATION kΩ
14 (–10)	7.40 to 9.20
23 (–5)	5.65 to 7.00
32 (0)	4.35 to 5.40
41 (5)	3.40 to 4.20
50 (10)	2.68 to 3.30
59 (15)	2.10 to 2.60
68 (20)	1.66 to 2.10
77 (25)	1.32 to 1.66
86 (30)	1.05 to 1.35

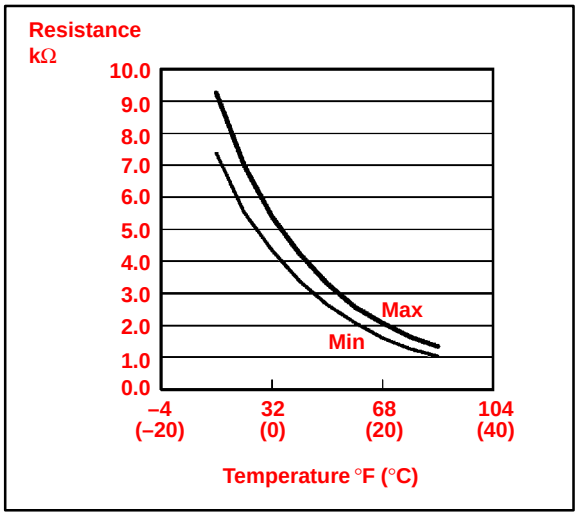

WhereEverybodyKnowsYourName

Inspection Procedure (Continued)

Graph 3:

TEMPERATURE °F (°C)	SPECIFICATION kΩ
14 (–10)	8.00 to 10.00
23 (–5)	6.15 to 7.65
32 (0)	4.75 to 5.85
41 (5)	3.70 to 4.55
50 (10)	2.91 to 3.55
59 (15)	2.32 to 2.80
68 (20)	1.85 to 2.22
77 (25)	1.48 to 1.77
86 (30)	1.20 to 1.43

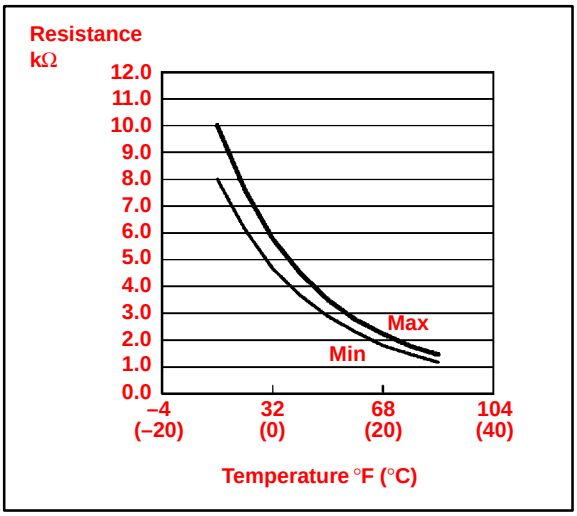

WhereEverybodyKnowsYourName

Inspection Procedure (Continued)

5. Inspect Solar Sensor.

Four types of solar sensors are used on Lexus vehicles depending on the vehicle specifications. The inspection procedure for each type of sensor differs from the others. Select the appropriate inspection procedure from the table below according to vehicle specifications and perform the inspection.

EQUIPPED WITH AUTOMATIC LIGHT CONTROL SYSTEM	A/C SYSTEM WITH RIGHT/LEFT INDEPENDENT TEMPERATURE CONTROL	INSPECTION PROCEDURE
No	No	A
No	Yes	B
Yes	Yes	C
Yes	No	D

Procedure A:

a. Disconnect the solar sensor connector.

b. Measure the resistance between terminals 1 and 2 of the solar sensor under the following conditions:

- Cover the sensor with a cloth to avoid direct light.
- Expose the sensor to light from a distance of 300 mm (11.81 in.) or less with an inspection light.

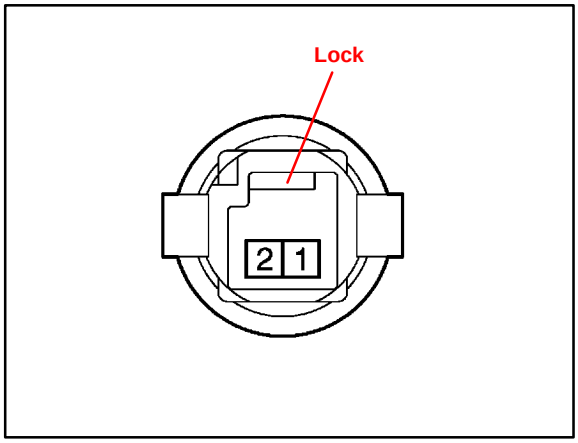

NOTE:

- **Terminal 1 of the sensor is always on the right, when the lock is facing up.**
- **When using an analog tester, connect the positive (+) lead to terminal 2 and negative (–) lead to terminal 1 of the solar sensor.**

HINT:

If the light is weak, the sensor may not react. Be sure to use an incandescent light for an inspection light.

Standard:

CONDITION	SPECIFICATION
When the sensor is covered with a cloth (to avoid direct light)	Infinite ohms
When the sensor is exposed to light	Less than infinite resistance

WhereEverybodyKnowsYourName

Inspection Procedure (Continued)

Procedure B:

a. Disconnect the solar sensor connector.

b. Measure the resistance between terminals 2 and 3 of the solar sensor under the following conditions:

- Cover the sensor with a cloth to avoid direct light.
- Expose the sensor to light from a distance of 300 mm (11.81 in.) or less with an inspection light.

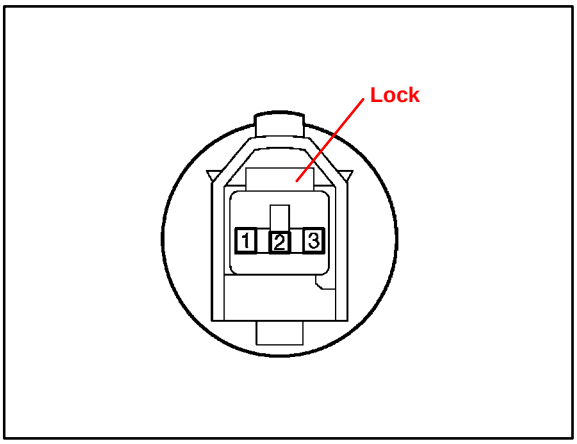

NOTE:

When using an analog tester, connect the positive (+) lead to terminal 3 and negative (–) lead to terminal 2 of the solar sensor.

HINT:

If the light is weak, the sensor may not react. Be sure to use an incandescent light for an inspection light.

Standard:

CONDITION	SPECIFICATION
When the sensor is covered with a cloth (to avoid direct light)	Infinite ohms
When the sensor is exposed to light	Less than infinite resistance

WhereEverybodyKnowsYourName

Inspection Procedure (Continued)

Procedure C:

a. Turn the ignition switch ON.

b. Measure the voltage between terminals TSR (+) and CLTE (–) of the connector under the following conditions:

- Cover the sensor with a cloth to avoid direct light.
- Expose the sensor to light from a distance of 300 mm (11.81 in.) or less with an inspection light.

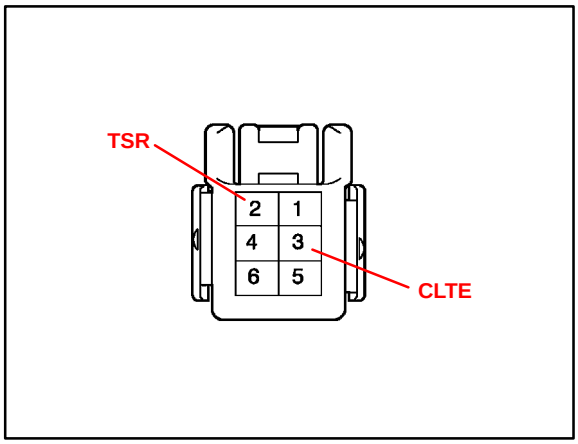

HINT:
- **If the light is weak, the sensor may not react. Be sure to use an incandescent light for an inspection light.**
- **Do not disconnect the solar sensor connector.**

Standard:

CONDITION	SPECIFICATION
When the sensor is covered with a cloth (to avoid direct light)	Below 0.8 V
When the sensor is exposed to light	4.3 +/– 0.3 V

c. Measure the voltage between terminals TSL (+) and CLTE (–) of the connector under the following conditions:

- Cover the sensor with a cloth to avoid direct light.
- Expose the sensor to light from a distance of 300 mm (11.81 in.) or less with an inspection light.

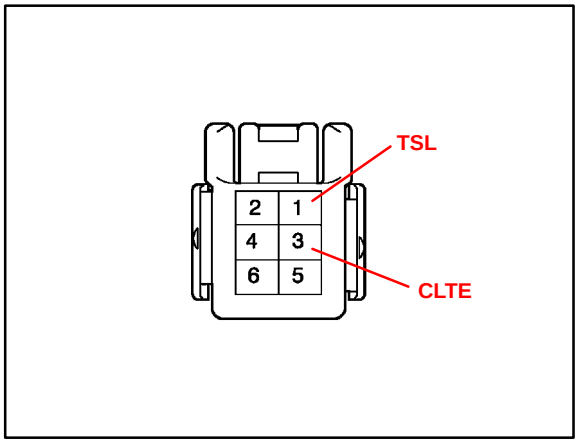

HINT:
- **If the light is weak, the sensor may not react. Be sure to use an incandescent light for an inspection light.**
- **Do not disconnect the solar sensor connector.**

Standard:

CONDITION	SPECIFICATION
When the sensor is covered with a cloth (to avoid direct light)	Below 0.8 V
When the sensor is exposed to light	4.3 +/– 0.3 V

WhereEverybodyKnowsYourName

Inspection Procedure (Continued)

Procedure D:

a. Turn the ignition switch ON.

b. Using the tester, measure the voltage between terminals TSD (+) and CLTE (–) of the connector under the following conditions:

- Cover the sensor with a cloth to avoid direct light.
- Expose the sensor to light from a distance of 300 mm (11.81 in.) or less with an inspection light.

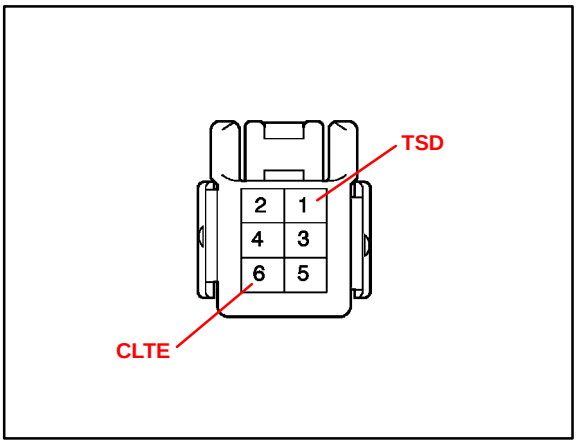

HINT:

- **If the light is weak, the sensor may not react. Be sure to use an incandescent light for an inspection light.**
- **Do not disconnect the solar sensor connector.**

Standard:

CONDITION	SPECIFICATION
When the sensor is covered with a cloth (to avoid direct light)	Below 0.8 V
When the sensor is exposed to light	4.3 +/– 0.3 V

WhereEverybodyKnowsYourName

Inspection Procedure (Continued)

6. Inspect Room Humidity Sensor.

Measure the humidity and output voltage of the humidity sensor when the sensor is installed on the vehicle and the temperature at the humidity sensor position (room temperature sensor position) is 77°F (25°C).
If the output voltage is within the specifications according to the graph and table below, the sensor is normal.

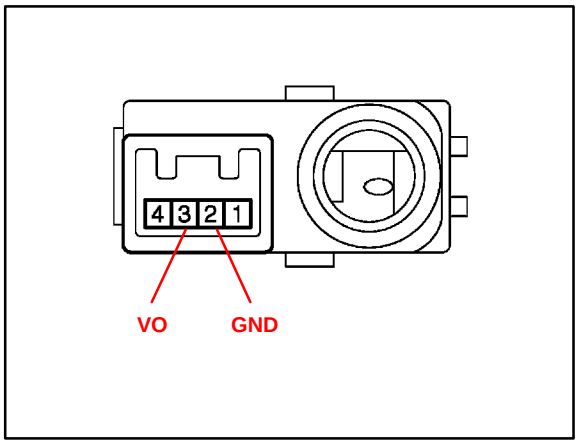

HINT:
For the inspection procedure of the room temperature sensor, refer to "Room Temperature Sensor Inspection Procedure" in this bulletin.

A. Turn the ignition switch to the ON position.

B. Measure the voltage between terminal VO (3) and GND (2) of the room humidity sensor.

C. Measure the humidity and voltage when the room temperature (humidity sensor position) is 77°F (25°C). According to the result, determine whether the sensor is normal or not.

HUMIDITY (% RH)	OUTPUT VOLTAGE AT 77°F (25°C)
10	0.70 to 1.08 V
20	0.72 to 1.57 V
30	1.13 to 1.95 V
40	1.61 to 2.24 V
50	1.99 to 2.46 V
60	2.26 to 2.66 V
70	2.48 to 2.85 V
80	2.68 to 3.04 V
90	2.87 to 3.05 V

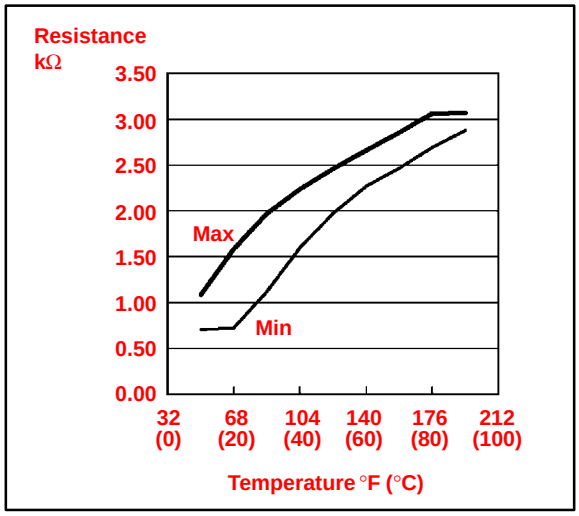

WhereEverybodyKnowsYourName

Title **ALTERNATE REFRIGERANTS AND A/C RETROFIT**

Effective January 1, 1996, the E.P.A. has officially banned the manufacture of Refrigerant 12 (Freon). As a result, surplus supplies of R–12 will begin to dwindle over the next several years until, eventually, R–12 will no longer be available.

This uncertainty about the availability of R–12 has caused significant concerns for Lexus dealers when servicing HVAC systems not using R–134a refrigerant. Similarly, the reduced availability of R–12 has prompted demands for R–134a retrofit kits and/or alternate refrigerants. This TSB will clarify Lexus's current recommendations for servicing and retrofitting HVAC systems on Lexus vehicles using R–12 refrigerant.

ALTERNATE REFRIGERANTS:

Previously, the E.P.A. has endorsed other alternative refrigerants. These endorsements, combined with the uncertain future availability of R–12, have lead to a limited acceptance of using alternative refrigerants when servicing or retrofitting R–12 HVAC systems. Use of these refrigerants can lead to several service related problems, including:

- Poor system performance and leak detection capabilities.
- Contamination of R–12 and R–134a during refrigerant recovery and recycling.

Recently the E.P.A. released a statement clarifying that approval of alternative refrigerants relates only to the toxicology, flammability, ozone depletion and global warming characteristics. The approval **does not imply acceptability of alternative refrigerants** use with respect to serviceability or performance.

TOYOTA MOTOR SALES, U.S.A. ENDORSES THE USE OF R–134a AS THE ONLY ACCEPTABLE ALTERNATIVE REFRIGERANT FOR VEHICLES USING R–12.

R–12 AVAILABILITY:

It is estimated that existing R–12 supplies will meet market demand in 1996. Beyond that, Lexus will supply R–12 to it's dealers from a strategic reserve. These strategic reserves are allocated specifically for distribution to Lexus dealers for repair of their customers' R–12 HVAC systems. TMS projects these reserves may meet dealer demand through early 1998. After that, we believe R–12 will no longer be readily available and dealers will begin to retrofit customer vehicles with R–134a.

RETROFIT ISSUES:

Lexus has completed development of retrofit parts for all later model Lexus vehicles using R–12 refrigerant. These parts will be produced in harmony with market demand, based on R–12 availability.

The parts necessary for a typical retrofit will generally include:

- Receiver Dryer
- O–Rings
- Fittings
- Labels
- Oil

A TSIB outlining retrofit procedures will be released when the retrofit kits become available.

For additional information, contact the Environmental Assistance Network Hotline at 1–800–542–3914.

WhereEverybodyKnowsYourName

HEATING & AIR CONDITIONING
AC94–001
MARCH 25, 1994
ALL MODELS

Title **ALTERNATIVE REFRIGERANTS**

Beginning with the Montreal Protocol signed in April 1988, auto manufacturers world–wide committed to phase–out the use of ozone damaging Refrigerant R–12, also known as Freon. All automobile manufacturers are re–designing new production vehicles to use non-ozone depleting R–134a which is the only universally approved replacement refrigerant for R–12. All 1994 and newer Lexus use R–134a.

Several independent companies have begun marketing alternative refrigerants which they claim can replace R–12 when servicing vehicles in the dealership. These R–12 replacements commonly referred to as blends or hydrocarbon based refrigerants, have the potential to cause damage to Lexus AC systems and in some cases can cause personal injury to the service technician or the end–user. **Lexus strongly discourages the use of these refrigerants in Lexus vehicles.**

Furthermore, dealer technicians should be cautious of vehicles that may be labeled or otherwise identified to contain such refrigerants. Servicing these vehicles **can contaminate your AC refrigerant recovery equipment** causing refrigerant stored in the recovery machine to be rendered unusable. Also, if the contaminated refrigerant equipment is then used on subsequent repairs, the dealer may unknowingly contaminate other owner's vehicles.

For all Lexus models and years that are designed to operate on R–12, **continue to service with R–12 as long as it is available which is expected to be two or more years.** When research is complete and R–12 becomes difficult to acquire, Lexus will provide parts and procedures to properly retrofit an R–12 vehicle to non–ozone depleting R–134a.

WhereEverybodyKnowsYourName

Title **ALTERNATE REFRIGERANTS AND A/C RETROFIT**

Effective January 1, 1996, the E.P.A. has officially banned the manufacture of Refrigerant 12 (Freon). As a result, surplus supplies of R–12 will begin to dwindle over the next several years until, eventually, R–12 will no longer be available.

This uncertainty about the availability of R–12 has caused significant concerns for Lexus dealers when servicing HVAC systems not using R–134a refrigerant. Similarly, the reduced availability of R–12 has prompted demands for R–134a retrofit kits and/or alternate refrigerants. This TSB will clarify Lexus's current recommendations for servicing and retrofitting HVAC systems on Lexus vehicles using R–12 refrigerant.

ALTERNATE REFRIGERANTS:

Previously, the E.P.A. has endorsed other alternative refrigerants. These endorsements, combined with the uncertain future availability of R–12, have lead to a limited acceptance of using alternative refrigerants when servicing or retrofitting R–12 HVAC systems. Use of these refrigerants can lead to several service related problems, including:

- Poor system performance and leak detection capabilities.
- Contamination of R–12 and R–134a during refrigerant recovery and recycling.

Recently the E.P.A. released a statement clarifying that approval of alternative refrigerants relates only to the toxicology, flammability, ozone depletion and global warming characteristics. The approval **does not imply acceptability of alternative refrigerants** use with respect to serviceability or performance.

TOYOTA MOTOR SALES, U.S.A. ENDORSES THE USE OF R–134a AS THE ONLY ACCEPTABLE ALTERNATIVE REFRIGERANT FOR VEHICLES USING R–12.

R–12 AVAILABILITY:

It is estimated that existing R–12 supplies will meet market demand in 1996. Beyond that, Lexus will supply R–12 to it's dealers from a strategic reserve. These strategic reserves are allocated specifically for distribution to Lexus dealers for repair of their customers' R–12 HVAC systems. TMS projects these reserves may meet dealer demand through early 1998. After that, we believe R–12 will no longer be readily available and dealers will begin to retrofit customer vehicles with R–134a.

RETROFIT ISSUES:

Lexus has completed development of retrofit parts for all later model Lexus vehicles using R–12 refrigerant. These parts will be produced in harmony with market demand, based on R–12 availability.

The parts necessary for a typical retrofit will generally include:

- Receiver Dryer
- O–Rings
- Fittings
- Labels
- Oil

A TSIB outlining retrofit procedures will be released when the retrofit kits become available.

For additional information, contact the Environmental Assistance Network Hotline at 1–800–542–3914.

WhereEverybodyKnowsYourName

Title **COIL SPRING COMPRESSOR SST # 09727-30020-02**

Please observe the following procedures each time this tool is used:

❶ **Carefully** inspect your spring compressor for cracks or other deformation **prior to each use.**

❷ **Use only on Lexus vehicles.** Use on other applications may exceed the tool design limits.

→ Be sure spring is free from its seat (unstuck) prior to compressing.

❹ **Do not** compress the coil spring further than needed to facilitate the repair.

When using suspension coil spring compressor be sure to follow the instructions outlined in the repair manual as well as the **caution label** placed on the tool (see illustration below).

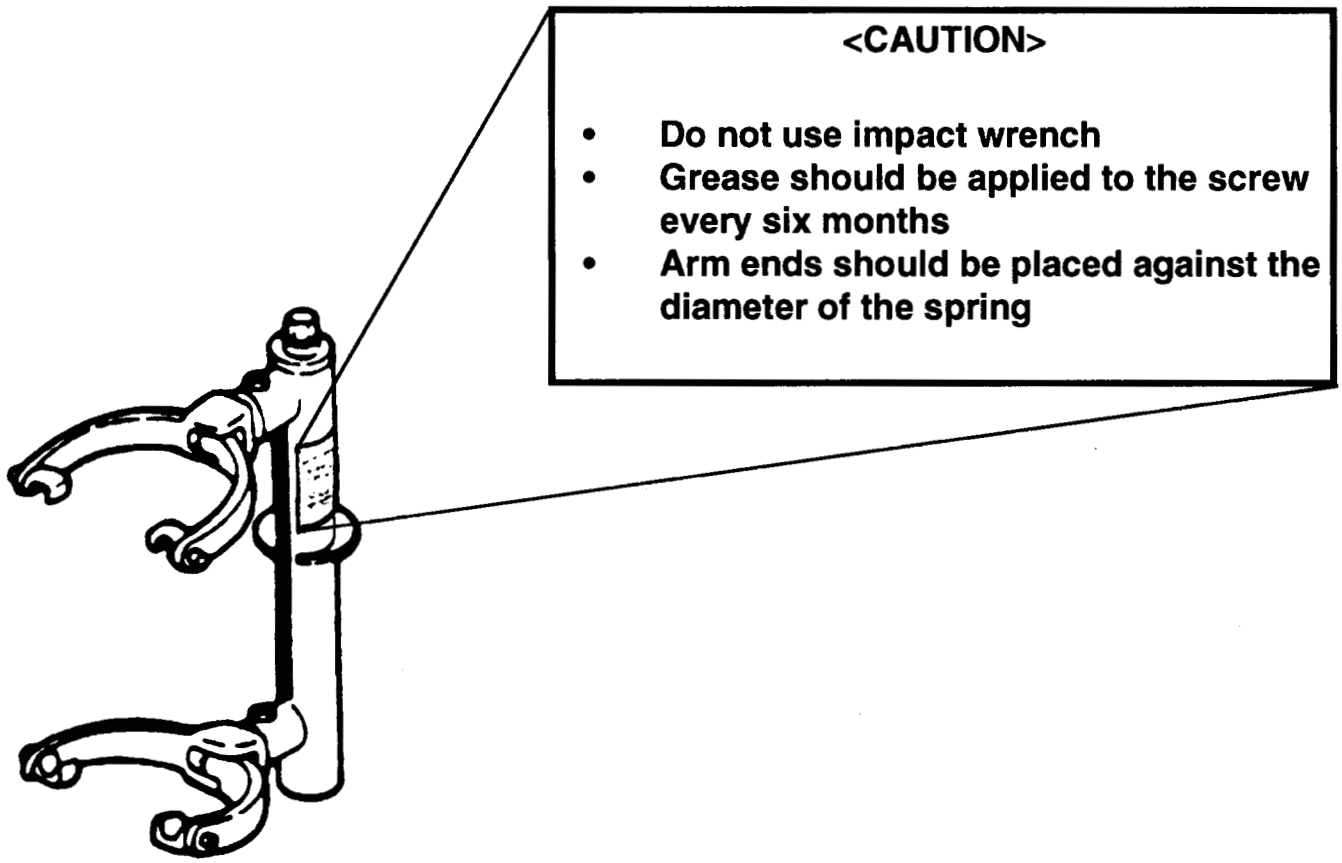

WhereEverybodyKnowsYourName

Title **CHANGE IN SUPPLY PARTS FOR INNER REAR VIEW MIRROR**

Supply parts for the inner rear view mirror have been changed from an assembly to the components listed below.

PART NUMBER INFORMATION:

PART NAME	PART NUMBER	DESCRIPTION	QTY
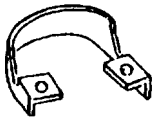 Spring	87825–24010	Spring, Inner Rear View Mirror Body Setting	1
Holder	87808–24010	Holder Subassembly, Inner Rear View Mirror	2
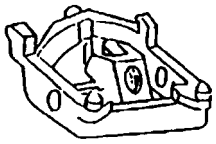 Spacer	87817–24010	Spacer, Inner Rear View Mirror	1
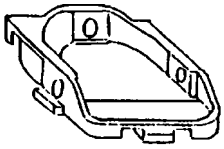 Mirror Base	N/A	★ Not available as a separate supply part	N/A

★ This part is attached to windshield. Use original part or replace windshield and mirror base as an assembly, if necessary.

WhereEverybodyKnowsYourName

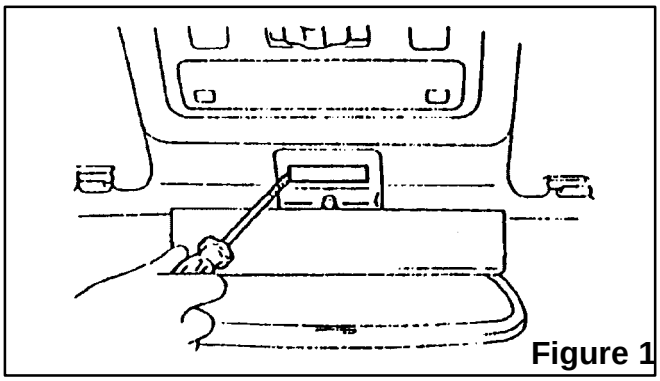
Figure 1

INNER REAR VIEW MIRROR REMOVAL:

Note: To prevent damage to plastic parts, tape the screwdriver tip before use.

1) Remove Center Visor
   a) Remove the visor arm set clip (Figure 1).
   b) Remove the two attachment screws.

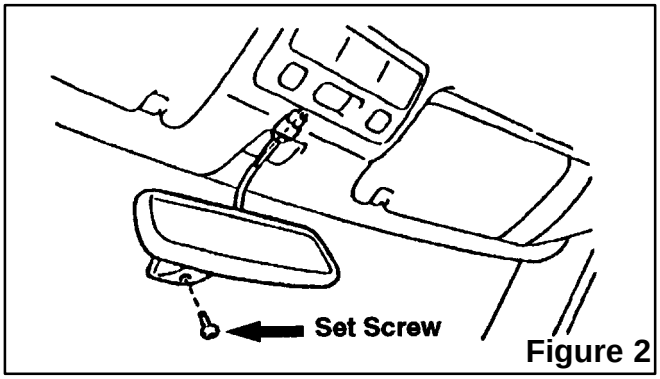

Figure 2

2) Remove Inner Rear View Mirror
   a) Remove mirror set screw (Figure 2).
   b) Disconnect the mirror wire harness.

COMPONENT DISASSEMBLY:

a) Using snap ring pliers, remove the spring.
b) Remove the two holders and the spacer (Figure 3).

NOTE: Do not remove the mirror base from the windshield.

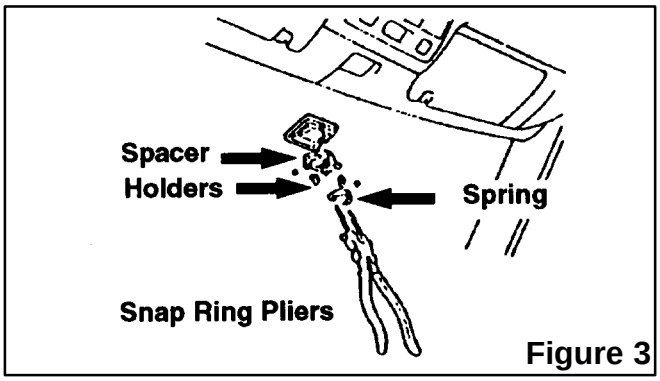

Figure 3

COMPONENT ASSEMBLY:

a) Reinstall components by installing the spacer, two holders and spring.
b) Install the spring using snap ring pliers (Figure 4).

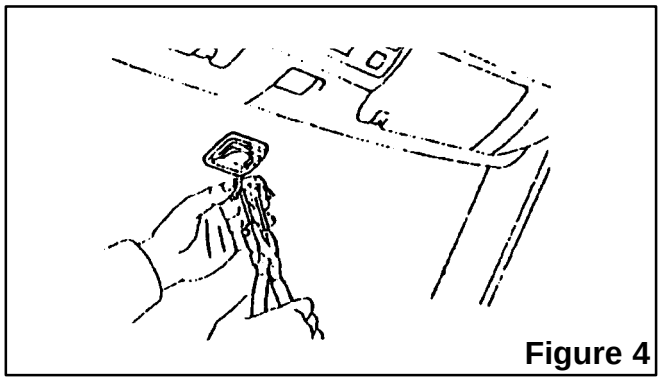
Figure 4

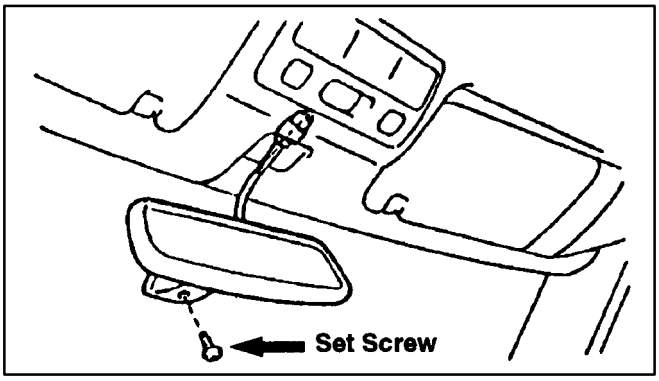

INNER REAR VIEW MIRROR & CENTER VISOR INSTALLATION:

a) Install inner rear view mirror by re–installing attachment set screw (Figure 5).

Note: Use thread locking compound on set screw to ensure screw retention.

b) Re–connect wire harness.

Note: Check review mirror dimming operation before re–installation of center visor.

c) Install center visor by re–installing two attachment screws.

d) Re–install visor arm set clip.

PARTS LOCATION:

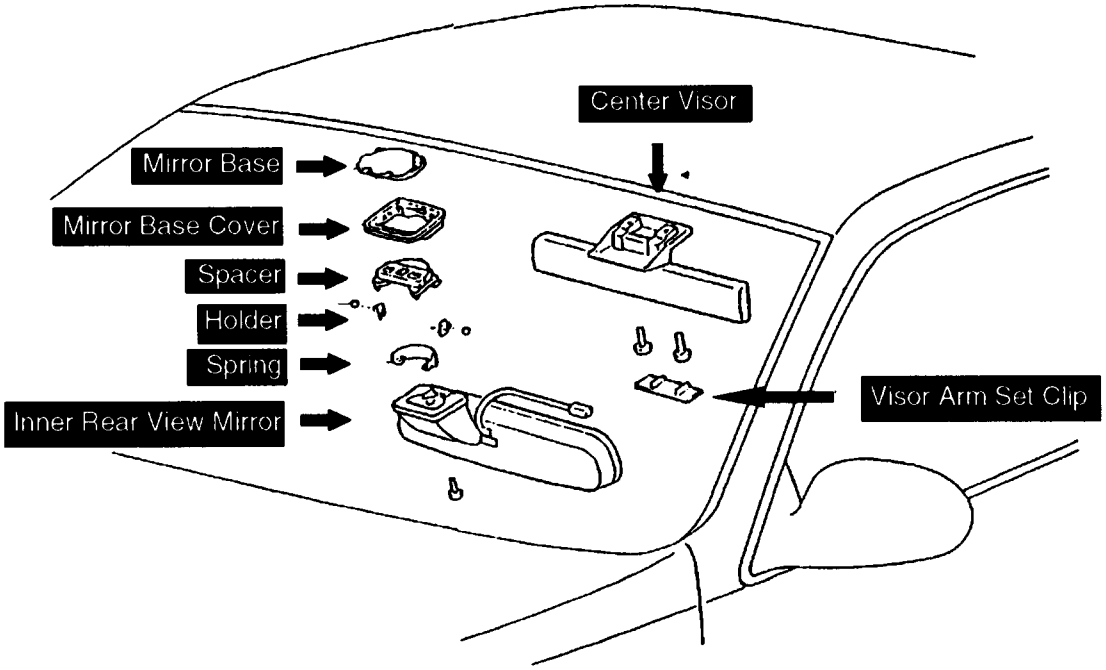

Title **REAR SUSPENSION NOISE**

The rear spring bumper has been changed in production on 1995 SC 300/400 in an effort to reduce clunking/rattling noises.

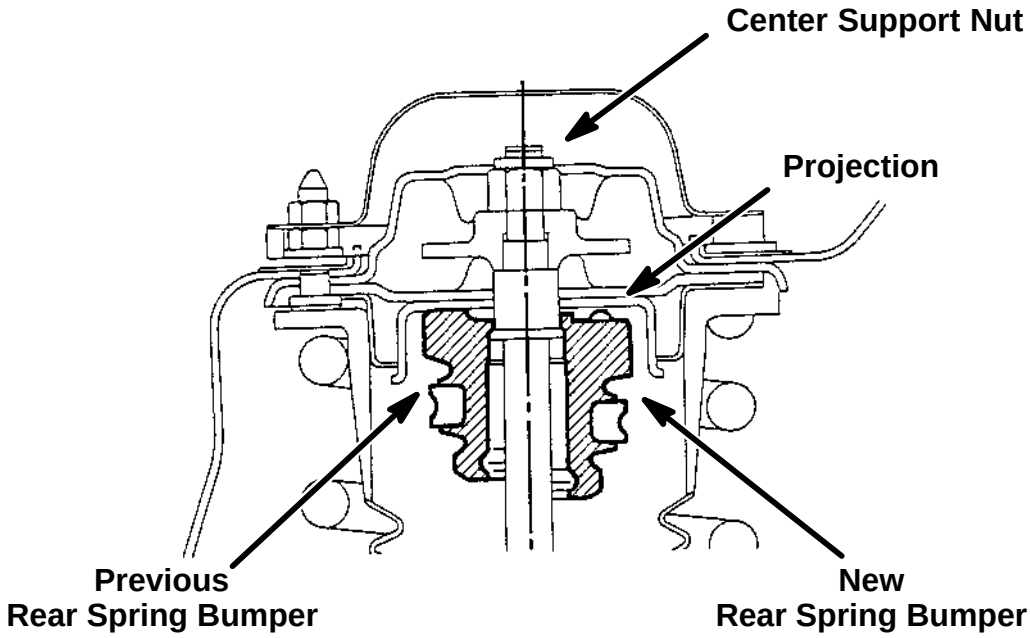

SERVICE HINT: A similar clunking/rattling type noise can be generated by an improperly torqued center support nut (27 N●m, 280 kgf.cm, 20 ft.lbs).

PRODUCTION EFFECTIVE:

Starting VINs: JT8UZ30C*S0047966
JT8JZ31C*S0030524

PART NUMBER INFORMATION:

PREVIOUS PART NUMBER	NEW PART NUMBER	PART NAME	QTY
48341-24040 48341-24070	48341-24071	Bumper, Rear Spring	2

WhereEverybodyKnowsYourName

WARRANTY INFORMATION:

OPCODE	DESCRIPTION	TIME	OPN	T1	T2
482201A	R&R Rear Shock Absorber Assembly (both sides including replacement of spring bumpers and all necessary adjustments)	1.8	48341-24040 or 48341-24070	91	41

Replacement of the rear spring bumper under warranty is limited to correction of a problem based upon a customer's complaint.

WhereEverybodyKnowsYourName

Title **SERVICE HINTS FOR REFRIGERANT LEAK DETECTION**

Use of electronic leak detectors for checking A/C systems refrigerant leakage is the only method approved by TMS. This type of leak detector is sensitive not only to refrigerant, but also sensitive to numerous petrochemical substances (motor oil, gasoline, solvents, etc.) commonly found in a repair shop environment. Because this sensitivity could diminish the leak detector's capacity for accurate leak detection, some service hints have been provided to help increase the accuracy of your diagnosis.

SERVICE HINTS:

1. **Visual Inspection:** Do a quick visual inspection under the hood for signs of refrigerant leakage. Check for areas of heavy oil leakage at block and piping joints. Many times these areas have accumulated road dust and dirt.

2. **Inspection with leak detector:** **NOTE:** Make sure the system is fully charged. Operate the system to increase refrigerant pressure. Shut the system off before inspecting with leak detector.

   A. Checking for leakage at a joint: Wipe the oil/dirt accumulation off the joint with a clean rag. Do not use solvents to clean the joint. Refrigerant is heavier than air so start checking for leaks with the detector wand about 1/4 in. below the joint. Move the wand slowly across and around each joint (see illustration below).

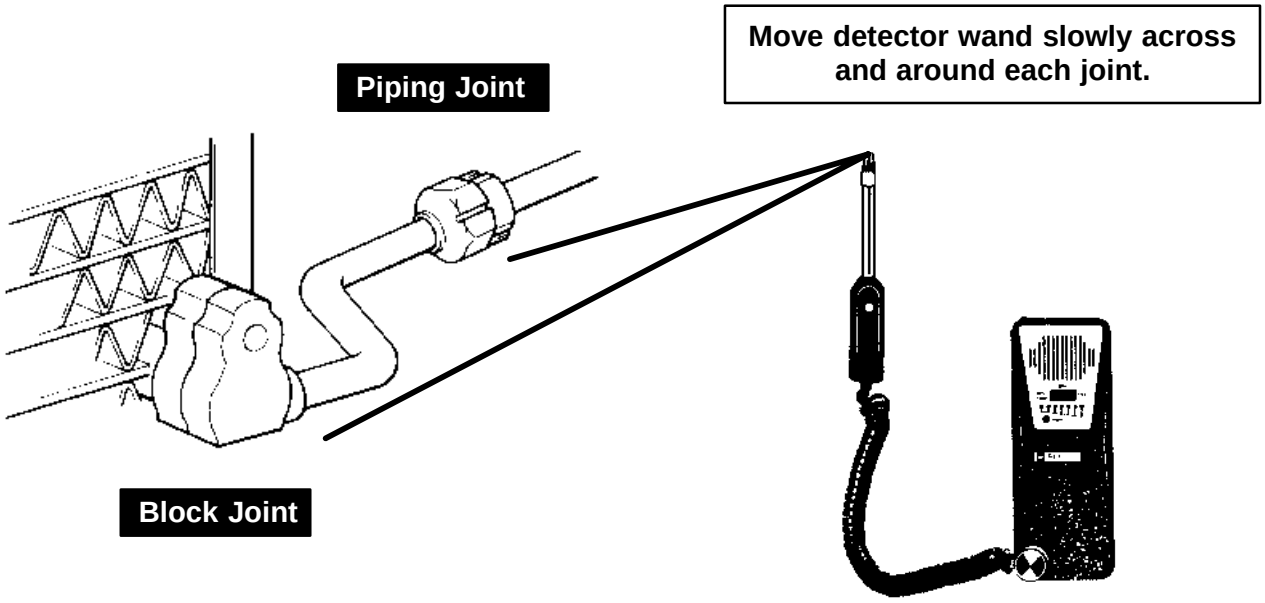

WhereEverybodyKnowsYourName

B. Checking for leakage at the evaporator: The evaporator drain hose provides an excellent access point to check for refrigerant leakage from the evaporator. Be sure to raise the vehicle on a lift so that the evaporator is as far as possible from any petrochemical source that may be on the shop floor. When leak checking in this area, turn the system off, pinch off the evaporator drain hose, and wait 10 to 15 minutes to allow the refrigerant to accumulate in the evaporator case. When the system is ready to check, release the drain hose and hold the leak detector wand about 1/4 inch below the drain opening (see diagram).

NOTE: Do not allow the leak detector tip to come in contact with water from the evaporator.

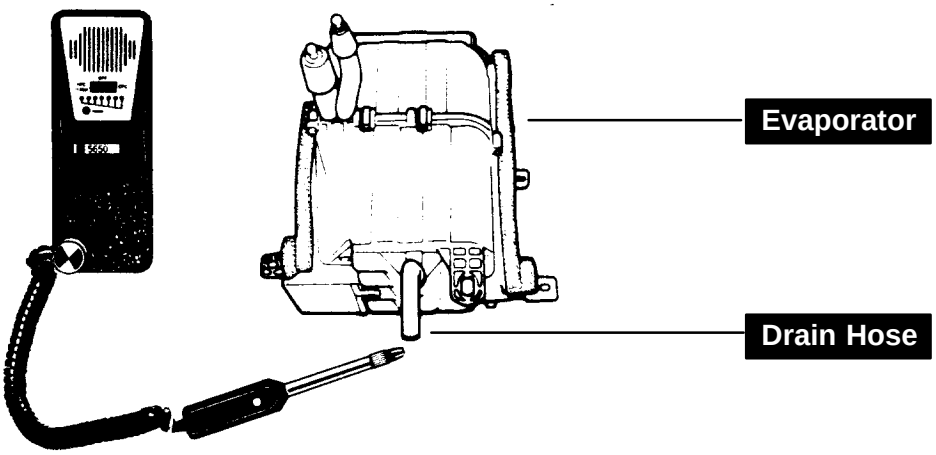

C. Checking for leakage at front compressor seal: Front compressor seal leaks are probably the most difficult leaks to detect accurately. Special diagnostic procedures must be followed for the best success. Make sure the system is fully charged. Operate the system with a pressure gauge installed and assure that the system has correct system pressures. **Shut off the engine.** Begin the leak check by placing the detector probe along the bottom half of the compressor clutch. Move the wand slowly across the bottom of the compressor clutch. Be careful not to expose the detector wand tip to any oil residue as this may cause a false leakage reading.

Verify correct system pressure.

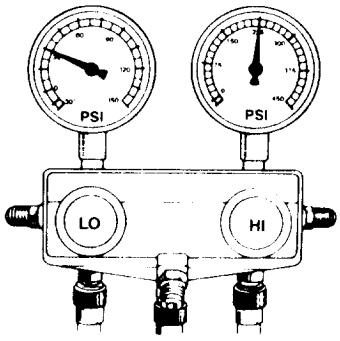

Move dectector wand slowly across the bottom half of the compressor clutch.

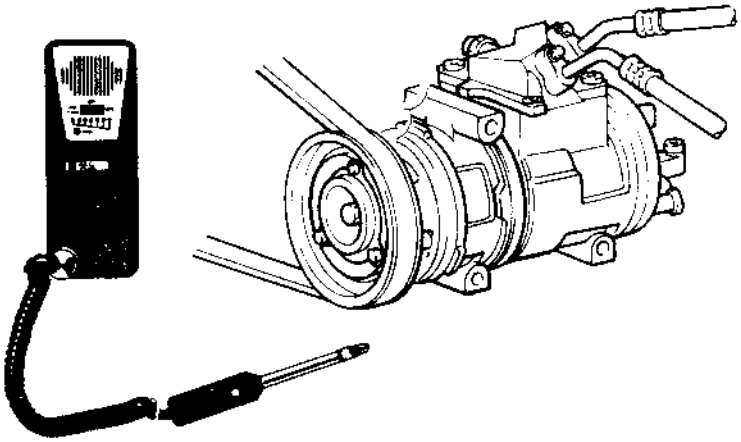

D. Checking for leakage at service valves or pressure switches:
Small accumulations of refrigerant gas under the service valve caps or pressure switch connectors is normal. When checking for leaks at these points, use the following procedures to assure the highest accuracy:

1. Remove the service valve cap or pressure switch connector.

2. Allow the service valve or pressure switch to remain uncapped for approximately 20 minutes. This will allow the air to circulate and carry away the accumulated refrigerant. (This is a good time to leak check other areas of the system).

3. Do not use compressed air to flush out the service valve or pressure switch cavity. Petroleum residue from inline oilers or compressor lubrication may cause false readings.

Title **SC 300/SC 400 IMPROVED SUNVISOR HINGE RETENTION (REVISED)**

Some SC 300/SC 400 vehicles may have a sunvisor which falls away slightly from the roof when placed in the full upright position. To improve visor retention, the position of an internal clip has been modified in production.

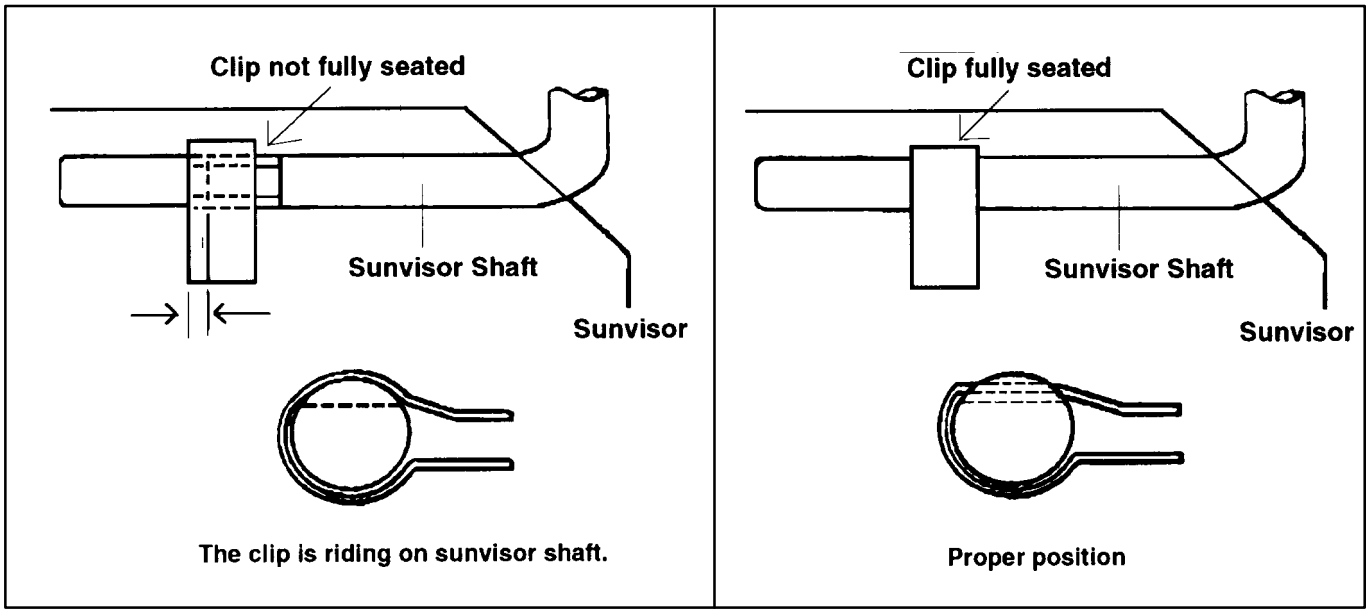

NOTE: Before replacing the Sunvisor assembly, ensure that shaft is fully seated into the sunvisor by pushing the sunvisor further onto the shaft. This may seat the internal clip into the groove on the shaft.

PRODUCTION EFFECTIVE:

FROM: November, 1991
VIN: SC 400: JT8UZ30C9N0011202
SC 300: JT8JZ30C9N0002890

PART NUMBER INFORMATION:

New Part Number	Prev. Part Number	Description	Side
74310–24120–03	Same	Medium Gray	RH
74310–24120–07	"	Spruce	RH
74310–24120–08	"	Ivory	RH
74310–24130–03	Same	Medium Gray	RH w/Sunroof
74310–24130–07	"	Spruce	RH w/Sunroof
74310–24130–08	"	Ivory	RH w/Sunroof
74320–24130–03	Same	Medium Gray	LH
74320–24130–07	"	Spruce	LH
74320–24130–08	"	Ivory	LH
74320–24080–03	Same	Medium Gray	LH w/Sunroof
74320–24080–07	"	Spruce	LH w/Sunroof
74320–24080–08	"	Ivory	LH w/Sunroof

WhereEverybodyKnowsYourName

Title:
SUSPENSION BALL JOINT INSPECTION
Models:
Applicable Models

Introduction

This Service Bulletin is to inform you of the inspection method, and free play specification figures for suspension ball joints. The on–vehicle inspection methods have been standardized.

Applicable Vehicles

- **1990 – 2000** model year **LS 400** vehicles.
- **2001 – 2003** model year **LS 430** vehicles.
- **1993 – 2003** model year **GS 300** vehicles.
- **1998 – 2000** model year **GS 400** vehicles.
- **2001 – 2003** model year **GS 430** vehicles.
- **1992 – 2000** model year **SC 300 & SC 400** vehicles.
- **2002 – 2003** model year **SC 430** vehicles.
- **2001 – 2003** model year **IS 300** vehicles.
- **1999 – 2003** model year **RX 300** vehicles.
- **1990 – 2003** model year **ES 250 & ES 300** vehicles.
- **1998 – 2003** model year **LX 470** vehicles.

Warranty Information

OP CODE	DESCRIPTION	TIME	OFP	T1	T2
N/A	Not Applicable to Warranty	–	–	–	–

WhereEverybodyKnowsYourName

Inspection Information Table

MODEL	LOCATION	LOWER BALL JOINT OR SUSPENSION BALL JOINT			UPPER BALL JOINT		
		INSP. METHOD	MAX. PLAY	TURNING TORQUE	INSP. METHOD	MAX. PLAY	TURNING TORQUE
LS 400 (UCF10) 1990–1994	Front	1–(A)	0.016 in. (0.4) mm	4 in.•lbf (0.5 N•m) or Less	2	No Play Felt	31 in.•lbf (3.5 N•m) or Less
	Rear	3	No Play Felt	31 in.•lbf (3.5 N•m) or Less			
LS 400 (UCF20) 1995–2000	Front	1–(A)	0.016 in. (0.4) mm	22 in.•lbf (2.5 N•m) or Less			
	Rear	3	No Play Felt	31 in.•lbf (3.5 N•m) or Less			
LS 430 (UCF30) 2001–2003	Front	1–(A)	No Play Felt	31 in.•lbf (3.5 N•m) or Less			
	Rear	3	No Play Felt	31 in.•lbf (3.5 N•m) or Less			
GS 300 (JZS147) 1993–1997	Front	1–(A)	0.016 in. (0.4) mm	27 in.•lbf (3.0 N•m) or Less			
	Rear	1–(A)	No Play Felt	31 in.•lbf (3.5 N•m) or Less			
GS 300, 400, 430 (JZS16#, UZS16#) 1998–2003	Front	1–(A)	0.016 in. (0.4) mm	27 in.•lbf (3.0 N•m) or Less			
	Rear	3	No Play Felt	31 in.•lbf (3.5 N•m) or Less			
SC 300, 400 (JZZ31, UZZ30) 1992–2000	Front	1–(A)	0.016 in. (0.4) mm	27 in.•lbf (3.0 N•m) or Less			
	Rear	1–(A)	No Play Felt	31 in.•lbf (3.5 N•m) or Less			
SC 430 (UZZ40) 2002–2003	Front	1–(A)	0.016 in. (0.4) mm	27 in.•lbf (3.0 N•m) or Less			
	Rear	3	No Play Felt	31 in.•lbf (3.5 N•m) or Less			

WhereEverybodyKnowsYourName

Inspection Information Table (Continued)

MODEL	LOCATION	LOWER BALL JOINT OR SUSPENSION BALL JOINT			UPPER BALL JOINT		
		INSP. METHOD	MAX. PLAY	TURNING TORQUE	INSP. METHOD	MAX. PLAY	TURNING TORQUE
IS 300 (JCE10) 2001–2003	Front	1–(A)	0.016 in. (0.4) mm	27 in.•lbf (3.0 N•m) or Less	2	No Play Felt	31 in.•lbf (3.5 N•m) or Less
	Rear	3	No Play Felt	31 in.•lbf (3.5 N•m) or Less			27 in.•lbf (3.0 N•m) or Less
RX 300 (MCU10, 15) 1999–2003	Front	1–(B)	No Play Felt	31 in.•lbf (3.5 N•m) or Less	N/A	N/A	N/A
	Rear	N/A	N/A	N/A	N/A	N/A	N/A
ES 250 & 300 (VZV21, MCV20, 30) 1990–2003	Front	1–(B)	No Play Felt	31 in.•lbf (3.5 N•m) or Less	N/A	N/A	N/A
	Rear	N/A	N/A	N/A	N/A	N/A	N/A
LX 470 (UZJ100) 1998–2003	Front	1–(A)	No Play Felt	27 in.•lbf (3.0 N•m) or Less	2	No Play Felt	40 in.•lbf (4.5 N•m) or Less
	Rear	N/A	N/A	N/A	N/A	N/A	N/A

Free Play Inspection

NOTE:
- **Be sure to check the table for the applicable inspection type based on the vehicle model.**
- **Refer to the table for the standard free play values.**

1. Inspect Lower Ball Joint Free Play

A. Move the hub up and down by hand (Most models with wish–bone suspension):

a. Remove the tire.

b. Install the 2 lug nuts.

c. Inspect the free play while moving the lug nuts up and down at a force of 67 lbf (294 N, 30 kgf).

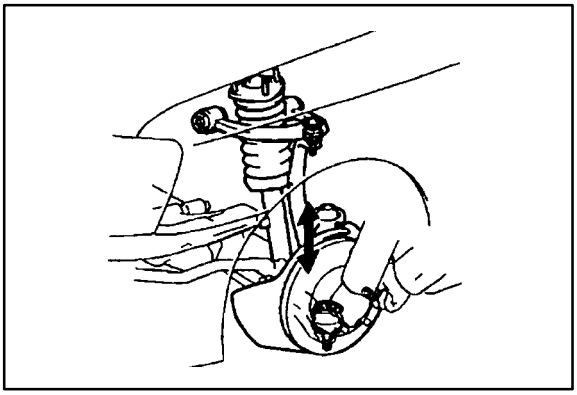

WhereEverybodyKnowsYourName

Free Play Inspection (Continued)

B. Move the lower arm by hand (All models with strut type suspension and some models with wish–bone type suspension):

a. Lift up the vehicle.

b. Inspect the free play while moving the lower arm up and down at a force of 67 lbf (294 N, 30 kgf).

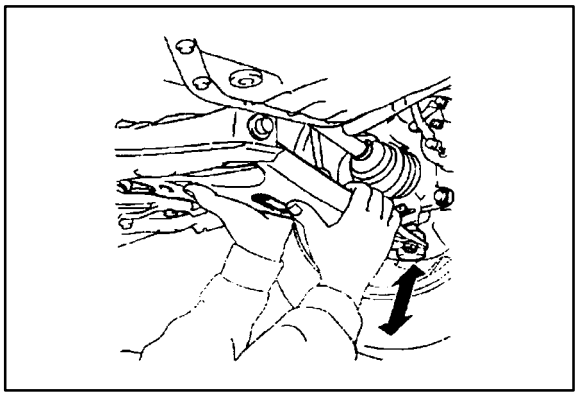

2. Inspect Upper Ball Joint Play

Move the upper arm by hand (Models where the **LOWER** control arm are linked by a torsion bar, and all models using a coil spring.

A. Remove the front tire.

B. Inspect the free play while moving the upper arm up and down at a force of 67 lbf (294 N, 30 kgf).

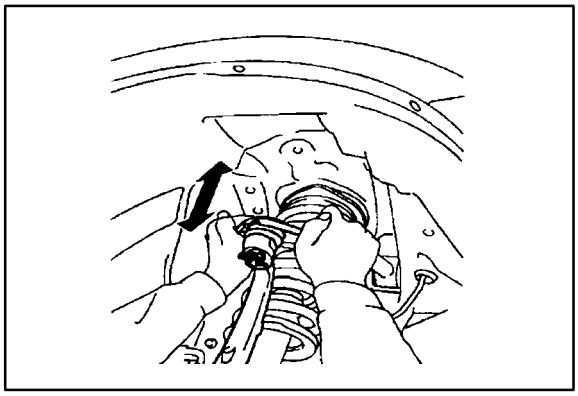

3. Inspect the Suspension Arm Ball Joint Free Play

A. Lift up the vehicle.

B. Inspect the free play while moving the control arm by hand.

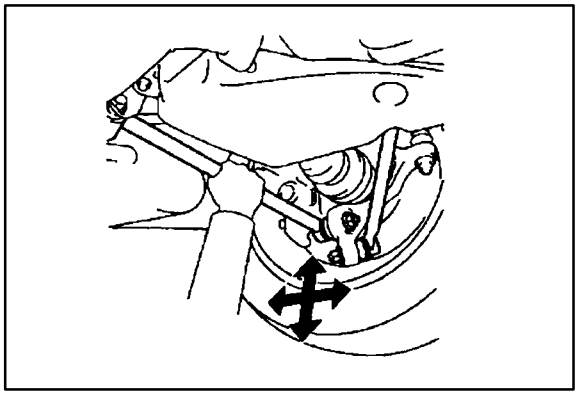

(Reference)

Free Play Inspection Method (Gauge Installation)

- Position the dial gauge between the arm (upper or lower) and the knuckle, and measure free play.
  (This illustration shows how to measure free play for vehicles with double wishbone type suspension with coil spring).

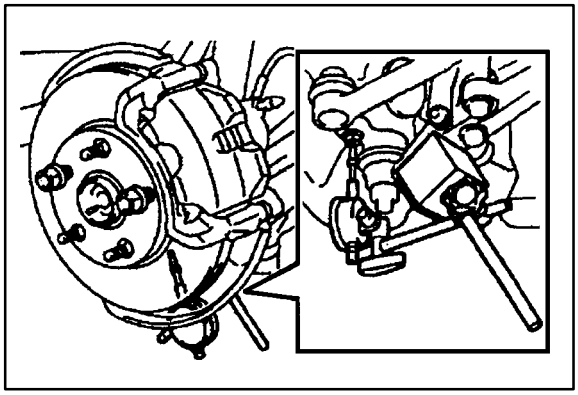

Inspect Ball Joint Dust Cover

Check for cracks and grease leaks on the dust cover (boots).

WhereEverybodyKnowsYourName

Turning Torque Inspection

Inspect Ball Joint Turning Torque

Move the stud back and forth 5 times, then turn the stud continuously at 3–5 seconds per turn, and measure the turning torque at the 5th turn.

HINT:

Refer to the table for standard values for the turning torque.

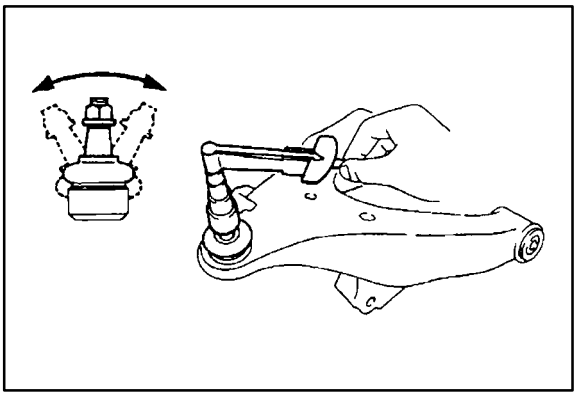

WhereEverybodyKnowsYourName

WIRELESS DOOR LOCK REMOTE CONTROL

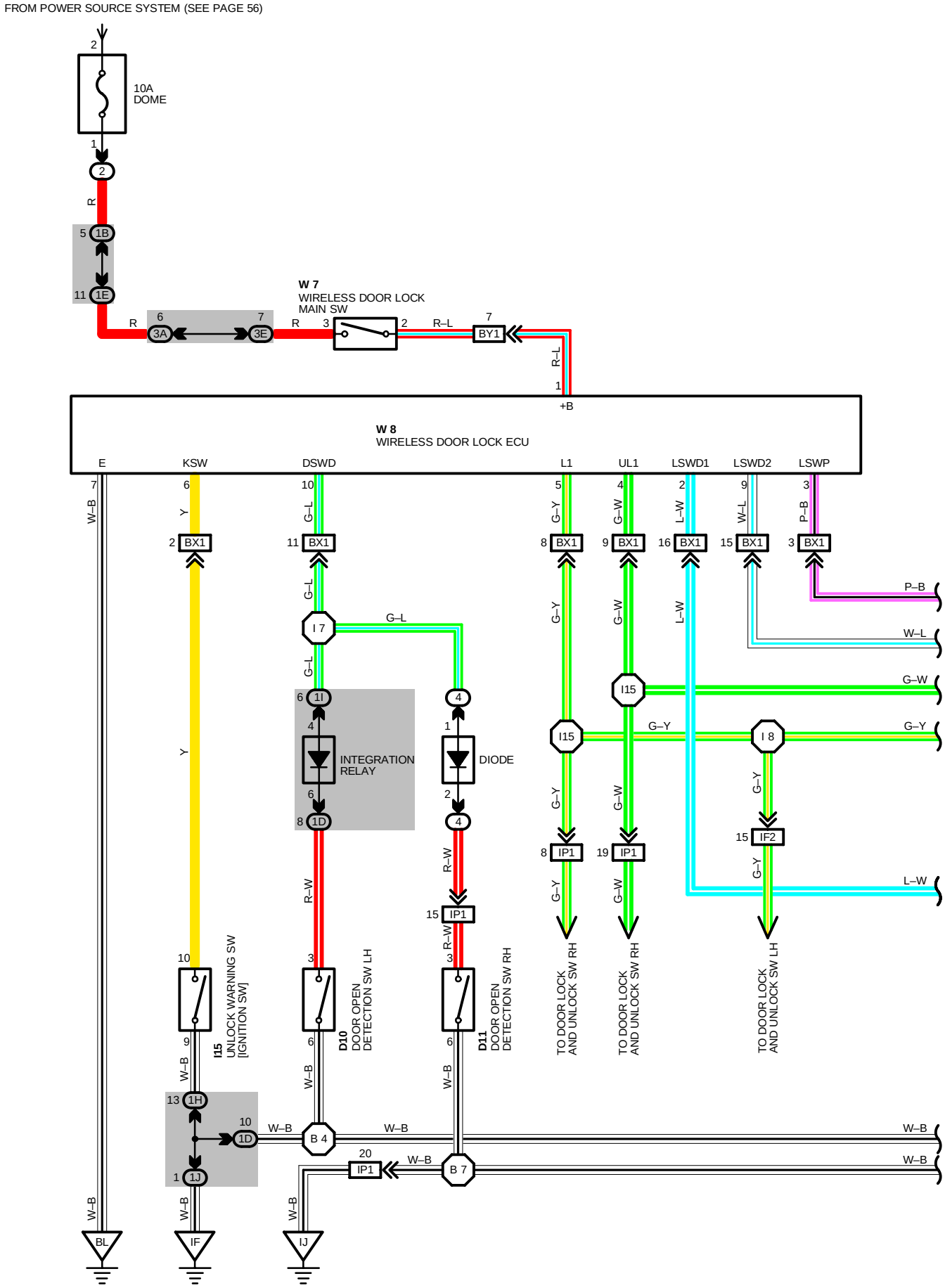

WhereEverybodyKnowsYourName

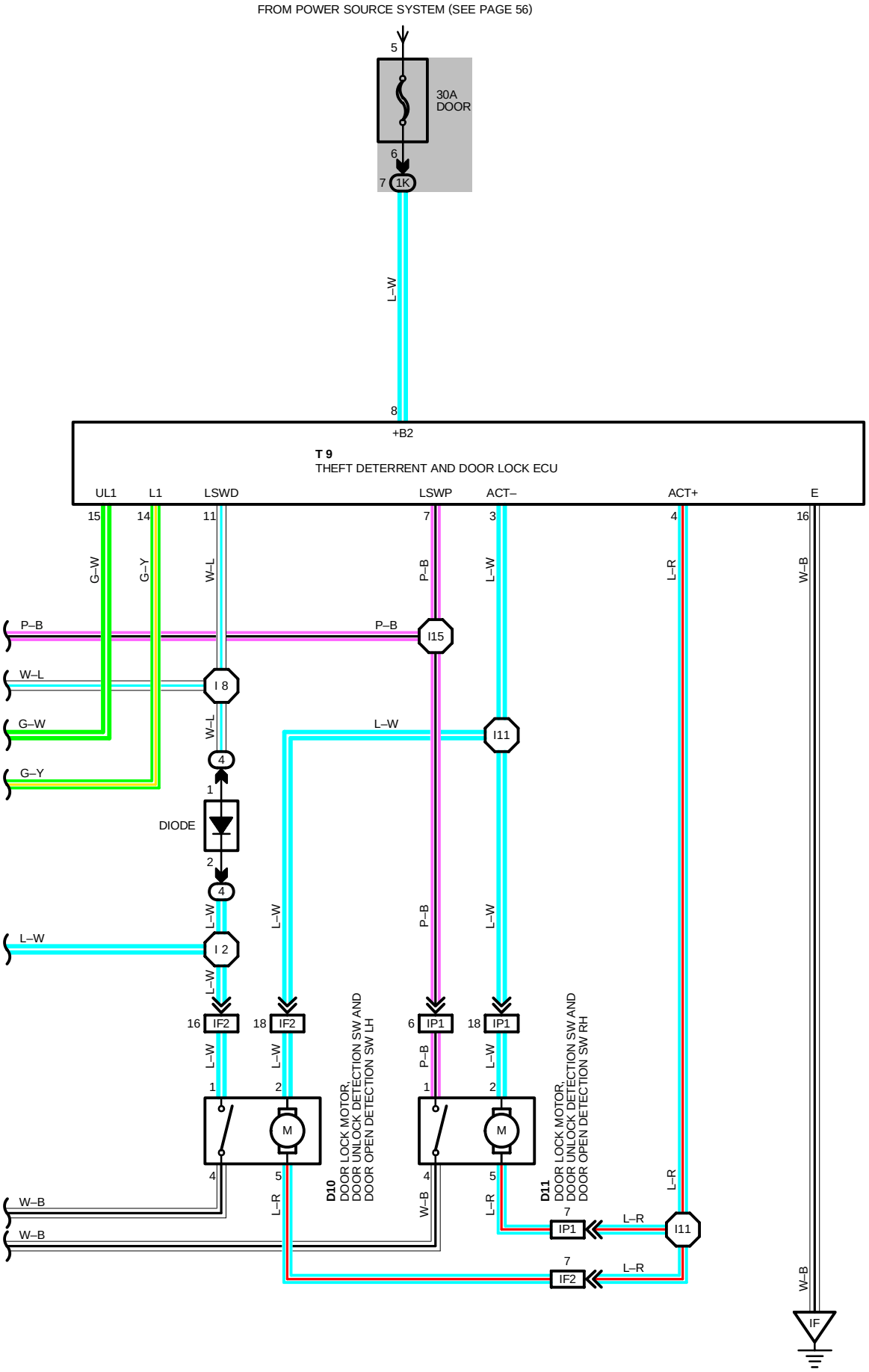

WhereEverybodyKnowsYourName

WIRELESS DOOR LOCK REMOTE CONTROL

SYSTEM OUTLINE

DOOR LOCK CONTROL (LOCK AND UNLOCK) IS PERFORMED BY REMOTE CONTROL, WITHOUT THE IGNITION KEY INSERTED IN THE DOOR KEY CYLINDER, USING LOW–POWER RADIO WAVES EMITTED BY A TRANSMITTER BUILT INTO IGNITION KEY.

1. WIRELESS DOOR LOCK OR UNLOCK NORMAL OPERATION

WITH THE WIRELESS DOOR LOCK MAIN SW ON, THE IGNITION KEY NOT INSERTED INTO THE IGNITION KEY CYLINDER (UNLOCK WARNING SW OFF) AND ALL THE DOORS COMPLETELY CLOSED, WHEN THE SWITCH (TRANSMITTER) ON THE IGNITION KEY IS PUSHED, THE WIRELESS DOOR LOCK ECU RECEIVES THE ELECTRICAL WAVES FROM THE IGNITION KEY (TRANSMITTER), CAUSING IT TO OPERATE.

AS A RESULT, THE ECU JUDGES WHETHER THE DOOR IS LOCKED OR UNLOCKED BASED ON THE SIGNAL FROM THE DOOR LOCK MOTOR, AND SENDS A SIGNAL TO THE DOOR LOCK ECU TO SWITCH THE CONDITION FROM LOCK TO UNLOCK OR VICE VERSA, CAUSING THE DOOR LOCK MOTOR TO OPERATE (FOR THE CURRENT FLOW DURING LOCK AND UNLOCK REFER TO THE DOOR LOCK CONTROL SYSTEM.)

2. AUTO LOCK OPERATION

AFTER PUSHING THE IGNITION KEY SWITCH (TRANSMITTER) TO UNLOCK ALL THE DOORS, IF A DOOR IS NOT OPENED WITHIN **30** SECONDS, ALL OF THE DOORS ARE AUTOMATICALLY LOCKED AGAIN.

3. WIRELESS DOOR LOCK STOP FUNCTION

IF A DOOR IS OPEN (DOOR COURTESY SW ON), A SIGNAL IS INPUT FROM THE DOOR OPEN COURTESY SW TO THE WIRELESS DOOR LOCK ECU, STOPPING WIRELESS DOOR LOCK OR UNLOCK.

IF THE IGNITION KEY IS IN THE IGNITION KEY CYLINDER (UNLOCK WARNING SW ON), THE UNLOCK WARNING SWITCH INPUT A SIGNAL TO THE WIRELESS DOOR LOCK ECU, STOPPING WIRELESS DOOR LOCK OR UNLOCK.

4. DOOR LOCK MOTOR PROTECTIVE FUNCTION

IF THE DOOR LOCK OR UNLOCK CONDITION DOES NOT CHANGE AFTER WIRELESS DOOR LOCK OR UNLOCK OPERATION, THE DOOR LOCK ECU SENDS CURRENT TEN TIMES TO THE DOOR LOCK MOTOR. IF THE DOOR LOCK CONDITION STILL HAS NOT CHANGED AS A RESULT THE WIRELESS DOOR LOCK ECU STOPS RECEPTION AND STOPS DOOR LOCK AND UNLOCK FUNCTION.

BY MANUALLY OPERATION THE DOOR LOCK OR UNLOCK, THE STOP CONDITION OF THE WIRELESS DOOR LOCK FUNCTION IS RELEASED.

SERVICE HINTS

D10, D11 DOOR OPEN DETECTION SW LH, RH
3–6 : CLOSED WITH DOOR OPENED

I15 UNLOCK WARNING SW [IGNITION SW]
10–9 : CLOSED WITH IGNITION KEY IN CYLINDER

W 8 WIRELESS DOOR LOCK ECU
1–GROUND: APPROX. **12** VOLTS WITH WIRELESS DOOR LOCK MAIN SW ON
7–GROUND: ALWAYS CONTINUITY
10–GROUND: CONTINUITY WITH EACH DOOR OPENED
6–GROUND: CONTINUITY WITH IGNITION KEY IN CYLINDER

: PARTS LOCATION

CODE	SEE PAGE	CODE	SEE PAGE	CODE	SEE PAGE
D10	30	**I15**	29	**W 7**	29
D11	30	**T 9**	29	**W 8**	31

: RELAY BLOCKS

CODE	SEE PAGE	RELAY BLOCKS (RELAY BLOCK LOCATION)
2	19	ENGINE COMPARTMENT LEFT
4	23	LEFT KICK PANEL (J/B NO.1 LEFT)

: JUNCTION BLOCK AND WIRE HARNESS CONNECTOR

CODE	SEE PAGE	JUNCTION BLOCK AND WIRE HARNESS (CONNECTOR LOCATION)
1B	20	ENGINE ROOM MAIN WIRE
1D	20	FRONT DOOR LH WIRE
1E	20	INSTRUMENT PANEL WIRE
1H	20	COWL WIRE
1I		
1J		
1K		
3A	22	INSTRUMENT PANEL WIRE
3E		

WhereEverybodyKnowsYourName

: CONNECTOR JOINING WIRE HARNESS AND WIRE HARNESS

CODE	SEE PAGE	JOINING WIRE HARNESS AND WIRE HARNESS (CONNECTOR LOCATION)
IF2	36	FRONT DOOR LH WIRE AND COWL WIRE (LEFT KICK PANEL)
IP1	38	FRONT DOOR RH WIRE AND COWL WIRE (RIGHT KICK PANEL)
BX1	40	FLOOR NO. 3 WIRE AND COWL WIRE (RIGHT KICK PANEL)
BY1	40	INSTRUMENT PANEL WIRE AND FLOOR NO. 3 WIRE (RIGHT KICK PANEL)

: GROUND POINTS

CODE	SEE PAGE	GROUND POINTS LOCATION
IF	36	LEFT KICK PANEL
IJ	36	RIGHT KICK PANEL
BL	40	UNDER THE CENTER PILLAR RH

: SPLICE POINTS

CODE	SEE PAGE	WIRE HARNESS WITH SPLICE POINTS	CODE	SEE PAGE	WIRE HARNESS WITH SPLICE POINTS
I 2	38	COWL WIRE	**B 4**	40	FRONT DOOR LH WIRE
I 7			**B 5**		
I 8			**B 6**	40	FRONT DOOR RH WIRE
I11			**B 7**		
I15					

D10, D11 GRAY

I15 BLACK

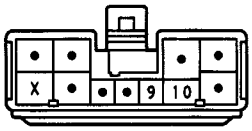

T 9 ORANGE

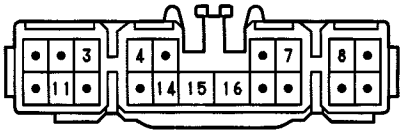

W 7

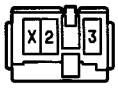

W 8

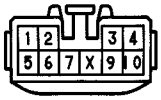

WhereEverybodyKnowsYourName

: PARTS LOCATION

CODE		SEE PAGE	CODE	SEE PAGE	CODE	SEE PAGE
C15	B	28	**W 2**	27		
C16	A	28	**W 5**	27		

: JUNCTION BLOCK AND WIRE HARNESS CONNECTOR

CODE	SEE PAGE	JUNCTION BLOCK AND WIRE HARNESS (CONNECTOR LOCATION)
1H	20	COWL WIRE
1J		
1K		

: CONNECTOR JOINING WIRE HARNESS AND WIRE HARNESS

CODE	SEE PAGE	JOINING WIRE HARNESS AND WIRE HARNESS (CONNECTOR LOCATION)
IE1	36	ENGINE ROOM MAIN WIRE AND COWL WIRE (R/B NO. 4)

: GROUND POINTS

CODE	SEE PAGE	GROUND POINTS LOCATION
IF	36	LEFT KICK PANEL

: SPLICE POINTS

CODE	SEE PAGE	WIRE HARNESS WITH SPLICE POINTS	CODE	SEE PAGE	WIRE HARNESS WITH SPLICE POINTS
I 7	38	COWL WIRE			

C15 (B)

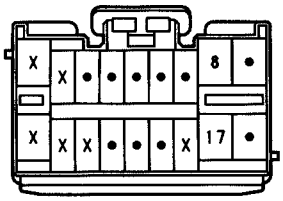

C16 (A) BLACK

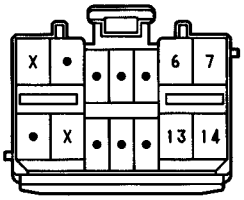

W 2 BLACK

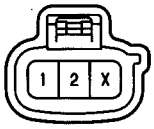

W 5 GRAY

WhereEverybodyKnowsYourName

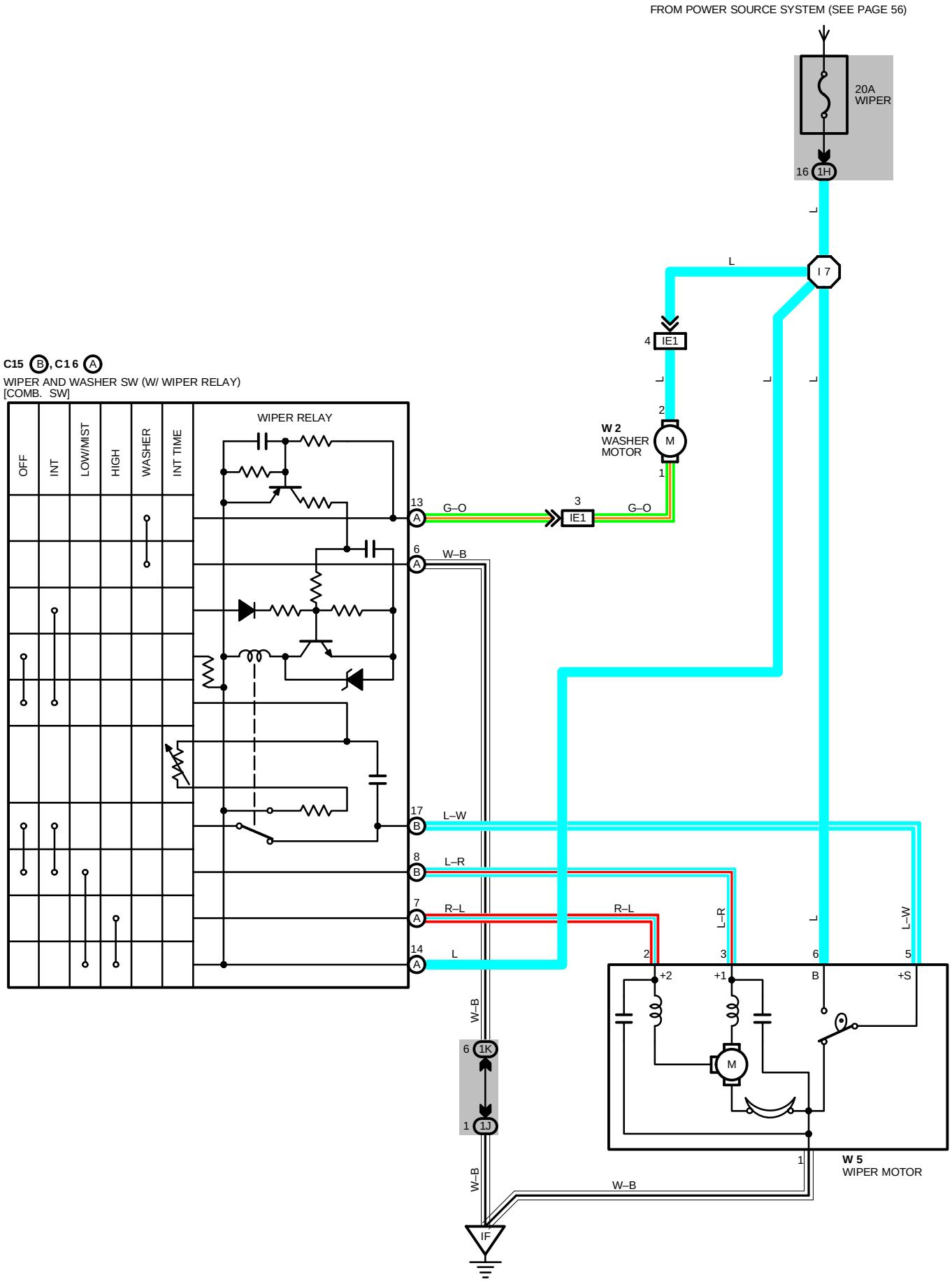

WhereEverybodyKnowsYourName

SYSTEM OUTLINE

WITH THE IGNITION SW TURNED ON, THE CURRENT FLOWS TO **TERMINAL (A)14** OF THE WIPER AND WASHER SW, **TERMINAL 2** OF THE WASHER MOTOR AND **TERMINAL 6** OF THE WIPER MOTOR THROUGH THE **WIPER** FUSE.

1. LOW SPEED POSITION

WITH WIPER SW TURNED TO **LOW** POSITION, THE CURRENT FLOWS FROM **TERMINAL (A)14** OF THE WIPER AND WASHER SW → **TERMINAL (B)8** → **TERMINAL 3** OF THE WIPER MOTOR → **TERMINAL 1** → TO **GROUND** AND CAUSES TO THE WIPER MOTOR TO RUN AT LOW SPEED.

2. HIGH SPEED POSITION

WITH WIPER SW TURNED TO **HIGH** POSITION, THE CURRENT FLOWS FROM **TERMINAL (A)14** OF THE WIPER AND WASHER SW → **TERMINAL (A)7** → **TERMINAL 2** OF THE WIPER MOTOR → **TERMINAL 1** → TO **GROUND** AND CAUSES TO THE WIPER MOTOR TO RUN AT HIGH SPEED.

3. INT POSITION

WITH WIPER SW TURNED TO **INT** POSITION, THE RELAY OPERATES AND THE CURRENT WHICH IS CONNECTED BY RELAY FUNCTION FLOWS FROM **TERMINAL (A)14** OF THE WIPER AND WASHER SW → **TERMINAL (A)6** → TO **GROUND**. THIS FLOW OF CURRENT OPERATES THE INTERMITTENT CIRCUIT AND THE CURRENT FLOWS FROM **TERMINAL (A)14** OF THE WIPER AND WASHER SW → **TERMINAL (B)8** → **TERMINAL 3** OF THE WIPER MOTOR → **TERMINAL 1** → TO **GROUND** AND FUNCTIONS.

THE INTERMITTENT OPERATION IS CONTROLLED BY A CONDENSER'S CHARGED AND DISCHARGED FUNCTION INSTALLED IN RELAY AND THE INTERMITTENT TIME IS CONTROLLED BY A TIME CONTROL SW TO CHARGE THE CHARGING TIME OF THE CONDENSER.

4. MIST POSITION

WITH WIPER SW TURNED TO **MIST** POSITION, THE CURRENT FLOWS FROM **TERMINAL (A)14** OF THE WIPER AND WASHER SW → **TERMINAL (B)8** → **TERMINAL 3** OF THE WIPER MOTOR → **TERMINAL 1** → TO **GROUND** AND CAUSES TO THE WIPER MOTOR TO RUN AT LOW SPEED.

5. WASHER CONTINUOUS OPERATION

WITH WASHER SW TURNED TO ON, THE CURRENT FLOWS FROM **TERMINAL 2** OF THE WASHER MOTOR → **TERMINAL 1** → **TERMINAL (A)13** OF THE WIPER AND WASHER SW → **TERMINAL (A)6** → TO **GROUND** AND CAUSES TO THE WASHER MOTOR TO RUN. AND WINDOW WASHER IS JET. THIS CAUSES THE CURRENT TO FLOW WASHER CONTINUOUS OPERATION CIRCUIT IN **TERMINAL (A)14** OF THE WIPER AND WASHER SW → **TERMINAL (B)8** → **TERMINAL 3** OF THE WIPER MOTOR → **TERMINAL 1** TO **GROUND** AND FUNCTION.

SERVICE HINTS

C15(B), C16(A) WIPER AND WASHER SW [COMB. SW]

(A) 6–GROUND :	ALWAYS CONTINUITY
(A)14–GROUND :	APPROX. **12** VOLTS WITH IGNITION SW AT **ON** POSITION
(B) 8–GROUND :	APPROX. **12** VOLTS WITH WIPER AND WASHER SW AT **LOW** OR **MIST** POSITION
	APPROX. **12** VOLTS EVERY APPROX. **1** TO **10** SECONDS INTERMITTENTLY WITH WIPER SW AT **INT** POSITION
(B)17–GROUND :	APPROX. **12** VOLTS WITH IGNITION SW ON UNLESS WIPER MOTOR AT **STOP** POSITION
(A) 7–GROUND :	APPROX. **12** VOLTS WITH IGNITION SW ON AND AFTER WIPER SW OFF UNTIL WIPER MOTOR STOPS

W 5 WIPER MOTOR

6–5 : CLOSED UNLESS WIPER MOTOR AT **STOP** POSITION

WhereEverybodyKnowsYourName

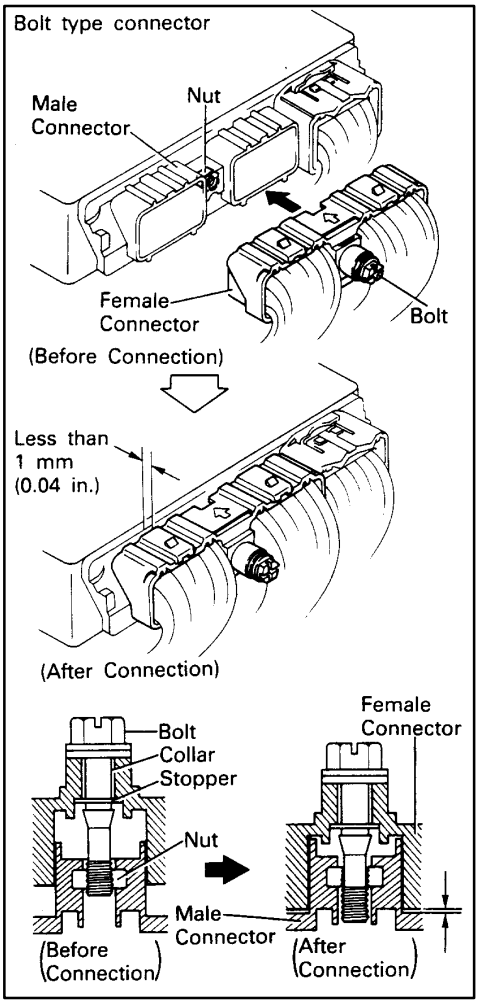

DISCONNECTION AND CONNECTION OF BOLT TYPE CONNECTORS

For engine and ECT ECU in this vehicle, connectors are used which require a bolt built into the connector to be screwed down to securely connect the connector.

1. Disconnect the connector

   After completely loosening the bolt, the two parts of the connector can be separated.

   NOTICE:

   Do not pull the wire harness when disconnecting the connector.

2. Connect the connector

   NOTICE:

   Before connecting the connector, always check that the terminals are not bent or damaged.

   (a) Match the guide section of the male connector correctly with the female connector, then press them together.

   (b) Tighten the bolt.

   Make sure the connectors are completely connected, by tightening the bolt until there is a clearance of less than 1 mm (0.04 in.) between the bottom of male connector and the end of female connector.

ABBREVIATIONS

The following abbreviations are used in this manual.

A/C	=	Air Conditioning	O/D	=	Overdrive
ABS	=	Anti–Lock Brake System	R/B	=	Relay Block
A/T	=	Automatic Transmission	RH	=	Right–Hand
CB	=	Circuit Breaker	SRS	=	Supplement Restraint System
COMB.	=	Combination	SW	=	Switch
ECT	=	Electronic Controlled Transmission	TDCL	=	Total Diagnostic Communication Link
ECU	=	Electronic Control Unit	TEMP.	=	Temperature
EGR	=	Exhaust Gas Recirculation	TRAC	=	Traction Control
FL	=	Fusible Link	VSV	=	Vacuum Switching Valve
ISC	=	Idle Speed Control	W/	=	With
J/B	=	Junction Block	W/O	=	Without
LH	=	Left-Hand			

* The titles given inside the components are the names of the terminals (terminal codes) and are not treated as being abbreviations.

WhereEverybodyKnowsYourName

A 4 (B) GRAY

A 7, A 8 GRAY

A22 (A) DARK GARY

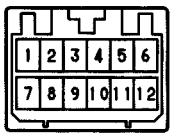

A23 (B) DARK GARY

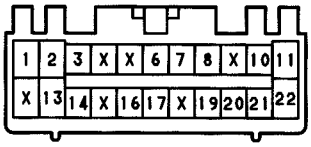

A30, A31 GRAY

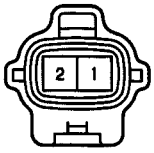

A33 (A) GRAY

B 1 GRAY

C 3 BLACK

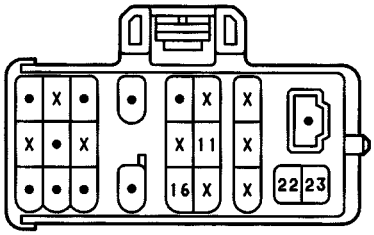

C13 (B)

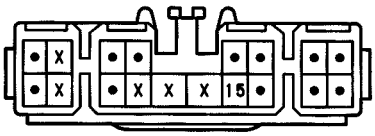

C14 (A)

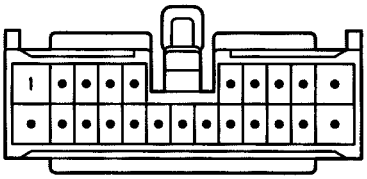

D 2 BLACK

F 9 BLACK

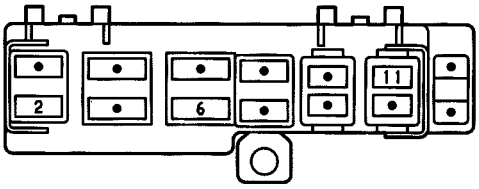

P 3

S12

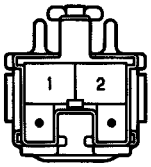

T 6 DARK GARY

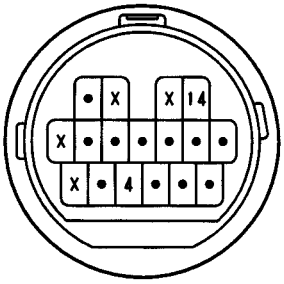

WhereEverybodyKnowsYourName

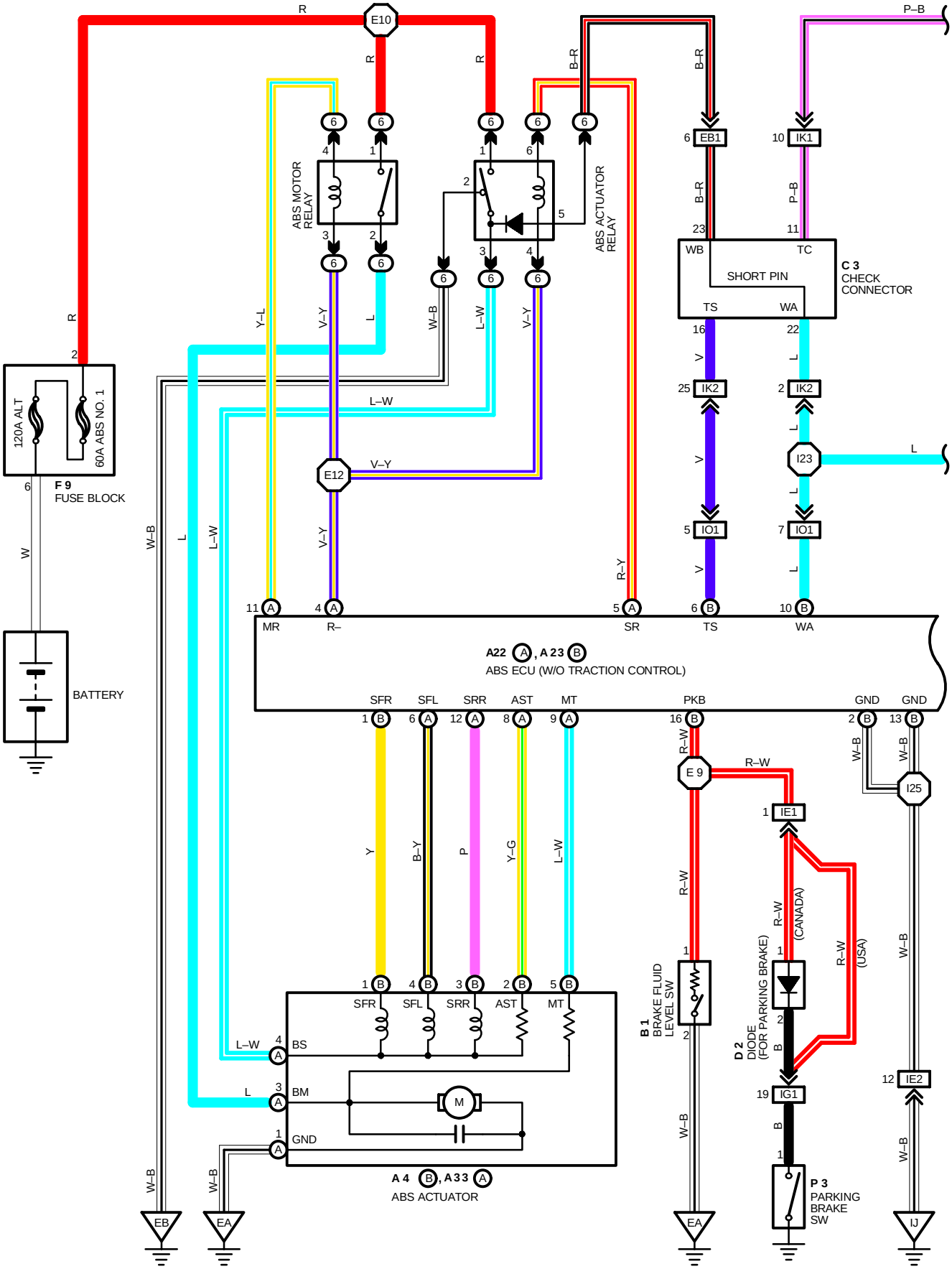

WhereEverybodyKnowsYourName

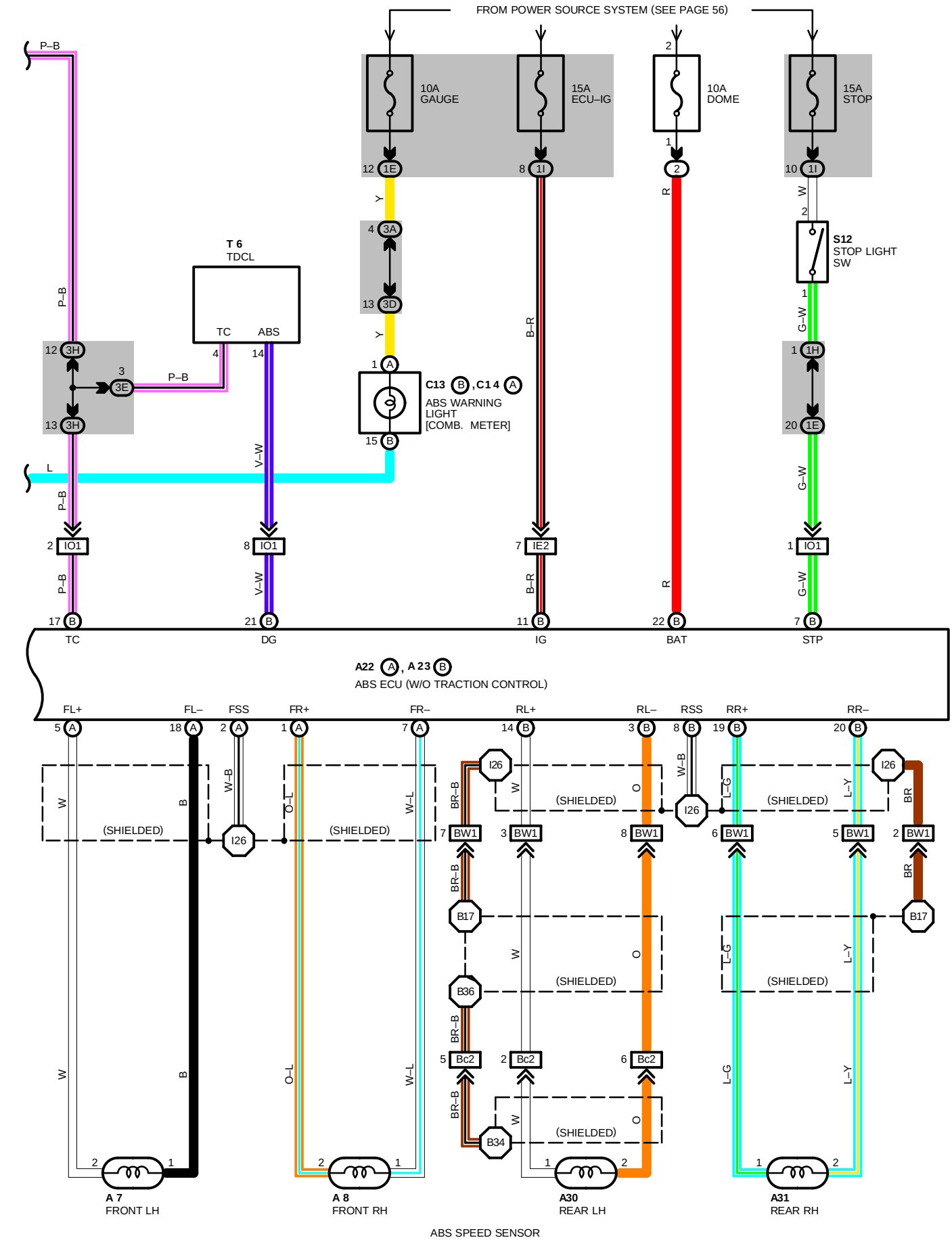
FROM POWER SOURCE SYSTEM (SEE PAGE 56)
10A GAUGE
15A ECU–IG
10A DOME
15A STOP
T 6
TDCL
TC
ABS
S12
STOP LIGHT SW
C13 B , C14 A
ABS WARNING LIGHT [COMB. METER]
IO1
IE2
TC
DG
IG
BAT
STP
A22 A , A23 B
ABS ECU (W/O TRACTION CONTROL)
FL+
FL–
FSS
FR+
FR–
RL+
RL–
RSS
RR+
RR–
(SHIELDED)
I26
BW1
B17
B36
Bc2
B34
A 7
FRONT LH
A 8
FRONT RH
A30
REAR LH
A31
REAR RH
ABS SPEED SENSOR

ABS (ANTI–LOCK BRAKE SYSTEM)

SYSTEM OUTLINE

THIS SYSTEM CONTROLS THE RESPECTIVE BRAKE FLUID PRESSURES ACTING ON THE DISC BRAKE CYLINDERS OF THE RIGHT FRONT WHEEL, LEFT FRONT WHEEL AND REAR WHEELS WHEN THE BRAKES ARE APPLIED IN A PANIC STOP SO THAT THE WHEELS DO NOT LOCK. THIS RESULTS IN IMPROVED DIRECTIONAL STABILITY AND STEERABILITY DURING PANIC BRAKING.

1. INPUT SIGNALS

(1) SPEED SENSOR SIGNAL

THE SPEED OF THE WHEELS IS DETECTED AND INPUT TO **TERMINALS FL+, FR+, RL+** AND **RR+** OF THE ABS ECU.

(2) STOP LIGHT SW SIGNAL

A SIGNAL IS INPUT TO **TERMINAL STP** OF THE ABS ECU WHEN THE BRAKE PEDAL IS OPERATED.

(3) PARKING BRAKE SW SIGNAL

A SIGNAL IS INPUT TO **TERMINAL PKB** OF THE ABS ECU WHEN THE PARKING BRAKE IS OPERATED.

2. SYSTEM OPERATION

DURING SUDDEN BRAKING, THE ABS ECU WHICH HAS SIGNALS INPUT FROM EACH SENSOR CONTROLS THE CURRENT FLOWING TO THE SOLENOID INSIDE THE ACTUATOR AND LETS THE HYDRAULIC PRESSURE ACTING ON EACH WHEEL CYLINDER ESCAPE TO THE RESERVOIR.

THE PUMP INSIDE THE ACTUATOR IS ALSO OPERATING AT THIS TIME AND IT RETURNS THE BRAKE FLUID FROM THE RESERVOIR TO THE MASTER CYLINDER, THUS PREVENTING LOCKING OF THE VEHICLE WHEELS.

IF THE ECU JUDGES THAT THE HYDRAULIC PRESSURE ACTING ON THE WHEEL CYLINDER IS INSUFFICIENT, THE CURRENT ACTING ON SOLENOID IS CONTROLLED AND THE HYDRAULIC PRESSURE IS INCREASED.

HOLDING OF THE HYDRAULIC PRESSURE IS ALSO CONTROLLED BY THE COMPUTER, BY THE SAME METHOD AS ABOVE. BY REPEATED PRESSURE REDUCTION, HOLDING AND INCREASE ARE REPEATED TO MAINTAIN VEHICLE STABILITY AND TO IMPROVE STEERABILITY DURING SUDDEN BRAKING.

SERVICE HINTS

A 4(B), A 33(A) ABS ACTUATOR
(A)3, **(A)**4–GROUND : ALWAYS APPROX. **12** VOLTS
(A)1–GROUND : ALWAYS CONTINUITY
(B)4, **(B)**5, **(B)**6–GROUND : APPROX. **1.15**? (IGNITION SW OFF)
(B)2–GROUND :APPROX. **5**? (IGNITION SW OFF)

A 7, A 8, A30, A31 ABS SPEED SENSOR FRONT LH, RH, REAR LH, RH
1–2 : APPROX. **1.0**KΩ (**20**˚C, **68**˚F)

A22(A), A23(B) ABS ECU
(B) 11–GROUND : APPROX. **12** VOLTS WITH IGNITION SW ON
(B)2, **(B)**13–GROUND : ALWAYS CONTINUITY
(B)22–GROUND : ALWAYS APPROX. **12** VOLTS
(B) 1, **(A)** 6, **(A)** 12–GROUND : APPROX. **12** VOLTS WITH IGNITION SW ON
(B) 16–GROUND : CONTINUITY WITH PARKING BRAKE LEVER PULLED UP
(B) 7–GROUND : APPROX. **12** VOLTS WITH STOP LIGHT SW ON

P 3 PARKING BRAKE SW
1–GROUND : CLOSED WITH PARKING BRAKE LEVER PULLED UP

S12 STOP LIGHT SW
1–2 : CLOSED WITH BRAKE PEDAL DEPRESSED

WhereEverybodyKnowsYourName

: PARTS LOCATION

CODE		SEE PAGE	CODE		SEE PAGE	CODE	SEE PAGE
A 4	B	26	**A31**		30	**D 2**	28
A 7		26	**A33**	A	26	**F 9**	26
A 8		26	**B 1**		26	**P 3**	29
A22	A	28	**C 3**		26	**S12**	29
A23	B	28	**C13**	B	28	**T 6**	29
A30		30	**C14**	A	28		

: RELAY BLOCKS

CODE	SEE PAGE	RELAY BLOCKS (RELAY BLOCK LOCATION)
2	19	ENGINE COMPARTMENT LEFT
6	24	

: JUNCTION BLOCK AND WIRE HARNESS CONNECTOR

CODE	SEE PAGE	JUNCTION BLOCK AND WIRE HARNESS (CONNECTOR LOCATION)
1E	20	INSTRUMENT PANEL WIRE
1H	20	COWL WIRE
1I		
3A	22	INSTRUMENT PANEL WIRE
3D		
3E		
3H		

: CONNECTOR JOINING WIRE HARNESS AND WIRE HARNESS

CODE	SEE PAGE	JOINING WIRE HARNESS AND WIRE HARNESS (CONNECTOR LOCATION)
EB1	34	ENGINE WIRE AND ENGINE ROOM MAIN WIRE (FRONT SIDE OF R/B NO. 2)
IE1	36	ENGINE ROOM MAIN WIRE AND COWL WIRE (R/B NO. 4)
IE2	38	ENGINE ROOM MAIN WIRE AND COWL WIRE (BEHIND GLOVE BOX)
IG1	36	INSTRUMENT PANEL WIRE AND COWL WIRE (R/B NO. 5)
IK1	36	ENGINE WIRE AND INSTRUMENT PANEL WIRE (RIGHT KICK PANEL)
IK2		
IO1	38	ENGINE ROOM MAIN WIRE AND INSTRUMENT PANEL WIRE (RIGHT KICK PANEL)
BW1	40	ENGINE ROOM MAIN WIRE AND FLOOR NO. 3 WIRE (RIGHT KICK PANEL)
Bc2	40	FLOOR NO. 3 WIRE AND FLOOR WIRE (UNDER THE LEFT SIDE OF REAR SEAT CUSHION)

: GROUND POINTS

CODE	SEE PAGE	GROUND POINTS LOCATION
EA	34	FRONT SIDE OF RIGHT FENDER
EB	34	FRONT SIDE OF LEFT FENDER
IJ	36	RIGHT KICK PANEL

: SPLICE POINTS

CODE	SEE PAGE	WIRE HARNESS WITH SPLICE POINTS	CODE	SEE PAGE	WIRE HARNESS WITH SPLICE POINTS
E 9	34	ENGINE ROOM MAIN WIRE	**I26**	38	ENGINE ROOM MAIN WIRE
E10			**B17**	40	FLOOR NO. 3 WIRE
E12	34	ENGINE ROOM MAIN WIRE	**B34**	40	FLOOR MAIN WIRE
I23	38	INSTRUMENT PANEL WIRE	**B36**	40	FLOOR NO. 3 WIRE
I25	38	ENGINE ROOM MAIN WIRE			

WhereEverybodyKnowsYourName

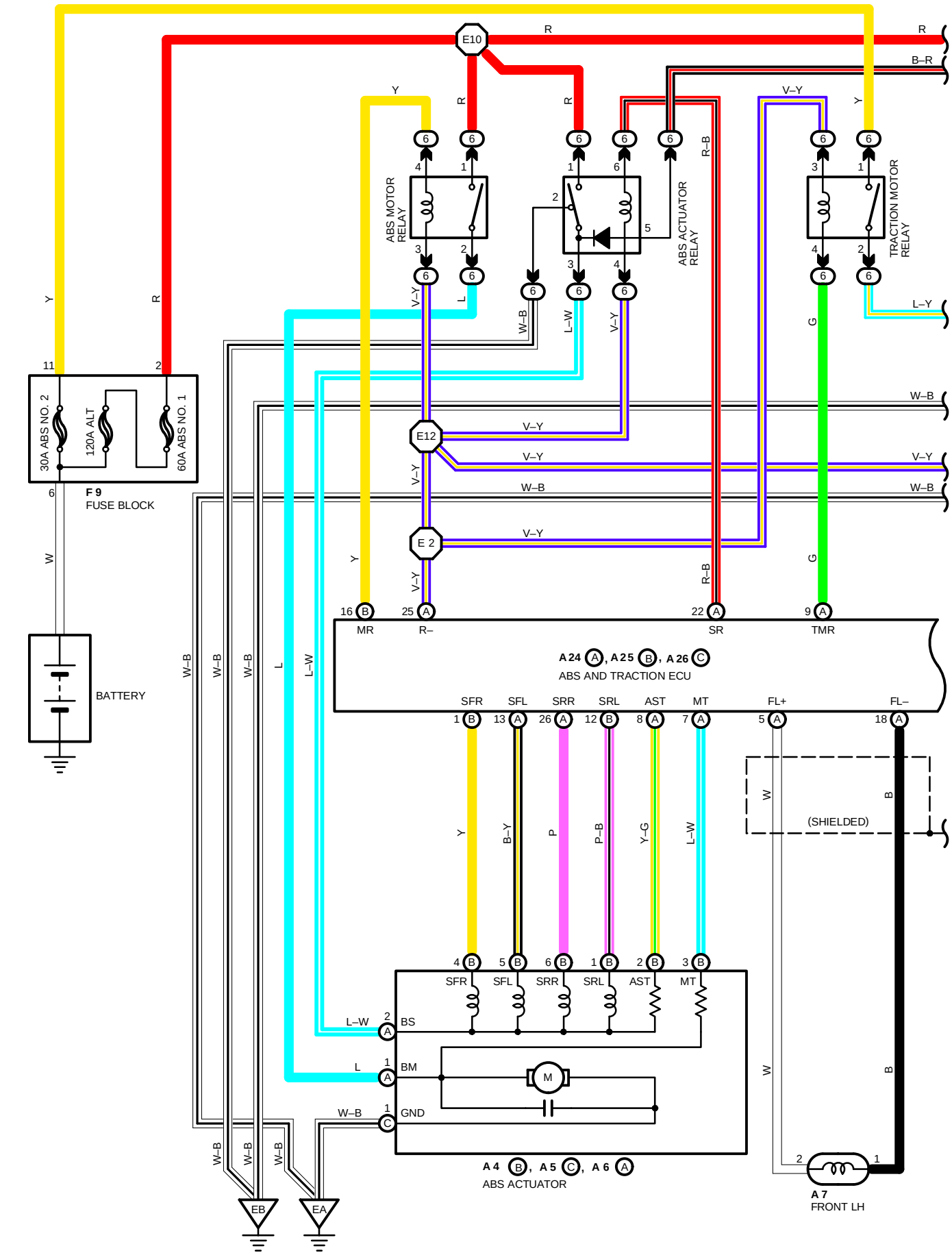

WhereEverybodyKnowsYourName

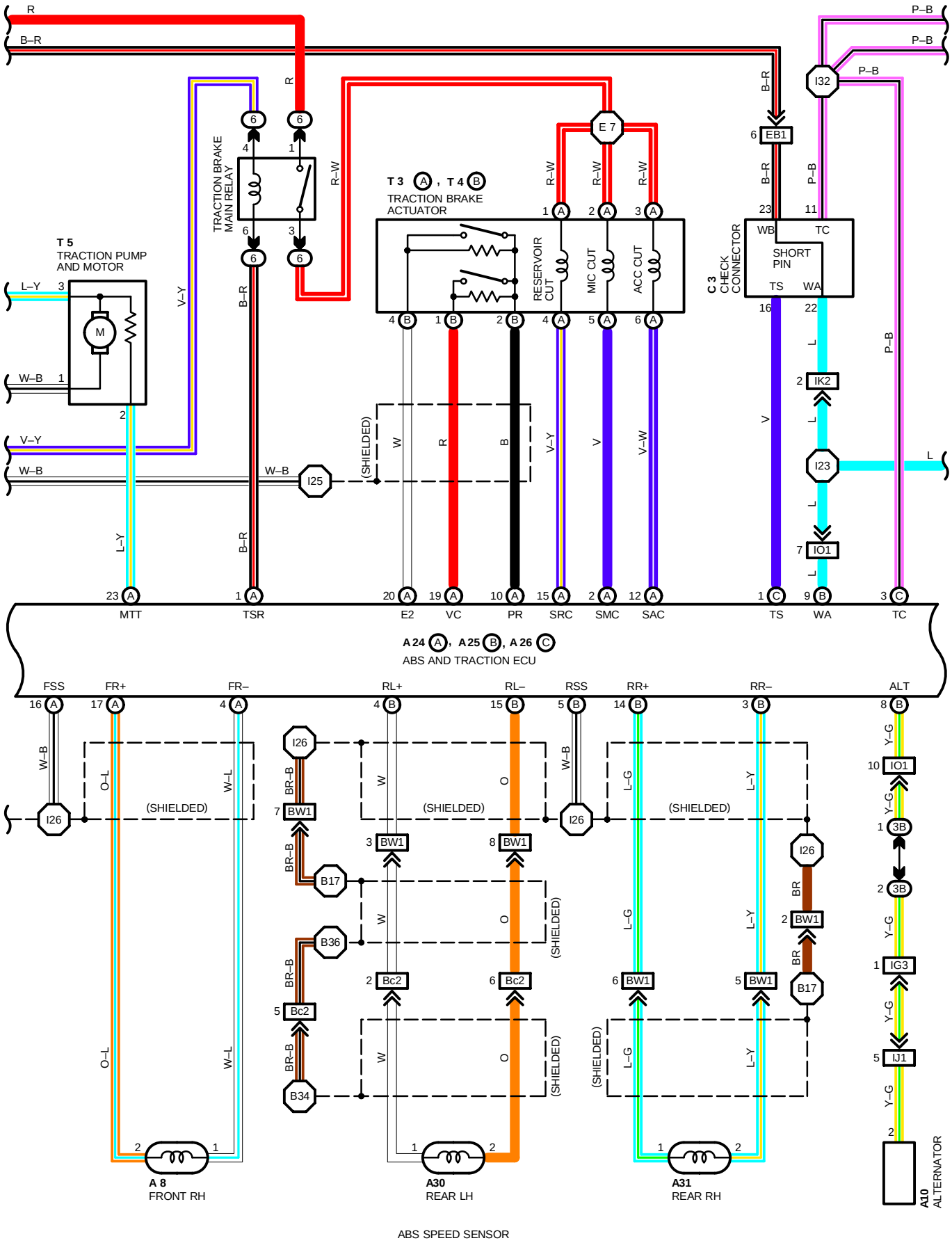

WhereEverybodyKnowsYourName

ABS AND TRACTION CONTROL

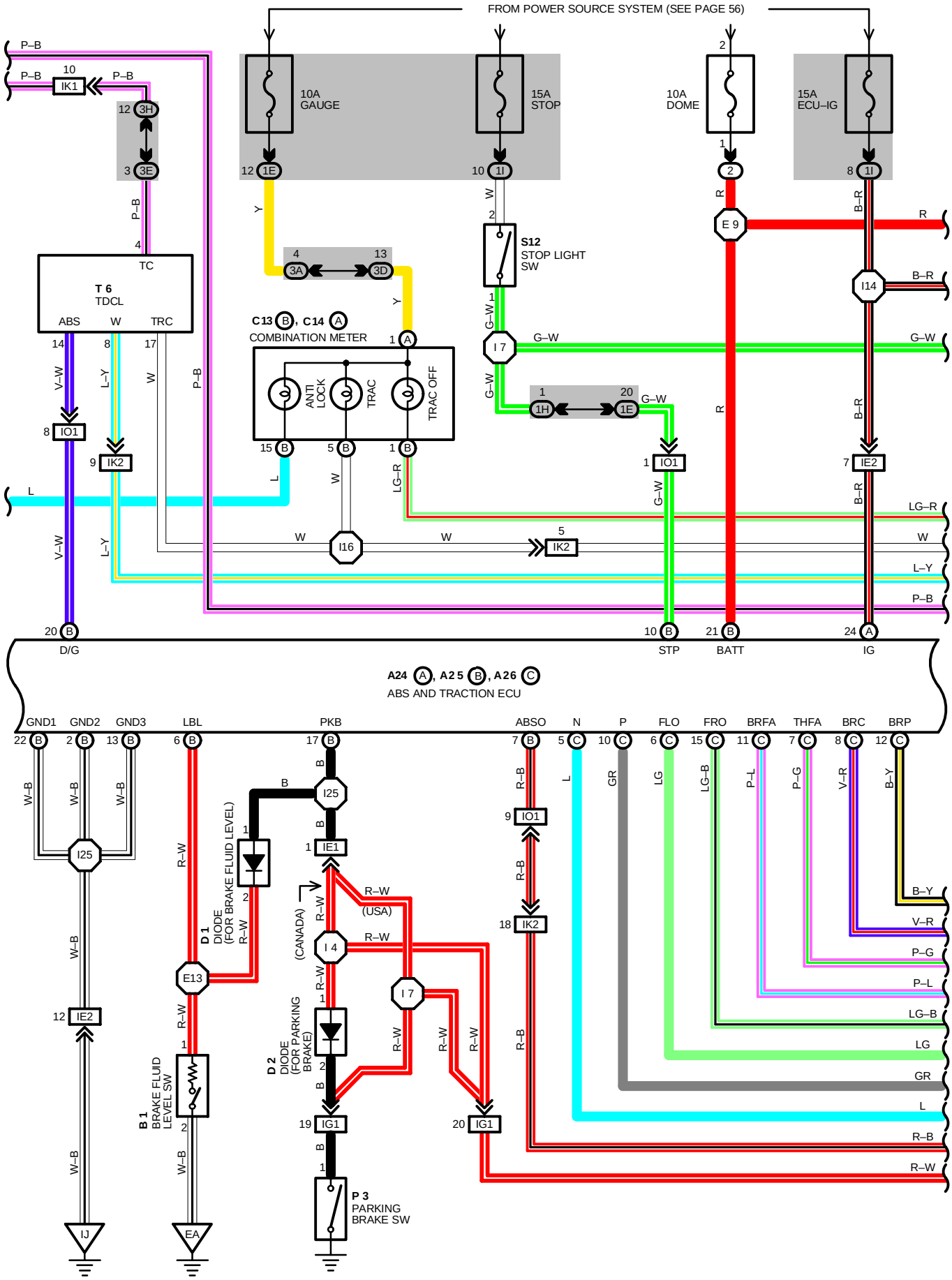

WhereEverybodyKnowsYourName

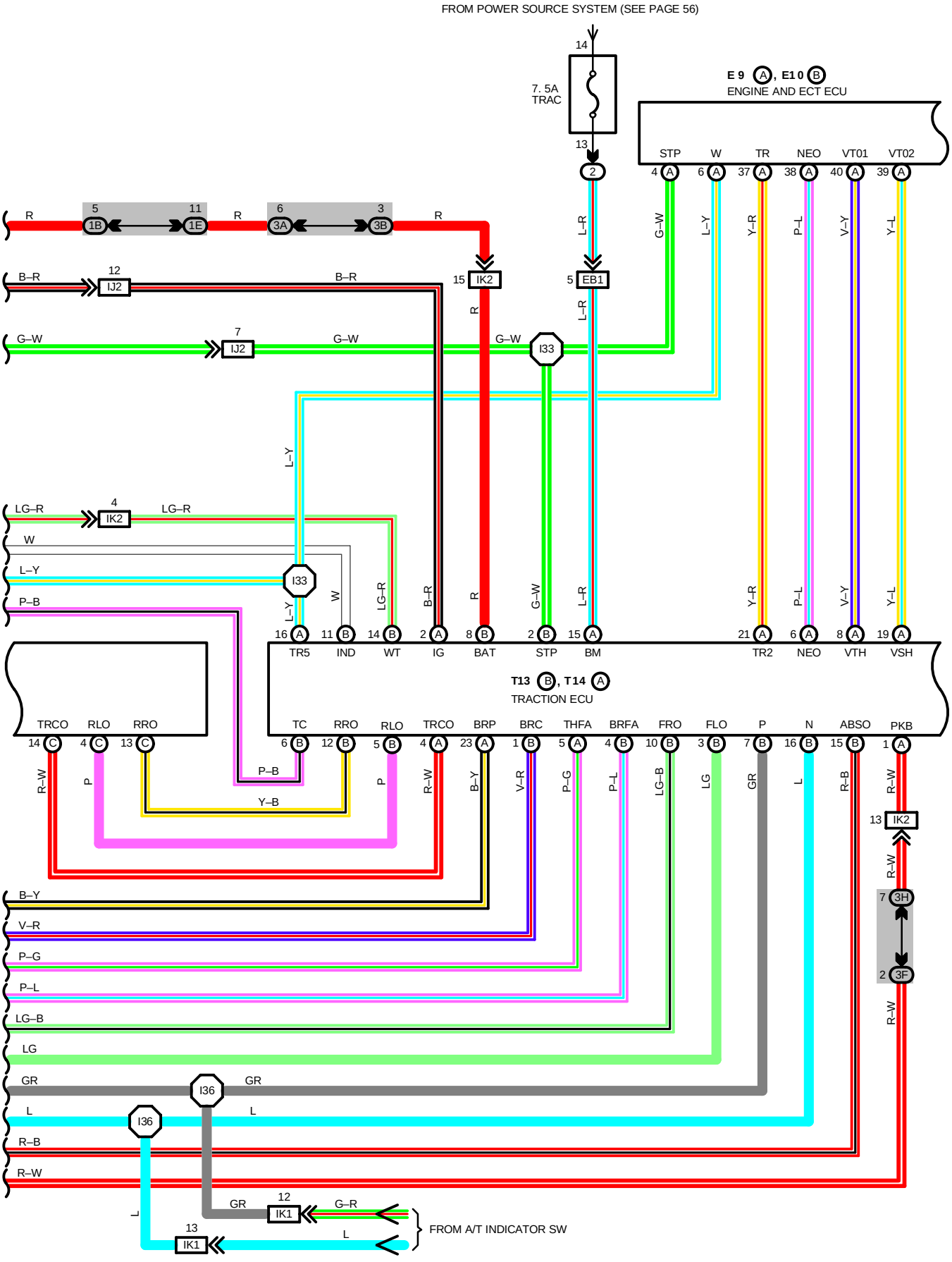

WhereEverybodyKnowsYourName

*1 : USA SPEC.

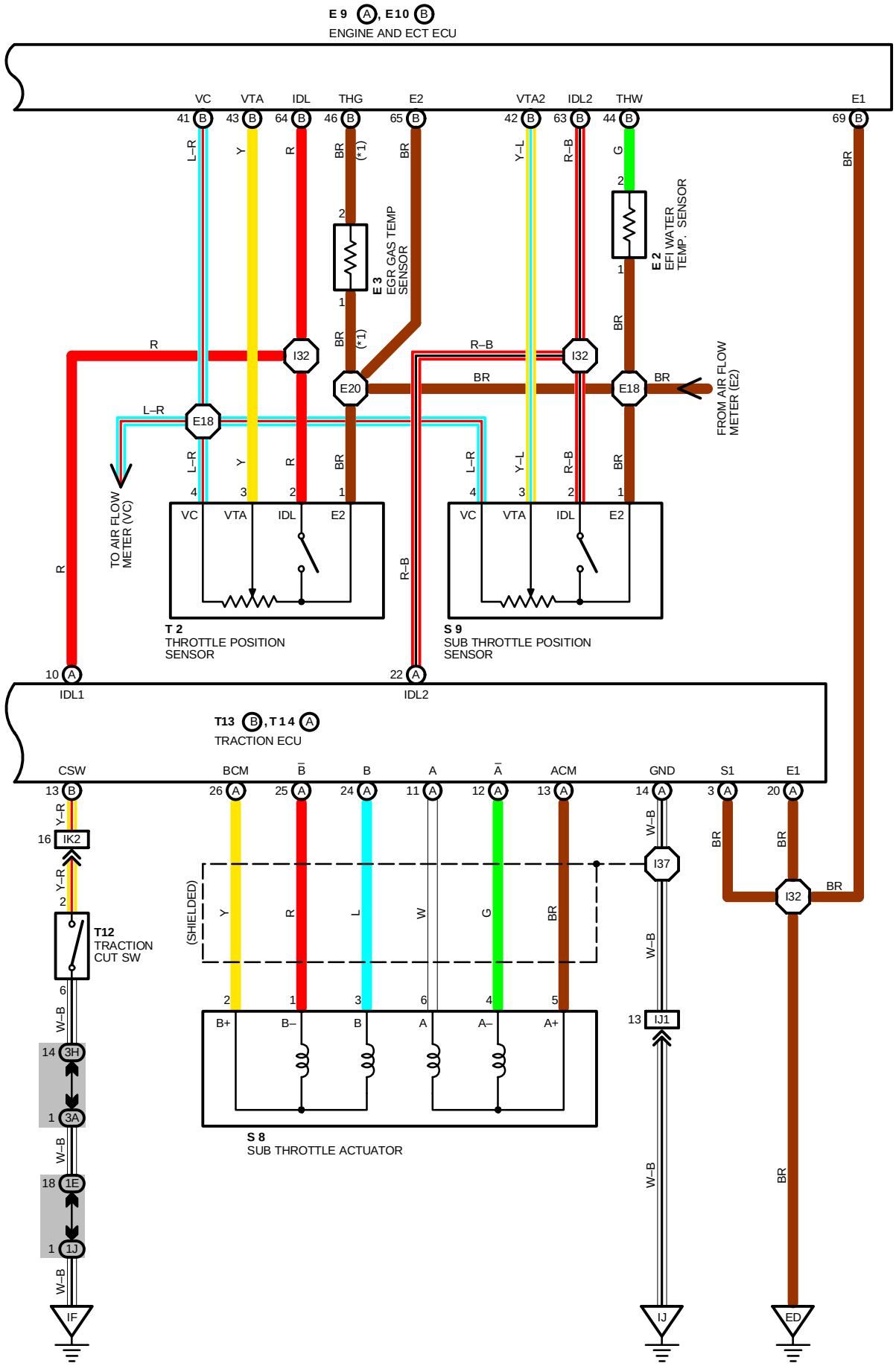

WhereEverybodyKnowsYourName

SYSTEM OUTLINE

(FOR ABS)

THIS SYSTEM CONTROLS THE RESPECTIVE BRAKE FLUID PRESSURES ACTING ON THE DISC BRAKE CYLINDERS OF THE RIGHT FRONT WHEEL, LEFT FRONT WHEEL AND REAR WHEELS WHEN THE BRAKES ARE APPLIED IN A PANIC STOP SO THAT THE WHEELS DO NOT LOCK. THIS RESULTS IN IMPROVED DIRECTIONALLY STABILITY AND STEERABILITY DURING PANIC BRAKING.

1. INPUT SIGNALS

(1) SPEED SENSOR SIGNAL

THE SPEED OF THE WHEELS IS DETECTED AND INPUT TO **TERMINALS FL+, FR+, RL+** AND **RR+** OF THE ABS AND TRACTION ECU.

(2) STOP LIGHT SW SIGNAL

A SIGNAL IS INPUT TO **TERMINAL STP** OF THE ABS AND TRACTION ECU WHEN THE BRAKE PEDAL IS OPERATED.

(3) PARKING BRAKE SW SIGNAL

A SIGNAL IS INPUT TO **TERMINAL PKB** OF THE ABS AND TRACTION ECU WHEN THE PARKING BRAKE IS OPERATED.

2. SYSTEM OPERATION

DURING SUDDEN BRAKING, THE ABS AND TRACTION ECU WHICH HAS SIGNALS INPUT FROM EACH SENSOR CONTROLS THE CURRENT FLOWING TO THE SOLENOID INSIDE THE ACTUATOR AND LETS THE HYDRAULIC PRESSURE ACTING ON EACH WHEEL CYLINDER ESCAPE TO THE RESERVOIR. THE PUMP INSIDE THE ACTUATOR IS ALSO OPERATING AT THIS TIME AND IT RETURNS THE BRAKE FLUID FROM THE RESERVOIR TO THE MASTER CYLINDER, THUS PREVENTING LOCKING OF THE VEHICLE WHEELS.

IF THE ECU JUDGES THAT THE HYDRAULIC PRESSURE ACTING ON THE WHEEL CYLINDER IS INSUFFICIENT, THE CURRENT ACTING ON SOLENOID IS CONTROLLED AND THE HYDRAULIC PRESSURE IS INCREASED, HOLDING OF THE HYDRAULIC PRESSURE IS ALSO CONTROLLED BY THE COMPUTER, BY THE SAME METHOD AS ABOVE. BY REPEATED PRESSURE REDUCTION, HOLDING AND INCREASE ARE REPEATED TO MAINTAIN VEHICLE STABILITY AND TO IMPROVE STEERABILITY DURING SUDDEN BRAKING.

(FOR TRACTION CONTROL)

THE TRACTION CONTROL SYSTEM IS A SYSTEM WHEREBY THE “ABS AND TRACTION ECU” AND “TRACTION ECU” CONTROLS THE ENGINE TORQUE AND THE HYDRAULIC PRESSURE OF THE WHEEL CYLINDER OF THE DRIVING WHEELS IN ORDER TO CONTROL SPINNING OF THE DRIVING WHEELS WHEN STARTING OFF AND ACCELERATING, AND PROVIDE THE MOST APPROPRIATE DRIVING FORCE IN RESPONSE TO THE ROAD CONDITIONS FOR VEHICLE STABILITY.

TRACTION CONTROL OPERATION

VEHICLE SPEED SIGNALS FROM THE SPEED SENSOR INSTALLED ON EACH WHEEL ARE INPUT TO THE ABS AND TRACTION ECU.

WHEN THE ACCELERATOR PEDAL IS DEPRESSED WHILE DRIVING ON A SLIPPERY ROAD AND THE DRIVING WHEEL (REAR WHEEL) SLIPS, IF THE ROTATION OF THE REAR WHEEL EXCEEDS THE ROTATION OF THE FRONT WHEELS FOR A SPECIFIED PERIOD, THE ECU JUDGES THAT THE REAR WHEEL IS SLIPPING.

WHEN THIS OCCURS, CURRENT FLOWS FROM TRACTION ECU TO SUB THROTTLE ACTUATOR TO CLOSE THE SUB THROTTLE VALVE. THE THROTTLE VALVE OPENING ANGLE SIGNAL IS OUTPUT FROM **TERMINAL VTA** OF SUB THROTTLE POSITION SENSOR TO **TERMINAL VTA2** OF ENGINE AND ECT ECU TO KEEP THE ENGINE RPM AT THE MOST SUITABLE LEVEL FOR THE DRIVING CONDITIONS AND REDUCE SLIP OF THE DRIVING WHEEL. AT THE SAME TIME, OPERATION OF THE ABS AND TRACTION ECU CAUSE THE TRACTION BRAKE ACTUATORS (ACC CUT, M/C CUT, RESERVOIR CUT SOLENOID) TO TURN ON TO SWITCH THE HYDRAULIC CIRCUIT TO “TRACTION” MODE.

IN THIS CASE, SIGNALS ARE INPUT FROM **TERMINAL SRR** OF ABS AND TRACTION ECU TO **TERMINAL (B)6** OF ABS ACTUATOR, AND FROM **TERMINAL SRL** OF ABS AND TRACTION ECU TO **TERMINAL (B)1** OF ABS ACTUATOR, CONTROLLING THE REAR WHEEL SOLENOID IN THE ABS ACTUATOR AND INCREASING THE HYDRAULIC PRESSURE OF THE WHEEL CYLINDER IN ORDER TO PREVENT SLIP.

TO MAINTAIN THE HYDRAULIC PRESSURE OF THE REAR WHEELS, THE REAR WHEEL SOLENOID INSIDE THE ABS ACTUATOR IS PUT IN “HOLD” MODE AND KEEPS THE HYDRAULIC PRESSURE TO THE BRAKE CYLINDER CONSTANT.

WHEN THE BRAKE CYLINDER HYDRAULIC PRESSURE IS REDUCED, THE PRESSURE REDUCTION MODE REDUCES AND CONTROLS THE HYDRAULIC PRESSURE.

WhereEverybodyKnowsYourName

SERVICE HINTS

A24(A), A25(B), A26(C) ABS AND TRACTION ECU
(B)21–GROUND : ALWAYS APPROX. **12** VOLTS
(B)11–GROUND : APPROX. **12** VOLTS WITH IGNITION SW AT **ON** POSITION
(B)10–GROUND : CONTINUITY WITH STOP LIGHT SW ON
(B)2, **(B)**13, **(B)**22–GROUND : ALWAYS CONTINUITY
(B)17–GROUND : CONTINUITY WITH PARKING BRAKE LEVER PULLED UP (PARKING BRAKE SW ON)

A 4(B), A 5(C), A 6(A) ABS ACTUATOR
(A)1, **(A)**2–GROUND : APPROX. APPROX. **12** VOLTS
(C)1–GROUND : ALWAYS CONTINUITY
(B)1, **(B)**5, **(B)**4, **(B)**6–GROUND : APPROX. **1.15** (IGNITION SW OFF)
(B)2–GROUND : APPROX. **5** (IGNITION SW OFF)

T 3(A), T 4(B) TRACTION BRAKE ACTUATOR
(B)2– **(B)**4 : OPEN ABOVE APPROX. **134.5**KG/CM^2 (**13189**KPA, **1910**PSI)
CLOSED BELOW APPROX. **95**KG/CM^2 (**9316**KPA, **1349**PSI)
(A)3– **(A)**6 : APPROX. **2**
(A)2– **(A)**5 : APPROX. **2**
(A)1– **(A)**4 : APPROX. **2**

S12 STOP LIGHT SW
2–1 : CLOSED WITH BRAKE PEDAL DEPRESSED

A 7, A 8, A30, A31 ABS SPEED SENSOR FRONT LH, RH, REAR LH, RH
1–2 : APPROX. **1.0** (**20**˚C, **68**˚F)

T13(B), T14(A) TRACTION ECU
(A) 2–GROUND : APPROX. **12** VOLTS WITH IGNITION SW AT **ON** POSITION
(A)15–GROUND : ALWAYS APPROX. **12** VOLTS
(A)20, **(A)**14–GROUND : ALWAYS CONTINUITY
(A) 1–GROUND : CONTINUITY WITH PARKING BRAKE LEVER PULLED UP
(B) 2–GROUND : APPROX. **12** VOLTS WITH STOP LIGHT SW ON
(B)13–GROUND : CONTINUITY WITH TRACTION CUT SW PUSHED ON
(B) 8–GROUND : ALWAYS APPROX. **12** VOLTS

P 3 PARKING BRAKE SW
1–GROUND : CLOSED WITH PARKING BRAKE LEVER PULLED UP

S 8 SUB THROTTLE ACTUATOR
2–1, 2–3 : APPROX. **0.9**
5–4, 5–6 : APPROX. **0.9**

○ : PARTS LOCATION

CODE		SEE PAGE	CODE		SEE PAGE	CODE		SEE PAGE
A 4	B	26	**C 3**		26	**S 9**		27
A 5	C	26	**C13**	B	28	**S12**		29
A 6	A	26	**C14**	A	28	**T 2**		27
A 7		26	**D 1**		28	**T 3**	A	27
A 8		26	**D 2**		28	**T 4**	B	27
A10		26	**E 2**		26	**T 5**		27
A24	A	28	**E 3**		26	**T 6**		29
A25	B	28	**E 9**	A	28	**T12**		29
A26	C	28	**E10**	B	28	**T13**	B	29
A30		30	**F 9**		26	**T14**	A	29
A31		30	**P 3**		29			
B 1		26	**S 8**		27			

⬭ : RELAY BLOCKS

CODE	SEE PAGE	RELAY BLOCKS (RELAY BLOCK LOCATION)
2	19	ENGINE COMPARTMENT LEFT
6	24	

WhereEverybodyKnowsYourName

: JUNCTION BLOCK AND WIRE HARNESS CONNECTOR

CODE	SEE PAGE	JUNCTION BLOCK AND WIRE HARNESS (CONNECTOR LOCATION)
1B	20	ENGINE ROOM MAIN WIRE
1E	20	INSTRUMENT PANEL WIRE
1H	20	COWL WIRE
1I		
1J		
3A	22	INSTRUMENT PANEL WIRE
3B		
3D		
3E		
3F		
3H		

: CONNECTOR JOINING WIRE HARNESS AND WIRE HARNESS

CODE	SEE PAGE	JOINING WIRE HARNESS AND WIRE HARNESS (CONNECTOR LOCATION)
EB1	34	ENGINE WIRE AND ENGINE ROOM MAIN WIRE (FRONT SIDE OF R/B NO. 2)
IE1	36	ENGINE ROOM MAIN WIRE AND COWL WIRE (R/B NO. 4)
IE2	36	ENGINE ROOM MAIN WIRE AND COWL WIRE (BEHIND GLOVE BOX)
IG1	36	INSTRUMENT PANEL WIRE AND COWL WIRE (R/B NO. 5)
IG3	36	INSTRUMENT PANEL WIRE AND COWL WIRE (RIGHT KICK PANEL)
IJ1	36	ENGINE WIRE AND COWL WIRE (RIGHT KICK PANEL)
IJ2		
IK1	36	ENGINE WIRE AND INSTRUMENT PANEL WIRE (RIGHT KICK PANEL)
IK2		
IO1	38	ENGINE ROOM MAIN WIRE AND INSTRUMENT PANEL WIRE (RIGHT KICK PANEL)
BW1	40	ENGINE ROOM MAIN WIRE AND FLOOR NO. 3 WIRE (RIGHT KICK PANEL)
Bc2	40	FLOOR NO. 3 WIRE AND FLOOR WIRE (UNDER THE LEFT SIDE OF REAR SEAT CUSHION)

: GROUND POINTS

CODE	SEE PAGE	GROUND POINTS LOCATION
EA	34	FRONT SIDE OF RIGHT FENDER
EB	34	FRONT SIDE OF LEFT FENDER
ED	34	REAR SIDE OF INTAKE MANIFOLD
IF	36	LEFT KICK PANEL
IJ	36	RIGHT KICK PANEL

: SPLICE POINTS

CODE	SEE PAGE	WIRE HARNESS WITH SPLICE POINTS	CODE	SEE PAGE	WIRE HARNESS WITH SPLICE POINTS
E 2	34	ENGINE ROOM MAIN WIRE	**I23**	38	INSTRUMENT PANEL WIRE
E 7			**I25**	38	ENGINE ROOM MAIN WIRE
E 9			**I26**		
E10			**I32**	38	ENGINE WIRE
E12			**I33**		
E13			**I35**		
E18	34	ENGINE WIRE	**I36**		
E20			**I37**		
I 4	38	COWL WIRE	**B17**	40	FLOOR NO. 3 WIRE
I 7			**B34**	40	FLOOR MAIN WIRE
I14			**B36**	40	FLOOR NO. 3 WIRE
I16	38	INSTRUMENT PANEL WIRE			

A 4 (B) GRAY

A 5 (C) GRAY

A 6 (A) GRAY

A 7, A 8 GRAY

A10 BLACK

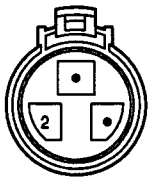

A24 (A)

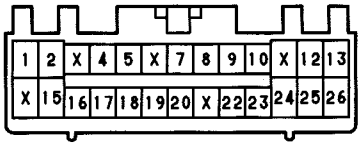

A25 (B)

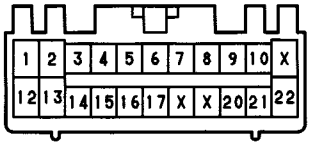

A26 (C)

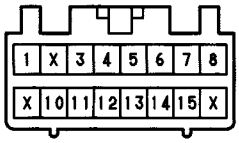

A30, A31 GRAY

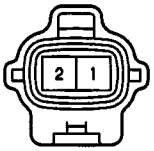

WhereEverybodyKnowsYourName

B 1 GRAY

C 3 BLACK

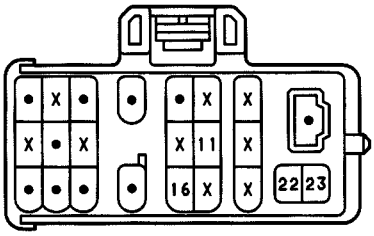

C13 (B)

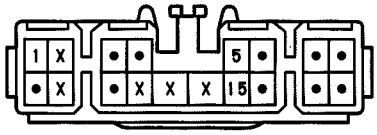

C14 (A)

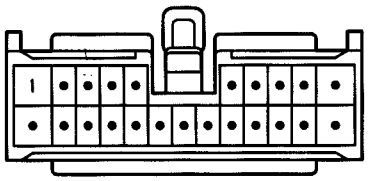

D 1, D 2 BLACK

E 2 DARK GREEN

E 3 DARK GRAY

E 9 (A) DARK GRAY

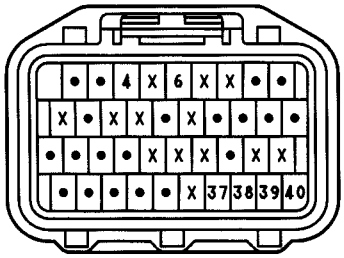

E10 (B) DARK GRAY

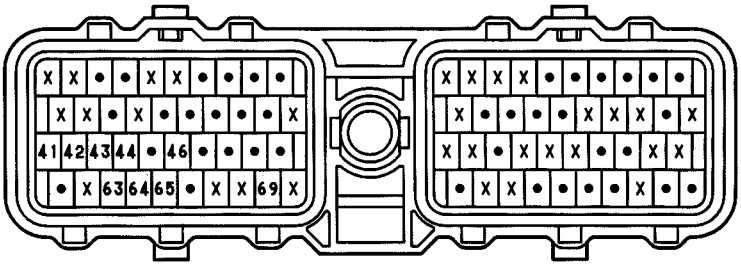

F 9 BLACK

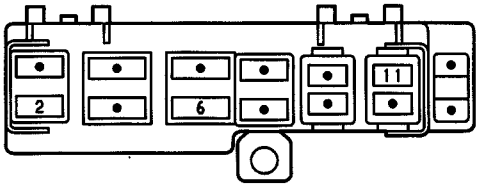

P 3

S 8 GRAY

S 9 BLACK

S12

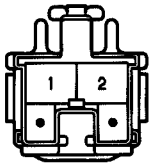

T 2 BLACK

T 3 (A) BLACK

T 4 (B) BLACK

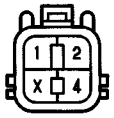

T 5

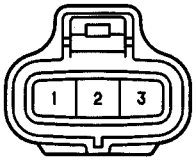

T 6 DARK GRAY

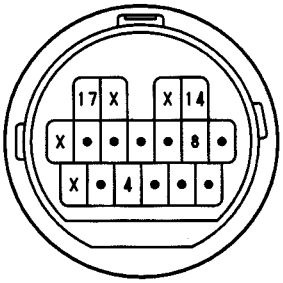

T12

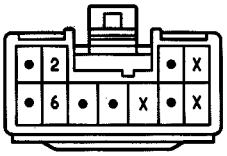

T13 (B) DARK GRAY

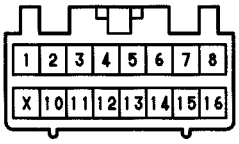

T14 (A) DARK GRAY

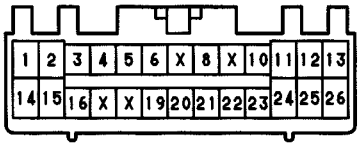

WhereEverybodyKnowsYourName

SYSTEM OUTLINE

1. HEATER BLOWER MOTOR OPERATION

CURRENT IS APPLIED AT ALL TIMES THROUGH **HEATER** FUSE (60A) TO **TERMINAL 5** OF HEATER RELAY. WHEN THE IGNITION SW IS TURNED ON, CURRENT FLOWS THROUGH **HEATER** FUSE (10A) TO **TERMINAL 1** OF HEATER RELAY → **TERMINAL 3** → **TERMINAL HR** OF A/C CONTROL ASSEMBLY. AT THE SAME TIME, CURRENT ALSO FLOWS FROM **HEATER** FUSE (10A) TO **TERMINAL IG+** OF A/C CONTROL ASSEMBLY AND **TERMINAL 2** OF WATER VALVE VSV → **TERMINAL 1** → **TERMINAL WV** OF A/C CONTROL ASSEMBLY.

∗ LOW SPEED OPERATION

WHEN THE BLOWER SW (A/C CONTROL ASSEMBLY) IS PUSHED TO **LOW SPEED** POSITION, THE CURRENT TO **TERMINAL HR** OF A/C CONTROL ASSEMBLY FLOWS TO **TERMINAL E** OF A/C CONTROL ASSEMBLY → **GROUND** AND TURNS THE HEATER RELAY. AS A RESULT, THE CURRENT TO **TERMINAL 5** OF HEATER RELAY FLOWS TO **TERMINAL 4** OF RELAY → **TERMINAL 2** OF BLOWER RESISTOR → **TERMINAL 1** → **GROUND** AND CAUSES THE BLOWER MOTOR TO ROTATE AT LOW SPEED.

∗ MEDIUM (M1, M2, M3) AND HIGH SPEED OPERATION

WHEN THE BLOWER SW (A/C CONTROL ASSEMBLY) IS SELECTED TO **MEDIUM (M1, M2, M3)** OR **HIGH** POSITION, THE CURRENT TO **TERMINAL HR** OF A/C CONTROL ASSEMBLY FLOWS TO **TERMINAL E** → **GROUND** AND TURNS THE HEATER RELAY ON. THEN, THE CURRENT TO **TERMINAL IG+** OF A/C CONTROL ASSEMBLY FLOWS TO **TERMINAL BLR** → **TERMINAL (B)2** OF POWER TRANSISTOR → **TERMINAL (A)1** → **GROUND.** AS A RESULT, THE CURRENT TO **TERMINAL 5** OF HEATER RELAY FLOWS TO **TERMINAL 4** → **TERMINAL 2** OF BLOWER MOTOR → **TERMINAL 1** → **TERMINAL (A)2** OF POWER TRANSISTOR → **TERMINAL (A)1** → **GROUND** AND BLOWER MOTOR IS ROTATED AT SELECTED SPEED BY THE A/C CONTROL ASSEMBLY CONTROLLING THE CURRENT FLOW FROM **TERMINAL (B)2** OF POWER TRANSISTOR TO **TERMINAL (B)1**.

∗ AUTO FUNCTION

WHEN THE AUTO SW IN HEATER CONTROL SW (A/C CONTROL ASSEMBLY) IS SELECTED, THE CURRENT FLOW IS THE SAME AS ABOVE MENTIONS, BUT THE A/C CONTROL ASSEMBLY DECIDES THE APPROPRIATE AIR FLOW VOLUME ACCORDING TO SET TEMPERATURE AND THE INPUT SIGNALS FROM EACH SENSOR. BY CONTROLLING THE CURRENT FLOW FROM **TERMINAL BLR** OF THE A/C CONTROL ASSEMBLY TO **TERMINAL (B)2** OF POWER TRANSISTOR → **TERMINAL (A)1** → **GROUND**, THE A/C CONTROL ASSEMBLY CONTROLS THE BLOWER MOTOR STEPLESSLY.

2. OPERATION OF AIR INLET CONTROL SERVO MOTOR

(SWITCHING FROM FRESH TO RECIRC)

WITH IGNITION SW TURNED ON, THE CURRENT FLOWS FROM **HEATER** FUSE (10A) TO **TERMINAL IG+** OF A/C CONTROL ASSEMBLY → **TERMINAL MREC** → **TERMINAL 6** OF AIR INLET CONTROL SERVO MOTOR → **TERMINAL 2** → **TERMINAL MFRS** OF A/C CONTROL ASSEMBLY → **TERMINAL E** → **GROUND**, THE MOTOR ROTATES AND THE DAMPER MOVES TO THE RECIRC SIDE. WHEN THE DAMPER OPERATES WITH THE A/C SW AT **RECIRC** POSITION, THE **DAMPER** POSITION SIGNAL IS INPUT FROM **TERMINAL 5** OF THE SERVO MOTOR TO **TERMINAL TPI** OF THE ECU (BUILT INTO THE A/C CONTROL ASSEMBLY). AS A RESULT, CURRENT TO THE SERVO MOTOR CIRCUIT IS CUT OFF BY THE ECU, SO THE DAMPER STOPS AT THAT POSITION.

(SWITCHING FROM RECIRC TO FRESH)

WITH IGNITION SW TURNED ON, WHEN THE RECIRC/FRESH SW IS SWITCHED TO THE FRESH SIDE, THE CURRENT FLOWS FROM **TERMINAL IG+** OF A/C CONTROL ASSEMBLY → **TERMINAL MFRS** → **TERMINAL 2** OF AIR INLET CONTROL SERVO MOTOR → **TERMINAL 6** → **TERMINAL MREC** OF A/C CONTROL ASSEMBLY → **TERMINAL E** → **GROUND**, THE MOTOR ROTATES AND THE DAMPER STOPS AT THAT POSITION.

3. OPERATION OF AIR VENT MODE CONTROL SERVO MOTOR

WITH IGNITION SW TURNED ON, THE CURRENT FLOWS FROM **HEATER** FUSE (10A) TO **TERMINAL IG+** OF A/C CONTROL ASSEMBLY.

(SWITCHING FROM DEF TO FACE)

THE CURRENT FLOWS FROM **TERMINAL MFACE** OF A/C CONTROL ASSEMBLY → **TERMINAL 4** OF AIR VENT CONTROL SERVO MOTOR → **TERMINAL 5** → **TERMINAL MDEF** OF A/C CONTROL ASSEMBLY → **TERMINAL E** → **GROUND**. THE MOTOR ROTATES AND THE DAMPER MOVES TO THE FACE SIDE. WHEN THE DAMPER OPERATES WITH THE A/C SW AT **FACE** POSITION, THE **DAMPER** POSITION SIGNAL IS INPUT FROM **TERMINAL 1** OF THE SERVO MOTOR TO THE **TERMINAL TPM** OF THE ECU (BUILT INTO THE A/C CONTROL ASSEMBLY). AS A RESULT, CURRENT TO THE SERVO MOTOR CIRCUIT IS CUT OFF BY THE ECU, SO THE DAMPER STOPS AT THAT POSITION.

(SWITCHING FROM FACE TO DEF)

THE CURRENT FLOWS FROM **TERMINAL DEF** OF A/C CONTROL ASSEMBLY → **TERMINAL 5** OF AIR VENT CONTROL SERVO MOTOR → **TERMINAL 4** → **TERMINAL MFACE** OF A/C CONTROL ASSEMBLY → **TERMINAL E** → **GROUND**, THE MOTOR ROTATES AND THE DAMPER STOPS AT THAT POSITION.

WhereEverybodyKnowsYourName

4. OPERATION OF AIR MIX CONTROL SERVO MOTOR

WHEN THE TEMPERATURE SW IS TURNED TO THE “COOL” SIDE, THE CURRENT FLOWS FROM **TERMINAL MC** OF A/C CONTROL ASSEMBLY → **TERMINAL 4** OF AIR MIX CONTROL SERVO MOTOR → MOTOR → **TERMINAL 5** → **TERMINAL MH** OF A/C CONTROL ASSEMBLY → **GROUND** AND THE MOTOR ROTATES. THE DAMPER OPENING ANGLE AT THIS TIME IS INPUT FROM **TERMINAL 1** OF SERVO MOTOR TO **TERMINAL TP** OF A/C CONTROL ASSEMBLY, THIS IS USED TO DETERMINE THE **DAMPER STOP** POSITION AND MAINTAIN THE SET TEMPERATURE.

WHEN THE TEMPERATURE CONTROL SW IS TURNED TO THE “HOT” SIDE, THE CURRENT FLOWS FROM SERVO MOTOR → **TERMINAL MH** OF A/C CONTROL ASSEMBLY → **TERMINAL 5** OF AIR MIX CONTROL SERVO MOTOR → MOTOR → **TERMINAL 1** → **TERMINAL MC** OF A/C CONTROL ASSEMBLY, ROTATING THE MOTOR IN REVERSE AND SWITCHING THE DAMPER FROM “COOL” TO “HOT” SIDE.

5. AIR CONDITIONER OPERATION

THE A/C CONTROL ASSEMBLY RECEIVES VARIOUS SIGNALS, I.E., THE ENGINE RPM FROM THE IGNITER, OUTLET TEMPERATURE SIGNAL FROM THE A/C THERMISTOR, COOLANT TEMPERATURE FROM THE WATER TEMP. SENSOR AND THE LOCK SIGNAL FROM THE A/C COMPRESSOR, ETC.

WHEN THE ENGINE IS STARTED AND THE A/C SW (A/C CONTROL ASSEMBLY) IS ON, A SIGNAL IS INPUT TO THE ECU. (BUILT IN THE A/C CONTROL ASSEMBLY).

AS A RESULT, THE GROUND CIRCUIT IN A/C CONTROL ASSEMBLY IS CLOSED AND CURRENT FLOWS FROM **HEATER** FUSE (10A) TO **TERMINAL 2** OF MAGNETIC CLUTCH RELAY → **TERMINAL 3** → **TERMINAL ACMG** OF ENGINE AND ECT ECU → **TERMINAL E** OF A/C CONTROL ASSEMBLY → **GROUND**, TURNING THE MAGNETIC CLUTCH RELAY ON, SO THAT THE MAGNETIC CLUTCH IS ON AND THE A/C COMPRESSOR OPERATES.

AT THE SAME TIME, THE ENGINE AND ECT ECU DETECTS THE MAGNETIC CLUTCH IS ON AND THE A/C COMPRESSOR OPERATES.

OPEN DIRECTION TO AVOID LOWERING THE ENGINE RPM DURING A/C OPERATING.

WHEN ANY OF THE FOLLOWING SIGNALS ARE INPUT TO THE A/C CONTROL ASSEMBLY, THE CONTROL ASSEMBLY OPERATES TO TURN OFF THE AIR CONDITIONING.

* ENGINE HIGH TEMP. SIGNAL IS HIGH.
* COOLANT HIGH TEMP. SIGNAL IS HIGH.
* A SIGNAL THAT THE TEMPERATURE AT THE AIR OUTLET IS LOW.
* A SIGNAL THAT THERE IS A LARGE DIFFERENCE BETWEEN ENGINE RPM AND COMPRESSOR RPM.
* A SIGNAL THAT THE REFRIGERANT PRESSURE IS ABNORMALLY HIGH OR LOW.

WhereEverybodyKnowsYourName

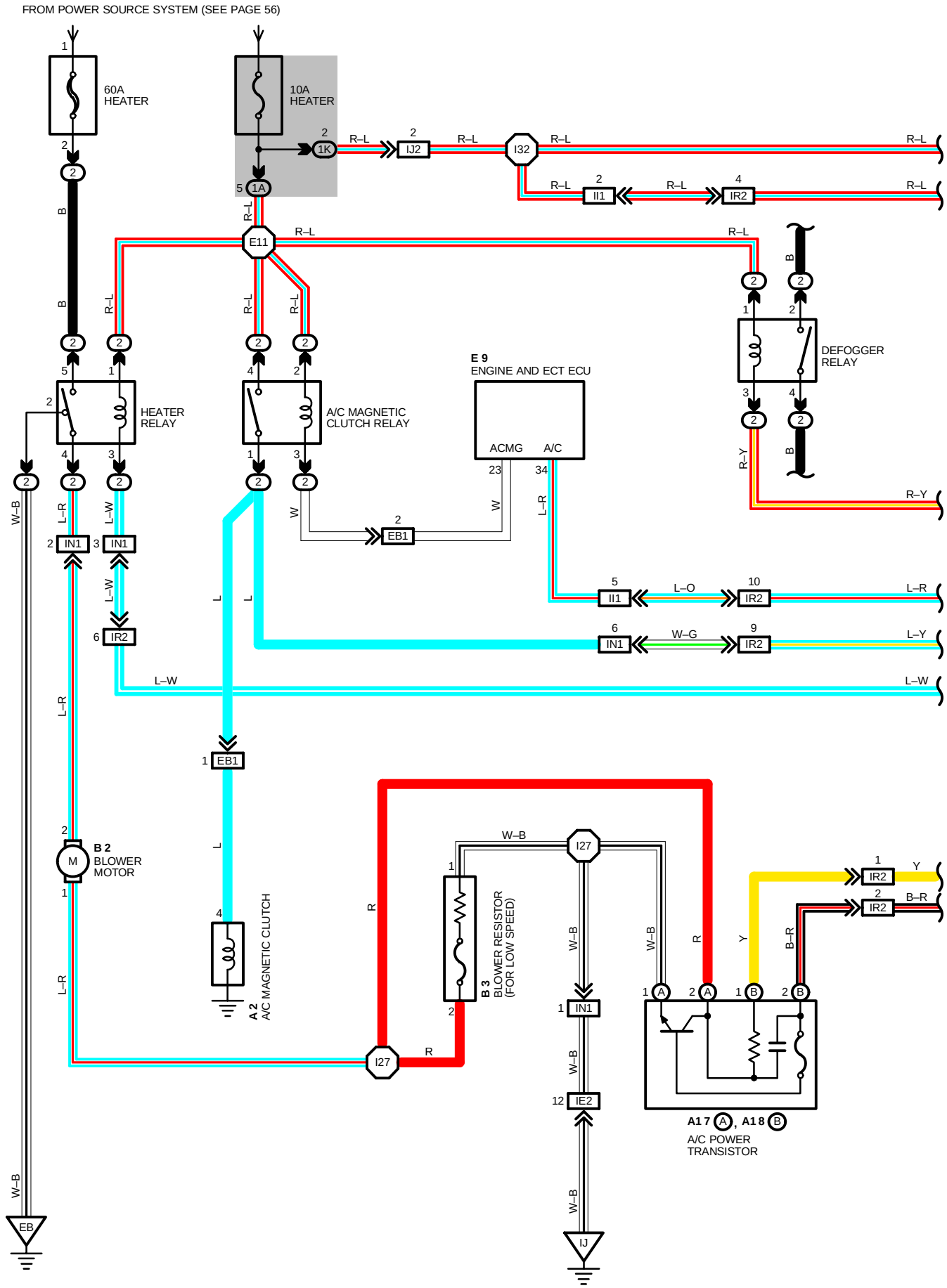

WhereEverybodyKnowsYourName

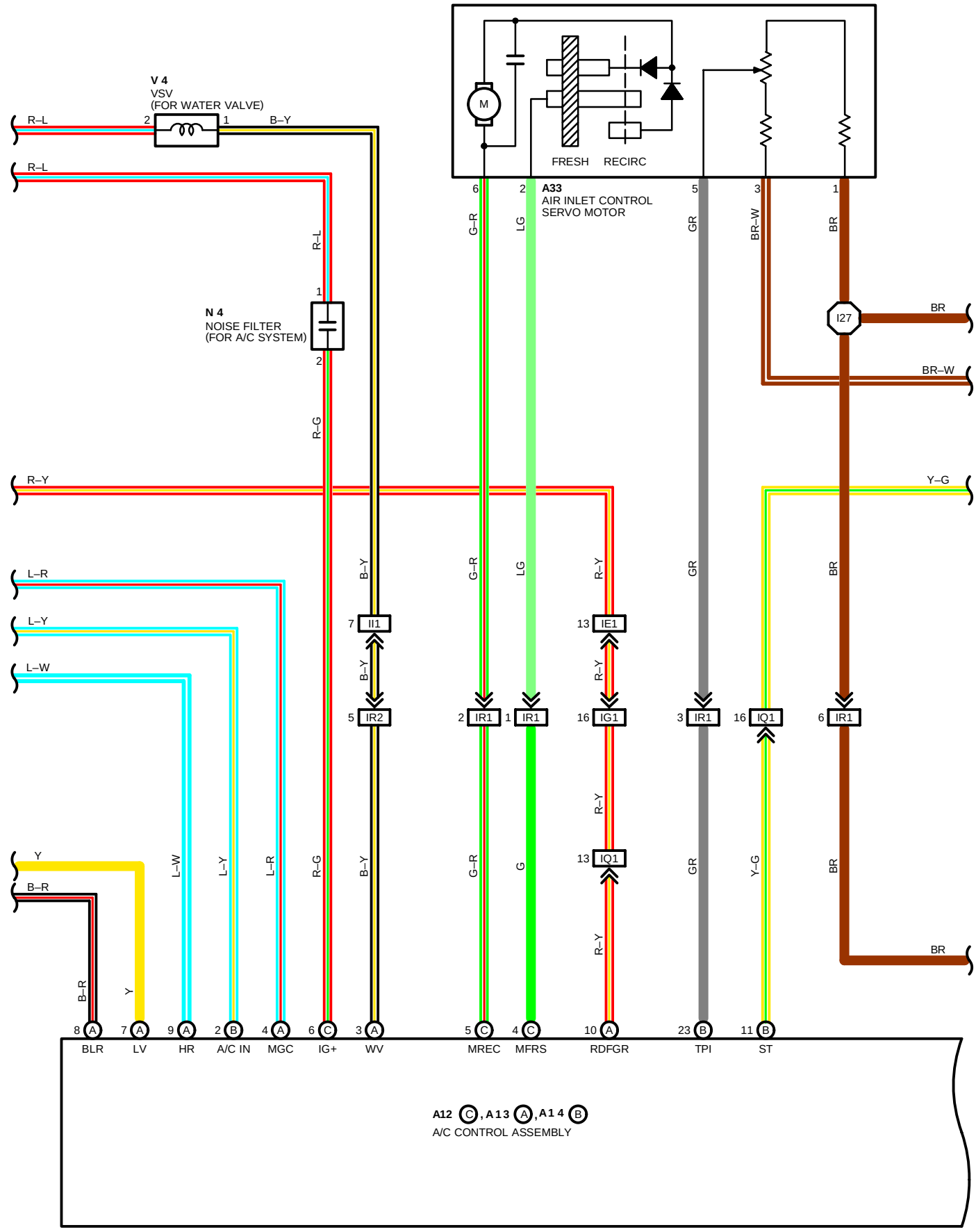

WhereEverybodyKnowsYourName

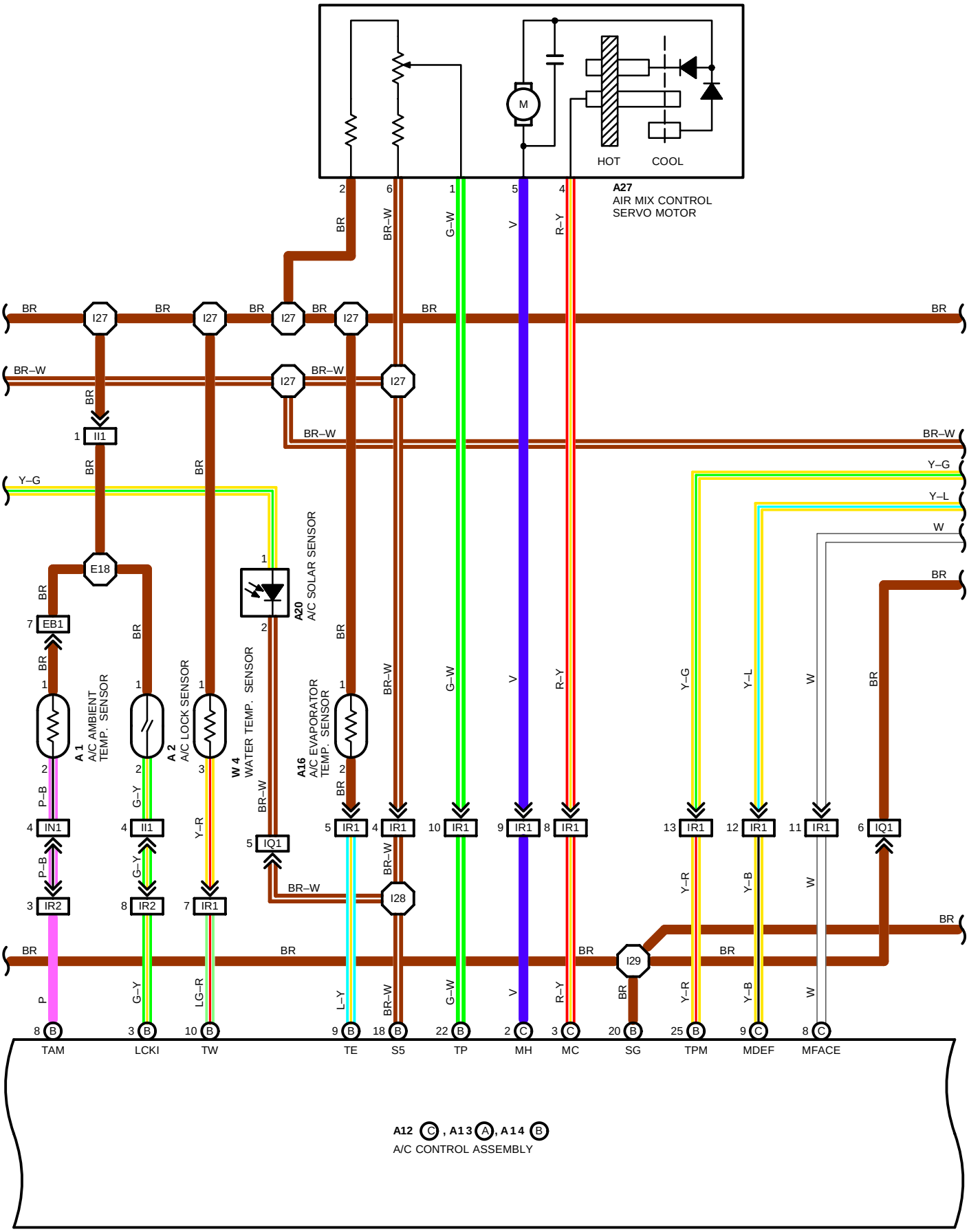

WhereEverybodyKnowsYourName

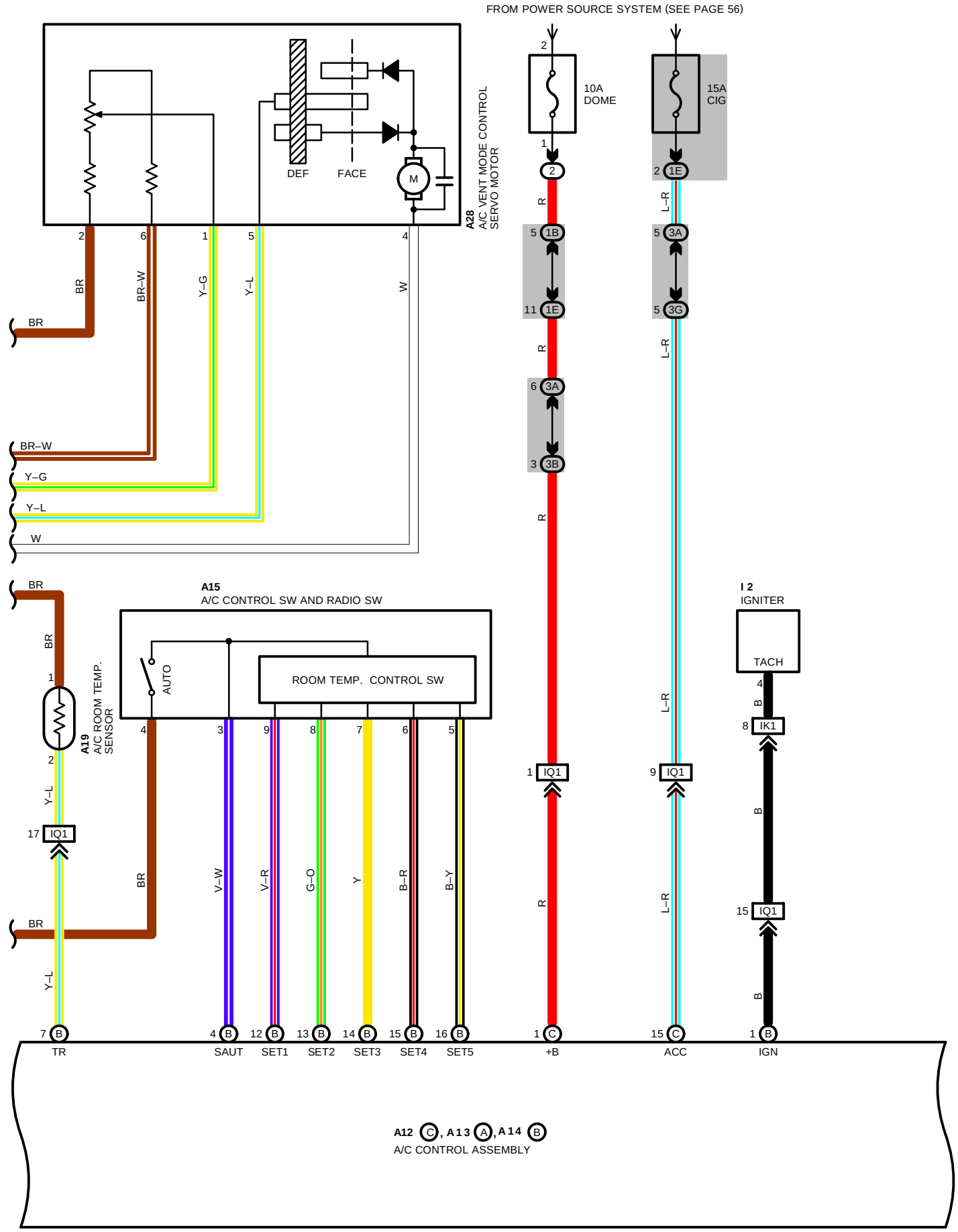

WhereEverybodyKnowsYourName

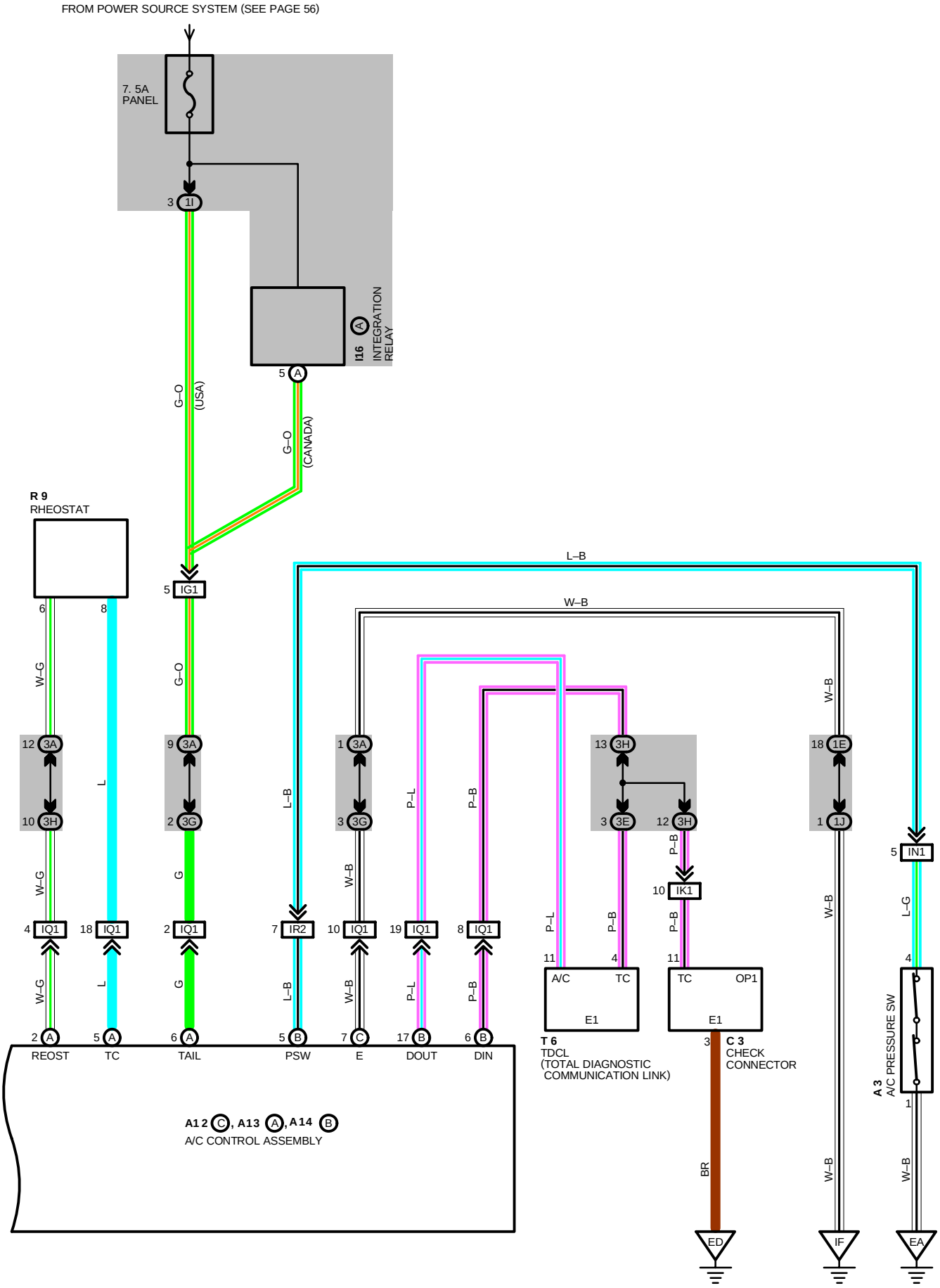

WhereEverybodyKnowsYourName

SERVICE HINTS

A 2 A/C MAGNETIC CLUTCH
4–GROUND : APPROX. **3.7**?

A 3 A/C PRESSURE SW
4–1 : OPEN ABOVE APPROX. **15.5**KG/CM^2 (**30** PSI, **206** KPA) OR **27** KG/CM^2 (**384** PSI, **2648** KPA)

A17, A18 POWER TRANSISTOR
(B)1– **(A)**2 : APPROX. **2.0–2.4**K?

A12, A13, A14 A/C CONTROL ASSEMBLY
+B – GROUND: ALWAYS APPROX. **10–14** VOLTS
IG + – GROUND: APPROX. **10–14** VOLTS WITH IGNITION SW AT **ON** POSITION
HR – GROUND: APPROX. **10–14** VOLTS WITH IGNITION SW AT **ON** POSITION AND DO NOT TURN THE BLOWER MOTOR
BELOW **1** VOLTS WITH IGNITION SW AT **ON** POSITION AND TURN THE BLOWER MOTOR
LP – GROUND: NO CONTINUITY WITH PRESSURE LESS THAN **2.1** KG/CM^2 (**30** PSI, **206** KPA) OR ABOVE **27** KG/CM^2 (**384** PSI, **2648** KPA)
ACC – GROUND: APPROX. **10–14** VOLTS WITH IGNITION SW AT **ACC** OR **ON** POSITION
WV – GROUND: **10–14** VOLTS AT START THE ENGINE AND MAX. COLD POSITION OF A/C TEMP. CONTROL SW
BELOW **1** VOLTS AT START THE ENGINE AND MAX. WARM POSITION OF A/C TEMP. CONTROL SW
MGC – GROUND: BELOW **1** VOLTS AT START THE ENGINE, PUSH THE A/C AUTO SW AND A/C SW **ON** POSITION
10–14 VOLTS AT START THE ENGINE, PUSH THE A/C AUTO SW AND A/C SW **OFF** POSITION
BLR – GROUND: BELOW **1.5** VOLTS WITH THE IGNITION SW ON AND TURN THE BLOWER MOTOR
S5 – GROUND: **4–6** VOLTS WITH THE IGNITION SW ON
SG – GROUND: ALWAYS CONTINUITY
MH – MC : **13–19** VOLTS WITH IGNITION SW OFF
MFRS – GROUND: APPROX. **12** VOLTS WITH FRESH SW ON
MREC – GROUND: APPROX. **12** VOLTS WITH RECIRC SW ON
MFACE – GROUND: APPROX. **12** VOLTS WITH FACE SW ON
MDEF – GROUND: APPROX. **12** VOLTS WITH DEF SW ON
E – GROUND: ALWAYS CONTINUITY

B 3 BLOWER RESISTOR (FOR LOW SPEED)
1–2 : APPROX. **2.6–3.0**?

: PARTS LOCATION

CODE		SEE PAGE	CODE		SEE PAGE	CODE		SEE PAGE
A 1		26	**A18**	B	28	**E 9**	A	28
A 2		26	**A19**		28	**I 2**		27
A 3		26	**A20**		28	**I16**		29
A12	C	28	**A27**		28	**N 4**		29
A13	A	28	**A28**		28	**R 9**		29
A14	B	28	**A33**		28	**T 6**		29
A15		28	**B 2**		28	**V 4**		27
A16		28	**B 3**		28	**W 4**		29
A17	A	28	**C 3**		26			

: RELAY BLOCKS

CODE	SEE PAGE	RELAY BLOCKS (RELAY BLOCK LOCATION)
2	19	ENGINE COMPARTMENT LEFT

: JUNCTION BLOCK AND WIRE HARNESS CONNECTOR

CODE	SEE PAGE	JUNCTION BLOCK AND WIRE HARNESS (CONNECTOR LOCATION)
1A	20	ENGINE ROOM MAIN WIRE
1B		
1E	20	INSTRUMENT PANEL WIRE
1I	20	COWL WIRE
1J		
1K		
3A	23	INSTRUMENT PANEL WIRE
3B		
3E		
3G		
3H		

WhereEverybodyKnowsYourName

: CONNECTOR JOINING WIRE HARNESS AND WIRE HARNESS

CODE	SEE PAGE	JOINING WIRE HARNESS AND WIRE HARNESS (CONNECTOR LOCATION)
EB1	34	ENGINE WIRE AND ENGINE ROOM MAIN WIRE (FRONT SIDE OF R/B NO. 2)
IE1	36	ENGINE ROOM MAIN WIRE AND COWL WIRE (R/B NO. 4)
IE2	36	ENGINE ROOM MAIN WIRE AND COWL WIRE (BEHIND GLOVE BOX)
IG1	36	INSTRUMENT PANEL WIRE AND COWL WIRE (R/B NO. 5)
II1	36	ENGINE WIRE AND A/C WIRE (BEHIND GLOVE BOX)
IJ2	36	ENGINE WIRE AND COWL WIRE (RIGHT KICK PANEL)
IK1	36	ENGINE WIRE AND INSTRUMENT PANEL WIRE (RIGHT KICK PANEL)
IN1	38	ENGINE ROOM MAIN WIRE AND A/C WIRE (BEHIND GLOVE BOX)
IQ1	38	INSTRUMENT PANEL WIRE AND CONSOLE BOX WIRE (UNDER THE INSTRUMENT PANEL CENTER)
IR1	38	CONSOLE BOX WIRE AND A/C SUB WIRE (BEHIND GLOVE BOX)
IR2		

: GROUND POINTS

CODE	SEE PAGE	GROUND POINTS LOCATION
EA	34	FRONT SIDE OF RIGHT FENDER
EB	34	FRONT SIDE OF LEFT FENDER
ED	34	REAR SIDE OF INTAKE MANIFOLD
IF	36	LEFT KICK PANEL
IJ	36	RIGHT KICK PANEL

: SPLICE POINTS

CODE	SEE PAGE	WIRE HARNESS WITH SPLICE POINTS	CODE	SEE PAGE	WIRE HARNESS WITH SPLICE POINTS
E11	34	ENGINE ROOM MAIN WIRE	**I28**	38	CONSOLE BOX WIRE
E18	34	ENGINE WIRE	**I29**		
I27	38	A/C WIRE	**I32**	38	ENGINE WIRE

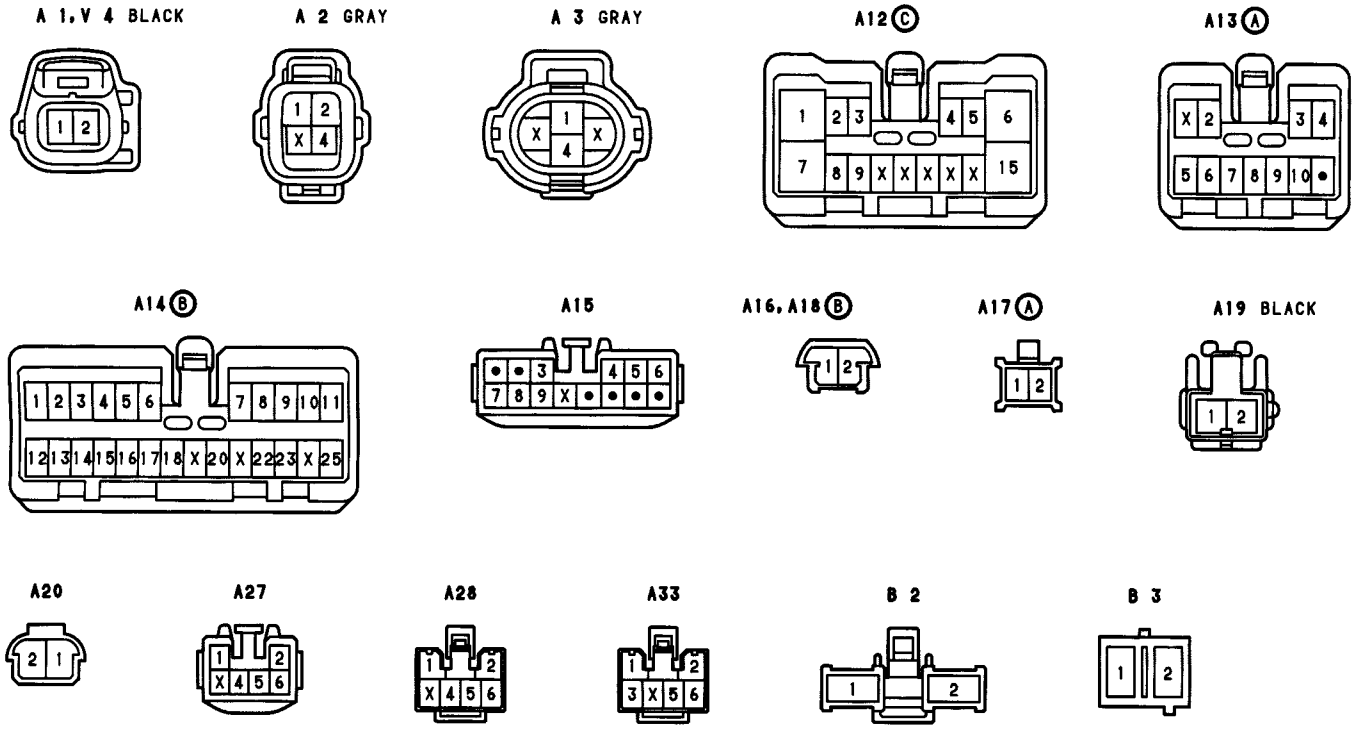

WhereEverybodyKnowsYourName

C 3 BLACK

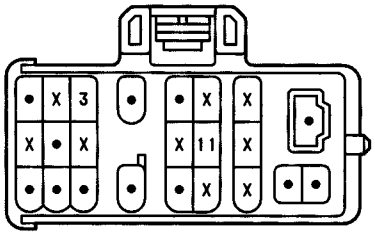

E 9 DARK GRAY

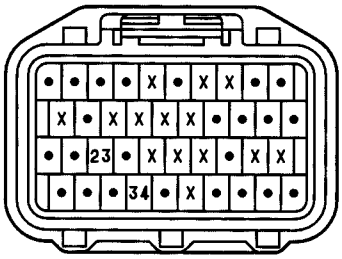

I 2 BLACK

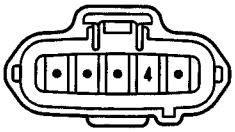

I16 (A)

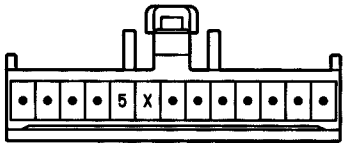

N 4

R 9

T 6 DARK GRAY

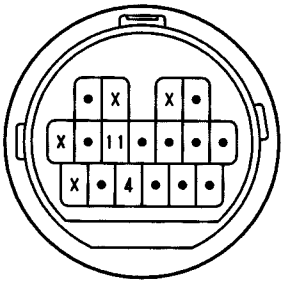

W 4

WhereEverybodyKnowsYourName

AUTO ANTENNA

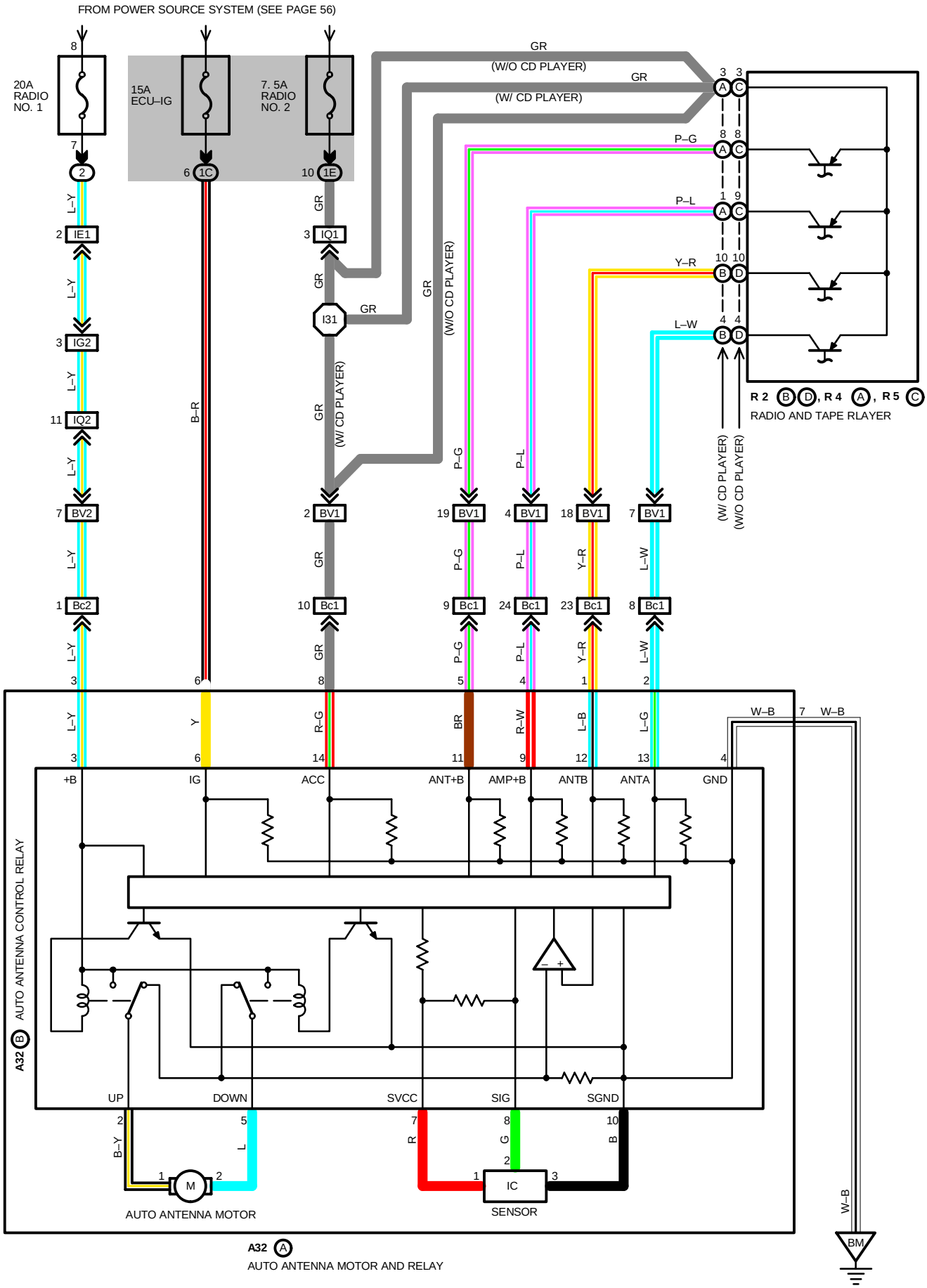

WhereEverybodyKnowsYourName

SERVICE HINTS

A32 AUTO ANTENNA MOTOR AND RELAY
3–GROUND : ALWAYS APPROX. **12** VOLTS
6–GROUND : APPROX. **12** VOLTS WITH IGNITION SW AT **ON** POSITION
8–GROUND : APPROX. **12** VOLTS WITH IGNITION SW AT **ACC** OR **ON** POSITION
7–GROUND : ALWAYS CONTINUITY

R 4(A), R 5(C) RADIO AND PLAYER
(A)3, **(C)**3–GROUND : APPROX. **12** VOLTS WITH IGNITION SW AT **ACC** OR **ON** POSITION

: PARTS LOCATION

CODE		SEE PAGE	CODE		SEE PAGE	CODE		SEE PAGE
A32	A	30	**R 2**	A	29 (W/ CD PLAYER)	**R 4**	B	29 (W/ CD PLAYER)
	B	30		D	29 (W/O CD PLAYER)	**R 5**	C	29 (W/O CD PLAYER)

: RELAY BLOCKS

CODE	SEE PAGE	RELAY BLOCKS (RELAY BLOCK LOCATION)
2	19	ENGINE COMPARTMENT LEFT

: JUNCTION BLOCK AND WIRE HARNESS CONNECTOR

CODE	SEE PAGE	JUNCTION BLOCK AND WIRE HARNESS (CONNECTOR LOCATION)
1C	20	FLOOR WIRE
1E	20	INSTRUMENT PANEL WIRE

: CONNECTOR JOINING WIRE HARNESS AND WIRE HARNESS

CODE	SEE PAGE	JOINING WIRE HARNESS AND WIRE HARNESS (CONNECTOR LOCATION)
IE1	36	ENGINE ROOM MAIN WIRE AND COWL WIRE (R/B NO. 4)
IG2	36	INSTRUMENT PANEL WIRE AND COWL WIRE (R/B NO. 5)
IQ1	38	INSTRUMENT PANEL WIRE AND CONSOLE BOX WIRE (UNDER THE INSTRUMENT PANEL CENTER)
IQ2		
BV1	40	FLOOR NO. 3 WIRE AND CONSOLE BOX WIRE (UNDER THE INSTRUMENT PANEL CENTER)
BV2		
Bc1	40	FLOOR NO. 3 WIRE AND FLOOR WIRE (UNDER THE LEFT SIDE OF REAR SEAT CUSHION)
Bc2		

: GROUND POINTS

CODE	SEE PAGE	GROUND POINTS LOCATION
BM	40	BACK PANEL CENTER

: SPLICE POINTS

CODE	SEE PAGE	WIRE HARNESS WITH SPLICE POINTS	CODE	SEE PAGE	WIRE HARNESS WITH SPLICE POINTS
I31	38	CONSOLE BOX WIRE			

A32 (A)

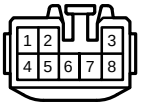

A32 (B)

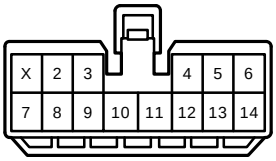

R 2 (D)

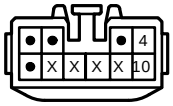

R 2 (B)

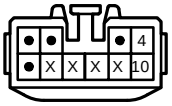

R 4 (A)

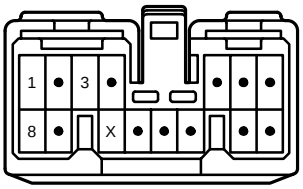

R 5 (C)

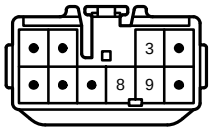

WhereEverybodyKnowsYourName

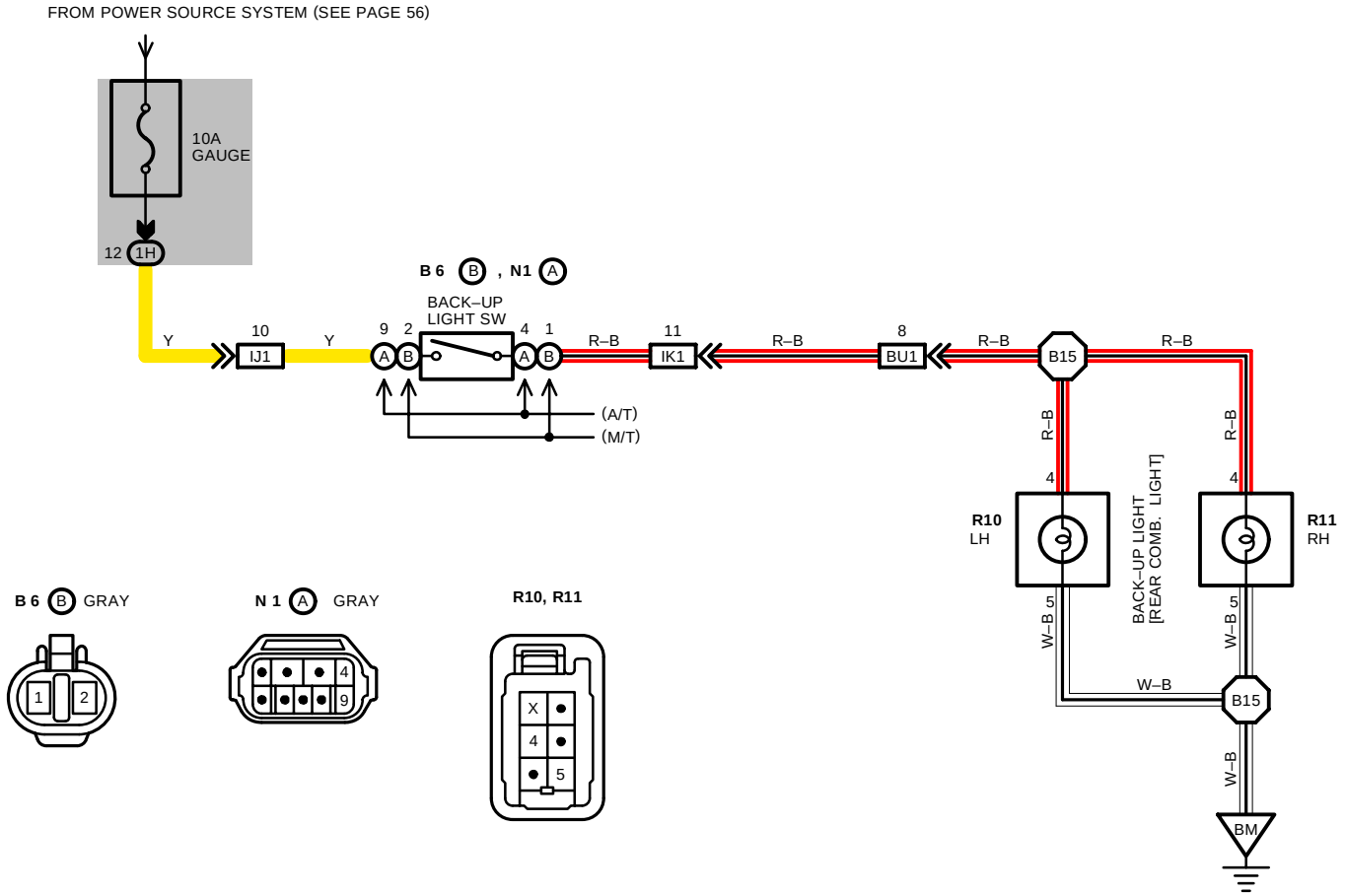

SERVICE HINTS

N 1 BACK–UP LIGHT SW
4–9 : CLOSED WITH SHIFT LEVER IN **R** POSITION

: PARTS LOCATION

CODE		SEE PAGE	CODE	SEE PAGE	CODE	SEE PAGE
B 6	B	26	**R10**	31		
N 1	A	27	**R11**	31		

: JUNCTION BLOCK AND WIRE HARNESS CONNECTOR

CODE	SEE PAGE	JUNCTION BLOCK AND WIRE HARNESS (CONNECTOR LOCATION)
1H	20	COWL WIRE

: CONNECTOR JOINING WIRE HARNESS AND WIRE HARNESS

CODE	SEE PAGE	JOINING WIRE HARNESS AND WIRE HARNESS (CONNECTOR LOCATION)
IJ1	36	ENGINE WIRE AND COWL WIRE (RIGHT KICK PANEL)
IK1	36	ENGINE WIRE AND INSTRUMENT PANEL WIRE (RIGHT KICK PANEL)
BU1	40	FLOOR WIRE AND INSTRUMENT PANEL WIRE (LEFT KICK PANEL)

: GROUND POINTS

CODE	SEE PAGE	GROUND POINTS LOCATION
BM	40	BACK PANEL CENTER

: SPLICE POINTS

CODE	SEE PAGE	WIRE HARNESS WITH SPLICE POINTS	CODE	SEE PAGE	WIRE HARNESS WITH SPLICE POINTS
B15	40	FLOOR MAIN WIRE			

WhereEverybodyKnowsYourName

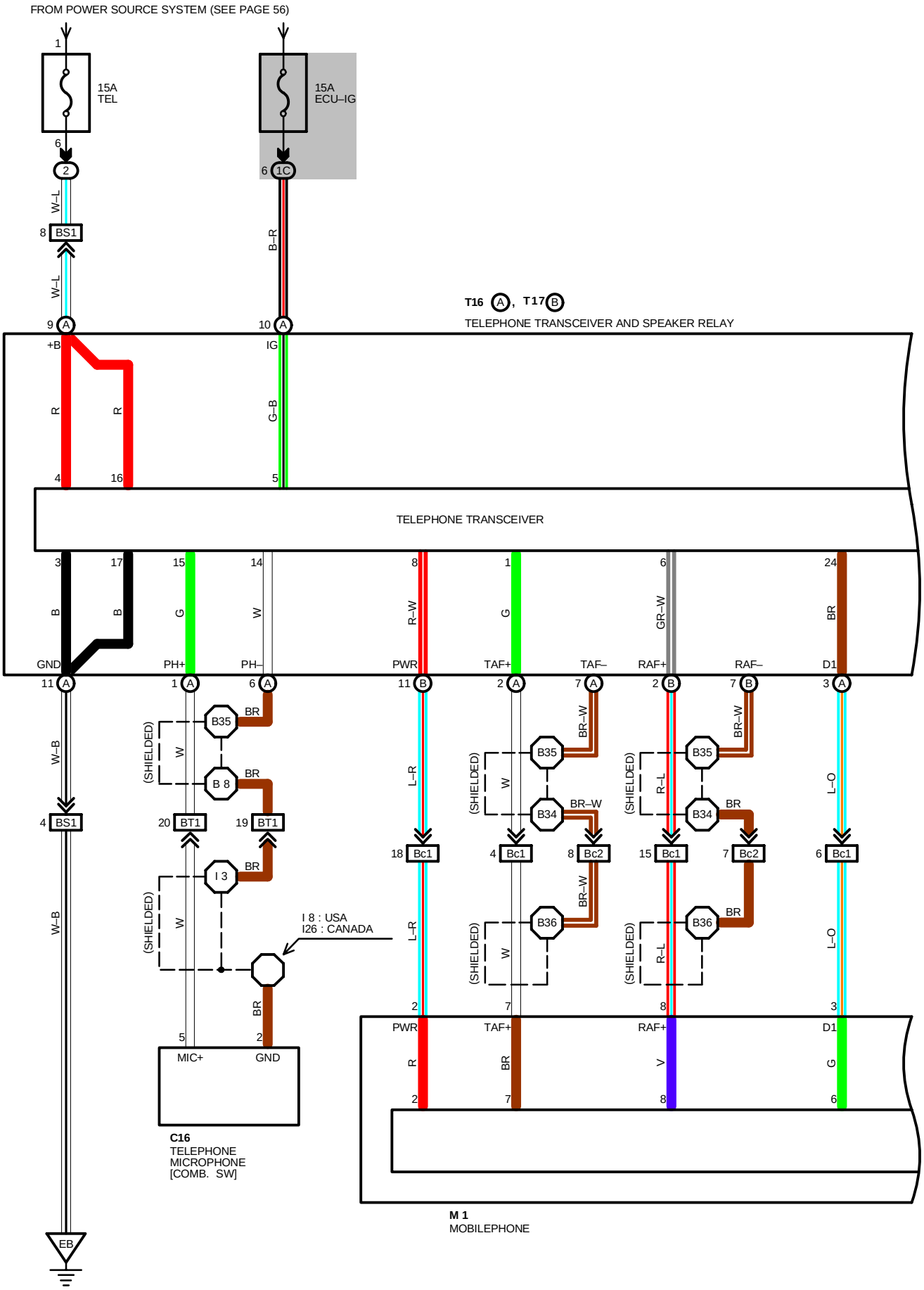

WhereEverybodyKnowsYourName

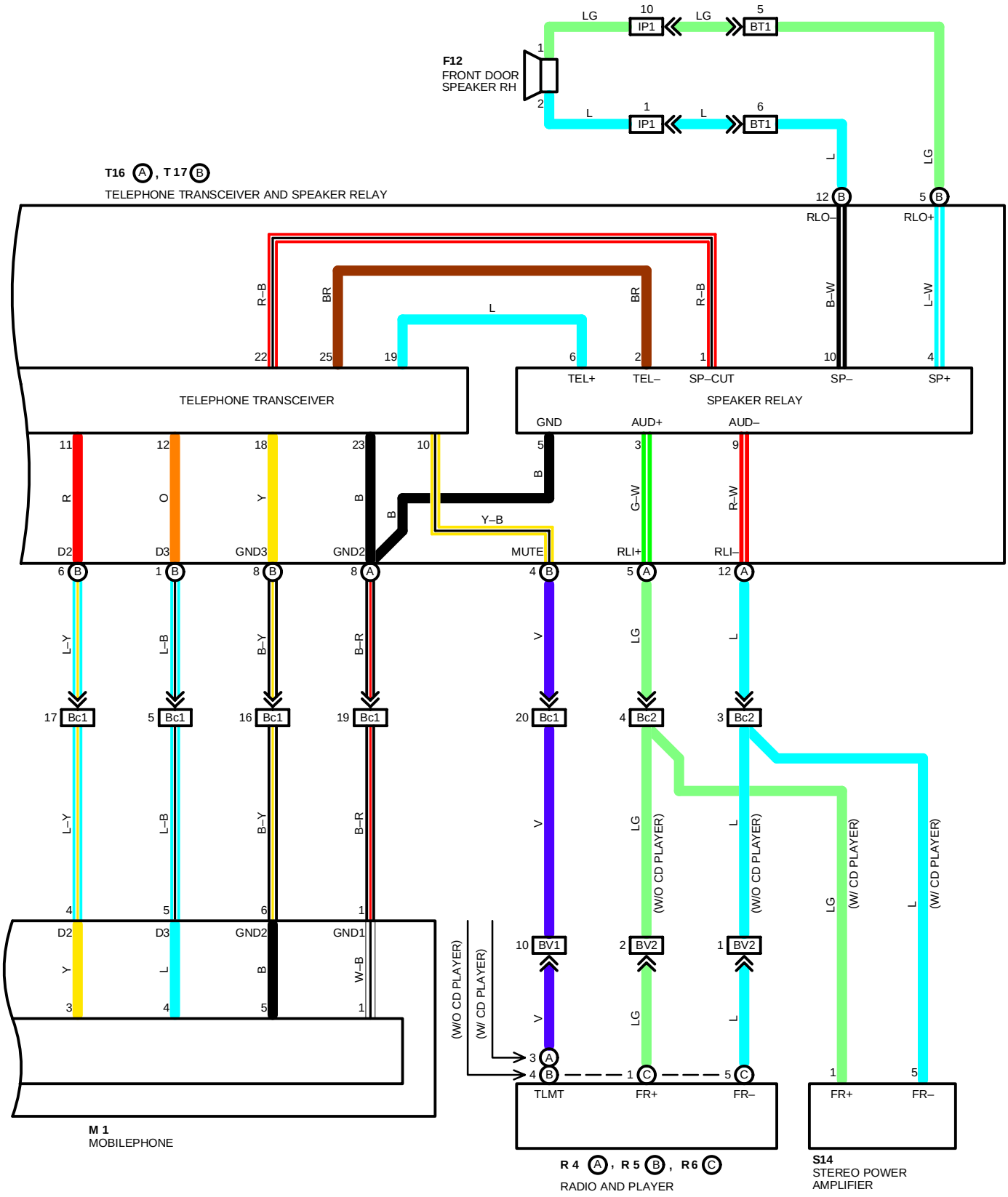

WhereEverybodyKnowsYourName

CELLULAR MOBILE TELEPHONE

SERVICE HINTS

T16 (A) TELEPHONE TRANSCEIVER AND SPEAKER RELAY

(A) 9–GROUND : ALWAYS APPROX. **12** VOLTS
(A) 10–GROUND : APPROX. **12** VOLTS WITH IGNITION SW AT **ACC** OR **ON** POSITION
(A) 11–GROUND : ALWAYS CONTINUITY

: PARTS LOCATION

CODE	SEE PAGE	CODE		SEE PAGE	CODE		SEE PAGE
C16	28	**R 4**	A	29 (W/ CD PLAYER)	**S14**		31
F12	30	**R 5**	B	29 (W/O CD PLAYER)	**T16**	A	31
M 1	31	**R 6**	C	29 (W/O CD PLAYER)	**T17**	B	31

: RELAY BLOCKS

CODE	SEE PAGE	RELAY BLOCKS (RELAY BLOCK LOCATION)
2	19	ENGINE COMPARTMENT LEFT

: JUNCTION BLOCK AND WIRE HARNESS CONNECTOR

CODE	SEE PAGE	JUNCTION BLOCK AND WIRE HARNESS (CONNECTOR LOCATION)
1C	20	FLOOR WIRE

: CONNECTOR JOINING WIRE HARNESS AND WIRE HARNESS

CODE	SEE PAGE	JOINING WIRE HARNESS AND WIRE HARNESS (CONNECTOR LOCATION)
IP1	38	FRONT DOOR RH WIRE AND COWL WIRE (RIGHT KICK PANEL)
BS1	40	ENGINE ROOM MAIN WIRE AND FLOOR WIRE (LEFT KICK PANEL)
BT1	40	FLOOR WIRE AND COWL WIRE (LEFT KICK PANEL)
BV1	40	FLOOR NO. 3 WIRE AND CONSOLE BOX WIRE (UNDER THE INSTRUMENT PANEL CENTER)
BV2		
Bc1	40	FLOOR NO. 3 WIRE AND COWL WIRE (UNDER THE LEFT SIDE OF REAR SEAT CUSHION
Bc2		

: GROUND POINTS

CODE	SEE PAGE	GROUND POINTS LOCATION
EB	34	FRONT SIDE OF LEFT FENDER

: SPLICE POINTS

CODE	SEE PAGE	WIRE HARNESS WITH SPLICE POINTS	CODE	SEE PAGE	WIRE HARNESS WITH SPLICE POINTS
I 3	38	COWL WIRE	**B34**	40	FLOOR MAIN WIRE
I 8			**B35**		
I 26	38	ENGINE ROOM MAIN WIRE	**B36**	40	FLOOR NO. 3 WIRE
B 8	40	FLOOR MAIN WIRE			

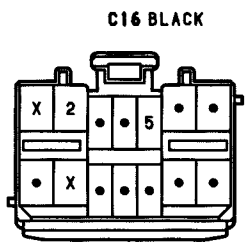

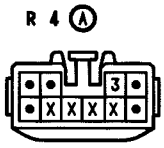

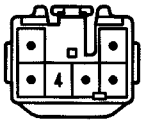

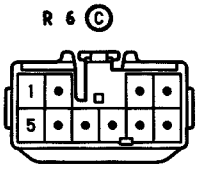

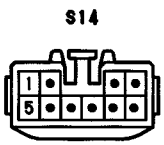

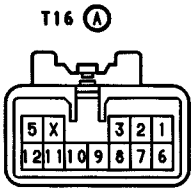

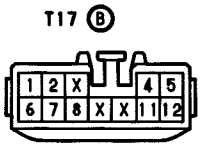

WhereEverybodyKnowsYourName

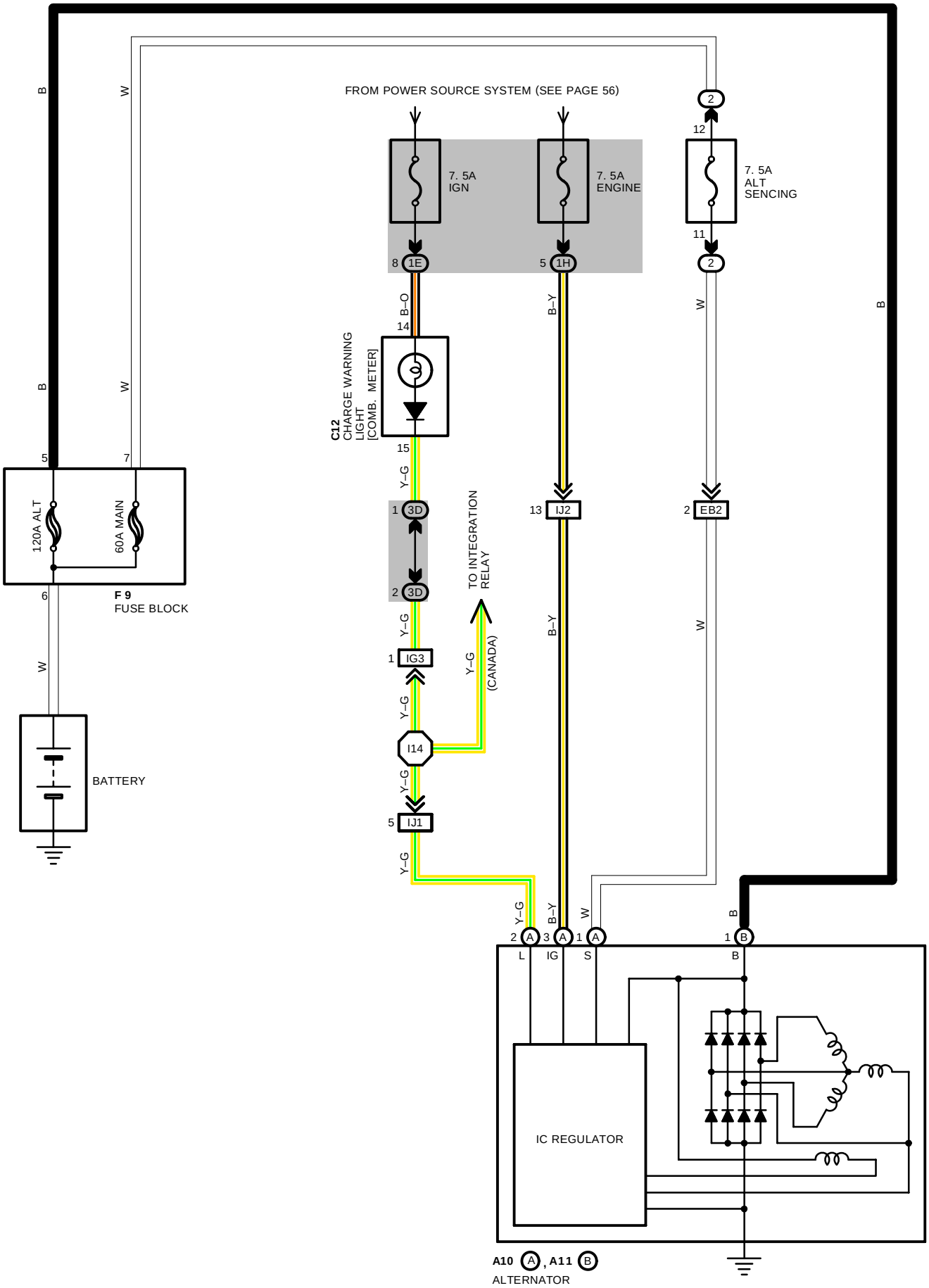

WhereEverybodyKnowsYourName

SERVICE HINTS

A10(A) ALTERNATOR

(A) 1–GROUND : **13.9–15.1** VOLTS WITH ENGINE RUNNING AT **2000** RPM AND **25**˚C (**77**˚F)
13.5–14.3 VOLTS WITH ENGINE RUNNING AT **5000** RPM AND **115**˚C (**239**˚F)

(A) 2–GROUND : **0–4** VOLTS WITH IGNITION SW AT **ON** POSITION AND ENGINE NOT RUNNING

: PARTS LOCATION

CODE		SEE PAGE	CODE	SEE PAGE	CODE	SEE PAGE
A10	**A**	26	**C12**	28		
A11	**B**	26	**F 9**	26		

: RELAY BLOCKS

CODE	SEE PAGE	RELAY BLOCKS (RELAY BLOCK LOCATION)
2	19	ENGINE COMPARTMENT LEFT

: JUNCTION BLOCK AND WIRE HARNESS CONNECTOR

CODE	SEE PAGE	JUNCTION BLOCK AND WIRE HARNESS (CONNECTOR LOCATION)
1E	20	INSTRUMENT PANEL WIRE
1H	20	COWL WIRE
3D	22	INSTRUMENT PANEL WIRE

: CONNECTOR JOINING WIRE HARNESS AND WIRE HARNESS

CODE	SEE PAGE	JOINING WIRE HARNESS AND WIRE HARNESS (CONNECTOR LOCATION)
EB2	34	ENGINE WIRE AND ENGINE ROOM MAIN WIRE (FRONT SIDE OF R/B NO.2)
IG3	38	INSTRUMENT PANEL WIRE AND COWL WIRE (RIGHT KICK PANEL)
IJ1	36	ENGINE WIRE AND COWL WIRE (RIGHT KICK PANEL)
IJ2		

: SPLICE POINTS

CODE	SEE PAGE	WIRE HARNESS WITH SPLICE POINTS	CODE	SEE PAGE	WIRE HARNESS WITH SPLICE POINTS
I14	38	COWL WIRE			

A10 (A) BLACK

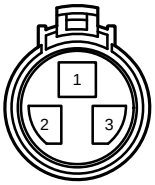

A11 (B)

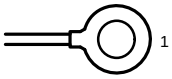

C12

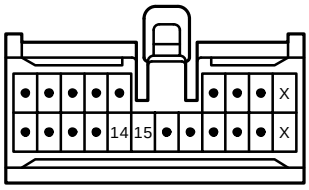

F 9 BLACK

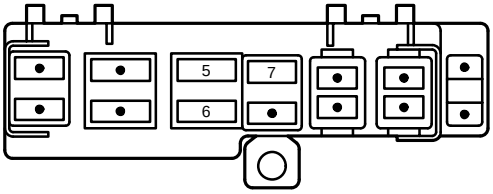

WhereEverybodyKnowsYourName

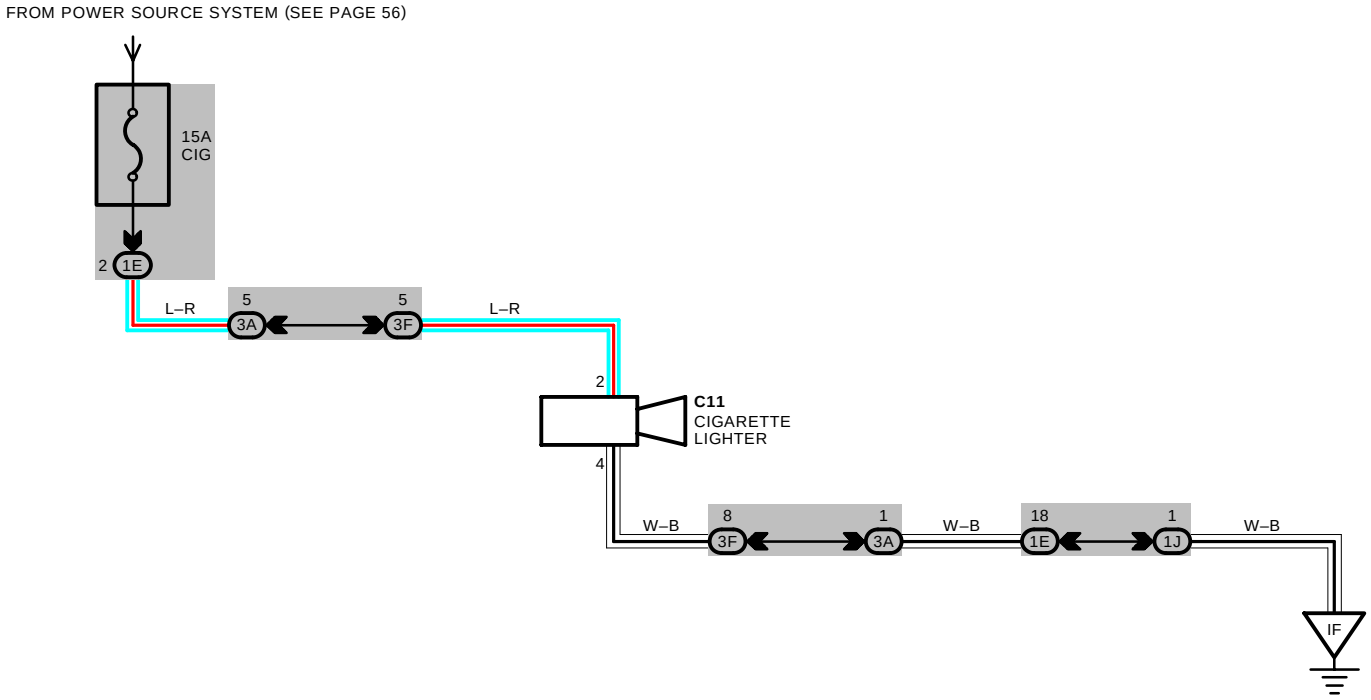

SERVICE HINTS

C11 CIGARETTE LIGHTER

2–GROUND : APPROX. **12** VOLTS WITH IGNITION SW AT **ACC** OR **ON** POSITION

4–GROUND : ALWAYS CONTINUITY

○ : PARTS LOCATION

CODE	SEE PAGE	CODE	SEE PAGE	CODE	SEE PAGE
C11	28				

⬭ : JUNCTION BLOCK AND WIRE HARNESS CONNECTOR

CODE	SEE PAGE	JUNCTION BLOCK AND WIRE HARNESS (CONNECTOR LOCATION)
1E	20	INSTRUMENT PANEL WIRE
1J	20	COWL WIRE
3A	23	INSTRUMENT PANEL WIRE
3F		

▽ : GROUND POINTS

CODE	SEE PAGE	GROUND POINTS LOCATION
IF	36	LEFT KICK PANEL

C11 BLUE

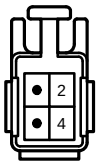

WhereEverybodyKnowsYourName

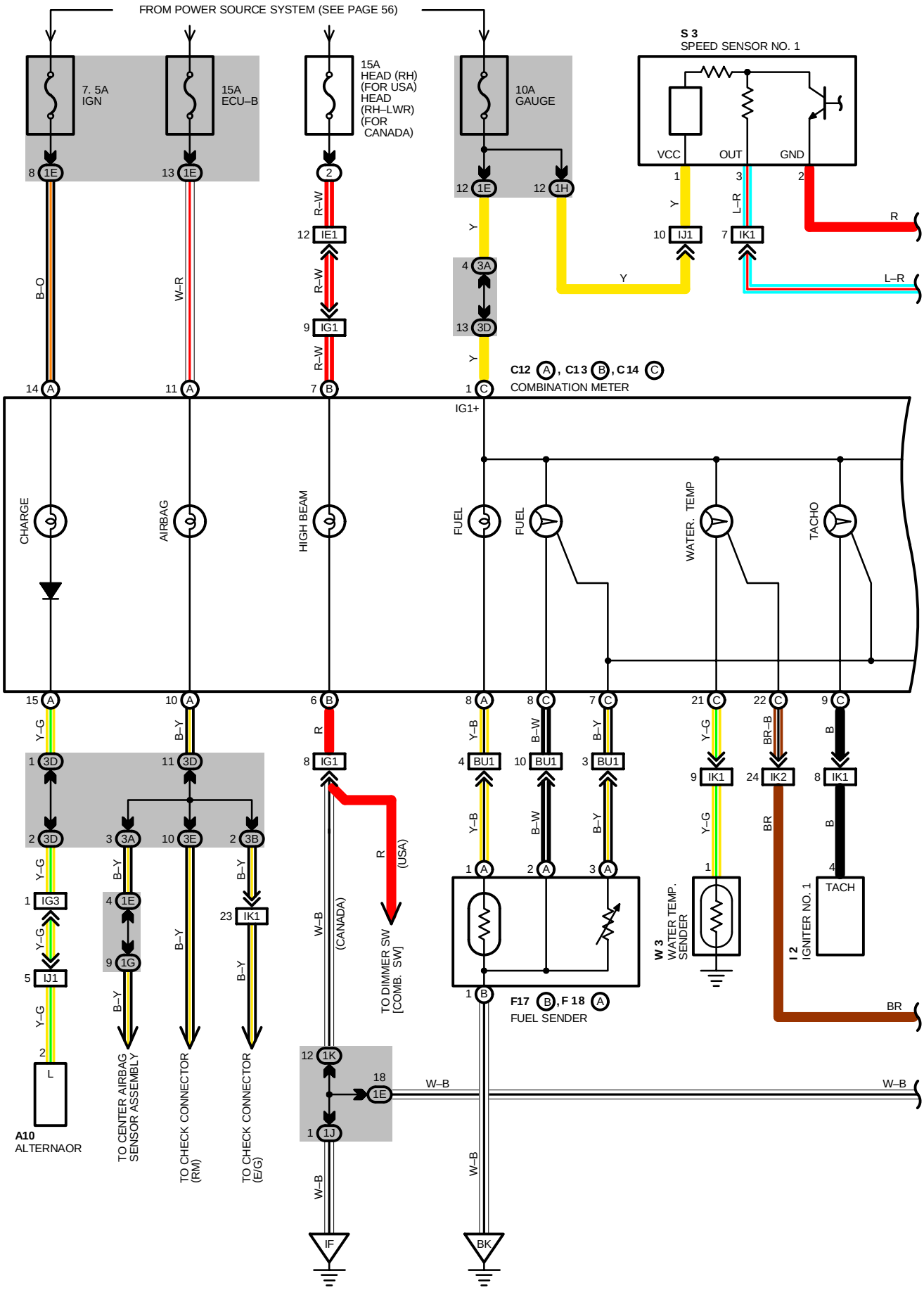

WhereEverybodyKnowsYourName

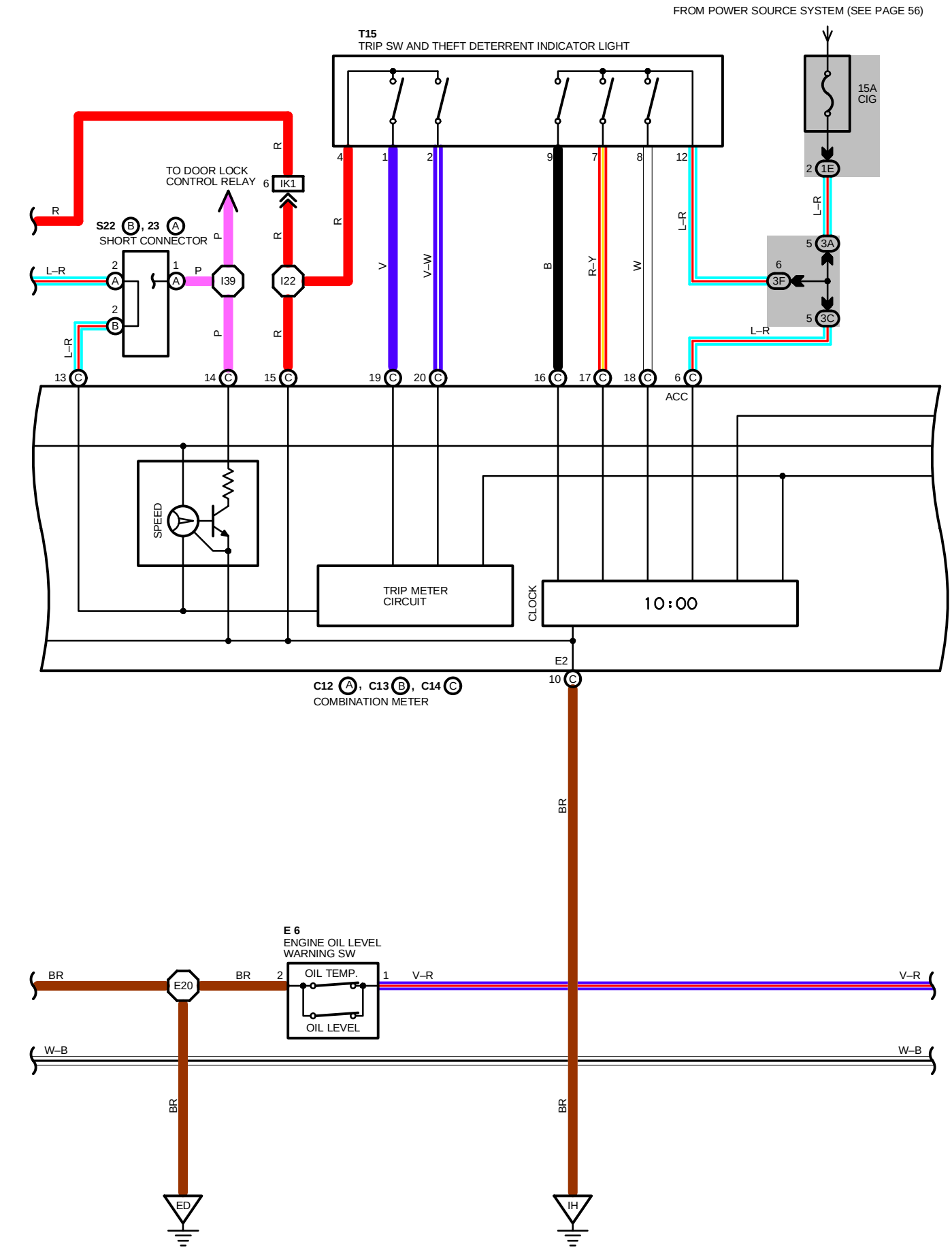

WhereEverybodyKnowsYourName

*1 : W/ TRACTION CONTROL
*2 : W/O TRACTION CONTROL

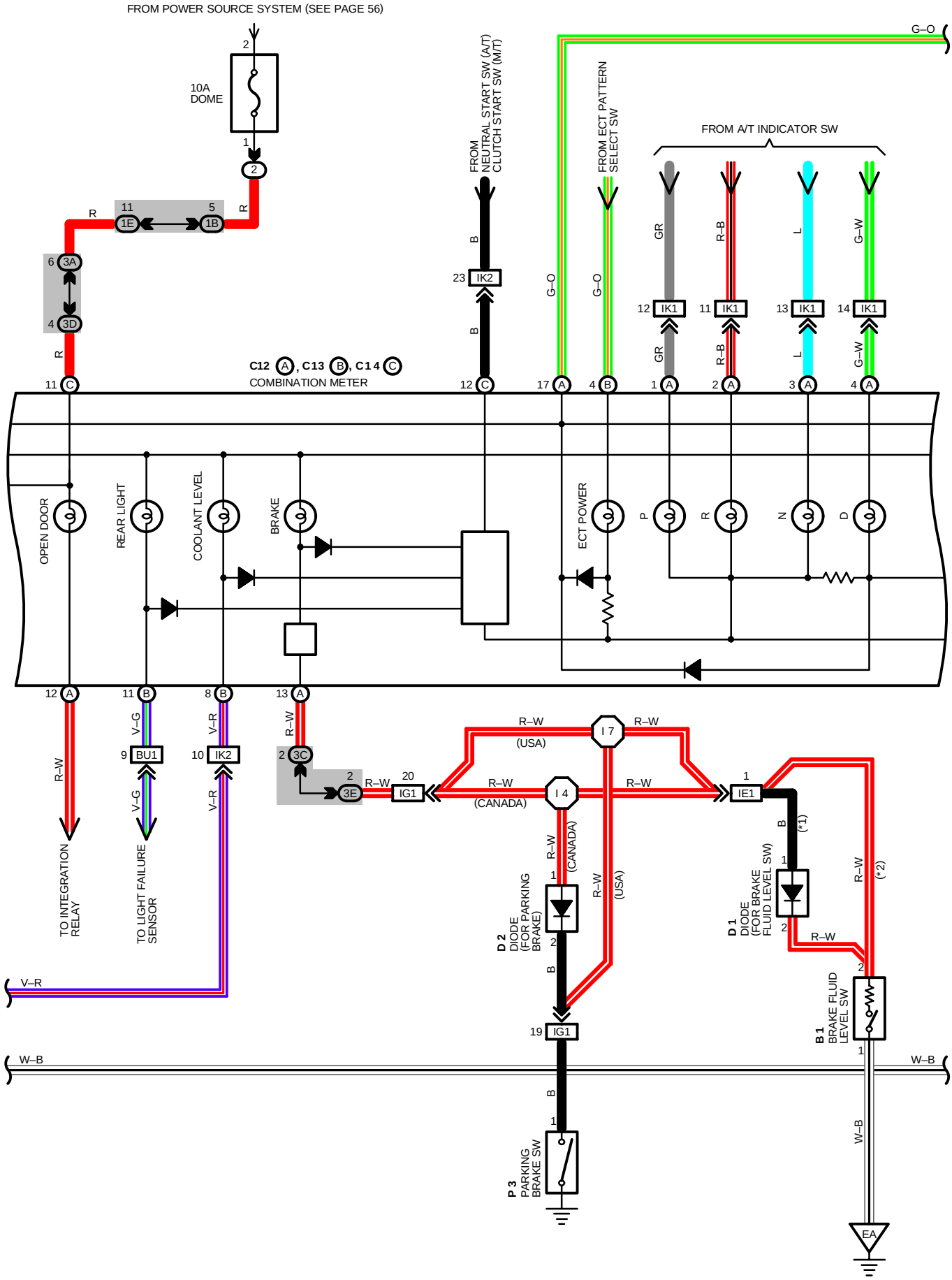

WhereEverybodyKnowsYourName

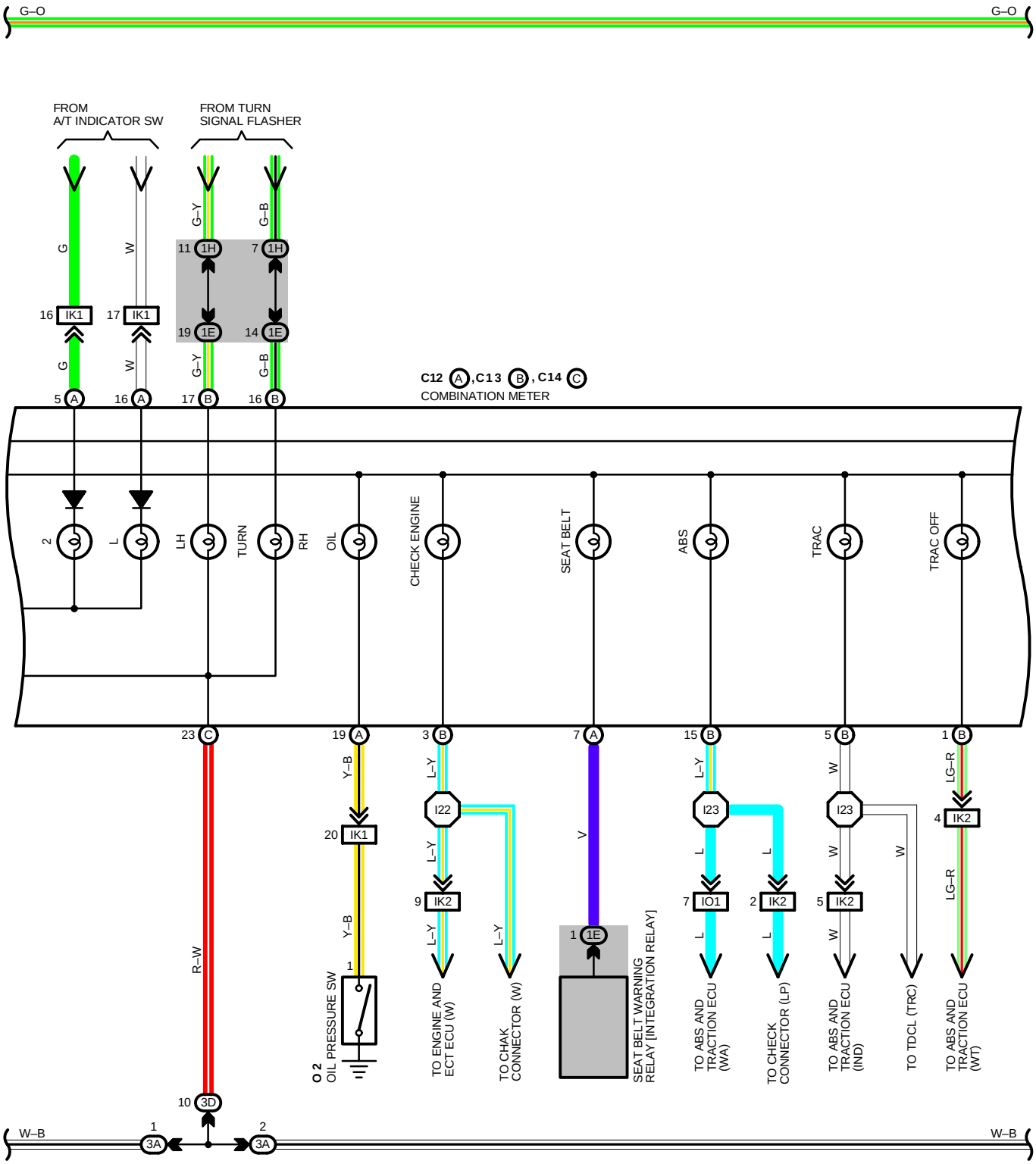

WhereEverybodyKnowsYourName

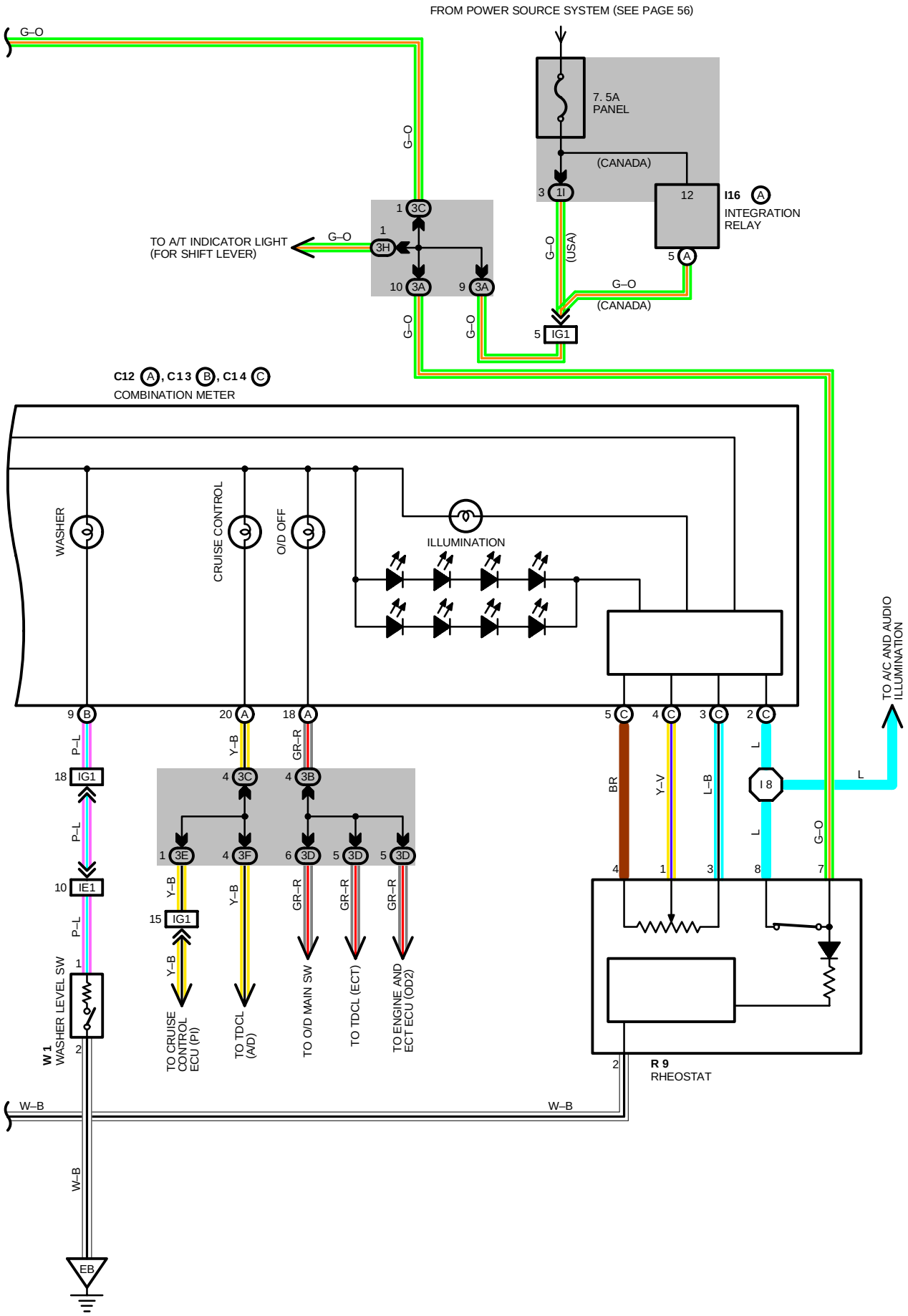

WhereEverybodyKnowsYourName

SERVICE HINTS

B 1 BRAKE FLUID LEVEL SW
1–2 : CLOSED WITH FLOAT DOWN

P 3 PARKING BRAKE SW
1–GROUND : CLOSED WITH PARKING BRAKE LEVER PULLED UP

O 2 OIL PRESSURE SW
1–GROUND : CLOSED WITH OIL PRESSURE BELOW APPROX. **0.2** KG/CM^2 (**2.8** PSI, **20** KPA)

W 3 WATER TEMP. SENDER
1–GROUND : APPROX. **226**? (**50**˚C, **122**˚F)
APPROX. **25**? (**115**˚C, **239**˚F)

E 6 ENGINE OIL LEVEL WARNING SW
1–2 : CLOSED WITH FLOAT UP AND ENGINE OIL TEMP. AT BELOW APPROX. **55**˚C (**131**˚F)
OPEN WITH FLOAT DOWN AND ENGINE OIL TEMP. AT BELOW APPROX. **60**˚C (**140**˚F)

F18(A) FUEL SENDER
2–3 : APPROX. **3**? AT FUEL FULL
APPROX. **110**? AT FUEL EMPTY

C14 (C) COMBINATION METER
1–GROUND : APPROX. **12** VOLTS WITH IGNITION SW AT **ON** POSITION
12–GROUND : APPROX. **12** VOLTS WITH IGNITION SW AT **ST** POSITION AND SHIFT LEVER AT **P** OR **N** RANGE
10–GROUND : ALWAYS CONTINUITY
22–GROUND : ALWAYS CONTINUITY
11–GROUND : ALWAYS APPROX. **12** VOLTS

: PARTS LOCATION

CODE		SEE PAGE	CODE		SEE PAGE	CODE		SEE PAGE
A10		26	**E 6**		26	**R 9**		29
B 1		26	**F17**	B	30	**S 3**		27
C12	A	28	**F18**	A	30	**S22**	B	29
C13	B	28	**I 2**		27	**S23**	A	29
C14	C	28	**I16**	A	29	**T15**		29
D 1		28	**O 2**		27	**W 1**		27
D 2		28	**P 3**		29	**W 3**		27

: RELAY BLOCKS

CODE	SEE PAGE	RELAY BLOCKS (RELAY BLOCK LOCATION)
2	19	ENGINE COMPARTMENT LEFT

: JUNCTION BLOCK AND WIRE HARNESS CONNECTOR

CODE	SEE PAGE	JUNCTION BLOCK AND WIRE HARNESS (CONNECTOR LOCATION)
1B	20	ENGINE ROOM MAIN WIRE
IE	20	INSTRUMENT PANEL WIRE
1G	20	COWL NO. 2 WIRE
1H	20	COWL WIRE
1I		
1J		
1K		
3A	22	INSTRUMENT PANEL WIRE
3B		
3C		
3D		
3E		
3F		
3H		

WhereEverybodyKnowsYourName

: CONNECTOR JOINING WIRE HARNESS AND WIRE HARNESS

CODE	SEE PAGE	JOINING WIRE HARNESS AND WIRE HARNESS (CONNECTOR LOCATION)
IE1	36	ENGINE ROOM MAIN WIRE AND COWL WIRE (R/B NO. 4)
IG1	36	INSTRUMENT PANEL WIRE AND COWL WIRE (R/B NO. 5)
IG3	38	INSTRUMENT PANEL WIRE AND COWL WIRE (RIGHT KICK PANEL)
IJ1	36	ENGINE WIRE AND COWL WIRE (RIGHT KICK PANEL)
IK1	36	ENGINE WIRE AND INSTRUMENT PANEL WIRE (RIGHT KICK PANEL)
IK2		
IO1	38	ENGINE ROOM MAIN WIRE AND INSTRUMENT PANEL WIRE (RIGHT KICK PANEL)
BU1	40	FLOOR WIRE AND INSTRUMENT PANEL WIRE (LEFT KICK PANEL)

: GROUND POINTS

CODE	SEE PAGE	GROUND POINTS LOCATION
EA	34	FRONT SIDE OF RIGHT FENDER
EB	34	FRONT SIDE OF LEFT FENDER
ED	34	REAR SIDE OF CYLINDER HEAD RH
IF	36	LEFT KICK PANEL
IG	36	INSTRUMENT PANEL BRACE LH
BK	40	UNDER THE CENTER PILLAR LH

: SPLICE POINTS

CODE	SEE PAGE	WIRE HARNESS WITH SPLICE POINTS	CODE	SEE PAGE	WIRE HARNESS WITH SPLICE POINTS
E20	34	ENGINE WIRE	**I22**	38	INSTRUMENT PANEL WIRE
I 4	38	COWL WIRE	**I23**		
I 7			**I39**		
I 8					

WhereEverybodyKnowsYourName

A10

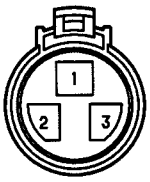

B 1 GRAY

C12 (A)

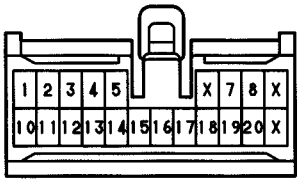

C13 (B)

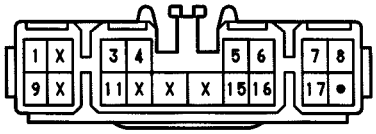

C14 (C)

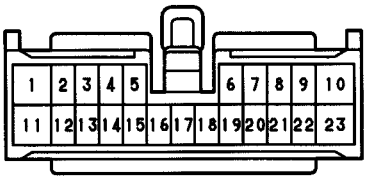

D 1 BLACK

D 2 BLACK

E 6 GRAY

F17 (B)

F18 (A)

I 2 BLACK

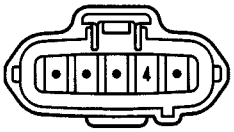

I16 (A)

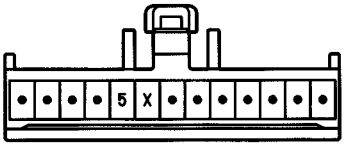

O 2 GRAY

P 3

R 9

S 3 GRAY

S22 (B)

S23 (A)

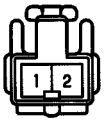

T15

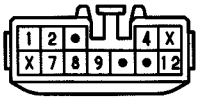

W 1

W 3 GRAY

WhereEverybodyKnowsYourName

Position of Parts in Engine Compartment

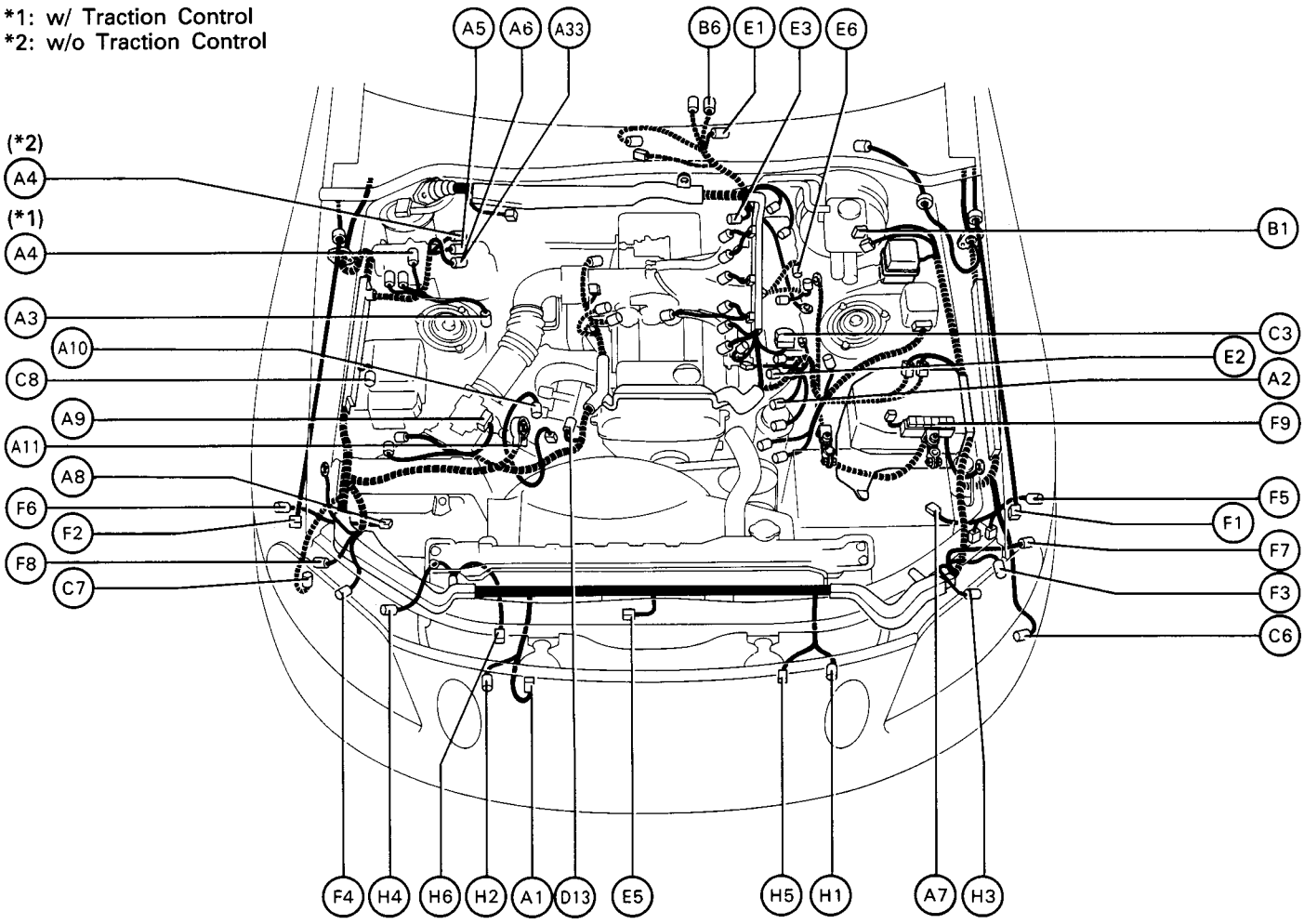

A	1	A/C Ambient Temp. Sensor
A	2	A/C Lock Sensor and A/C Magnetic Clutch
A	3	A/C High Pressure SW
A	4	ABS Actuator
A	5	ABS Actuator (w/ Traction Control)
A	6	ABS Actuator (w/ Traction Control)
A	7	ABS Speed Sensor Front LH
A	8	ABS Speed Sensor Front RH
A	9	Air Flow Meter
A	10	Alternator
A	11	Alternator
A	33	ABS Actuator (w/o Traction Control)
B	1	Brake Fluid Level SW
B	6	Back–Up Light SW (for M/T)
C	3	Check Connector
C	6	Cornering Light LH
C	7	Cornering Light RH
C	8	Cruise Control Actuator
D	13	Distributor
E	1	ECT Solenoid
E	2	EFI Water Temp. Sensor
E	3	EGR Gas Temp. Sensor (for USA Spec.)
E	5	Engine Hood Courtesy SW
E	6	Engine Oil Level Warning SW
F	1	Front Airbag Sensor LH
F	2	Front Airbag Sensor RH
F	3	Front Clearance Light LH
F	4	Front Clearance Light RH
F	5	Front Side Marker Light LH
F	6	Front Side Marker Light RH
F	7	Front Turn Signal Light LH
F	8	Front Turn Signal Light RH
F	9	Fuse Block
H	1	Headlight Hi LH
H	2	Headlight Hi RH
H	3	Headlight Lo LH
H	4	Headlight Lo RH
H	5	Horn LH
H	6	Horn RH

WhereEverybodyKnowsYourName

Position of Parts in Engine Compartment

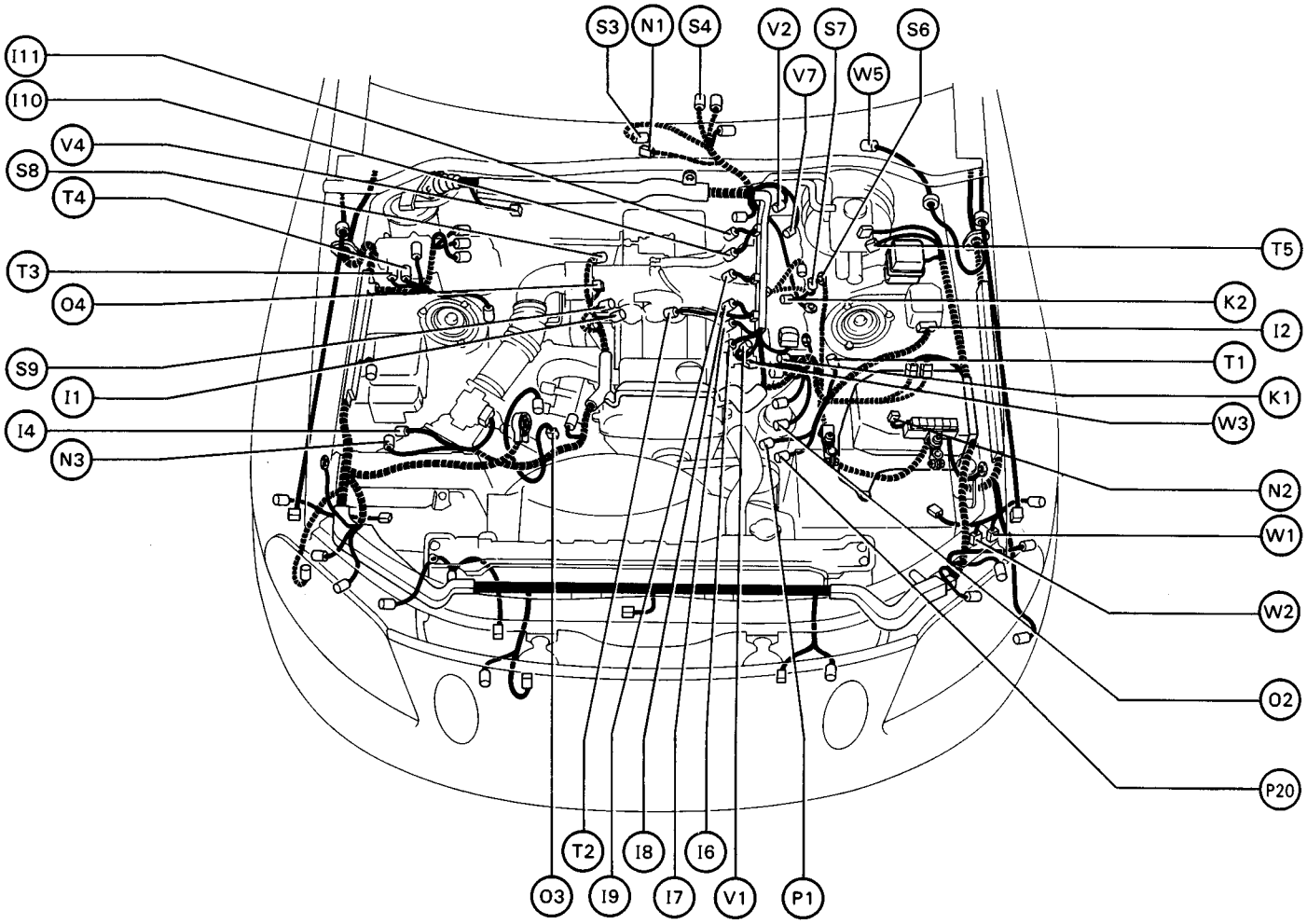

I	1	ISC Valve
I	2	Igniter
I	4	Ignition Coil
I	6	Injector No. 1
I	7	Injector No. 2
I	8	Injector No. 3
I	9	Injector No. 4
I	10	Injector No. 5
I	11	Injector No. 6
K	1	Knock Sensor No. 1 (on Front Side)
K	2	Knock Sensor No. 2 (on Rear Side)
N	1	Neutral Start SW, Back–Up Light SW and A/T Indicator SW (for A/T)
N	2	Noise Filter (for Defogger System)
N	3	Noise Filter (for Ignition System)
O	2	Oil Pressure SW
O	3	Oxygen Sensor Main No. 1 (on Front Side)
O	4	Oxygen Sensor Main No. 2 (on Rear Side)
P	1	PPS Solenoid
P	20	Power Steering Pressure SW
S	3	Speed Sensor No. 1
S	4	Speed Sensor No. 2 (for ECT)
S	6	Starter
S	7	Starter
S	8	Sub Throttle Actuator
S	9	Sub Throttle Position Sensor
T	1	Theft Deterrent Horn
T	2	Throttle Position Sensor
T	3	Traction Brake Actuator
T	4	Traction Brake Actuator
T	5	Traction pump and Motor
V	1	VSV (for EGR) (Exc. USA Spec)
V	2	VSV (for EVAP)
V	4	VSV (for Water Valve)
V	7	VSV (for Intake Control Valve)
W	1	Washer Level SW
W	2	Washer Motor
W	3	Water Temp. Sender
W	5	Wiper Motor

WhereEverybodyKnowsYourName

Position of Parts in Instrument Panel

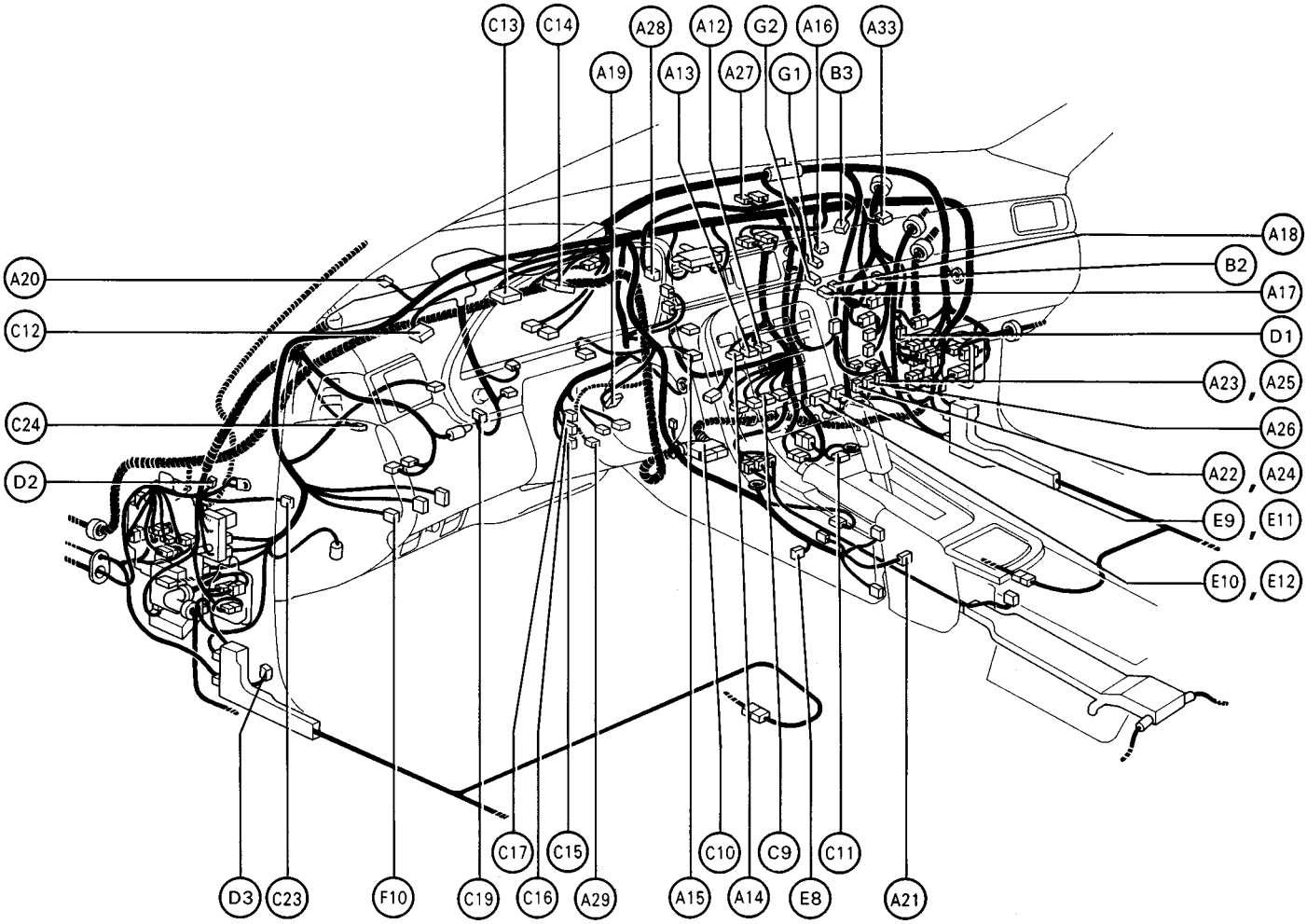

A	12	A/C Control Assembly
A	13	A/C Control Assembly
A	14	A/C Control Assembly
A	15	A/C Control SW and Radio SW
A	16	A/C Evaporator Temp. Sensor
A	17	A/C Power Transistor
A	18	A/C Power Transistor
A	19	A/C Room Temp. Sensor
A	20	A/C Solar Sensor
A	21	A/T Indicator Light (for Shift Lever)
A	22	ABS ECU (for M/T, w/o Traction Control)
A	23	ABS ECU (for M/T, w/o Traction Control)
A	24	ABS and Traction ECU
A	25	ABS and Traction ECU
A	26	ABS and Traction ECU
A	27	Air Mix Control Servo Motor
A	28	Air Vent Mode Control Servo Motor
A	29	Airbag Squib
A	33	Air Inlet Control Servo Motor
B	2	Blower Motor
B	3	Blower Resistor (for Low Speed)
C	9	CD Player
C	10	Center Airbag Sensor Assembly
C	11	Cigarette Lighter
C	12	Combination Meter
C	13	Combination Meter
C	14	Combination Meter
C	15	Combination SW
C	16	Combination SW
C	17	Combination SW
C	19	Cruise Control ECU
C	23	Clutch Start SW
C	24	Cruise Control Clutch SW
D	1	Diode (for Brake Fluid Level)
D	2	Diode (for Parking Brake)
D	3	Diode (for Tension Reduser)
E	8	ECT Pattern Select SW
E	9	Engine and ECT ECU (for A/T)
E	10	Engine and ECT ECU (for A/T)
E	11	Engine ECU (for M/T)
E	12	Engine ECU (for M/T)
F	10	Fuel Lid Opener SW
G	1	Glove Box Light
G	2	Glove Box Light SW

WhereEverybodyKnowsYourName

Position of Parts in Instrument Panel

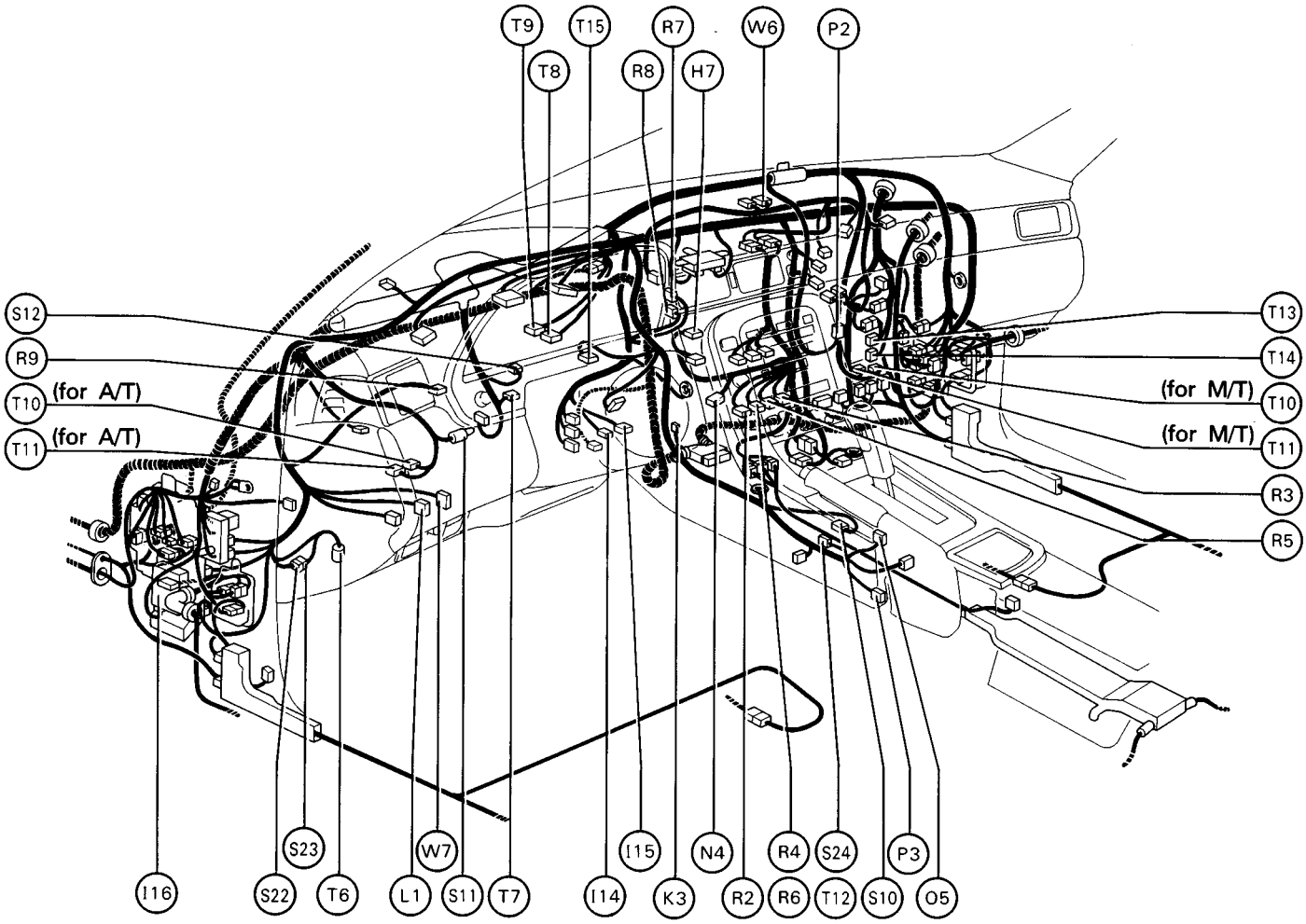

H 7 Hazard SW

I 14 Ignition Key Cylinder Light
I 15 Ignition SW, Unlock Warning SW and Key Inter Lock Solenoid
I 16 Integration Relay

K 3 Kick Down SW

L 1 Luggage Compartment Door Open SW

N 4 Noise Filter (for A/C System)

O 5 O/D Main SW

P 2 PPS ECU
P 3 Parking Brake SW

R 2 Radio and Player
R 3 Radio and Player
R 4 Radio and Player (w/ CD Player)
R 5 Radio and Player (w/o CD Player)
R 6 Radio and Player (w/o CD Player)
R 7 Remote Control Mirror ECU
R 8 Remote Control Mirror ECU
R 9 Rheostat

S 10 Shift Lock ECU
S 11 Step Light
S 12 Stop Light SW
S 22 Short Connector
S 23 Short Connector
S 24 Seat Heater SW (for M/T)

T 6 TDCL (Total Diagnostic Communication Link)
T 7 Telescopic Position Sensor
T 8 Theft Deterrent and Door Lock Control ECU
T 9 Theft Deterrent and Door Lock Control ECU
T 10 Tilt and Power Telescopic ECU
T 11 Tilt and Power Telescopic ECU
T 12 Traction Cut SW and Seat Heater SW (for A/T)
T 13 Traction ECU (for A/T)
T 14 Traction ECU (for A/T)
T 15 Trip SW and Theft Deterrent Indicator Light

W 6 Water Temp. Sensor (for A/C System)
W 7 Wireless Door Lock Main SW

WhereEverybodyKnowsYourName

Position of Parts in Body

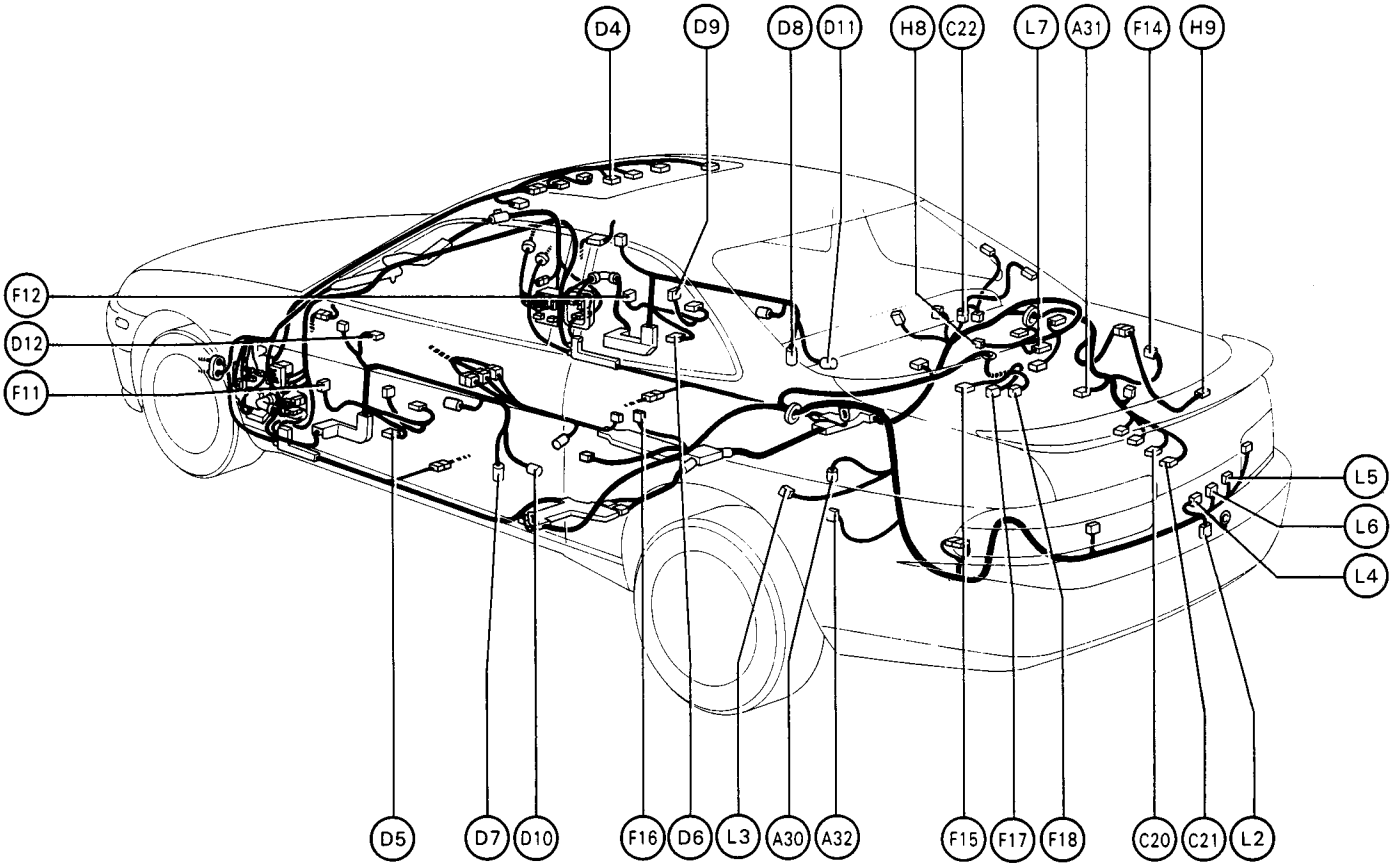

A 30 ABS Speed Sensor Rear LH
A 31 ABS Speed Sensor Rear RH
A 32 Auto Antenna Motor and Relay

C 20 CD Automatic Changer
C 21 CD Automatic Changer
C 22 Choke Coil

D 4 DAY/NIGHT Shift SW
D 5 Door Courtesy Light LH
D 6 Door Courtesy Light RH
D 7 Door Key Lock and Unlock SW LH
D 8 Door Key Lock and Unlock SW RH
D 9 Door Lock Control SW RH
D 10 Door Lock Motor, Door Unlock Detection SW and Door Open Detection SW LH
D 11 Door Lock Motor, Door Unlock Detection SW and Door Open Detection SW RH
D 12 Driving Position Memory and Return SW

F 11 Front Door Speaker LH
F 12 Front Door Speaker RH
F 14 Fuel Lid Opener Solenoid
F 15 Fuel Pump
F 16 Fuel Pump ECU
F 17 Fuel Sender
F 18 Fuel Sender

H 8 High Mount Stop Light (w/o Rear Spoiler)
H 9 High Mount Stop Light (w/ Rear Spoiler)

L 2 Licence Plate Light
L 3 Light Failure Sensor
L 4 Luggage Compartment Door Opener Motor
L 5 Luggage Compartment Key Unlock SW
L 6 Luggage Compartment Light SW
L 7 Luggage Compartment Light

WhereEverybodyKnowsYourName

Position of Parts in Body

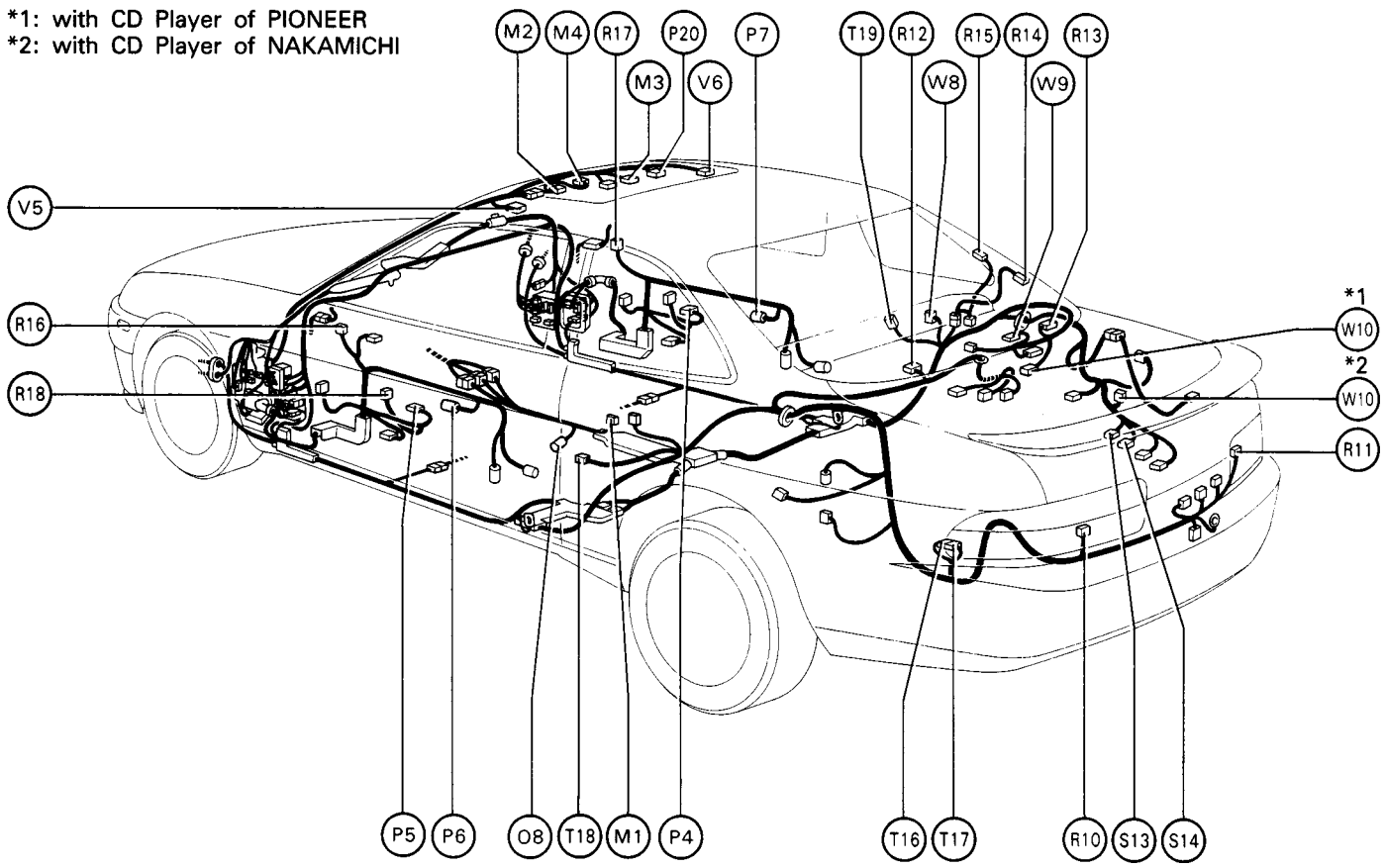

M	1	Mobilephone
M	2	Moon Roof Control Relay
M	3	Moon Roof Control SW
M	4	Moon Roof Motor and Limit SW
O	8	Oxygen Sensor Sub (for California)
P	4	Power Window Control SW RH
P	5	Power Window Master SW and Door Lock Control SW LH
P	6	Power Window Motor LH
P	7	Power Window Motor RH
P	20	Personal Light
R	10	Rear Combination Light LH
R	11	Rear Combination Light RH
R	12	Rear Speaker LH
R	13	Rear Speaker RH
R	14	Rear Window Defogger (+)
R	15	Rear Window Defogger (–)
R	16	Remote Control Mirror LH
R	17	Remote Control Mirror RH
R	18	Remote Control Mirror SW
S	13	Stereo Power Amplifier
S	14	Stereo Power Amplifier
T	16	Telephone Transceiver and Speaker Relay
T	17	Telephone Transceiver and Speaker Relay
T	18	Tension Reducer Solenoid LH
T	19	Tension Reducer Solenoid RH
V	5	Vanity Light LH
V	6	Vanity Light RH
W	8	Wireless Door Lock ECU
W	9	Woofer Speaker
W	10	Woofer Speaker Amplifier

WhereEverybodyKnowsYourName

Position of Parts in Seat

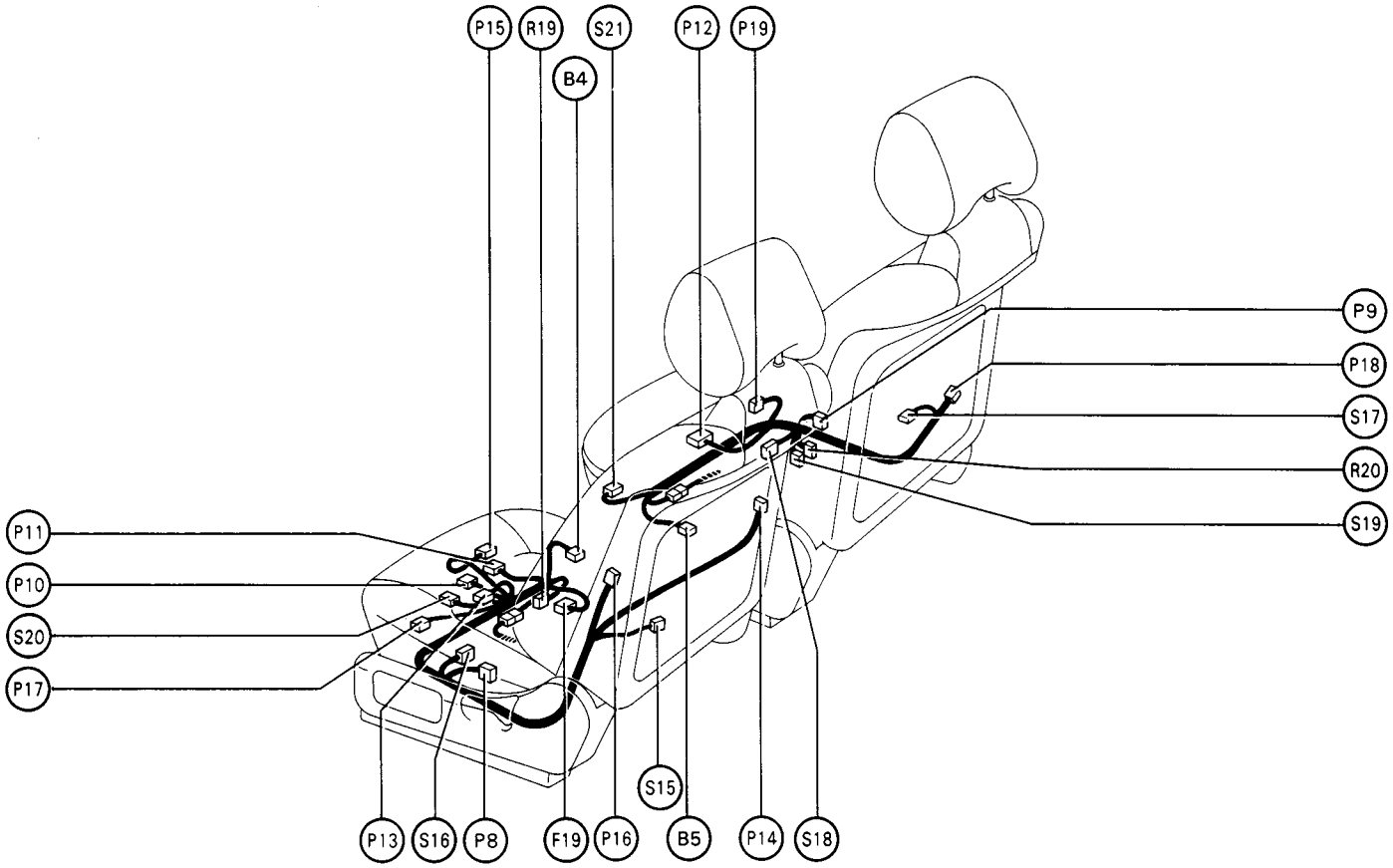

B 4 Buckle SW LH
B 5 Buckle SW RH

F 19 Front Vertical Position Sensor

P 8 Power Seat Control SW (for Driver's Seat)
P 9 Power Seat Control SW (for Passenger's Seat)
P 10 Power Seat ECU (for Driver's Seat)
P 11 Power Seat ECU (for Driver's Seat)
P 12 Power Seat ECU (for Passenger's Seat)
P 13 Power Seat Motor (for Driver's Seat Front Vertical Control)
P 14 Power Seat Motor (for Driver's Seat Lumbar Support Control)
P 15 Power Seat Motor (for Driver's Seat Rear Vertical Control)
P 16 Power Seat Motor (for Driver's Seat Reclining Motor Control)
P 17 Power Seat Motor (for Driver's Seat Slide Control)
P 18 Power Seat Motor (for Passenger's Seat Reclining Control)
P 19 Power Seat Motor (for Passenger's Seat Slide Control)

R 19 Rear Vertical Position Sensor
R 20 Reclining Limit SW

S 15 Seat Heater (for Driver's Seat Back)
S 16 Seat Heater (for Driver's Seat Cushion)
S 17 Seat Heater (for Passenger's Seat Back)
S 18 Seat Heater (for Passenger's Seat Cushion)
S 19 Slide Limit SW
S 20 Slide Position Sensor (for Driver's Seat)
S 21 Slide Position Sensor (for Passenger's Seat)

WhereEverybodyKnowsYourName

▭ : Location of Connector Joining Wire Harness and Wire Harness

▽ : Location of Ground Points

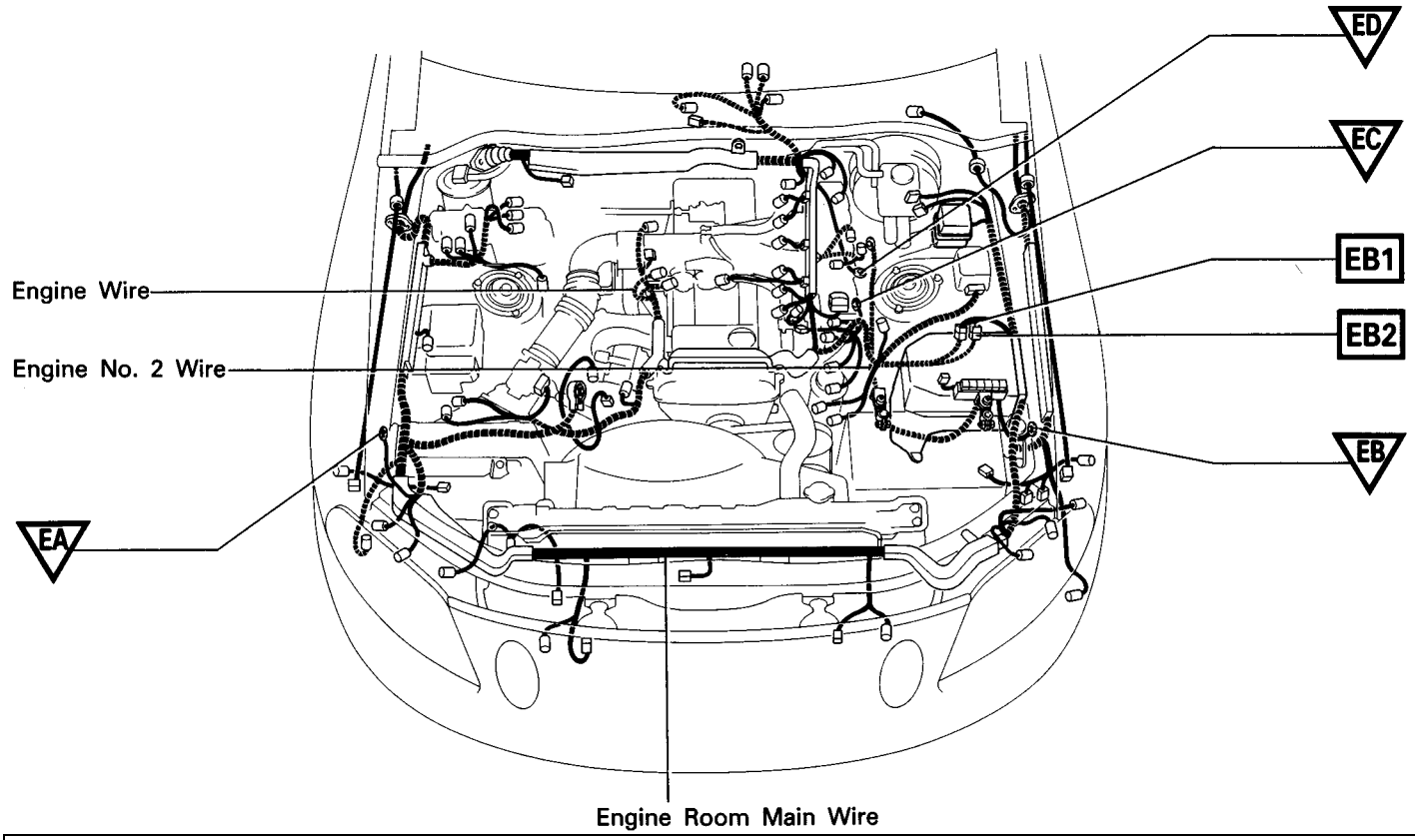

⬡ : Location of Splice Points

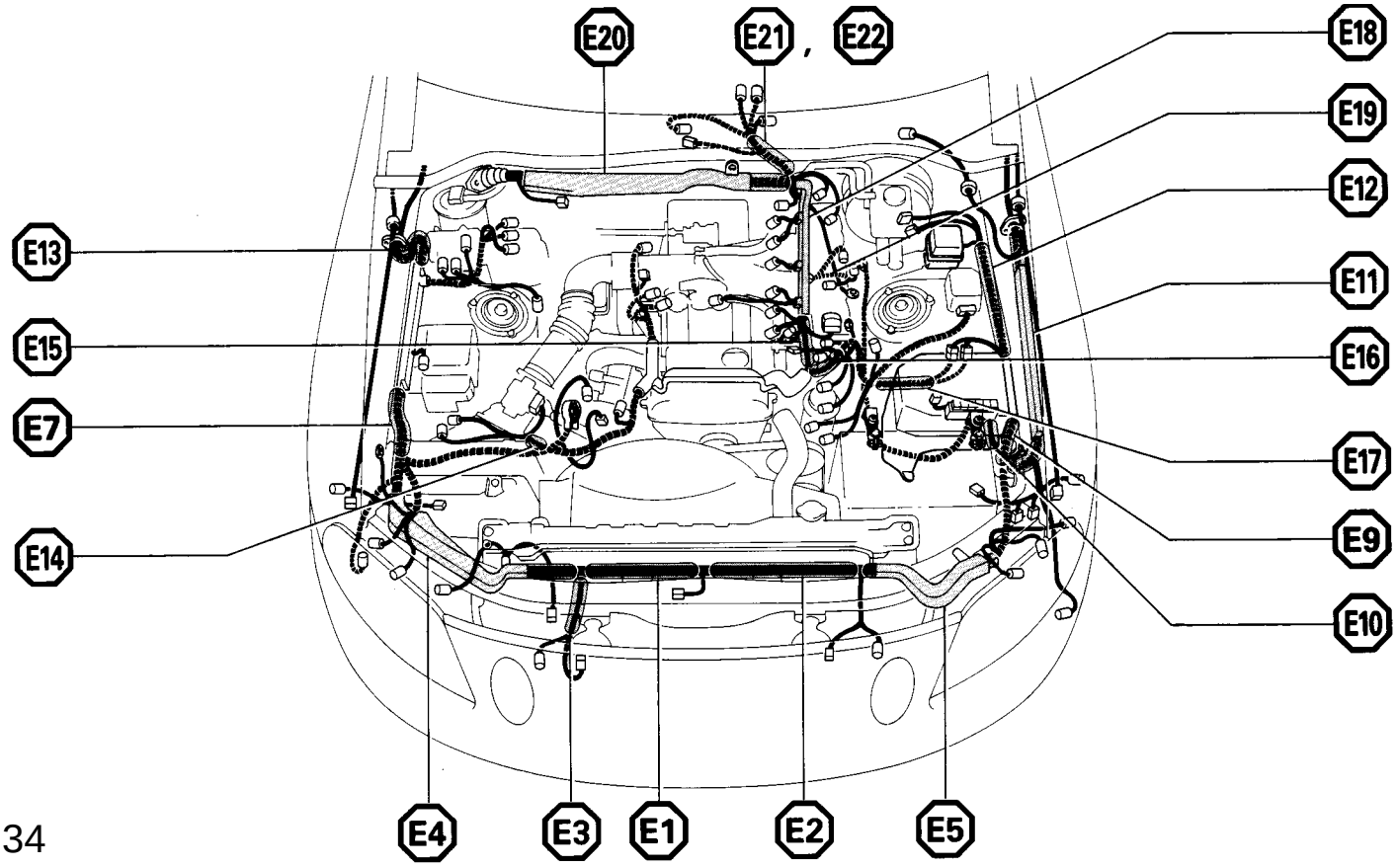

WhereEverybodyKnowsYourName

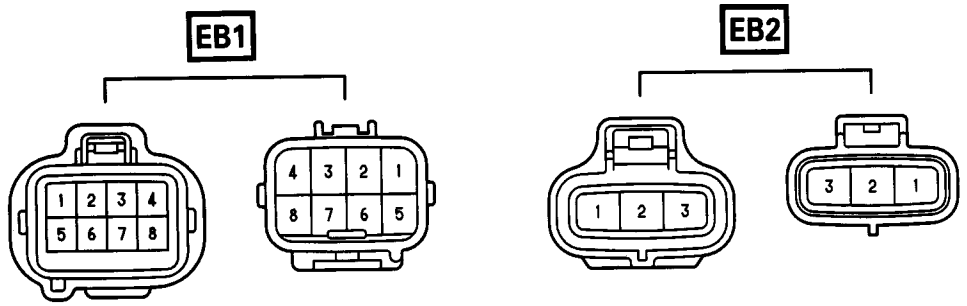

CODE	JOINING WIRE HARNESS AND WIRE HARNESS (CONNECTOR LOCATION)
EB1	ENGINE WIRE AND ENGINE ROOM MAIN WIRE (FRONT SIDE OF R/B NO. 2)
EB2	

WhereEverybodyKnowsYourName

▭ : Location of Connector Joining Wire Harness and Wire Harness

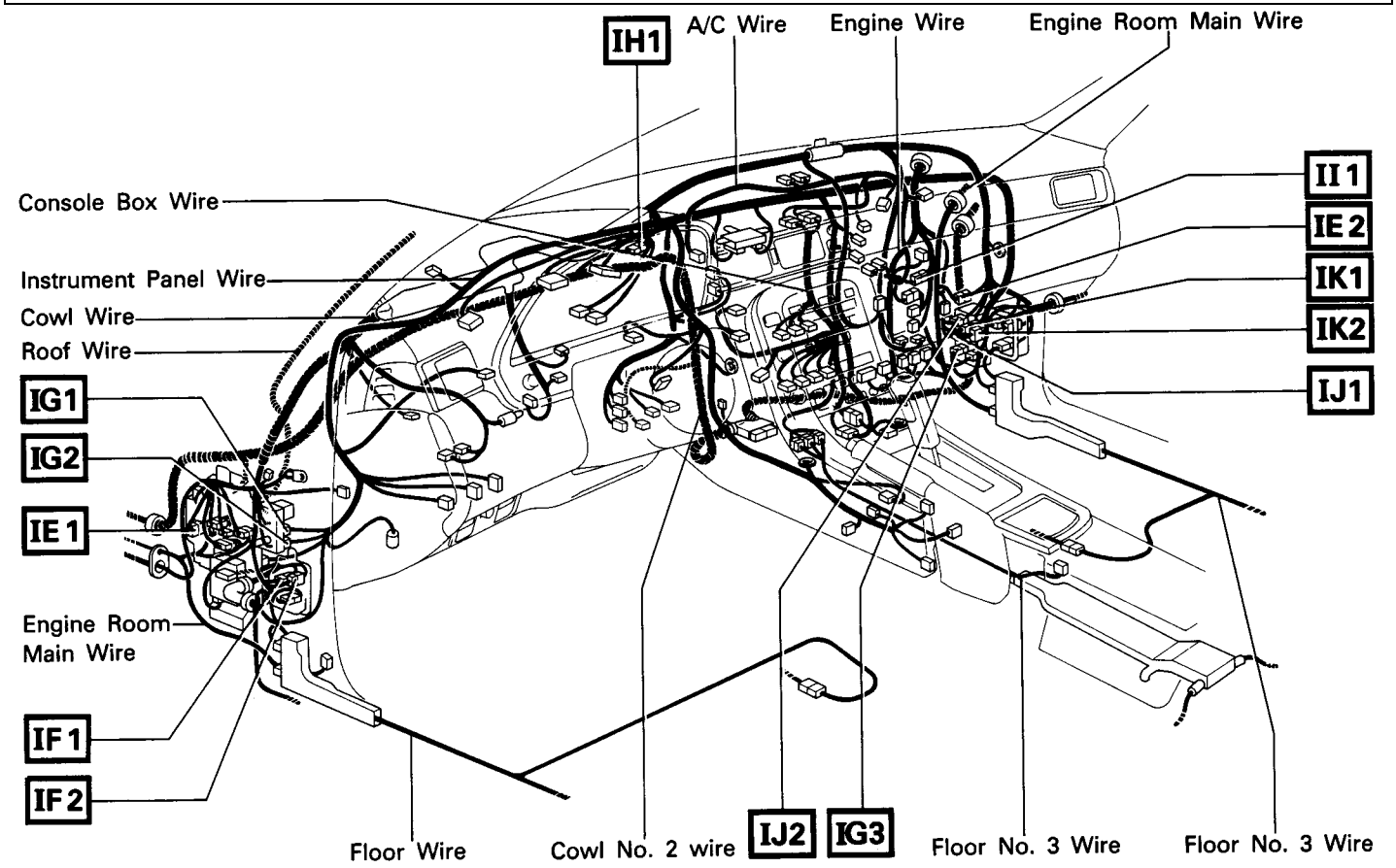

▽ : Location of Ground Points

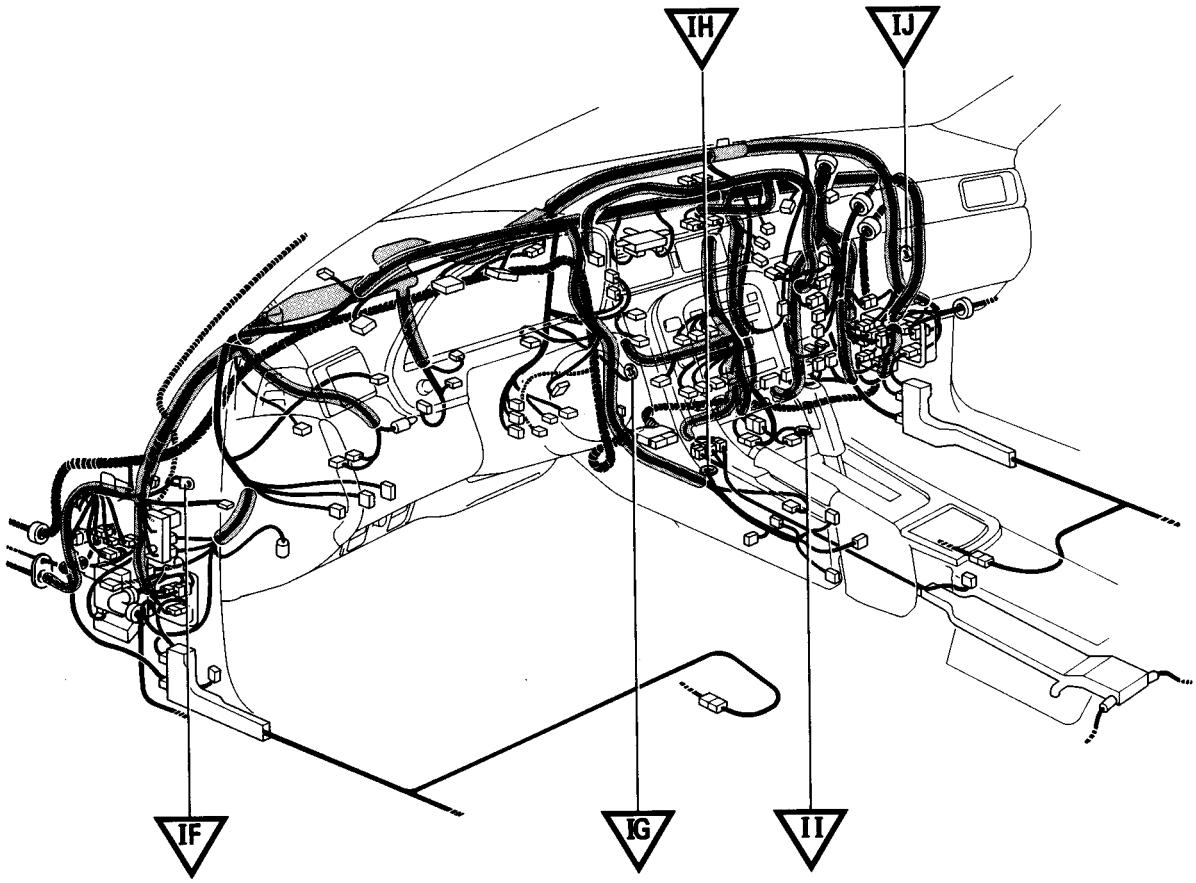

WhereEverybodyKnowsYourName

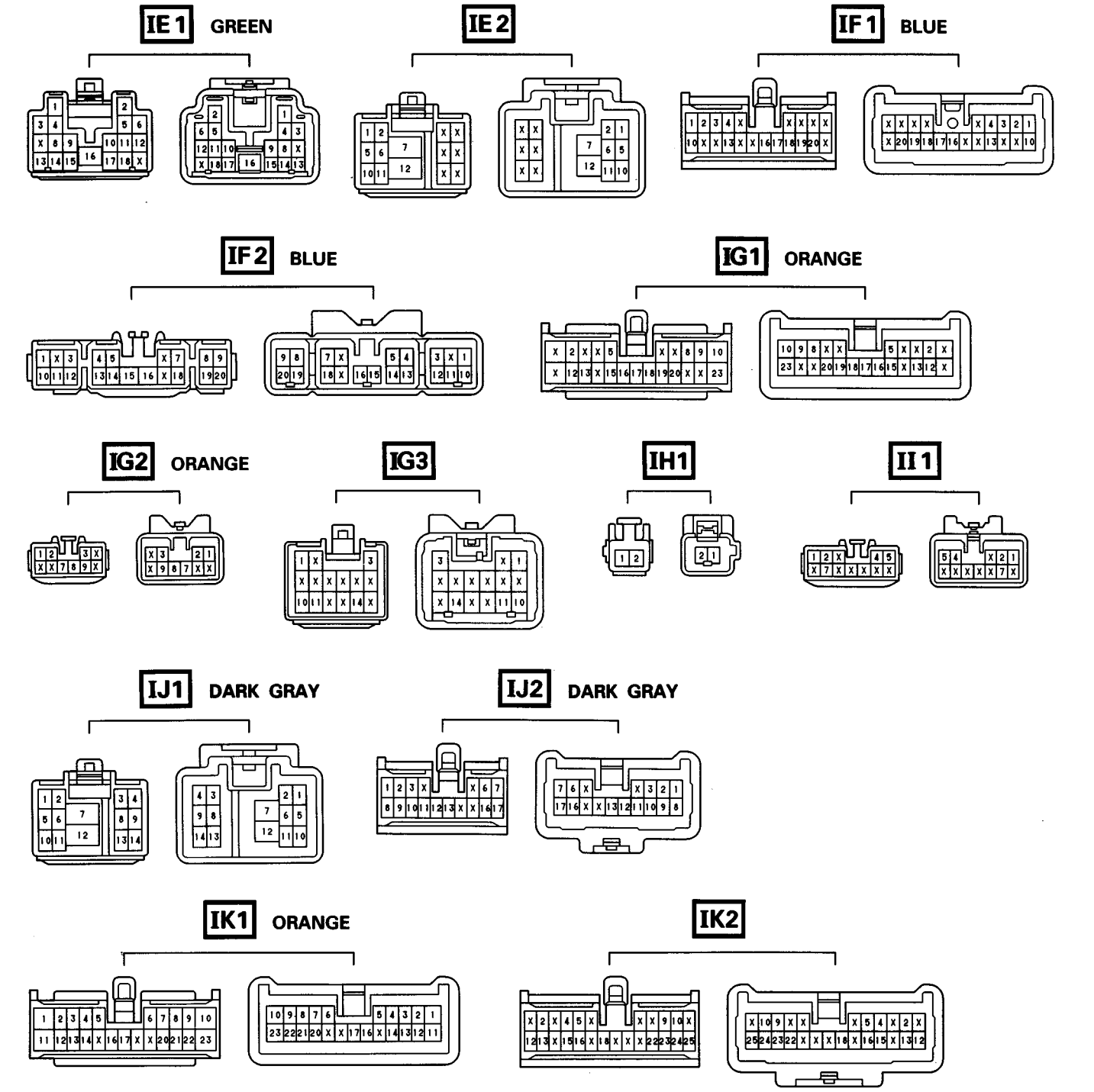

CODE	JOINING WIRE HARNESS AND WIRE HARNESS (CONNECTOR LOCATION)
IE1	ENGINE ROOM MAIN WIRE AND COWL WIRE (R/B NO. 4)
IE2	ENGINE ROOM MAIN WIRE AND COWL WIRE (BEHIND GLOVE BOX)
IF1	FRONT DOOR LH WIRE AND COWL WIRE (LEFT KICK PANEL)
IF2	
IG1	INSTRUMENT PANEL WIRE AND COWL WIRE (R/B NO. 5)
IG2	
IG3	INSTRUMENT PANEL WIRE AND COWL WIRE (RIGHT KICK PANEL)
IH1	COWL NO. 2 WIRE AND COWL WIRE (BEHIND COMBINATION METER)
II1	ENGINE WIRE AND A/C WIRE (BEHIND GLOVE BOX)
IJ1	ENGINE WIRE AND COWL WIRE (RIGHT KICK PANEL)
IJ2	
IK1	ENGINE WIRE AND INSTRUMENT PANEL WIRE (RIGHT KICK PANEL)
IK2	

WhereEverybodyKnowsYourName

▭ : Location of Connector Joining Wire Harness and Wire Harness

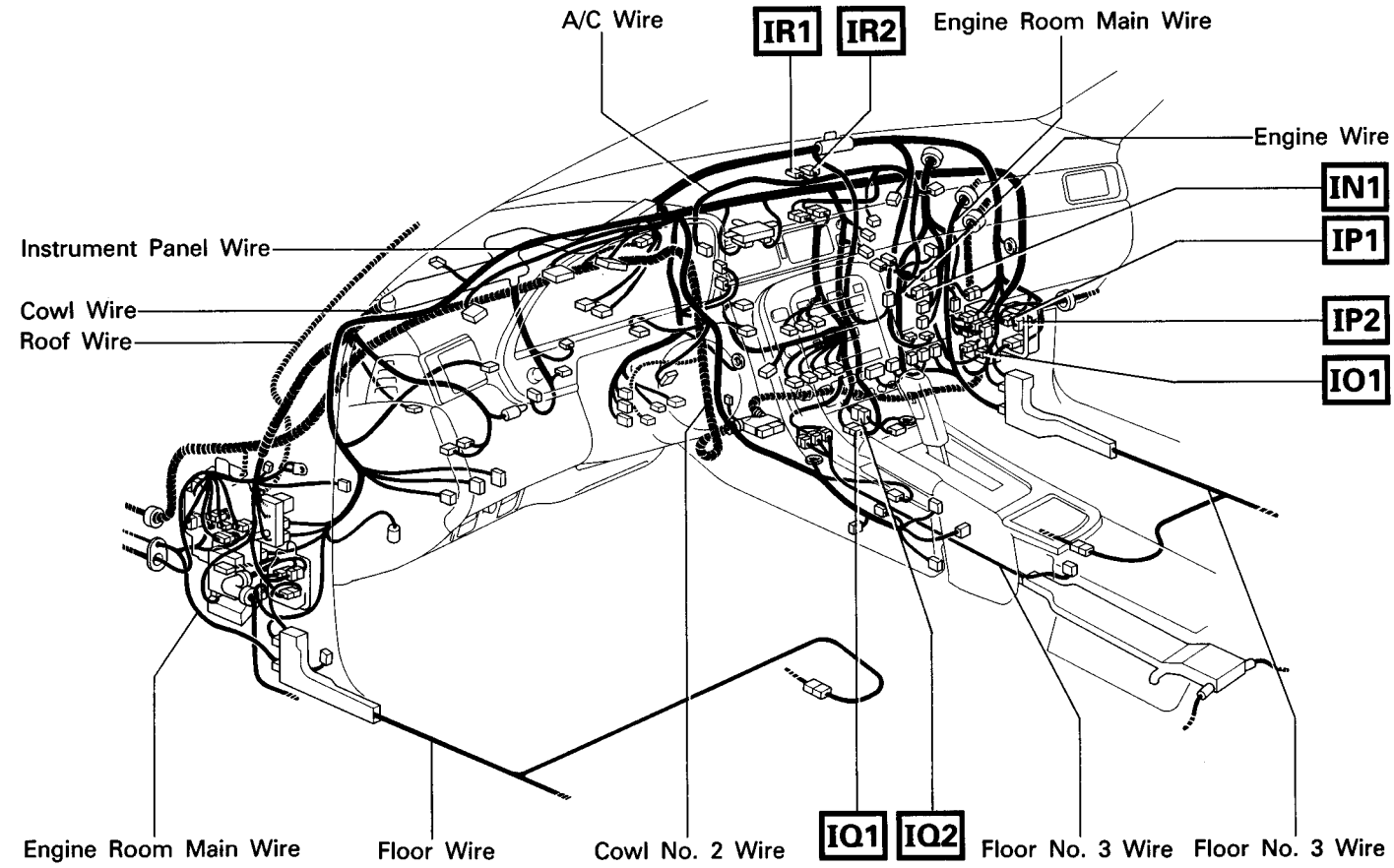

○ : Location of Splice Points

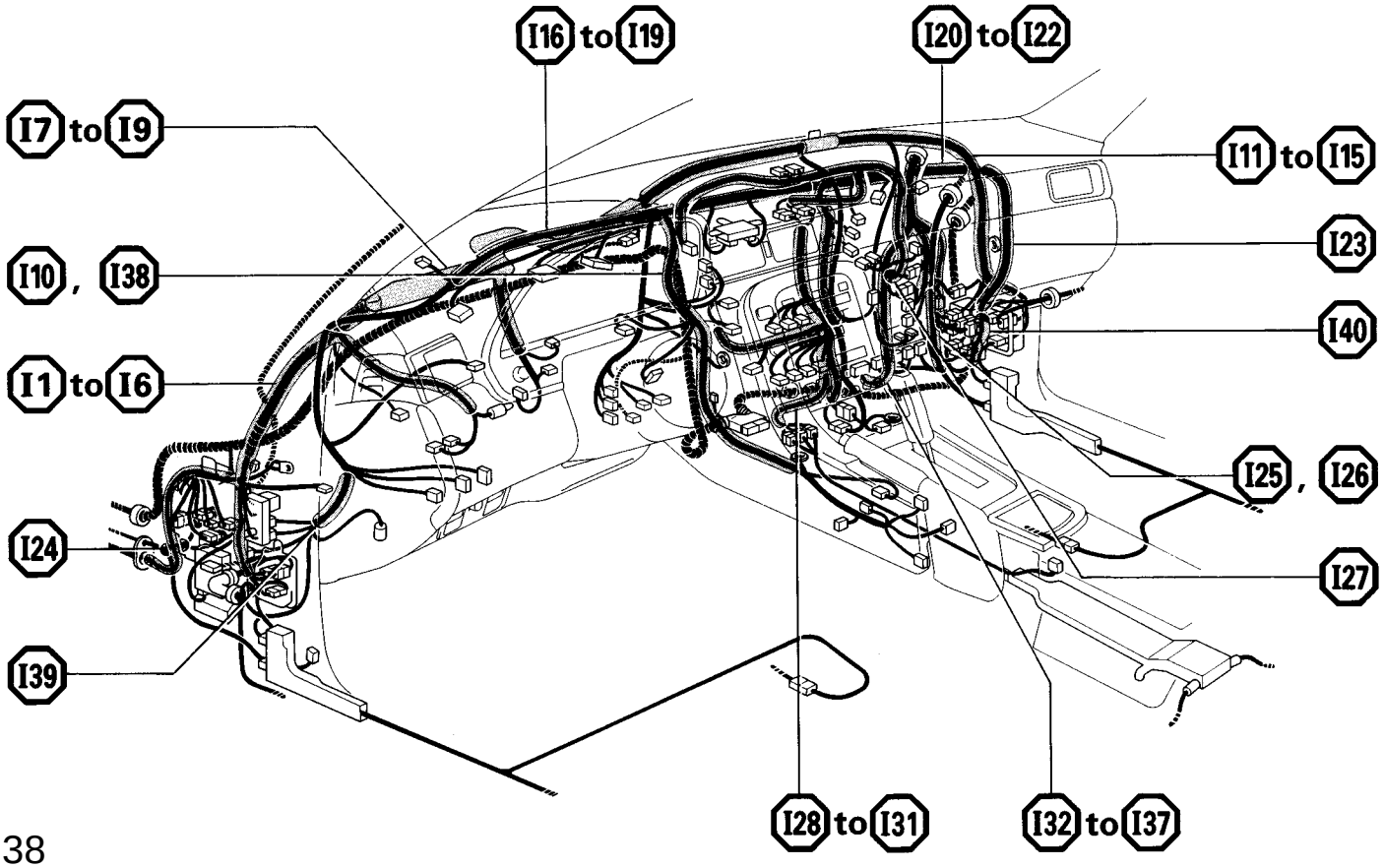

WhereEverybodyKnowsYourName

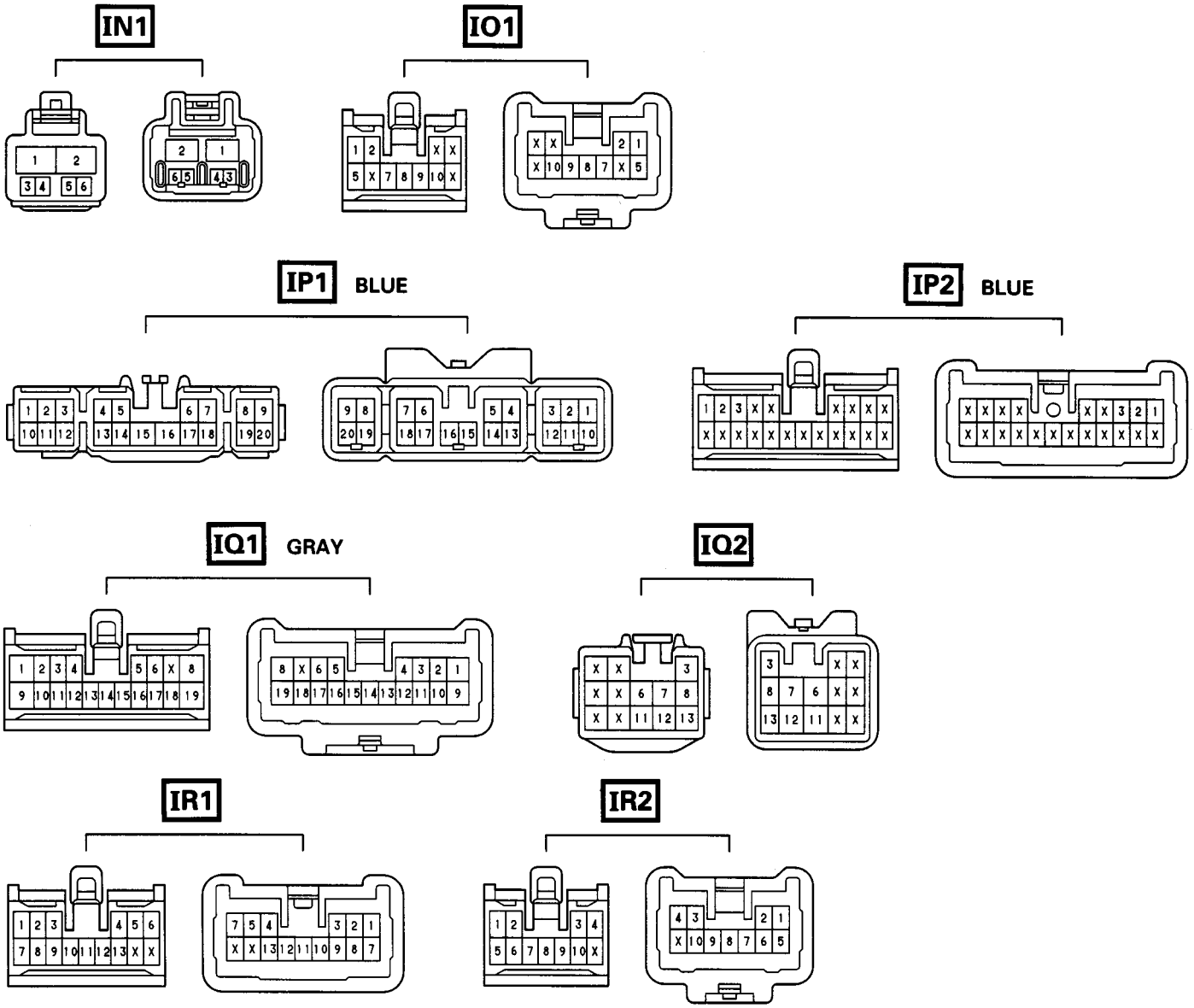

CODE	JOINING WIRE HARNESS AND WIRE HARNESS (CONNECTOR LOCATION)
IN1	ENGINE ROOM MAIN WIRE AND A/C WIRE (BEHIND GLOVE BOX)
IO1	ENGINE ROOM MAIN WIRE AND INSTRUMENT PANEL WIRE (RIGHT KICK PANEL)
IP1	FRONT DOOR RH WIRE AND COWL WIRE (RIGHT KICK PANEL)
IP2	
IQ1	INSTRUMENT PANEL WIRE AND CONSOLE BOX WIRE (UNDER THE INSTRUMENT PANEL CENTER)
IQ2	
IR1	CONSOLE BOX WIRE AND A/C WIRE (BEHIND GLOVE BOX)
IR2	

WhereEverybodyKnowsYourName

▭ : Location of Connector Joining Wire Harness and Wire Harness

▽ : Location of Ground Points

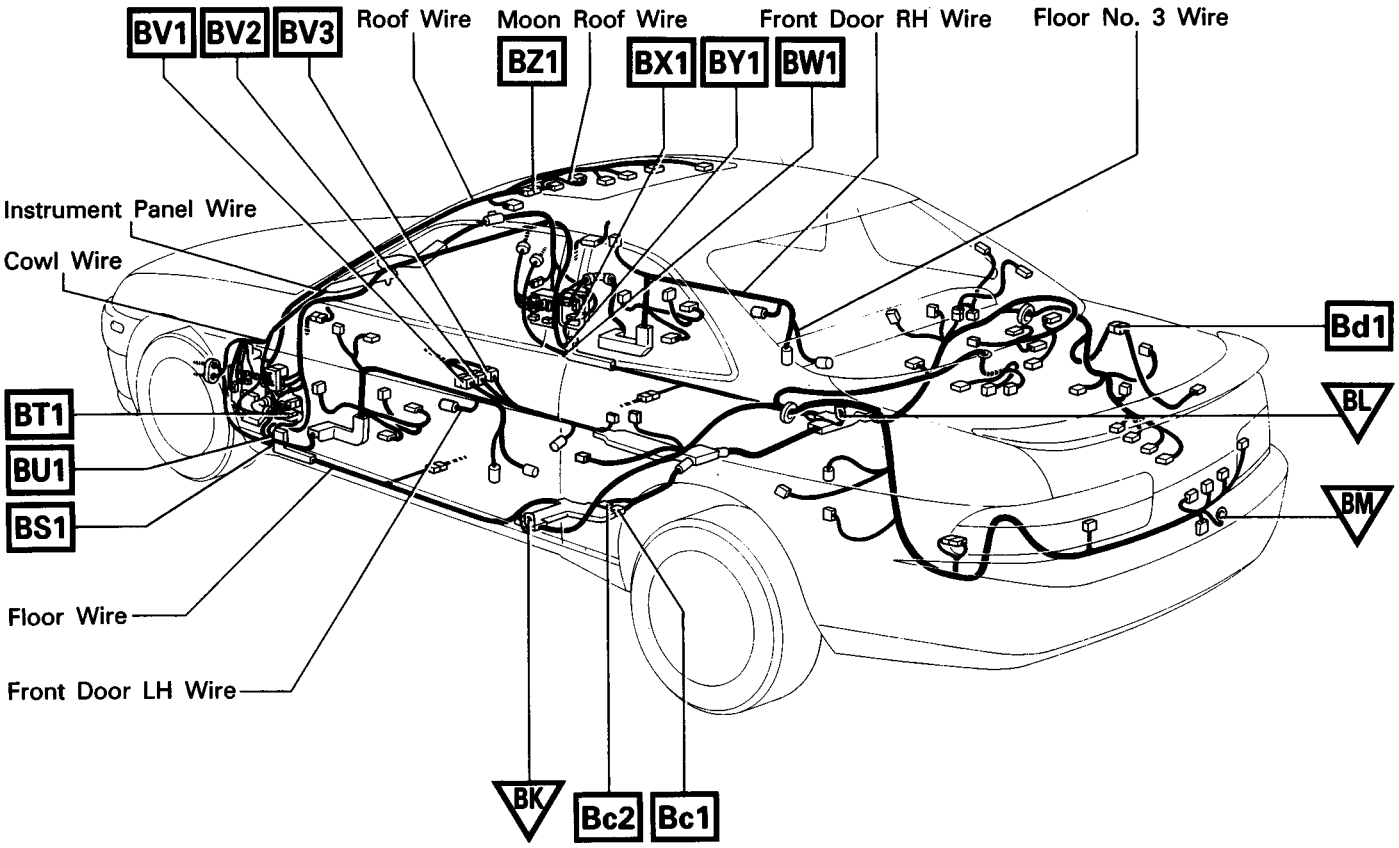

○ : Location of Splice Points

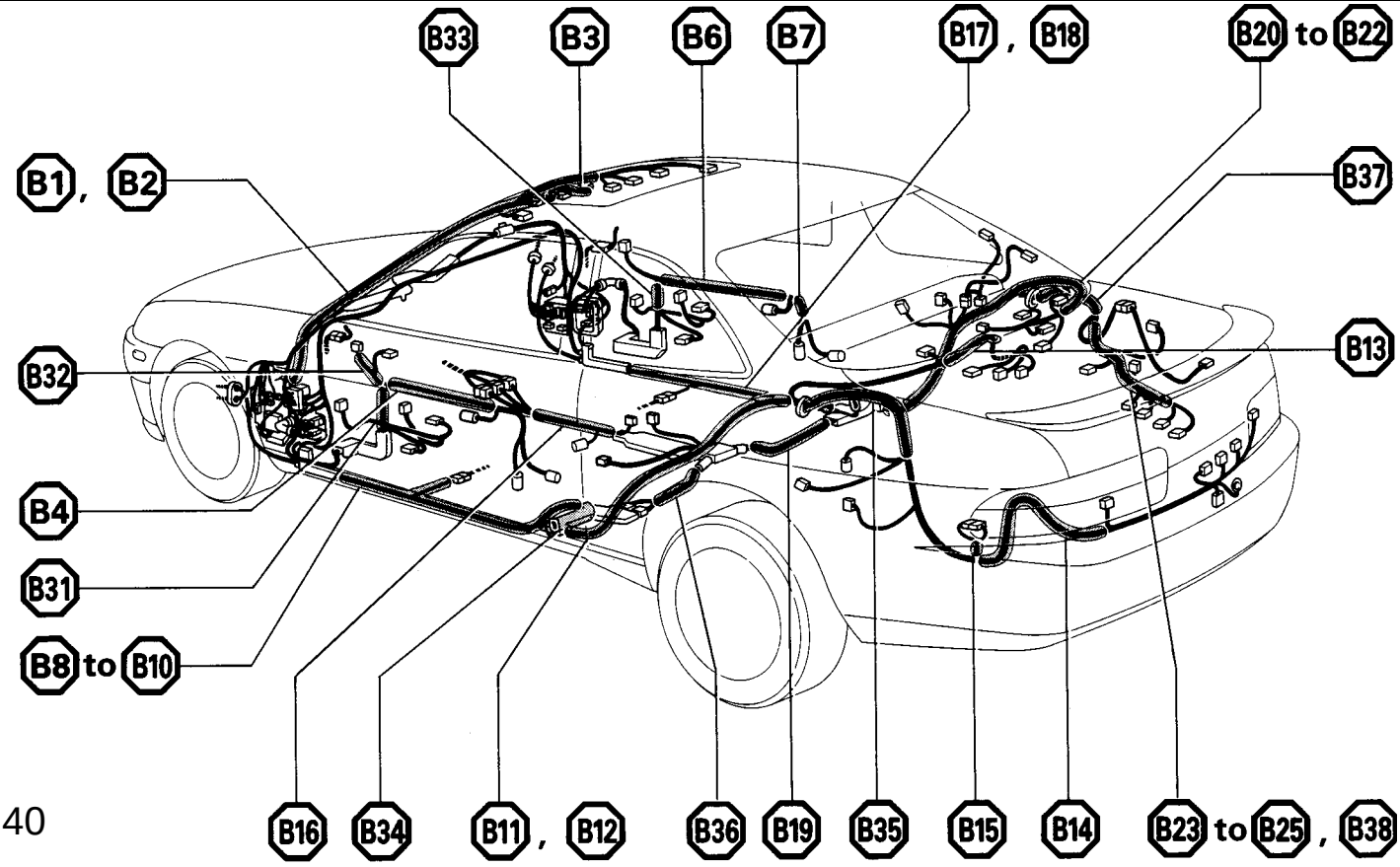

WhereEverybodyKnowsYourName

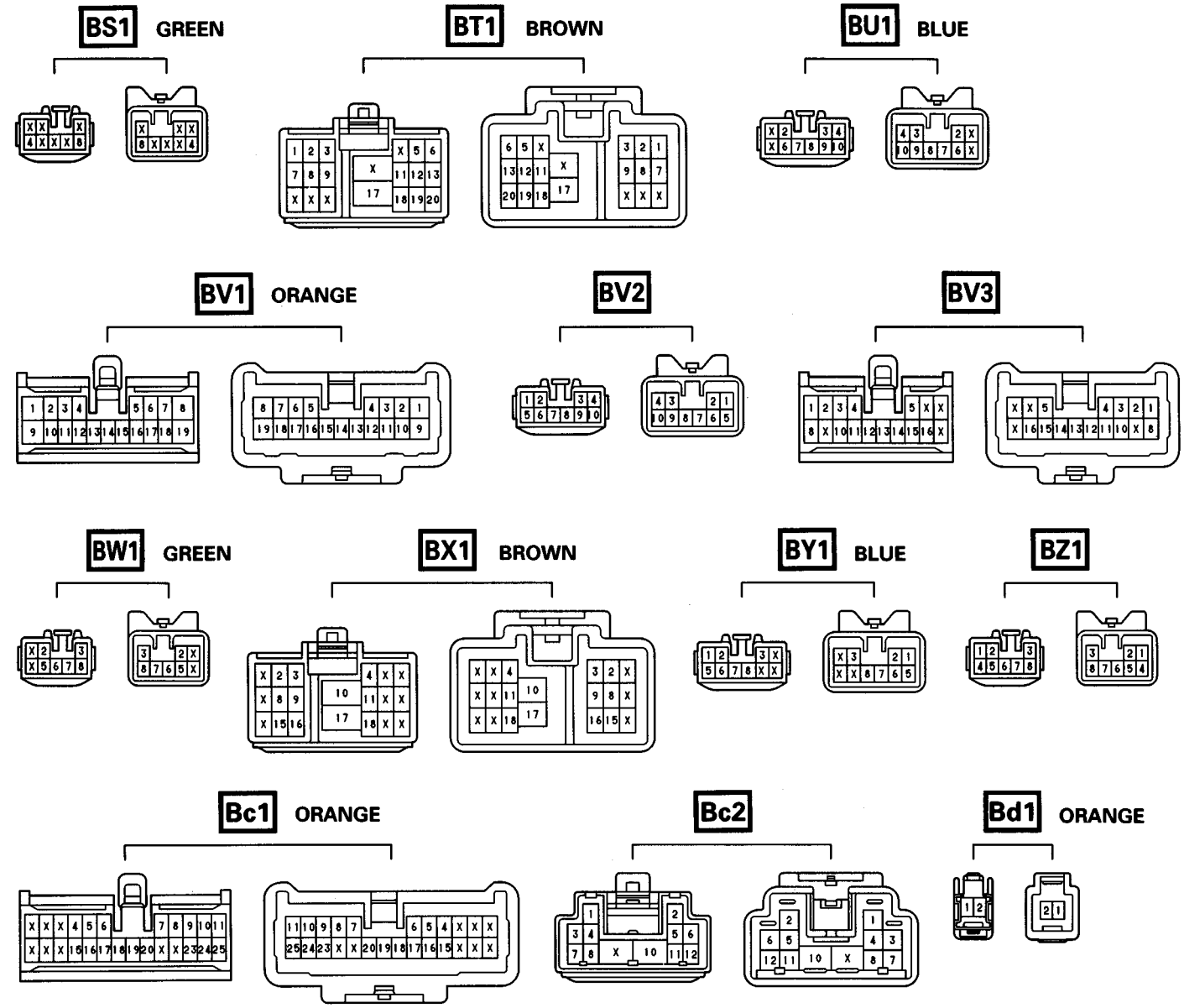

CODE	JOINING WIRE HARNESS AND WIRE HARNESS (CONNECTOR LOCATION)
BS1	ENGINE ROOM MAIN WIRE AND FLOOR WIRE (LEFT KICK PANEL)
BT1	FLOOR WIRE AND COWL WIRE (LEFT KICK PANEL)
BU1	INSTRUMENT PANEL WIRE AND FLOOR WIRE (LEFT KICK PANEL)
BV1	FLOOR NO. 3 WIRE AND CONSOLE BOX WIRE (UNDER THE INSTRUMENT PANEL CENTER)
BV2	
BV3	
BW1	ENGINE ROOM MAIN WIRE AND FLOOR NO. 3 WIRE (RIGHT KICK PANEL)
BX1	FLOOR NO. 3 WIRE AND COWL WIRE (RIGHT KICK PANEL)
BY1	INSTRUMENT PANEL WIRE AND FLOOR NO. 3 WIRE (RIGHT KICK PANEL)
BZ1	ROOF WIRE AND MOON ROOF WIRE (FRONT SIDE OF ROOF LEFT)
Bc1	FLOOR NO. 3 WIRE AND FLOOR WIRE (UNDER THE LEFT SIDE OF REAR SEAT CUSHION)
Bc2	
Bd1	FLOOR NO. 3 WIRE AND LUGGAGE NO. 2 WIRE (RIGHT SIDE OF LUGGAGE COMPARTMENT)

WhereEverybodyKnowsYourName

▭ : Location of Connector Joining Wire Harness and Wire Harness

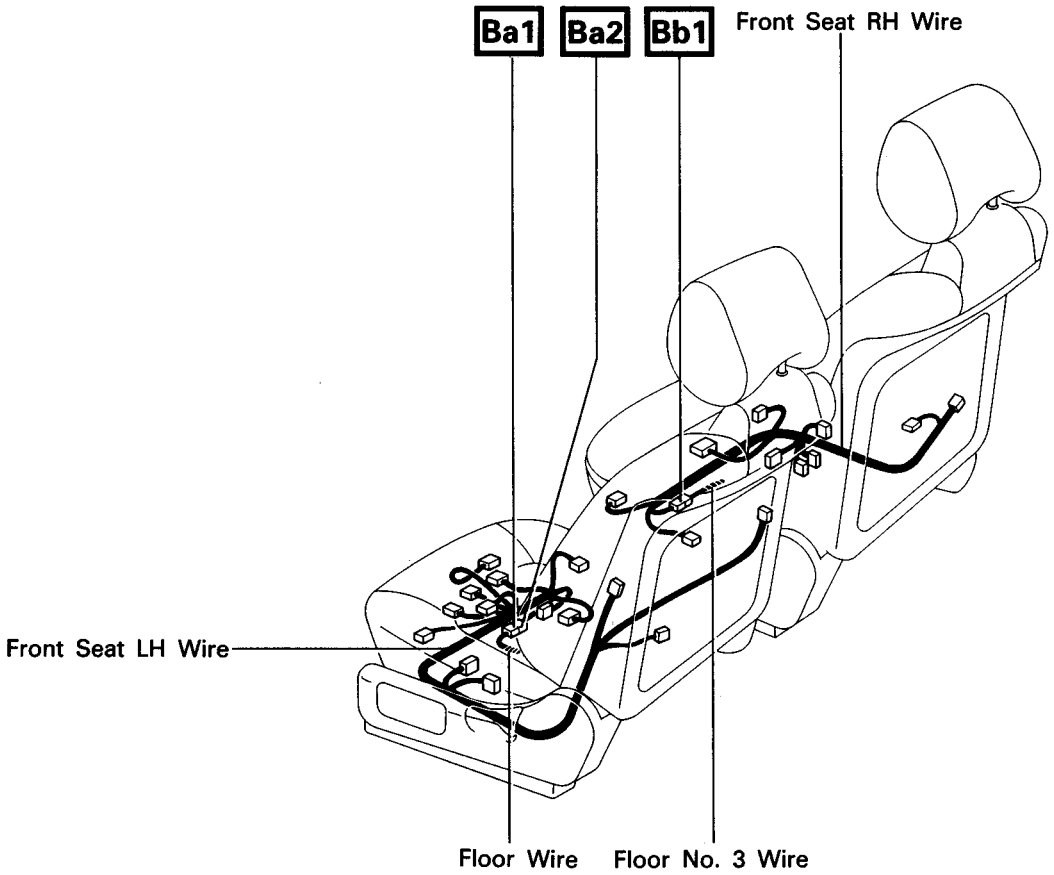

○ : Location of Splice Points

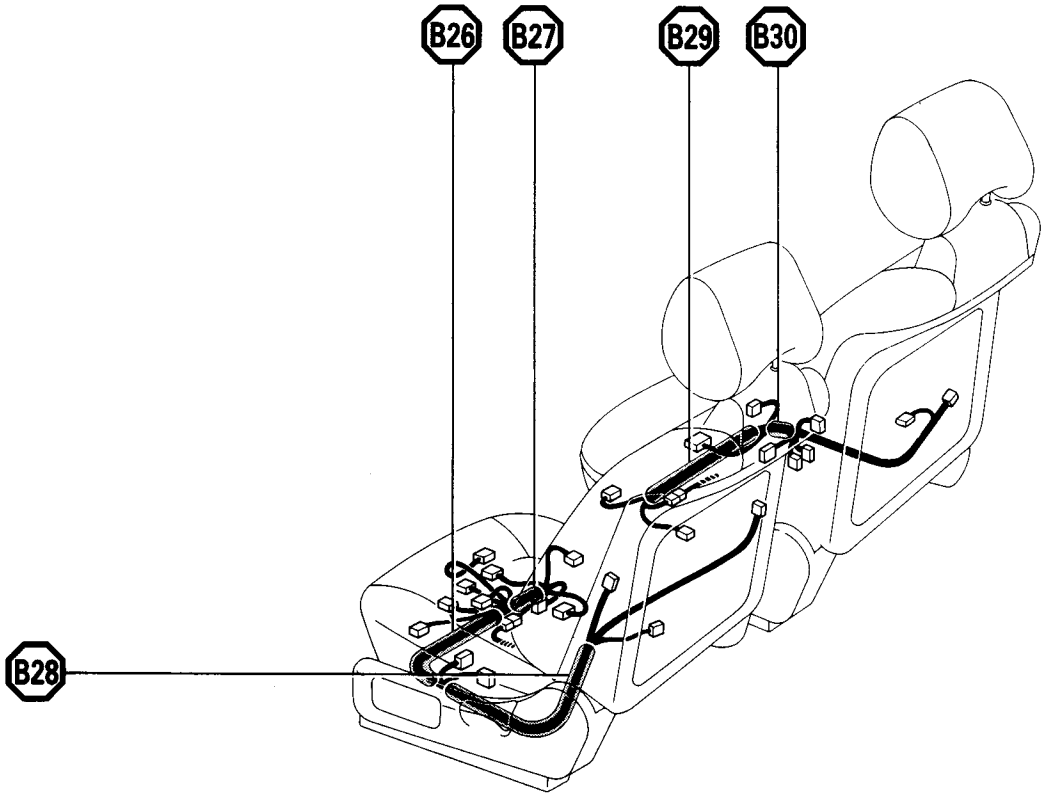

WhereEverybodyKnowsYourName

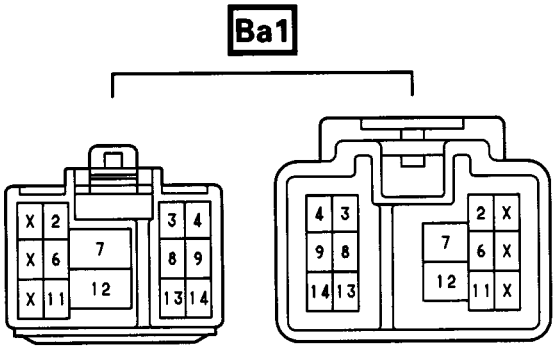

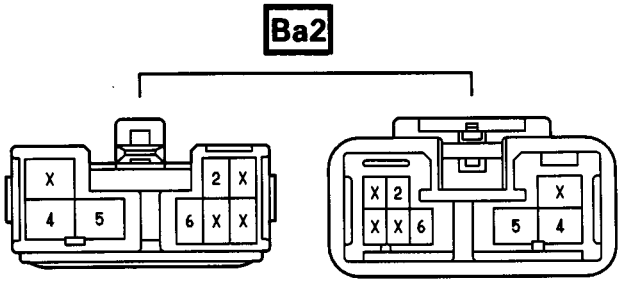

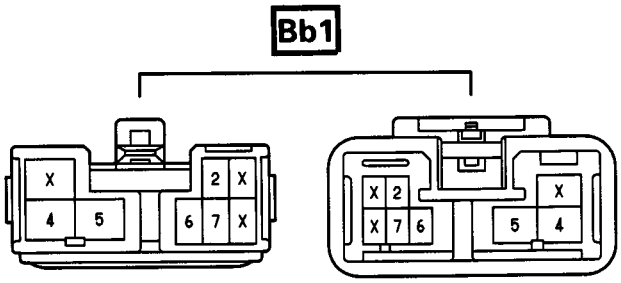

CODE	JOINING WIRE HARNESS AND WIRE HARNESS (CONNECTOR LOCATION)
Ba1	FLOOR WIRE AND FRONT SEAT LH WIRE (UNDER THE FRONT LH SEAT)
Ba2	
Bb1	FLOOR NO. 3 WIRE AND FRONT SEAT RH WIRE (UNDER THE FRONT RH SEAT)

WhereEverybodyKnowsYourName

CORNERING LIGHT

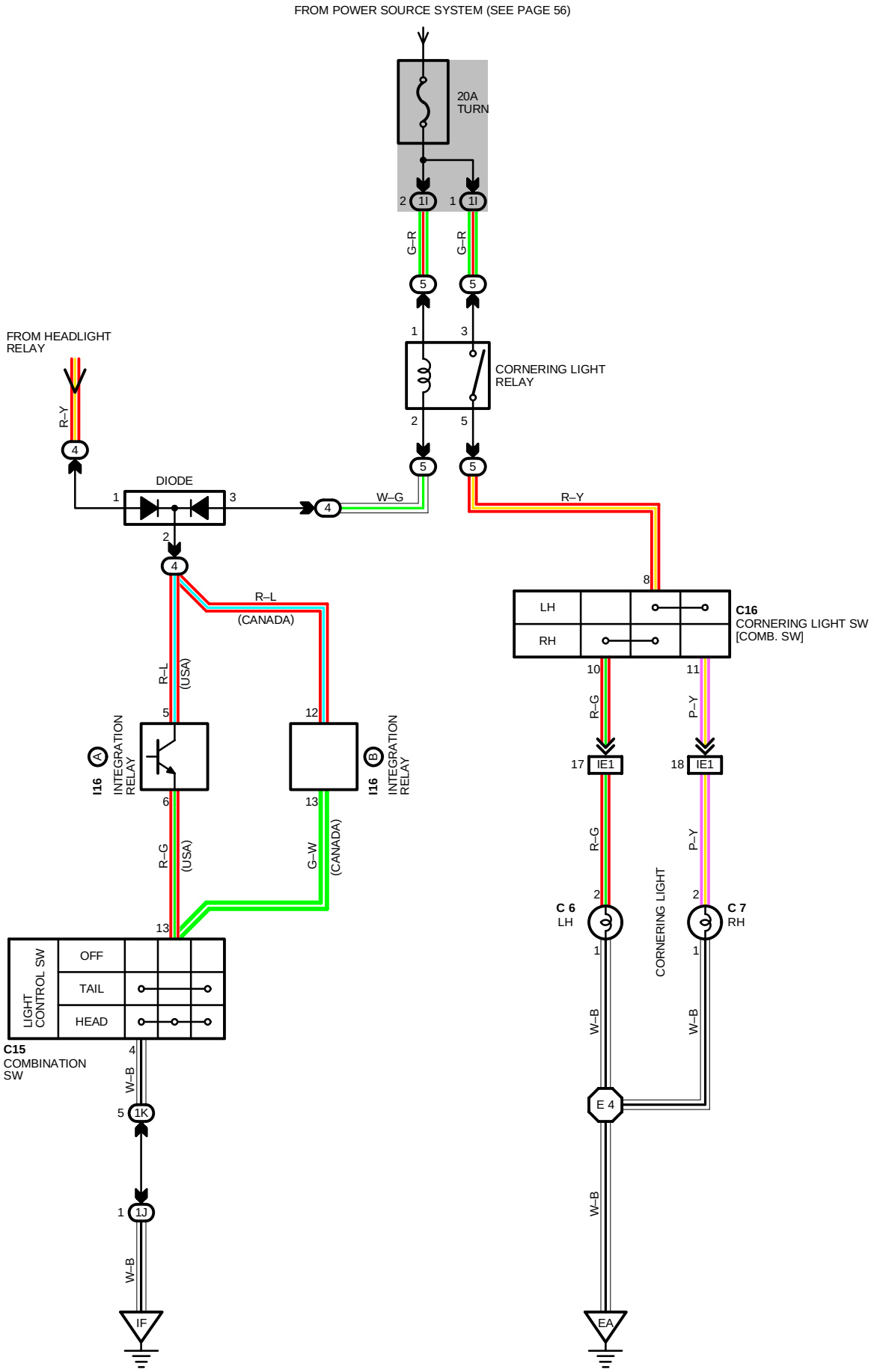

WhereEverybodyKnowsYourName

SERVICE HINTS

CORNERING LIGHT RELAY
3–5 : CLOSED WITH LIGHT CONTROL SW AT **HEAD** POSITION
C15 LIGHT CONTROL SW [COMB. SW]
13–4 : CLOSED WITH LIGHT CONTROL SW AT **HEAD** POSITION
C16 CORNERING LIGHT SW [COMB. SW]
8–11 : CLOSED WITH TURN SIGNAL LEVER AT **LEFT** POSITION
8–10 : CLOSED WITH TURN SIGNAL LEVER AT **RIGHT** POSITION

: PARTS LOCATION

CODE	SEE PAGE	CODE	SEE PAGE	CODE		SEE PAGE
C 6	26	**C15**	28	**I16**	A	29 (USA)
C 7	26	**C16**	28		B	29 (CANADA)

: RELAY BLOCKS

CODE	SEE PAGE	RELAY BLOCKS (RELAY BLOCK LOCATION)
4	23	LEFT KICK PANEL (J/B NO.1 LEFT)
5	23	LEFT KICK PANEL (J/B NO.1 RIGHT)

: JUNCTION BLOCK AND WIRE HARNESS CONNECTOR

CODE	SEE PAGE	JUNCTION BLOCK AND WIRE HARNESS (CONNECTOR LOCATION)
1I	20	COWL WIRE
1J		
1K		

: CONNECTOR JOINING WIRE HARNESS AND WIRE HARNESS

CODE	SEE PAGE	JOINING WIRE HARNESS AND WIRE HARNESS (CONNECTOR LOCATION)
IE1	36	ENGINE ROOM MAIN WIRE AND COWL WIRE (R/B NO. 4)

: GROUND POINTS

CODE	SEE PAGE	GROUND POINTS LOCATION
EA	34	FRONT SIDE OF RIGHT FENDER
IF	36	LEFT KICK PANEL

: SPLICE POINTS

CODE	SEE PAGE	WIRE HARNESS WITH SPLICE POINTS	CODE	SEE PAGE	WIRE HARNESS WITH SPLICE POINTS
E 4	34	ENGINE ROOM MAIN WIRE			

C 6, C 7 GRAY

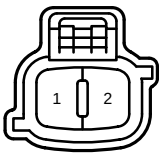

C15

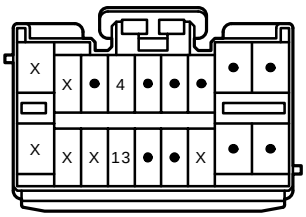

C16 BLACK

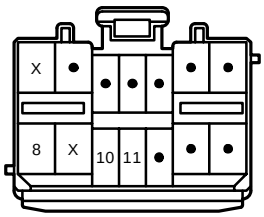

(USA) **I16** (A)

(CANADA) **I16** (B)

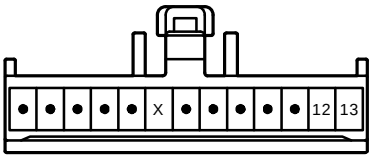

WhereEverybodyKnowsYourName

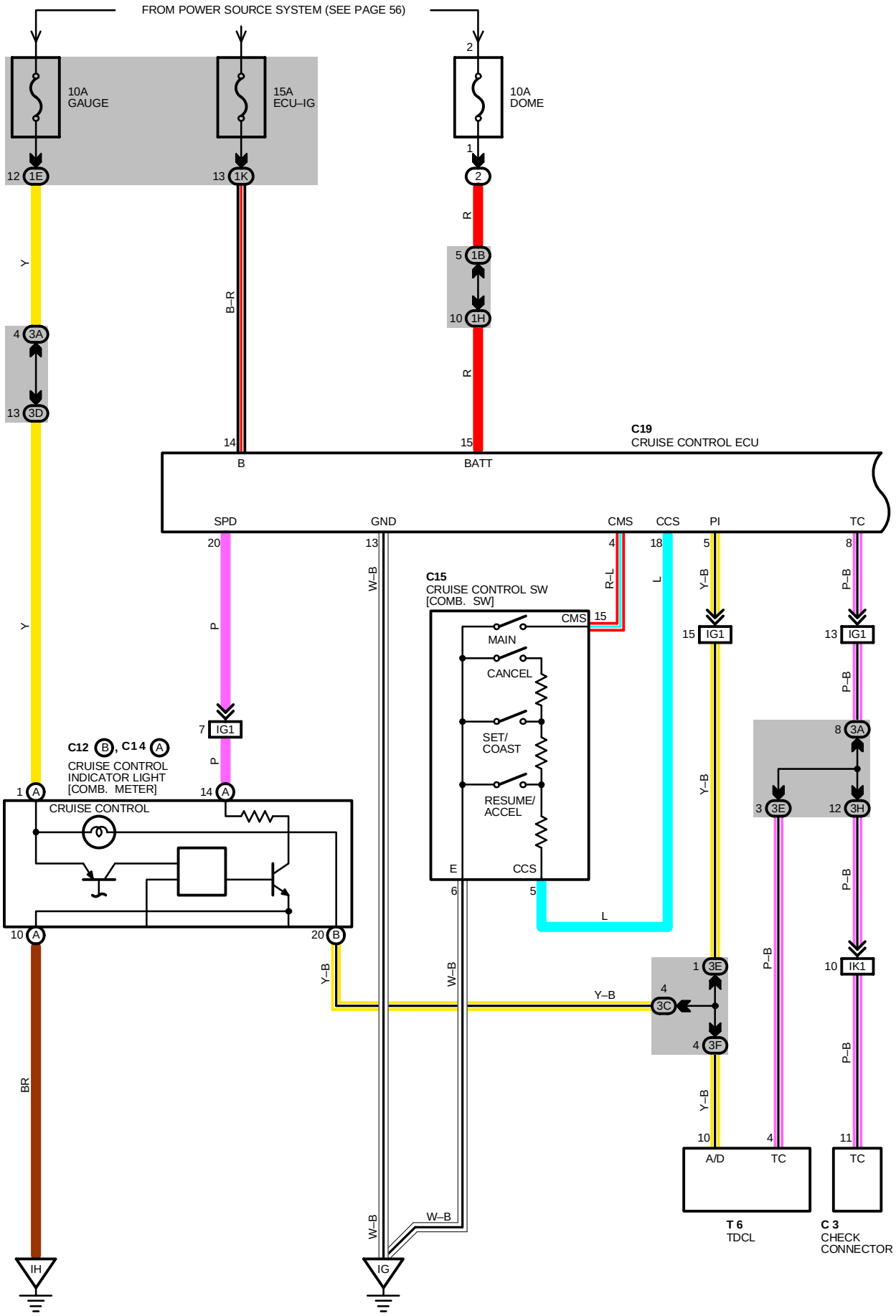

WhereEverybodyKnowsYourName

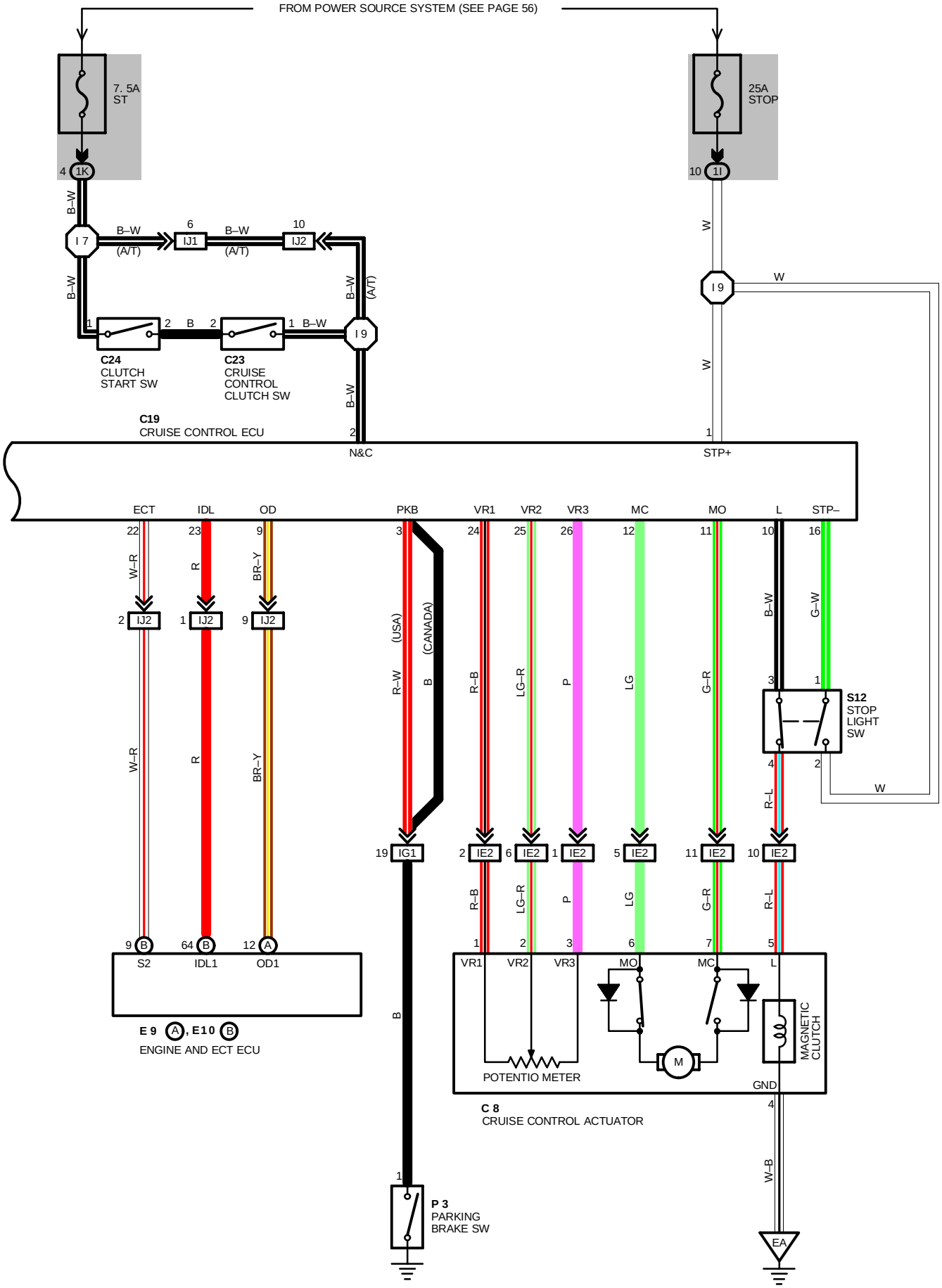

WhereEverybodyKnowsYourName

SYSTEM OUTLINE

CURRENT IS APPLIED AT ALL TIMES THROUGH **STOP** FUSE TO **TERMINAL 1** OF THE CONTROL ECU **TERMINAL 2** OF STOP LIGHT SWITCH, AND ALSO THROUGH THE **DOME** FUSE TO **TERMINAL 15** OF CRUISE CONTROL ECU.

WITH THE IGNITION SWITCH TURNED TO ON, THE CURRENT FLOWS THROUGH **GAUGE** FUSE TO **TERMINAL (A)1** OF COMBINATION METER AND THE CURRENT THROUGH **ECU–IG** FUSE FLOWS TO **TERMINAL 14** OF CRUISE CONTROL ECU.

WHEN THE IGNITION SWITCH IS ON AND THE CRUISE CONTROL MAIN SWITCH IS TURNED ON, A SIGNAL IS INPUT FROM **TERMINAL 15** OF CRUISE CONTROL MAIN SWITCH TO **TERMINAL 4** OF CRUISE CONTROL ECU. AS A RESULT, THE CRUISE CONTROL ECU FUNCTIONS AND THE CURRENT TO **TERMINAL 14** OF CRUISE CONTROL ECU TO **TERMINAL 13** OF CRUISE CONTROL ECU → **GROUND,** AND THE CRUISE CONTROL SYSTEM IS IN A CONDITION READY FOR OPERATION.

AT THE SAME TIME, THE CURRENT THROUGH THE **GAUGE** FUSE FLOWS FROM **TERMINAL (A)1** OF CRUISE CONTROL INDICATOR LIGHT → **TERMINAL (B)20** → **TERMINAL 5** OF CRUISE CONTROL ECU → **TERMINAL 13** → TO **GROUND,** CAUSING THE CRUISE CONTROL INDICATOR LIGHT TO LIGHT UP, INDICATING THAT THE CRUISE CONTROL IS READY FOR OPERATION.

1. SET OPERATION

WHEN THE CRUISE CONTROL MAIN SWITCH IS TURNED ON AND THE SET SWITCH IS PUSHED WITH THE VEHICLE SPEED WITHIN THE SET LIMIT (APPROX. **40** KM/H, **2.5** MPH TO **200** KM/H, **124** MPH), A SIGNAL IS INPUT TO **TERMINAL 18** OF THE CRUISE CONTROL ECU AND THE VEHICLE SPEED AT THE TIME THE SET SWITCH IS RELEASED IS MEMORIZED IN THE ECU AS THE SET SPEED.

2. SET SPEED CONTROL

DURING CRUISE CONTROL DRIVING, THE ECU COMPARES THE SET SPEED MEMORIZED IN THE ECU WITH THE ACTUAL VEHICLE SPEED INPUT INTO **TERMINAL 20** OF THE CRUISE CONTROL ECU FROM THE SPEED SENSOR, AND CONTROLS THE CRUISE CONTROL ACTUATOR TO MAINTAIN THE SET SPEED.

WHEN THE ACTUAL SPEED IS LOWER THAN THE SET SPEED, THE ECU CAUSES THE CURRENT TO THE CRUISE CONTROL ACTUATOR TO FLOW FROM **TERMINAL 12** → **TERMINAL 6** OF CRUISE CONTROL ACTUATOR → **TERMINAL 7** → **TERMINAL 11** OF CRUISE CONTROL ECU. AS A RESULT, THE MOTOR IN THE CRUISE CONTROL ACTUATOR IS ROTATED TO OPEN THE THROTTLE VALVE AND THE THROTTLE CABLE IS PULLED TO INCREASE THE VEHICLE SPEED. WHEN THE ACTUAL DRIVING SPEED IS HIGHER THAN THE SET SPEED, THE CURRENT TO CRUISE CONTROL ACTUATOR FLOWS FROM **TERMINAL 11** OF ECU → **TERMINAL 7** OF CRUISE CONTROL ACTUATOR → **TERMINAL 6** → **TERMINAL 12** OF CRUISE CONTROL ECU.

THIS CAUSES THE MOTOR IN THE CRUISE CONTROL ACTUATOR TO ROTATE TO CLOSE THE THROTTLE VALVE AND RETURN THE THROTTLE CABLE TO DECREASE THE VEHICLE SPEED.

3. COAST CONTROL

DURING THE CRUISE CONTROL DRIVING, WHILE THE COAST SWITCH IS ON, THE CRUISE CONTROL ACTUATOR RETURNS THE THROTTLE CABLE TO CLOSE THE THROTTLE VALVE AND DECREASE THE DRIVING SPEED. THE VEHICLE SPEED WHEN THE COAST SWITCH IS TURNED OFF IS MEMORIZED AND THE VEHICLE CONTINUES AT THE NEW SET SPEED.

4. ACCEL CONTROL

DURING CRUISE CONTROL DRIVING, WHILE THE ACCEL SWITCH IS TURNED ON, THE CRUISE CONTROL ACTUATOR PULLS THE THROTTLE CABLE TO OPEN THE THROTTLE VALVE AND INCREASE THE DRIVING SPEED.

THE VEHICLE SPEED WHEN THE ACCEL SWITCH IS TURNED OFF IS MEMORIZED AND THE VEHICLE CONTINUES AT THE NEW SET SPEED.

5. RESUME CONTROL

UNLESS THE VEHICLE SPEED FALLS BELOW THE MINIMUM SPEED LIMIT (APPROX. **40** KM/H, **25** MPH) AFTER CANCELING THE SET SPEED BY THE CANCEL SWITCH, PUSHING THE RESUME SWITCH WILL CAUSE THE VEHICLE TO RESUME THE SPEED SET BEFORE CANCELLATION.

6. MANUAL CANCEL MECHANISM

IF ANY OF THE FOLLOWING OPERATIONS OCCURS DURING CRUISE CONTROL OPERATION, THE SAFETY MAGNETIC CLUTCH OF THE ACTUATOR TURNS OFF AND THE MOTOR ROTATES TO CLOSE THE THROTTLE VALVE AND THE CRUISE CONTROL IS RELEASED.

* PLACING THE SHIFT LEVER IN “N” RANGE (NEUTRAL START SWITCH ON)). “SIGNAL INPUT TO **TERMINAL 2** OF ECU”
* DEPRESSING THE BRAKE LEVER (STOP LIGHT SWITCH ON). “SIGNAL INPUT TO **TERMINAL 16** OF ECU”
* PULLING THE PARKING BRAKE PEDAL (PARKING BRAKE SWITCH ON). “SIGNAL INPUT TO **TERMINAL 3** OF ECU”
* PUSHING THE CANCEL SWITCH (CANCEL SWITCH ON). “SIGNAL INPUT TO **TERMINAL 18**“

WhereEverybodyKnowsYourName

7. AUTO CANCEL FUNCTION

A) IF ANY OF THE FOLLOWING OPERATING CONDITIONS OCCURS DURING CRUISE CONTROL OPERATION, THE SET SPEED IS ERASED, CURRENT FLOW TO MAGNETIC CLUTCH IS STOPPED AND THE CRUISE CONTROL IS RELEASED. (MAIN SWITCH TURNS OFF).

WHEN THIS OCCURS, THE IGNITION SWITCH MUST BE TURNED OFF ONCE BEFORE THE MAIN SWITCH WILL TURN ON.

- ∗ OVER CURRENT TO TRANSISTER DRIVING MOTOR AND/OR MAGNETIC CLUTCH.
- ∗ WHEN CURRENT CONTINUED TO FLOW TO THE MOTOR INSIDE THE ACTUATOR IN THE THROTTLE VALVE “OPEN” DIRECTION.
- ∗ OPEN CIRCUIT IN MAGNETIC CLUTCH.
- ∗ MOMENTARY INTERRUPTION OF VEHICLE SPEED SIGNAL.
- ∗ SHORT CIRCUIT IN CRUISE CONTROL SWITCH.
- ∗ MOTOR DOES NOT OPERATE DESPITE THE MOTOR DRIVE SIGNAL BEING OUTPUT.

B) IF ANY OF THE FOLLOWING CONDITIONS OCCURS DURING CRUISE CONTROL OPERATION, THE SET SPEED IS ERASED AND THE CRUISE CONTROL IS RELEASED. (THE POWER OF MAGNETIC CLUTCH IS CUT OFF UNTIL THE SET SWITCH IS “ON” AGAIN.)

- ∗ WHEN THE VEHICLE SPEED FALLS BELOW THE MINIMUM SPEED LIMIT, APPROX. **40** KM/H (**2.5** MPH)
- ∗ WHEN THE VEHICLE SPEED FALLS MORE THAN **16** KM/H (**10** MPH) BELOW THE SET SPEED, E.G. ON AN UPWARD SLOPE.
- ∗ WHEN POWER TO THE CRUISE CONTROL SYSTEM IS MOMENTARILY CUT OFF.

C) IF ANY OF THE FOLLOWING CONDITIONS OCCURS DURING CRUISE CONTROL OPERATION, THE CRUISE CONTROL IS RELEASED.

- ∗ OPEN CIRCUIT FOR **TERMINAL 1** OF CRUISE CONTROL ECU AND SPLICE POINT “I 9”.

8. AUTOMATIC TRANSMISSION CONTROL FUNCTION

- ∗ IN OVERDRIVE. IF THE VEHICLE SPEED BECOMES LOWER THAN THE OVERDRIVE CUT SPEED (SET SPEED MINUS APPROX. **4** KM/H, **2.5** MPH) DURING CRUISE CONTROL OPERATION, SUCH AS DRIVING UP A HILL, THE OVERDRIVE IS RELEASED AND THE POWER INCREASED TO PREVENT A REDUCTION IN VEHICLE SPEED.
- ∗ AFTER RELEASING THE OVERDRIVE, VEHICLE SPEED BECOMES HIGHER THAN THE OVERDRIVE RETURN SPEED (SET SPEED MINUS APPROX. **2** M/H, **1.2** MPH) AND THE ECU JUDGES BY THE SIGNALS FROM POTENTIOMETER OF THE ACTUATOR THAT THE UPWARD SLOPE HAS FINISHED, OVERDRIVE IS RESUMED AFTER APPROXIMATELY **6** SECONDS.
- ∗ DURING CRUISE CONTROL DRIVING, THE CRUISE CONTROL OPERATION SIGNAL IS OUTPUT FROM THE CRUISE CONTROL ECU TO THE ENGINE AND TRANSMISSION ECU. UPON RECEIVING THIS SIGNAL, THE ENGINE AND TRANSMISSION ECU CHANGES THE SHIFT PATTERN TO NORMAL.

TO MAINTAIN SMOOTH CRUISE CONTROL OPERATION (ON A DOWNWARD SLOPE ETC.), LOCK–UP RELEASE OF THE TRANSMISSION WHEN THE IDLING POINT OF THE THROTTLE POSITION IS “ON” IS FORBIDDEN.

SERVICE HINTS

C 8 CRUISE CONTROL ACTUATOR

1–3 : APPROX. **2**K?
5–4 : APPROX. **38.5**?

C15 CRUISE CONTROL SW [COMB. SW]

15–6 :CONTINUITY WITH MAIN SW ON
5–6 :APPROX. **420**? WITH CANCEL SW ON
APPROX. **70**? WITH RESUME/ACCEL SW ON
APPROX. **200**? WITH SET/COAST SW ON

C19 CRUISE CONTROL ECU

14–GROUND : APPROX. **12** VOLTS WITH IGNITION SW AT **ON** POSITION
1, 15–GROUND : ALWAYS APPROX. **12** VOLTS
3–GROUND : CONTINUITY WITH PARKING BRAKE LEVER PULLED UP (ONE OF THE CANCEL SW) OR BRAKE LEVER WARNING SW ON
20–GROUND : **1** PULSE WITH **40**CM (DRIVER VEHICLE SLOWLY)
18–GROUND : APPROX. **420**? WITH CANCEL SW ON IN CONTROL SW
APPROX. **200**? WITH SET/COAST SW ON IN CONTROL SW
APPROX. **70**? WITH RESUME/ACCEL SW ON IN CONTROL SW
13–GROUND : ALWAYS CONTINUITY

WhereEverybodyKnowsYourName

CRUISE CONTROL

: PARTS LOCATION

CODE		SEE PAGE	CODE		SEE PAGE	CODE	SEE PAGE
C 3		26	**C19**		28	**P 3**	29
C 8		26	**C23**		28	**S12**	29
C12	B	28	**C24**		28	**T 6**	29
C14	A	28	**E 9**	A	28		
C15		28	**E10**	B	28		

: RELAY BLOCKS

CODE	SEE PAGE	RELAY BLOCKS (RELAY BLOCK LOCATION)
2	19	ENGINE COMPARTMENT LEFT

: JUNCTION BLOCK AND WIRE HARNESS CONNECTOR

CODE	SEE PAGE	JUNCTION BLOCK AND WIRE HARNESS (CONNECTOR LOCATION)
1B	20	ENGINE ROOM MAIN WIRE
1E	20	INSTRUMENT PANEL WIRE
1H	20	COWL WIRE
1I		
1K		
3A	22	INSTRUMENT PANEL WIRE
3C		
3D		
3E		
3F		
3H		

: CONNECTOR JOINING WIRE HARNESS AND WIRE HARNESS

CODE	SEE PAGE	JOINING WIRE HARNESS AND WIRE HARNESS (CONNECTOR LOCATION)
IE2	36	ENGINE ROOM MAIN WIRE AND COWL WIRE (BEHIND GLOVE BOX)
IG1	36	INSTRUMENT PANEL WIRE AND COWL WIRE (R/B NO. 5)
IJ1	36	ENGINE WIRE AND COWL WIRE (RIGHT KICK PANEL)
IJ2		
IK1	36	ENGINE WIRE AND INSTRUMENT PANEL WIRE (RIGHT KICK PANEL)

: GROUND POINTS

CODE	SEE PAGE	GROUND POINTS LOCATION
EA	34	FRONT SIDE OF RIGHT FENDER
IG	36	INSTRUMENT PANEL BRACE LH
IH	36	UNDER THE ASHTRAY LH

: SPLICE POINTS

CODE	SEE PAGE	WIRE HARNESS WITH SPLICE POINTS	CODE	SEE PAGE	WIRE HARNESS WITH SPLICE POINTS
I 7	38	COWL WIRE	**I 9**	38	COWL WIRE

WhereEverybodyKnowsYourName

C 3 BLACK

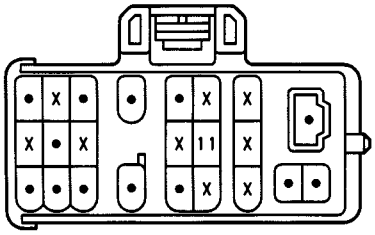

C 8 GRAY

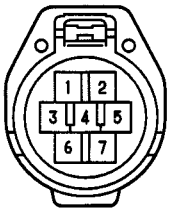

C12 (B)

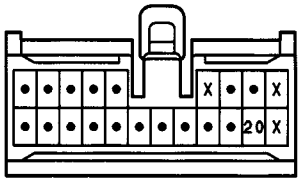

C14 (A)

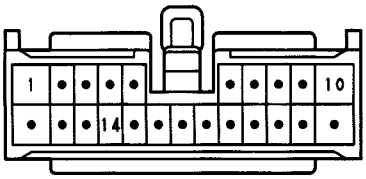

C15 GRAY

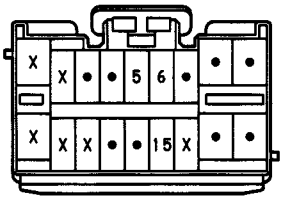

C19 GRAY

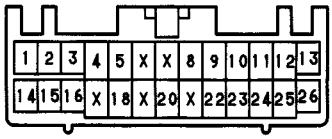

C23

C24

E 9 (A) DARK GRAY

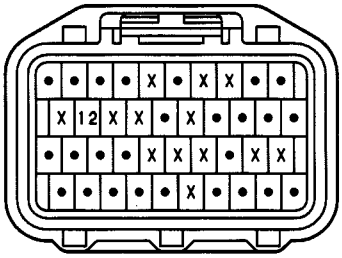

E10 (B) DARK GRAY

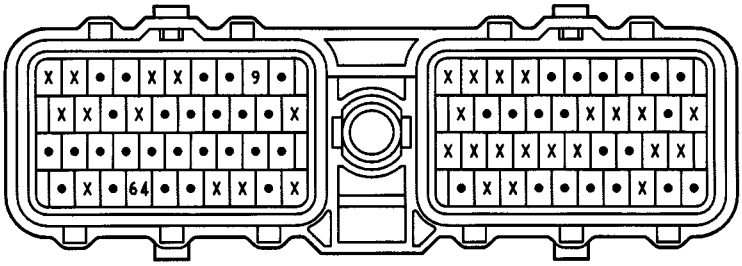

P 3

S12

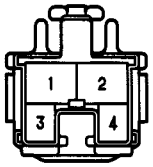

T 6 DARK GRAY

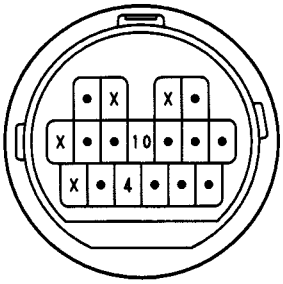

WhereEverybodyKnowsYourName

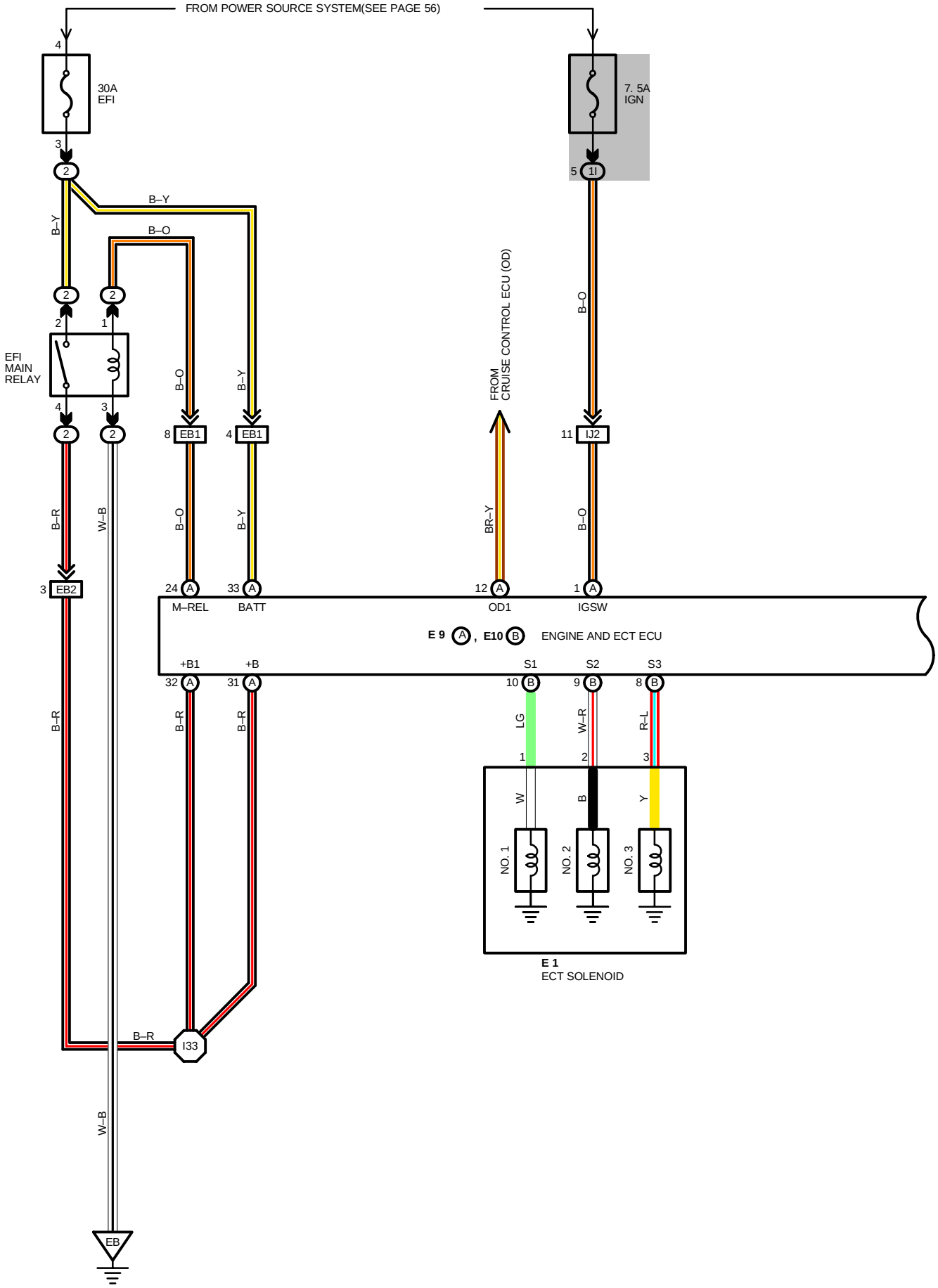

WhereEverybodyKnowsYourName

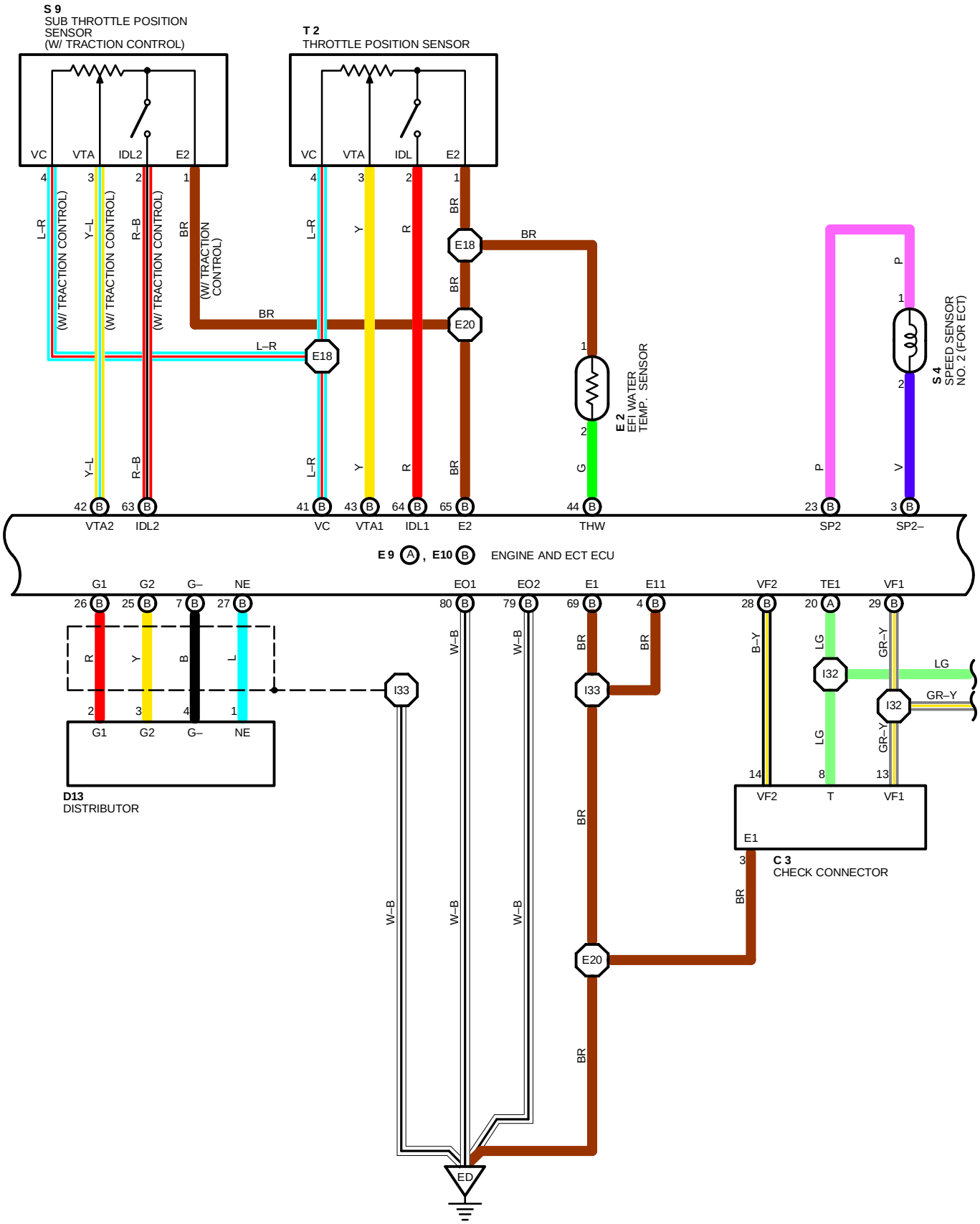

WhereEverybodyKnowsYourName

ECT AND A/T INDICATOR

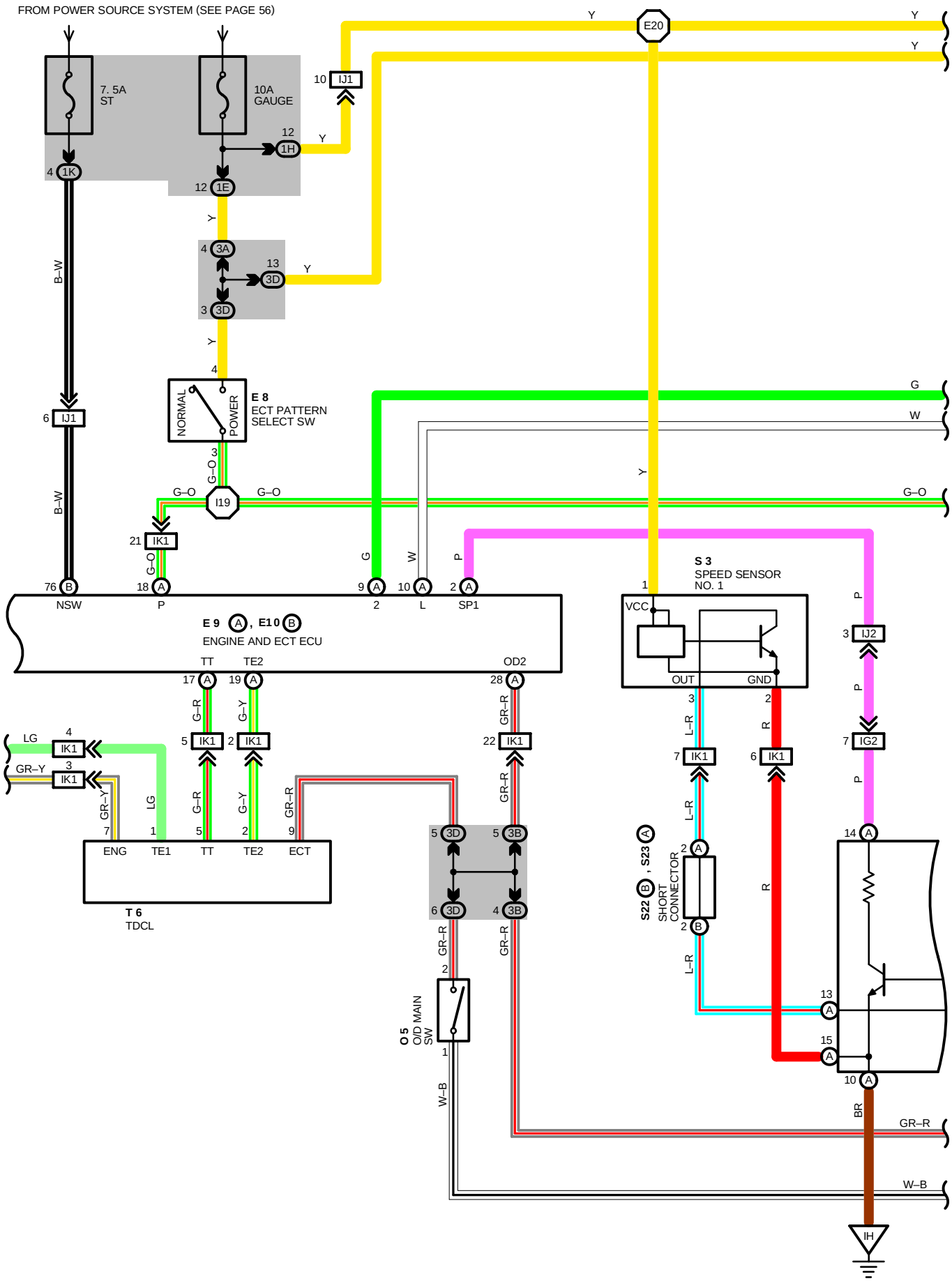

WhereEverybodyKnowsYourName

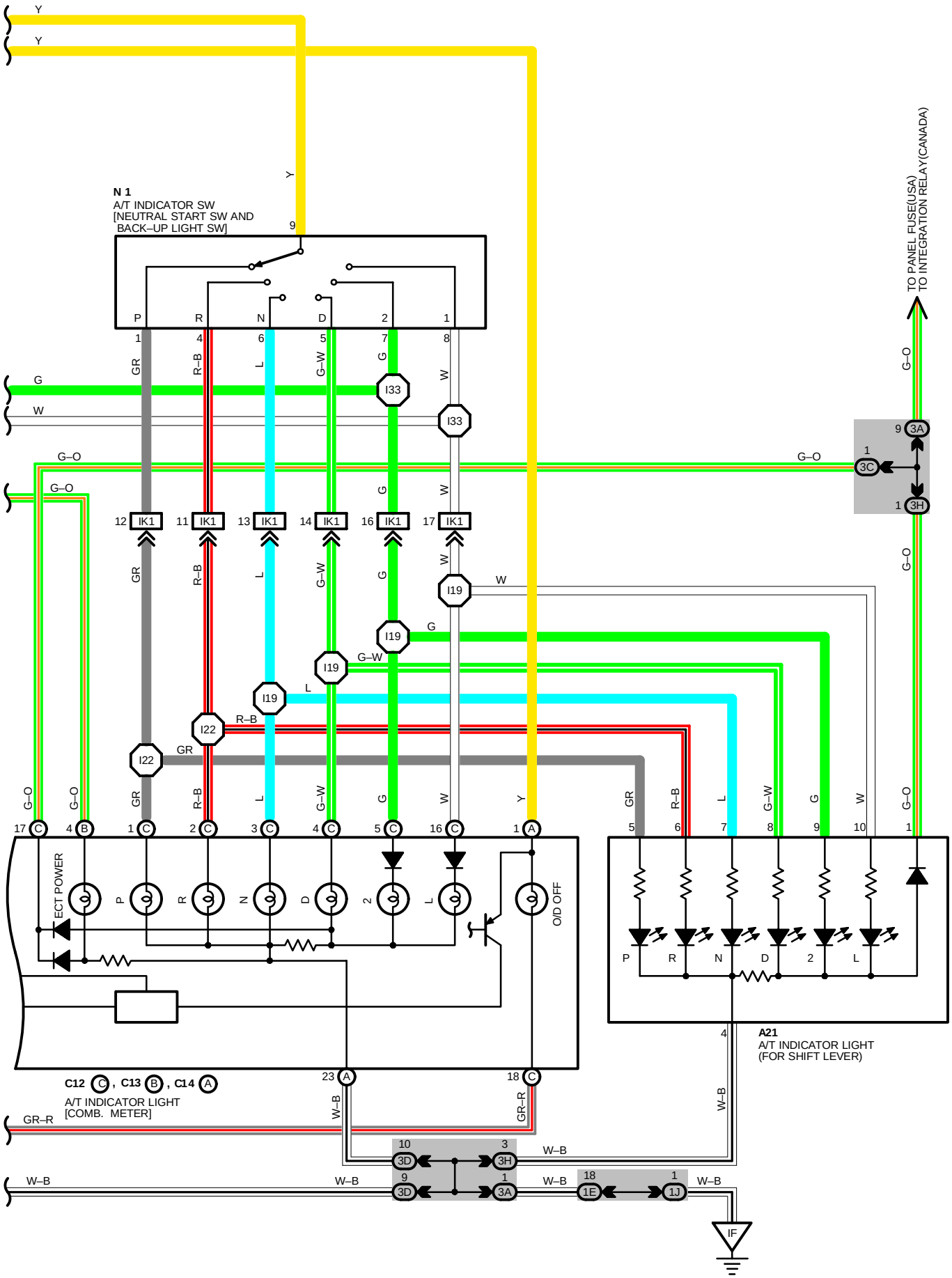

WhereEverybodyKnowsYourName

SYSTEM OUTLINE

THIS SYSTEM, ELECTRICALLY CONTROLS THE LINE PRESSURE, THROTTLE PRESSURE, LOCK–UP PRESSURE AND ACCUMULATOR PRESSURE ETC. THROUGH THE SOLENOID VALVE. THE ECT IS A SYSTEM WHICH PRECISELY CONTROLS GEAR SHIFT TIMING AND LOCK–UP TIMING IN RESPONSE TO THE VEHICLE'S DRIVING CONDITIONS AND THE ENGINE OPERATING CONDITIONS DETECTED BY VARIOUS SENSORS, MAKING SMOOTH DRIVING POSSIBLE BY SHIFT SELECTION FOR EACH GEAR WHICH IS THE MOST APPROPRIATE TO THE DRIVING CONDITIONS AT THAT TIME, AND CONTROLS THE ENGINE TORQUE DURING SHIFTING TO ACHIEVE OPTIMUM SHIFT FEELING.

1. GEAR SHIFT OPERATION

WHEN DRIVING, THE ENGINE WARM UP CONDITION IS INPUT AS A SIGNAL TO **TERMINAL (B)44** OF THE ECU FROM THE EFI WATER TEMP. SENSOR AND THE VEHICLE SPEED SIGNAL FROM SPEED SENSOR NO.2 IS INPUT TO **TERMINAL (B)23** OF THE ECU. AT THE SAME TIME, THE THROTTLE VALVE OPENING SIGNAL FROM THE THROTTLE POSITION SENSOR (MAIN) IS INPUT TO **TERMINAL (B)43** OF THE ECU AS ENGINE RPM CONDITION (IDLING, HIGH LOAD AND ACCELERATION CONDITIONS) SIGNAL.

BASED ON THESE SIGNALS, THE ECU SELECTS THE BEST SHIFT POSITION FOR DRIVING CONDITIONS AND SENDS CURRENT TO THE ECT SOLENOIDS.

WHEN SHIFTING TO 1ST SPEED, THE CURRENT FLOWS FROM **TERMINAL (B)10** OF THE ECU → **TERMINAL 1** OF ECT SOLENOIDS → **GROUND** AND CONTINUITY TO NO.1 SOLENOID CAUSES THE SHIFT (NO.2 SOLENOID DOES NOT HAVE CONTINUITY AT THIS TIME).

FOR 2ND SPEED, THE CURRENT FLOWS SIMULTANEOUSLY FROM **TERMINAL (B)9** OF THE ECU → **TERMINAL 2** OF ECT SOLENOIDS → **GROUND,** AND FROM **TERMINAL (B)10** OF THE ECU → **TERMINAL 1** OF ECT SOLENOIDS → **GROUND,** AND CONTINUITY TO NO.1 AND NO.2 SOLENOIDS CAUSES THE SHIFT.

FOR 3RD SPEED, THERE IS NO CONTINUITY TO NO.1 SOLENOID, ONLY TO NO.2 SOLENOID, CAUSING THE SHIFT.

SHIFTING INTO THE 4TH SPEED (OVERDRIVE) OCCURS WHEN NO CURRENT FLOWS TO NO.1 AND NO.2 SOLENOIDS. THE NO.4 SOLENOID (FOR ACCUMULATOR BACK PRESSURE MODULATION) IS INSTALLED TO ADJUST THE BACK PRESSURE ON THE ACCUMULATOR AND CONTROL THE HYDRAULIC PRESSURE DURING SHIFTING AND LOCK–UP IN ORDER TO PROVIDE SMOOTH SHIFTING WITH LITTLE SHIFT SHOCK.

2. LOCK–UP OPERATION

WHEN THE ECT ECU DECIDES, BASED ON EACH SIGNAL, THAT THE LOCK–UP CONDITION HAS BEEN MET, THE CURRENT FLOWS FROM → **TERMINAL (B)8** OF THE ECU → **TERMINAL 3** OF THE ECT SOLENOID → **GROUND,** CAUSING CONTINUITY TO THE LOCK–UP SOLENOID AND CAUSING LOCK–UP OPERATION.

3. STOP LIGHT SW CIRCUIT

IF THE BRAKE PEDAL IS DEPRESSED (STOP LIGHT SW ON) WHEN DRIVING IN LOCK–UP CONDITION, A SIGNAL IS INPUT TO **TERMINAL (A)4** OF THE ECU. THE ECU OPERATES AND CUTS THE CURRENT TO THE SOLENOID TO RELEASE LOCK–UP.

4. OVERDRIVE CIRCUIT

* O/D MAIN SW ON

  WHEN THE O/D MAIN SW IS TURNED ON (SW POINT IS OPEN), A SIGNAL IS INPUT TO **TERMINAL (A)28** OF THE ECU AND THE ECT CAUSES SHIFT TO OVERDRIVE WHEN THE CONDITIONS FOR OVERDRIVE ARE MET.

* O/D MAIN SW OFF

  WHEN THE O/D MAIN SW IS TURNED OFF (SW POINT IS CLOSED), THE CURRENT FLOWING THROUGH THE O/D OFF INDICATOR LIGHT FLOWS TO **GROUND** BY WAY OF THE O/D MAIN SW AND CAUSES THE O/D OFF INDICATOR LIGHT TO LIGHT UP. AT THE SAME TIME, A SIGNAL IS INPUT TO **TERMINAL (A)28** OF THE ECU AND THE ECT PREVENTS SHIFT INTO OVERDRIVE.

5. ECT PATTERN SELECT SW CIRCUIT

WHEN THE ECT PATTERN SELECT SW IS CHANGED FROM "NORMAL" TO "POWER", THE CURRENT THROUGH THE **GAUGE** FUSE FLOWS TO **TERMINAL 4** OF ECT PATTERN SELECT SW → **TERMINAL 3** → **TERMINAL (B)4** OF A/T INDICATOR → **TERMINAL (C)23** → **GROUND** AND CAUSES THE INDICATOR LIGHT TO LIGHT UP. AT THE SAME TIME, THE CURRENT FLOWS TO **TERMINAL (A)18** OF THE ECU AND THE ECU PERFORMS SHIFT UP AND SHIFT DOWN AT A HIGHER VEHICLE SPEED RANGE COMPARED WITH "NORMAL" POSITION.

6. KICK DOWN OPERATION

WHEN THE ACCELERATOR IS DEPRESSED FURTHER THAN THE FULL THROTTLE POSITION WHILE DRIVING, THE KICK DOWN SW TURNS ON AND ITS SIGNAL IS INPUT TO **TERMINAL (A)3** OF THE ECU. THEN, THE ECU CONTROLS THE CURRENT WHICH FLOWS FROM **TERMINALS (B)10** AND **(B)9** OF THE ECU TO THE NO. 1 AND NO. 2 SOLENOIDS AND SHIFTS DOWN BY TURNING THE SOLENOIDS ON AND OFF.

7. CRUISE CONTROL

WHEN CRUISE CONTROL OPERATION IS SELECTED A SIGNAL IS INPUT TO **TERMINAL (A)12** OF THE ECU FROM CRUISE CONTROL ECU. AS A RESULT, THE ECU OPERATES AND CONTROLS OVERDRIVE, LOCK–UP AND SO ON FOR SMOOTH DRIVING.

WhereEverybodyKnowsYourName

SERVICE HINTS

E 1 ECT SOLENOID

1–4 : APPROX. **5.3**?
2–5 : APPROX. **3.7**?
3–GROUND : APPROX. **13.2**?
6–GROUND : APPROX. **13.2**?

E 2 EFI WATER TEMP. SENSOR

1–2 : APPROX. **16.2**K? (**–20**˚C **–4**˚F)
APPROX. **2.5**K? (**20**˚C **68**˚F)
APPROX. **0.32**K? (**80**˚C **176**˚F)

E 8 ECT PATTERN SELECT SW

4–3 : CLOSED WITH ECT PATTERN SELECT SW AT **POWER** POSITION

E 9(A), E10(B) ENGINE AND ECT ECU

BATT – E1: ALWAYS APPROX. **12** VOLTS
IGSW – E1: APPROX. **12** VOLTS WITH IGNITION SW ON
BK – E1: APPROX. **12** VOLTS WITH BRAKE PEDAL DEPRESSED
P – E1: APPROX. **12** VOLTS WITH IGNITION SW **ON** POSITION AND ECT PATTERN SELECT SW AT **POWER** POSITION
KD–GROUND :CONTINUITY WITH KICK DOWN SW ON
OD2 – E1: APPROX. **12** VOLTS WITH O/D MAIN SW ON
0 VOLTS WITH O/D MAIN SW ON
+B–GROUND : APPROX. **12** VOLTS WITH IGNITION SW AT **ON** POSITION
+B1–GROUND : APPROX. **12** VOLTS WITH IGNITION SW AT **ON** POSITION
MREL–GROUND:APPROX. **12** VOLTS WITH IGNITION SW AT **ON** POSITION
E01–GROUND : ALWAYS CONTINUITY
E02–GROUND : ALWAYS CONTINUITY
L–GROUND : APPROX. **12** VOLTS WITH SHIFT LEVER AT “L” RANGE
2–GROUND : APPROX. **12** VOLTS WITH SHIFT LEVER AT “2” RANGE
R–GROUND : APPROX. **12** VOLTS WITH SHIFT LEVER AT “R” RANGE
E1–GROUND : ALWAYS CONTINUITY
VC–VTA1 : LESS THAN **1** VOLTS WITH THROTTLE VALVE FULLY CLOSED
MORE THAN **3** VOLTS WITH THROTTLE VALVE OPEN
VTA1 – E2: CONTINUITY WITH THROTTLE VALVE FULLY CLOSED
APPROX. **4**K? WITH THROTTLE VALVE FULLY OPEN
VC – E2: APPROX. **5** VOLTS

O 1 O/D DIRECT CLUTCH SPEED SENSOR

1–2 : APPROX. **620**?

S 4 SPEED SENSOR NO.2 (FOR ECT)

1–2 : APPROX. **620**?

S12 STOP LIGHT SW

2–1 : CLOSED WITH BRAKE PEDAL DEPRESSED

WhereEverybodyKnowsYourName

: PARTS LOCATION

CODE		SEE PAGE	CODE		SEE PAGE	CODE		SEE PAGE
A21		28	**E 2**		26	**S 9**		27
C 3		26	**E 8**		28	**S22**	B	29
C12	C	28	**E 9**	A	28	**S23**	A	29
C13	B	28	**E10**	B	28	**T 2**		27
C14	A	28	**N 1**		27	**T 6**		29
D13		26	**O 5**		29	**S 3**		27
E 1		26	**S 4**		27			

: RELAY BLOCKS

CODE	SEE PAGE	RELAY BLOCKS (RELAY BLOCK LOCATION)
2	19	ENGINE COMPARTMENT LEFT

: JUNCTION BLOCK AND WIRE HARNESS CONNECTOR

CODE	SEE PAGE	JUNCTION BLOCK AND WIRE HARNESS (CONNECTOR LOCATION)
1E	20	INSTRUMENT PANEL WIRE
1H	20	COWL WIRE
1I		
1J		
1K		
3A	22	INSTRUMENT PANEL WIRE
3B		
3D		
3H		

: CONNECTOR JOINING WIRE HARNESS AND WIRE HARNESS

CODE	SEE PAGE	JOINING WIRE HARNESS AND WIRE HARNESS (CONNECTOR LOCATION)
EB1	34	ENGINE WIRE AND ENGINE ROOM MAIN WIRE (FRONT SIDE OF R/B NO. 2)
EB2		
IG2	36	INSTRUMENT PANEL WIRE AND COWL WIRE (R/B NO. 5)
IJ1	36	ENGINE WIRE AND COWL WIRE (RIGHT KICK PANEL)
IJ2		
IK1	36	ENGINE WIRE AND INSTRUMENT PANEL WIRE (RIGHT KICK PANEL)

: GROUND POINTS

CODE	SEE PAGE	GROUND POINTS LOCATION
EB	34	FRONT SIDE OF LEFT FENDER
ED	34	REAR SIDE OF CYLINDER HEAD RH
IF	36	LEFT KICK PANEL
IH	36	UNDER THE ASHTRAY LH

: SPLICE POINTS

CODE	SEE PAGE	WIRE HARNESS WITH SPLICE POINTS	CODE	SEE PAGE	WIRE HARNESS WITH SPLICE POINTS
E18	34	ENGINE WIRE	**I22**	38	INSTRUMENT PANEL WIRE
E20			**I32**	38	ENGINE WIRE
I19	38	INSTRUMENT PANEL WIRE	**I33**		

WhereEverybodyKnowsYourName

A21

C 3 BLACK

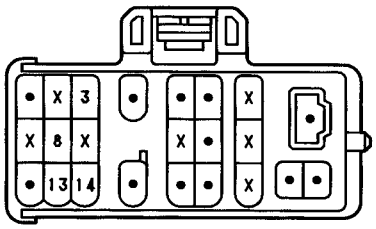

C12 Ⓒ

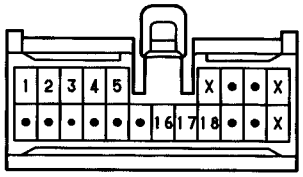

C13 Ⓑ

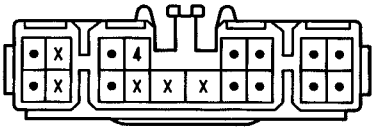

C14 Ⓐ

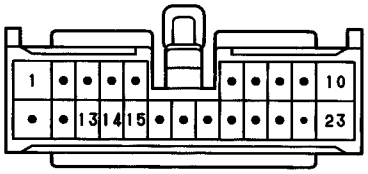

E 1 BLACK

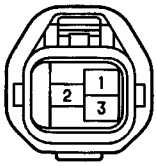

E 2 DARK GREEN

D13 BLACK

E 8

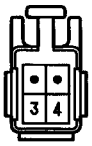

E 9 Ⓐ DARK GRAY

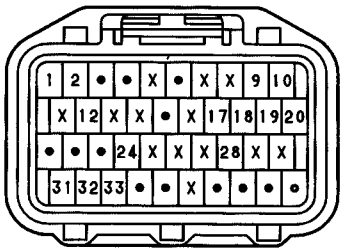

E10 Ⓑ DARK GRAY

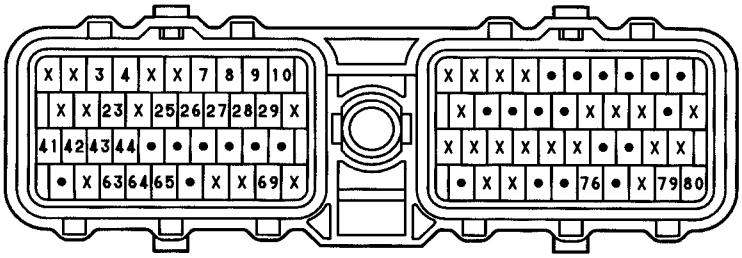

N 1 GRAY

O 5

S 3

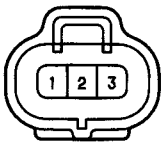

S 4 BLACK

S 9 BLACK

S22 Ⓑ

S23 Ⓐ

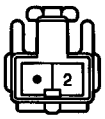

T 2 BLACK

T 6 DARK GRAY

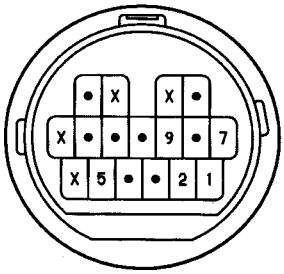

WhereEverybodyKnowsYourName

SYSTEM OUTLINE

THIS SYSTEM UTILIZES AN ECU AND MAINTAINS OVERALL CONTROL OF THE ENGINE, TRANSMISSION AND SO ON. AN OUTLINE OF THE ENGINE CONTROL IS EXPLAINED HERE.

1. INPUT SIGNALS

(1) WATER TEMP. SIGNAL CIRCUIT

THE WATER TEMP. SENSOR DETECTS THE ENGINE COOLANT TEMP. AND HAS A BUILT–IN THERMISTOR WITH A RESISTANCE WHICH VARIES ACCORDING TO THE WATER TEMP. THE WATER TEMP. IS INPUT INTO **TERMINAL THW** OF ENGINE CONTROL ECU AS A CONTROL SIGNAL.

(2) INTAKE AIR TEMP. SIGNAL CIRCUIT

THE INTAKE AIR TEMP. SENSOR IS INSTALLED IN THE AIR FLOW METER AND DETECTS THE INTAKE AIR TEMP., WHICH IS INPUT AS A CONTROL SIGNAL TO **TERMINAL THA** OF ENGINE CONTROL ECU.

(3) OXYGEN SENSOR SIGNAL CIRCUIT

THE OXYGEN DENSITY IN THE EXHAUST EMISSION IS DETECTED AND INPUT AS A CONTROL SIGNAL FROM THE OXYGEN SENSOR NO. 1 AND NO. 2 TO **TERMINALS OX1, OX2** OF THE ECU AND FROM THE OXYGEN SENSOR SUB (FOR CALIFORNIA) TO **TERMINAL OX3** OF THE ECU.

TO STABILIZE DETECTION PERFORMANCE BY THE OXYGEN SENSOR SUB (FOR CALIFORNIA) IS WARMED. THIS HEATER IS ALSO CONTROLLED BY THE ECU (HT).

(4) RPM SIGNAL CIRCUIT

CRANKSHAFT POSITION IS DETECTED BY THE PICK–UP COIL INSTALLED INSIDE THE DISTRIBUTOR. CRANKSHAFT POSITION IS INPUT AS A CONTROL SIGNAL TO **TERMINALS G1** AND **G2** OF THE ECU, AND RPM IS INPUT TO **TERMINAL NE**.

(5) THROTTLE SIGNAL CIRCUIT

THE THROTTLE POSITION SENSOR DETECTS THE THROTTLE VALVE OPENING ANGLE AS A CONTROL SIGNAL, WHICH IS INPUT INTO **TERMINAL VTA1** OF THE ECU. WHEN THE VALVE IS COMPLETELY CLOSED, THE CONTROL SIGNAL IS INPUT INTO **TERMINAL IDL1**.

(6) VEHICLE SPEED CIRCUIT

THE VEHICLE SPEED IS DETECTED BY SPEED SENSOR NO. 1 INSTALLED IN THE TRANSMISSION AND THE SIGNAL IS INPUT TO **TERMINAL SPD** OF THE ECU VIA THE COMB. METER.

(7) NEUTRAL START SIGNAL CIRCUIT

THE NEUTRAL START SW DETECTS WHETHER THE SHIFT POSITION IS IN NEUTRAL OR NOT, AND THE SIGNAL IS INPUT INTO **TERMINAL NSW** OF THE ECU.

(8) AIRCONDITIONING SW SIGNAL CIRCUIT

THE OPERATING VOLTAGE OF THE A/C MAGNETIC CLUTCH IS DETECTED AND THE SIGNAL IS INPUT INTO **TERMINAL ACMG** OF ECU AS A CONTROL SIGNAL.

(9) BATTERY SIGNAL CIRCUIT

VOLTAGE IS CONSTANTLY APPLIED TO **TERMINAL BATT** OF THE ECU. WITH THE IGNITION SW TURNED ON, THE VOLTAGE FOR ECU START–UP POWER SUPPLY IS APPLIED TO **TERMINALS +B** AND **+B1** OF ECU VIA EFI MAIN RELAY.

THE CURRENT FLOWING THROUGH THE **IGN** FUSE FLOWS TO **TERMINAL IGSW** OF THE ECU.

(10) INTAKE AIR VOLUME SIGNAL CIRCUIT

INTAKE AIR VOLUME IS DETECTED BY THE AIR FLOW METER AND THE SIGNAL IS INPUT TO **TERMINAL KS** OF THE ECU AS A CONTROL SIGNAL.

(11) STOP LIGHT SW SIGNAL CIRCUIT

THE STOP LIGHT SW IS USED TO DETECT WHETHER OR NOT THE VEHICLE IS BRAKING AND THE SIGNAL IS INPUT INTO **TERMINAL STP** OF THE ECU AS A CONTROL SIGNAL.

(12) STA SIGNAL CIRCUIT

TO CONFIRM WHETHER THE ENGINE IS CRANKING, THE VOLTAGE APPLIED TO THE STARTER MOTOR DURING CRANKING IS DETECTED AND THE SIGNAL IS INPUT INTO **TERMINAL STA** OF THE ECU AS A CONTROL SIGNAL.

(13) ENGINE KNOCK SIGNAL CIRCUIT

ENGINE KNOCKING IS DETECTED BY KNOCK SENSOR NO. 1 AND NO. 2 AND THE SIGNAL IS INPUT INTO **TERMINALS KNK1** AND **KNK2** AS A CONTROL SIGNAL.

WhereEverybodyKnowsYourName

2. CONTROL SYSTEM

* EFI (ELECTRONIC FUEL INJECTION) SYSTEM

  THE EFI SYSTEM MONITORS THE ENGINE CONDITION THROUGH THE SIGNALS INPUT FROM EACH SENSOR (INPUT SIGNALS FROM (1) TO (13) ETC.) TO THE ECU. THE BEST FUEL INJECTION TIMING IS DECIDED BASED ON THIS DATA AND THE PROGRAM MEMORIZED BY THE ECU, AND THE CONTROL SIGNAL IS OUTPUT TO **TERMINALS #10, #20, #30, #40, #50** AND **#60** OF THE ECU TO OPERATE THE INJECTOR. (INJECT THE FUEL). THE EFI SYSTEM PRODUCES CONTROL OF FUEL INJECTION OPERATION BY THE ECU IN RESPONSE TO THE DRIVING CONDITIONS.

* ESA (ELECTRONIC SPARK ADVANCE) SYSTEM

  THE ESA SYSTEM MONITORS THE ENGINE CONDITION THROUGH THE SIGNALS INPUT TO THE ECU FROM EACH SENSOR (INPUT SIGNALS FROM (1), (2), (4) TO (13) ETC.). THE BEST IGNITION TIMING IS DECIDED ACCORDING TO THIS DATA AND THE MEMORIZED DATA IN THE ECU AND THE CONTROL SIGNAL IS OUTPUT TO **TERMINAL IGT** THIS SIGNAL CONTROLS THE IGNITER TO PROVIDE THE BEST IGNITION TIMING FOR THE DRIVING CONDITIONS.

* OXYGEN SENSOR HEATER CONTROL SYSTEM (USA SPEC.)

  THE OXYGEN SENSOR HEATER CONTROL SYSTEM TURNS THE HEATER ON WHEN THE INTAKE AIR VOLUME IS LOW (TEMP. OF EXHAUST EMISSIONS IS LOW), AND WARMS UP THE OXYGEN SENSOR TO IMPROVE DETECTION PERFORMANCE OF THE SENSOR.

  THE ECU EVALUATES THE SIGNALS FROM EACH SENSOR (INPUT SIGNALS FROM (1), (2), (4), (9) TO (11) ETC.,) AND OUTPUTS CURRENT TO **TERMINAL HT** TO CONTROL THE HEATER.

* ISC (IDLE SPEED CONTROL) SYSTEM

  THE ISC SYSTEM (STEP MOTOR TYPE) INCREASES THE RPM AND PROVIDES IDLING STABILITY FOR FAST IDLE–UP WHEN THE ENGINE IS COLD, AND WHEN THE IDLE SPEED HAS DROPPED DUE TO ELECTRICAL LOAD AND SO ON. THE ECU EVALUATES THE SIGNALS FROM EACH SENSOR (INPUT SIGNALS FROM (1), (4), (5), (8), (9), (11) ETC.), OUTPUTS CURRENT TO **TERMINAL ISC1, ISC2, ISC3** AND **ISC4** TO CONTROL ISC VALVE.

* EGR CONTROL SYSTEM

  THE EGR CONTROL SYSTEM DETECTS THE SIGNAL FROM EACH SENSOR (INPUT SIGNALS FROM (1), (4), (9), (10) ETC.), AND OUTPUTS CURRENT TO **TERMINAL EGR** TO CONTROL THE EGR VALVE.

* FUEL PUMP CONTROL SYSTEM

  THE COMPUTER OUTPUTS CURRENT TO **TERMINAL FPC** AND CONTROLS THE FUEL PUMP ECU AND FUEL PUMP DRIVE SPEED IN RESPONSE TO CONDITIONS.

* ACIS (ACOUSTIC CONTROL INDUCTION SYSTEM)

  ACIS INCLUDES A VALVE IN THE BULKHEAD SEPARATING THE SURGE TANK INTO TWO PARTS. THIS VALE IS OPENED AND CLOSED IN ACCORDANCE WITH THE DRIVING CONDITIONS TO CONTROL THE INTAKE MANIFOLD LENGTH IN TWO STAGES FOR INCREASED ENGINE OUTPUT IN ALL RANGES FROM LOW TO HIGH SPEEDS.

  THE ECU JUDGES THE VEHICLE SPEED BY THE SIGNALS ((4), (5)) FROM EACH SENSOR AND OUTPUTS SIGNALS TO THE **TERMINAL ACIS** TO CONTROL THE VSV (FOR OPENING AND CLOSING THE INTAKE CONTROL VALVE).

3. DIAGNOSIS SYSTEM

WITH THE DIAGNOSIS SYSTEM, WHEN THERE IS A MALFUNCTION IN THE ECU SIGNAL SYSTEM, THE MALFUNCTIONING SYSTEM IS RECORDED IN THE MEMORY. THE MALFUNCTIONING SYSTEM CAN BE FOUND BY READING THE CODE DISPLAYED BY THE CHECKING ENGINE WARNING LIGHT.

4. FAIL–SAFE SYSTEM

WHEN A MALFUNCTION HAS OCCURRED IN ANY SYSTEM, IF THERE IS A POSSIBILITY OF ENGINE TROUBLE BEING CAUSED BY CONTINUED CONTROL BASED ON THE SIGNALS FROM THAT SYSTEM, THE FAIL–SAFE SYSTEM EITHER CONTROLS THE SYSTEM BY USING DATA (STANDARD VALUES) RECORDED IN THE ECU MEMORY OR ELSE STOPS THE ENGINE.

NOTE: THE SPECIFICATION DESCRIPTIONS **"USA SPEC."** AND **"EXC. USA SPEC."** USED IN THIS SECTION INDICATE THE FOLLOWING SPECIFICATIONS.

USA SPEC. : USA (50 STATES) SPECIFICATIONS

EXC. USA SPEC. : USA (EXCEPT CALIFORNIA) AND CANADIAN SPECIFICATIONS.

WhereEverybodyKnowsYourName

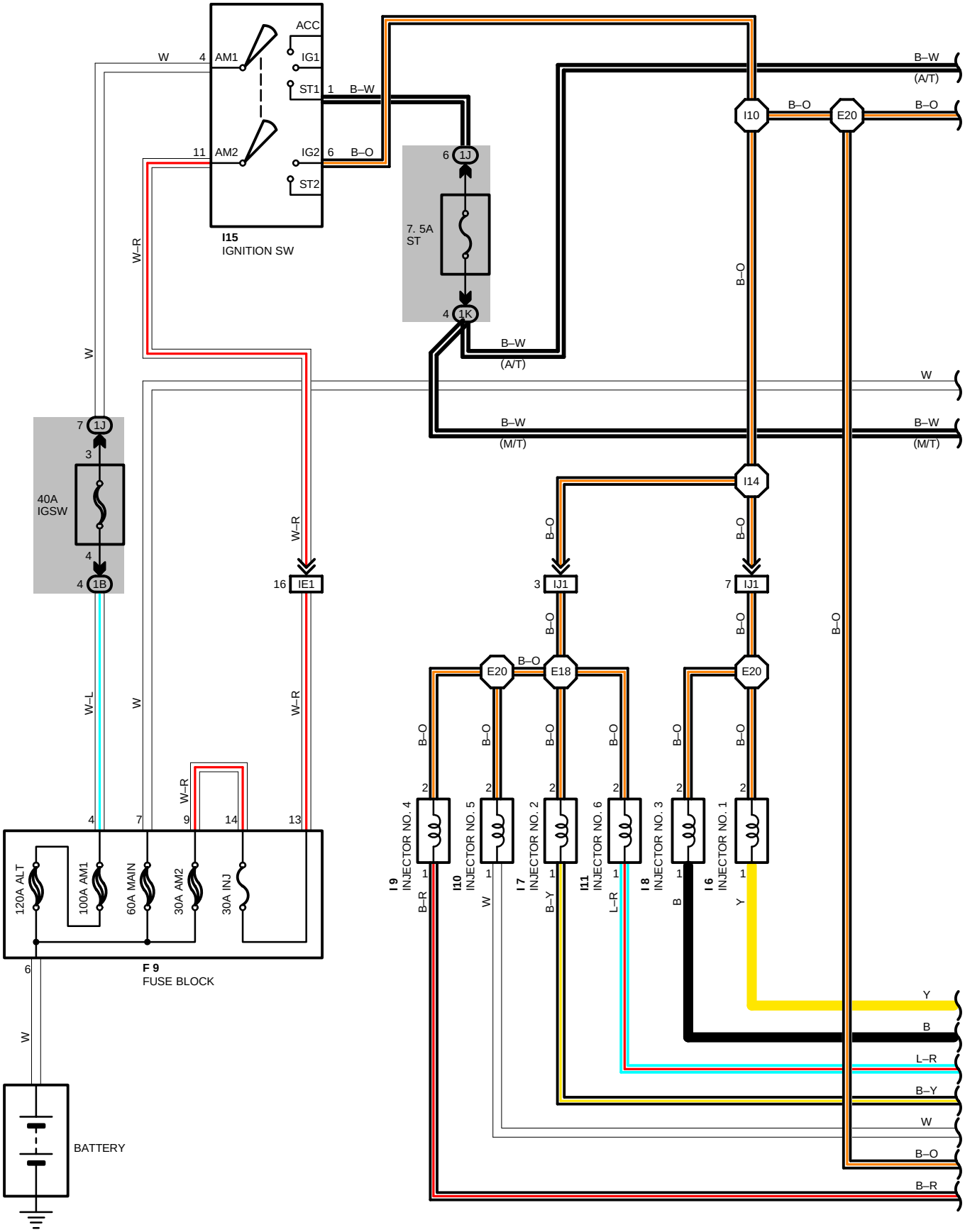

WhereEverybodyKnowsYourName

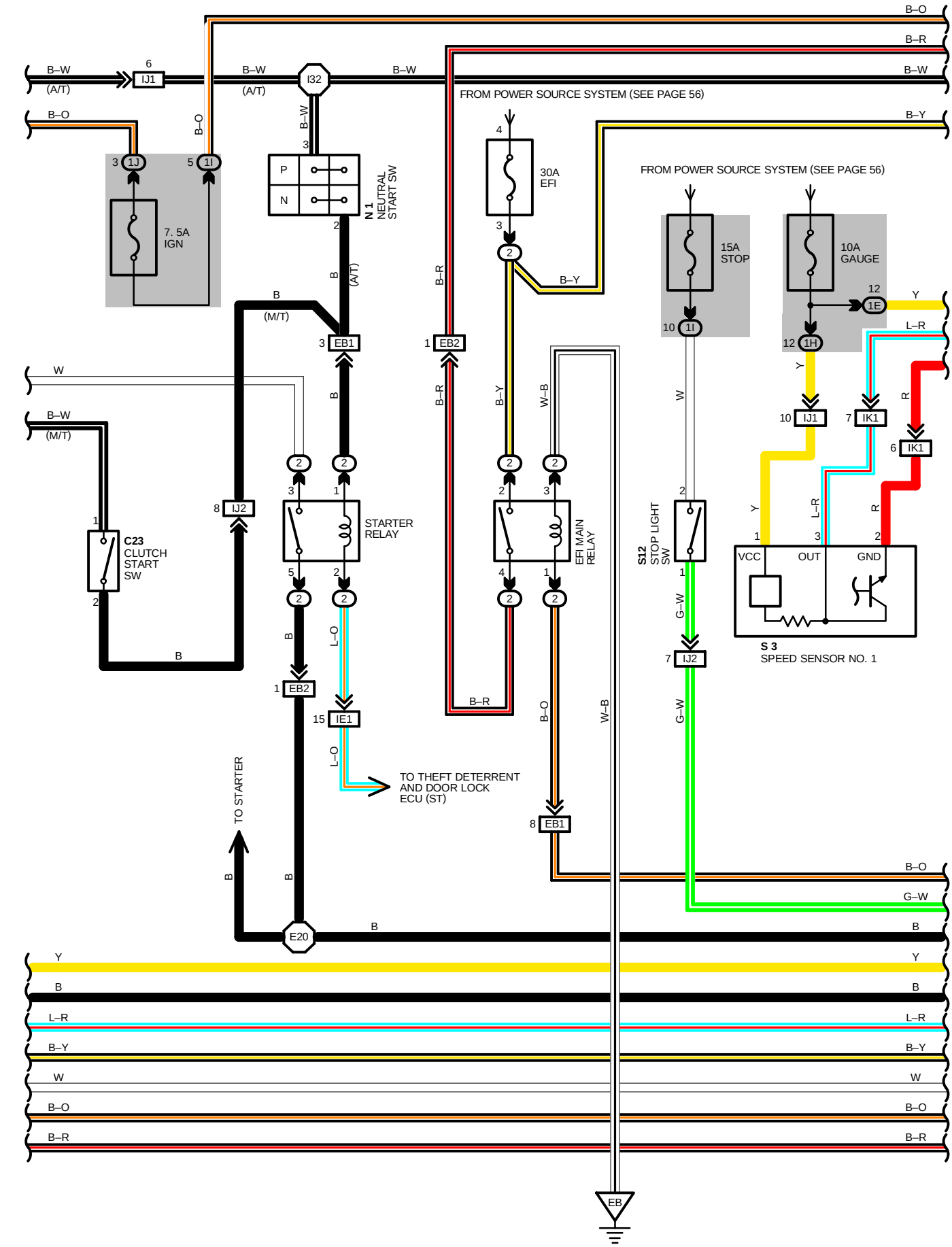

WhereEverybodyKnowsYourName

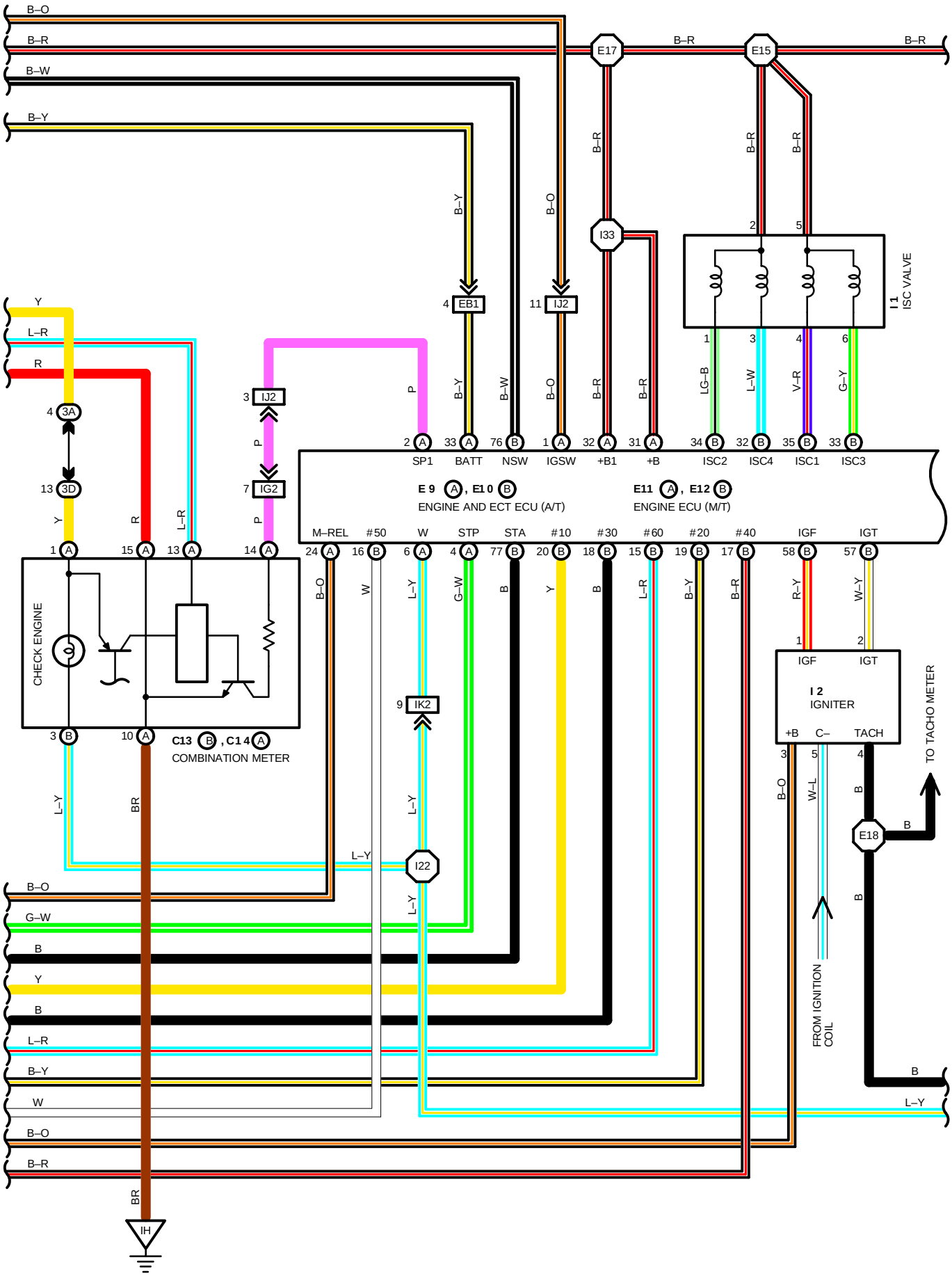

WhereEverybodyKnowsYourName

*1 : W/ TRACTION CONTROL
*2 : W/O TRACTION CONTROL

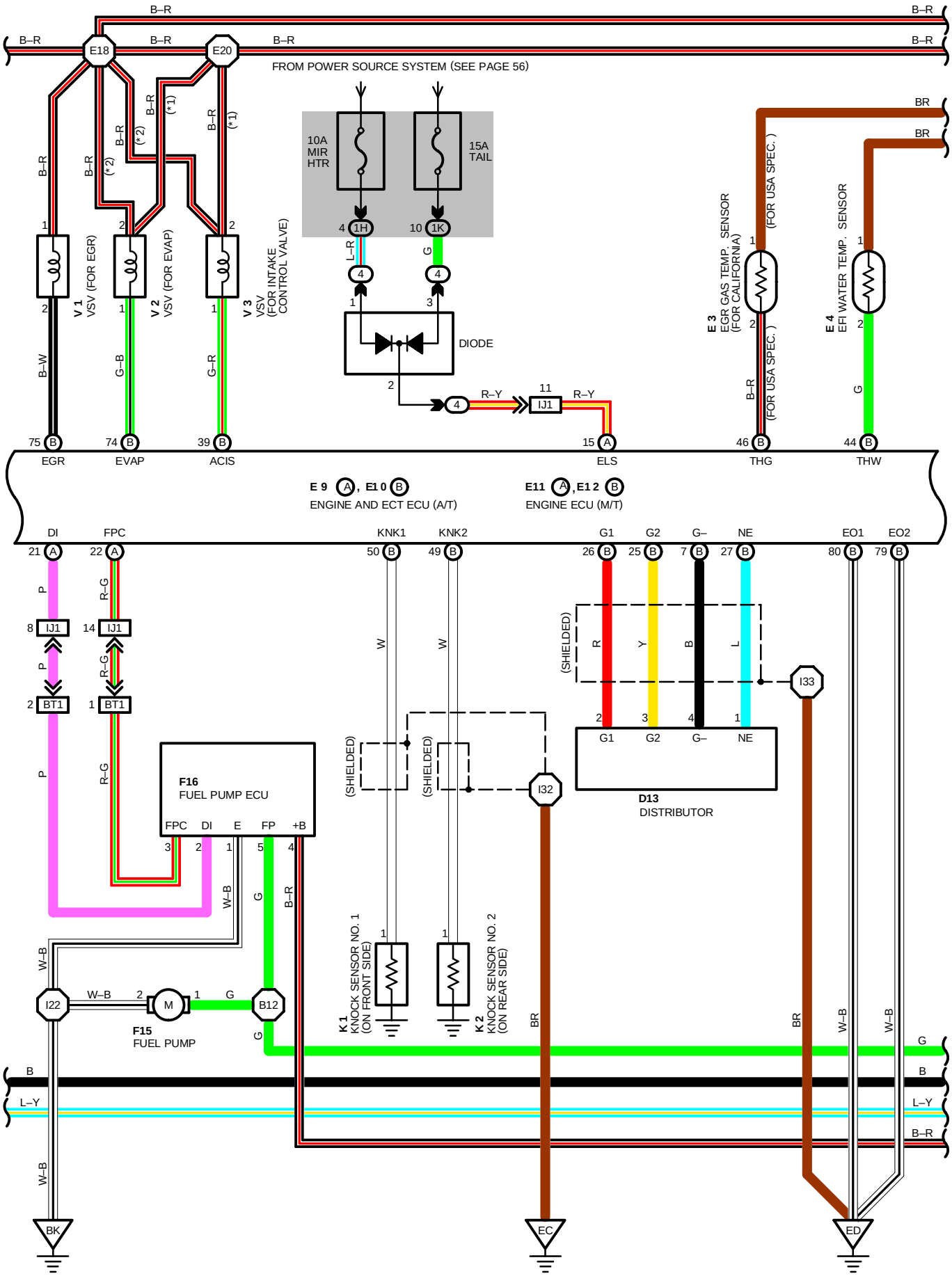

WhereEverybodyKnowsYourName

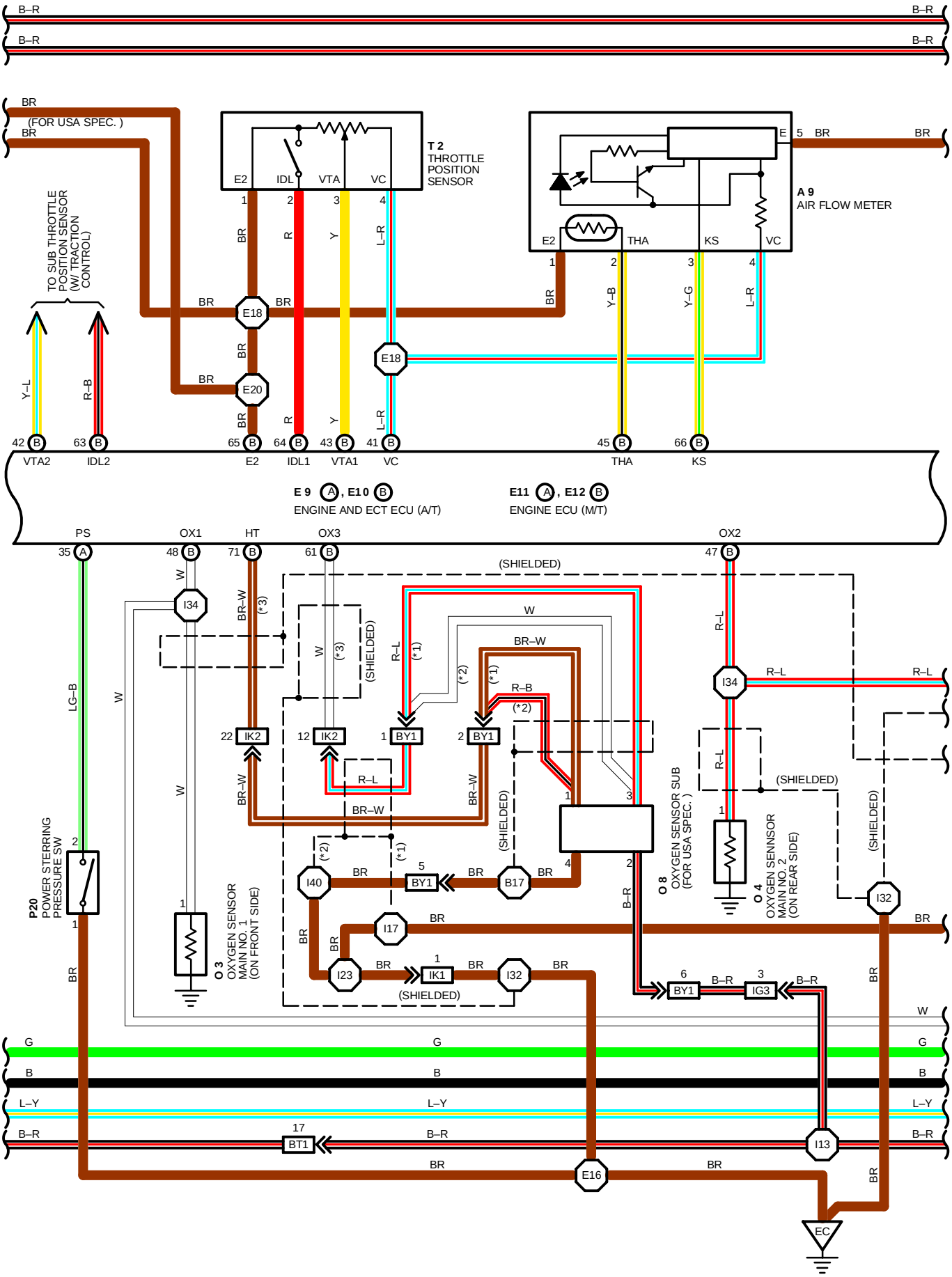

WhereEverybodyKnowsYourName

*1 : W/ CD PLAYER
*2 : W/O CD PLAYER
*3 : FOR USA SPEC.

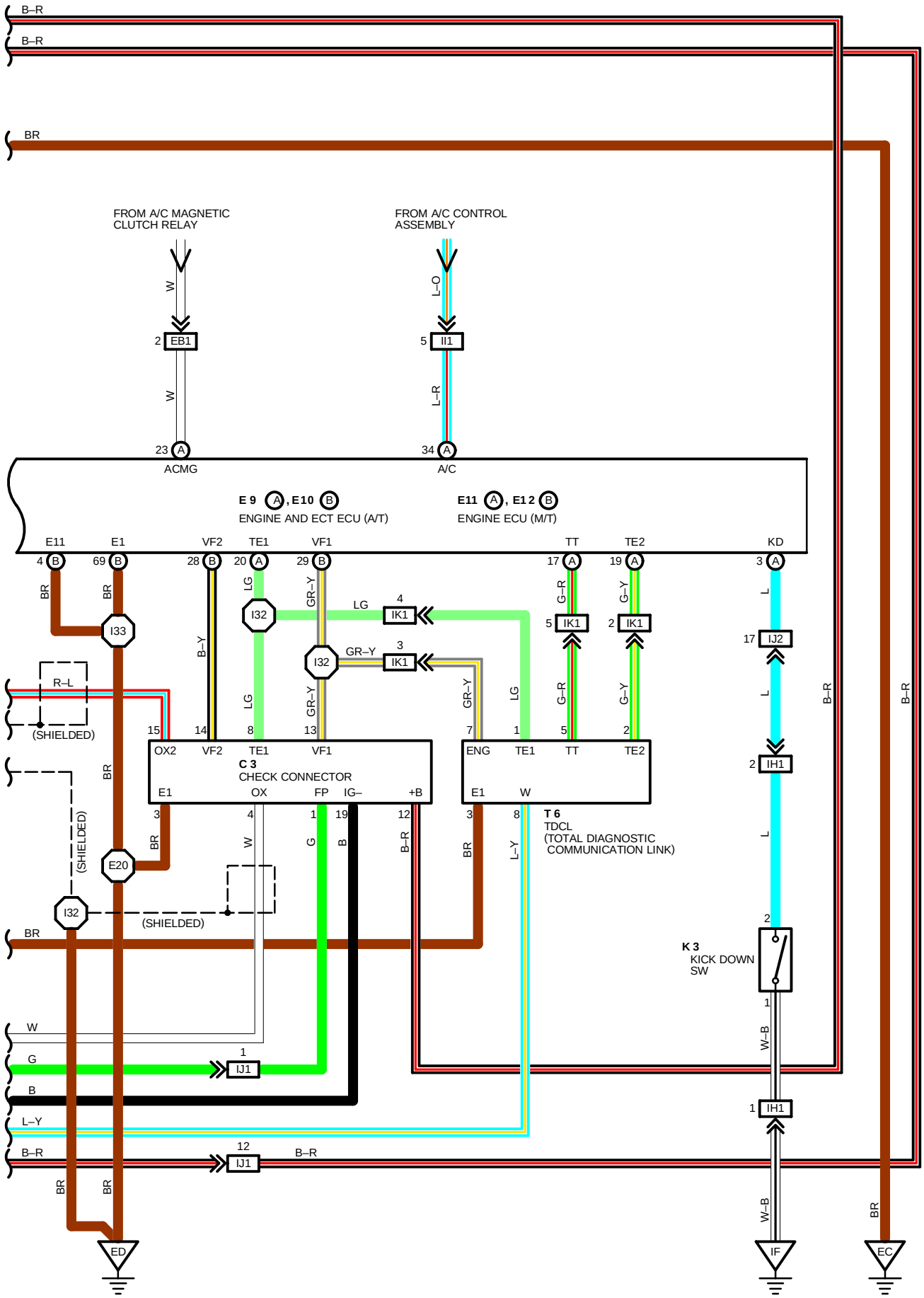

WhereEverybodyKnowsYourName

SERVICE HINTS

EFI MAIN RELAY
2 – 4: CLOSED WITH IGNITION SW AT **ON** OR **ST** POSITION

W 4 WATER TEMP. SENSOR
1 – 2: APPROX. **16.2**K (**–20**˚C, **–4**˚F)
: APPROX. **2.45**K (**20**˚C, **68**˚F)
: APPROX. **0.32**K (**80**˚C, **176**˚F)

E 3 EGR GAS TEMP. SENSOR (FOR USA SPEC.)
1 – 2: APPROX. **78.30**K (**50**˚C, **122**˚F)
APPROX. **13.06**K (**100**˚C, **212**˚F)
APPROX. **3.16**K (**150**˚C, **302**˚F)

E 9(A), E10(B) ENGINE AND ECT ECU, E11(A), E12(B) ENGINE ECU
(VOLTAGE AT ENGINE AND ECT ECU WIRING CONNECTORS)

BATT	– E1	: ALWAYS APPROX. **12** VOLTS
IGSW	– E1	: APPROX. **12** VOLTS WITH IGNITION SW ON
+B, +B1	– E1	: APPROX. **12** VOLTS WITH IGNITION SW ON
VC	– E2	: **4–6** VOLTS WITH IGNITION SW ON
IDL1, IDL2	– E2	: **0–1** VOLTS WITH IGNITION SW ON AND THROTTLE VALVE FULLY CLOSED
		: **10–14** VOLTS WITH IGNITION SW ON AND THROTTLE VALVE FULLY OPEN
VTA1, VTA2	– E2	: **0.1–1.0** VOLTS WITH IGNITION SW ON AND THROTTLE VALVE FULLY CLOSED
		: **3–6** VOLTS WITH IGNITION SW ON AND THROTTLE VALVE FULLY OPEN
THA	– E2	: **1–3** VOLTS WITH IGNITION SW ON AND INTAKE AIR TEMP. **20**˚C (**68**˚F)
THW	– E2	: **0.1–1.0** VOLTS WITH IGNITION SW ON AND COOLANT TEMP. **80**˚C (**176**˚F)
STA	– E1	: **6–14** VOLTS WITH ENGINE CRANKING
#10, #20, #30, #40, #50, #60	– E1	: APPROX. **12** VOLTS WITH IGNITION SW ON
IGF	– E1	: **0–1** VOLTS WITH ENGINE IDLING
MREL	– E1	: APPROX. **12** VOLTS WITH IGNITION SW ON
DI	– E1	: **7.5–14** VOLTS WITH ENGINE IDLING
ISC1, ISC2, ISC3, ISC4	– E1	: APPROX. **12** VOLTS WITH IGNITION SW ON
HTL1, HTR1, HTL2, HTR2	– E01	: **0–2** VOLTS WITH ENGINE IDLING
EGR	– E1	: APPROX. **12** VOLTS WITH ENGINE IDLING
NSW	– E1	: **0–1** VOLTS WITH IGNITION SW ON AND SHIFT LEVER **P** OR **N** RANGE
		: **10–14** VOLTS WITH IGNITION SW ON AND SHIFT EXCEPT **P** OR **N** RANGE
TE1	– E1	: APPROX. **12** VOLTS WITH IGNITION SW ON
TE2	– E2	: APPROX. **12** VOLTS WITH IGNITION SW ON
W	– E1	: APPROX. **12** VOLTS WITH ENGINE IDLING
		0–2 VOLTS WITH IGNITION SW ON
A/C	– E1	: **0–2** VOLTS WITH AIR CONDITIONER ON
		10–14 VOLTS WITH AIR CONDITIONER OFF
ACMG	– E1	: **0–2** VOLTS WITH AIR CONDITIONER ON
		: **10–14** VOLTS WITH AIR CONDITIONER OFF
TR	– E1	: APPROX. **12** VOLTS WITH IGNITION SW ON
VTA1, VTA2	– E2	: **0–1** VOLTS WITH IGNITION SW ON AND THROTTLE VALVE FULLY CLOSED
		3–5.5 VOLTS WITH IGNITION SW ON AND THROTTLE VALVE FULLY OPEN
NE	– E1	: **4–6** VOLTS WITH IGNITION SW ON

(RESISTANCE OF ENGINE AND ECT ECU WIRING CONNECTORS)

+B, +B1 – #10, #20, #30, #40, #50, #60		: **13.2–14.2**
+B, +B1, ISC1, ISC2, ISC3, ISC4		: **10–30**
+B, +B1	–EGR	: **33–39**
+B, +B1, HT		: **5.1–6.3**
+B, +B1 –EVAP		: **30–34**
IDL1, IDL2	E2	: INFINITY WITH THROTTLE VALVE OPEN
		0–0.5 WITH THROTTLE VALVE FULLY CLOSED
VTA1, VTA2	E2	: **2.4–10.7** WITH THROTTLE VALVE FULLY OPEN
		0.3–5.9 WITH THROTTLE VALVE FULLY CLOSED
VCC	– E2	: **3–7**K
THW	– E2	: **200–400** WITH COOLANT TEMP. **80**˚C (**176**˚F)
THA	– E2	: **2–3**K WITH INTAKE AIR TEMP. **20**˚C (**68**˚F)
THG	– E2	: **69.4–88.5**K WITH EGR GAS TEMP. **50**˚C (**112**˚F)
G1, G2	–G–	: **0.835–13.5**K
NE–	G–	: **0.835–13.5**K

WhereEverybodyKnowsYourName

I 1 ISC VALVE
4, 6–5 : APPROX. **21.3**
1, 3–2 : APPROX. **21.3**

I 6, I 7, I 8, I 9, I10, I11 INJECTOR
1 – 2 : APPROX. **13.8**

O 8 OXYGEN SENSOR SUB (FOR USA SPEC.)
1 – 2 : APPROX. **5.6** (**20**˚C, **68**˚F)

T 2 THROTTLE POSITION SENSOR
1 – 4 : APPROX. **3–7**K
1 – 3 : **2.4–10.7**K WITH THROTTLE VALVE FULLY **OPENED** POSITION
0.3–5.9K WITH CLEARANCE BETWEEN LEVER AND STOP SCREW **0MM (0 IN.)**
1 – 2 : LESS THAN **0.5**K WITH CLEARANCE BETWEEN LEVER AND STOP SCREW **0.4 MM (0.0157 IN.)**
INFINITY WITH CLEARANCE BETWEEN LEVER AND STOP SCREW **0.85MM (0.0335 IN.)**

WhereEverybodyKnowsYourName

: PARTS LOCATION

CODE		SEE PAGE	CODE	SEE PAGE	CODE	SEE PAGE
A 9		26	F15	30	K 3	29
C 3		26	F16	30	N 1	27
C13	B	28	I 1	27	O 3	27
C14	A	28	I 2	27	O 4	27
C23		28	I 6	27	O 8	31
D13		26	I 7	27	P20	27
E 2		26	I 8	27	S 3	27
E 3		26	I 9	27	S12	29
E 9	A	28	I10	27	T 2	27
E10	B	28	I11	27	T 6	29
E11	A	28	I15	29	V 1	27
E12	B	28	K 1	27	V 2	27
F 9		26	K 2	27	V 3	27

: RELAY BLOCKS

CODE	SEE PAGE	RELAY BLOCKS (RELAY BLOCK LOCATION)
2	19	ENGINE COMPARTMENT LEFT
4	23	LEFT KICK PANEL (J/B NO.1 LEFT)

: JUNCTION BLOCK AND WIRE HARNESS CONNECTOR

CODE	SEE PAGE	JUNCTION BLOCK AND WIRE HARNESS (CONNECTOR LOCATION)
1B	20	ENGINE ROOM MAIN WIRE
1E	20	INSTRUMENT PANEL WIRE
1H	20	COWL WIRE
1I		
1J		
1K		
3A	23	INSTRUMENT PANEL WIRE
3D		

: CONNECTOR JOINING WIRE HARNESS AND WIRE HARNESS

CODE	SEE PAGE	JOINING WIRE HARNESS AND WIRE HARNESS (CONNECTOR LOCATION)
EB1	34	ENGINE WIRE AND ENGINE ROOM MAIN WIRE (FRONT SIDE OF R/B NO.2)
EB2		
IE1	36	ENGINE ROOM MAIN WIRE AND COWL WIRE (R/B NO. 4)
IG2	36	INSTRUMENT PANEL WIRE AND COWL WIRE (R/B NO. 5)
IG3	38	INSTRUMENT PANEL WIRE AND COWL WIRE (RIGHT KICK PANEL)
IH1	36	COWL NO. 2 WIRE AND COWL WIRE (BEHIND COMBINATION METER)
II1	36	ENGINE WIRE AND A/C WIRE (BEHIND GLOVE BOX)
IJ1	36	ENGINE WIRE AND COWL WIRE (RIGHT KICK PANEL)
IJ2		
IK1	36	ENGINE WIRE AND INSTRUMENT PANEL WIRE (RIGHT KICK PANEL)
IK2		
BT1	40	FLOOR WIRE AND COWL WIRE (LEFT KICK PANEL)
BY1	40	INSTRUMENT PANEL WIRE AND FLOOR NO.3 WIRE (RIGHT KICK PANEL)

: GROUND POINTS

CODE	SEE PAGE	GROUND POINTS LOCATION
EB	34	FRONT SIDE OF LEFT FENDER
EC	34	FRONT SIDE OF INTAKE MANIFOLD
ED	34	REAR SIDE OF CYLINDER HEAD RH
IF	36	LEFT KICK PANEL
IH	36	UNDER THE ASHTRAY LH
BK	40	UNDER THE CENTER PILLAR LH

WhereEverybodyKnowsYourName

: SPLICE POINTS

CODE	SEE PAGE	WIRE HARNESS WITH SPLICE POINTS	CODE	SEE PAGE	WIRE HARNESS WITH SPLICE POINTS
E15	34	ENGINE WIRE	I22	38	INSTRUMENT PANEL WIRE
E16			I23		
E17			I32	38	ENGINE WIRE
E18			I33		
E20			I34		
I10	38	COWL WIRE	I40	38	INSTRMENT PANEL WIRE
I13			B12	40	FLOOR MAIN WIRE
I14			B17	40	FLOOR NO.3 WIRE
I17	38	INSTRUMENT PANEL WIRE			

A 9 BLACK

C 3 BLACK

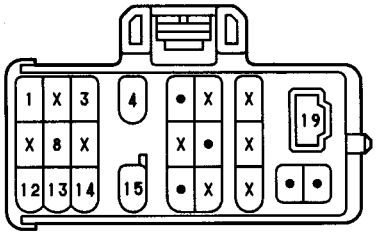

C13 (B)

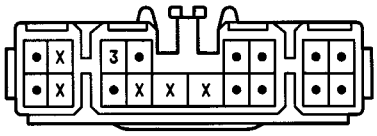

C14 (A)

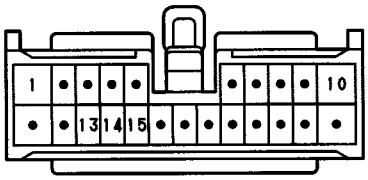

C23

D13 BLACK

E 2 DARK GREEN

E 3 DARK GRAY

E 9, E11 (A) DARK GRAY

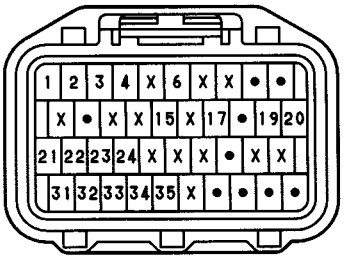

E10, E12 (B) DARK GRAY

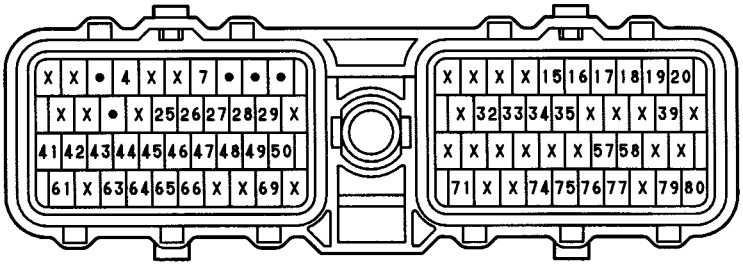

F 9 BLACK

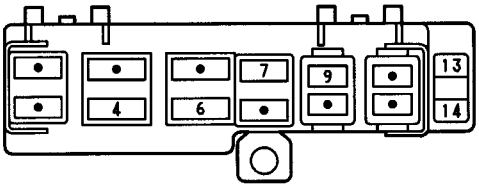

F15 DARK GRAY

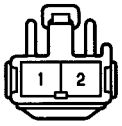

F16 BLACK

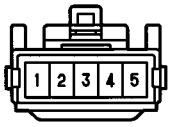

I 1 DARK GRAY

I 2 BLACK

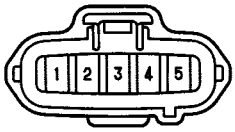

I 6, I 7, I 8, I 9, I10, I11 GRAY

I15 BLACK

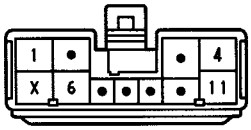

K 1, K 2 DARK GRAY

K 3 BLACK

WhereEverybodyKnowsYourName

N 1 GRAY

O 3, O 4 DARK GRAY

O 8 DARK GRAY

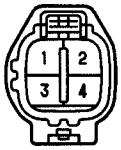

P20 DARK GRAY

S 3 GRAY

S12

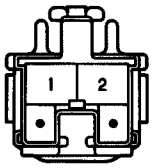

T 2 BLACK

T 6 DARK GRAY

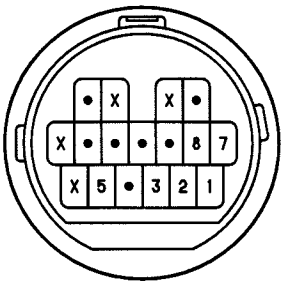

V 1 BLUE

V 2 BLUE

V 3 BLUE

WhereEverybodyKnowsYourName

ELECTRIC TENSION REDUCER

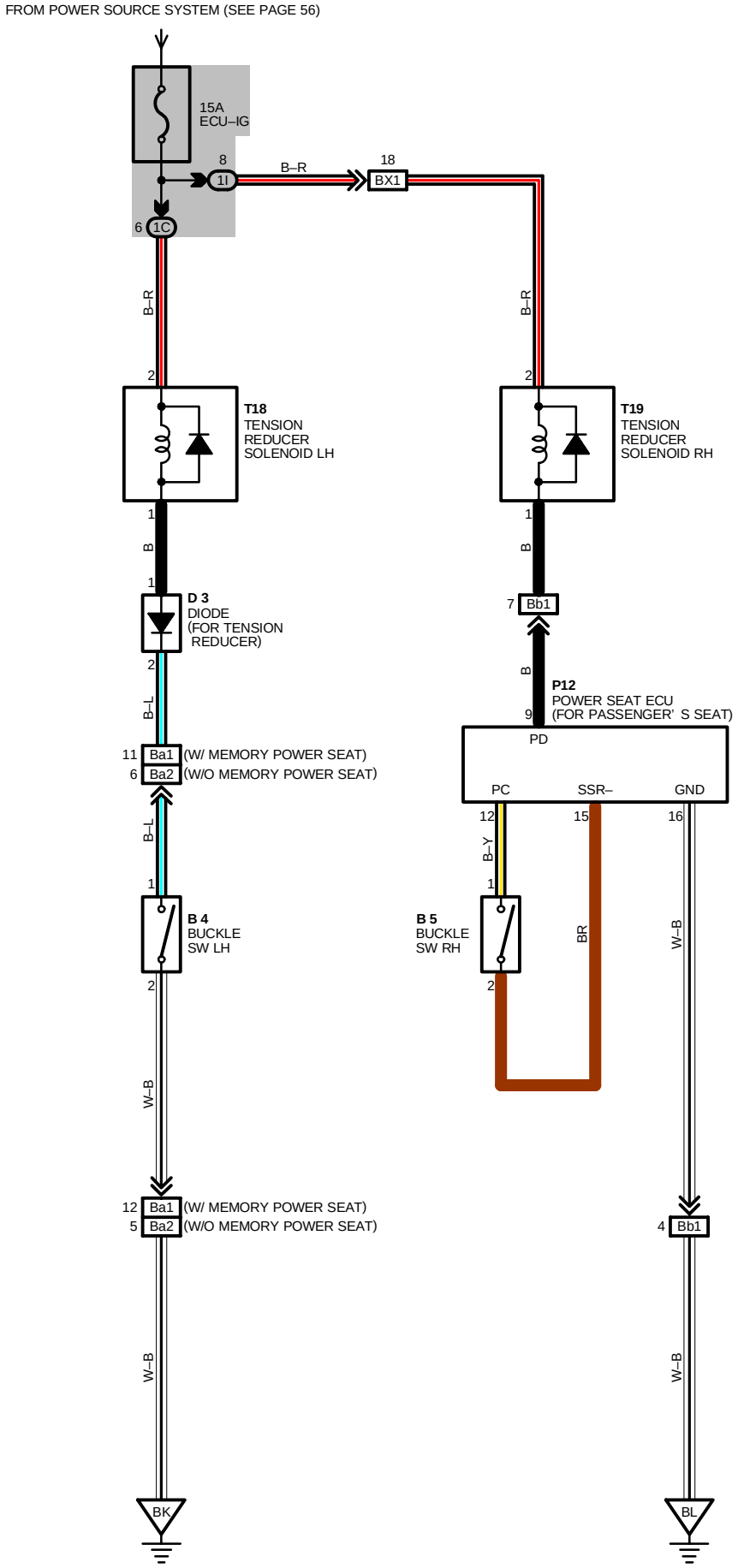

WhereEverybodyKnowsYourName

SERVICE HINTS

B 4 BUCKLE SW LH
1–2 : CLOSED WITH DRIVER'S LAP BELT IN USE

B 5 BUCKLE SW RH
1–2 : CLOSED WITH PASSENGER'S LAP BELT IN USE

T18, T19 TENSION REDUCER SOLENOID LH, RH
2–GROUND : APPROX. **12** VOLTS WITH IGNITION SW AT **ON** POSITION

○ : PARTS LOCATION

CODE	SEE PAGE	CODE	SEE PAGE	CODE	SEE PAGE
B 4	32	**D 3**	28	**T18**	31
B 5	32	**P12**	32	**T19**	31

: JUNCTION BLOCK AND WIRE HARNESS CONNECTOR

CODE	SEE PAGE	JUNCTION BLOCK AND WIRE HARNESS (CONNECTOR LOCATION)
1C	20	FLOOR WIRE
1I	20	COWL WIRE

: CONNECTOR JOINING WIRE HARNESS AND WIRE HARNESS

CODE	SEE PAGE	JOINING WIRE HARNESS AND WIRE HARNESS (CONNECTOR LOCATION)
BX1	40	FLOOR NO. 3 WIRE AND COWL WIRE (RIGHT KICK PANEL)
Ba1	42	FLOOR WIRE AND FRONT SEAT LH WIRE (UNDER THE FRONT LH SEAT)
Ba2		
Bb1	42	FLOOR NO. 3 WIRE AND FRONT SEAT RH WIRE (UNDER THE FRONT RH SEAT)

▽ : GROUND POINTS

CODE	SEE PAGE	GROUND POINTS LOCATION
BK	40	UNDER THE CENTER PILLAR LH
BL	40	UNDER THE CENTER PILLAR RH

B 4, B 5 ORANGE

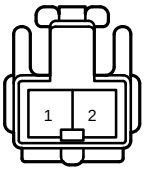

D 3 BLACK

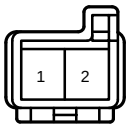

P12

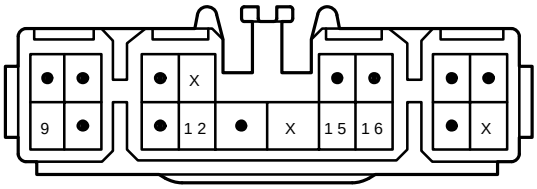

T18, T19

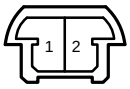

WhereEverybodyKnowsYourName

FOREWORD

This wiring diagram manual has been prepared to provide information on the electrical system of the 1992 LEXUS SC300.

Applicable models: JZZ31 Series

For service specifications and repair procedures of the above models other than those listed in this manual, refer to the following manuals;

Manual Name	Pub. No.
2 1992 LEXUS SC300 Repair Manual Volume 1 Volume 2	 RM260U1 RM260U2
2 1992 LEXUS New Car Features	NCF080U

All information in this manual is based on the latest product information at the time of publication. However, specifications and procedures are subject to change without notice.

TOYOTA MOTOR CORPORATION

NOTICE

Servicing vehicles with an SRS AIRBAG (referred to as the airbag in the remainder of this manual) installed.
When handling airbag components (removal, installation or inspection, etc.), always follow the directions given in the repair manuals listed above to prevent the occurrence of accidents and airbag malfunction.

WhereEverybodyKnowsYourName

GLOSSARY OF TERMS AND SYMBOLS

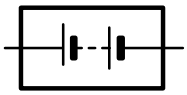

BATTERY

Stores chemical energy and converts it into electrical energy. Provides DC current for the auto's various electrical circuits.

CAPACITOR (Condenser)

A small holding unit for temporary storage of electrical voltage.

CIGARETTE LIGHTER

An electric resistance heating element.

CIRCUIT BREAKER

Basically a reusable fuse, a circuit breaker will heat and open if too much current flows through it. Some units automatically reset when cool, others must be manually reset.

DIODE

A semiconductor which allows current flow in only one direction.

DIODE, ZENER

A diode which allows current flow in one direction but blocks reverse flow only up to a specific voltage. Above that potential, it passes the excess voltage. This acts as a simple voltage regulator.

DISTRIBUTOR, IIA

Channels high–voltage current from the ignition coil to the individual spark plugs.

(for Medium Current Fuse)

(for High Current Fuse or Fusible Link)

FUSE

A thin metal strip which burns through when too much current flows through it, thereby stopping current flow and protecting a circuit from damage.

FUSIBLE LINK

A heavy–gauge wire placed in high amperage circuits which burns through on overloads, thereby protecting the circuit. The numbers indicate the cross–section surface area of the wires.

GROUND

The point at which wiring attaches to the Body, thereby providing a return path for an electrical circuit; without a ground, current cannot flow.

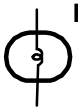

HEADLIGHTS

1. SINGLE FILAMENT

2. DOUBLE FILAMENT

Current flow causes a headlight filament to heat up and emit light. A headlight may have either a single (1) filament or a double (2) filament.

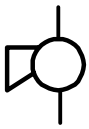

HORN

An electric device which sounds a loud audible signal.

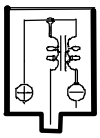

IGNITION COIL

Converts low–voltage DC current into high–voltage ignition current for firing the spark plugs.

LIGHT

Current flow through a filament causes the filament to heat up and emit light.

LED (LIGHT EMITTING DIODE)

Upon current flow, these diodes emit light without producing the heat of a comparable light.

METER, ANALOG

Current flow activates a magnetic coil which causes a needle to move, thereby providing a relative display against a background calibration.

METER, DIGITAL

Current flow activates one or many LED's, LCD's, or fluorescent displays, which provide a relative or digital display.

MOTOR

A power unit which converts electrical energy into mechanical energy, especially rotary motion.

WhereEverybodyKnowsYourName

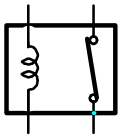

RELAY

1. NORMALLY CLOSED

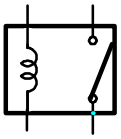

2. NORMALLY OPEN

Basically, an electrically operated switch which may be normally closed (1) or open (2).

Current flow through a small coil creates a magnetic field which either opens or closes an attached switch.

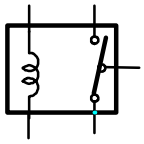

RELAY, DOUBLE THROW

A relay which passes current through one set of contacts or the other.

RESISTOR

An electrical component with a fixed resistance, placed in a circuit to reduce voltage to a specific value.

RESISTOR, TAPPED

A resistor which supplies two or more different non–adjustable resistance values.

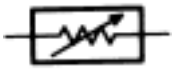

RESISTOR, VARIABLE OR RHEOSTAT

A controllable resistor with a variable rate of resistance. Also called a potentiometer or rheostat.

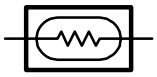

SENSOR (Thermistor)

A resistor which varies its resistance with temperature.

SENSOR, ANALOG SPEED

Uses magnetic impulses to open and close a switch to create a signal for activation of other components.

SHORT PIN

Used to provide an unbroken connection within a junction block.

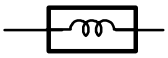

SOLENOID

An electromagnetic coil which forms a magnetic field when current flows, to move a plunger, etc.

SPEAKER

An electromechanical device which creates sound waves from current flow.

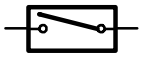

1. NORMALLY OPEN

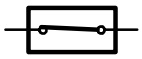

2. NORMALLY CLOSED

SWITCH, MANUAL

Opens and closes circuits, thereby stopping (1) or allowing (2) current flow.

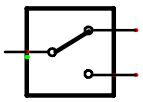

SWITCH, DOUBLE THROW

A switch which continuously passes current through one set of contacts or the other.

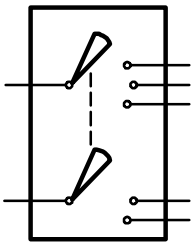

SWITCH, IGNITION

A key operated switch with several positions which allows various circuits, particularly the primary ignition circuit, to become operational.

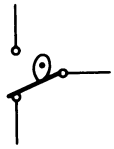

SWITCH, WIPER PARK

Automatically returns wipers to the stop position when the wiper switch is turned off.

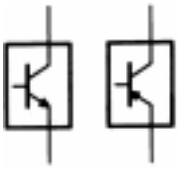

TRANSISTOR

A solidstate device typically used as an electronic relay; stops or passes current depending on the voltage applied at “base.”

WIRES

(1) NOT CONNECTED

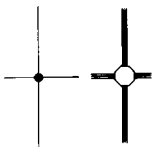

(2) SPLICED

Wires are always drawn as straight lines on wiring diagrams. Crossed wires (1) without a black dot at the junction are not joined; crossed wires (2) with a black dot or octagonal ( ) mark at the junction are spliced (joined) connections.

WhereEverybodyKnowsYourName

GROUND POINT

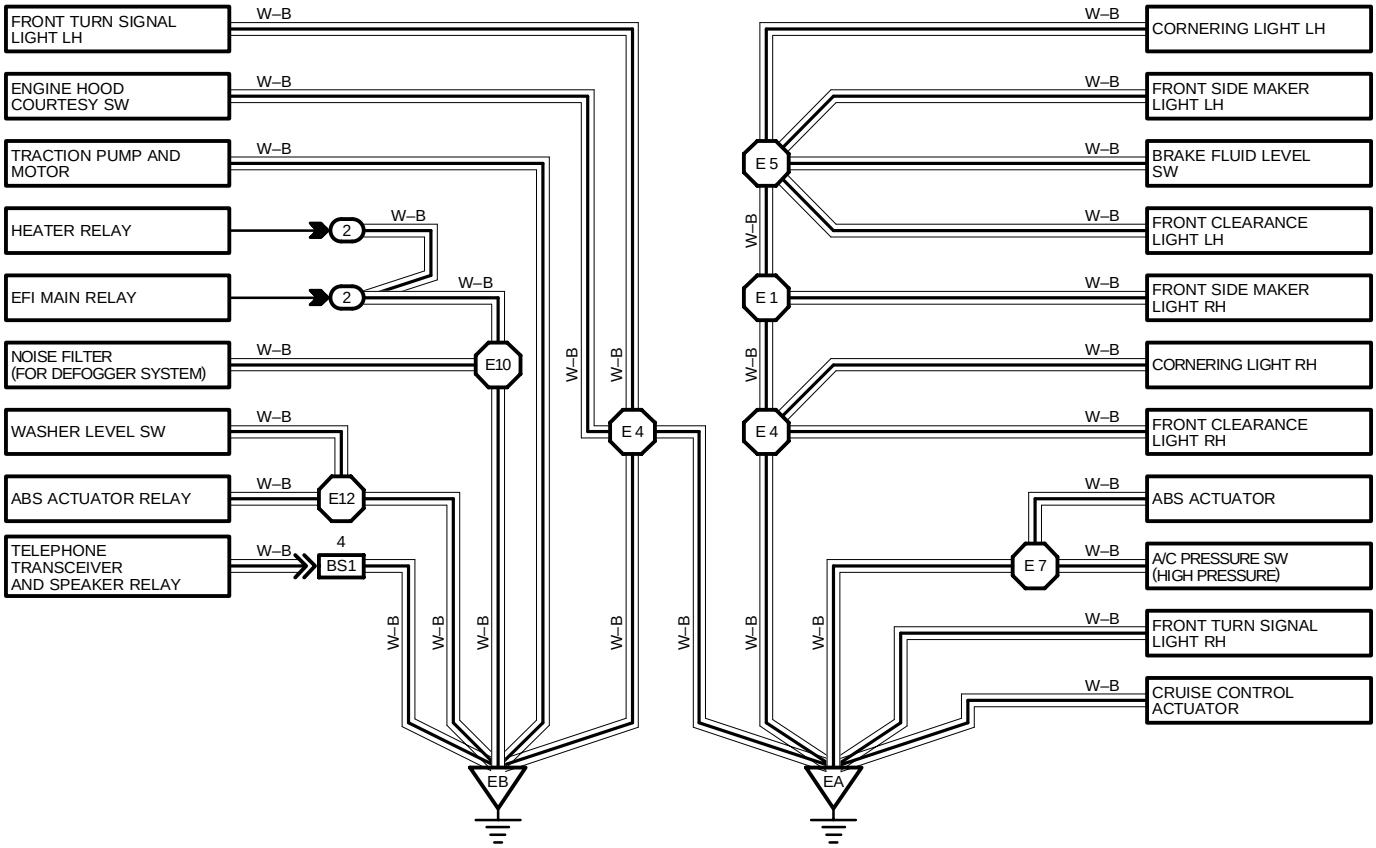

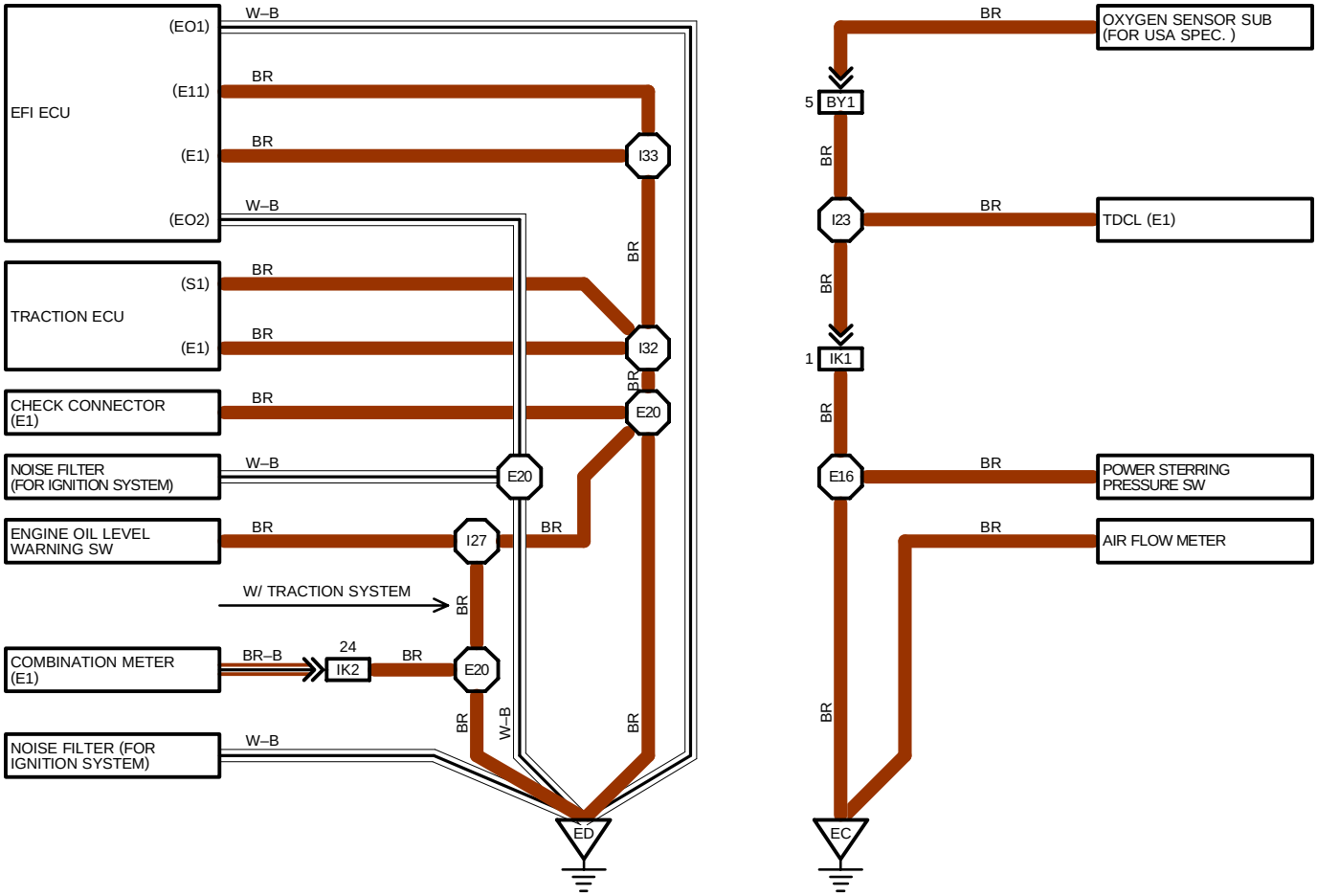

WhereEverybodyKnowsYourName

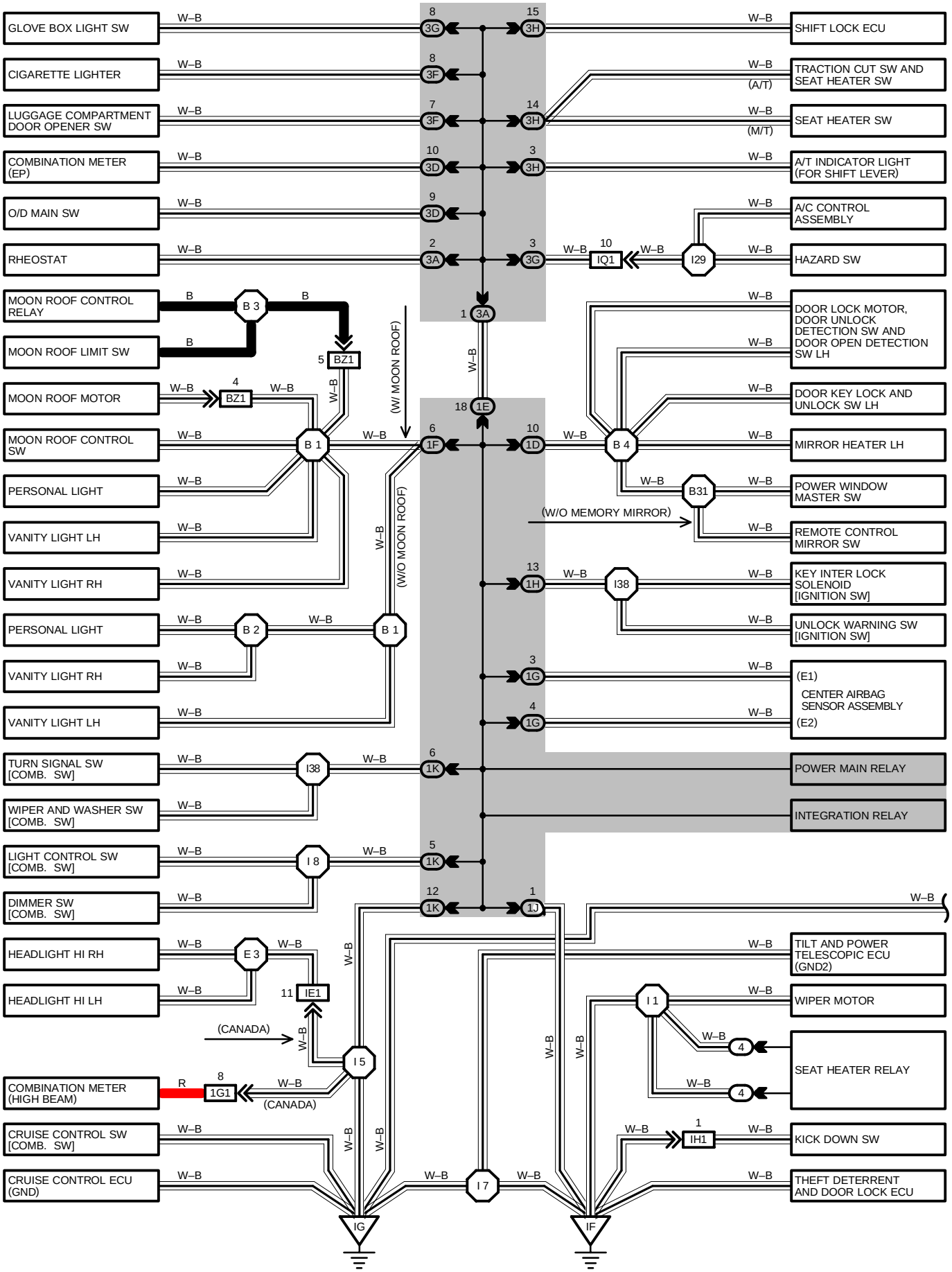

WhereEverybodyKnowsYourName

GROUND POINT

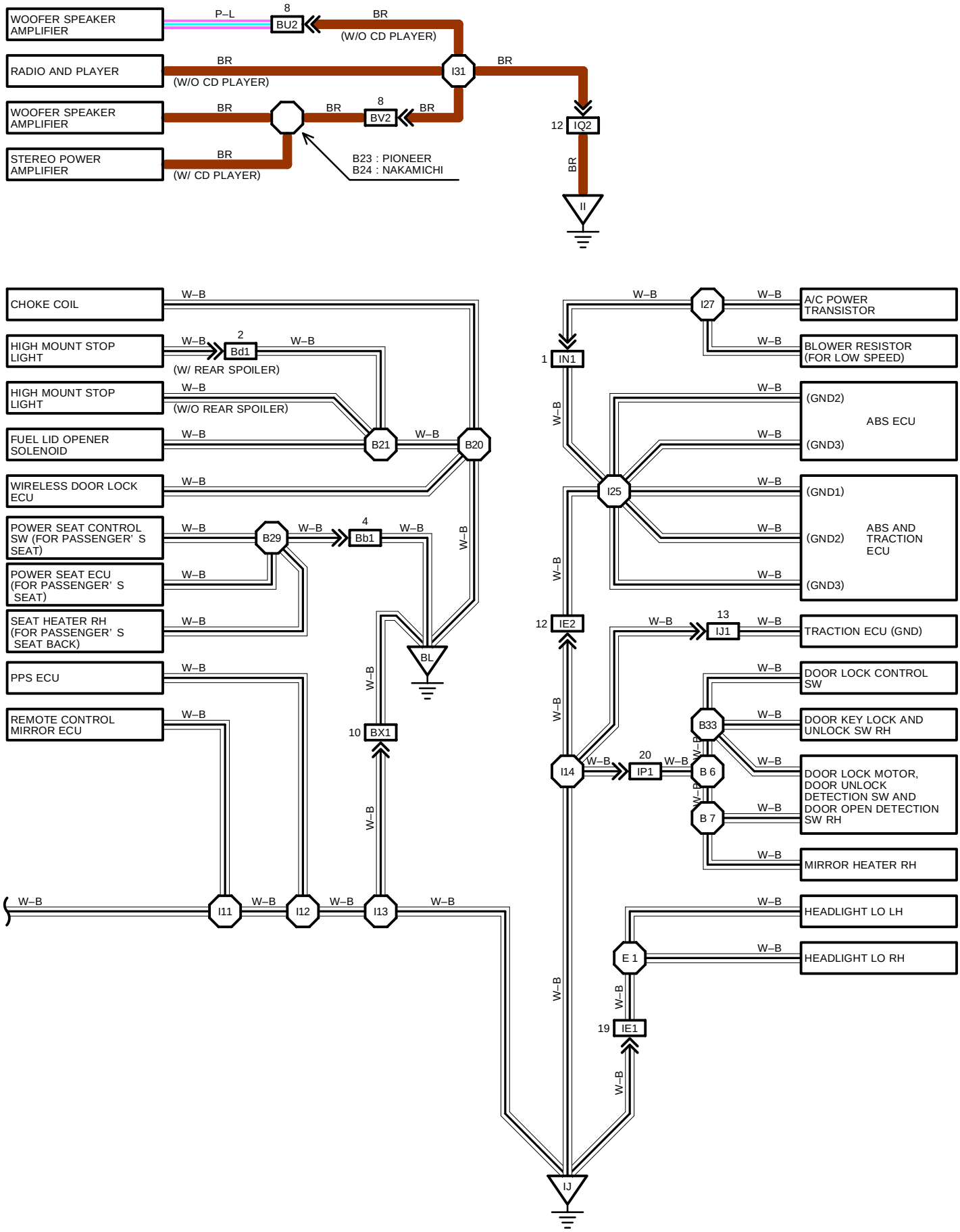

WhereEverybodyKnowsYourName

*1 : W/ DRIVING POSITION MEMORY
*2 : W/O DRIVING POSITION MEMORY

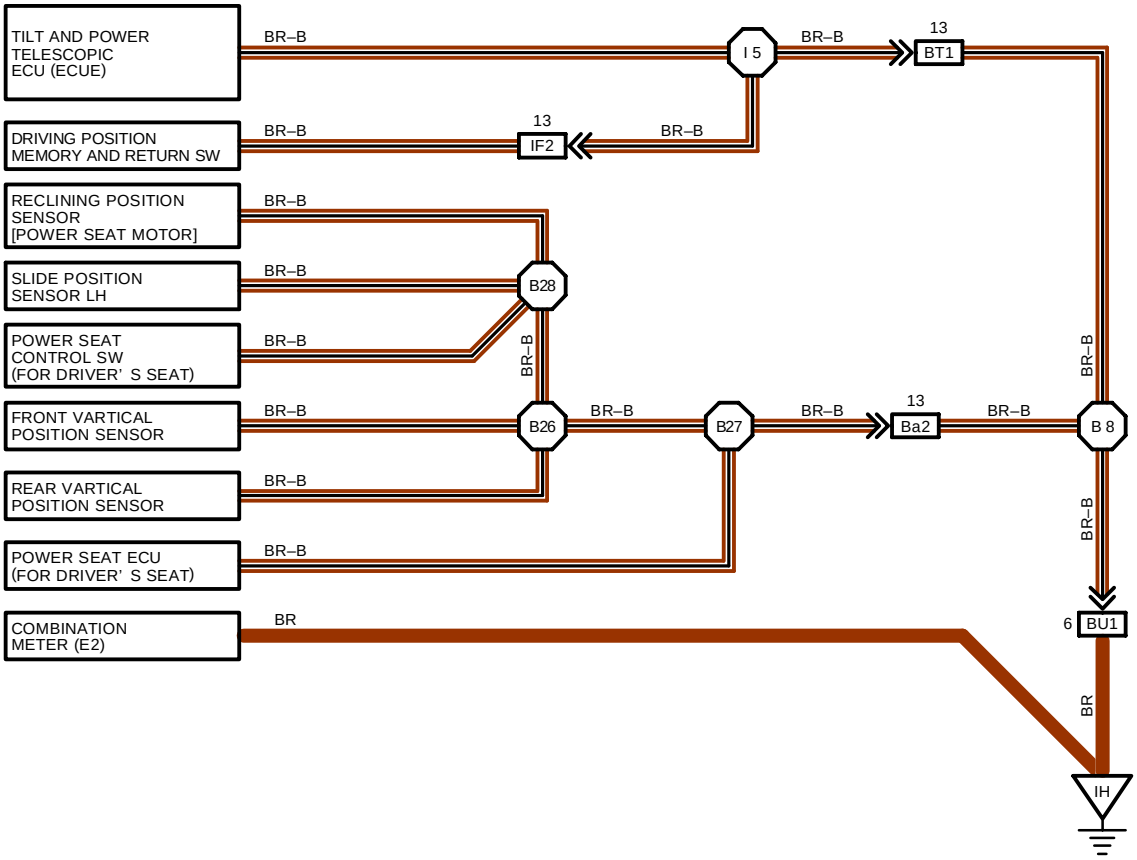

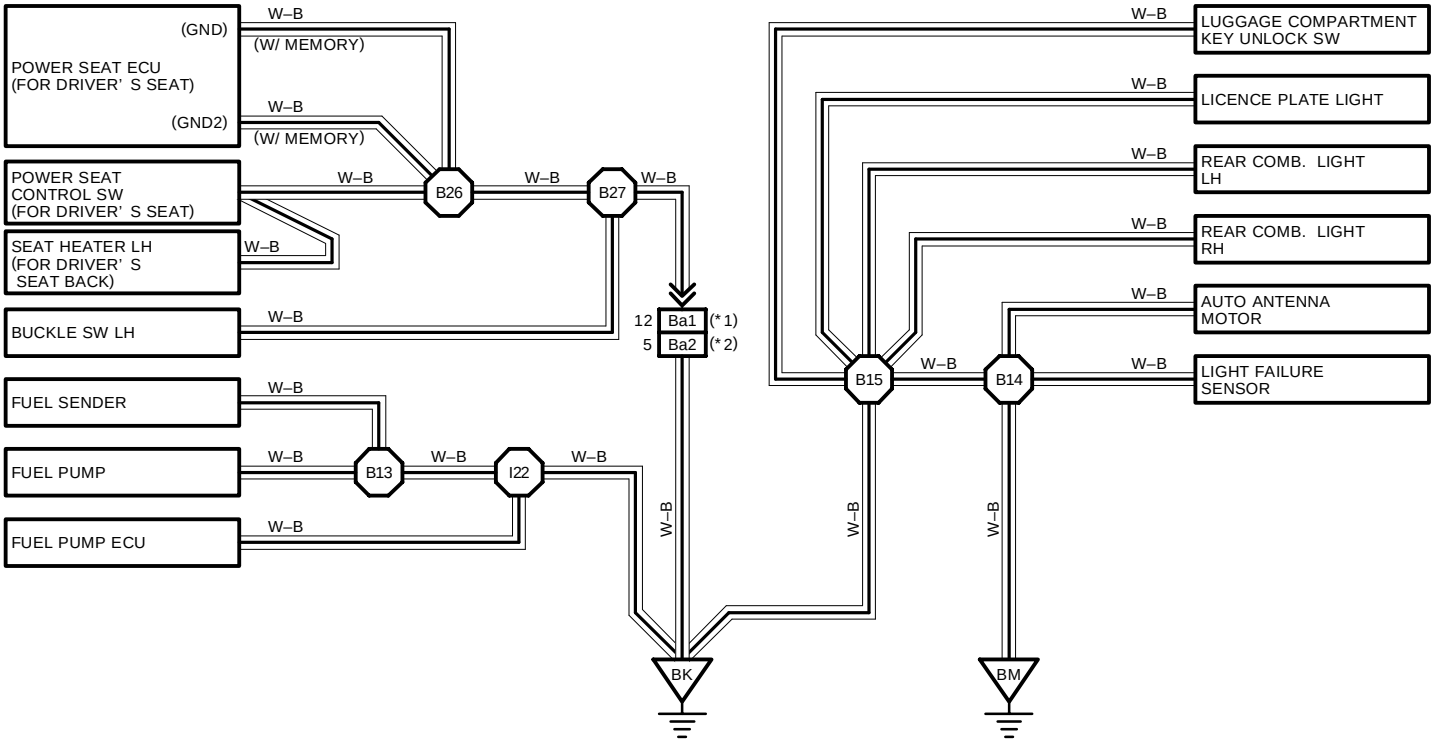

WhereEverybodyKnowsYourName

GROUND POINT

: RELAY BLOCKS

CODE	SEE PAGE	RELAY BLOCKS (RELAY BLOCK LOCATION)
2	19	ENGINE COMPARTMENT LEFT
4	22	LEFT KICK PANEL (J/B NO.1 LEFT)

: JUNCTION BLOCK AND WIRE HARNESS CONNECTOR

CODE	SEE PAGE	JUNCTION BLOCK AND WIRE HARNESS (CONNECTOR LOCATION)
1D	20	FRONT DOOR LH WIRE
1E	20	INSTRUMENT PANEL WIRE
1F	20	ROOF WIRE
1G	20	COWL NO. 2 WIRE
1H	20	COWL WIRE
1J		
1K		
3A	22	INSTRUMENT PANEL WIRE
3D		
3F		
3G		
3H		

: CONNECTOR JOINING WIRE HARNESS AND WIRE HARNESS

CODE	SEE PAGE	JOINING WIRE HARNESS AND WIRE HARNESS (CONNECTOR LOCATION)
IE1	36	ENGINE ROOM MAIN WIRE AND COWL WIRE (R/B NO.4)
IE2	36	ENGINE ROOM MAIN WIRE AND COWL WIRE (BEHIND GLOVE BOX)
IF2	36	FRONT DOOR LH WIRE AND COWL WIRE (LEFT KICK PANEL)
IG1	36	INSTRUMENT PANEL WIRE AND COWL WIRE (R/B NO.5)
IH1	36	COWL NO. 2 WIRE AND COWL WIRE (BEHIND COMBINATION METER)
IJ1	36	ENGINE WIRE AND COWL WIRE (RIGHT KICK PANEL)
IK1	36	ENGINE WIRE AND INSTRUMENT PANEL WIRE (RIGHT KICK PANEL)
IK2		
IN1	38	ENGINE ROOM MAIN WIRE AND A/C WIRE (BEHIND GLOVE BOX)
IP1	38	FRONT DOOR RH WIRE AND COWL WIRE (RIGHT KICK PANEL)
IQ1	38	INSTRUMENT PANEL WIRE AND CONSOLE BOX WIRE (UNDER THE INSTRUMENT PANEL CENTER)
IQ2		
BS1	40	ENGINE ROOM MAIN WIRE AND FLOOR WIRE (LEFT KICK PANEL)
BT1	40	FLOOR WIRE AND COWL WIRE (LEFT KICK PANEL)
BU1	40	FLOOR WIRE AND INSTRUMENT PANEL WIRE (LEFT KICK PANEL)
BU2		
BV2	40	FLOOR NO. 3 WIRE AND CONSOLE BOX WIRE (UNDER THE INSTRUMENT PANEL CENTER)
BX1	40	FLOOR NO. 3 WIRE AND COWL WIRE (RIGHT KICK PANEL)
BY1	40	INSTRUMENT PANEL WIRE AND FLOOR NO. 3 WIRE (RIGHT KICK PANEL)
BZ1	40	ROOF WIRE AND MOON ROOF WIRE (FRONT SIDE OF ROOF LEFT)
Ba1	42	FLOOR WIRE AND FRONT SEAT LH WIRE (UNDER THE FRONT LH SEAT)
Ba2		
Bb1	42	FLOOR NO. 3 WIRE AND FRONT SEAT RH WIRE (UNDER THE FRONT RH SEAT)
Bd1	42	FLOOR NO. 3 WIRE AND LUGGAGE NO. 2 WIRE (RIGHT SIDE OF LUGGAGE COMPARTMENT)

: GROUND POINTS

CODE	SEE PAGE	GROUND POINTS LOCATION
EA	34	FRONT SIDE OF RIGHT FENDER
EB	34	FRONT SIDE OF LEFT FENDER
EC	34	REAR SIDE OF INTAKE MANIFOLD
ED	34	REAR SIDE OF CYLINDER HEAD RH
IF	36	LEFT KICK PANEL
IG	36	INSTRUMENT PANEL BRACE LH
IH	36	UNDER THE ASHTRAY LH
II	36	UNDER THE ASHTRAY RH
IJ	36	RIGHT KICK PANEL
BK	40	UNDER THE CENTER PILLAR LH
BL	40	UNDER THE CENTER PILLAR RH
BM	40	BACK PANEL CENTER

WhereEverybodyKnowsYourName

: SPLICE POINTS

CODE	SEE PAGE	WIRE HARNESS WITH SPLICE POINTS	CODE	SEE PAGE	WIRE HARNESS WITH SPLICE POINTS
E 1	34	ENGINE ROOM MAIN WIRE	**I32**	38	ENGINE WIRE
E 3			**I33**	28	
E 4			**I38**	28	COWL WIRE
E 5			**B 1**	40	ROOF WIRE
E 7			**B 2**		
E10			**B 3**	40	MOON ROOF WIRE
E12			**B 4**	40	FRONT DOOR LH WIRE
E16	34	ENGINE WIRE	**B 6**	40	FRONT DOOR RH WIRE
E20			**B 7**		
I 1	38	COWL WIRE	**B 8**	40	FLOOR MAIN WIRE
I 5			**B13**	40	FLOOR MAIN WIRE
I 7			**B14**		
I 8			**B15**		
I11			**B20**	40	FLOOR NO. 3 WIRE
I12			**B21**		
I13			**B23**		
I14			**B24**		
I22	38	INSTRUMENT PANEL WIRE	**B26**	42	FRONT SEAT LH WIRE
I23			**B27**		
I25	38	ENGINE ROOM MAIN WIRE	**B28**		
I27	38	A/C WIRE	**B29**	42	FRONT SEAT RH WIRE
I29	38	CONSOLE BOX WIRE	**B31**	40	FRONT DOOR LH WIRE
I31			**B33**	40	FRONT DOOR RH WIRE

WhereEverybodyKnowsYourName

HEADLIGHT (FOR USA)

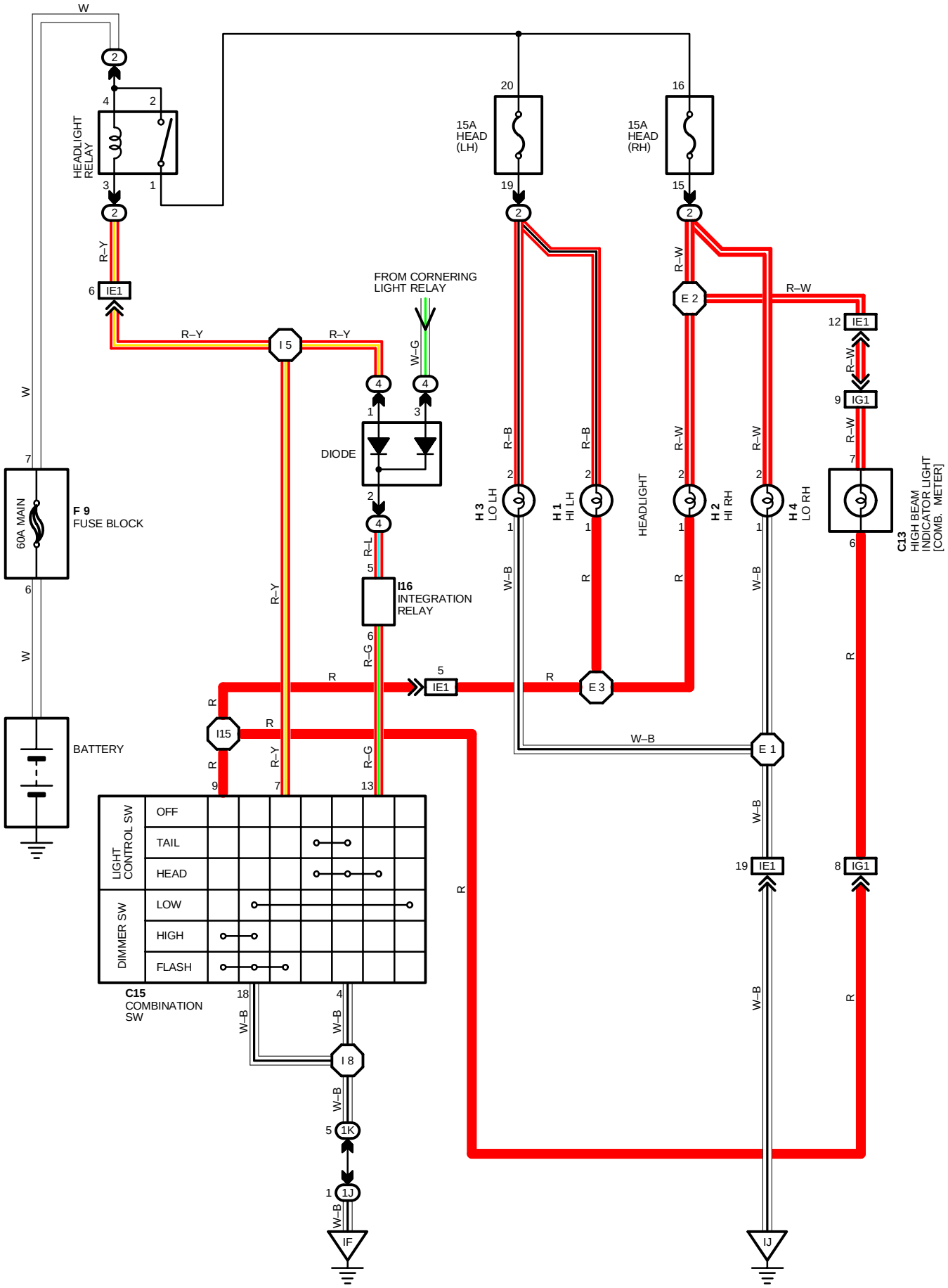

WhereEverybodyKnowsYourName

SERVICE HINTS

HEADLIGHT RELAY

1–2 : CLOSED WITH LIGHT CONTROL SW AT **HEAD** POSITION OR DIMMER SW AT **FLASH** POSITION

C15 LIGHT CONTROL SW [COMB. SW]

13–4: CLOSED WITH LIGHT CONTROL SW AT **HEAD** POSITION

C15 DIMMER SW [COMB. SW]

7–18: CLOSED WITH DIMMER SW AT **FLASH** POSITION

9–18: CLOSED WITH DIMMER SW AT **HIGH** OR **FLASH** POSITION

: PARTS LOCATION

CODE	SEE PAGE	CODE	SEE PAGE	CODE	SEE PAGE
C13	28	**H 1**	26	**H 4**	26
C15	28	**H 2**	26	**I16**	29
F 9	26	**H 3**	26		

: RELAY BLOCKS

CODE	SEE PAGE	RELAY BLOCKS (RELAY BLOCK LOCATION)
2	19	ENGINE COMPARTMENT LEFT
4	23	LEFT KICK PANEL (J/B NO.1 LEFT)

: JUNCTION BLOCK AND WIRE HARNESS CONNECTOR

CODE	SEE PAGE	JUNCTION BLOCK AND WIRE HARNESS (CONNECTOR LOCATION)
1J	20	COWL WIRE
1K		

: CONNECTOR JOINING WIRE HARNESS AND WIRE HARNESS

CODE	SEE PAGE	JOINING WIRE HARNESS AND WIRE HARNESS (CONNECTOR LOCATION)
IE1	36	ENGINE ROOM MAIN WIRE AND COWL WIRE (R/B NO. 4)
IG1	36	INSTRUMENT PANEL WIRE AND COWL WIRE (R/B NO. 5)

: GROUND POINTS

CODE	SEE PAGE	GROUND POINTS LOCATION
IF	36	LEFT KICK PANEL
IJ	36	RIGHT KICK PANEL

: SPLICE POINTS

CODE	SEE PAGE	WIRE HARNESS WITH SPLICE POINTS	CODE	SEE PAGE	WIRE HARNESS WITH SPLICE POINTS
E 1	34	ENGINE ROOM MAIN WIRE	**I 5**	38	COWL WIRE
E 2			**I 8**		
E 3			**I15**		

C13

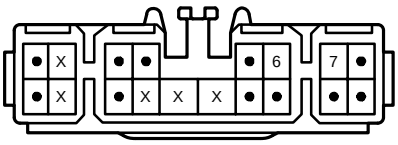

C15

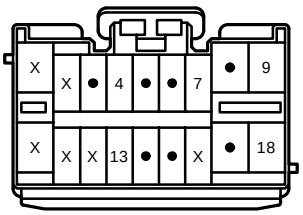

F 9 BLACK

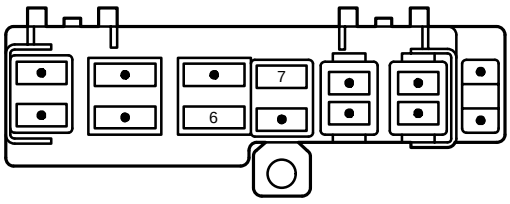

H 1, H 2 BLACK

H 3, H 4 BROWN

I16

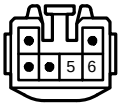

WhereEverybodyKnowsYourName

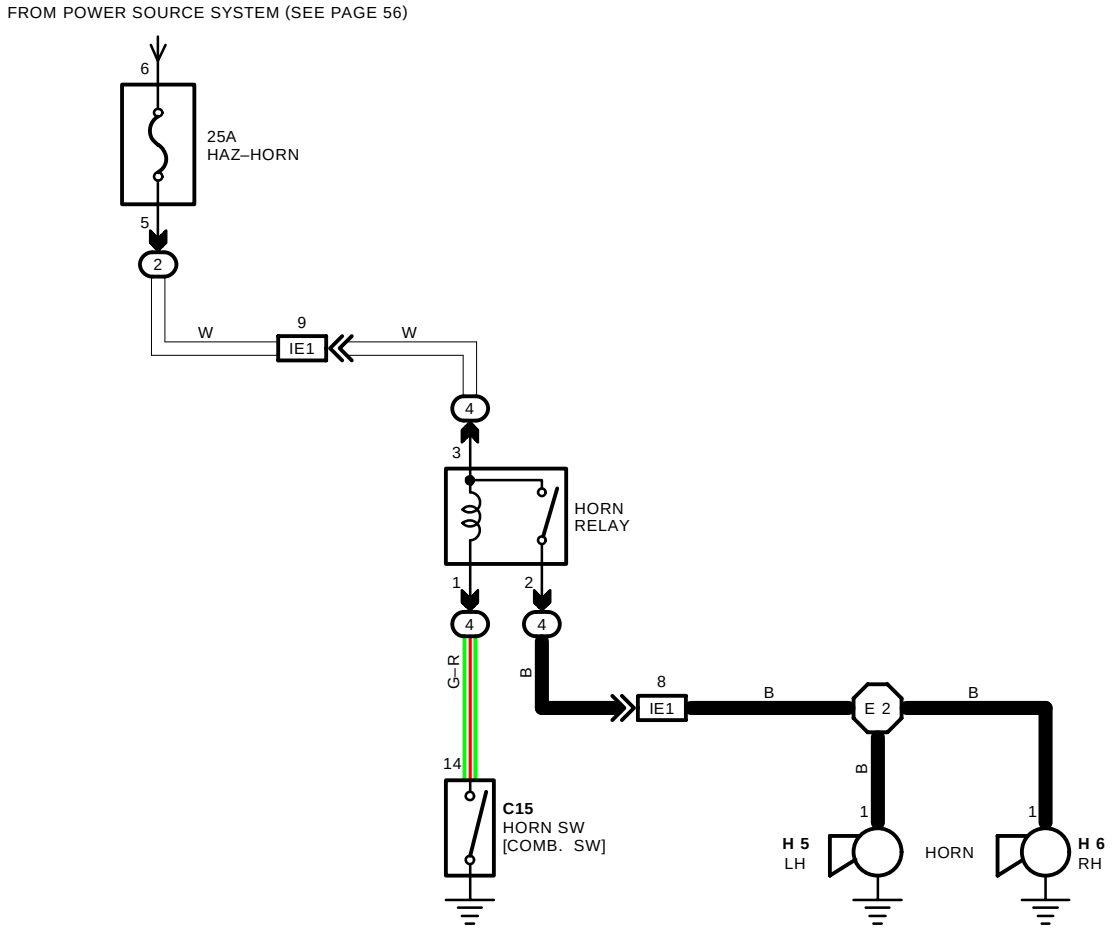

SERVICE HINTS

HORN RELAY

2–3 : CLOSED WITH HORN SW ON

: PARTS LOCATION

CODE	SEE PAGE	CODE	SEE PAGE	CODE	SEE PAGE
C15	28	**H 5**	26	**H 6**	26

: RELAY BLOCKS

CODE	SEE PAGE	RELAY BLOCKS (RELAY BLOCK LOCATION)
2	19	ENGINE COMPARTMENT LEFT
4	23	LEFT KICK PANEL (J/B NO.1 LEFT)

: CONNECTOR JOINING WIRE HARNESS AND WIRE HARNESS

CODE	SEE PAGE	JOINING WIRE HARNESS AND WIRE HARNESS (CONNECTOR LOCATION)
IE1	36	ENGINE ROOM MAIN WIRE AND COWL WIRE (R/B NO.4)

: SPLICE POINTS

CODE	SEE PAGE	WIRE HARNESS WITH SPLICE POINTS	CODE	SEE PAGE	WIRE HARNESS WITH SPLICE POINTS
E 2	34	ENGINE ROOM MAIN WIRE			

C15

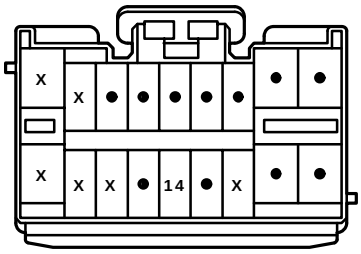

H 5, H 6 BLACK

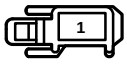

WhereEverybodyKnowsYourName

This manual provides information on the electrical circuits in on vehicles by dividing them into a circuit for each system.

The actual wiring of each system circuit is shown from the point where the power source is received from the battery as far as each ground point. (All circuit diagrams are shown with the switches in the OFF position.)

When troubleshooting any problem, first understand the operation of the circuit where the problem was detected (see System Circuit section), the power source supplying power to that circuit (see Power Source section), and the ground points (see Ground Points section). See the System Outline to understand the circuit operation.

When the circuit operation is understood, begin troubleshooting of the problem circuit to isolate the cause. Use Relay Location and Electrical Routing sections to find each part, junction block and wiring harness connectors, wiring harness and wiring harness connectors, splice points, and ground points of each system circuit. Internal wiring for each junction block is also provided for better understanding of connection within a junction block.

Wiring related to each system is indicated in each system circuit by arrows (from __ , to __). When overall connections are required, see the Overall Wiring Diagram at the end of this manual.

WhereEverybodyKnowsYourName

* The system shown here is an EXAMPLE ONLY. It is different to the actual circuit shown in the SYSTEM CIRCUITS SECTION.

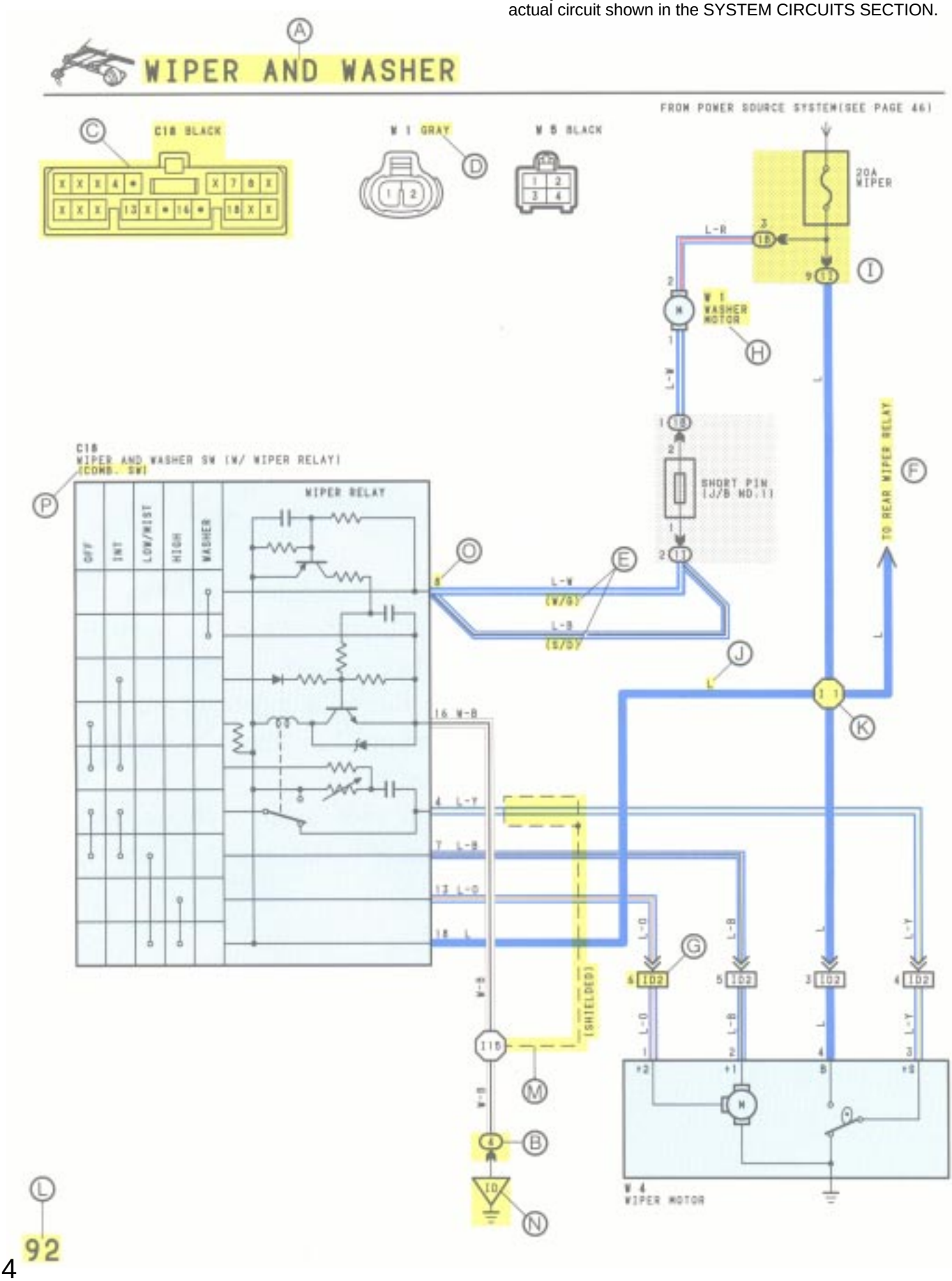

WhereEverybodyKnowsYourName

Ⓐ : System Title

Ⓑ : Indicates a Relay Block. No shading is used and only the Relay Block No. is shown to distinguish it from the J/B.

Example: Indicates Relay Block No. 1.

Ⓒ : Indicates the connector to be connected to a part (the numeral indicates the pin No.)

Explanation of pin use.

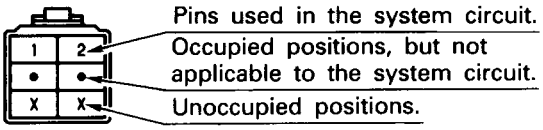

The pins shown are only for the highest grade, or only include those in the specification.

Ⓓ : Connector Color

Connectors not indicated are milky white in color.

Ⓔ : ( ) is used to indicate different wiring and connector, etc. when the vehicle model, engine type, or specification is different.

Ⓕ : Indicates related system.

Ⓖ : Indicates the wiring harness and wiring harness connector. The wiring harness with male terminal is shown with arrows (⩔).

Outside numerals are pin numbers.

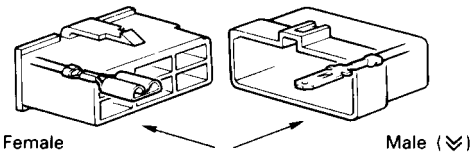

The first letter of the code for each wiring harness and wiring harness connector(s) indicates the component's location, e.g., "E" for the Engine Compartment, "I" for the Instrument Panel and Surrounding area, and "B" for the Body and Surrounding area.

When more than one code has the first and second letters in common, followed by numbers (e.g., IH1, IH2), this indicates the same type of wiring harness and wiring harness connector.

Ⓗ : Represents a part (all parts are shown in sky blue). The code is the same as the code used in parts position.

Ⓘ : Junction Block (The number in the circle is the J/B No. and the connector code is shown beside it). Junction Blocks are shaded to clearly separate them from other parts (different junction blocks are shaded differently for further clarification).

Example:

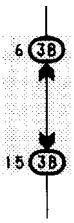

3B indicates that it is inside Junction Block No. 3.

Ⓙ : Indicates the wiring color.

Wire colors are indicated by an alphabetical code.

B	=	Black	L	=	Blue	R	=	Red
BR	=	Brown	LG	=	Light Green	V	=	Violet
G	=	Green	O	=	Orange	W	=	White
GR	=	Gray	P	=	Pink	Y	=	Yellow

The first letter indicates the basic wire color and the second letter indicates the color of the stripe.

Example: L – Y

(Blue) (Yellow)

Ⓚ : Indicates a wiring Splice Point (Codes are "E" for the Engine Room, "I" for the Instrument Panel, and "B" for the Body).

Example:

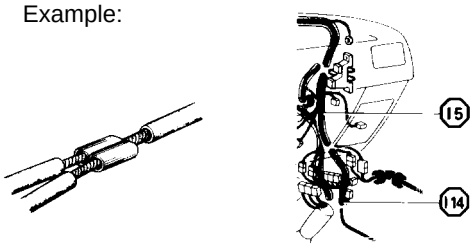

The Location of Splice Point I 5 is indicated by the shaded section.

Ⓛ : Page No.

Ⓜ : Indicates a shielded cable.

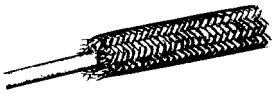

Ⓝ : Indicates a ground point.

The first letter of the code for each ground point(s) indicates the component's location, e.g., "E" for the Engine Compartment, "I" for the Instrument Panel and Surrounding area, and "B" for the Body and Surrounding area.

Ⓞ : Indicates the pin number of the connector.

The numbering system is different for female and male connectors.

Example: Numbered in order from upper left to lower right — Numbered in order from upper right to lower left

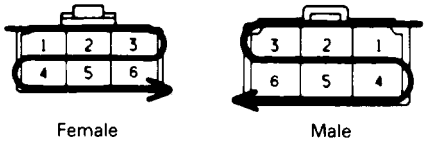

Ⓟ : When 2 parts both use one connector in common, the parts connector name used in the wire routing section is shown in square brackets [ ].

WhereEverybodyKnowsYourName

Q

SYSTEM OUTLINE

WITH THE IGNITION SW TURNED ON, THE CURRENT FLOWS TO TERMINAL 3 OF THE POWER WINDOW MASTER SW, TERMINAL 2 OF THE POWER WINDOW CONTROL RELAY AND TERMINAL 8 OF THE POWER WINDOW SW THROUGH THE DOOR FUSE.

1. DRIVER'S WINDOW "MANUAL UP" OPERATION BY MASTER SW

HOLDING MANUAL SW (DRIVER'S) ON "UP" POSITION LOCATED IN POWER WINDOW MASTER SW, THE CURRENT FLOWS TO TERMINAL 5 OF THE POWER WINDOW CONTROL RELAY THROUGH TERMINAL 3 OF THE MASTER SW → TERMINAL 2 TO OPERATE A POWER WINDOW CONTROL RELAY. THUS THE CURRENT INSIDE THE RELAY FLOWS FROM TERMINAL 2 OF THE RELAY → TERMINAL 1 → TERMINAL 2 OF THE POWER WINDOW MOTOR → TERMINAL 1 → TERMINAL 4 OF THE RELAY → TERMINAL 3 → TO GROUND. THE MOTOR TURNS TO ASCENT THE WINDOW. RELEASING THIS SW, THE ROTATION OF MOTOR IS STOPPED AND THE WINDOWS CAN STOP AT WILL POINT.

(FOR THE "MANUAL DOWN" OPERATION, CURRENT FLOWS IN THE REVERSE DIRECTION BECAUSE THE TERMINALS WHERE IT FLOWS ARE CHANGED).

2. DRIVER'S WINDOW "AUTO DOWN" OPERATION BY MASTER SW

ONCE THE "AUTO DOWN" BUTTON OF THE MASTER SW IS PUSHED, THE CURRENT FLOWS TERMINAL 9 OF THE POWER WINDOW CONTROL RELAY THROUGH TERMINAL 3 OF THE MASTER SW → TERMINALS 8 AND 9 TO OPERATE THE RELAY. THUS THE CURRENT INSIDE THE POWER WINDOW CONTROL RELAY FLOWS FROM TERMINAL 2 OF THE RELAY → TERMINAL 4 → TERMINAL 1 OF THE POWER WINDOW MOTOR → TERMINAL 2 → TERMINAL 1 OF THE RELAY → TERMINAL 3 → TO GROUND. THE MOTOR CONTINUES THE ROTATION ENABLING TO DESCENT THE WINDOW.

THE WINDOW DESCENDS TO THE END POSITION. THE CURRENT WILL BE CUT OFF TO RELEASE THE AUTO DOWN FUNCTION BASED ON THE INCREASING CURRENT BETWEEN TERMINAL 2 OF THE RELAY AND TERMINAL 1 IN RELAY.

3. DRIVER'S WINDOW AUTO DOWN RELEASE OPERATION BY MASTER SW

HOLDING THE MANUAL SW (DRIVER'S) ON "UP" POSITION IN OPERATING AUTO DOWN. THE CURRENT FROM TERMINAL 3 OF THE MASTER SW PASSING TERMINAL 2 FLOWS TERMINAL 5 OF THE RELAY AND RELEASES THE AUTO DOWN FUNCTION IN THE POWER WINDOW CONTROL RELAY. RELEASING THE HAND FROM SW, WINDOW STOPS AND CONTINUING ON TOUCHING SW, THE FUNCTION SWITCHES TO MANUAL UP OPERATION.

4. PASSENGER'S WINDOW UP OPERATION (MASTER SW) AND WINDOW LOCK SW OPERATION

HOLDING PASSENGER'S WINDOW SW (MASTER SW) ON "UP", THE CURRENT FLOWS FROM TERMINAL 3 OF THE MASTER SW PASSING TERMINAL 6 TO TERMINAL 3 OF THE POWER WINDOW SW (PASSENGER'S) → TERMINAL 4 → TERMINAL 2 OF THE MOTOR → TERMINAL 1 → TERMINAL 9 OF THE POWER WINDOW SW → TERMINAL 7 → TERMINAL 1 OF THE MASTER SW → TERMINAL 4 TO GROUND. THE MOTOR RUNS TO ASCENT THE WINDOW. RELEASING THIS SW, THE ROTATION OF MOTOR IS STOPPED AND WINDOW CAN STOP AT WILL PLACE.

SWITCHING THE WINDOW LOCK SW IN "LOCK" POSITION, THE CIRCUIT IS OPENED AND STOPPED THE MOTOR ROTATION.

(FOR THE DOWN OPERATION, CURRENT FLOWS IN THE REVERSE DIRECTION BECAUSE THE TERMINALS WHERE IT FLOWS ARE CHANGED).

R

SERVICE HINTS

P 2 POWER WINDOW CONTROL RELAY

3–GROUND: ALWAYS CONTINUITY

2–GROUND: APPROX. **12** VOLTS WITH IGNITION SW AT **ON** POSITION

5–GROUND: APPROX. **12** VOLTS WITH IGNITION SW AT **ON** POSITION AND MASTER SW AT **UP** POSITION

8–GROUND: APPROX. **12** VOLTS WITH IGNITION SW AT **ON** POSITION AND MASTER SW AT **AUTO DOWN** POSITION

9–GROUND: APPROX. **12** VOLTS WITH IGNITION SW AT **ON** POSITION AND MASTER SW AT **DOWN** OR **AUTO DOWN** POSITION

P 4 POWER WINDOW MASTER SW

4–GROUND: ALWAYS CONTINUITY

3–GROUND: APPROX. **12** VOLTS WITH IGNITION SW AT **ON** POSITION

WINDOW LOCK SW

OPEN WITH WINDOW LOCK SW AT **LOCK** POSITION

S

: PARTS LOCATION

CODE	SEE PAGE	CODE	SEE PAGE	CODE	SEE PAGE
P 2	21	**P 4**	21	**P 6**	21
P 3	21	**P 5**	21		21

T

: RELAY BLOCKS

CODE	SEE PAGE	RELAY BLOCK (RELAY BLOCK LOCATION)
1	16	R/B NO. 1 (INSTRUMENT PANEL LEFT SIDE)

U

: JUNCTION BLOCK AND WIRE HARNESS CONNECTOR

CODE	SEE PAGE	JUNCTION BLOCK AND WIRE HARNESS (CONNECTOR LOCATION)
3B	14	J/B NO. 3 AND COWL WIRE (INSTRUMENT PANEL LEFT SIDE)

V

: CONNECTOR JOINING WIRE HARNESS AND WIRE HARNESS

CODE	SEE PAGE	JOINING WIRE HARNESS AND WIRE HARNESS (CONNECTOR LOCATION)
ID1	26	FRONT DOOR RH WIRE AND COWL WIRE (RIGHT KICK PANEL)
IH1	26	FRONT DOOR LH WIRE AND COWL WIRE (LEFT KICK PANEL)

W

: GROUND POINTS

CODE	SEE PAGE	GROUND POINT LOCATION
IC	24	COWL LEFT

X

: SPLICE POINTS

CODE	SEE PAGE	WIRE HARNESS WITH SPLICE POINTS
I 5	24	COWL WIRE

WhereEverybodyKnowsYourName

Ⓠ : Explains the system outline.

Ⓡ : Indicates values or explains the function for reference during troubleshooting.

Ⓢ : Indicates the reference page showing the position on the vehicle of the parts in the system circuit.

Example: Part “P4” (Power Window Master SW) is on page 21 of the manual.

* The letter in the code is from the first letter of the part, and the number indicates its order in parts starting with that letter.

Example: P 4

Part is 4th in order

Power Window Master SW

Ⓣ : Indicates the reference page showing the position on the vehicle of Relay Block Connectors in the system circuit.

Example: Connector “1” is described on page 16 of this manual and is installed on the left side of the instrument panel.

Ⓤ : Indicates the reference page showing the position on the vehicle of J/B and Wire Harness in the system circuit.

Example: Connector “3B” connects the Cowl Wire and J/B No. 3. It is described on page 14 of this manual, and is installed on the instrument panel left side.

Ⓥ : Indicates the reference page describing the wiring harness and wiring harness connector (the female wiring harness is shown first, followed by the male wiring harness).

Example: Connector “ID1”connects the front door RH wire (female) and cowl wire (male). It is described on page 26 of this manual, and is installed on the right side kick panel.

Ⓦ : Indicates the reference page showing the position of the ground points on the vehicle.

Example: Ground point “IC” is described on page 24 of this manual and is installed on the cowl left side.

Ⓧ : Indicates the reference page showing the position of the splice points on the vehicle.

Example: Splice point “I 5” is on the Cowl Wire Harness and is described on page 24 of this manual.

WhereEverybodyKnowsYourName

The “Current Flow Chart” section, describes which parts each power source (fuses, fusible links, and circuit breakers) transmits current to. In the Power Source circuit diagram, the conditions when battery power is supplied to each system are explained. Since all System Circuit diagrams start from the power source, the power source system must be fully understood.

POWER SOURCE (Current Flow Chart)

The chart below shows the route by which current flows from the battery to each electrical source (Fusible Link, Circuit Breaker, Fuse, etc.) and other parts.

The next page and following pages show the parts to which each electrical source outputs current.

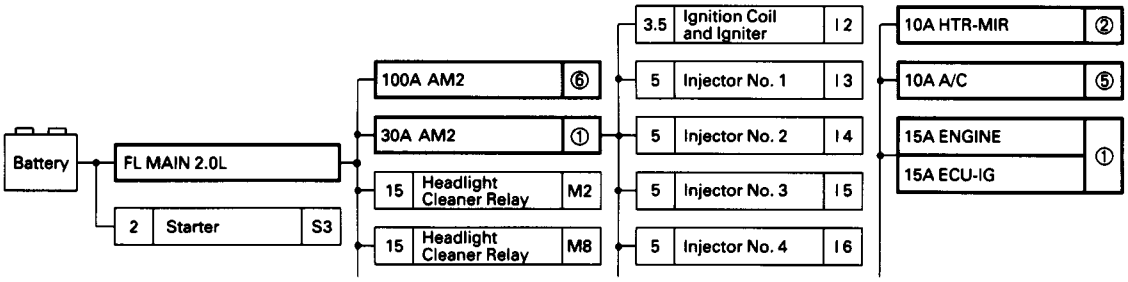

Location	Page Nos. of Related Systems	32	5	3	28	32	32	10	32	25	28	10	12	12	32	32	12	12	6	5	30	10	5
	Parts / Code or Location	A/C Idle-Up VSV	Air Flow Meater	Alternator	Auto Antenna Motor	A/C Amplifier	A/C SW	A/C SW Light	A/C Pressure SW	ADD Control Relay	Auto Antenna Control Relay	A/T Indicator Light	Back-Up Light SW	Back-Up Light Relay	Blower Motor	Blower Resistor	Back-Up Light LH	Back-Up Light RH	Choke Heater	Check Connector	Cigarette Lighter	Cigarette Lighter Light	Circuit Opening Relay
	CB or Fuse	A1	A4	A5	A7	A8	A9		A10	A11	A12	O9	B1	B3	B4	B5	R5	R6	C2	C3	C8	C8	C9
	10A ENGINE			●																			
	20A WIPER																						
	10A TURN																						
	10A GAUGE									●	●		●	●			●	●					

POWER SOURCE

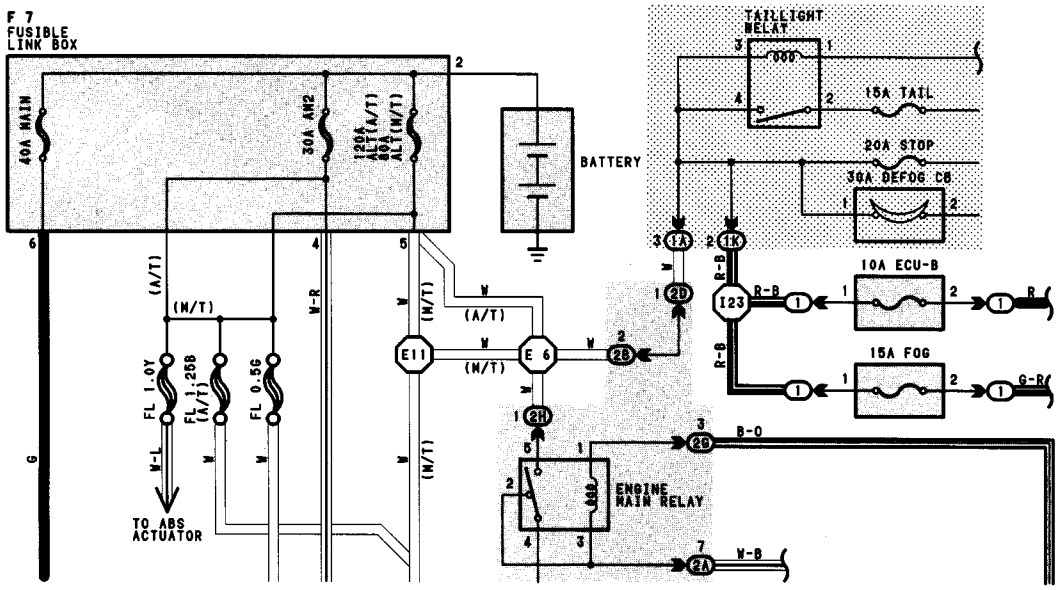

* The system shown here is an EXAMPLE ONLY. It is different to the actual circuit shown in the SYSTEM CIRCUITS SECTION.

WhereEverybodyKnowsYourName

The ground points circuit diagram shows the connections from all major parts to the respective ground points. When troubleshooting a faulty ground point, checking the system circuits which use a common ground may help you identify the problem ground quickly. The relationship between ground points (BH, BI, and BK shown below) can also be checked this way.

GROUND POINT

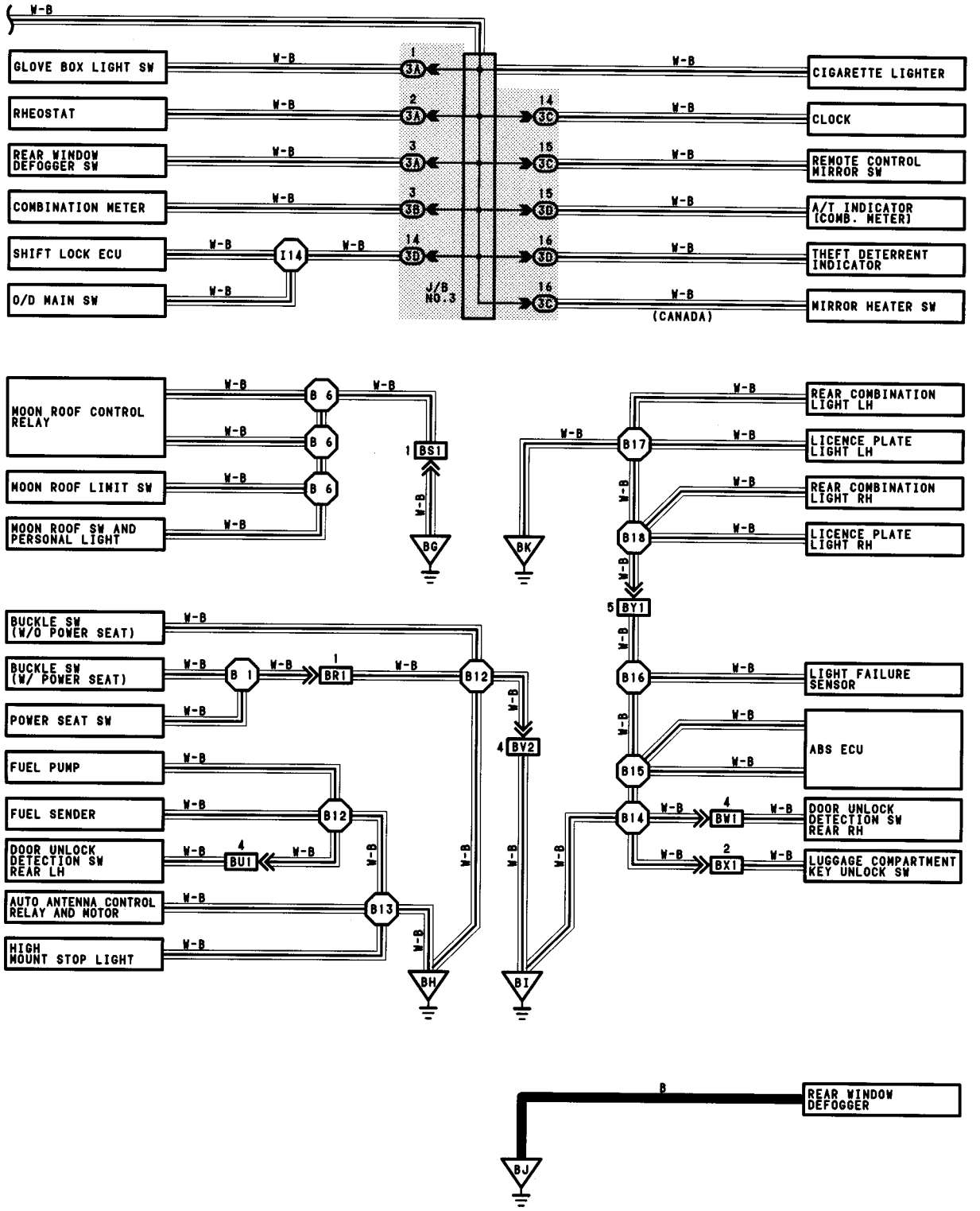

* The system shown here is an EXAMPLE ONLY. It is different to the actual circuit shown in the SYSTEM CIRCUITS SECTION.

WhereEverybodyKnowsYourName

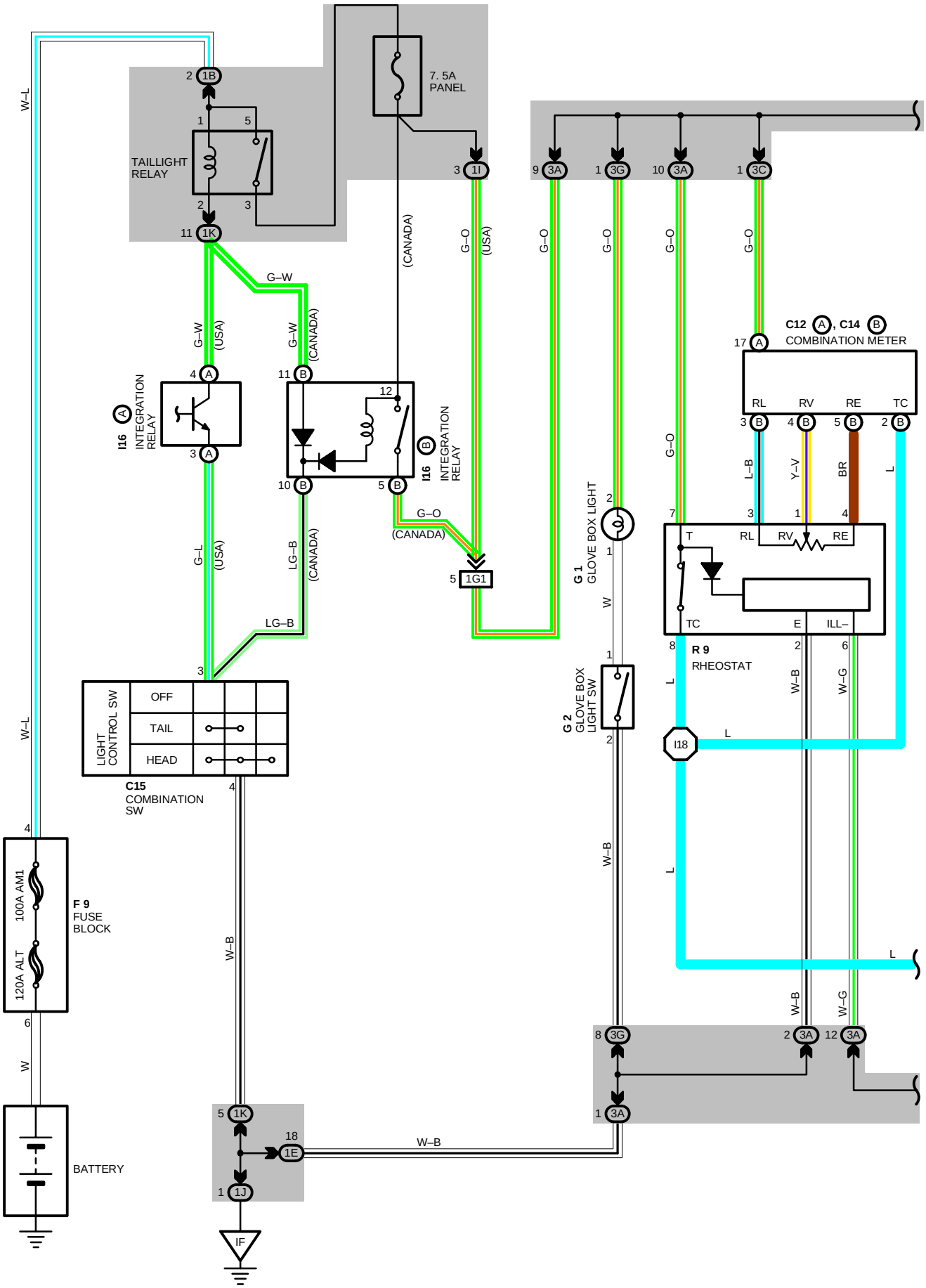

WhereEverybodyKnowsYourName

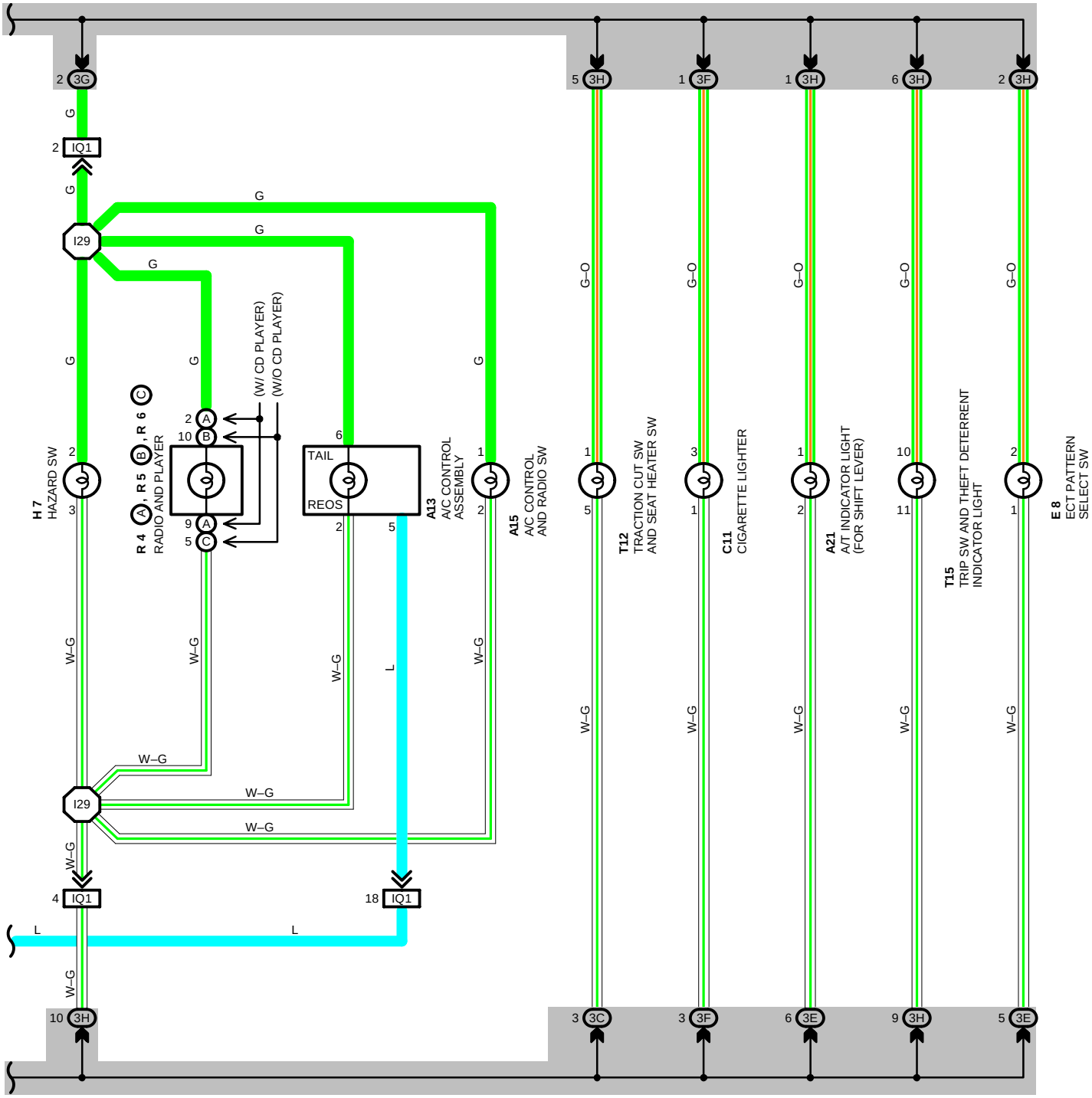

WhereEverybodyKnowsYourName

ILLUMINATION

SERVICE HINTS

TAILLIGHT RELAY
5–3 : CLOSED WITH LIGHT CONTROL SW AT **TAIL** OR **HEAD** POSITION
C15 LIGHT CONTROL SW [COMB. SW]
3–4 : CLOSED WITH LIGHT CONTROL SW AT **TAIL** OR **HEAD** POSITION

: PARTS LOCATION

CODE		SEE PAGE	CODE		SEE PAGE	CODE		SEE PAGE
A13		28	**E 8**		28	**R 4**	A	29
A15		28	**F 9**		26	**R 5**	B	29
A21		28	**G 1**		28	**R 6**	C	29
C11		28	**G 2**		28	**R 9**		29
C12	A	28	**H 7**		29	**T12**		29
C14	B	28	**I16**	A	29	**T15**		29
C15		28		B	29			

: JUNCTION BLOCK AND WIRE HARNESS CONNECTOR

CODE	SEE PAGE	JUNCTION BLOCK AND WIRE HARNESS (CONNECTOR LOCATION)
1B	20	ENGINE ROOM MAIN WIRE
1E	20	INSTRUMENT PANEL WIRE
1I	20	COWL WIRE
1J		
1K		
3A	22	INSTRUMENT PANEL WIRE
3C		
3E		
3F		
3G		
3H		

: CONNECTOR JOINING WIRE HARNESS AND WIRE HARNESS

CODE	SEE PAGE	JOINING WIRE HARNESS AND WIRE HARNESS (CONNECTOR LOCATION)
IG1	36	INSTRUMENT PANEL WIRE AND COWL WIRE (R/B NO.5)
IQ1	38	INSTRUMENT PANEL WIRE AND CONSOLE BOX WIRE (UNDER THE INSTRUMENT PANEL CENTER)

: GROUND POINTS

CODE	SEE PAGE	GROUND POINTS LOCATION
IF	36	LEFT KICK PANEL

: SPLICE POINTS

CODE	SEE PAGE	WIRE HARNESS WITH SPLICE POINTS	CODE	SEE PAGE	WIRE HARNESS WITH SPLICE POINTS
I18	38	INSTRUMENT PANEL WIRE	**I29**	38	CONSOLE BOX WIRE

WhereEverybodyKnowsYourName

A13

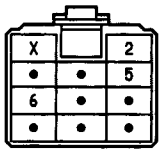

A15

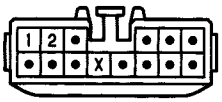

A21

C11 BLUE

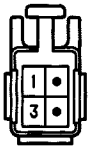

C12 (A)

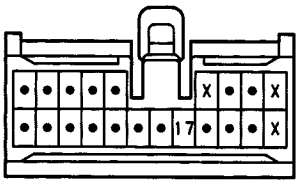

C14 (B)

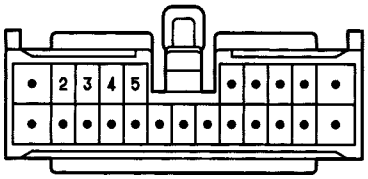

C15

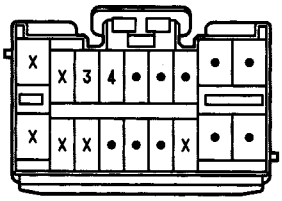

E 8

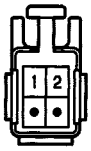

F 9

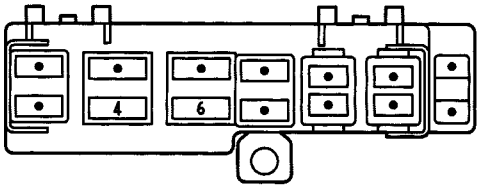

G 1 GRAY

G 2 BLACK

H 7 BLACK

(USA) I16 (A)

(CANADA) I16 (B)

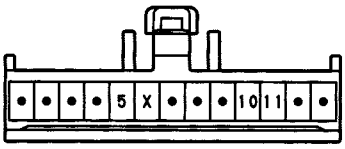

R 4 (A)

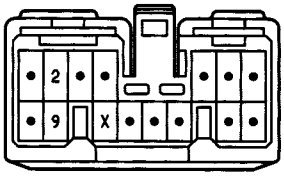

R 5 (B)

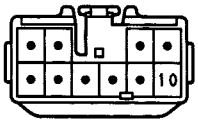

R 6 (C)

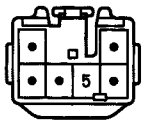

R 9

T12

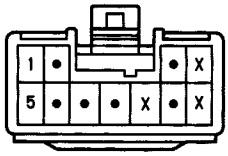

T15

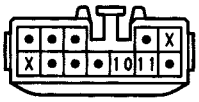

WhereEverybodyKnowsYourName

INTERIOR LIGHT

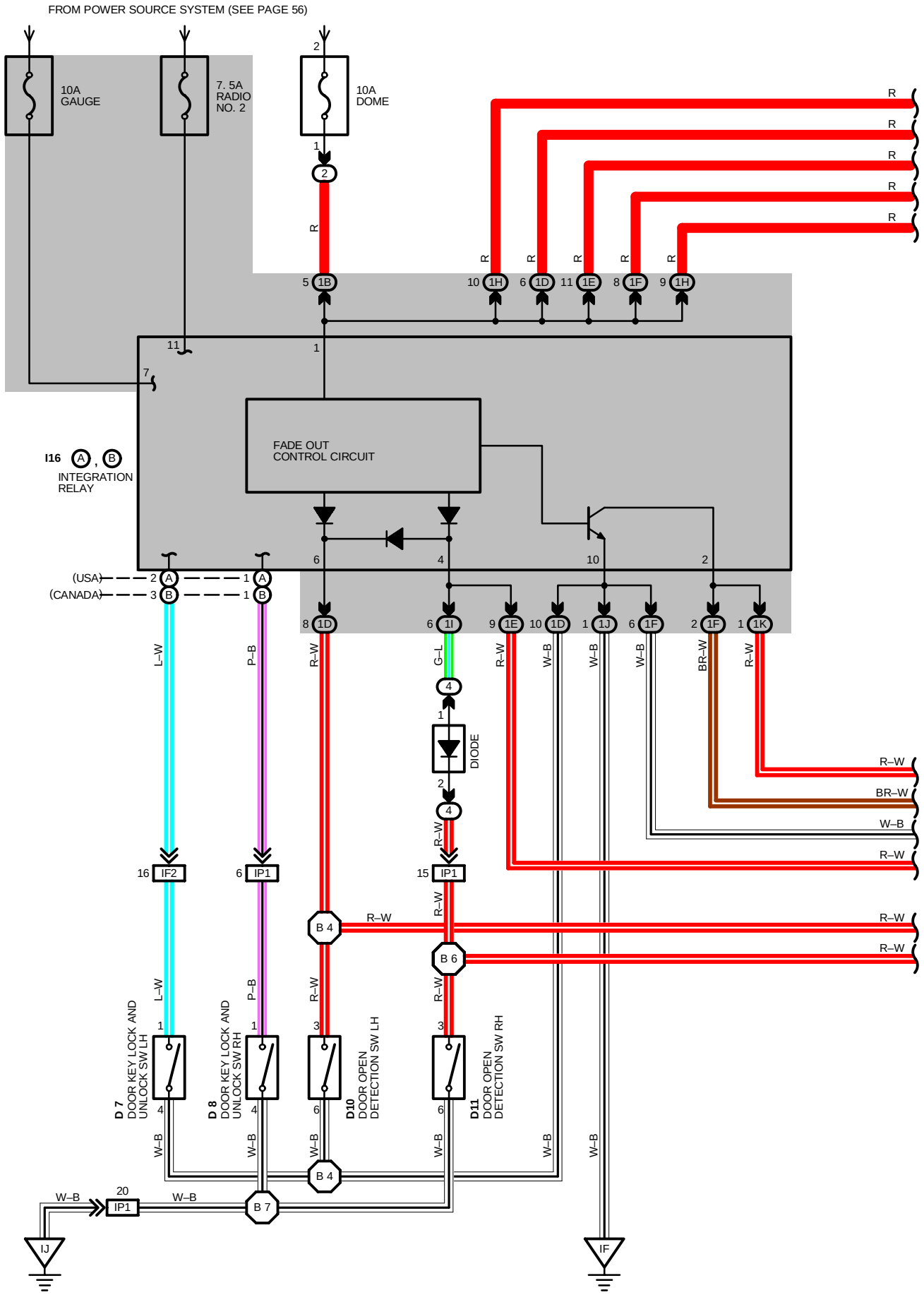

WhereEverybodyKnowsYourName

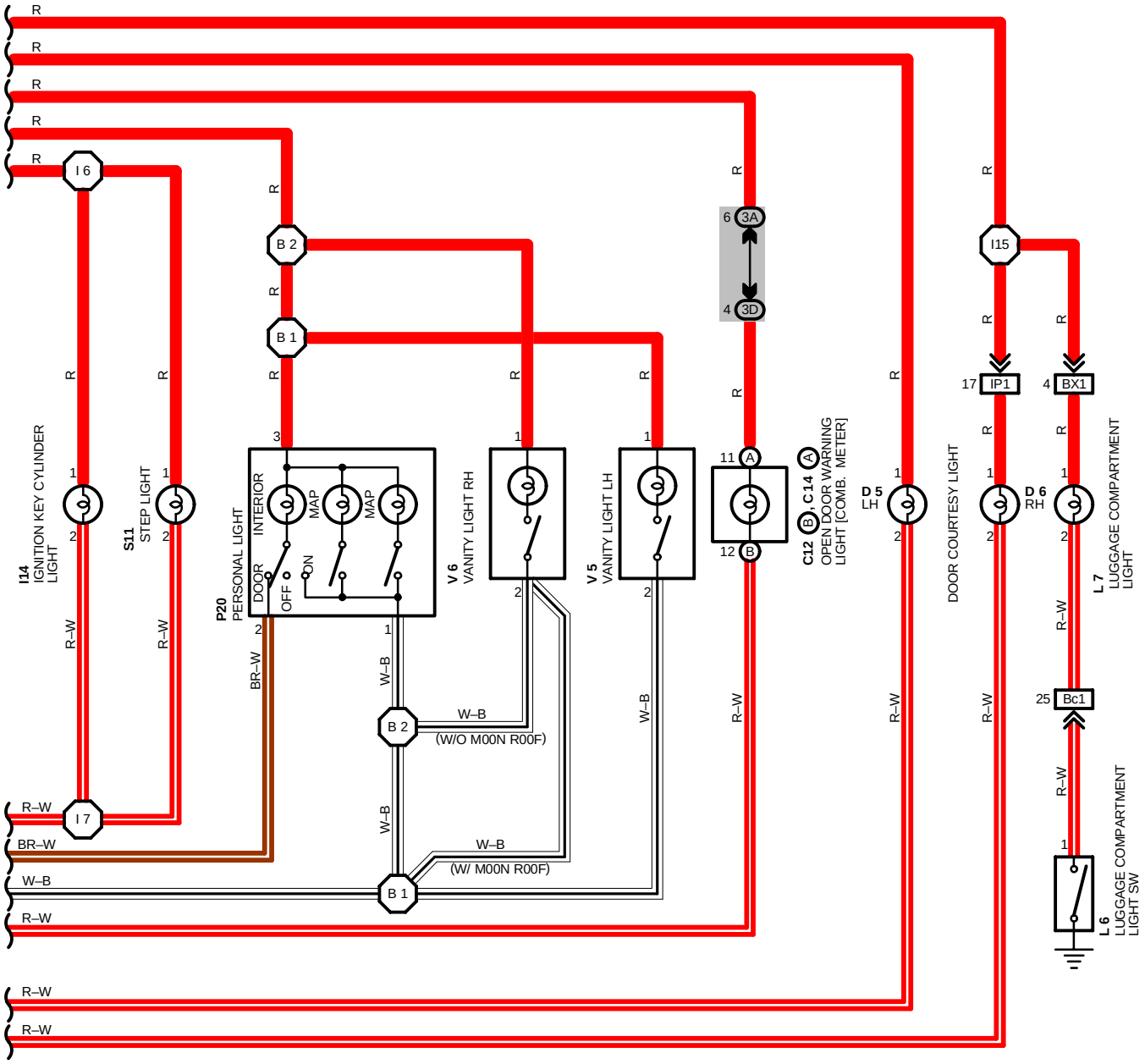

WhereEverybodyKnowsYourName

INTERIOR LIGHT

SERVICE HINTS

INTEGRATION RELAY (J/B NO. 1)
(1B) 5–GROUND : ALWAYS APPROX. **12** VOLTS
(1D) 8–GROUND : CONTINUITY WITH FRONT LH DOOR OPEN
(1I) 6–GROUND : CONTINUITY WITH FRONT RH DOOR OPEN

D10, D11 DOOR OPEN DETECTION SW LH, RH
3–6 : CLOSED WITH DOOR OPEN

L 6 LUGGAGE COMPARTMENT LIGHT SW
1–GROUND : CLOSED WITH LUGGAGE COMPARTMENT DOOR OPEN

: PARTS LOCATION

CODE		SEE PAGE	CODE		SEE PAGE	CODE	SEE PAGE
C12	B	28	**D10**		30	**L 7**	30
C14	A	28	**D11**		30	**P20**	32
D 5		30	**I14**		30	**S11**	29
D 6		30	**I16**	A	30	**V 5**	31
D 7		30	**I16**	B	30	**V 6**	31
D 8		30	**L 6**		30		

: RELAY BLOCKS

CODE	SEE PAGE	RELAY BLOCKS (RELAY BLOCK LOCATION)
2	19	ENGINE COMPARTMENT LEFT
4	22	LEFT KICK PANEL (J/B NO.1 LEFT)

: JUNCTION BLOCK AND WIRE HARNESS CONNECTOR

CODE	SEE PAGE	JUNCTION BLOCK AND WIRE HARNESS (CONNECTOR LOCATION)
1B	20	ENGINE ROOM MAIN WIRE
1D	20	FRONT DOOR LH WIRE
1E	20	INSTRUMENT PANEL WIRE
1F	20	ROOF WIRE
1H	20	COWL WIRE
1I		
1J		
1K		
3A	23	INSTRUMENT PANEL WIRE
3D		

: CONNECTOR JOINING WIRE HARNESS AND WIRE HARNESS

CODE	SEE PAGE	JOINING WIRE HARNESS AND WIRE HARNESS (CONNECTOR LOCATION)
IF2	36	ENGINE WIRE AND COWL WIRE (R/B NO. 4)
IP1	38	FRONT DOOR RH WIRE AND COWL WIRE (RIGHT KICK PANEL)
BX1	40	FLOOR NO. 3 WIRE AND COWL WIRE (RIGHT KICK PANEL)
Bc1	40	FLOOR NO. 3 WIRE AND FLOOR WIRE (UNDER THE LEFT SIDE OF REAR SEAT CUSHION)

: GROUND POINTS

CODE	SEE PAGE	GROUND POINTS LOCATION
IF	36	LEFT KICK PANEL
IJ	36	RIGHT KICK PANEL

: SPLICE POINTS

CODE	SEE PAGE	WIRE HARNESS WITH SPLICE POINTS	CODE	SEE PAGE	WIRE HARNESS WITH SPLICE POINTS
I 6	38	COWL WIRE	**B 2**	40	ROOF WIRE
I 7			**B 4**	40	FRONT DOOR LH WIRE
I15			**B 6**	40	FRONT DOOR RH WIRE
B 1	40	ROOF WIRE	**B 7**		

WhereEverybodyKnowsYourName

C12 (B)

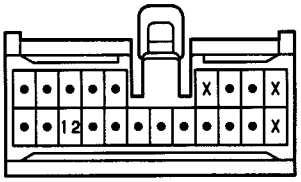

C14 (A)

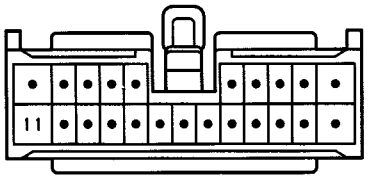

D 5, D 6

D 7, D 8, D10, D11 GRAY

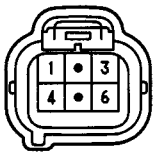

I14

I16 (A) (USA)

I16 (B) (CANADA)

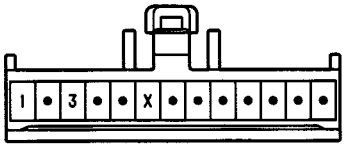

L 6 GRAY

L 7 GRAY

P20

S11 BLACK

V 5, V 6 BLUE

WhereEverybodyKnowsYourName

INTRODUCTION

This manual consists of the following 11 sections:

No.	Section	Description
A	INDEX	Index of the contents of this manual.
	INTRODUCTION	Brief explanation of each section.
B	HOW TO USE THIS MANUAL	Instructions on how to use this manual.
C	TROUBLE–SHOOTING	Describes the basic inspection procedures for electrical circuits.
D	ABBREVIATIONS	Defines the abbreviations used in this manual.
E	GLOSSARY OF TERMS AND SYMBOLS	Defines the symbols and functions of major parts.
F	RELAY LOCATIONS	Shows position of the Electronic Control Unit, Relays, Relay Block, etc. This section is closely related to the system circuit.
G	ELECTRICAL WIRING ROUTING	Describes position of Parts Connectors, Splice points, Ground points, etc. This section is closely related to the system circuit.
H	POWER SOURCE (Current Flow Chart)	Describes power distribution from the power supply to various electrical loads.
I	INDEX	Index of the system circuits.
	SYSTEM CIRCUITS	Electrical circuits of each system are shown from the power supply through ground points. Wiring connections and their positions are shown and classified by code according to the connection method. (Refer to the section, “How to use this manual”). The “System Outline” and “Service Hints” useful for troubleshooting are also contained in this section.
J	GROUND POINTS	Shows ground positions of all parts described in this manual.
K	OVERALL WIRING DIAGRAM	Provides circuit diagrams showing the circuit connections.

WhereEverybodyKnowsYourName

LIGHT AUTO TURN OFF

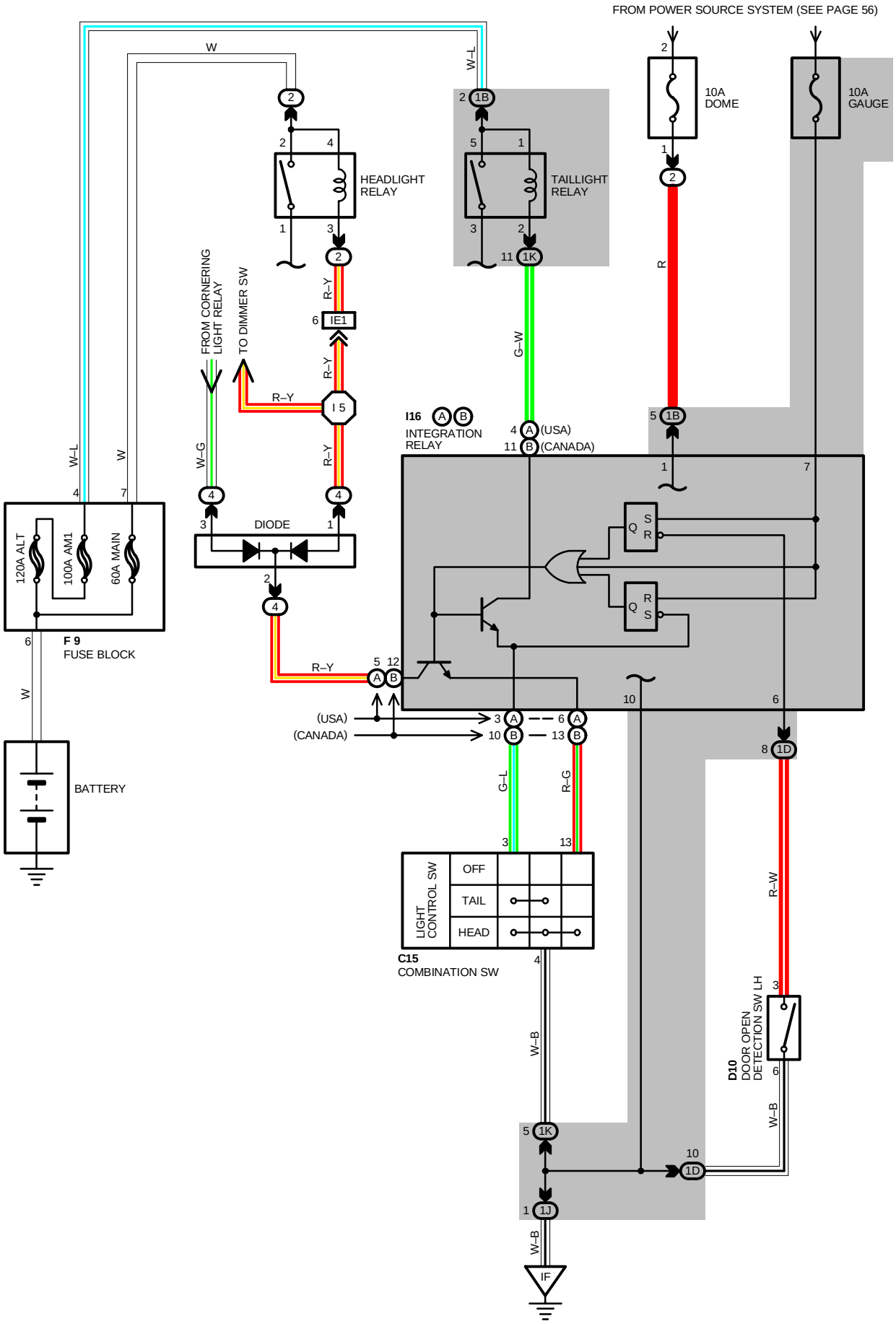

WhereEverybodyKnowsYourName

SYSTEM OUTLINE

WITH THE IGNITION SW TURNED ON, THE CURRENT FLOWS TO **TERMINAL 7** OF THE INTEGRATION RELAY THROUGH GAUGE FUSE. VOLTAGE IS APPLIED AT ALL TIMES TO **TERMINAL (A)4 (**USA), **(B)11** (CANADA) OF THE INTEGRATION RELAY THROUGH THE TAILLIGHT RELAY COIL, AND TO **TERMINAL (A)5** (USA), **(B)12** (CANADA) THROUGH THE HEADLIGHT RELAY COIL.

1. NORMAL LIGHTING OPERATION

TURN TAILLIGHT ON

WITH LIGHT CONTROL SW TURNED TO **TAILLIGHT** POSITION, A SIGNAL IS INPUT INTO **TERMINAL (A)3** (USA), **(B)10** (CANADA) OF THE INTEGRATION RELAY. DUE TO THIS SIGNAL, THE CURRENT FLOWING TO **TERMINAL (A)4** (USA), **(B)11** (CANADA) OF THE RELAY FLOWS TO **TERMINAL (A)3** (USA), **(B)10** (CANADA) → **TERMINAL 3** OF THE LIGHT CONTROL SW → **TERMINAL 4** → TO **GROUND** AND TAILLIGHT RELAY CAUSES TAILLIGHT TO TURN ON.

TURN HEADLIGHT ON

WITH LIGHT CONTROL SW TURNED TO **HEADLIGHT** POSITION, A SIGNAL IS INPUT INTO **TERMINALS (A)3** (USA). **(B)10** (CANADA) AND **(A)6** (USA), **(B)13** (CANADA) OF THE INTEGRATION RELAY. DUE TO THIS SIGNAL, THE CURRENT FLOWING TO **TERMINAL (A)5** (USA), **(B)12** (CANADA) OF THE RELAY FLOWS TO TERMINAL **(A)6** (USA), **(B)13** (CANADA) → **TERMINAL 13** OF THE LIGHT CONTROL SW → **TERMINAL 4** → TO **GROUND** IN THE HEADLIGHT CIRCUIT, AND CAUSES TAILLIGHT AND HEADLIGHT RELAY TO TURN ON. THE TAILLIGHT CIRCUIT IS SAME AS ABOVE.

2. LIGHT AUTO TURN OFF OPERATION

WITH LIGHTS ON AND IGNITION SW TURNED OFF (INPUT SIGNAL GOES TO **TERMINAL 7** OF THE RELAY), WHEN DOOR ON DRIVER'S SIDE IS OPENED (INPUT SIGNAL GOES TO **TERMINAL 6** OF THE RELAY), THE RELAY OPERATES AND THE CURRENT IS CUT OFF WHICH FLOWS FROM **TERMINAL (A)4** (USA), **(B)11** (CANADA) OF THE RELAY TO **TERMINAL (A)3** (USA), **(B)10** (CANADA) IN TAILLIGHT CIRCUIT AND FROM **TERMINAL (A)5** (USA), (**B)12** (CANADA) TO **TERMINAL (A)6** (USA), **(B)13** (CANADA) IN HEADLIGHT CIRCUIT.

AS A RESULT, ALL LIGHTS ARE TURNED OFF AUTOMATICALLY.

SERVICE HINTS

HEADLIGHT RELAY
1–2 : CLOSED WITH LIGHT CONTROL SW AT **HEAD** POSITION OR DIMMER SW AT **FLASH** POSITION

TAILLIGHT RELAY
5–3 : CLOSED WITH LIGHT CONTROL SW AT **TAIL** OR **HEAD** POSITION

I16(A)(B) INTEGRATION RELAY
7–GROUND : APPROX. **12** VOLTS WITH IGNITION SW AT **ON** POSITION
6–GROUND : CONTINUITY WITH DOOR LH OPEN
(A)4, **(B)**11–GROUND: ALWAYS APPROX. **12** VOLTS
(A)5, **(B)**12–GROUND: ALWAYS APPROX. **12** VOLTS
(A)6, **(B)**13–GROUND: CONTINUITY WITH LIGHT CONTROL SW AT **HEAD** POSITION
(A)3, **(B)**10–GROUND: CONTINUITY WITH LIGHT CONTROL SW AT **TAIL** OR **HEAD** POSITION

D10 DOOR LOCK MOTOR, DOOR UNLOCK DETECTION SW AND DOOR OPEN DETECTION SW LH
3–6 : CLOSED WITH DOOR LH OPEN

○ : PARTS LOCATION

CODE	SEE PAGE	CODE		SEE PAGE	CODE		SEE PAGE
C15	28	**F 9**		26	**I16**	B	29 (CANADA)
D10	30	**I16**	A	29 (USA)			

▭ : RELAY BLOCKS

CODE	SEE PAGE	RELAY BLOCKS (RELAY BLOCK LOCATION)
2	19	ENGINE COMPARTMENT LEFT
4	23	LEFT KICK PANEL (J/B NO.1 LEFT)

▭ : JUNCTION BLOCK AND WIRE HARNESS CONNECTOR

CODE	SEE PAGE	JUNCTION BLOCK AND WIRE HARNESS (CONNECTOR LOCATION)
1B	20	ENGINE ROOM MAIN WIRE
1D	20	FRONT DOOR LH WIRE
1J	20	COWL WIRE
1K		

▭ : CONNECTOR JOINING WIRE HARNESS AND WIRE HARNESS

CODE	SEE PAGE	JOINING WIRE HARNESS AND WIRE HARNESS (CONNECTOR LOCATION)
IE1	36	ENGINE WIRE AND COWL WIRE (R/B NO.4)

WhereEverybodyKnowsYourName

LIGHT AUTO TURN OFF

: GROUND POINTS

CODE	SEE PAGE	GROUND POINTS LOCATION
IF	36	LEFT KICK PANEL

: SPLICE POINTS

CODE	SEE PAGE	WIRE HARNESS WITH SPLICE POINTS	CODE	SEE PAGE	WIRE HARNESS WITH SPLICE POINTS
I 5	38	COWL WIRE			

C15

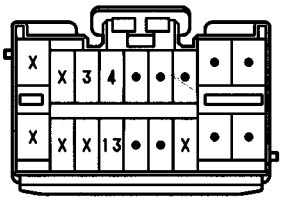

D10 GRAY

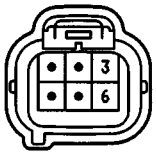

F 9 BLACK

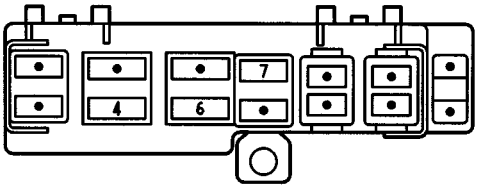

(USA) I16 (A)

(CANADA) I16 (B)

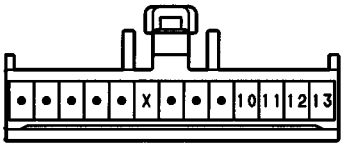

WhereEverybodyKnowsYourName

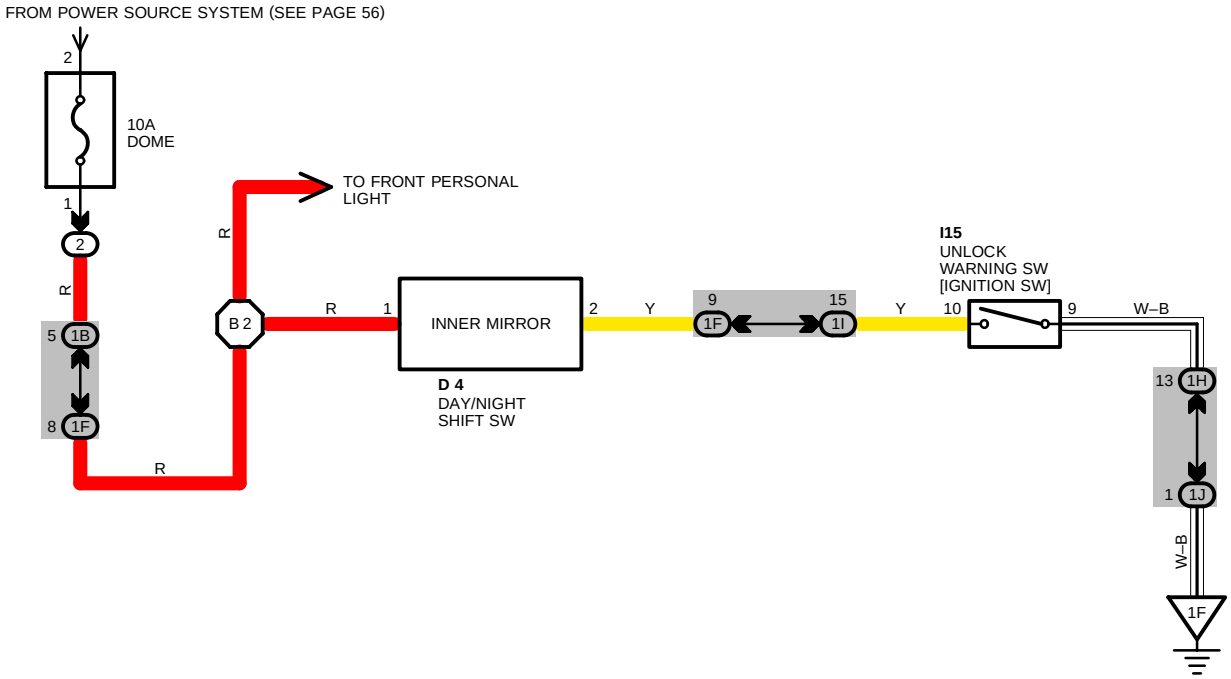

SERVICE HINTS

D 4 DAY/NIGHT SHIFT SW

1 – GROUND: ALWAYS APPROX. **12** VOLTS

I15 UNLOCK WARNING SW [IGNITION SW]

10–9: CLOSED WITH IGNITION KEY IN CYLINDER

: PARTS LOCATION

CODE	SEE PAGE	CODE	SEE PAGE	CODE	SEE PAGE
D 4	30	**I15**	29		

: RELAY BLOCKS

CODE	SEE PAGE	RELAY BLOCKS (RELAY BLOCK LOCATION)
2	19	ENGINE COMPARTMENT LEFT

: JUNCTION BLOCK AND WIRE HARNESS CONNECTOR

CODE	SEE PAGE	JUNCTION BLOCK AND WIRE HARNESS (CONNECTOR LOCATION)
1B	20	ENGINE ROOM MAIN WIRE
1F	20	ROOF WIRE
1H	20	COWL WIRE
1I		
1J		

: GROUND POINTS

CODE	SEE PAGE	GROUND POINTS LOCATION
IF	36	LEFT KICK PANEL

: SPLICE POINTS

CODE	SEE PAGE	WIRE HARNESS WITH SPLICE POINTS	CODE	SEE PAGE	WIRE HARNESS WITH SPLICE POINTS
B 2	40	ROOF WIRE			

D 4

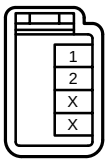

I15 BLACK

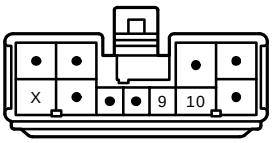

WhereEverybodyKnowsYourName

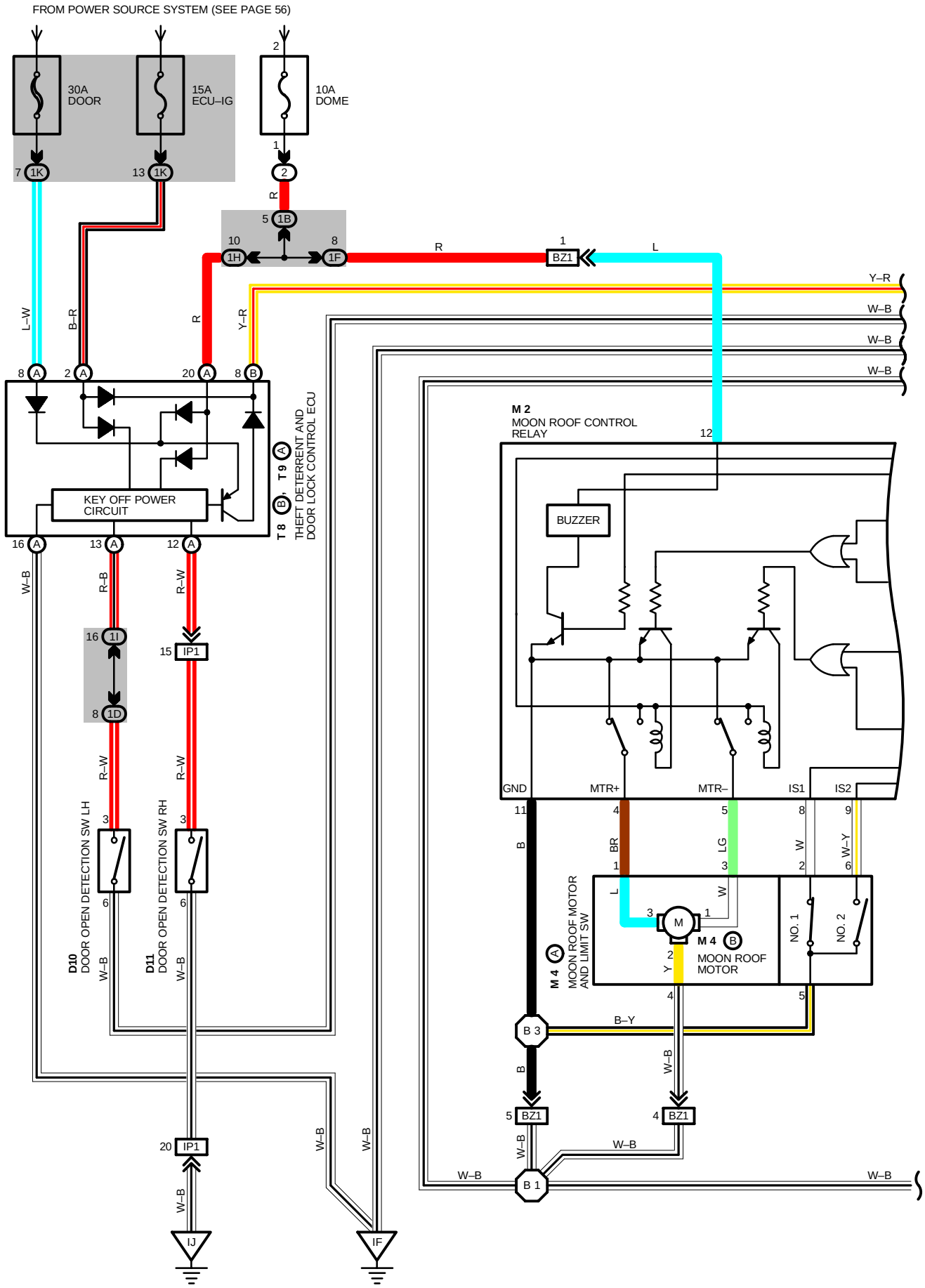

WhereEverybodyKnowsYourName

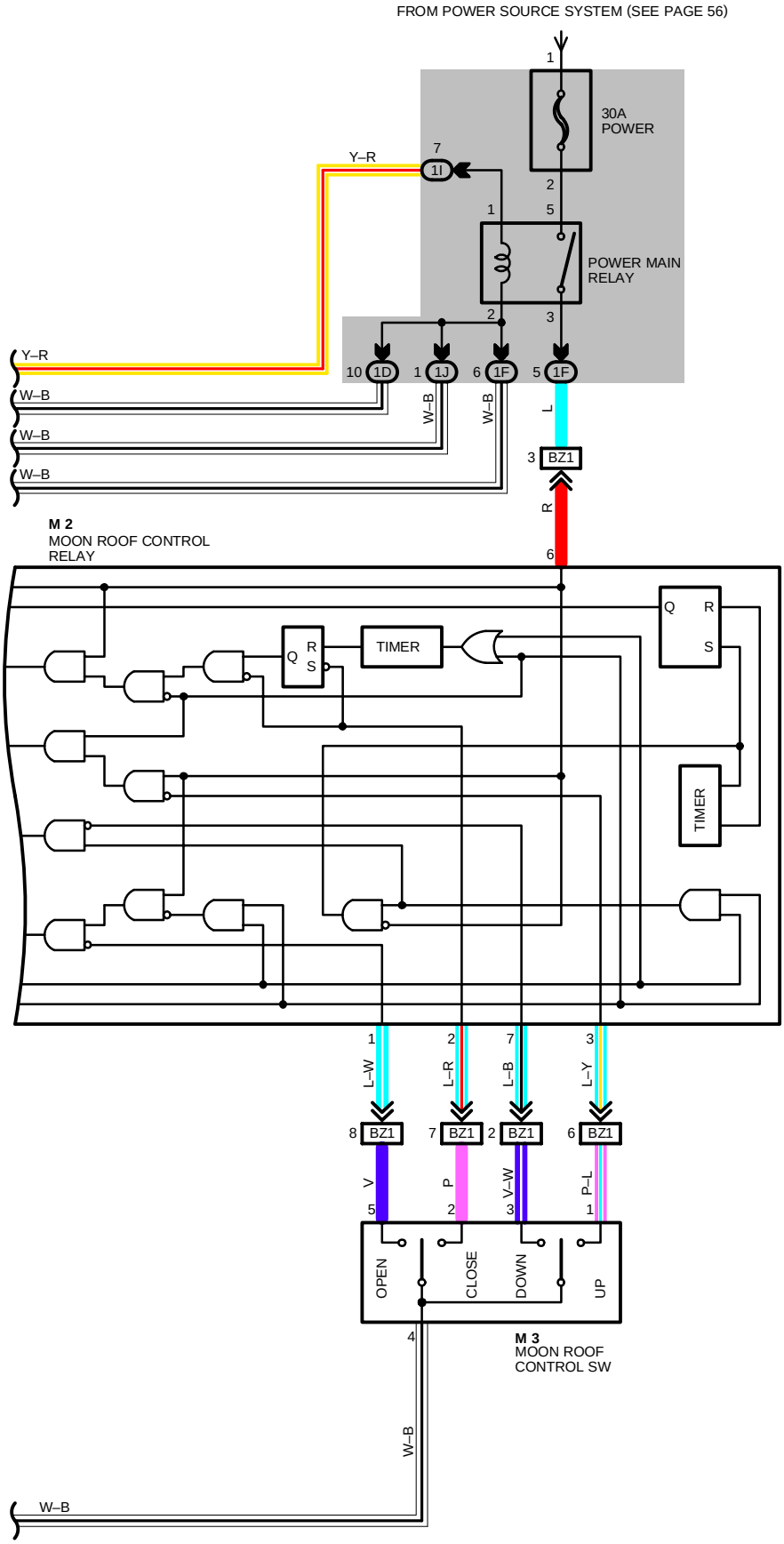

WhereEverybodyKnowsYourName

SYSTEM OUTLINE

CURRENT IS APPLIED AT ALL TIMES THROUGH **POWER** FUSE TO **TERMINAL 5** OF POWER MAIN RELAY AND ALSO THROUGH **DOME** FUSE TO **TERMINAL 12** OF MOON ROOF CONTROL RELAY. WITH THE IGNITION SW TURNED ON, THE CURRENT FLOWS **TERMINAL 1** OF POWER MAIN RELAY → **TERMINAL 2** → TO **GROUND** THROUGH **ECU–IG** FUSE. AS A RESULT, POWER MAIN RELAY IS ACTIVATED AND THE CURRENT TO **TERMINAL 5** OF POWER MAIN RELAY FLOWS FROM **TERMINAL 3** OF RELAY TO **TERMINAL 6** OF MOON ROOF CONTROL RELAY.

1. SLIDE OPEN OPERATION

WHEN THE IGNITION SW IS TURNED ON AND THE MOON ROOF CONTROL SW IS PUSHED TO THE **OPEN** POSITION, A SIGNAL IS INPUT FROM **TERMINAL 5** OF MOON ROOF CONTROL SW TO **TERMINAL 1** OF MOON ROOF CONTROL RELAY. MOON ROOF LIMIT SW NO. 2 IS ON AT THIS TIME.

WHEN THIS OCCURS, THE RELAY IS ACTIVATED AND THE CURRENT TO **TERMINAL 6** OF MOON ROOF CONTROL RELAY FLOWS FROM **TERMINAL 5** → **TERMINAL 3** OF MOON ROOF MOTOR → **TERMINAL 1** → **TERMINAL 4** OF MOON ROOF CONTROL RELAY → **TERMINAL 11** → TO **GROUND** AND ROTATES THE MOTOR TO OPEN THE MOON ROOF WHILE THE SW IS BEING PUSHED TO **OPEN** POSITION.

2. SLIDE CLOSE OPERATION

WITH THE IGNITION SW TURNED ON, THE MOON ROOF COMPLETELY OPEN AND MOON ROOF LIMIT SW NO. 1 AND NO. 2 BOTH ON, WHEN THE MOON ROOF CONTROL SW IS PUSHED TO THE **CLOSE** POSITION A SIGNAL IS INPUT FROM **TERMINAL 2** OF MOON ROOF CONTROL SW TO **TERMINAL 2** OF MOON ROOF CONTROL RELAY.

WHEN THIS OCCURS, THE RELAY IS ACTIVATED AND THE CURRENT TO **TERMINAL 6** OF MOON ROOF CONTROL RELAY FLOWS FROM **TERMINAL 4** → **TERMINAL 1** OF MOON ROOF MOTOR → **TERMINAL 3** → **TERMINAL 5** OF MOON ROOF CONTROL RELAY → **TERMINAL 11** → TO **GROUND** AND ROTATES THE MOTOR TO CLOSE THE MOON ROOF WHITE THE SW IS BEING PUSHED TO **CLOSE** POSITION.

MOON ROOF LIMIT SW NO. 1 TURNS OFF (LIMIT SW NO. 2 IS ON) AND AT **200MM (7.9**IN) BEFORE FULLY **CLOSED** POSITION, SIGNAL IS INPUT FROM **TERMINAL 2** OF LIMIT SW NO. 1 TO **TERMINAL 8** OF MOON ROOF CONTROL RELAY. THIS SIGNAL ACTIVATES THE RELAY AND STOPS CONTINUITY FROM **TERMINAL 6** OF MOON ROOF CONTROL RELAY TO **TERMINAL 11**. AS A RESULT, THE MOON ROOF STOPS AT THIS POSITION.

TO CLOSE THE MOON ROOF COMPLETELY, PUSHING THE MOON ROOF CONTROL SW AGAIN TO THE CLOSE SIDE CAUSES A SIGNAL TO BE INPUT AGAIN TO **TERMINAL 2** OF MOON ROOF CONTROL RELAY. THIS ACTIVATES THE RELAY AND THE MOON ROOF WILL CLOSE AS LONG AS THE MOON ROOF CONTROL SW IS BEING PUSHED, ALLOWING THE MOON ROOF TO FULLY CLOSE.

3. TILT UP OPERATION

WHEN THE MOON ROOF CONTROL SW IS PUSHED TO **TILT UP** POSITION, WITH THE IGNITION SW TURNED ON AND THE MOON ROOF COMPLETELY CLOSED (MOON ROOF LIGHT SW NO.2 IS OFF), A SIGNAL IS INPUT FROM **TERMINAL 1** OF MOON ROOF CONTROL SW TO **TERMINAL 3** OF MOON ROOF CONTROL RELAY. AS A RESULT, THE RELAY IS ACTIVATED AND THE CURRENT TO **TERMINAL 6** OF RELAY FLOWS FROM **TERMINAL 4** OF THE RELAY → **TERMINAL 1** OF MOON ROOF MOTOR → **TERMINAL 3** → **TERMINAL 5** OF RELAY → **TERMINAL 11** TO **GROUND** AND ROTATES THE MOTOR SO THAT TILT UP OPERATION OCCURS AS LONG AS THE MOON ROOF CONTROL SW IS PUSHED ON THE TILT UP SIDE.

4. TILT DOWN OPERATION

WHEN THE MOON ROOF CONTROL SW IS PUSHED TO **TILT DOWN** POSITION, WITH THE IGNITION SW TURNED ON AND THE MOON ROOF TILTED UP (NO. 1 AND NO. 2 MOON ROOF LIMIT SWITCHES ARE BOTH OFF), A SIGNAL IS INPUT FROM **TERMINAL 3** OF MOON ROOF CONTROL SW TO **TERMINAL 7** OF MOON ROOF CONTROL RELAY.

AS A RESULT, THE RELAY IS ACTIVATED AND THE CURRENT TO **TERMINAL 6** OF RELAY FLOWS FROM **TERMINAL 5** OF RELAY → **TERMINAL 3** OF MOON ROOF MOTOR → **TERMINAL 1** → **TERMINAL 4** OF RELAY → **TERMINAL 11** → TO **GROUND** AND ROTATES THE MOTOR SO THAT TILT DOWN OPERATION OCCURS AS LONG AS THE MOON ROOF CONTROL SW IS PUSHED ON THE TILT DOWN SIDE. (DURING TILT DOWN, LIMIT SW NO. 1 IS CHANGED FROM OFF TO ON.)

5. KEY OFF MOON ROOF OPERATION

WITH THE IGNITION SW TURNED FROM ON TO OFF, THE THEFT DETERRENT ECU OPERATES AND CURRENT FLOWS FROM **DOOR** FUSE TO **TERMINAL (A)8** OF THE ECU OR **DOME** FUSE TO **TERMINAL (A)20** OF THE ECU → **TERMINAL (B)8** → **TERMINAL 1** OF POWER MAIN RELAY → **TERMINAL 2** → TO **GROUND** FOR ABOUT **60** SECONDS. THE SAME AS NORMAL OPERATION, THE CURRENT FLOWS FROM **POWER** FUSE → **TERMINAL 5** OF THE POWER MAIN RELAY → **TERMINAL 3** → **TERMINAL 6** OF THE MOON ROOF CONTROL RELAY. AS A RESULT, FOR ABOUT **60** SECONDS AFTER THE IGNITION SW IS TURNED OFF, THE FUNCTIONING OF THIS RELAY MAKES IT POSSIBLE TO OPEN AND CLOSE THE MOON ROOF. ALSO, BY OPENING THE FRONT DOOR (DOOR DETECT SW ON) WITHIN ABOUT **60** SECONDS AFTER TURNING THE IGNITION SW TO OFF, A SIGNAL IS INPUT TO **TERMINALS (A)12** OR **(A)13** OF THEFT DETERRENT ECU. AS A RESULT, THE ECU TURNS OFF AND OPEN AND CLOSE MOVEMENT OF THE MOON ROOF STOPS.

WhereEverybodyKnowsYourName

6. TILT UP REMINDER SYSTEM

WITH THE IGNITION SW IS TURNED TO ACC OR OFF WITH THE MOON ROOF STILL TILTED UP, KEY OFF MOON ROOF OPERATION CAUSES CURRENT TO FLOW TO **TERMINAL 6** OF THE MOON ROOF CONTROL RELAY FOR A PERIOD OF APPROX. **60** SECONDS OR UNTIL THE DRIVER'S DOOR OR PASSENGER'S DOOR IS OPENED. WHEN KEY OFF MOON ROOF OPERATION ENDS AND THE CURRENT FLOW IS STOPPED, THE MOON ROOF CONTROL RELAY RECEIVES A SIGNAL THAT THE IGNITION SW IS OFF. MOON ROOF LIMIT SW NO. 1 AND NO. 2 ARE OFF AT THIS TIME, SO THE SIGNAL IS INPUT TO **TERMINALS 8** AND **9** OF THE MOON ROOF CONTROL RELAY, INDICATING THAT THE MOON ROOF IS IN THE TILT UP CONDITION. THIS CURRENT TO THE MOON ROOF CONTROL RELAY FLOWS TO **TERMINAL 12** OF RELAY → BUZZER → **TERMINAL 11** → **GROUND,** CAUSING THE BUZZER TO SOUND FOR APPROX. **8** SECONDS. TO INFORM THE DRIVER THAT THE MOON ROOF IS IN THE TILT UP POSITION.

SERVICE HINTS

POWER MAIN RELAY
3–5 : CLOSED WITH IGNITION SW AT **ON** POSITION

M 2 MOON ROOF CONTROL RELAY
11–GROUND : ALWAYS CONTINUITY
6–GROUND : APPROX. **12** VOLTS WITH IGNITION SW AT **ON** POSITION
4–GROUND : APPROX. **12** VOLTS WITH IGNITION SW ON, AND MOON ROOF CONTROL SW AT **CLOSE** OR **UP** POSITION (EXCEPT APPROX. **200MM** (**7.9** IN) BEFORE FULLY **CLOSED** POSITION)
5–GROUND : APPROX. **12** VOLTS WITH IGNITION SW ON, AND MOON ROOF CONTROL SW AT **OPEN** OR **DOWN** POSITION

M 3 MOON ROOF CONTROL SW
1–4 : CLOSED WITH MOON ROOF CONTROL SW AT **UP** POSITION
2–4 : CLOSED WITH MOON ROOF CONTROL SW AT **CLOSE** POSITION
3–4 : CLOSED WITH MOON ROOF CONTROL SW AT **DOWN** POSITION
5–4 : CLOSED WITH MOON ROOF CONTROL SW AT **OPEN** POSITION
4–GROUND : ALWAYS CONTINUITY

: PARTS LOCATION

CODE	SEE PAGE	CODE		SEE PAGE	CODE		SEE PAGE
D10	30	**M 3**		31	**T 8**	B	29
D11	30	**M 4**	A	31	**T 9**	A	29
M 2	31		B	31			

: RELAY BLOCKS

CODE	SEE PAGE	RELAY BLOCKS (RELAY BLOCK LOCATION)
2	19	ENGINE COMPARTMENT LEFT

: JUNCTION BLOCK AND WIRE HARNESS CONNECTOR

CODE	SEE PAGE	JUNCTION BLOCK AND WIRE HARNESS (CONNECTOR LOCATION)
1B	20	ENGINE ROOM MAIN WIRE
1D	20	FRONT DOOR LH WIRE
1F	20	ROOF WIRE
1H	20	COWL WIRE
1I		
1J		
1K		

: CONNECTOR JOINING WIRE HARNESS AND WIRE HARNESS

CODE	SEE PAGE	JOINING WIRE HARNESS AND WIRE HARNESS (CONNECTOR LOCATION)
IP1	38	FRONT DOOR RH WIRE AND COWL WIRE (RIGHT KICK PANEL)
BZ1	40	ROOF WIRE AND MOON ROOF WIRE (FRONT SIDE OF ROOF LEFT)

: GROUND POINTS

CODE	SEE PAGE	GROUND POINTS LOCATION
IF	36	LEFT KICK PANEL
IJ	36	RIGHT KICK PANEL

: SPLICE POINTS

CODE	SEE PAGE	WIRE HARNESS WITH SPLICE POINTS	CODE	SEE PAGE	WIRE HARNESS WITH SPLICE POINTS
B 1	40	ROOF WIRE	**B 3**	40	MOON ROOF WIRE

WhereEverybodyKnowsYourName

D10, D11 GRAY

M 2

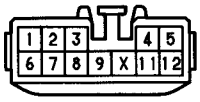

M 3

M 4 (A)

M 4 (B)

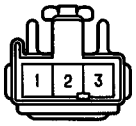

T 8 (B) ORANGE

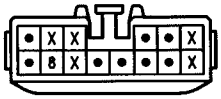

T 9 (A) ORANGE

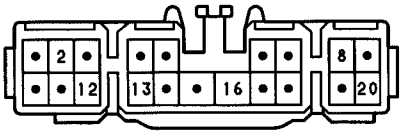

WhereEverybodyKnowsYourName

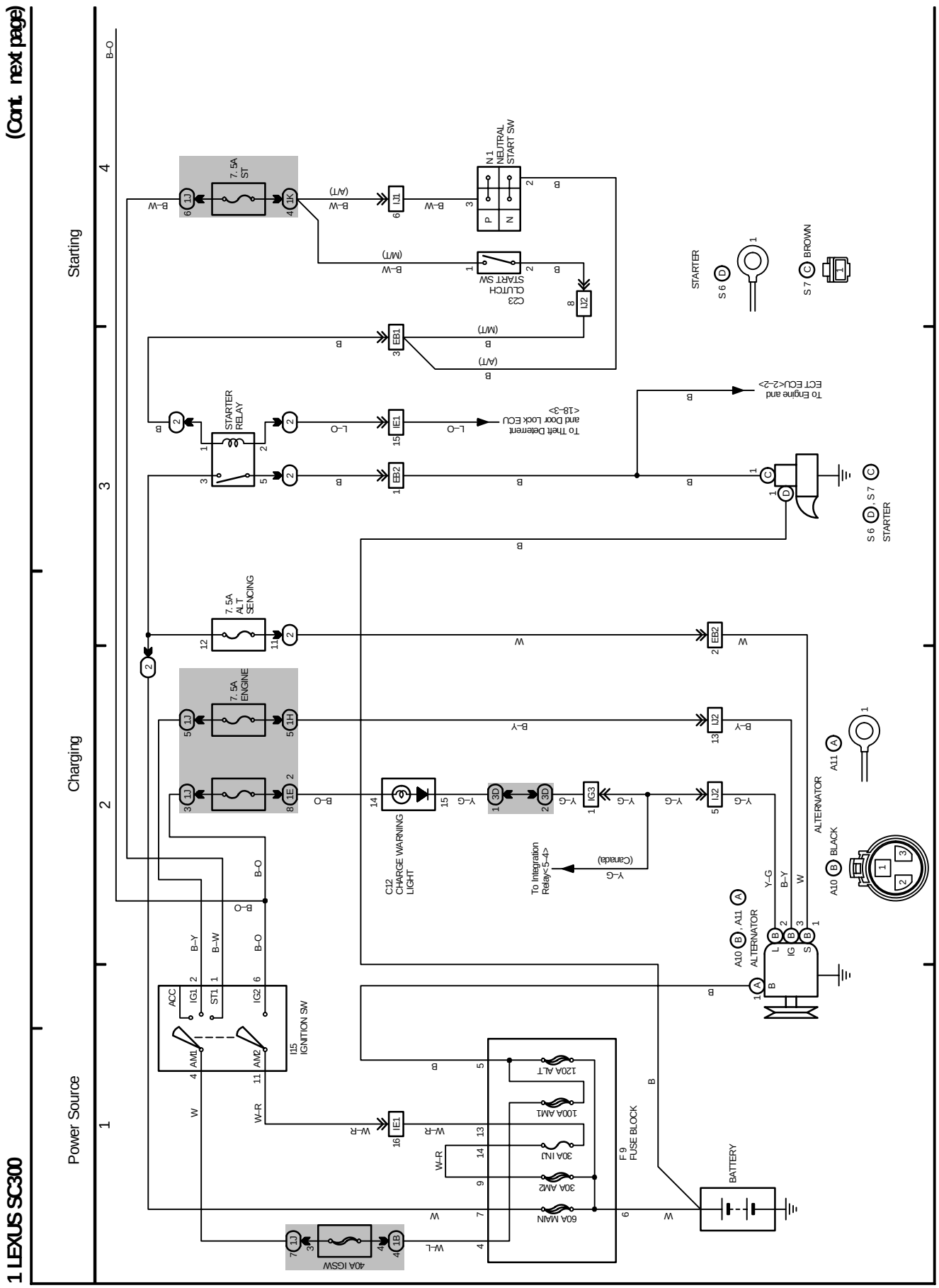

WhereEverybodyKnowsYourName

Ignition

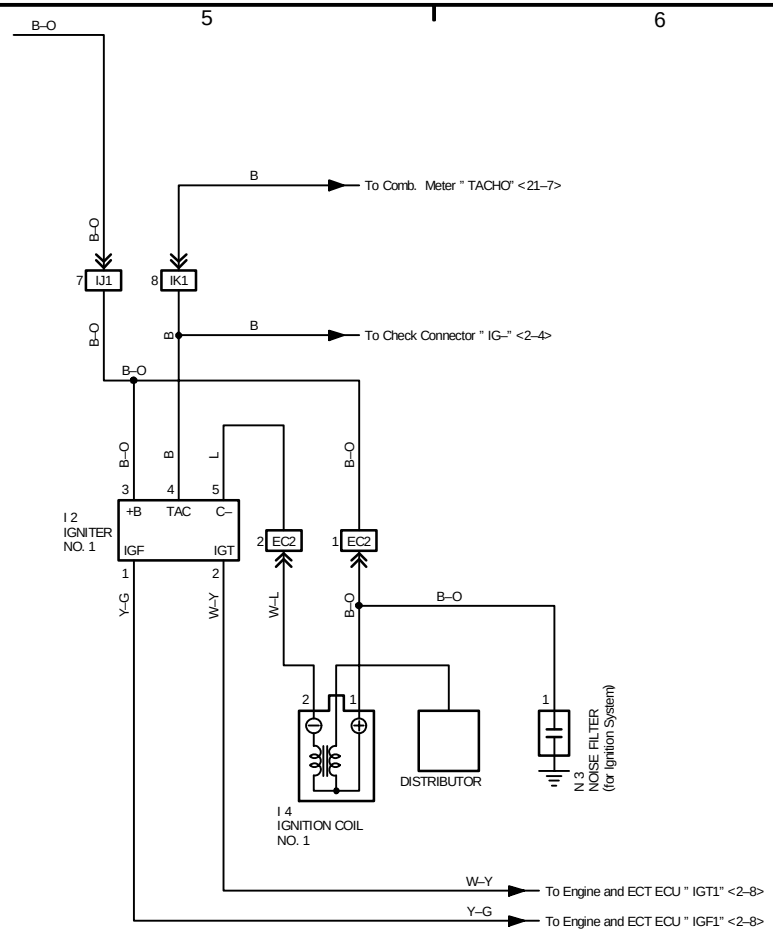

WhereEverybodyKnowsYourName

OVERALL ELECTRICAL WIRING DIAGRAM

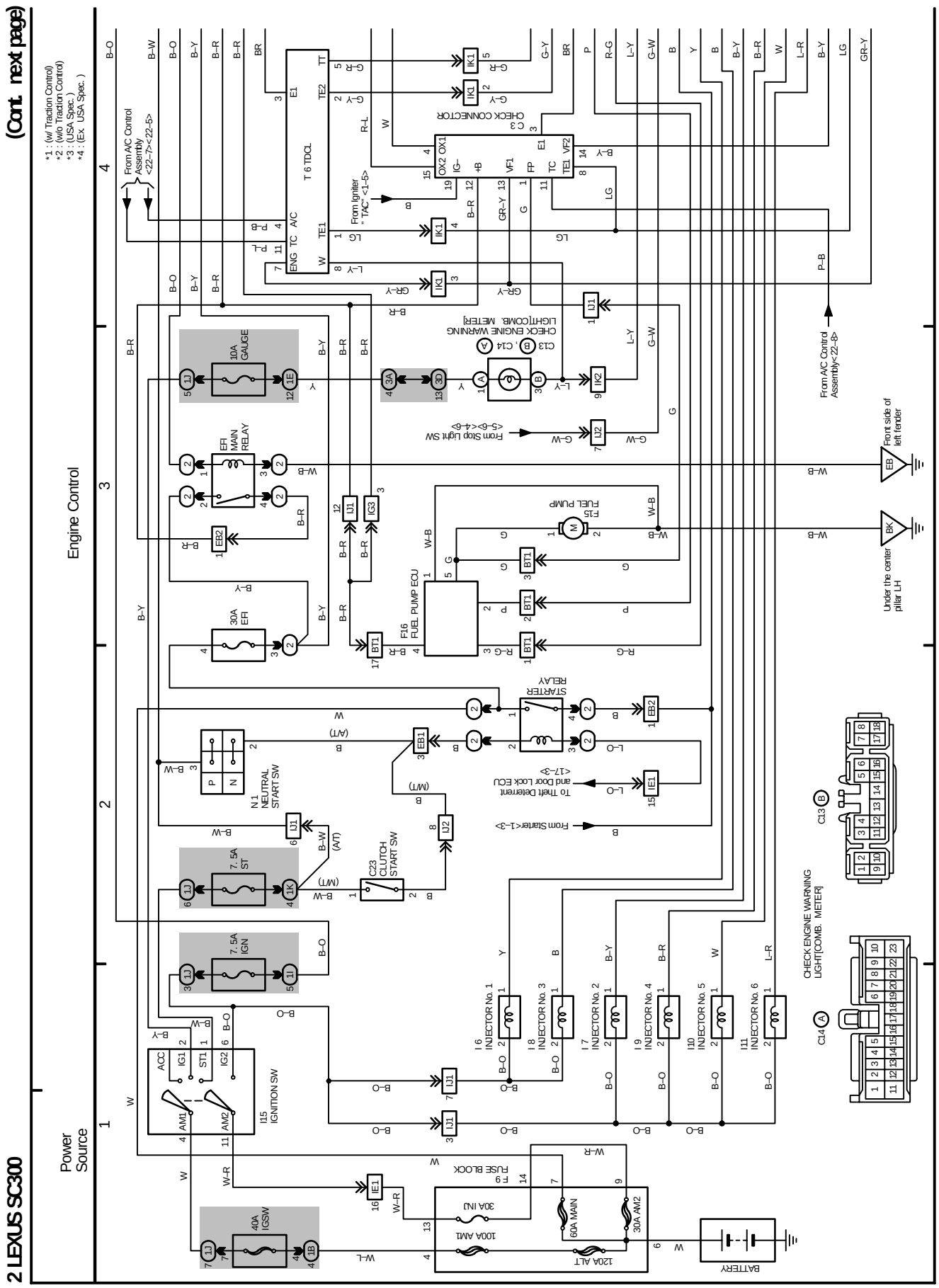

WhereEverybodyKnowsYourName

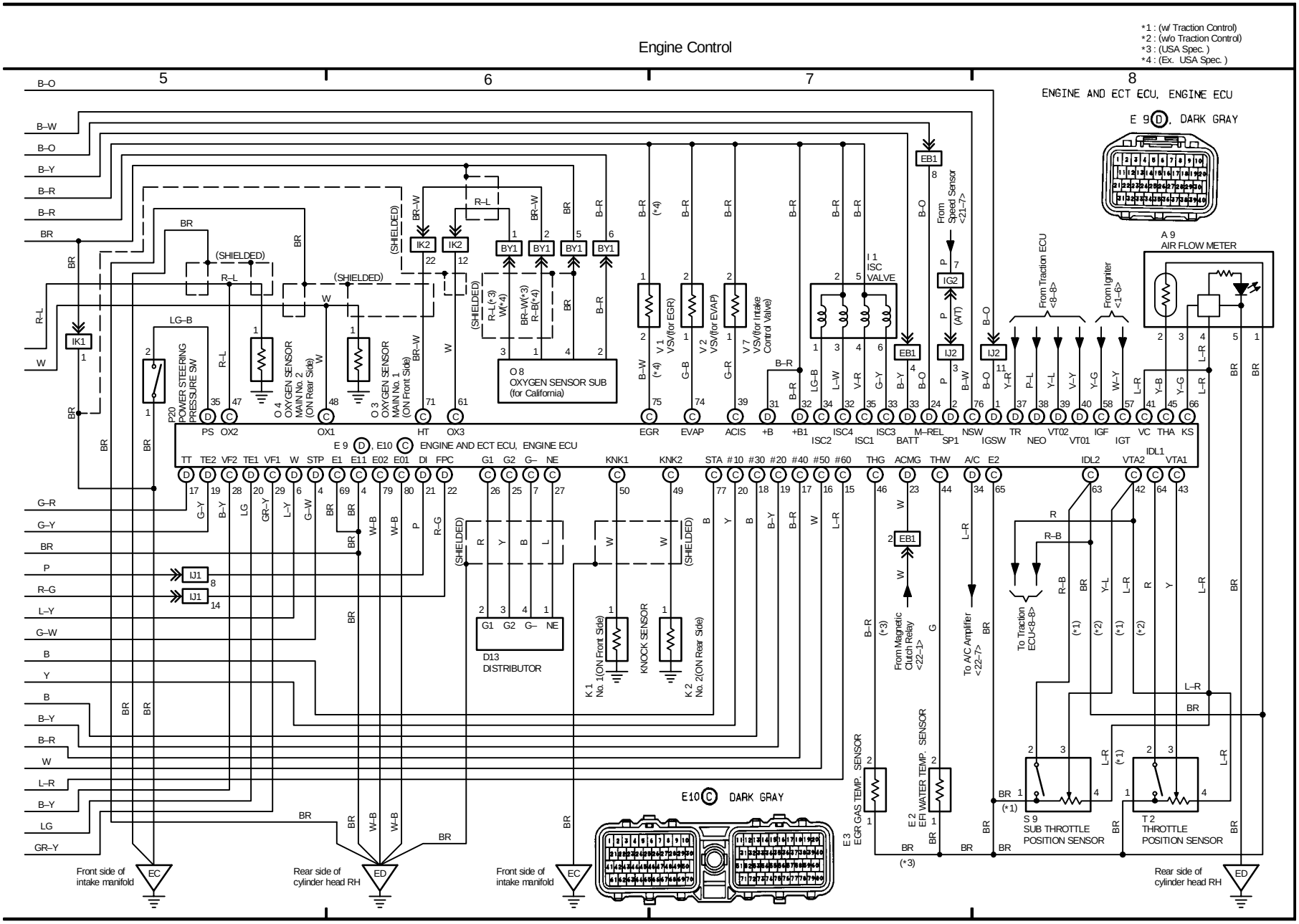

WhereEverybodyKnowsYourName

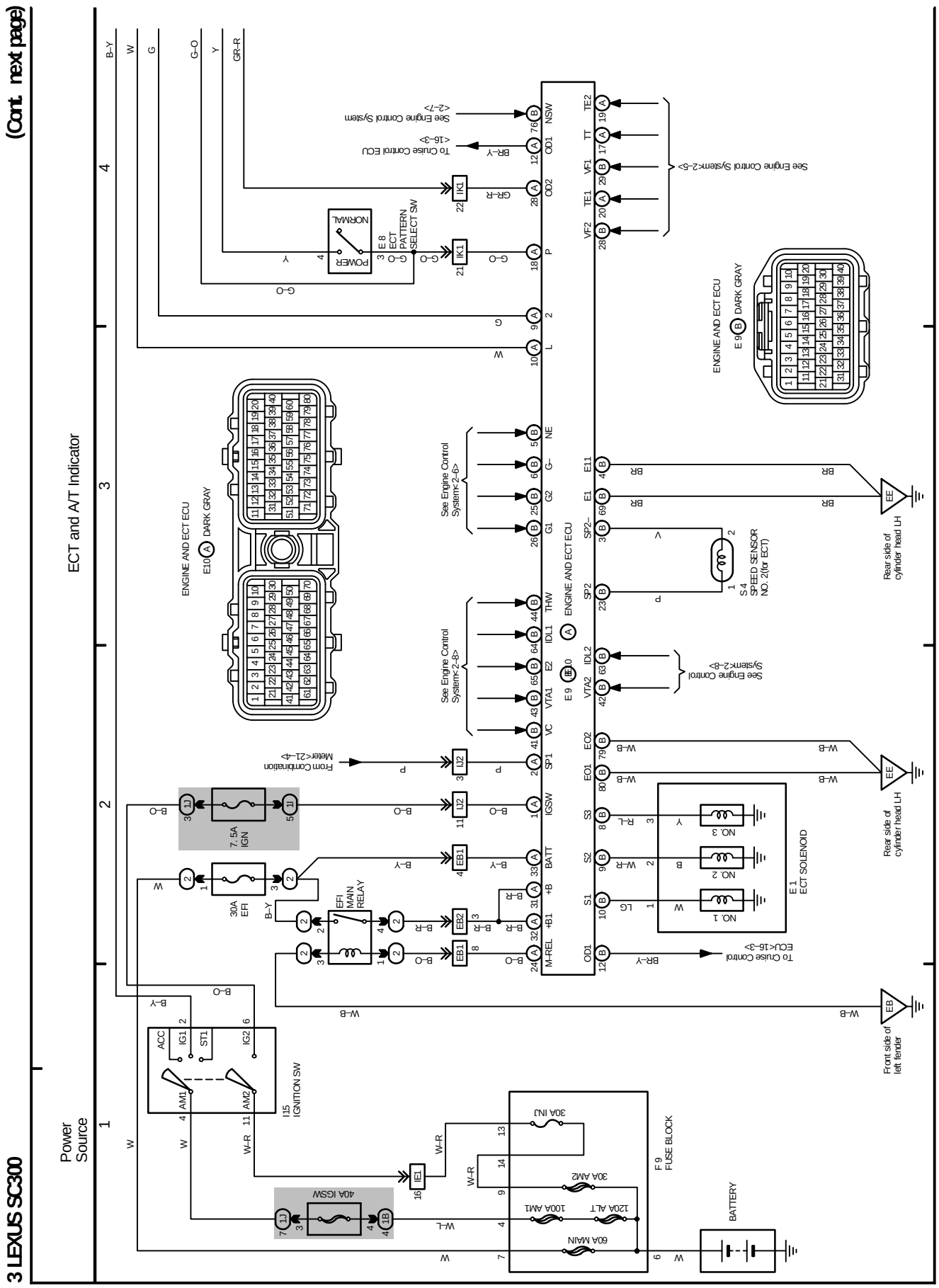

WhereEverybodyKnowsYourName

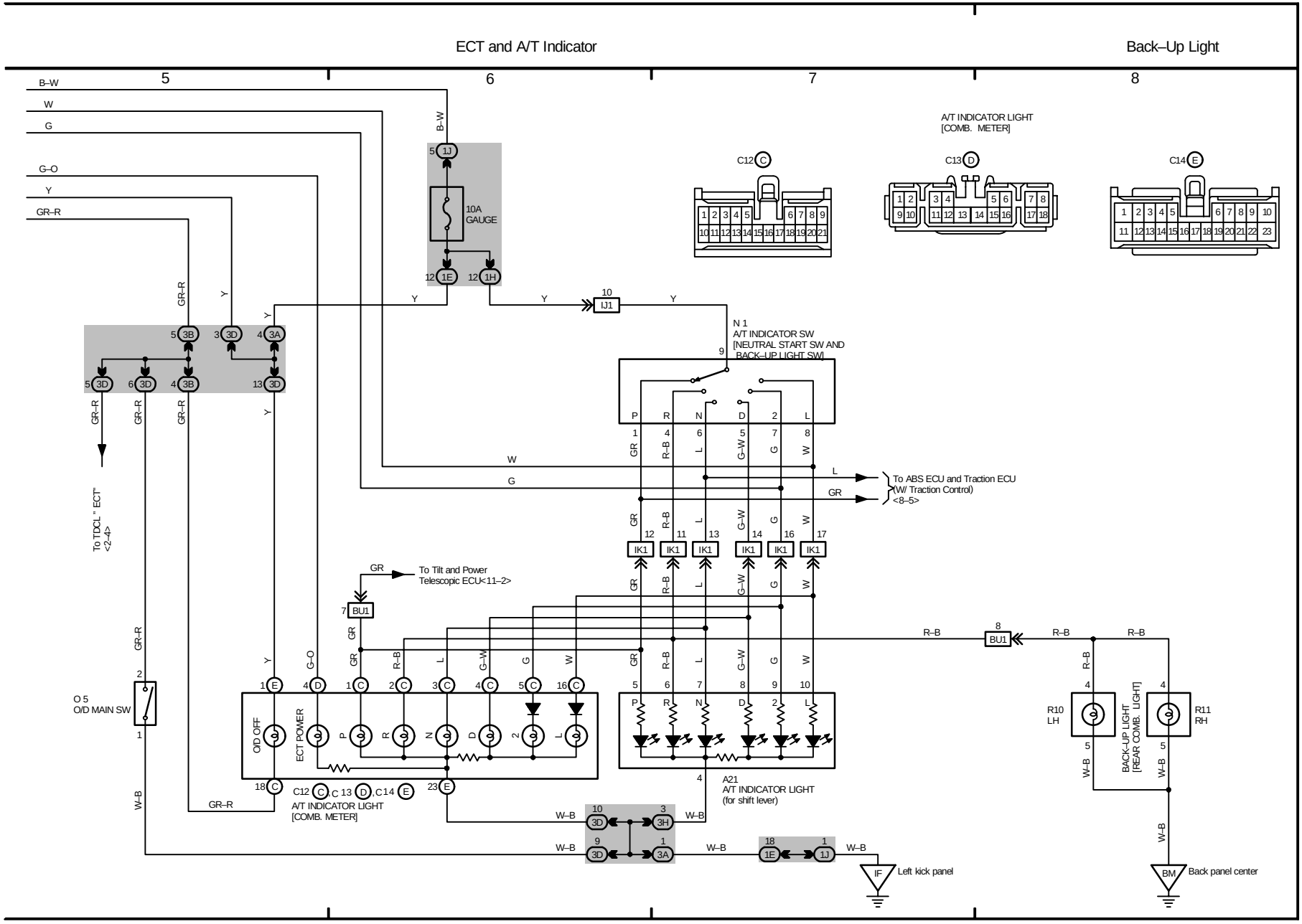

WhereEverybodyKnowsYourName

OVERALL ELECTRICAL WIRING DIAGRAM

(Cont. next page)

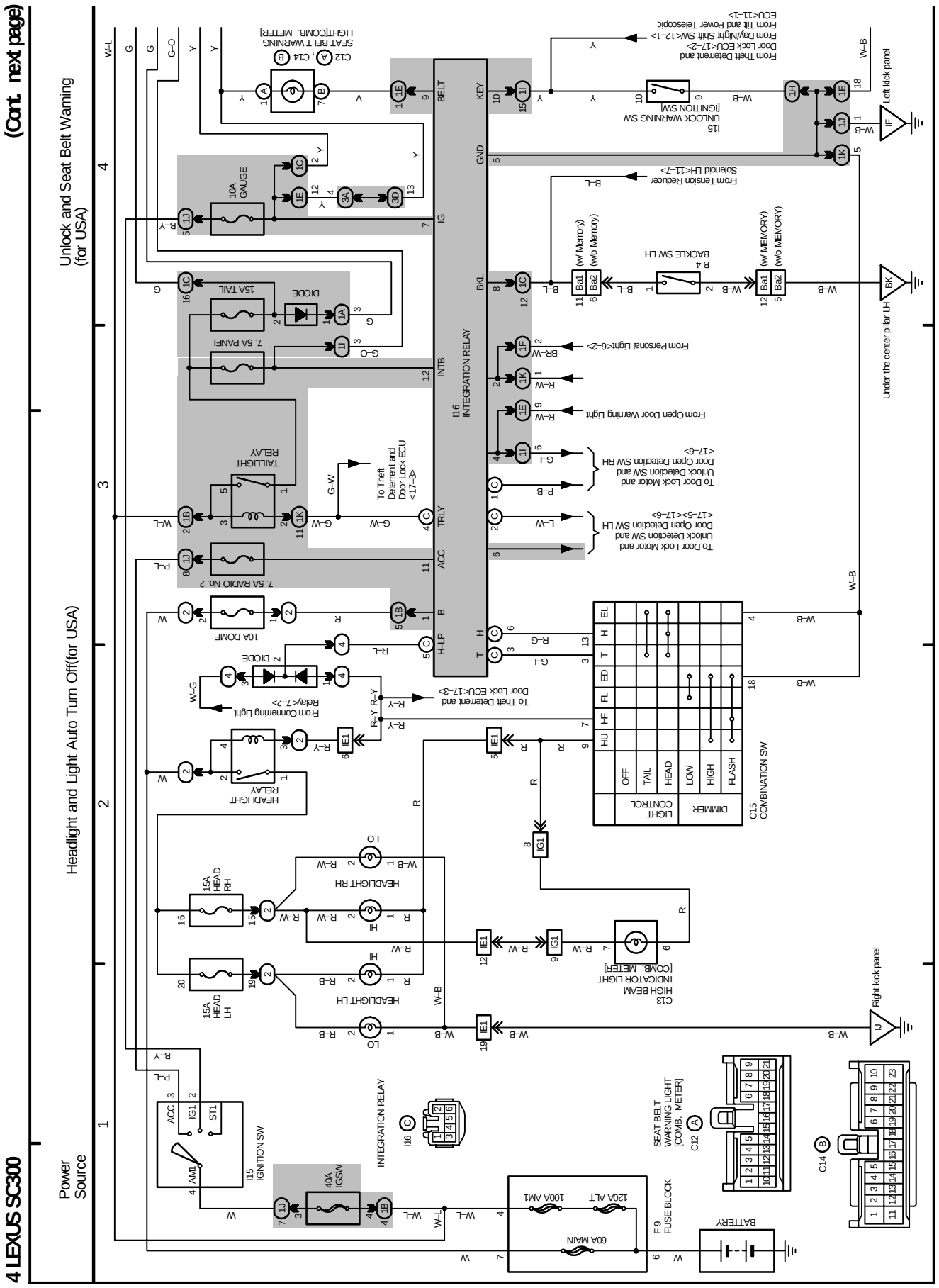

WhereEverybodyKnowsYourName

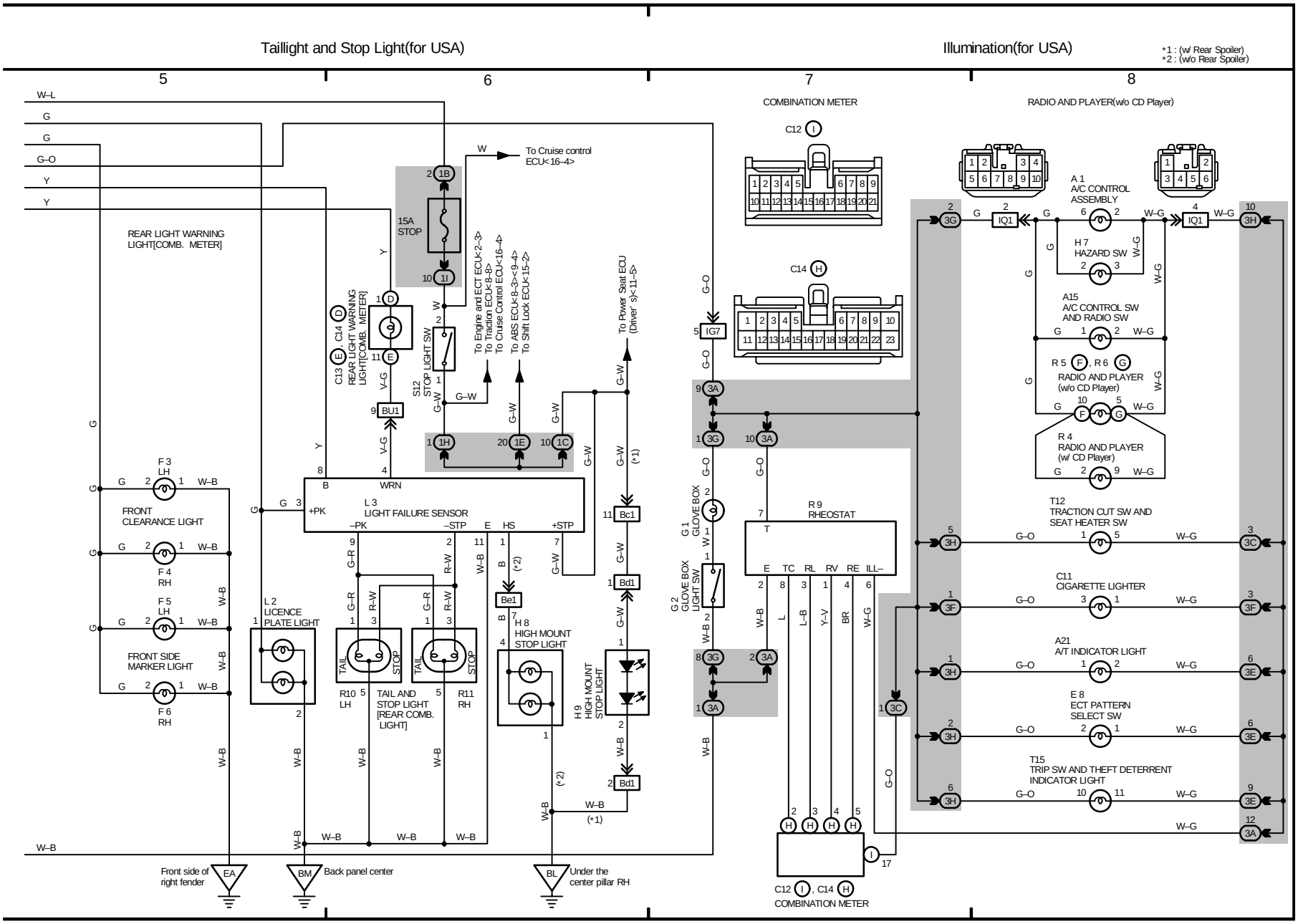

WhereEverybodyKnowsYourName

OVERALL ELECTRICAL WIRING DIAGRAM

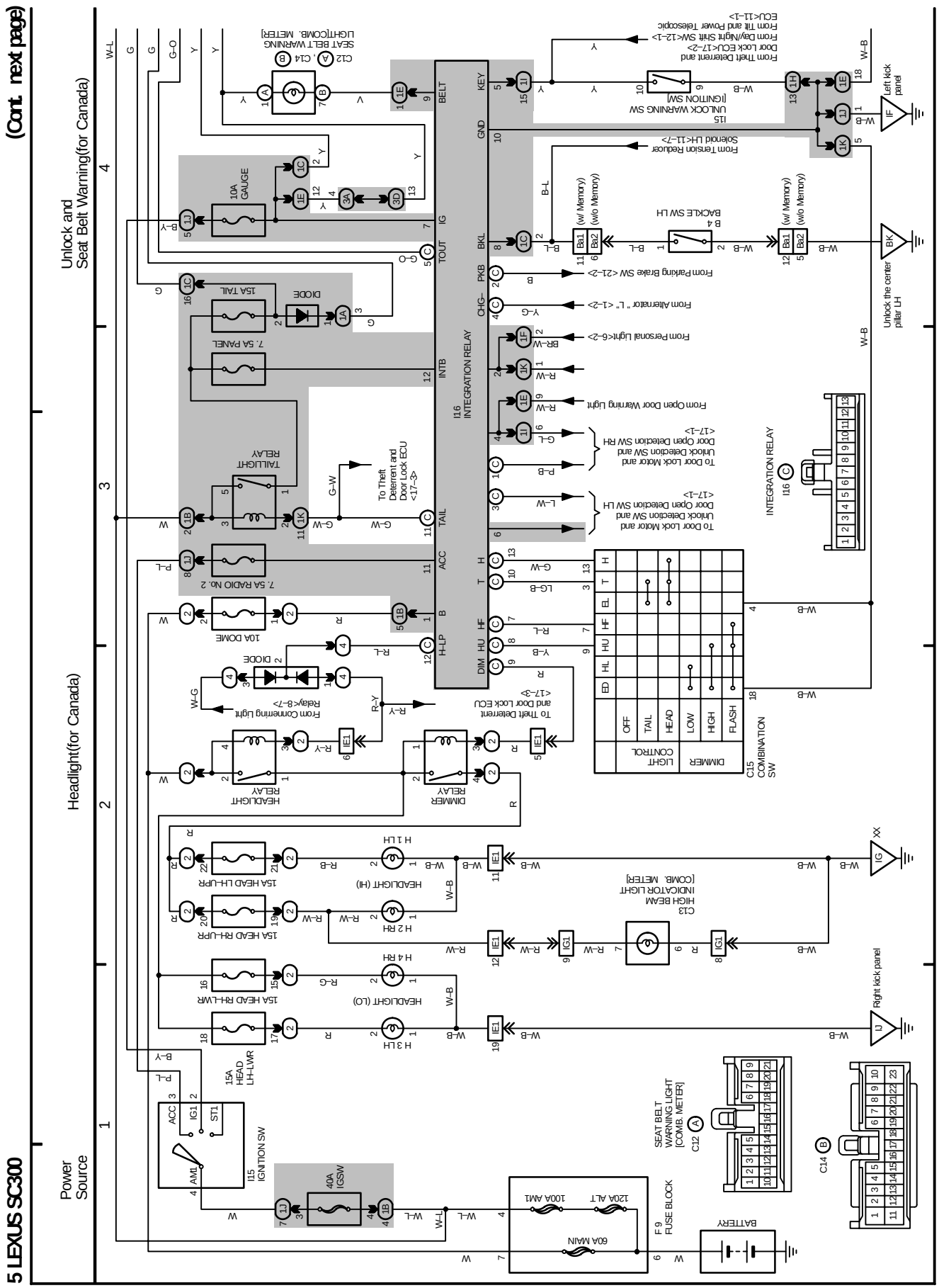

WhereEverybodyKnowsYourName

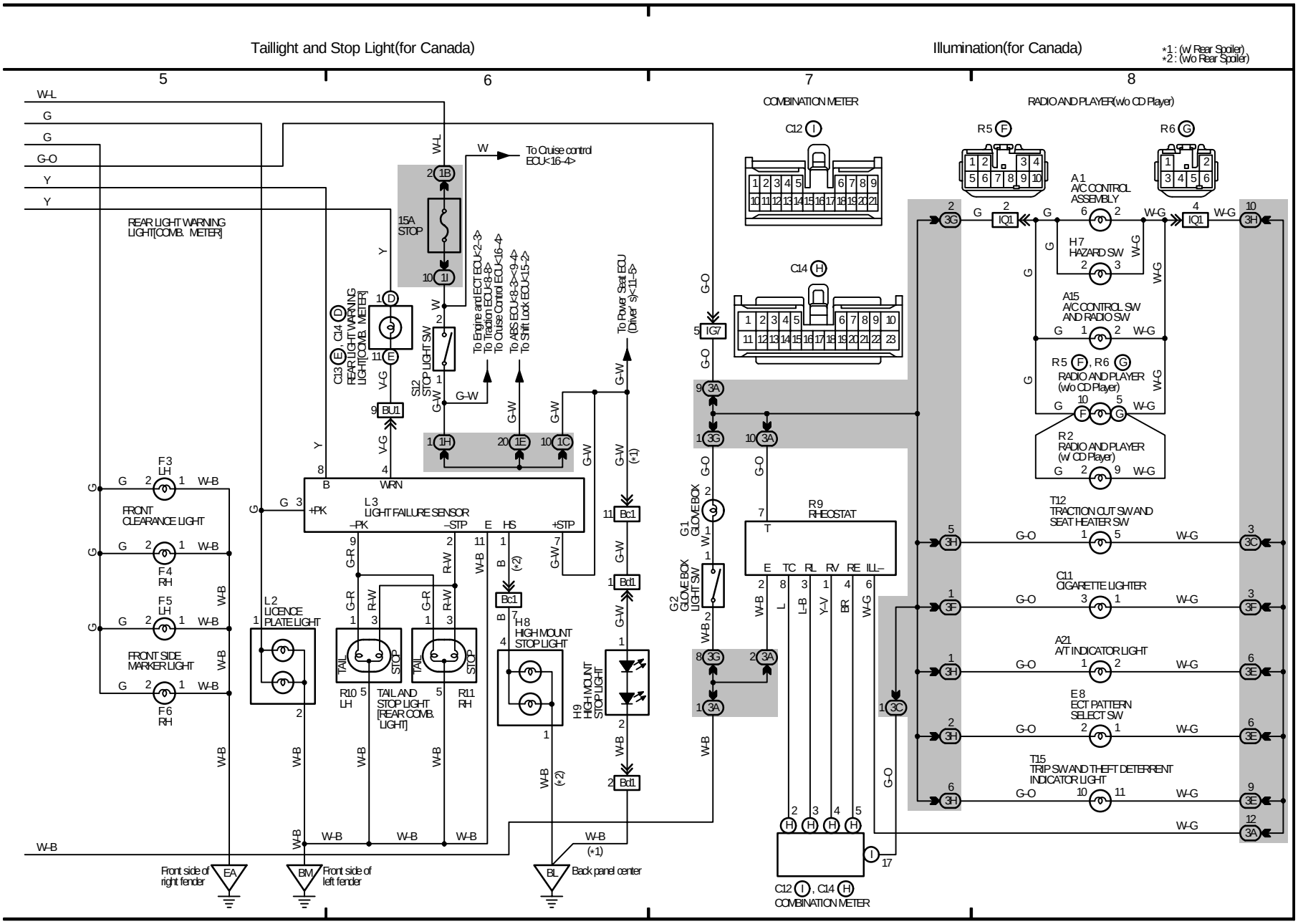

WhereEverybodyKnowsYourName

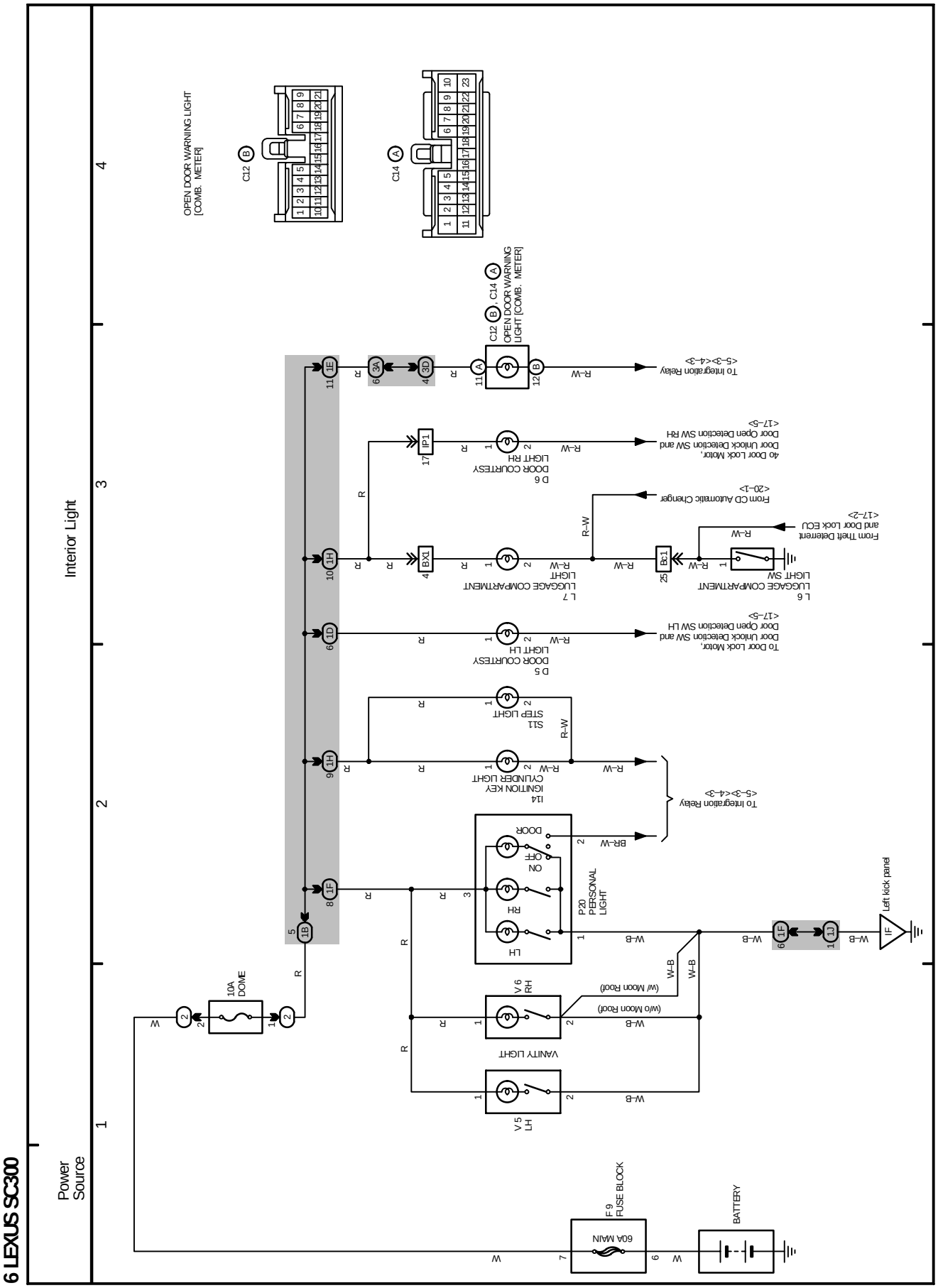

WhereEverybodyKnowsYourName

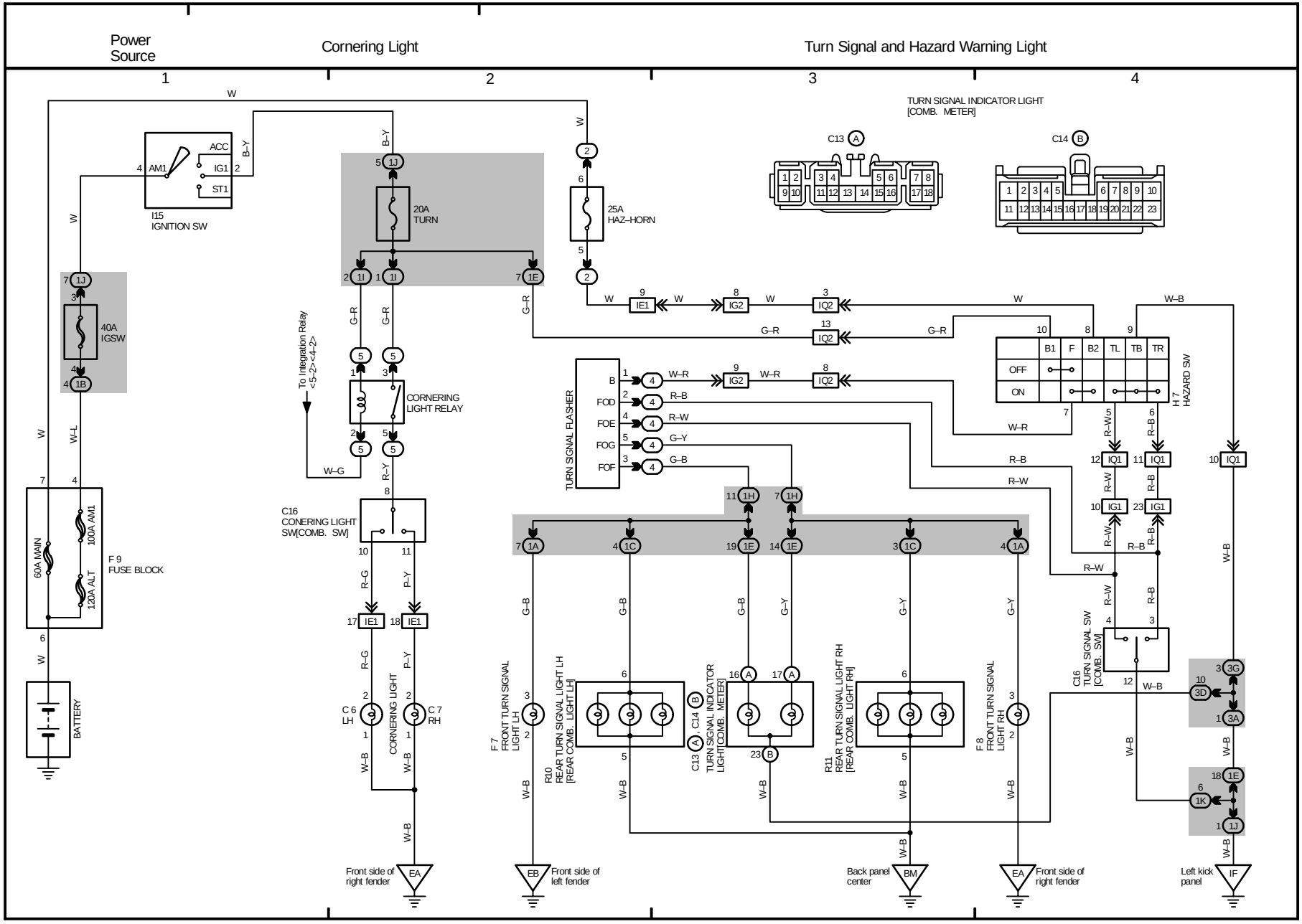

WhereEverybodyKnowsYourName

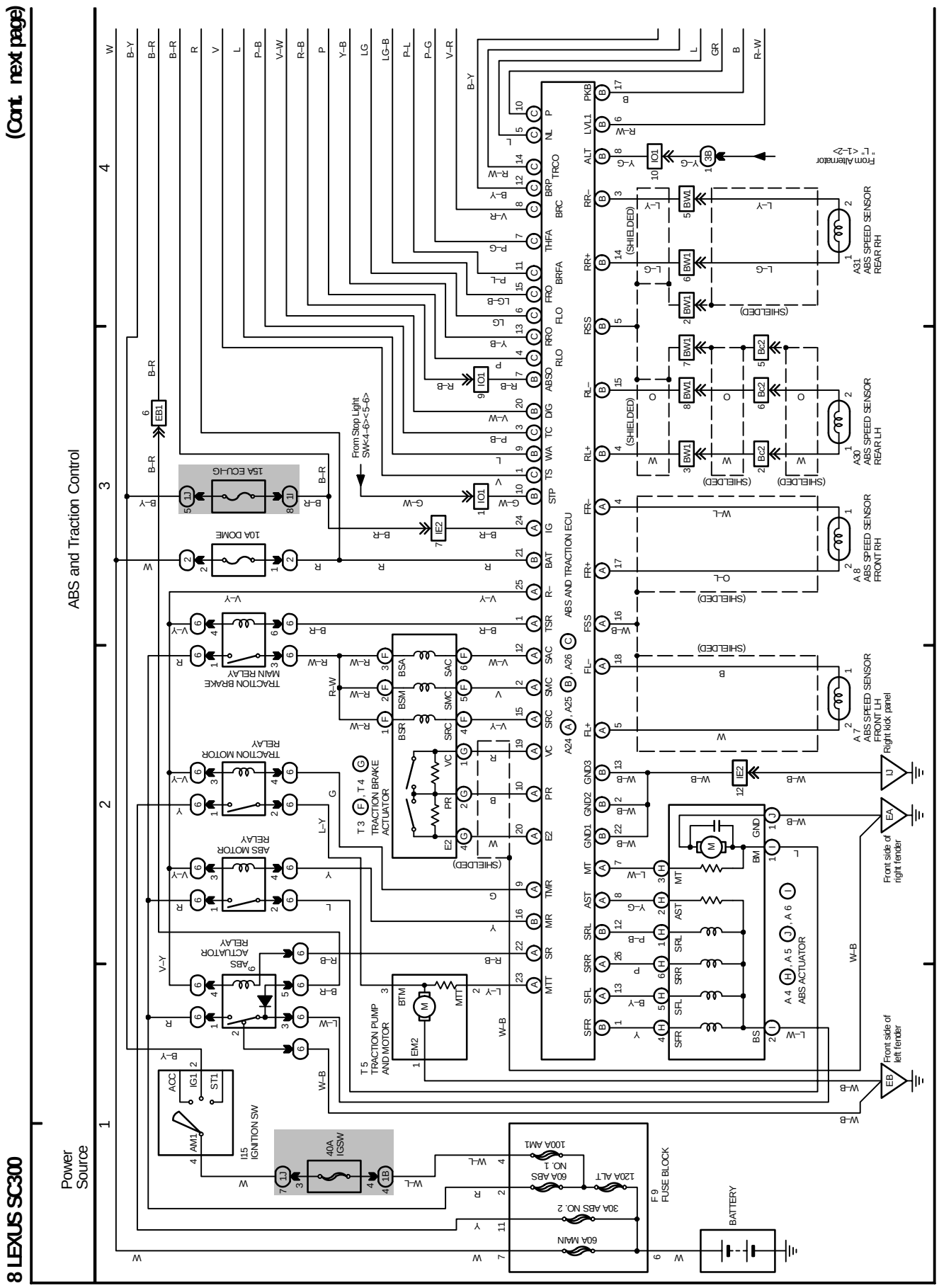

WhereEverybodyKnowsYourName

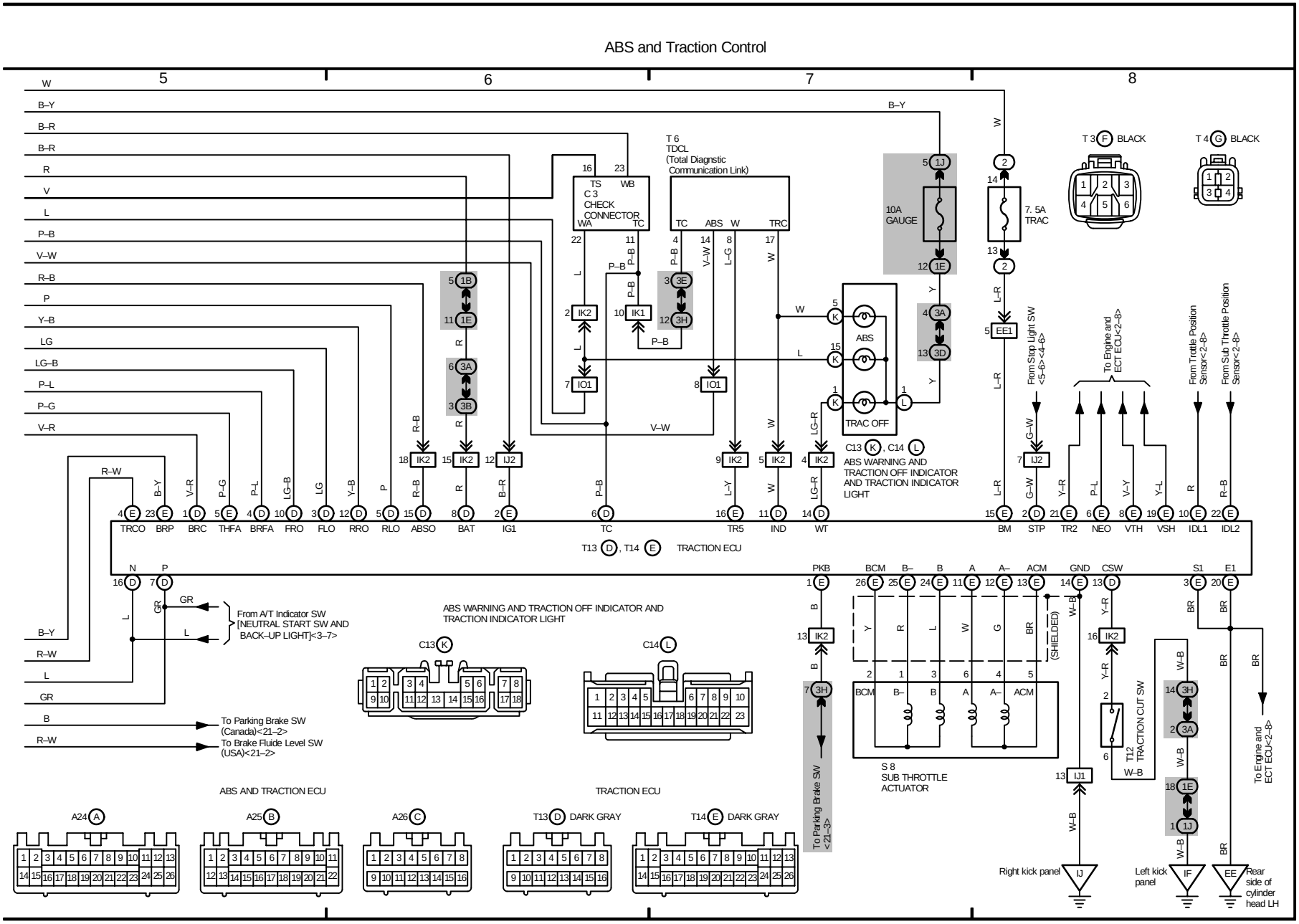

WhereEverybodyKnowsYourName

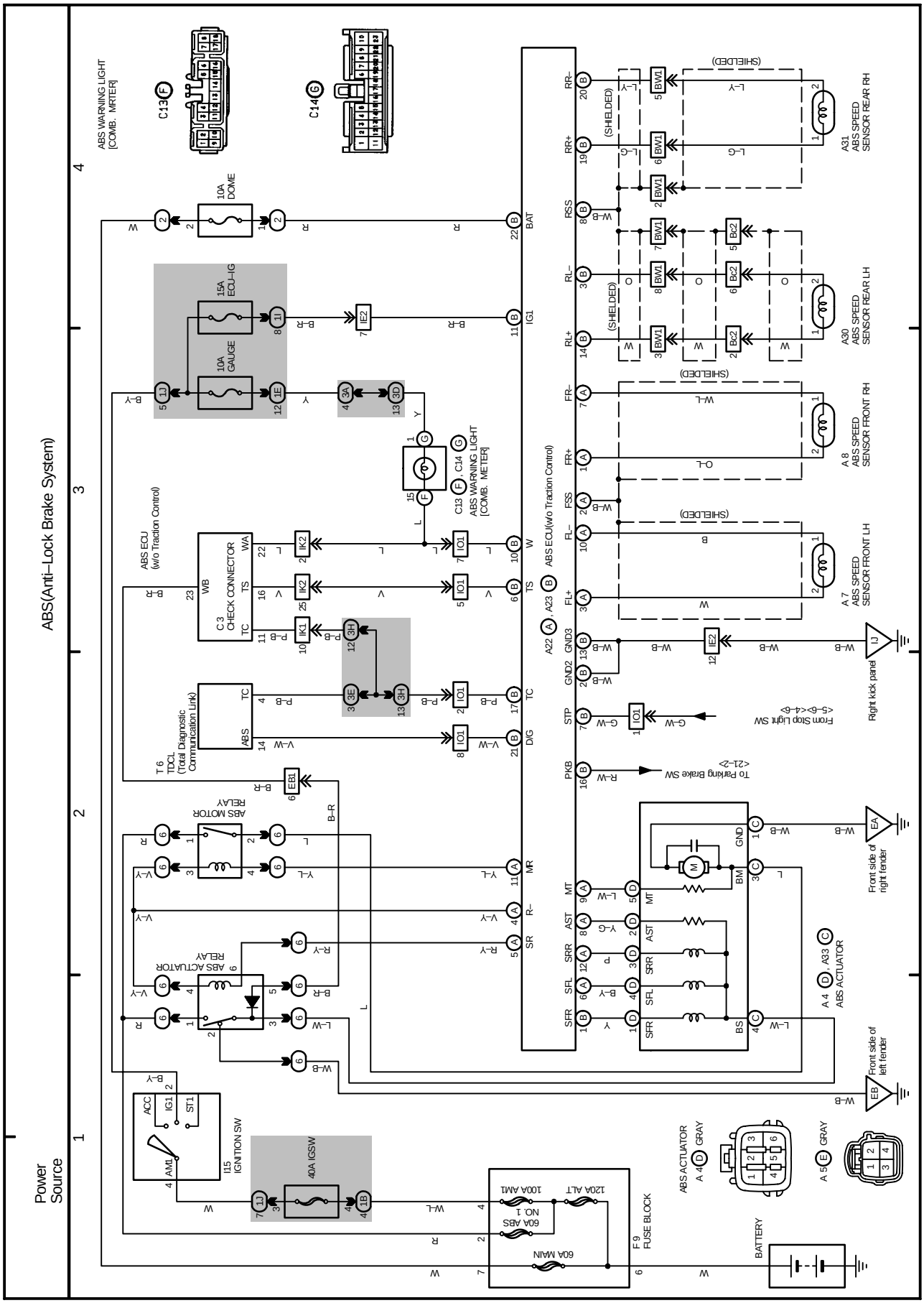

WhereEverybodyKnowsYourName

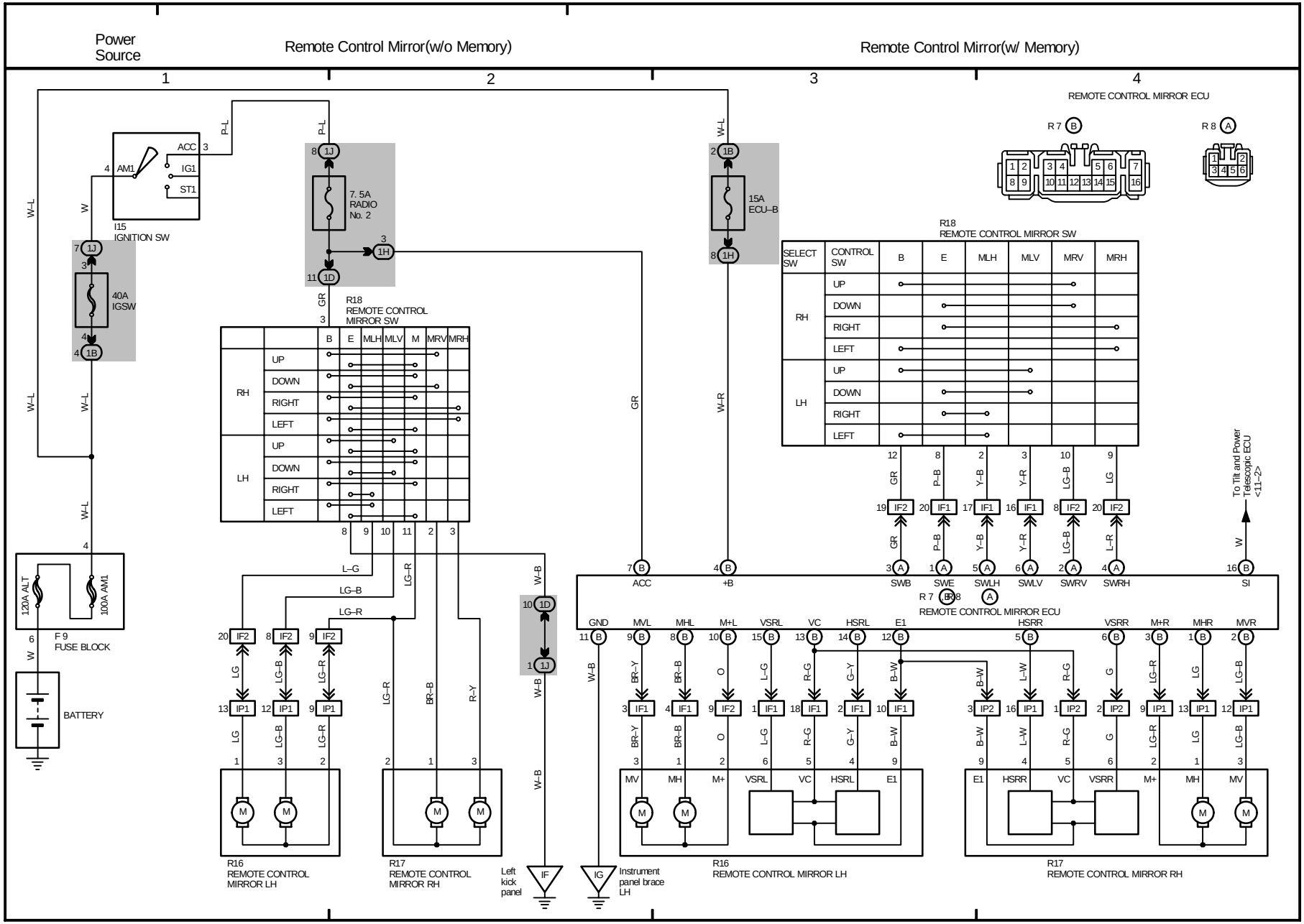

WhereEverybodyKnowsYourName

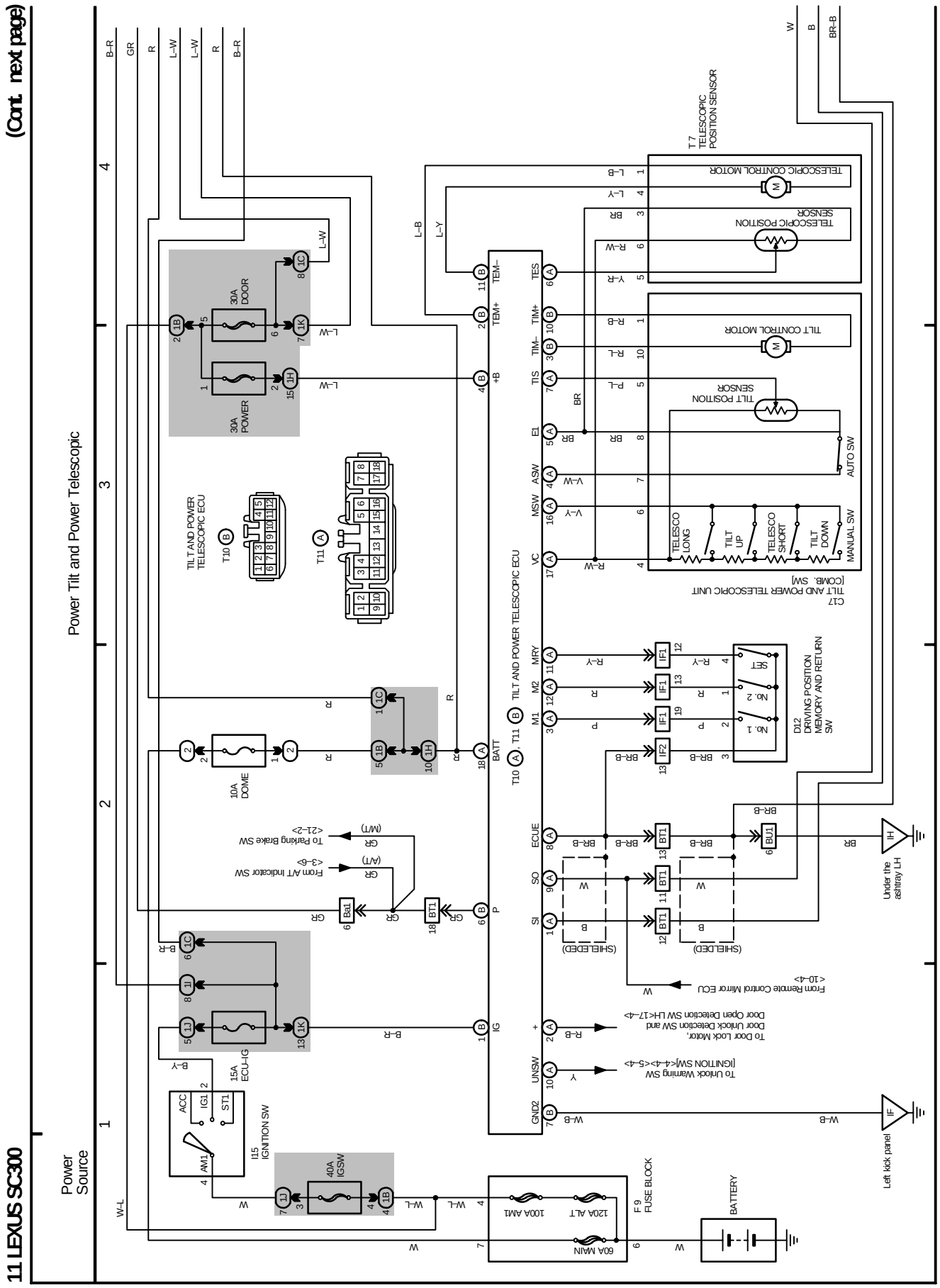

WhereEverybodyKnowsYourName

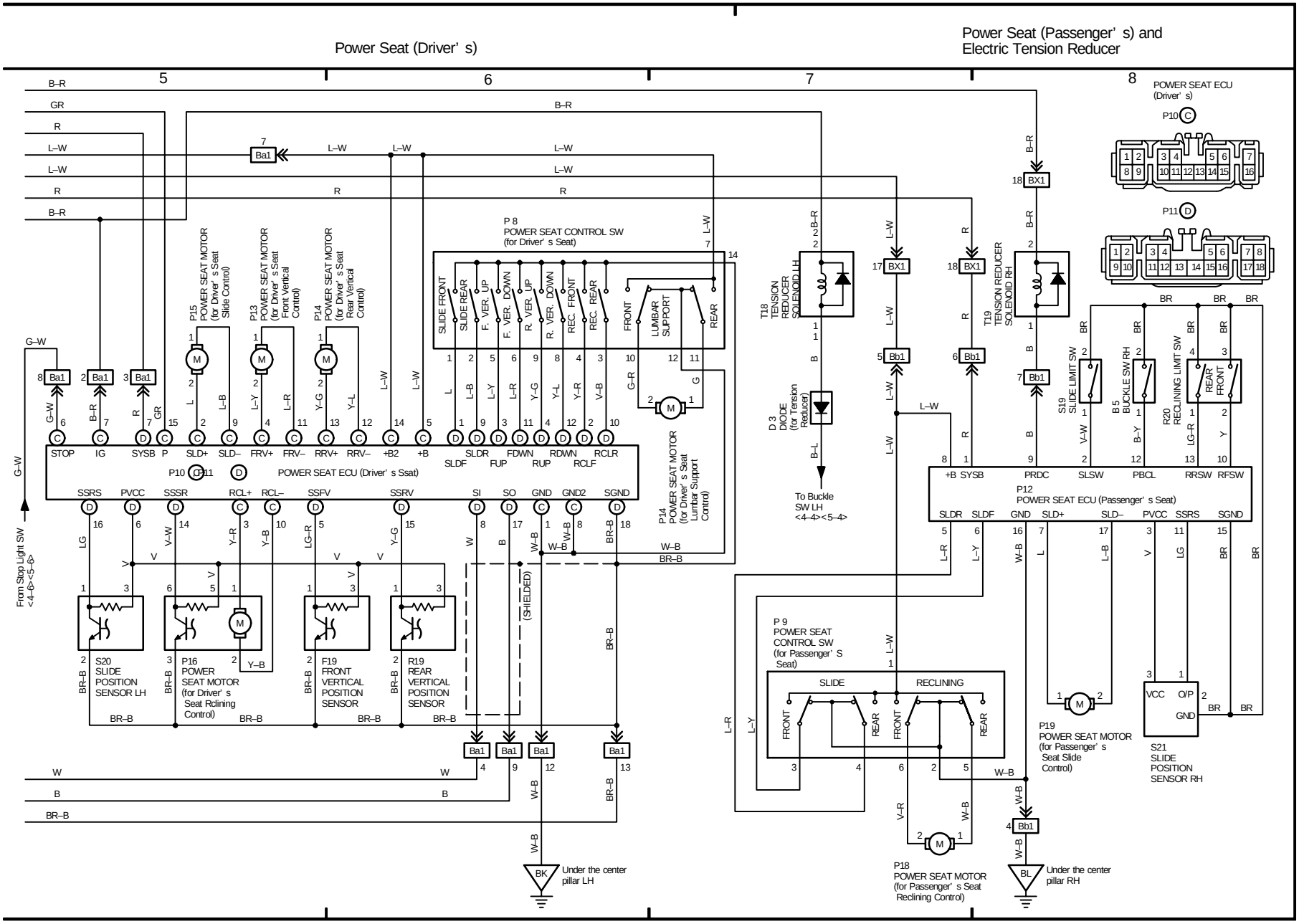

WhereEverybodyKnowsYourName

OVERALL ELECTRICAL WIRING DIAGRAM

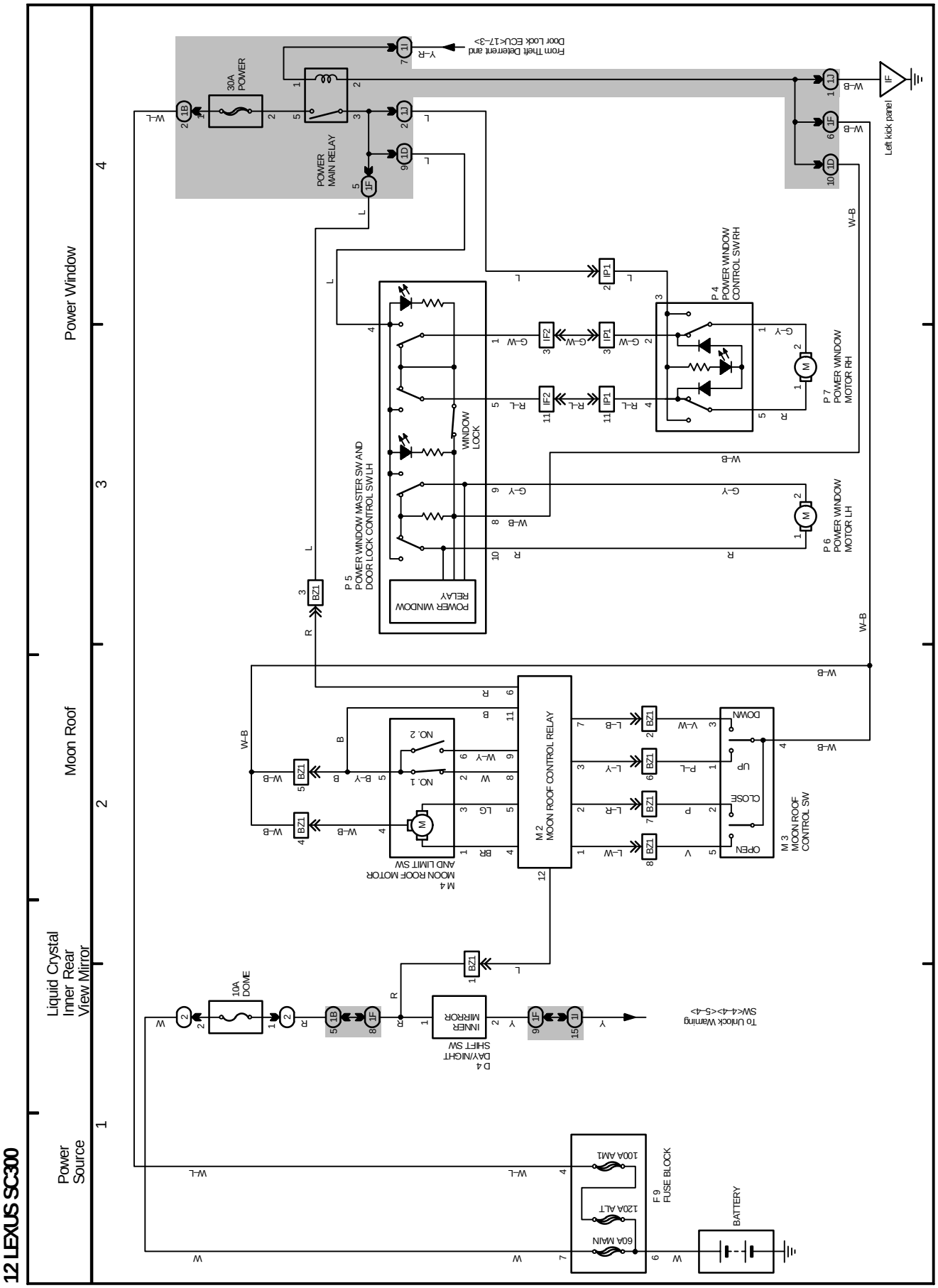

WhereEverybodyKnowsYourName

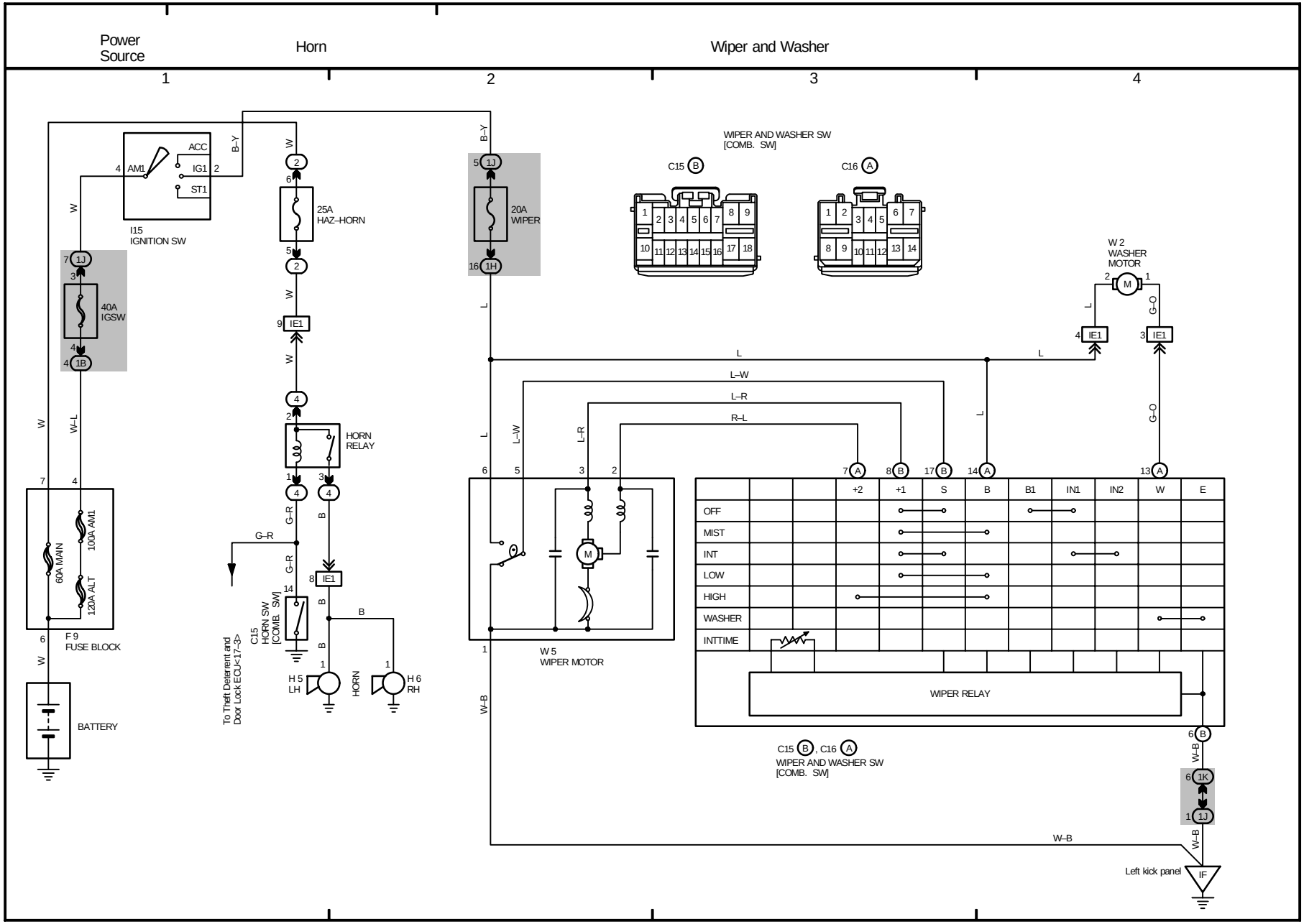

WhereEverybodyKnowsYourName

OVERALL ELECTRICAL WIRING DIAGRAM

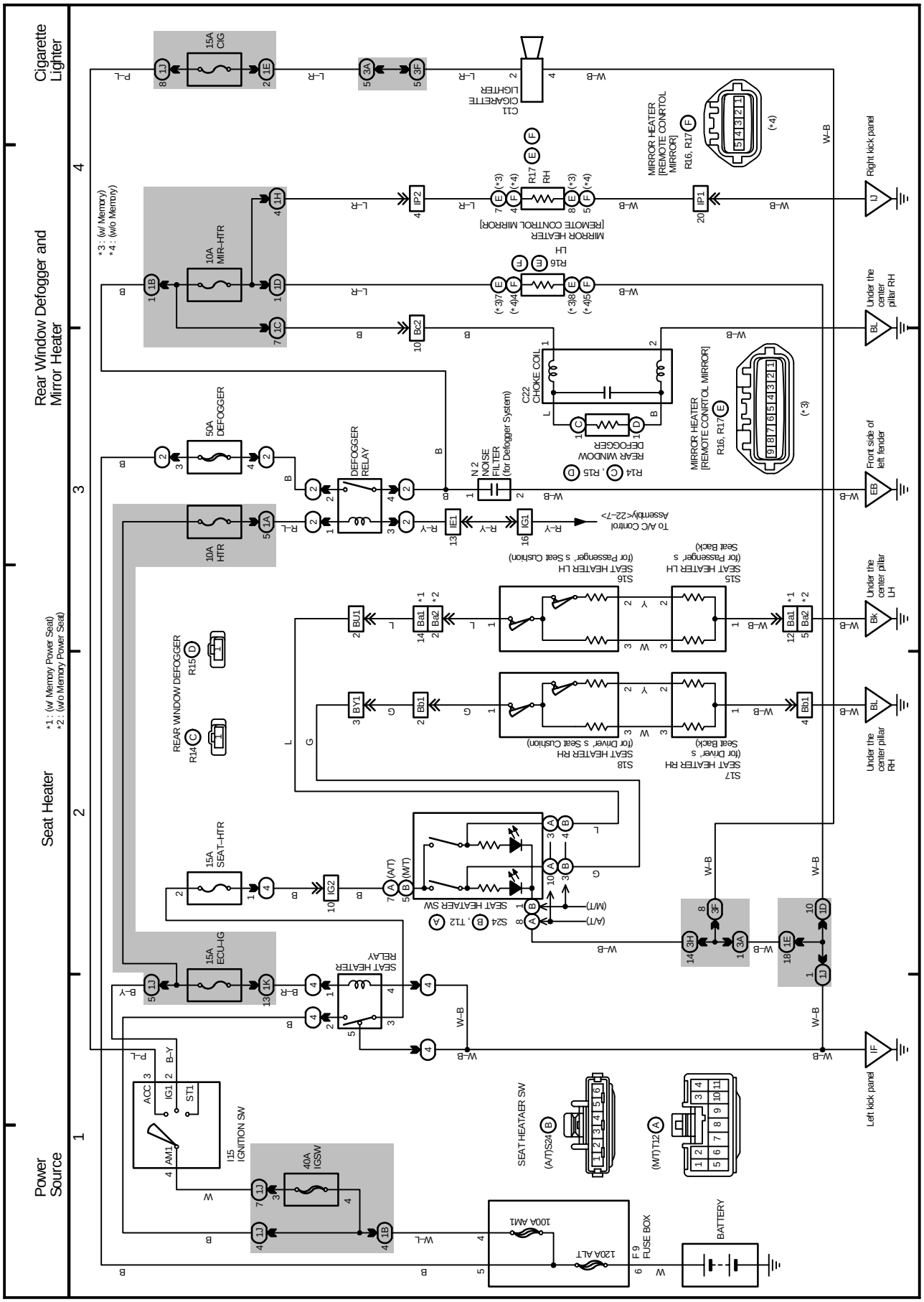

WhereEverybodyKnowsYourName

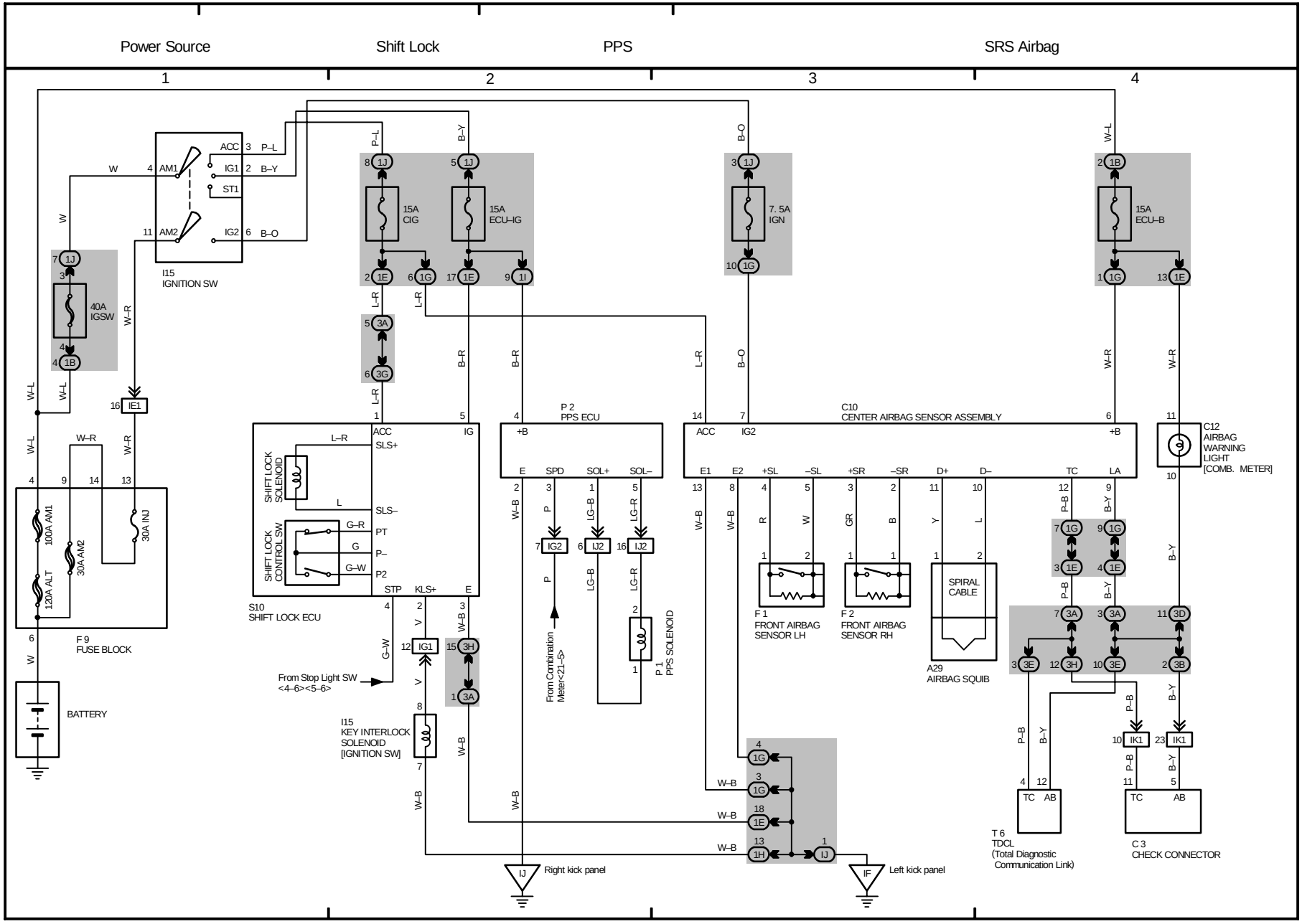

WhereEverybodyKnowsYourName

OVERALL ELECTRICAL WIRING DIAGRAM

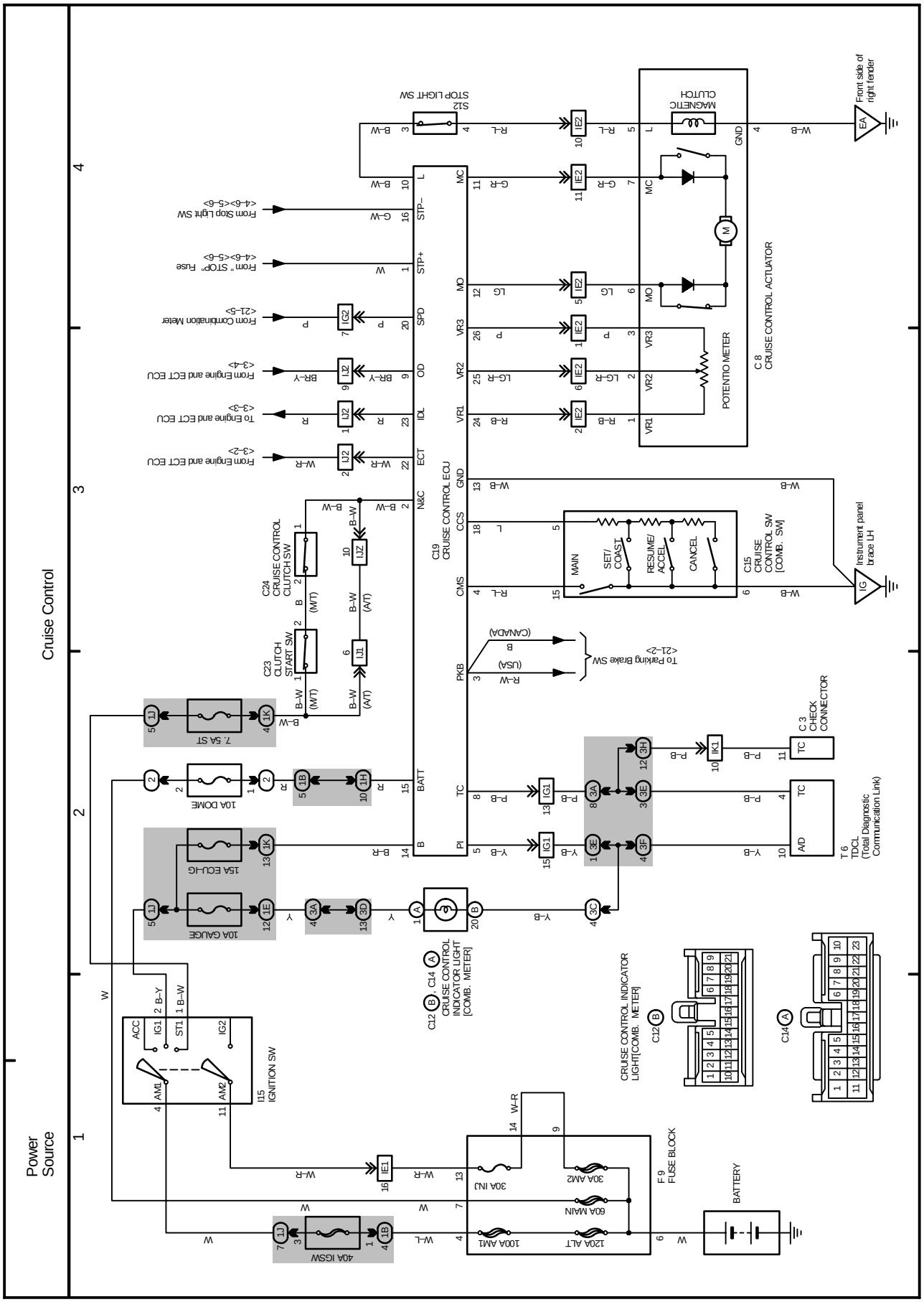

WhereEverybodyKnowsYourName

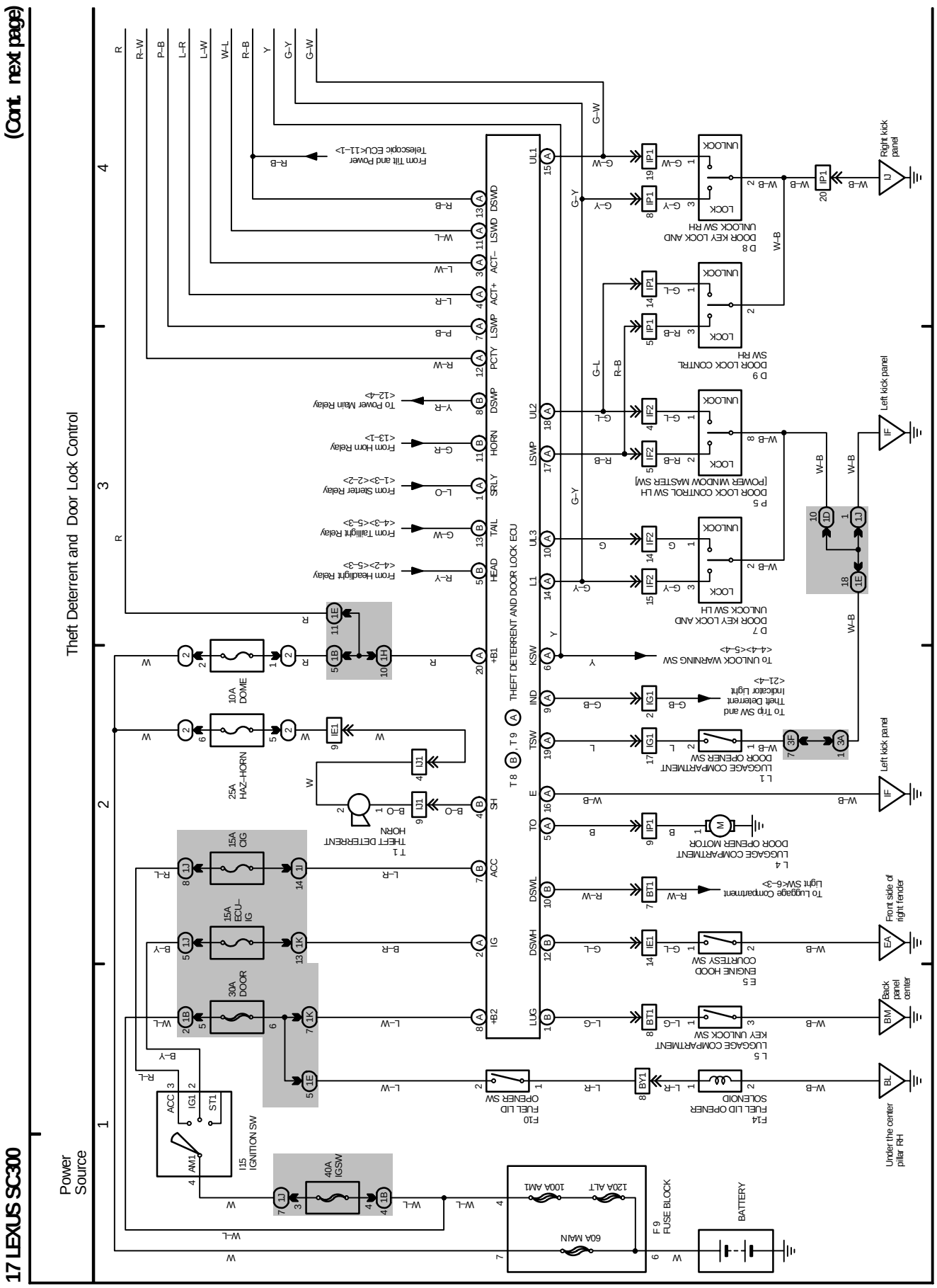
17 LEXUS SC300
(Cont. next page)
Theft Deterrent and Door Lock Control
Power Source
THEFT DETERRENT AND DOOR LOCK ECU
T 8 (B), T 9 (A)
From Tilt and Power Telescopic ECU<-11-1>
To Power Main Relay <12-4>
From Horn Relay <13-1>
From Starter Relay <1-3><2-2>
From Taillight Relay <4-3><5-3>
From Headlight Relay <4-2><5-3>
To UNLOCK WARNING SW <4-4><5-4>
To Trip SW and Theft Deterrent Indicator Light <21-4>
L 1 LUGGAGE COMPARTMENT DOOR OPENER SW
L 4 LUGGAGE COMPARTMENT DOOR OPENER MOTOR
To Luggage Compartment Light SW<6-3>
E 5 ENGINE HOOD COURTESY SW
L 5 LUGGAGE COMPARTMENT KEY UNLOCK SW
F14 FUEL LID OPENER SOLENOID
F10 FUEL LID OPENER SW
D 8 DOOR KEY LOCK AND UNLOCK SW RH
D 9 DOOR LOCK CONTROL SW RH
P 5 DOOR LOCK CONTROL SW LH [POWER WINDOW MASTER SW]
D 7 DOOR KEY LOCK AND UNLOCK SW LH
T 1 THEFT DETERRENT HORN
I 15 IGNITION SW
F 9 FUSE BLOCK
BATTERY
Right kick panel
Left kick panel
Front side of right fender
Back panel center
Under the center pillar RH

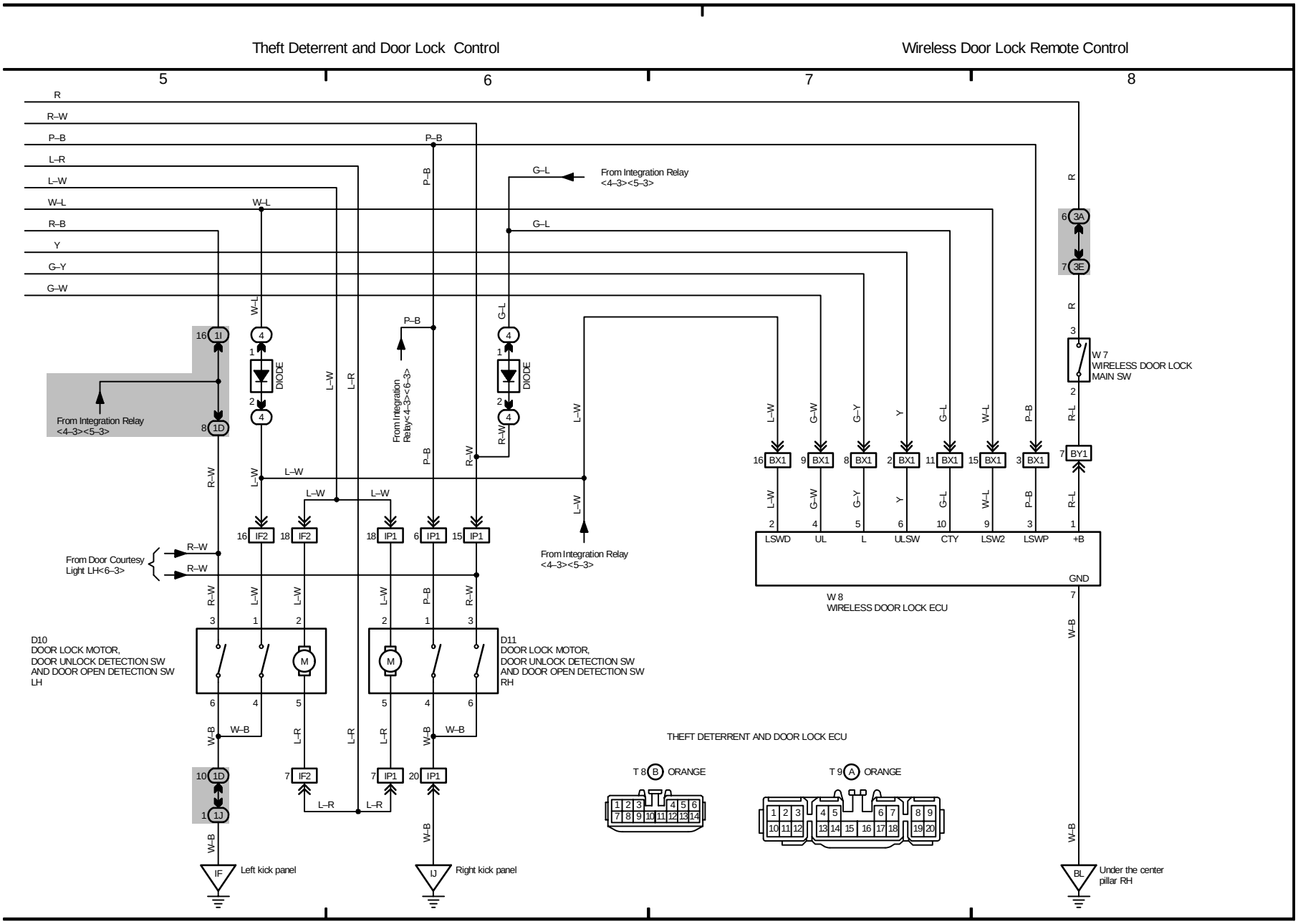

WhereEverybodyKnowsYourName

OVERALL ELECTRICAL WIRING DIAGRAM

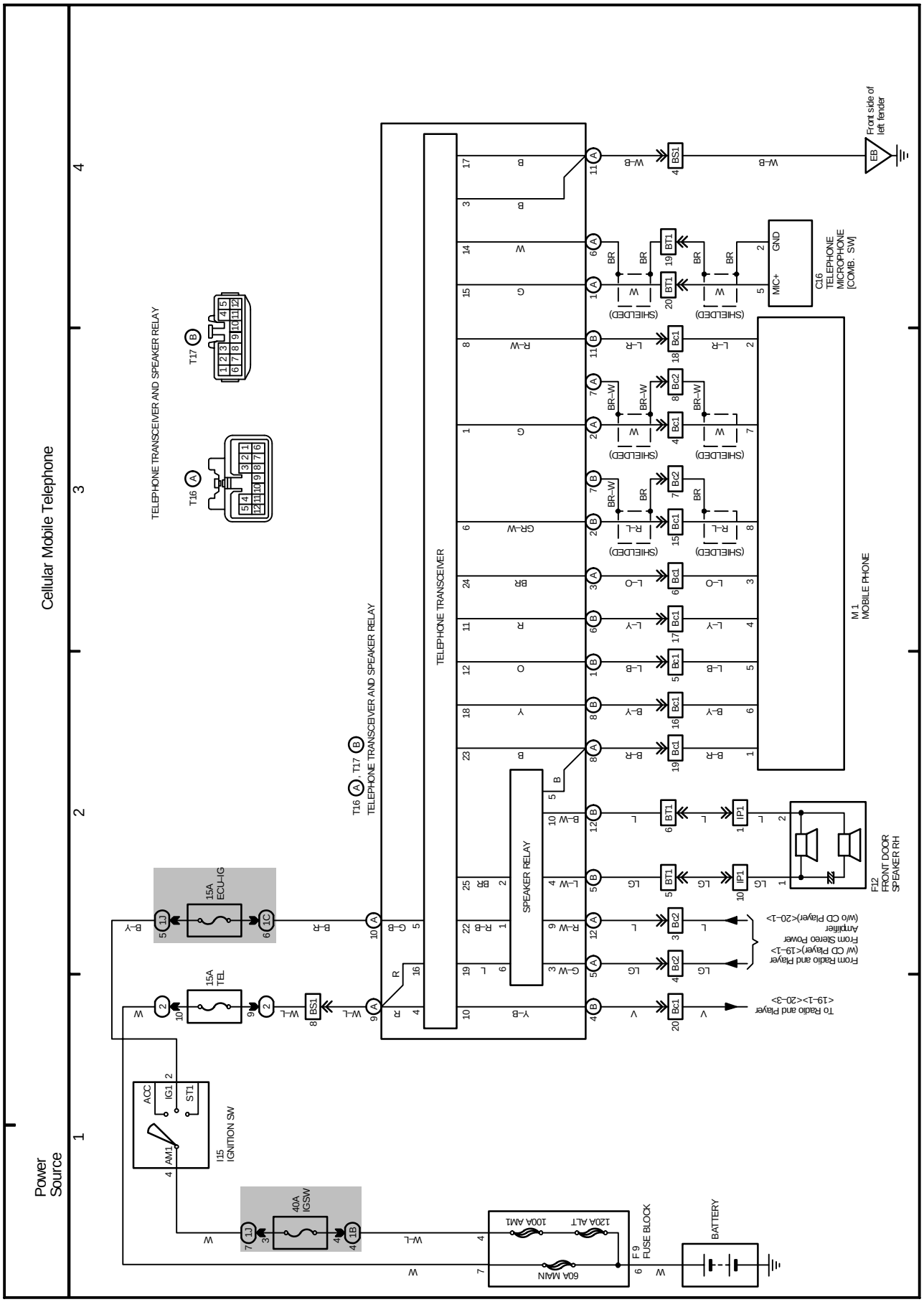

WhereEverybodyKnowsYourName

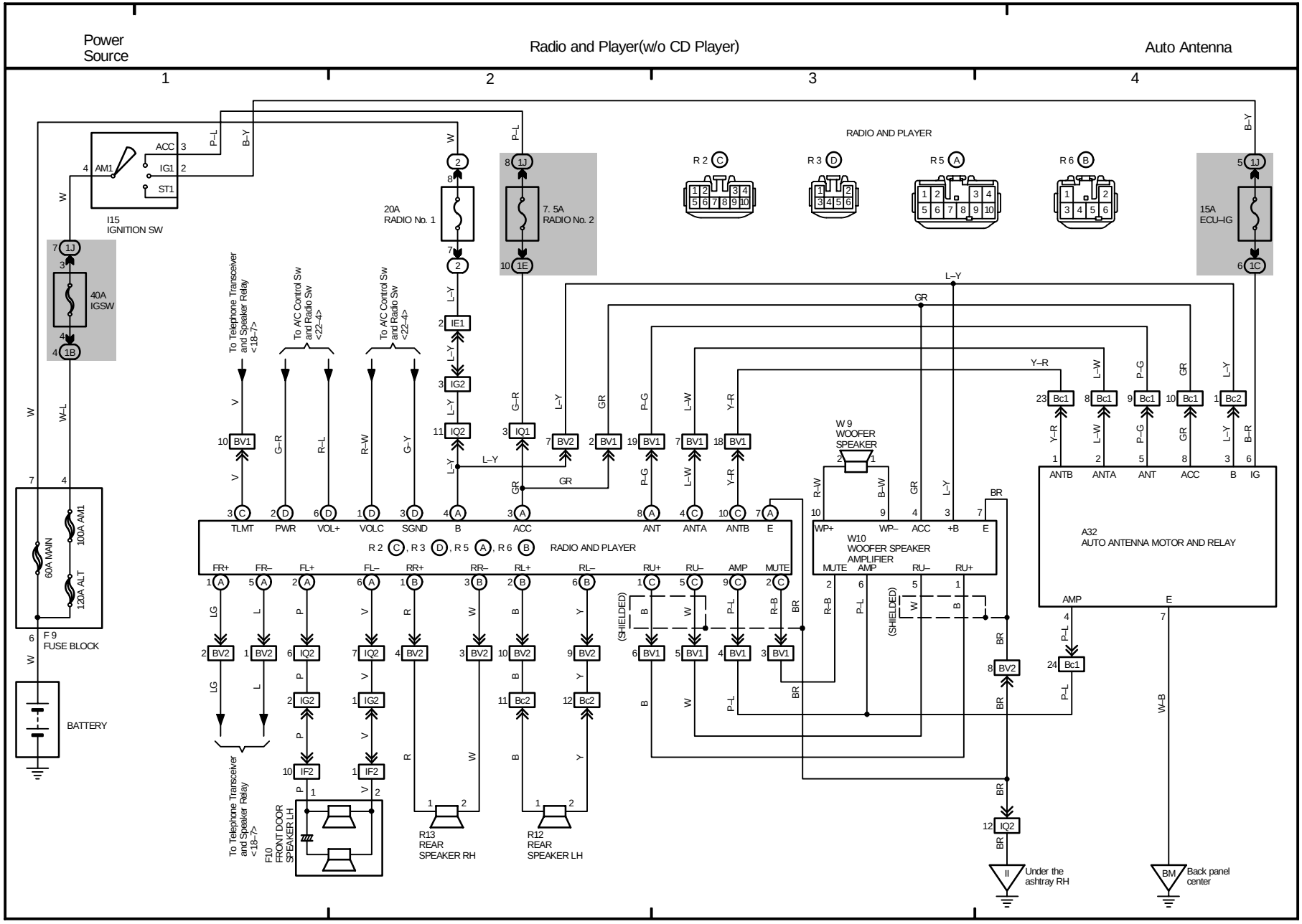

WhereEverybodyKnowsYourName

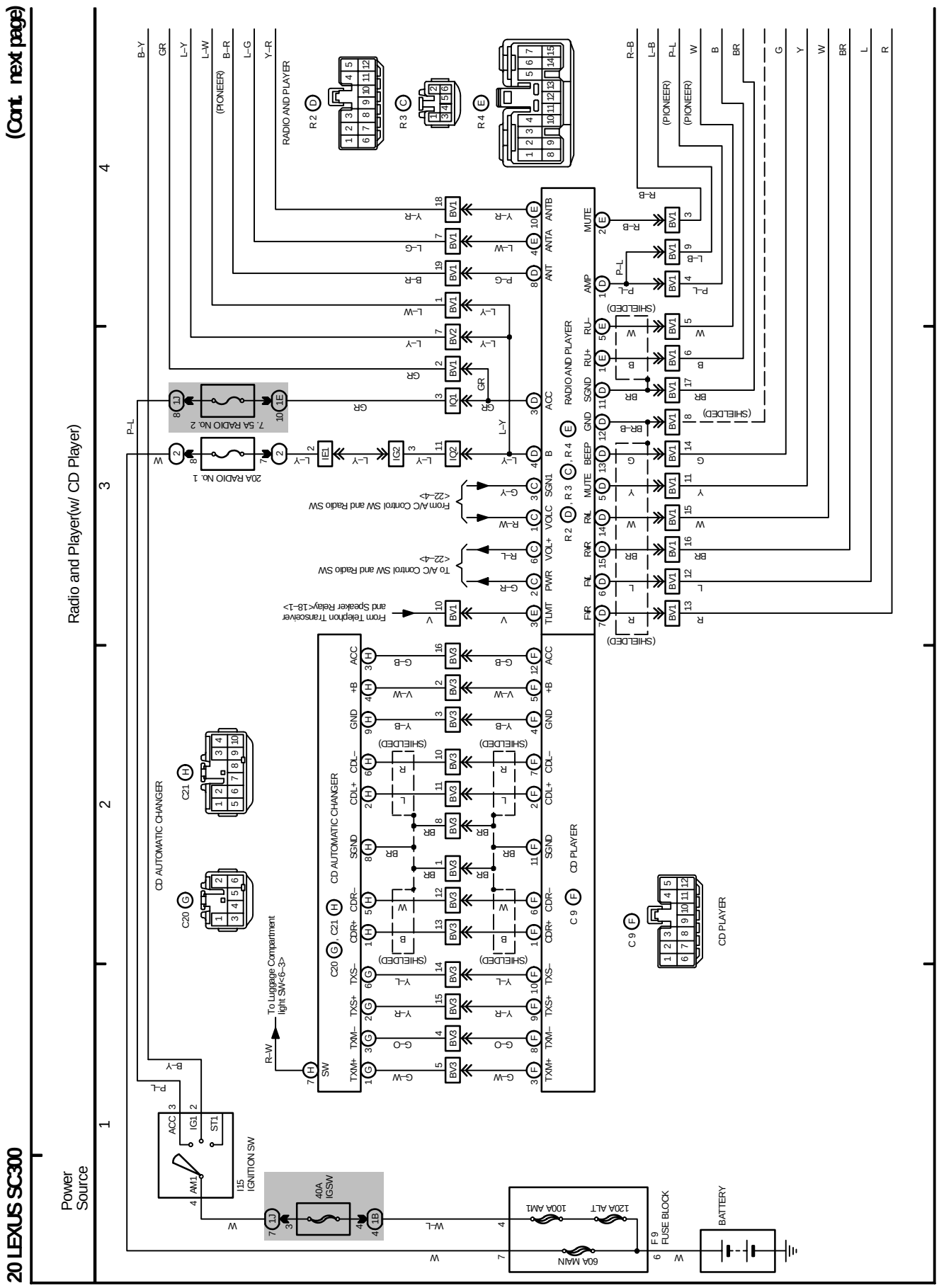

WhereEverybodyKnowsYourName

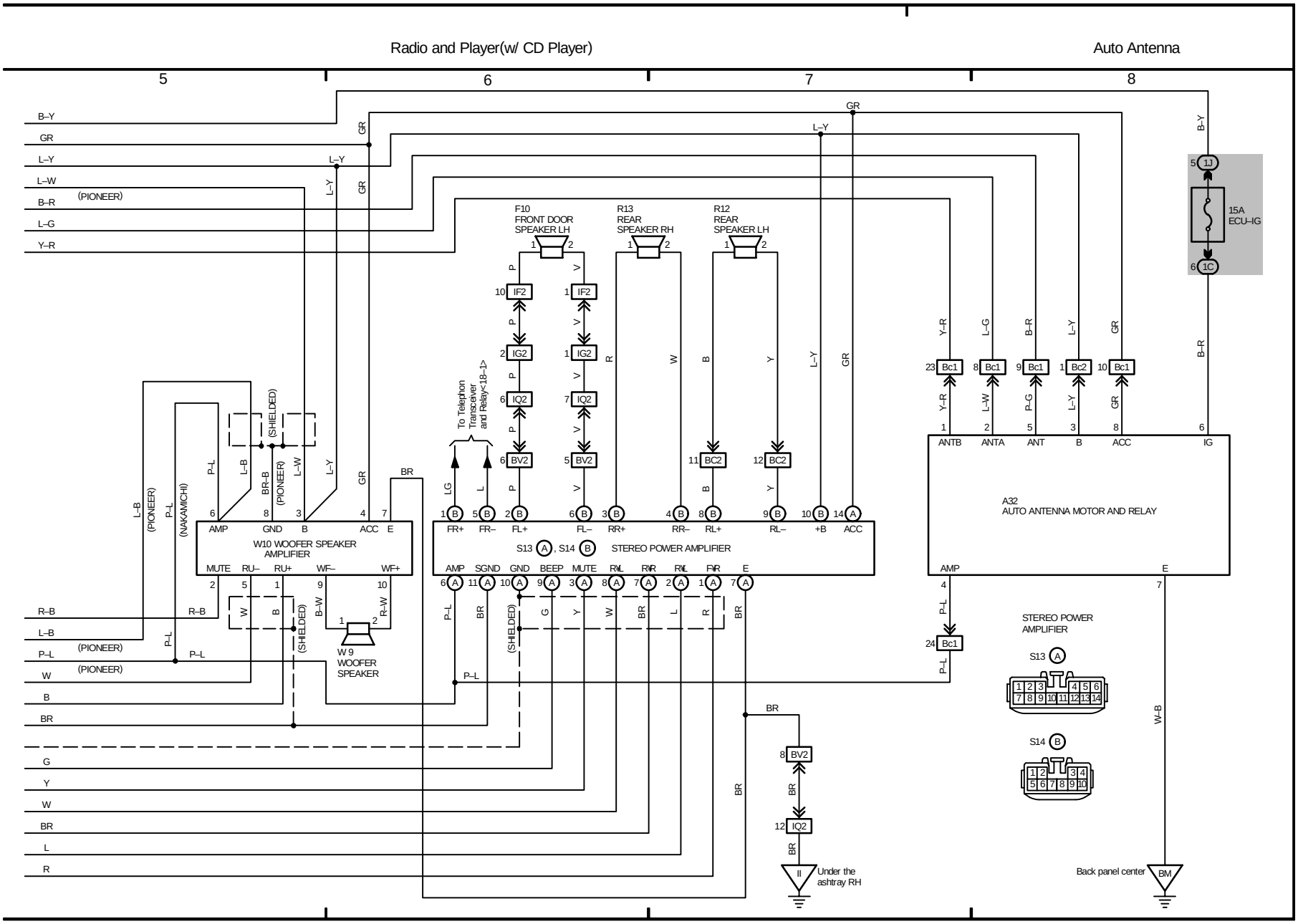

WhereEverybodyKnowsYourName

OVERALL ELECTRICAL WIRING DIAGRAM

(Cont. next page)

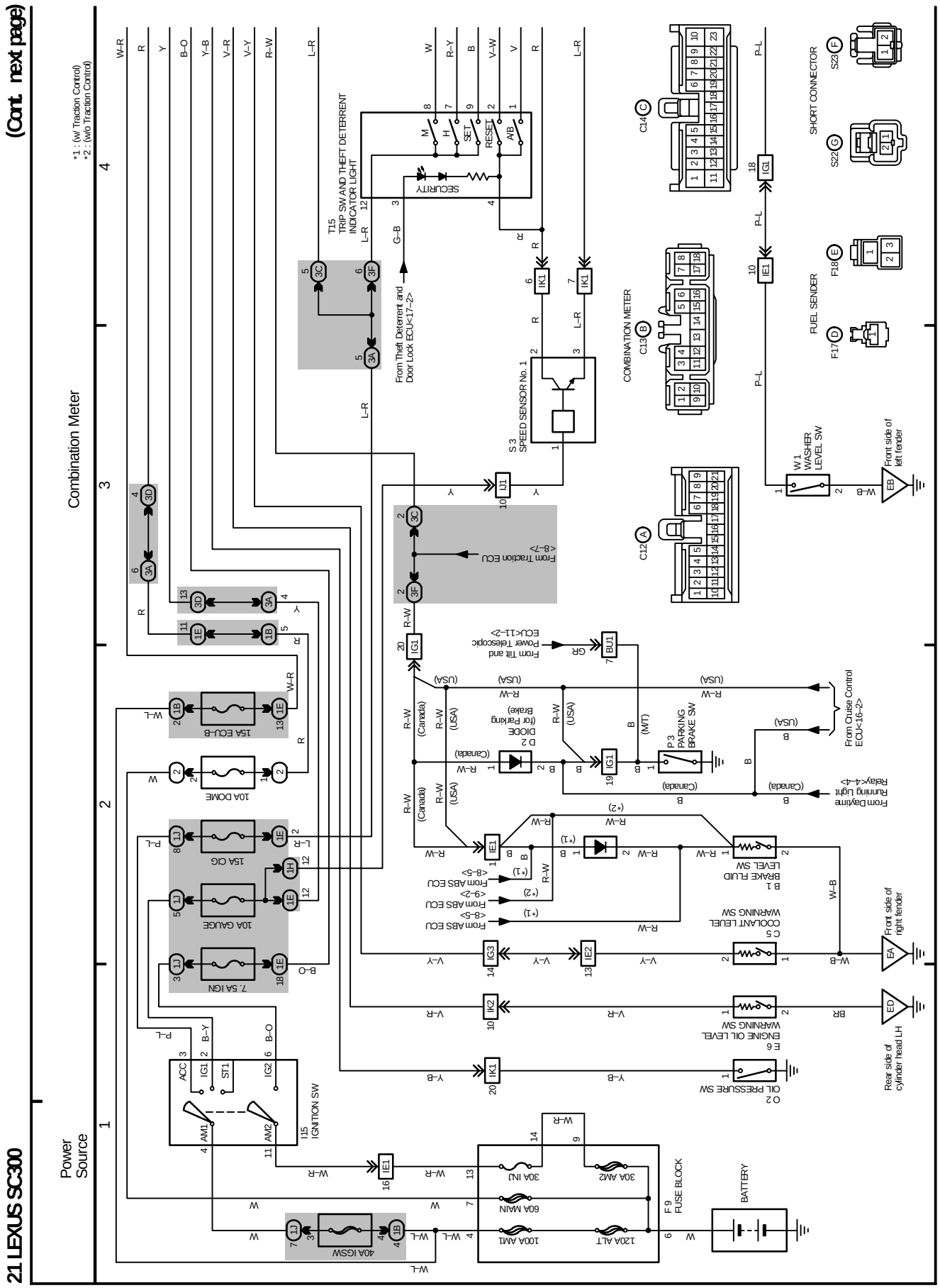

WhereEverybodyKnowsYourName

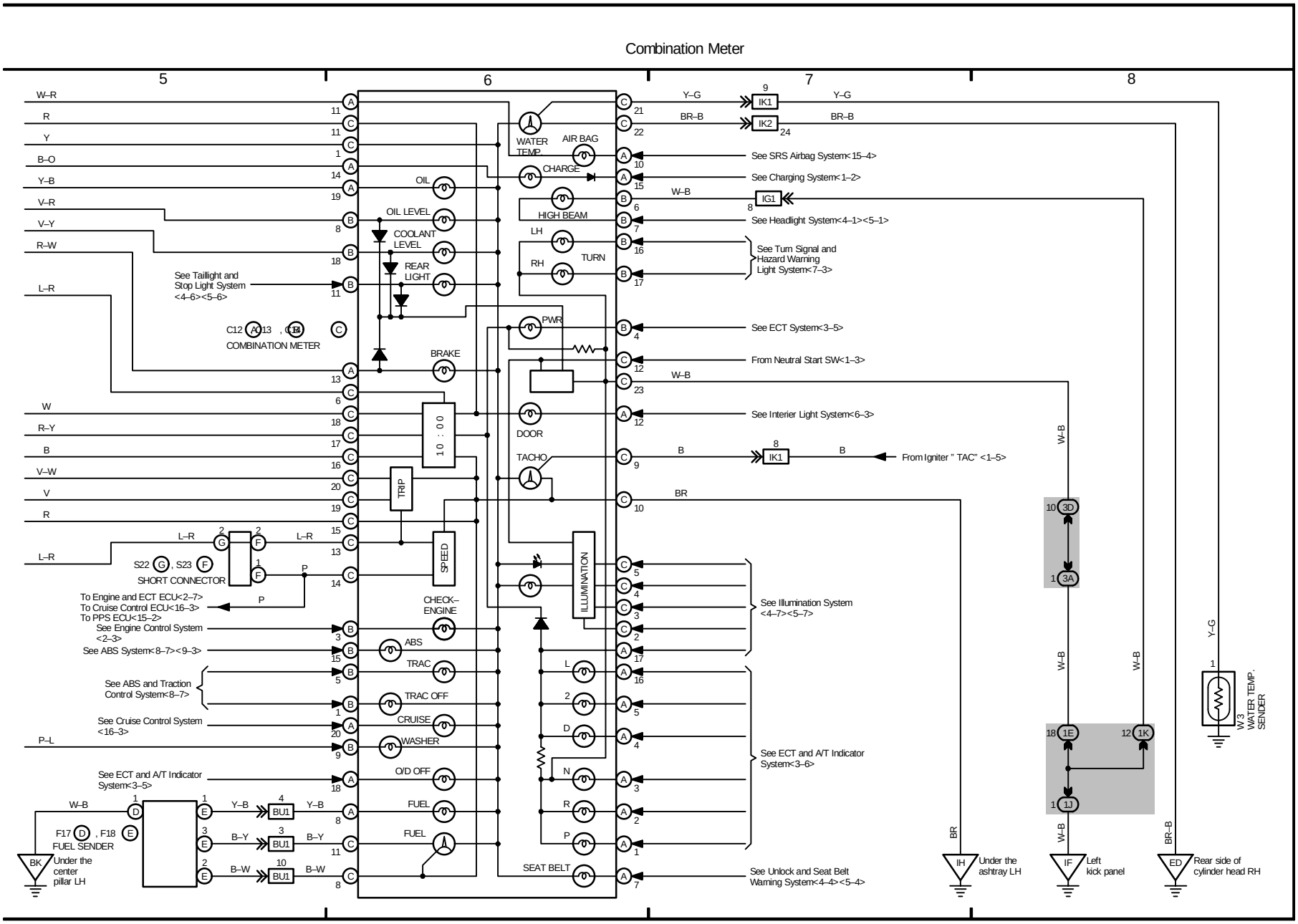

WhereEverybodyKnowsYourName

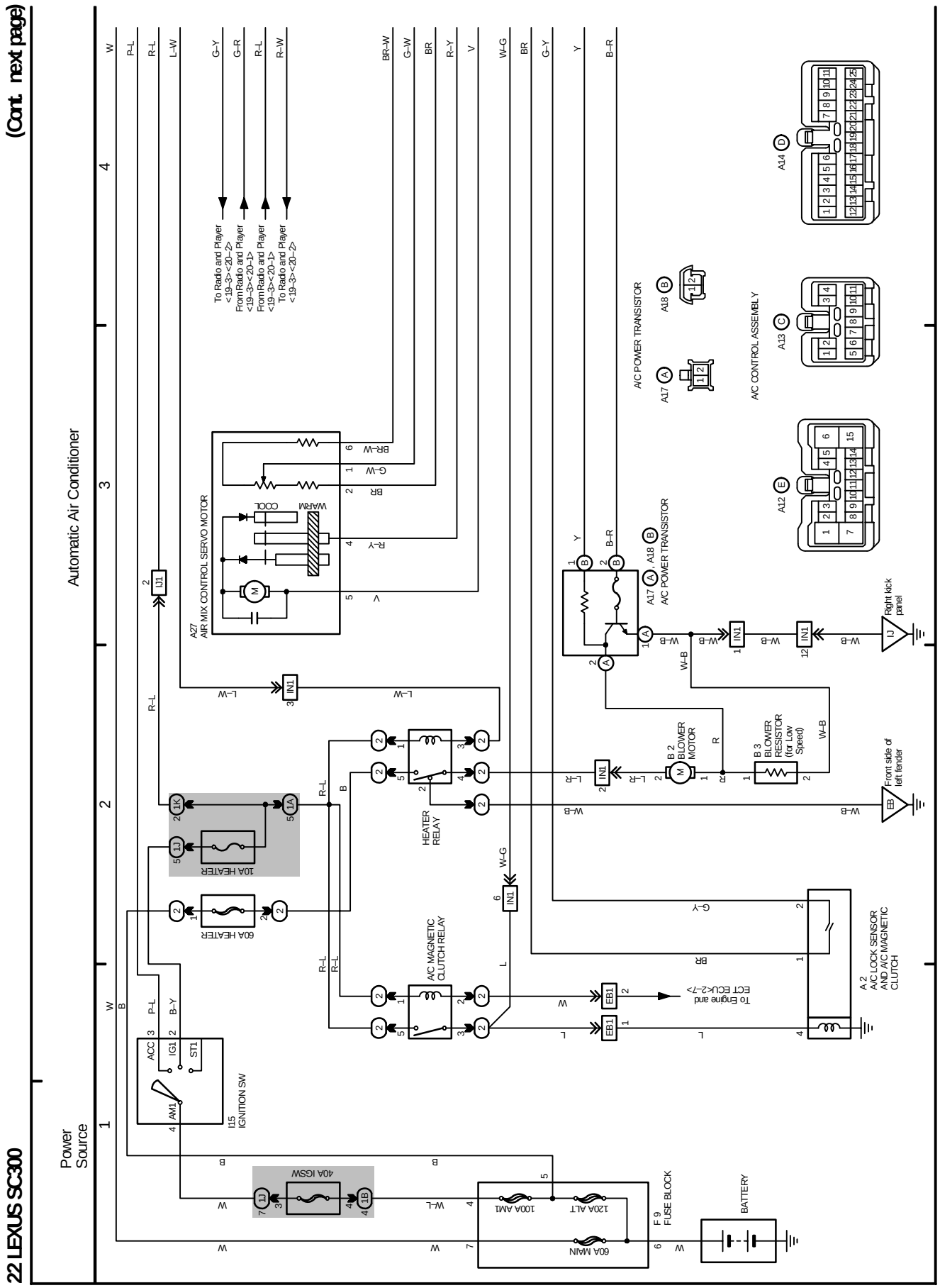

WhereEverybodyKnowsYourName

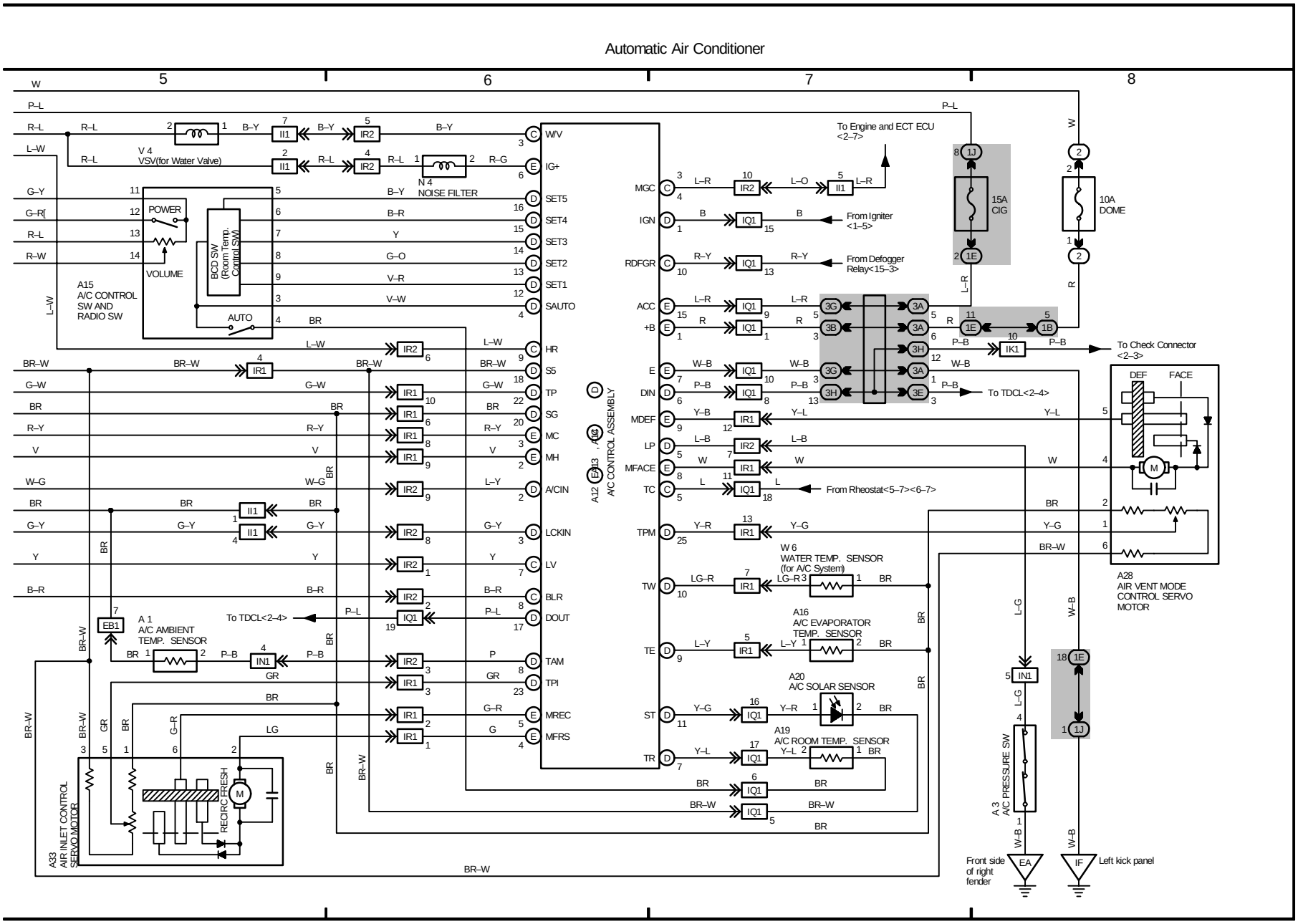

WhereEverybodyKnowsYourName

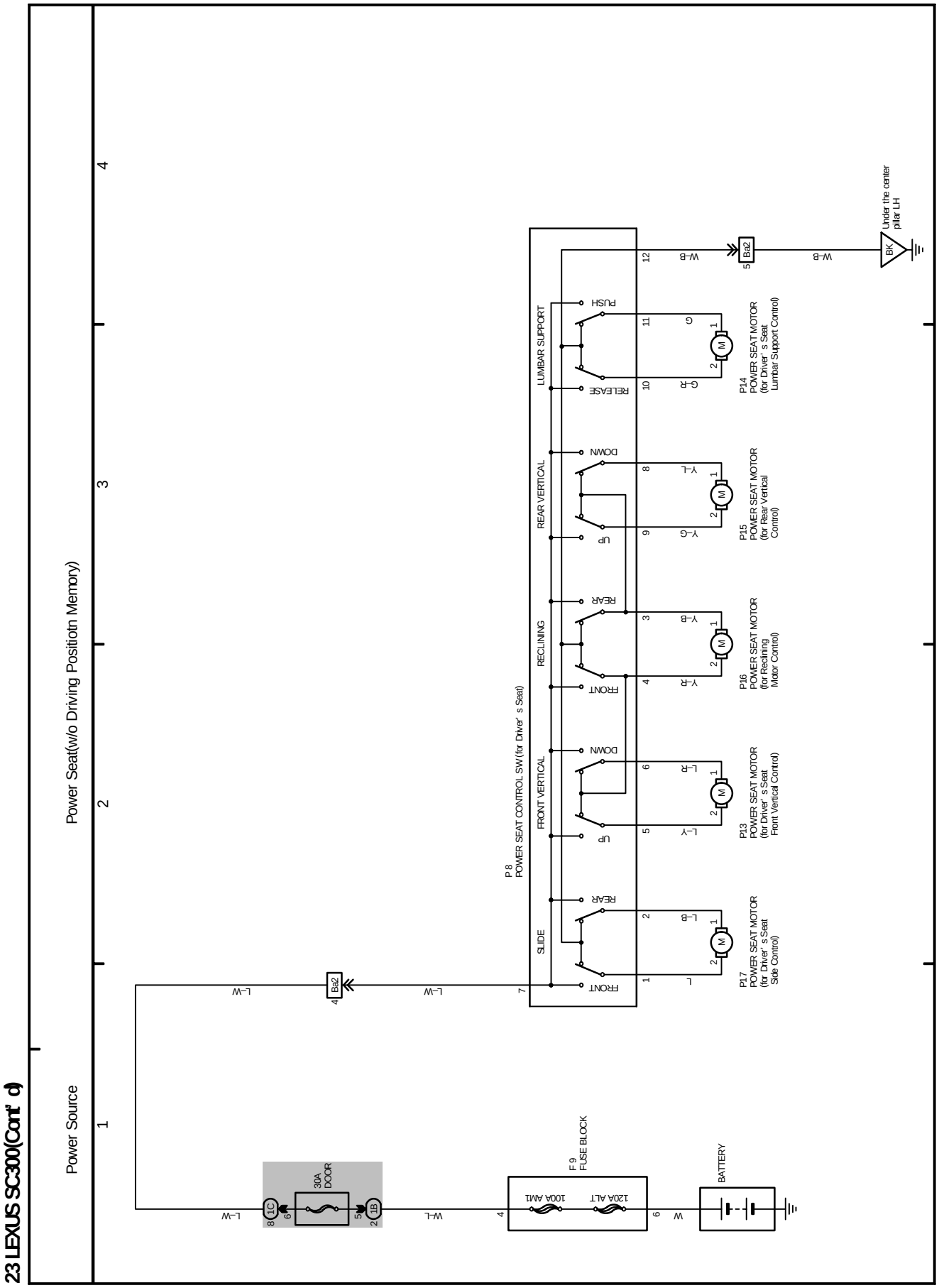

WhereEverybodyKnowsYourName

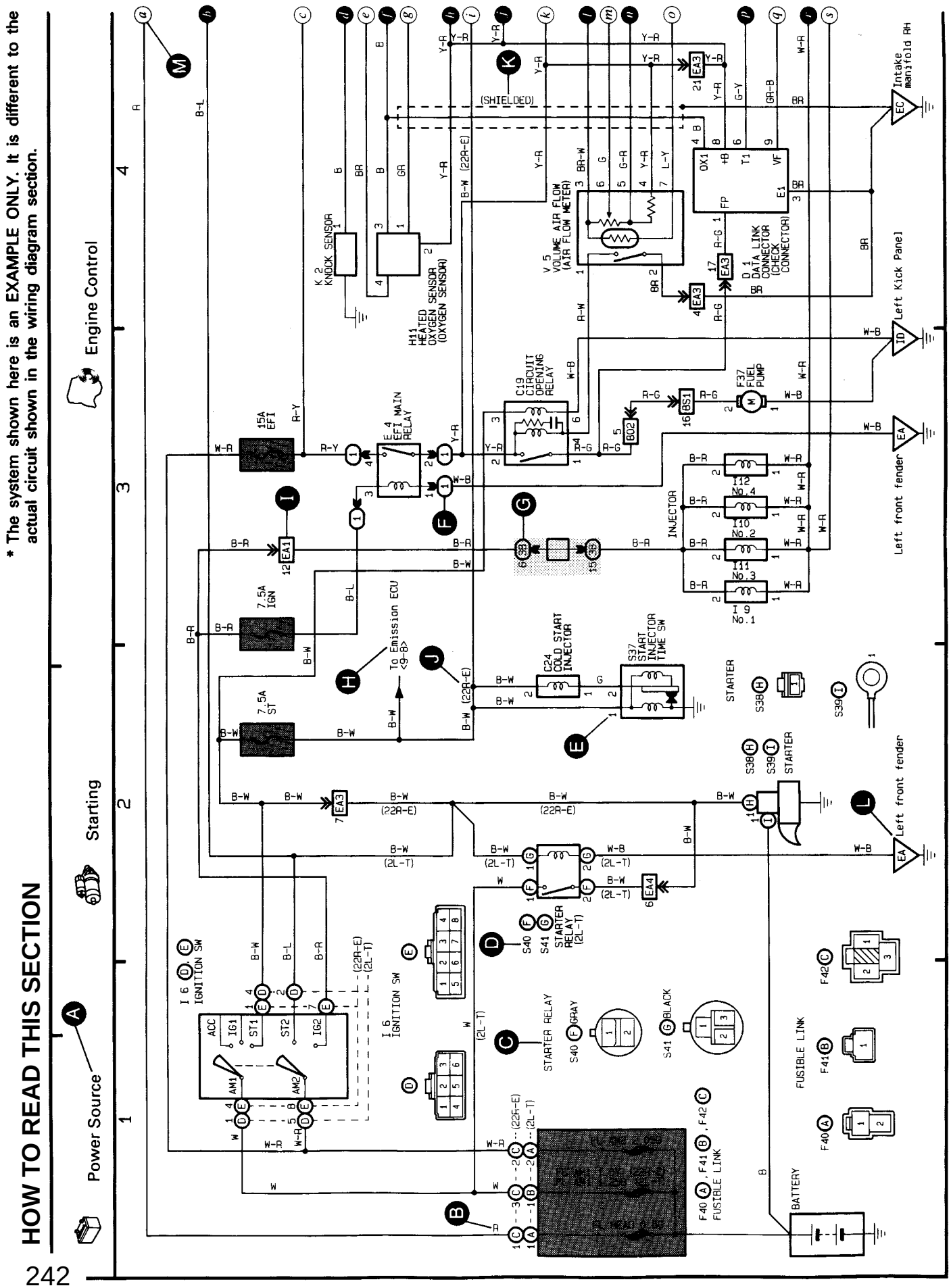

WhereEverybodyKnowsYourName

A: System Title

B: Indicates the wiring color.

Wire colors are indicated by an alphabetical code.

B	=	Black	L	=	Blue	R	=	Red
BR	=	Brown	LG	=	Light Green	V	=	Violet
G	=	Green	O	=	Orange	W	=	White
GR	=	Gray	P	=	Pink	Y	=	Yellow

The first letter indicates the basic wire color and the second letter indicates the color of the stripe.

Example: L – Y

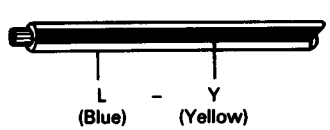

C: Indicates the connector to be connected to a part (the numeral indicates the pin No.)

D: The position of the parts. is the same as shown in the wiring diagram and wire routing.

E: Indicates the pin number of the connector. The numbering system is different for female and male connectors.

Example: **Numbered in order from upper left to lower right** **Numbered in order from upper right to lower left**

The numbering system for the overall wiring diagram is the same as above.

F: Indicates a Relay Block. No Shading is used and only the Relay Block No. is shown to distinguish it from the J/B.

Example: ① Indicates Relay Block No. 1.

G: Junction Block (the number in the circle is the J/B No. and connector code is shown beside it). Junction Blocks are shaded to clearly separate them from other parts (different junction blocks are shaded differently for further clarification.).

Example:

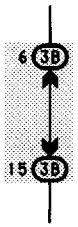

3B indicates that it is inside Junction Block No. 3.

H: Indicates related system.

I: Indicates the wiring harness and wiring harness connector. The wiring harness with male terminal is shown with arrows **(⩔)**.

Outside numerals are pin numbers.

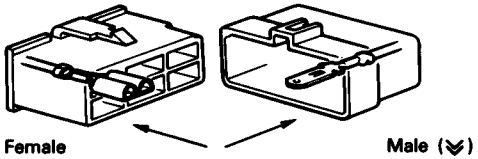

J: **( )** is used to indicate different wiring and connector, etc. when the vehicle model, engine type, or specification is different.

K: Indicates a shielder cable.

L: Indicates and located on ground point.

M: The same code occuring on the next page indicates that the wire harness is continuous.

WhereEverybodyKnowsYourName

SYSTEMS	LOCATION
ABS and Traction Control	8–2
ABS (Anti–Lock Brake System)	9–2
Automatic Air Conditioner	22–2
Auto Antenna	19–4 (w/o CD Player) 20–8 (w/ CD Player)
Back–Up Light	3–8
Cellular Mobile Telephone	18–2
Charging	1–2
Cigarette Lighter	14–4
Combination Meter	21–2
Cornering Light	7–2
Cruise Control	16–2
ECT and A/T Indicator	3–2
Engine Control	2–2
Headlight and Light Auto Turn Off (for USA)	4–2
Headlight (for Canada)	5–2

SYSTEMS	LOCATION
Horn	13–2
Ignition	1–5
Illumination	4–7 (for USA) 5–7 (for Canada)
Interior Light	6–2
Liquid Crystal Inner Rear View Mirror	12–1
Moon Roof	12–2
Power Seat (Driver's)	11–5 (w/ Driving Position Memory) 23–2 (w/o Driving Position Memory)
Power Seat (Passenger"s and Electric Tension Header	11–7
Power Source	1 23–1
Power Tilt and Power Telescopic	11–2
Power Window	12–3
PPS (Progressive Power Steering	15–2
Radio and Player	19–2 (w/o CD Player 20–2 (w/ CD Player

SYSTEMS	LOCATION
Rear Window Defogger and Mirror Heater	14–3
Remote Control Mirror	10–2 (w/ Memory) 5–7 (w/o Memory)
Seat Heater	14–2
Shift Lock	15–2
SRS AIRBAG	15–3
Starting	1–3
Taillight and Stop Light	4–5 (for USA) 5–5 (for Canada)
Theft Deterrent and Door Lock Control	17–2
Turn Signal and Hazard Warning Light	7–3
Unlock and Seat Belt Warning	4–3 (for USA) 5–3 (for Canada)
Wiper and Washer	13–2
Wireless Door Lock Remote Control	17–7

WhereEverybodyKnowsYourName

POWER SOURCE (Current Flow Chart)

The chart below shows the route by which current flows from the battery to each electrical source (Fusible Link, Circuit Breaker, Fuse, etc.) and other parts.

The next page and following pages show the parts to which each electrical source outputs current.

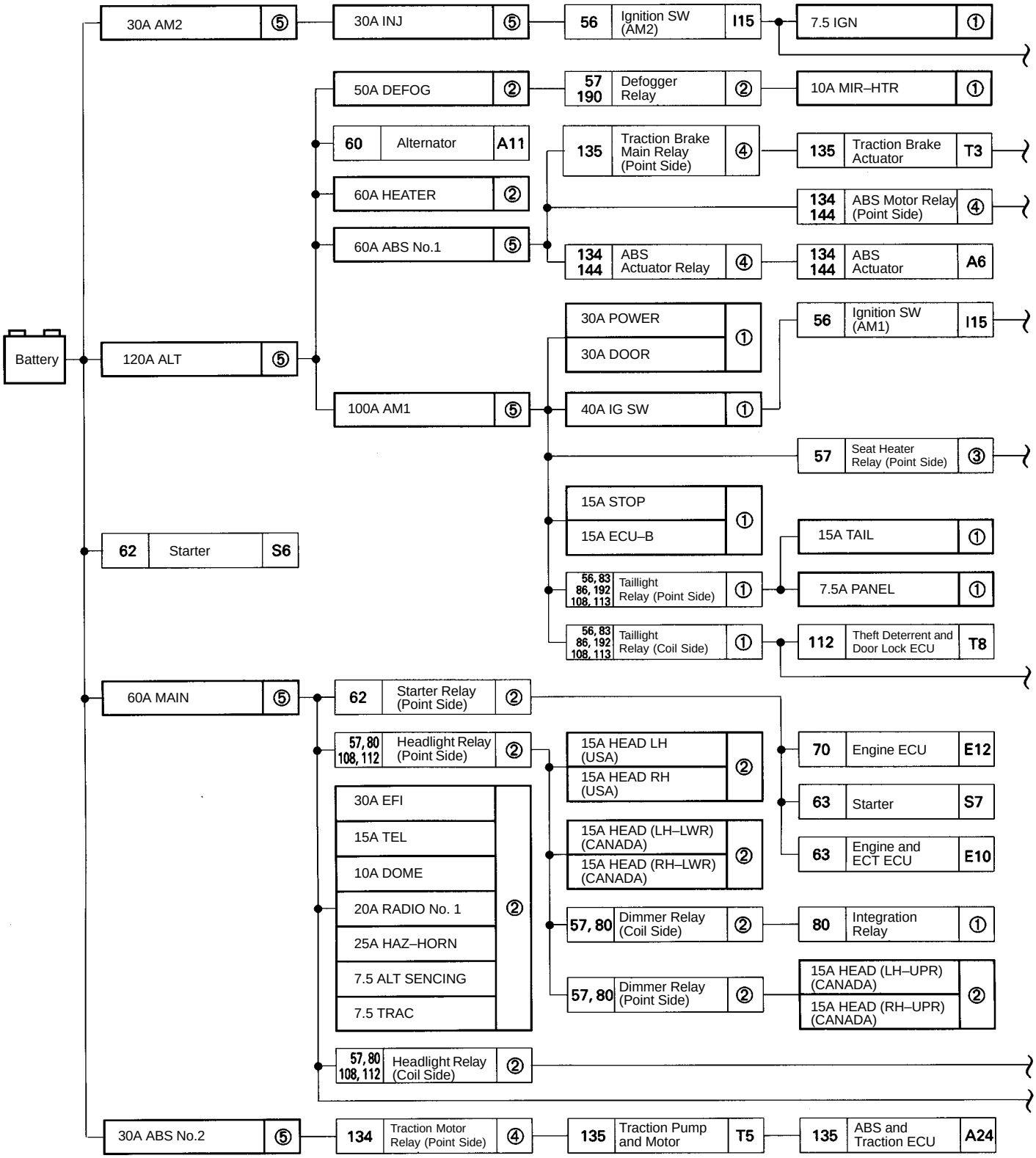

[LOCATION] (1) : J/B No. 1 (See page 20) (2) : R/B No. 2 (See page 19) (3) : R/B No. 4 (See page 22)

WhereEverybodyKnowsYourName

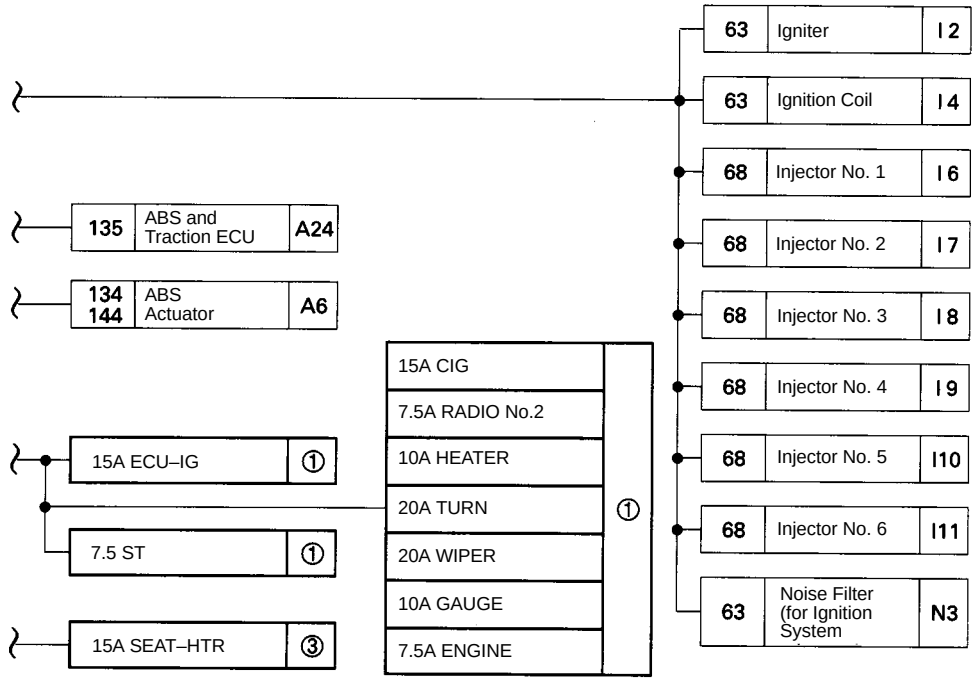

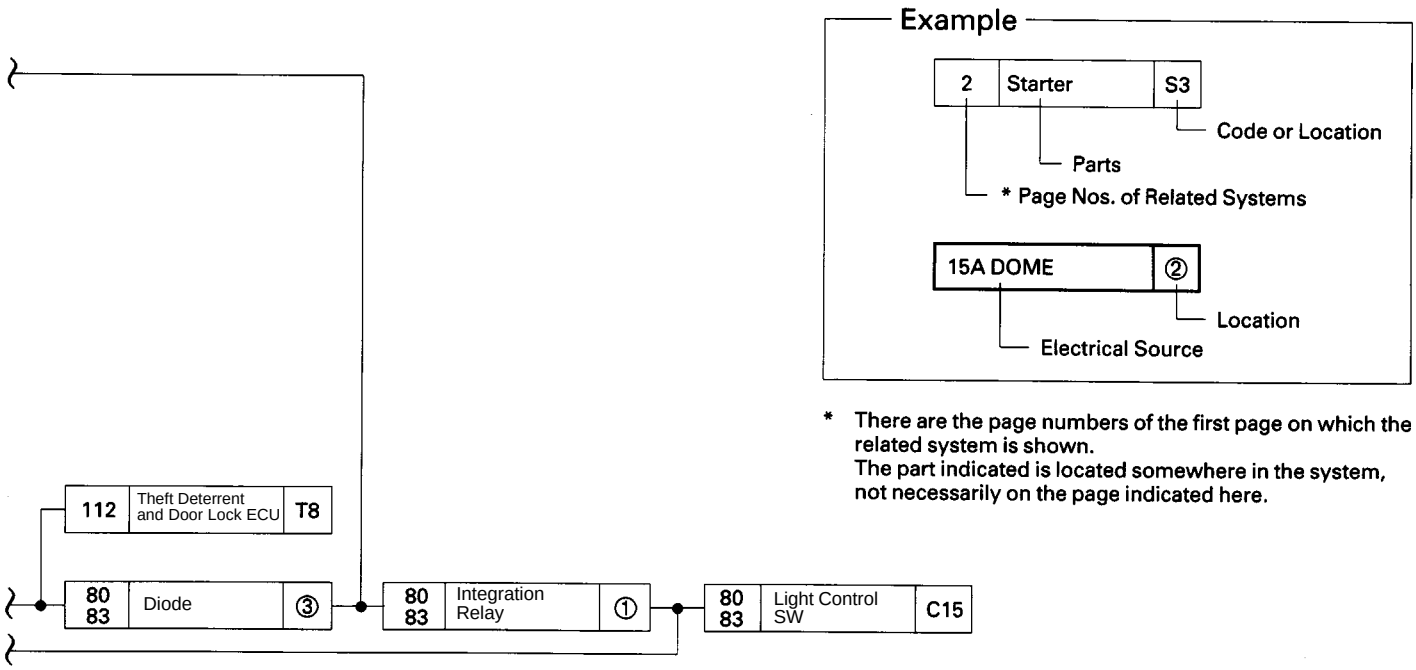

(4) : R/B No. 6 (See page 24) (5) : Fuse Block (F9 See page 19)

WhereEverybodyKnowsYourName

POWER SOURCE (Current Flow Chart)

*1: USA
*2: CANADA

Location	CB or Fuse		A/C Magnetic Clutch	Alternator	A/C Control Assembly			A/C Control SW and Radio SW	A/C Power Transistor	A/T Indicator Light (for Shift Lever)	ABS ECU	ABS and Traction ECU	ABS and Traction ECU	Auto Antenna Motor And Relay	Brake Fluid Level SW	Blower Motor	Blower Resistor	Buckle SW LH	Back–Up Light SW	Check Connector	Cornering Light LH	Cornering Light RH	Center Airbag Assembly	Cigarette Lighter
		*Page Nos. of Related Systems	226	60 216	190 226	226		90	226	90 126	144	134		202 208 212	216	226		192	101	68 134 144 178	102		178	90 167
		Code or Location	A2	A10	A12	A13	A14	A15	A17	A21	A23	A24	A25	A32	B1	B2	B3	B4	B6	C3	C6	C7	C10	C11
①	50A	DEFOG																						
	30A	DOOR																						
	30A	POWER																						
	15A	STOP									●		●											
	15A	ECU–B																		●			●	
	10A	MIR–HTR																						
	10A	HEATER	●		●	●	●																	
	20A	TURN																			●	●		
	20A	WIPER																						
	10A	GAUGE								●	●		●		●				●	●				
	15A	ECU–IG									●	●		●				●						
	7.5A	ENGINE		●																				
	7.5A	IGN		●																			●	
	15A	CIG			●																		●	●
	7.5A	RADIO No.2												●										
	15A	TAIL																						
	7.5A	PANEL				●		●		●														●
	7.5A	ST																						
②	15A	TEL																						
	10A	DOME			●						●		●											
	20A	RADIO No.1												●										
	25A	HAZ–HORN																						
	30A	EFI																		●				
	7.5	ALT SENCING		●																				
	15A	HEAD LH*1																						
	15A	HEAD RH*1																						
	15A	HEAD LH–LWR*2																						
	15A	HEAD RH–LWR*2																						
	15A	HEAD LH–UPR																						
	15A	HEAD RH–UPR																						
	60A	HEATER							●							●	●							
	7.5A	TRAC																						
③	15A	SEAT–HTR																						

* These are the page numbers of the first page on which the related system is shown.
The part indicated is located somewhere in the system, not necessarily on the page indicated here.

[LOCATION] (1) : J/B No. 1 (See page 20) (2) : R/B No. 2 (See page 19) (3) : R/B No. 4 (See page 22)

WhereEverybodyKnowsYourName

Airbag Warning Light	Charge Warning Light	A/T Indicator Light [Comb. Meter]	Combination Meter	High Beam Indicator Light [Comb. Meter]	Turn Signal Indicator Light [Comb. Meter]	Check Engine Warning Light	Open Door Warning Light	Rear Lights Warning Light	Seat Belt Warning Light	Traction Indicator Light	ABS Warning Light [Comb. Meter]	ABS Warning Light and Traction Off Indicator Light [Comb. Meter]	Coolant Level Warning Light	Cruise Control Indicator Light [Comb. Meter]	Combination Meter	Dimmer SW [Comb. SW]	Horn SW [Comb. SW]	Light Control SW [Comb. SW]	Cornering Light SW [Comb. SW]	Turn Signal SW [Comb. SW]	Wiper and Washer SW [Comb. SW]	Cruise Control ECU	Choke Coil	Crutch Start SW	Cruise Control Clutch SW	Diode (for Brake Fluid Level)
178 216	216	129	60 90 216	216	80 82 216	104	216		98 86 216	182 216	134 216	144	216		148 216	68 94 134 184 216	80 90 102	111	80 90 102	102	104	200	148	190	62 68 112 148	148	216
C12		C12 C13 C14	C12	C13			C14										C15			C16			C19	C22	C23	C24	D1
																								●			
																							●				
●			●																								
					●												●		●	●	●						
																						●					
		●	●				●		●	●	●	●	●	●	●	●							●				●
																							●				
	●		●																								
																●											
			●														●		●								
																●							●		●	●	
							●									●							●				
					●													●									
				●																							
				●	●																						

POWER SOURCE (Current Flow Chart)

*1: USA
*2: CANADA

Location	CB or Fuse		Diode (for Parking Brake)	Diode (for Tension Reducer)	Day/Night Shift SW	Door Courtesy Light LH	Door Courtesy Light RH	Door Lock Motor, Door Unlock Detection SW and Door Open Detection SW LH	Door Lock Motor, Door Unlock Detection SW and Door Open Detection SW RH	ECT Solenoid	Engine Oil Level Warning SW	ECT Pattern Select SW	Engine and ECT ECU		Engine ECU		Front Clearance Light LH	Front Clearance Light RH	Front Side Marker Light LH	Front Side Marker Light RH	Front Turn Signal Light LH	Front Turn Signal Light RH	Fuel Lid Opener SW	Fuel Lid Opener Solenoid
	*Page Nos. of Related Systems		216	192	107	94				126	216	90 126	68 126 136 226	68 126	68		86				104		112	
			D2	D3	D4	D5	D6	D10	D11	E1	E6	E8	E9	E10	E11	E12	F3	F4	F5	F6	F7	F8	F10	F14
①	50A	DEFOG																						
	30A	DOOR																					●	●
	30A	POWER																						
	15A	STOP											●		●									
	15A	ECU–B																						
	10A	MIR–HTR																						
	10A	HEATER											●		●									
	20A	TURN																			●	●		
	20A	WIPER																						
	10A	GAUGE	●								●	●	●		●									
	15A	ECU–IG		●																				
	7.5A	ENGINE																						
	7.5A	IGN											●		●									
	15A	CIG																						
	7.5A	RADIO No.2																						
	15A	TAIL											●		●		●	●	●	●				
	7.5A	PANEL										●												
	7.5A	ST												●		●								
②	15A	TEL																						
	10A	DOME			●	●	●	●	●															
	20A	RADIO No.1																						
	25A	HAZ–HORN																			●	●		
	30A	EFI								●			●	●	●	●								
	7.5A	ALT SENCING																						
	15A	HEAD LH*1																						
	15A	HEAD RH*1																						
	15A	HEAD LH–LWR*2																						
	15A	HEAD RH–LWR*2																						
	15A	HEAD LH–UPR																						
	15A	HEAD RH–UPR																						
	60A	HEATER																						
	7.5A	TRAC																						
③	15A	SEAT–HTR																						

* These are the page numbers of the first page on which the related system is shown.
The part indicated is located somewhere in the system, not necessarily on the page indicated here.

[LOCATION] (1) : J/B No. 1 (See page 20) (2) : R/B No. 2 (See page 19) (3) : R/B No. 4 (See page 22)

WhereEverybodyKnowsYourName

68	216	90		80 82				111		90 104	98		68	216	94	186	107	82 108 91 182 94 216 102	86	86 98	94		194		154 162	101	62 68 101 112 126
Fuel Pump ECU	Fuel Sender	Glove Box Light	Glove Box Light SW	Headlight LH HI	Headlight RH HI	Headlight LH LO	Headlight RH LO	Horn LH	Horn RH	Hazard SW	High Mount Stop Light (w/ Rear Spailer)	High Mount Stop Light (w/o Rear Spailer)	ISC Valve	Igniter No.1	Ignition Key Cylinder Light	Key Inter Lock Solenoid	Unlock Warning SW [Ignition SW]	Integration Relay	Licence Plate Light	Light Failure Sensor	Luggage Compartment Light SW	Luggage Compartment Light SW	Moon Roof Control Relay	Moon Roof Motor	A/T Indicator SW	Back–Up Light SW	Neutral Start SW
F16	F18	G1	G2	H1	H2	H3	H4	H5	H6	H7	H9	H8	I1	I2	I14	I15		I16	L2	L3	L6	L7	M2	M4	N1		
																							●	●			
											●	●								●							
										●								●									
	●													●				●		●					●	●	●
																●											
																		●									
																			●	●							
		●	●							●								●									
																											●
															●		●	●			●	●	●				
								●	●	●																	
●													●														
				●		●																					
					●		●																				
						●																					
							●																				
				●																							
					●																						

(4) : R/B No. 5 (See page 22)

WhereEverybodyKnowsYourName

POWER SOURCE (Current Flow Chart)

*1: USA
*2: CANADA

Location	Code or Location	CB or Fuse	Noise Filter (for Defogger System)	Noise Filter (for A/C System)	Oil Pressure SW	O/D Main SW	Oxygen Sensor Sub (for California)	PPS ECU	Parking Brake SW	Power Window Control SW RH	Power Window Master SW and Door Lock Control SW LH	Power Window Motor LH	Power Window Motor RH	Power Seat Control SW (for Driver's Seat)	Power Seat Control SW (for Passenger's Seat)	Power Seat ECU (Driver's)		Power Seat ECU (Passenger's)	Power Seat Motor (for Driver's Lumbar Support Control)	Power Seat Motor (for Passenger's Reclining Control)	Personal Light	Radio and Player		Radio and Player (w/ CD Player)
	*Page Nos. of Related Systems		190	226	216	126	68	184	216	122				154				154 192	154		94	208	202	90 202
			N2	N4	O2	O5	O8	P2	P3	P4	P5	P6	P7	P8	P9	P10	P11	P12	P14	P18	P20	R2	R5	R4
①	50A	DEFOG	●																					
	30A	DOOR												●	●	●		●	●	●				
	30A	POWER								●	●	●	●											
	15A	STOP														●								
	15A	ECU–B																						
	10A	MIR–HTR																						
	10A	HEATER		●																				
	20A	TURN																						
	20A	WIPER																						
	10A	GAUGE			●	●			●							●								
	15A	ECU–IG						●								●		●						
	7.5A	ENGINE																						
	7.5A	IGN																						
	15A	CIG																						
	7.5A	RADIO No.2																				●	●	●
	15A	TAIL																						
	7.5A	PANEL																						●
	7.5A	ST																						
②	15A	TEL																						
	10A	DOME															●	●			●			
	20A	RADIO No.1																				●	●	
	25A	HAZ–HORN																						
	30A	EFI					●																	
	7.5A	ALT SENCING																						
	15A	HEAD LH*1																						
	15A	HEAD RH*1																						
	15A	HEAD LH–LWR*2																						
	15A	HEAD RH–LWR*2																						
	15A	HEAD LH–UPR																						
	15A	HEAD RH–UPR																						
	60A	HEATER																						
	7.5A	TRAC																						
③	15A	SEAT–HTR																						

* These are the page numbers of the first page on which the related system is shown.
The part indicated is located somewhere in the system, not necessarily on the page indicated here.

[LOCATION] (1) : J/B No. 1 (See page 20) (2) : R/B No. 2 (See page 19) (3) : R/B No. 4 (See page 22)

WhereEverybodyKnowsYourName

	90 202 212	168	90 216	101	104	98	86	101	98	86	104	173 190		173	68 184 216	186	94	68 98 134 144 148 154 186	208		188				216	188	112	134 144 148 178
	Radio and Player (w/o CD Player)	Remote Control Mirror ECU	Rheostat	Back-Up Light LH [Rear Comb. Light LH]	Rear Turn Signal Light LH [Rear Comb. Light LH]	Stop Light LH [Rear Comb. Light LH]	Taillight LH [Rear Comb. Light LH]	Back-Up Light RH [Rear Comb. Light RH]	Stop Light RH [Rear Comb. Light RH]	Taillight RH [Rear Comb. Light RH]	Rear Turn Signal Light RH [Rear Comb. Light RH]	Remote Control Mirror LH	Remote Control Mirror RH	Remote Control Mirror SW	Speed Sensor No. 1	Shift Lock ECU	Stop Light	Stop Light SW	Stereo Power Amplifier		Seat Heater (for Driver's Seat Back)	Seat Heater (for Driver's Seat Cushion)	Seat Heater (for Passenger's Seat Back)	Seat Heater (for Passenger's Seat Cushion)	Short Connector	Seat Heater SW (M/T)	Theft Deterrent Horn	TDCL
	R5	R7	R9	R10					R11			R16	R17	R18	S3	S10	S11	S12	S13	S14	S15	S16	S17	S18	S23	S24	T1	T6
						●			●							●		●										
		●																										●
												●	●															
					●						●																	
				●				●							●										●			●
																●												
																●												
●		●										●	●	●					●									
							●			●																		
●			●																									
																	●											
																				●								
					●						●																●	
																					●	●	●	●		●		

(4) : R/B No. 5 (See page 22)

WhereEverybodyKnowsYourName

POWER SOURCE (Current Flow Chart)

*1: USA
*2: CANADA

Location	Code or Location	Parts	Theft Deterrent and Door Lock ECU		Tilt and power Telescopic ECU		Seat Heater SW (A/T)	Traction Cut SW	Traction ECU	Traction ECU	Trip SW and Theft Deterrent Indicator	Telephone Transceiver and Speaker Relay	Tension Reducer Solenoid LH	Tension Reducer Solenoid RH	VSV (for EGR)(EX. California)	VSV (for EVAP)	VSV (for Fuel Pressure Up)	VSV (for Water Valve)	Vanity Light LH	Vanity Light RH	Washer Level SW	Washer Motor	Water Temp Sender	Wiper Motor
		*Page Nos. of Related Systems	112 194	112	162		188	90	134		90 216	204	156 192		68			226	94		216	200	216	200
	CB or Fuse		T8	T9	T10	T11	T12		T13	T14	T15	T16	T18	T19	V1	V2	V3	V4	V5	V6	W1	W2	W3	W5
①	50A	DEFOG																						
	30A	DOOR		●																				
	30A	POWER				●																		
	15A	STOP							●															
	15A	ECU–B																						
	10A	MIR–HTR																						
	10A	HEATER																●						
	20A	TURN																						
	20A	WIPER																				●		●
	10A	GAUGE				●			●		●										●		●	
	15A	ECU–IG		●		●				●		●	●	●										
	7.5A	ENGINE																						
	7.5A	IGN																						
	15A	CIG	●								●													
	7.5A	RADIO No.2																						
	15A	TAIL																						
	7.5A	PANEL						●			●													
	7.5A	ST		●																				
②	15A	TEL										●												
	10A	DOME	●	●	●				●										●	●				
	20A	RADIO No.1																						
	25A	HAZ–HORN	●																					
	30A	EFI													●	●	●							
	7.5A	ALT SENCING																						
	15A	HEAD LH*1																						
	15A	HEAD RH*1																						
	15A	HEAD LH–LWR*2																						
	15A	HEAD RH–LWR*2																						
	15A	HEAD LH–UPR																						
	15A	HEAD RH–UPR																						
	60A	HEATER																						
	7.5A	TRAC								●														
③	15A	SEAT–HTR					●																	

* These are the page numbers of the first page on which the related system is shown.
The part indicated is located somewhere in the system, not necessarily on the page indicated here.

[LOCATION] (1) : J/B No. 1 (See page 20) (2) : R/B No. 2 (See page19) (3) : R/B No. 4 (See page22)

WhereEverybodyKnowsYourName

118		208 212	112 194	226	68 126	226	190 226	62 68 112	94	104	102	111 112	102
Wireless Door Lock Main SW	Wireless Door Lock ECU	Woofer Speaker Amplifier	Power Main Relay	A/C Magnetic Clutch Relay	EFI Main Relay	Heater Relay	Defogger Relay	Starter Relay	Diode	Turn Signal Flasher	Diode	Horn Relay	Cornering Light Relay
W7	W8	W10	①	②						③			④
							●						
			●										
			●										
				●		●	●						
										●	●		●
			●										
		●											
								●					
●	●		●						●				
		●											
										●		●	
					●								
						●							

(4) : R/B No. 5 (See page 22)

WhereEverybodyKnowsYourName

POWER SOURCE

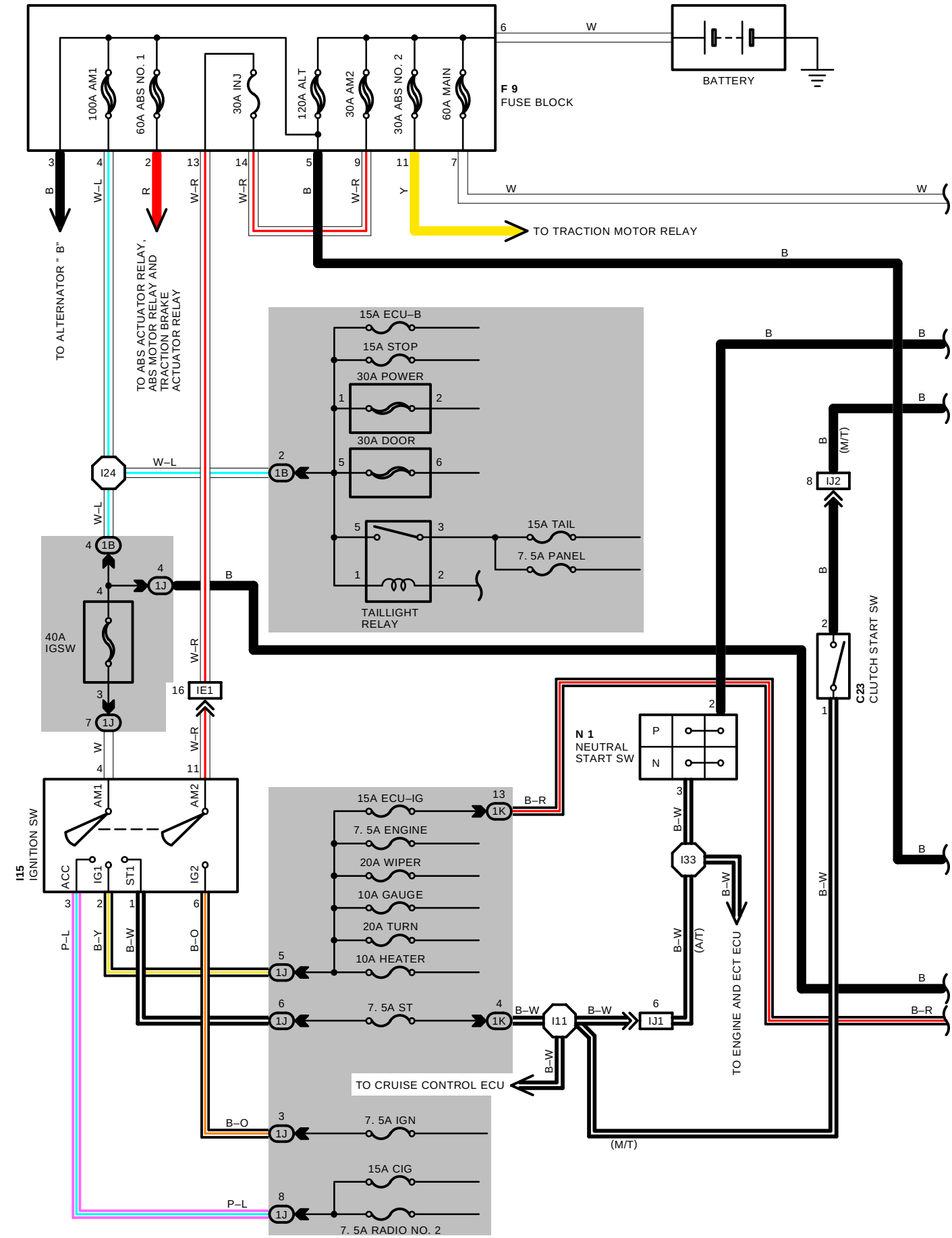

WhereEverybodyKnowsYourName

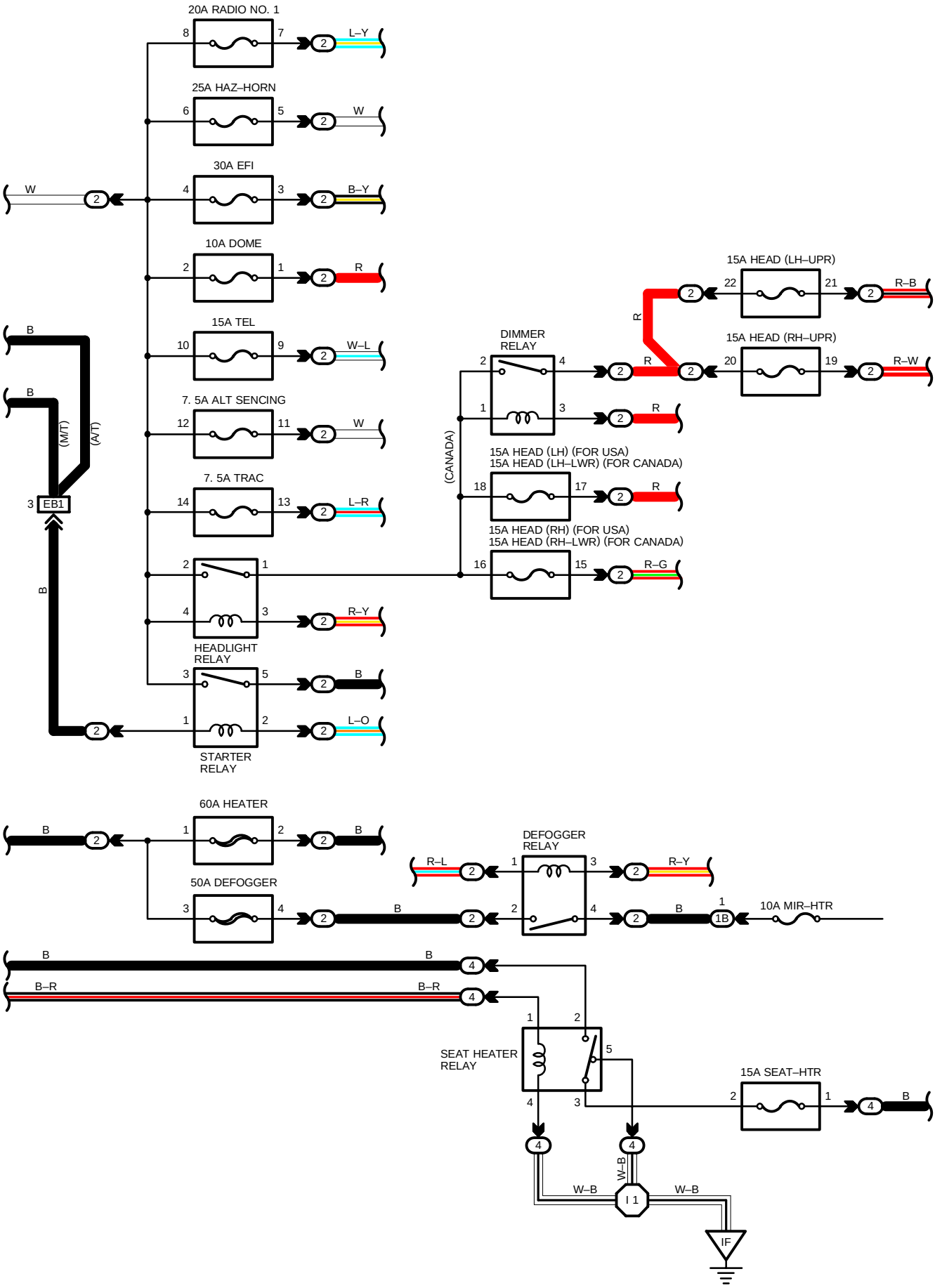

WhereEverybodyKnowsYourName

POWER SOURCE

SERVICE HINTS

HEADLIGHT RELAY (FOR USA)
1–2 : CLOSED WITH LIGHT CONTROL SW AT **HEAD** POSITION OR DIMMER SW AT **FLASH** POSITION
HEADLIGHT RELAY (FOR CANADA)
1–2 : CLOSED WITH LIGHT CONTROL SW AT **HEAD** POSITION OR DIMMER SW AT **FLASH** POSITION
: CLOSED WITH ENGINE RUNNING AND PARKING BRAKE PEDAL RELEASED (PARKING BRAKE SW OFF)
TAILLIGHT RELAY (FOR USA)
5–3 : CLOSED WITH LIGHT CONTROL SW AT **TAIL** OR **HEAD** POSITION
TAILLIGHT RELAY (FOR CANADA)
5–3 : CLOSED WITH LIGHT CONTROL SW AT **TAIL** OR **HEAD** POSITION
: CLOSED WITH ENGINE RUNNING AND PARKING BRAKE PEDAL RELEASED (PARKING BRAKE SW OFF)
IGNITION MAIN RELAY
2–1 : CLOSED WITH IGNITION KEY AT **ON** OR **ST** POSITION
I15 IGNITION SW
4–3 : CLOSED WITH IGNITION KEY AT **ACC** OR **ON** POSITION
4–2 : CLOSED WITH IGNITION KEY AT **ON** OR **ST** POSITION
11–6: CLOSED WITH IGNITION KEY AT **ON** OR **ST** POSITION
4–1 : CLOSED WITH IGNITION KEY AT **ST** POSITION

: PARTS LOCATION

CODE	SEE PAGE	CODE	SEE PAGE	CODE	SEE PAGE
C23	28	**I15**	29		
F 9	26	**N 1**	27		

: RELAY BLOCKS

CODE	SEE PAGE	RELAY BLOCKS (RELAY BLOCK LOCATION)
2	19	ENGINE COMPARTMENT LEFT
4	23	LEFT KICK PANEL (J/B NO.1 LEFT)

: JUNCTION BLOCK AND WIRE HARNESS CONNECTOR

CODE	SEE PAGE	JUNCTION BLOCK AND WIRE HARNESS (CONNECTOR LOCATION)
1B	20	ENGINE ROOM MAIN WIRE
1J	20	COWL WIRE
1K		

: CONNECTOR JOINING WIRE HARNESS AND WIRE HARNESS

CODE	SEE PAGE	JOINING WIRE HARNESS AND WIRE HARNESS (CONNECTOR LOCATION)
EB1	34	ENGINE WIRE AND ENGINE ROOM MAIN WIRE (FRONT SIDE OF R/B NO. 2)
IE1	36	ENGINE ROOM MAIN WIRE AND COWL WIRE (R/B NO. 4)
IJ1	36	ENGINE WIRE AND COWL WIRE (RIGHT KICK PANEL)
IJ2		

: GROUND POINTS

CODE	SEE PAGE	GROUND POINTS LOCATION
IF	36	LEFT KICK PANEL

: SPLICE POINTS

CODE	SEE PAGE	WIRE HARNESS WITH SPLICE POINTS	CODE	SEE PAGE	WIRE HARNESS WITH SPLICE POINTS
I 1	38	COWL WIRE	**I24**	38	ENGINE ROOM MAIN WIRE
I11			**I33**	38	ENGINE WIRE

C23

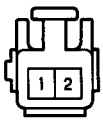

F 9 BLACK

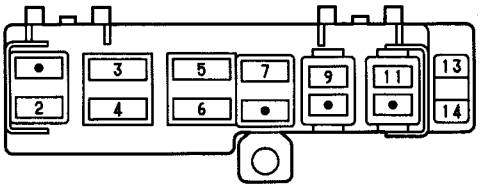

I15 BLACK

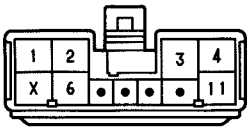

N 1 GRAY

WhereEverybodyKnowsYourName

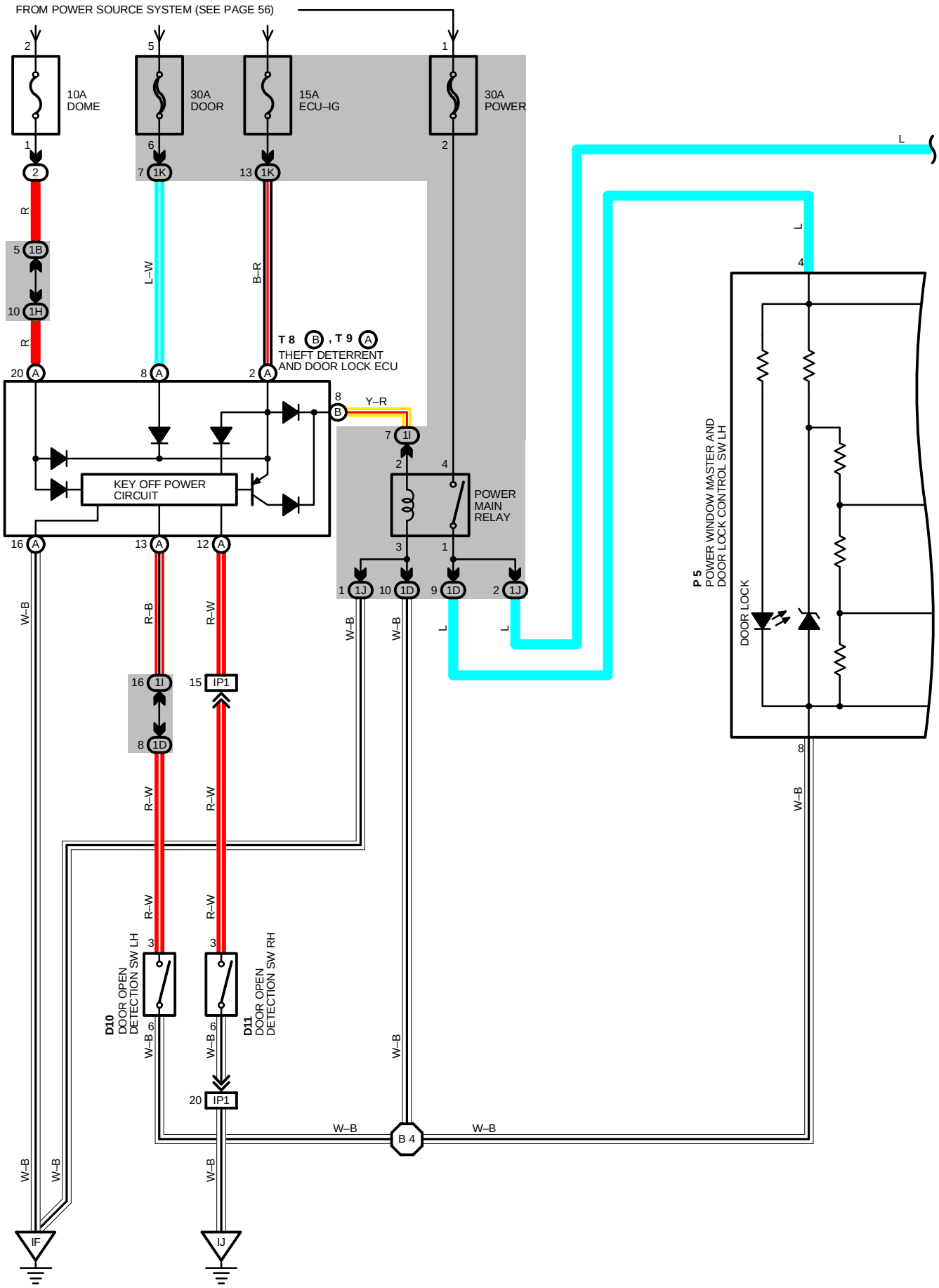

WhereEverybodyKnowsYourName

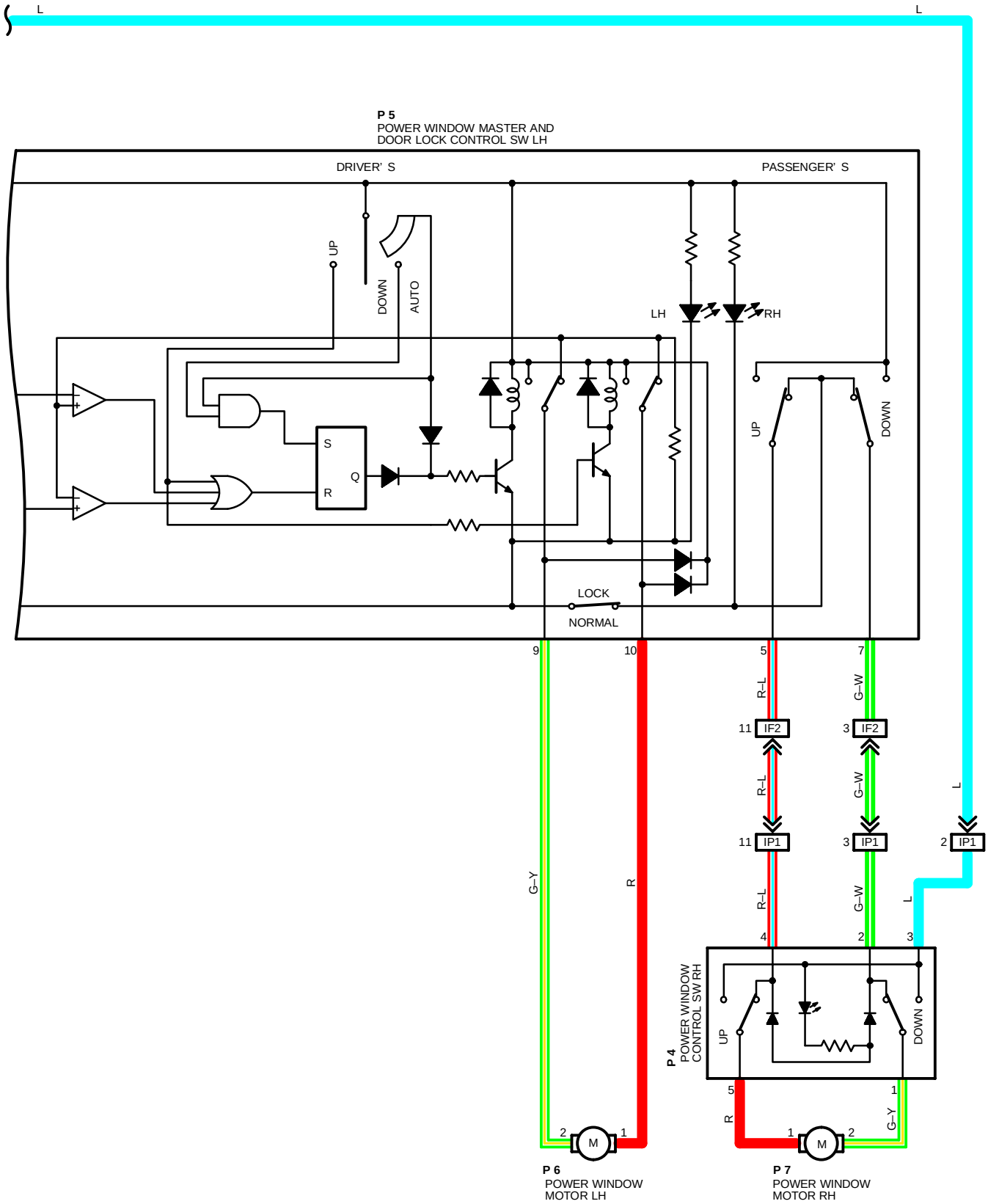

WhereEverybodyKnowsYourName

SYSTEM OUTLINE

WITH THE IGNITION SW TURNED ON, CURRENT FLOWS THROUGH THE **ECU–IG** FUSE → **TERMINAL (A)2** OF THE THEFT DETERRENT ECU→ **(B)8** → **TERMINAL 2** OF THE POWER MAIN RELAY → **TERMINAL 3** → TO **GROUND,** THIS ACTIVATES THE RELAY AND THE CURRENT FLOWING TO **TERMINAL 4** OF THE RELAY FROM **POWER** FUSE FLOWS TO **TERMINAL 1** OF THE RELAY → **TERMINAL 4** OF THE POWER WINDOW MASTER SW, **TERMINAL 3** OF THE POWER WINDOW SW.

1. MANUAL OPERATION (DRIVER'S WINDOW)

WITH THE IGNITION SW TURNED ON AND WITH THE POWER WINDOW MASTER SW (DRIVER'S) IN **UP** POSITION, THE CURRENT FLOWING TO **TERMINAL 4** OF THE POWER WINDOW MASTER SW FLOWS TO **TERMINAL 10** OF THE MASTER SW → **TERMINAL 1** OF THE POWER WINDOW MOTOR → **TERMINAL 2** → **TERMINAL 9** OF THE MASTER SW → **TERMINAL 8** → TO **GROUND** AND CAUSES THE POWER WINDOW MOTOR TO ROTATE IN THE UP DIRECTION. THE WINDOW ASCENDS ONLY WHILE THE SW IS BEING PUSHED.

IN DOWN OPERATION, THE FLOW OF CURRENT FROM **TERMINAL 4** OF THE POWER WINDOW MASTER SW TO **TERMINAL 9** OF THE MASTER SW CAUSES THE FLOW OF CURRENT FROM **TERMINAL 2** OF THE MOTOR → **TERMINAL 1** → **TERMINAL 10** OF THE MASTER SW → **TERMINAL 8** → TO **GROUND,** FLOWING IN THE OPPOSITE DIRECTION TO MANUAL UP OPERATION AND CAUSING THE MOTOR TO ROTATE IN REVERSE, LOWERING THE WINDOW.

2. DRIVER'S WINDOW AUTO DOWN OPERATION

WHEN THE DRIVER'S WINDOW SW IS PUSHED STRONGLY ON THE DOWN SIDE, THE CURRENT FLOWING TO **TERMINAL 4** OF THE POWER WINDOW MASTER SW FLOWS TO THE DOWN CONTACT POINT AND AUTO DOWN CONTACT POINT OF THE DRIVER'S SW.

THIS ACTIVATES THE RELAY (DOWN SIDE) INSIDE THE POWER WINDOW MASTER SW AND THE HOLD CIRCUIT ALSO TURNS ON AT THE SAME TIME, SO THE RELAY (DOWN SIDE) REMAINS ACTIVATED EVEN WHEN THE SW IS RELEASED.

CURRENT FLOWS AT THIS TIME FROM **TERMINAL 4** OF THE POWER WINDOW MASTER SW → **TERMINAL 9** → **TERMINAL 2** OF POWER WINDOW MOTOR → MOTOR → **TERMINAL 1** → **TERMINAL 10** OF POWER WINDOW MASTER SW → **TERMINAL 8** → **GROUND,** SO THE MOTOR CONTINUES TO OPERATE UNTIL THE DRIVER'S WINDOW IS FULLY DOWN.

WHEN THE DRIVER'S WINDOW FINISHES DOWN OPERATION THE HOLD CIRCUIT GOES OFF, SO THE RELAY (DOWN SIDE) ALSO TURNS OFF. THIS STOPS THE CURRENT FLOW FROM **TERMINAL 4** OF THE POWER WINDOW MASTER SW TO **TERMINAL 9,** SO THE POWER WINDOW MOTOR STOPS AND AUTO DOWN OPERATION STOPS.

WHEN THE DRIVER'S SW IS PULLED ON THE UP SIDE DURING AUTO DOWN OPERATION, THE HOLD CIRCUIT IS TURNED OFF SO CURRENT FLOW FROM **TERMINAL 4** OF THE POWER WINDOW MASTER SW TO **TERMINAL 9** IS CUT OFF AND THE POWER WINDOW MOTOR STOPS. IF THE SW REMAINS PULLED UP THE RELAY (UP SIDE) IS ACTIVATED, SO CURRENT FLOWS FROM **TERMINAL 4** OF THE POWER WINDOW MASTER SW → **TERMINAL 10** → **TERMINAL 1** OF POWER WINDOW MOTOR → MOTOR → **TERMINAL 2** → **TERMINAL 9** → **TERMINAL 8** → **GROUND,** THE POWER WINDOW MOTOR ROTATES IN THE UP DIRECTION AND MANUAL UP OPERATION OCCURS WHILE THE SWITCH IS PULLED UP.

3. MANUAL OPERATION BY POWER WINDOW SW (PASSENGER'S WINDOW)

WITH POWER WINDOW SW (PASSENGER'S) PULLED TO THE UP SIDE, CURRENT FLOWING FROM **TERMINAL 3** OF THE POWER WINDOW CONTROL SW FLOWS TO **TERMINAL 5** OF THE POWER WINDOW SW → **TERMINAL 1** OF THE POWER WINDOW MOTOR → **TERMINAL 2** → **TERMINAL 1** OF THE POWER WINDOW SW → **TERMINAL 2** → **TERMINAL 7** OF THE MASTER SW → **TERMINAL 8** → TO **GROUND** AND CAUSES THE POWER WINDOW MOTOR (PASSENGER'S) TO ROTATE IN THE UP DIRECTION. UP OPERATION CONTINUES ONLY WHILE THE POWER WINDOW SW IS PULLED TO THE UP SIDE. WHEN THE WINDOW DESCENDS, THE CURRENT FLOWING TO THE MOTOR FLOWS IN THE OPPOSITE DIRECTION, FROM **TERMINAL 2** TO **TERMINAL 1,** AND THE MOTOR ROTATES IN REVERSE. WHEN THE WINDOW LOCK SW IS PUSHED TO THE LOCK SIDE, THE GROUND CIRCUIT TO THE PASSENGER'S WINDOW BECOMES OPEN.

AS A RESULT, EVEN IF OPEN/CLOSE OPERATION OF THE PASSENGER'S WINDOW IS TRIED, THE CURRENT FROM **TERMINAL 8** OF THE POWER WINDOW MASTER SW IS NOT GROUNDED AND THE MOTOR DOES NOT ROTATE, SO THE PASSENGER'S WINDOW CAN NOT BE OPERATED AND WINDOW LOCK OCCURS.

4. KEY OFF POWER WINDOW OPERATION

WITH THE IGNITION SW TURNED FROM ON TO OFF, THE THEFT DETERRENT ECU OPERATES AND CURRENT FLOWS FROM **DOOR** FUSE TO **TERMINAL (A)8** OF THE **ECU** OR **DOME** FUSE TO **TERMINAL (A)20** OF THE ECU → **TERMINAL (B)8** → **TERMINAL 2** OF POWER MAIN RELAY → **TERMINAL 3** → TO **GROUND** FOR ABOUT **60** SECONDS. THE SAME AS NORMAL OPERATION, THE CURRENT FLOWS FROM **POWER** FUSE → **TERMINAL 4** OF THE POWER MAIN RELAY → **TERMINAL 1** → **TERMINAL 4** OF THE POWER WINDOW MASTER SW AND **TERMINAL 5** OF THE POWER WINDOW SW. AS A RESULT, FOR ABOUT **60** SECONDS AFTER THE IGNITION SW IS TURNED OFF, THE FUNCTIONING OF THIS RELAY MAKES IT POSSIBLE TO RAISE AND LOWER THE POWER WINDOW. ALSO, BY OPENING THE FRONT DOOR (DOOR DETECT SW ON) WITHIN ABOUT **60** SECONDS AFTER TURNING THE IGNITION SW TO OFF, A SIGNAL IS INPUT TO **TERMINALS (A)12** OR **(A)13** OF THEFT DETERRENT ECU. AS A RESULT, THE ECU TURNS OFF AND UP AND DOWN MOVEMENT OF THE POWER WINDOW STOPS.

WhereEverybodyKnowsYourName

SERVICE HINTS

P 5 POWER WINDOW MASTER AND DOOR LOCK CONTROL SW LH
4–GROUND: APPROX. **12** VOLTS WITH IGNITION SW AT **ON** POSITION
8–GROUND: ALWAYS CONTINUITY
10–GROUND: APPROX. **12** VOLTS WITH IGNITION SW **ON** AND MASTER SW (DRIVER'S WINDOW) AT **UP** POSITION
9–GROUND: APPROX. **12** VOLTS WITH IGNITION SW **ON** AND MASTER SW (DRIVER'S WINDOW) AT **DOWN** OR **AUTO DOWN** POSITION

WINDOW LOCK SW
OPEN WITH WINDOW LOCK SW AT **LOCK** POSITION

: PARTS LOCATION

CODE	SEE PAGE	CODE	SEE PAGE	CODE		SEE PAGE
D10	29	**P 5**	29	**T 8**	B	29
D11	29	**P 6**	29	**T 9**	A	29
P 4	29	**P 7**	29			

: RELAY BLOCKS

CODE	SEE PAGE	RELAY BLOCKS (RELAY BLOCK LOCATION)
2	19	ENGINE COMPARTMENT LEFT

: JUNCTION BLOCK AND WIRE HARNESS CONNECTOR

CODE	SEE PAGE	JUNCTION BLOCK AND WIRE HARNESS (CONNECTOR LOCATION)
1B	20	ENGINE ROOM MAIN WIRE
1D	20	FRONT DOOR LH WIRE
1H	20	COWL WIRE
1I		
1J		
1K		

: CONNECTOR JOINING WIRE HARNESS AND WIRE HARNESS

CODE	SEE PAGE	JOINING WIRE HARNESS AND WIRE HARNESS (CONNECTOR LOCATION)
IF2	36	FRONT DOOR LH WIRE AND COWL WIRE (LEFT KICK PANEL)
IP1	38	FRONT DOOR RH WIRE AND COWL WIRE (RIGHT KICK PANEL)

: GROUND POINTS

CODE	SEE PAGE	GROUND POINTS LOCATION
IF	36	LEFT KICK PANEL
IJ	36	RIGHT KICK PANEL

: SPLICE POINTS

CODE	SEE PAGE	WIRE HARNESS WITH SPLICE POINTS	CODE	SEE PAGE	WIRE HARNESS WITH SPLICE POINTS
B 4	40	FRONT DOOR LH WIRE			

D10, D11 GRAY

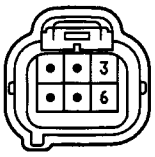

P 4

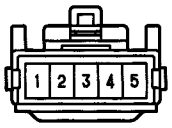

P 5

P 6, P 7

T 8 (B) ORANGE

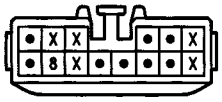

T 9 (A) ORANGE

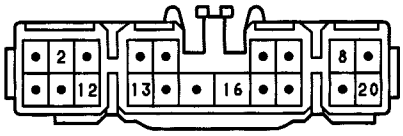

WhereEverybodyKnowsYourName

PPS (PROGRESSIVE POWER STEERING)

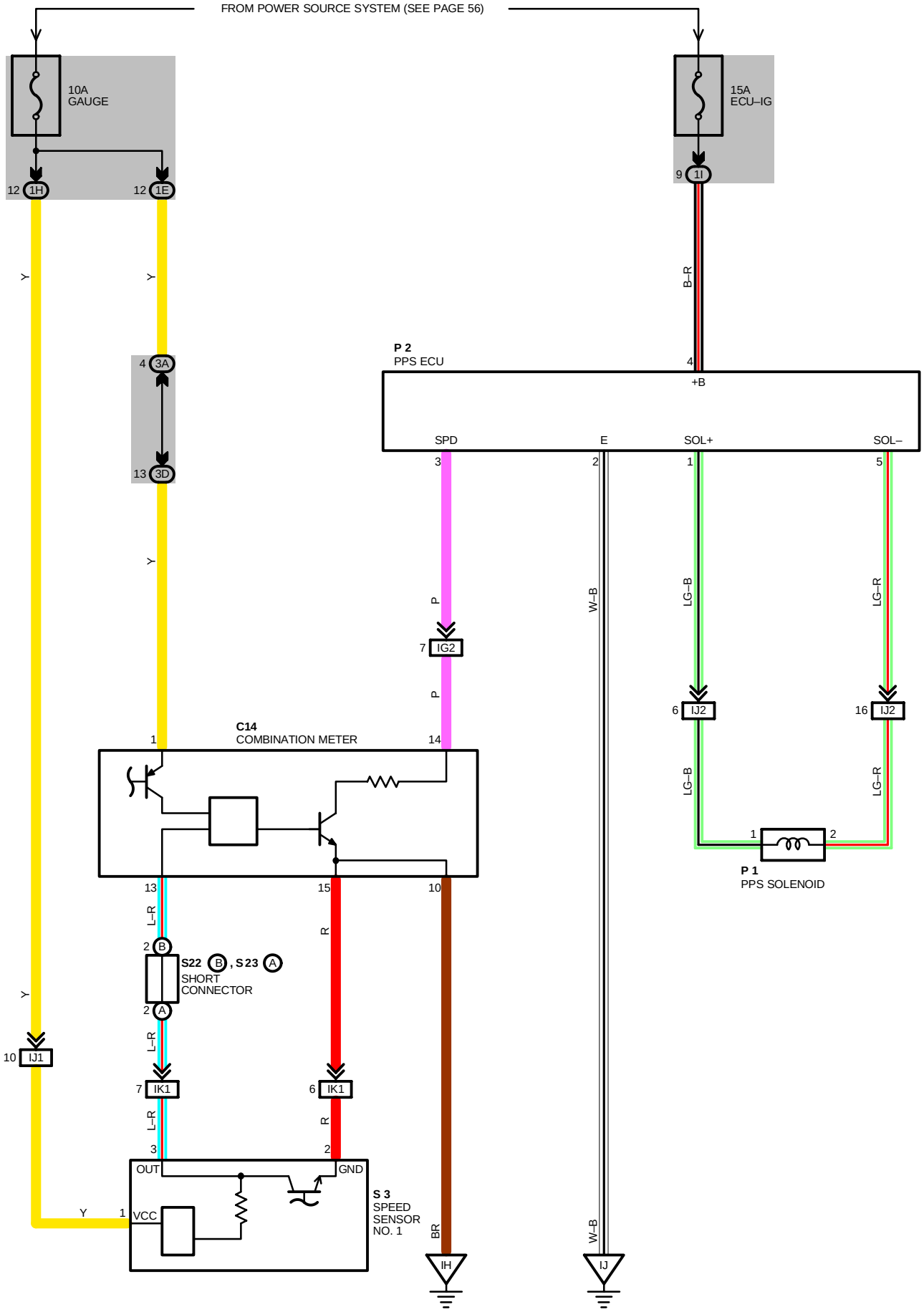

WhereEverybodyKnowsYourName

SYSTEM OUTLINE

THE PPS (HYDRAULIC REACTION TYPE) CONTROLS THE HYDRAULIC PRESSURE APPLIED TO THE HYDRAULIC REACTION CHAMBER IN THE GEAR BOX CONTROL UNIT USING THE PPS ECU, TO CHANGE THE STEERING FORCE AND PROVIDE OPTIMUM STEERING FEELING AT ANY VEHICLE SPEED AND UNDER ANY STEERING CONDITIONS.

(PPS OPERATION)

WHEN THE IGNITION SW IS TURNED ON THE STARTING CURRENT FLOWS FROM THE **ECU–IG** FUSE TO **TERMINAL 4** OF THE PPS ECU. THE SPEED SENSOR MONITORS THE VEHICLE SPEED AND TRANSMITS CONTROL SIGNALS TO **TERMINAL 3** OF THE ECU. WHEN THE VEHICLE SPEED IS LOW, THE PPS ECU SENDS A HIGHER–VOLTAGE FROM **TERMINAL 1** OF THE ECU → **TERMINAL 1** OF THE SOLENOID VALVE → **TERMINAL 2** → **TERMINAL 5** OF THE ECU → **TERMINAL 2** → **GROUND,** INCREASING THE SOLENOID VALVE OPENING ANGLE TO PROVIDE COMFORTABLE STEERING OPERATION. WHEN THE VEHICLE SPEED IS HIGH, THE PPS ECU DECREASES THE SOLENOID VALVE OPENING ANGLE BY REDUCING THE VOLTAGE TO THE VALVE TO PROVIDE RESPONSIVE STEERING FEELING.

SERVICE HINTS

P 1 PPS SOLENOID
1–2 : APPROX. **7.7**? (**25**˚C, **77**˚F)

P 2 PPS ECU
4–GROUND : APPROX. **12** VOLTS WITH IGNITION SW AT **ON** POSITION
2–GROUND : ALWAYS CONTINUITY
1–5 : APPROX. **0.8**A WITH VEHICLE SPEED BELOW **20** KM/H (**12** MPH)
APPROX. **0.45**A WITH VEHICLE SPEED AT **80** KM/H (**48** MPH)
APPROX. **0.2**A WITH VEHICLE SPEED ABOVE **160** KM/H (**96** MPH)

○ : PARTS LOCATION

CODE	SEE PAGE	CODE	SEE PAGE	CODE		SEE PAGE
C14	28	**P 2**	29	**S22**	B	29
P 1	27	**S 3**	27	**S23**	A	29

: JUNCTION BLOCK AND WIRE HARNESS CONNECTOR

CODE	SEE PAGE	JUNCTION BLOCK AND WIRE HARNESS (CONNECTOR LOCATION)
1E	20	INSTRUMENT PANEL WIRE
1H	20	COWL WIRE
1I		
3A	22	INSTRUMENT PANEL WIRE
3D		

: CONNECTOR JOINING WIRE HARNESS AND WIRE HARNESS

CODE	SEE PAGE	JOINING WIRE HARNESS AND WIRE HARNESS (CONNECTOR LOCATION)
IG2	36	INSTRUMENT PANEL WIRE AND COWL WIRE (R/B NO. 5)
IJ1	36	ENGINE WIRE AND COWL WIRE (RIGHT KICK PANEL)
IJ2		
IK1	36	ENGINE WIRE AND INSTRUMENT PANEL WIRE (RIGHT KICK PANEL)

▽ : GROUND POINTS

CODE	SEE PAGE	GROUND POINTS LOCATION
IH	36	UNDER THE ASHTRAY LH
IJ	36	RIGHT KICK PANEL

C14

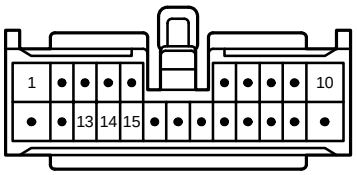

P 1 GRAY

P 2

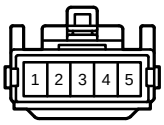

S 3 GRAY

S22 (B)

S23 (A)

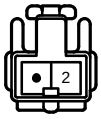

WhereEverybodyKnowsYourName

POWER SEAT (w/o DRIVING POSITION MEMORY)

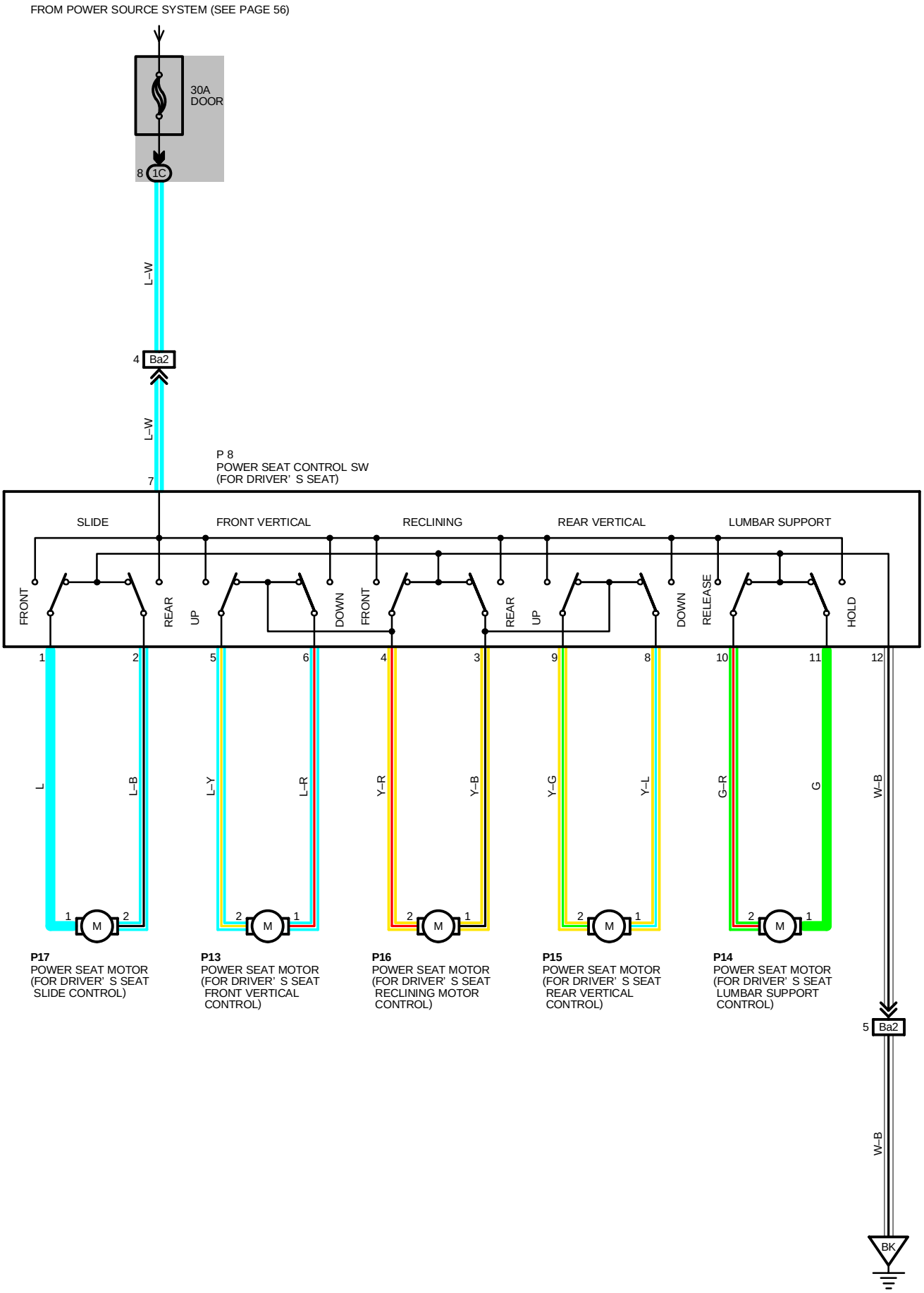

WhereEverybodyKnowsYourName

SERVICE HINTS

P 8 POWER SEAT CONTROL SW (FOR DRIVER'S SEAT)
12–GROUND :ALWAYS CONTINUITY
7–GROUND :ALWAYS APPROX. **12** VOLTS

○ : PARTS LOCATION

CODE	SEE PAGE	CODE	SEE PAGE	CODE	SEE PAGE
P 8	32	**P14**	32	**P16**	32
P13	32	**P15**	32	**P17**	32

: JUNCTION BLOCK AND WIRE HARNESS CONNECTOR

CODE	SEE PAGE	JUNCTION BLOCK AND WIRE HARNESS (CONNECTOR LOCATION)
1C	20	FLOOR WIRE

: CONNECTOR JOINING WIRE HARNESS AND WIRE HARNESS

CODE	SEE PAGE	JOINING WIRE HARNESS AND WIRE HARNESS (CONNECTOR LOCATION)
Ba2	43	FLOOR WIRE AND FRONT SEAT LH WIRE (UNDER THE FRONT LH SEAT)

: GROUND POINTS

CODE	SEE PAGE	GROUND POINTS LOCATION
BK	40	UNDER THE CENTER PILLAR LH

P 8

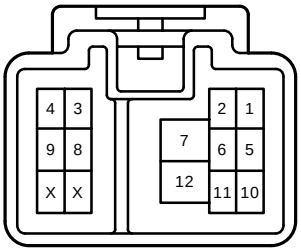

P13, P15

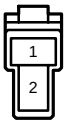

P14

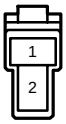

P16

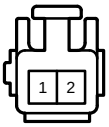

P17 GRAY

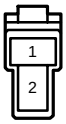

WhereEverybodyKnowsYourName

POWER SEAT (w/ DRIVING POSITION MEMORY)

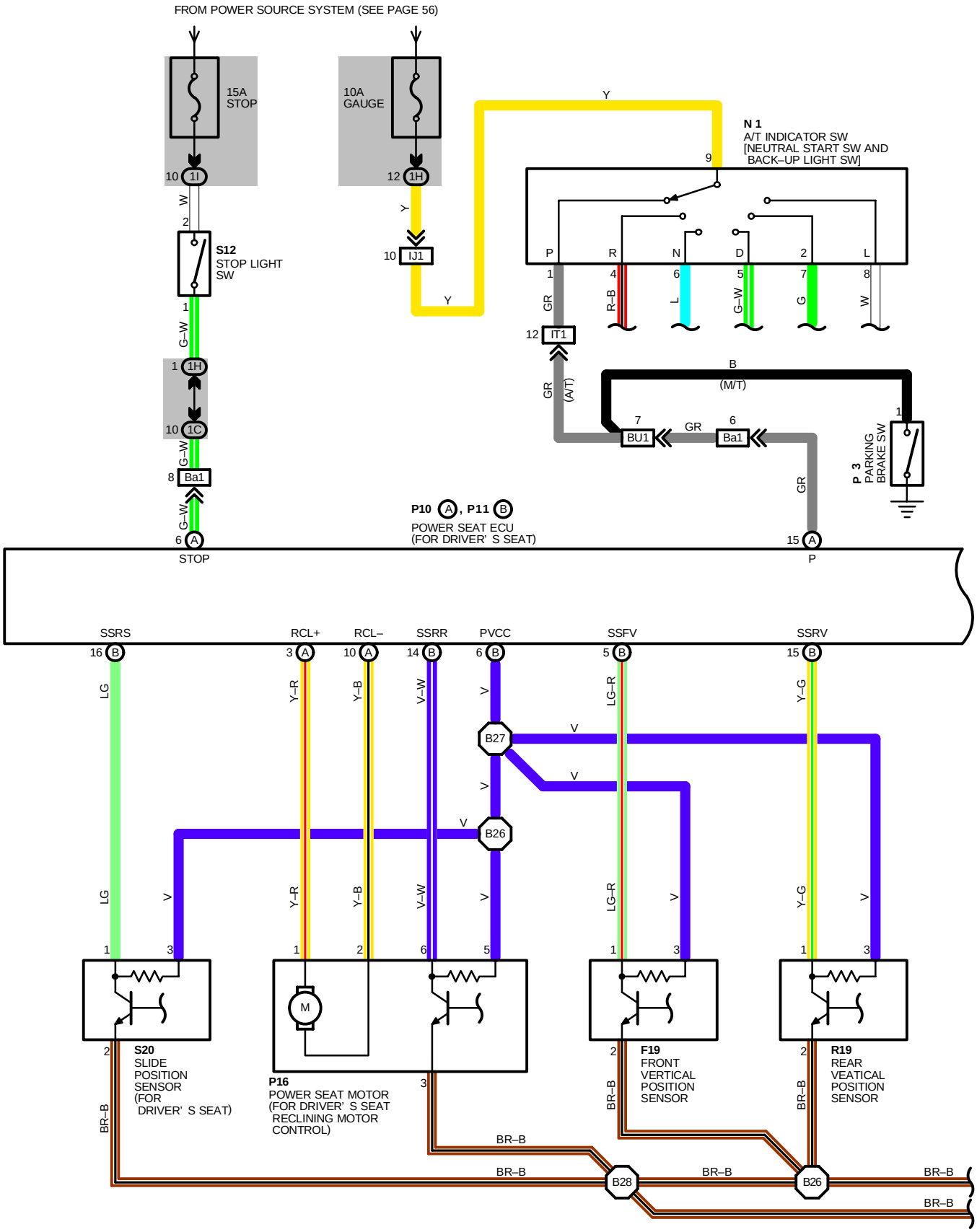

WhereEverybodyKnowsYourName

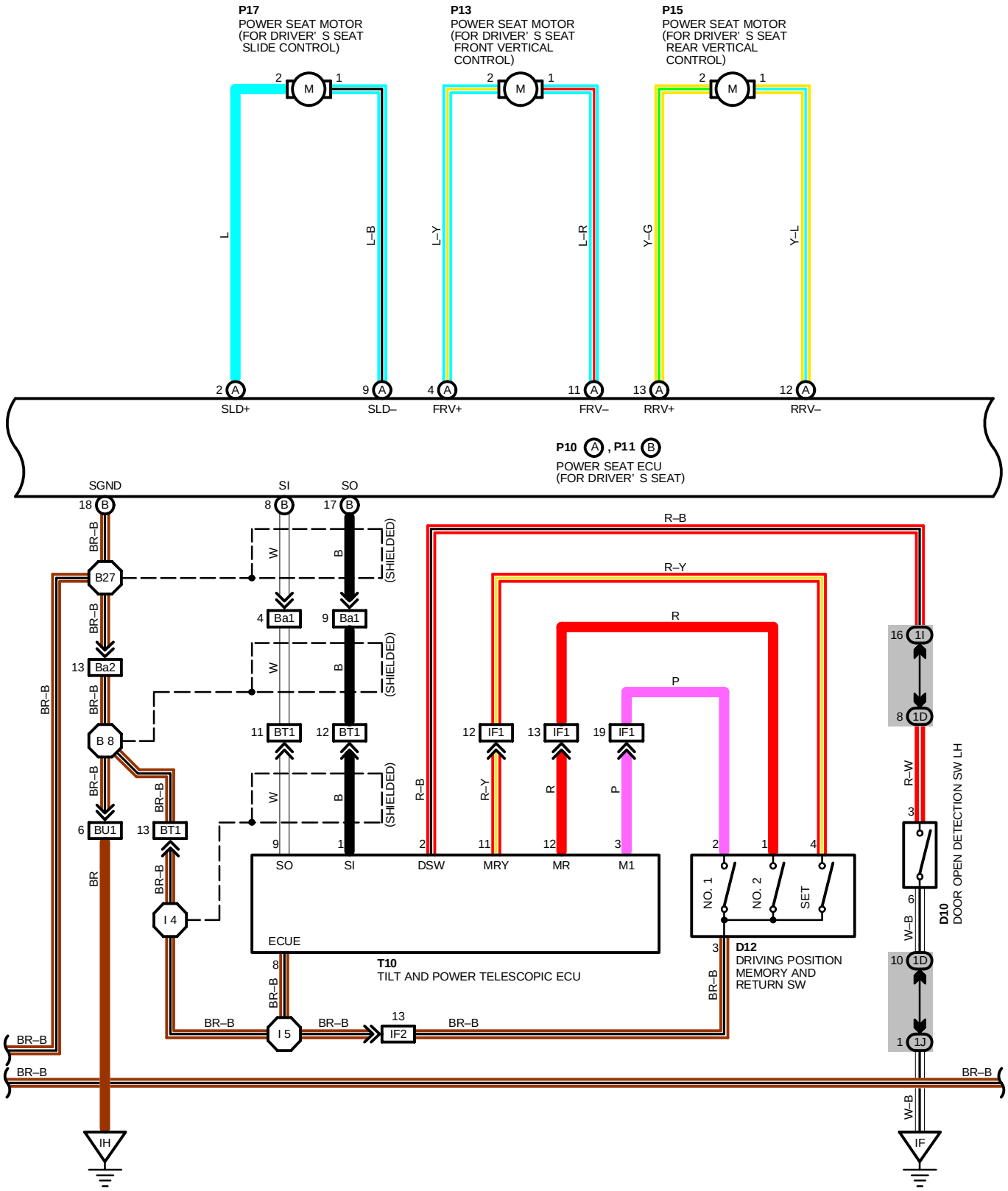

WhereEverybodyKnowsYourName

POWER SEAT (w/ DRIVING POSITION MEMORY)

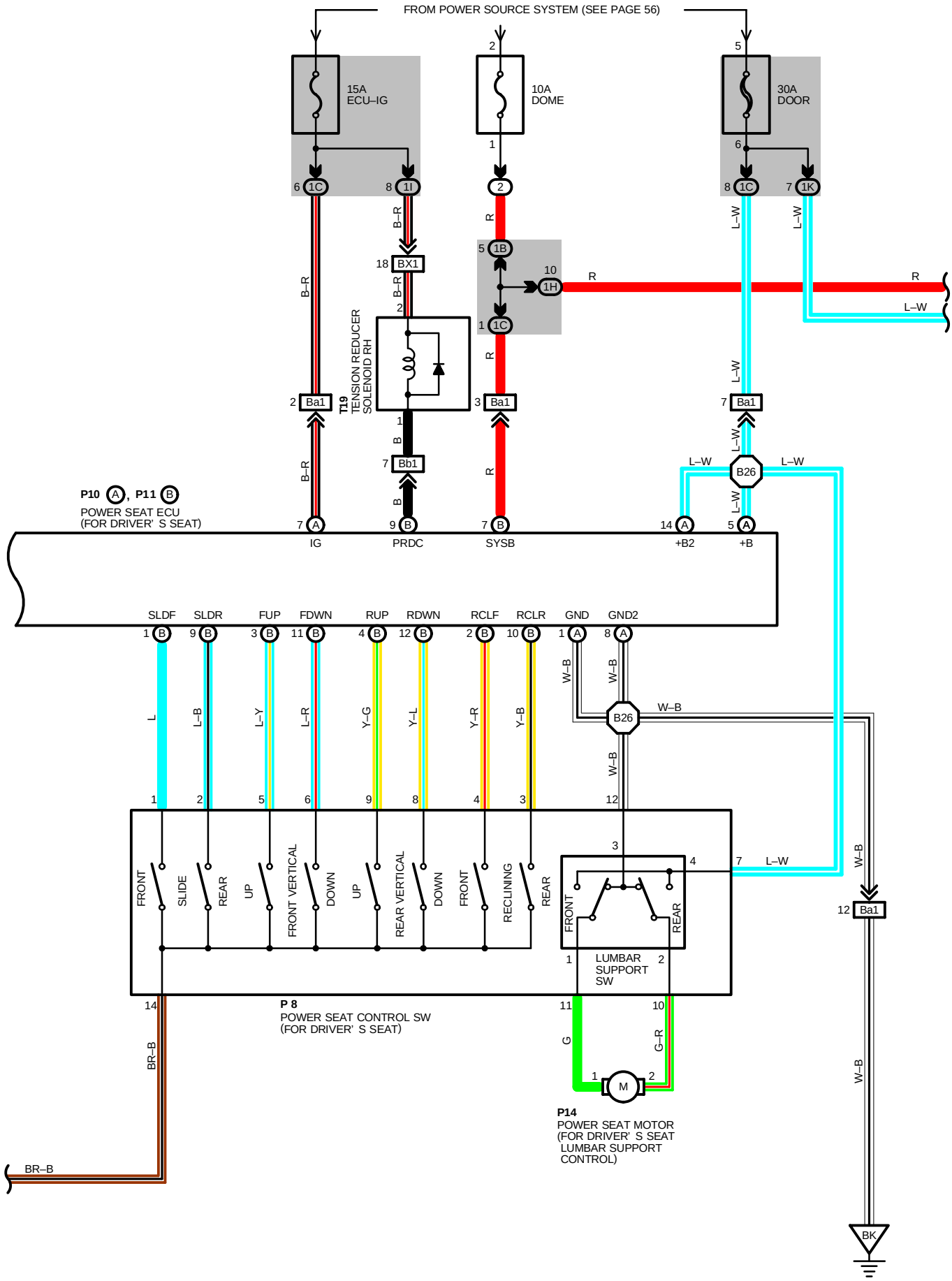

WhereEverybodyKnowsYourName

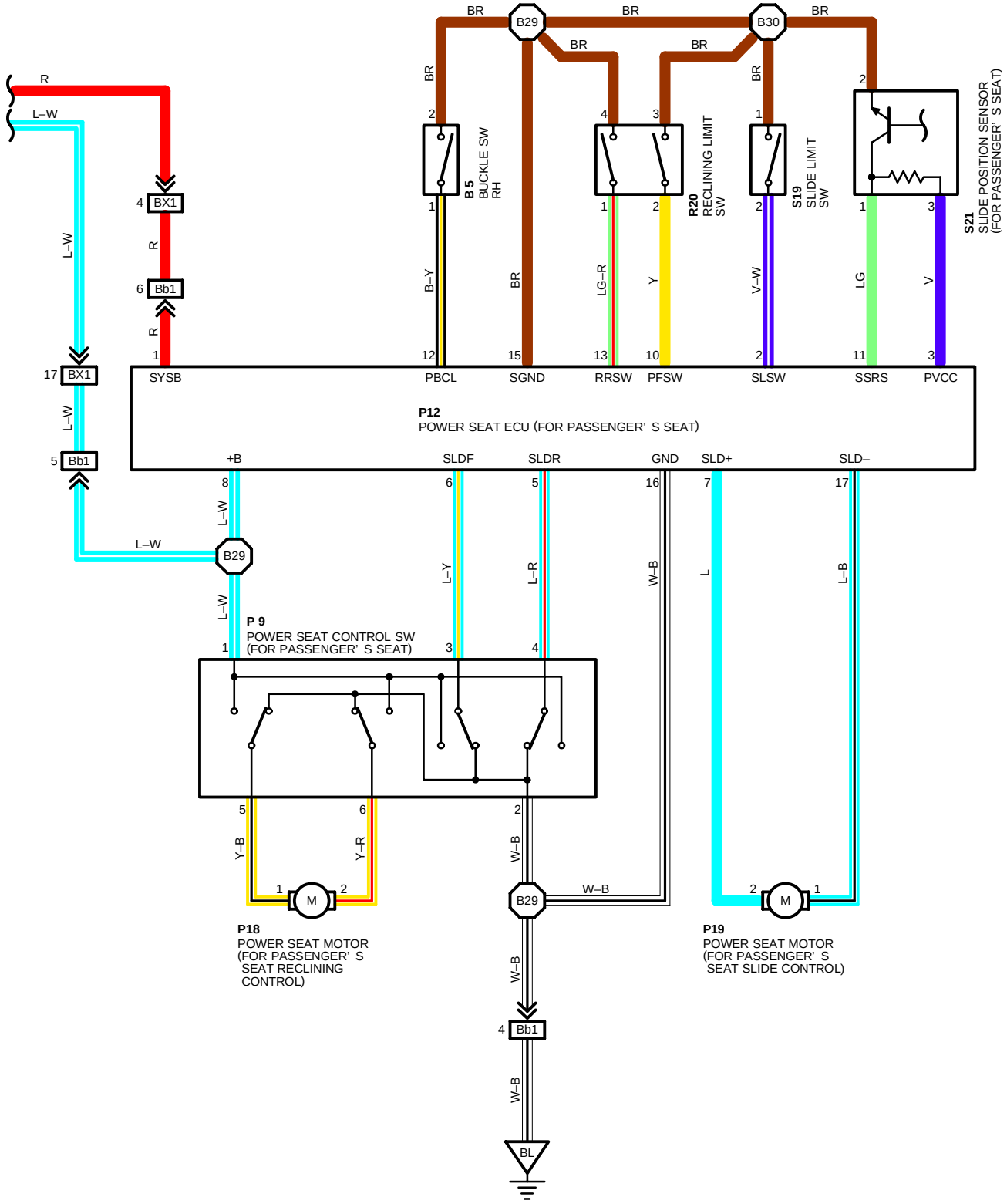

WhereEverybodyKnowsYourName

SYSTEM OUTLINE

CURRENT IS ALWAYS APPLIED FROM THE **DOME** FUSE TO **TERMINAL SYSB** OF THE POWER SEAT ECU, FROM **DOOR** FUSE TO **TERMINAL +B** OF THE POWER SEAT ECU AND FROM **STOP** FUSE TO **TERMINAL 2** OF THE STOP LIGHT SW.

WHEN THE IGNITION SW IS TURNED ON, CURRENT FLOWS FROM **ECU–IG** FUSE TO **TERMINAL IG** OF THE POWER SEAT ECU AND FROM THE **GAUGE** FUSE TO **TERMINAL 9** OF A/T INDICATOR SW.

POWER SEAT OPERATION (FOR DRIVER'S SEAT)

CURRENT IS ALWAYS APPLIED TO **TERMINAL SYSB** AND **TERMINAL +B** OF POWER SEAT ECU SO THAT THE POWER SEAT ECU IS ALWAYS READY TO OPERATE.

WHEN THE POWER SEAT CONTROL SW IS PUSHED TO THE **"FRONT SIDE** POSITION" SIDE, A SIGNAL IS INPUT INTO **TERMINAL SLDF** OF POWER SEAT ECU, THE ECU OPERATES AND THE CURRENT TO **TERMINAL +B** OF POWER SEAT ECU FLOWS FROM **TERMINAL SLD+** OF POWER SEAT ECU → **TERMINAL 2** OF POWER SEAT MOTOR (FOR DRIVER'S SEAT SLIDE CONTROL) → MOTOR **TERMINAL 1** → **TERMINAL SLD–** OF POWER SEAT ECU → **TERMINAL GND** → **GROUND,** ROTATING THE POWER SEAT MOTOR SO THAT THE SEAT SLIDES FORWARD WHILE THE POWER SEAT CONTROL SW IS BEING PRESSED.

TO SIDE THE DRIVER'S SEAT TO THE REAR, PUSHING THE POWER CONTROL SW TO THE **"REAR SLIDE** POSITION" SIDE, INPUTS A SIGNAL TO **TERMINAL SLDR** OF POWER SEAT ECU. THIS CAUSES THE CURRENT FLOWING FROM THE ECU TO THE MOTOR TO FLOW FROM **TERMINAL SLD–** OF POWER SEAT ECU → **TERMINAL 2** OF POWER SEAT MOTOR (FOR DRIVER'S SEAT SLIDE CONTROL) → MOTOR → **TERMINAL 1** → **TERMINAL SLD+** OF POWER SEAT ECU, FLOWING THE REVERSE TO FRONT SLIDE OPERATION AND CAUSING THE MOTOR TO ROTATE IN REVERSE, SO THAT THE DRIVER'S SEAT MOVES TO THE REAR.

THE MOVEMENT TO OTHER POSITIONS OCCURS SIMILARLY, SO ONLY THE FLOW OF CURRENT TO EACH MOTOR IS SHOWN:

FRONT VERTICAL CONTROL 'UP' OPERATION

TERMINAL +B OF POWER SEAT ECU → **TERMINAL FRV+** → **TERMINAL 2** OF POWER SEAT MOTOR → MOTOR → **TERMINAL 1** → **TERMINAL FRV–** OF ECU → **TERMINAL GND** → **GROUND**.

FRONT VERTICAL CONTROL 'DOWN' OPERATION

TERMINAL +B OF POWER SEAT ECU → **TERMINAL FRV–** → **TERMINAL 1** OF POWER SEAT MOTOR → MOTOR → **TERMINAL 2** → **TERMINAL FRV+** OF ECU → **TERMINAL GND** → **GROUND**.

REAR VERTICAL CONTROL 'UP' OPERATION

TERMINAL +B OF POWER SEAT ECU → **TERMINAL RRV+** → **TERMINAL 2** OF POWER SEAT MOTOR → MOTOR → **TERMINAL 1** → **TERMINAL RRV–** OF ECU → **TERMINAL GND** → **GROUND**.

REAR VERTICAL CONTROL 'DOWN' OPERATION

TERMINAL +B OF POWER SEAT ECU → **TERMINAL RRV–** → **TERMINAL 1** OF POWER SEAT MOTOR → MOTOR → **TERMINAL 2** → **TERMINAL RRV+** OF ECU → **TERMINAL GND** → **GROUND**.

LUMBAR SUPPORT CONTROL 'FRONT' OPERATION

TERMINAL 7 OF POWER SEAT CONTROL SW → **TERMINAL 4** OF LUMBAR SUPPORT SW → **TERMINAL 1** → **TERMINAL 11** OF POWER SEAT CONTROL SW → **TERMINAL 1** OF POWER SEAT MOTOR → MOTOR → **TERMINAL 2** → **TERMINAL 10** OF POWER SEAT CONTROL SW → **TERMINAL 2** OF LUMBAR SUPPORT SW → **TERMINAL 3** → **TERMINAL 12** OF POWER SEAT CONTROL SW → **GROUND**.

LUMBAR SUPPORT CONTROL 'REAR' OPERATION

TERMINAL 7 OF POWER SEAT CONTROL SW → **TERMINAL 4** OF LUMBAR SUPPORT SW → **TERMINAL 2** → **TERMINAL 10** OF POWER SEAT CONTROL SW → **TERMINAL 2** OF POWER SEAT MOTOR → MOTOR → **TERMINAL 1** → **TERMINAL 11** OF POWER SEAT CONTROL SW → **TERMINAL 1** OF LUMBAR SUPPORT SW → **TERMINAL 3** → **TERMINAL 12** OF POWER SEAT CONTROL SW → **GROUND**.

THE NUMBER OF TURNS OF EACH MOTOR (AMOUNT OF MOVEMENT OF EACH PART OF THE SEAT) IS DETECTED BY THE POSITION SENSORS AND INPUT TO THE ECU, MAKING IT POSSIBLE TO PERFORM MEMORY AND RETURN FUNCTIONS FOR THE SEAT POSITION USING THE DRIVING POSITION MEMORY AND RETURN SWITCH.

POWER WALK–IN OPERATION (FOR PASSENGER'S SEAT)

WALK–IN OPERATION

WHEN THE WALK–IN PEDAL IS DEPRESSED OR THE RECLINING HANDLE IS LIFTED UP, THE SEAT BACK RECLINES FULLY FORWARD AND RECLINING LIMIT SWITCH NO. 2 OPERATES, SO A SIGNAL IS INPUT TO **TERMINAL RFSW** OF THE POWER SEAT ECU → **TERMINAL SLD+** → **TERMINAL 1** OF THE POWER SEAT MOTOR (FOR PASSENGER'S SEAT SLIDE CONTROL) → MOTOR → **TERMINAL 2** → **TERMINAL SLD–** OF THE ECU → **TERMINAL GND** → **GROUND**. THIS CAUSES THE SEAT TO SLIDE FORWARD **100 MM** IN THE WALK–IN MODE. HOWEVER, WHEN THE INITIAL SLIDE POSITION IS **100 MM** OR LESS FROM THE MOST FORE POSITION, THE SEAT CAN ONLY SLIDE FORWARD AS FAR AS THE MOST FORE POSITION.

WhereEverybodyKnowsYourName

RETURN OPERATION

WHEN THE SEAT BACK IS RAISED UP FROM THE WALK–IN POSITION AND RETURNED TO THE UPRIGHT LOCK POSITION, RECLINING LIMIT SWITCH NO. 1 OPERATES AND A SIGNAL IS INPUT TO **TERMINAL RRSW** OF THE POWER SEAT ECU → **TERMINAL SLD–** → **TERMINAL 2** OF POWER SEAT MOTOR (FOR PASSENGER'S SEAT SLIDE CONTROL) → MOTOR → **TERMINAL 1** → **TERMINAL SLD+** OF ECU → **TERMINAL GND** → **GROUND**. THIS CAUSES THE SEAT TO SLIDE BACK TO A POSITION **120 MM** FROM THE MOST REAR POSITION, COMPLETING RETURN OPERATION. HOWEVER, IF THE SEAT IS POSITIONED WITHIN **120 MM** OF THE **MOST REAR** POSITION, RETURN OPERATION DOES NOT OCCUR, THUS MAINTAINING SUFFICIENT SPACE FOR THE REAR SEAT PASSENGER.

SERVICE HINTS

D10 DOOR LOCK MOTOR, DOOR UNLOCK DETECTION SW AND DOOR OPEN DETECTION SW LH

3–6 : CLOSED WITH FRONT LH DOOR OPEN

N 1 A/T INDICATOR SW [NEUTRAL START SW]

9–1 : CLOSED WITH SHIFT LEVER AT "P" POSITION

P10(A), P11(B) POWER SEAT ECU (FOR DRIVER'S SEAT)

(A) 6–GROUND : APPROX. **12** VOLTS WITH STOP LIGHT SW ON
(B) 7–GROUND : ALWAYS APPROX. **12** VOLTS
(A) 7–GROUND : APPROX. **12** VOLTS WITH IGNITION SW ON
(A) 15–GROUND : APPROX. **12** VOLTS WITH IGNITION SW ON AND SHIFT LEVER AT **"P"** RANGE
(A) 2–GROUND : APPROX. **12** VOLTS WITH DRIVER'S SEAT AT FRONT SLIDE OPERATION
(A) 9–GROUND : APPROX. **12** VOLTS WITH DRIVER'S SEAT AT REAR SLIDE OPERATION
(A) 4–GROUND : APPROX. **12** VOLTS WITH DRIVER'S SEAT AT FRONT VERTICAL UP OPERATION
(A) 11–GROUND : APPROX. **12** VOLTS WITH DRIVER'S SEAT AT FRONT VERTICAL DOWN OPERATION
(A) 13–GROUND : APPROX. **12** VOLTS WITH DRIVER'S SEAT AT REAR VERTICAL UP OPERATION
(A) 12–GROUND : APPROX. **12** VOLTS WITH DRIVER'S SEAT AT REAR VERTICAL DOWN OPERATION
(B) 18–GROUND : ALWAYS CONTINUITY
(A) 5**, (A)** 14–GROUND : ALWAYS APPROX. **12** VOLTS
(A) 1**, (A)** 8–GROUND : ALWAYS CONTINUITY

P 8 POWER SEAT CONTROL SW (FOR DRIVER'S SEAT)

4–14 : CLOSED WITH DRIVER'S SEAT AT FRONT RECLINING OPERATION
3–14 : CLOSED WITH DRIVER'S SEAT AT REAR RECLINING OPERATION
1–14 : CLOSED WITH DRIVER'S SEAT AT FRONT SLIDE OPERATION
2–14 : CLOSED WITH DRIVER'S SEAT AT REAR SLIDE OPERATION
5–14 : CLOSED WITH DRIVER'S SEAT AT FRONT VERTICAL UP OPERATION
6–14 : CLOSED WITH DRIVER'S SEAT AT FRONT VERTICAL DOWN OPERATION
9–14 : CLOSED WITH DRIVER'S SEAT AT REAR VERTICAL UP OPERATION
8–14 : CLOSED WITH DRIVER'S SEAT AT REAR VERTICAL DOWN OPERATION

P12 POWER SEAT ECU (FOR PASSENGER'S SEAT)

1–GROUND : ALWAYS APPROX. **12** VOLTS
8–GROUND : ALWAYS APPROX. **12** VOLTS
7–GROUND : APPROX. **12** VOLTS WITH PASSENGER'S SEAT AT FRONT SLIDE OPERATION
17–GROUND : APPROX. **12** VOLTS WITH PASSENGER'S SEAT AT REAR SLIDE OPERATION

S12 STOP LIGHT SW

2–1 : CLOSED WITH STOP LIGHT SW ON

WhereEverybodyKnowsYourName

POWER SEAT (w/ DRIVING POSITION MEMORY)

: PARTS LOCATION

CODE	SEE PAGE	CODE	SEE PAGE	CODE	SEE PAGE
B 5	32	P11 B	32	R19	32
D10	30	P12	32	R20	32
D12	30	P13	32	S12	32
F19	32	P14	32	S19	32
N 1	27	P15	32	S20	29
P 3	29	P16	32	S21	32
P 8	32	P17	32	T10	29
P 9	32	P18	32	T19	31
P10 A	32	P19	32		

: RELAY BLOCKS

CODE	SEE PAGE	RELAY BLOCKS (RELAY BLOCK LOCATION)
2	19	ENGINE COMPARTMENT LEFT

: JUNCTION BLOCK AND WIRE HARNESS CONNECTOR

CODE	SEE PAGE	JUNCTION BLOCK AND WIRE HARNESS (CONNECTOR LOCATION)
1B	20	ENGINE ROOM MAIN WIRE
1C	20	FLOOR WIRE
1D	20	FRONT DOOR LH WIRE
1H	20	COWL WIRE
1I		
1J		
1K		

: CONNECTOR JOINING WIRE HARNESS AND WIRE HARNESS

CODE	SEE PAGE	JOINING WIRE HARNESS AND WIRE HARNESS (CONNECTOR LOCATION)
IF1	36	FRONT DOOR LH WIRE AND COWL WIRE (LEFT KICK PANEL)
IF2		
IJ1	36	ENGINE WIRE AND COWL WIRE (RIGHT KICK PANEL)
IT1	38	ENGINE WIRE AND A/C WIRE (BEHIND GLOVE BOX)
BT1	40	FLOOR WIRE AND COWL WIRE (LEFT KICK PANEL)
BU1	40	FLOOR WIRE AND INSTRUMENT PANEL WIRE (LEFT KICK PANEL)
BX1	40	FLOOR NO. 3 WIRE AND COWL WIRE (RIGHT KICK PANEL)
Ba1	42	FLOOR WIRE AND FRONT SEAT LH WIRE (UNDER THE FRONT LH SEAT)
Ba2		
Bb1	42	FLOOR NO. 3 WIRE AND FRONT SEAT RH WIRE (UNDER THE FRONT RH SEAT)

: GROUND POINTS

CODE	SEE PAGE	GROUND POINTS LOCATION
IF	36	LEFT KICK PANEL
IH	36	UNDER THE ASHTRAY LH
BK	40	UNDER THE CENTER PILLAR LH
BL	40	UNDER THE CENTER PILLAR RH

: SPLICE POINTS

CODE	SEE PAGE	WIRE HARNESS WITH SPLICE POINTS	CODE	SEE PAGE	WIRE HARNESS WITH SPLICE POINTS
I 4	38	COWL WIRE	B27	42	FRONT SEAT LH WIRE
I 5			B28		
B 8	40	FLOOR MAIN WIRE	B29	42	FRONT SEAT RH WIRE
B26	42	FRONT SEAT LH WIRE	B30		

WhereEverybodyKnowsYourName

B 5 ORANGE

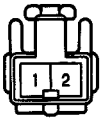

D10 GRAY

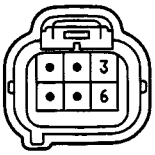

D12 BLACK

F19 BLUE

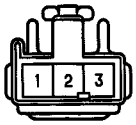

N 1 GRAY

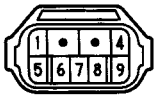

P 3

P 8

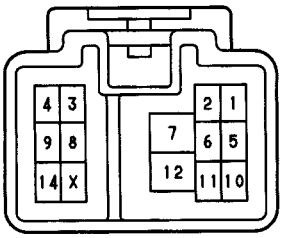

P 9

P10 (A)

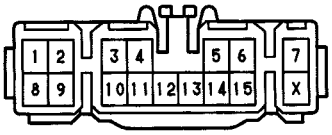

P11 (B)

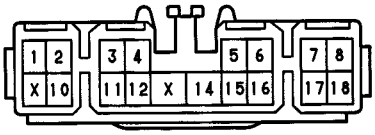

P12

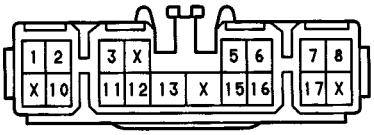

P13, P15 ORANGE

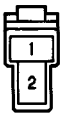

P14, P19

P16

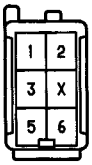

P17 GREEN

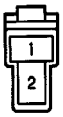

P18, S19

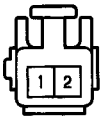

R19 GRAY

R20

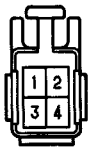

S12

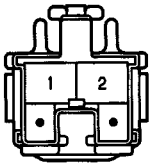

S20, S21

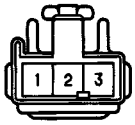

T10

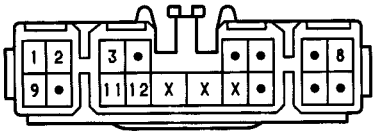

T19

WhereEverybodyKnowsYourName

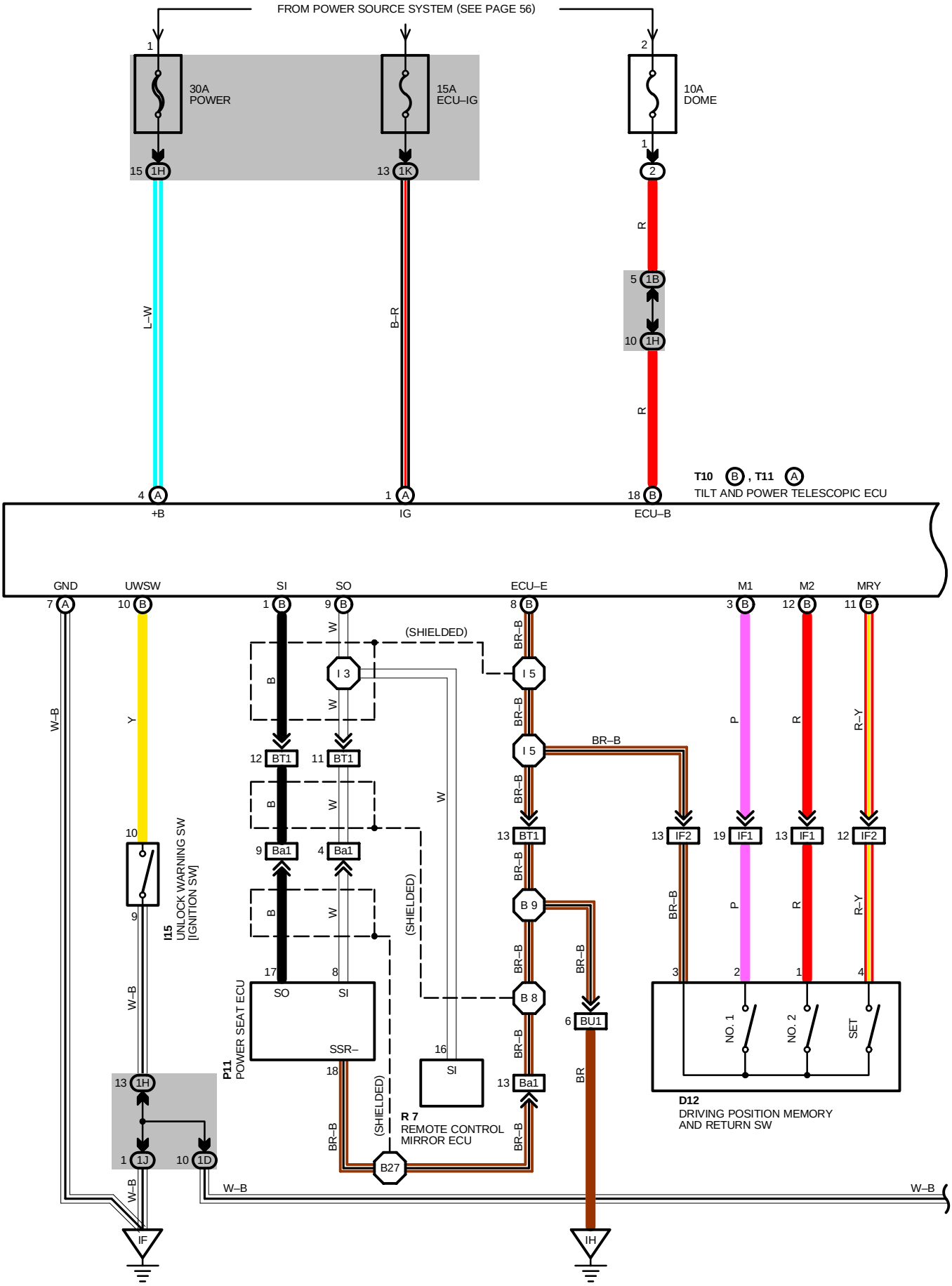

WhereEverybodyKnowsYourName

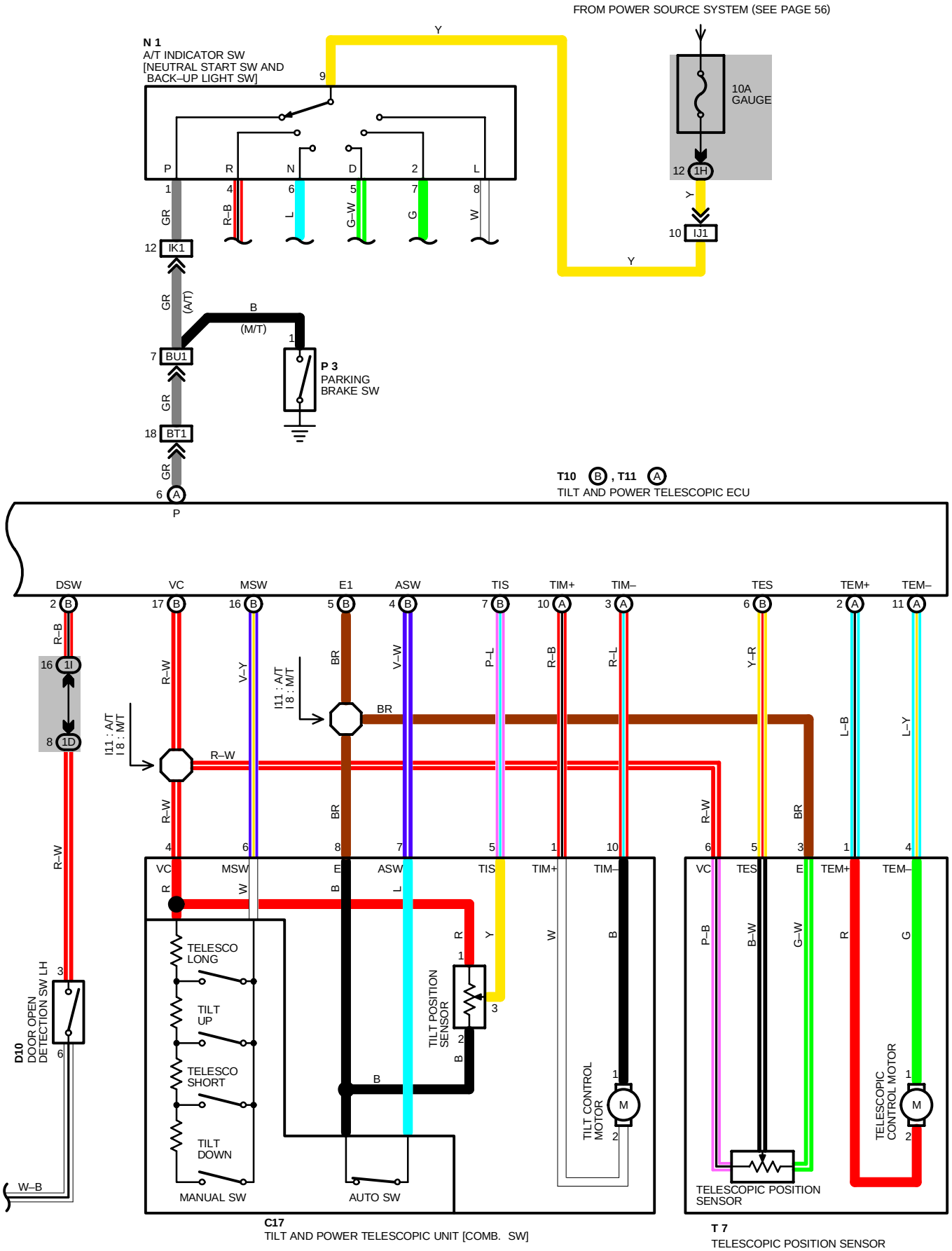

WhereEverybodyKnowsYourName

SYSTEM OUTLINE

THIS SYSTEM OPERATES WITH BOTH THE TILT FUNCTION AND TELESCOPIC FUNCTION DRIVEN AUTOMATICALLY BY THE MOTOR AND CONTROLLED BY THE ECU. THE STEERING CAN BE ADJUSTED STEPLESSLY FORWARD AND BACK, AND UP AND DOWN, TO PROVIDE THE MOST SUITABLE STEERING POSITION FOR EASY DRIVING, WITH AUTOMATIC MOVEMENT OF THE STEERING TO A POSITION WHICH FACILITATES GETTING IN AND OUT OF THE VEHICLE.

THE DRIVER CAN HAVE THE MOST APPROPRIATE DRIVING POSITION MEMORIZED BY OPERATING THE POWER SEAT AND REMOTE CONTROL MIRROR TOGETHER WITH THE TILT AND POWER TELESCOPIC STEERING.

CURRENT IS ALWAYS APPLIED THROUGH THE **POWER** FUSE TO **TERMINAL +B** OF THE TILT AND POWER TELESCOPIC ECU AND THROUGH THE **DOME** FUSE TO **TERMINAL BATT** OF TILT AND POWER TELESCOPIC ECU.

WITH THE IGNITION SW TURNED ON, THE CURRENT FLOWS FROM **ECU–IG** FUSE TO **TERMINAL IG** AND FROM **GAUGE** FUSE TO **TERMINAL 9** OF A/T INDICATOR SW.

1. MANUAL TILT OPERATION

WHEN THE IGNITION KEY IS INSERTED INTO THE IGNITION KEY CYLINDER (UNLOCK WARNING SW ON), A SIGNAL IS INPUT TO **TERMINAL UWSW** OF TILT AND POWER TELESCOPIC ECU. IF THE MANUAL SW IS PUSHED TO THE “TILT UP” SIDE, CURRENT FLOWS FROM **TERMINAL VC** OF TILT AND POWER TELESCOPIC ECU TO **TERMINAL MSW** OF TILT AND POWER TELESCOPIC ECU PASSING THROUGH THE MANUAL SW. (THE ECU DETECTS THE MANUAL SW POSITION BY THE VOLUME OF CURRENT.)

AS A RESULT, TILT AND POWER TELESCOPIC ECU OPERATES AND THE CURRENT TO **TERMINAL +B** OF ECU FLOWS FROM **TERMINAL TIM+** → **TERMINAL 1** OF COMB. SW → **TERMINAL 2** OF TILT CONTROL MOTOR → **TERMINAL 1** → **TERMINAL 10** OF COMB. SW → **TERMINAL TIM–** OF TILT AND POWER TELESCOPIC ECU → **TERMINAL GND2** → **GROUND**, AND THE TILT UP FUNCTION OPERATES AS LONG AS THE MANUAL SW IS PUSHED TO THE “TILT UP” SIDE.

FOR “TILT DOWN” OPERATION, WHEN THE MANUAL SW IS PUSHED TO THE DOWN SIDE, THE CURRENT FLOWING FROM ECU TO MOTOR FLOWS TO **TERMINAL TIM–** OF TILT AND POWER TELESCOPIC ECU → **TERMINAL 10** OF COMB. SW → **TERMINAL 1** OF TILT CONTROL MOTOR → **TERMINAL 2** → **TERMINAL 1** OF COMB. SW → **TERMINAL TIM+** OF TILT AND POWER TELESCOPIC ECU, SO THE MOTOR ROTATES IN THE REVERSE DIRECTION TO TILT UP OPERATION, AND TILT DOWN OPERATION OCCURS ONLY WHILE THE MANUAL SW IS BEING PUSHED.

2. MANUAL TELESCOPIC OPERATION

WHEN THE IGNITION KEY IS INSERTED INTO THE IGNITION KEY CYLINDER (UNLOCK WARNING SW ON), A SIGNAL IS INPUT TO **TERMINAL UWSW** OF TILT AND TELESCOPIC ECU. WHEN THE MANUAL SW IS PUSHED TOWARD “TELESCOPIC SHORT” SIDE, CURRENT FLOWS FROM **TERMINAL VC** OF TILT AND POWER TELESCOPIC ECU TO **TERMINAL MSW** OF TILT AND POWER TELESCOPIC ECU THROUGH THE MANUAL SW.

AS A RESULT, THE TILT AND POWER TELESCOPIC ECU OPERATES AND THE CURRENT TO **TERMINAL +B** OF TILT AND POWER TELESCOPIC ECU FLOWS FROM **TERMINAL TEM+** OF TILT AND POWER TELESCOPIC ECU → **TERMINAL 1** OF COMB. SW → **TERMINAL 2** OF TELESCOPIC CONTROL MOTOR → **TERMINAL 1** → **TERMINAL 4** OF COMB. SW → **TERMINAL TEM–** OF TILT AND POWER TELESCOPIC ECU → **TERMINAL GND2** → **GROUND**, AND “TELESCOPIC SHORT” OPERATION OCCURS AS LONG AS THE MANUAL SW IS PUSHED THE TO “TELESCOPIC SHORT” SIDE.

FOR “TELESCOPIC LONG” OPERATION, WHEN THE MANUAL SW IS PUSHED TO THE TELESCOPIC LONG SIDE, CURRENT FLOWING FROM TILT AND POWER TELESCOPIC ECU TO THE MOTOR FLOWS THROUGH **TERMINAL TEM–** OF TILT AND POWER TELESCOPIC ECU → **TERMINAL 4** OF COMB. SW → **TERMINAL 1** OF TELESCOPIC CONTROL MOTOR → **TERMINAL 2** → **TERMINAL 1** OF COMB. SW → **TERMINAL TEM+** OF TILT AND POWER TELESCOPIC ECU → **TERMINAL GND2** → **GROUND**.

AS A RESULT, THE MOTOR ROTATES IN REVERSE TO THE TELESCOPIC SHORT MODE AND TELESCOPIC LONG OPERATION OCCURS AS LONG AS THE MANUAL SW IS PUSHED TO THE “TELESCOPIC LONG” SIDE.

3. AUTO AWAY OPERATION

WHEN THE IGNITION SW IS TURNED FROM ON TO OFF, THE CURRENT STOPS FLOWING FROM ECU–IG TO **TERMINAL IG** OF TILT AND POWER TELESCOPIC ECU AND IS INPUT AS A SIGNAL THAT THE IGNITION SW IS OFF. WHEN THE AUTO SW IS TURNED ON, AN “AUTO SW ON” SIGNAL IS INPUT TO **TERMINAL ASW** OF TILT AND POWER TELESCOPIC ECU.

IF THE IGNITION KEY IS REMOVED FROM THE IGNITION KEY CYLINDER (UNLOCK WARNING SW OFF) AT THIS TIME, A SIGNAL IS INPUT FROM **TERMINAL UWSW** OF TILT AND POWER TELESCOPIC ECU. ALSO, THE TILT POSITION SENSOR (COMB. SW) INPUTS INTO **TERMINAL TIS** OF THE TILT AND TELESCOPIC ECU A SIGNAL OF THE STEERING TILT POSITION JUST BEFORE THE IGNITION SW (FOR UNLOCK WARNING) IS TURNED FROM ON TO OFF.

AS A RESULT, THE TILT AND POWER TELESCOPIC ECU OPERATES AND THE CURRENT TO **TERMINAL +B** OF TILT AND POWER TELESCOPIC FLOWS FROM **TERMINAL TIM+** OF TILT AND POWER TELESCOPIC ECU → **TERMINAL 1** OF COMB. SW → **TERMINAL 2** OF TILT CONTROL MOTOR → **TERMINAL 1** → **TERMINAL 10** OF COMB. SW → **TERMINAL TIM–** OF TILT AND POWER TELESCOPIC ECU → **TERMINAL GND2** → **GROUND**, CAUSING THE MOTOR TO ROTATE SO THAT “TILT UP” OPERATION OCCURS AUTOMATICALLY.

AT THE SAME TIME, THE CURRENT FROM **TERMINAL +B** OF TILT AND POWER TELESCOPIC ECU TO **TERMINAL TEM+** FLOWS FROM **TERMINAL 1** OF COMB. SW → **TERMINAL 2** OF TELESCOPIC CONTROL MOTOR → **TERMINAL 1** → **TERMINAL 4** OF COMB. SW → **TERMINAL TEM–** OF TILT AND POWER TELESCOPIC ECU → **TERMINAL GND2** → **GROUND**, CAUSING THE MOTOR TO ROTATE SO THAT TELESCOPIC SHORT OPERATION OCCURS ON AUTO AND WITH TILT UP OPERATION OCCURRING SIMULTANEOUSLY ON AUTO, AUTO AWAY OPERATION OCCURS.

WhereEverybodyKnowsYourName

4. AUTO RETURN OPERATION

WHEN THE STEERING IS IN “AUTO AWAY” CONDITION AND THE IGNITION KEY IS INSERTED INTO THE IGNITION KEY CYLINDER (UNLOCK WARNING SW ON), A SIGNAL IS INPUT TO **TERMINAL UWSW** OF TILT AND POWER TELESCOPIC ECU.

AS A RESULT, THE TILT AND POWER TELESCOPIC ECU OPERATES AND THE CURRENT TO **TERMINAL +B** OF TILT AND POWER TELESCOPIC ECU FLOWS FROM **TERMINAL TEM–** OF TILT AND POWER TELESCOPIC ECU → **TERMINAL 4** OF COMB. SW → **TERMINAL 1** OF TELESCOPIC CONTROL MOTOR → **TERMINAL 2** → **TERMINAL 1** OF COMB. SW → **TERMINAL TEM+** OF TILT AND POWER TELESCOPIC ECU → **TERMINAL GND2** → **GROUND**, AND AT THE SAME TIME, CURRENT FLOWS FROM **TERMINAL TIM–** OF TILT AND POWER TELESCOPIC ECU → **TERMINAL 10** OF COMB. SW → **TERMINAL 1** OF TILT CONTROL MOTOR → **TERMINAL 2** → **TERMINAL 1** OF COMB. SW → **TERMINAL TIM+** OF TILT AND POWER TELESCOPIC ECU → **TERMINAL GND2** → **GROUND**, CAUSING BOTH THE TILT CONTROL MOTOR AND TELESCOPIC CONTROL MOTOR TO ROTATE. THE MOTORS CONTINUE TO ROTATE UNTIL THE SIGNALS INPUT FROM THE TILT POSITION SENSOR TO **TERMINAL TIS** OF TILT AND POWER TELESCOPIC ECU AND FROM THE TELESCOPIC POSITION SENSOR **TERMINAL TES** OF TILT AND POWER TELESCOPIC ECU (SIGNALS INFORMING THE ECU OF THE CURRENT POSITION OF THE STEERING) MATCH THE POSITION MEMORIZED BY THE ECU PRIOR TO AUTO AWAY OPERATION.

IN THIS WAY, THE STEERING POSITION IS AUTOMATICALLY RETURNED TO THE ORIGINAL POSITION.

WHEN THE IGNITION SW IS TURNED FROM OFF TO ON OR THE SHIFT LEVER IS SHIFTED TO A POSITION OTHER THAN P OR N, AUTO OPERATION IS STOPPED.

SERVICE HINTS

C15 TILT AND POWER TELESCOPIC UNIT [COMB. SW]
4–6 : APPROX. **160**? WITH TELESCOPIC LONG OPERATION
: APPROX. **360**? WITH TILT UP OPERATION
: APPROX. **790**? WITH TELESCOPIC SHORT OPERATION
: APPROX. **2.0**K? WITH TILT DOWN OPERATION
8–7 : CONTINUITY WITH AUTO SW OFF
8–4 : APPROX. **5**K?

T 7 (D) TELESCOPIC POSITION SENSOR
6–3 : APPROX. **5**K?

D10 DOOR LOCK MOTOR, DOOR UNLOCK DETECTION SW AND DOOR OPEN DETECTION SW LH
3–6GROUND :CLOSED WITH FRONT DOOR LH OPEN

D12 DRIVING POSITION MEMORY AND RETURN SW
2–3 : CLOSED WITH DRIVING POSITION MEMORY SW (NO. 1) ON
1–3 : CLOSED WITH DRIVING POSITION MEMORY SW (NO. 2) ON
4–3 : CLOSED WITH DRIVING POSITION MEMORY SW (SET) ON

I15 UNLOCK WARNING SW [IGNITION SW]
9–10: CLOSED WITH IGNITION KEY IN CYLINDER

N 1 A/T INDICATOR SW [NEUTRAL START SW]
9–1 : CLOSED WITH SHIFT LEVER AT **P** POSITION

T10, T11 TILT AND POWER TELESCOPIC ECU
(A) 4–GROUND : ALWAYS APPROX. **12** VOLTS
(A) 1–GROUND : APPROX. **12** VOLTS WITH IGNITION SW AT **ON** POSITION
(B) 18–GROUND : ALWAYS APPROX. **12** VOLTS
(A) 6–GROUND : APPROX. **12** VOLTS WITH IGNITION SW ON AND SHIFT LEVER AT “P” RANGE
(B) 10–GROUND : CONTINUITY WITH IGNITION KEY IN CYLINDER
(A) 7–GROUND : ALWAYS CONTINUITY
(B) 8–GROUND : ALWAYS CONTINUITY
(B) 2–GROUND : CONTINUITY WITH FRONT DOOR LH OPEN
(B) 3–GROUND : CONTINUITY WITH DRIVING POSITION MEMORY SW (NO. 1) ON
(B) 12–GROUND : CONTINUITY WITH DRIVING POSITION MEMORY SW (NO. 2) ON
(B) 11–GROUND : CONTINUITY WITH DRIVING POSITION MEMORY SW (SET) ON
(A) 10–GROUND : APPROX. **12** VOLTS WITH TILT UP OPERATION
(A) 3–GROUND : APPROX. **12** VOLTS WITH TILT DOWN OPERATION
(A) 2–GROUND : APPROX. **12** VOLTS WITH TELESCOPIC SHORT OPERATION
(A) 11–GROUND : APPROX. **12** VOLTS WITH TELESCOPIC LONG OPERATION

○ : PARTS LOCATION

CODE	SEE PAGE	CODE	SEE PAGE	CODE		SEE PAGE
C17	28	**N 1**	27	**T 7**		32
D10	30	**P 3**	29	**T10**	B	29
D12	30	**P11**	27	**T11**	A	29
I15	29	**R 7**	32			

WhereEverybodyKnowsYourName

POWER TILT AND POWER TELESCOPIC

: RELAY BLOCKS

CODE	SEE PAGE	RELAY BLOCKS (RELAY BLOCK LOCATION)
2	19	ENGINE COMPARTMENT LEFT

: JUNCTION BLOCK AND WIRE HARNESS CONNECTOR

CODE	SEE PAGE	JUNCTION BLOCK AND WIRE HARNESS (CONNECTOR LOCATION)
1B	20	ENGINE ROOM MAIN WIRE
1D	20	FRONT DOOR LH WIRE
1H	20	COWL WIRE
1I		
1J		
1K		

: CONNECTOR JOINING WIRE HARNESS AND WIRE HARNESS

CODE	SEE PAGE	JOINING WIRE HARNESS AND WIRE HARNESS (CONNECTOR LOCATION)
IF1	36	FRONT DOOR LH WIRE AND COWL WIRE (LEFT KICK PANEL)
IF2		
IJ1	36	ENGINE WIRE AND COWL WIRE (RIGHT KICK PANEL)
IK1	36	ENGINE WIRE AND INSTRUMENT PANEL WIRE (RIGHT KICK PANEL)
BT1	40	FLOOR WIRE AND COWL WIRE (LEFT KICK PANEL)
BU1	40	FLOOR WIRE AND INSTRUMENT PANEL WIRE (LEFT KICK PANEL)
Ba1	42	FLOOR WIRE AND FRONT SEAT LH WIRE (UNDER THE FRONT LH SEAT)

: GROUND POINTS

CODE	SEE PAGE	GROUND POINTS LOCATION
IF	36	LEFT KICK PANEL
IH	36	INSTRUMENT PANEL BRACE LH

: SPLICE POINTS

CODE	SEE PAGE	WIRE HARNESS WITH SPLICE POINTS	CODE	SEE PAGE	WIRE HARNESS WITH SPLICE POINTS
I 3	38	COWL WIRE	B 8	40	FLOOR MAIN WIRE
I 5			B 9		
I 8			B27	42	FRONT SEAT LH WIRE
I11					

C17 GRAY

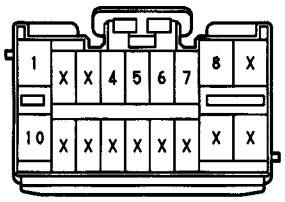

D10 GRAY

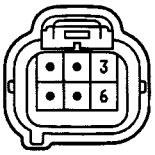

D12 BLACK

I15 BLACK

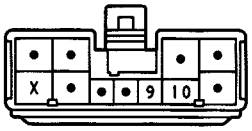

N 1 GRAY

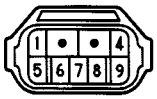

P 3

P11

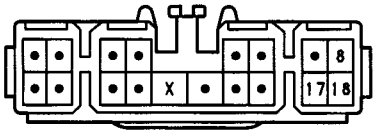

R 7

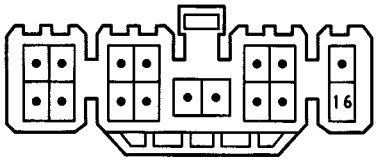

T 7

T10 (B)

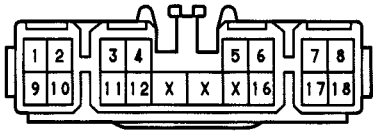

T11 (A)

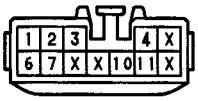

WhereEverybodyKnowsYourName

REMOTE CONTROL MIRROR (w/ DRIVING POSITION MEMORY)

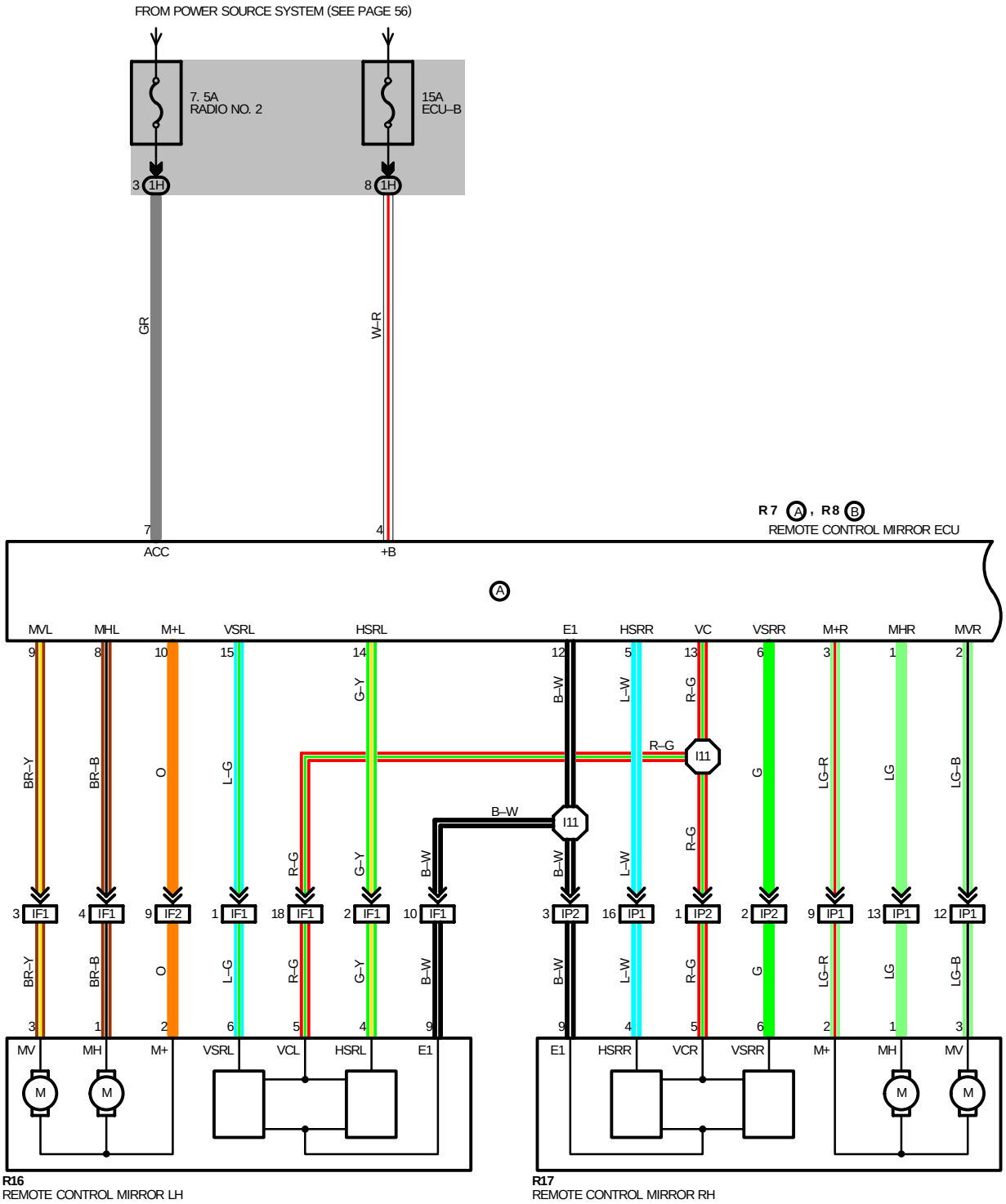

R16
REMOTE CONTROL MIRROR LH

R17
REMOTE CONTROL MIRROR RH

WhereEverybodyKnowsYourName

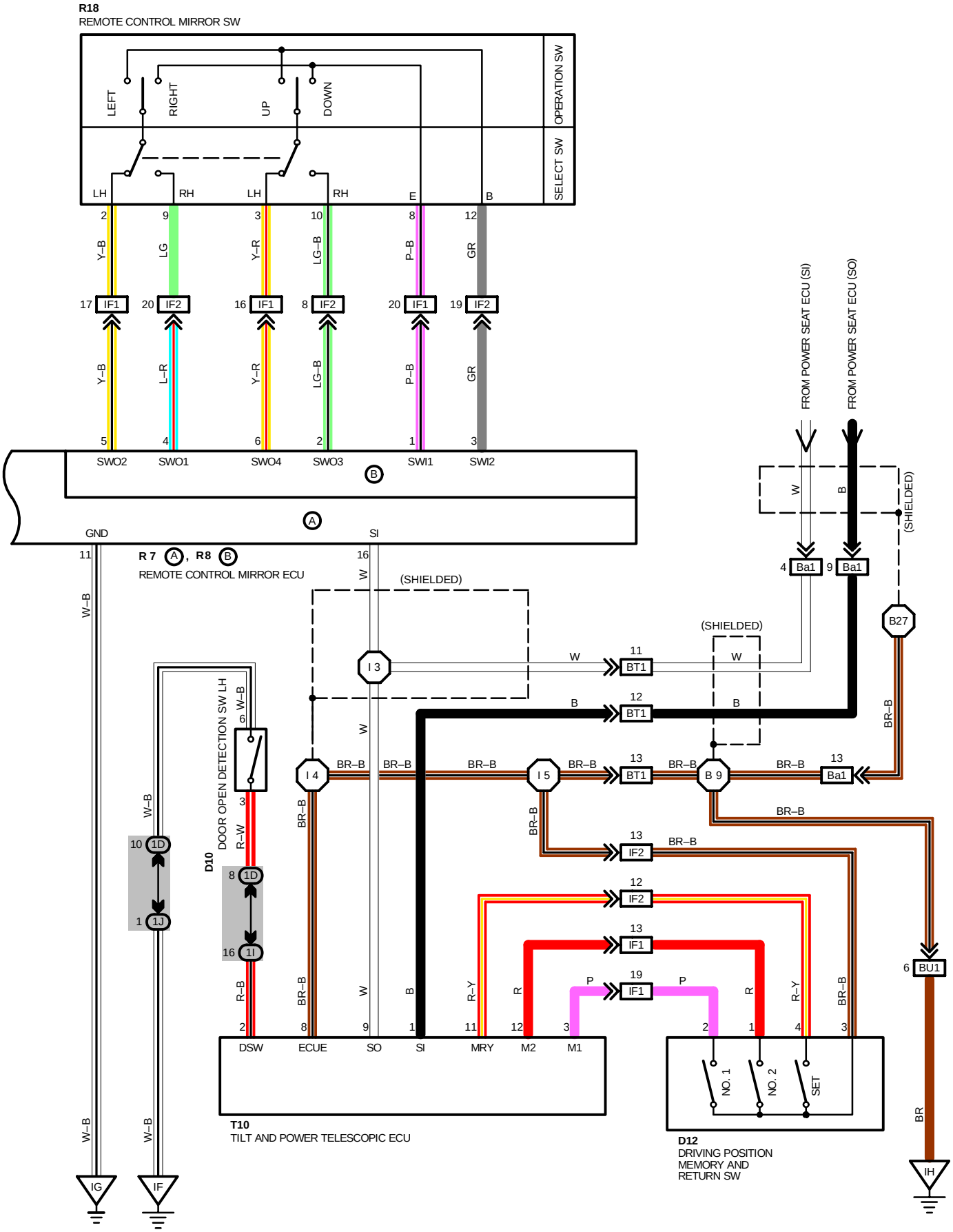

WhereEverybodyKnowsYourName

SYSTEM OUTLINE

CURRENT IS ALWAYS APPLIED TO **TERMINAL +B** OF REMOTE CONTROL MIRROR ECU THROUGH THE **ECU–B** FUSE.

WHEN THE IGNITION SW IS TURNED TO **ON** OR **ACC** POSITION, THE CURRENT FLOWS TO **TERMINAL ACC** OF THE REMOTE CONTROL MIRROR ECU THROUGH THE **RADIO NO. 2** FUSE.

REMOTE CONTROL MIRROR OPERATION

WHEN THE IGNITION SW IS TURNED TO **ON** OR **ACC** POSITION, THE REMOTE CONTROL MIRROR ECU OPERATES. WHEN THE SELECT SW OF THE REMOTE CONTROL MIRROR SW IS MOVED TO THE **LH** POSITION AND THE OPERATION SW IS MOVED TO "LEFT" SIDE, A SIGNAL IS INPUT FROM **TERMINAL SWO2** OF REMOTE CONTROL MIRROR ECU TO **TERMINAL 2** OF REMOTE CONTROL MIRROR SW → **TERMINAL 12** → **TERMINAL SWI2** OF ECU.

AS A RESULT, THE CURRENT TO **TERMINAL +B** OF ECU FLOWS FROM **TERMINAL MHL** OF ECU → **TERMINAL 1** OF REMOTE CONTROL MIRROR LH → MOTOR → **TERMINAL 2** → **TERMINAL M+L** OF ECU → **TERMINAL GND** → **GROUND**, ROTATING THE MOTOR TO ADJUST THE ANGLE OF THE LEFT SIDE OF THE OUTER MIRROR (DRIVER'S).

TO CHANGE THE ANGLE OF THE RIGHT SIDE OF THE MIRROR, THE OPERATION SW OF THE REMOTE CONTROL MIRROR SW IS MOVED TO THE "RIGHT" SIDE.

THEN, A SIGNAL IS INPUT FROM **TERMINAL SWO2** OF REMOTE CONTROL MIRROR ECU → **TERMINAL 2** OF REMOTE CONTROL MIRROR SW → **TERMINAL 8** → **TERMINAL SWI1** OF ECU. AS A RESULT, THE CURRENT TO **TERMINAL +B** OF REMOTE CONTROL MIRROR ECU FLOWS FROM **TERMINAL M+L** OF ECU → TERMINAL 2 OF REMOTE CONTROL MIRROR → MOTOR → **TERMINAL 1** → **TERMINAL MHL** OF ECU → **TERMINAL GND** → **GROUND,** CAUSING THE ANGLE OF THE OUTER MIRROR (DRIVER'S) TO CHANGE ON THE RIGHT SIDE.

THE MOVEMENT TO OTHER POSITIONS OCCURS SIMILARLY, SO ONLY THE CURRENT FLOW TO EACH MOTOR IS SHOWN:

SELECT SW RH POSITION, OPERATION SW LEFT POSITION

TERMINAL +B OF REMOTE CONTROL MIRROR ECU → **TERMINAL MHR** → **TERMINAL 1** OF REMOTE CONTROL MIRROR → MOTOR → **TERMINAL 2** → **TERMINAL M+R** OF ECU → **TERMINAL GND** → **GROUND**.

SELECT SW RH POSITION, OPERATION SW RIGHT POSITION

TERMINAL +B OF REMOTE CONTROL MIRROR ECU → **TERMINAL M+R** → **TERMINAL 2** OF REMOTE CONTROL MIRROR → MOTOR → **TERMINAL 1** → **TERMINAL MHR** OF ECU → **TERMINAL GND** → **GROUND**.

SELECT SW LH POSITION, OPERATION SW UP POSITION

TERMINAL +B OF REMOTE CONTROL MIRROR ECU → **TERMINAL MVL** → **TERMINAL 3** OF REMOTE CONTROL MIRROR → MOTOR → **TERMINAL 2** → **TERMINAL M+L** OF ECU → **TERMINAL GND** → **GROUND**.

SELECT SW LH POSITION, OPERATION SW DOWN POSITION

TERMINAL +B OF REMOTE CONTROL MIRROR ECU → **TERMINAL M+L** → **TERMINAL 2** OF REMOTE CONTROL MIRROR → MOTOR → **TERMINAL 3** → **TERMINAL MVL** OF ECU → **TERMINAL GND** → **GROUND**.

SELECT SW RH POSITION, OPERATION SW UP POSITION

TERMINAL +B OF REMOTE CONTROL MIRROR → **TERMINAL MVR** → **TERMINAL 3** OF REMOTE CONTROL MIRROR → MOTOR → **TERMINAL 2** → **TERMINAL M+R** OF ECU → **TERMINAL GND** → **GROUND**.

SELECT SW RH POSITION, OPERATION SW DOWN POSITION

TERMINAL +B OF REMOTE CONTROL MIRROR → **TERMINAL M+R** → **TERMINAL 2** OF REMOTE CONTROL MIRROR → MOTOR → **TERMINAL 3** → **TERMINAL MVR** OF ECU → **TERMINAL GND** → **GROUND**.

THE NUMBER OF TURNS OF EACH MOTOR (AMOUNT OF MOVEMENT OF EACH PART OF THE MIRROR) IS DETECTED BY THE POSITION SENSORS AND INPUT TO THE ECU, MAKING IT POSSIBLE TO PERFORM MEMORY AND RETURN FUNCTIONS FOR THE MIRROR POSITION USING THE DRIVING POSITION MEMORY AND RETURN SWITCH.

WhereEverybodyKnowsYourName

SERVICE HINTS

D10 DOOR LOCK MOTOR, DOOR UNLOCK DETECTION SW AND DOOR OPEN DETECTION SW LH
3–6 : CLOSED WITH FRONT DOOR LH OPEN

D12 DRIVING POSITION MEMORY AND RETURN SW
4–3 : CLOSED WITH SET SW ON
2–3 : CLOSED WITH MEMORY NO. 1 SW ON
1–3 : CLOSED WITH MEMORY NO. 2 SW ON

R18 REMOTE CONTROL MIRROR SW
2–12: CONTINUITY WITH SELECT SW AT **LH** POSITION AND OPERATION SW AT **LEFT** POSITION
2–8: CONTINUITY WITH SELECT SW AT **LH** POSITION AND OPERATION SW AT **RIGHT** POSITION
9–12: CONTINUITY WITH SELECT SW AT **RH** POSITION AND OPERATION SW AT **LEFT** POSITION
9–8: CONTINUITY WITH SELECT SW AT **RH** POSITION AND OPERATION SW AT **RIGHT** POSITION
3–12: CONTINUITY WITH SELECT SW AT **LH** POSITION AND OPERATION SW AT **UP** OPERATION
3–8: CONTINUITY WITH SELECT SW AT **LH** POSITION AND OPERATION SW AT **DOWN** POSITION
10–12: CONTINUITY WITH SELECT SW AT **RH** POSITION AND OPERATION SW AT **UP** POSITION
10–8: CONTINUITY WITH SELECT SW AT **RH** POSITION AND OPERATION SW AT **DOWN** POSITION

R 7 REMOTE CONTROL MIRROR ECU
4–GROUND : ALWAYS APPROX. **12** VOLTS
7–GROUND : APPROX. **12** VOLTS WITH IGNITION SW AT **ACC** OR **ON** POSITION
11–GROUND : ALWAYS CONTINUITY
9–GROUND : APPROX. **12** VOLTS WITH REMOTE CONTROL MIRROR LH AT UP OPERATION
8–GROUND : APPROX. **12** VOLTS WITH REMOTE CONTROL MIRROR LH AT LEFT OPERATION
13–GROUND : APPROX. **5** VOLTS
12–GROUND : ALWAYS CONTINUITY
2–GROUND : APPROX. **12** VOLTS WITH REMOTE CONTROL MIRROR RH AT UP OPERATION
1–GROUND : APPROX. **12** VOLTS WITH REMOTE CONTROL MIRROR RH AT LEFT OPERATION

: PARTS LOCATION

CODE		SEE PAGE	CODE		SEE PAGE	CODE	SEE PAGE
D10		30	**R 8**	B	29	**R18**	31
D12		30	**R16**		31	**T10**	29
R 7	A	29	**R17**		31		

: JUNCTION BLOCK AND WIRE HARNESS CONNECTOR

CODE	SEE PAGE	JUNCTION BLOCK AND WIRE HARNESS (CONNECTOR LOCATION)
1D	20	FRONT DOOR LH WIRE
1H	20	COWL WIRE
1I		
1J		

: CONNECTOR JOINING WIRE HARNESS AND WIRE HARNESS

CODE	SEE PAGE	JOINING WIRE HARNESS AND WIRE HARNESS (CONNECTOR LOCATION)
IF1	36	FRONT DOOR LH WIRE AND COWL WIRE (LEFT KICK PANEL)
IF2		
IP1	38	FRONT DOOR RH WIRE AND COWL WIRE (RIGHT KICK PANEL)
IP2		
BT1	40	FLOOR WIRE AND COWL WIRE (LEFT KICK PANEL)
BU1	40	FLOOR WIRE AND INSTRUMENT PANEL WIRE (LEFT KICK PANEL)
Ba1	42	FLOOR WIRE AND FRONT SEAT LH WIRE (UNDER THE FRONT LH SEAT)

: GROUND POINTS

CODE	SEE PAGE	GROUND POINTS LOCATION
IF	36	LEFT KICK PANEL
IG	36	INSTRUMENT PANEL BRACE LH
IH	36	UNDER THE ASHTRAY LH

: SPLICE POINTS

CODE	SEE PAGE	WIRE HARNESS WITH SPLICE POINTS	CODE	SEE PAGE	WIRE HARNESS WITH SPLICE POINTS
I 3	38	COWL WIRE	**I11**	38	COWL WIRE
I 4			**B 9**	40	FLOOR MAIN WIRE
I 5			**B27**	46	FRONT SEAT LH WIRE

WhereEverybodyKnowsYourName

REMOTE CONTROL MIRROR (w/ DRIVING POSITION MEMORY)

D10 GRAY

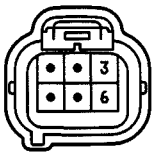

D12 BLACK

R 7 (A)

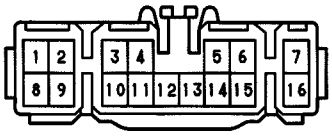

R 8 (B)

R16, R17

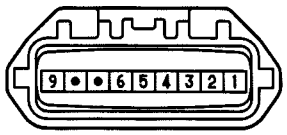

R18 BLUE

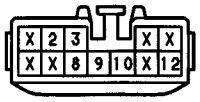

T10

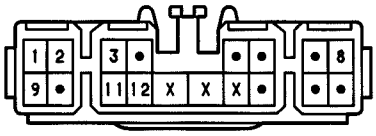

WhereEverybodyKnowsYourName

REMOTE CONTROL MIRRORS (w/o DRIVING POSITION MEMORY)

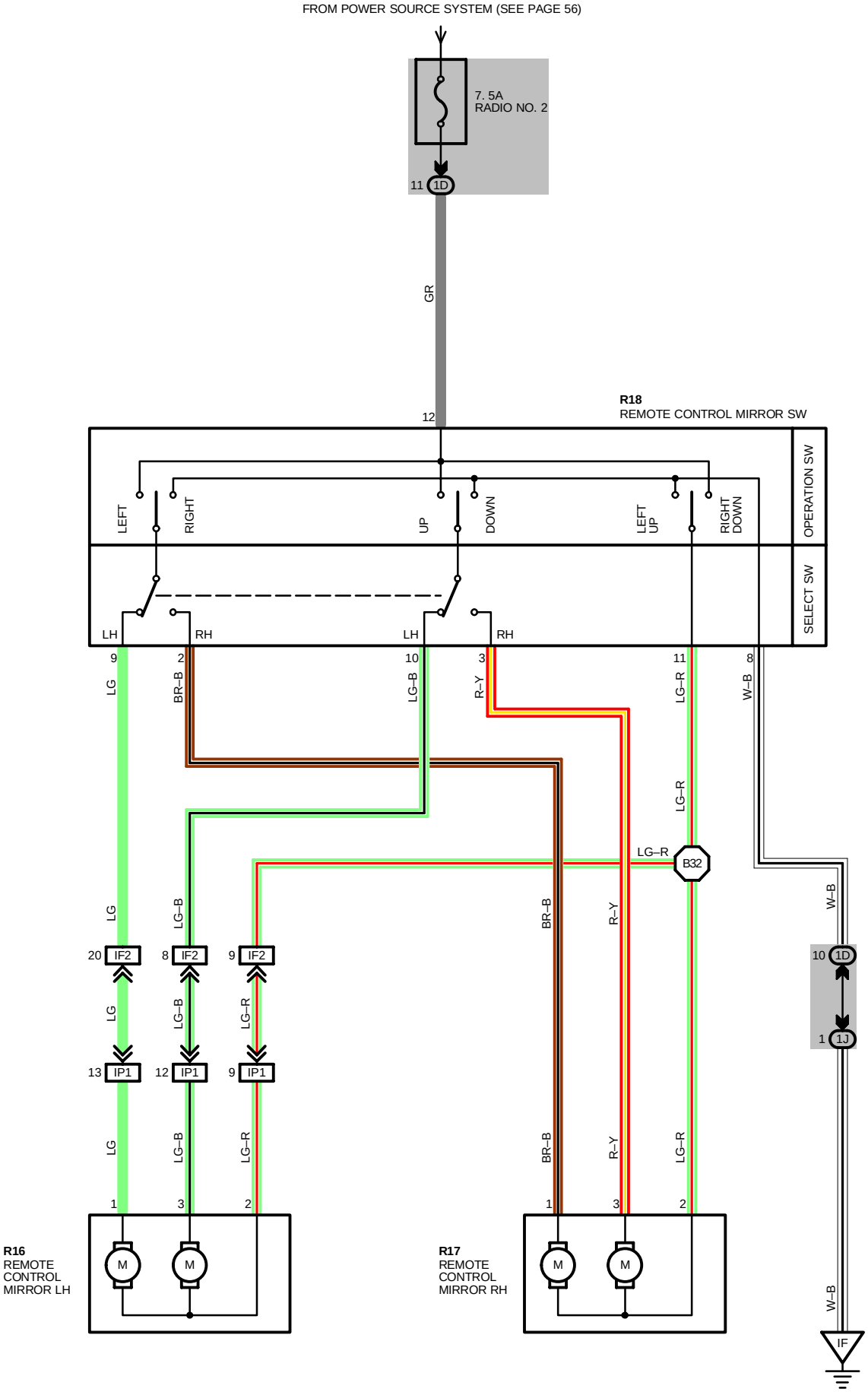

WhereEverybodyKnowsYourName

REMOTE CONTROL MIRRORS (w/o DRIVING POSITION MEMORY)

SERVICE HINTS

R18 REMOTE CONTROL MIRROR SW

12–GROUND	:	APPROX. **12** VOLTS WITH IGNITION SW AT **ACC** OR **ON** POSITION
11–8	:	CONTINUITY WITH OPERATION SW AT **LEFT** OR **UP** POSITION
3–11	:	CONTINUITY WITH OPERATION SW AT **RIGHT** OR **DOWN** POSITION
8–GROUND	:	ALWAYS CONTINUITY

: PARTS LOCATION

CODE	SEE PAGE	CODE	SEE PAGE	CODE	SEE PAGE
R16	31	**R17**	31	**R18**	31

: JUNCTION BLOCK AND WIRE HARNESS CONNECTOR

CODE	SEE PAGE	JUNCTION BLOCK AND WIRE HARNESS (CONNECTOR LOCATION)
1D	20	FRONT DOOR LH WIRE
1J	20	COWL WIRE

: CONNECTOR JOINING WIRE HARNESS AND WIRE HARNESS

CODE	SEE PAGE	JOINING WIRE HARNESS AND WIRE HARNESS (CONNECTOR LOCATION)
IF2	38	FRONT DOOR LH WIRE AND COWL WIRE (LEFT KICK PANEL)
IP1	38	FRONT DOOR RH WIRE AND COWL WIRE (RIGHT KICK PANEL)

: GROUND POINTS

CODE	SEE PAGE	GROUND POINTS LOCATION
IF	36	LEFT KICK PANEL

: SPLICE POINTS

CODE	SEE PAGE	WIRE HARNESS WITH SPLICE POINTS	CODE	SEE PAGE	WIRE HARNESS WITH SPLICE POINTS
B 32	40	FRONT DOOR LH WIRE			

R16, R17

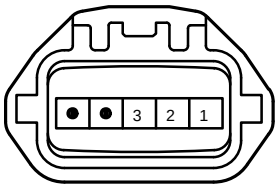

R18

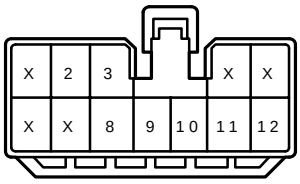

WhereEverybodyKnowsYourName

[Engine Compartment]

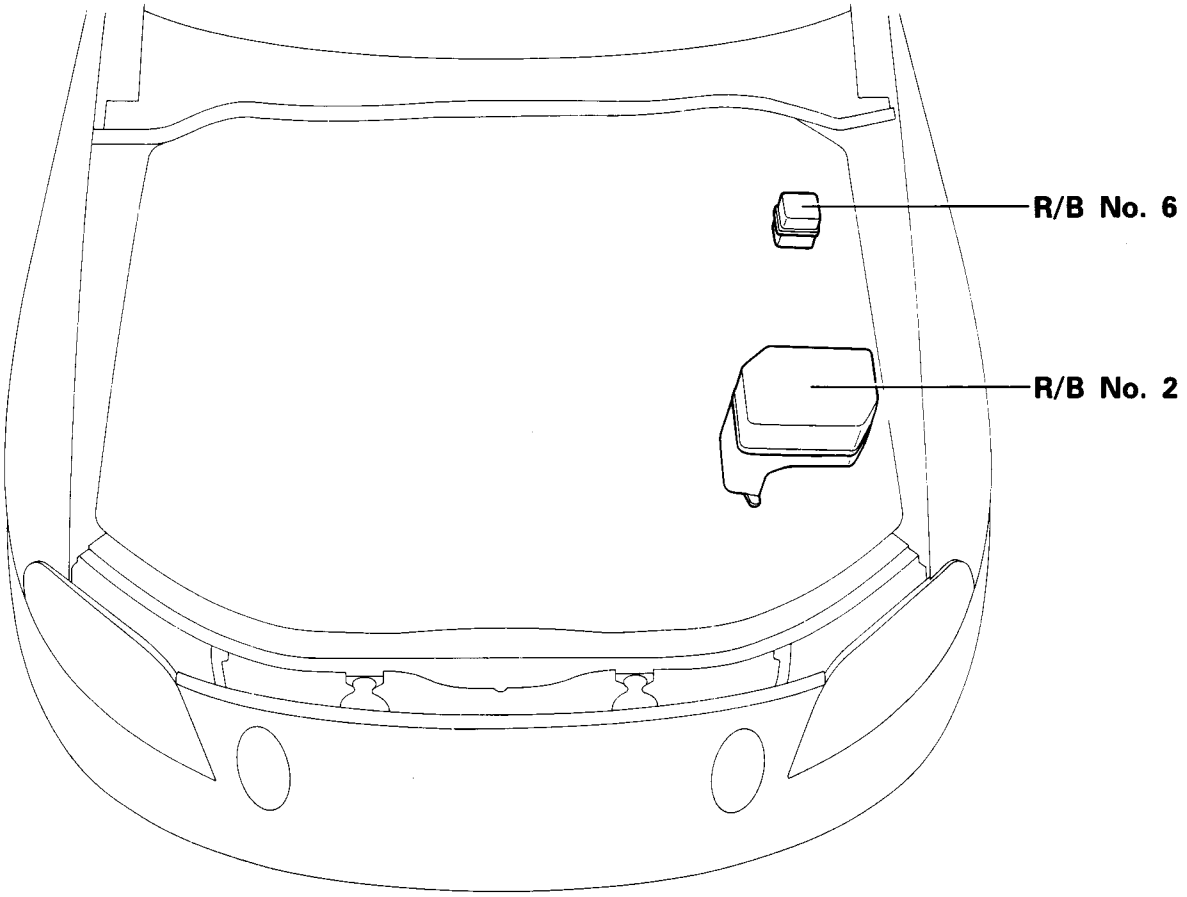

[Instrument Panel]

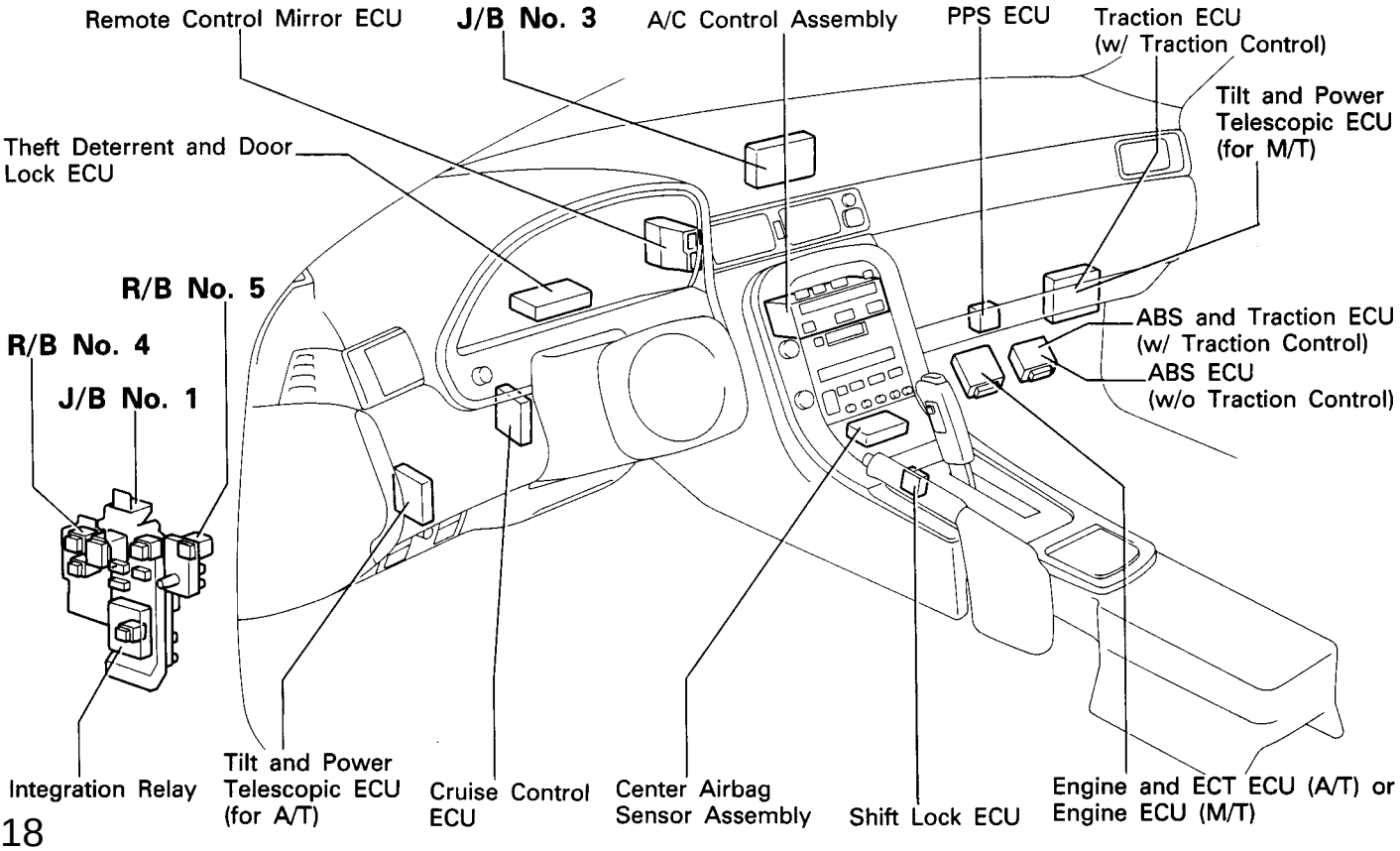

WhereEverybodyKnowsYourName

[Body]

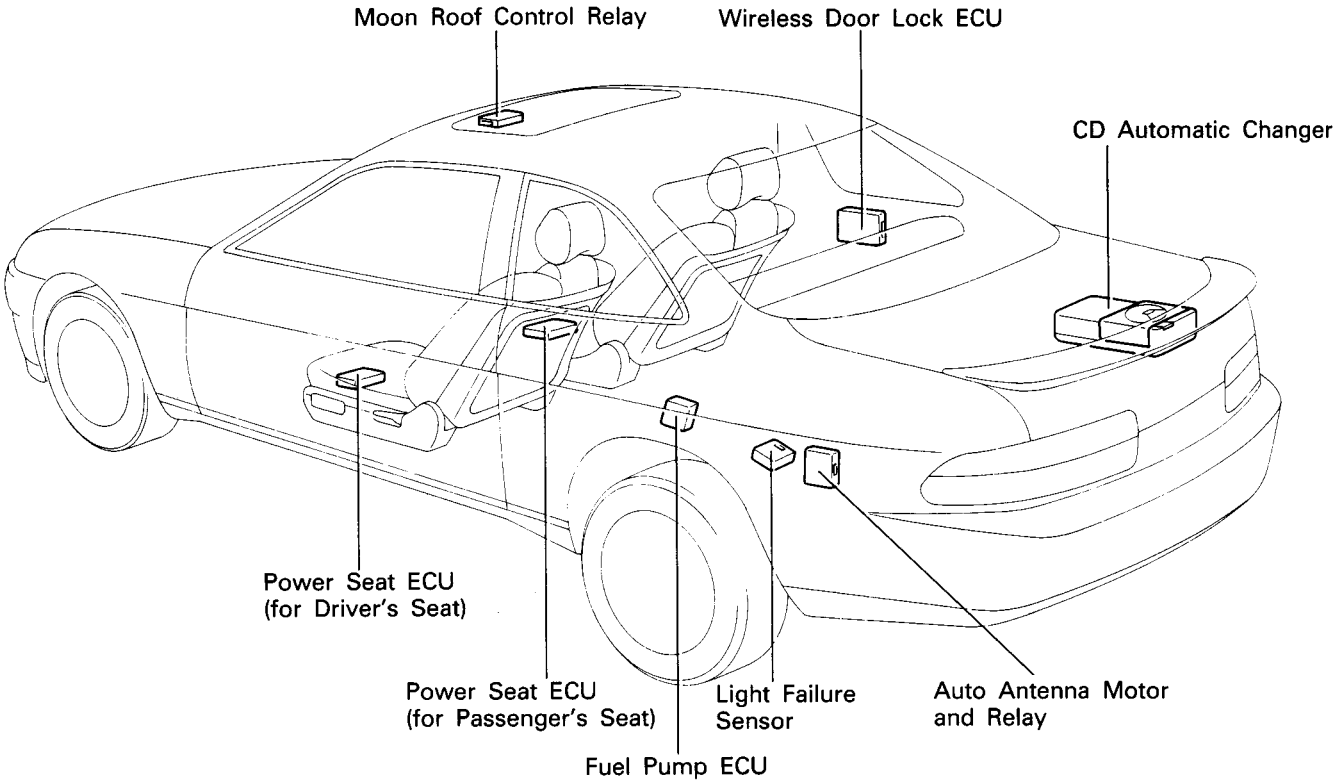

② : R/B No. 2	Engine Compartment Left (See Page 18)

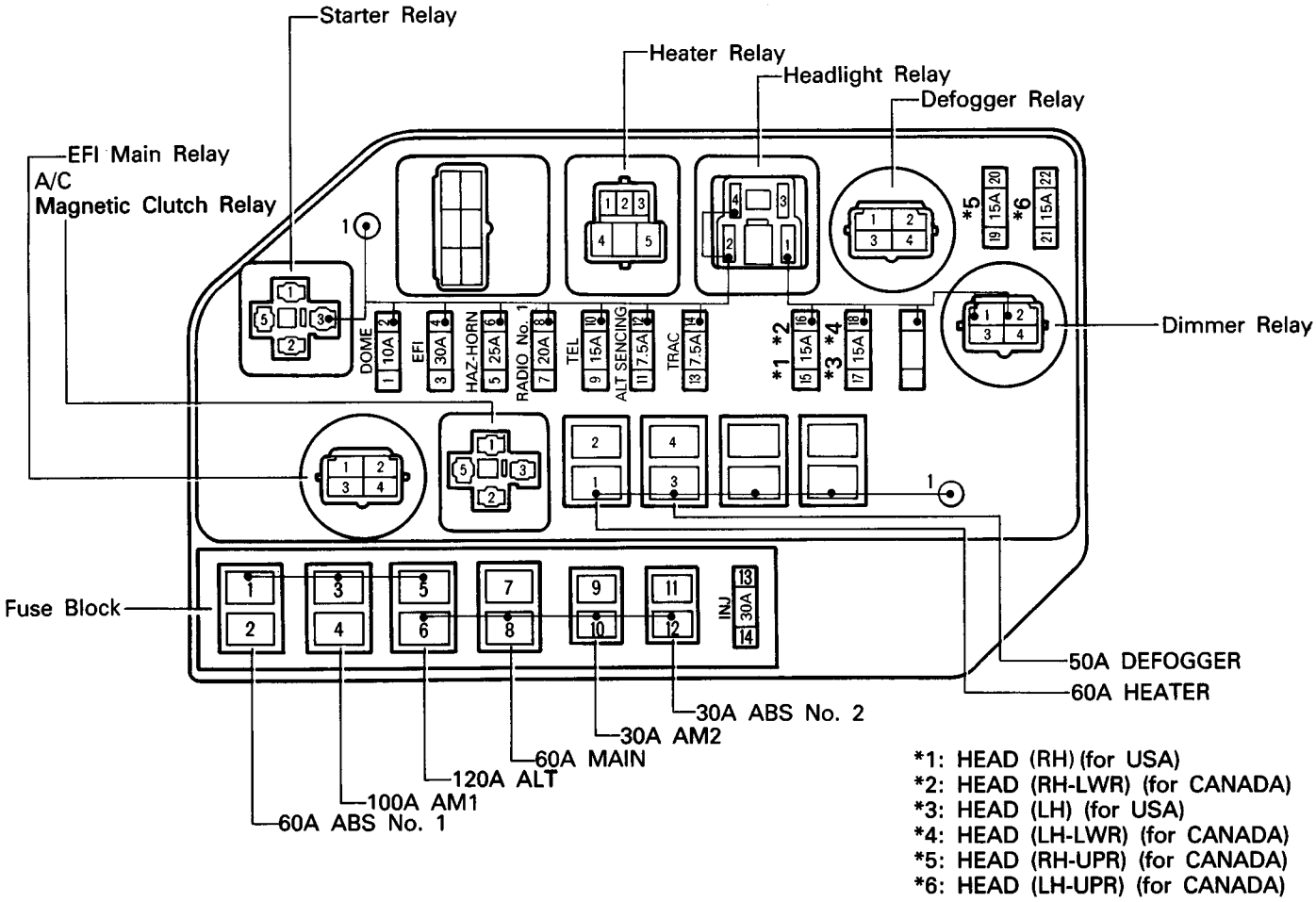

WhereEverybodyKnowsYourName

: J/B No. 1	Left Kick Panel (See Page 18)

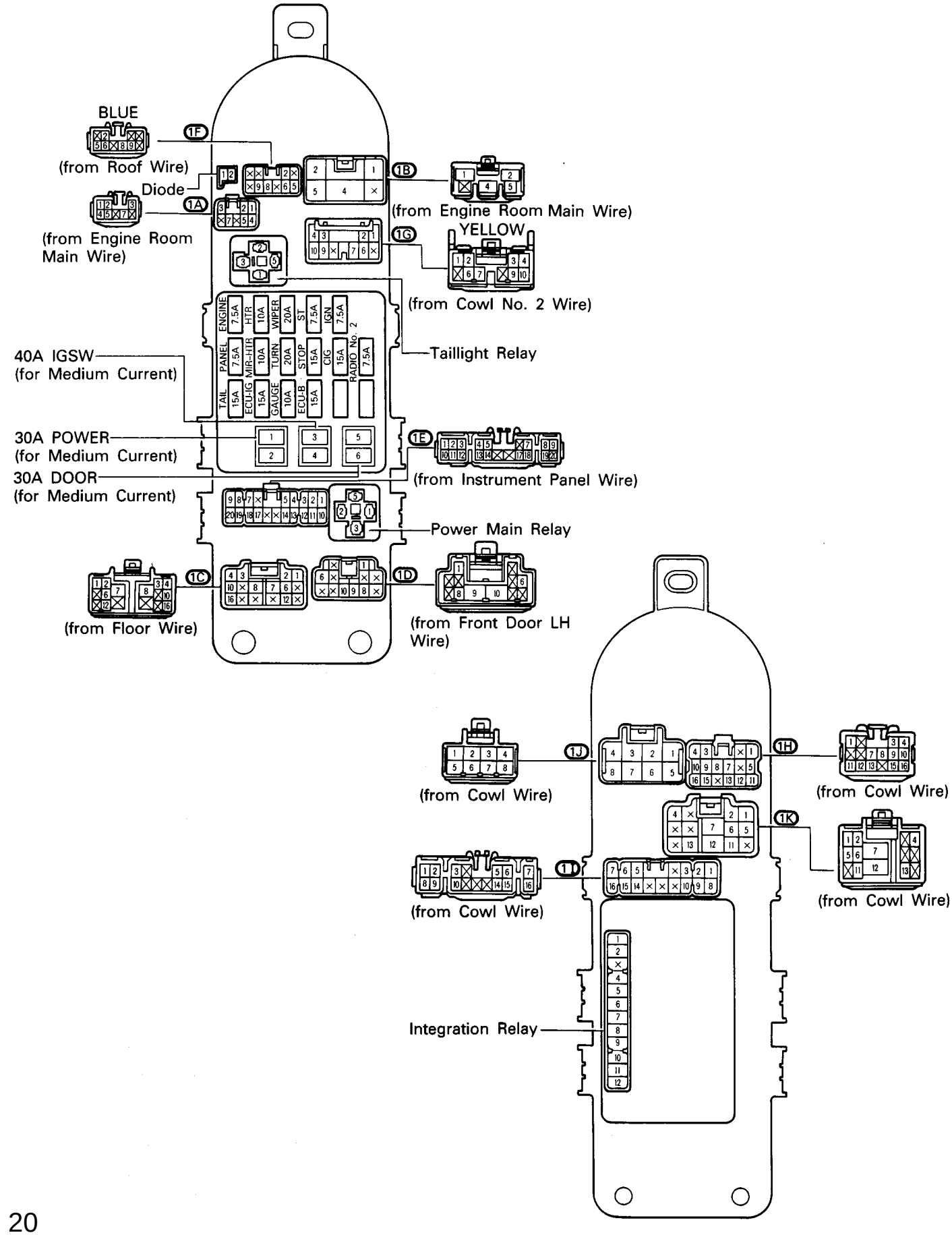

WhereEverybodyKnowsYourName

[J/B No. 1 Inner Circuit]

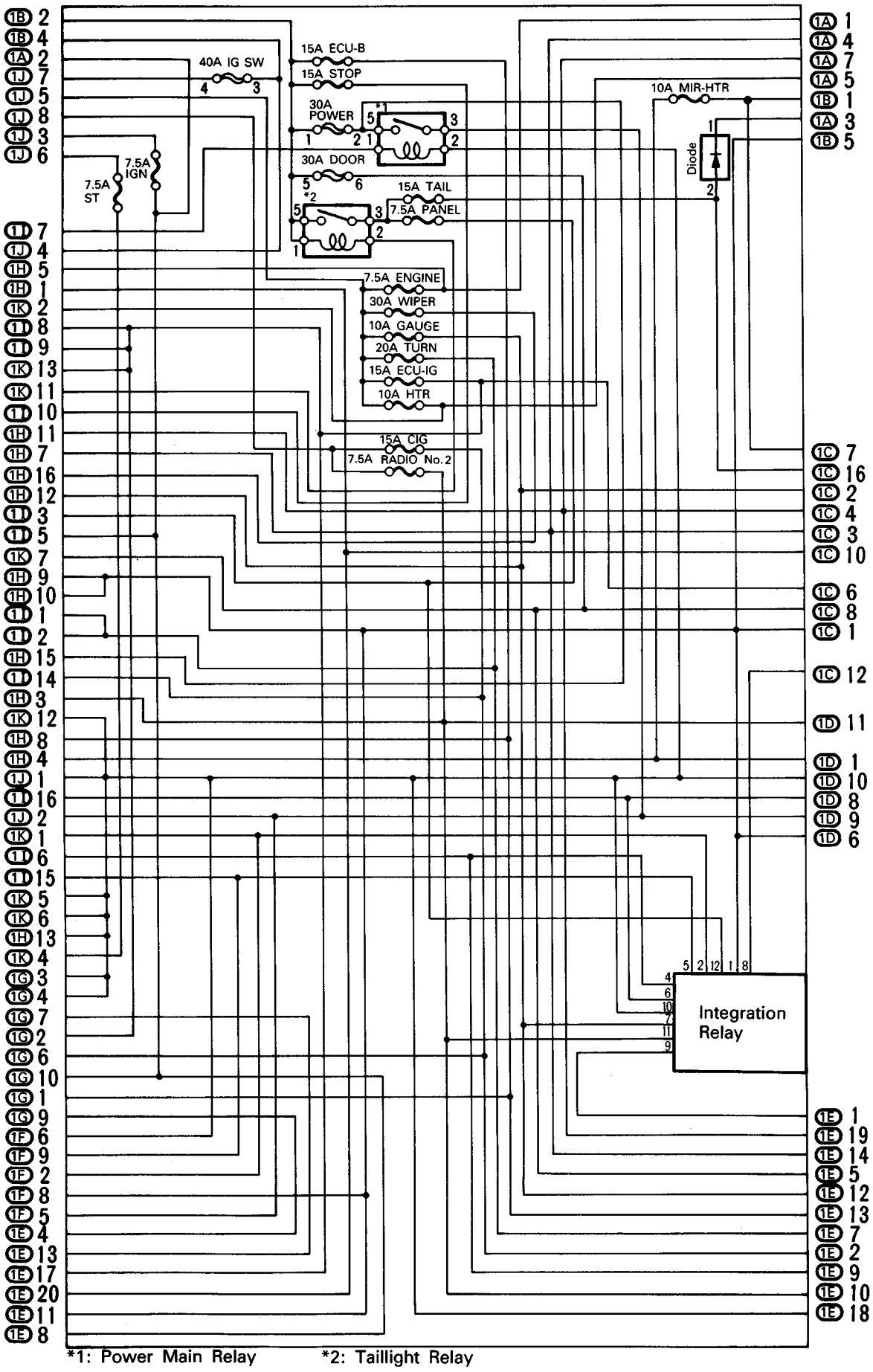

WhereEverybodyKnowsYourName

: J/B No. 3	Behind the Instrument Panel Center (See Page 18)

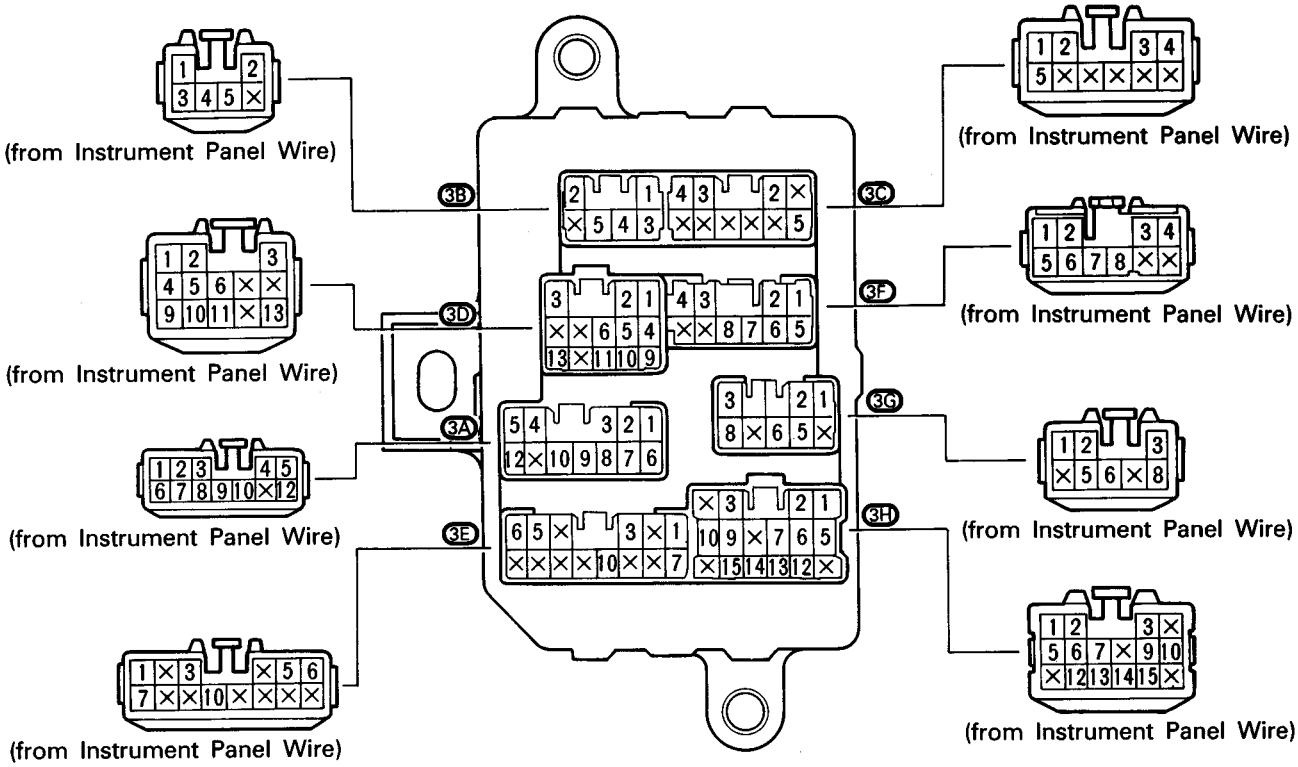

[J/B No. 3 Inner Circuit]

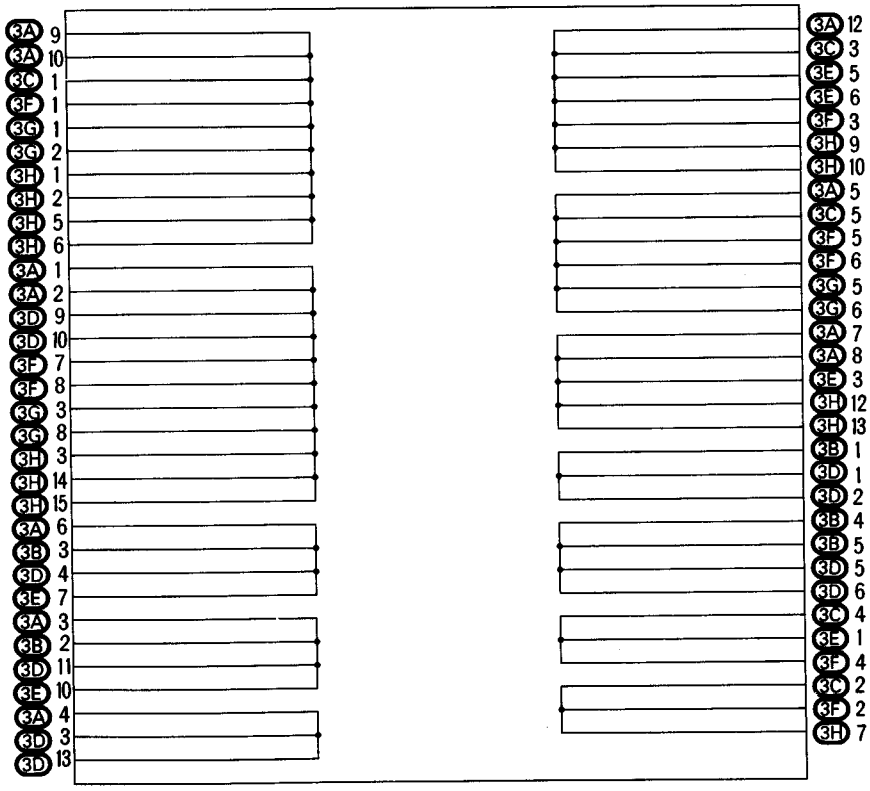

WhereEverybodyKnowsYourName

④ : R/B No. 4	Front Side of J/B No. 1 (See Page 18)
⑤ : R/B No. 5	Rear Side of J/B No. 1 (See Page 18)

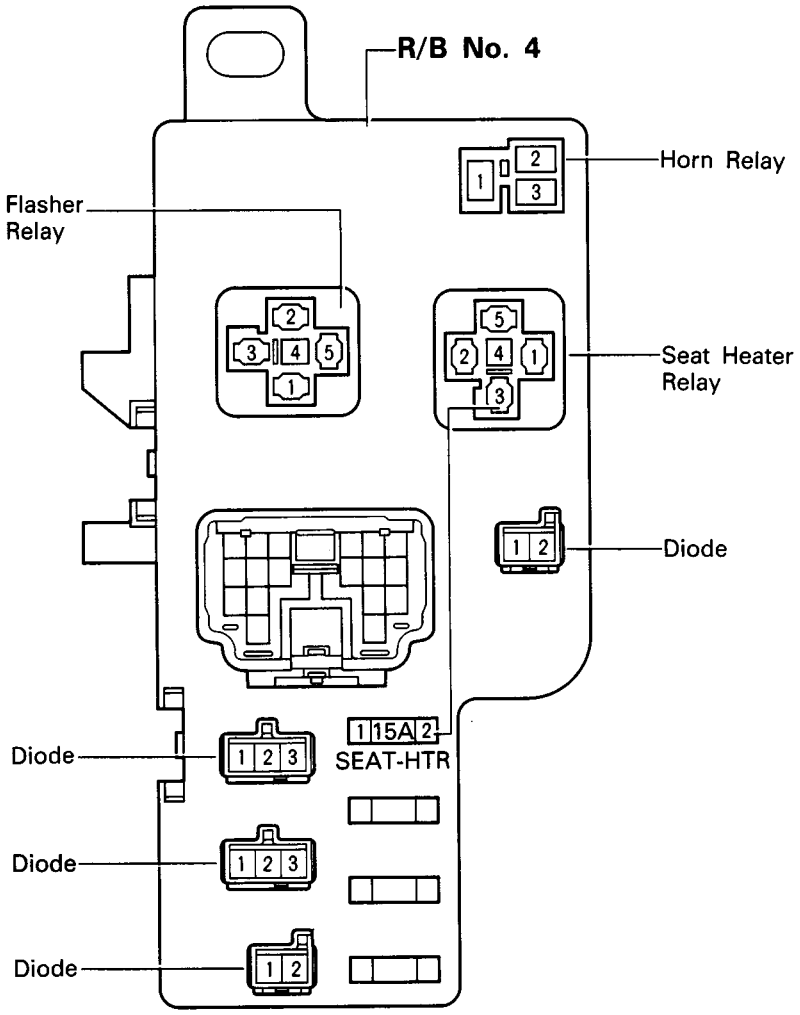

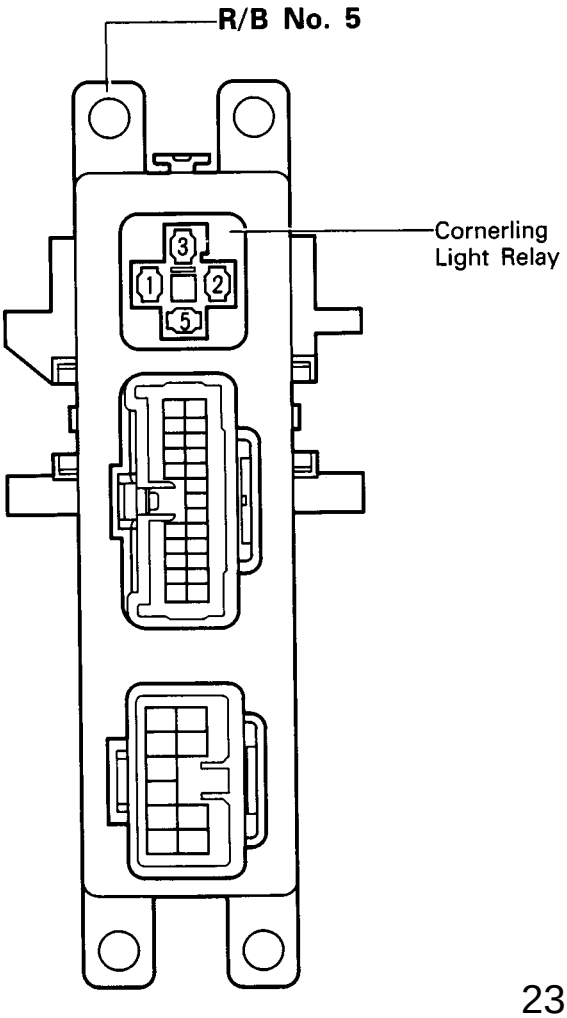

WhereEverybodyKnowsYourName

⑥ : R/B No. 6	Engine Compartment Left (See Page 18)

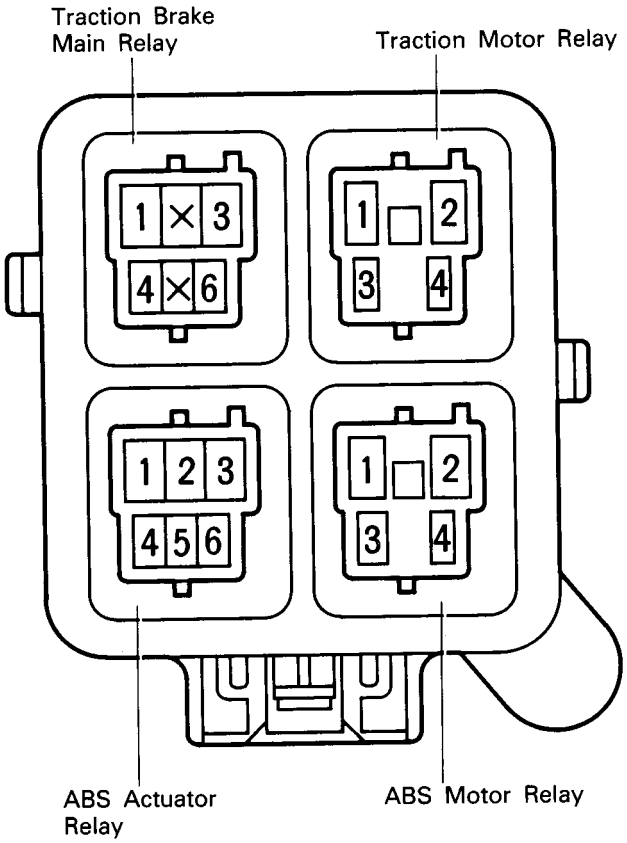

WhereEverybodyKnowsYourName

A15

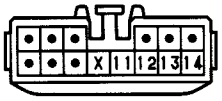

A32

C 9 (D)

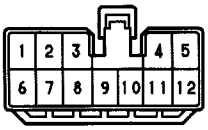

C20 (A)

C21 (B)

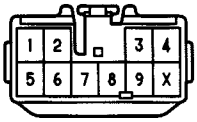

F11, F12, W 9

L 6 GRAY

R 2 (B)

R 3 (C)

R 4 (A)

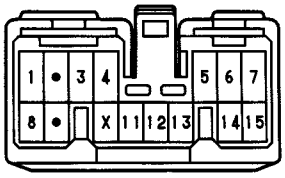

R12, R13

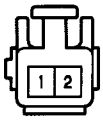

S13 (A)

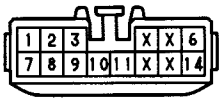

S14 (B)

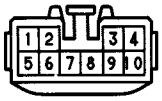

S22 (A), T16 (A)

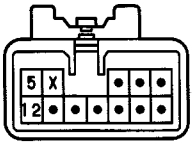

S23 (B), T17 (B)

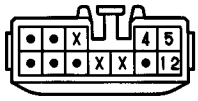

W10

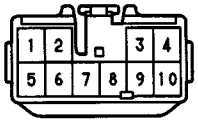

WhereEverybodyKnowsYourName

RADIO AND PLAYER (w/ CD PLAYER)

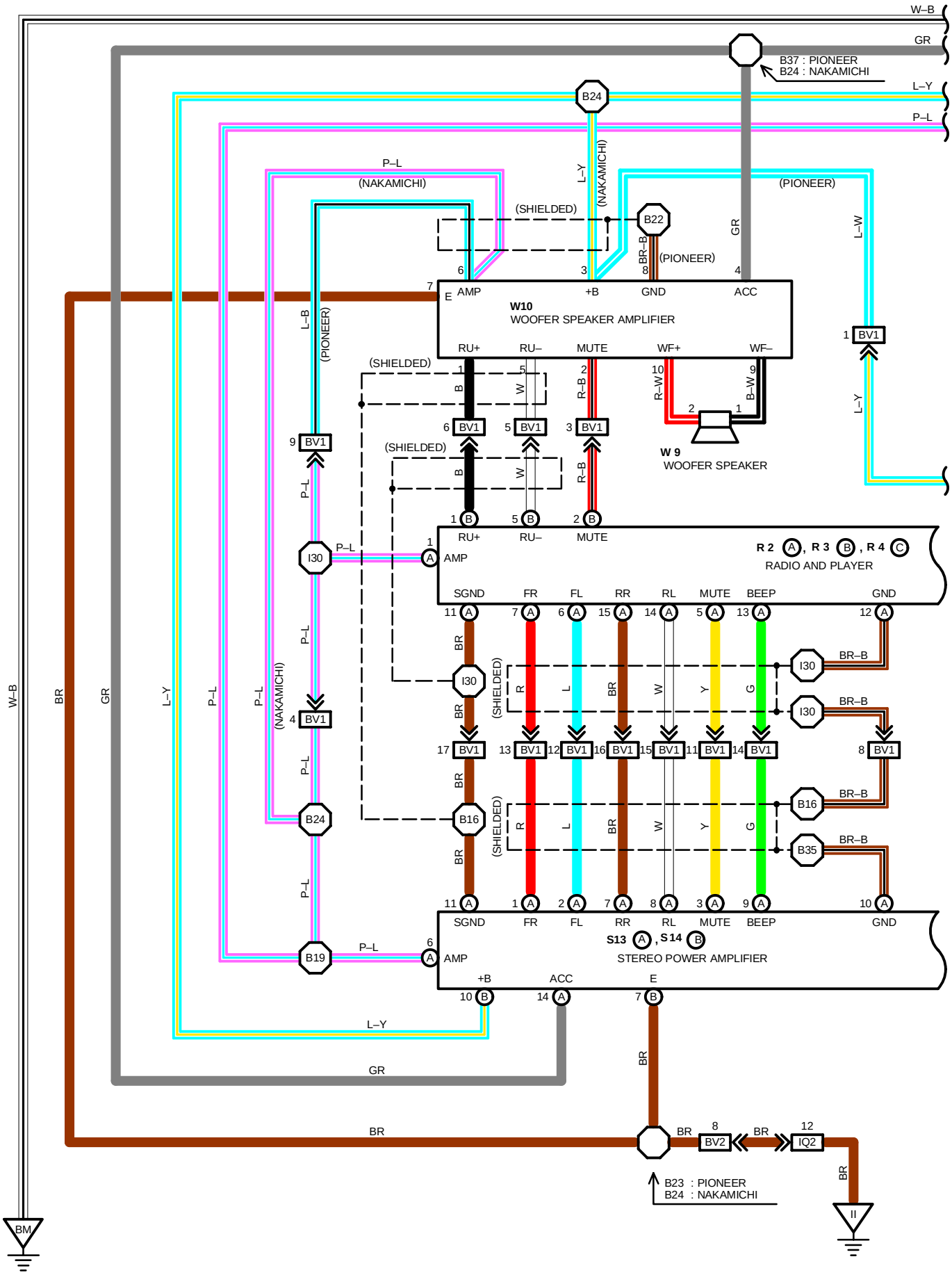

WhereEverybodyKnowsYourName

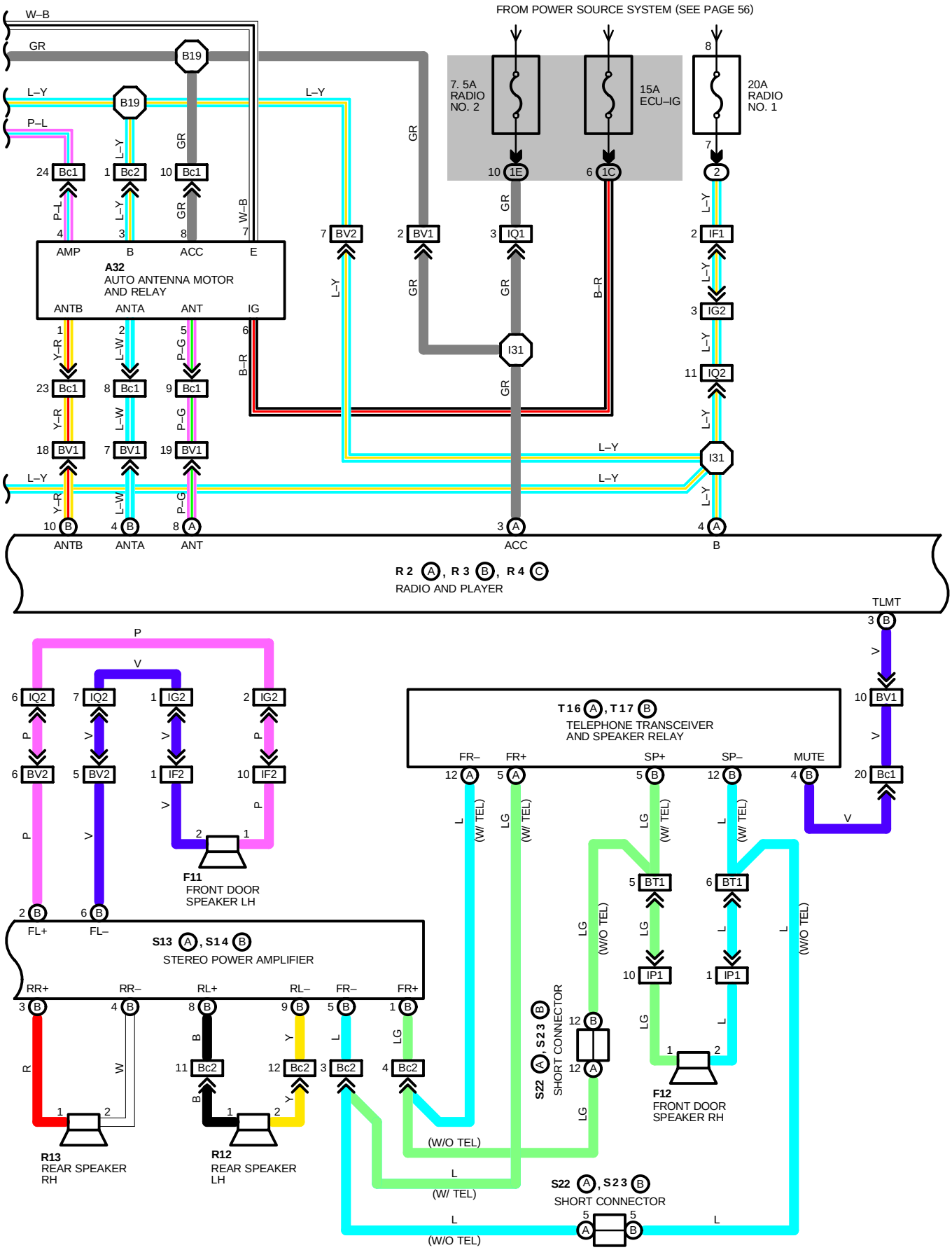

WhereEverybodyKnowsYourName

RADIO AND PLAYER (w/ CD PLAYER)

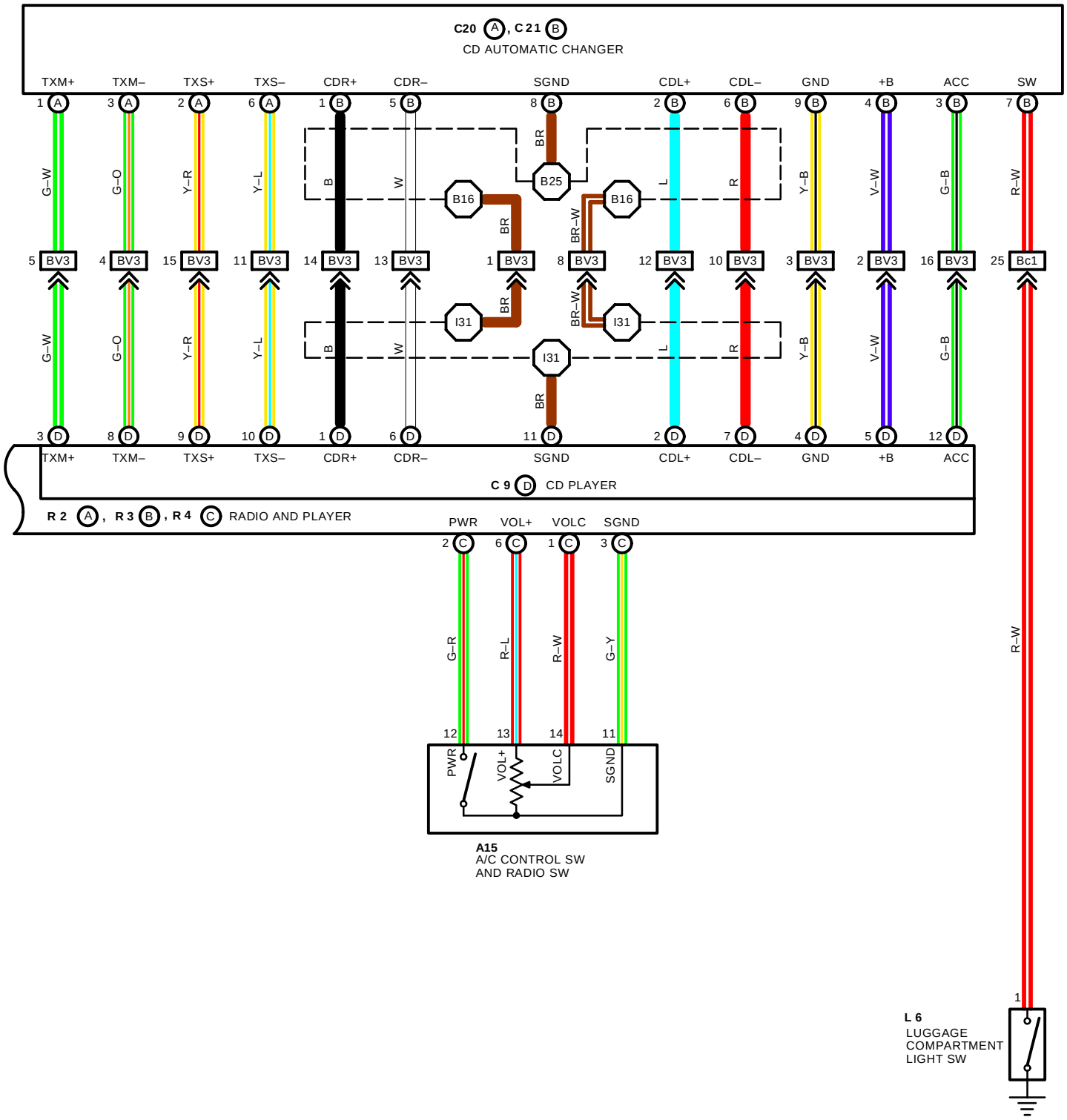

WhereEverybodyKnowsYourName

SERVICE HINTS

R 4(A) RADIO AND PLAYER

(A) 3–GROUND : APPROX. **12** VOLTS WITH IGNITION SW AT **ACC** OR **ON** POSITION

(A) 4–GROUND : ALWAYS APPROX. **12** VOLTS

S14(B) STEREO POWER AMPLIFIER

(B) 7–GROUND : ALWAYS CONTINUITY

: PARTS LOCATION

CODE		SEE PAGE	CODE		SEE PAGE	CODE		SEE PAGE
A15		28	**L 6**		30	**S14**	B	31
A32		30	**R 2**	B	29	**S22**	A	29
C 9	D	28	**R 3**	C	29	**S23**	B	29
C20	A	30	**R 4**	A	29	**T16**	A	31
C21	B	30	**R12**		31	**T17**	B	31
F11		30	**R13**		31	**W 9**		31
F12		30	**S13**	A	31	**W10**		31

: RELAY BLOCKS

CODE	SEE PAGE	RELAY BLOCKS (RELAY BLOCK LOCATION)
2	19	ENGINE COMPARTMENT LEFT

: JUNCTION BLOCK AND WIRE HARNESS CONNECTOR

CODE	SEE PAGE	JUNCTION BLOCK AND WIRE HARNESS (CONNECTOR LOCATION)
1C	20	INSTRUMENT PANEL WIRE
1E	20	FLOOR WIRE

: CONNECTOR JOINING WIRE HARNESS AND WIRE HARNESS

CODE	SEE PAGE	JOINING WIRE HARNESS AND WIRE HARNESS (CONNECTOR LOCATION)
IF1	36	FRONT DOOR LH WIRE AND COWL WIRE (LEFT KICK PANEL)
IF2	36	FRONT DOOR LH WIRE AND COWL WIRE (LEFT KICK PANEL)
IG2	36	INSTRUMENT PANEL WIRE AND COWL WIRE (R/B NO. 5)
IP1	38	FRONT DOOR RH WIRE AND COWL WIRE (RIGHT KICK PANEL)
IQ1	38	INSTRUMENT PANEL WIRE AND CONSOLE BOX WIRE (UNDER THE INSTRUMENT PANEL CENTER)
IQ2		
BT1	40	FLOOR WIRE AND COWL WIRE (LEFT KICK PANEL)
BV1	40	FLOOR NO. 3 WIRE AND CONSOLE BOX WIRE (UNDER THE INSTRUMENT PANEL CENTER)
BV2		
BV3		
Bc1	40	FLOOR NO. 3 WIRE AND FLOOR WIRE (UNDER THE LEFT SIDE OF REAR SEAT CUSHION)
Bc2		

: GROUND POINTS

CODE	SEE PAGE	GROUND POINTS LOCATION
II	36	UNDER THE ASHTRAY RH
BM	40	BACK PANEL CENTER

: SPLICE POINTS

CODE	SEE PAGE	WIRE HARNESS WITH SPLICE POINTS	CODE	SEE PAGE	WIRE HARNESS WITH SPLICE POINTS
I30	38	CONSOLE BOX WIRE	**B23**	40	FLOOR NO. 3 WIRE
I31			**B24**		
B16	40	FLOOR NO. 3 WIRE	**B25**		
B19			**B35**	40	FLOOR MAIN WIRE
B22			**B37**	40	FLOOR NO. 3 WIRE

WhereEverybodyKnowsYourName

RADIO AND PLAYER (w/o CD PLAYER)

FROM POWER SOURCE SYSTEM (SEE PAGE 56)

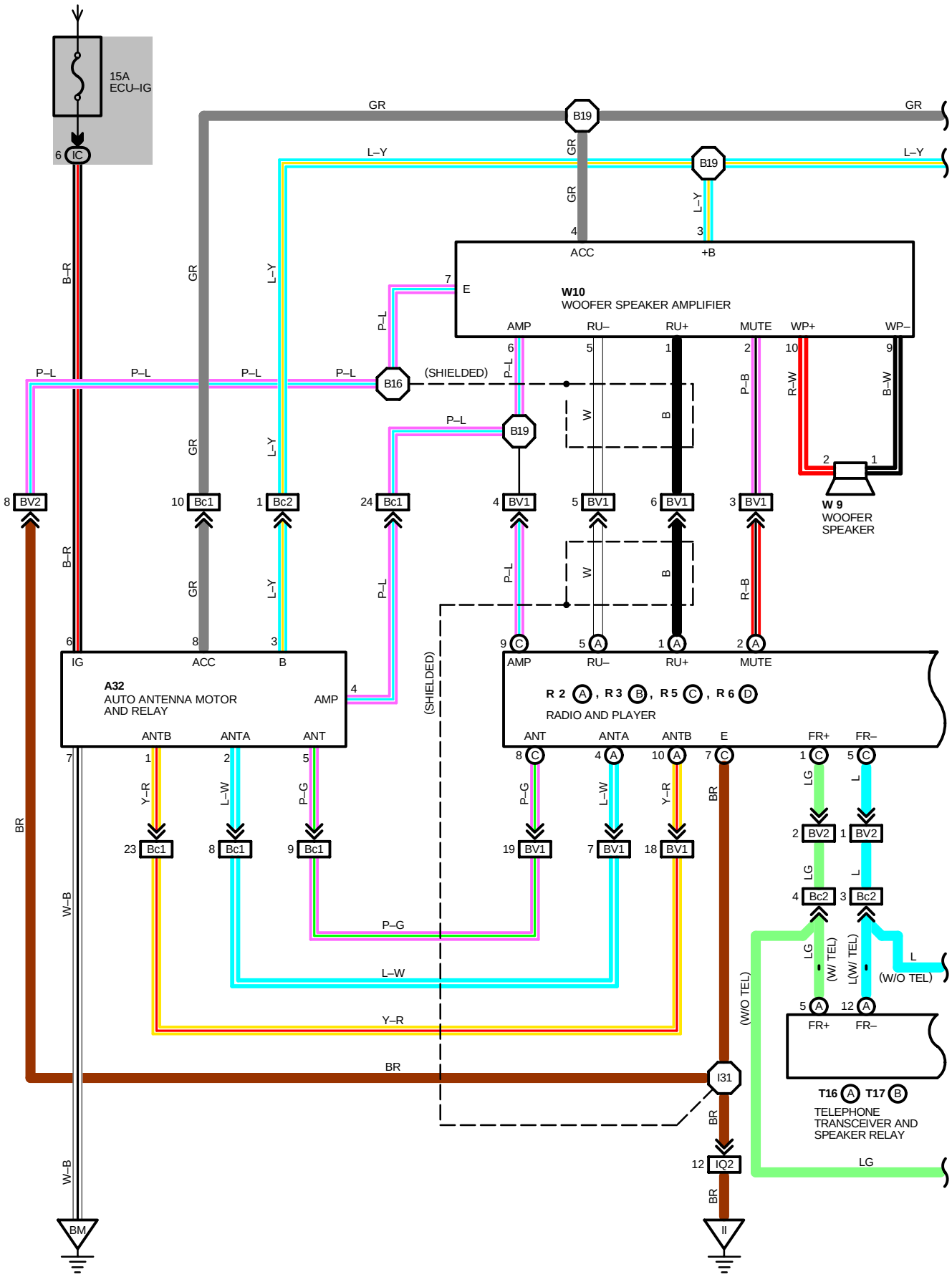

WhereEverybodyKnowsYourName

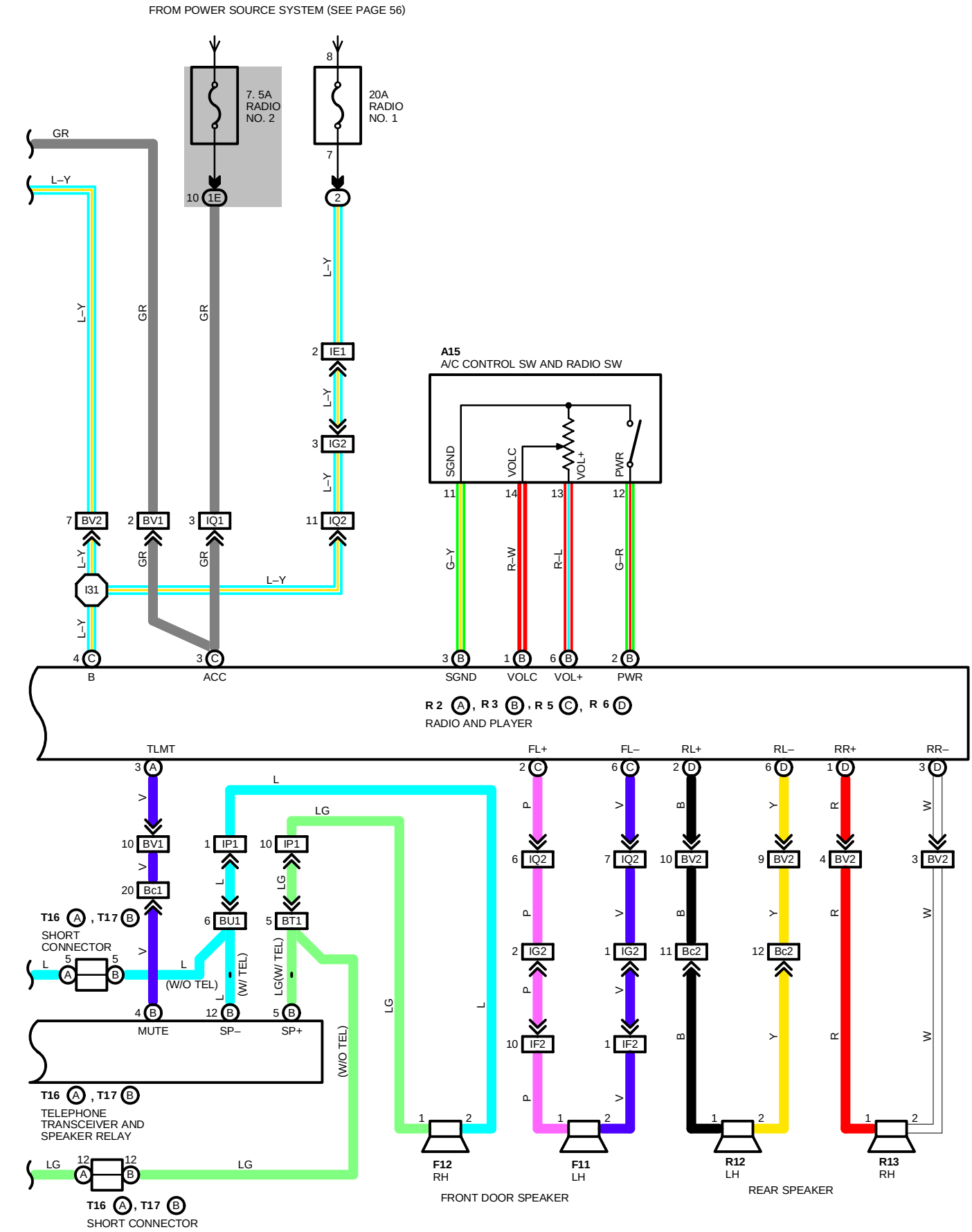

WhereEverybodyKnowsYourName

RADIO AND PLAYER (w/o CD PLAYER)

SERVICE HINTS

R 5(A) RADIO AND PLAYER

(A) 3–GROUND : APPROX. **12** VOLTS WITH IGNITION SW AT **ACC** OR **ON** POSITION
(A) 4–GROUND : ALWAYS APPROX. **12** VOLTS
(A) 7–GROUND : ALWAYS CONTINUITY

: PARTS LOCATION

CODE		SEE PAGE	CODE		SEE PAGE	CODE		SEE PAGE
A15		28	**R 3**	B	29	**T16**	A	31
A32		30	**R 5**	C	29	**T17**	B	31
F11		30	**R 6**	D	29	**W 9**		31
F12		30	**R12**		31	**W10**		31
R 2	A	29	**R13**		31			

: RELAY BLOCKS

CODE	SEE PAGE	RELAY BLOCKS (RELAY BLOCK LOCATION)
2	19	ENGINE COMPARTMENT LEFT

: JUNCTION BLOCK AND WIRE HARNESS CONNECTOR

CODE	SEE PAGE	JUNCTION BLOCK AND WIRE HARNESS (CONNECTOR LOCATION)
1C	20	FLOOR WIRE
1E	20	INSTRUMENT PANEL WIRE

: CONNECTOR JOINING WIRE HARNESS AND WIRE HARNESS

CODE	SEE PAGE	JOINING WIRE HARNESS AND WIRE HARNESS (CONNECTOR LOCATION)
IE1	36	ENGINE ROOM MAIN WIRE AND COWL WIRE (R/B NO. 4)
IF2	36	FRONT DOOR LH WIRE AND COWL WIRE (LEFT KICK PANEL)
IG2	36	INSTRUMENT PANEL WIRE AND COWL WIRE (R/B NO. 5)
IP1	38	FRONT DOOR RH WIRE AND COWL WIRE (RIGHT KICK PANEL)
IQ1	38	INSTRUMENT PANEL WIRE AND CONSOLE BOX WIRE (UNDER THE INSTRUMENT PANEL CENTER)
IQ2		
BT1	40	FLOOR WIRE AND COWL WIRE (LEFT KICK PANEL)
BU1	40	INSTRUMENT PANEL WIRE AND FLOOR WIRE (LEFT KICK PANEL)
BV1	40	FLOOR NO. 3 WIRE AND CONSOLE BOX WIRE (UNDER THE INSTRUMENT PANEL CENTER)
BV2		
Bc1	40	FLOOR NO. 3 WIRE AND FLOOR WIRE (UNDER THE LEFT SIDE OF REAR SEAT CUSHION)
Bc2		

: GROUND POINTS

CODE	SEE PAGE	GROUND POINTS LOCATION
II	36	UNDER THE ASHTRAY RH
BM	40	BACK PANEL CENTER

: SPLICE POINTS

CODE	SEE PAGE	WIRE HARNESS WITH SPLICE POINTS	CODE	SEE PAGE	WIRE HARNESS WITH SPLICE POINTS
I31	38	CONSOLE BOX WIRE	**B19**	40	FLOOR NO. 3 WIRE
B16	40	FLOOR NO. 3 WIRE			

A15

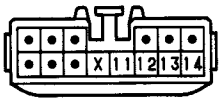

A32

F11, F12

R 2 (A)

R 3 (B)

R 5 (C)

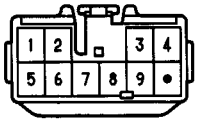

R 6 (D)

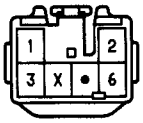

R12, R13

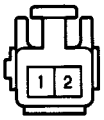

T16 (A)

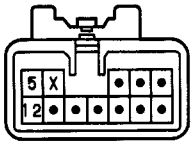

T17 (B)

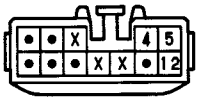

W 9

W10

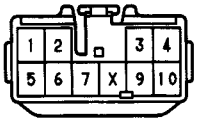

WhereEverybodyKnowsYourName

REAR WINDOW DEFOGGER AND MIRROR HEATER

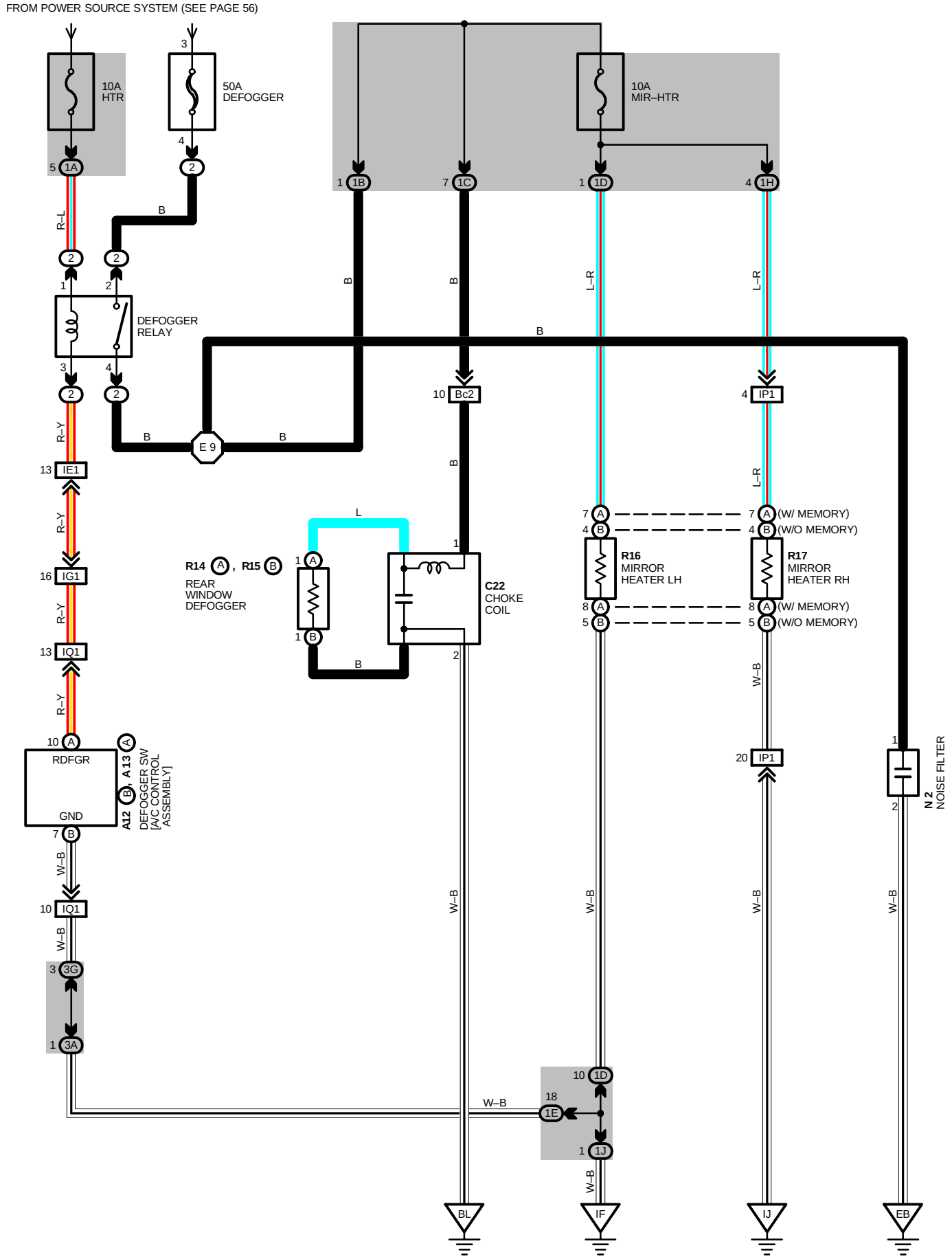

WhereEverybodyKnowsYourName

SERVICE HINTS

DEFOGGER RELAY

2–4 : CLOSED WITH IGNITION SW AT **ON** POSITION AND DEFOGGER SW (A/C CONTROL ASSEMBLY) ON

: PARTS LOCATION

CODE		SEE PAGE	CODE		SEE PAGE	CODE		SEE PAGE
A12	B	28	**R14**	A	31	**R17**	A	31
A13	A	28	**R15**	B	31	**R17**	B	31
C22		30	**R16**	A	31			
N 2		27	**R16**	B	31			

: RELAY BLOCKS

CODE	SEE PAGE	RELAY BLOCKS (RELAY BLOCK LOCATION)
2	19	ENGINE COMPARTMENT LEFT

: JUNCTION BLOCK AND WIRE HARNESS CONNECTOR

CODE	SEE PAGE	JUNCTION BLOCK AND WIRE HARNESS (CONNECTOR LOCATION)
1A	20	ENGINE ROOM MAIN WIRE
1B		
1C	20	FLOOR WIRE
1D	20	FRONT DOOR LH WIRE
1E	20	INSTRUMENT PANEL WIRE
1H	20	COWL WIRE
1J		
3A	22	INSTRUMENT PANEL WIRE
3G		

: CONNECTOR JOINING WIRE HARNESS AND WIRE HARNESS

CODE	SEE PAGE	JOINING WIRE HARNESS AND WIRE HARNESS (CONNECTOR LOCATION)
IE1	36	ENGINE ROOM MAIN WIRE AND COWL WIRE (R/B NO. 4)
IG1	36	INSTRUMENT PANEL WIRE AND COWL WIRE (R/B NO. 5)
IP1	38	FRONT DOOR RH WIRE AND COWL WIRE (RIGHT KICK PANEL)
IQ1	38	INSTRUMENT PANEL WIRE AND CONSOLE BOX WIRE (UNDER THE INSTRUMENT PANEL CENTER)
Bc2	40	FLOOR NO. 3 WIRE AND FLOOR WIRE (UNDER THE LEFT SIDE OF REAR SEAT CUSHION)

: GROUND POINTS

CODE	SEE PAGE	GROUND POINTS LOCATION
EB	34	FRONT SIDE OF LEFT FENDER
IF	36	LEFT KICK PANEL
IJ	36	RIGHT KICK PANEL
BL	40	UNDER THE CENTER PILLAR RH

: SPLICE POINTS

CODE	SEE PAGE	WIRE HARNESS WITH SPLICE POINTS	CODE	SEE PAGE	WIRE HARNESS WITH SPLICE POINTS
E 9	34	ENGINE ROOM MAIN WIRE			

A12 (B)

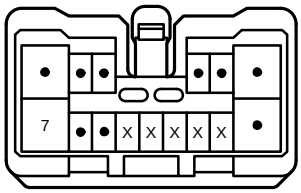

A13 (A)

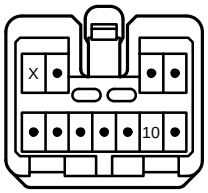

C22

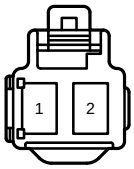

N 2

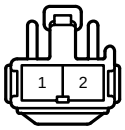

R14 (A), **R15** (B)

R16, R17 (A) (W/ MEMORY)

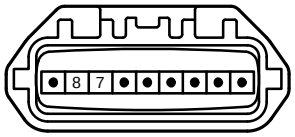

R16, R17 (B) (W/O MEMORY)

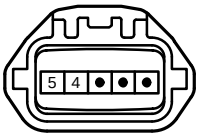

WhereEverybodyKnowsYourName

SEAT HEATER

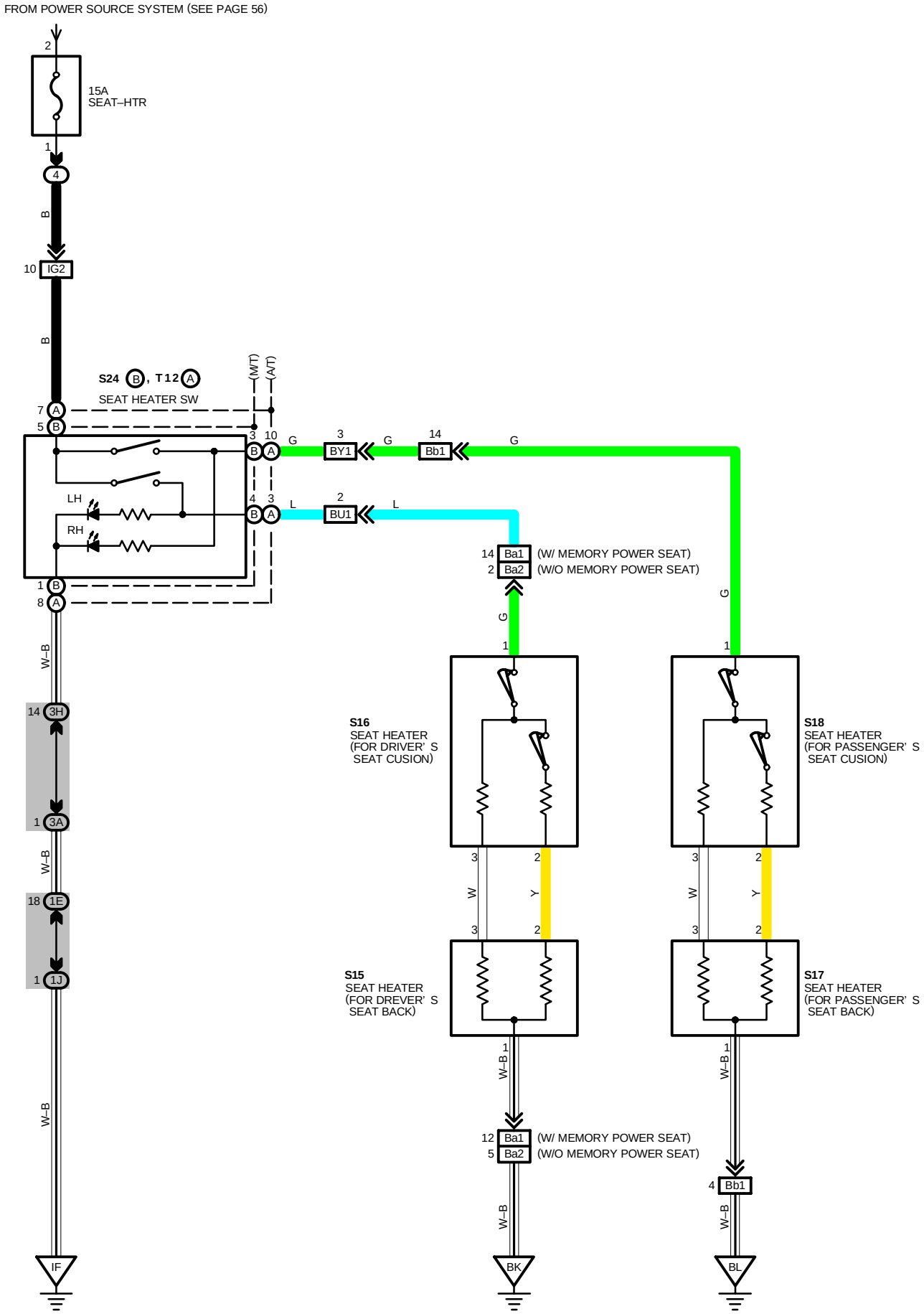

WhereEverybodyKnowsYourName

SERVICE HINTS

T12 SEAT HEATER SW
7–GROUND : APPROX. **12** VOLTS WITH SW AT **ON** POSITION
8–GROUND : ALWAYS CONTINUITY

: PARTS LOCATION

CODE	SEE PAGE	CODE	SEE PAGE	CODE		SEE PAGE
S15	32	**S17**	32	**S24**	B	29
S16	32	**S18**	32	**T12**	A	29

: RELAY BLOCKS

CODE	SEE PAGE	RELAY BLOCKS (RELAY BLOCK LOCATION)
4	23	LEFT KICK PANEL (J/B NO. 1 LEFT)

: JUNCTION BLOCK AND WIRE HARNESS CONNECTOR

CODE	SEE PAGE	JUNCTION BLOCK AND WIRE HARNESS (CONNECTOR LOCATION)
1E	20	INSTRUMENT PANEL WIRE
1J	20	COWL WIRE
3A	22	INSTRUMENT PANEL WIRE
3H		

: CONNECTOR JOINING WIRE HARNESS AND WIRE HARNESS

CODE	SEE PAGE	JOINING WIRE HARNESS AND WIRE HARNESS (CONNECTOR LOCATION)
IG2	36	INSTRUMENT PANEL WIRE AND COWL WIRE (R/B NO. 5)
BU1	40	FLOOR WIRE AND INSTRUMENT PANEL WIRE (LEFT KICK PANEL)
BY1	40	INSTRUMENT PANEL WIRE AND FLOOR NO. 3 WIRE (RIGHT KICK PANEL)
Ba1	42	FLOOR WIRE AND FRONT SEAT LH WIRE (UNDER THE FRONT LH SEAT)
Ba2		
Bb1	42	FLOOR NO. 3 WIRE AND FRONT SEAT RH WIRE (UNDER THE FRONT RH SEAT)

: GROUND POINTS

CODE	SEE PAGE	GROUND POINTS LOCATION
IF	36	LEFT KICK PANEL
BK	40	UNDER THE CENTER PILLAR LH
BL	40	UNDER THE CENTER PILLAR RH

S15, S17

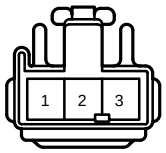

S16, S18 ORANGE

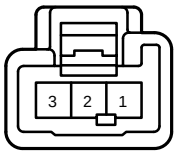

S24 (B)

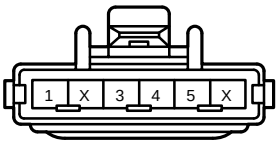

T12 (A)

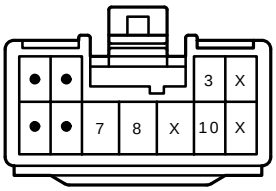

WhereEverybodyKnowsYourName

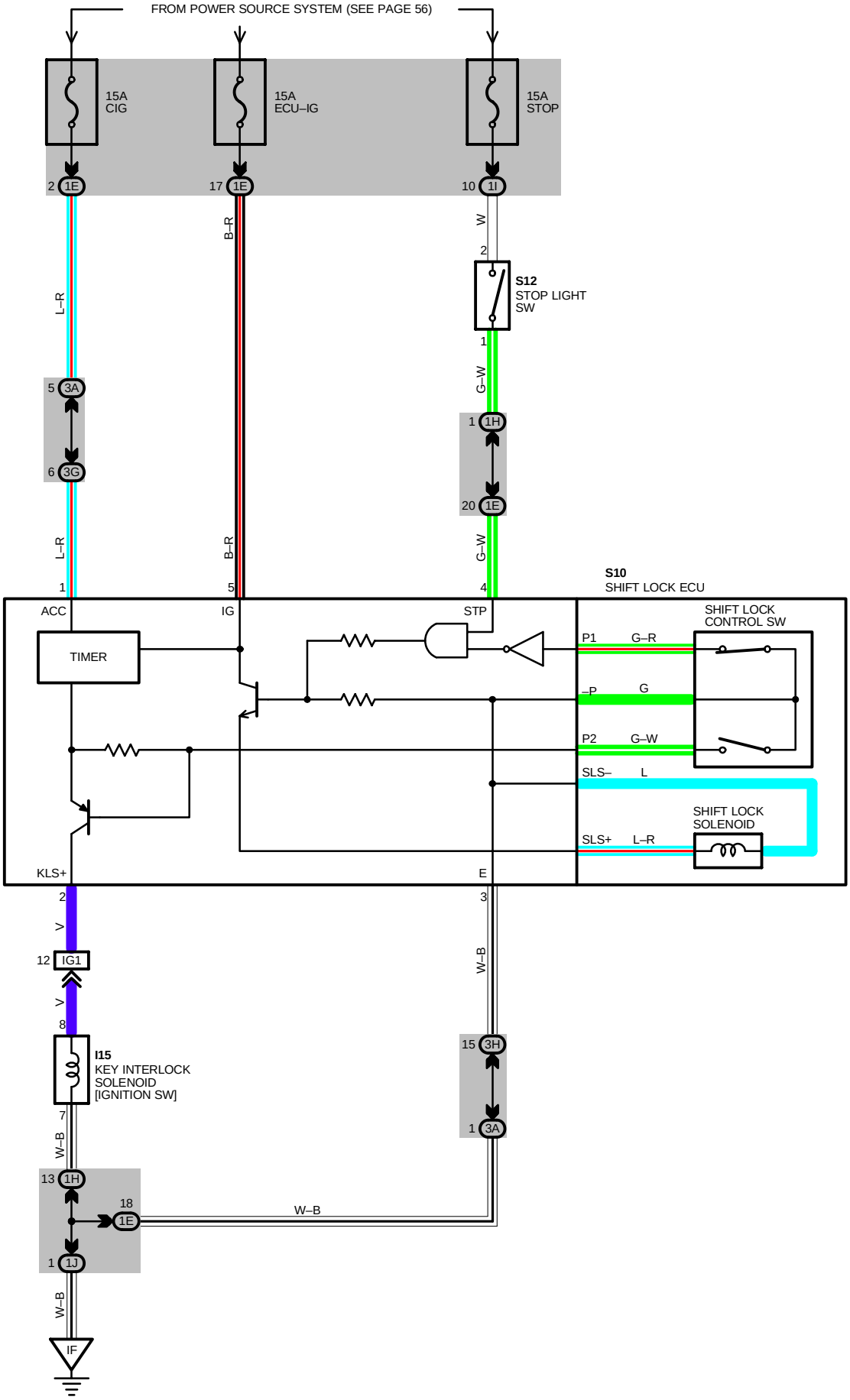

WhereEverybodyKnowsYourName

SYSTEM OUTLINE

WHEN THE IGNITION SW IS TURNED TO **ACC** POSITION THE CURRENT FROM THE **CIG** FUSE FLOWS TO **TERMINAL 1** OF THE SHIFT LOCK ECU, IN THE **ON** POSITION, THE CURRENT FROM THE **ECU–IG** FUSE FLOWS TO **TERMINAL 5** OF THE ECU.

1. SHIFT LOCK MECHANISM

WITH THE IGNITION SW ON, WHEN A SIGNAL THAT THE BRAKE PEDAL IS DEPRESSED (STOP LIGHT SW ON) AND A SIGNAL THAT THE SHIFT LEVER IS PUT IN “P” RANGE (CONTINUITY BETWEEN P1 AND P OF THE SHIFT LOCK CONTROL SW) IS INPUT TO THE ECU, THE ECU OPERATES AND CURRENT FLOWS FROM **TERMINAL 5** OF THE ECU → **TERMINAL SL+** OF THE SHIFT LOCK SOLENOID → SOLENOID → **TERMINAL SL–** → **TERMINAL 3** OF THE ECU → **GROUND.** THIS CAUSES THE SHIFT LOCK SOLENOID TO TURN ON (PLATE STOPPER DISENGAGES) AND THE SHIFT LEVER CAN SHIFT INTO RANGE OTHER THAN THE “P” RANGE.

2. KEY INTER LOCK MECHANISM

WITH THE IGNITION SW **ON** OR **ACC** POSITION, WHEN THE SHIFT LEVER IS PUT IN “P” RANGE (NO CONTINUITY BETWEEN P2 AND P OF SHIFT LOCK CONTROL SW), THE CURRENT FLOWING FROM **TERMINAL 2** OF THE ECU → KEY INTER LOCK SOLENOID IS CUT OFF. THIS CAUSES THE KEY INTER LOCK SOLENOID TO TURN OFF (LOCK LEVER DISENGAGES FROM **LOCK** POSITION) AND THE IGNITION KEY CAN BE TURNED FROM **ACC** TO **LOCK** POSITION. IF THE IGNITION IS LEFT IN **ACC** OR **ON** POSITION WITH THE SHIFT LEVER IN OTHER THAN “P” RANGE, THAN AFTER APPROX. ONE HOUR THE ECU OPERATES TO RELEASE THE LOCK.

SERVICE HINTS

S10 SHIFT LOCK ECU
1–GROUND : APPROX. **12** VOLTS WITH IGNITION SW AT **ACC** OR **ON** POSITION
5–GROUND : APPROX. **12** VOLTS WITH IGNITION SW AT **ON** POSITION
3–GROUND : ALWAYS CONTINUITY
4–GROUND : APPROX. **12** VOLTS WITH BRAKE PEDAL DEPRESSED
S12 STOP LIGHT SW
2–1 : CLOSED WITH BRAKE PEDAL DEPRESSED

○ : PARTS LOCATION

CODE	SEE PAGE	CODE	SEE PAGE	CODE	SEE PAGE
I15	29	**S10**	29	**S12**	29

⬭ : JUNCTION BLOCK AND WIRE HARNESS CONNECTOR

CODE	SEE PAGE	JUNCTION BLOCK AND WIRE HARNESS (CONNECTOR LOCATION)
1E	20	INSTRUMENT PANEL WIRE
1H	20	COWL WIRE
1I		
1J		
3A	22	INSTRUMENT PANEL WIRE
3G		
3H		

▭ : CONNECTOR JOINING WIRE HARNESS AND WIRE HARNESS

CODE	SEE PAGE	JOINING WIRE HARNESS AND WIRE HARNESS (CONNECTOR LOCATION)
IG1	36	INSTRUMENT PANEL WIRE AND COWL WIRE (R/B NO. 5)

▽ : GROUND POINTS

CODE	SEE PAGE	GROUND POINTS LOCATION
IF	36	LEFT KICK PANEL

I15 BLACK

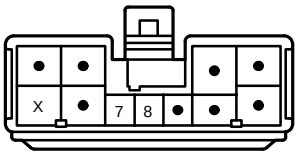

S10

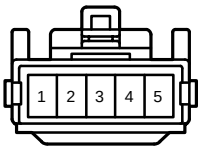

S12

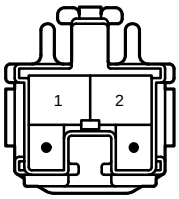

WhereEverybodyKnowsYourName

NOTICE: When inspecting or repairing the SRS AIRBAG, perform the operation in accordance with the following precautionary instructions and the procedure and precautions in the Repair Manual for the applicable model year.

▼ Malfunction symptoms of the airbag system are difficult to confirm, so the diagnostic codes become the most important source of information when troubleshooting.

When troubleshooting the airbag system, always inspect the diagnostic codes before disconnecting the battery.

▼ Work must be started after 30 seconds or longer from the time the Ignition SW is set to the “LOCK” position and the negative (–) terminal cable is disconnected from the battery.

(The airbag system is equipped with a back–up power source so that if work is started within 30 seconds of disconnecting the negative (–) terminal cable of the battery, the airbag may be deployed.)

When the negative (–) terminal cable is disconnected from the battery, memory of the clock and audio systems will be cancelled. So before starting work, make a record of the contents memorized by each memory system. Then when work is finished, reset the clock and audio system as before.

When the vehicle has tilt and telescopic steering, power seat, outside rear view mirror and power shoulder belt anchorage, which are all equipped with memory function, it is not possible to make a record of the memory contents. So when the operation is finished, it will be necessary to explain this fact to the customer, and request the customer to adjust the features and reset the memory.

To avoid erasing the memory of each memory system, never use a back–up power supply from outside the vehicle.

▼ When removing the steering wheel pad or handling a new steering wheel pad, keep the pad upper surface facing upward. Also, lock the lock lever of the twin lock type connector at the rear of the pad and take care not to damage the connector.

(Storing the pad with its metallic surface up may lead to a serious accident if the airbag inflates for some reason).

▼ Store the steering wheel pad where the ambient temperature remains below 93˚C (200˚F), without high humidity and away from electrical noise.

▼ Never use airbag parts from another vehicle. When replacing airbag parts, replace them with new parts.

▼ Never disassemble or repair the steering wheel pad, center airbag sensor assembly or front airbag sensors.

▼ Before repairing the body, remove the airbag sensors if during repair shocks are likely to be applied to the sensors due to vibration of the body or direct tapping with tools or other parts.

▼ Do not reuse a steering wheel pad or front airbag sensors.

After evaluating whether the center airbag sensor assembly is damaged or not, decide whether or not to reuse it. (See the Repair Manual for the method for evaluating the center airbag sensor assembly.)

▼ When troubleshooting the airbag system, use a high–impedance (Min. 10kΩ/V) tester.

▼ The vehicle wiring harness exclusively for the airbag system is distinguished by corrugated yellow tubing, as are the connectors.

▼ Do not measure the resistance of the airbag squib.

(It is possible this will deploy the airbag and is very dangerous.)

▼ If the wire harness used in the airbag system is damaged, replace the whole wire harness assembly.

When the connector to the airbag front sensors can be repaired alone (when there is no damage to the wire harness), use the repair wire specially designed for the purpose.

(Refer to the Repair Manual for the applicable Model year for details of the replacement method.)

▼ INFORMATION LABELS (NOTICES) are attached to the periphery of the airbag components. Follow the instructions on the notices.

WhereEverybodyKnowsYourName

The airbag system has connectors which possess the functions described below:

1. AIRBAG ACTIVATION PREVENTION MECHANISM

   Each connector contains a short spring plate. When the connector is disconnected, the short spring plate automatically connects the power source and grounding terminals of the squib to preclude a potential difference between the terminals.

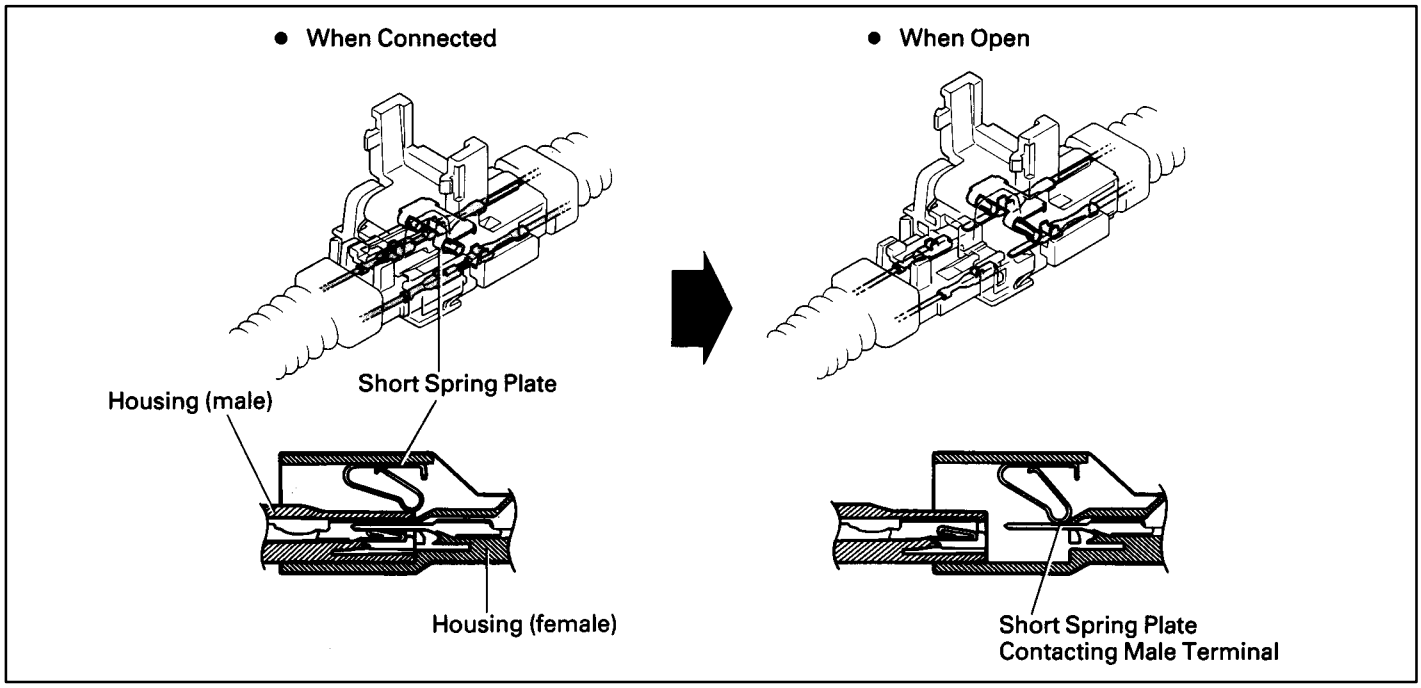

2. ELECTRICAL CONNECTION CHECK MECHANISM

   This mechanism is designed to electrically check if connectors are connected correctly and completely.

   The electrical connection check mechanism is designed so that the connection detection pin connects with the diagnosis terminals when the connector housing lock is in the locked condition.

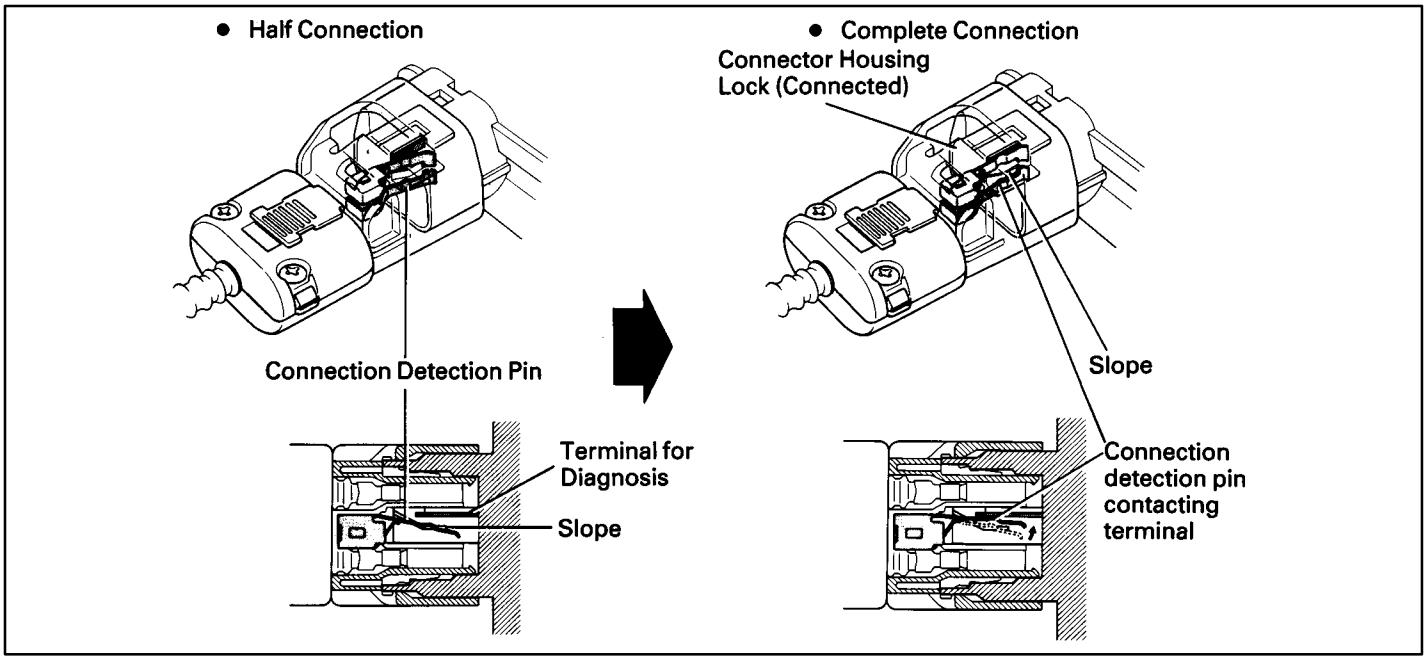

WhereEverybodyKnowsYourName

3. CONNECTOR TWIN–LOCK MECHANISM

With this mechanism connectors (male and female connectors) are locked by two locking devices to increase connection reliability. If the primary lock is incomplete, ribs interfere and prevent the secondary lock.

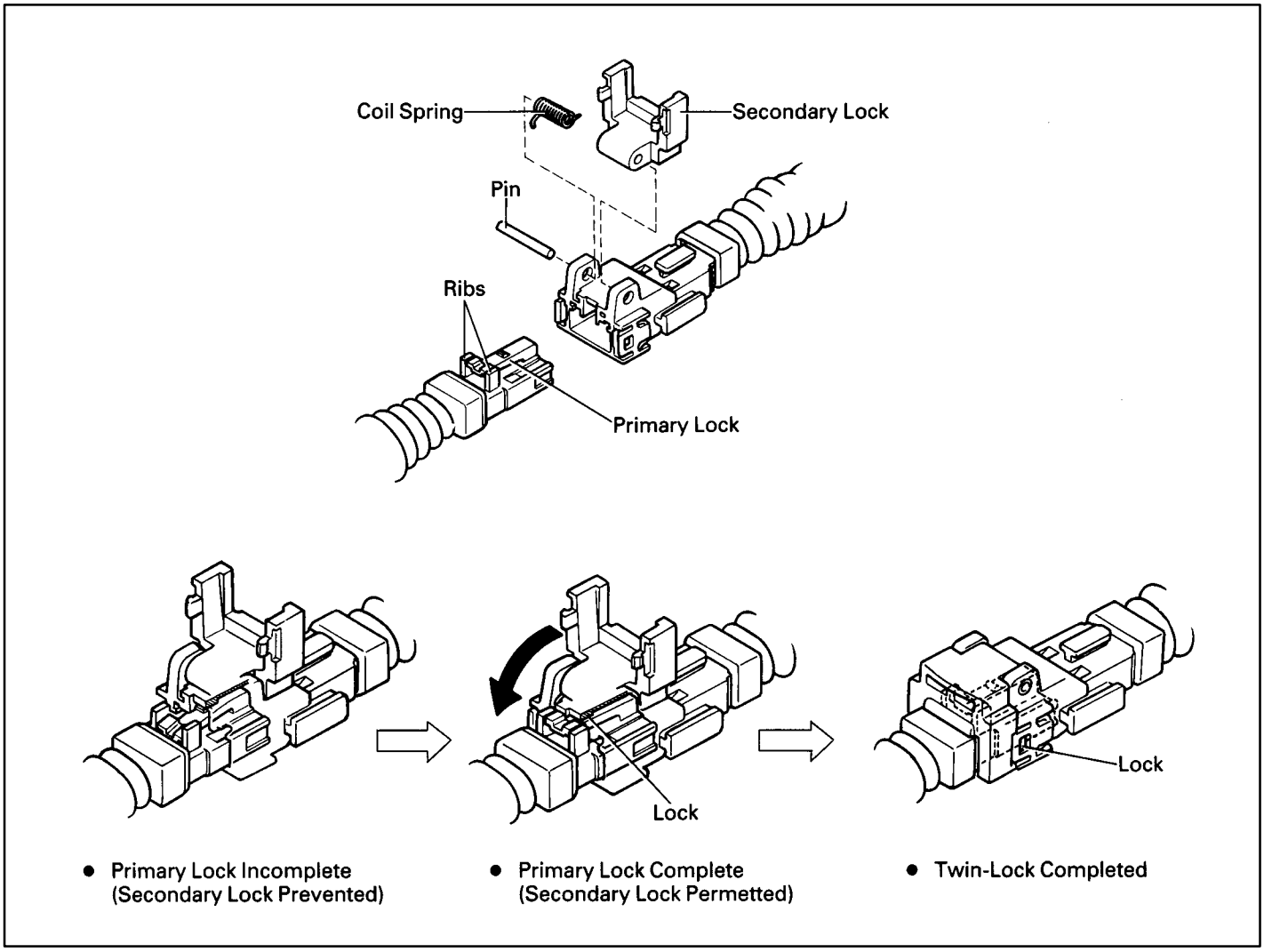

WhereEverybodyKnowsYourName

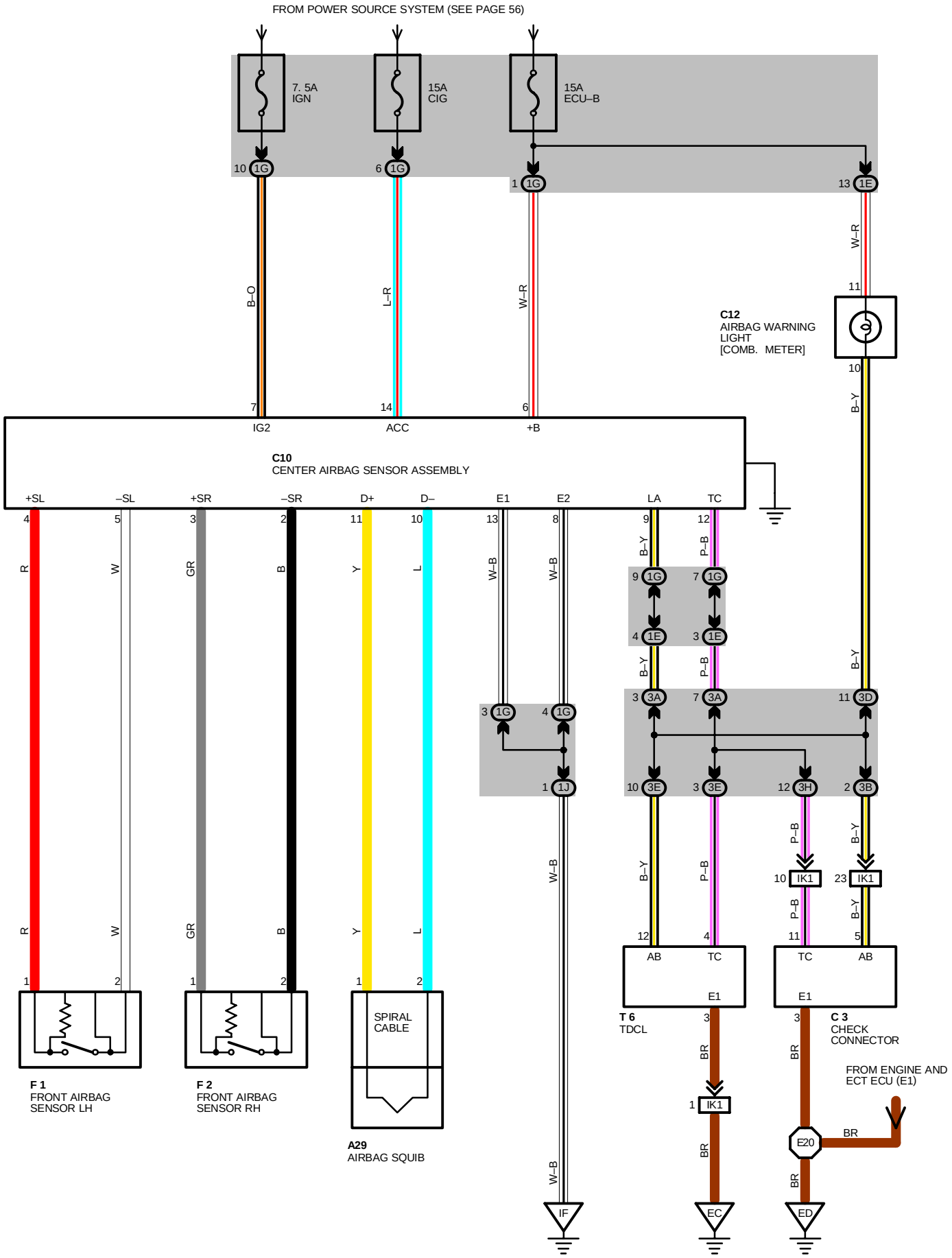

WhereEverybodyKnowsYourName

SYSTEM OUTLINE

THE SRS (SUPPLEMENTAL RESTRAINT SYSTEM) AIRBAG IS A DRIVER PROTECTION DEVICE WHICH HAS A SUPPLEMENTAL ROLE TO THE SEAT BELTS.
CURRENT FLOWS CONSTANTLY TO **TERMINAL 6** OF THE CENTER AIRBAG SENSOR ASSEMBLY. WHEN THE IGNITION SW IS TURNED TO ACC OR ON, CURRENT FROM THE **CIG** FUSE FLOWS TO **TERMINAL 14** OF THE CENTER AIRBAG SENSOR ASSEMBLY. ONLY WHEN THE IGNITION SW IS ON DOES THE CURRENT FROM THE **IGN** FUSE TO **TERMINAL 7**.
IF AN ACCIDENT OCCURS WHILE DRIVING, DECELERATION CAUSED BY A FRONTAL IMPACT IS DETECTED BY EACH SENSOR AND SWITCH, AND WHEN THE FRONTAL IMPACT EXCEEDS A SET LEVEL (WHEN THE SAFING SENSOR BUILT INTO THE CENTER AIRBAG SENSOR ASSEMBLY IS ON AND THE CENTER AIRBAG SENSOR IS ON, FRONT AIRBAG SENSORS ARE OFF), CURRENT FROM THE **CIG** OR **IGN** FUSE FLOWS TO **TERMINAL 11** OF THE CENTER AIRBAG SENSOR ASSEMBLY → **TERMINAL 1** OF THE AIRBAG SQUIB → SQUIB → **TERMINAL 2** → **TERMINAL 10** OF CENTER AIRBAG SENSOR ASSEMBLY → **TERMINAL 8, TERMINAL 13** OR BODY GROUND → **GROUND.**
WHEN THE SAFING SENSOR BUILT INTO THE CENTER AIRBAG SENSOR ASSEMBLY IS ON AND THE FRONT AIRBAG SENSOR LH OR RH IS ON, CENTER AIRBAG SENSOR IS OFF AND CURRENT FROM THE **CIG** OR **IGN** FUSE FLOWS TO **TERMINAL 11** OF THE CENTER AIRBAG SENSOR ASSEMBLY → **TERMINAL 1** OF THE AIRBAG SQUIB → SQUIB → **TERMINAL 2** → **TERMINAL 10** OF CENTER AIRBAG SENSOR ASSEMBLY → **TERMINAL 3** OR **4** → **TERMINAL 1** OF FRONT AIRBAG SENSOR → **TERMINAL 2** → **TERMINAL 2** OR **5** OF CENTER AIRBAG SENSOR ASSEMBLY → **TERMINAL 8, TERMINAL 13** OR **BODY GROUND** → **GROUND**, WHEN THE SAFING SENSOR BUILT INTO THE CENTER AIRBAG SENSOR ASSEMBLY IS ON, AND THE FRONT AIRBAG SENSOR LH OR RH IS ON AND CENTER AIRBAG SENSOR IS ON ONE OF THE ABOVE–MENTIONED CIRCUITS IS ACTIVATED SO THAT CURRENT FLOWS TO THE AIRBAG SQUIB AND CAUSES IT TO OPERATE. THE BAG STORED INSIDE THE STEERING WHEEL PAD IS INSTANTANEOUSLY EXPANDED TO SOFTEN THE SHOCK TO THE DRIVER.

: PARTS LOCATION

CODE	SEE PAGE	CODE	SEE PAGE	CODE	SEE PAGE
A29	28	**C12**	28	**T 6**	29
C 3	26	**F 1**	26		
C10	28	**F 2**	26		

: JUNCTION BLOCK AND WIRE HARNESS CONNECTOR

CODE	SEE PAGE	JUNCTION BLOCK AND WIRE HARNESS (CONNECTOR LOCATION)
1E	20	INSTRUMENT PANEL WIRE
1G	20	COWL NO. 2 WIRE
1J	20	COWL WIRE
3A	22	INSTRUMENT PANEL WIRE
3B		
3D		
3E		
3H		

: CONNECTOR JOINING WIRE HARNESS AND WIRE HARNESS

CODE	SEE PAGE	JOINING WIRE HARNESS AND WIRE HARNESS (CONNECTOR LOCATION)
IK1	36	ENGINE WIRE AND INSTRUMENT PANEL WIRE (RIGHT KICK PANEL)

: GROUND POINTS

CODE	SEE PAGE	GROUND POINTS LOCATION
EC	34	FRONT SIDE OF INTAKE MANIFOLD
ED	34	REAR SIDE OF CYLINDER HEAD RH
IF	36	LEFT KICK PANEL

: SPLICE POINTS

CODE	SEE PAGE	WIRE HARNESS WITH SPLICE POINTS	CODE	SEE PAGE	WIRE HARNESS WITH SPLICE POINTS
E20	34	ENGINE WIRE			

WhereEverybodyKnowsYourName

A29 YELLOW

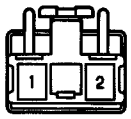

C 3 BLACK

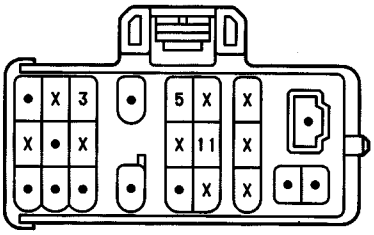

C10 YELLOW

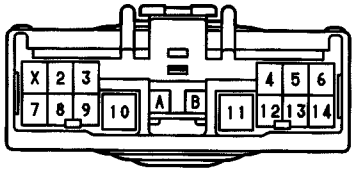

C12

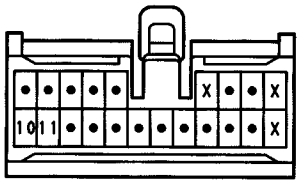

F 1, F 2 YELLOW

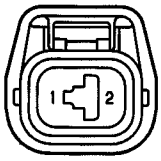

T 6 DARK GRAY

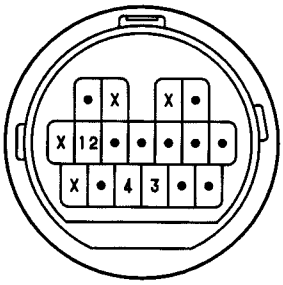

WhereEverybodyKnowsYourName

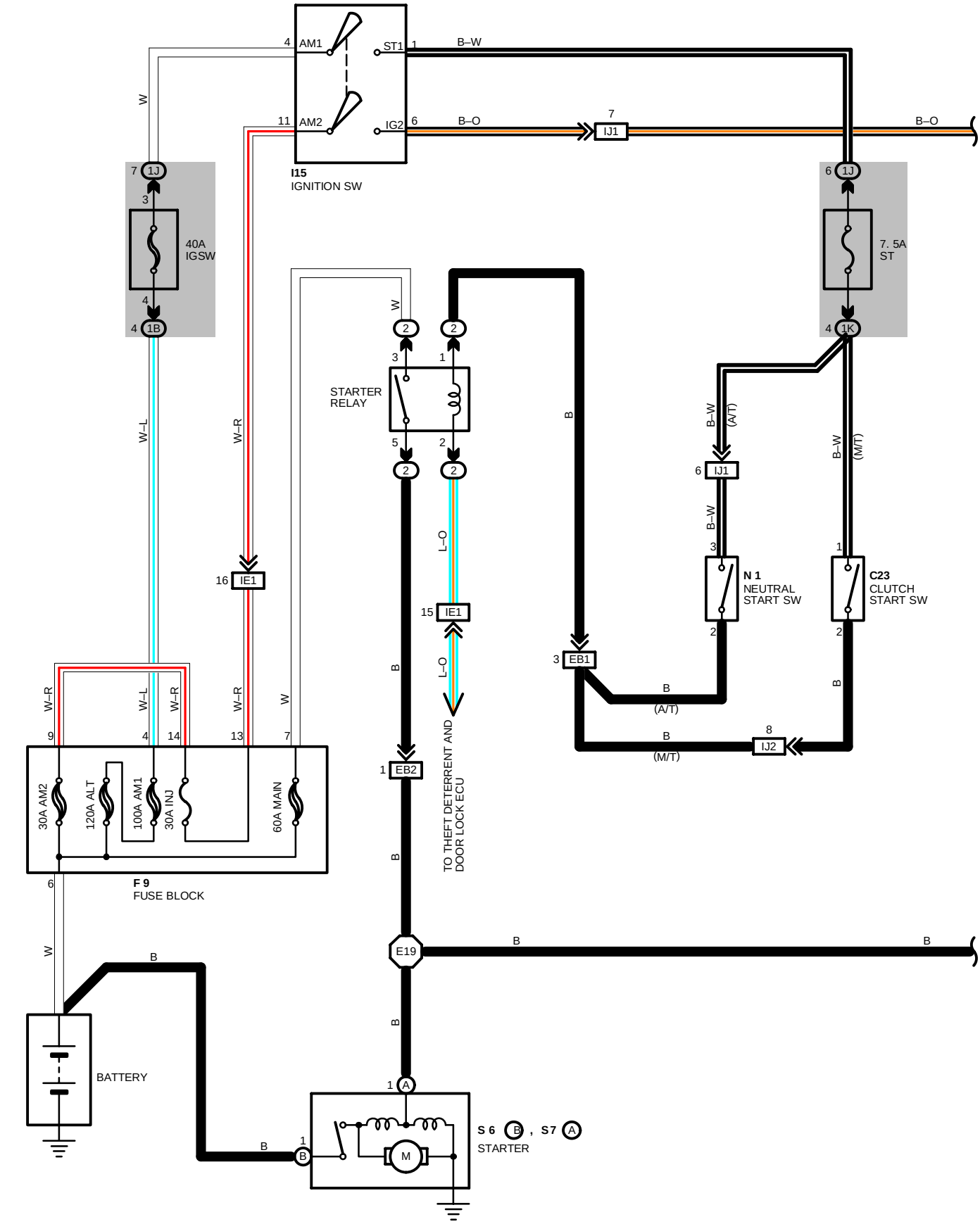

WhereEverybodyKnowsYourName

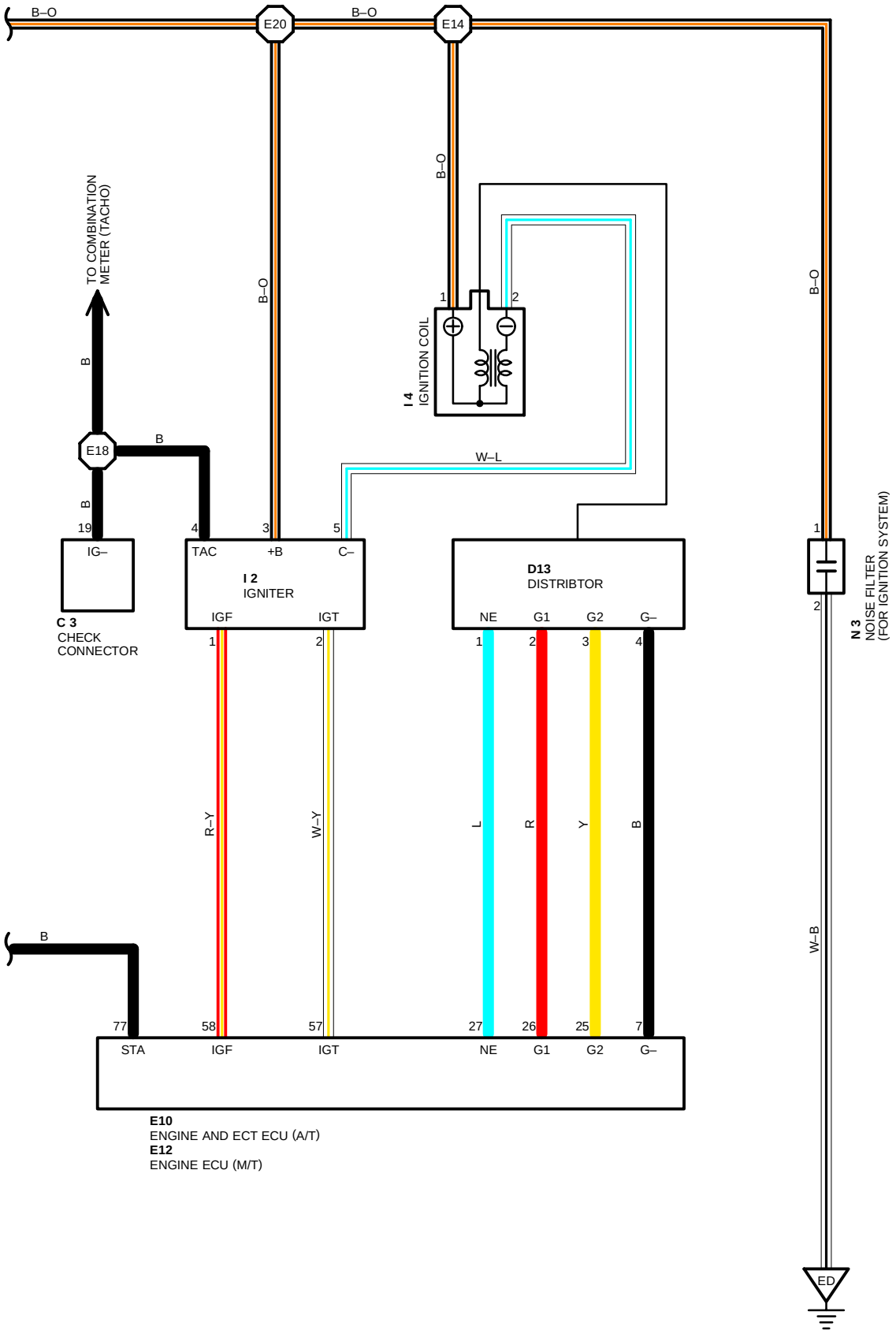

WhereEverybodyKnowsYourName

SERVICE HINTS

C 4 COLD START INJECTOR
2–1 : APPROX. **12** VOLTS WHILE START INJECTOR TIME SW IS CLOSED AND STARTER CRANKING
I15 IGNITION SW
4–1 : CLOSED WITH IGNITION SW AT **ST** POSITION
11–6: CLOSED WITH IGNITION SW AT **ON** OR **ST** POSITION
N 1 NEUTRAL START SW
3–2 : CLOSED WITH A/T SHIFT LEVER IN **P** OR **N** POSITION
S 6(B), S 7(A) STARTER
POINTS CLOSED WITH NEUTRAL START SW ON AND IGNITION SW AT **ST** POSITION

: PARTS LOCATION

CODE	SEE PAGE	CODE	SEE PAGE	CODE		SEE PAGE
C 3	26	**F 9**	26	**N 3**		27
C23	28	**I 2**	27	**S 6**	B	27
D13	26	**I 4**	27	**S 7**	A	27
E10	28	**I15**	29			
E12	28	**N 1**	27			

: RELAY BLOCKS

CODE	SEE PAGE	RELAY BLOCKS (RELAY BLOCK LOCATION)
2	19	ENGINE COMPARTMENT LEFT

: JUNCTION BLOCK AND WIRE HARNESS CONNECTOR

CODE	SEE PAGE	JUNCTION BLOCK AND WIRE HARNESS (CONNECTOR LOCATION)
1B	20	ENGINE ROOM MAIN WIRE
1J	20	COWL WIRE
1K		

: CONNECTOR JOINING WIRE HARNESS AND WIRE HARNESS

CODE	SEE PAGE	JOINING WIRE HARNESS AND WIRE HARNESS (CONNECTOR LOCATION)
EB1	34	ENGINE WIRE AND ENGINE ROOM MAIN WIRE (FRONT SIDE OF R/B NO. 2)
EB2		
IE1	36	ENGINE ROOM MAIN WIRE AND COWL WIRE (R/B NO. 4)
IJ1	36	ENGINE WIRE AND COWL WIRE (RIGHT KICK PANEL)
IJ2	36	ENGINE WIRE AND COWL WIRE (RIGHT KICK PANEL)

: GROUND POINTS

CODE	SEE PAGE	GROUND POINTS LOCATION
ED	34	REAR SIDE OF INTAKE MANIFOLD

: SPLICE POINTS

CODE	SEE PAGE	WIRE HARNESS WITH SPLICE POINTS	CODE	SEE PAGE	WIRE HARNESS WITH SPLICE POINTS
E14	34	ENGINE WIRE	**E19**	34	ENGINE WIRE
E18			**E20**		

WhereEverybodyKnowsYourName

C 3 BLACK

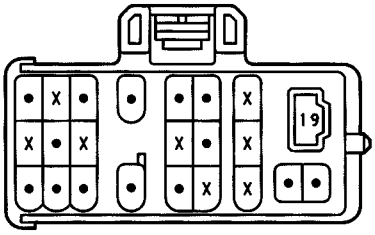

C23

D13

E10, E12 DARK GRAY

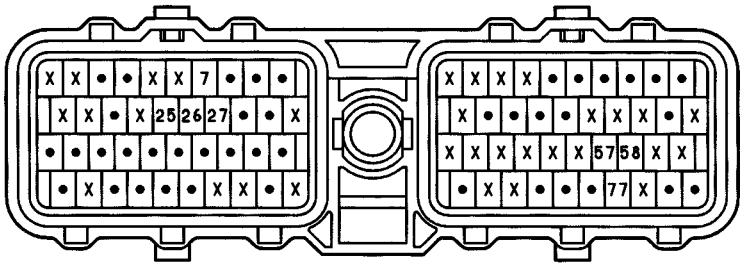

F 9 BLACK

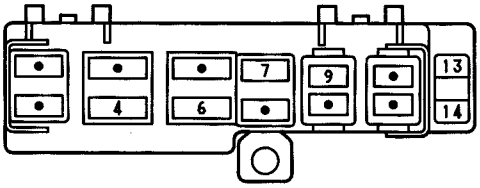

I 2 BLACK

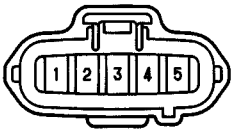

I 4 BLACK

I15 BLACK

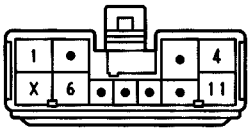

N 1 GRAY

N 3 GRAY

S 6 (B)

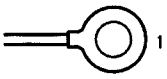

S 7 (A)

WhereEverybodyKnowsYourName

STOP LIGHT

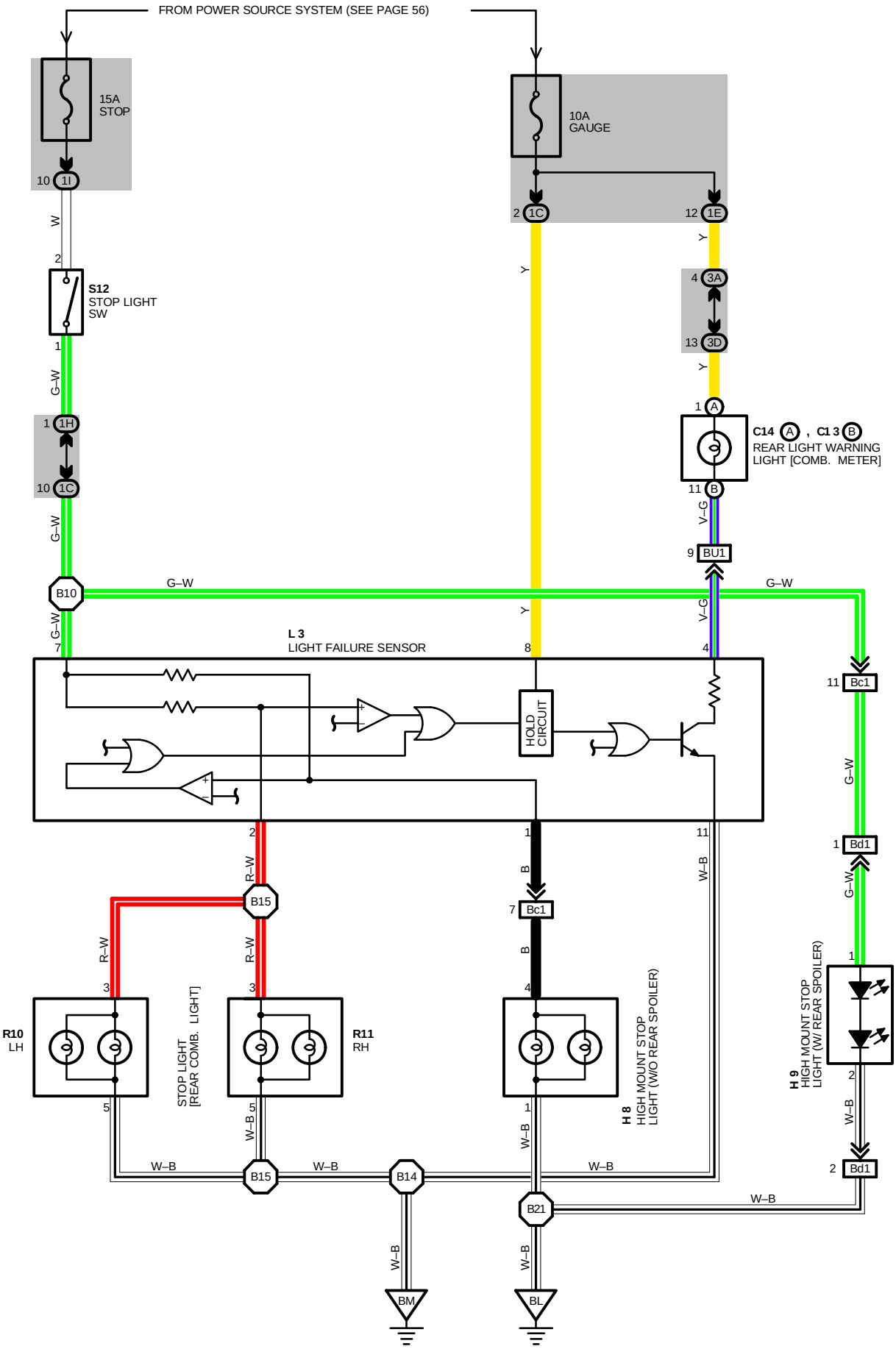

WhereEverybodyKnowsYourName

SYSTEM OUTLINE

CURRENT IS APPLIED AT ALL TIMES THROUGH A **STOP** FUSE TO **TERMINAL 2** OF THE STOP LIGHT SW.

WHEN THE IGNITION SW IS TURNED ON, CURRENT FLOWS FROM THE **GAUGE** FUSE TO **TERMINAL 8** OF THE LIGHT FAILURE SENSOR, AND ALSO FLOWS THROUGH THE REAR LIGHT WARNING LIGHT TO **TERMINAL 4** OF THE LIGHT FAILURE SENSOR.

STOP LIGHT DISCONNECTION WARNING

WHEN THE IGNITION SW IS TURNED ON AND THE BRAKE PEDAL IS PRESSED (STOP LIGHT SW ON), IF THE STOP LIGHT CIRCUIT IS OPEN, THE CURRENT FLOWING FROM **TERMINAL 7** OF THE LIGHT FAILURE SENSOR TO **TERMINALS 1, 2** CHANGES, SO THE LIGHT FAILURE SENSOR DETECTS THE DISCONNECTION AND THE WARNING CIRCUIT OF THE LIGHT FAILURE SENSOR IS ACTIVATED.

AS A RESULT, THE CURRENT FLOWS FROM **TERMINAL 4** OF THE LIGHT FAILURE SENSOR → **TERMINAL 11** → **GROUND** AND TURNS THE REAR LIGHT WARNING LIGHT ON. BY PRESSING THE BRAKE PEDAL, THE CURRENT FLOWING TO **TERMINAL 8** OF THE LIGHT FAILURE SENSOR KEEPS THE WARNING CIRCUIT ON HOLD AND THE WARNING LIGHT ON UNTIL THE IGNITION SW IS TURNED OFF.

SERVICE HINTS

S12 STOP LIGHT SW
2–1: CLOSED WITH BRAKE PEDAL DEPRESSED

L 3 LIGHT FAILURE SENSOR
1, 2, 7–GROUND : APPROX. **12** VOLTS WITH STOP LIGHT SW ON
4, 8–GROUND : APPROX. **12** VOLTS WITH IGNITION SW AT **ON** POSITION
11–GROUND : ALWAYS CONTINUITY

○ : PARTS LOCATION

CODE		SEE PAGE	CODE	SEE PAGE	CODE	SEE PAGE
C13	B	28	**H 9**	30	**R11**	31
C14	A	28	**L 3**	30	**S12**	29
H 8		30	**R10**	31		

⬭ : JUNCTION BLOCK AND WIRE HARNESS CONNECTOR

CODE	SEE PAGE	JUNCTION BLOCK AND WIRE HARNESS (CONNECTOR LOCATION)
1C	20	FLOOR WIRE
1E	20	INSTRUMENT PANEL WIRE
1H	20	COWL WIRE
1I		
3A	22	INSTRUMENT PANEL WIRE
3D		

▭ : CONNECTOR JOINING WIRE HARNESS AND WIRE HARNESS

CODE	SEE PAGE	JOINING WIRE HARNESS AND WIRE HARNESS (CONNECTOR LOCATION)
BU1	40	FLOOR WIRE AND INSTRUMENT PANEL WIRE (LEFT KICK PANEL)
Bc1	40	FLOOR NO. 3 WIRE AND FLOOR WIRE (UNDER THE LEFT SIDE OF REAR SEAT CUSHION)
Bd1	40	FLOOR NO. 3 WIRE AND LUGGAGE NO. 2 WIRE (RIGHT SIDE OF LUGGAGE COMPARTMENT)

▽ : GROUND POINTS

CODE	SEE PAGE	GROUND POINTS LOCATION
BL	40	UNDER THE CENTER PILLAR RH
BM	40	BACK PANEL CENTER

⬡ : SPLICE POINTS

CODE	SEE PAGE	WIRE HARNESS WITH SPLICE POINTS	CODE	SEE PAGE	WIRE HARNESS WITH SPLICE POINTS
B10	40	FLOOR MAIN WIRE	**B15**	40	FLOOR MAIN WIRE
B14			**B21**	40	FLOOR NO. 3 WIRE

WhereEverybodyKnowsYourName

C13 (B)

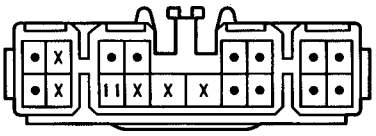

C14 (A)

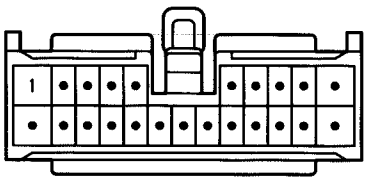

H 8

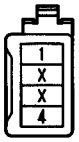

H 9

L 3

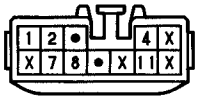

R10, R11

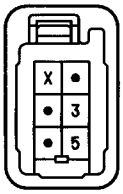

S12

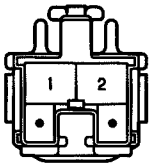

WhereEverybodyKnowsYourName

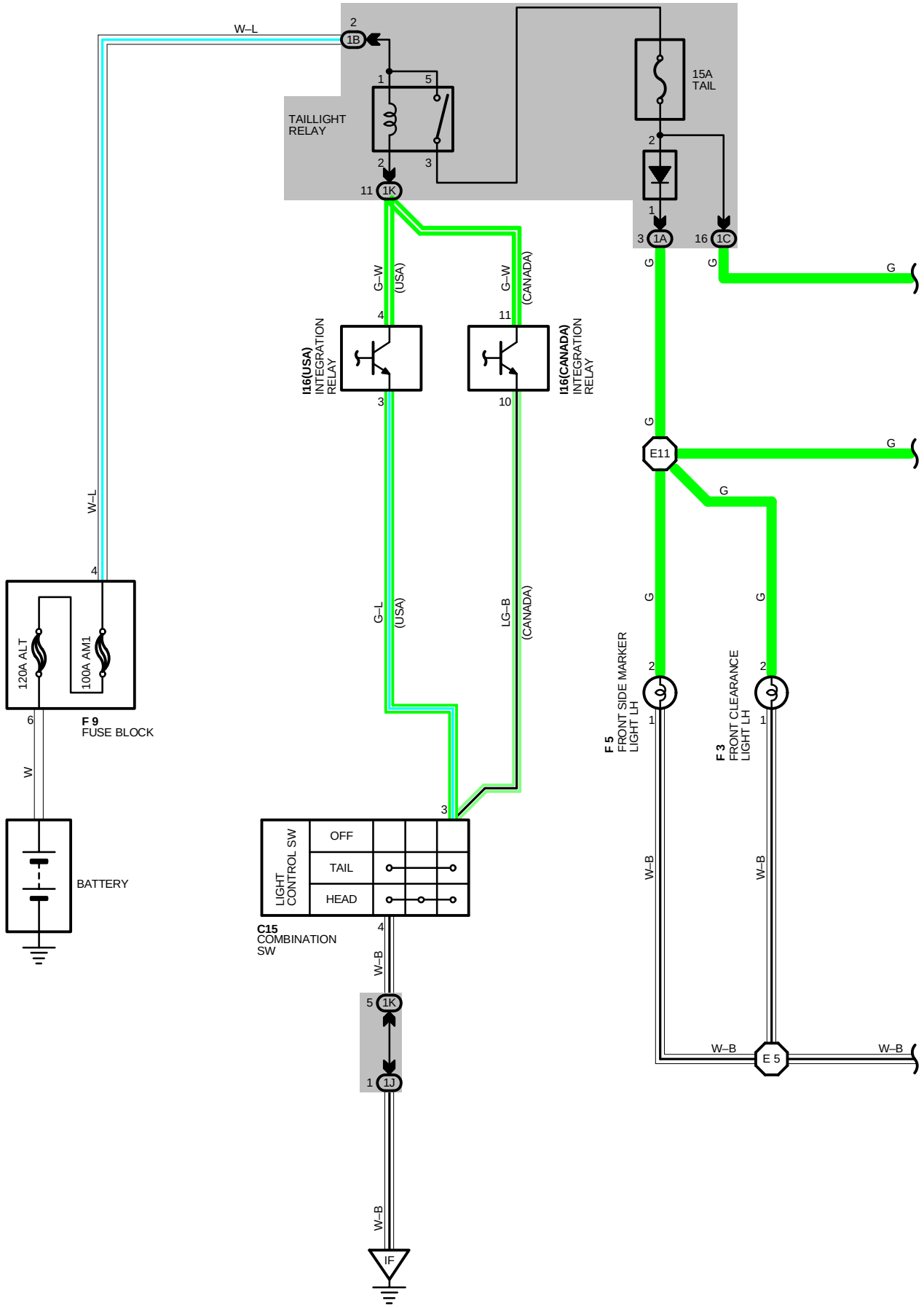

WhereEverybodyKnowsYourName

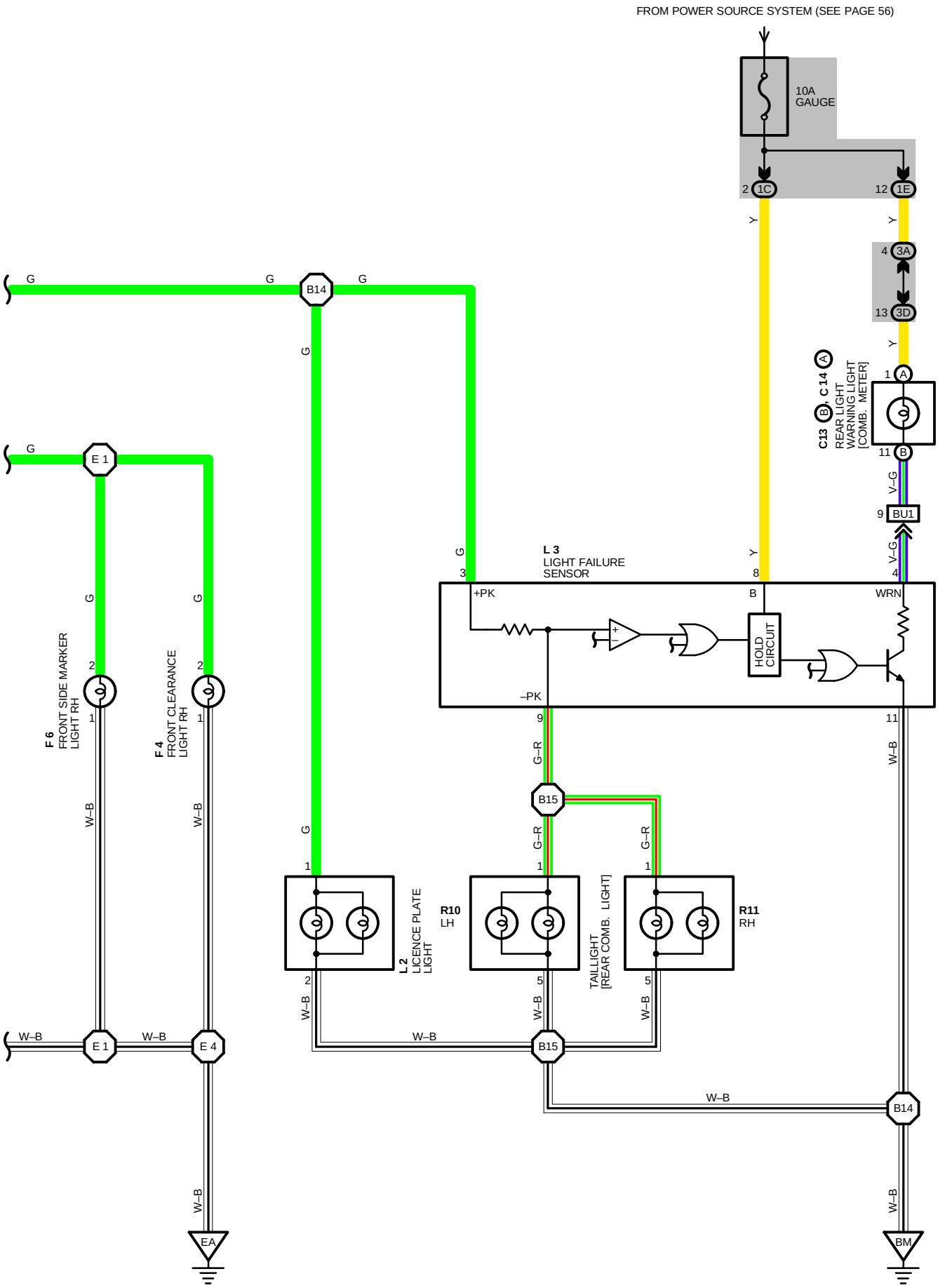

WhereEverybodyKnowsYourName

TAILLIGHT

SYSTEM OUTLINE

WHEN THE LIGHT CONTROL SW IS TURNED TO **TAIL** OR **HEAD** POSITION. THE CURRENT FLOWS TO **TERMINAL 3** OF THE LIGHT FAILURE SENSOR THROUGH THE **TAIL** FUSE.

WHEN THE IGNITION SW IS TURNED ON, THE CURRENT FLOWS FROM THE **GAUGE** FUSE TO **TERMINAL 8** OF THE LIGHT FAILURE SENSOR, AND ALSO FLOWS THROUGH THE REAR LIGHT WARNING LIGHT TO **TERMINAL 4** OF THE LIGHT FAILURE SENSOR.

TAILLIGHT DISCONNECTION WARNING

WITH THE IGNITION SW ON AND THE LIGHT CONTROL SW TURNED TO **TAIL** OR **HEAD** POSITION. IF THE TAILLIGHT CIRCUIT IS OPEN, THE LIGHT FAILURE SENSOR DETECTS THE FAILURE BY THE CHANGE IN CURRENT FLOWING FROM **TERMINAL 3** OF THE LIGHT FAILURE SENSOR TO **TERMINAL 9, 11** AND THE WARNING CIRCUIT OF THE LIGHT FAILURE SENSOR IS ACTIVATED.

AS A RESULT, THE CURRENT FLOWS FROM **TERMINAL 4** OF THE LIGHT FAILURE SENSOR → **TERMINAL 11** → **GROUND** AND TURNS THE REAR LIGHT WARNING LIGHT ON, WHICH REMAINS ON UNTIL THE LIGHT CONTROL SW IS TURNED OFF.

SERVICE HINTS

TAILLIGHT RELAY
5–3 : CLOSED WITH LIGHT CONTROL SW AT **TAIL** OR **HEAD** POSITION

L 3 LIGHT FAILURE SENSOR
4, 8–GROUND: APPROX. **12** VOLTS WITH IGNITION SW AT **ON** POSITION
3–GROUND: APPROX. **12** VOLTS WITH LIGHT CONTROL SW AT **TAIL** OR **HEAD** POSITION
11–GROUND : ALWAYS CONTINUITY

○ : PARTS LOCATION

CODE		SEE PAGE	CODE		SEE PAGE	CODE	SEE PAGE
C13	B	28	**F 5**		26	**L 2**	30
C14	A	28	**F 6**		26	**L 3**	30
C15		28	**F 9**		26	**R10**	31
F 3		26	**I16**	A	29 (USA)	**R11**	31
F 4		26		B	29 (CANADA)		

: JUNCTION BLOCK AND WIRE HARNESS CONNECTOR

CODE	SEE PAGE	JUNCTION BLOCK AND WIRE HARNESS (CONNECTOR LOCATION)
1A	20	ENGINE ROOM MAIN WIRE
1B		
1C	20	FLOOR WIRE
1E	20	INSTRUMENT PANEL WIRE
1J	20	COWL WIRE
1K		
3A	22	INSTRUMENT PANEL WIRE
3D		

: CONNECTOR JOINING WIRE HARNESS AND WIRE HARNESS

CODE	SEE PAGE	JOINING WIRE HARNESS AND WIRE HARNESS (CONNECTOR LOCATION)
BU1	40	FLOOR WIRE AND INSTRUMENT PANEL WIRE (LEFT KICK PANEL)

▽ : GROUND POINTS

CODE	SEE PAGE	GROUND POINTS LOCATION
EA	34	FRONT SIDE OF RIGHT FENDER
IF	36	LEFT KICK PANEL
BM	40	BACK PANEL CENTER

: SPLICE POINTS

CODE	SEE PAGE	WIRE HARNESS WITH SPLICE POINTS	CODE	SEE PAGE	WIRE HARNESS WITH SPLICE POINTS
E 1	34	ENGINE ROOM MAIN WIRE	**E11**	34	ENGINE ROOM MAIN WIRE
E 4			**B14**	40	FLOOR MAIN WIRE
E 5			**B15**		

WhereEverybodyKnowsYourName

C13 (B)

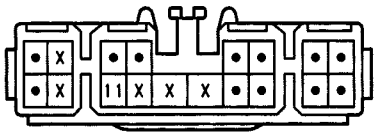

C14 (A)

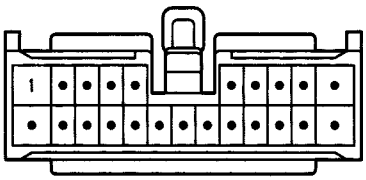

C15

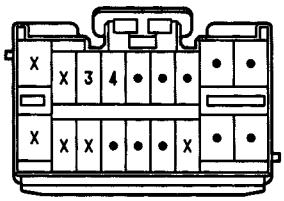

F 3, F 4 GRAY

F 5, F 6 GRAY

F 9 BLACK

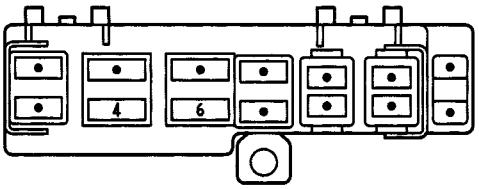

(USA) I16 (A)

(CANADA) I16 (B)

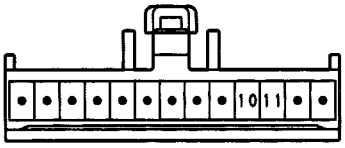

L 2

L 3

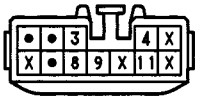

R10, R11

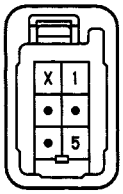

WhereEverybodyKnowsYourName

THEFT DETERRENT AND DOOR LOCK CONTROL

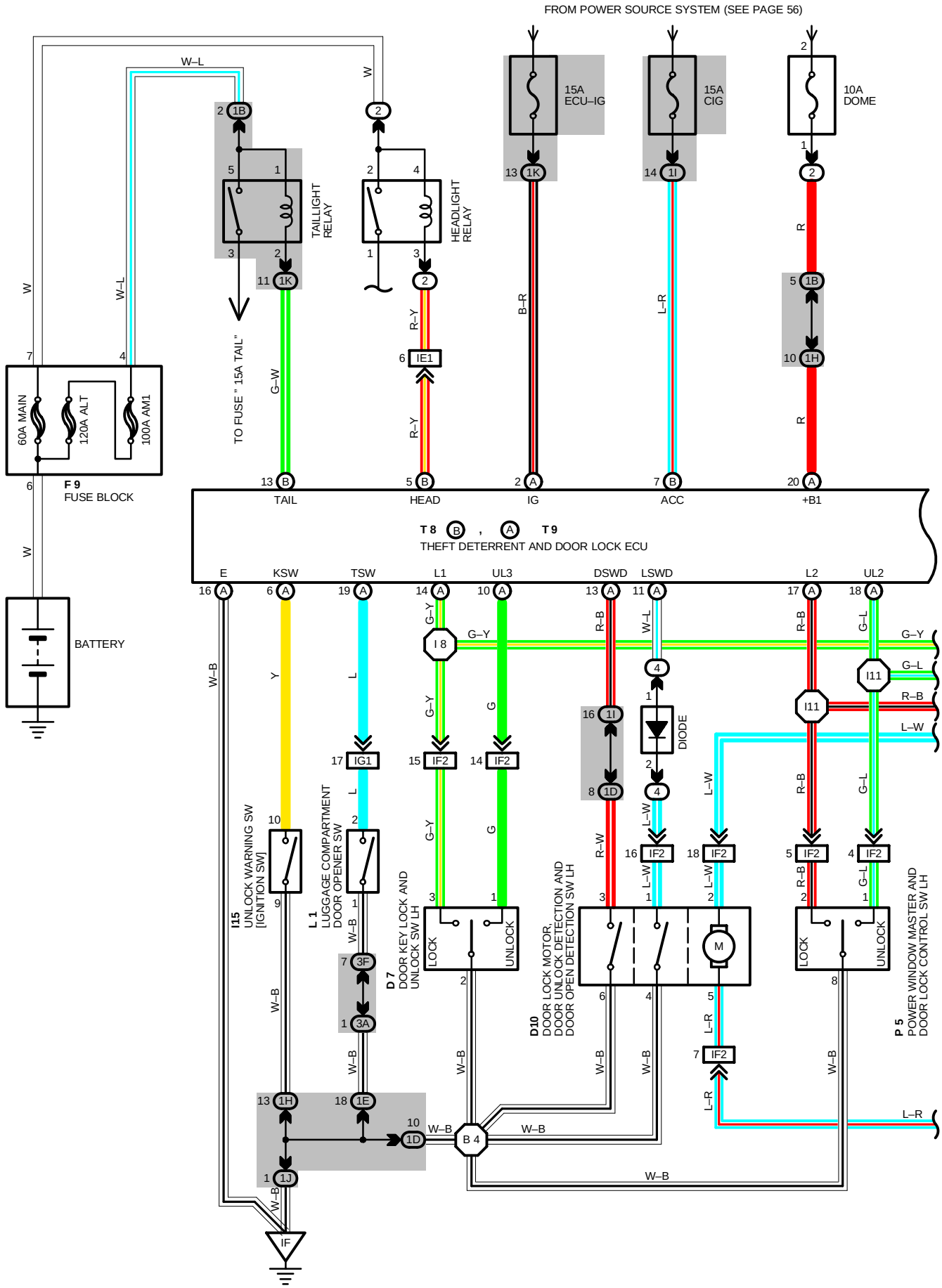

WhereEverybodyKnowsYourName

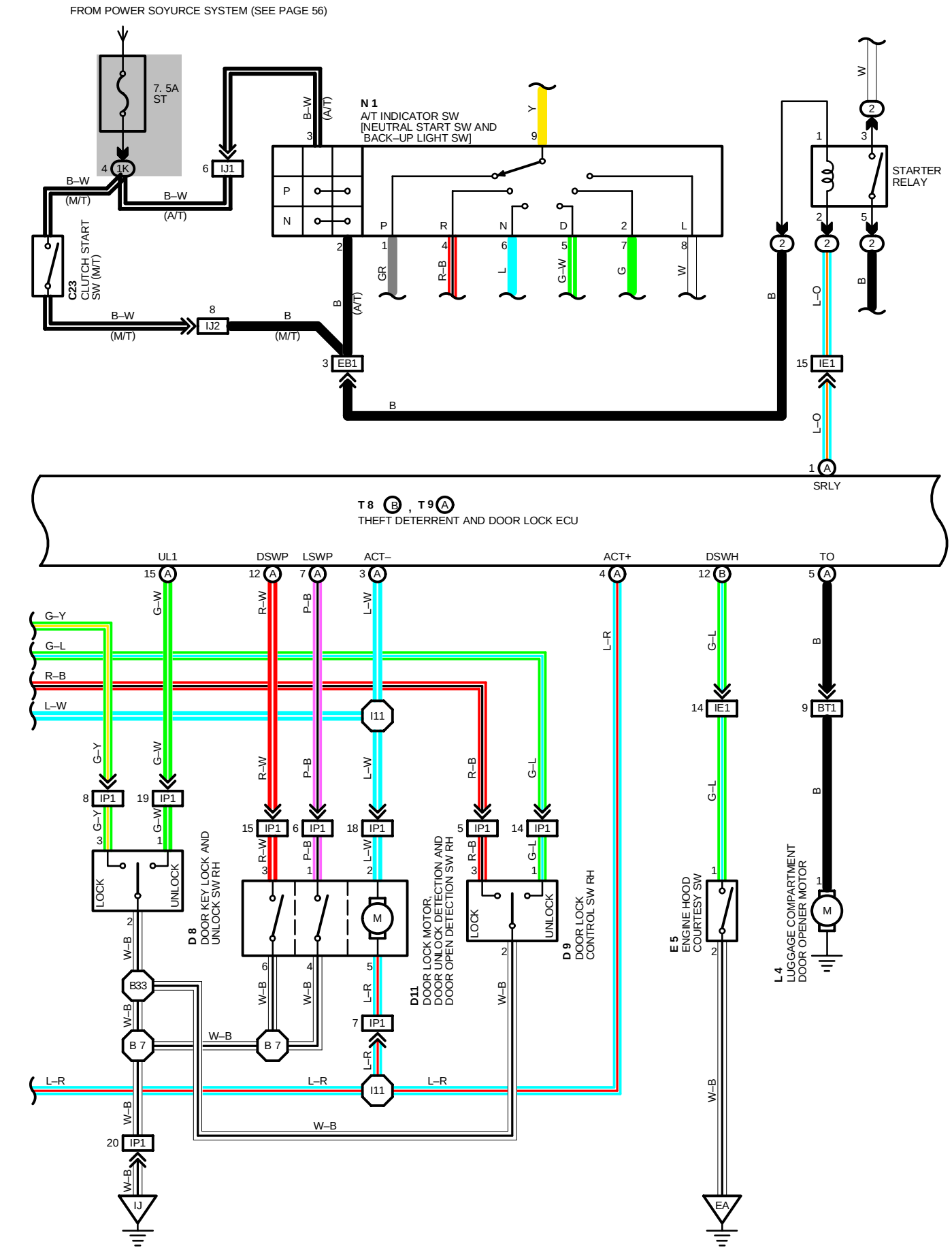

WhereEverybodyKnowsYourName

THEFT DETERRENT AND DOOR LOCK CONTROL

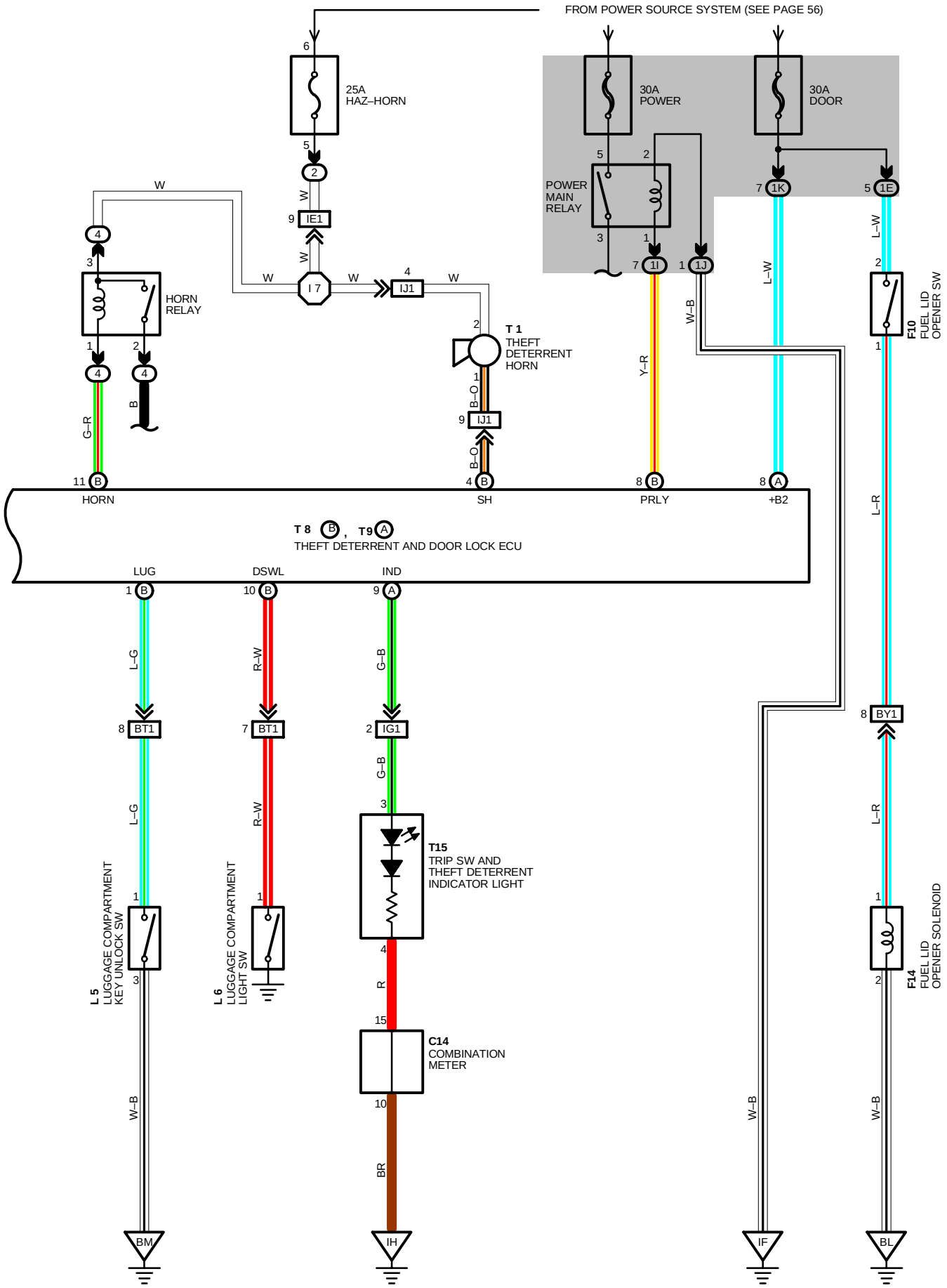

WhereEverybodyKnowsYourName

SYSTEM OUTLINE

CURRENT ALWAYS FLOWS TO **TERMINAL (A)8** OF THE DOOR LOCK ECU THROUGH THE **DOOR** FUSE, AND TO **TERMINAL (A)20** THROUGH THE **DOME** FUSE.

WHEN THE IGNITION SW IS TURNED ON, THE CURRENT FLOWING THROUGH THE **ECU–IG** FUSE → **TERMINAL (A)2** OF THE ECU → **TERMINAL (B)8** FLOWS THROUGH THE COIL SIDE OF THE POWER MAIN RELAY TO **GROUND,** CAUSING THE RELAY TO OPERATE. THE CURRENT FLOWING THROUGH THE **POWER** FUSE FLOWS TO THE DOOR LOCK CONTROL SW LH, CAUSING THE INDICATOR LIGHT TO LIGHT UP.

1. MANUAL LOCK OPERATION

WHEN THE DOOR CONTROL SW OR KEY SW ARE PUSHED TO **LOCK** POSITION, A LOCK SIGNAL IS INPUT TO **TERMINAL (A)17**, **(A)14** (FOR KEY SW) OF THE DOOR LOCK ECU AND CAUSES THE ECU TO FUNCTION. CURRENT FLOWS FROM **TERMINAL (A)8** OF THE ECU → **TERMINAL (A)4** → **TERMINAL 5** OF THE DOOR LOCK MOTORS → **TERMINAL 2** → **TERMINAL (A)3** OF THE ECU → **TERMINAL (A)16** → TO **GROUND** AND THE DOOR LOCK MOTOR CAUSES THE DOOR TO LOCK.

2. MANUAL UNLOCK OPERATION

WHEN THE DOOR LOCK CONTROL SW OR KEY ARE PUSHED TO **UNLOCK** POSITION, AN UNLOCK SIGNAL IS INPUT TO **TERMINAL (A)18, (A)10** (FOR KEY SW LH) OR **(A)15** (FOR KEY SW RH) OF THE DOOR LOCK ECU AND CAUSES THE ECU TO FUNCTION. CURRENT FLOWS FROM **TERMINAL (A)8** OF THE ECU → **TERMINAL (A)3** → **TERMINAL 2** OF THE DOOR LOCK MOTORS → **TERMINAL 5** → **TERMINAL (A)4** OF THE ECU → **TERMINAL (A)16** → TO **GROUND** AND THE DOOR LOCK MOTOR CAUSES THE DOOR TO UNLOCK.

WHEN UNLOCK OPERATION OCCURS USING THE LH DOOR KEY SW, PERFORMING THE UNLOCK OPERATION ONCE UNLOCKS ONLY THE DRIVER'S DOOR. TO UNLOCK ALL THE OTHER DOORS TOGETHER, UNLOCK OPERATION MUST BE PERFORMED AGAIN WITHIN 3 SECONDS OF THE FIRST OPERATION.

3. IGNITION KEY REMINDER OPERATION

* OPERATION OF DOOR LOCK BUTTON (OPERATION OF DOOR LOCK MOTORS)

  WHEN THE IGNITION KEY IS IN THE CYLINDER (UNLOCK WARNING SW ON) AND THE DOOR IS OPENED AND LOCKED USING DOOR LOCK BUTTON (DOOR LOCK MOTOR), THE DOOR IS LOCKED ONCE BUT EACH DOOR IS UNLOCKED SOON BY THE OPERATION OF THE ECU. AS A RESULT OF ECU ACTIVATION, THE CURRENT FLOWS FROM **TERMINAL (A)8** OF THE ECU → **TERMINAL (A)3** → **TERMINAL 2** OF THE DOOR LOCK MOTORS → **TERMINAL 5** → **TERMINAL (A)4** OF THE ECU → **TERMINAL (A)16** → TO **GROUND** AND CAUSES ALL THE DOORS TO UNLOCK.

  THE SAME APPLIES TO OPERATION OF THE DOOR LOCK CONTROL SW AND DOOR LOCK KEY SW.

* KEY LESS LOCK OPERATION

  WHEN THE IGNITION KEY IS STILL INSERTED IN THE CYLINDER (UNLOCK WARNING SW ON), THE DOOR IS OPEN AND UNLOCK OPERATION IS PREVENTED BY KEEPING THE DOOR LOCK BUTTON PRESSED TO THE LOCK SIDE, THE DOOR IS KEPT IN THE LOCK CONDITION. IF THE DOOR IS THEN CLOSED, A SIGNAL IS INPUT TO THE ECU FROM THE DOOR COURTESY SW. THIS ACTIVATES THE ECU AND EACH DOOR IS UNLOCKED.

WhereEverybodyKnowsYourName

THEFT DETERRENT AND DOOR LOCK CONTROL

SERVICE HINTS

D 7, D 8 DOOR KEY LOCK AND UNLOCK SW LH, RH
1–2 : CLOSED WITH DOOR LOCK CYLINDER UNLOCKED WITH KEY
3–2 : CLOSED WITH DOOR LOCK CYLINDER LOCKED WITH KEY

D10, D11 DOOR LOCK MOTOR, DOOR UNLOCK DETECTION SW AND DOOR OPEN DETECTION SW LH, RH
1–4: CLOSED WITH **UNLOCK** POSITION

E 5 ENGINE HOOD COURTESY SW
1–2: CLOSED WITH ENGINE HOOD OPEN

I15 UNLOCK WARNING SW [IGNITION SW]
9–10: CLOSED WITH IGNITION KEY IN CYLINDER

L 5 LUGGAGE COMPARTMENT KEY UNLOCK SW
1–3: CLOSED WITH DOOR LOCK CYLINDER UNLOCK WITH KEY

L 6 LUGGAGE COMPARTMENT LIGHT SW
1–GROUND: CLOSED WITH DOOR OPEN

T 8(B) THEFT DETERRENT AND DOOR LOCK ECU
1–GROUND: CONTINUITY WITH LUGGAGE COMPARTMENT DOOR TO **UNLOCK** POSITION
12–GROUND: CONTINUITY WITH ENGINE HOOD OPEN
10–GROUND: CONTINUITY WITH LUGGAGE COMPARTMENT DOOR OPEN
7–GROUND: APPROX. **12** VOLTS WITH IGNITION SW AT **ACC** OR **ON** POSITION

T 9(A) THEFT DETERRENT AND DOOR LOCK ECU
1–GROUND: APPROX. **12** VOLTS WITH SHIFT LEVER IN **N** OR **P** POSITION AND IGNITION SW AT **ST** POSITION
2–GROUND: APPROX. **12** VOLTS WITH IGNITION SW AT **ON** POSITION
6–GROUND: CONTINUITY WITH IGNITION KEY IN CYLINDER
7–GROUND: CONTINUITY WITH FRONT RH DOOR TO **UNLOCK** POSITION
8–GROUND: ALWAYS APPROX. **12** VOLTS
10–GROUND: CONTINUITY WITH DOOR LOCK KEY SW LH TO **UNLOCK** POSITION
11–GROUND: CONTINUITY WITH FRONT LH DOOR TO **UNLOCK** POSITION
12–GROUND: CONTINUITY WITH FRONT RH DOOR OPENED
13–GROUND: CONTINUITY WITH FRONT LH DOOR OPENED
14–GROUND: CONTINUITY WITH DOOR LOCK KEY SW RH TO **LOCK** POSITION
15–GROUND: CONTINUITY WITH DOOR LOCK KEY SW RH TO **UNLOCK** POSITION
20–GROUND: ALWAYS APPROX. **12** VOLTS

○ : PARTS LOCATION

CODE	SEE PAGE	CODE	SEE PAGE	CODE		SEE PAGE
C14	28	**F 9**	26	**N 1**		27
C23	28	**F10**	28	**P 5**		31
D 7	30	**F14**	30	**T 1**		27
D 8	30	**I15**	29	**T 8**	B	29
D 9	30	**L 1**	29	**T 9**	A	29
D10	30	**L 4**	30	**T15**		29
D11	30	**L 5**	30			
E 5	26	**L 6**	30			

▭ : RELAY BLOCKS

CODE	SEE PAGE	RELAY BLOCKS (RELAY BLOCK LOCATION)
2	19	ENGINE COMPARTMENT LEFT
4	22	LEFT KICK PANEL (J/B NO.1 LEFT)

▭ : JUNCTION BLOCK AND WIRE HARNESS CONNECTOR

CODE	SEE PAGE	JUNCTION BLOCK AND WIRE HARNESS (CONNECTOR LOCATION)
1B	20	ENGINE ROOM MAIN WIRE
1D	20	FRONT DOOR LH WIRE
1E	20	INSTRUMENT PANEL WIRE
1H	20	COWL WIRE
1I		
1J		
1K		
3A	22	INSTRUMENT PANEL WIRE
3F		

WhereEverybodyKnowsYourName

: CONNECTOR JOINING WIRE HARNESS AND WIRE HARNESS

CODE	SEE PAGE	JOINING WIRE HARNESS AND WIRE HARNESS (CONNECTOR LOCATION)
EB1	34	ENGINE WIRE AND ENGINE ROOM MAIN WIRE (FRONT SIDE OF R/B NO.2)
IE1	36	ENGINE ROOM MAIN WIRE AND COWL WIRE (R/B NO.4)
IF2	36	FRONT DOOR LH WIRE AND COWL WIRE (LEFT KICK PANEL)
IG1	36	INSTRUMENT PANEL WIRE AND COWL WIRE (R/B NO.5)
IJ1	36	ENGINE WIRE AND COWL WIRE (RIGHT KICK PANEL)
IJ2	36	
IP1	38	FRONT DOOR RH WIRE AND COWL WIRE (RIGHT KICK PANEL)
BT1	40	FLOOR WIRE AND COWL WIRE (LEFT KICK PANEL)
BY1	40	INSTRUMENT PANEL WIRE AND FLOOR NO.3 WIRE (RIGHT KICK PANEL)

: GROUND POINTS

CODE	SEE PAGE	GROUND POINTS LOCATION
EA	34	FRONT SIDE OF RIGHT FENDER
IF	36	LEFT KICK PANEL
IH	36	UNDER THE ASHTRAY LH
IJ	36	RIGHT KICK PANEL
BL	40	UNDER THE CENTER PILLAR RH
BM	40	BACK PANEL CENTER

: SPLICE POINTS

CODE	SEE PAGE	WIRE HARNESS WITH SPLICE POINTS	CODE	SEE PAGE	WIRE HARNESS WITH SPLICE POINTS
I 7	38	COWL WIRE	**B 7**	40	FRONT DOOR RH WIRE
I11			**B33**		
B 4	40	FRONT DOOR LH WIRE			

C14

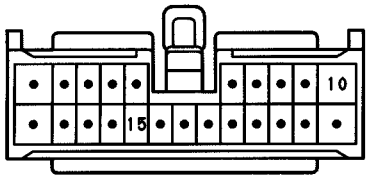

C23

D 7, D 8

D 9

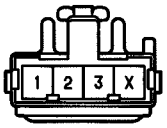

D10, D11 GRAY

E 5 BLACK

F 9

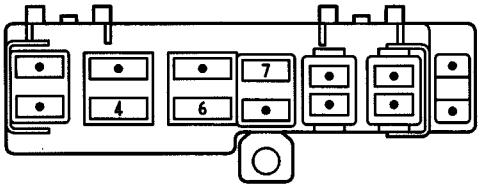

F10 GREEN

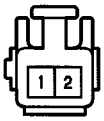

F14

I15 BLACK

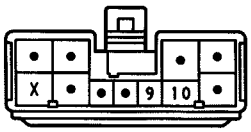

L 1

L 4

L 5

L 6 GRAY

N 1 GRAY

P 5

T 1 BLACK

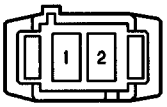

T 8 (B) ORANGE

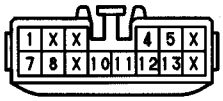

T 9 (A) ORANGE

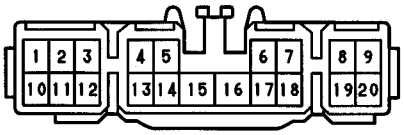

T15

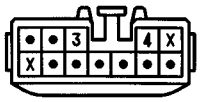

WhereEverybodyKnowsYourName

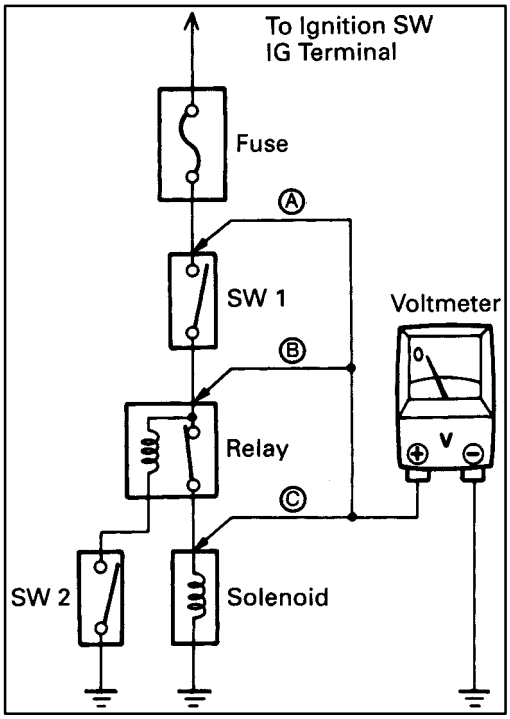

VOLTAGE CHECK

(a) Establish conditions in which voltage is present at the check point.

Example:

Ⓐ – Ignition SW on

Ⓑ – Ignition SW and SW 1 on

Ⓒ – Ignition SW, SW 1 and Relay on (SW 2 off)

(b) Using a voltmeter, connect the negative lead to a good ground point or negative battery terminal, and the positive lead to the connector or component terminal. This check can be done with a test light instead of a voltmeter.

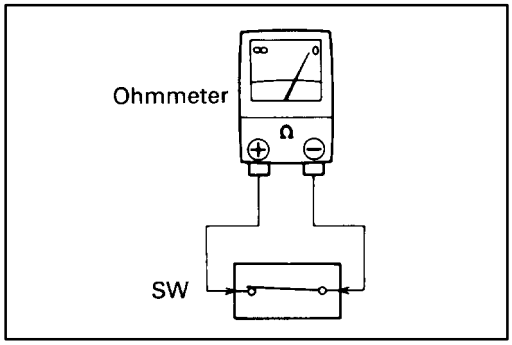

CONTINUITY AND RESISTANCE CHECK

(a) Disconnect the battery terminal or wire so there is no voltage between the check points.

(b) Contact the two leads of an ohmmeter to each of the check points.

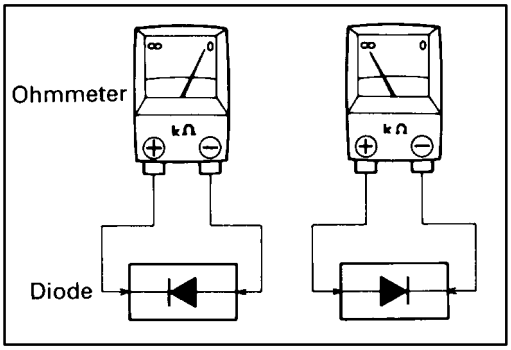

If the circuit has diodes, reverse the two leads and check again.

When contacting the negative lead to the diode positive side and the positive lead to the negative side, there should be continuity.

When contacting the two leads in reverse, there should be no continuity.

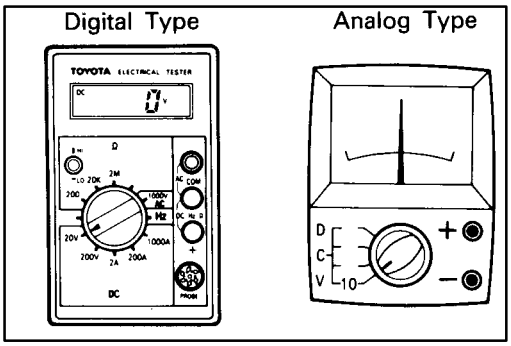

(c) Use the volt/ohmmeter with high impedance (10 kΩ/V minimum) for troubleshooting of the electrical circuit.

WhereEverybodyKnowsYourName

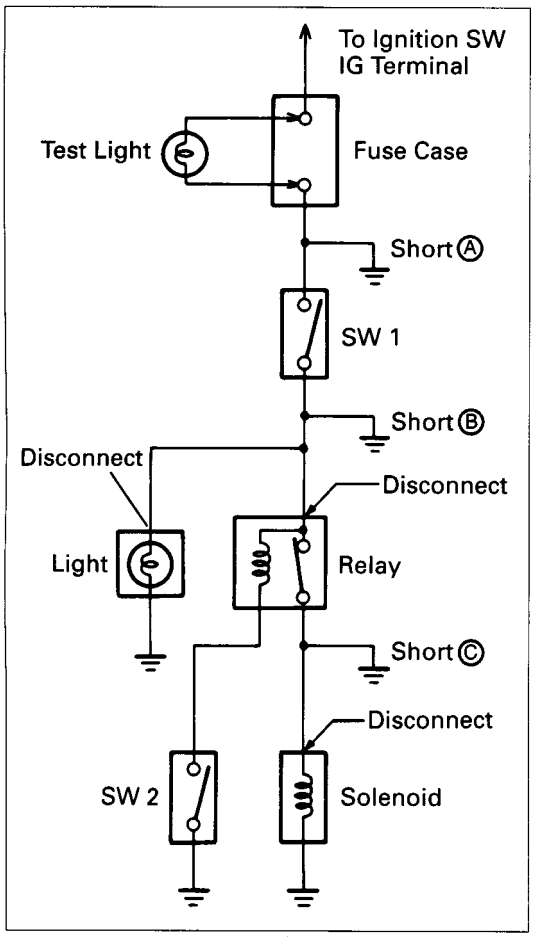

FINDING A SHORT CIRCUIT

(a) Remove the blown fuse and disconnect all loads of the fuse.

(b) Connect a test bulb in place of the fuse.

(c) Establish conditions in which the test bulb comes on.

Example:

Ⓐ – Ignition SW on

Ⓑ – Ignition SW and SW 1 on

Ⓒ – Ignition SW, SW 1 and Relay on (Connect the Relay) and SW 2 off (or Disconnect SW 2)

(d) Disconnect and reconnect the connectors while watching the test bulb.

The short lies between the connector where the test bulb stays lit and the connector where the bulb goes out.

(e) Find the exact location of the short by lightly shaking the problem wire along the body.

CAUTION:

(a) Do not open the cover or the case of the ECU unless absolutely necessary. (If the IC terminals are touched, the IC may be destroyed by static electricity.)

(b) When replacing the internal mechanism (ECU part) of the digital meter, be careful that no part of your body or clothing comes in contact with the terminals of leads from the IC, etc. of the replacement part (spare part).

DISCONNECTION OF MALE AND FEMALE CONNECTORS

To pull apart the connectors, pull on the connector itself, not the wire harness.

HINT: Check to see what kind of connector you are disconnecting before pulling apart.

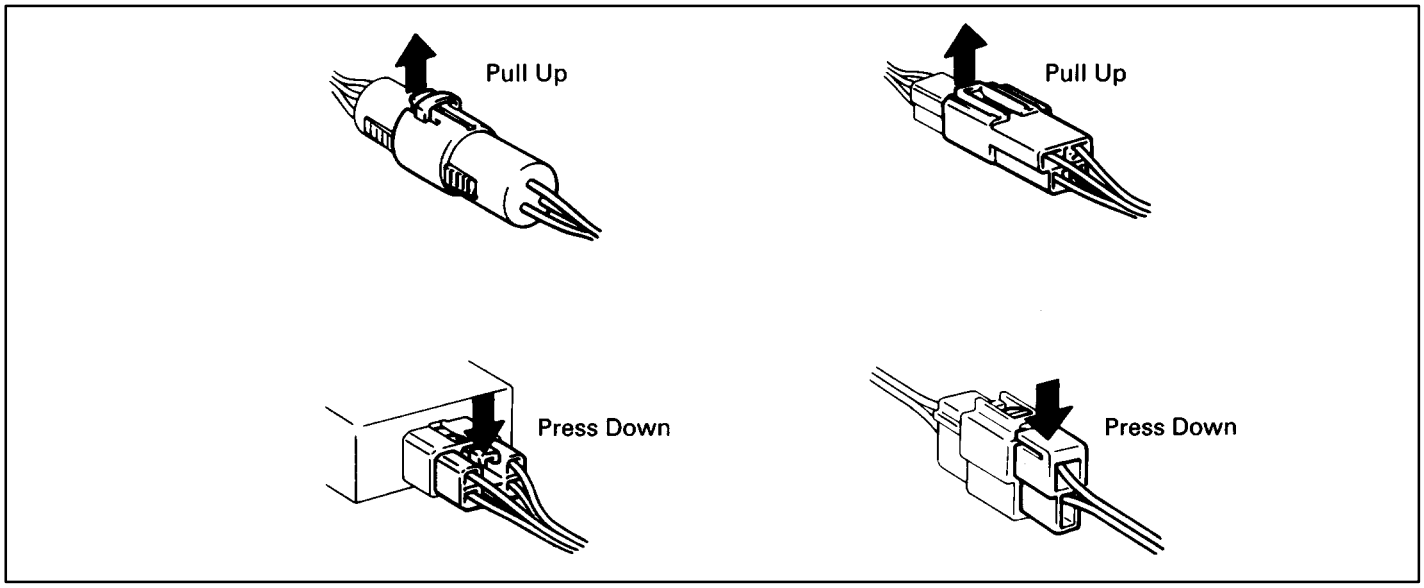

WhereEverybodyKnowsYourName

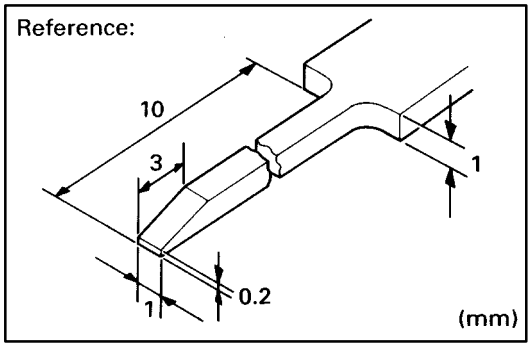

HOW TO REPLACE TERMINAL

(with terminal retainer or secondary locking device)

1. PREPARE THE SPECIAL TOOL

   HINT: To remove the terminal from the connector, please construct and use the special tool or like object shown on the left.

2. DISCONNECT CONNECTOR

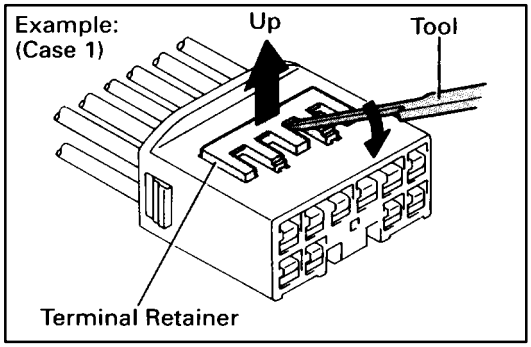

3. DISENGAGE THE SECONDARY LOCKING DEVICE OR TERMINAL RETAINER

   (a) Locking device must be disengaged before the terminal locking clip can be released and the terminal removed from the connector.

   (b) Use a special tool or the terminal pick to unlock the secondary locking device or terminal retainer.

   NOTICE:

   Do not remove the terminal retainer from connector body.

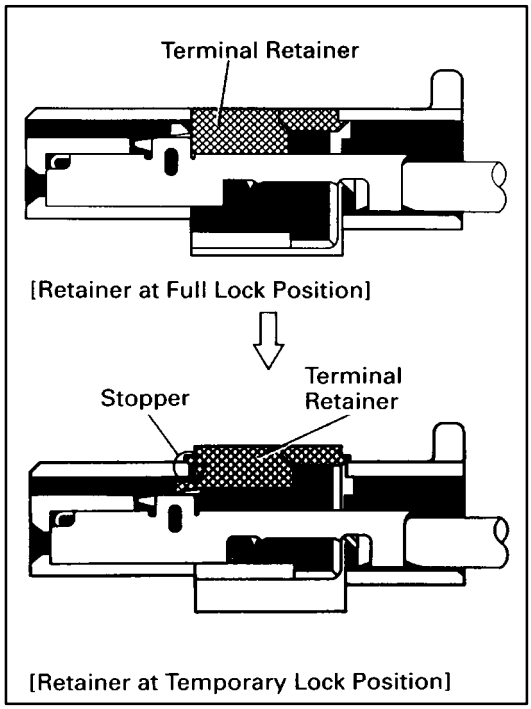

Ⓐ For Non–Waterproof Type Connector

HINT: The needle insertion position varies according to the connector's shape (number of terminals etc.), so check the position before inserting it.

"Case 1"

Raise the terminal retainer up to the temporary lock position.

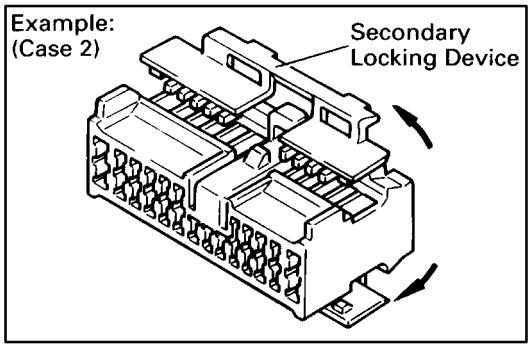

"Case 2"

Open the secondary locking device.

WhereEverybodyKnowsYourName

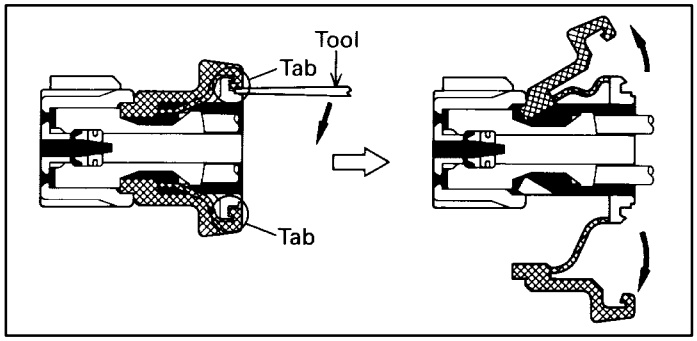

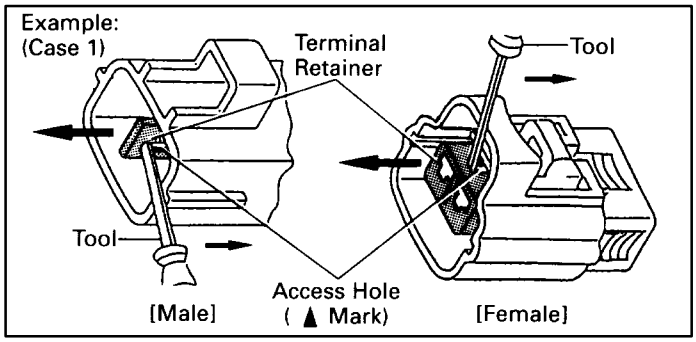

Ⓑ For Waterproof Type Connector

HINT: Terminal retainer color is different according to connector body.

Example:

Terminal Retainer	Connector Body
Black or White	: Gray
Black or White	: Dark Gray
Gray or White	: Black

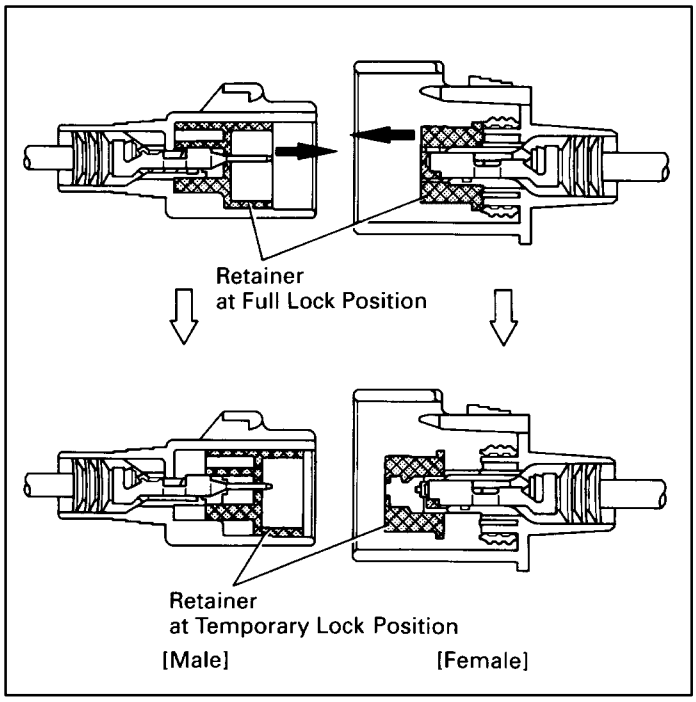

"Case 1"

Type where terminal retainer is pulled up to the temporary lock position (Pull Type).

Insert the special tool into the terminal retainer access hole (▲ Mark) and pull the terminal retainer up to the temporary lock position.

HINT: The needle insertion position varies according to the connector's shape (Number of terminals, etc.), so check the position before inserting it.

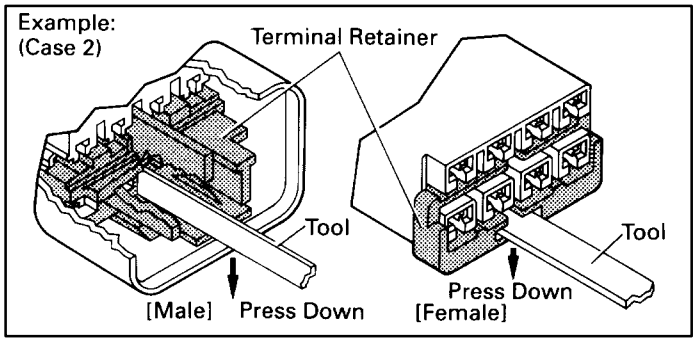

"Case 2"

Type which cannot be pulled as far as Power Lock

WhereEverybodyKnowsYourName

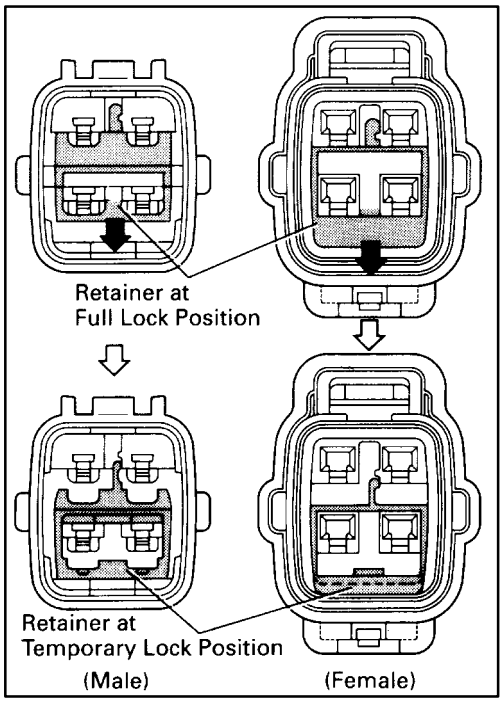

Insert the tool straight into the access hole of terminal retainer as shown.

Push the terminal retainer down to the temporary lock position.

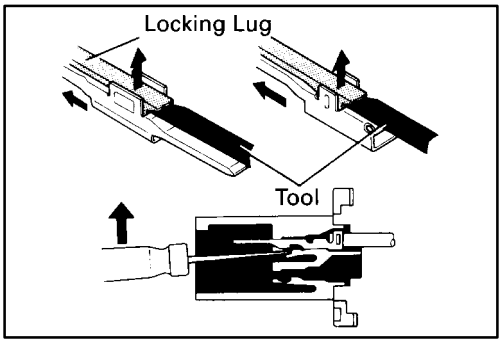

(c) Release the locking lug from terminal and pull the terminal out from rear.

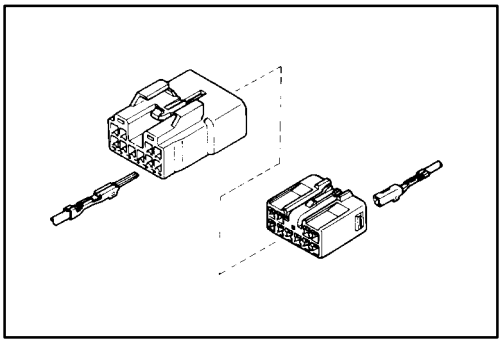

4. INSTALL TERMINAL TO CONNECTOR

(a) Insert the terminal.

HINT:

1. Make sure the terminal is positioned correctly.
2. Insert the terminal until the locking lug locks firmly.
3. Insert the terminal with terminal retainer in the temporary lock position.

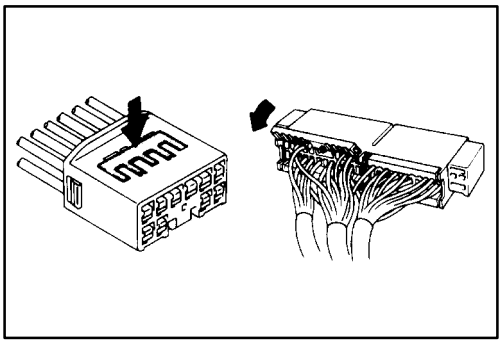

(b) Push the secondary locking device or terminal retainer into the full lock position.

5. CONNECT CONNECTOR

WhereEverybodyKnowsYourName

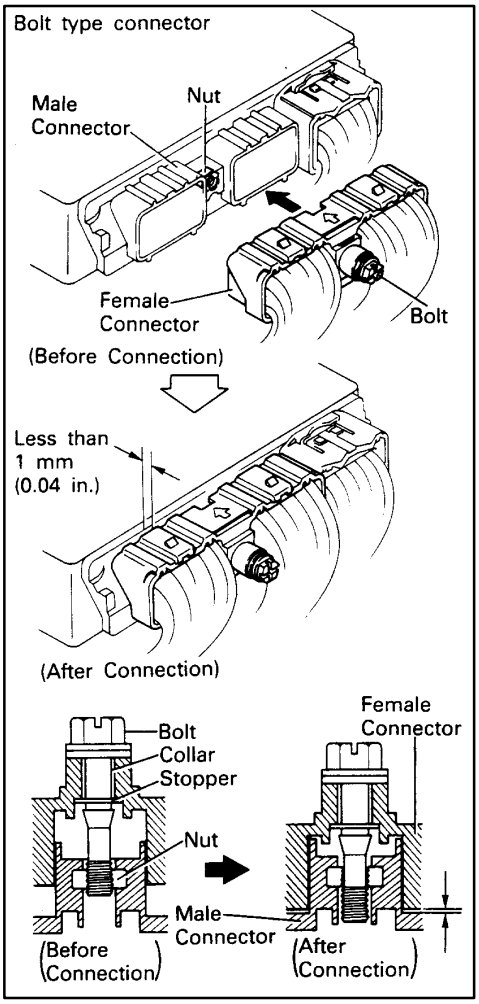

DISCONNECTION AND CONNECTION OF BOLT TYPE CONNECTORS

For engine and ECT ECU in this vehicle, connectors are used which require a bolt built into the connector to be screwed down to securely connect the connector.

1. Disconnect the connector

   After completely loosening the bolt, the two parts of the connector can be separated.

   NOTICE:

   Do not pull the wire harness when disconnecting the connector.

2. Connect the connector

   NOTICE:

   Before connecting the connector, always check that the terminals are not bent or damaged.

   (a) Match the guide section of the male connector correctly with the female connector, then press them together.

   (b) Tighten the bolt.

   Make sure the connectors are completely connected, by tightening the bolt until there is a clearance of less than 1 mm (0.04 in.) between the bottom of male connector and the end of female connector.

ABBREVIATIONS

The following abbreviations are used in this manual.

A/C	=	Air Conditioning	O/D	=	Overdrive
ABS	=	Anti–Lock Brake System	R/B	=	Relay Block
A/T	=	Automatic Transmission	RH	=	Right–Hand
CB	=	Circuit Breaker	SRS	=	Supplement Restraint System
COMB.	=	Combination	SW	=	Switch
ECT	=	Electronic Controlled Transmission	TDCL	=	Total Diagnostic Communication Link
ECU	=	Electronic Control Unit	TEMP.	=	Temperature
EGR	=	Exhaust Gas Recirculation	TRAC	=	Traction Control
FL	=	Fusible Link	VSV	=	Vacuum Switching Valve
ISC	=	Idle Speed Control	W/	=	With
J/B	=	Junction Block	W/O	=	Without
LH	=	Left-Hand			

* The titles given inside the components are the names of the terminals (terminal codes) and are not treated as being abbreviations.

WhereEverybodyKnowsYourName

TURN SIGNAL AND HAZARD WARNING LIGHT

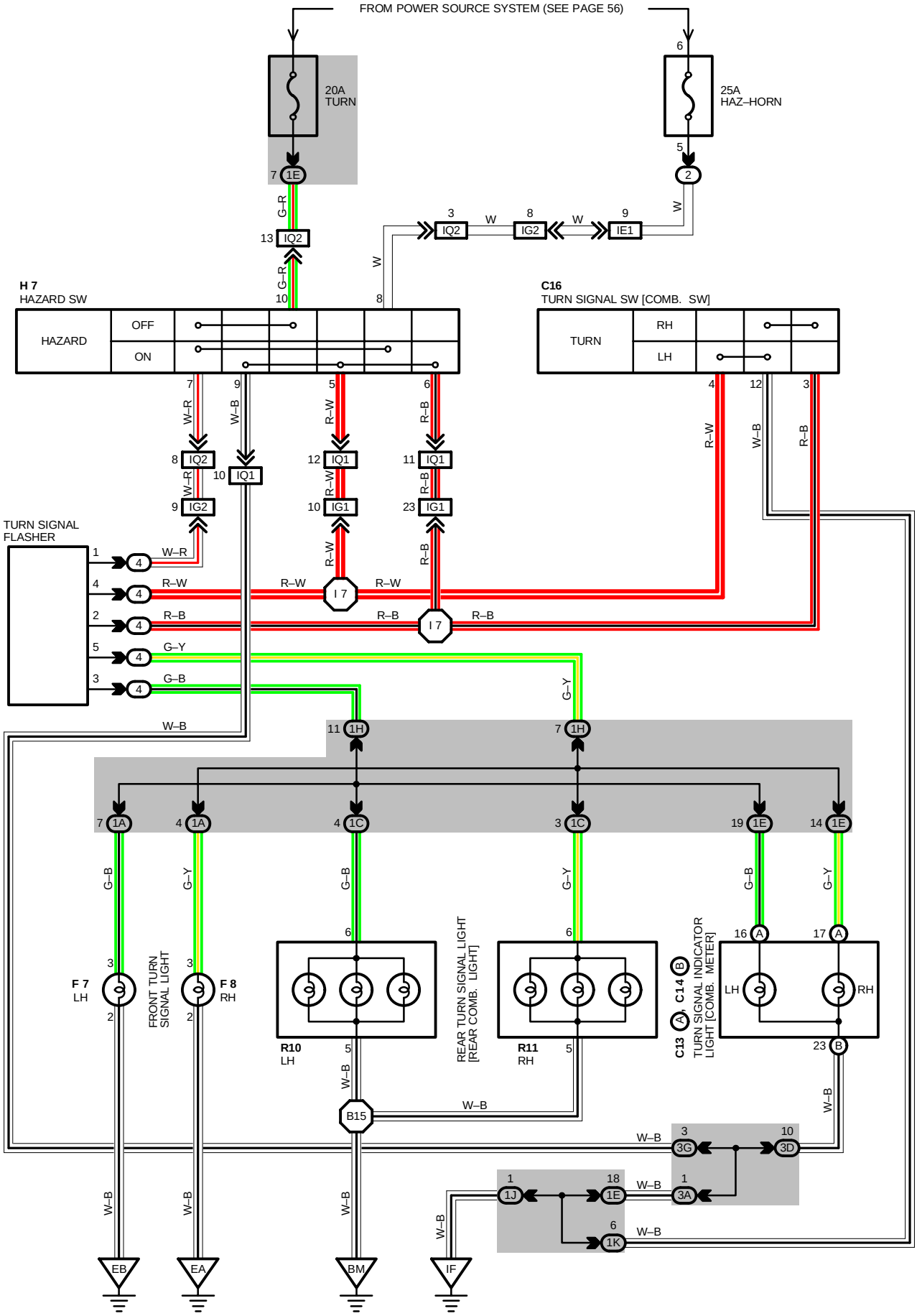

WhereEverybodyKnowsYourName

SERVICE HINTS

TURN SIGNAL FLASHER

(4) 3 – GROUND: CHANGES FROM APPROX. **12** VOLTS TO **0** VOLTS WITH IGNITION SW ON AND TURN SIGNAL SW LEFT, OR WITH HAZARD SW ON

(4) 5 – GROUND: CHANGES FROM APPROX. **12** VOLTS TO **0** VOLTS WITH IGNITION SW ON AND TURN SIGNAL SW RIGHT, OR WITH HAZARD SW ON

(4) 4 – GROUND: CONTINUITY WITH TURN SIGNAL SW LEFT, OR HAZARD SW ON

(4) 2 – GROUND: CONTINUITY WITH TURN SIGNAL SW RIGHT, OR HAZARD SW ON

(4) 1 – GROUND: APPROX. **12** VOLTS WITH IGNITION SW ON OR HAZARD SW ON

: PARTS LOCATION

CODE		SEE PAGE	CODE	SEE PAGE	CODE	SEE PAGE
C13	A	28	**F 7**	26	**R10**	31
C14	B	28	**F 8**	26	**R11**	31
C16		28	**H 7**	29		

: RELAY BLOCKS

CODE	SEE PAGE	RELAY BLOCKS (RELAY BLOCK LOCATION)
2	19	ENGINE COMPARTMENT LEFT
4	23	LEFT KICK PANEL (J/B NO.1 LEFT)

: JUNCTION BLOCK AND WIRE HARNESS CONNECTOR

CODE	SEE PAGE	JUNCTION BLOCK AND WIRE HARNESS (CONNECTOR LOCATION)
1A	20	ENGINE ROOM MAIN WIRE
1C	20	FLOOR WIRE
1E	20	INSTRUMENT PANEL WIRE
1H	20	COWL WIRE
1J		
1K		
3A	22	INSTRUMENT PANEL WIRE
3D		
3G		

: CONNECTOR JOINING WIRE HARNESS AND WIRE HARNESS

CODE	SEE PAGE	JOINING WIRE HARNESS AND WIRE HARNESS (CONNECTOR LOCATION)
IE1	36	ENGINE ROOM MAIN WIRE AND COWL WIRE (R/B NO. 4)
IG1	36	INSTRUMENT PANEL WIRE AND COWL WIRE (R/B NO. 5)
IG2		
IQ1	38	INSTRUMENT PANEL WIRE AND CONSOLE BOX WIRE (UNDER THE INSTRUMENT PANEL CENTER)
IQ2		

: GROUND POINTS

CODE	SEE PAGE	GROUND POINTS LOCATION
EA	34	FRONT SIDE OF RIGHT FENDER
EB	34	FRONT SIDE OF LEFT FENDER
IF	36	LEFT KICK PANEL
BM	40	BACK PANEL CENTER

: SPLICE POINTS

CODE	SEE PAGE	WIRE HARNESS WITH SPLICE POINTS	CODE	SEE PAGE	WIRE HARNESS WITH SPLICE POINTS
I 7	38	COWL WIRE	**B15**	40	FLOOR MAIN WIRE

WhereEverybodyKnowsYourName

C13 Ⓐ

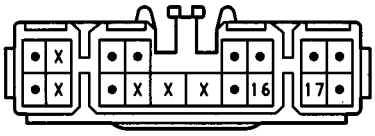

C14 Ⓑ

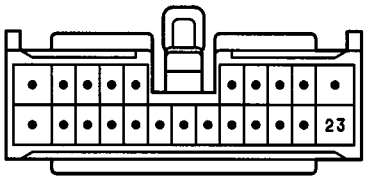

C16 BLACK

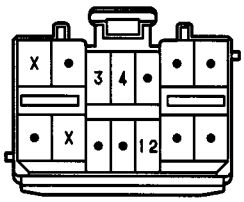

F 7, F 8 GRAY

H 7 BLACK

R10, R11

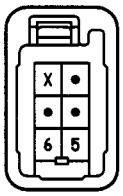

WhereEverybodyKnowsYourName

B 4 ORANGE

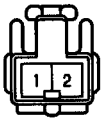

C12 (A)

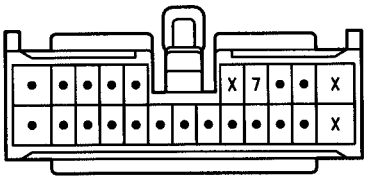

C14 (B)

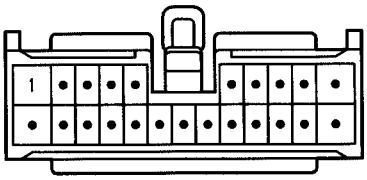

D10 GRAY

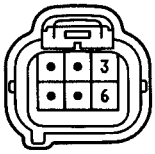

I15 BLACK

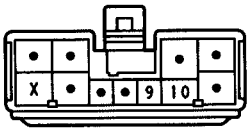

WhereEverybodyKnowsYourName

UNLOCK AND SEAT BELT WARNING

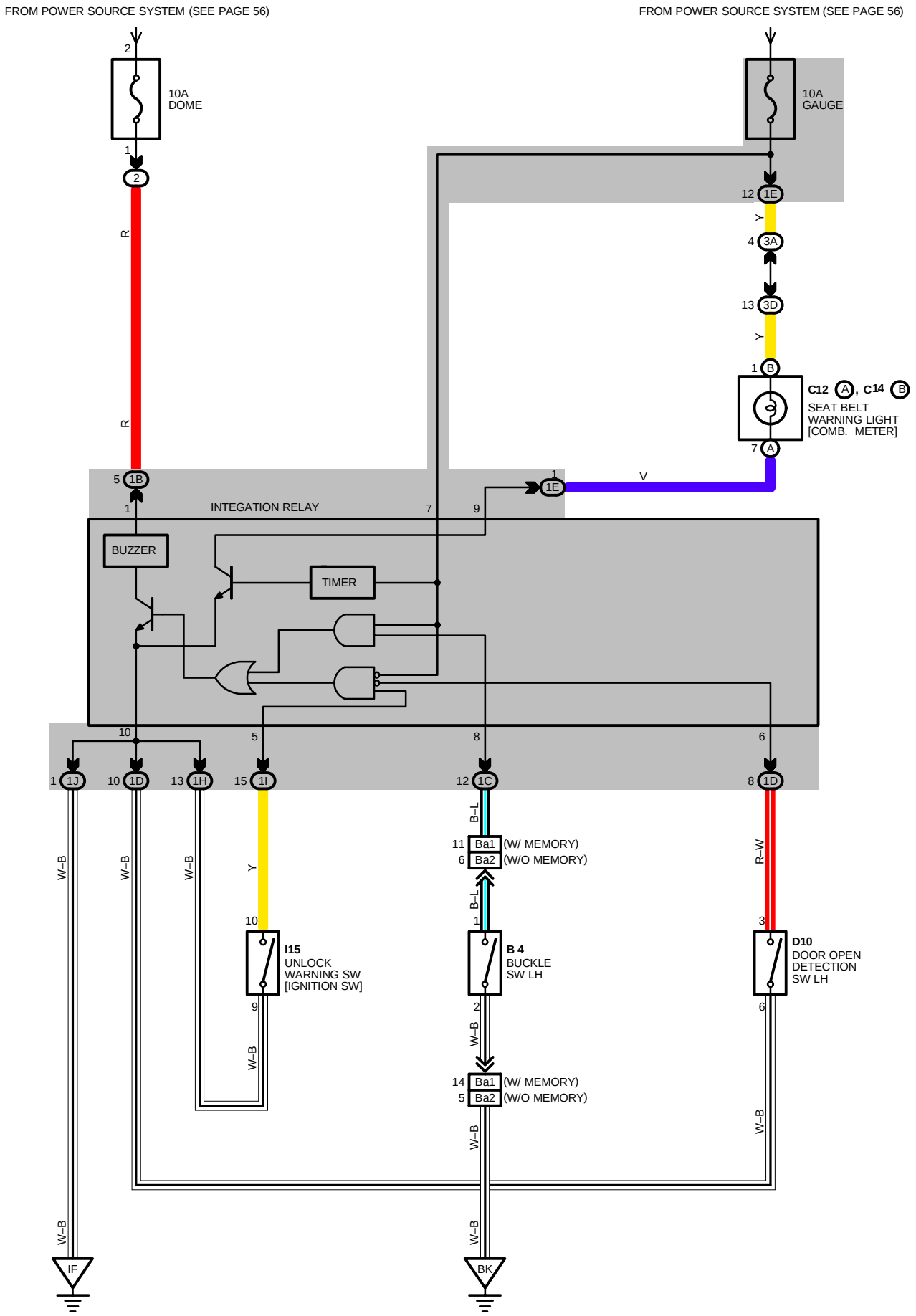

WhereEverybodyKnowsYourName

SYSTEM OUTLINE

CURRENT ALWAYS FLOWS TO **TERMINAL 1** OF THE INTEGRATION RELAY THROUGH **DOME** FUSE.

1. SEAT BELT WARNING SYSTEM

WHEN THE IGNITION SW IS TURNED ON, CURRENT FLOWS FROM THE **GAUGE** FUSE TO **TERMINAL 7** OF THE INTEGRATION RELAY. AT THE SAME TIME, CURRENT FLOWS TO **TERMINAL 9** OF THE RELAY FROM THE **GAUGE** FUSE THROUGH THE SEAT BELT WARNING LIGHT. THIS CURRENT ACTIVATES THE INTEGRATION RELAY AND, FOR APPROX. 4–8 SECONDS, CURRENT FLOWING THROUGH THE WARNING LIGHT FLOWS FROM TERMINAL 9 OF THE RELAY → **TERMINAL 10** → **GROUND,** CAUSING THE WARNING LIGHT TO LIGHT UP. AT THE SAME TIME AS THE WARNING LIGHT LIGHTS UP, A BUCKLE SW OFF SIGNAL IS INPUT TO **TERMINAL 8** OF THE RELAY, THE CURRENT FLOWING TO **TERMINAL 7** OF THE RELAY FLOWS FROM **TERMINAL 10** → **GROUND** AND THE SEAT BELT WARNING BUZZER SOUNDS FOR APPROX. **4–8** SECONDS. HOWEVER, IF THE SEAT BELT IS PUT ON DURING THIS PERIOD (WHILE THE BUZZER IS SOUNDING), SIGNAL INPUT TO **TERMINAL 8** OF RELAY STOPS AND THE CURRENT FLOW FROM **TERMINAL 7** OF THE RELAY → **TERMINAL 10** → **GROUND** IS CUT, CAUSING THE BUZZER TO STOP.

2. UNLOCK WARNING SYSTEM

WITH THE IGNITION KEY INSERTED IN THE KEY CYLINDER (UNLOCK SW ON), THE IGNITION SW STILL OFF AND DOOR OPEN (DOOR COURTESY SW ON), WHEN A SIGNAL IS INPUT TO **TERMINAL 6** OF THE RELAY, THE INTEGRATION RELAY OPERATES, CURRENT FLOWS FROM **TERMINAL 7** OF THE RELAY → **TERMINAL 10** → **GROUND** AND UNLOCK WARNING BUZZER SOUNDS.

SERVICE HINTS

B 4 BUCKLE SW LH
1–2 : CLOSED WITH DRIVER'S LAP BELT IN USE
D10 DOOR COURTESY SW LH
3–6 : CLOSED WITH LH DOOR OPEN
I15 UNLOCK WARNING SW [IGNITION SW]
10–9: CLOSED WITH IGNITION KEY IN CYLINDER
INTEGRATION RELAY
10–GROUND: ALWAYS CONTINUITY
6–GROUND: CONTINUITY WITH DRIVER'S DOOR OPEN
5–GROUND: CONTINUITY WITH IGNITION KEY IN CYLINDER
8–GROUND: CONTINUITY WITH DRIVER'S LAP BELT IN USA
9–GROUND: **0** VOLTS FOR **4–8** SECONDS WITH IGNITION SW ON AND APPROX. **12** VOLTS **4–8** SECONDS AFTER IGNITION SW ON
1–GROUND: ALWAYS APPROX. **12** VOLTS

: PARTS LOCATION

CODE		SEE PAGE	CODE		SEE PAGE	CODE	SEE PAGE
B 4		32	**C14**	B	28	**I15**	29
C12	A	28	**D10**		30		

: RELAY BLOCKS

CODE	SEE PAGE	RELAY BLOCKS (RELAY BLOCK LOCATION)
2	19	ENGINE COMPARTMENT LEFT

: JUNCTION BLOCK AND WIRE HARNESS CONNECTOR

CODE	SEE PAGE	JUNCTION BLOCK AND WIRE HARNESS (CONNECTOR LOCATION)
1B	20	ENGINE ROOM MAIN WIRE
1C	20	FLOOR MAIN
1D	20	FRONT DOOR LH WIRE
1E	20	INSTRUMENT PANEL WIRE
1H	20	COWL WIRE
1I		
1J		
3A	22	INSTRUMENT PANEL WIRE
3D		

: CONNECTOR JOINING WIRE HARNESS AND WIRE HARNESS

CODE	SEE PAGE	JOINING WIRE HARNESS AND WIRE HARNESS (CONNECTOR LOCATION)
Ba1	42	FLOOR WIRE AND FRONT SEAT LH WIRE (UNDER THE FRONT LH SEAT)
Ba2		

: GROUND POINTS

CODE	SEE PAGE	GROUND POINTS LOCATION
IF	36	LEFT KICK PANEL
BK	40	UNDER THE CENTER PILLAR LH

WhereEverybodyKnowsYourName