HPS DDR3

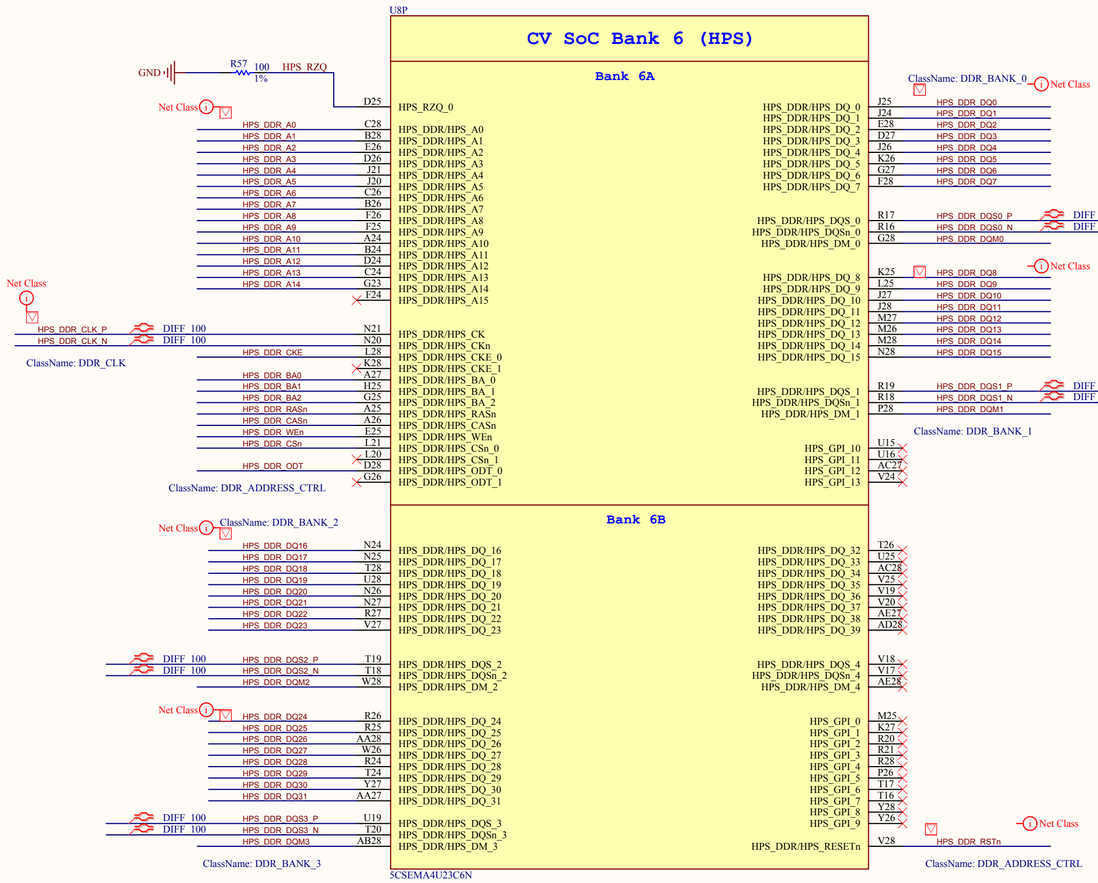

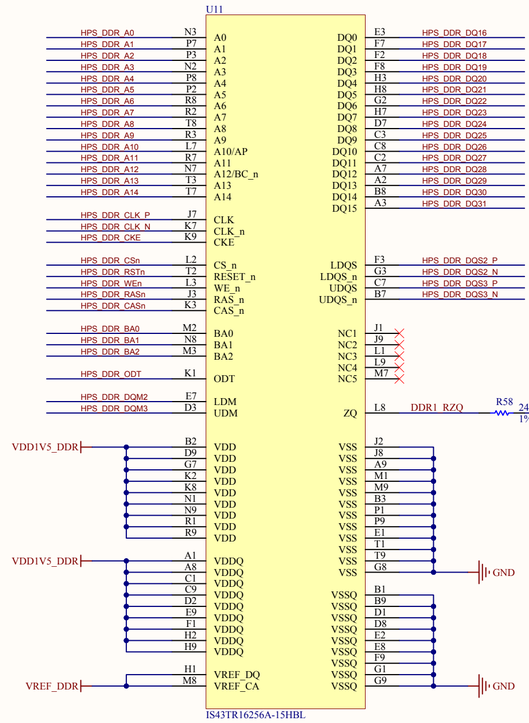

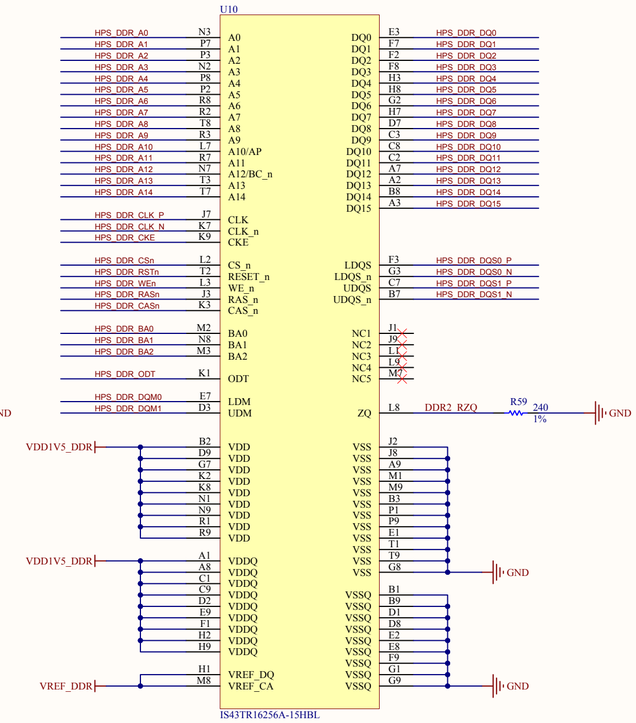

MID VTT RAIL

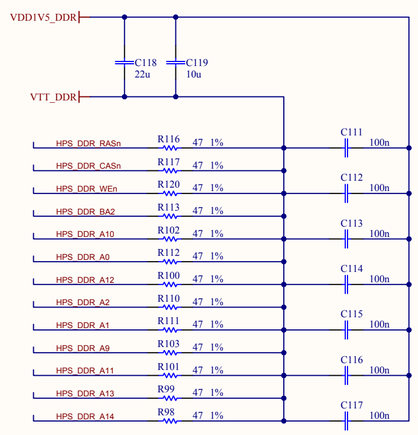

TOP VTT RAIL

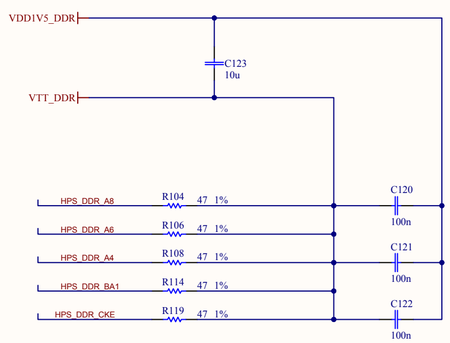

BOTTOM VTT RAIL

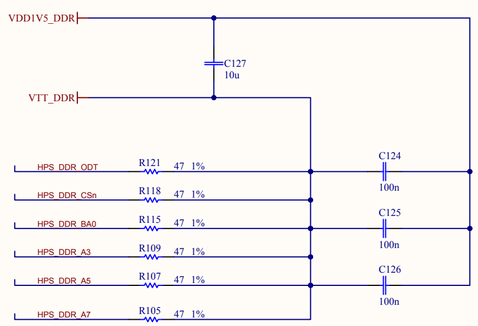

CLK TERMINATION

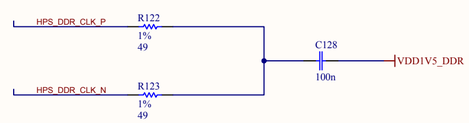

Title		
Size A2	Number	Revision
Date: 8/24/2016	Sheet of	
File: D:\Projectos\...\[7] - HPS DDR3 [A].SchDoc	Drawn By:	