Complete Service Manual coverage for late model year Mercedes-Benz vehicles requires three individual manuals:

Service Manual, Engine
Service Manual, Chassis and body
Service Manual, Heating and air conditioning

Throughout these manuals, the vehicles are identified by their chassis and engine numbers. These numbers are made up of the first six digits of the respective serial number. For the actual location of chassis and engine numbers, see page 00–015/1. In case where the repair instructions apply to all versions, only the first three digits of the respective number are referenced.

For example, the engine type in model 500 SEC is 117.963. The number 117 applies to all 5.0 liter light alloy V-8 gasoline engines with overhead camshafts produced from 1984-85.

Location of specific repair instructions

First locate the Group No. in the Group Index. Individual groups are separated by an easily visible dividing page, which is followed by the job index page. Then check the job index for the exact job required. The first page of a typical job description looks like this:

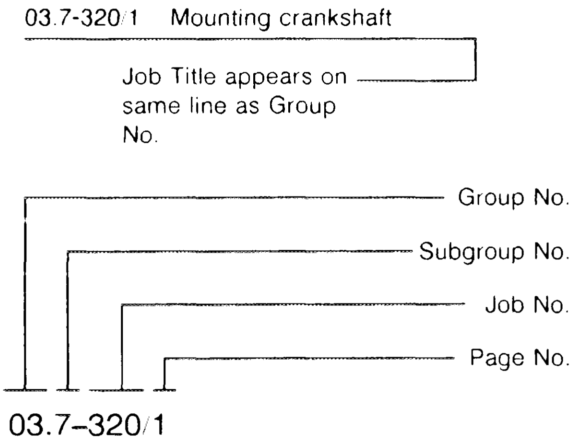

The original page format was developed for use on microfiche. In order to use the same originals for printing this manual, the page numbers always appear on the lower left of each page. In some chapters, the page numbering will jump because the sections from the microfiche that do not apply to USA specification vehicles have been left out.

Technical data, tightening torques and tools are listed at the beginning of each job.

All dimensions are in metric units, unless otherwise indicated. Any part numbers given are only used for identification and easier differentiation between individual components, and are not intended for ordering purposes.

Engine and vehicle identification

This manual applies to all M116 and M117 light alloy engines installed in the following passenger cars from model year 1981 through 1985:

Model	From	To	Chassis Type	Engine Type
380 SLC	1981	1981	107.025	116.960
380 SL	1981	1981	107.045	116.960
	1982	1985		116.962
380 SE	1984	1985	126.032	116.963
380 SEL	1981	1981	126.033	116.961
	1982	1983		116.963
380 SEC	1982	1983	126.043	116.963
500 SEL	1984	1985	126.037	117.963
500 SEC	1984	1985	126.044	117.963

Vehicle identification number locations

Model 107

When ordering spare parts, please specify chassis and engine numbers.

The illustration depicts the 380 SL. On the 380 SLC, the identification plates are arranged similarly.

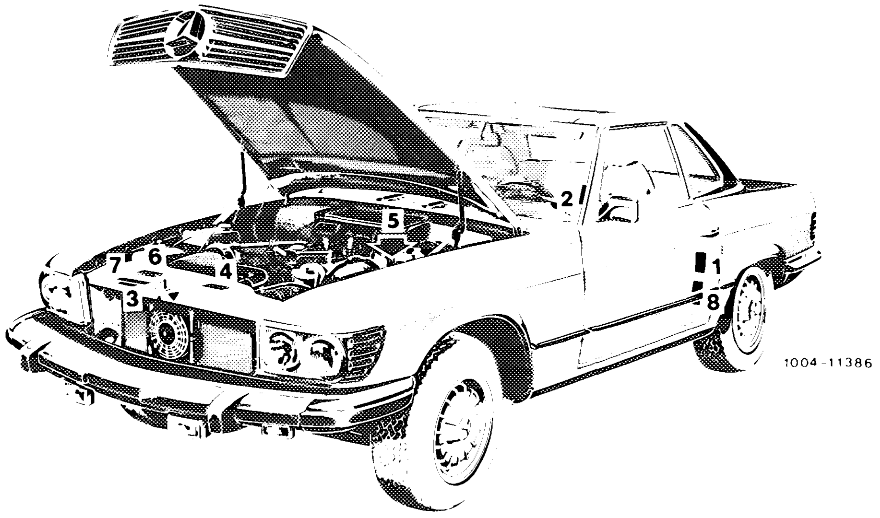

1 Certification Tag (left door pillar)
2 Identification Tag (left windshield post)
3 Vehicle Identification No.
4 Engine No.
5 Body No. and Paintwork No.
6 Information Tag
California version
Vacuum line routing for emission control system
7 Emission Control Tag
8 Emission Control Tag
Catalyst Information

Model 126 sedan (coupe similar)

When ordering spare parts, please specify chassis and engine numbers.

The illustration depicts the sedan. On the coupe, the identification plates are arranged similarly.

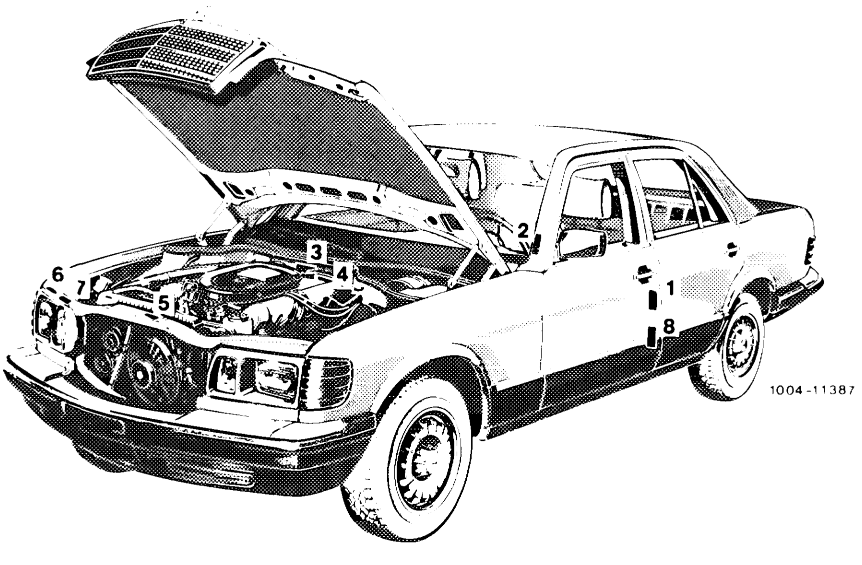

1 Certification Tag (left door pillar)
2 Identification Tag (left window post)
3 Vehicle Identification No.
4 Engine No.
5 Body No. and Paintwork No.
6 Emission Control Tag
7 Information Tag
California version
Vacuum line routing
for emission control system

Engine

Model	107.045	107.025	126.033	126.043
Sales designation	380 SL	380 SLC	380 SEL	380 SEC
Engine	116.960 116.962	116.960	116.961 116.963	116.963
Operation	4-cycle, electronic/ mechanical gasoline injection system with airflow sensor (CIS)	4-cycle, electronic/ mechanical gasoline injection system with airflow sensor (CIS)	4-cycle, electronic/ mechanical gasoline injection system with airflow sensor (CIS)	4-cycle, electronic/ mechanical gasoline injection system with airflow sensor (CIS)
Number of cylinders	8	8	8	8
Cylinder arrangement	V-shaped 90°	V-shaped 90°	V-shaped 90°	V-shaped 90°
Bore/stroke mm	88/78.9	88/78.9	88/78.9	88/78.9
Total effective piston displacement cc	3839	3839	3839	3839
Compression ratio	8.3:1	8.3:1	8.3:1	8.3:1
Firing order	1-5-4-8-6-3-7-2	1-5-4-8-6-3-7-2	1-5-4-8-6-3-7-2	1-5-4-8-6-3-7-2
Maximum speed rpm	5300 ± 50	5300 ± 50	5300 ± 50	5300 ± 50
Engine output (SAE)kW/rpm (SAE net bhp/rpm)	115/4750 (155/4750)	115/4750 (155/4750)	115/4750 (155/4750)	115/4750 (155/4750)
Maximum torque Nm/rpm (net lb-ft./rpm)	275/2750 (196/2750)	275/2750 (196/2750)	275/2750 (196/2750)	275/2750 (196/2750)
Crankshaft bearings	5	5	5	5
Valve arrangement	Overhead/hydraulic lifters	Overhead/hydraulic lifters	Overhead/hydraulic lifters	Overhead/hydraulic lifters
Camshaft arrangement	OHC, one per cylinder bank	OHC, one per cylinder bank	OHC, one per cylinder bank	OHC, one per cylinder bank
Oil cooling	none	none	none	none
Cooling	Coolant circulating pump, thermostat with bypass line, fan with visco fan clutch, finned tube radiator	Coolant circulating pump, thermostat with bypass line, fan with visco fan clutch, finned tube radiator	Coolant circulating pump, thermostat with bypass line, fan with visco fan clutch, finned tube radiator	Coolant circulating pump, thermostat with bypass line, fan with visco fan clutch, finned tube radiator
Lubrication	Pressure lubrication via gear type pump	Pressure lubrication via gear type pump	Pressure lubrication via gear type pump	Pressure lubrication via gear type pump
Oil filter	Full flow filter	Full flow filter	Full flow filter	Full flow filter
Air cleaner	Dry paper cartridge	Dry paper cartridge	Dry paper cartridge	Dry paper cartridge

Engine

Model	126.037	126.044
Sales designation	500 SEL	500SEC
Engine	116.960 116.962	116.960
Operation	4-cycle, electronic mechanical gasoline injection system with airflow sensor (CIS)	4-cycle, electronic mechanical gasoline injection system with airflow sensor (CIS)
Number of cylinders	8	8
Cylinder arrangement	V-shaped 90°	V-shaped 90°
Bore stroke mm	96.5 85	96.5 85
Total effective piston displacement cc	4973	4973
Compression ratio	8.0:1	8.0:1
Firing order	1-5-4-8-6-3-7-2	1-5-4-8-6-3-7-2
Maximum speed rpm	5500 ± 50	5500 ± 50
Engine output (SAE)kW rpm (SAE net bhp rpm)	137 4500 (184 4500)	137 4500 (184 4500)
Maximum torque Nm rpm (net lb-ft. rpm)	343 2000 (247 2000)	343 2000 (247 2000)
Crankshaft bearings	5	5
Valve arrangement	Overhead hydraulic lifters	Overhead hydraulic lifters
Camshaft arrangement	OHC, one per cylinder bank	OHC, one per cylinder bank
Oil cooling	none	none
Cooling	Coolant circulating pump, thermostat with bypass line, fan with visco fan clutch, finned tube radiator	Coolant circulating pump, thermostat with bypass line, fan with visco fan clutch, finned tube radiator
Lubrication	Pressure lubrication via gear type pump	Pressure lubrication via gear type pump
Oil filter	Full flow filter	Full flow filter
Air cleaner	Dry paper cartridge	Dry paper cartridge

Filling capacities

Model	107.045	107.025	126.032	126.033	126.043
Sales designation	380 SL	380 SLC	380 SE	380 SEL	380 SEC
Engine	116.960 116.962	116.960	116.963	116.961 116.963	116.963
Fuel tank/reserve approx. l	85/11.5	85/11.5	90/12.5	90/12.5	90/12.5
Engine oil initial filling approx. l	8.5	8.5	8.5	8.5	8.5
During oil and filter change approx. l	8.0	8.0	8.0	8.0	8.0
Marks on dipstick max./min. approx. l	7.5/5.5	7.5/5.5	7.5/5.5	7.5/5.5	7.5/5.5
Cooling system with heater approx. l	12.5	12.5	12.5	12.5	12.5
Coolant pump	maintenance-free	maintenance-free	maintenance-free	maintenance-free	maintenance-free
Brake system approx. l	0.53	0.53	0.53	0.53	0.53
Automatic transmission approx. l initial fill/oil change	7.3/6.2	7.3/6.2	7.1/6.2	7.3/6.2	7.3/6.2
Rear axle hypoid gear oil SAE 90 approx. l	1.3	1.3	1.3	1.3	1.3
Power steering approx. l	1.4	1.4	1.2	1.2	1.2

Filling capacities

Model	126.037	126.044
Sales designation	500 SEL	500 SEC
Engine	117.963	117.963
Fuel tank/reserve approx. l	90/12.5	90/12.5
Engine oil initial filling approx. l	8.5	8.5
During oil and filter change approx. l	8.0	8.0
Marks on dipstick max./min. approx. l	7.5/5.5	7.5/5.5
Cooling system with heater approx. l	13.0	13.0
Coolant pump	maintenance-free	maintenance-free
Brake system approx. l	0.53	0.53
Automatic transmission approx. l initial fill/oil change	8.6/7.7	8.6/7.7
Rear axle hypoid gear oil SAE 90 approx. l	1.3	1.3
Power steering approx. l	1.2	1.2

Electrical system

Model		107.045	107.025	126.032	126.033	126.043
Sales designation		380 SL	380 SLC	380 SE	380 SEL	380 SEC
Engine		116.960 116.962	116.960	116.963	116.961 116.963	116.963
Battery	Voltage	12 V	12 V	12 V	12 V	12 V
	Capacity	88 Ah	88 Ah	66 Ah	66 Ah	66 Ah
Starter	Bosch	GF 12 V 1.5 kW	GF 12 V 1.5 kW	GF 12 V 1.5 kW	GF 12 V 1.5 kW	GF 12 V 1.5 kW
Alternator		Kl 14 V 70 A 20	Kl 14 V 70 A 20	N1 - 14 V 80 A 19	Kl 14 V 70 A 20	Kl 14 V 70 A 20

Electrical system

Model		126.037	126.044
Sales designation		500 SEL	500 SEC
Engine		117.963	117.963
Battery	Voltage	12 V	12 V
	Capacity	66 Ah	66 Ah
Starter	Bosch	GF 12 V 1.5 kW	GF 12 V 1.5 kW
Alternator		N1 - 14 V 80 A 19	N1 - 14 V 80 A 19

Engine	Model	Sales designation	Output in kW at 1/min	Compression ε : 1
116.960	107.025	380 SLC	160/5500	9.0
116.960 NV			145/5500	7.5
116.960 (J) (USA)			120/4750	8.3
116.960	107.045	380 SL	160/5500	9.0
116.960 NV			145/5500	7.5
116.960 (AUS)			145/5500	8.3
116.960 (J) (USA)			120/4750	8.3
116.961	126.032	380 SE	160/5500	9.0
116.961 NV			145/5500	7.5
116.961	126.033	380 SEL	160/5500	9.0
116.961 NV			145/5500	7.5
116.961 (AUS) (S)			145/5500	8.3
116.961 (J) (USA)			120/4750	8.3
116.962	107.045	380 SL	150/5250	9.4
116.962 NV			135/5500	7.5
116.962 (AUS) (CH) (S)			145/5500	8.3
116.962 (J) (USA)			120/4750	8.3
116.963	126.032	380 SE	150/5250	9.4
116.963 KAT, (USA)			120/4750	8.3
116.963 NV			135/5500	7.5
116.963 (AUS) (CH) (S)			145/5500	8.3
116.963	126.033	380 SEL	150/5250	9.4
116.963 NV			135/5500	7.5
116.963 (AUS) (CH) (S)			145/5500	8.3
116.963 KAT, (J) (USA)			120/4750	8.3
116.963	126.043	380 SEC	150/5250	9.4
116.963 NV			135/5500	7.5
116.963 (AUS) (CH) (S)			145/5500	8.3
116.963 KAT, (J) (USA)			120/4750	8.3
116.964 RÜF, (CH) (S)	107.047	420 SL	160/5200	9.0
116.964 KAT, (CH)			150/5200	9.0
116.964 NV			150/5200	8.0

Engine	Model	Sales designation	Output in kW at 1/min	Compression ϵ : 1
116.965 RÜF, (CH)	126.034	420 SE	160/5200	9.0
116.965 KAT, (CH)			150/5200	9.0
116.965 NV			150/5200	8.0
116.965 RÜF			170/5400	10.0
116.965 KAT			165/5400	10.0
116.965 RÜF, (CH) (S)	126.035	420 SEL	160/5200	9.0
116.965 KAT, (AUS) (CH) (J) (USA)			150/5200	9.0
116.965 NV			150/5200	8.0
116.965 RÜF			170/5400	10.0
116.965 KAT			165/5400	10.0
116.965 RÜF, (CH) (S)	126.046	420 SEC	160/5200	9.0
116.965 KAT, (CH)			150/5200	9.0
116.965 NV			150/5200	8.0
116.965 RÜF			170/5400	10.0
116.965 KAT			165/5400	10.0
117.960	107.026	500 SLC	177/4750	8.8
117.960 NV			165/4750	7.5
117.960	107.046	500 SL	177/4750	8.8
117.960 NV			165/4750	7.5
117.961	126.036	500 SE	177/4750	8.8
117.961			165/4750	7.5
117.961	126.037	500 SEL	177/4750	8.8
117.961 NV			165/4750	7.5
117.962	107.046	500 SL	170/4750	9.2
117.962 NV			160/4750	7.5
117.963	126.036	500 SE	170/4750	9.2
117.963 NV			160/4750	7.5
117.963	126.037	500 SEL	170/4750	9.2
117.963 NV			160/4750	7.5
117.963 (CH) (S)			170/4750	9.2
117.963 (J) (USA)			137/4500	8.0
117.963	126.044	500 SEC	170/4750	9.2
117.963 NV			160/4750	7.5
117.963 (CH) (S)			170/4750	9.2
117.963 (J) (USA)			137/4500	8.0
117.964 RÜF	107.046	500 SL	180/4750	9.0
117.964 KAT			164/4700	9.0
117.964 NV			170/4750	8.0
117.965 RÜF	126.036	500 SE	180/4750	9.0
117.965 KAT, (CH)			164/4700	9.0
117.965 NV			170/4750	8.0
117.965 RÜF			195/5200	10.0
117.965 KAT			185/5200	10.0

Engine	Model	Sales designation	Output in kW at 1/min	Compression ϵ : 1
117.965 RÜF	126.037	500 SEL	180/4750	9.0
117.965 KAT, CH			164/4700	9.0
117.965 NV			170/4750	8.0
117.965 RÜF			195/5200	10.0
117.965 KAT			185/5200	10.0
117.965 RÜF	126.044	500 SEC	180/4750	9.0
117.965 KAT, CH			164/4700	9.0
117.965 NV			170/4750	8.0
117.965 RÜF			195/5200	10.0
117.965 KAT			185/5200	10.0
117.967 AUS	107.048	560 SL	175/4750	9.0
117.967 J USA			173/4750	9.0
117.968 RÜF	126.039	560 SEL	200/5000	9.0
117.968 KAT, AUS CH			178/4800	9.0
117.968 J USA			180/4800	9.0
117.968			220/5000	10.0
117.968 RÜF			220/5000	10.0
117.968 KAT			205/5200	10.0
117.968 NV			200/5000	8.0
117.968 RÜF	126.045	560 SEC	200/5000	9.0
117.968 KAT, AUS CH			178/4800	9.0
117.968			220/5000	10.0
117.968 J USA			180/4800	9.0
117.968 RÜF			220/5000	10.0
117.968 KAT			205/5200	10.0
117.968 NV			200/5000	8.0

NV = Low compression, SA = Special version, KAT = Catalytic converter
RÜF = Reconverted vehicle

01–010 Checking compression pressure

Test values with engine at operating temperature		Positive pressure in bar
Minimum compression pressure[1]) at	Normal compression	approx. 8.5
	Low compression	approx. 7.5
Permissible difference between the individual cylinders		max. 1.5

---

[1]) Check cylinders for leaks if compression pressure is below minimum.

Special tools

Compression pressure recorder with accessories	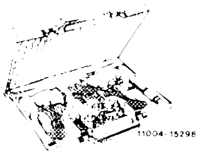	001 589 76 21 00
Adapter line for compression pressure recorder		124 589 36 63 00

Note

Check compression pressure at operating temperature.

Check cylinders for leaks if compression pressure is below minimum (01–015).

For checking, unscrew all spark plugs.

Disconnect plug connection (X27) from cable harness and connect adapter line (01) with single-pole coupling to plug connection (terminal 50) of the cable harness.

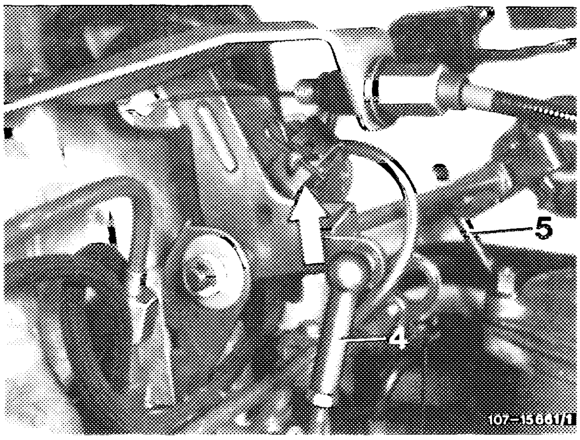

Rotate the engines with the starter motor. To do so, connect the terminals specified in each case.

On vehicles with screw-type cable connectors, use the crocodile clip with the single-pole plug instead of the adapter line.

Model 107

On the 4-pole cable connector, disconnect cable (color red/violet) at terminal 16 and switch off ignition, so that the ignition coil and the fuel pump are not activated. Connect terminal 30 (cable color red) and terminal 50 (cable color violet).

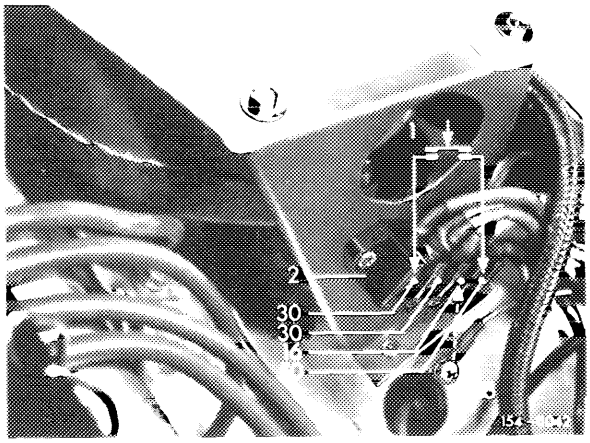

Model 126

Separate plug (terminal 16, arrow), switch off ignition so that ignition coil and fuel pump are not activated.

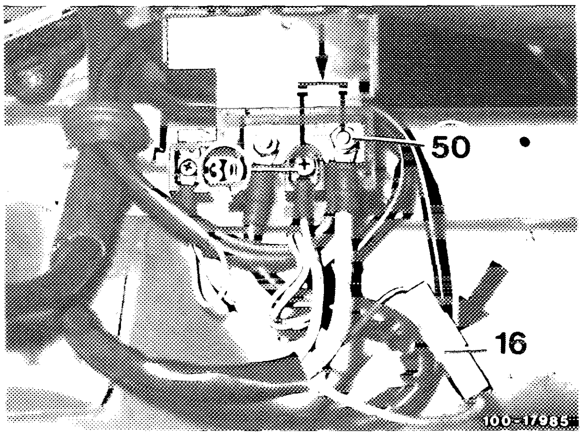

Connect the terminals shown with arrows.

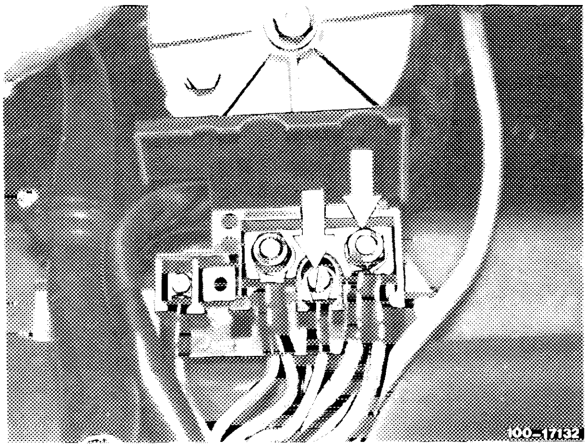

Checking

1 Unscrew all spark plugs.

2 Rotate engine several times to expel residue and soot. (Selector lever: position N or P).

3 Press compression pressure recorder into the spark plug hole of the cylinder concerned.

4 For checking, rotate crankshaft approx. 8 times at full throttle.

Check all cylinders in this manner. First move data sheet in compression pressure recorder into new working position.

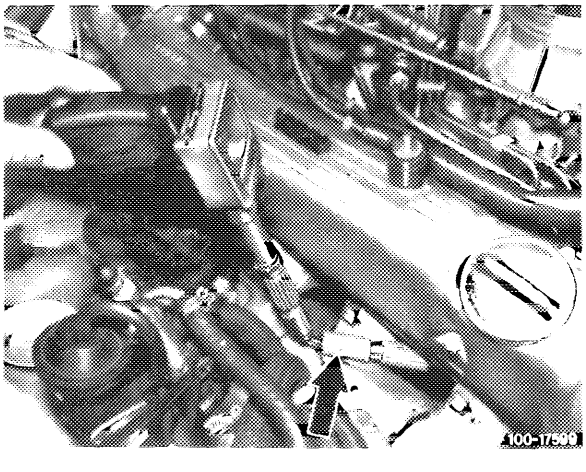

01–015 Checking cylinders for leaks

Data

Total pressure loss	max. 25 %
On valves and cylinder head gasket	max. 10 %
On pistons and piston rings	max. 20 %

Special tools

Socket insert 27 mm, 1/2" drive for rotating the engine	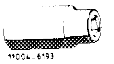	001 589 65 09 00
1/2" drive, 80 mm long for rotating the engine		617 589 00 16 00

Conventional tool

Cylinder leak tester	e.g. Bosch, EFAW 210 A Sun, CLT 228–1

Checking

1 Run engine up to operating temperature.

2 Remove air cleaner.

3 Set throttle valve into fully open position.

4 Unscrew spark plugs.

5 Pull off breather hose on the cylinder head cover (arrow).

6 Top up coolant, leaving cap off.

7 Connect cylinder leak tester with hose to a compressed air system.

Calibrate tester.

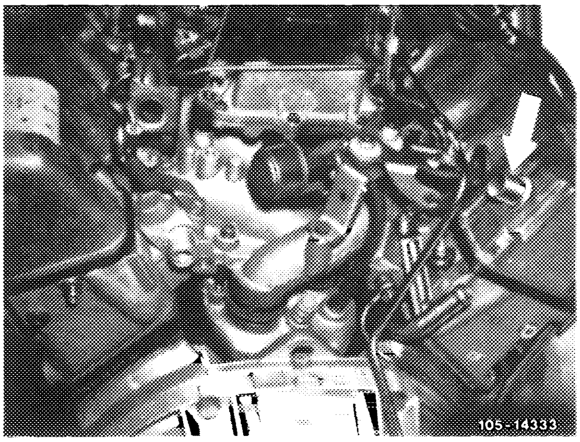

8 Set the piston of the cylinder to be checked at ignition TDC. To do so, rotate engine at the crankshaft using the tool combination.

For rotating the engine of model 107, remove the radiator cowling and the fan.

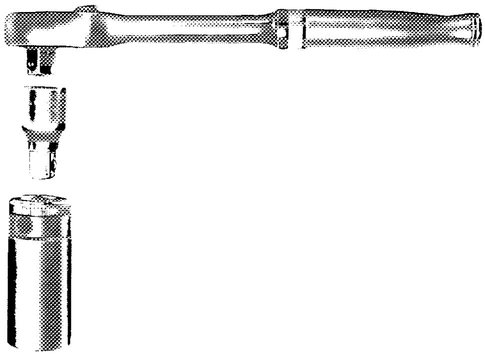

Note: The vibration damper is marked with the figures 0, 90, 180 and 270 (arrows).

The respective pistons are in TDC position when the marks on the vibration damper are adjacent to the indicator:

Mark	Pistons at TDC
0	1 and 6
90	5 and 3
180	4 and 7
270	8 and 2

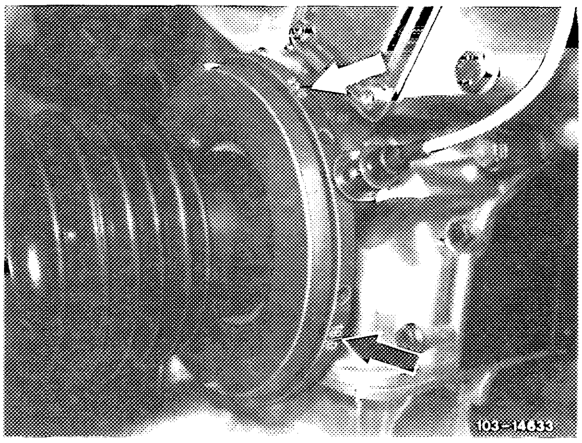

9 Screw connection hose into spark plug bore and connect to leak tester hose.

Ensure that the crankshaft does not move.

10 Note the pressure loss on the cylinder leak tester.

11 By listening, determine if pressure escapes through the intake manifold, exhaust, engine breathing system, spark plug bore of the neighboring cylinder or coolant filler opening.

12 Check all cylinders in the sequence of the firing order.

Note: There is a possibility that the piston ring gaps of individual pistons are directly one above the other, so that the test result will be misrepresented.

When in doubt, continue running the vehicle and recheck cylinders for leaks at a later date.

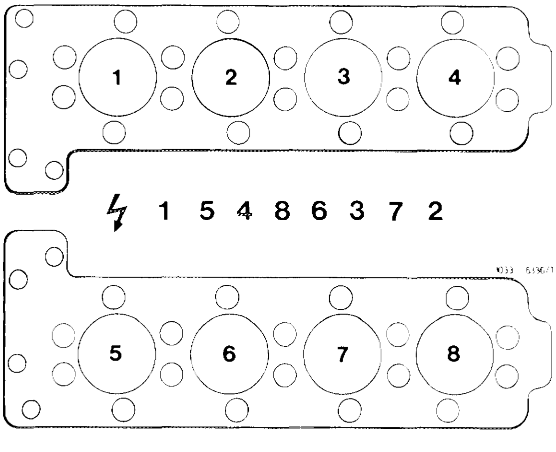

Conventional tool

Cylinder illuminating lamp	e.g. Karl Storz GmbH, D–7200 Tuttlingen Motoskop TW (cold light) with lens probe 103 26 CW (570 mm) and lens probe 103 26 CT (210 mm)[1]

[1] Required for 3rd cylinder.

Note

With a cylinder illuminating lamp it is possible to carry out the visual check while the cylinder heads are installed.

To evaluate the cylinder bore, the lens probe is introduced through the spark plug bore while the respective piston is at BDC position.

To check cylinders with difficult access (left engine side), the lens probe 10326 CT (210 mm) must first be introduced into the spark plug bore before connecting it to the extension.

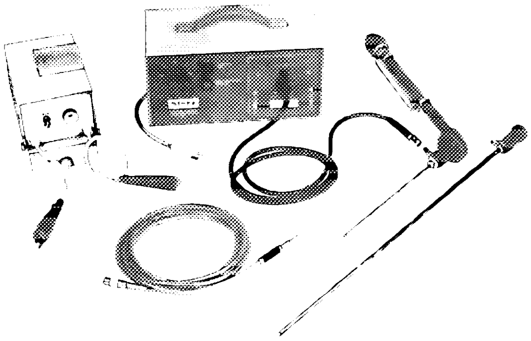

Motoskop TW
12 volts and 220 volts

103 - 15713

After boring and honing, the cylinder running surfaces are treated electrolytically. The result of this is that the piston rings and the chrome or iron-plated light metal pistons are only in contact with the silicon crystals (0.02 mm to 0.05 mm in size), which provide a wear-resistant running surface. Honing traces are not visible on these cylinder running surfaces.

When evaluating scored or streaky cylinder running surfaces, it is often hard for the workshop to decide whether the damage is already serious enough to require engine removal or repair, or whether the marks are insignificant. The following information will help to make expert and correct decisions.

Note: With ,,streaks in direction of land'' (in direction of piston pin), shaft streaks or seizures are not possible, since there is no contact between piston skirt and cylinder liner. The first difference on cylinder running surfaces is between ,,optical streaks'' or ,,seizure streaks''. ,,Optical streaks'' are up to 3 mm wide and without significance; with ,,seizure streaks'' however, the cylinder running surface is rough. If there is any doubt, remove the cylinder head.

Brown discoloration (oil lacquer) is a normal occurrence with aluminum cylinder running surfaces.

Specified viscosity classes according to SAE
during lasting ambient temperatures

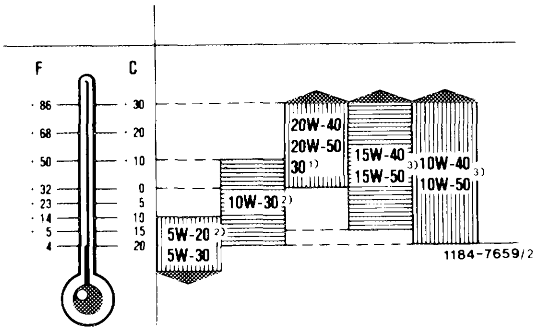

1) SAE 40 may be used during lasting outside temperatures above +30 °C (+86 °F).

2) For engine oils identified on sheets 226.1 and 227.1 of Specifications for Service Products with footnote 1),
the following applies:
SAE 5 W–20 below +10 °C.
SAE 10 W–30 in temperate zones all seasons; i.e. up to +30 °C.
SAE 15 W–30 in temperate zones all seasons.

3) All-season oil.

Oil capacity in liters (for approved engine oils refer to Specifications for Service Products)

Engine (total filling capacity)	New filling (dry engine)	8.5¹)
	With oil and filter change	8.0

1) On vehicles with air-oil cooler 0.5 liter additionally.

Tightening torques		Nm
Oil drain plug of oil pan	M 26	50
	M 12	40
Central screw – oil filter cover	Model 126	25
Attaching screw for oil filter lower part	Model 107	35

Special tools

Tester for cooling system and radiator or expansion tank cap	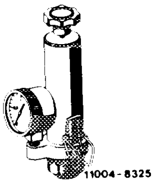 11004-8325	001 589 48 21 00
Radiator cap with hose for leak test	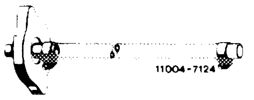 11004-7124	605 589 00 25 00
Adapter for checking radiator cap in connection with tester	 11004-8326	000 589 73 63 00

Conventional tool

Engine hoist size 1.5	e.g. Wilibär, D–5630 Remscheid

Note

On model 126, raise engine hood into 90° position and engage left detent lever (arrow).

On model 107, remove engine hood.

Remove and install engine with transmission at an inclination of approx. 45°.

Removal

1 Drain coolant.

Caution!
The drain plugs (2) are arranged at the left and right of the cylinder crankcase.
The lateral crankshaft bearing cap bolts (arrows) should not be confused with the coolant drain plugs.

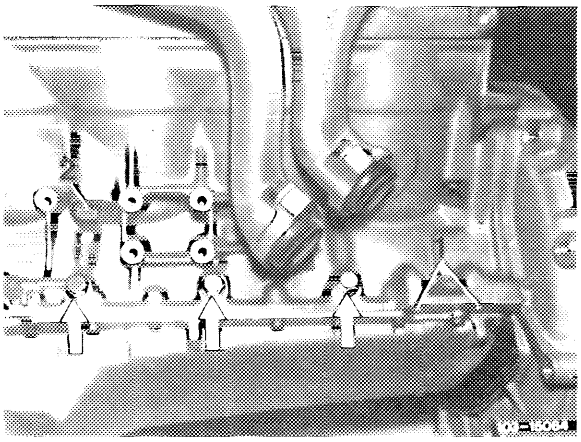

2 Drain plug left

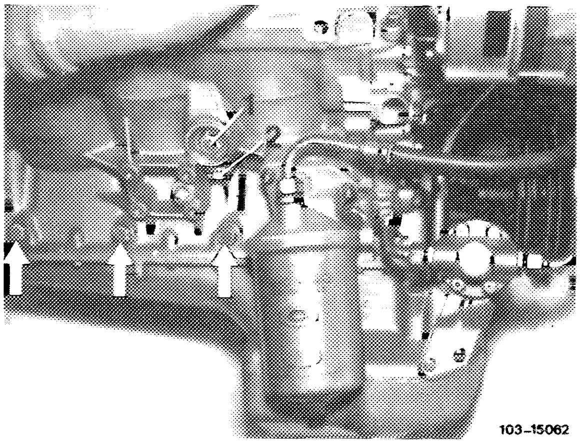

2 Drain plug right

2 On vehicles with air conditioning or automatic climate control, these should be drained and hoses disconnected at the pipe pair (arrow) (83–516).

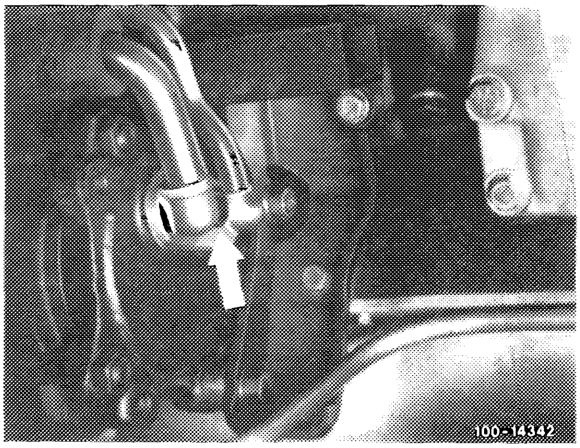

3 Remove radiator and fan.

4 Remove complete exhaust system.

5 Press control arm (4) off right ball head (only model 107).

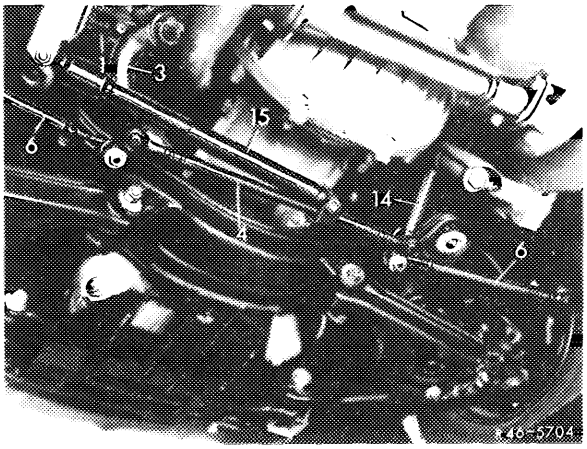

6 Evacuate power steering pump reservoir.

7 Disconnect pressure hose on power steering.

8 Disconnect all coolant, vacuum, oil, fuel and electrical lines and other connections leading to the engine.

9 Unscrew cable for TDC transmitter from diagnostic socket.
Remove screw (4) and pull out transmitter (3).

10 Disconnect control shaft.

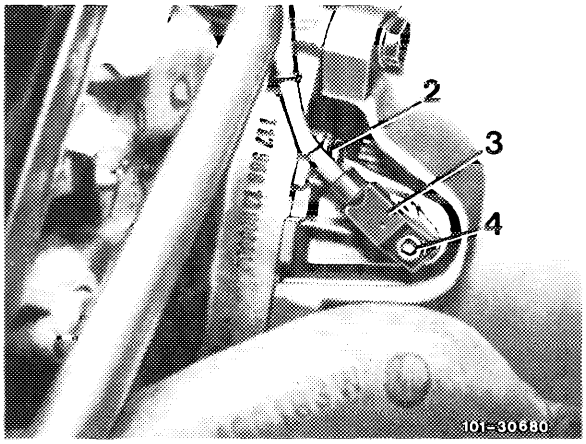

11 Unscrew attaching screws (arrow) at left and right of engine mount.

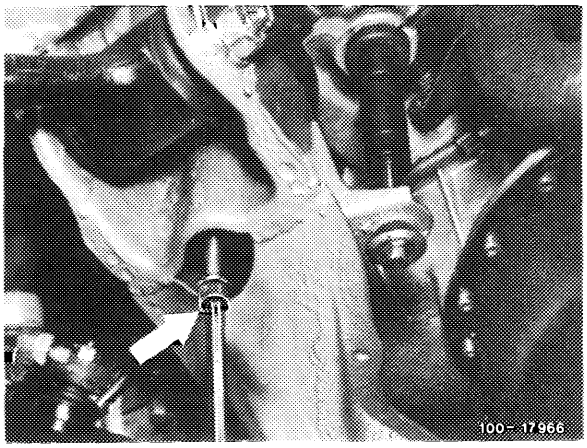

12 Remove engine shock absorbers left and right.

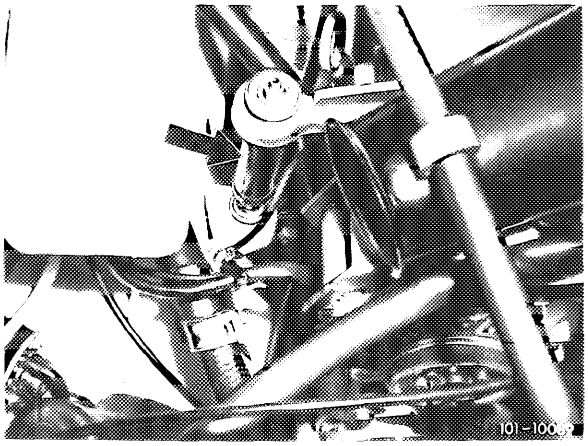

Model 107

13 Attach engine hoist cables to the lifting eyes.

14 Remove rear engine cross member or bulkhead with engine mount.

15 Disconnect drive shaft from transmission.

16 Loosen connections on transmission.

17 Lift out engine at an inclination of 45°.

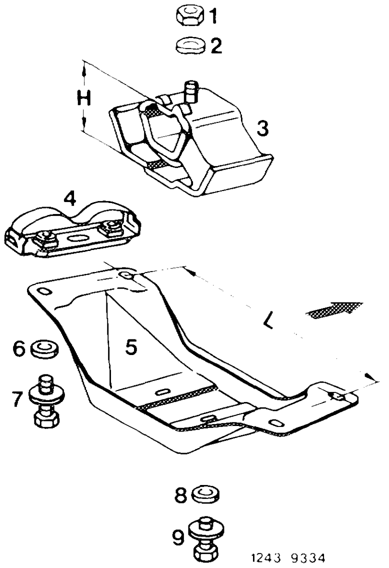

Installation

Caution!
When installing a new engine after a previous bearing failure, carefully flush oil hoses, renew oil cooler. Disassemble and clean oil damper.

18 Check engine mounts, coolant, vacuum, oil and fuel hoses, renew if required.

Caution!
When installing the refrigerant compressor carrier (steel version) it is important to ensure stress-free assembly.

The carrier (steel version) must be checked for distortion. It must rest evenly on all contact points of the cylinder crankcase without gap. This condition should be checked before tightening the bolts.

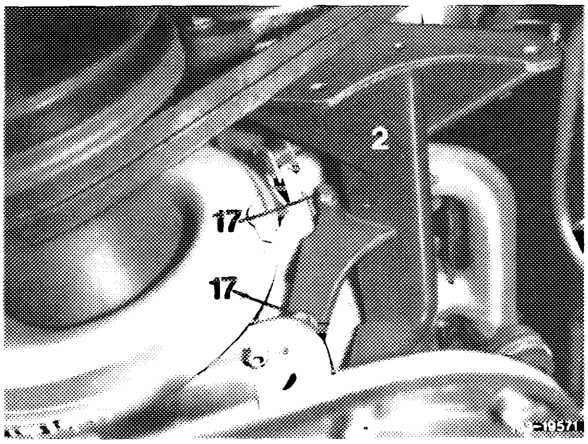

The bolts must be tightened in the following sequence:

a) Install bolts (17, 6 and 5) finger-tight.

b) Tighten bolts (17) at engine front.

c) Tighten bolt (6) and nut (5) at side of engine.

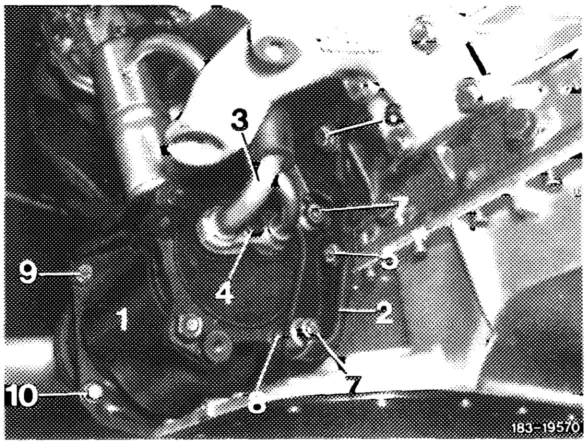

19 Install and connect engine.

20 Install rear engine mount without tension. Tighten set screw with 30 Nm.

21 Ensure that all drain plugs are tight.

22 Fill in oils (exchange engines and overhauled engines initial operation oil according to sheet 225.3 „Specifications for Service Products"), coolant and refrigerant.

23 Check cooling system with leak tester for leaks.

Check antifreeze capacity of coolant.

24 Connect control linkage and check function.

25 Clean air filter and renew if necessary.

26 Clean air cleaner and renew if necessary.

27 Set idle speed and exhaust gas value

The engine has a closed maintenance-free engine breathing system. The engine blow-by gases and cylinder crankcase vapors flow through the connection pipe (1) in the left cylinder head cover (in direction of driving) to the idle air distributor (3). A breather orifice of 2 mm dia. is installed in the idle air distributor.

From the breather orifice, the blow-by gases and crankcase vapors mixed with the idle air flow through a distribution pipe to the two idle air ducts (one duct per bank of cylinders), which are integrated in the intake manifold casting. From here the vapors and gases are directed straight into the intake pipes and further into the combustion chambers.

From the breather connection (2) of the right cylinder head cover the breather pipe leads directly to the clean air side in the air cleaner.

In the lower and medium performance range, the engine is supplied with fresh air via the right-hand cylinder bank by means of the intake manifold vacuum which is transmitted via the left-hand breather pipe into the cylinder crankcase. In other words, clean air is drawn in from the air cleaner via the breather pipe.

This changes to a breathing action in the upper performance range. The blow-by gases and crankcase vapors flow into the air cleaner, and further into the intake pipes and combustion chambers via the air cleaner flap.

In order to prevent freezing of the condensate in the breather orifice at low ambient temperatures, the idle air distributor is coolant-heated.

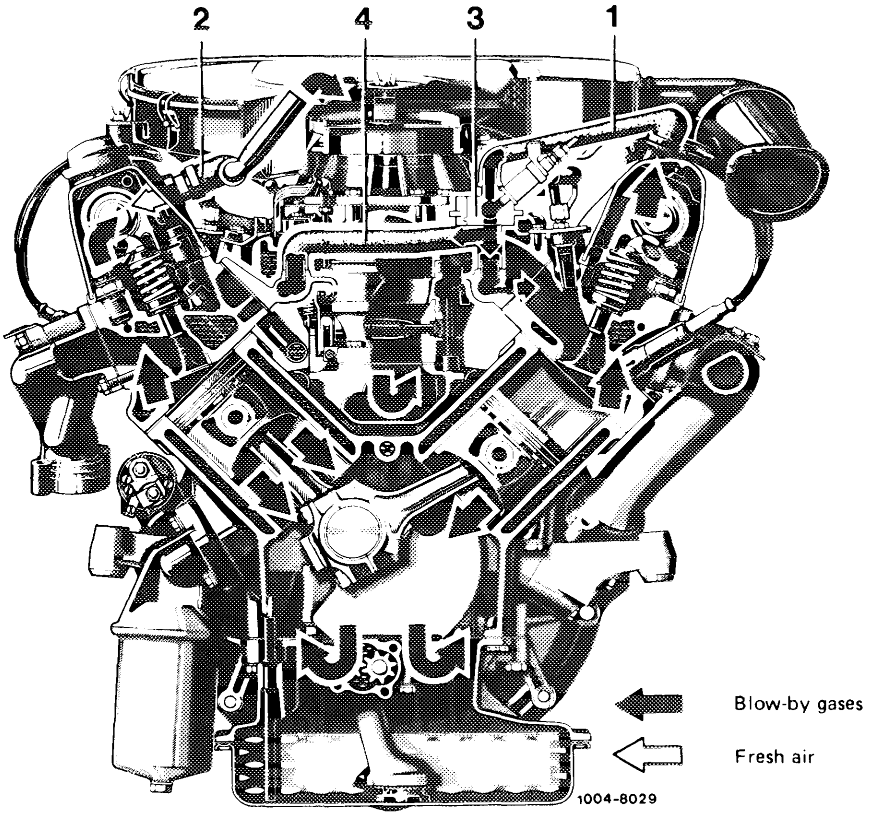

01–112 Measuring, honing and silicon–lapping cylinder bores

Allocation	Group No.	Cylinder diameter	Piston diameter
Engines 116.960/961/964/965			
Standard size Std 92.0 dia.	0	91.998–92.003	91.985–91.990
	0+	92.003–92.008	91.990–91.995
	1	92.008–92.013	91.995–92.000
	1+	92.013–92.018	92.000–92.005
	2	92.018–92.023	92.005–92.010
	2+	92.023–92.028	92.010–92.015
1st repair stage +0.5[1]	0	92.498–92.503	92.485–92.490
	1	92.508–92.513	92.495–92.500
	2	92.518–92.523	92.505–92.510
2nd repair stage +1.0[1]	0	92.998–93.003	92.985–92.990
	1	93.008–93.013	92.995–93.000
	2	93.018–93.023	93.005–93.010
Engines 116.960 AUS J USA, 116.961 AUS J S USA 116.962/963			
Standard size Std 88.0 dia.	0	87.998–88.003	87.985–87.990
	0+	88.003–88.008	87.990–87.995
	1	88.008–88.013	87.995–88.000
	1+	88.013–88.018	88.000–88.005
	2	88.018–88.023	88.005–88.010
	2+	88.023–88.028	88.010–88.015
1st repair stage +0.5[1]	0	88.498–88.503	88.485–88.490
	1	88.508–88.513	88.495–88.500
	2	88.518–88.523	88.505–88.510
2nd repair stage +1.0[1]	0	88.998–89.003	88.985–88.990
	1	89.008–89.013	88.995–89.000
	2	89.018–89.023	89.005–89.010

---

[1] Pistons of the repair stages are only available with the group numbers 0, 1 and 2.

Engine 117.960 up to end No. 000885

Standard size Std 97.0 dia.	0	96.998–97.003	96.985–96.990
	0+	97.003–97.008	96.990–96.995
	1	97.008–97.013	96.995–97.000
	1+	97.013–97.018	97.000–97.005
	2	97.018–97.023	97.005–97.010
	2+	97.023–97.028	97.010–97.015
1st repair stage +0.5[1])	0	97.498–97.503	97.485–97.490
	1	97.508–97.513	97.495–97.500
	2	97.018–97.523	97.505–97.510

Engines 117.960 as of end No. 000886
117.961/962/963/964/965/967/968

Standard size Std 96.5 dia.	0	96.498–96.503	96.485–96.490
	0+	96.503–96.508	96.490–96.495
	1	96.508–96.513	96.495–96.500
	1+	96.513–96.518	96.500–96.505
	2	96.518–96.523	96.505–96.510
	2+	96.523–96.528	96.510–96.515
1st repair stage +0.5[1])	0	96.998–97.003	96.985–96.990
	1	97.008–97.013	96.995–97.000
	2	97.018–97.023	97.005–97.010
2nd repair stage +1.0[1])	0	97.498–97.503	97.485–97.490
	1	97.508–97.513	97.495–97.500
	2	97.518–97.523	97.505–97.510

---

[1]) Pistons of the repair stages are only available with the group numbers 0, 1 and 2.

Piston clearance	when new	0.008–0.018
	wear limit	0.08
Maximum wear limit of cylinder bores in driving or transverse direction at upper and lower points of return of 1st piston ring		0.10

Machining tolerances

Permissible deviation from cylindrical shape	when new	0.013
	wear limit	0.05
Permissible deviation from rectangularity with reference to cylinder height		0.05
Mean roughness (Rz) after polishing		0.001
Mean roughness (Rz) after silicon-lapping		0.001–0.003
Permissible peak-to-valley-height (Wt)	50% of the roughness after silicon-lapping	
Cylinder bore chamfer		see Fig. No. 14

Conventional tools

Automatic cylinder reconditioning machine SUNNEN CK-10-G with honing oil filter and oil cooler

Honing head CK-3000 for 76–127 mm dia.

SUNNEN honing oil MB 30[1])

Prehoning, stone set C 30-A 53, 70 mm long[2])

Finish honing, stone set C 30-J 84, 70 mm long[2])

Polishing, stone set C 30-C 03-81

Stone holder for felt insert CK-30 35

Felt insert holder set CK-3130

Felt insert C 30-F 85

SUNNEN silicon paste AN-30

Box for silicon paste and felt inserts AN-35

Inside measuring instrument (dial gauge) for 50 to 150 mm diameter, with 0.01 mm division and spring-loaded measuring tip, e.g. Sunnen GRM 2125

Setting micrometer for inside measuring instrument GAM 2125 with setting range 50–200 mm, e.g. Sunnen CF-1000 M

Federal Republic of Germany:
e.g. Hommel Handel GmbH
Donatusstraße 24, D–5000 Köln 71

Other countries:
e.g. SUNNEN Products Comp.
USA–7910 Manchester
St. Louis, Mo. 63143

Hommel Handel Export Division
P.O. Box 1206
D–6806 Viernheim

---

[1] Initial filling approx. 170 liters.

[2] These stones are only available with a length of 89 mm and must be shortened at the top to 70 mm using a metal saw (see Fig. 3).

Note

The light metal cylinder bores are very sensitive to damage, scratches and dirt and therefore should be treated very carefully.

When honing, the cylinder bores should be matched to the dimensions of the existing repair stage pistons with group numbers 0, 1 or 2, while maintaining the specified piston clearance.

Measuring

When measuring the cylinder bores, use a measuring instrument with spring-loaded measuring tip to prevent score marks on cylinder running surface through the measuring point contact and premature wear of the instrument measuring pins.
Set the self-centering inside measuring instrument to the cylinder diameter before measuring, and measure at 22–24 °C room temperature.

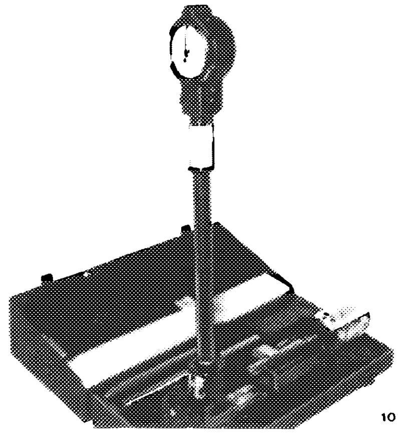

Inside measuring instrument with setting micrometer

101 – 18671

The aluminum surface recession (0.5–1.5 μm) between the silicon crystals can only be measured indirectly via the mean roughness (Rz) after silicon-lapping (end condition).

The specified exposed depth of the silicon crystals is obtained by the temporally limited control during silicon-lapping and the choice of silicon paste used.

Honing and silicon-lapping

With severely scored and worn cylinder (> 0.10 mm) etc., the cylinder bores can be honed to the specified repair stages.
After honing, the silicon crystals must remain intact and flattened on the cylinder surface.

The honing processes (prehoning, finish honing and polishing) must be followed by „silicon-lapping" according to the Sunnen process in order to expose the silicon crystals.

Omission of the job „silicon-lapping" invariably leads to piston seizures.

Caution!
The following jobs must only be carried out with a honing machine with honing oil filter and oil cooler.

The silicon particles must be separated from the honing oil by filtering.

The honing oil must be cooled to a constant temperature of 20 °C to avoid excessive heating of the cylinder crankcase.

In order to obtain a good honing quality it is necessary to use only the specified honing oil.

1 Set up honing machine CK-10-G.

Carry out all honing and lapping work without directional guide shoes.

The protrusion of the honing stone (arrow) is 14 mm.

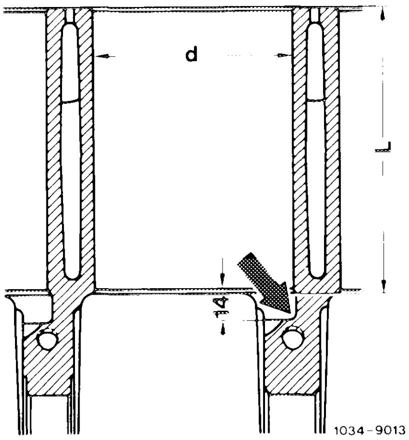

2 Cut the lower protrusion of the bronze strip on the main guide shoe (arrow) as the recess at the bottom of the cylinders allows only approx. 14 mm protrusion of the honing stone.

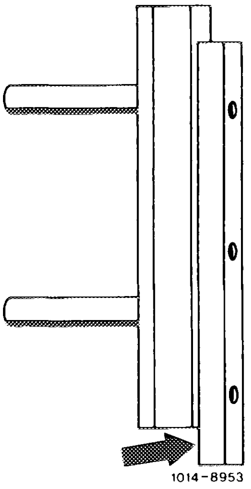

3 The specified stone sets of 89 mm length must be shortened to 70 mm. To do so, cut the honing stone at the top (not the holder) using a metal saw.

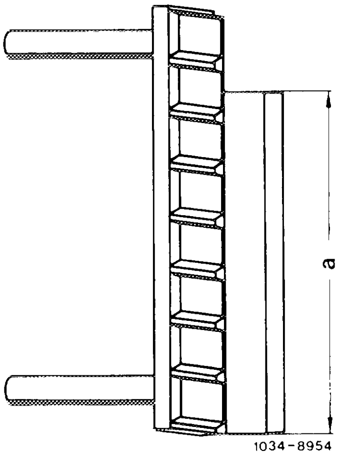

Dimension a = 70 mm

4 Torque the crankshaft bearing cap bolts and nuts in the sequence of the tightening diagram with 50 Nm.

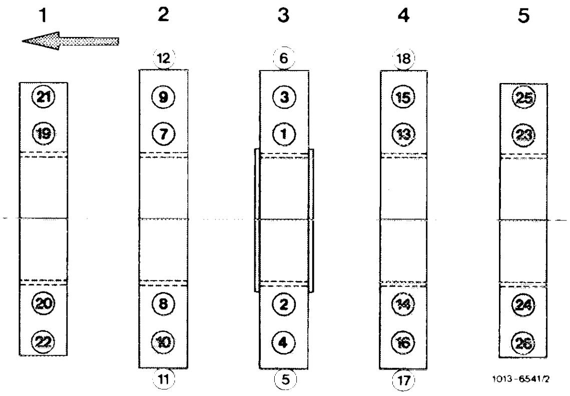

5 Fix disassembled and cleaned cylinder crankcase with fitted and tightened crankshaft bearing caps in the honing machine by means of the square steel.

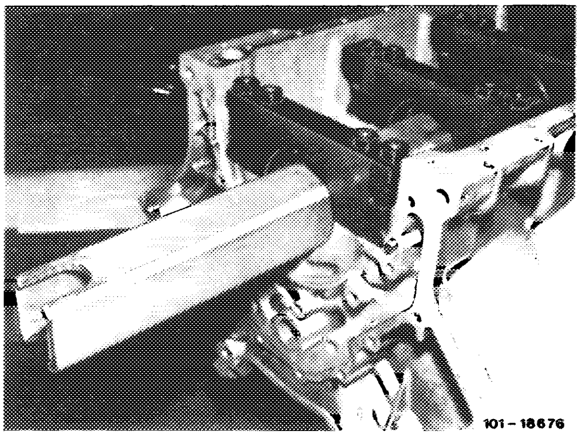

6 Adjust stroke (cylinder length) on the stroke scale according to the table „Prehoning".

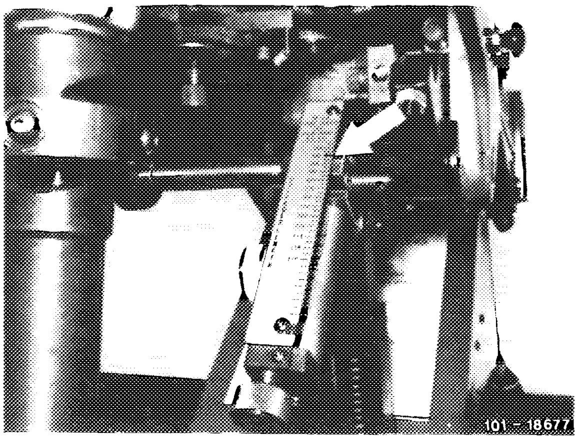

7 Adjust stone projection (arrow) with the gauge according to the table.

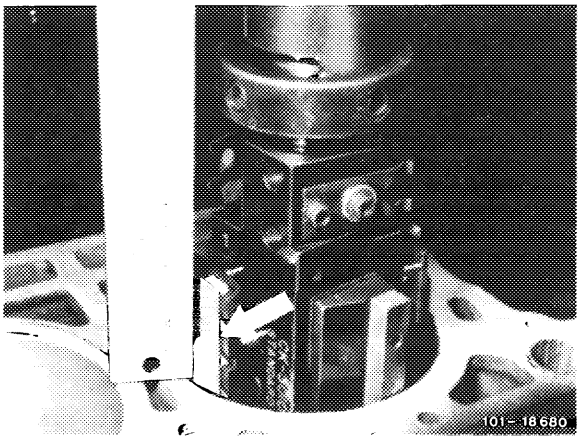

8 Adjust feed (arrow) according to the table.

9 Adjust strokes per minute and revolutions per minute according to the table.

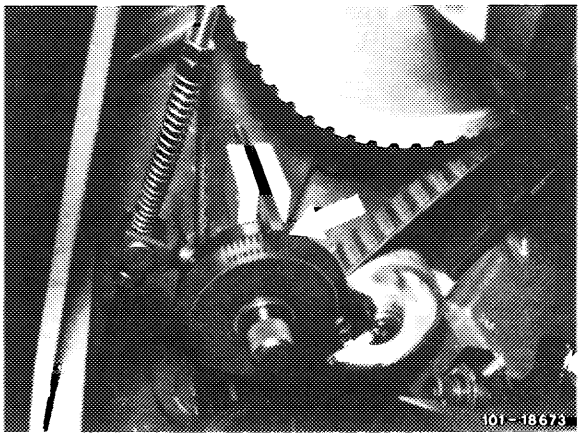

Prehoning

Setting up of honing machine

Engine	116.960 116.961 116.964 116.965	116.960[2][4] 116.961[2] 116.962[3][4] 116.963[3]	117.960[1] 117.961 117.962 117.963	117.964 117.965 117.967 117.968	117.960[1]
Cylinder dia. setting for 1st repair stage (+0.5)		92 mm	88 mm	96.5 mm	97 mm
Cylinder length		135 mm	135 mm	155 mm	
Stroke setting		137 mm	137 mm	157 mm	
Speed/min			125		
Strokes/min			49		
Feed			4		
Stone protrusion			approx. 12 mm		
Prehoning stone set			C 30-A 53		
Indication %			approx. 30		
Material removal/min			0.07 mm		
Feed scale/material removal			10 divisions/0.05 mm		

[1] Up to engine end No. 000885 cylinder dia. 97 mm.

[2] AUS J S USA model year 1981.

[3] Standard version and AUS J S USA as of model year 1982.

[4] Only AUS J USA

10 Prehone all cylinder bores with full honing oil supply up to approx. 0.08 mm before the final dimension, since otherwise the silicon crystals will be torn out or damaged by the cutting pressure.

Caution!
When measuring directly after prehoning, a dimension of approx. +0.02 mm is obtained due to a rise in temperature.

The heating-up of the cylinder crankcase is also dependent on the ambient temperature.

11 Insert stone set for fine honing and cut to size as described under figure 3.

12 Set up honing machine according to the table ,,Fine honing''.

Fine honing

Setting up of honing machine

Engine	116.960 116.961 116.964 116.965	116.960[2])[4]) 116.961[2]) 116.962[3])[4]) 116.963[3])	117.960[1]) 117.961 117.962 117.963	117.964 117.965 117.967 117.968	117.960[1])
Cylinder dia. setting for 1st repair stage (+0.5)		92.42 mm	88.42 mm	96.92 mm	97.42 mm
Cylinder length		135 mm	135 mm	155 mm	
Stroke setting		137 mm	137 mm	157 mm	
Speed/min			125		
Strokes/min			49		
Feed			3		
Stone projection			approx. 12 mm		
Finish honing stone set			C 30-J 84		
Indication %			approx. 30		
Material removal/min			0.05 mm		
Feed scale/material removal			10 divisions/0.05 mm		

[1]) Up to engine end No. 000885 cylinder dia. 97.42 mm.
[2]) (AUS) (J) (S) (USA) model year 1981.
[3]) Standard version and (AUS) (J) (S) (USA) as of model year 1982.
[4]) Only (AUS) (J) (USA)

13 Fine-hone all cylinder bores with full honing oil supply up to approx. 0.02 mm before reaching the final dimension.

Caution!

Measuring directly after fine-honing, a dimension of approx. +0.01 mm is obtained as a result of temperature increase. The heating-up of the cylinder crankcase is also dependent on the ambient temperature.

14 **Chamfer** cylinder bores according to drawing **prior to „polishing".**

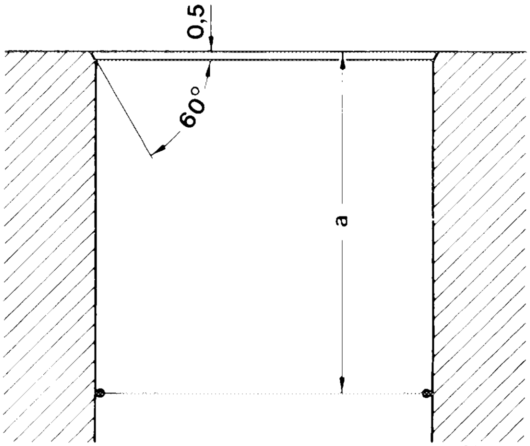

1034–8952

15 For chamfering, use a suitable hand milling tool with an angle according to the above drawing.

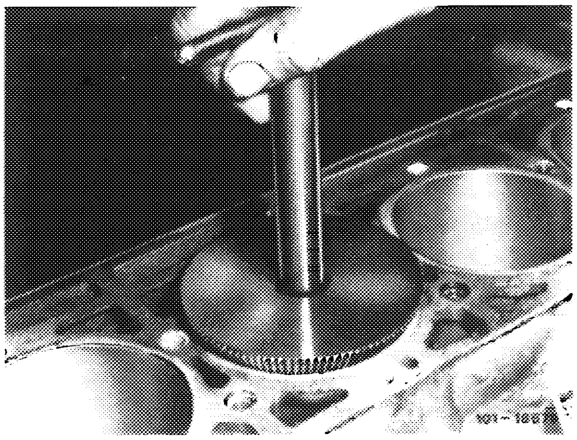

16 Insert stone set for polishing.

Prior to machining, the new polishing stones should be straightened in the narrowest cylinder bore.

17 Set up honing machine according to the table „Polishing".

Polishing

Setting up of honing machine

Engine	116.960 116.961 116.964 116.965	116.960[2][4] 116.961[2] 116.962[3][4] 116.963[3]	117.960[1] 117.961 117.962 117.963 117.964 117.965 117.967 117.968	117.960[1]
Cylinder dia. setting for 1st repair stage (+0.5)	92.48 mm	88.48 mm	96.98 mm	97.48 mm
Cylinder length	135 mm	135 mm	155 mm	
Stroke setting	137 mm	137 mm	157 mm	
Speed/min		125		
Strokes/min		49		
Feed		2		
Stone projection		approx. 12 mm		
Polishing stone set		C 30-C 03-81		
Indication %		approx. 30		
Material removal/min		0.01 mm		
Feed scale/material removal		10 divisions/0.01 mm		

[1] Up to engine end No. 000885 cylinder dia. 97.48 mm.

[2] AUS J S USA model year 1981.

[3] Standard version and AUS J S USA as of model year 1982.

[4] Only AUS J USA

18 Polish all cylinder bores with full honing oil supply until the end dimension has been reached.

19 Allow cylinder crankcase to cool down.

20 Measure cylinder bores, while taking into account the required cylinder diameter (group No.) for the existing pistons and the specified piston clearance.

Repolish if required.

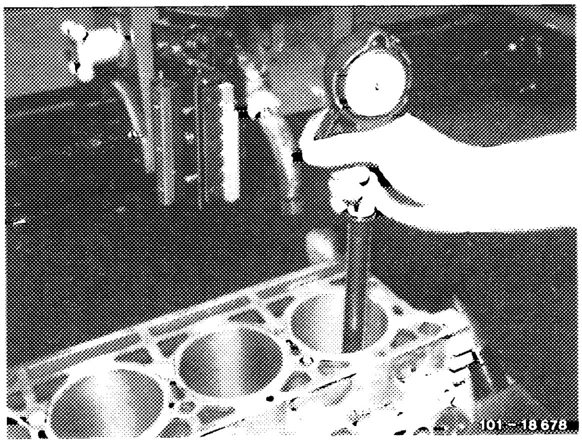

21 Clean cylinder walls with filtered honing oil to remove all silicon particles and to avoid scratches during the subsequent silicon-lapping process.

22 Press felt inserts (C 30-F 85) into the holders CK-3130 and these into the stone holders CK-3035.

Caution!
After the felt inserts have been pressed into the holder, remove all material which has been scraped off in the process.

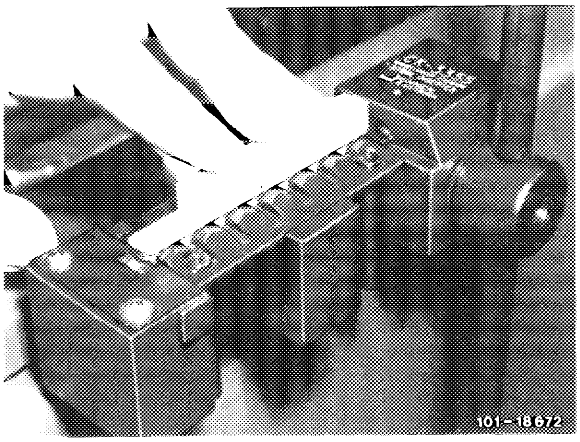

23 Set up the cylinder diameter by means of the setting gauge.

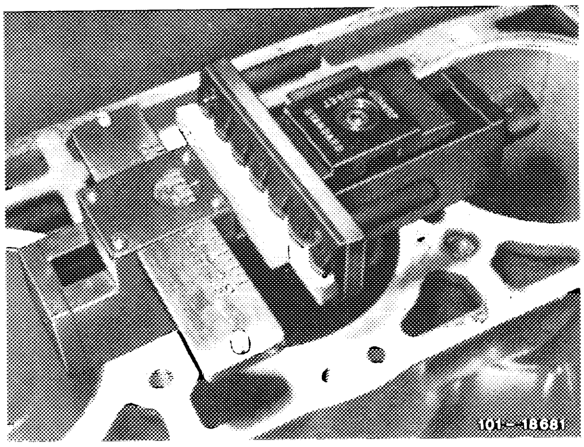

24 Soak felt inserts with filtered honing oil and insert into the honing head.

25 Cut honing oil supply.

26 Set up honing machine according to the table „Silicon-lapping".

Silicon-lapping

Setting up of honing machine

Engine	116.960 116.961 116.964 116.965	116.960[2][4] 116.961[2] 116.962[3][4] 116.963[3]	117.960[1] 117.961 117.962 117.963 117.964 117.965 117.967 117.968	117.960[1]
Cylinder dia. setting for 1st repair stage (+0.5)	92.50 mm	88.50 mm	97.00 mm	97.50 mm
Cylinder length	135 mm	135 mm	155 mm	
Stroke setting	120 mm	120 mm	140 mm	
Speed/min		185		
Strokes/min		73		
Feed		2		
Felt insert projection		approx. 2 mm		
Felt insert		C 30-F 85		
Indication %		approx. 30		
Material removal/min		not measurable		
Feed scale		18 divisions ≈ 70 s running time		

[1] Up to engine end No. 000885 cylinder dia. 97.5 mm.

[2] (AUS) (J) (S) (USA) model year 1981.

[3] Standard version and (AUS) (J) (S) (USA) as of model year 1982.

[4] Only (AUS) (J) (USA)

27 Thoroughly stir silicon paste AN-30 and fully coat the dry cylinder walls.

28 Likewise coat the felt inserts with silicon paste.

29 Introduce honing head with felt inserts into cylinder bore.

30 With honing machine running, slowly turn feed wheel to the right until the indicator reaches 30 %.

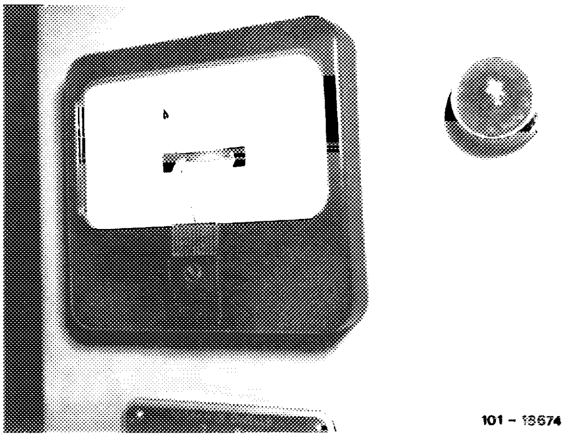

31 Set feed scale to 18 divisions.

The honing machine will switch off after approx. 80 seconds. The cylinder surface will then have a dull appearance.

No honing marks will be visible.

The roughness is 0.001–0.003 mm.

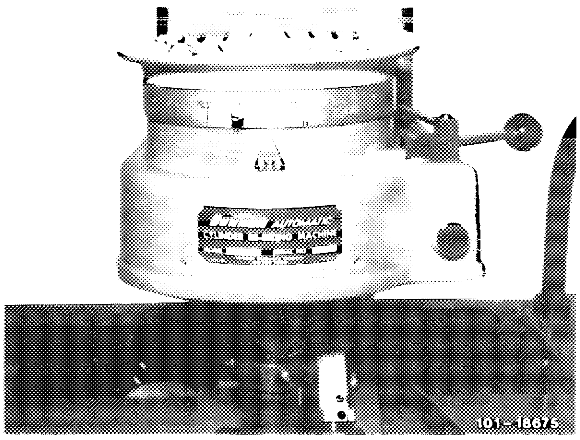

32 Thoroughly clean cylinder bores of all silicon traces using filtered honing oil and a suitable brush, then dry.

Used silicon paste may not be reused!

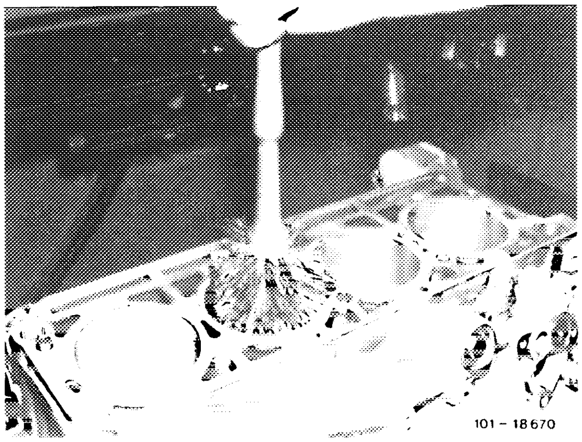

01–120 Machining crankcase mating surface

Data

Engine		116.96	117.96
Height „A" of the crankcase when new		216.35–216.45	245.35–245.45
Minimum height of the necessary material removal[1]		216.20	245.20
Permissible deviation from the parallel of the upper mating surfaces to the crankshaft center	in longitudinal direction	0.08	
	in transverse direction	0.05	
Permissible deviation from evenness of the upper mating surfaces		0.02	
Mean roughness (Rz) of the upper mating surfaces		0.006–0.016	
Test pressure: water jacket with air under water in bar		3	
Distance from piston crown to crankcase mating surface		see 03–316	
Cylinder bore chamfer		see Note	

---

[1] The total material removed from crankcase and cylinder head of an engine may not exceed 0.5 mm (see 01–418).

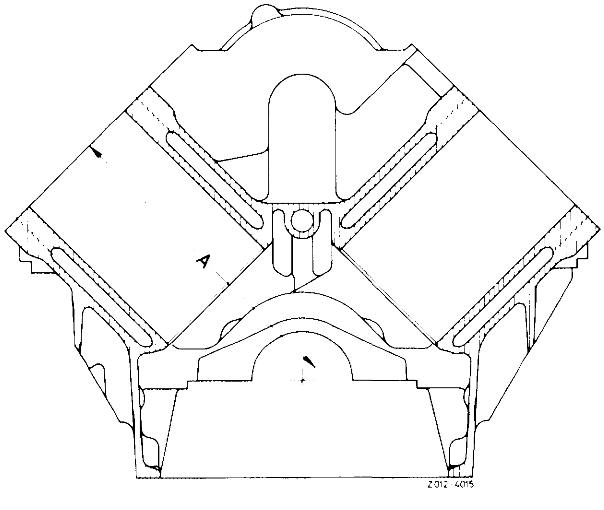

Note

After facing the surfaces, chamfer the cylinder bores. Smooth out the lower edge of the chamfer with a polishing stone.

If the crankcase mating surface was remachined, the valve timing has to be adjusted again (05–215).

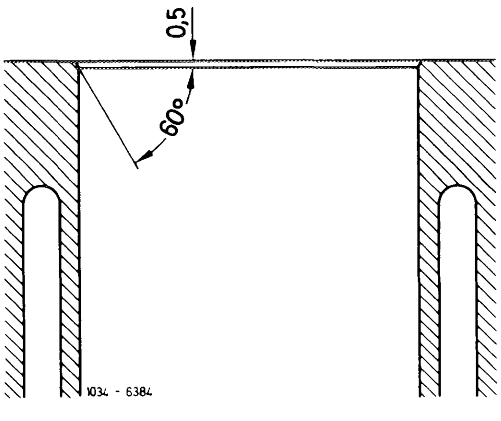

01–122 Reconditioning of threaded bores for cylinder head bolts

Special tools

Drilling jig for threaded bores for cylinder head bolts in crankcase		117 589 02 23 00
Tap with guide shaft		117 589 00 70 00

Conventional tools

Heli-Coil tap M 10 Item No. 0140 0100104	
Heli-Coil threaded insert M 10 Standard item No. 0130 0100025 (part No. 000 997 58 15)	e.g. Böllhoff & Co., D–4800 Bielefeld 14
Heli-Coil hand installer M 10 Item No. 0150 0410000-1	

Note

If damaged threads are discovered during removal or installation of the cylinder head, Heli-Coil threaded inserts part No. 000 997 58 15 must be installed for all cylinder head bolts of the cylinder bank concerned. The threaded inserts have a length (screwed in) which corresponds to **2.5 times** the diameter of the cylinder head bolts (14 threads).

For threads with difficult access, use an angular drilling machine with a chuck for drills with 10 mm diameter to avoid that the engine has to be removed.

Caution!
The threaded holes 15, 7, 1, 8 and 17 for the cylinder head bolts M 10 x 165 on the camshaft bearings are drilled at an angle in the crankcase.

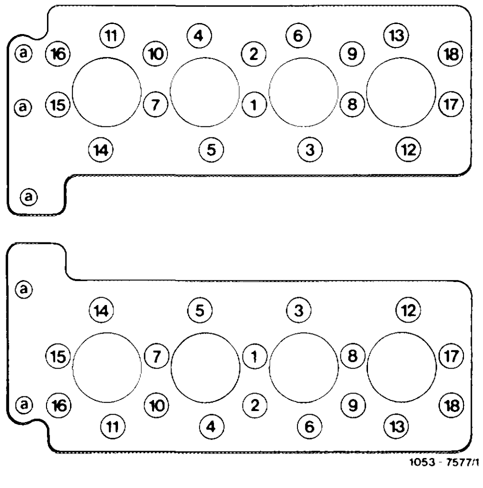

These threaded holes are not vertical to the crankcase mating surface, but at an inclination of 1° 52′ to the engine outside.

In order to prevent pressure points on the cylinder running surfaces due to the relatively long Heli-Coil inserts, the respective core holes must be drilled vertically or at 1° 52′ inclination **using the drilling jig.**

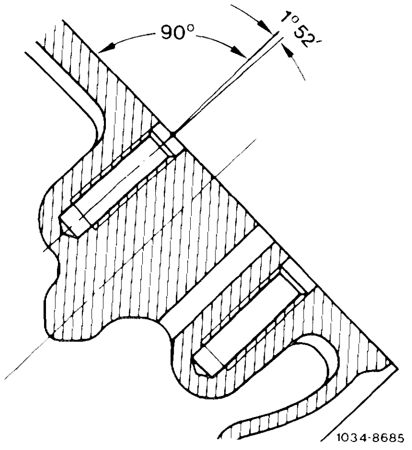

Reconditioning

1 Bolt drilling jig onto the cylinder bank concerned.

2 Cover cylinder bores, coolant openings and chain case (minute aluminum-silicon chips damage the cylinder running surface and the piston).

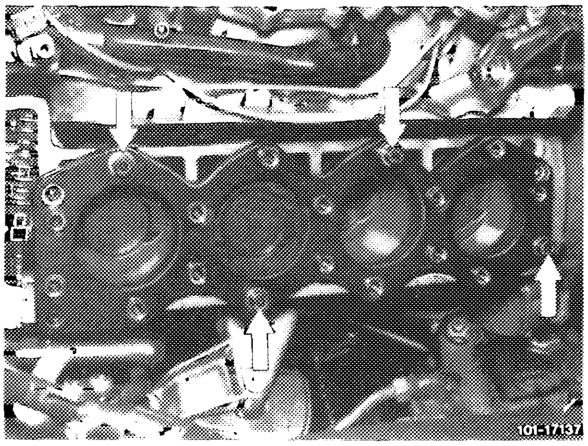

3 Using an HSS spiral drill 10 mm dia., drill core hole approx. 37 mm deep while lubricating with honing oil.

Core hole diameter should be a minimum of 10 mm and a maximum of 10.3 mm.

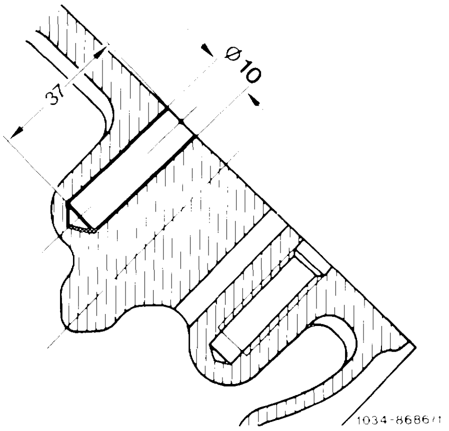

4 Remove drilling jig and blow out chips.

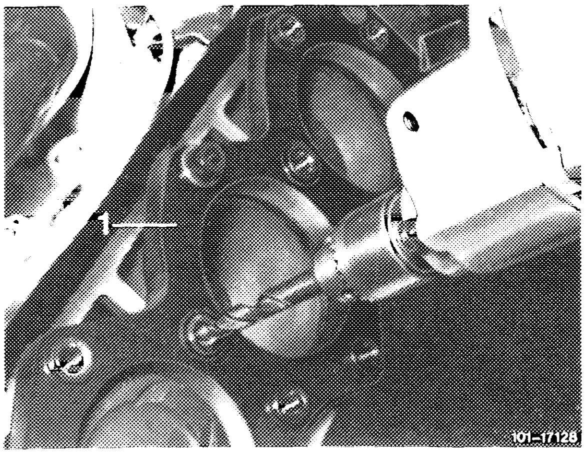

5 Precut the Heli-Coil installation thread as deep as possible using the tap with guide shaft section. To do so, lubricate the tap with honing oil.

6 Carefully blow out chips.

7 Cut Heli-Coil installation thread using Heli-Coil tap M 10 (outside diameter 12.0 mm), item No. 0140 0100104, approx. 35 mm deep, while lubricating the tap with honing oil.

8 Carefully blow out chips.

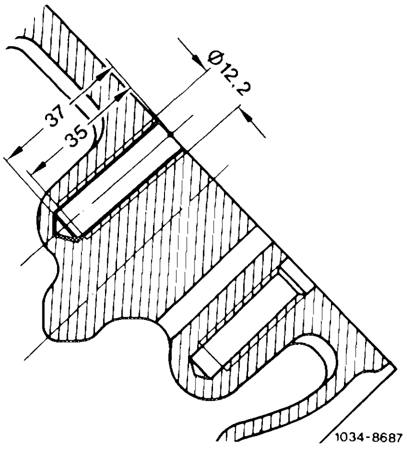

9 Screw in oil-coated Heli-Coil threaded insert (1), part No. 000 997 58 15, (Heli-Coil standard item No. 01 30 0100025), using hand installer M 10 (2), item No. 0150 0410000–1.
To do so, screw Heli-Coil insert (1) with the driving end to the front into the hand installer (2) until the first winding projects 3/4. Align the hand installer over the tapped hole and screw in the Helicoil insert (1) without pressure by turning the spindle.

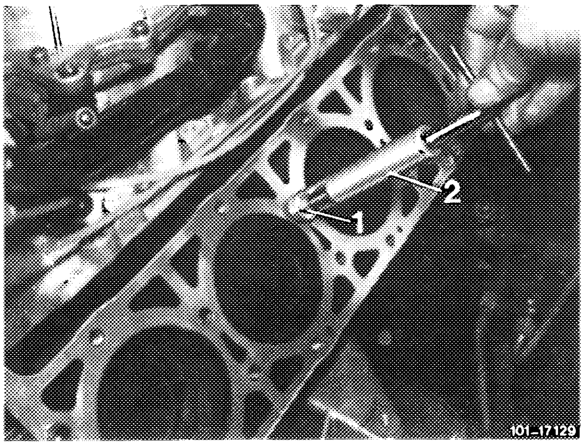

Caution!
The uppermost thread must be positioned approx. 4 mm below the crankcase mating surface.

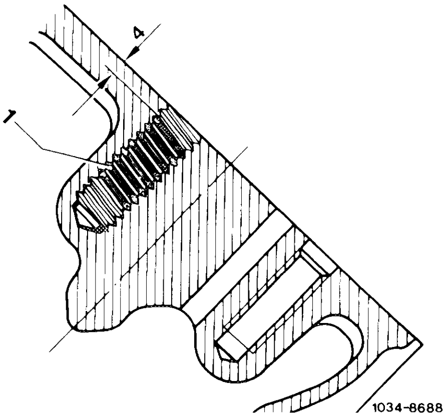

10 Screw a cylinder head bolt into the inserted thread and check for misalignment and easy operation.

The screw-in depth should be approx. 29 mm.

Note: The driving end of the Heli-Coil threaded insert is not removed as is usual, but remains on the threaded insert.

Conventional tools

Heli-Coil tap M 10 Item No. 0140 0100104	
Heli-Coil threaded insert M 10 Standard item No. 0130 0100020	e.g. Böllhoff & Co., D–4800 Bielefeld 14
Heli-Coil hand installer M 10 Item No. 0150 0410000–1	

Note

Stripped threads for intermediate flange or transmission attachment must be replaced with Heli-Coil threaded inserts standard, item No. 0130 0100020, with a length equivalent to twice the diameter of the bolts (11 threads).

If stripped threads are not accessible with removed transmission or intermediate flange because of limited space, the engine must be removed.

Reconditioning

1 Drill core hole approx. 27 mm deep using an HSS spiral drill of 10 mm dia.

The core hole diameter should be a minimum of 10 mm and a maximum of 10.3 mm.

2 Blow out chips.

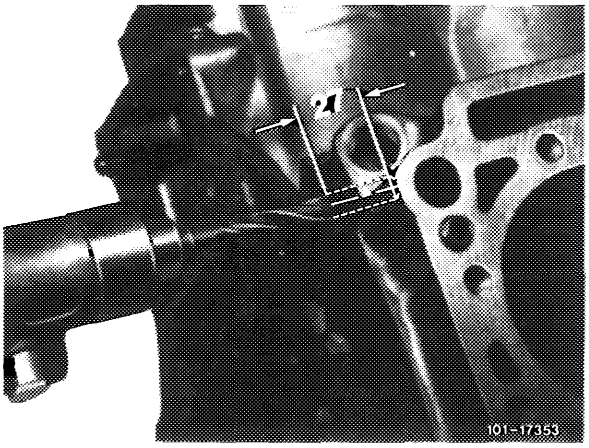

3 Cut Heli-Coil installation thread approx. 25 mm deep using Heli-Coil tap M 10 (outside diameter 12.0 mm), item No. 0140 0100104. To do so, lubricate tap with honing oil.

4 Blow out chips.

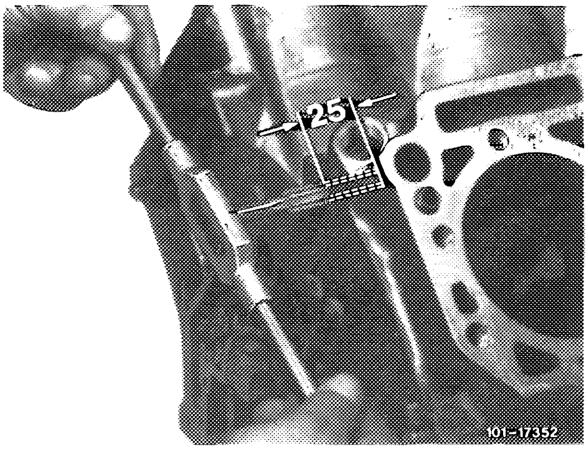

5 Use hand installer M 10, item No. 0150 0410000–1, to screw in oil-coated Heli-Coil threaded insert M 10, standard item No. 0130 01000020.

Caution!
The uppermost thread must be positioned approx. 2 mm below the mating surface.

6 Using an arbor, break off drive end of the threaded bush.

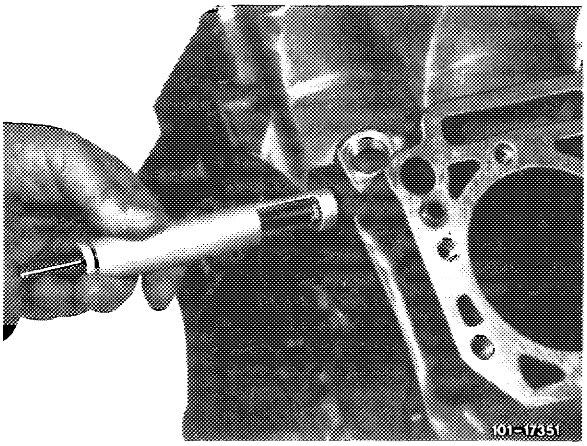

7 Screw in a bolt to check inserted thread for misalignment and ease of operation.

The screw-in depth should be approx. 23 mm.

Note

As of October 1980, the modified screw plug M 38 x 1.5 is installed together with an O-ring.

The chamfer in the crankcase was changed for this reason (2nd version).

When installing a coolant preheater, an O-ring or sealing ring to suit the chamfer in the crankcase should be used.

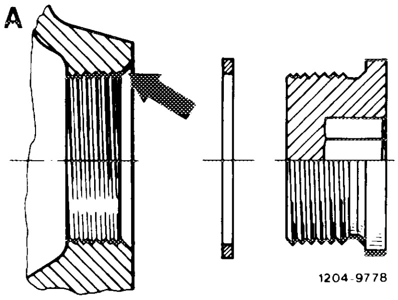

A 1st version

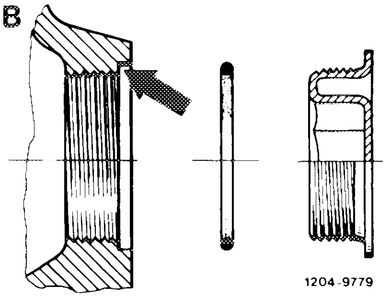

B 2nd version

Removal and installation of timing case cover

Tightening torques		Nm
Crankshaft end bolt	with 3 diaphragm springs[1])	270 – 330
	with 4 diaphragm springs[1])	370 – 400

[1]) See Note 03–324.

Special tools

Detent for counterholding crankshaft	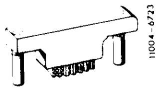	116 589 01 40 00
Torque wrench 150–500 Nm	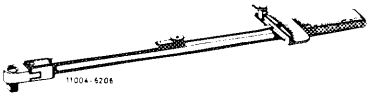	001 589 31 21 00
Socket insert 27 mm	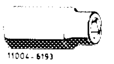	001 589 65 09 00
Screwdriver for hexagon socket head screws 6 mm, 440 mm long	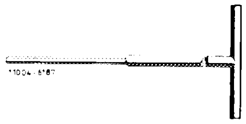	116 589 03 07 00
Installing tool for radial sealing ring	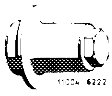	110 589 07 61 00
Installing tool for oil dipstick guide tube	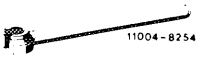	117 589 00 31 00

Conventional tool

3/4" inside to 1/2" outside square drive adapter	e.g. Hazet, D–5630 Remscheid Order No. 1058 RI

Notes

The timing case covers of engines 116 and 117 are distinguished by casting number and height.

Two through-holes each for the heater return (1) and the coolant supply (2) are arranged on the timing case cover. These are sealed at the crankcase by means of rubber sealing rings.

Because of the modified hole pattern for the water pump, the timing case covers cannot be used on cast iron engines.

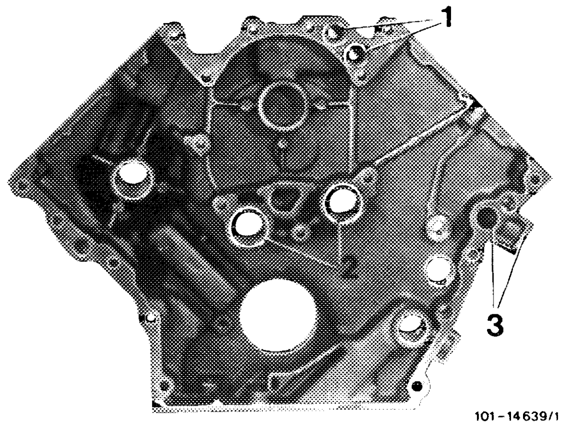

101-14639/1

On engines without oil cooler, the thread (arrow) for the temperature switch on the timing case cover (only turbocharged engines) were changed from M 16 x 1.5 to M 14 x 1.5.

The timing case cover can be removed with the cylinder heads installed if care is exercised not to damage the cylinder head gasket.

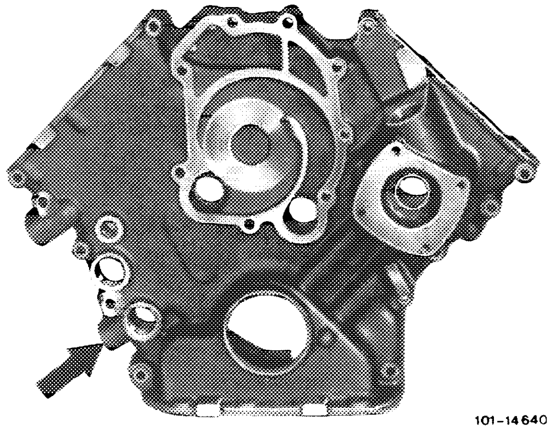

Removal

1 Disconnect ground strip from battery.

2 Drain engine oil and coolant.

3 Remove radiator, fan cover and viscofan.

4 Remove alternator with bracket.

5 Remove distributor.

6 Remove power steering pump with pipes connected and set aside.

7 Remove V-belt pulley together with vibration damper and hub (03–342).

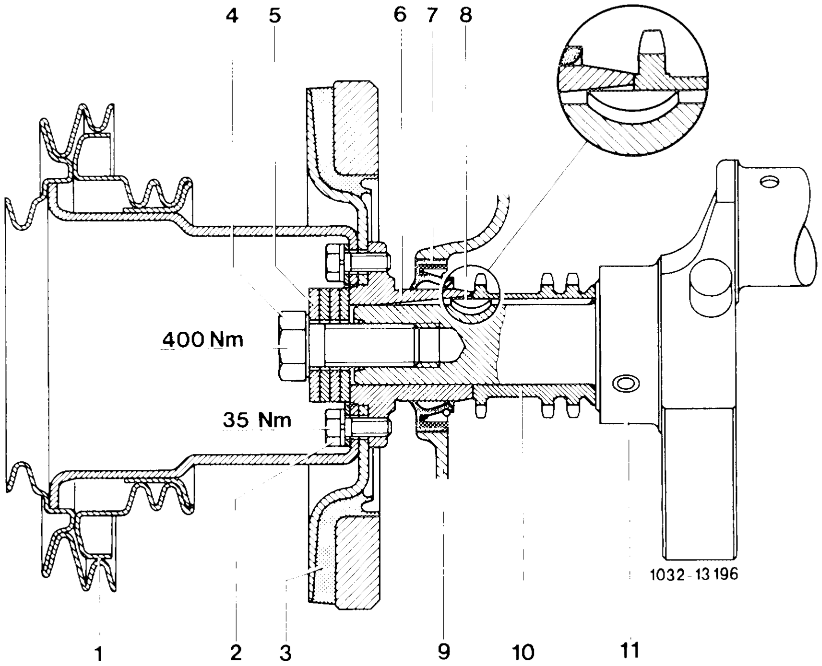

Crankshaft arrangement
2nd version

1 V-belt pulley
2 Bolt M 8 x 22
3 Vibration damper
4 Bolt M 18 x 1.5 x 45
5 Diaphragm springs (4)
6 Hub
7 Radial sealing ring
8 Woodruff key
9 Timing case cover
10 Crankshaft sprocket
11 Crankshaft

8 Remove coolant pump (20–210).

9 Unscrew warming-up regulator.

10 Remove oil pump (18–210).

11 Loosen oil pan upper part (with two-piece oil pan) on crankcase, i.e. back out screws approx. 3–4 turns.

12 Drive out oil dipstick guide tube.

13 Unscrew cylinder head bolts M 8 (arrows).

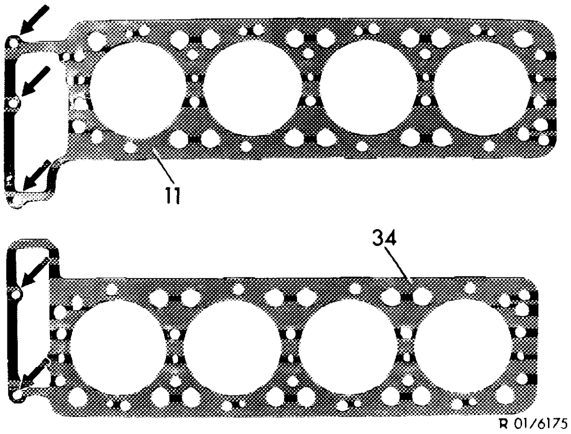

14 Disconnect TDC transmitter and remove.

15 Screw out all bolts for timing case cover.

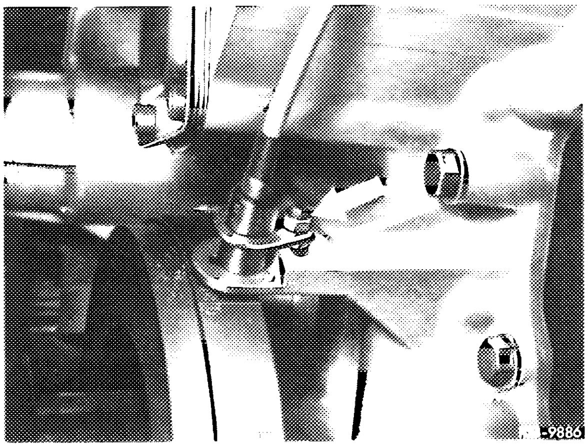

16 Force out crankshaft oil seal.

17 Take off timing case cover and remove oil pump chain from crankshaft sprocket.

Caution!
Do not damage cylinder head gaskets.

Installation

---

18 Renew O-rings for sealing of water galleries.

Caution!
When renewing bushes, observe the position of the oil groove **below** (arrows).

19 Coat sealing surface of timing case cover with sealing compound.

20 Grease cylinder head gaskets.

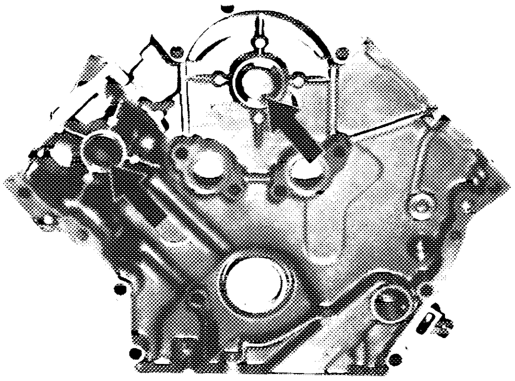

103–9559

21 When fitting the timing case cover, install the oil pump chain on the crankshaft sprocket by means of a bent piece of sheet metal.

22 First install cylinder head bolts M 8.

23 For further installation proceed vice versa to sequence of removal.

01–220 Installation and centering of intermediate flange

Engine 117.960 with automatic transmission 722.006 up to engine end No. 001685

Data

Permissible radial runout deviation at the fitted collar of the intermediate flange with a full turn	0.10
Permissible lateral runout deviation on the fitted collar of the intermediate flange with a full turn	0.10
Fitted hole in the intermediate flange for centering dowels	12.016 to 12.043

Tightening torques		Nm
Mounting bolts for intermediate flange		50
Mounting bolts M 8 for support angle on crankcase		30
Mounting bolts M 10 for support angle on intermediate flange		50
Necked-down bolt for driven plate	Pre-torque	40
	Torque angle	90–100°

Special tools

Dial gauge holder (2 required)	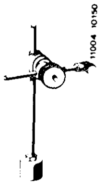	363 589 02 21 00
Socket insert 27 mm, 1/2" drive for rotating the engine	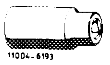	001 589 65 09 00
1/2" square drive insert, 80 mm long for rotating the engine		617 589 00 16 00

Tool for self-fabrication

Threaded pin	see Fig. No. 3

Note

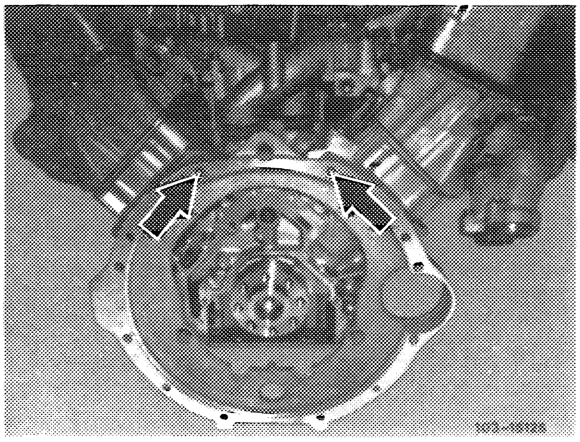

If an intermediate flange is renewed it has to be centered.

Intermediate flange and support angle are only installed in model 107.026 with engine 117.960 in combination with the automatic transmission 722.006 up to chassis end No. 001627, and engine end No. 001685 respectively. The hole pattern to mount the transmission is not identical with that of the cast-iron engines. The two mounting threads in the crankcase (arrows) have each been moved 9 mm further inside.

Installation and centering

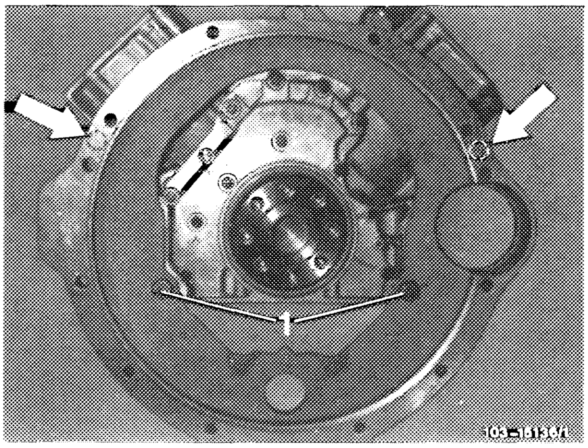

1 Fit the intermediate flange onto the dowel pins (arrows) on the crankcase. Remove support angle.

2 Lightly tighten the two mounting bolts (1).

3 Screw threaded pin into the crankshaft and lock.

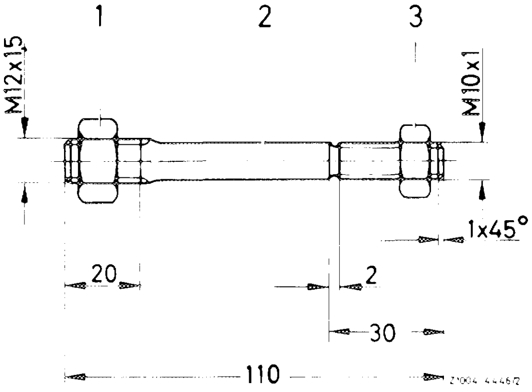

1 Hexagon nut M 12 x 1.5
2 Threaded pin 10 mm dia.
3 Hexagon nut M 10 x 1

4 Attach dial gauge holder with dial gauge to threaded pin.

5 Position measuring pin on the fitted round centering surface of the intermediate flange to measure radial and lateral runout. Set dial gauge to 0.

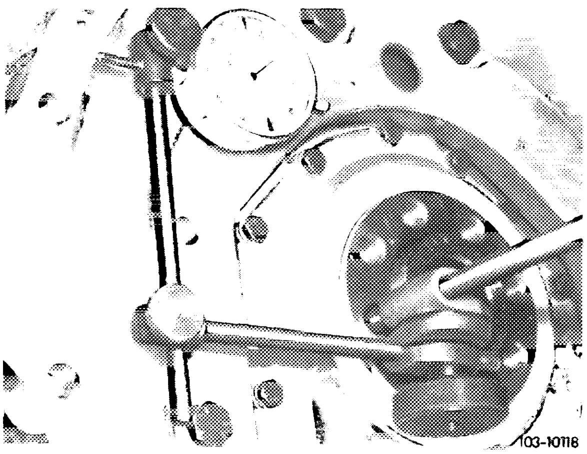

6 Turn crankshaft in direction of rotation a full turn using the tool combination. Maximum lateral and radial runout is 0.10 mm. In other words, the total deflection of the pointer may not exceed 0.10 mm. If lateral runout is greater than 0.10 mm, renew intermediate flange.

Note: When turning the crankshaft, ensure that the measuring pin of the dial gauge is not sticking.

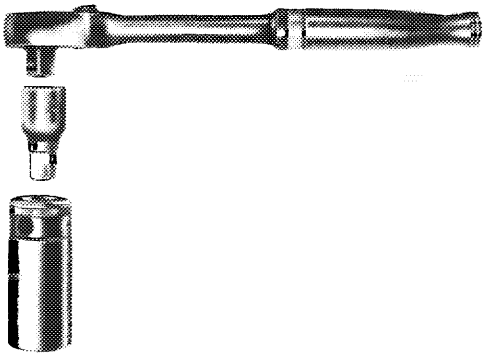

R100-5952

7 Correct the radial runout with light taps on the intermediate flange.

8 Tighten mounting bolts.

Note: If the radial runout is greater than 0.10 mm, remove intermediate flange.

9 Drill both fitted holes in the intermediate flange to 12.1 mm.

10 Repeat figures 1–8.

11 Mount supporting angle only after the intermediate flange has been attached to the crankcase.

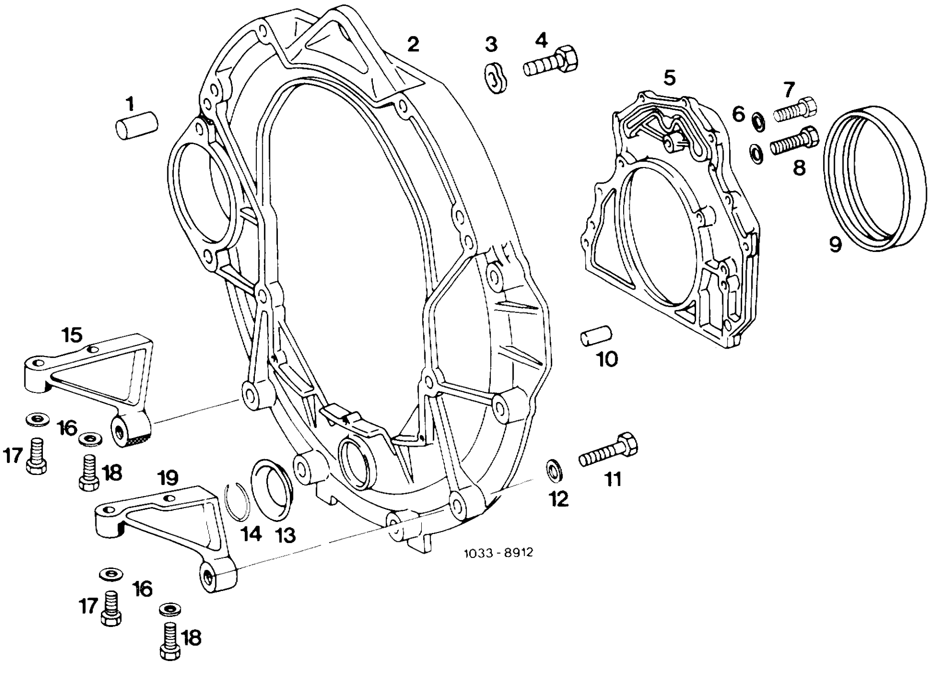

Model 107.026 with engine 117.960 and transmission 722.006 (W 3 B 050)

1 Dowel pin 12 x 22 mm, 2 required
Repair dowel pin dia. 12.2 x 22 mm
2 Intermediate flange up to
engine end No. 001685
3 Spring washer B 10, 2 required
4 Bolt M 10 x 35, 2 required
5 End cover
6 Washer A 6, 4, 13 required

7 Bolts M 6 x 25, 9 required
8 Bolts M 6 x 20, 4 required
9 Radial sealing ring 13 mm wide,
repair radial sealing ring
10.5 mm wide
10 Dowel pin 6 h8 x 10, 2 required
11 Bolt
12 Washer

13 Cover
14 Circlip 38
15 Support angle right
16 Washer A 8, 4, 4 required
17 Bolt M 8 x 40
18 Bolt M 8 x 65, 2 required
19 Support angle left

01–222 Removal and installation of end cover

Tightening torques		Nm
Fastening screws for end cover		9
Necked-down bolts for driven plates	Initial torque Angle of rotation torque	30–40 Nm 90–100°

Special tool		
Installation tool for installing end cover with pressed-in radial sealing ring	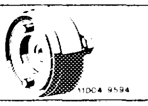	117 589 00 43 00

Note

The end cover closes the main oil gallery, so that special care must be used during installation. Ensure that the sealing surfaces of the end cover and the crankcase are without score marks.

The threaded holes in the crankshaft flange are throughholes. With bolts removed and the engine inclined, engine oil will run out.

Removal

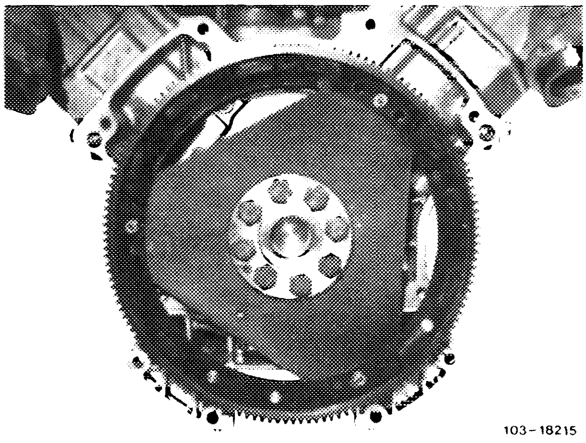

1 Remove transmission (27–600).

Note: With the exception of engine 117.960 with automatic transmission 722.006, the ring gear remains on the engine when removing the transmission.

2 Remove driven plates (03–410).

3 Remove end cover.

A threaded hole M 8 is provided on each side to facilitate removal of a tightly seated end cover (arrows).

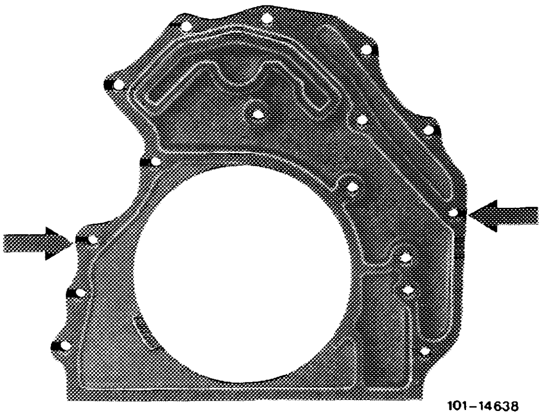

Installation

4 Carefully clean sealing surface on crankcase and end cover.

5 Uniformly coat the end cover sealing surface with sealing compound. It must be observed that no sealing compound enters the oil circuit.

6 Fill radial sealing ring space between dust and sealing lips with long-life grease.

7 Slide end cover with radial sealing ring over the attached installation tool for radial sealing ring and bolt on.

Caution!
Observe different bolt lengths.

Oil capacity in liters

Model	107	126
Oil pan max./min.	7.5/5.5	
Oil filter	0.5	
Air-oil cooler	0.5	0.4
Oil dipstick color coding	gentian blue	light blue or grey[1])

[1]) As of 1985.

Tightening torques

		Nm
Oil drain plug on oil pan	M 26	50
	M 12	40
Oil drain plug on air-oil cooler		35
Attaching screws for oil pan lower part and oil pan	M 6	11

Special tools

Allen box wrench 13 x 14 mm	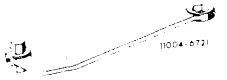	117 589 02 07 00
Installation tool for oil dipstick guide tube	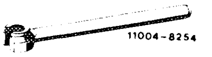	117 589 00 31 00

Note

The engines 117.960 (1st version) with intermediate flange, up to end No. 001681, with the exception of engine end No. 001613–001617 and 001636–001640, were fitted with a one-piece oil pan together with a gasket coated on one side with graphite, similar to the engine 117.985, however with additional supporting angles between engine and intermediate flange.

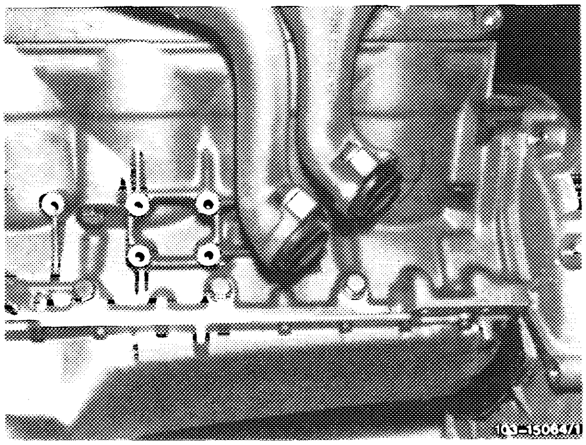

The engines 116.960 and 117.960 (2nd version) as well as 116.962 and 117.962 are fitted with the one-piece oil pan, the engines 116.961/963 and 117.961/963 are fitted with the two-piece oil pan, both with integrated supporting angles, together with a gasket graphite-coated on one side.

The hole pattern for the oil pan of all engines 116.96 and 117.96 are identical and differ from the hole pattern for the cast-iron engines 116.98 and 117.98.

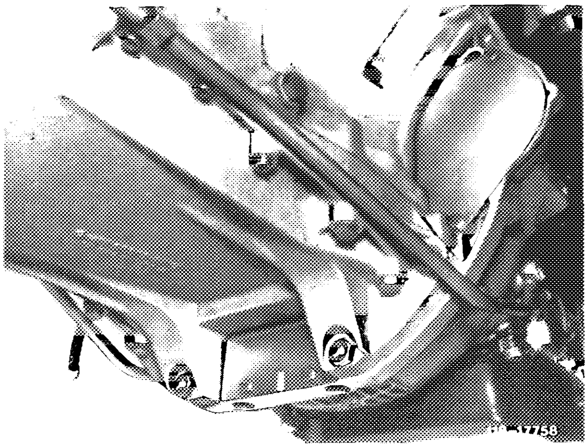

A protective bead was added in the area of the oil drain plug at the oil pan lower part in order to avoid engine cracks.

Introduction: July 1983

Engine No. 116.963 12 037 088
117.963 12 032 251

If the refrigerant compressor carrier is bolted to the crankcase during oil pan removal and installation it is necessary to ensure tension-free assembly.

The carrier (steel version) must be checked for distortion. There should be no gap between contact points of the support angle and the crankcase. This condition must be verified before attaching the angle. The bolts must be tightened in the following sequence:

a) Install bolts (17, 6 and 5) finger-tight.

b) Tighten bolts (17) at engine front.

c) Tighten bolt (6) and nut (5) at side of engine.

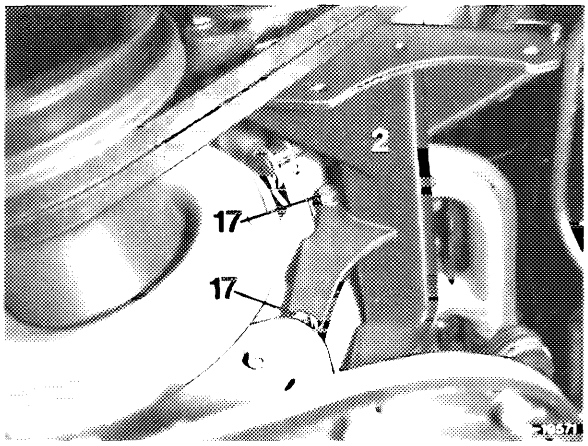

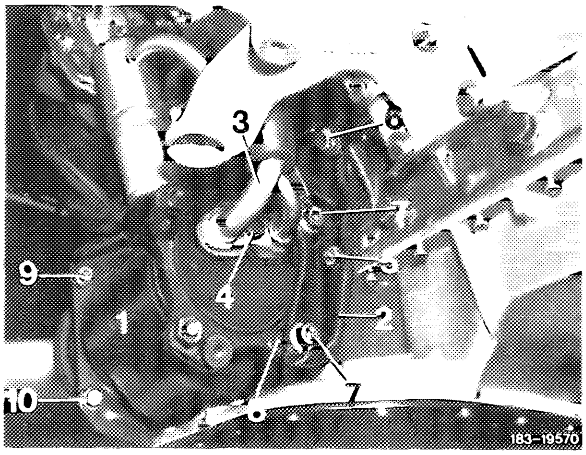

A. Model 107

Removal

1 Remove fan shroud and fan.

2 Remove front axle (33–100).

3 Remove refrigerant compressor with carrier (83–522).

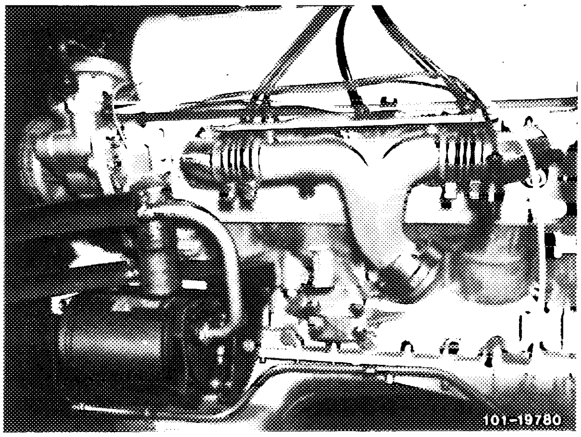

Engine 116.961 (USA) 1981

4 Remove support angle from transmission (1st version engine 117.960 with intermediate flange).

5 Unscrew bracket for oil dipstick guide tube.

6 Unscrew oil pan and remove downwards together with oil dipstick guide tube.

Installation

7 Prior to installation, use grease to attach new gasket to the oil pan.

8 The further installation takes place in the sequence vice versa to the removal.

B. Model 126

Removal

1 Remove refrigerant compressor with carrier and tension pulley without disconnecting the pipe assembly.

2 Remove control linkage.

3 Remove oil pan lower part.

4 Remove oil dipstick guide tube.

5 Remove oil pump.

6 Unscrew oil pan upper part.

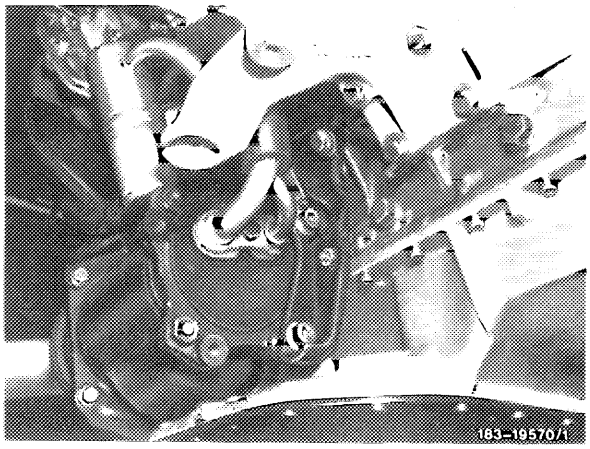

7 Unscrew both mounting bolts for engine mounts (arrow).

8 Loosen both engine shock absorbers at the bottom.

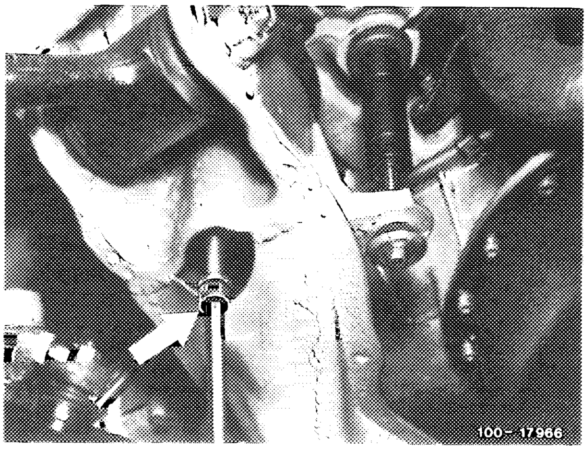

9 Disconnect fan shroud.

10 Lift engine with hoist until the oil pan can be removed.

Installation

11 Before the installation, use grease to attach a new gasket to the oil pan.

12 Further installation takes place in the sequence vice versa to the removal.

Caution!
The rear mating surface of the oil pan must be lined up with the rear mating surface of the crankcase (arrows). If the oil pan is not lined up with the crankcase, this can lead to complaints of noise and vibration.

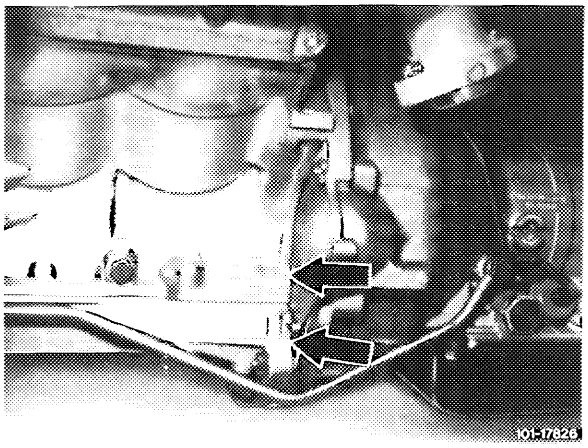

Ensure that oil dipstick guide tubes are neither swapped during assembly nor interchanged with those of cast-iron engines, as this would result in false oil level readings.

They can be distinguished by means of the drawing and table below.

A	Engine 116.985,	117.986	a = 125.5 mm
B	Engine 116.984,	117.985	a = 135.5 mm
C	Engine 116.960/962/ 964,	117.960/962/ 964/967	a = 135.5 mm
D	Engine 116.961/963/ 965,	117.961/963/ 965/968	a = 125.5 mm

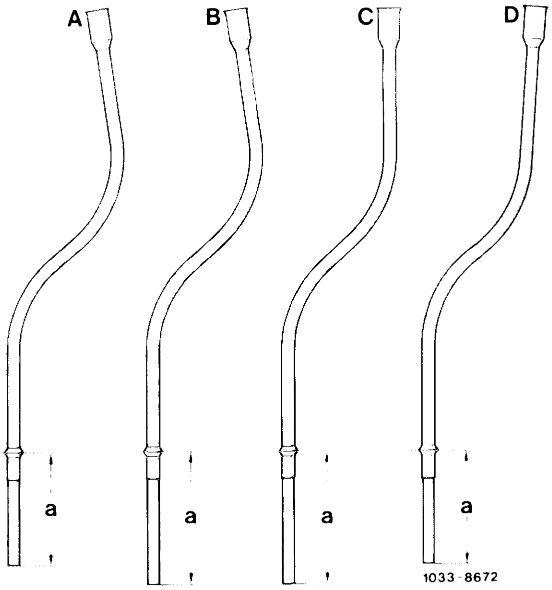

Tightening torques		Nm
Cylinder head bolts	1st stage	30
	2nd stage	60
	Settling break at least 10 minutes	
	3rd stage	60[1]
Cylinder head cover screws		3
Necked-down bolts for camshaft sprockets		100
Injection valves to cylinder head		10

[1]) Each screw must first be loosened individually in the sequence of the tightening diagram before tightening to the specified torque.

Special tools

Screwdriver insert 8 mm, 1/2" drive		116 589 00 13 00
Screwdriver 6 mm, 440 mm long for hex. socket screws	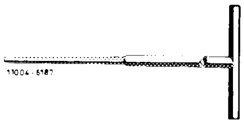	116 589 03 07 00
Impact puller for bearing bolts (basic tool)	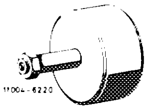	116 589 20 33 00
Threaded bolt M 6 x 50		116 589 01 34 00
Threaded bolt M 6 x 100	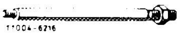	100 589 00 34 00

Note

The cylinder heads differ in the diameter „A" of the exhaust ports, the basic bore „G" of the exhaust valve seat rings, the different combustion chamber and the valve seat rings as well as the casting number.

The cylinder heads cannot be used in cast-iron engines, as the five cylinder head bolt bores do not correspond.

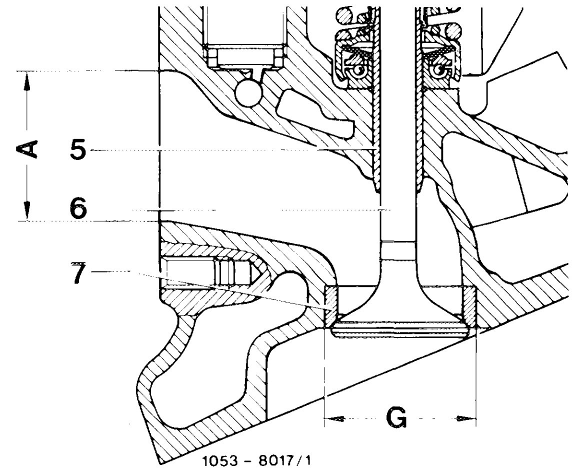

Remove the cylinder heads only when the engine has cooled down.

Face cylinder head mating surface only if porous or damaged. A slightly warped mating surface will adapt itself again after the cylinder heads have been tightened.

Each cylinder head is aligned and fixed with the crankcase by means of two dowel sleeves and secured to the crankcase with 18 cylinder head bolts, 6 for each cylinder bore.

The cylinder head gaskets of the engines 116 and 117 differ in combustion chamber and cylinder diameter.

The cylinder head gaskets of the engines 116.96 and 117.96 differ from those of 116.98 and 117.98 by a different hole pattern of the 5 central cylinder head bolt holes.

The cylinder head gaskets do not require retorquing.

The cylinder head bolts are no longer retightened when the engine is warm.

Caution!
The cylinder head bolts M 10 x 165, M 10 x 90 and M 10 x 65 are 10 mm longer than for the cast-iron engines.

The cylinder head bolts are nickel-plated (chromium color) – previously phosphated (anthracite color). This prevents seizing of the thread flanks in the aluminum crankcase.
The washers of the cylinder head bolts were phosphated at the same time (previously galvanized, brass color). This measure provides more uniform friction values when tightening the cylinder head bolts.

Production breakpoint: November 1982

Model	Engine	Engine end No.	Chassis end No.
107.045	116.962	011845	021251
107.046	117.962	001565	025013
126.032 126.033	116.963	022704	038527
126.036 126.037	117.963	018595	027517
126 043	116.963	022704	004655
126.044	117.963	018595	004152

If damaged threads are discovered during cylinder head removal or installation, Heli-Coil threaded inserts part No. 000 997 58 15 should be installed for all cylinder head bolts of the respective cylinder bank (01–122).

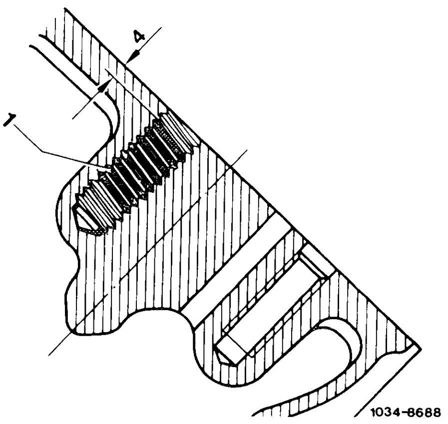

Removal

1 Drain coolant from crankcase at the left or right.

Caution!
Do not confuse the lateral crankshaft bearing cap bolts (arrows) with the coolant drain plugs (2).

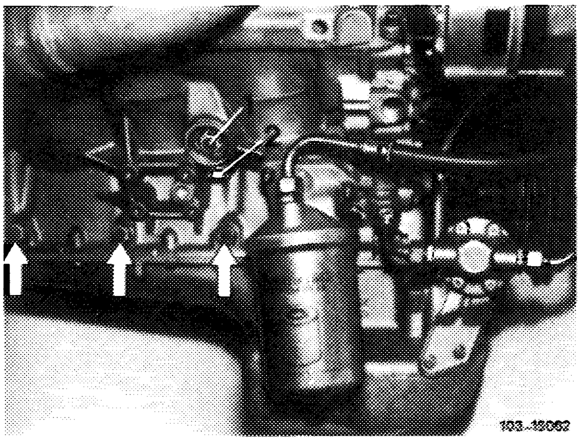

Right engine side

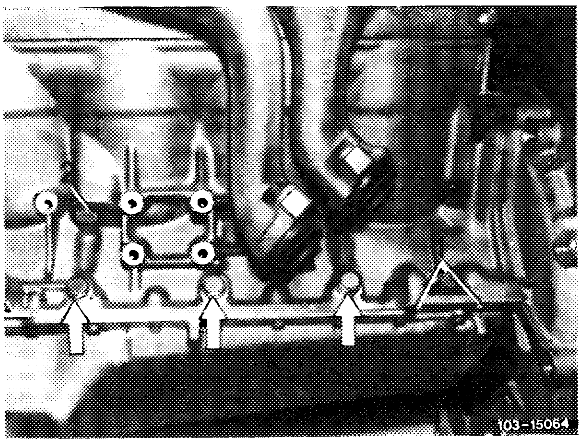

Left engine side

2 Remove fuel injection pipes.

3 Unscrew injection valve retainers.

4 Remove intake manifold.

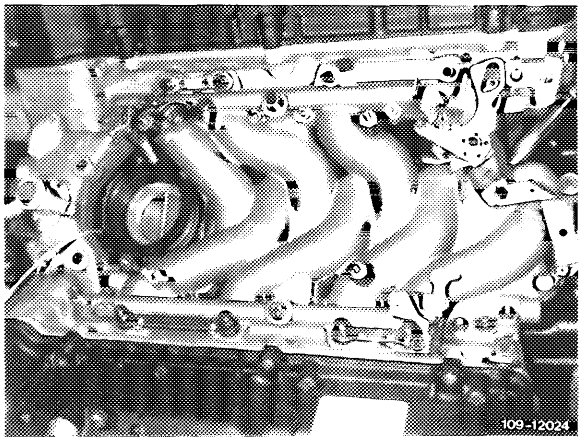

5 Set engine to ignition TDC.

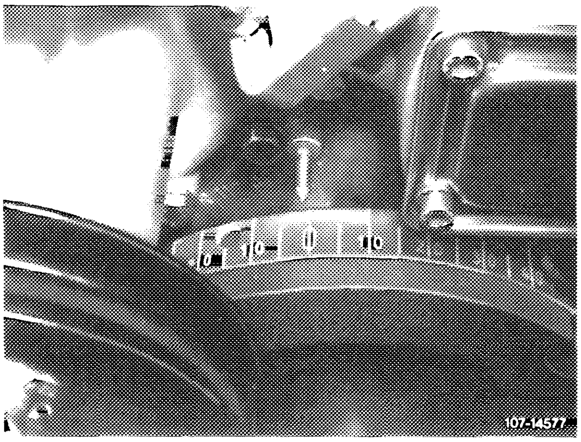

6 Mark camshaft sprocket and timing chain relative to each other (arrow).

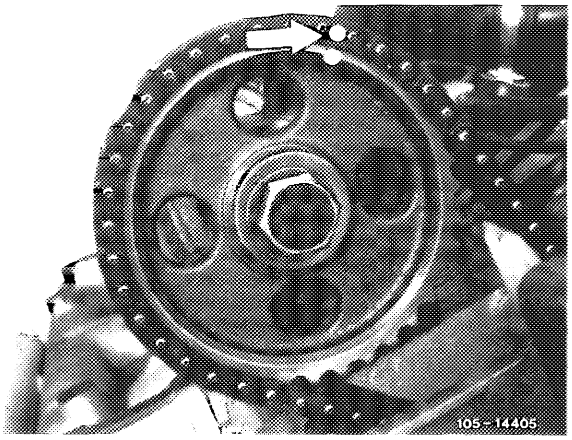

7 Loosen necked-down bolt of the camshaft sprocket while holding the camshaft with an open-end wrench (arrow).

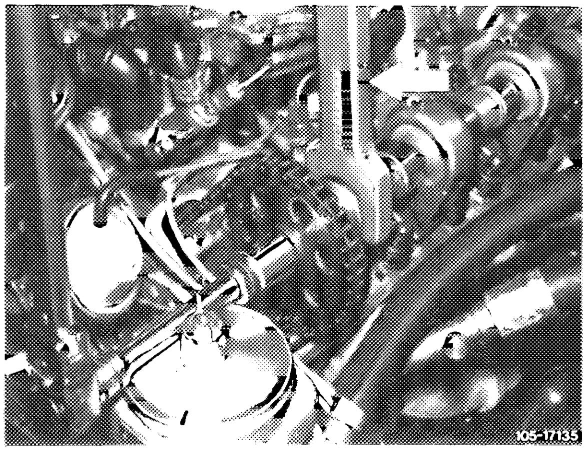

8 Remove camshaft sprocket.

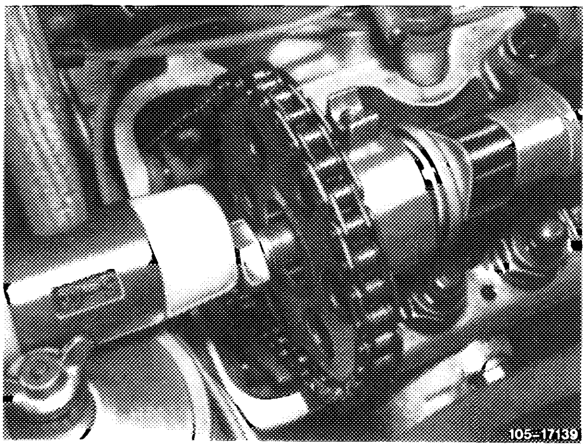

Lefthand cylinder head

9 Unscrew power steering pump and set aside with piping connected.

10 Remove ignition distributor (only engine 116).

11 Remove inner sliding rail from lefthand cylinder head. To do so, pull out bearing pins by means of the impact puller.

First remove the camshaft sprocket, then the sliding rail.

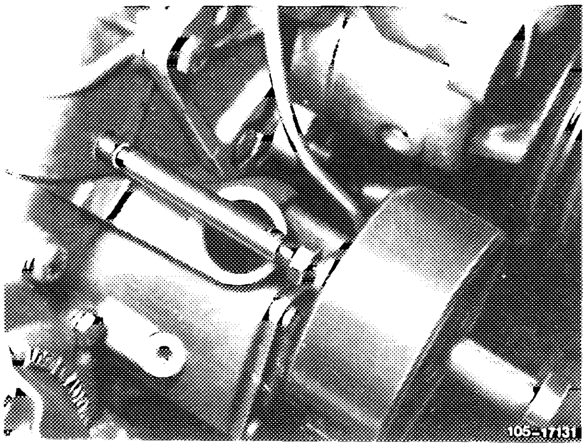

Righthand cylinder head

12 Remove alternator with bracket.

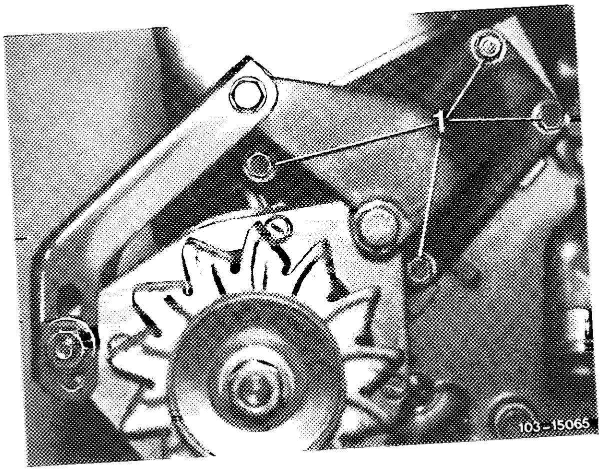

13 Remove chain tensioner.

14 Remove inner sliding rail.

Right and left cylinder head

15 Unscrew exhaust manifold from exhaust pipe and cylinder head and remove. To do so, loosen engine mount and engine shock absorber of engine 117.96 and raise slightly.

16 Unscrew cylinder head bolts in reverse order of tightening diagram.

Loosen the bolts M 8 (a) with screwdriver insert 116 589 03 07 00.

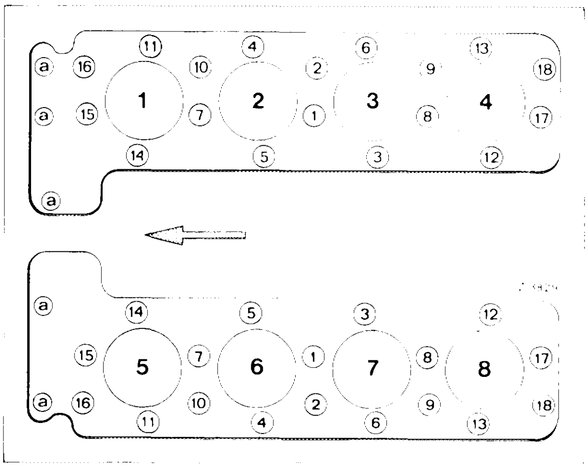

a Bolts M 8

Note: The following tools are required to loosen and tighten the cylinder head bolts:

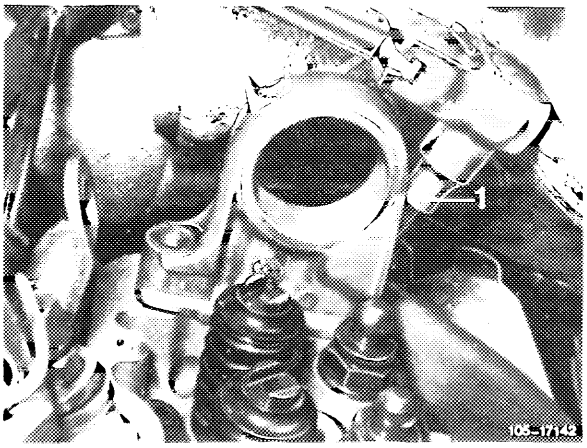

Allen wrench 8 x 52 mm long

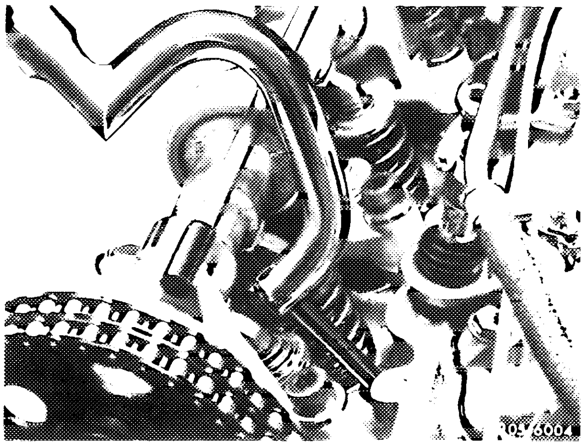

Screwdriver insert 116 589 00 13 00

17 To remove the righthand cylinder head, push the tension rail with the timing chain towards the center of the engine so that the tension rail is not in the way.

18 Lift out cylinder heads.

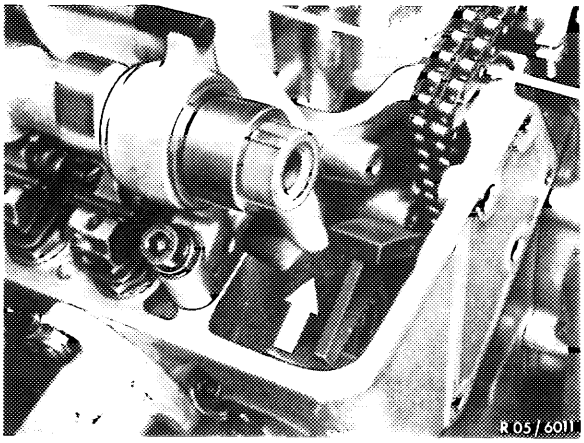

Installation

Note: On ET (spare part) cylinder heads without air injection, the 4 holes for the air injection to the exhaust valves (arrow) must be closed by means of tapered aluminum plugs.

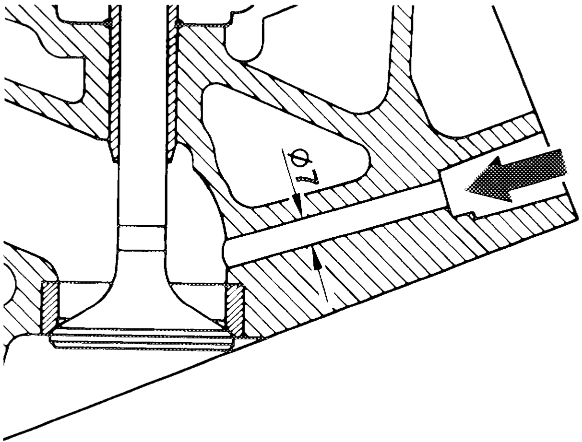

1053-6511/1

19 Coat tapered aluminum plugs with Loctite AVX 86, part No. 002 989 87 71, and drive into the holes in the cylinder head.

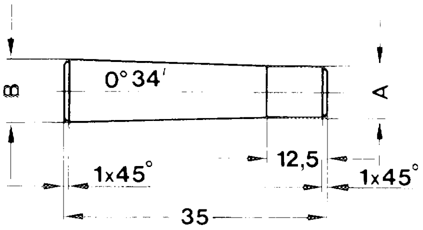

1014-9904/1

Tapered aluminum plugs
∢ 0° 34′
A 6.90 mm
B 7.33 mm

20 Clean intake manifold sealing surface. To do so, cover the cylinder.

21 Clean mating surfaces of cylinder head and crankcase.

Caution!
The light alloy crankcase mating surfaces must be treated very carefully to avoid scratches and score marks.

Clean threaded bores in the crankcase with compressed air.

22 Fit new cylinder head gaskets by placing them over the two dowel sleeves on each cylinder bank.

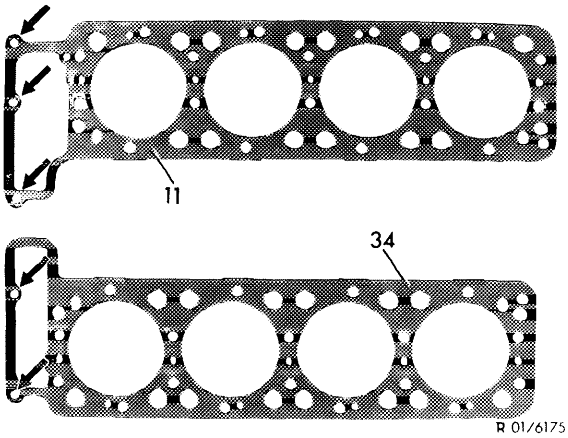

11 Righthand cylinder head gasket
34 Lefthand cylinder head gasket

Caution!
The cylinder head bolt M 10 x 165 (arrow) at the rear camshaft bearing must be inserted prior to fitting the cylinder heads.

The respective exhaust manifold is only installed after the tightening of the cylinder head bolts has been completed.

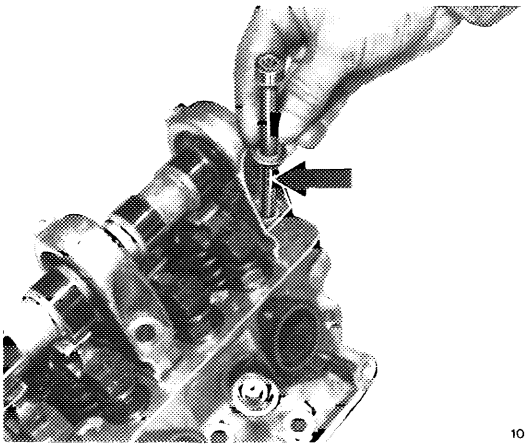

23 Install cylinder heads.

Before installing the cylinder head bolts, the thread and the contact area of the cylinder head bolts and the washers must be coated with oil.

Caution!
The cylinder head bolts M 10 x 165, M 10 x 90 and M 10 x 65 are 10 mm longer than those of the cast-iron engine 116.98 and 117.98.

24 Tighten cylinder head bolts in the sequence of the tightening diagram as follows:

1st stage with 30 Nm.

2nd stage with 60 Nm.

3rd stage after 10 minutes **settling break with cold engine** individually loosen cylinder head bolts slightly and retorque with 60 Nm.

25 Further installation takes place in the sequence vice versa to removal.

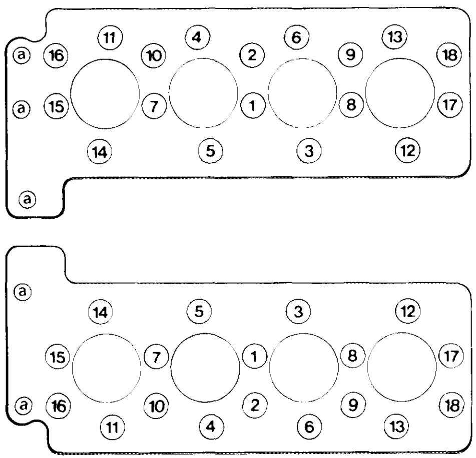

01–418 Facing cylinder head mating surface

Data

Reference dimension H when new		59.8–60
Minimum dimension H after material removal		59.55[1]
Unevenness of mating surface when new and after machining	in longitudinal direction	0.08
	in transverse direction	0.0
Roughness of cylinder head mating surface		0.006–0.014
Test pressure with air under water in bar		2

---

[1] The total maximum material removal on both cylinder head and cylinder crankcase of an engine may not exceed 0.5 mm (see 01–120).

Conventional tools

Surface grinder with milling facility for light metal surfaces	e.g. Sceledum, type RTY Roaro u. Fi. Schio, Italy
Knife-edge ruler approx. 500 mm long	

Note

Face cylinder head mating surface only when porous or damaged, or if an impermissible deviation of the evenness has been measured in longitudinal direction.

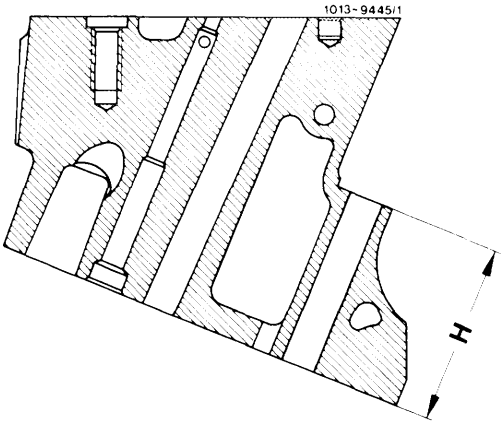

Facing

1 Measure reference value H and note down.

2 Face cylinder head mating surface. Remove sharp edges around combustion chamber.

3 Again measure dimension H. Determine material removed and note down.

4 Insert valve and measure distance between valve stem end and cylinder head, note down.

5 Remachine valve seats according to the material removed from the cylinder head (05–291).

6 Check valve timing (05–215).

01–420 Pressure-testing cylinder head

Data

Test pressure with air under water in bar gauge pressure	2

Special tools

Pressure plate	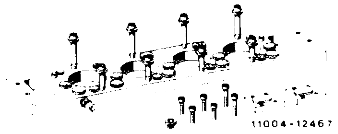	117 589 00 25 00
Rubber seal (1 set = 21 gaskets)		117 589 00 25 09
Suspension device	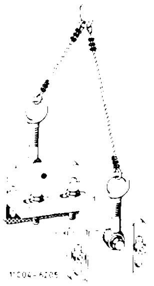	115 589 34 63 00

Conventional tool

Electrically heated water tank	e.g. Otto Dürr, D–7123 Sachsenheim-Ochsenbach

Pressure-testing

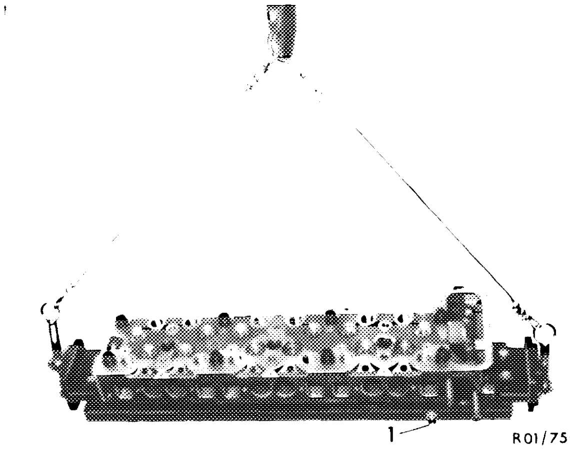

Pressure-test cylinder head if cracks (coolant loss) are suspected.

1 Bolt pressure plate onto cleaned cylinder head.

2 Blank off holes and connections.

3 Connect compressed air hose and regulate compressed air to 2 bar.

4 Fasten cylinder head on suspension device and immerse into heated water (80 °C).

5 If air bubbles rise, determine source and mark.

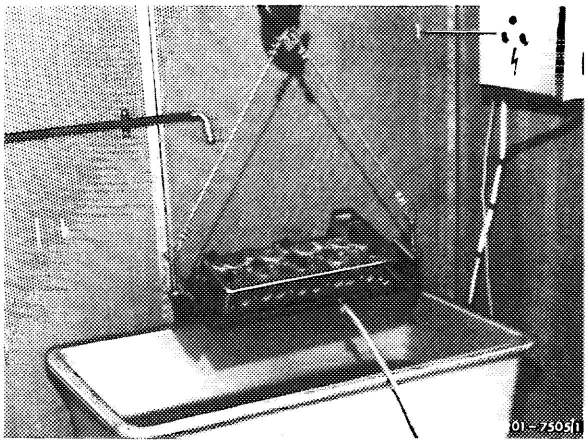

03–310 Checking, renewing and tightening connecting rod bolts

Dimensions of connecting rod bolts and connecting rod nuts

Engine	116.960 1)/961 1) 117.960/961	116.960 2)/961 2) 116.962/963 116.964/965 117.962/963 117.964/965 117.967/968
Part No.	116 038 04 71	116 038 05 71
Thread dia. d	M 10 x 1	
Necked-down shank dia. c when new	8.4–0.1	
Minimum necked-down shank dia. c	8.0	
a	6.6	
Dimension b	4.5	
e	5.2	4.2
Length L	58.2–58.5	49.2–49.5
Connecting rod nut height H	11	9

1) Not model year 1981 national version.
2) Only model year 1981 national version.

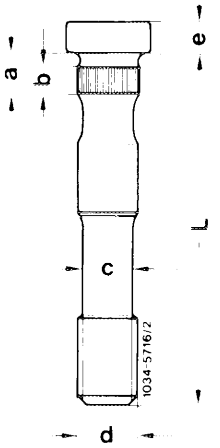

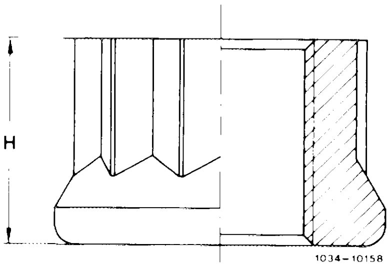

Tightening torque

Connecting rod nuts	Initial torque	40–50 Nm
	Angle of rotation torque	90–100°

Tool for self-fabrication

Steel plate	see Fig., item 3

Note

Prior to assembly, lubricate connecting rod bolt threads and contact surface of nuts with engine oil.

The connecting rod bolt 116 038 04 71 is identical with the 3rd connecting rod bolt version of the cast-iron engines 116.98 and 117.98.

Drive out connecting rod bolts only if they have to be renewed.

Checking

1 Prior to re-using connecting rod bolt measure minimum necked-down shank dia. c.

If the minimum necked-down shank dia. c is reached, renew connecting rod bolt.

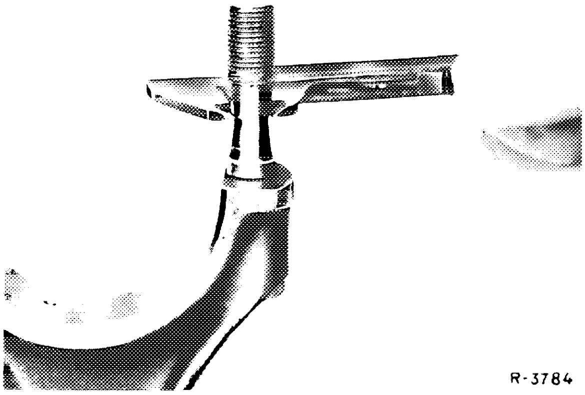
R-3784

Renewing

2 Drive out connecting rod bolts.

3 Press new connecting rod bolts into connecting rod with approx. 45 000 N or install with hammer and mandrel. To do so, place connecting rod on a ground steel plate.

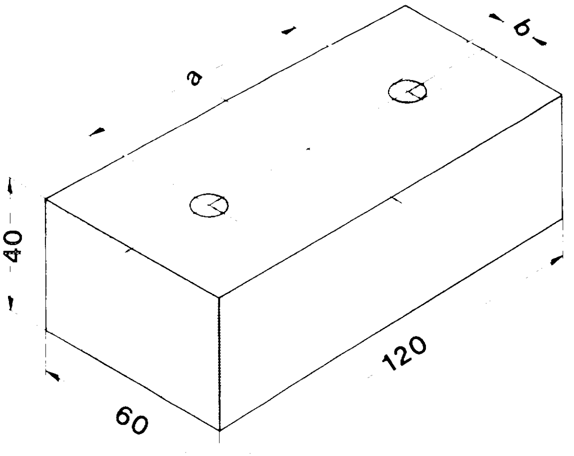

Z1004-4752/1

Engine	116.960[1]/961[1] 117.960/961	116.960[2]/961[2] 116.962/963 117.962/963	116.964 116.965 117.964 117.965 117.967 117.968
Hole distance a	68 mm		64.6 mm
Hole b		11.5 mm	

---

[1] Not model year 1981 national version.
[2] Only model year 1981 national version.

Tightening

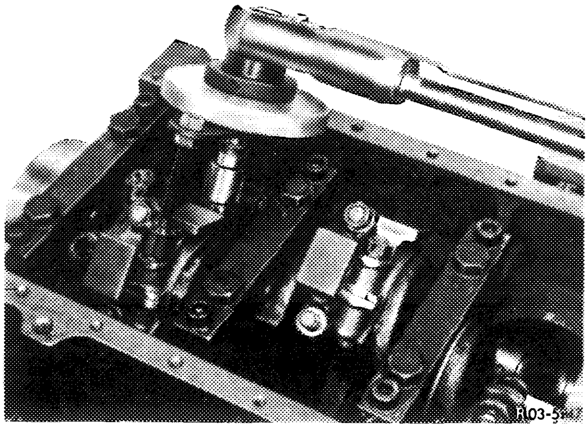

4 Lubricate contact surface of nuts and connecting rod bolt thread.

5 Tighten connecting rod nuts to 40–50 Nm initial torque and 90–100° angle of rotation torque.

Caution!
Tighten connecting rod bolts knocked in with a **hammer** with an initial torque of 50–60 Nm followed by a 90–100° angle of rotation torque.

It is essential that this instruction is observed, failure to do so could result in the connecting rod nuts coming loose.

Note: If no angle of rotation wrench is available, the nut can also be turned **in one go** by the specified angle using an ordinary socket wrench. The angle should be observed as accurately as possible. **In order to prevent faults with the angular torque, do not use a torque wrench** when tightening according to angular degrees.

03–313 Reconditioning and squaring connecting rods

Data

Engine	116.960[1] 116.961[1]	116.960[2] 116.961[2] 116.962 116.963 116.964 116.965	117.960 117.961	117.962 117.963 117.964 117.965 117.967 117.968
Center of connecting rod bearing bore to center of connecting rod bushing bore (L in Fig. item 5)	138.050 137.950		154.550 154.450	
Width of connecting rod at connecting rod bearing bore	24.890 24.857			
Width of connecting rod at connecting rod bushing bore	28.000 27.900			
Basic bore for connecting rod bearing shells (A in Fig. item 5)	55.619 55.600	51.619 51.600	55.619 55.600	51.619 51.600
Basic bore for connecting rod bushing (a in Fig. item 5)	29.021 29.000	26.021 26.000	29.021 29.000	
Connecting rod bushing inner dia.	26.013 26.007	23.013 23.007	26.013 26.007	
Roughness of connecting rod bushing, inside	0.004			
Permissible offset of connecting rod bearing bore relative to connecting rod bushing bore	0.13		0.15	
Permissible deviation from parallel of axes: connecting rod bearing bore to connecting rod bushing bore	0.06		0.07	
Permissible runout of connecting rod bearing bore	0.01			
Permissible weight difference of the complete connecting rod within one engine	4 g			

[1] Not model year 1981 national version.
[2] Only model year 1981 national version.

Tightening torque

Connecting rod nuts	Initial torque	40–50 Nm
	Angle of rotation torque	90–100°

Conventional tool

Connecting rod testing and straightening device	e.g. Walter Krupp GmbH D–5309 Meckenheim Model CL 6

Note

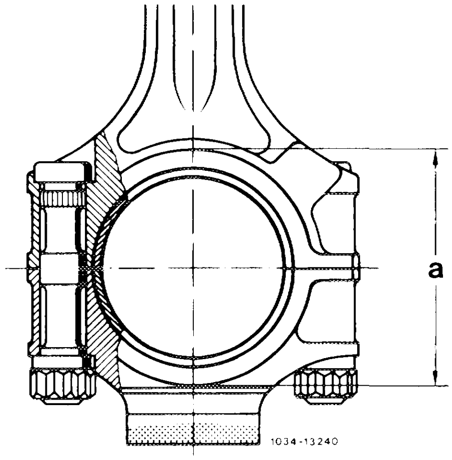

Connecting rods which were overheated as a result of bearing damage (blue discoloration) may not be re-used.

Connecting rod and connecting rod cap are marked together. The connecting rod shaft should not show any transverse score marks and nicks.

Connecting rods with machined connecting rod bushing are available as a spare part.

Connecting rods and crankshafts with different contact collar diameters may be installed together during repairs.

When renewing connecting rods, pay attention to differences in weight of connecting rods.

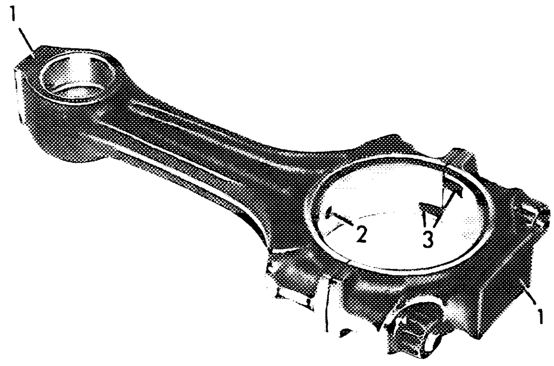

1 Weight compensation
2 Oil hole
3 Locating grooves

103-9495

Reconditioning

1 Check connecting rod bolts and renew if required (03–310).

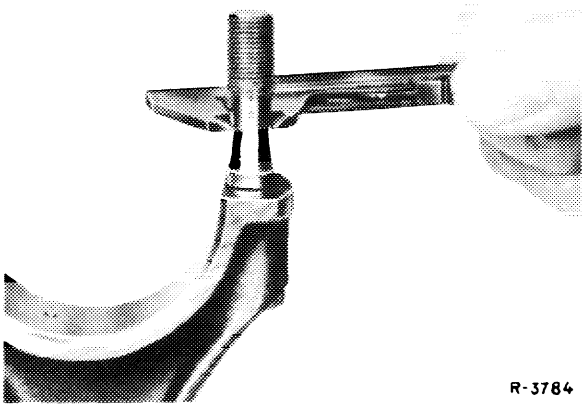
R-3784

2 Check bores for connecting rod bolts.

Place connecting rod bearing cap on one connecting rod bolt. If connecting rod bearing cap moves down by its own weight, renew connecting rod.

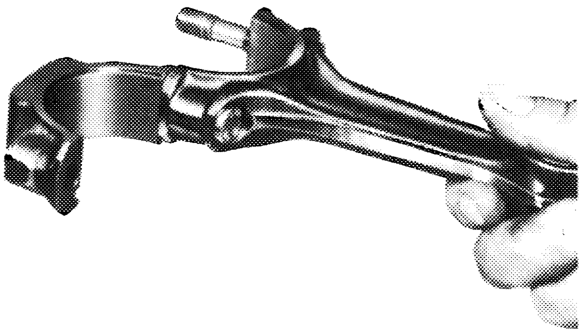
103-9232

3 Mount connecting rod bearing cap and tighten connecting rod nuts to 40–50 Nm.

4 Measure connecting rod bearing basic bores. If basic bore exceeds the specified value or is conical, touch up bearing cap mating surface on a surface plate up to a maximum of 0.02 mm.

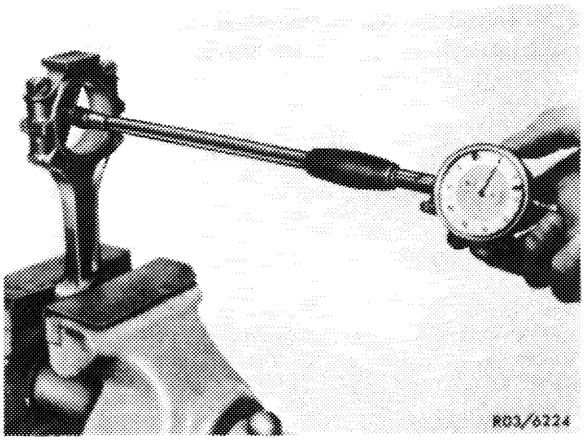
R03/6224

5 Press in new connecting rod bushing so that the oil bores are in alignment. Pressing-in pressure at least 2500 N.

6 Machine or ream connecting rod bushing.

7 Touch up lateral connecting rod contact surfaces on a surface plate.

8 Square connecting rod with connecting rod tester.

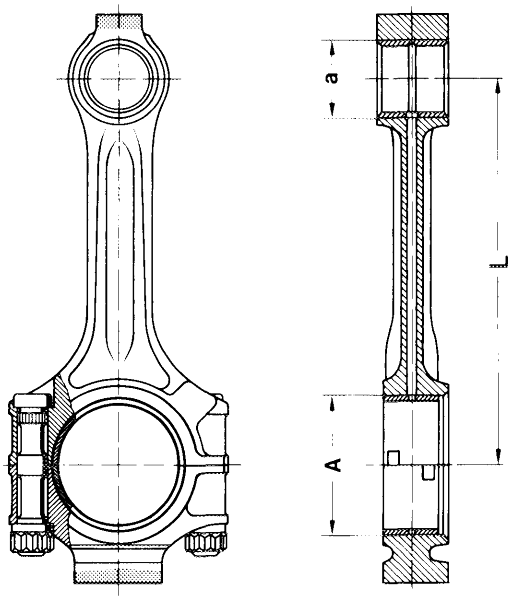

1033-8002/2

9 Align connecting rod bore relative to connecting rod bushing bore (parallel alignment).

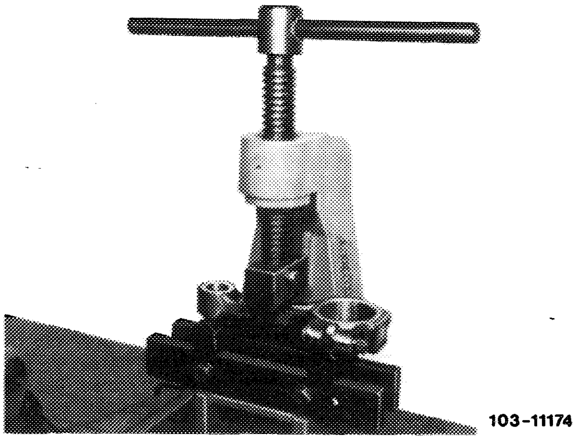

103-11174

10 Check offset of connecting rod bearing bore relative to connecting rod bushing bore and correct if necessary.

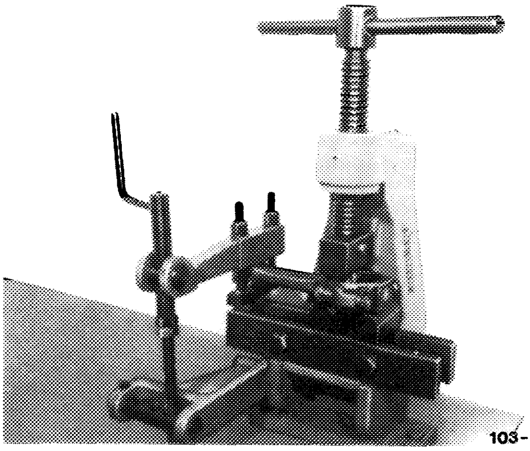

103-11173

Allocation	Group No.	Cylinder dia.	Piston dia.
Engine 116.960/961/964/965			
Standard dimension Std 92.0 dia.	0	91.998–92.003	91.985–91.990
	0+	92.003–92.008	91.990–91.995
	1	92.008–92.013	91.995–92.000
	1+	92.013–92.018	92.000–92.005
	2	92.018–92.023	92.005–92.010
	2+	92.023–92.028	92.010–92.015
1st repair stage +0.5	0	92.498–92.503	92.485–92.490
	1	92.508–92.513	92.495–92.500
	2	92.518–92.523	92.505–92.510
2nd repair stage +1.0	0	92.998–93.003	92.985–92.990
	1	93.008–93.013	92.995–93.000
	2	93.018–93.023	93.005–93.010
Engine 116.960 AUS J USA, 116.961 AUS J S USA 116.962/963			
Standard dimension Std 88.0 dia.	0	87.998–88.003	87.985–87.990
	0+	88.003–88.008	87.990–87.995
	1	88.008–88.013	87.995–88.000
	1+	88.013–88.018	88.000–88.005
	2	88.018–88.023	88.005–88.010
	2+	88.023–88.028	88.010–88.015
1st repair stage +0.5 1)	0	88.498–88.503	88.485–88.490
	1	88.508–88.513	88.495–88.500
	2	88.518–88.523	88.505–88.510
2nd repair stage +1.0 1)	0	38.998–89.003	88.985–88.990
	1	89.008–89.013	88.995–89.000
	2	89.018–89.023	89.005–89.010
Engine 117.960 up to end No. 000885			
Standard dimension Std 97.0 dia.	0	96.998–97.003	96.985–96.990
	0+	97.003–97.008	96.990–96.995
	1	97.008–97.013	96.995–97.000
	1+	97.013–97.018	97.000–97.005
	2	97.018–97.023	97.005–97.010
	2+	97.023–97.028	97.010–97.015
1st repair stage +0.5	0	97.498–97.503	97.485–97.490
	1	97.508–97.513	97.495–97.500
	2	97.518–97.523	97.005–97.510

1) Repair stage pistons are only available with the group numbers 0, 1 and 2.

Engine 117.960 as of end No. 000 886
117.961/962/963/964/965/967/968

Standard dimension Std 96.5 dia.	0	96.498–96.503	96.485–96.490
	0+	96.503–96.508	96.490–96.495
	1	96.508–96.513	96.495–96.500
	1+	96.513–96.518	96.500–96.505
	2	96.518–96.523	96.505–96.510
	2+	96.523–96.528	96.510–96.515
1st repair stage +0.5	0	96.998–97.003	96.985–96.990
	1	97.008–97.013	96.995–97.000
	2	97.018–97.023	97.005–97.010
2nd repair stage +1.0	0	97.498–97.503	97.485–97.490
	1	97.508–97.513	97.495–97.500
	2	97.518–97.523	97.505–97.510

---

[1] Repair stage pistons are only available with the group numbers 0, 1 and 2.

Piston clearance	when new	0.008–0.018
	wear limit	0.08
Max. wear limit of cylinder bores in direction of driving or transverse direction at the upper and lower point of return of the 1st piston ring		0.10
Piston weight difference within one engine		4 g

Tightening torque

Connecting rod nuts	Initial torque	40–50 Nm
	Angle of rotation torque	90–100°

Special tools

Piston ring spreader	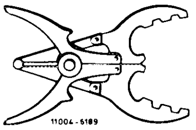	000 589 51 37 00
Piston ring clamping strap	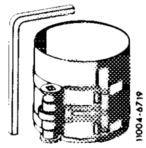	000 589 04 14 00
Cover sleeves (2) for connecting rod and connecting rod bolts during piston installation	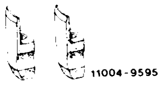	117 589 00 98 00

Note

As standard, the pistons are subdivided into six tolerance groups (group numbers). The following information is stamped into the piston crown:

1. Piston diameter e.g. 96.505
2. Piston code number e.g. 72
3. Group number e.g. 1+
4. Direction of driving arrow

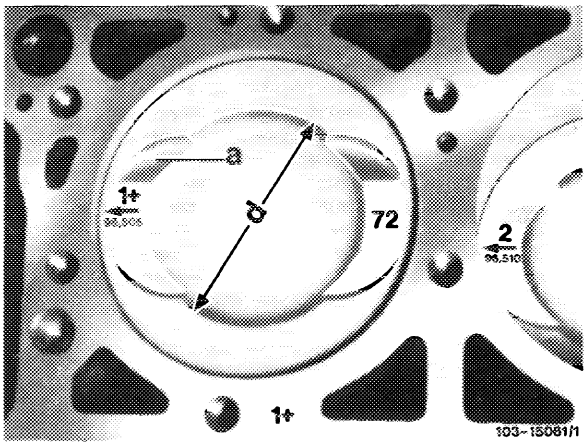

a Valve recesses
b Trough diameter

The group number is also stamped into the crankcase mating surface.

The piston group number (e.g. 2) must correspond with the group number of the cylinder bores (series manufacture).

This will ensure that the piston clearance is maintained.

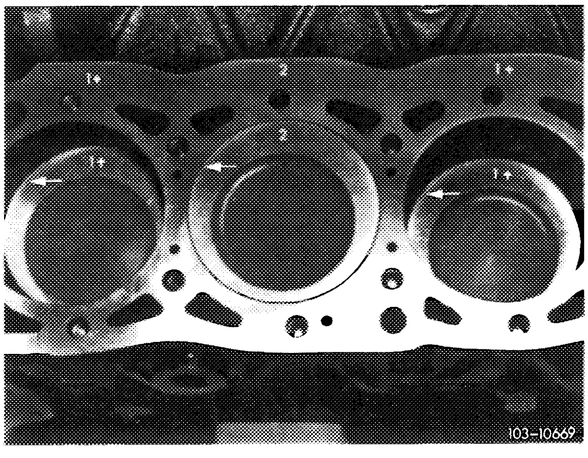

In the event of repairs, hone cylinder bores according to the dimensions of the existing pistons plus the piston clearance (see table).

The piston pins of the engines 117.967/968 have different inside diameters for weight compensation purposes together with the piston. In the case of repairs, the piston pins must remain with their respective piston.

Removal

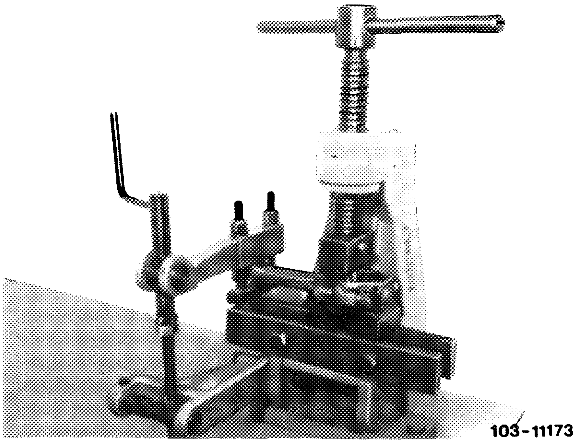

1 Remove connecting rod with piston in upward direction. For this purpose, cover connecting rod with cover sleeves to prevent damage to the cylinder wall.

2 Remove piston pin circlip and push out piston pin.

3 Recondition connecting rod and square (03–313).

Installation

4 On used pistons, check piston ring gap and axial clearance.

5 Lubricate piston pins and connecting rod bushings.

6 Mount pistons in such a way that the arrow points in the direction of driving and the locating grooves (3) in the connecting rod are facing to the engine outside.

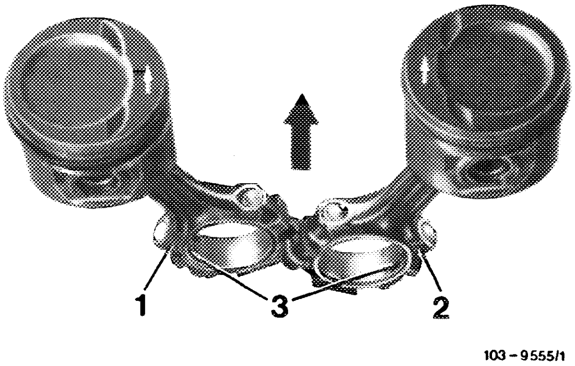

1 Connecting rod contact side
3 Locating grooves

7 Push piston pin in manually.

Caution!
Do not heat piston.

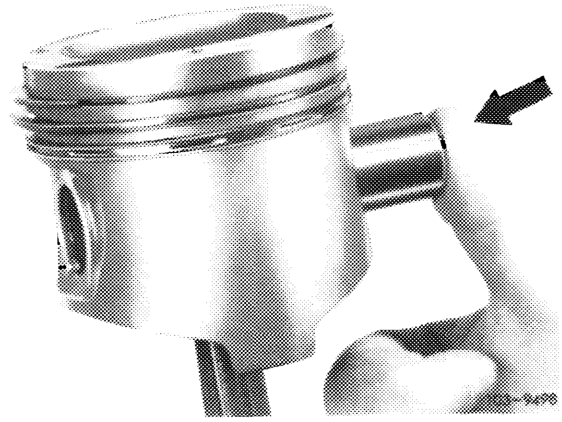

8 Insert piston pin circlip into the groove.

9 Lubricate cleaned cylinder bores, connecting rod bearing journals, connecting rod bearing shells and pistons.

10 Distribute piston ring gaps uniformly around the piston circumference.

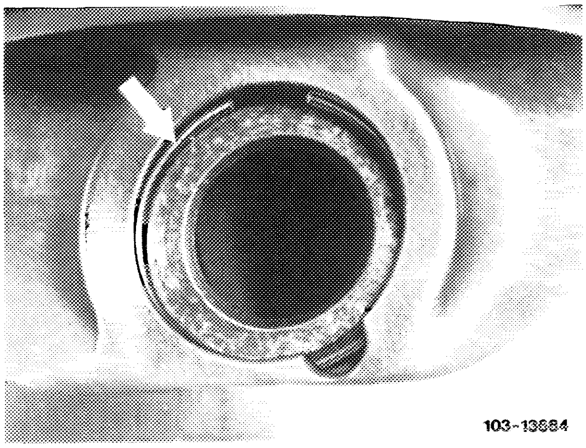

11 Position piston ring clamping strap and introduce pistons into cylinder bore with arrow in the direction of driving.

To do so, fit cover sleeves to connecting rod to avoid damage to the cylinder wall.

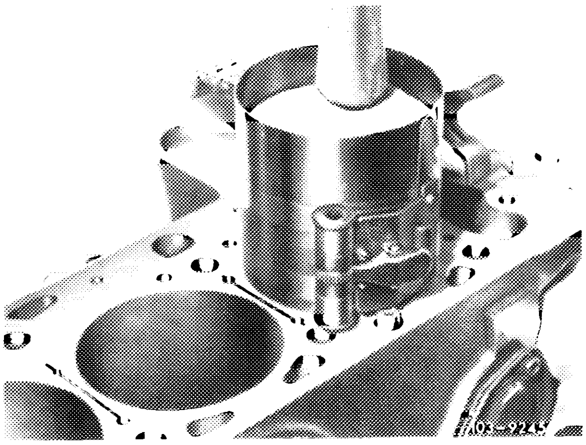

12 Mount connecting rod bearing caps along connecting rod with matching identification number and tighten connecting rod nuts with 40–50 Nm initial torque and 90–100° angle of rotation torque.

13 Rotate crankshaft and check clearance between piston pin eye and connecting rod.

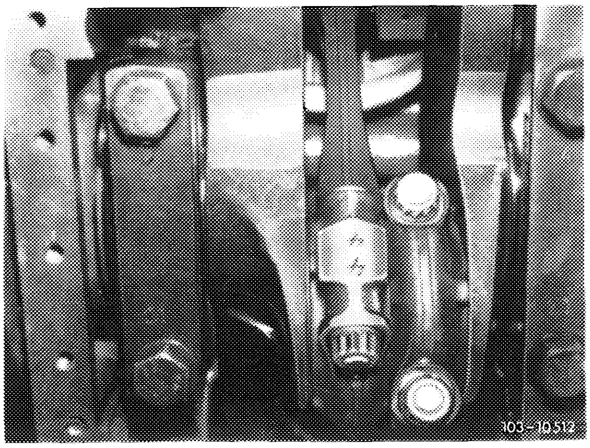

14 Measure distance between piston crown and crankcase mating surface with the piston at TDC position (see table).

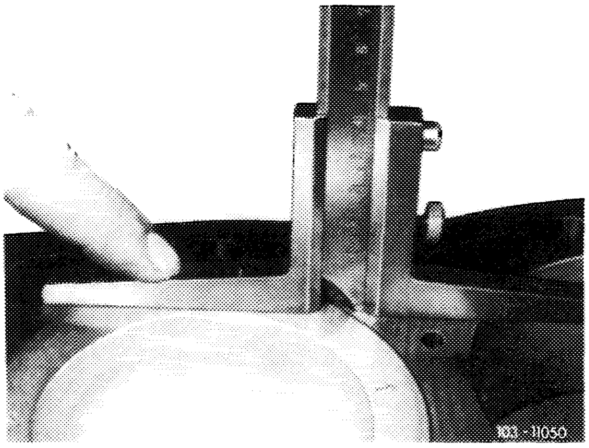

03–317 Renewal of piston rings

Piston removed (03–316).

Data

		Tolerance when new	Wear limit
Maximum wear limit of the cylinder bores in direction of driving or transverse direction at the upper and lower point of return of the 1st piston ring			0.09
Axial clearance for piston rings in	Groove a	0.05–0.08	0.10
	Groove b	0.01–0.03	0.10
	Groove c	0.01–0.04	0.06
Piston ring gap in	Groove a	0.20–0.35	1.0
	Groove b	0.20–0.35	0.8
	Groove c	0.20–0.35	0.8
Piston clearance		0.008–0.018	0.08

Special tool

Piston ring spreader	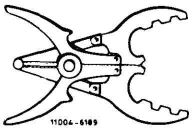	000 589 51 37 00

Note

If piston rings are renewed, the cylinder wear and the piston ring axial clearance must be measured with new piston rings.

1 Remove old piston rings; remove carbon from piston crowns and firing webs.

2 Remove carbon from piston ring grooves; do not use sharp-edged tools to prevent damage to the groove corners.

3 Clean oil holes in the circular oil groove.

Caution!
It is possible that pistons with different 2nd piston ring (straight face or taper face ring) are installed in the same engine.

The 2nd piston ring must be replaced with the piston ring of identical shape, otherwise it could get stuck in the piston ring groove.

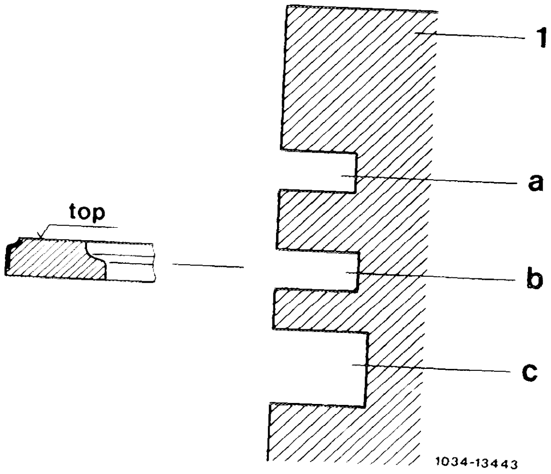

Straight face piston ring

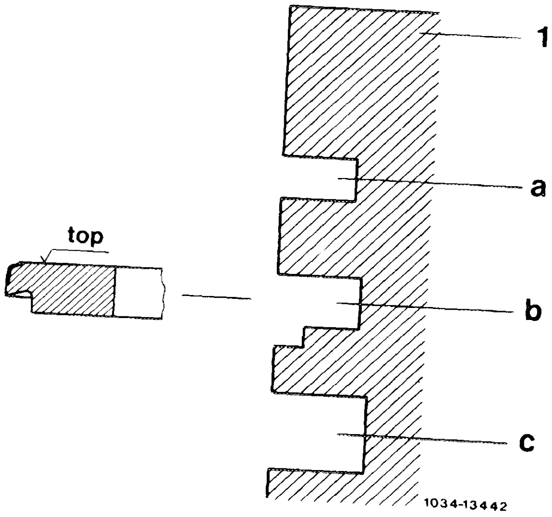

Taper face piston ring

4 Install 3rd piston ring (oil control ring). The joint of the inner spiral spring must be opposite the gap of the piston ring.

Install 2nd piston ring.
Observe piston ring shape.

Install 1st piston ring.

Caution!
The marking „TOP" on the piston ring must be at the top.

Data

Crankshaft standard dimension and repair stages	Crankshaft bearing journal diameter	Width of thrust bearing journal	Crank pin diameter		Width of pins
Standard dimension	63.965 63.950	27.000 27.021	51.965[1] 51.945	47.965[2] 47.945	50.000 50.100
1st repair stage	63.715 63.700	up to 27.50	51.715[1] 51.695	47.715[2] 47.695	up to 50.30
2nd repair stage	63.465 63.450		51.465[1] 51.445	47.465[2] 47.445	
3rd repair stage	63.215 63.200		51.215[1] 51.195	47.215[2] 47.195	
4th repair stage	62.965 62.950		50.965[1] 50.945	46.965[2] 46.945	

Permissible crankshaft journal and crank pin runout		0.0025
Permissible deviation of the connecting rod journal surface axis to the reference axis of the crankshaft journals I and V, from parallel		0.01
Permissible radial runout of the rear crankshaft flange[3]		0.02
Permissible axial runout of the rear crankshaft flange[3]		0.012
Permissible axial runout of the crankshaft bearing journals[3]	Journals II, IV	0.07
	Journals III	0.10
Permissible deviation of the front crankshaft journal[4]	from the cylindrical shape	0.005
	from axial runout[3]	0.030
Permissible deviation of the bearing surfaces of the thrust bearing	from radial runout[3]	0.02
Fillet radii at the crankshaft and connecting rod bearing journals		2.5–3
Crankshaft bearing journal diameter front		31.984–32.000
Bearing surface dia. for radial sealing ring rear, ground without helix		99.928 99.874
Scleroscope hardness of crankshaft bearing journals and crank pins	when new	71–81
	limit value	60[5]

---

[1] Engines 116 and 117 except [2].

[2] 116.960/961 (AUS) (J) (S) (USA) 116.962/963 and 117.962/963.

[3] With crankshaft resting on outer crankshaft bearing journals I and V and one full turn.

[4] When measuring in the installed position, eliminate end float by pressing against the crankshaft journal.

[5] Limit value should be available at least on 2/3 of journal circumference.

Special tool

Impact hardness tester (scleroscope)	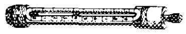 11004-6210	000 589 20 21 00

Note

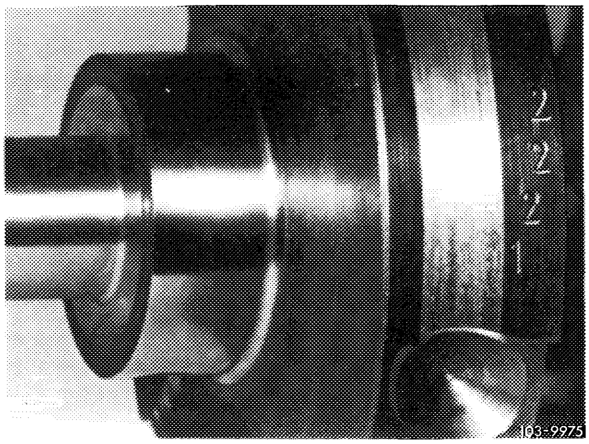

During repair the crankshaft need not be balanced.

When checking and reconditioning the crankshaft proceed according to the following diagram.

Group number for crank pin diameter (standard dimension)

1 = 51.945–51.954 mm and 47.945–47.954 mm
2 = 51.955–51.965 mm and 47.955–47.965 mm

The stamped-in figure at bottom applies to the 1st crank pin.

Diagram

* See section „Explanation on diagram".

V = Scrapping.

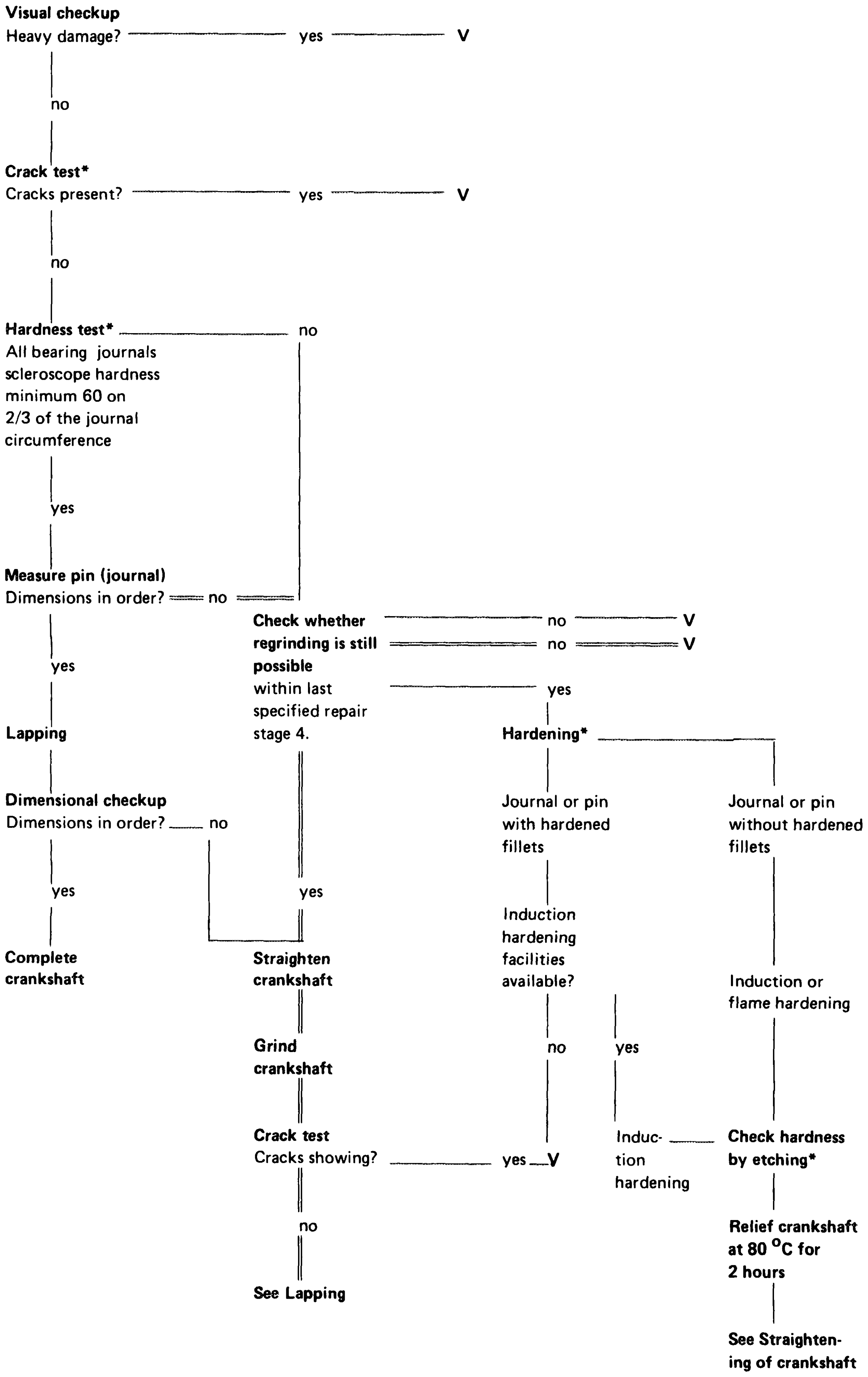
Visual checkup
Heavy damage?
yes
V
no
Crack test*
Cracks present?
yes
V
no
Hardness test*
All bearing journals scleroscope hardness minimum 60 on 2/3 of the journal circumference
no
yes
Measure pin (journal)
Dimensions in order?
no
yes
Lapping
Dimensional checkup
Dimensions in order?
no
yes
Complete crankshaft
Check whether regrinding is still possible within last specified repair stage 4.
no
V
no
V
yes
Hardening*
Journal or pin with hardened fillets
Journal or pin without hardened fillets
yes
Straighten crankshaft
Grind crankshaft
Crack test
Cracks showing?
yes
V
no
See Lapping
Induction hardening facilities available?
no
yes
Induc-tion hardening
Induction or flame hardening
Check hardness by etching*
Relief crankshaft at 80 °C for 2 hours
See Straightening of crankshaft

Explanation of diagram

Crack test

Clean crankshaft. Bearing journals and pins should be free of oil and grease. Magnetise crankshaft and apply fluorescent powder (fluxing). A color penetration method may also be used (immersion in bath or using spray can).

Flux agent: Paint or UV-oil,
cleaning agent,
developer

Hardness test

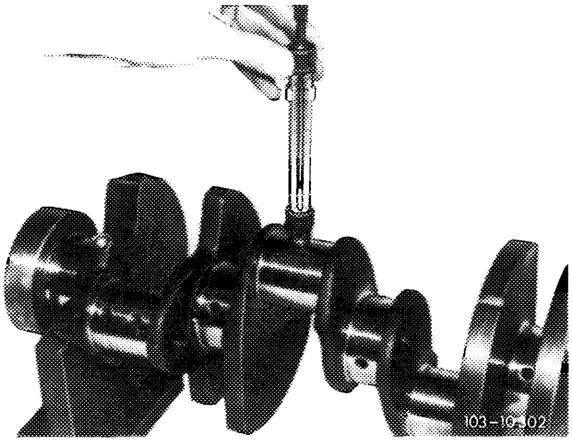

Test hardness with impact hardness tester (scleroscope).

The minimum hardness should be available on 2/3 of the journal and pin circumference.

Hardening

Journals and pins without hardened fillets can be inductance hardened or flame hardened. On the other hand, journals and pins with hardened fillets (arrow) must always be inductance hardened. If this is not possible, scrap the crankshaft.

When hardening journals and pins without hardened fillets, the distance A between hardened runout and fillet radius (4—5 mm) must be maintained.

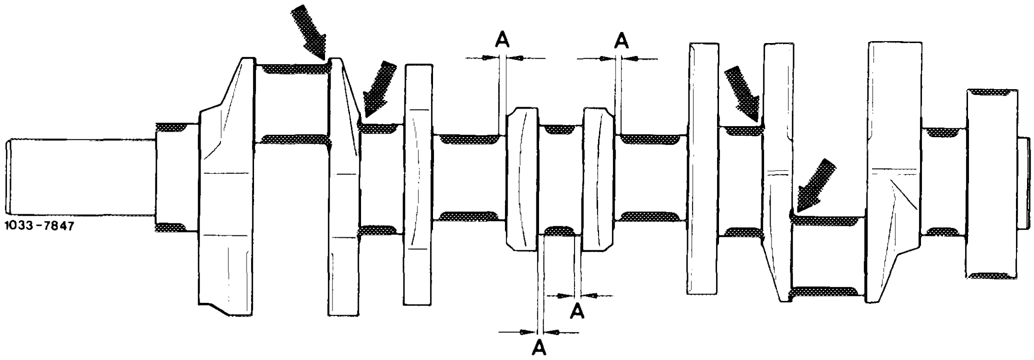

The running surface for the rear radial sealing ring is hardened and ground without helix (previously 60° helix).

Checking the hardening results

For perfect hardening, check adjustment of hardening equipment by means of metallographic etching (grinding).

Pertinent tests can be made with scrapped crankshafts.

Check hardening by etching surface of journals and pins with a 2% solution of alcoholic nitric acid (HNO_3).

No dark areas should appear on journal or pin surfaces.

Unhardened fillets will become dark.

Hardened fillets, on the other hand, should be as bright as the surface of pin or journal.

A journal or pin which has already passed metallographic inspection may be used for comparison.

After the test, carefully wash off nitric acid with alcohol.

Corrosion protection

Crankshafts which are not immediately installed again should be lubricated with engine initial operation oil (SAE 30).

03–320 Mounting of crankshaft

Engine removed and disassembled.

Data

Crankshaft standard dimension and repair stages	Crankshaft bearing journal diameter	Width of crankshaft thrust bearing journal	Crank pin diameter		Width of crank pins
Standard size	63.965 63.950	27.000 27.021	51.965[1] 51.945	47.965[2] 47.945	50.000 50.100
1st repair stage	63.715 63.700	up to 27.50	51.715[1] 51.695	47.715[2] 47.695	up to 50.30
2nd repair stage	63.465 63.450		51.465[1] 51.445	47.465[2] 47.445	
3rd repair stage	63.215 63.200		51.215[1] 51.195	47.215[2] 47.195	
4th repair stage	62.965 62.950		50.965[1] 50.945	46.965[2] 46.945	

Basic bore and bearing play		Crankcase[3]	Connecting rod	
Basic bore diameter		68.480[4] 68.500	55.600[1] 55.619	51.600[2] 51.619
Permissible out-of-round and conicity of basic bore		0.01		0.01
Seat width of thrust bearing shell[3]		22.379 22.400		
Radial bearing play	when new	0.025–0.045[5]	0.030–0.055[5]	
	wear limit	0.09	0.08	
Axial bearing play	when new	0.10–0.22	0.22–0.38	
	wear limit	0.30	0.50	

---

[1] Engines 116 and 117 except [2].

[2] 116.960/961 AUS J S USA 116.962/963 and 117.962/963.

[3] Machined together with the crankshaft bearing caps.

[4] Tolerance range indicated on crankshaft bearing cap with paint, 68.480–68.490 blue, 68.490–68.500 red.

[5] The mean value is desirable for radial bearing play.

Tightening torques		Nm
Crankshaft bearing threaded stud	Threaded stud in crankcase¹)	30
	Nut M 10 x 1 and lateral bolts	50
Connecting rod nuts	Initial torque	40–50
	Angle of rotation torque	90–100°
Crankshaft end bolt	with 3 diaphragm springs ²)	270–330
	with 4 diaphragm springs ²)	370–400
Necked-down bolts for driven plates	Initial torque	30–40
	Angle of rotation torque	90–100°

---

¹) After unscrewing, the threaded studs lose their locking effect. They may only be used once.
²) See Note 03–324.

Special tools

Clamping strap for piston rings	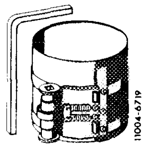	000 589 04 14 00
Dial gauge holder for measuring crankshaft end play	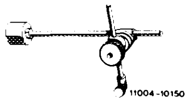	363 589 02 21 00
Cover sleeves (2) for connecting rods and connecting rod bolts during piston installation	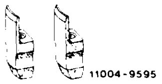	117 589 00 98 00

Note

Self-locking threaded studs are screwed into the crankcase for mounting of the crankshaft bearing caps.

These threaded studs may only be screwed in once, as the locking compound, which is applied to approx. 8 mm of thread length, will become ineffective after unscrewing the stud.

When renewing the threaded studs, pay attention to the different screw-in lengths and collar diameters.

No Heli-Coil inserts may be used in repair cases for the self-locking crankshaft bearing cap studs.

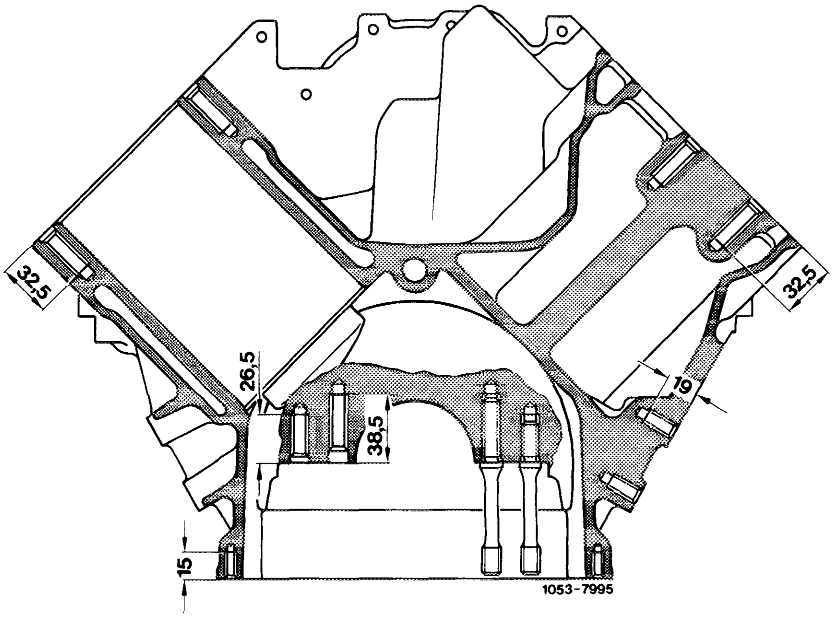

The five crankshaft bearing caps made of malleable cast iron are fitted into the crankcase with a lateral overlap of 0.01 mm.

The three center bearing caps are always bolted to the crankcase outer walls.

The crankshaft bearing caps have been machined together with the crankcase and are not available as a spare part.

Mounting of crankshaft with engine removed and disassembled.

Following a bearing failure, the connecting rods must be removed and any chips removed from the connecting rod bores.

Carefully clean oil galleries in the crankcase, crankshaft, timing case cover, oil filter housing, end cover, oil pump etc.

Check crankshaft for cracks, dimensions and hardness (03–318).

Associating crankshaft bearings, installing crankshaft

1 Install crankshaft bearing cap, observe marks, 1 is at the front.

The bearing caps are fitted asymmetrically, in this way the caps can only be installed in one position.

2 Lubricate nut contact area and threads, tighten nuts with 50 Nm.

3 Lubricate thread and bolt head contact area of lateral bolts (M 10 x 40), install with washers and tighten with 50 Nm.

4 Measure basic bore in direction A, B and C at two levels (conicity). Note down values.

With the basic bore which exceeds the specified value or is conical, touch up bearing cap contact surface on a surface plate to a maximum of 0.02 mm.

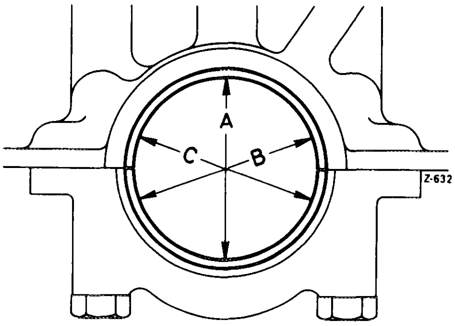

5 Insert bearing shells, mount crankshaft bearing caps.

Tighten nuts to 50 Nm and lateral bolts with 50 Nm.

6 Measure bearing diameter, note down measured values.

7 Measure crankshaft journal, then determine crankshaft radial bearing play.

Note: The bearing play can be corrected by using different bearing shells, while the aim should be for the mean value of the specified bearing play. Crankshaft bearing shells without color coding are thicker than the ones with blue color coding. It must be observed however that the wall thicknesses of shells without and with color coding may overlap.

8 Measure width of fitted bearing journal and the fitted bearing. Determine crankshaft axial bearing play.

The fitted bearing shells of the repair stages are available in oversize.

Both fitted bearing shells must be machined together on both sides to the width of the fitted bearing journal minus the axial play.

9 Coat bearing shells and crankshaft with engine oil SAE 30 and fit crankshaft.

Caution!
Do not use bearing shells without oil hole in the crankcase but only in the bearing cap.

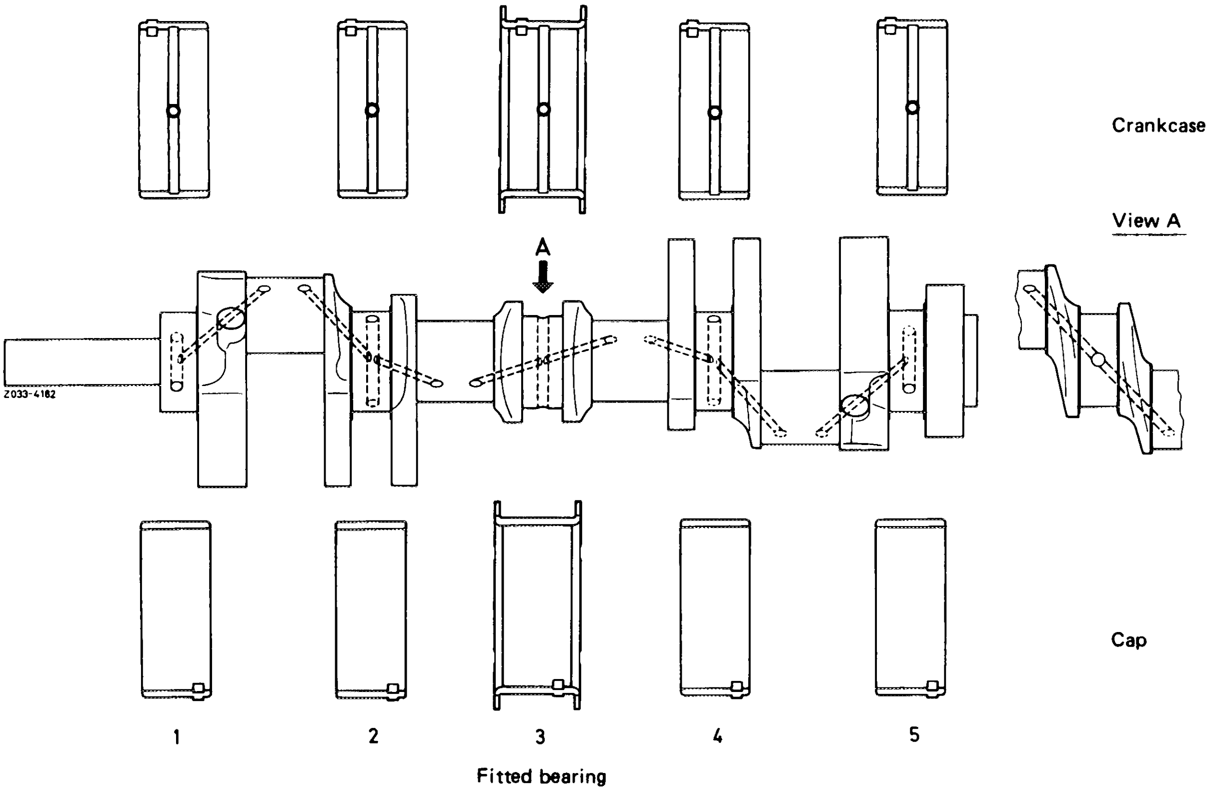

10 Tighten crankshaft bearing caps with a specified torque in the sequence of the tightening diagram. To do so, the thread and the bolt and nut contact areas should be lubricated beforehand.

Nuts 50 Nm.

Lateral bolts 50 Nm.

Note: Quality 10.9 must be used for the lateral bearing cap bolts.

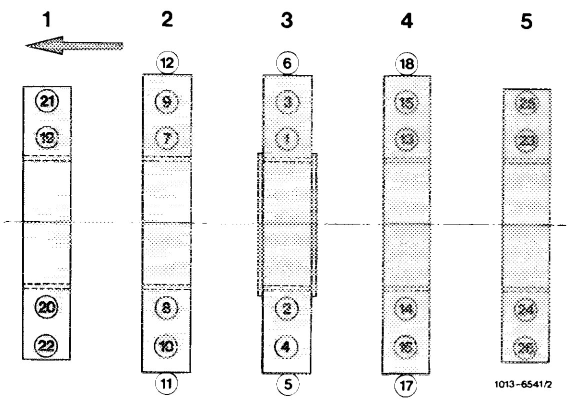

11 Measure crankshaft axial play (end float).

12 Rotate crankshaft by hand to check whether it runs freely.

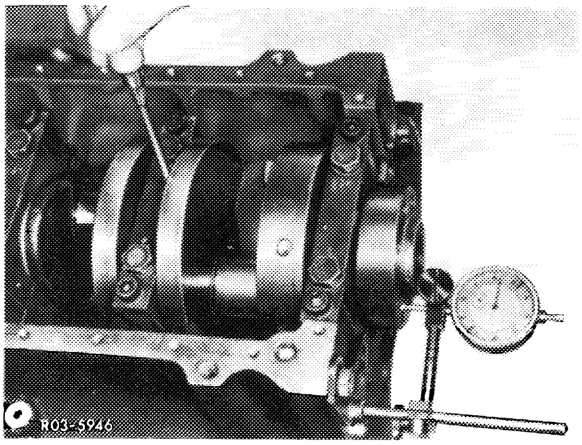

Associating connecting rod bearings and installing connecting rods

13 Check connecting rod bolts (03–310).

14 Recondition and square connecting rods (03–313).

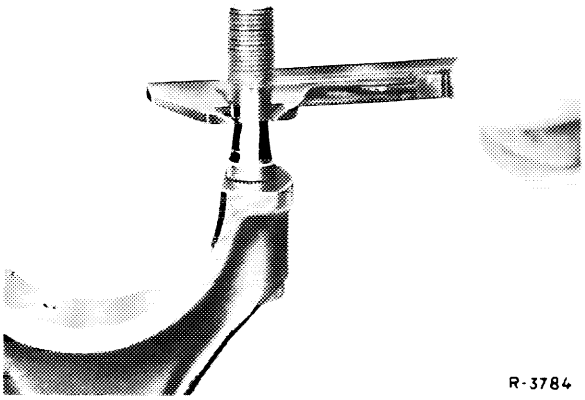

15 Matching the stamped numbers, mount connecting rod bearing caps. Tighten connecting rod nuts with 40–50 Nm.

16 Measure basic bore in two directions. If the basic bore exceeds the specified value or is conical, touch up bearing cap contact surface on a surface plate up to a maximum of 0.02 mm.

17 Insert connecting rod bearing shells, install connecting rod bearing caps with bearing shells and tighten connecting rod nuts with 40–50 Nm.

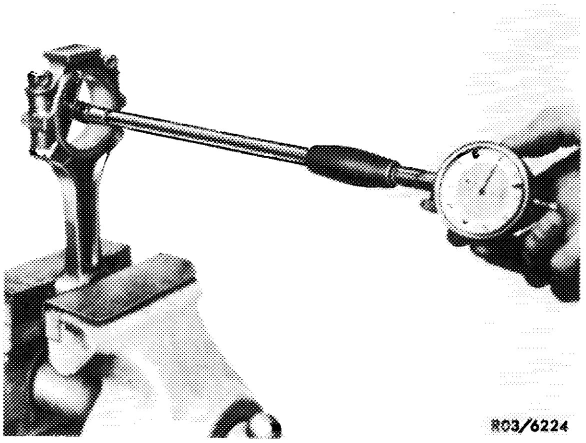

18 Measure and note bearing diameter.

19 Measure crank pin. Determine radial connecting rod bearing play.

Note: The bearing play can be corrected by using different bearing shells, while the aim should be for the mean value of the specified bearing play. Crankshaft bearing shells without color coding are thicker than the ones with blue color coding. It must be observed however that the wall thicknesses of shells without and with color coding may overlap.

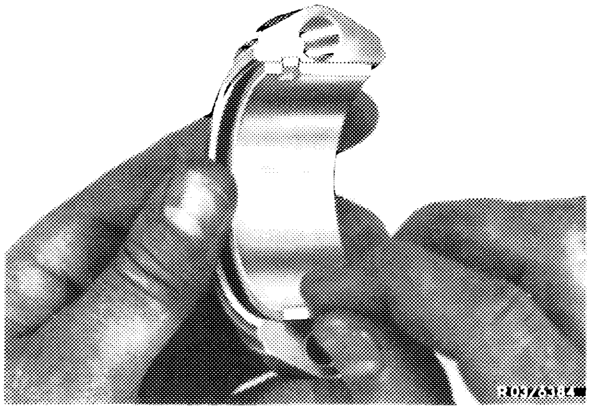

20 Mount piston and connecting rods (03–316).

To do so, use cover sleeves on connecting rods to prevent damage to the cylinder wall.

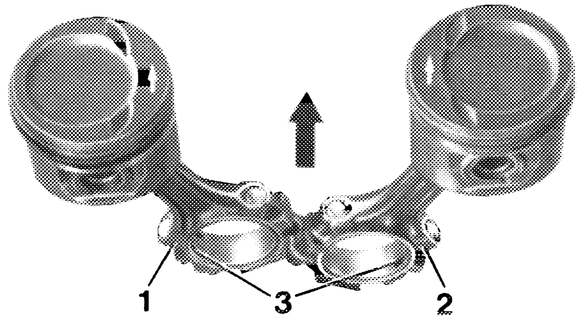

1 Connecting rod contact side
3 Locating grooves for bearing shells

103 – 9555/1

21 Lubricate bearing shells, crankshaft, pistons and cylinders with engine oil SAE 30. Install connecting rods with pistons (03–316).

Observe marking!

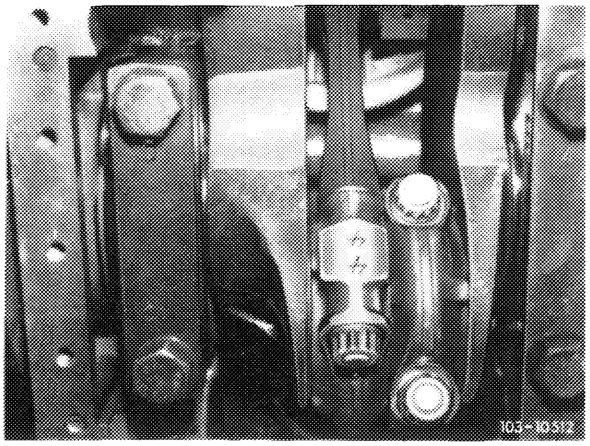

22 Tighten connecting rod nuts with 40–50 Nm **initial torque** and 90–100° **angle of rotation torque.**

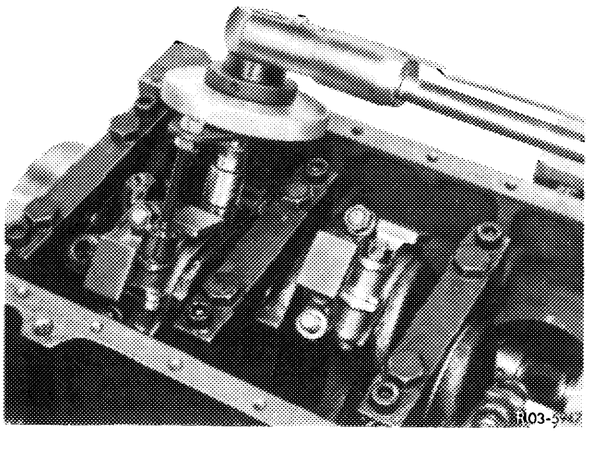

23 Measure axial connecting rod bearing play. Ensure freedom of movement of connecting rods in the pistons.

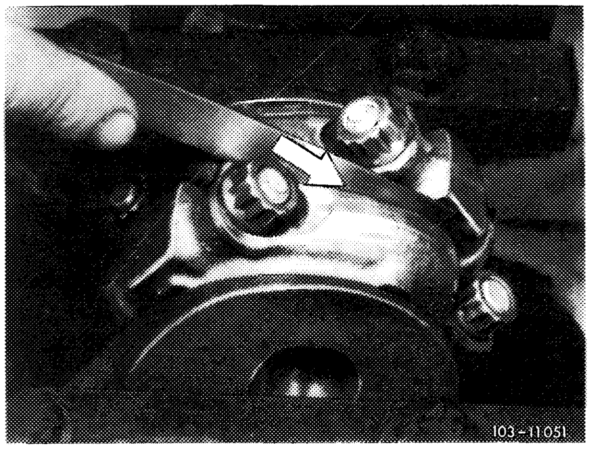

Caution!
Disassemble oil pump, clean and renew if required. Renew oil pressure limiting valve. Disassemble oil filter upper part and clean, carefully clean air-oil cooler or renew. Unscrew and clean oil pressure relief valve for oil filter insert and oil cooler bypass valve. Disassemble and clean oil damper.

Fit initial operation oil filter insert. After 1000 to 1500 km, change engine oil and oil filter element.

Note: For repair purposes it is possible on model 107.026 with engine 117.960 to exchange the crankshaft 1st version with the shorter crankshaft 117 031 14 01 together with an additional compensation plate (10.5 mm thick) and longer (29 mm instead of 23 mm) necked-down bolts.

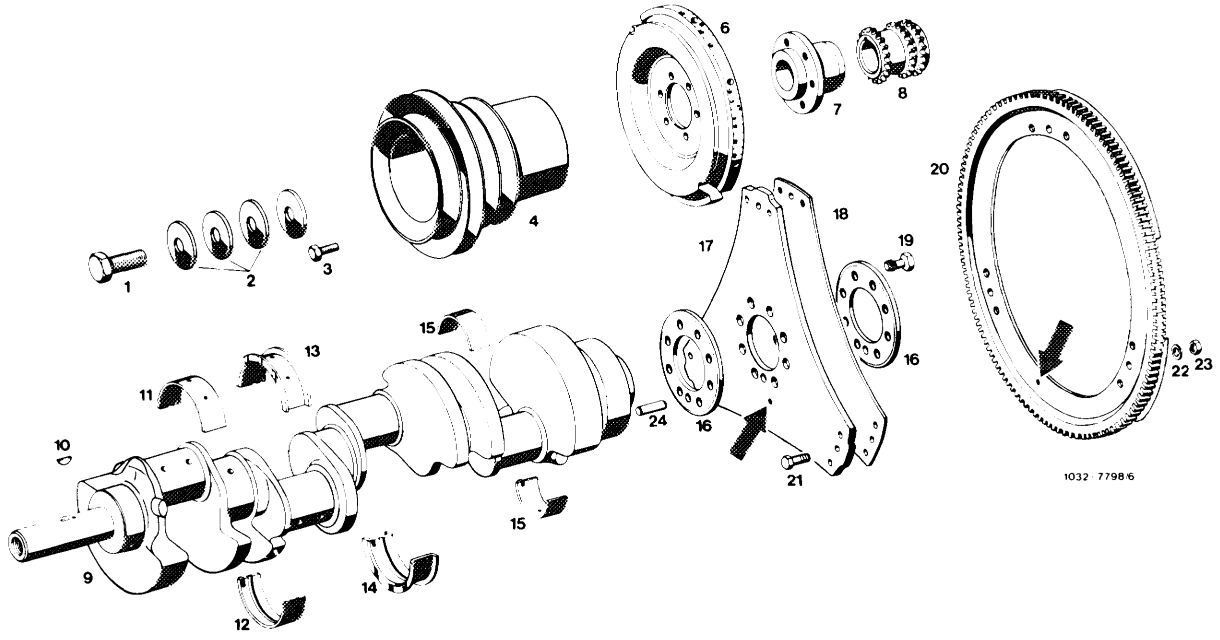

1 Bolt M 18 x 1.5 x 45
2 Diaphragm springs (4 required), 2nd version
3 Bolt M 8 x 22 (6 required)
4 V-belt pulley
6 Vibration damper
7 Hub
8 Crankshaft sprocket
9 Crankshaft
10 Woodruff key
11 Crankshaft bearing shell in crankcase
12 Crankshaft bearing shell in bearing cap
13 Fitted bearing shell in crankcase
14 Fitted bearing shell in bearing cap
15 Connecting rod bearing shells
16 Plates 4.5 mm thick
17 Driven plate 1.5 mm thick, 296 mm dia.
18 Driven plate 1 mm thick, 287 mm dia.
19 Necked-down bolt for driven plates M 12 x 1.5 x 23 (8 required)
20 Ring gear with segments
21 Fitted bolts
22 Spring washer B 6
23 Nut M 6
24 Dowel pin (only for EZL transmitter)

03–324 Replacing front crankshaft radial sealing ring

Tightening torques		Nm
Crankshaft end bolt	with 3 diaphragm springs [1])	270–330
	with 4 diaphragm springs [1])	370–400
Bolts, V-belt pulley to hub		35

[1]) See Note.

Special tools

Detent for counterholding crankshaft (starter flange left or right)	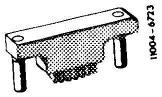	116 589 01 40 00
Torque wrench 3/4" drive, 150–500 Nm	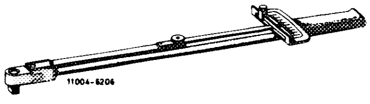	001 589 31 21 00
Socket insert 27 mm, 1/2" drive	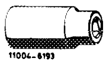	001 589 65 09 00
Sleeve for front radial sealing ring	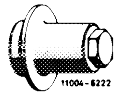	110 589 07 61 00

Conventional tool	
Adapter 3/4" inside to 1/2" outside drive	e.g. Hazet, D–5630 Remscheid Order No. 1058 RI

Note

As of 1985, the number of diaphragm springs was increased from 3 to 4.

For purposes of repair it is not permitted to increase the number of diaphragm springs by adding one additional diaphragm spring, but **4 new** diaphragm springs must be used.

The *old* version (with 3 diaphragm springs) may be retained.

If 4 diaphragm springs (2nd version) are used instead of 3 diaphragm springs (1st version) during repairs, the tightening torque must be increased to 370–400 Nm.

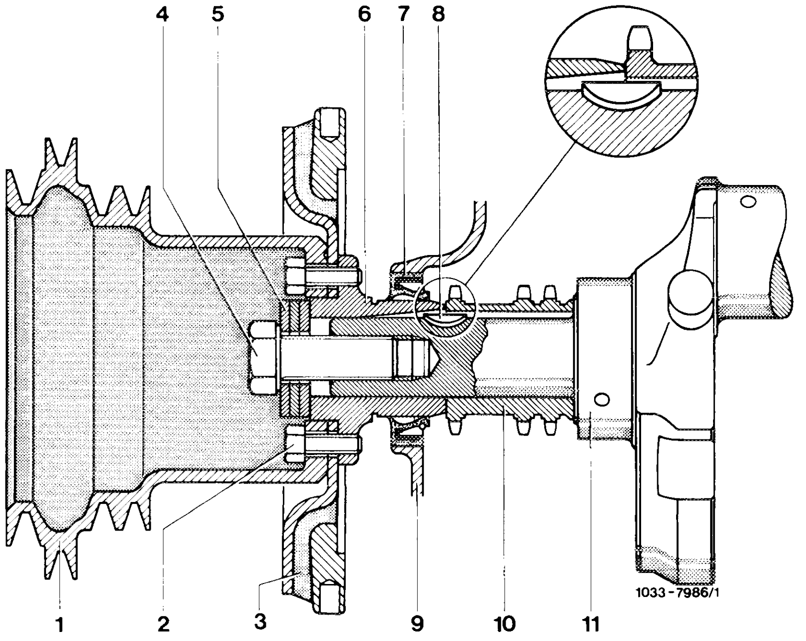

Crankshaft arrangement
1st version

1	V-belt pulley
2	Bolt M 8 x 22
3	Vibration damper
4	Bolt M 18 x 1.5 x 45
5	Diaphragm springs (3 required)
6	Hub
7	Radial sealing ring
8	Woodruff key
9	Timing case cover
10	Crankshaft sprocket
11	Crankshaft

Note

Prior to installation, the space between sealing and dust lips of the radial sealing ring must be filled with long-life grease according to sheet 266.2 of the Specifications for Service Products.

Caution!
The V-belt pulley on the crankshaft is optionally made of cast iron or pressed steel plate.

Care should be exercised not to break the cast-iron pulley.

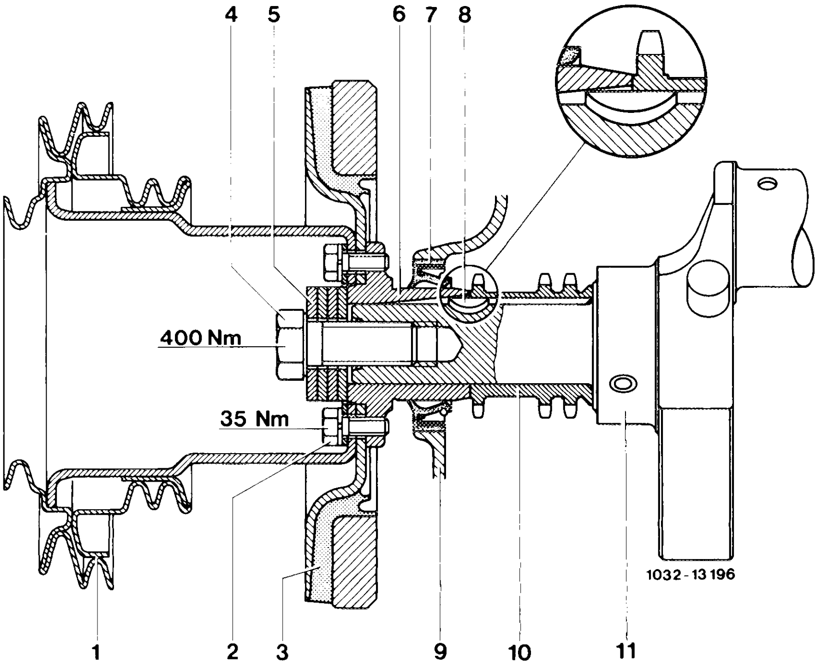

Crankshaft arrangement
2nd version

1	V-belt pulley
2	Bolt M 8 x 22
3	Vibration damper
4	Bolt M 18 x 1.5 x 45
5	Diaphragm springs (4 required)
6	Hub
7	Radial sealing ring
8	Woodruff key
9	Timing case cover
10	Crankshaft sprocket
11	Crankshaft

Renewing

1 Remove hub, vibration damper and V-belt pulley (03–342).

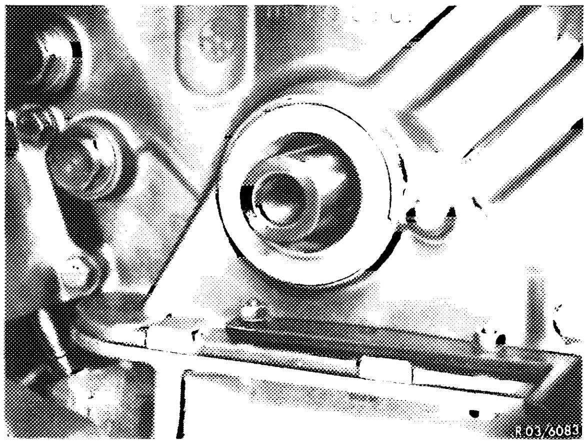

2 Force out radial sealing ring by means of a screwdriver.

Caution!
Do not damage crankshaft and seating bore for radial sealing ring.

3 Remove burr from edge of radial sealing ring seat.

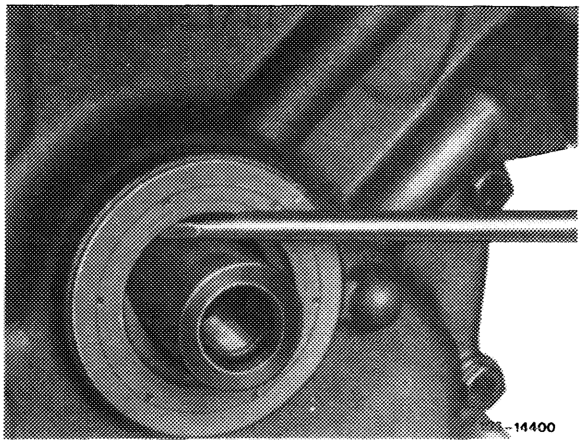

4 Pull in radial sealing ring by means of installation sleeve (1). For installing, use the hexagon head bolt (107) for mounting hub to crankshaft and one diaphragm spring (106).

The radial sealing ring must be positioned at right angles to the crankshaft journal.

Note: Hubs with running grooves from the radial sealing ring must be renewed.

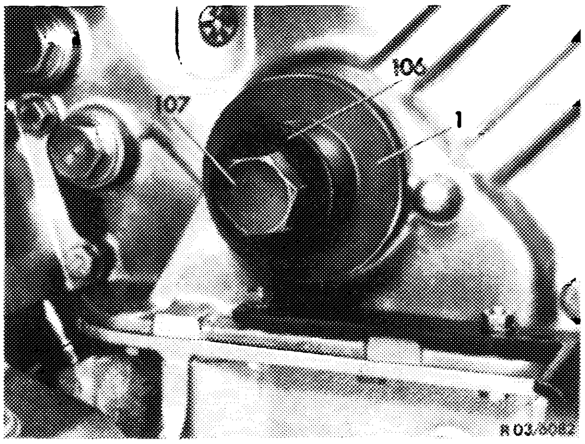

5 Install hub, vibration damper and V-belt pulley (03–342).

The bolt M 18 x 1.5 x 45 (4) is installed with 4 diaphragm springs (2nd version) (see Note).

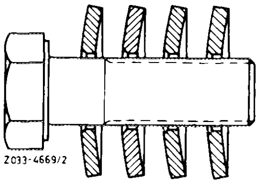

03–327 Replacing rear crankshaft radial sealing ring

Necked-down bolts for driven plates onto crankshaft

Necked-down bolts, part No.		116 032 02 71	116 052 04 71 1)
Thread D		M 12 x 1.5	
Necked-down shank dia. d	when new	9.8–0.2	
	minimum dia.	9.3	
Length L		23	29 1)

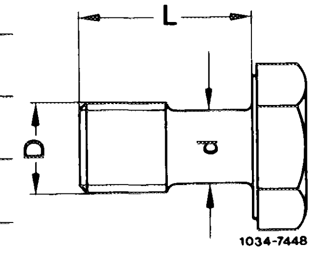

---

1) In case of repairs the crankshaft 1st version of model 107.026 with engine 117.960 can be replaced by the shorter crankshaft 117 031 14 01 together with a compensation plate (10.5 mm thick) and longer necked-down bolts (29 mm instead of 23 mm).

Tightening torques

Necked-down bolts for driven plates to crankshaft	Initial torque	30–40 Nm
	Angle of rotation torque	90–100°

Special tool

Installation tool for radial sealing ring with end cover fitted	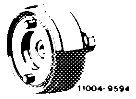 11004-9594	117 589 00 43 00

Note

The end cover directs the engine oil from the main oil gallery to the two oil galleries supplying the cylinder heads and is sealed against the crankcase by means of sealing compound. It is for this reason that the radial sealing ring should be replaced without removing the end cover if possible.

The running surface for the rear radial sealing ring on the crankshaft is hardened and ground without helix.

If the crankshaft has a groove on the running surface of the sealing ring, a repair stage sealing ring with a sealing lip offset to the inside should be installed.

Standard radial sealing ring (13 mm wide).

Radial sealing ring repair stage (10.5 mm wide) for use with worn crankshaft.

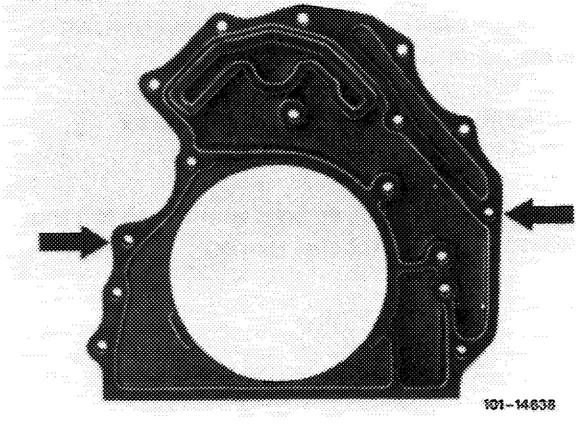
101–14838

Renewing

1 Force out radial sealing ring by means of a screwdriver.

Caution!
Do not damage crankshaft and installation bore for the sealing ring.

2 Inspect running surface on crankshaft.

3 Fit mounting sleeve to crankshaft.

4 Fill radial sealing ring space between dust lip and sealing lip with long-life grease according to sheet 266.2 of the Specifications for Service Products.

5 Push radial sealing ring over the installation sleeve.

6 Using the installation tool, pull radial sealing ring into the cover until it bottoms.
It must be observed that on crankshafts with locating dowel a corresponding bore is provided on the installer.

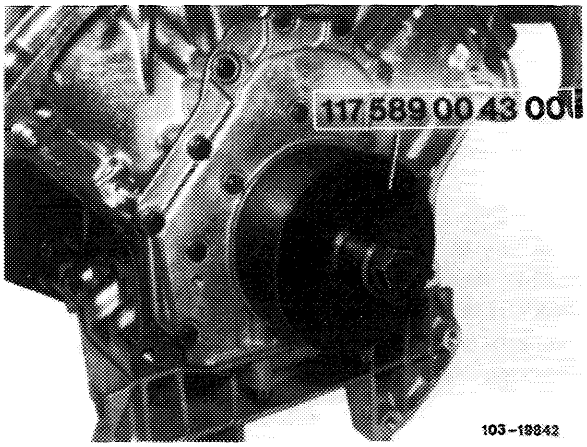

7 Measure necked-down shank of necked-down bolts.

8 Mount driven plates in correct sequence (03–410).

9 Tighten necked-down bolts with 30–40 Nm and 90–100° angle of rotation torque.

03–342 Removal and installation of hub, vibration damper and V-belt pulley

Data

Permissible deviation on vibration damper	radial runout	0.3
	lateral runout	0.5

Tightening torques

		Nm
Crankshaft end bolt	3 diaphragm springs [1]	270–330
	4 diaphragm springs [1]	370–400
Bolts, V-belt pulley to hub		35

[1] See Note 03–324.

Special tools

Detent	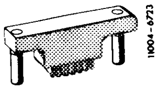	116 589 01 40 00
Torque wrench 3/4" drive, 150–500 Nm	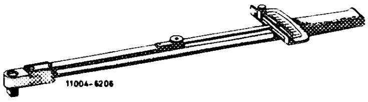	001 589 31 21 00
Socket insert 27 mm, 1/2" drive	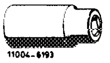	001 589 65 09 00

Conventional tool

Adapter 3/4" inside to 1/2" outside drive	e.g. Hazet, D–5630 Remscheid Order No. 1058 RI

Note

The crankshaft sprocket (10) and the hub (6) are seated on the front crankshaft stub, lined up by means of the Woodruff key (8). This assembly is pressed against the crankshaft with the bolt (4) and the 4 diaphragm springs (5) (2nd version as of 1985). The vibration damper (3) and the V-belt pulley (1) are bolted to the hub (6) in a certain position, since one of the six threaded holes is set off.

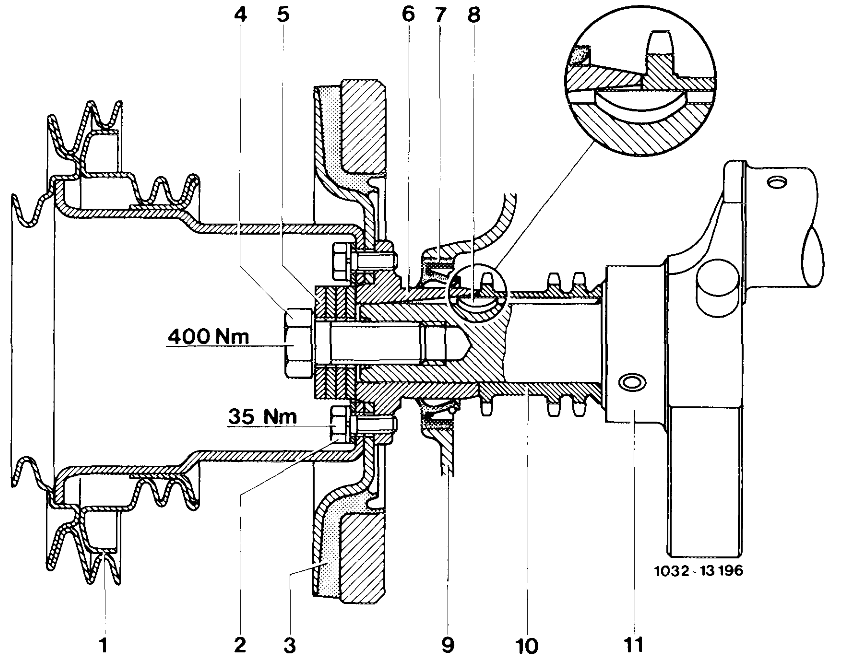

Crankshaft arrangement
2nd version

1 V-belt pulley
2 Bolt M 8 x 22
3 Vibration damper
Engine 116.96 201.5 mm dia.
Engine 117.96 214 mm dia.
4 Bolt M 18 x 1.5 x 45
5 Diaphragm springs (4 required)
6 Hub
7 Radial sealing ring
8 Woodruff key
9 Timing case cover
10 Crankshaft sprocket
11 Crankshaft

Hub, vibration damper and V-belt pulley can be renewed without balancing.

The vibration dampers of the engines 116.96 and 117.96 have a different outside diameter and characteristic frequency.

The V-belt pulleys of the different engines 116.96 and 117.96 are also different.

Note: The vibration damper of engines 116.960/961 (AUS) (J) (S) and (USA) with asymmetrical mounting bore at the outer circumference was replaced with the vibration damper 116 030 07 03 with symmetrically arranged installation recesses as of January 1981.

Used in:

Engine No. 116.960 12 006407
116.961 12 011140

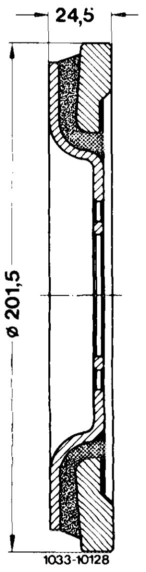

1st version
Vibration damper engine 116.96

Removal

1 Remove radiator, fan and V-belt.

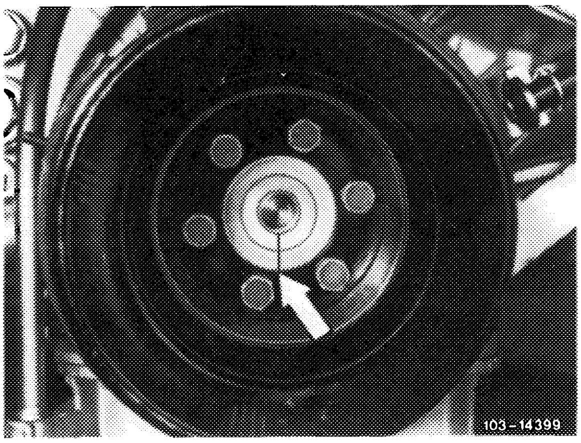

2 Use special tool detent to locate crankshaft in position.

3 Unscrew crankshaft and bolt.

4 Use a chisel to mark crankshaft and hub relative to each other (arrow) so that the groove of the hub lines up with the Woodruff key upon assembly.

5 Manually pull off vibration damper together with V-belt pulley and hub, assisting with light taps with a plastic hammer if necessary.

Caution!
Take care not to break the cast-iron V-belt pulley.

Installation

6 Mount vibration damper, V-belt pulley and hub bolted together as a unit.

7 For this purpose, heat the hub to approx. 50 °C to facilitate sliding onto the crankshaft. Slide onto crankshaft while turning the assembly to ensure alignment of hub groove with Woodruff key.

Caution!

The vibration damper, the V-belt pulley and the hub must be bolted together in a certain position.

One of the 6 bores is offset. The holes must correspond accurately (see dimension 1.73).

As opposed to cast-iron engine, the 6 bolts M 8 x 22 for the attachment of the V-belt pulley and the vibration damper are installed without spring washers.

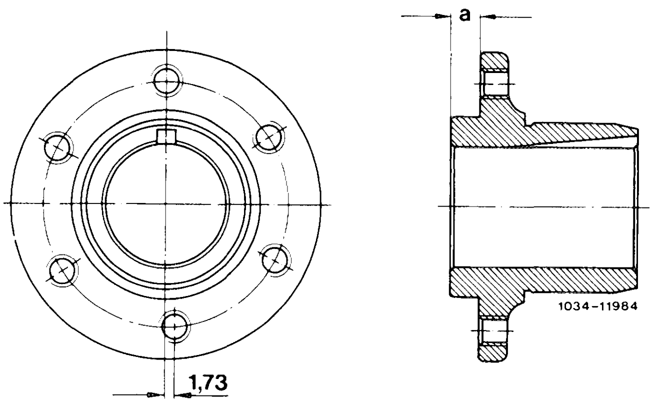

8 Install the bolts M 18 x 1.5 x 45 with 4 diaphragm springs (2nd version) and tighten with the specified torque (see Note 03–324).

If the vibration damper was renewed, the TDC transmitter must be newly adjusted (03–345).

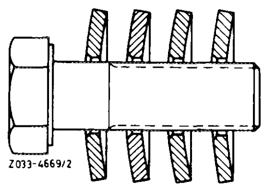

03–345 Checking and correcting adjustment of TDC transmitter

Special tools

Measuring pin for TDC and 20° ATDC position of the engine on 1st cylinder	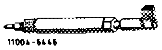 11004-6446	115 589 17 21 00
Locating tool for adjusting slide	 11004-10349	102 589 03 21 00
Socket insert 27 mm, 1/2" drive	 11004-6193	001 589 65 09 00
1/2" drive insert, 80 mm long, for rotating the engine	 11004-10282	617 589 00 16 00

Note

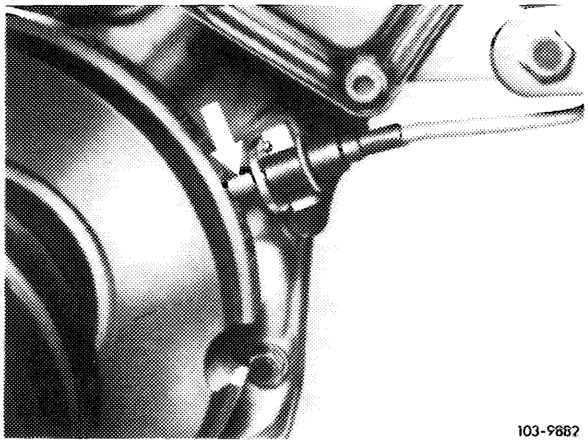
103-9882

With the crankshaft at 20° after TDC, the TDC transmitter must be positioned exactly above the pin in the vibration damper (arrow).

The adjustment of the TDC transmitter must be checked and corrected

a) when renewing the TDC transmitter adjusting slide

b) when renewing the crankshaft with hub and vibration damper

c) when renewing the timing case cover

d) when completing partly assembled engines.

Checking

1 Loosen power steering pump, remove V-belt, swing power steering pump to the inside.

2 On vehicles with air conditioning or automatic climate control, remove refrigerant compressor with carrier.

3 Unscrew hex. head nut (arrow) and pull out TDC transmitter.

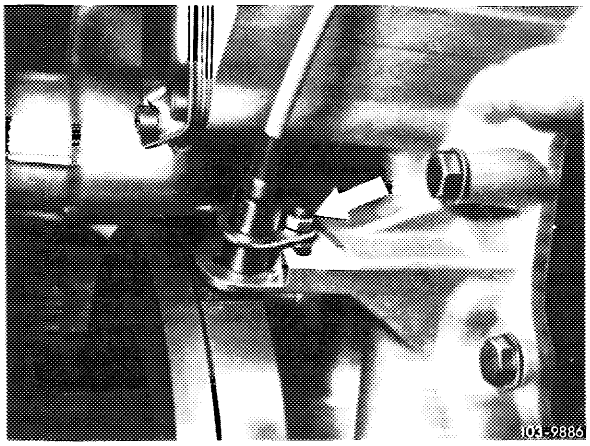

4 Screw adapter into the spark plug bore of No. 1 cylinder.

Insert adjusting pin (1) into the adapter and push down fully.

Note: With the cylinder head removed, attach a dial gauge holder to the crankcase and position dial gauge pin on the piston crown.

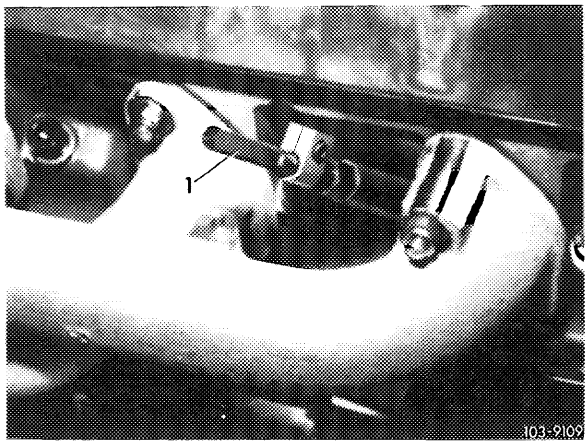

5 Turn crankshaft with the tool combination until the adjusting pin has reached its highest position.

The piston is then at TDC.

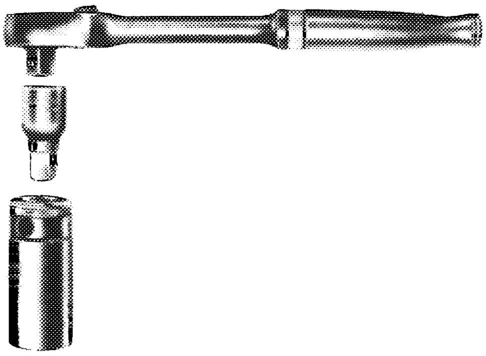

6 Remove adjusting pin.

Clamp dial gauge in position with a preload of approx. 5 mm.

Rotate crankshaft and accurately adjust TDC with the dial gauge.

Turn dial gauge scale until the pointer is at 0.

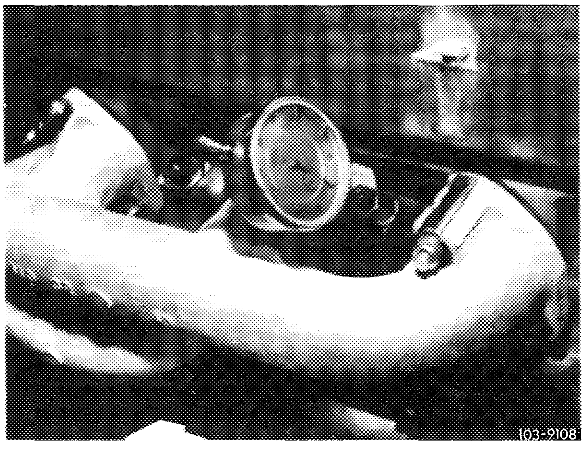

7 Continue rotating the crankshaft in direction of rotation until the dial gauge pointer has moved back by the value specified in the table.

8 Insert locating tool into adjusting slide. The pin of the vibration damper must engage in the slot of the locating tool.

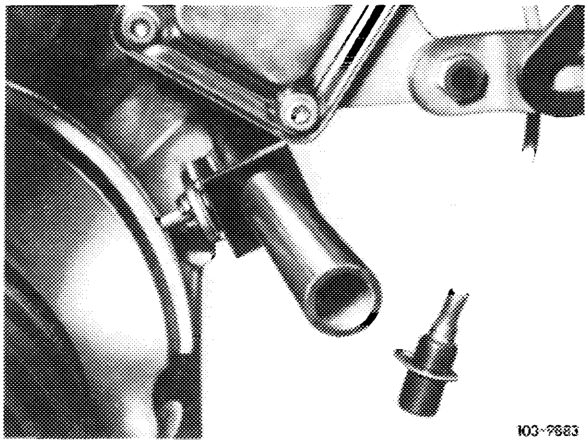

Engine	Measurement through spark plug bore
116.960/961 Standard version 116.964/965	2.99
116.960/961 (AUS) (J) (S) (USA) 116.962/963	3.36
117.960/961 117.962/963 117.964/965	3.58
117.967/968	4.09

Correcting

9 Loosen adjusting slide (arrow) and slide until the pin engages in the locating tool.

10 Tighten adjusting slide (arrow) and remove locating fixture.

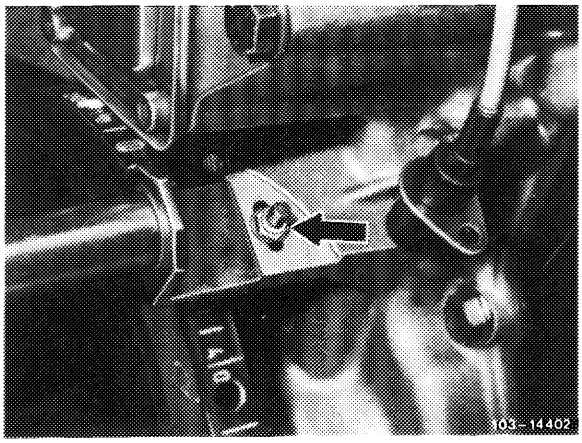

11 Insert TDC transmitter and secure (arrow).

12 Remove dial gauge.

13 Briefly turn crankshaft in direction of rotation, then unscrew the adapter from the spark plug bore.

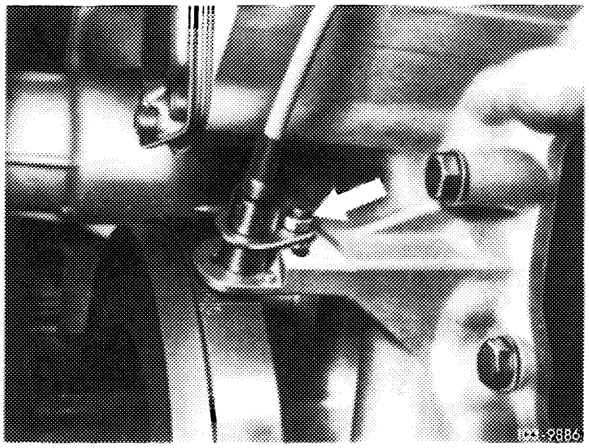

Necked-down bolts for driven plates to crankshaft

Necked-down bolts, part No.		116 032 02 71	116 032 04 71[1])
Thread D		M 12 x 1.5	
Necked-down shank dia. d	when new	9.8–0.2	
	minimum dia.	9.3	
Length L		23	29[1])

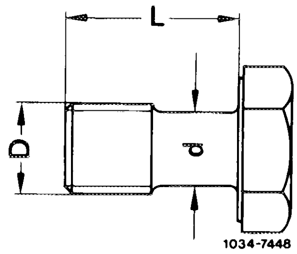

---

[1]) In case of repairs the crankshaft 1st version of model 107.026 with engine 117.960 can be replaced by the shorter crankshaft 117 031 14 01 together with a compensation plate (10.5 mm thick) and longer necked-down bolts (29 mm instead of 23 mm).

Tightening torques

Initial torque	30–40 Nm
Angle of rotation torque	90–100°

Note

The two driven plates (2nd and 3rd version) with 1.5 mm and 1.0 mm thickness differ with regard to the outer diameter from those of the engine 117.960 (1st version) with automatic transmission 722.006 and those of the cast-iron engines with 329 mm dia.

Engines with position indicator for the ignition (as of 1985) are equipped with a locating pin (24) and driven plates (17 and 18) with a bore for the locating pin. (3rd version)

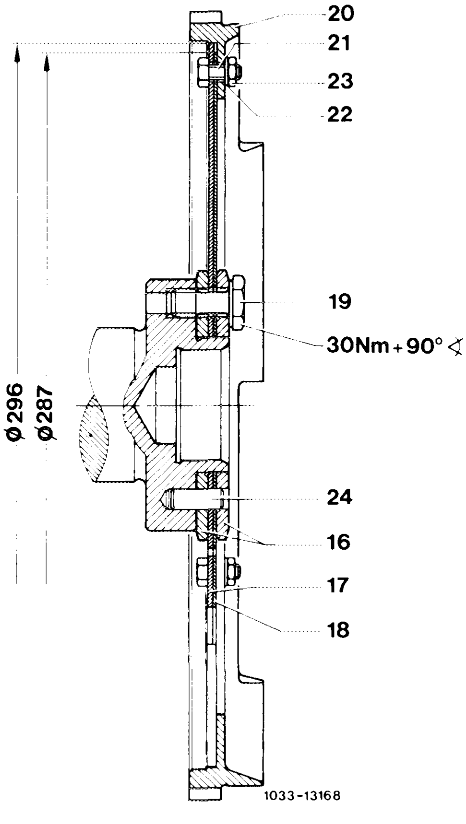

Arrangement engine 116.96, 117.96
(3rd version)

16 Plate 4.5 mm thick
17 Driven plate 1.5 mm thick, 296 mm dia.
18 Driven plate 1 mm thick, 287 mm dia.
19 Necked-down bolt
20 Ring gear
21 Fitted bolt
22 Spring washer B 6
23 Nut M 6
24 Locating pin

The previous hole of 8 mm dia. for the assembly of the locating pin (24) was enlarged to 8.5 mm in the plates (16).

The threaded holes in the crankshaft flange are through-holes. With the bolts removed and the engine inclined, oil will run out.

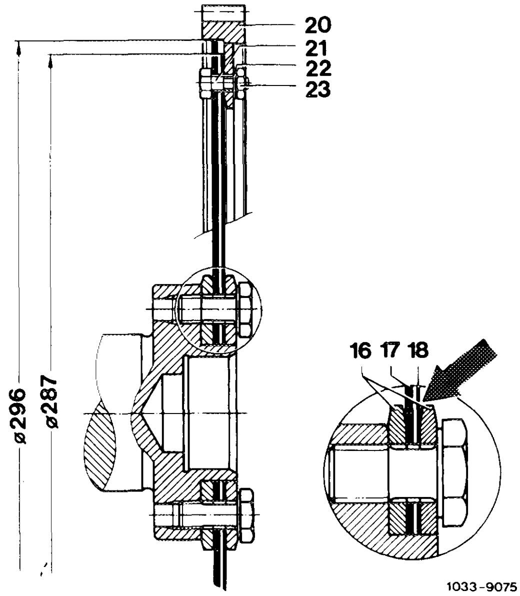

Arrangement engine 116.96, 117.96
(2nd version)

16 Plate 4.5 mm thick
17 Driven plate 1.5 mm thick, 296 mm dia.
18 Driven plate 1 mm thick, 287 mm dia.
20 Ring gear
21 Fitted bolt
22 Spring washer B 6
23 Nut M 6

The arrangement of the driven plates on the engine 117.960 (1st version) with automatic transmission 722.006 up to engine end No. 001612, as well as engine end No. 001618–001635 and 001641–001681, corresponds with the arrangement for cast-iron engines.

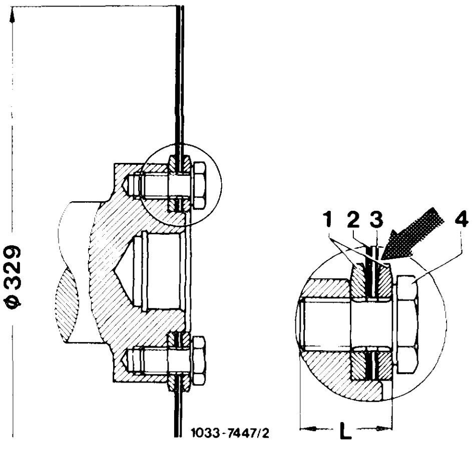

Arrangement engine 117.960, 1st version

1 Plate 4.5 mm
2 Driven plate 1.5 mm, 329 mm dia.
3 Driven plate 1.0 mm, 329 mm dia.
4 Necked-down bolts L = 23 mm

If during a repair the shorter crankshaft 117 031 14 01 is installed in the engine 117.960 (1st version) with automatic transmission 722.006, the compensating plate 10.5 mm thick, part No. 116 032 03 76 (arrow) should be used instead of the front plate, 4.5 mm thick, together with longer (L = 29 mm) necked-down bolts (6), part No. 116 032 04 71, (see arrangement engine 117.960 repair procedure with 1st version).

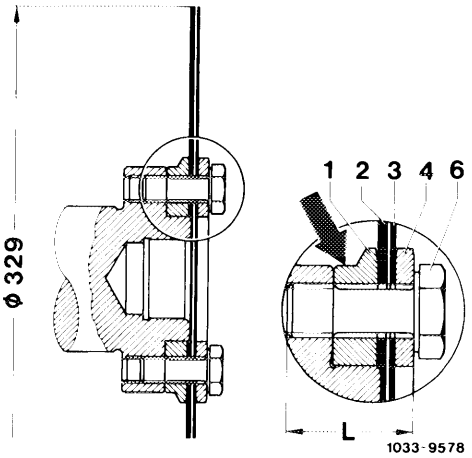

Arrangement engine 117.960, repair procedure with 1st version

1 Longitudinal compensation plate 10.5 mm
2 Driven plate 1.5 mm, 329 mm dia.
3 Driven plate 1.0 mm, 329 mm dia.
4 Plate 4.5 mm
6 Necked-down bolt L = 29 mm

When using the longitudinal compensation plate together with the shortened crankshaft, the driven plate assembly must be centered with a self-fabricated centering sleeve before tightening the necked-down bolts.

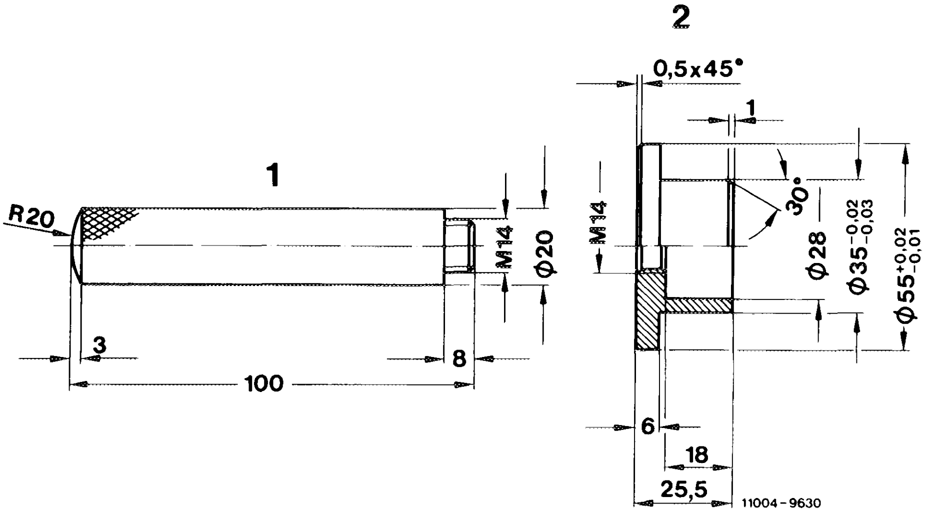

Self-fabricated centering sleeve

Note: Lighter driven plates and starter ring gears (version B) were installed in engines 116.962/963 and 117.962/963 during the period November 1982 to February 1983 and as of June 1983.

A

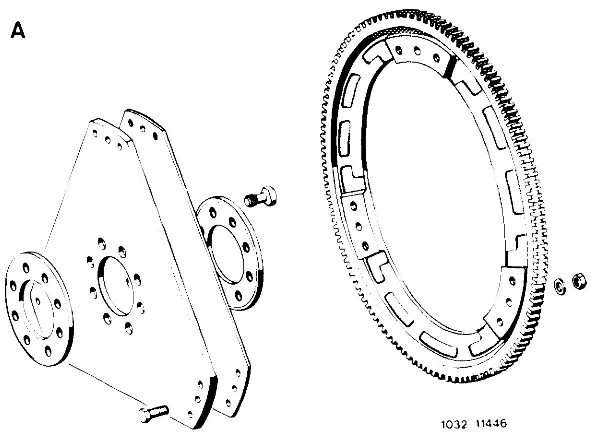

B

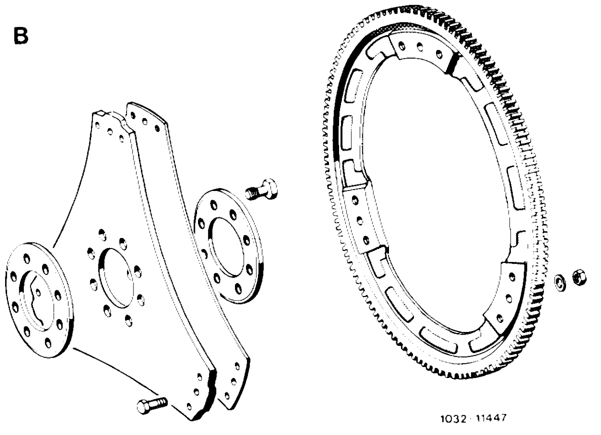

Designation	Version A	Version B
Driven plate, 1 mm thick	117 032 04 06	117 032 06 06
Driven plate 1.5 mm thick	117 032 05 06	117 032 07 06
Starter ring gear	117 030 03 12	117 030 04 12

Balancing

Crankshaft, V-belt pulley, vibration damper, driven plates and ring gear are individually balanced, and can be renewed without additional balancing.

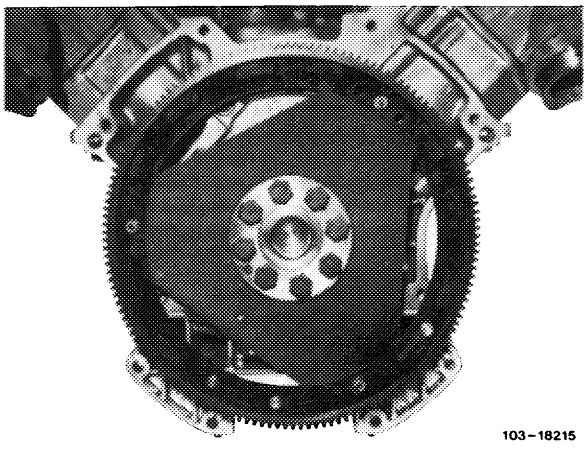
103–18215

Removal

1 Remove transmission (27–600).

2 Unscrew necked-down bolts, spacer plates and driven plates with ring gear.

Installation

3 Measure necked-down shank. If the specified minimum diameter „d" on the necked-down shank is reached, the necked-down bolts must be renewed.

Caution!
One of the eight mounting bolts is offset from the pitch circle diameter (arrow).
The driven plates must therefore be installed in a certain position.
The hole patterns must be matched accurately.

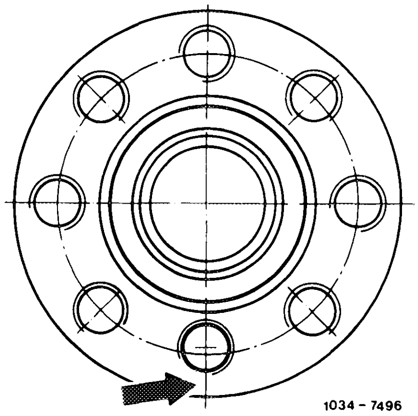

4 Screw in necked-down bolts and tighten with 30–40 Nm initial torque and 90–100° angle of rotation torque.

Data

Permissible lateral runout of ring gear	0.3 mm
Centering collar dia. for driven plates	296.00–296.05 mm
Residual unbalance of ring gear with **steel ring**	

A. Engines 116.960/961/962/963, 117.960/961/962/963 with automatic transmission 722.3 (W 4 A 040) without position indicator

Note

When removing the transmission the ring gear remains on the engine.

The ring gear and the welded-on steel ring are balanced together.

The ring gear (20) is welded to a steel ring and bolted to the driven plates (17 and 18).

The 1.5 mm thick driven plate outer diameter is a machined fit for the centering of the ring gear.

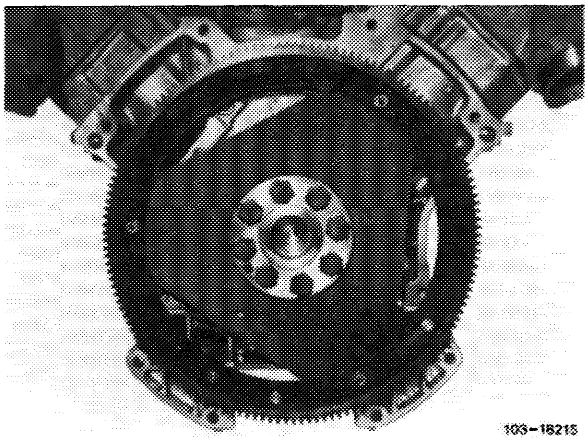
103–18215

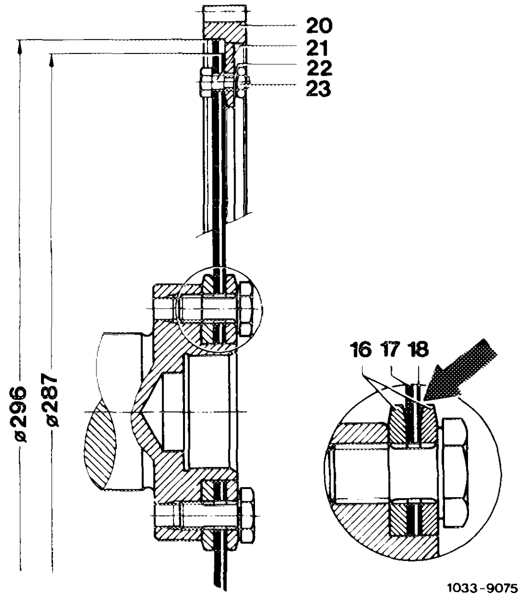

16 Plates 4.5 mm
17 Driven plate 1.5 mm, 296 mm dia.
18 Driven plate 1 mm, 287 mm dia.
20 Ring gear
21 Fitted bolt
22 Spring washer B 6
23 Nut M 6

Lighter driven plates and ring gears (version B) were installed in the period November 1982 to February 1983 and as of June 1983.

Designation	Version A	Version B
Driven plate, 1 mm thick	117 032 04 06	117 032 06 06
Driven plate, 1.5 mm thick	117 032 05 06	117 032 07 06
Ring gear	117 030 03 12	117 030 04 12

In the case of repair, the version A of the ring gear must be replaced with the version B.

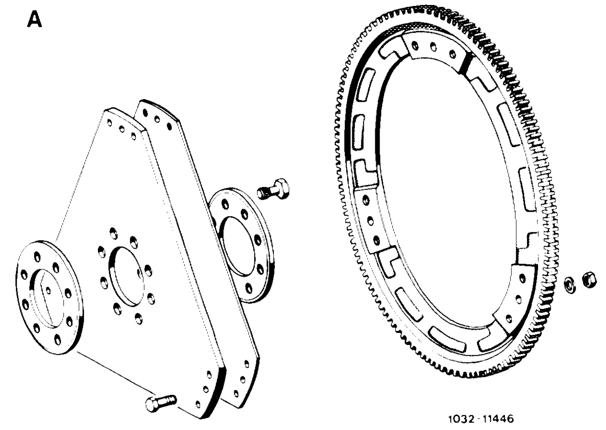

Version A

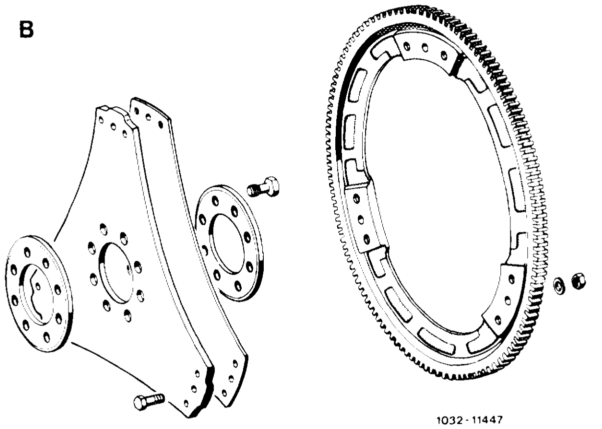

Version B

B. Engine 117.960 with automatic transmission 722.006 (W 3 B 050)

Note

When removing the transmission, the ring gear remains on the torque converter.

Ring gear with welded-on steel ring are balanced as a unit.

C. Engines 116.964/965, 117.964/965/967/968 with position indicator for ignition system

Note

When removing the transmission the ring gear remains on the engine.

The ring gear (20) with 4 segments for the position indicator of the ignition system is forged from one piece, balanced and bolted to the driven plates (17) and (18).

The 1.5 mm thick driven plate outer diameter is a machined fit for the centering of the ring gear.

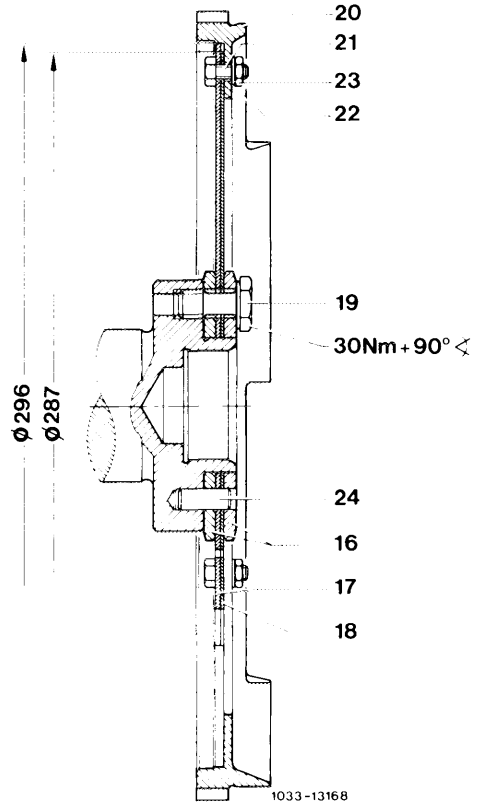

16	Plates
17	Driven plate 1.5 mm
18	Driven plate 1.0 mm
19	Necked-down bolt
20	Ring gear
21	Bolt
22	Washer
23	Nut
24	Locating pin

When removing the ring gear, unscrew position indicator (3) and pull out of holder (1) to avoid actuation.

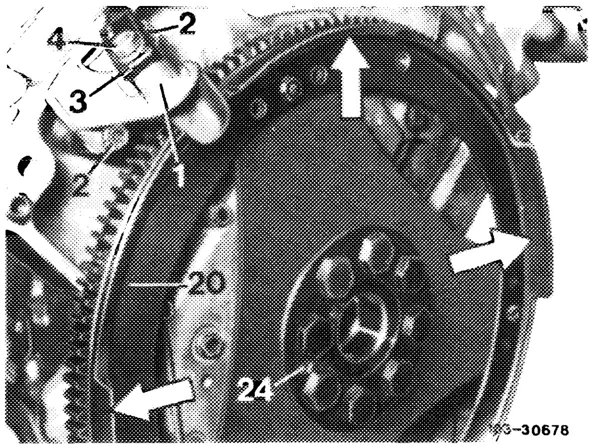

Caution!
The ring gear must be mounted so that the 3.5 mm dia. holes (arrows) in the ring gear and the driven plates assume the same angular position, otherwise a proper functioning of the ignition is not guaranteed.

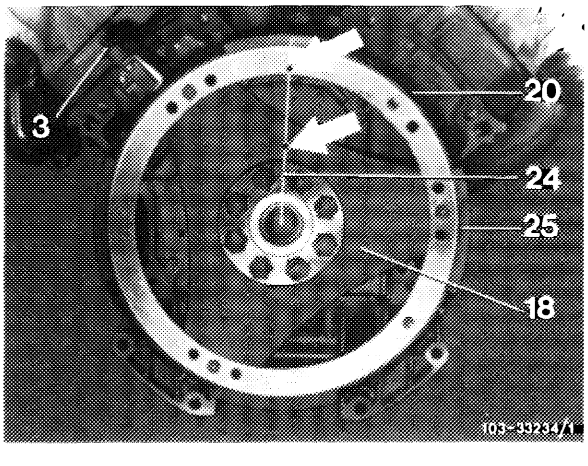

05–211 Checking and replacing hydraulic valve clearance compensating elements

Tightening torques	Nm
Bolts for cylinder head cover	3
Compensating element in cylinder head	60

Special tool

Spring compressor for valve spring	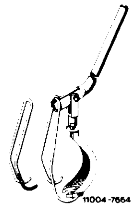	123 589 03 61 00

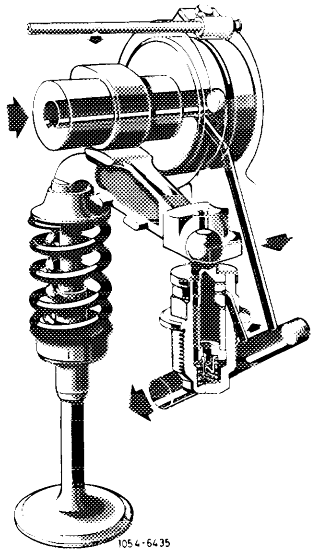

Note

Store compensating elements in upright position only and do not disassemble.

Reinstall rocker arms and compensating elements in the same place from which they were removed.

In the event of complaints about noise, check compensating elements as follows:

Checking

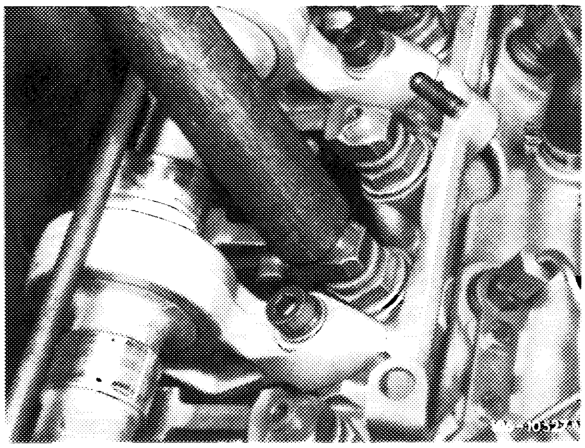

1 Place cam tip opposite rocker arm in upward position.

2 Push with handle of a hammer against rocker arm.

If the ball head pressure bolt drops too fast when compared with other pressure bolts, replace hydraulic valve clearance compensating element.

3 Try to move rocker arm manually.

If there is play, check basic position of compensating elements (05–213).

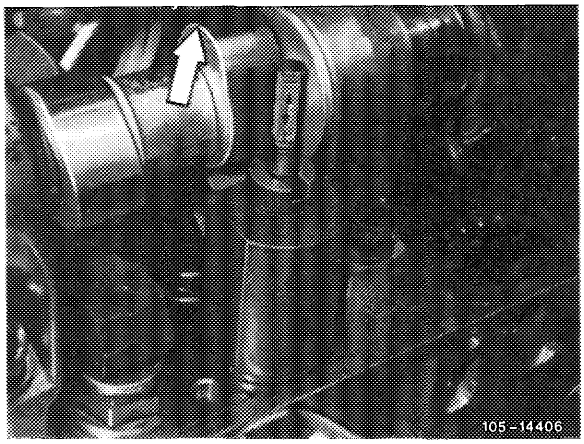

Replacing

4 Remove rocker arm (05–230).

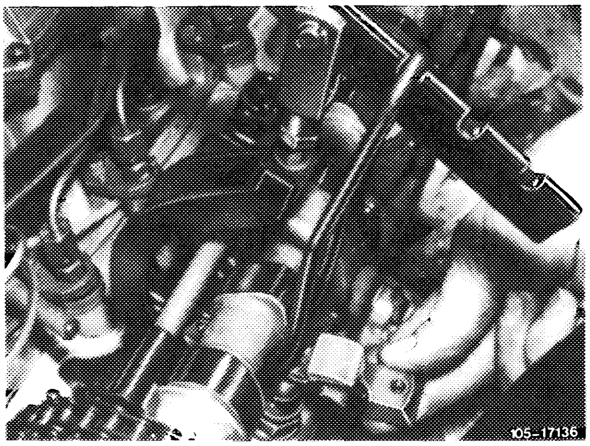

5 Unscrew compensating element with 24 mm socket.

6 Lubricate threads of new compensating element, screw in and tighten to 60 Nm.

7 Install rocker arm (05–230).

8 Check basic position (05–213).

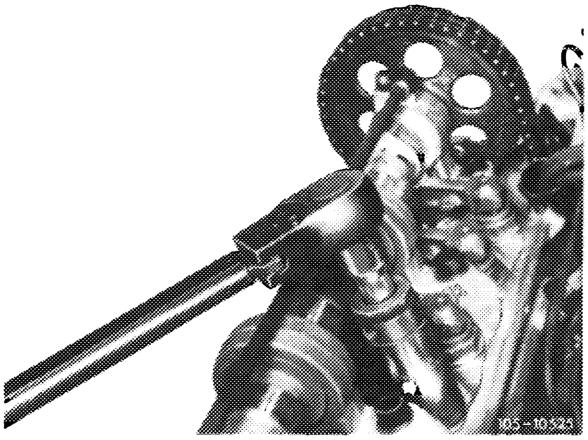

05–213 Checking and correcting basic position of hydraulic valve clearance compensating elements

Thickness „S" of thrust pieces in mm	Part No.
6.15	117 053 07 53
5.8	117 053 06 53
5.45	117 053 05 53
5.1	117 053 04 53
4.75	117 053 03 53
4.4	117 053 02 53
4.05	117 053 01 53
3.7	117 053 00 53

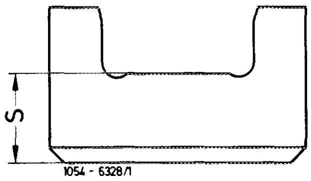

Tightening torque	Nm
Bolts for cylinder head cover	3

Special tools

Test gauge for hydraulic compensating elements	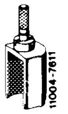 11004-7611	117 589 06 23 00
Spring compressor for valve spring	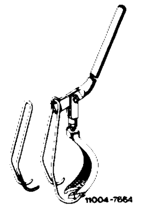 11004-7664	123 589 03 61 00

Note

The test gauge serves to find the basic position or a plus (+) or minus (–) deviation of hydraulic element.

In the event of a plus (+) or minus (–) deviation, the installation of a thinner or a thicker thrust piece (4) permits to reattain the basic position.

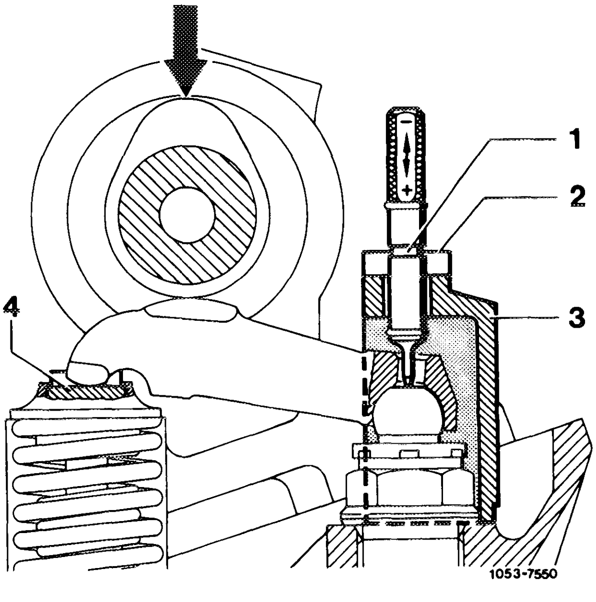

Since December 1982, the hydraulic valve clearance compensating elements are adjusted with a revised preload dimension (basic position) (previously 0.7–1.9 mm, now 1.2–2.4 mm).

This is achieved by adding a thicker thrust piece to the valve spring retainer.

Production breakpoint: December 1982

Model	Engine	Engine end No.	Chassis end No.
107.045	116.962	013323	022708
107.046	117.962	001791	004833
126.032 126.033	116.963	025756	040889
126.036 126.037	117.963	021019	029280
126.043	116.963	025756	005329
126.044	117.963	021019	004833

The revised preload dimension is also valid for all previously manufactured engines 116 and 117, and must be taken into account when checking and adjusting the basic position.

Note: Checking and adjusting should be carried out with the testing gauge 117 589 06 23 00 with revised measuring groove position.

Checking

1 With **newly** installed compensating element, **crank** engine with starter motor for approx. **30 seconds prior to checking**.

2 Cranking engine:

Model 107

On 4-point cable connector, disconnect cable terminal 16 (cable color red/purple) so that the ignition coil and the fuel pump are not activated. Connect terminal 30 (cable color red) and terminal 50 (cable color purple).

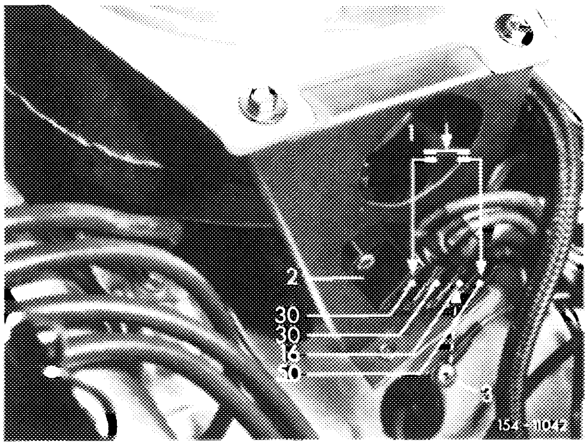

Model 126

Disconnect cable plug (terminal 16, arrow) so that the ignition coil and the fuel pump cannot be activated. Connect terminal 30 and 50.

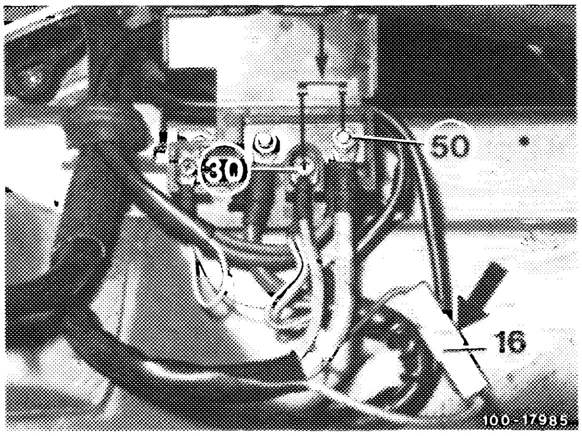

3 Remove load from hydraulic element to be checked, i.e. the cam tip should point in upward direction (arrow).

4 Place test gauge over hydraulic element to be tested and set measuring pin on the ball head bolt.

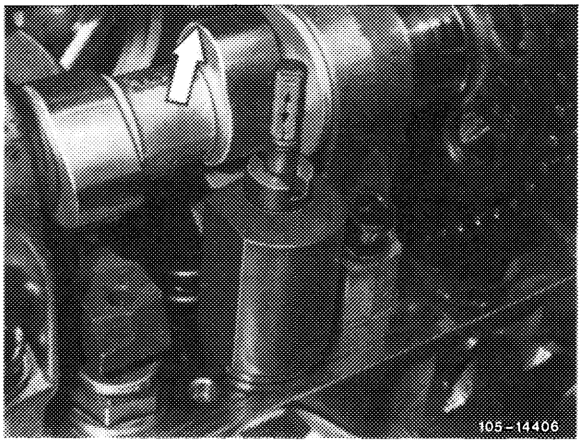

5 Check position of measuring groove (1) relative to the measuring edge (2):

a) The basic position is correct if the measuring edge (2) is within the 1.2 mm wide red measuring groove (1).

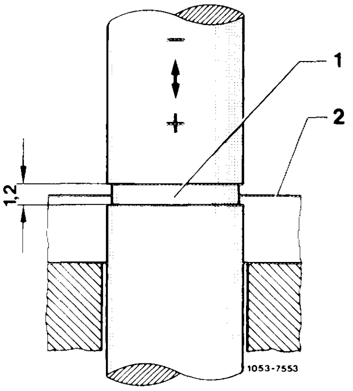

b) Plus deviation (+) is indicated if the measuring edge (2) is above the red measuring groove (1).

Remedy: For plus deviation (+) install thinner thrust piece.

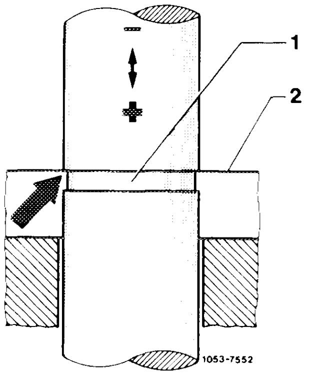

c) Minus deviation (–) is indicated if the measuring edge (2) is below the red measuring groove (1).

Remedy: For minus deviation (–) install thicker thrust piece.

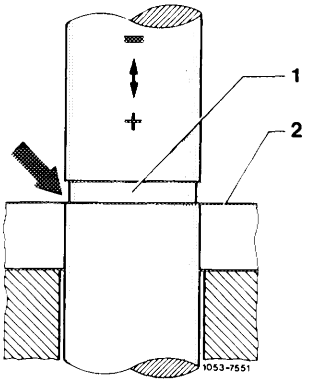

Corrections

6 Remove rocker arm by means of spring compressor. Remove thrust piece.

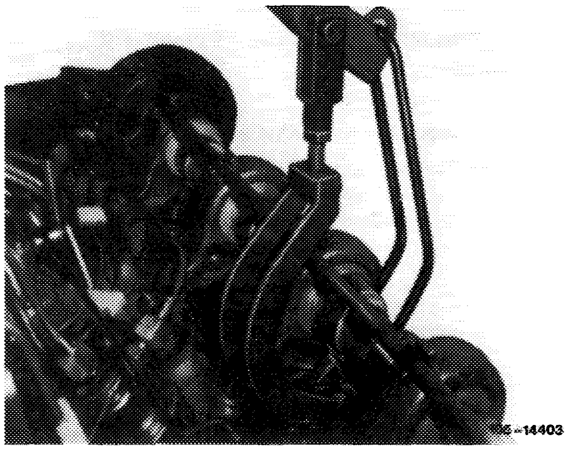

7 Measure thickness „S" of thrust piece.

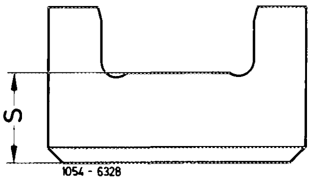

Thrust piece thickness „S" in mm	Part No.
6.15	117 053 07 53
5.8	117 053 06 53
5.45	117 053 05 53
5.1	117 053 04 53
4.75	117 053 03 53
4.4	117 053 02 53
4.05	117 053 01 53
3.7	117 053 00 53

8 In the event of plus deviation (+) install thinner, in the event of minus deviation (—) install thicker thrust piece.

Note: For readjustment aim for center position on measuring groove.

9 Install rocker arm and repeat checkup.

Timing in degree (°) crankshaft with 2 mm valve lift

Camshaft code number[1]) left/right	Engine	Engine special version No.	Intake valve opens ATDC[2])
02/03	117.960	–	12° (10°)
04/05	117.961	–	20° (18°)
08/09	116.964 116.965 117.962 117.963 117.964 117.965	012.468/01	22° (20°)
14/15	117.963	012.406/10	18° (16°)
16/17	117.968	012.480/01	17° (16°)
18/19	117.967 117.968	012.468/05 012.468/06 012.468/14 012.468/15	27° (26°)
20/21	116.965 117.965	–	21° (20°)
24/25	117.968 RÜF		17° (16°)
26/27	117.967 117.968 CAT	012.468/05 012.468/06 012.468/14 012.468/15	27° (26°)
60/61	116.960 116.961 116.962 116.963	012.406/03 012.406/04 012.406/07 012.406/08	12° (10°)
62/63	116.960 116.961 116.962 116.963	012.406/01 012.406/02 012.406/05 012.406/06	24° (22°)
70/71	116.962 116.963 116.964 116.965	012.468/03 012.468/04	16° (14°)

---

[1]) Camshaft code number association can be taken from the spare part microfilms.

[2]) With new timing chains and a running time of below 20 000 km, adjust the timing of the right-hand camshaft according to the values in brackets.

Tightening torques	Nm
Bolts for cylinder head cover	3
Bolts for camshaft sprockets M 14 x 1.5 x 40	100
Hydraulic valve clearance compensating elements in cylinder head	60

Special tools

Spring compressor for valve spring	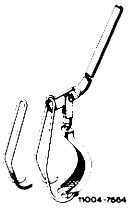	123 589 03 61 00
Dial gauge holder	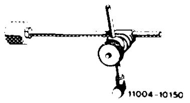	363 589 02 21 00
Valve clearance wrench 17 mm	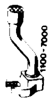	116 589 02 01 00
Socket insert 27 mm	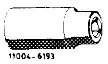	001 589 65 09 00
Square drive		617 589 00 16 00

Conventional tool

Dial gauge A 1 DIN 878	e.g. Mahr, D–7300 Esslingen Order No. 810

Note

During assembly jobs it is sufficient if the marks on the camshafts coincide at ignition TDC position of 1st cylinder.

Check „intake valve opens" on 1st and 6th cylinder at 2 mm valve lift.

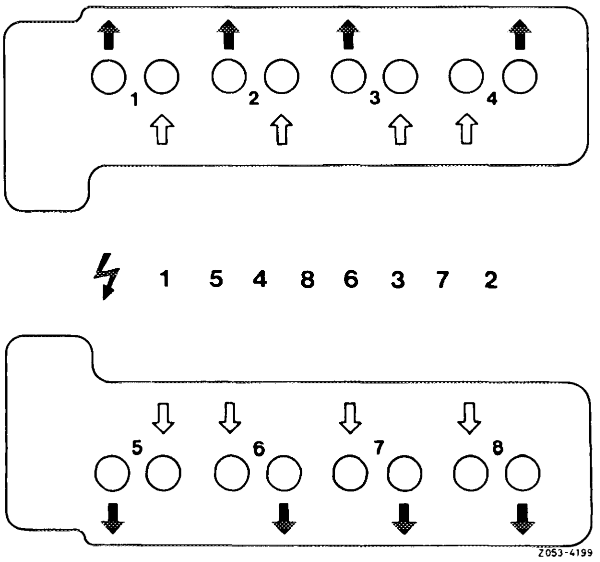

Checking

1 Check camshaft code number on rear end of camshafts.

2 Remove rocker arm (1) and valve clearance compensating elements (2) on intake valve of 1st and 6th cylinder. Install valve adjusting screw (1), part No. 116 050 11 20, on intake valve of 1st and 6th cylinder instead of compensating elements (2). Install rocker arm.

Caution!
The rocker arms and the valve clearance compensating elements should be installed in the place from which they were removed.

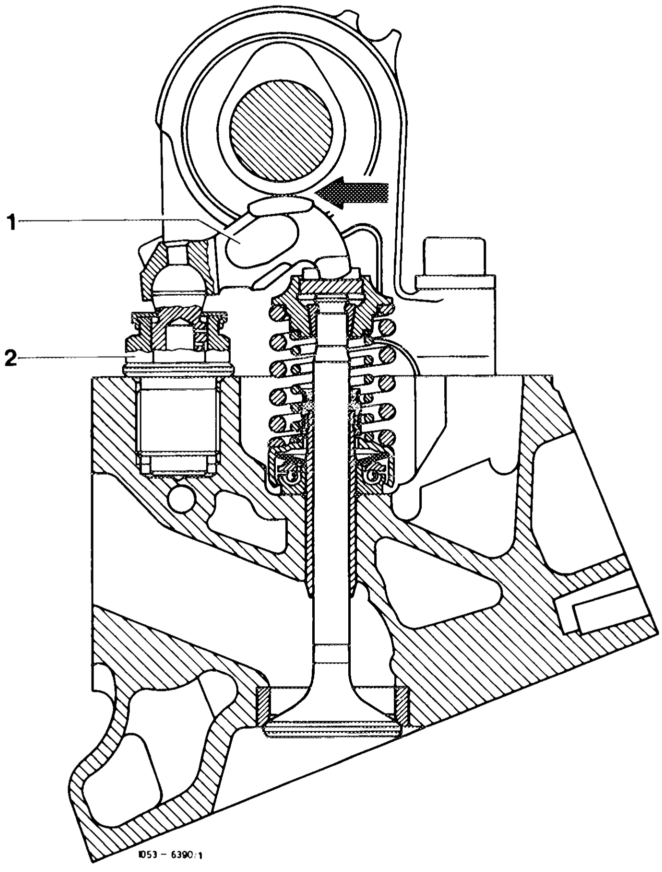

3 Rotate crankshaft (27 mm socket) until the cam tip rests against intake valve of 1st cylinder in upward position.

Rotate crankshaft in engine direction of rotation only.

4 Turn valve adjusting screw until rocker arm rests free of play against camshaft heel (arrow).

5 Attach dial gauge holder to cylinder head.

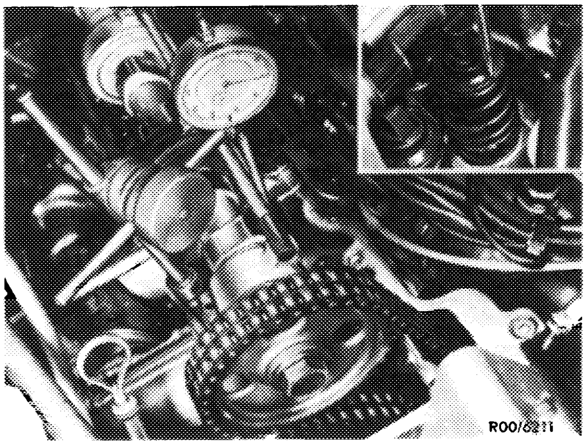

6 Clamp dial gauge with extension pin in dial gauge holder with a preload of 3 mm.

The measuring pin should rest on the valve spring retainer in an accurately vertical position.

7 Set the large pointer to 0.

8 Rotate crankshaft until the pointers of the dial gauge return by 2 mm to a preload of 1 mm. The valve lift will then be 2 mm.

9 In this engine position the value on the vibration damper should be in agreement with the value „Intake valve opens" in the table.

10 Perform this test on the intake valve of 6th cylinder by repeating figures 4 to 9.

Adjusting

If the timing must be corrected, install an offset Woodruff key or if the chain has been elongated too much, a new timing chain.

Woodruff keys are available in the following steps:

Offset mm	Part No.	For a correction of approx.	
0.7	621 991 04 67	4°	crank angle
0.9	621 991 02 67	6 1/2°	crank angle
1.1	621 991 01 67	8°	crank angle
1.3	621 991 00 67	10°	crank angle

An offset by one tooth on the camshaft sprocket results in approx. 18° on the crankshaft.

An offset of the Woodruff key to the right (in the direction of driving) results in an earlier commencement of opening, while an offset to the left results in a later commencement of opening.

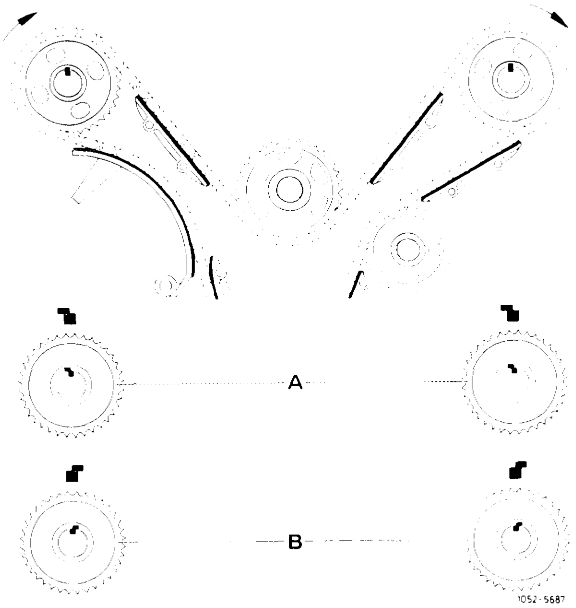

Installation position A results in earlier commencement of opening
Installation position B results in later commencement of opening

11 Mark camshaft sprockets and timing chain relative to each other (arrow).

12 Remove the respective camshaft sprocket.

13 Place a rag under the camshaft and remove the Woodruff key.

14 Insert the selected Woodruff key.

15 Install the camshaft sprocket while paying attention to the color coding.

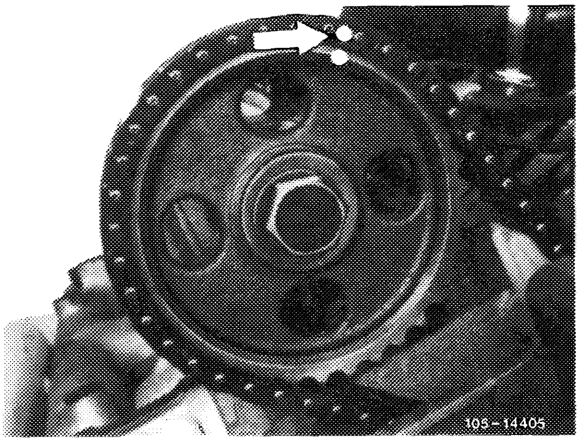

The wide collar on the camshaft sprocket should face to the camshaft (arrow).

Do not tighten the bolt.

16 Repeat items 4 to 9.

17 Tighten bolt to 100 Nm.

18 Check basic position of hydraulic valve clearance compensating elements and correct (05–213).

19 Complete the engine.

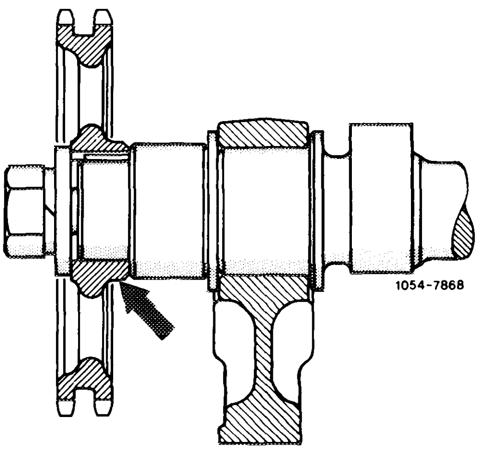

Timing in degree (°) crank angle, with 2 mm valve lift

Camshaft code number 1) left/right	Engine	Engine special version No.	Inlet valve opens ATDC 2)
02/03	117.960	–	12° (10°)
04/05	117.961	–	20° (18°)
08/09	116.964 116.965 117.962 117.963 117.964 117.965	012.468/01	22° (20°)
14/15	117.963	012.406/10	18° (16°)
16/17	117.968	012.480/01	17° (16°)
18/19	117.967 117.968	012.468/05 012.468/06 012.468/14 012.468/15	27° (26°)
20/21	116.965 117.965	–	21° (20°)
24/25	117.968 RÜF		17° (16°)
26/27	117.967 117.968 CAT	012.468/05 012.468/06 012.468/14 012.468/15	27° (26°)
60/61	116.960 116.961 116.962 116.963	012.406/03 012.406/04 012.406/07 012.406/08	12° (10°)
62/63	116.960 116.961 116.962 116.963	012.406/01 012.406/02 012.406/05 012.406/06	24° (22°)
70/71	116.962 116.963 116.964 116.965	012.468/03 012.468/04	16° (14°)

---

1) The association of camshaft code number can be taken from the spare part microfilms.

2) With new timing chains and a running time of below 20 000 km, the timing for the right-hand camshaft must be adjusted *according to the values in brackets.*

Tightening torques		Nm
Bolts for cylinder head cover		3
Bolts for camshaft sprockets M 14 x 1.5 x 40		100
Cylinder head bolts	1. Initial torque	30
	2. Final torque	60
Fastening screws for camshaft bearings on cylinder head		50

Special tools

Spring compressor for valve spring	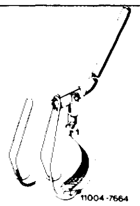	123 589 03 61 00
Retaining wrench for camshafts	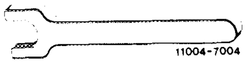	116 589 01 01 00
Screwdriver insert 8 mm, 1/2" drive, 130 mm long		000 589 33 07 00

Conventional tool

Screwdriver insert 8 mm, 1/2" drive, 52 mm long	e.g. Hazet, D–5630 Remscheid Order No. 986–8

Note

Pay attention to the association of camshaft code number relative to the respective engine (see table). The camshaft bearing journals can be ground, repair stage camshaft bearings are available (05–225).

If a camshaft needs to be replaced, it is necessary to replace the corresponding rocker arms as well.

The camshaft bearings of the engines 116.96 and 117.96 may be used on the cast iron engines 116.98 and 117.98.

Removal

1 Remove cylinder head cover.

For this purpose disconnect fuel lines on left-hand cylinder head cover (arrows).

2 Disconnect relay for fuel pump so that no fuel runs out of fuel line when the engine is cranked with the starter motor.

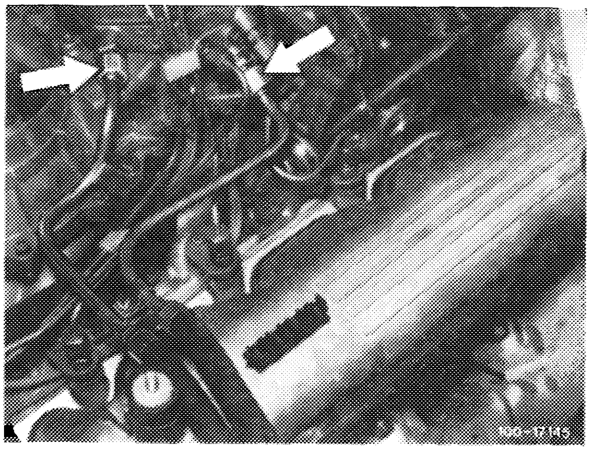

3 The engine can be rotated by connecting terminals 30 and 50 so that the respective cam tip is in an upward position for removing the rocker arms. For this purpose disconnect terminal 16 (arrow).

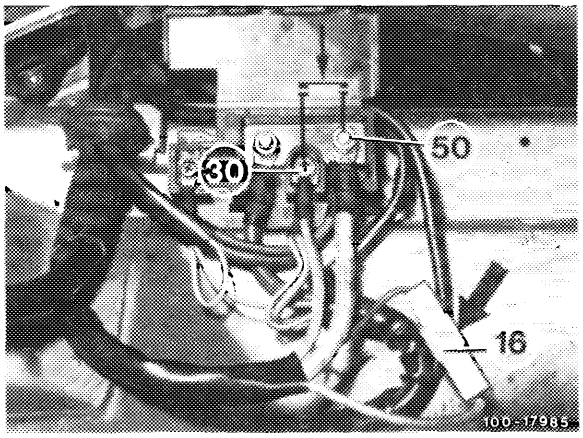

4 Remove rocker arm by means of the spring compressor.

Caution!
If rocker arms and camshafts are not replaced, reinstall them in the same position as before as failure to do so would require checking of the basic position of the hydraulic valve clearance compensating elements (05–213).

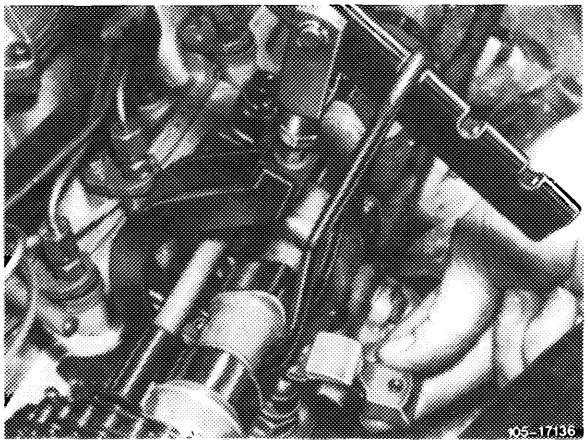

5 Set piston of No. 1 cylinder to ignition TDC, so that the Woodruff key in the camshaft (arrow) points up.

Note: Do not rotate engine on fastening bolt of camshaft sprockets.

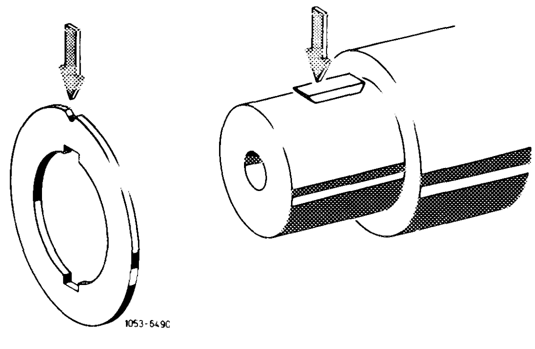

6 Prise off oil pipe with connections (arrows) and remove.

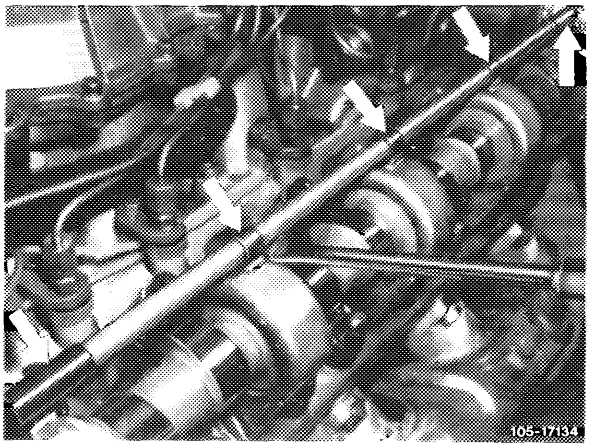

7 Mark timing chain and camshaft sprocket together with locking compound (arrows).

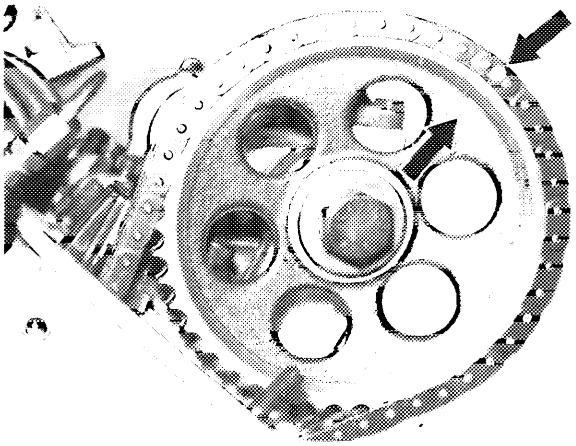

8 Loosen bolt on camshaft sprocket while holding it with the retaining wrench.

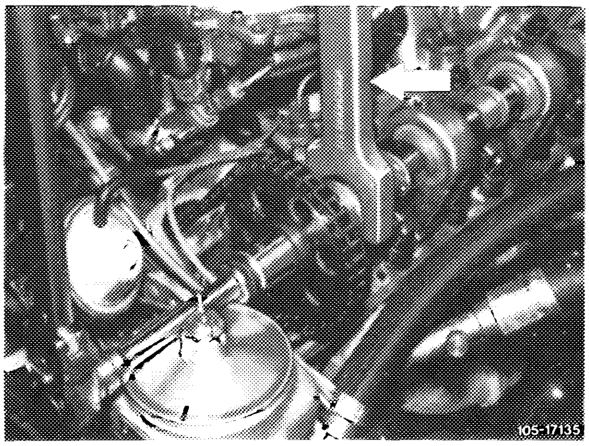

9 Unscrew camshaft bearing screws and remove.

Note: The rear cylinder head bolts M 10 x 165 mm (arrow) at left and right can be removed only after the camshaft bearing has been lifted.

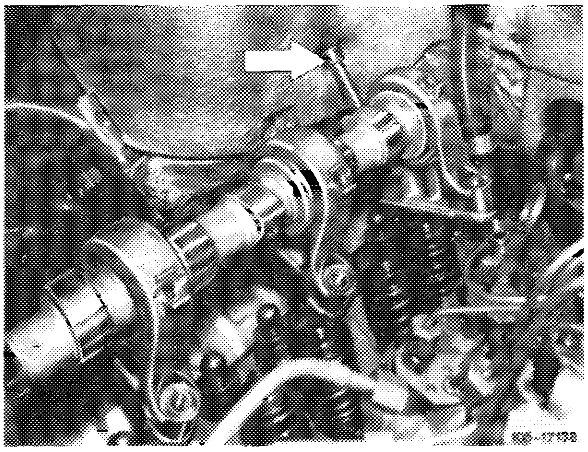

10 Lift camshaft including camshaft bearings and pull camshaft out of **rear** camshaft bearing.

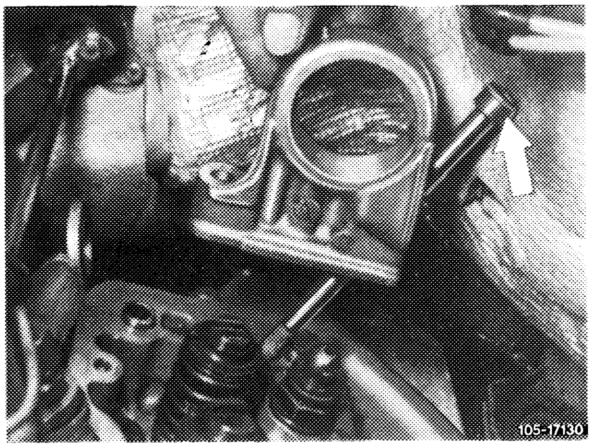

Installation

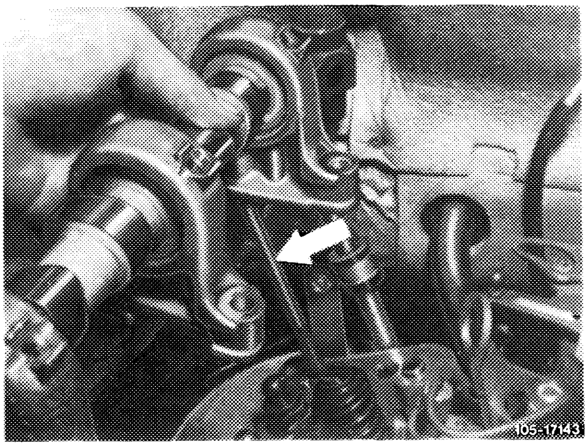

11 Lubricate camshaft bearings and slide camshaft into camshaft bearings.

Caution!
Introduce cylinder head bolts M 10 x 165 mm (arrow) at the rear camshaft bearing left and right before mounting the camshaft bearing.

12 Lubricate cylinder head bolt threads and head contact area.

13 Mount camshafts with camshaft bearings.

14 Tighten cylinder head bolts M 10 x 165 for camshaft bearings from inside out first to 30 Nm initial torque and then to 60 Nm final torque.

15 Tighten fastening bolts M 8 to 50 Nm.

Caution!
The camshaft should turn easily by hand.

16 When mounting the oil pipes, move connections into assembly position and check the three inside connections for unobstructed passage of oil bores prior to tapping them onto the camshaft bearings. **Replace oil pipe if oil bores are covered up.**

Caution!
Replace connections each time following removal from camshaft bearings since otherwise the oil pressure in the oil pipe is not assured.

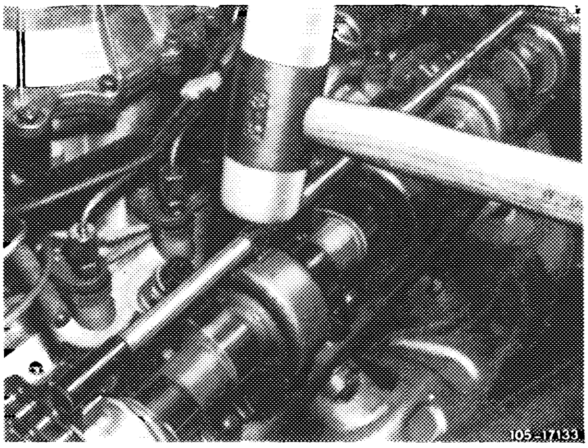

17 Mount compensating washer in such a manner that the groove below the notch engages with the Woodruff key of the camshaft (see arrows).

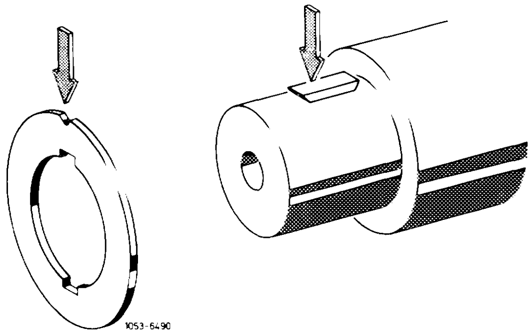

18 Mount camshaft sprocket while paying attention to the color coding (arrows).

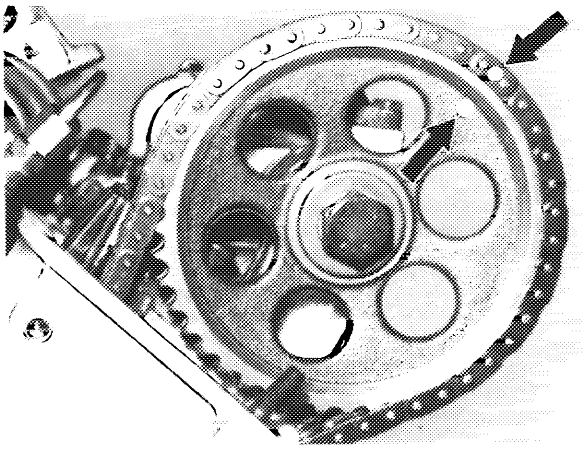

Caution!
The wide collar on the camshaft sprocket (arrow) should face to the camshaft.

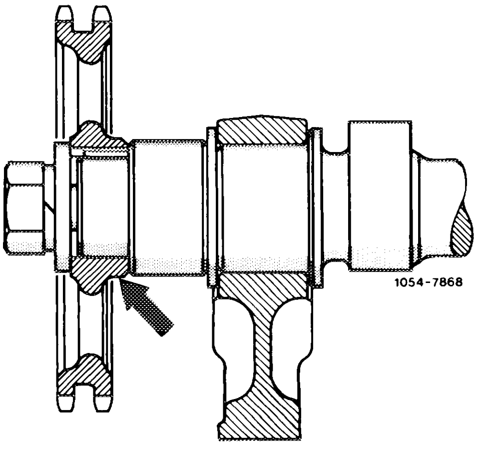

19 Mount bolt with washer and spring washer (arrow).

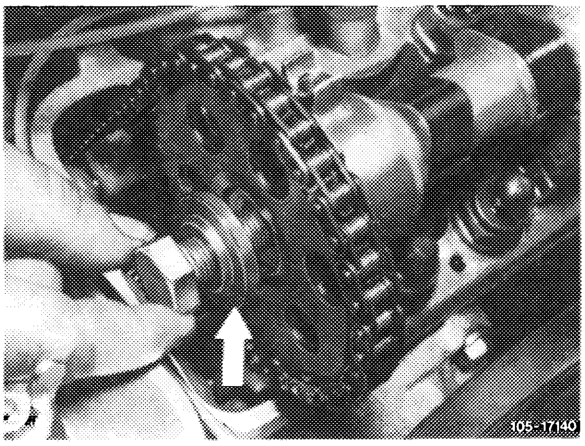

20 Tighten bolt to 100 Nm while holding the camshafts in place with the retaining wrench.

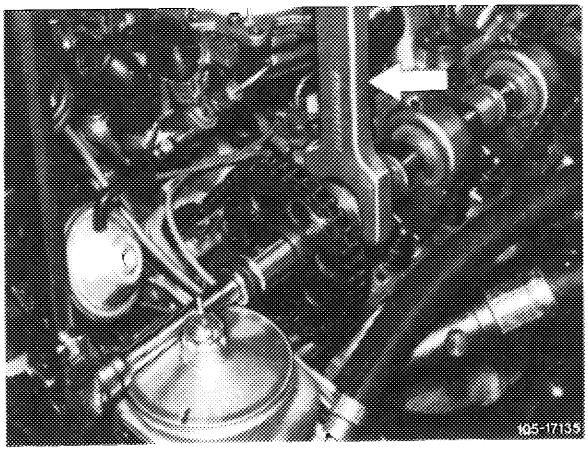

21 Install rocker arm in the same position as before.

Caution!
If the rocker arms or the camshaft have been replaced, check basic position of hydraulic valve clearance compensating elements (05–213).

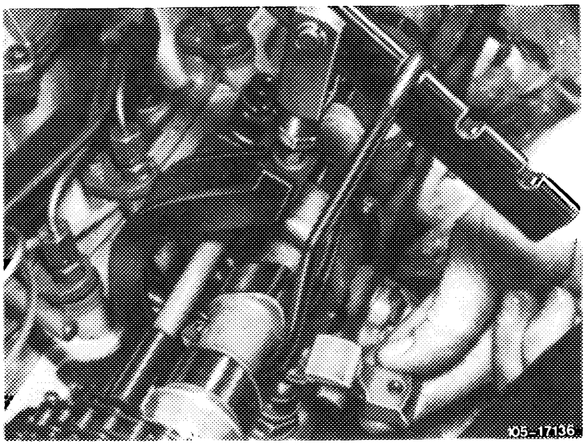

22 Complete the engine.

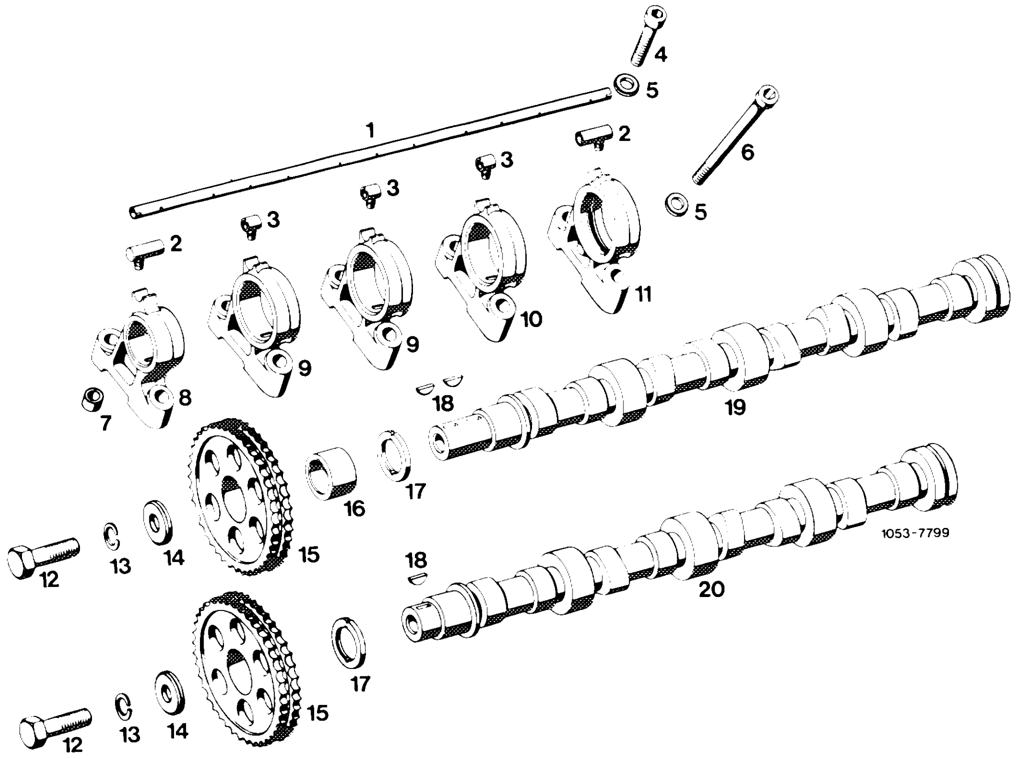

1 Oil pipe
2 End connection
3 Center connection
4 Cylinder head bolt M 10 x 50
5 Washer
6 Cylinder head bolt M 10 x 165
7 Dowel sleeve
8 Camshaft bearing sprocket end
9 Camshaft bearing 2 and 3
10 Camshaft bearing 5
11 Camshaft bearing flywheel side
12 Bolt M 14 x 1.5 x 40
13 Spring washer
14 Washer
15 Camshaft sprocket
16 Spacer ring right
17 Compensating washer
18 Woodruff key
19 Camshaft right
20 Camshaft left

05–225 Grinding camshaft bearing journals

Data

Average roughness (Rz) of camshaft bearing journals				0.005
Permissible radial runout of camshaft bearing journals b and c and of camshaft sprocket seat when mounting camshaft in bearing journal a and rear bearing journal c				0.025
Permissible radial runout of camshaft base circle when mounting camshaft in bearing journal a and rear bearing journal c				0.03
Bearing points (Fig.)		a	b	c
Standard dimension	Bearing dia.	35.000 35.016	49.200 49.216	49.400 49.416
	Journal dia.	34.975 34.959	49.175 49.159	49.375 49.359
Repair stage 1	Bearing dia.	34.900 34.916	49.100 49.116	49.300 49.316
	Journal dia.	34.875 34.859	49.075 49.059	49.275 49.259
Repair stage 2	Bearing dia.	34.750 34.766	48.950 48.966	49.150 49.166
	Journal dia.	34.725 34.709	48.925 48.909	49.125 49.109
Fitted bearing	Bearing bracket width	25.430 25.390		
	Journal width B	25.500 25.533		
Camshaft bearing play	radial	0.025–0.057	0.025–0.057	0.025–0.057
	axial	0.070–0.143		

Note

When regrinding thrust face of bearing journal ,,a'', grind face ,,S'' always so that the journal width ,,B'' and consequently the axial play (end play) is maintained.

Bearing journals are not hardened.

Suitable repair stage camshaft bearings are available for ground camshaft bearing journals.

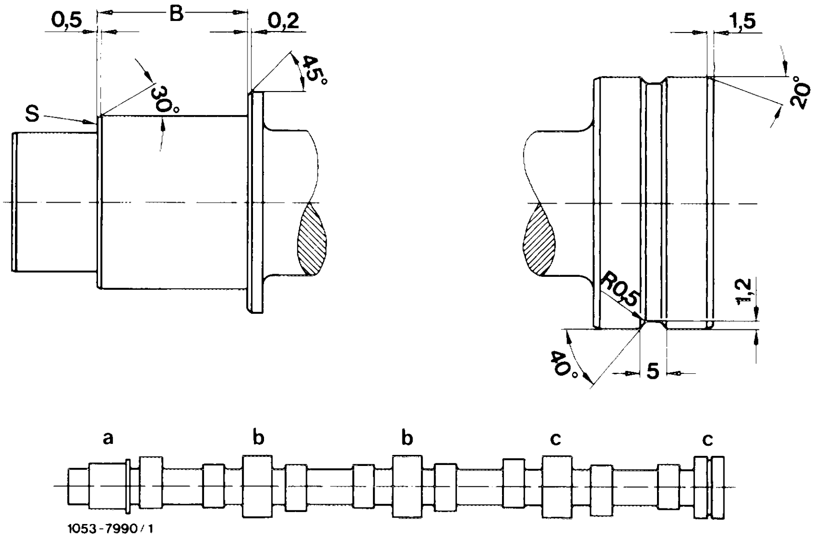

05–230 Removal and installation of rocker arms

Tightening torques	Nm
Bolts for cylinder head cover	3

Special tool

Spring compressor for valve spring	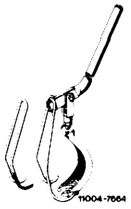	123 589 03 61 00

Note

Install rocker arms in the same position from which they were removed.

If rocker arms are mixed up or replaced, check basic position of hydraulic valve clearance compensating elements (05–213).

When installing new rocker arms also replace the corresponding camshaft.

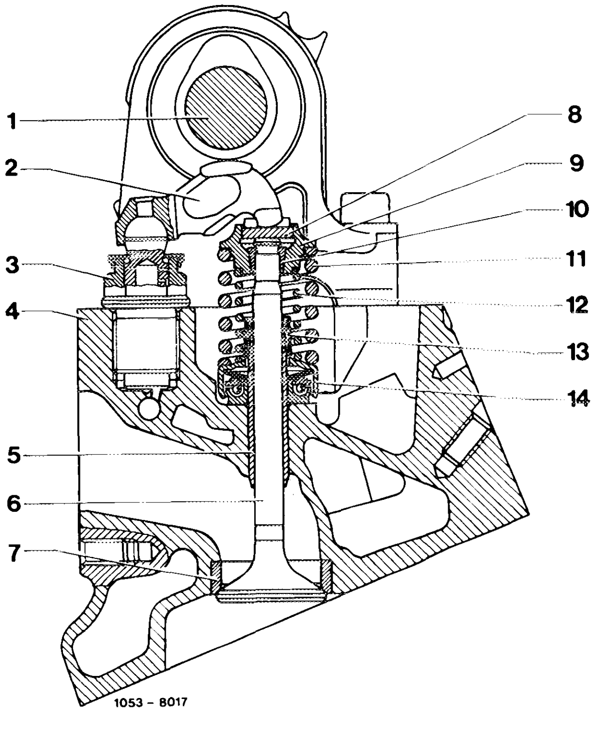

1 Camshaft
2 Rocker arm
3 Hydraulic valve clearance compensating element
4 Cylinder head
5 Valve guide
6 Exhaust valve
7 Valve seat ring
8 Thrust piece
9 Valve spring retainer
10 Valve cone half
11 Outer valve spring
12 Inner valve spring
13 Valve stem seal
14 Rotocap

Caution!
With hydraulic valve clearance compensating elements use rocker arm with chamfer (arrow) only.

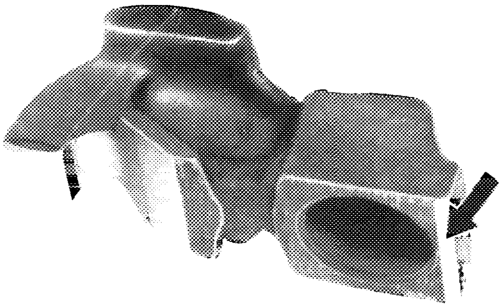

105–10604

Rocker arms of engines 116 and 117 and the rocker arms of engine 110 may not be interchanged.

Removal

1 Rotate engine so that the respective cam tip points upwards:

Model 107

On 4-point cable connector, disconnect cable terminal 16 (cable color red/purple) so that ignition coil and fuel pump are not activated. Connect terminal 30 (cable color red) and terminal 50 (cable color purple).

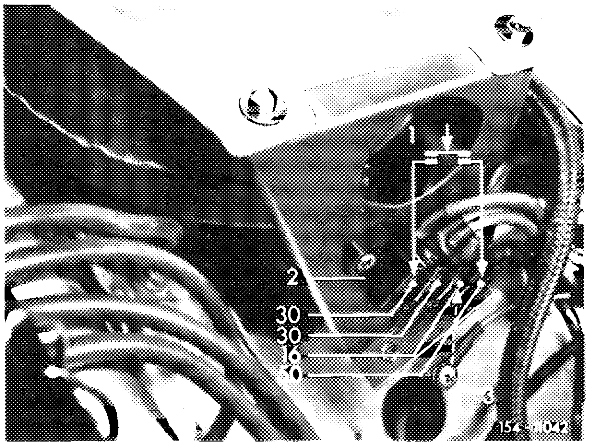

Model 126

Disconnect cable plug (terminal 16, arrow) so that the ignition coil and the fuel pump are not activated. Connect terminal 30 and 50.

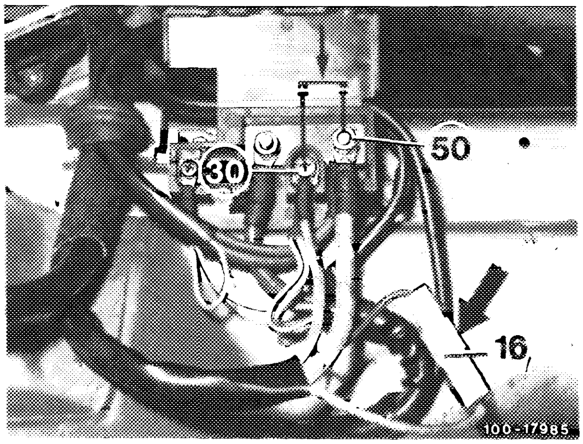

2 Remove rocker arms by means of spring compressor.

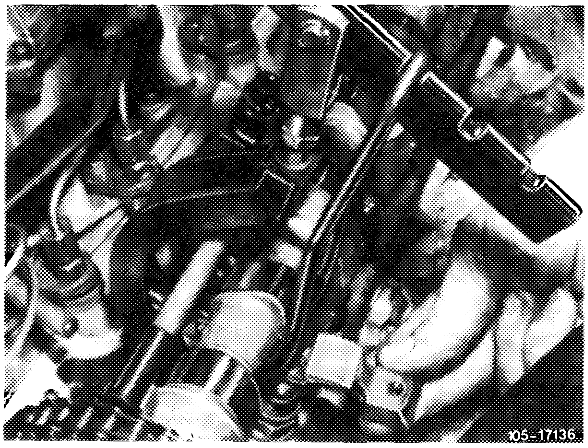

Installation

3 Lubricate sliding and contact surface of rocker arm.

4 Install rocker arm.

Caution!
If a camshaft or a rocker arm has been replaced, check basic position of hydraulic valve clearance compensating elements (05–213).

Removal and installation of valve springs

Tightening torque	Nm
Bolts for cylinder head cover	3

Special tools

Spring compressor for valve spring	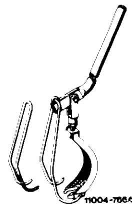	123 589 03 61 00
Magnetic finger for valve cone halves	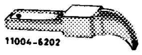	116 589 06 63 00

Conventional tool

Cylinder leak tester	e.g. Bosch, EFAW 210 A Sun, CLT 228–1

Note

From October 1984 to January 1985 no Rotocaps were installed on exhaust valves and from January to May 1985 on intake valves.

Observe valve spring preload (see 05–260).

Removal

1 Remove rocker arm (05–230).

Caution!
Reinstall rocker arms in the same place from which they were removed.

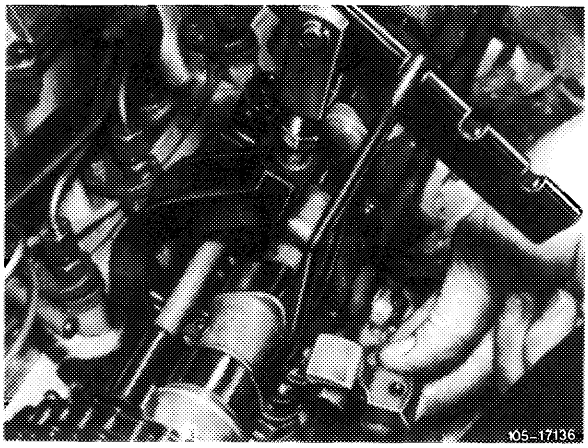

2 Unscrew spark plugs.

3 Set piston of respective cylinder to ignition TDC. For this purpose rotate the engine with the tool combination on the crankshaft.

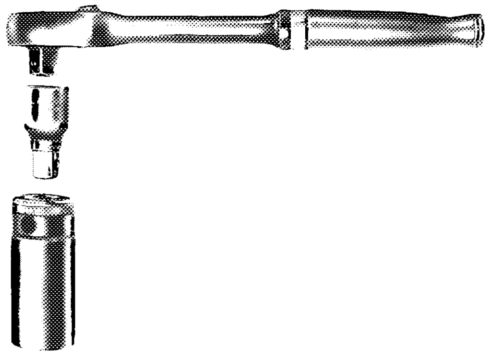

Note: The numbers 0, 90, 180 and 270 (arrows) are stamped into the vibration damper.

In the following positions of markings opposite the indicator the pistons are at TDC as follows:

Marking number	Piston at TDC
0	1 and 6
90	5 and 3
180	4 and 7
270	8 and 2

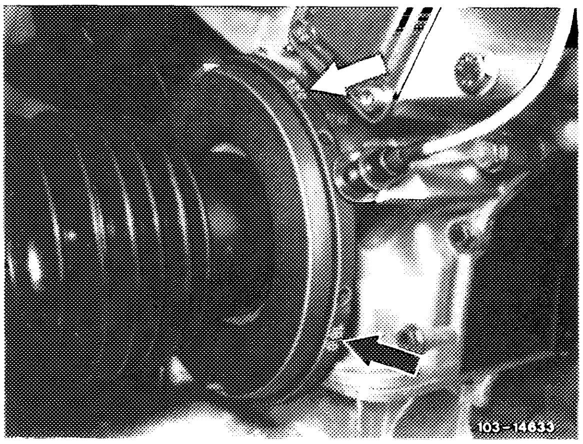

4 Support valves by means of compressed air (cylinder leak tester).

Caution!
The valves should not be seated on the piston crown to prevent bending of the valves.

5 Push valve spring retainer down by means of spring compressor.

6 Remove valve cone halves with the magnetic finger.

7 Remove valve spring retainer and valve spring.

8 Check valve spring, replace if necessary (05–260).

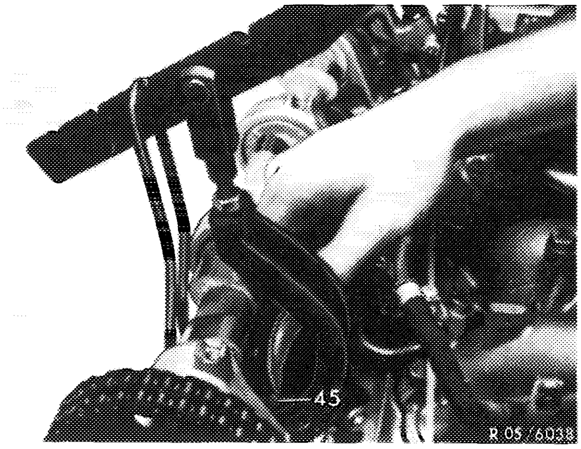

Installation

9 Insert valve spring with tight coil facing cylinder head.

10 For further installation proceed vice versa to sequence of removal.

1	Thrust piece
2	Valve cone
3	Valve spring retainer
4	Outer valve spring
5	Inner valve spring
6	Rotocap
7	Valve stem seal
8	Locking ring
9	Valve guide intake
10	Valve guide exhaust
11	Intake valve
12	Exhaust valve
13	Rocker arm
14	Hydraulic valve clearance compensating element

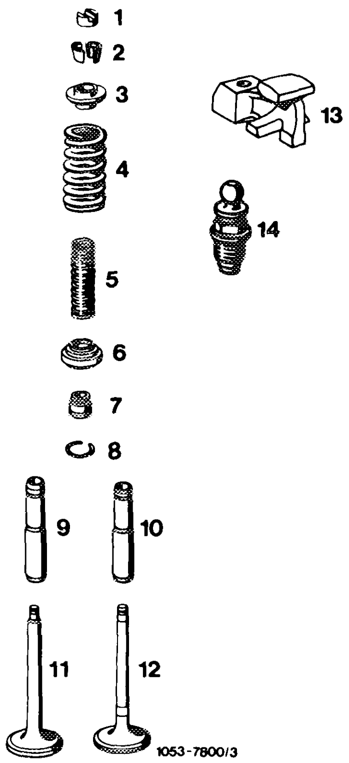

05–260 Checking valve springs and valve spring preload

Data

Valve spring Part No.	Color coding	Outside dia. mm	Wire dia. mm	Length unloaded mm	Spring force with preloaded Length mm	When new N	Limit value N
Inner spring 130 053 00 22	yellow/brown or purple/brown	22.0–22.4	2.5	45	21.5	235	224–246
Outer spring 110 053 01 20	yellow/red or purple/red	34.1–34.5	4.75	49	30.5	863	843–902

Checking

In the event of repairs, check valve spring for corrosion prior to reusing.

In addition, check spring force at specified length by means of a spring test scale.
If the value is below lower limit, replace valve springs.

In the installed condition, the valve spring force of both valve springs on engine 116.96 amounts to 1147–1245 N and on the engine 117.96 1000–1245 N. In order to avoid that this value is not lower than specified on valves which have been lowered (machined valve seats), the washer, part No. 116 990 26 40, should be placed under the Rotocap.

05–270 Replacing valve stem seals

Tightening torques	Nm
Bolts for cylinder head cover	3

Special tools

Spring compressor for valve spring	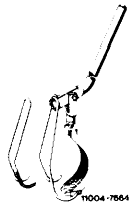	123 589 03 61 00
Magnetic finger for valve cone halves	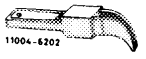	116 589 06 63 00

Conventional tool

Cylinder leak tester	e.g. Bosch, EFAW 210 A Sun, CLT 228–1

Note

The valve stem seals including assembly sleeves are supplied in repair kit form.

Valve guides which are worn at the retaining groove for valve stem seal must be replaced.

Caution!
Rocker arms, thrust pieces, valve spring retainers, valve springs, valve cone halves and Rotocaps must be reinstalled in the same position in order to ensure that the basic position of the hydraulic compensating element is not changed.

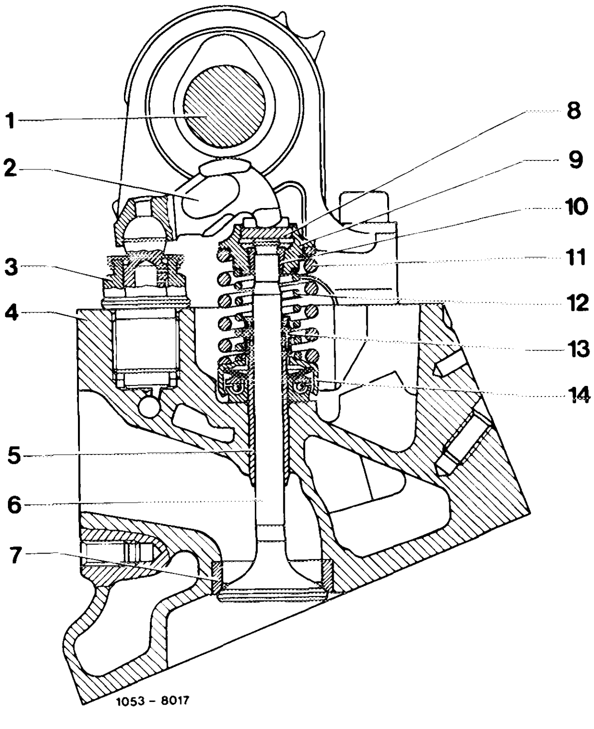

1 Camshaft
2 Rocker arm
3 Hydraulic valve clearance compensating element
4 Cylinder head
5 Valve guide
6 Exhaust valve
7 Valve seat ring
8 Thrust piece
9 Valve spring retainer
10 Valve cone half
11 Outer valve spring
12 Inner valve spring
13 Valve stem seal
14 Rotocap

The valve stem seals are supplied as spare part in two versions. They must be allocated to the appropriate valve guide to avoid oil leaks.

1st version

Valve stem seal 116 053 00 58 with **flat, brass-colored retaining spring** (arrow).

Use 1st version only for valve guide **without stop collar**, 5.2 mm retaining groove distance.

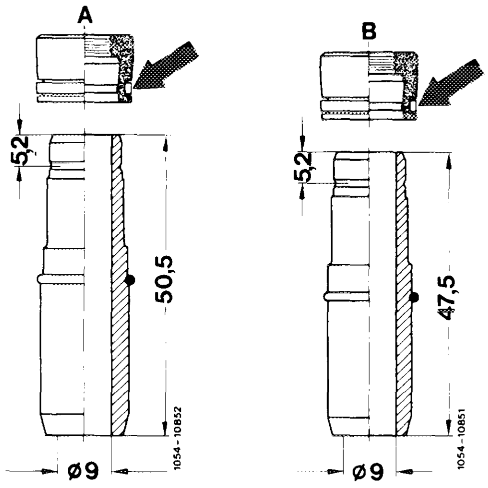

A Exhaust
B Intake

1st production breakpoint (1st version):
From start of production to February 1983 and from June 1983 to November 1983

Up to engine No.
116.962 12 015193
116.963 12 028837
117.962 12 001972
117.963 12 023645

2nd production breakpoint (1st version):
June to November 1983

Engine No.
116.962 12 018054–023705
116.963 12 033750–042895
117.962 12 002310–003139
117.963 12 028416–039773

2nd version

Valve stem seal 110 053 02 58 with **round, brass-colored retaining spring** (arrow).

Use 2nd version only for valve guide **with stop collar** and with 3.3 mm retaining groove distance.

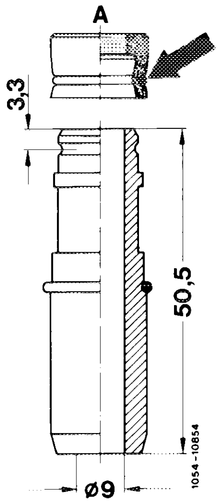

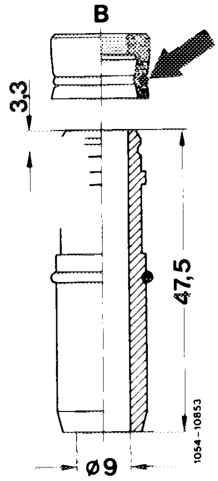

A Exhaust
B Intake

1. Production breakpoint (2nd version):
February to May 1983

Engine No.
116.962 12 015194–018053
116.963 12 028838–033749
117.962 12 001973–002309
117.963 12 023646–028415

2. Production breakpoint (2nd version):
From November 1983

Engine No.
116.962 12 023706
116.963 12 042896
117.962 12 003140
117.963 12 039774

Replacement

1 Remove valve springs (05–250).

2 Remove valve stem seals with a screwdriver or with a pair of pliers.

Caution!
Do not damage valve stem and valve guide.

3 Deburr valve stem groove.

Replace worn valve cone halves and spring retainers.

4 Check Rotocap and replace if required.

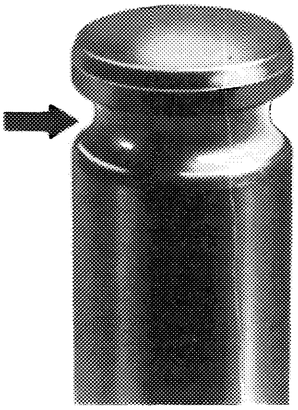

5 Lubricate valve stem seals and install.

Use installation mandrel.

6 Install valve springs (05–250).

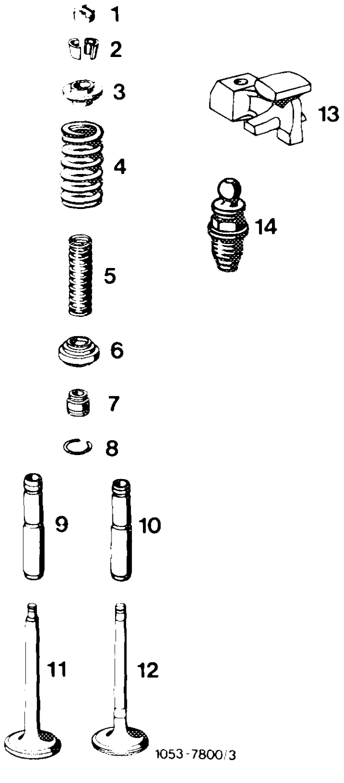

1	Thrust piece
2	Valve cone halves
3	Valve spring retainer
4	Outer valve spring
5	Inner valve spring
6	Rotocap
7	Valve stem seal
8	Locking ring
9	Valve guide intake
10	Valve guide exhaust
11	Intake valve
12	Exhaust valve
13	Rocker arm
14	Hydraulic valve clearance compensating element

05–280 Checking and machining valves

Data

Valve stem dia.		Intake	8.955–8.970
		Exhaust	8.935–8.960
Valve length		Intake	116.8–117.2
		Exhaust	117.8–118.2
Sodium charge		Intake	without
		Exhaust	with
Valve seat plating		Intake	with
		Exhaust	with
Height (h) of valve retainer	When new	Intake	1.5
		Exhaust	2.5
	Limit value	Intake	1.0
		Exhaust	2.0
Adjusting angle (α) for machining of valves			45°
Permissible runout on valve stem and valve seat max.			0.03
Permissible runout on face of valve stem when mounted at valve stem			0.015

Conventional tools

Valve cone grinding machine or Valve cone turning machine	e.g. Krupp, D–5320 Bad Godesberg Model VS e.g. Hunger, D–8000 München 55 Type VKDR 1 A, order No. 203.00.200

Note

The exhaust valves are filled with sodium!
When scrapping these valves, **observe safety regulations.** Do not melt valves filled with sodium as there is a risk of explosion and do not use such valves for making tools (punch etc.) without first removing the sodium filling.

Be careful when removing the sodium from the valves, since sodium mixed with water and watery solutions causes an extremely severe and explosive reaction and the resulting hydrogen gas may start a fire.

Sodium from cut or broken-up valves can be neutralized in a mixture of 2 liters of spirit of alcohol and 1 liter of water in a container in the open air.

Sodium-filled valves can be collected and sent for neutralizing to the Garantieprüfstelle Werk Stuttgart-Untertürkheim.

Checking and machining

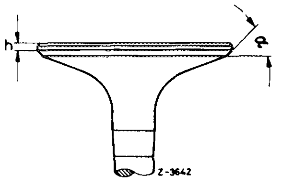

1 Clean valves and check visually.

Valves with a burnt valve disk, with insufficient height „h" of the valve disk and valves with worn out or scored valve stem should be replaced.

2 Measure runout on valve stem. If runout exceeds 0.03 mm, replace valve.

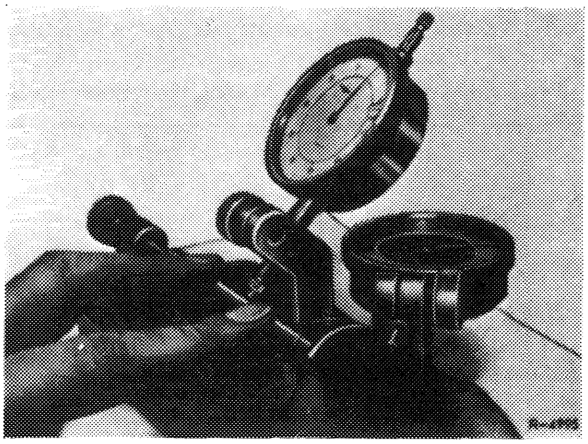

3 Machine valve seat and face of valve stem.

Observe operating instructions of machine tool and adjusting angle.

4 Measure runout on valve seat and height „h" of the valve disk.

If the limit values are reached, renew valve.

5 Machine valve seats (05–291).

Note: Observe checking valve springs and valve spring preload (05–260).

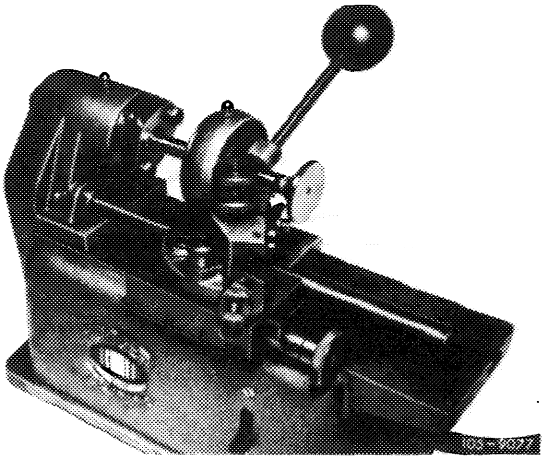

05–285 Checking, replacing valve guides

Valve guides

	Stages	Outer dia.	Color coding	Basic bore in cylinder head	Overlap[1]	Valve guide inner dia.
Intake	Standard dim.	14.043–14.050	grey-brown	14.030–14.035	0.008–0.020	9.000–9.015
	Repair stage	14.214–14.222	red	14.198–14.203	0.011–0.024	
Exhaust	Standard dim.	15.043–15.050	grey-brown	15.030–15.035	0.008–0.020	
	Repair stage	15.214–15.222	red	15.198–15.203	0.011–0.024	

[1] The overlap must be between 0.007 and 0.025 mm.

Special tools

Plug gauge 9 mm dia. for intake and exhaust valve guide			117 589 03 23 00
Knocking-out mandrel 9 mm dia. intake and exhaust		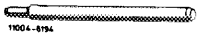	110 589 02 15 00
Plug gauge for valve guide basic bore		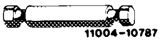	117 589 05 23 00
Reamer 14.035 mm dia. intake		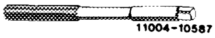	110 589 03 53 00
Reamer 15.035 mm dia. exhaust		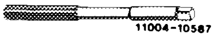	110 589 02 53 00
Broach 14.2 mm dia. intake			115 589 00 53 00
Broach 15.2 mm dia. exhaust			110 589 00 53 00
Guide sleeve for broach intake 14.2 mm dia.	Engines 116.960/961 and 117	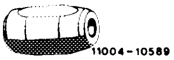	102 589 01 63 00
	Engines 116.962/963	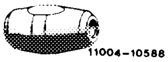	102 589 00 63 00
Guide sleeve for broach exhaust 15.2 mm dia.		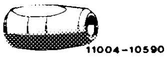	117 589 00 63 00
Installing mandrel 9 mm dia. intake and exhaust (1st version)		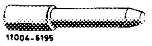	110 589 00 15 00
Installing mandrel 9 mm dia. intake and exhaust (2nd version)			110 589 06 15 00
Reamer 8.99 mm dia. H 7 intake and exhaust			000 589 10 53 00

Association engines – guide sleeves – broaches

Engine	Valve	Valve guide basic bore mm	Guide sleeve Part No.	Page	Broach Part No.
116.962/963	Intake	14.2	102 589 00 63 00	B	115 589 00 53 00
116.960/961, 117			102 589 01 63 00	A	
117.96	Exhaust	15.2	117 589 00 63 00	A	110 589 00 53 00
116				B	

Note

In the event of repairs, cylinder heads with standard normal dimension valve guides must be fitted with standard dimension valve guides (grey-brown). First, ream basic bores with reamers 14.035 mm dia. (intake) and 15.035 mm dia. (exhaust) to avoid too great an overlap.

Basic bores in which the use of standard dimension valve guides do not provide an adequately tight seat (minimum interference 0.007 mm) must be machined with broaches for repair stage valve guide installation.

The broaches must be driven through the basic bores with a plastic hammer and the aid of guide sleeves.

Checking valve guides

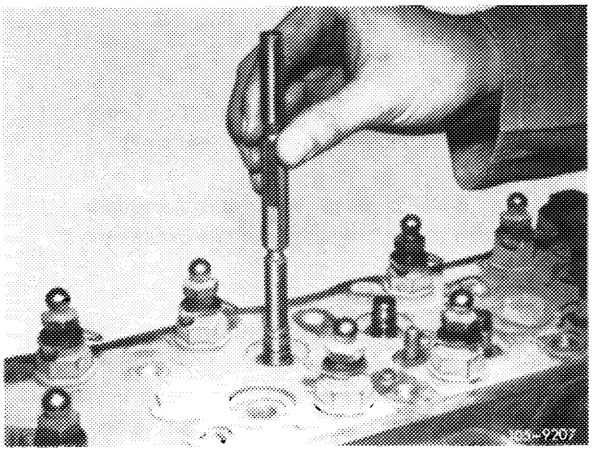

With cylinder head removed, check valve guides by means of plug gauge in longitudinal and transverse direction.

Valve guides which accept the no-go end with the wear limit (+ 220) in its entire height (5 mm) must be renewed.

Valve guides which are worn outside on the valve stem seal seat so that the valve stem seal is no longer seated tightly, should also be replaced.

Replacing valve guides

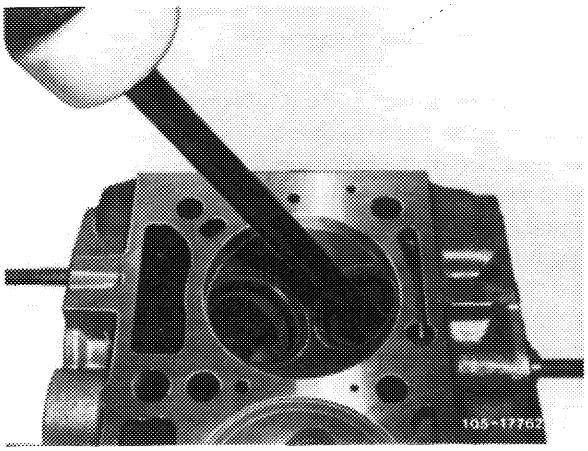

1 Knock out valve guide from combustion chamber end by means of knocking mandrel.

2 Check valve guide basic bore with plug gauge in longitudinal and transverse direction.

Basic bores into which the measuring plug can be inserted at one point for its entire height (8 mm), must be finished to repair stage dimensions.

If the measuring plug cannot be inserted fully or only in part, the basic bore for the valve guide can be reamed to normal dimension for the valve guides.

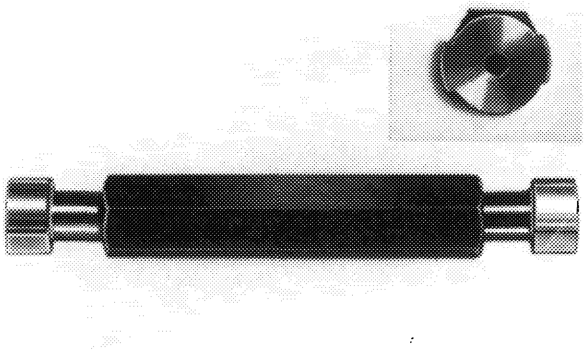

105-22767

Machining basic bore

Standard dimension

3 Ream basic bore with reamer 14.035 mm dia. or 15.035 mm dia. while lubricating with kerosene. Ream with low pressure and do not cant the reamer.

Note: Handle reamers carefully and put back into protective sleeve so that the cutting edges are not damaged.

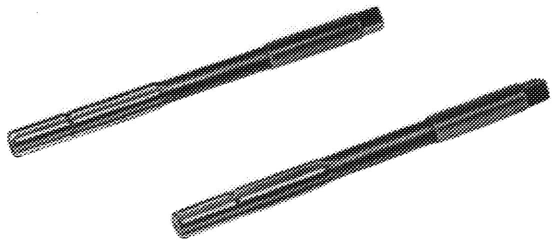

105-21802

Machining basic bore

Repair stage

4 Remove all soot from cylinder head and clean, in particular the inside of the valve seat rings.

5 Remove metal chips (use stiff plastic brush or similar) from the cutting edges of the broach prior to use.

6 Select correct guide sleeve (refer to table). Make sure that the guide sleeve is centered only by the inner diameter of the valve seat ring concerned and is not impaired with carbon residue, casting projections, intake and exhaust port walls etc.

7 Liberally lubricate guide sleeve, basic bore and the entire broach with engine oil.

8 Introduce broach in the direction of broaching into the guide sleeve so that during the subsequent introduction of the guide sleeve into the cylinder head the broach will enter into the bore up to the first cutting edge. Center the sleeve in the valve seat ring by means of rotary movements.

9 Drive broach through the bore by means of an aluminum mandrel approx. 130 mm long and a plastic hammer of approx. 250 g.

105–21801

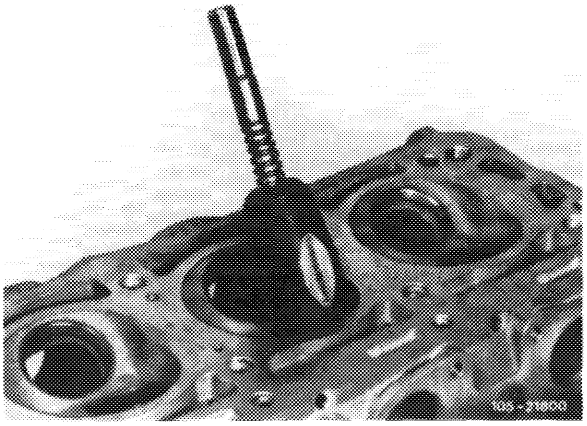

Inserting valve guide

10 Cool valve guide in liquid nitrogen (approx. 3 minutes) and insert.

If no liquid nitrogen is available, heat cylinder head in a water bath to approx. 80 °C. Drive valve guide into the cylinder head by means of the installing mandrel until the locking ring contacts the cylinder head.

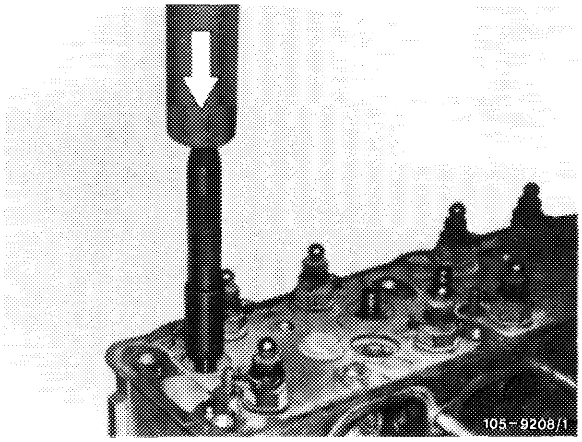

11 Check valve guide for tight seat with the cylinder head in a cooled-down condition.

12 Check inner dia. of valve guide with plug gauge.

The entire go end should be introduced into the bore.

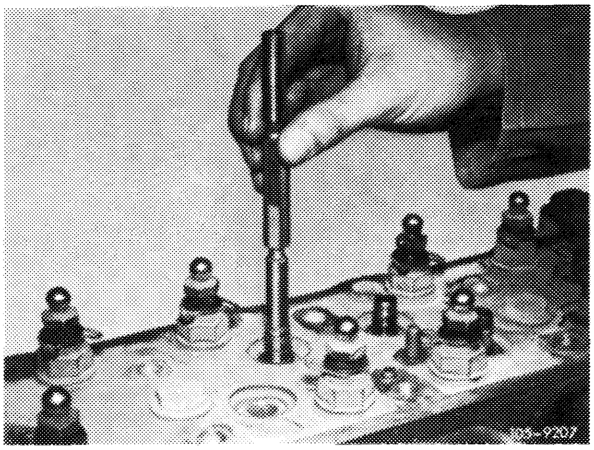

13 If required, ream inner dia. with reamer.

14 Check valve seats for runout and refinish if required.

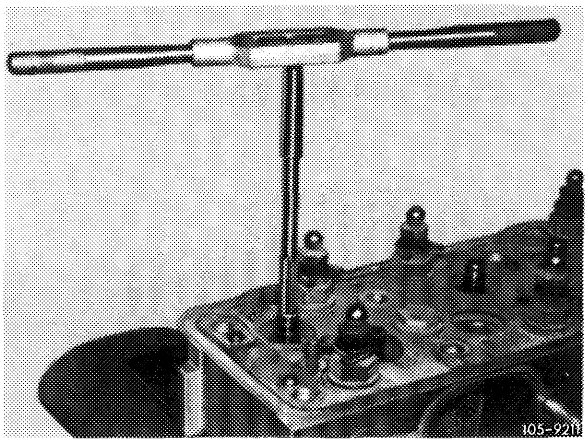

05–290 Replacing valve seat rings

Engine		116.960 116.961	116.960 AUS J USA 116.961 AUS J S USA	116.962 116.963	116.964 116.965 117.960 117.961	117.962 117.963 117.964 117.965	117.967 117.968
Standard dimen. D 1	Intake	46.000–46.016	41.000–41.016		46.000–46.016		47.400–47.416
	Exhaust	40.000–40.016			42.000–42.016		–
Standard dimen. D	Intake	46.090–46.100	41.090–41.100		46.090–46.100		47.490–47.500
	Exhaust	40.090–40.100			42.090–42.100		–
Repair stage intake	D1 max. to	47.016	41.016		47.016		48.016
	D roughing dimension	47.300	41.300		47.300		48.700
Repair stage exhaust	D1 max. to	40.016			42.016		–
	D roughing dimension	40.300			42.300		–
t		10.300–10.800					
H		10.390–10.500					
Overlap of valve seat rings in cylinder head		0.074–0.100					

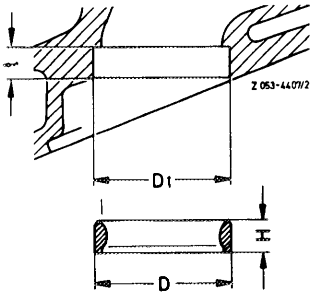

Intake

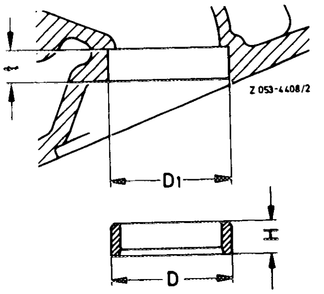

Exhaust

Special tool

Plug gauge 9 mm dia.		117 589 03 23 00

Conventional tools

Cylinder head clamping device	e.g. Rothenberger, D–6233 Kelkheim
Ring seat turning tool	e.g. Hunger, D–8000 München Size 2, order No. 220.03.110

Valve seat turning tool	e.g. Hunger, D–8000 München Type VDSNL 1/45/30, order No. 236.03.308
Test set for valve seats	e.g. Hunger, D–8000 München Order No. 216.93.300
Internal measuring instrument (measuring range 25–60 mm)	e.g. Mahr, D–7300 Esslingen Order No. 844
Outside micrometer (measuring range 25–50 mm)	e.g. Mahr, D–7300 Esslingen Order No. 40 S

Renewing

1 Remove old valve seat ring by means of a ring seat turning tool.

2 Check valve guides, renew if necessary (05–285).

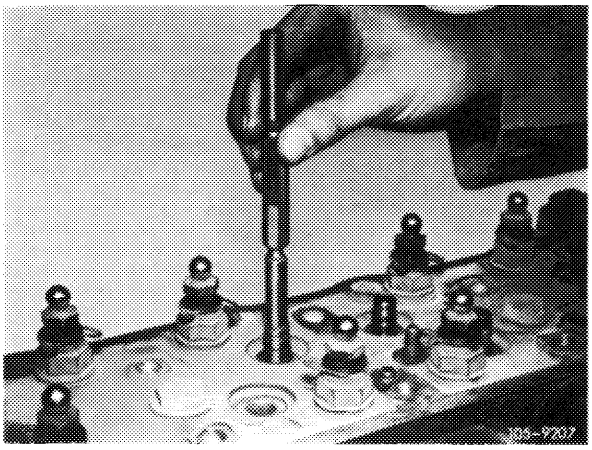

3 Measure basic bore D 1.

A new valve seat ring **standard dimension** may be used if the specified overlap is available.

4 Machine basic bore repair stage D 1 with the valve seat ring turning tool until the bore is just clean.

5 Measure machined basic bore.

6 Machine valve seat ring repair stage until the specified overlap is attained.

7 Heat cylinder head in water bath.

8 Cool valve seat ring in liquid nitrogen.

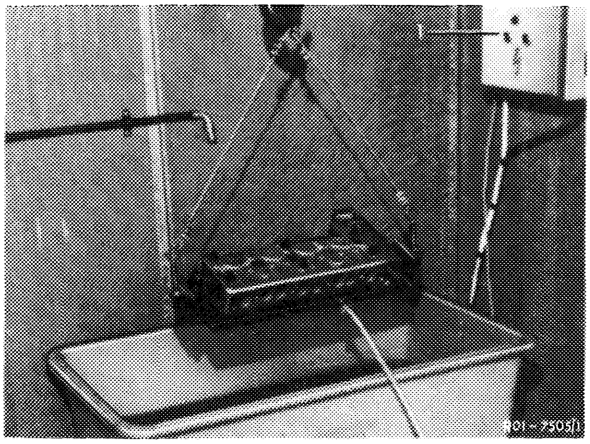

9 Install valve seat ring with a suitable mandrel.

10 Machine valve seats (05–291).

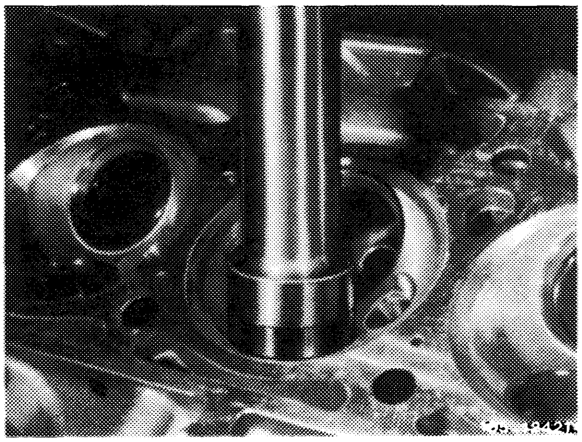

Data	Intake	Exhaust
Valve seat width b	1.3–2.0	1.5–2.0
Valve seat angle α	45°	
Correction angle top β	15°	
Correction angle bottom γ	60°	
Permissible runout of valve seat	0.04	

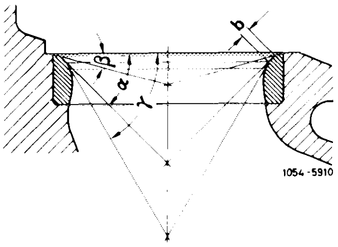

Special tools

Magnetic finger for valve cone halves	 11004-6202	116 589 06 63 00
Plug gauge 9 mm dia.	 11004-6211	117 589 03 23 00

Conventional tools

Cylinder head clamping device	e.g. Rothenberger, D–6233 Kelkheim
Valve seat turning tool	e.g. Hunger, D–8000 München Type VDSNL 1/45/30, order No. 236.03.308
Test set for valve seats	e.g. Hunger, D–8000 München Order No. 216.93.300
60° correction tool No. 13 for correction angle bottom	e.g. Hunger, D–8000 München Order No. 216.64 622

Note

Clamp cylinder head into clamping device for disassembling and machining.

Machine valve seats with valve seat turning tool, with valve seat grinder or with valve seat cutter.

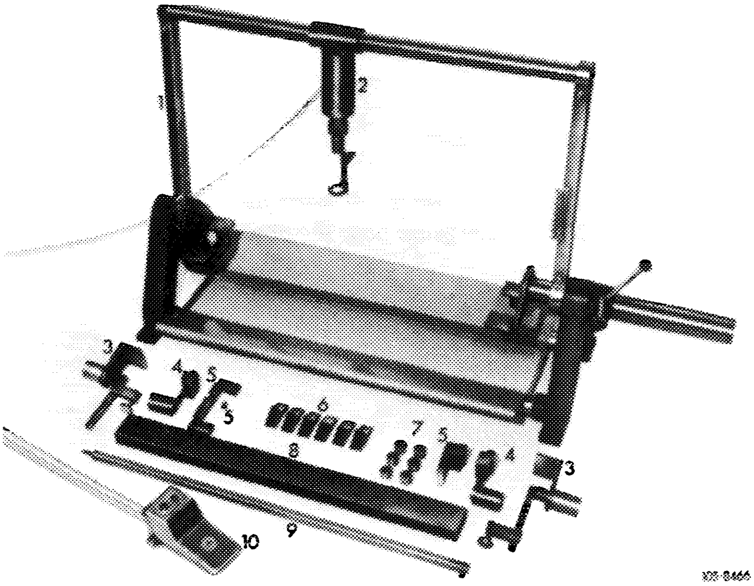

Machining valve seats

1 Check valve guides and replace if required (05–285).

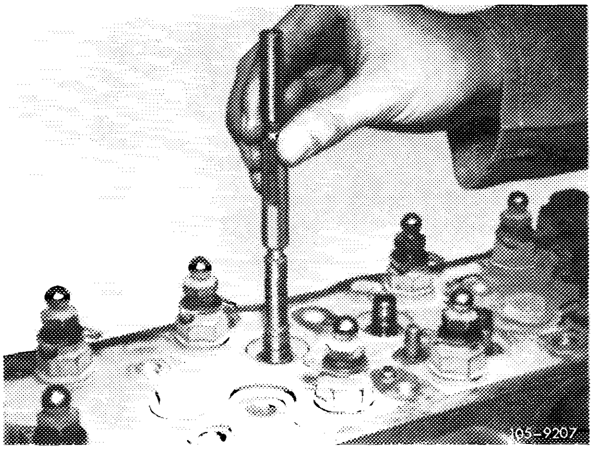

2 Machine valve seats (see operating instructions of machine tool manufacturer).

Caution!
Loosen pilot only after the runout of the valve seat has been checked (item 3).

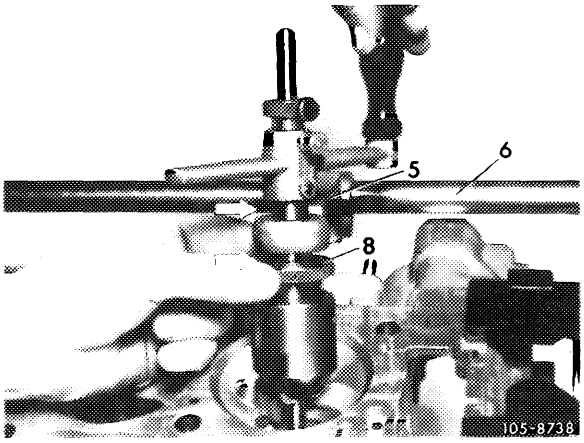

Caution!
Do not turn down the bead at the lower end of the valve seat.

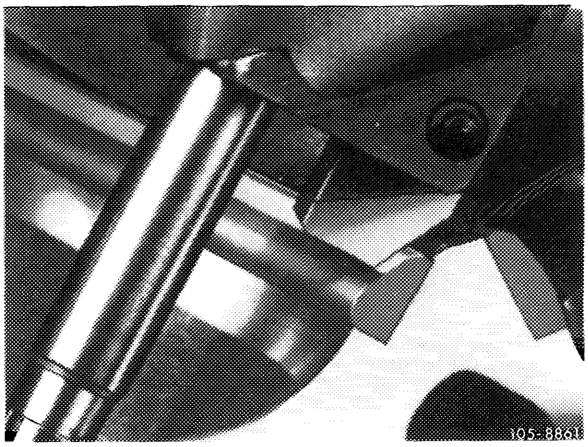

3 Check runout of valve seat.

For this purpose, slide test sleeve (19) with dial gauge holder (20) and dial gauge onto the pilot (5).

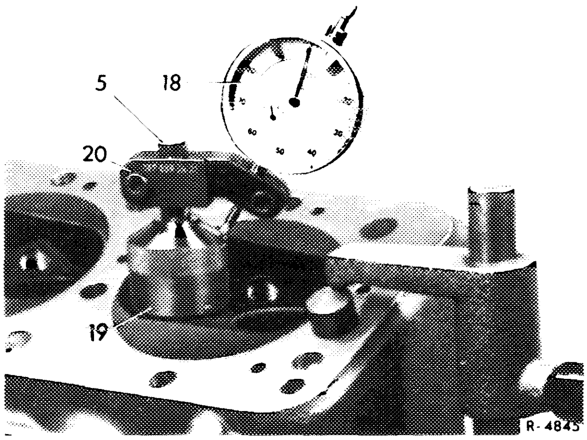

5	Pilot
18	Dial gauge
19	Test sleeve
20	Dial gauge holder

4 Measure valve seat width ,,b'' and correct at top with 15° and at bottom with 60° if required.

When machining with the Hunger turning tool, use the 60° correction steel No. 13 for the lower valve seat correction.

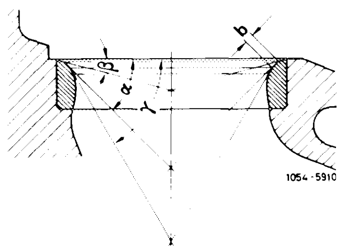

5 Observe valve springs and valve spring preload (05–260).

Equipment

Sandblasting device for walnut shell granulate	e.g. Alfred Kärcher Leutenbacher Straße 30–40, D–7057 Winnenden Order No. 1.486.601
Walnut shell granulate (25 kg) Grain size 1–1.5 mm	e.g. Eisenwerk Würth GmbH & Co. Friedrichshaller Straße, D–7107 Bad Friedrichshall Order No. 10407

Note

Transition fault during the warming-up phase on vehicles with KA injection system can be caused by coked-up inlet valves.

The inlet valves can be cleaned with a sandblasting device without removing the intake manifold.

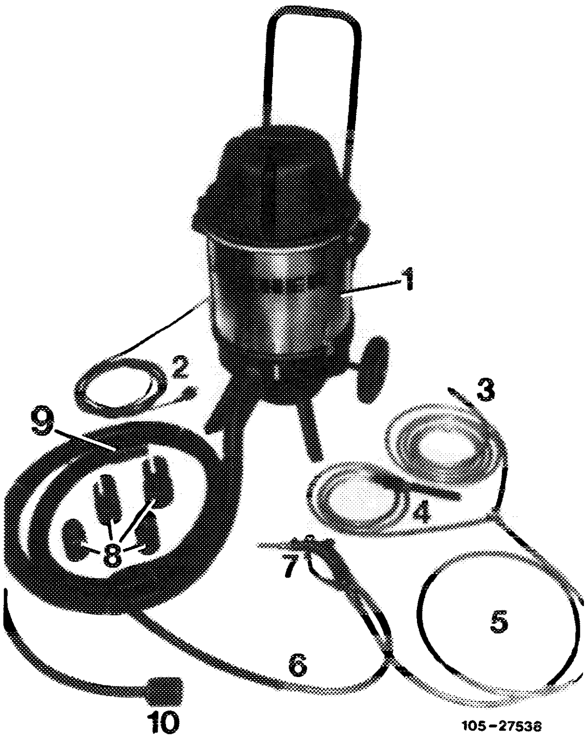

1 Sandblasting device
2 Power connection cable (220 volts)
3 Compressed-air connection
4 Blow-out valve
5 Compressed-air supply line
6 Granulate feed line
7 Compressed-air gun with nozzle
8 Adapter
9 Extraction line with plug connection
10 Extraction pipe

Cleaning procedure

Walnut shell granulate under high pressure is blasted on the disks of the closed inlet valves via the mounting bores of the injection valves. At the same time, the carbon residue is extracted together with the granulate via the throttle valve pipe into the sandblasting unit.

The valve disk is partly obstructed by the valve stem. In order to clean the obstructed part the valve must be turned once by 180°.

Maintenance and filling of sandblasting device

1 After approx. 20–30 cleaning processes, shake off the carbon pieces on the outside of filter bag (arrow).

2 When fitting the upper part, observe the marking (M).

3 Fill the unit lower part with approx. 4 kg of walnut shell granulate, grain size 1–1.5 mm up to the lower edge (arrow).

4 If lumps are formed and in the case of high dust content the granulate must be renewed because of its inefficient cleaning effect.

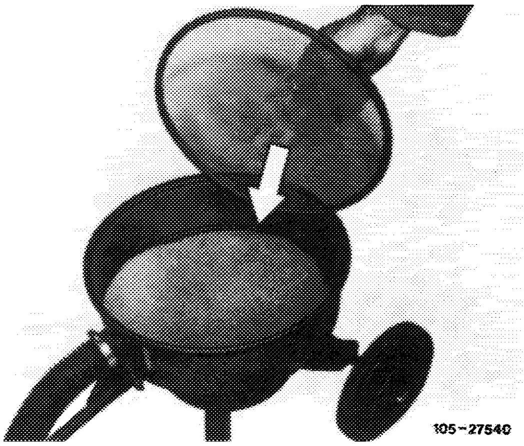

Decoking

1 Remove mixture control unit with air intake housing.

2 Remove injection valves.

3 Remove all rocker arms and thrust pieces.

Caution!
Rocker arms and thrust pieces must be installed in the same position from which they were removed.

4 Cover valve area and camshaft with a cleaning rag.

5 Fit adapter (8) with open throttle valve.

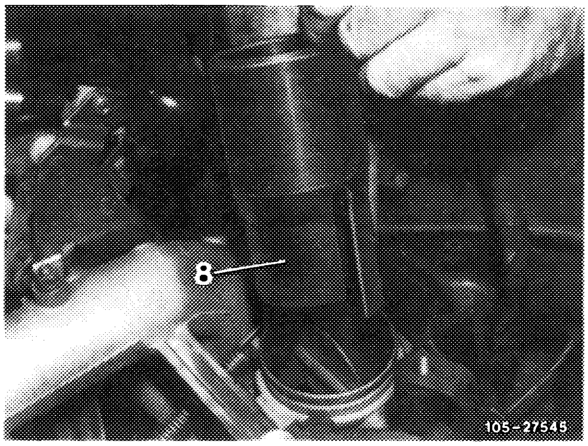

6 Connect extraction line (9) to the adapter (8).

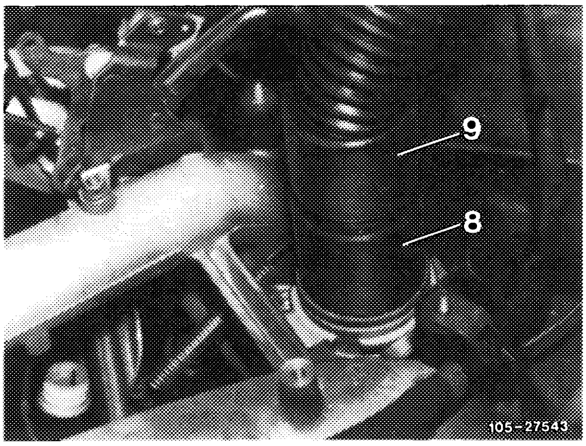

7 Place compressed-air gun (7) with nozzle in the bore for the injection valve. Blast the injection valve for approx. 30–60 seconds.

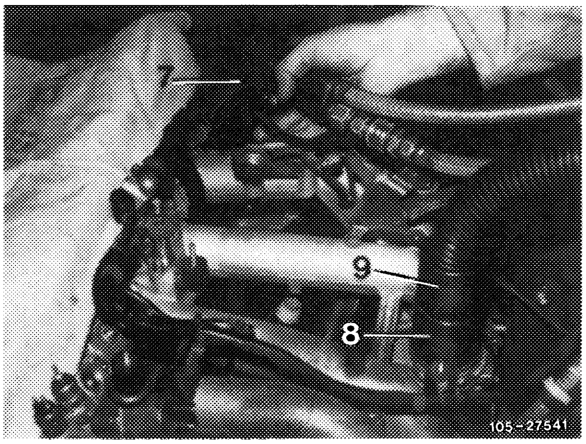

8 Blow out intake port with the blow-out valve (4) via the injection valve bore with the extraction switched on.

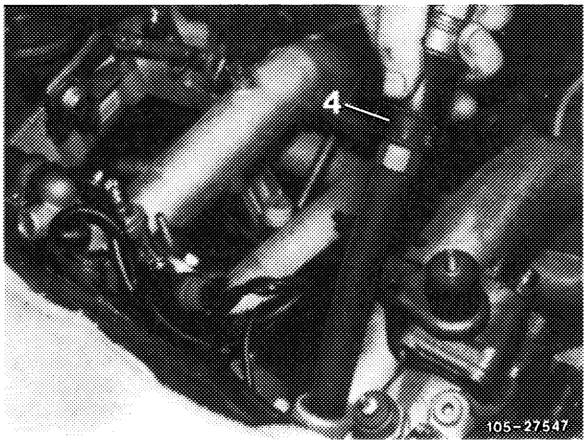

9 Force inlet valve down by means of the valve spring compressor 123 589 03 61 00 while turning the valve by 180°.

10 Blast inlet valve for approx. 15–30 seconds.

11 Blow inlet port with blow-out valve (4) via the injection valve bore with the extraction switched on.

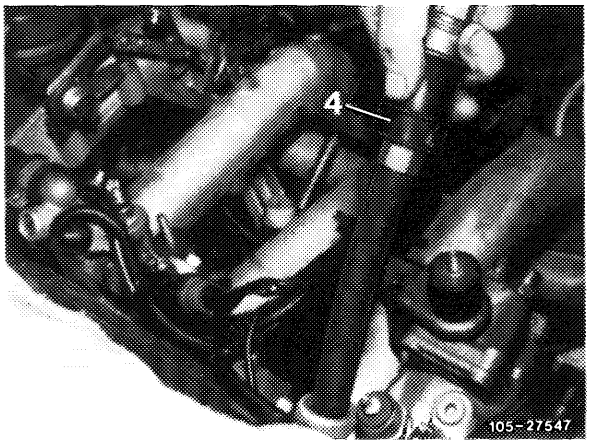

12 Insert the extraction pipe (10) via the throttle valve intake pipe and extract the remaining granulate from the intake manifold lower part and from the exhaust gas recirculation line.

13 Using a light, inspect intake manifold lower part and all cylinders for residual granulate, extract if necessary.

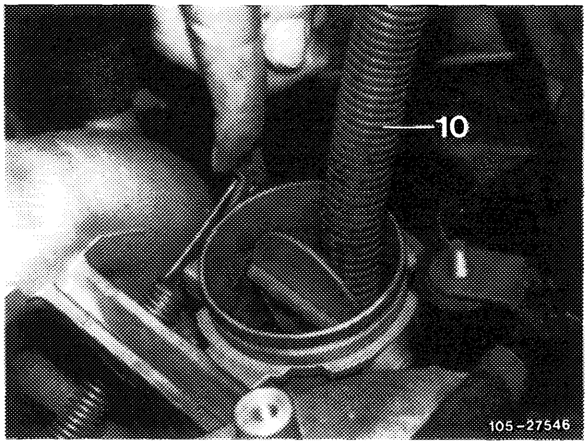

14 Flush throttle valve intake pipe and throttle valve with benzine.

15 Install removed parts.

16 Adjust idle speed (07.3–100).

Tightening torques	Nm
Screws for chain tensioner on cylinder head	25
Coupling nut for chain tensioner	90

Note

The hydraulic chain tensioner is supplied with hydraulic oil by the way of an oil duct (4) in the cylinder crankcase front and in the cylinder head (arrows).

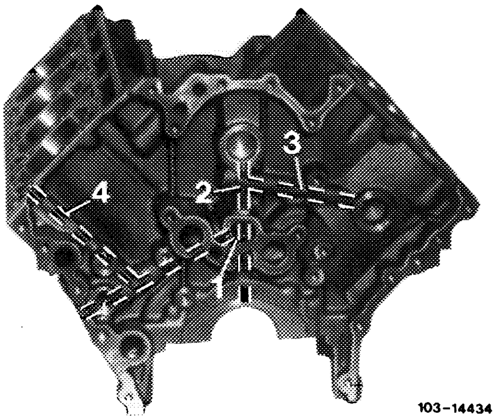

103–14434/1

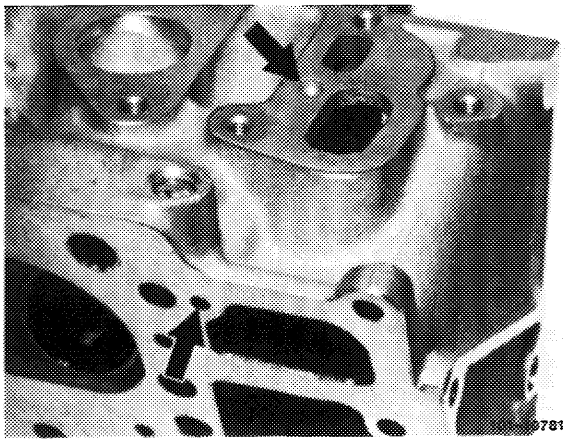

The contact pressure of the thrust bolt (10) against the tensioning rail is held constant by the check valve (4 and 5) and the pressure limiting valve (6 and 8) together with the compression spring (11), regardless of engine oil pressure.

Venting takes place after the oil pressure in the engine oil circuit has been established and the chain tensioner is being filled up with oil.

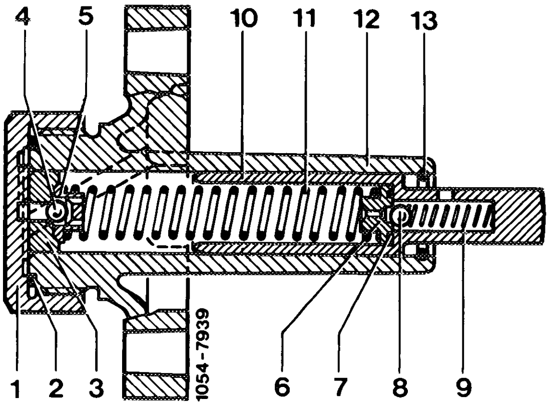

1 Closing nut
2 Aluminum sealing ring A 25 x 30
3 Ball seat ring
4 Ball 5 mm dia.
5 Ball cage
6 Valve disk
7 O-ring
8 Ball 5 mm dia.
9 Compression spring
10 Thrust pin
11 Compression spring
12 Housing
13 Circlip B 16

Caution!
As of June 1980, the chain tensioner has been provided with a reinforced flange of 17 mm (previously 12 mm).

Mount chain tensioner with 17 mm flange by means of screws M 8 x 30 mm (previously M 8 x 25 mm).

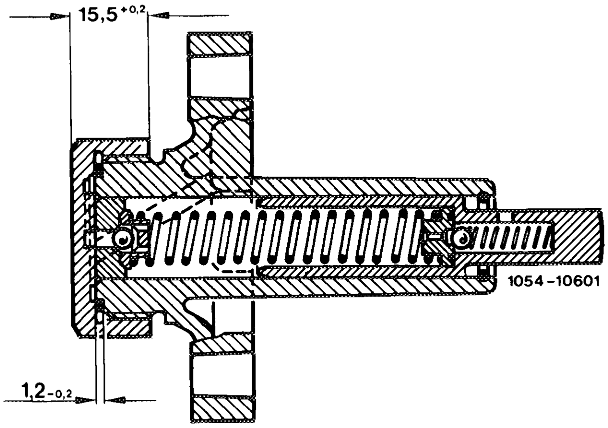

The chain tensioner housing and the closing nut dimensions were changed.
The reason for this were cracked and leaking closing nuts.

Chain tensioner housing: dimension $1.2^{-0.2}$ was 1.5 mm

Closing nut: dimension $15.5^{+0.2}$ was 14.5 mm

The part No. of the chain tensioner has not been changed.

Removal and installation

1 Remove fastening screws and remove chain tensioner.

2 Mount chain tensioner with a new gasket and tighten screws uniformly.

The pressure pin of the chain tensioner should rest against the tension rail lug.

Note: In the event of repairs, replace complete chain tensioner.

05–320 Replacing timing chain

Tightening torques	Nm
Mounting bolt for camshaft sprocket	100
Bolts for cylinder head cover	3

Special tools

Spring compressor for valve spring	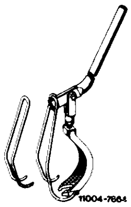	123 589 03 61 00
Socket insert 27 mm, 1/2" drive for rotating the engine	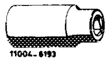	001 589 65 09 00
1/2" drive insert, 80 mm long, for rotating the engine		617 589 00 16 00

Note

A repair chain with connecting link is available for repairs.

If only an endless timing chain is available, the chain can be opened prior to installation by grinding off **both pins of a link** and subsequent installation by means of a connecting link.

The endless timing chain is installed with timing case cover removed. Check sprockets for score marks and pitting.

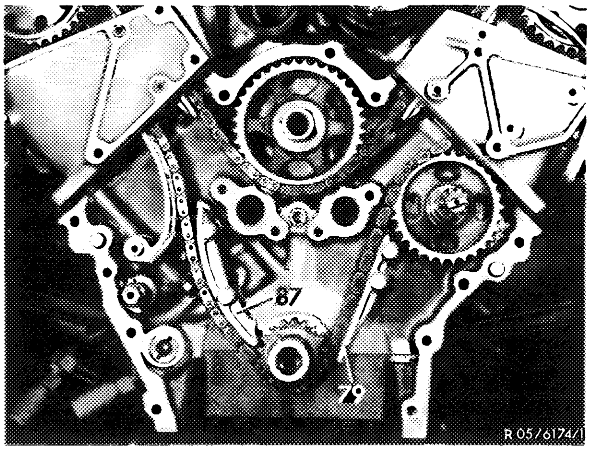

Repair duplex chain with connecting link.

Engine 116.960/961/962/963/964/965
186 links
Engine 117.960/961/962/963/964/965/967/968
198 links

The simplex chain (in Ⓙ and (USA) engines 116.96 up to model year 1983) must be replaced with the duplex chain together with all sprockets in the case of repair. The left-hand cylinder head must be removed for this purpose.

Replacement

1 Remove spark plugs.

2 Remove rocker arm on right-hand camshaft (05–230).

Caution!
The rocker arms must be installed in the same position from which they were removed.

3 Remove chain tensioner (05–310).

4 Cover chain box with rag and cut timing chain by means of chain cutting tool or grind off both pins of one link.

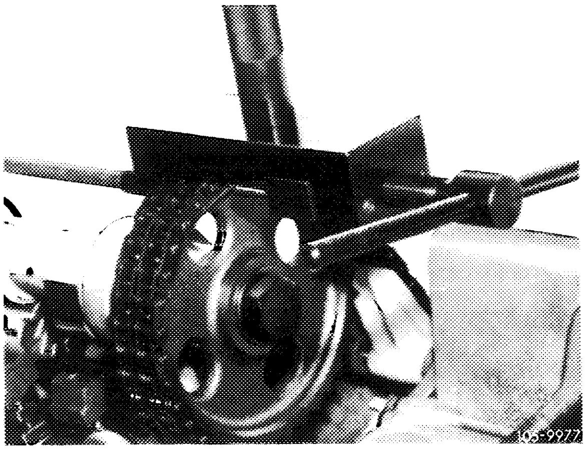

5 Attach new timing chain to old timing chain by means of a connecting link while removing cut-up connecting link.

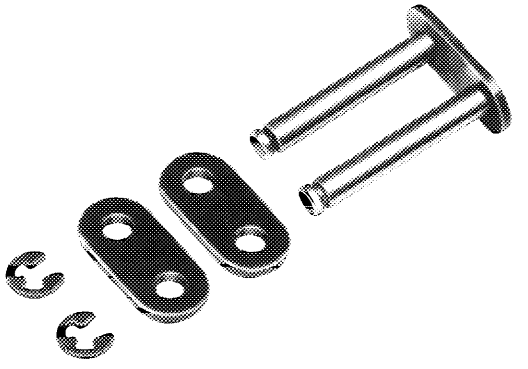

105-9259

6 Slowly rotate the crankshaft by means of tool combination in the direction of rotation of engine while simultaneously pulling up the old chain until the connecting link comes to rest against the uppermost position of the right-hand camshaft sprocket.

Caution!
While rotating the crankshaft, the timing chain should always remain in mesh with both camshaft sprockets.

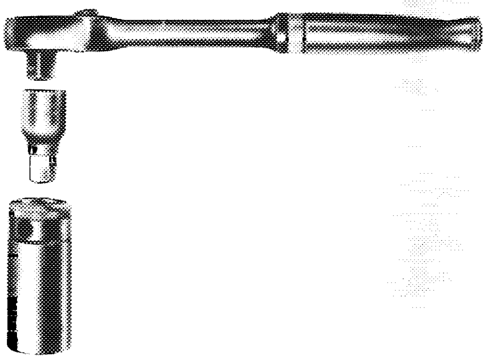

R100-5952

7 Disconnect old timing chain and connect new timing chain by means of a connecting link.

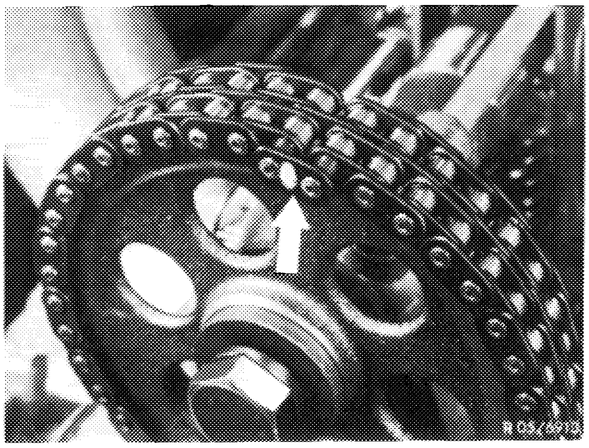

8 Set engine to ignition TDC at No. 1 cylinder.

If the markings (arrow) are not accurately lined up, check timing (05–215).

9 Complete the engine.

Note: Remove all metal deposits from worn-out sprockets and timing chains in the engine. Renew oil filter element and engine oil.

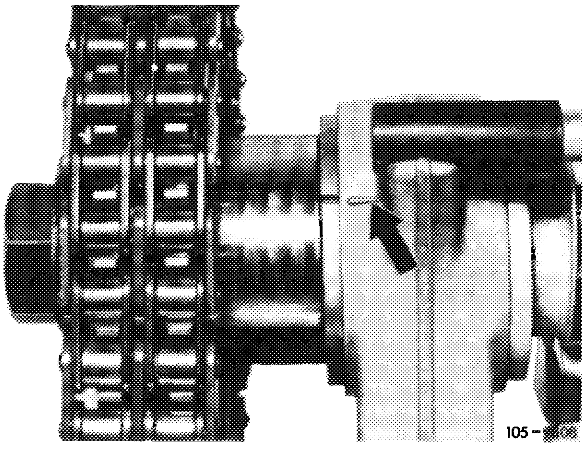

105-

05–330 Removal and installation of tension rail

Tightening torques	Nm
Bolts for cylinder head cover	3
Mounting bolt for camshaft sprocket	100

Special tools

Impact puller for bearing bolt (basic unit)	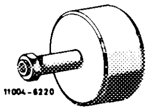	116 589 20 23 00
Threaded bolt M 6 x 50		116 589 01 34 00

Note

The timing chain is guided in the cylinder crankcase by means of 2 slide rails and is tensioned by the chain tensioner via a tension rail.

The tension rail is guided by a floating pin in crankcase and timing case cover.

The tension rails of engines 116.96 and 117.96 are different in length and differ in shape from those of cast-iron engines.

The thrust pin of the tension rail was relocated in an inward direction and centered.

The tension rail lining (3) of all engines 116 and 117 can be replaced in the case of repairs.

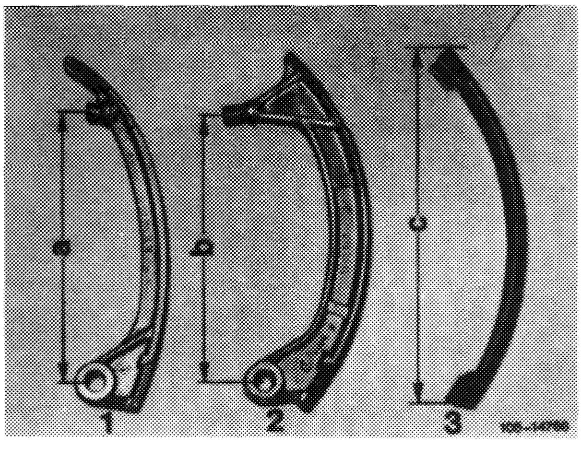

1 Tension rail
Engine 116.96 117.96
a = 133 mm 160 mm
2 Tension rail
Engine 116.98 117.98
b = 133 mm 161.5 mm
3 Lining
Engine 116 117
c = 184 mm 208 mm

Removal

1 Remove slide rail in right-hand cylinder head (only engines 116.960/961, 117.960/961).

2 Remove chain tensioner (only engines 116.962/963/964/965, 117.962/963/964/965/967/968).

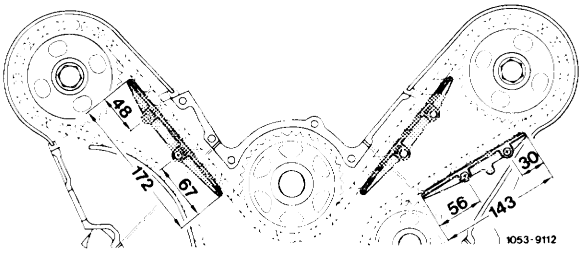

3 Mark right-hand camshaft sprocket and timing chain with paint.

4 Remove right-hand camshaft sprocket.

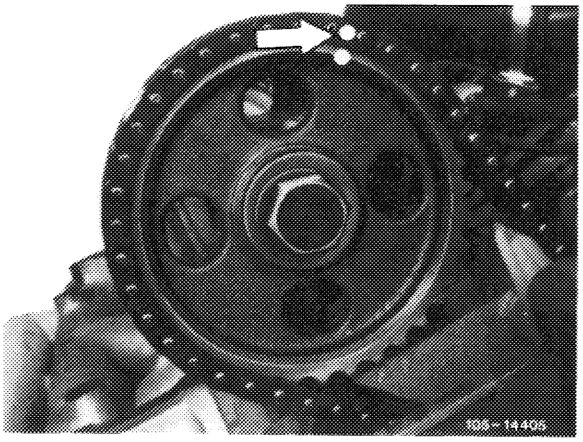

5 Unscrew closing plug (arrow).

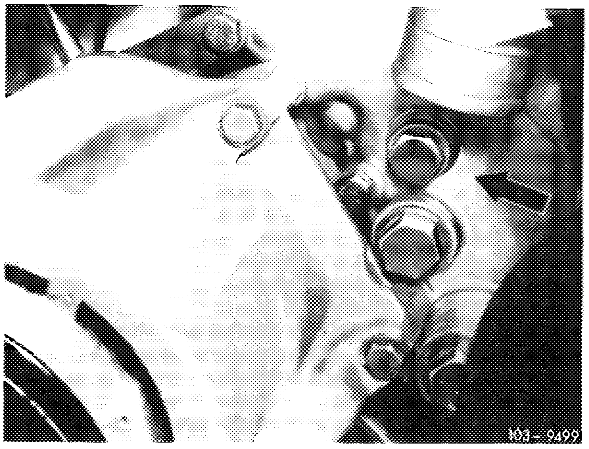

Engine 117 (USA)

6 Cant bearing pin of tension rail with a bolt M 8 or a screwdriver and pull out.

Note: The bearing pin is hollow (inner dia. 8.8 mm) and a floating fit (light sliding fit) in the crankcase and timing case cover.

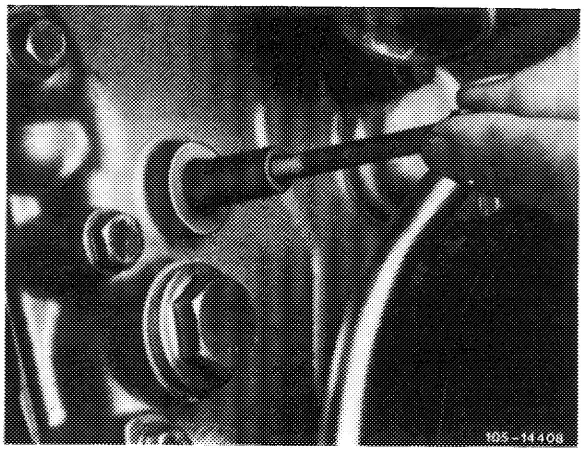

7 Remove tension rail.

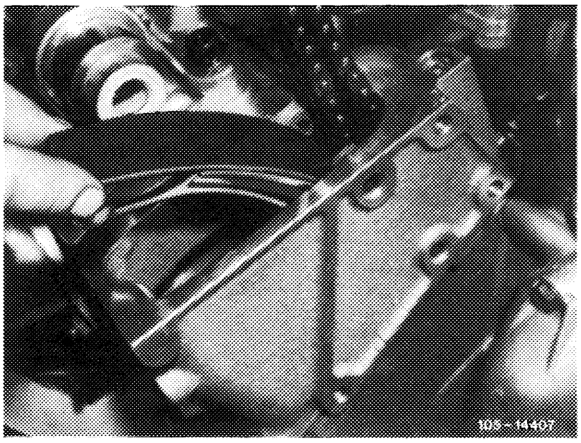

Installation

8 Insert tension rail between timing case cover and timing chain.

9 Insert bearing pin and drive in fully.

10 Install closing plug with sealing ring.

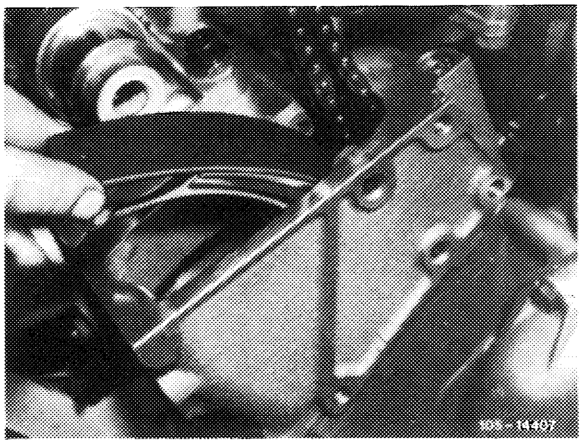

11 Mount camshaft sprocket so that the collar on camshaft sprocket (arrow) faces toward the camshaft.

12 For further installation proceed vice versa.

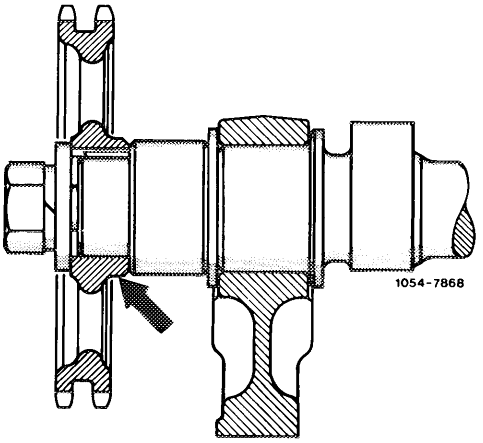

05–340 Removal and installation of slide rails

Tightening torques		Nm
Bolts for cylinder head cover		3
Crankshaft end bolt	with 3 diaphragm springs[1])	270–330
	with 4 diaphragm springs[1])	370–400
Mounting bolt for camshaft sprocket		100

---

[1]) See Note 03–324.

Special tools

Impact puller for bearing pin (basic unit)	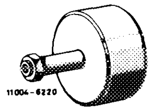	116 589 20 33 00
Threaded bolt M 6 x 50		116 589 01 34 00
Detent (starter motor flange left or right)	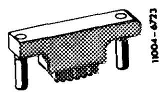	116 589 01 40 00
Torque wrench 3/4" drive, 150–800 Nm		001 589 74 21 00
Socket insert 27 mm, 1/2" drive	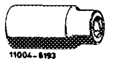	001 589 65 09 00

Conventional tool

Adapter 3/4" inside to 1/2" outside square drive	e.g. Hazet, D–5630 Remscheid Order No. 1058 RI

Note

All slide rails in cylinder heads of engines 116 are identical.

Likewise, the slide rails in cylinder heads of all engines 117 are identical.

On the other hand, the length of the pertinent bearing pins of light alloy engines differ from those of cast-iron engines.

Slide rails in cylinder head left inside and outside

1 Set piston of 1st cylinder to ignition TDC.

2 Remove distributor (07.5–510).

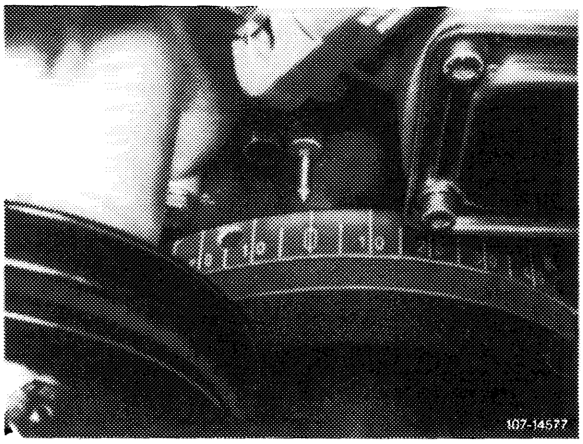

3 Remove power steering pump together with mounting bracket.

4 Knock out bearing pin with impact puller and remove slide rail.

5 When installing, pay attention to position of slide rail.

The bearing pins are different from those of cast-iron engines.

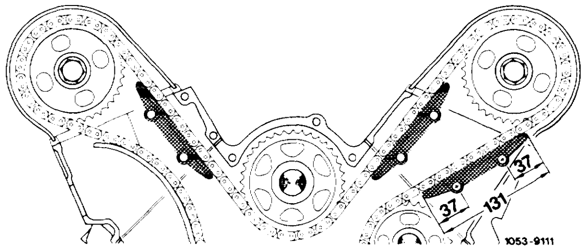

Slide rail layout engine 116

Bearing pin
Light alloy engines L = 46 mm
Cast-iron engines L = 56 mm

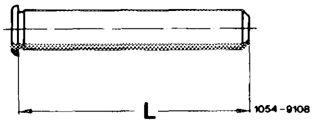

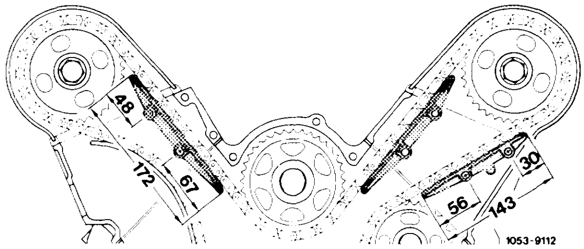

Slide rail layout engine 117

Bearing pin
Light alloy engines L = 46 mm
Cast-iron engines L = 56 mm

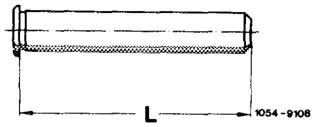

Slide rail in cylinder head right

1 Remove alternator together with mounting bracket.

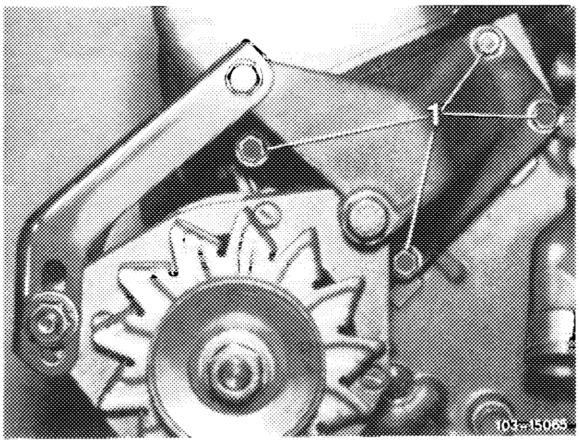

2 Knock out bearing pin with impact puller and remove slide rail.

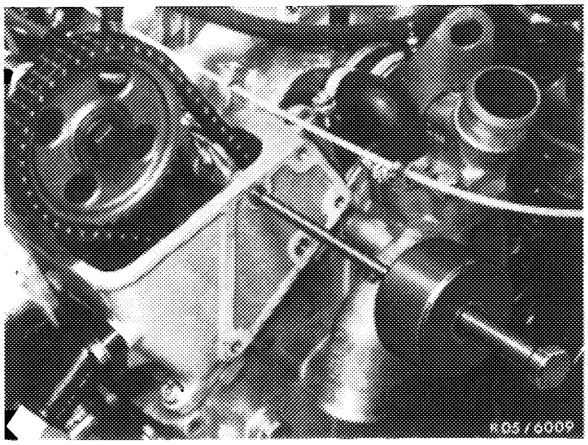

Slide rails in crankcase

1 Remove timing case cover (01–210).

2 Unscrew slide rail (87 or 79).

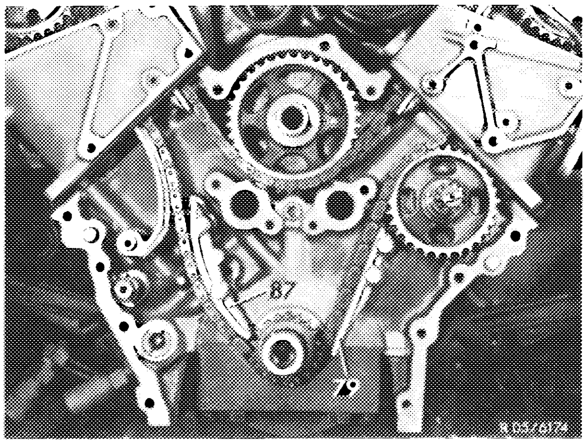

The two slide rails in the crankcase differ from those of cast-iron engines.

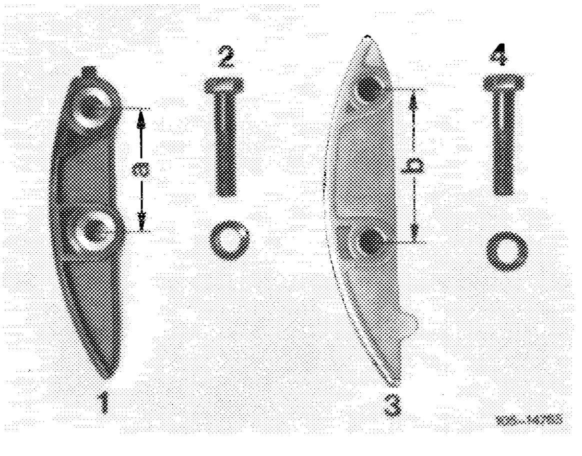

Engine 116.96, 117.96	Cast-iron engine 116.98, 117.98
1 Slide rail	3 Slide rail
2 Bolt M 8 x 40	4 Bolt M 8 x 38
a 43.8 mm	b 55 mm

The straight slide rail (1) in the crankcase is asymmetrical (arrow) and slides onto the pins (2) screwed into the crankcase.

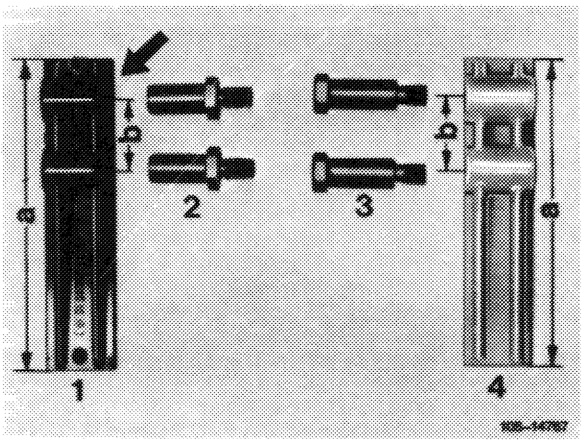

1, 2	Engine 116.96 and 117.96
3, 4	Cast-iron engine 116.98 and 117.98
a	114 mm
b	26 mm

Tension arm for oil pump chain

1 Remove timing case cover (01–210).

2 Remove lock and remove tension arm (84).

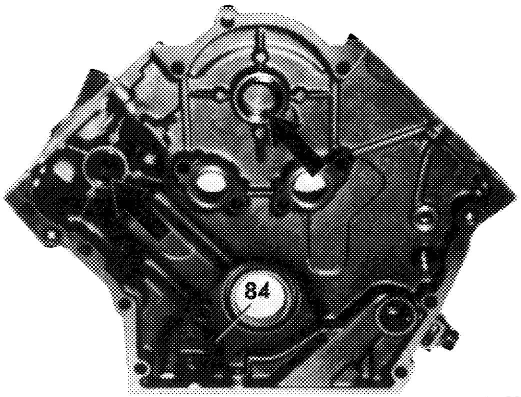

103–9559/1

05–434 Removal and installation of intermediate gear for distributor drive

Tightening torques		Nm
Crankshaft end bolt front	with 3 diaphragm springs[1])	270–330
	with 4 diaphragm springs[1])	370–400
Mounting bolt for camshaft sprocket		100

[1]) See Note 03–324.

Special tools

Torque wrench, single-arm, 3/4" drive, 150–800 Nm		001 589 74 21 00
Socket insert 27 mm, 1/2" drive	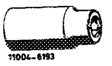	001 589 65 09 00
Detent (starter motor flange left or right)	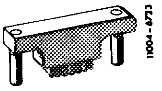	116 589 01 40 00
Allen wrench with cross-bar handle 6 mm, 440 mm long	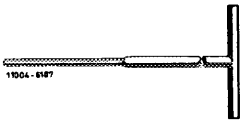	116 589 03 07 00
Sleeve for radial sealing ring front	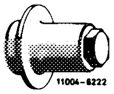	110 589 07 61 00

Conventional tool

Adapter 3/4" inside to 1/2" outside drive	e.g. Hazet, D–5630 Remscheid Order No. 1058 RI

Note

The bearing bushings for the distributor drive in the crankcase have fallen away as from December 1984 and those in the timing case cover as from March 1985.

Removal

1 Remove timing case cover (01–210).

2 Remove slide rail (87).

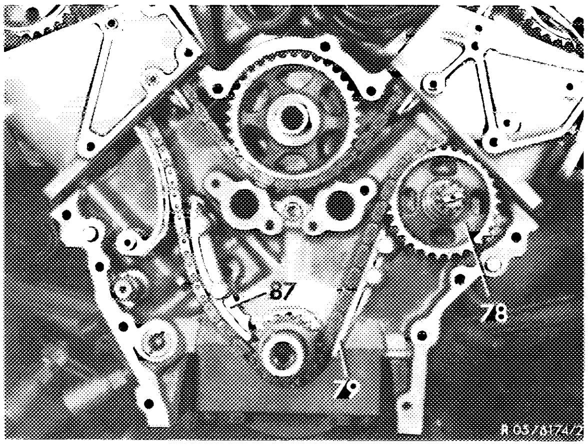

78 Intermediate gear for distributor drive

3 Slacken timing chain on intermediate sprocket by turning left-hand camshaft.

4 Remove intermediate sprocket. On engine 116 this requires the removal of left-hand cylinder head (01–415).

5 If required, pull out bearing bushing in cylinder crankcase and timing case cover by means of internal puller.

Installation

6 Press bearing bushing into crankcase and timing case cover so that the lubricating groove (arrow) is positioned at the bottom.

7 Lubricate bearing bushing with oil and insert intermediate sprocket.

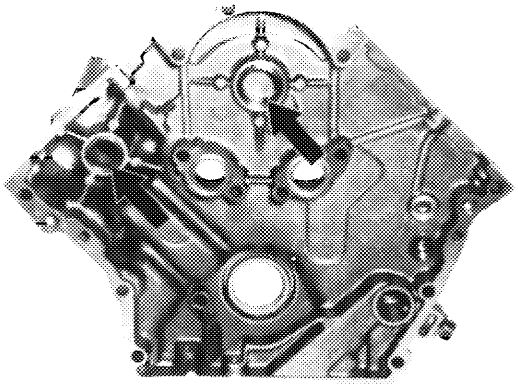

8 Set crankshaft to ignition TDC.

Caution!
In ignition TDC position of No. 1 cylinder, the intermediate sprocket should be positioned such that the marks on the intermediate sprocket and the crankcase are in alignment (arrow).

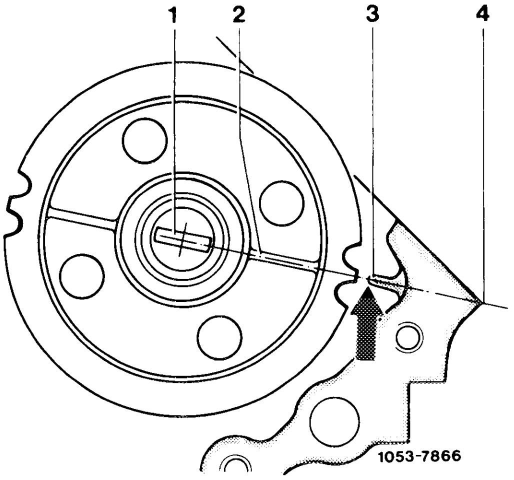

Engine 116

1 Driver
2 Mark on intermediate sprocket
3 Mark on crankcase
4 Reference point for crankcase without mark

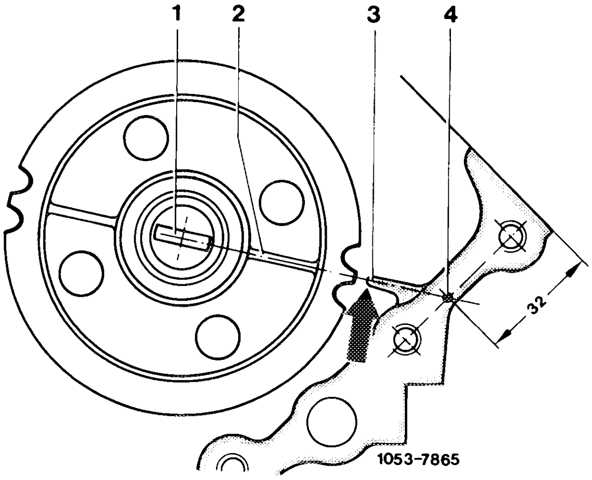

Engine 117

9 Check position of intermediate gear and correct if required.

The marks (arrows) should be in alignment. If not, distributor adjustment after installation will not be possible.

10 For further installation proceed vice versa.

Removal and installation of return sprocket

Tightening torques		Nm
Crankshaft end bolt front	with 3 diaphragm springs[1])	270–330
	with 4 diaphragm springs[1])	370–400

[1]) See Note 03–324.

Special tools

Torque wrench, single-arm, 3/4" drive, 150–800 Nm	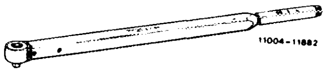	001 589 74 21 00
Socket insert 27 mm, 1/2" drive	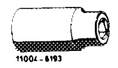	001 589 65 09 00
Detent (starter motor flange left or right)	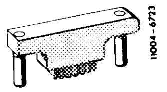	116 589 01 40 00
Allen screwdriver with cross-bar handle 6 mm, 440 mm long	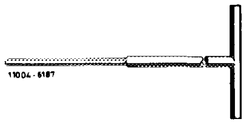	116 589 03 07 00
Sleeve for radial sealing ring front	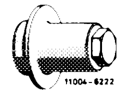	110 589 07 61 00

Conventional tool

Adapter 3/4" inside to 1/2" outside drive	e.g. Hazet, D–5630 Remscheid Order No. 1058 R1

Note

On engine 116 with duplex chain the intermediate sprocket can only be renewed after removal of the left-hand cylinder head.

The bearing bushings for the return sprocket in the crankcase have fallen away as from December 1984 and those in the timing case cover as from March 1985.

Removal

1 Remove timing case cover (01–210).

2 Remove slide rail (87).

3 Slacken timing chain on intermediate sprocket (78) by turning left-hand camshaft.

4 Remove intermediate sprocket (78).

5 Remove return sprocket (1).

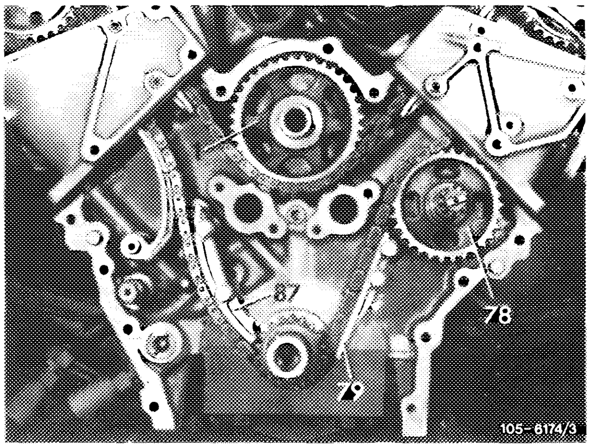

6 If required, pull out bearing bushing in crankcase by means of internal puller.

7 Pull out bearing bushing in timing case cover with internal puller.

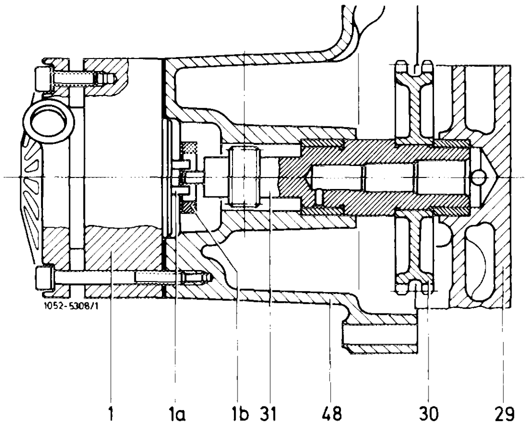

Installation

8 Press bearing bushing into crankcase and timing case cover with lubricating groove at the bottom (arrow).

9 Lubricate bearing bushing in crankcase with oil and introduce return sprocket.

10 Install intermediate sprocket (05–434).

11 For further installation proceed vice versa.

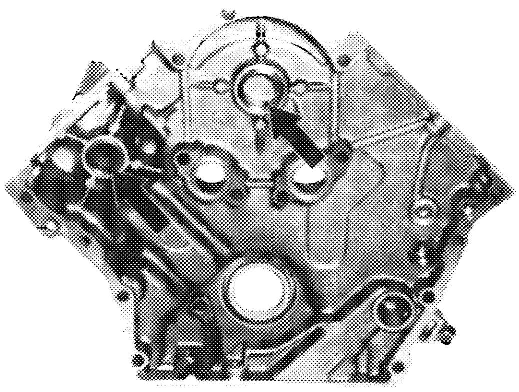

103-9559

Mechanically controlled gasoline injection system with air flow sensor (abbreviated designation CIS)

A. General information

Brief designation of gasoline injection system: CIS

C = Continuously
The fuel is injected **continuously** in a finely atomized spray into the intake passage ahead of the inlet valves.

IS = Injection system drive
This injection system does **not** require to be **driven** by the engine.

Mechanical CIS requires no drive from engine.

The air aspirated by the engine is controlled by means of throttle valve and is measured with an air flow sensor installed prior to throttle valve. The fuel distributor dispenses the respective fuel quantity to the individual engine cylinders in accordance with the air volume measured.

The accurately measured fuel quantity is fed to the injection valves, from where the fuel is injected continuously and in finely atomized shape in front of the intake valves.

The mixture is adapted to operating conditions during cold start, during warm-up stage, as well as during acceleration and full load operation by means of pertinent additional equipment.

Function diagram

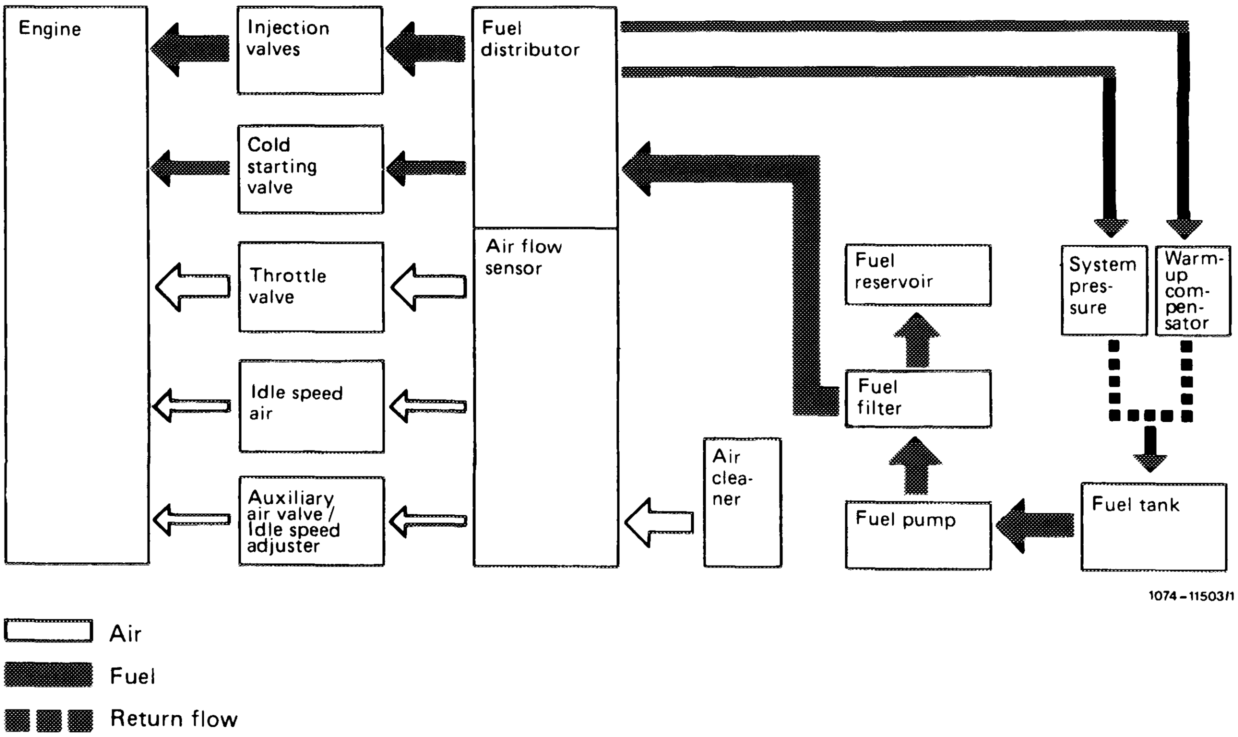

Components of CIS injection system
(prior to September 1981)

Engine 116.960/961, 117.960/961

Characteristics:

- Fuel distributor made of light alloy with integrated pressure compensating valve.
- Fuel pump with external check valve.
- Fuel reservoir located in parallel — 1 connection on pressure side.

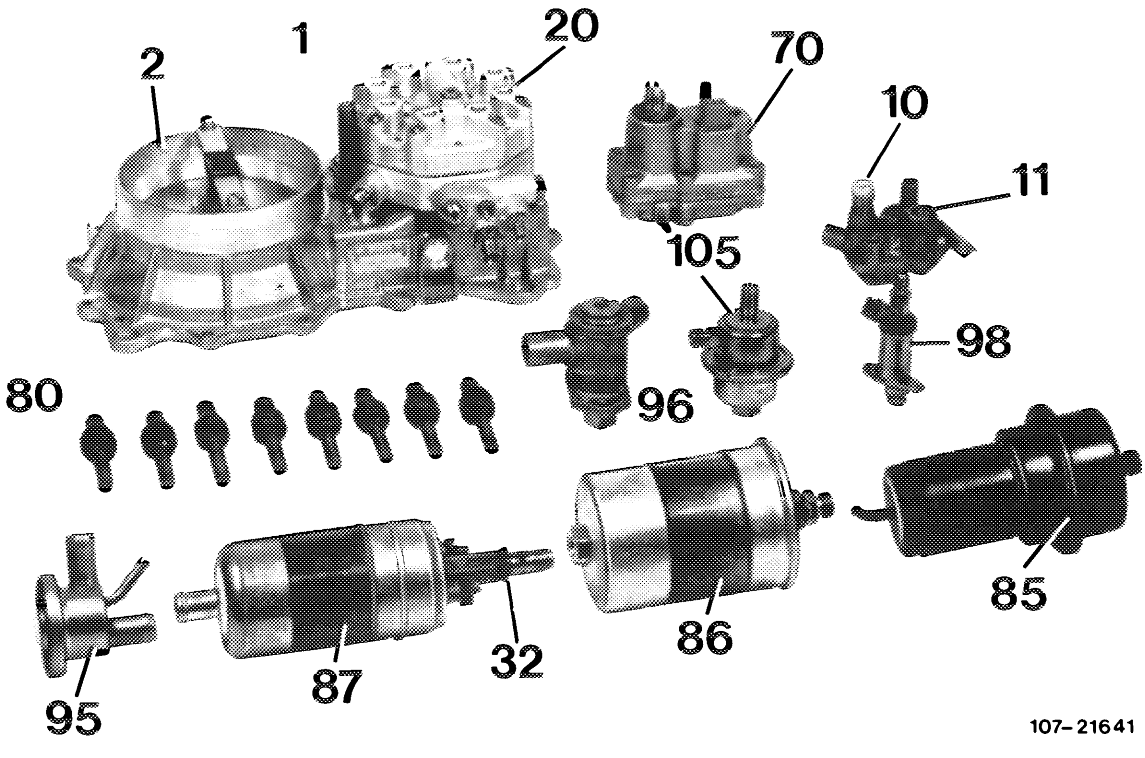

107–21641

1 Mixture control unit	32 Check valve	87 Fuel pump
2 Air flow sensor	70 Warm-up compensator	95 Intake damper
10 Idle speed air screw	80 Injection valves	96 Auxiliary air valve
11 Idle speed air distributor	85 Fuel reservoir	98 Cold start valve
20 Fuel distributor	86 Fuel filter	105 Pressure damper

Components of CIS injection system
(starting September 1981)

Engine 116.962/963, 117.962/963

Characteristics:

- Electronically controlled idle speed adjuster.
- Idle speed air screw, auxiliary air valve and pressure damper are no longer included.

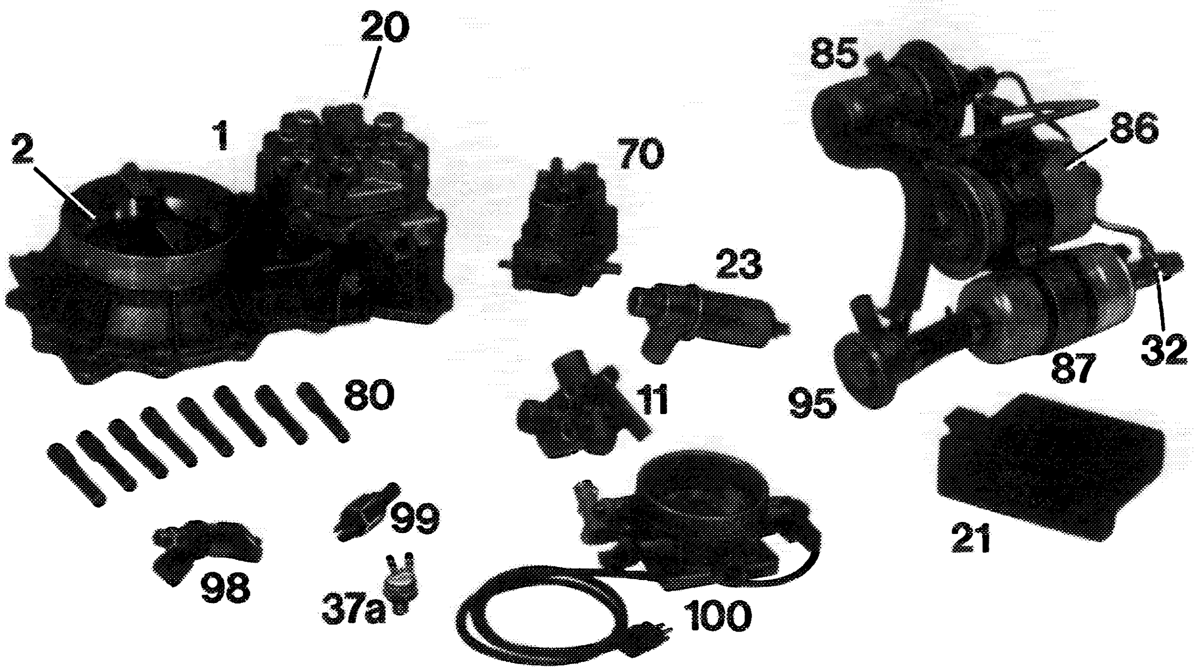

107–26338

1 Mixture control unit
2 Air flow sensor
11 Idle speed air distributor
20 Fuel distributor
21 Control unit
23 Idle speed adjuster
32 Check valve

37a Thermovalve 50 °C for acceleration enrichment
70 Warm-up compensator
80 Injection valves
85 Fuel reservoir
86 Fuel filter
87 Fuel pump

95 Intake damper
98 Cold start valve
99 Thermo time switch
100 Throttle valve housing with throttle valve switch

B. Operation

Diagrammatic view of injection systems

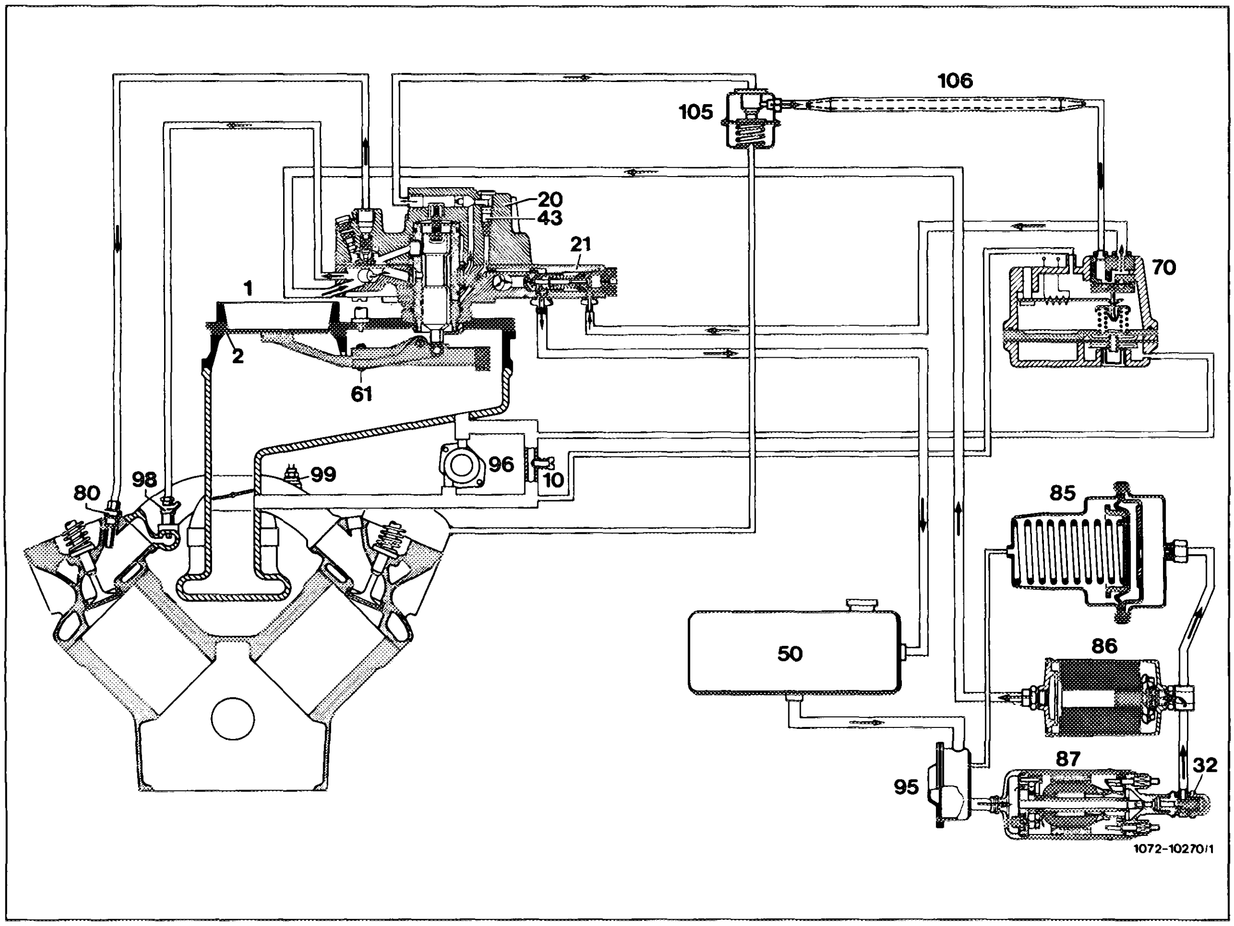

Prior to September 1981

1	Mixture control unit
2	Air flow sensor
10	Idle speed air screw
20	Fuel distributor
21	System pressure regulator
32	Check valve
43	Pressure relief valve
50	Fuel tank
61	Idle mixture adjusting screw
70	Warm-up compensator
80	Injection valve
85	Fuel reservoir
86	Fuel filter
87	Fuel pump
95	Diaphragm damper
96	Auxiliary air valve
98	Cold start valve
99	Thermo time switch
105	Pressure damper
106	Control pressure line with tecalan element

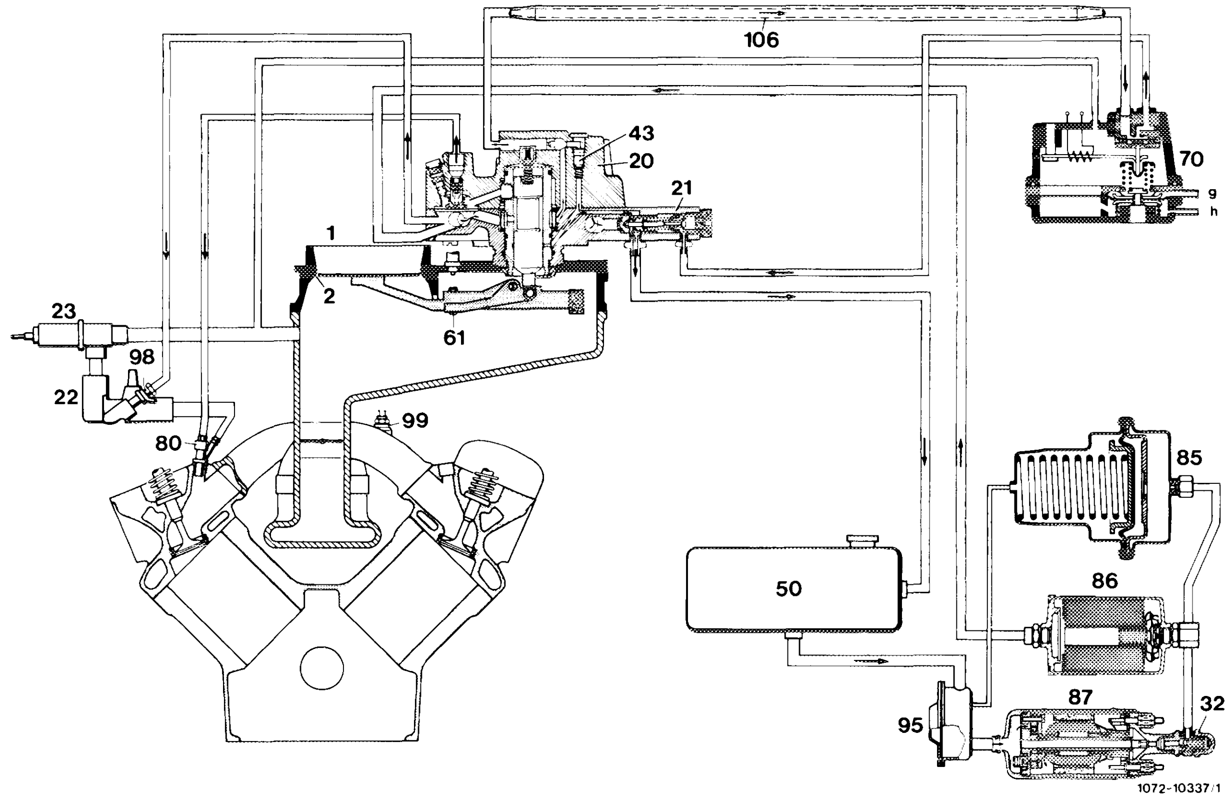

Starting September 1981

1	Mixture control unit	70	Warm-up compensator	106	Control pressure line with tecalan element
2	Air flow sensor	80	Injection valve	g	Upper chamber
20	Fuel distributor	85	Fuel reservoir	h	Lower chamber
21	System pressure regulator	86	Fuel filter		
22	Idle speed air distributor	87	Fuel pump		
23	Idle speed adjuster	95	Diaphragm damper		
32	Check valve	98	Cold start valve		
43	Pressure relief valve	99	Thermo time switch		
50	Fuel tank				
51	Idle-speed-mixture adjusting screw				

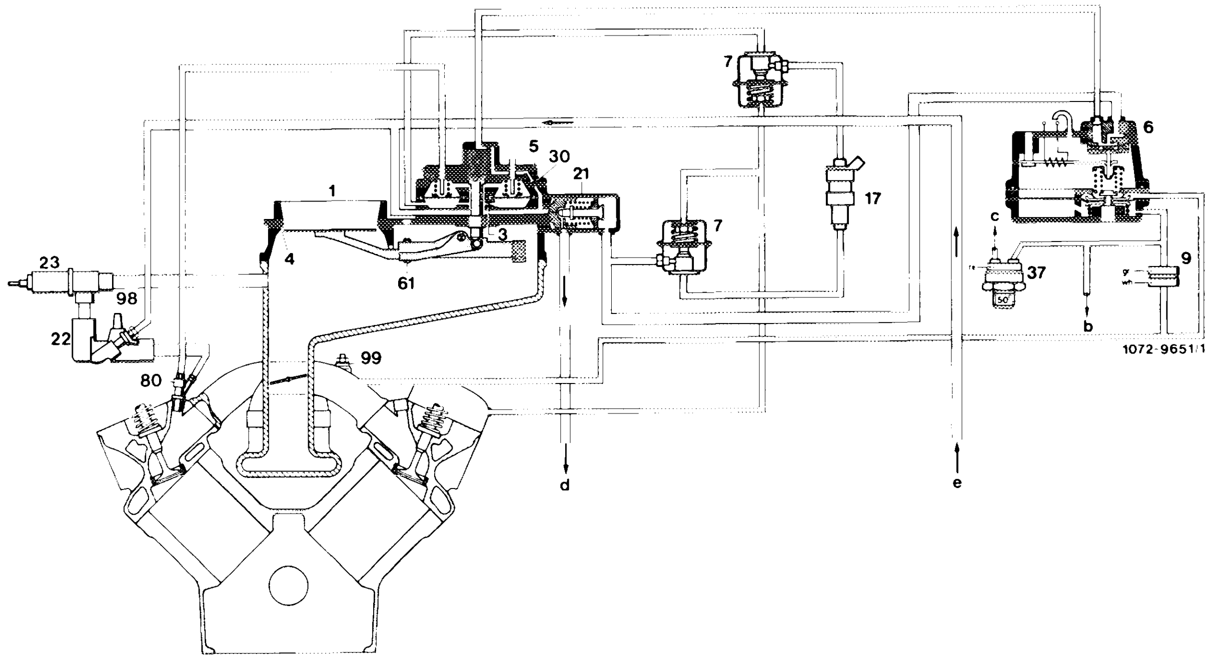

J USA

1 Mixture control unit
3 Orifice
4 Air flow sensor
5 Fuel distributor
6 Warm-up compensator
7 Pressure damper
9 Orifice
17 Timing valve
21 System pressure regulator
22 Idle speed air distributor
23 Idle speed adjuster

30 Pressure reliev valve
37 Thermo valve 50 °C
61 Idle speed-mixture adjusting screw
80 Injection valve
88 Cold start valve
99 Thermo time switch

b To ignition distributor
c To intake manifold
d Fuel return flow
e Fuel feed

Color code
gr = green
re = red
wh = white

Note: For checking lambda control refer to combustion III (14–100).

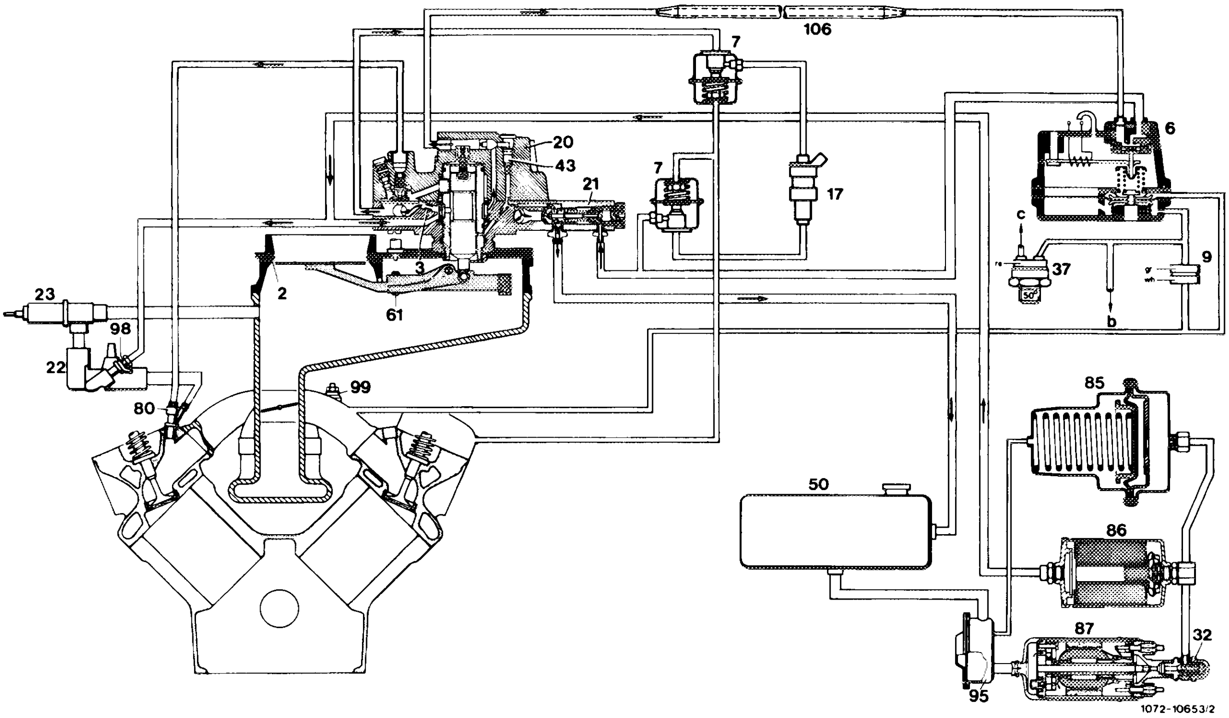

(J) (USA)

2 Air flow sensor
3 Orifice
4 Air flow sensor
6 Warm-up compensator
7 Pressure damper
9 Orifice
17 Timing valve
20 Fuel distributor
21 System pressure regulator
22 Idle speed air distributor
23 Idle speed adjuster
32 Check valve
37 Thermo valve 50 °C
43 Pressure relief valve
50 Fuel tank

61 Idle speed-mixture adjusting screw
80 Injection valve
85 Fuel reservoir
86 Fuelfilter
87 Fuel pump
95 Diaphragm damper
98 Cold start valve
99 Thermo time switch
106 Control pressure line with tecalan element

b To ignition distributor
c To intake manifold

Color code
gr = green
re = red
wh = white

Note: For checking lambda control refer to combustion III (14–100).

The fuel is drawn by electric fuel pump through a damper out of fuel tank and is delivered to the fuel distributor on mixture control unit via fuel filter and fuel reservoir.

A pressure regulator in fuel distributor keeps the system pressure constant. Excess fuel flows pressureless back to fuel tank.

The fuel pump is energized only when the starter is actuated and as long as the engine is running.

The mixture control unit comprises the air flow sensor and the fuel distributor. The air quantity aspirated by the engine is measured in air flow sensor by way of an air flow sensor plate.

For this purpose, the air flow sensor plate is moving in an air funnel and will take a given position in accordance with intake air quantity (floating body principle). This movement of the air flow sensor plate is transmitted to control piston in fuel distributor by means of a lever.

The control pressure acting on control piston opposes this movement. The control piston is moving in a slit carrier, which is centrally located in fuel distributor. The slit carrier is provided with vertical slits, the control or metering slits, in accordance with number of cylinders in engine.

The changing cross section of control slits adapts the fuel quantity to the intake air quantity. Each control slit is provided with a differential pressure valve which keeps the pressure drop on control slit constant independent of cross section.

The fuel flows from the differential pressure valves via injection lines to the injection valves, which are injecting the fuel continuously in front of the cylinder intake valves. When the intake valves are opening, the fuel is drawn with the air into the engine cylinders.

Auxiliary equipment

A warm-up compensator regulates the control pressure, which acts on the control piston and serves for enriching the mixture during warm-up stage and at full load.

An auxiliary air valve which is controlled by an expansion element in dependence of the coolant temperature provides a larger mixture quantity during warm-up period. Starting September 1981, this function is performed by an electronically controlled idle speed adjuster.

A cold start valve serves as a cold start aid.

C. Layout and function

Mixture control unit

The mixture control unit is a component comprising the air flow sensor and the fuel distributor.

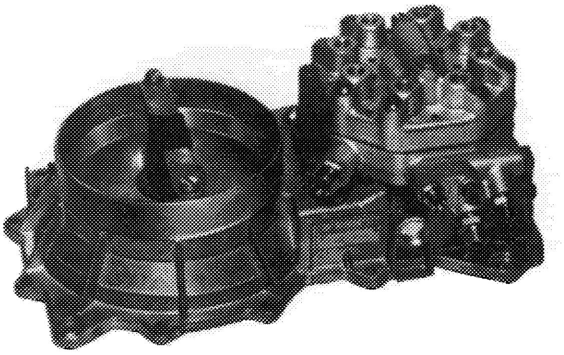

107-21636

Air flow sensor

The air flow sensor (1) comprises an air funnel and an air flow sensor plate (4) fastened to a lever (2). The lever swivels around a pivot (3). The dead weight of the air flow sensor plate is compensated by a counterweight (5).
The entire intake air quantity of engine is measured in air flow sensor which is installed in front of throttle valve.

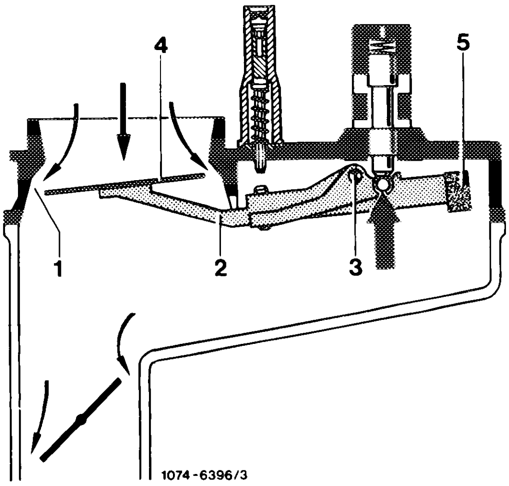

1074-6396/3

Measuring of the air quantity is based on floating-body principle, which says, that a floating body is moving in a uniform cone in linear relation with air flow.

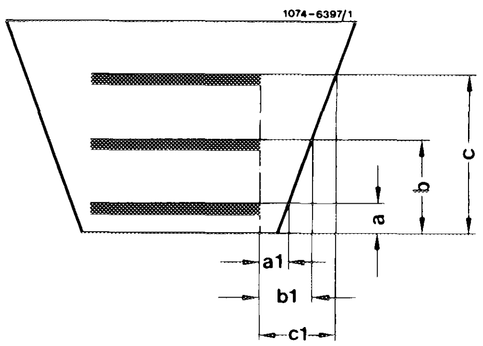

At stroke (a) the floating body shown in illustration clears the annular surface (a 1). The result is: The larger the quantity passing through the opening, the larger the floating body stroke.

In air flow sensor of mixture control unit, the air flow sensor plate is the floating body, the air funnel is the cone.

The air quantity aspirated by the engine changes the position of the air flow sensor plate. This air flow sensor plate stroke is transmitted by means of a lever with a definite ratio to the control piston which regulates the fuel flow rate through control slits.

The following forces will become effective at air flow sensor: The intake air acts as an air force (F 1) on air flow sensor plate. The opposing force is the hydraulic force (F 2) of control pressure, which acts on control piston by way of an orifice.

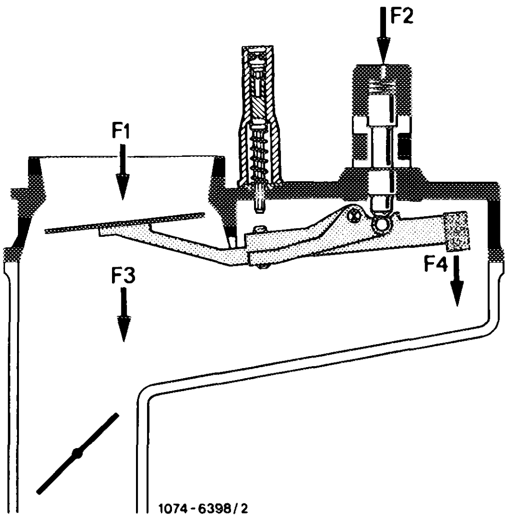

The dead weight of the air flow sensor plate and the lever, force (F 3), is compensated by the counter-weight (F 4).

The position of the air flow sensor plate keeps changing until the air force (F 1) and the hydraulic force (F 2) are in balance.

As a result, the air flow sensor plate deflection and thereby the position of the control piston with reference to air flow rate can be influenced by the control pressure.

Each engine has a given characteristic field, that is, the mixture must be enriched in given load and rpm ranges, in others, the mixture must be made leaner.

This precise adaptation to the engine characteristics is determined by the shape of the air funnel. For this reason, the air funnel deviates from a pure cone shape.

Note: No subsequent changes should therefore be made on air funnel and on air flow sensor plate.

Example: If the correction stage in air funnel is wider than the cone, the air flow sensor plate stroke in corrected air funnel is smaller with the air flow rate remaining the same. The fuel air mixture is getting leaner.

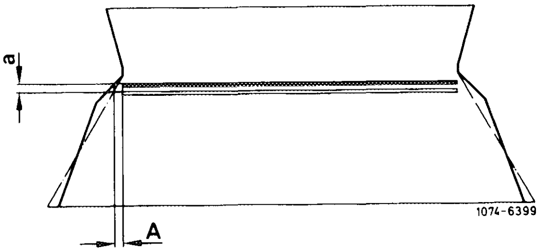

Funnel cone

If the correction stage in air funnel is tighter than the cone, the air flow sensor plate stroke is higher with the air flow rate remaining the same. The fuel air mixture is getting richer.

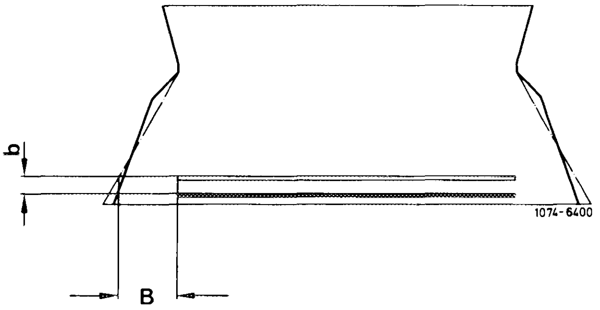

Funnel cone

On stopped engine the air flow sensor plate is seated at the closest (narrowest) point of air funnel. The rest position is provided by a resilient stop. The air funnel is getting wider also in the opposite direction, so that in the event of an engine kickback, the pressure can be reduced. The air flow sensor plate will then overcome the resilient stop.

Fuel distributor

The fuel distributor distributes the fuel quantity to the individual cylinders in accordance with position of air flow sensor plate in air flow sensor.

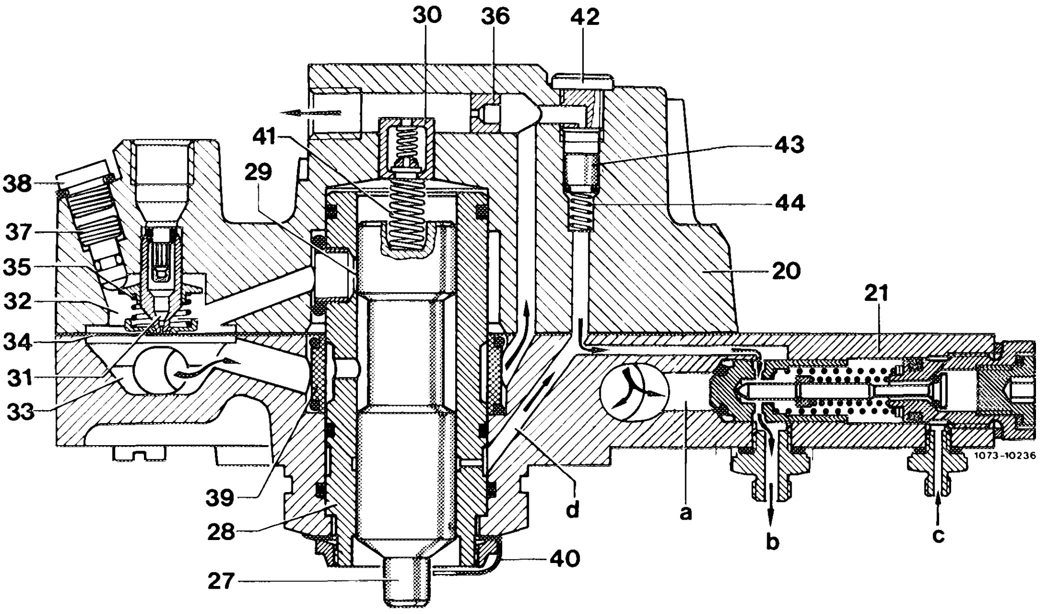

20 Fuel distributor
21 System pressure regulator
27 Timing piston
28 Slit carrier
29 Control slit
30 Damping restriction
31 Differential pressure valve
32 Upper chamber
33 Lower chamber
34 Diaphragm
35 Compression spring

36 Orifice
37 Differential pressure-adjusting screw
38 Closing plug
39 Filter
40 Sheet metal lock
41 Compression spring
42 Closing plug
43 Piston
44 Compression spring

a System pressure
b Return flow to fuel tank
c Return from warm-up compensator
d Return flow from control piston

The fuel distributor is made of light alloy and comprises two housing halves. The fabric diaphragm (34) between the upper and lower half separates the interior of the fuel distributor into the lower and the upper chambers (32 and 33).

The fuel is delivered by the electric fuel pump, first into the lower chambers (33), which are connected with each other.

The connection from the lower chambers (33) to the upper chambers (32) and thereby also to the injection valves is established by the slit carrier (28) and the control piston (27).

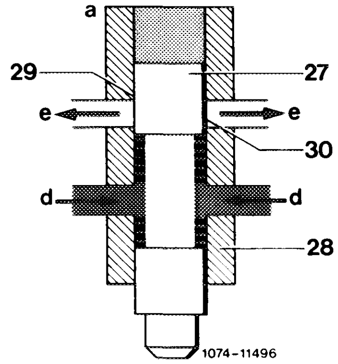

27 Control piston
28 Slit carrier
29 Control slit
30 Control edge
a Rest position
d Fuel inlet
(lower chamber)
e To upper chamber

■ Fuel inlet
▒ Control pressure
□ Metered fuel quantity

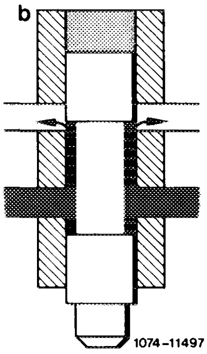

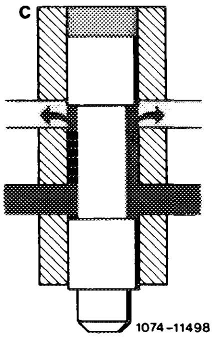

b Partial load
c Full load

■ Fuel inlet
▒ Control pressure
□ Metered fuel quantity

The slit carrier (28) is a hollow cylinder into which the control slits (29), slits 0.1–0.2 mm wide and 5 mm high, are machined. Each engine cylinder has one control slit.

The control piston (27) in slit carrier (28) determines with its control edge (30) the opening cross section of the control slits (29) and thereby the flow rate to the upper chamber and the injection valves.

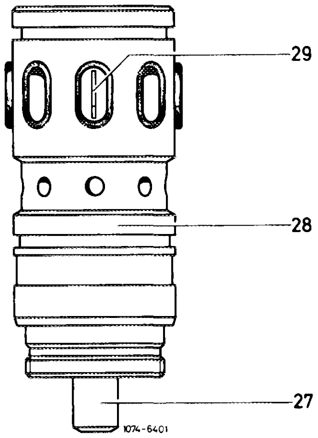

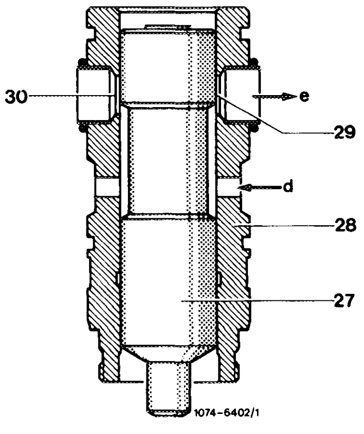

27 Control piston
28 Slit carrier
29 Control slit
30 Control edge
d Fuel inflow (lower chamber)
e To upper chamber

Each control slit with a differential pressure valve which keeps the pressure drop (differential pressure) at control slits constant independent of control slit opening. As a result, the metered fuel quantity depends exclusively from the exposed cross section.

Fluctuations of system pressure and deviations of injection valve opening pressure have no influence. The characteristic line control piston stroke – fuel quantity is linear.

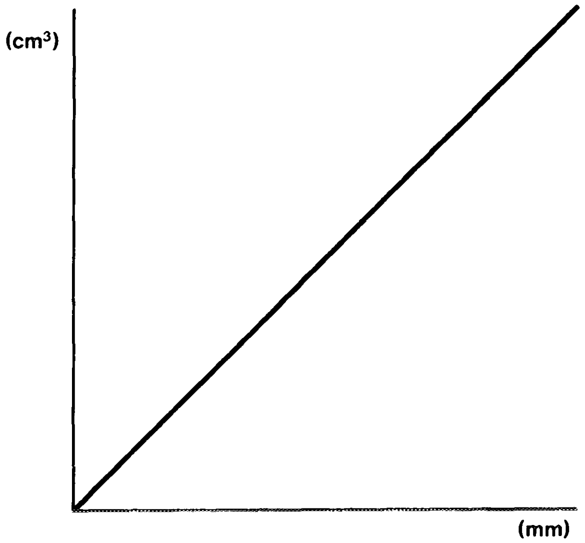

1074–11510

The differential pressure valves (31) are divided into lower and upper chambers by a diaphragm (34). The lower chambers (33) are connected by means of an annular channel. The pressure in lower chambers corresponds to system pressure. The pressure in the upper chambers (32) is lower by the differential pressure of 0.1 bar. This difference is provided by the compression spring (35) installed in upper chamber, as a result of which an equilibrium of forces is attained on diaphragm between upper and lower chamber.

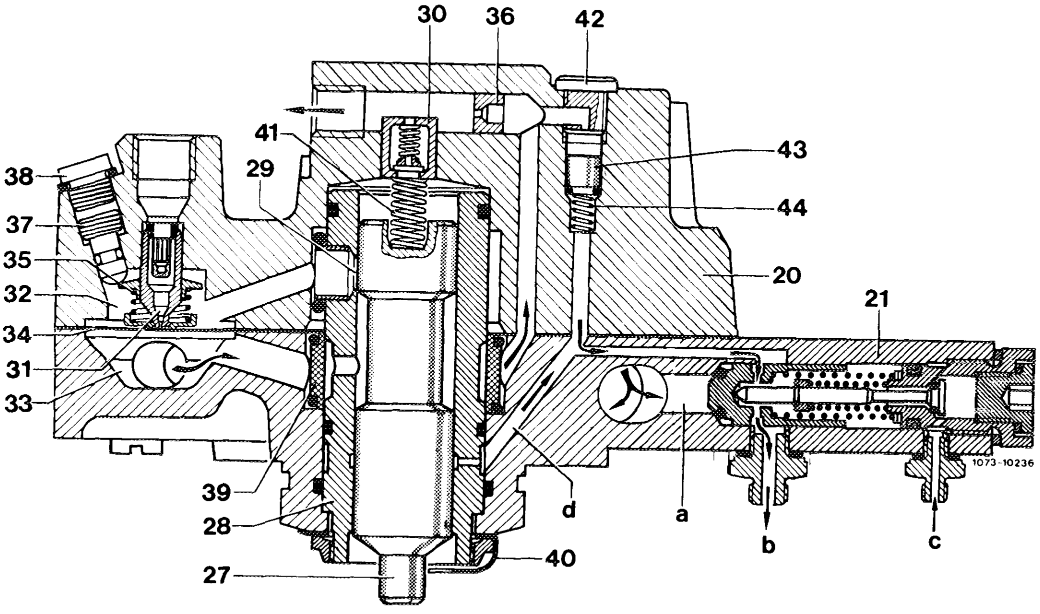

20 Fuel distributor
21 System pressure regulator
27 Control piston
28 Slit carrier
29 Control slit
30 Damping restriction
31 Differential pressure valve
32 Upper chamber
33 Lower chamber
34 Diaphragm
35 Compression spring
36 Orifice
37 Differential pressure-adjusting screw
38 Closing plug
39 Filter
40 Sheet metal lock
41 Compression spring
42 Closing plug
43 Piston
44 Compression spring

a System pressure
b Return flow to fuel tank
c Return flow from warm-up compensator
d Return flow from control piston

Function of differential pressure valves: If the flow rate on control slit (29) is increased, the pressure in upper chamber (32) is temporarily increased, so that the differential pressure is getting less than 0.1 bar. Since the spring force supports the pressure on diaphragm top, the diaphragm arches more in downward direction and therefore exposes a larger outflow cross section toward injection valve. The fuel pressure against diaphragm top is thereby again reduced. There is once again equilibrium between diaphragm upper and lower side, the diaphragm remains in wide-open position.

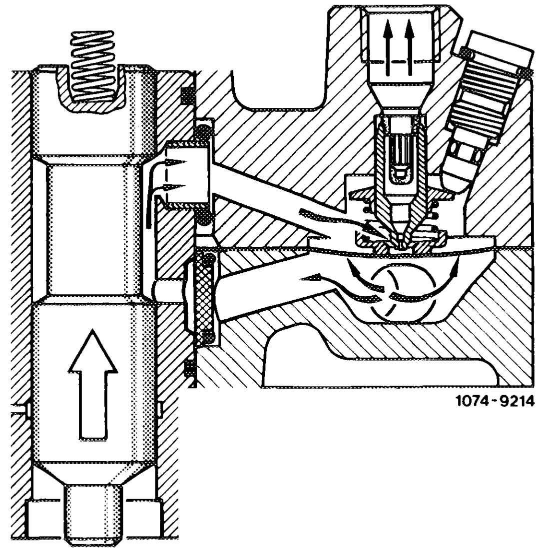

Vice versa, the pressure against diaphragm top drops when the control slit is closed (the differential pressure is increasing). The outflow cross section will be reduced until equilibrium is once again established.

This procedure is repeated during each new control piston position, that is, during each change of air flow sensor plate position.

The fuel distributor top has 8 closing plugs (38) with adjusting screws (37) for differential pressure valves (31) underneath. The differential pressure valves are set by manufacturer, readjustment is not permitted.

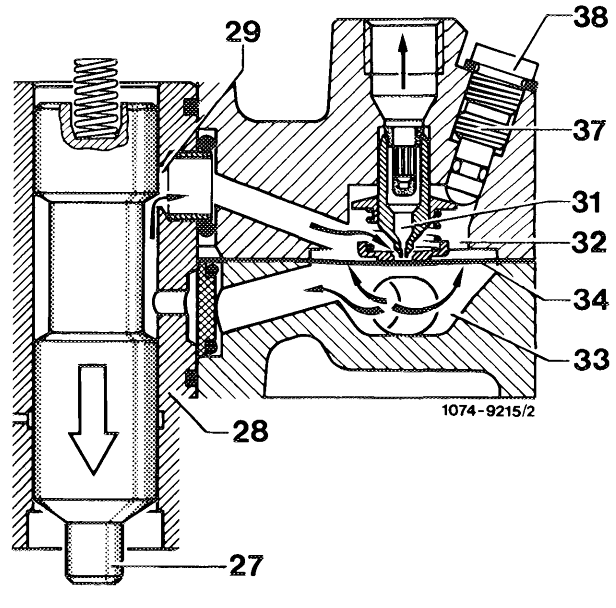

27 Control piston
28 Slit carrier
29 Control slit
31 Differential pressure valve
32 Upper chamber
33 Lower chamber
34 Diaphragm
37 Closing plug
38 Adjusting screw

A pressure compensating valve (arrow) is integrated with fuel distributor top.

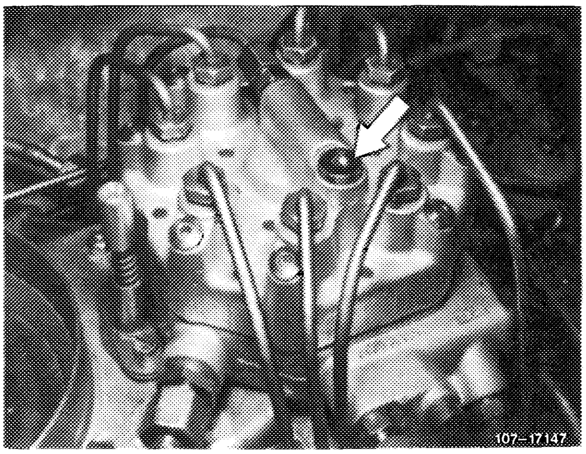

The pressure compensating valve remains closed as long as the fuel system is under pressure.

In the event of a pressure drop "following a long stationary period and cooling down of fuel" below 0.3–0.05 bar gauge pressure the pressure compensating valve will open.

Piston (2) is raised and pressure compensation between system pressure and return flow pressure proceeds by way of piston gap.

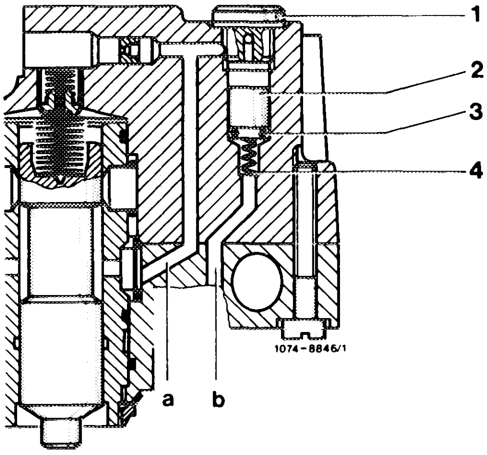

a System pressure
b Return flow

This will prevent that the control piston in fuel distributor is raised in direction of full load when the engine is stopped and that a high enrichment of mixture shows up during a cold start.

The fuel system is subdivided into the following pressure circuits:

System pressure circuit

The system pressure circuit has a constant overpressure. The pressure extends from fuel pump via fuel filter, fuel reservoir, fuel distributor (differential pressure valve-diaphragm underside) to cold start valve.

The differential pressure valve-diaphragm top in fuel distributor is subject to system pressure reduced by 0.1 bar.

The pressure in fuel lines from fuel distributor to injection valves corresponds to opening pressure of injection valves.

The excess fuel flows pressureless from system pressure regulator in fuel distributor through return flow line back to fuel tank.

Control pressure circuit

In fuel distributor the control pressure circuit is branched-off from system pressure circuit by means of an orifice (36). The orifice is in top of fuel distributor.

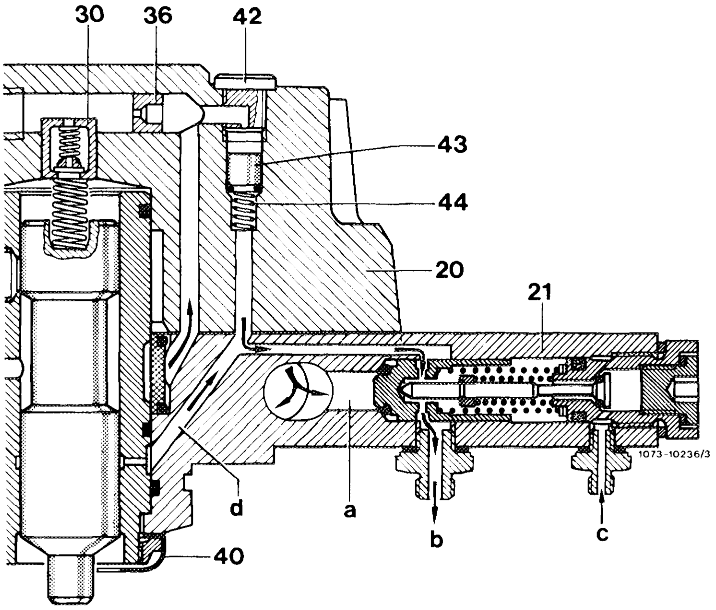

The control pressure circuit has a variable pressure of 0.5–3.8 bar gauge pressure which is controlled by warm-up compensator depending on temperature and load.

The control pressure acts on top of control piston as a counterforce to the air pressure occurring at air flow sensor plate.

High control pressure = less fuel
(lean mixture)

Low control pressure = more fuel
(richer mixture)

A capsule valve with a damping restriction (30) is located between the space above control piston and control pressure line.

The capsule valve serves for quick emptying of area above control piston during transition into warm-up stage. The restriction dampens the movements of the air flow sensor plate in the event of a pulsating air flow.

Simultaneously, the restriction determines the degree of excessive oscillation of air flow sensor plate and thereby the momentary transition enrichment during acceleration. As a result, the transition characteristics during acceleration are improved.

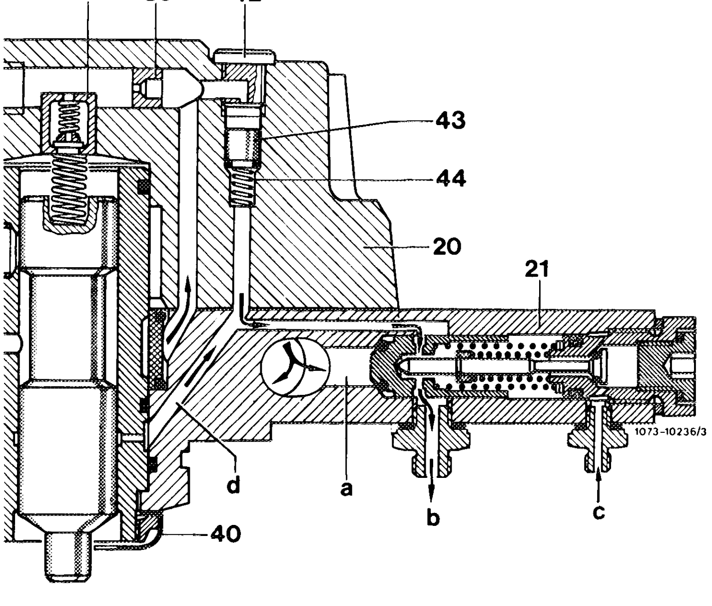

During acceleration, the quick emptying of the space above the control piston results in pressure peaks in control pressure line. To make sure that these pressure peaks are not damaging the diaphragm in warm-up compensator, a pressure damper (105) or a tecalan element is installed in control pressure line (106).

1st version

Control pressure line with pressure damper (105) and tecalan element (106). The tecalan element is closed at the front and at the rear (float).

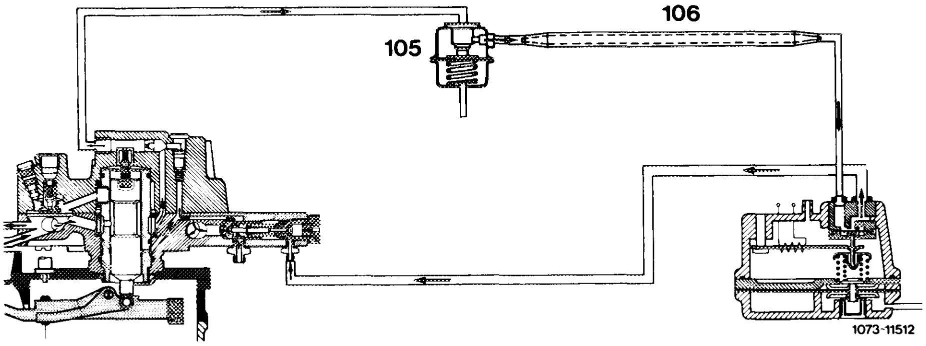

2nd version

The tecalan element in control pressure (106) has been extended. This made installation of pressure damper unnecessary.

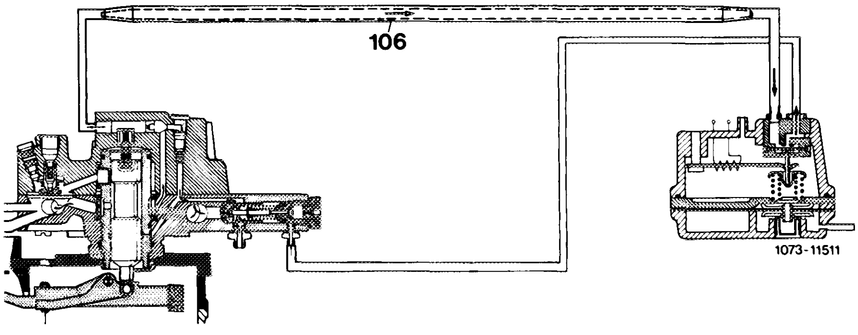

Damper

To avoid noises, a diaphragm damper is installed between fuel tank and fuel pump.

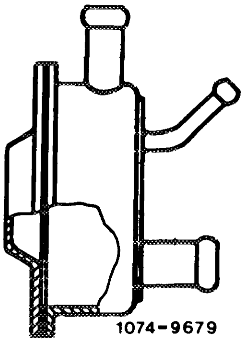

Fuel pump:

Characteristics:

- Roller-cell pump.
- Driven by a permanently excited electric motor.
- Fuel flowing through pump ("wet pump").
- No risk of explosion; due to a shortage of oxygen, no ignitable mixture can be formed in the relatively small spaces.

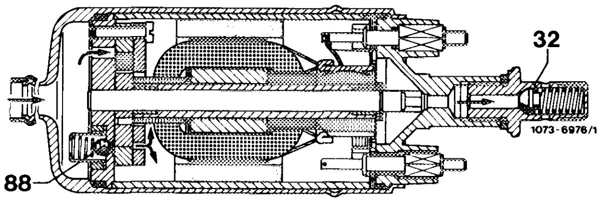

32 Check valve
88 Pressure relief valve

Operation

The rotor disk (1) has 5 pocket-shaped recesses with a roller (2) located in each recess. Centrifugal forces are pushing the rollers outwards against rotor ring in fuel pump housing (3), where they are serving as sealing rings. The eccentric location of rotor ring in fuel pump housing (3) in relation to rotor disk (1) changes the volume between the rollers, so that a delivery effect is obtained.

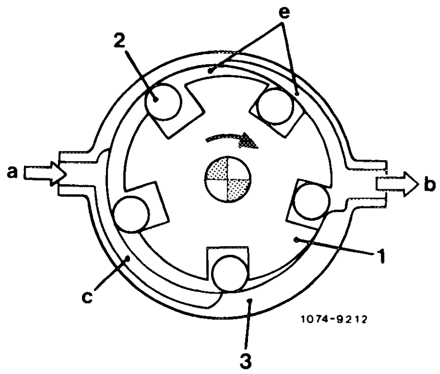

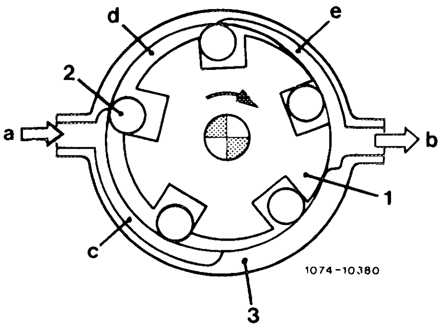

1 Rotor disk
2 Roller
3 Pump housing with rotor ring
a Suction side
b Pressure side
c Fuel, pressureless
d Fuel delivery
e Fuel under pressure

The delivery capacity of the fuel pump is designed in such a manner that the necessary pressure in fuel system is provided in all operating conditions, so that the engine is always provided with cool fuel.

The pressure relief valve (88) opens at a pressure of approx. 8 bar and connects the suction side with the pressure side inside fuel pump. This will prevent an additional pressure increase, e.g. at narrow spots in pressure or return flow system.

On stopped engine, the check valve (32) prevents that the fuel pressure is reduced by way of fuel pump. As a result, fuel vapor lock will be widely eliminated.

The fuel pump is provided with electric current by means of a relay. The fuel pump is therefore running only:

a) When the starter is operated.

b) When the engine is running.

This will prevent the delivery of fuel with the ignition switched on and the engine stopped (e.g. following an accident).

Fuel filter

The fuel filter is a fine filter with paper element. The fuel flow direction is indicated by arrows. A damper is installed to eliminate noise.

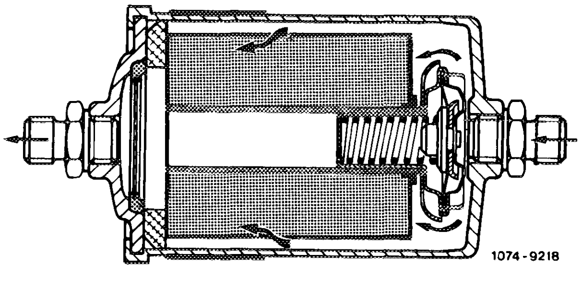

Fuel reservoir

The interior of the fuel reservoir is subdivided into a spring and storage chamber.

As soon as the fuel pump is running, the reservoir is filled and the diaphragm spring is preloaded. In this position, which corresponds to the max. storage volume, the diaphragm remains under tension as long as the engine is running.

With the engine stopped, the pressure in fuel system remains intact until the storage volume is exhausted. The respective time depends on the inner sealing of the system. For safety reasons, the spring chamber of the fuel reservoir is connected to the damper of the fuel pump by way of the leak line. As a result, no fuel can flow out in the event of a defective diaphragm.

During operation, the fuel reservoir contributes to the damping of fuel pump noise.

The fuel reservoir is located in parallel to fuel filter. It is filled through orifice (arrow) only slowly with fuel. From the fuel filter, the fuel flows directly into the feed line toward engine. These measures serve to establish the fuel pressure at the injection valves faster, which in turn will favor starting characteristics and smooth running after starting.

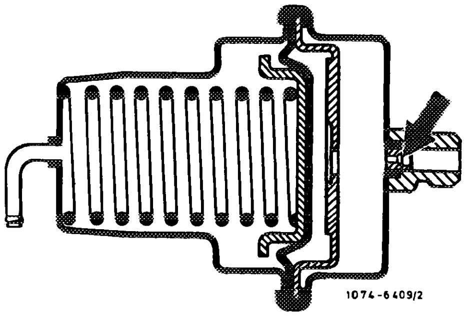

After the engine has been stopped, the fuel system is kept under pressure for a given period under influence of fuel reservoir.

This will widely prevent fuel vapor lock in fuel system, which in turn will improve hot starting characterisitics.

System pressure regulator

The system pressure regulator is a piston pressure regulator and integrated in fuel distributor. The system pressure regulator has the following functions:

a) Controlling the system pressure.

b) After stopping engine, making sure that the system pressure drops quickly under influence of opening pressure of injection valves, so that injection valves are reliably closing.

c) Sealing the system and control pressure circuit in relation to return flow, so that the pressure in fuel system is maintained for a longer period and that a good hot start is obtained.

The fuel is delivered by the fuel delivery pump initially into the lower chambers of the fuel distributor, which are connected by an annular channel.

Since the fuel pump delivers more fuel than the engine consumes, the pressure in the lower chambers increases.

This will displace the regulator piston (22) against force of spring (24) to clear the fuel return flow (b) to the extent that the fuel pressure in system pressure circuit attains the preset value.

During this procedure, the regulator piston (22) will also open the push-up valve (22a) and thereby establish a connection from warm-up compensator-return flow (c) to fuel return flow (b).

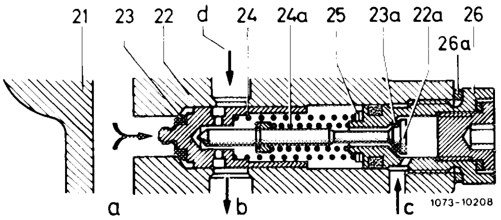

System pressure regulator in closed position

With the fuel delivery pump stopped, the regulator piston is returned to its sealing surface by the force of spring (24). The push-up valve (22a) can now also be pushed back to its closing position by the force of spring (24a). With the push-up valve closed, the fuel return flow from warm-up compensator is interrupted.

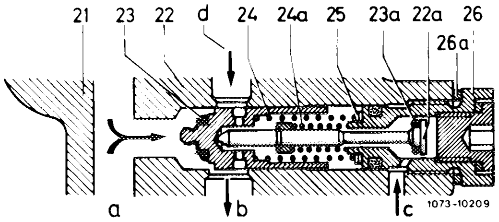

System pressure regulator in opened position

21 System pressure regulator
22 Regulator piston
22a Return flow valve
23 Contour ring
23a O-ring, vulcanized-on
24 Compression spring
24a Compression spring
25 Washer
26 Closing plug
26a Copper sealing ring

a System pressure
b Return flow to fuel tank
c Return flow from warm-up compensator
d Return flow from control piston leak quantity

Injection valves

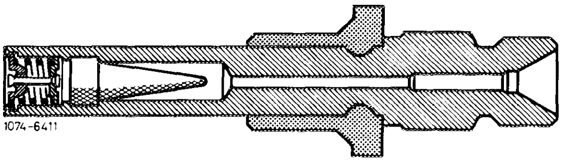

Each cylinder is associated with an injection valve. The injection valves are mounted in intake manifold.

The injection valves are atomizing the fuel even in minimum quantities to an extremely fine degree by means of an installed blow valve.

Auxiliary air valve

During the warm-up period, the engine requires an increased quantity of mixture to overcome the increased friction losses and to obtain perfectly smooth running characteristics.

The auxiliary air valve is controlled by an expansion element and supplies the engine with additional air in dependence of the coolant temperature.

Since this additional air is measured by means of the air flow sensor plate, the control piston distributes the pertinently increased quantity of fuel.

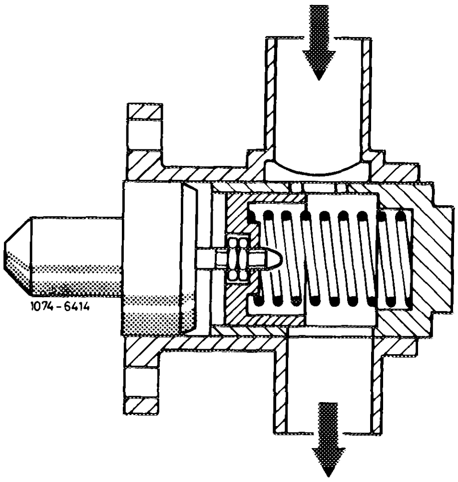

The auxiliary air valve is:

Open below −20 °C,
closed above +65 °C.

Starting September 1981, the auxiliary air valve has been replaced by an electronically controlled idle speed adjuster (refer to electronic idle speed control).

Cold start valve

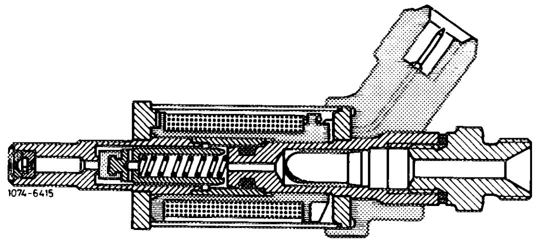

The electromagnetic cold start valve is activated by system pressure. It is controlled via terminal 50 and by a thermo time switch. The thermo time switch is closed at temperatures below +15 °C coolant temperature. The closing time of the thermo time switch and thereby the opening time of the cold start valve increases with decreasing temperature and amounts to 12 seconds at –20 °C.

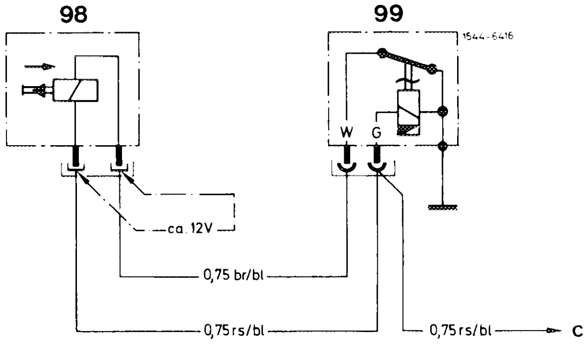

98	Cold start valve
99	Thermo time switch
c	To terminal 50

Warm-up compensator

The warm-up compensator regulates the control pressure, which acts on control piston and serves for enriching the mixture during warm-up stage and at full load.

Two fuel lines, the control pressure line and the return flow line, are connected to warm-up compensator.

The control pressure acts on top of diaphragm valve (71), which throttles the outflow cross section of the return flow line.

Two valve springs (72 and 73), which are tuned to the normal control pressure, are effective at underside.

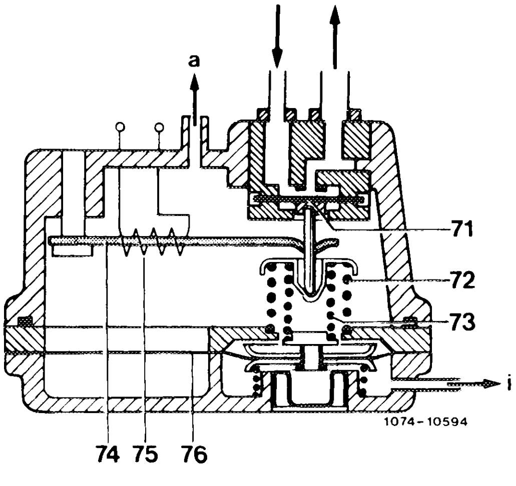

71	Diaphragm valve
72	Outer valve spring
73	Inner valve spring
74	Bimetallic strip
75	Heater coil
76	Vacuum diaphragm
a	To intake manifold (vacuum)
i	To leak line (atmosphere)

A bimetallic strip (74), which is provided with a heater coil (75), is installed for enrichment during warm-up stage. The cold bimetallic strip acts in opposition to valve springs (72 and 73), so that the diaphragm valve (71) opens and the control pressure is reduced. Heating up will gradually eliminate the effect of the bimetallic spring until the control pressure has attained its normal value.

Full load enrichment

Prior to September 1981

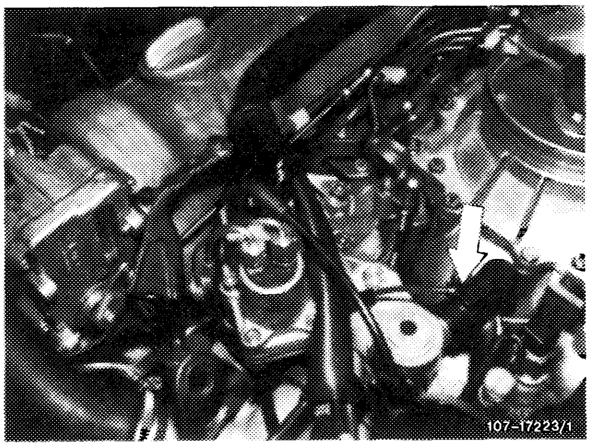

For full load enrichment the warm-up regulator is divided into two chambers by means of a vacuum diaphragm (76). The intake manifold vacuum "a" is effective in upper chamber. The lower chamber is connected to atmosphere via connection "i".

To avoid the entry of dirt or water, the venting system is connected to contour hose (arrow).

At idle and in partial load range the upper chamber is subject to a vacuum and the vacuum diaphragm (76) is resting against upper stop. In this position, the spring force provides the normal value of the control pressure.

At full load, the vacuum in upper chamber is reduced and the vacuum diaphragm (76) is moving downwards. The force of the inner valve spring (73) is getting less and the control pressure is thereby reduced to the full load value.

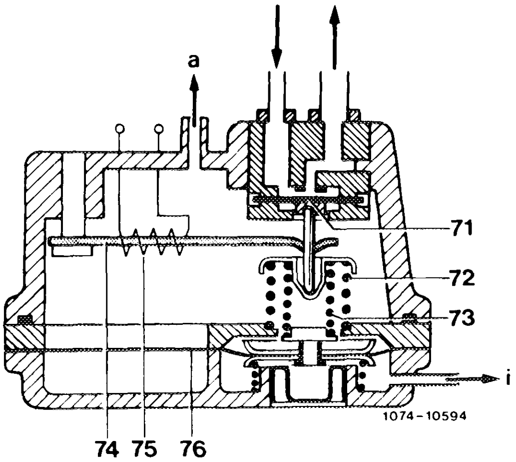

Starting September 1981

The full load enrichment is mechanically/pneumatically controlled. In full load position of throttle valve, the switchover valve (13) is switched by means of a gui guide lever (11a). Connections (e and c) are now connected and the vacuum from vacuum reservoir (14) is acting on vacuum chamber (connection h) of warm-up compensator.

The vacuum reservoir (14) is mounted in lefthand front wheel house.

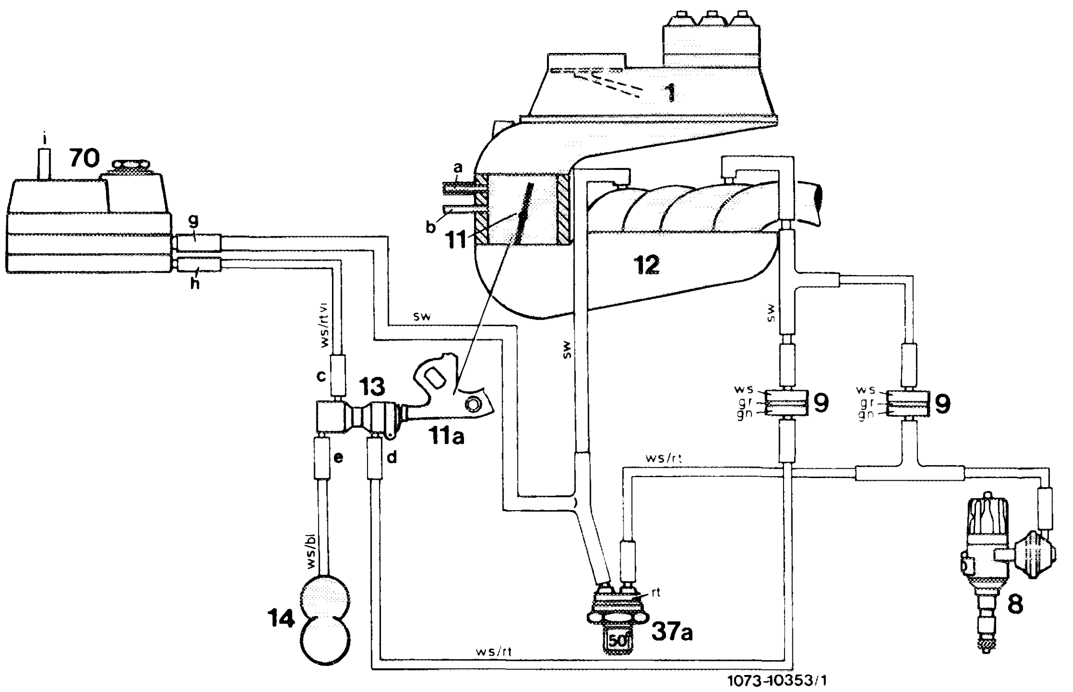

The intake manifold vacuum, which is less at full load, is acting on upper chamber (77). This will deflect the diaphragm in downward direction. The inner compression spring (73) is relieved and the force against control diaphragm (71) is reduced. The mixture is enriched.

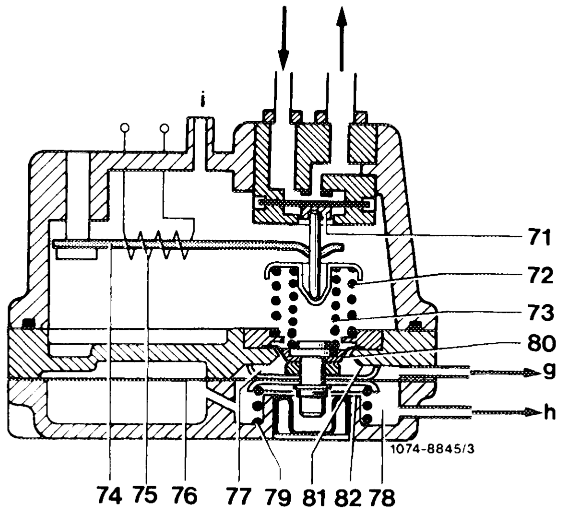

Acceleration enrichment

The acceleration enrichment is controlled in dependence of a vacuum at a coolant temperature below 50 °C (70 °C starting August 1984). There is no enrichment at higher coolant temperatures.

Two springs are exerting pressure against control diaphragm (71) in warm-up compensator, of which the outer spring (72) is firmly supported in housing and the inner spring (73) is loaded or unloaded in dependence of the vacuum.

The warm-up compensator lower half is subdivided into a upper and a lower chamber (77 and 78) by a diaphragm (76). The lower chamber holds a compression spring (79). Both chambers are subject to intake manifold vacuum.

The vacuum line of upper chamber (connection g) runs directly to intake manifold. The vacuum line of the vacuum chamber (connection h) runs via switchover valve (13) on throttle valve housing to intake manifold. The vacuum line is provided with an orifice (9). Connections "c" and "d" of switchover valve (13) are connected to each other. Switchover operatest at full throttle only (full load enrichment). In such a case, connections "e" and "c" are connected to each other.

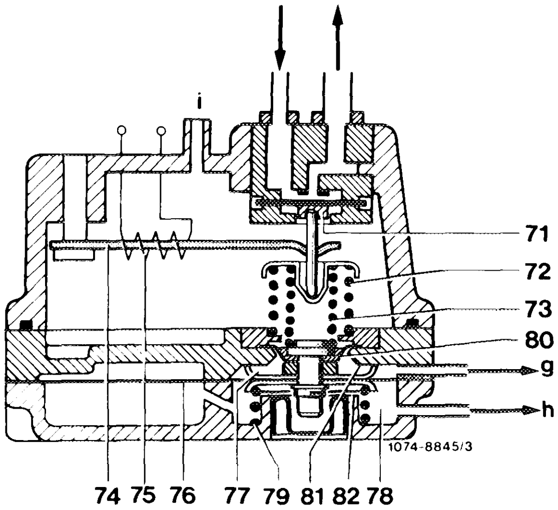

9	Orifice	77	Upper chamber
71	Control diaphram	78	Lower chamber
72	Outer valve spring	79	Compression spring
73	Inner valve spring	g	Connection upper chamber
74	Bimetallic spring	h	Connection lower chamber
76	Vacuum diaphragm	i	To contour hose (atmosphere)

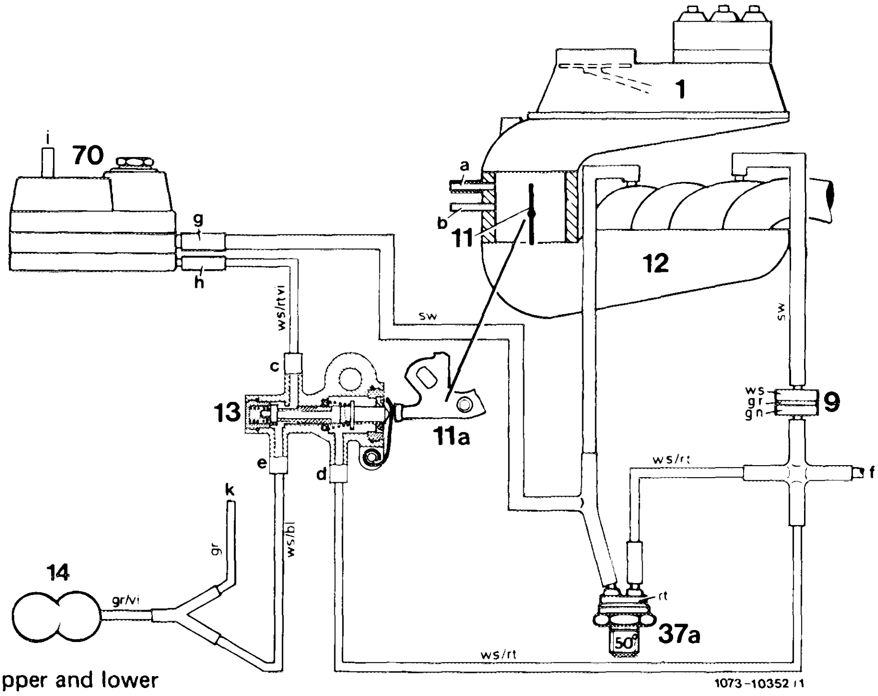

Acceleration enrichment < 50 °C

9	Orifice
13	Switchover valve
14	Vacuum reservoir
37a	Thermovalve 50 °C or 70 °C
f	To ignition distributor
g	Connection upper chamber
h	Connection lower chamber
i	To contour hose (atmosphere)
k	Connection to intake manifold

At constant speed the vacuum in upper and lower chamber (77 and 78) is the same. The vacuum diaphragm is resting against upper stop in vacuum chamber under influence of compression spring (79).

Upon acceleration, the vacuum in the upper chamber is reduced faster than in lower chamber under influence of orifice (9).

The vacuum diaphragm will move to lower stop.

The inner spring is relieved up to internal pressure compensation of the two chambers, so that the pressure against control diaphragm will become less. As a result of the now lower control pressure (increase of outflow cross section) a reduced force will act on control piston in fuel distributor. Consequently, the air flow sensor plate is increasingly deflected at similar air flow rate and a larger fuel quantity will be alloted (mixture enrichment).

The thermovalve (37a) opens starting at a coolant temperature of 50 °C (70 °C starting August 1984). The orifice in lower chamber will thereby be bypassed and the acceleration enrichment will be cancelled.

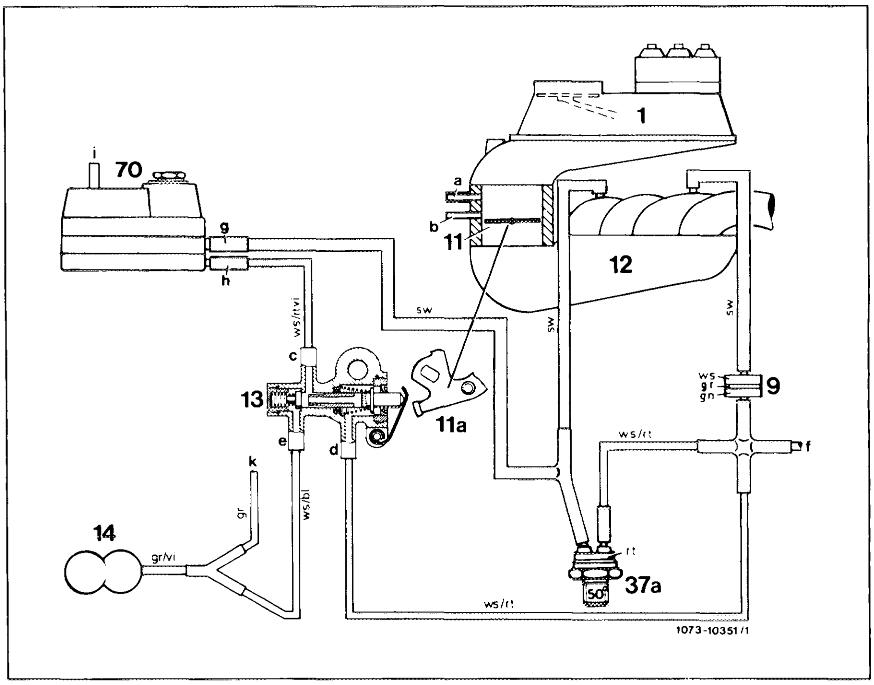

Partial load approx. 80 °C

9	Orifice
13	Switchover valve
14	Vacuum reservoir
37a	Thermovalve 50 °C
f	To ignition distributor
g	Connection upper chamber
h	Connection lower chamber
i	To contour hose (atmosphere)
k	Connection to intake manifold

USA starting 1985

Acceleration enrichment is also performed when engine at normal operating temperature via pressure step switch or lambda control (refer to 14–050, Combustion II).

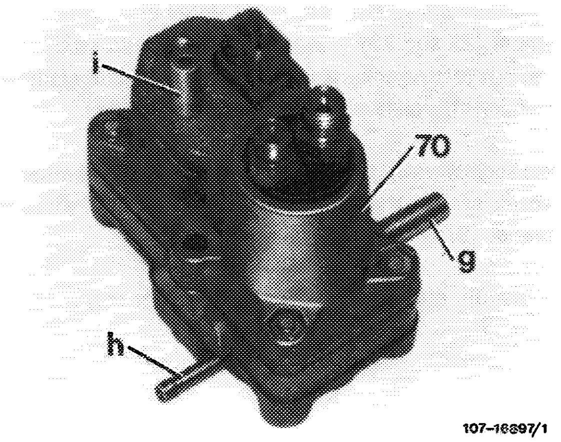

g	Connection upper chamber
h	Connection lower chamber
i	Vent
70	Warm-up compensator

The 4 functions of warm-up compensator:

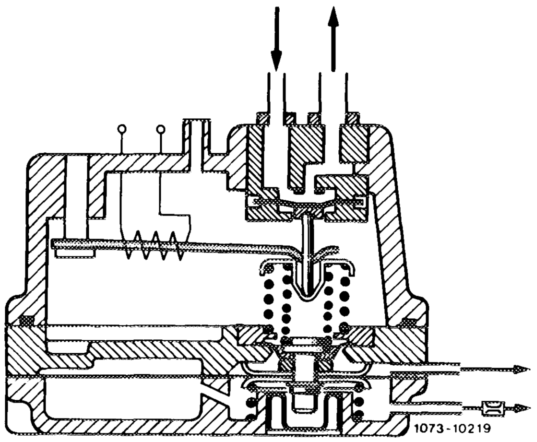

Warm-up stage

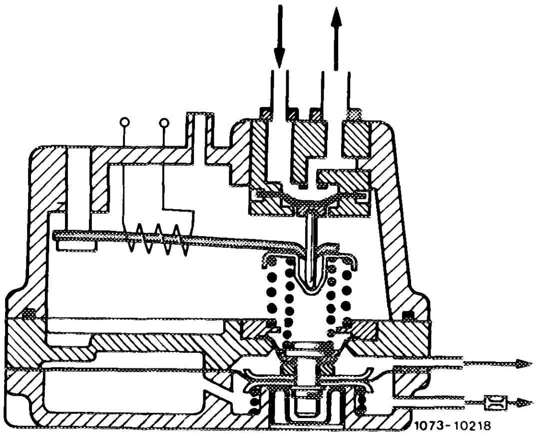

Warm-up and accelerating stage

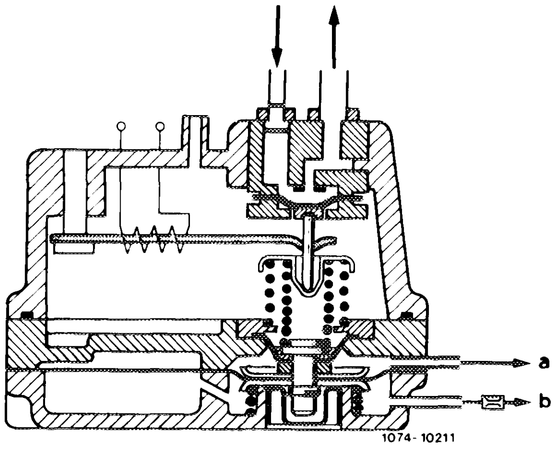

Stabilized with full load enrichment

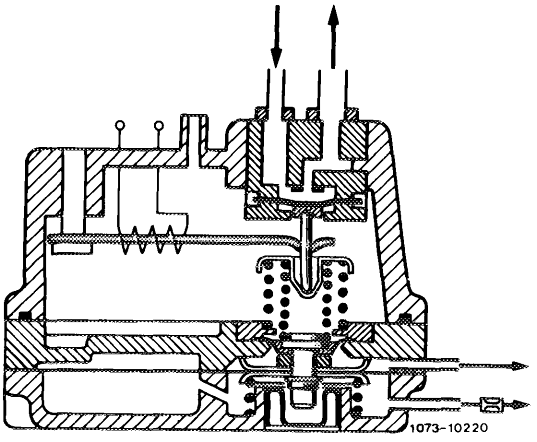

Stabilized in partial load position

D. Electronic idle speed regulation

a) Basic version starting September 1981
National version (AUS)(CH)(S)

The idle speed is electronically controlled by means of idle speed adjuster (23). The idle speed adjuster is a lifting magnet with respective aperture which permits variation of air flow rate. The control unit provides the lifting magnet with a timed direct current in frequency range of approx. 200 Hz.

The air is picked up after the air flow sensor plate, but before the throttle valve. As a result, the respective air quantity will be combined with the respective fuel quantity via air flow sensor plate.
The control unit processes the following variables:

- Engine speed (TCI terminal TD = transistor-speed).
- Engine temperature (42 °C temperature switch in coolant circuit).
- Engaged driving position.
- Engagement of refrigerant compressor.
- Idle speed and partial load identification.

When the ignition is switched on, the magnet is set to a fundamental frequency by way of the electronic control system. The momentary engine speed is taken from the ignition impulses (TCI terminal TD) and a signal is transmitted to the idle speed adjuster. The switchover point for the engine speed is taken from temperature switch (20).

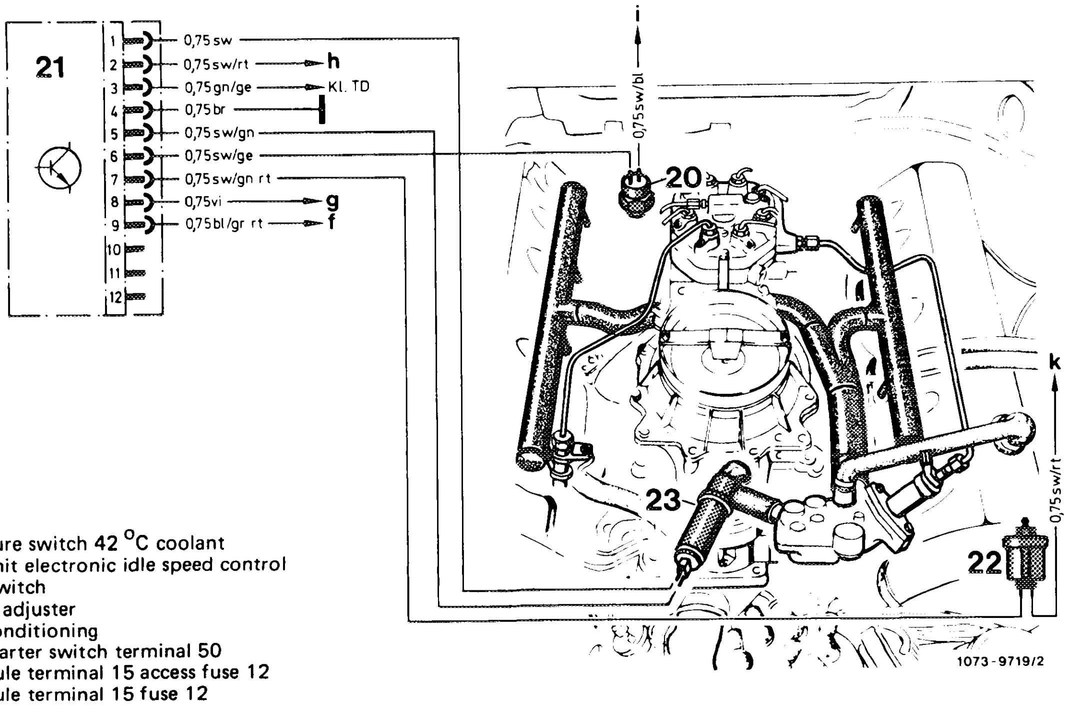

20	Temperature switch 42 °C coolant
21	Control unit electronic idle speed control
22	Vacuum switch
23	Idle speed adjuster
f	Lug, air conditioning
g	Ignition starter switch terminal 50
h	Fuse capsule terminal 15 access fuse 12
i,k	Fuse capsule terminal 15 fuse 12

b) Basic version NV KAT (closed-loop control) and national version (J) (USA)

Engine 116 model year 1981/82

The idle speed is electronically controlled by means of idle speed adjuster (23). The idle speed adjuster is a lifting magnet with respective aperture which permits variation of air flow rate. The control unit provides the lifting magnet with a timed direct current in frequency range of approx. 200 Hz.

The air is picked up after the air flow sensor plate, but before the throttle valve. As a result, the respective air quantity will be combined with the respective fuel quantity via air flow sensor plate.

Up to a coolant temperature of approx. 42 °C, the idle speed is regulated to 750/min, at a coolant temperature above approx. 42 °C, the idle speed is reduced to 500/min and kept constant.

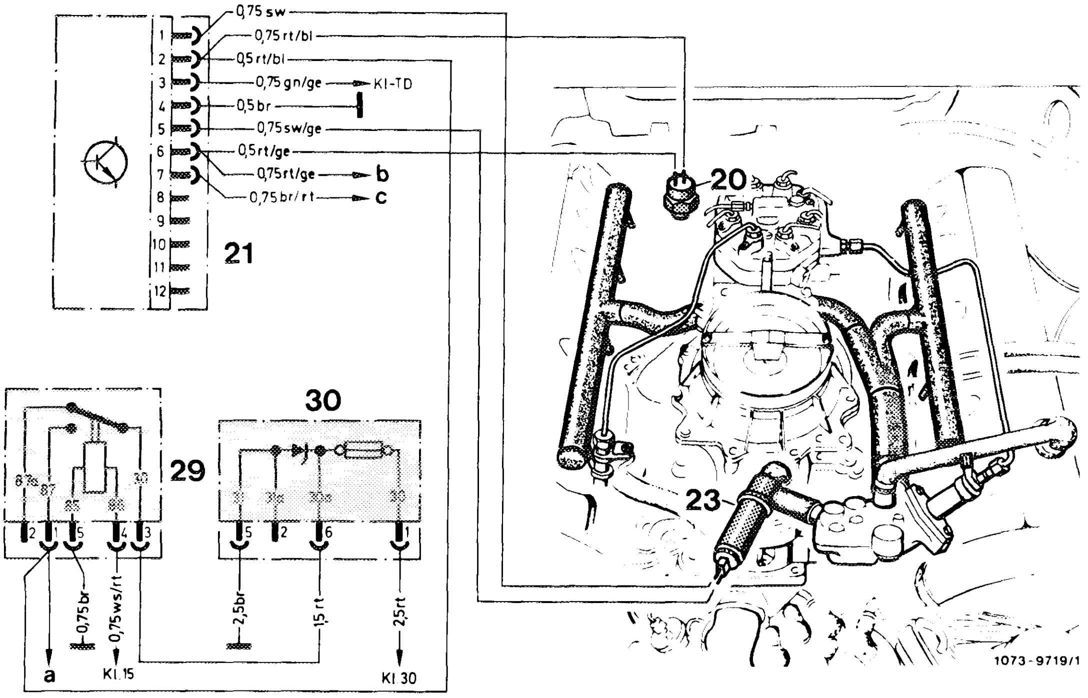

20 Temperature switch 42 °C coolant
21 Control unit electronic idle speed control
23 Idle speed adjuster
29 Relay voltage supply
30 Overvoltage protection

a To control unit lambda control, terminal 8
b To relay air injection
c To control unit lambda control, terminal 6

When the ignition is switched on, the magnet is set to a fundamental frequency by way of the electronic control system. The momentary engine speed is taken from the ignition impulses (TCI terminal TD) and a signal is transmitted to the idle speed adjuster. The switchover point for the engine speed 750/min or 500/min is taken from temperature switch (20).

Below approx. 42 °C = 750/min
(temperature switch closed)
Above approx. 42 °C = 500/min
(temperature switch opened)

Idle speed adjuster

The idle speed adjuster has the following functions:

1. With the ignition switched off, the aperture (1) is opened to max. capacity.

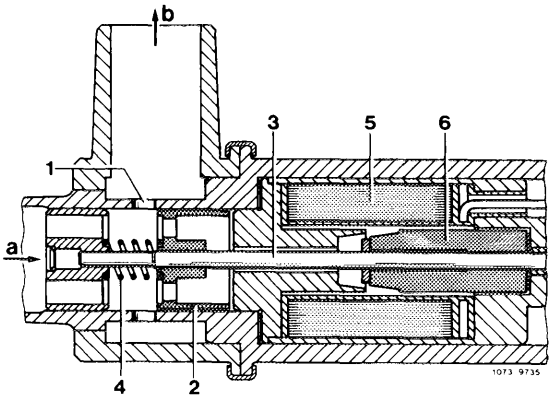

1	Aperture	5	Solenoid
2	Piston	6	Core
3	Shaft	a	Air inlet
4	Compression spring	b	Air outlet

2. With the ignition switched on (engine stopped) the idle speed adjuster is activated via electronic control system with approx. 1 ±0.5 Volt (measured at idle speed adjustment with clutch plugged on). Aperture (1) is opened to max. capacity.

3. With the engine running, the idle speed adjuster operates continuously between 4 and 5 Volts, or 1050–1200 mA. The orifice is closed approx. 5 Volts.

   A slight leak air rate is permitted.

4. At a speed above 900/min, the idle speed adjuster is activated with approx. 4.5 Volts, so that the aperture is partially opened. This will prevent stopping of engine in the event of a fast rpm drop.

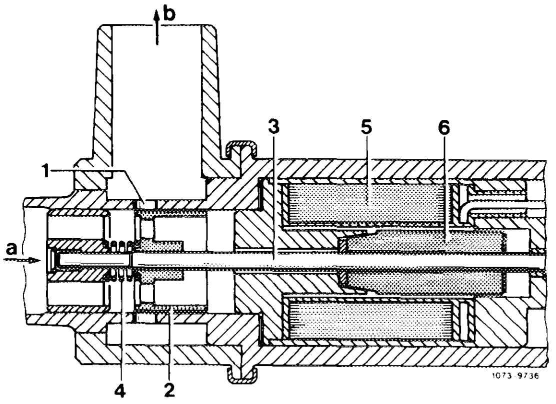

1	Aperture	5	Solenoid
2	Piston	6	Core
3	Shaft	a	Air inlet
4	Compression spring	b	Air outlet

Engine 116 starting model year 1983
Engine 116 basic version NV KAT (closed-loop control), starting 1984
Engine 117 starting model year 1984

The electronic idle speed control has been modified. The switchover point for engine speed is picked up at temperature switch 16 °C oil (19), which transmits simultaneously a signal to the control unit of lambda control.

The new control unit processes the following variables:

- Engine speed.
- Idle speed and partial load identification.
- Engine oil temperature.
- Engaged driving position.
- Engagement of refrigerant compressor.

Four idle speeds will result depending on operating condition and engine oil temperature.

Driving position	Engine oil temperature	Idle speed
With gear step not engaged	< 16 °C	800–950/min
	> 16 °C	600–700/min
With gear step engaged	< 16 °C	650–750/min
	> 16 °C	450–550/min

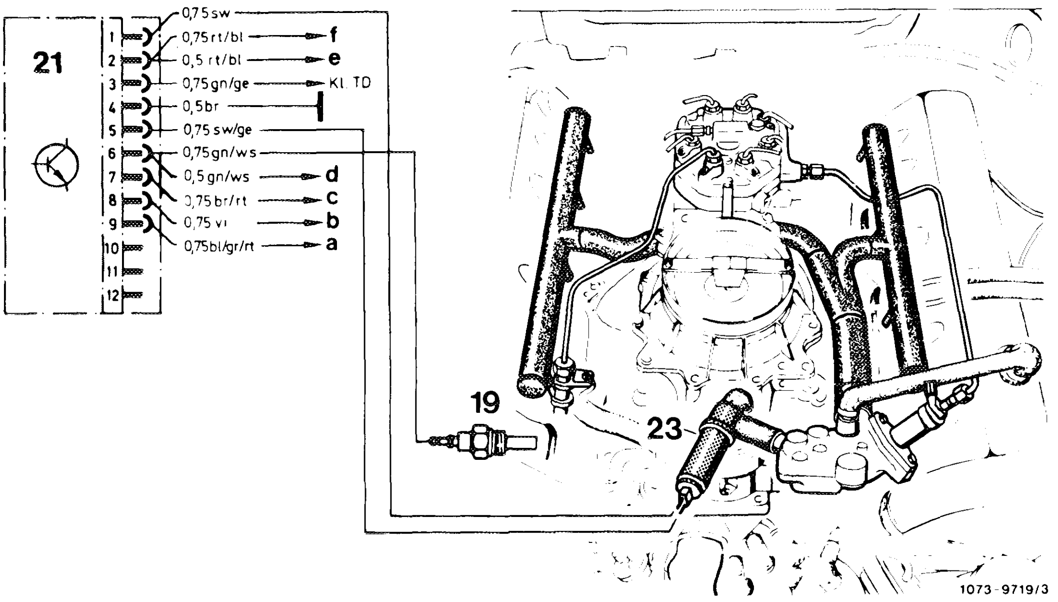

Function diagram

19 Temperature switch 16 °C oil
21 Control unit for electronic idle speed control
23 Idle speed adjuster

a To lug (a) automatic climate control
b To ignition starter switch terminal 50
c To control unit lambda control terminal 6
d To control unit lambda control terminal 7 looped to throttle valve switch
e To relay lambda control with overvoltage protection
f To temperature switch 42 °C coolant

Functional description of control unit

When the ignition is switched on, the magnet of the idle speed adjuster is put into a basic frequency via control electronics of control unit. The momentary engine speed is derived from ignition impulses (terminal TD) and a signal is transmitted to idle speed adjuster.

The idle speed adjuster has the following functions:

1. With the ignition switched off, the aperture (1) is opened to max. capacity.

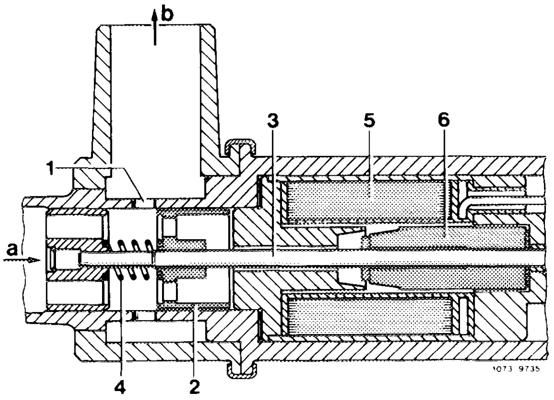

1	Aperture	5	Solenoid
2	Piston	6	Core
3	Shaft	a	Air inlet
4	Compression spring	b	Air outlet

2. At idle (without additional consumers) the idle speed adjuster operates with currents higher than 400 mA.

Idle speed and partial load identification

With the throttle valve slightly opened, the idle speed adjuster is provided with a speed of approx. 850 rpm via throttle valve switch and control unit. When the throttle valve is quickly closed, the engine speed cannot drop below 450 rpm.

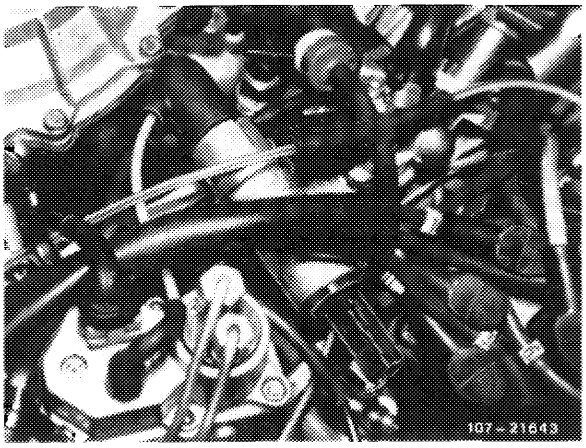

When 850 rpm are exceeded, the current increases proportionally with the speed up to approx. 1000/ rpm; above that number the air flow rate is constant.

Idle speed stabilization when switching on refrigerant compressor (at normal operating temperature)

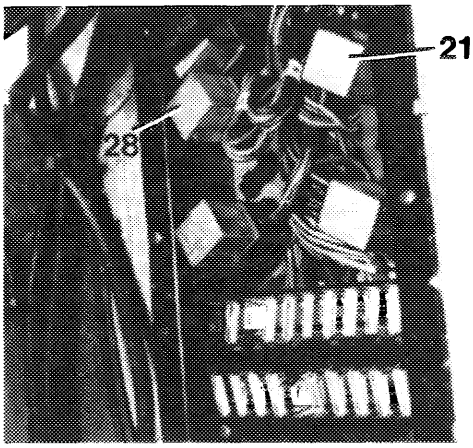

A delay valve (28, arrow) has been installed instead of alternating contact relay for activating the magnetic clutch of the refrigerant compressor. As a result, the control unit (21) will be activated prior to adding the refrigerant compressor (refer to group 83, electric wiring diagram).

Model 107

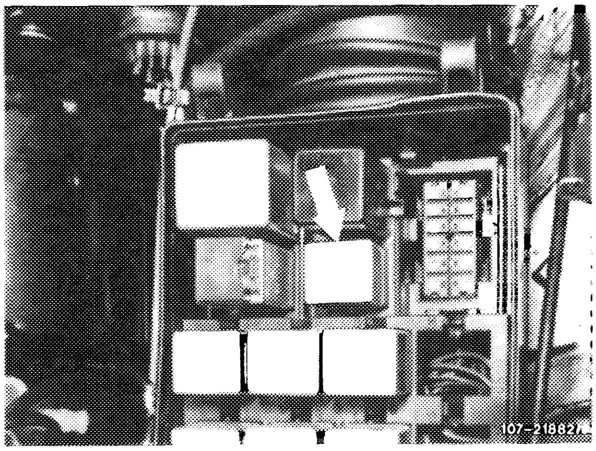

Prior to the increased engine load caused by including the refrigerant compressor, the idle speed adjuster opens to the extent that the engine continues running smoothly.

Model 126

Lowering of idle speed when engaging a driving position (at normal operating temperature)

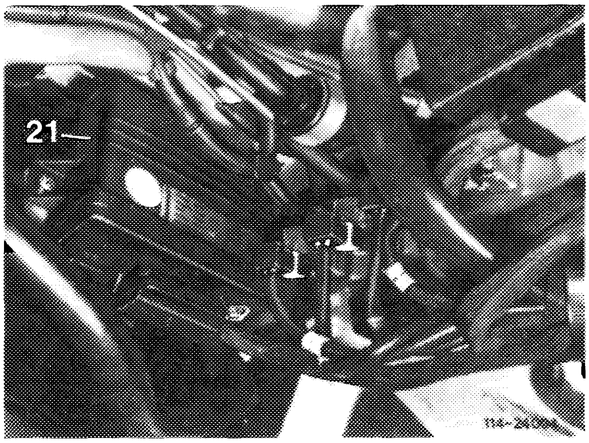

The starter lockout switch is closed in selector lever position "P" or "N". In such a case, terminal 8 of control unit (21) is connected to ground via coil of starter solenoid switch.

Model 107

21 Control unit at the right in vehicle interior under cover

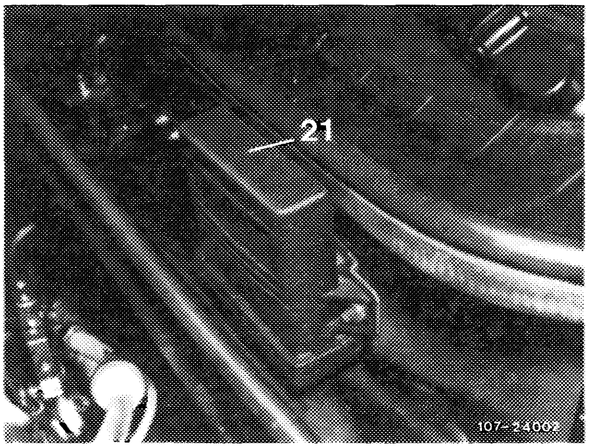

With driving position engaged, the starter lockout switch is opened and the ground connection is interrupted. The regulated speed changes from approx. 650 rpm to aprox. 500 rpm.

Model 126

21 Control unit in unit compartment

E. Fuel pump relay

The fuel pump relay for voltage supply of fuel pump has three, respectively four functions:

1. Activation of fuel pump when starting or with engine running.

   The warm-up compensator is also activated in parallel with fuel pump.

2. Rpm limitation after attaining max. engine speed.

3. Switching-off of fuel pump as soon as no more impulses are arriving via terminal TD of switching unit.

   TD = Transistor speed signal.

4. Kickdown shutoff.

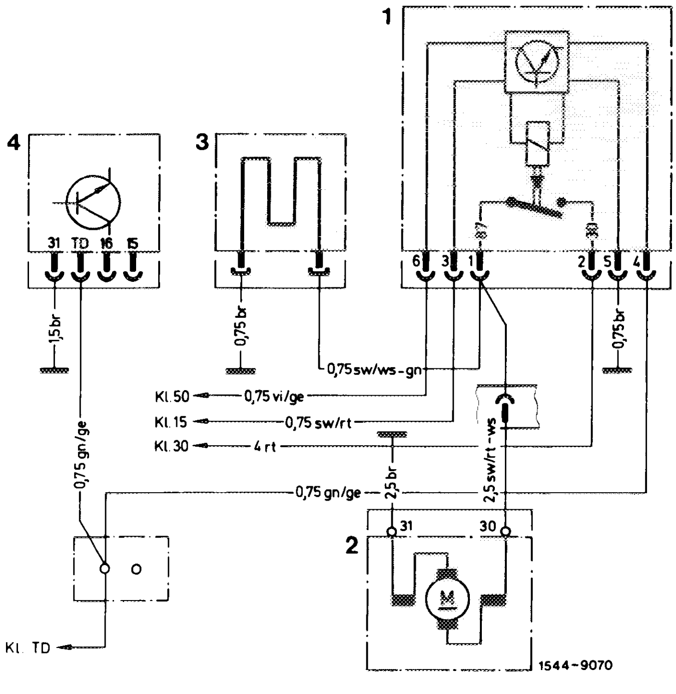

Wiring diagram prior to September 1981

1 Fuel pump relay
2 Fuel pump
3 Warm-up compensator
4 Switching unit (TCI)

1. Activation of fuel pump when starting and with engine running

When starting, the fuel pump relay is activated via terminal 50 and with the engine running via terminal TD of ignition switching unit.

While starting, the fuel pump relay is activated via terminal 50, because the respective parallel activation of fuel pump relay via terminal TD at engine speeds below approx. 80/min is not enough. The impulse sequence of terminal TD is too low to keep contacts 30–87 in pump relay constantly closed.

At speeds above approx. 80/min, the frequency of the impulses is high enough to keep contacts 30–87 in fuel pump relay constantly closed.

The warm-up compensator is also activated in parallel with fuel pump.

2. Rpm limitation after attaining max. engine speed

When a given impulse sequence in accordance with max. engine speed is attained, the contacts 30–87 for fuel pump are interrupted. The fuel pump is deenergized, and switches off.

Owing to the electronic rpm control, the rpm control on distributor rotor may be discarded. On engines 116.961, 117.961 the rpm control on distributor rotor is temporarily maintained, because the ignition distributors are identical with those of gray iron engines 116, 117.

3. Switching-off of fuel pump as soon as no more impulses are transmitted via terminal TD of switching unit

One second after the last impulse from terminal TD, the contacts 30–87 in fuel pump relay are interrupted as a safety measure. Pump is deenergized and switches off.

4. Kickdown shutoff

During acceleration at kickdown the magnetic valve is energized by kickdown switch (5).

The activation of the magnetic valve of kickdown switch (5) is routed via fuel pump relay with kickdown shutoff (13).

200/min prior to breakaway speed of engine, the fuel pump relay (13) interrupts the current supply to magnetic valve and the transmission will shift to next gear step.

This will make sure that the shifting proceeds prior to attaining breakaway speed.

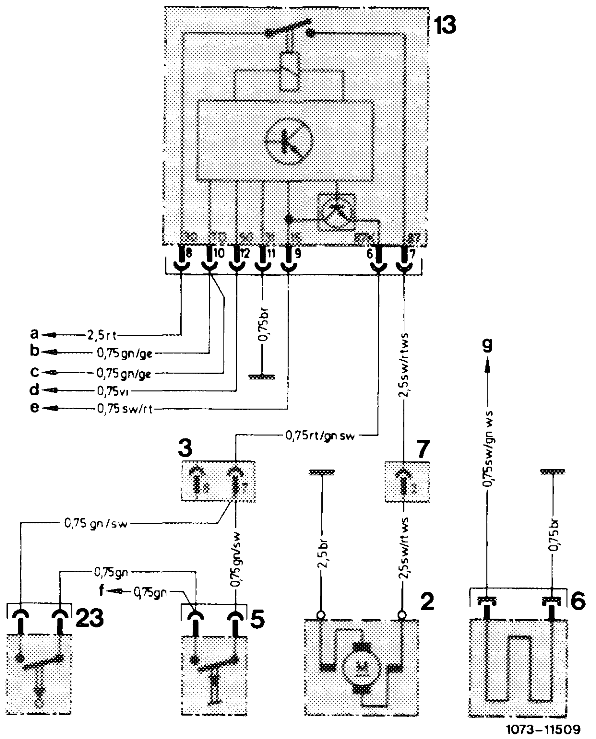

Wiring diagram starting September 1981

2	Fuel pump
3	Clutch 8-pole
5	Kickdown switch
6	Warm-up compensator
7	Connector, tail lamp harness
13	Fuel pump relay
23	Switch selector position "B"

a	Lug, terminal 30
b	Cable connector terminal TD
c	Control unit electronic idle speed control
d	Cable connector engine terminal 50
e	Fuse capsule terminal 15 access fuse 14
f	Magnetic valve automatic transmission
g	Model 107: Connector, tail lamp harness (7) 14-pole jack 2 Model 126: Fuel pump relay (13) terminal 87 jack 7

Line colors
br = brown
ge = yellow
gn = green
rt = red
sw = black
vi = purple
ws = white

07.3–105 Checking and adjusting on/off ratio

National version (J) (USA)

Adjust engines according to data of respective emission information label.
Identification: Information label in national language on cross member in front of radiator.

Scope

Testing, adjusting firing point.
Raising engine oil temperature to approx. 80 °C.
Checking operation and ease of movement of accelerator control linkage.
Testing, adjusting idle speed and on/off ratio.
Switching on all ancillaries and checking smooth engine running.

Testing and adjusting data

Engine	National version and model year	Information plate	Idle speed 1) 1/min	On/off ratio in % Test reading	Setting	Firing point with vacuum when idling
116	1981/1982	In Japanese	500–600	40–60	50 ± 10	5° BTDC
116 117	1983–1985		650^{+100}_{-50}	2)		TDC3)
116	1981	Color code black	500–600	40–60	50 ± 10	5° BTDC
	1982			2)		
116 117	1983–1985		650^{+100}_{-50}			TDC3)

[1] Electronically controlled.
[2] Test on/off ratio at 2500 rpm and take average reading. Compare this reading with the idle speed, adjust if necessary. The average reading at idle speed must not vary by more than ± 10 from the reading measured at 2500 rpm.
[3] Without vacuum.

Special tools

3 mm screwdriver with tommy handle for adjusting idle emissions level	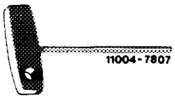	000 589 14 11 00
Puller		123 589 05 33 00
Installer for security plug		123 589 00 15 00
Oil telethermometer	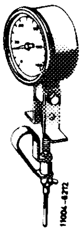	116 589 27 21 00

Conventional testers

Revolution counter	
Digital tester	e.g. Bosch, MOT 001.03
Lambda control tester	e.g. Bosch, KDJE–P 600 Hermann L 115

Adjusting

1 Connect digital tester and revolution counter, oil telethermometer and lambda control tester, as necessary.

2 Switch off air conditioning system. Move selector lever into position "P".

3 Raise engine oil temperature to approx. 80 °C.

4 Check whether the throttle valve lever is resting against the idle stop.

5 Test firing point when idling with vacuum, adjust (refer to table).

6 Check operation and ease of movement of accelerator control linkage, adjust.

Vehicles with cruise control

Check whether the actuator is resting against idle stop of the cruise control by detaching tie rod (21) and pressing lever of actuator clockwise to idle stop.

When attaching tie rod (21), ensure that the lever of the actuator is raised by approx. 1 mm off the idle stop. Adjust tie rod, if necessary.

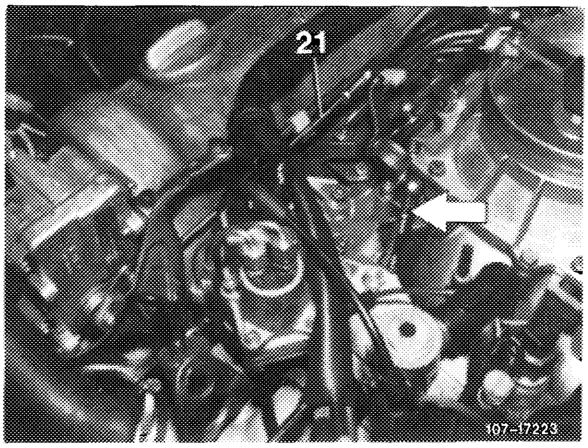

Check whether the roller (15) in the slotted lever (13) is resting free of tension against the end stop. Adjust with the connecting rod (1), if necessary.

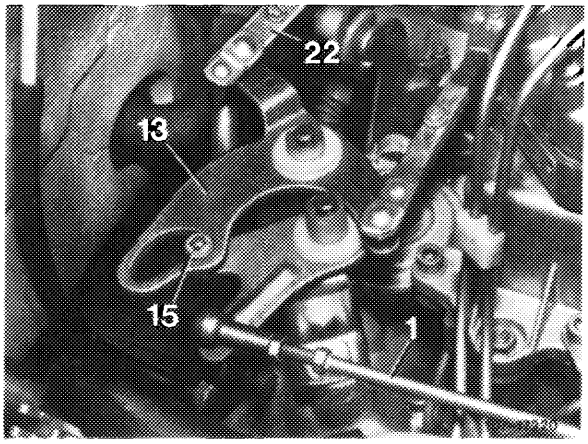

7 Run engine at idle speed and set to specified idle speed with the idle air screw (arrow).

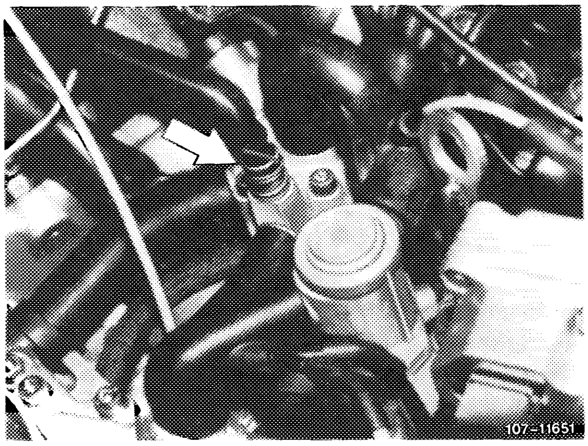

The idle speed on engines with electronic idle speed control cannot be varied. If the idle speed differs, perform test routine (07.3–112, section "B").

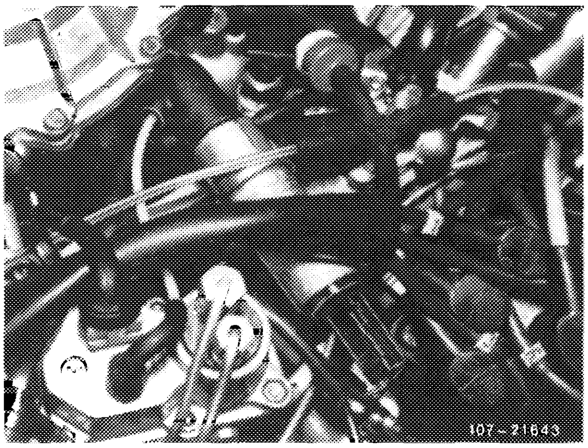

8 Check on/off ratio and adjust, if required.

Ⓙ **1981**

Note: The air cleaner need no longer be removed for adjusting on/off ratio at idle.

Read on/off ratio on tester, on/off ratio is in order if value is between 40–60 %. If not, pull out safety plug (4) by means of puller.

Insert screw driver (1) through cutout on air cleaner top onto adjusting device (2). Push with screw driver in downward direction against spring force of adjusting device, turn slightly until hexagon (3) engages in mixture control screw (61).

Turning counterclockwise = 60 % (leaner)
Turning clockwise = 40 % (richer)

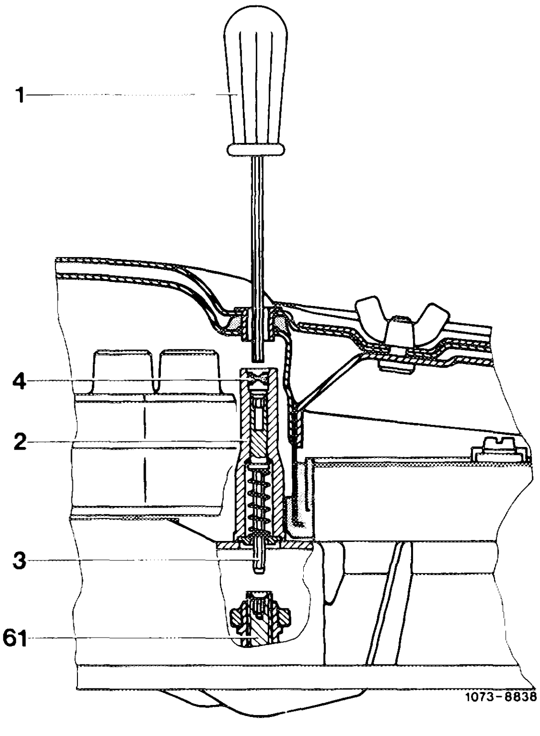

Release screw driver, the compression spring will disengage adjusting device from mixture control screw.

Accelerate for a short moment and check on/off ratio and readjust, if required.

Following adjustment, install a blue safety plug (4), part no. 000 997 59 86 by means of installer.

Ⓙ **starting 1982**

Note: The air cleaner need not be removed for adjusting on/off ratio at idle.

Pull purge line toward throttle valve housing from purge valve and close.

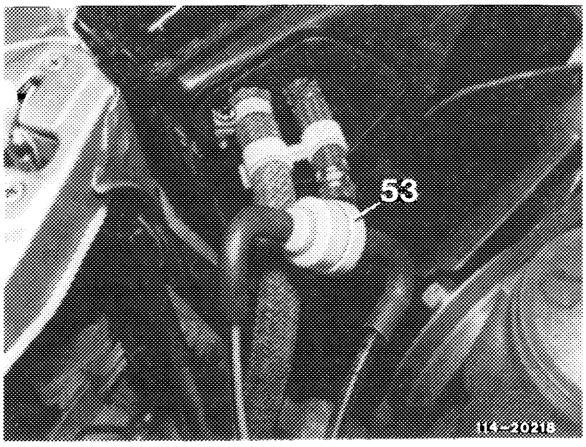

Check on/off ratio at 2500 rpm and read mean value. Compare this value with idle speed value. Mean value at idle should not deviate from value measured at 2500 rpm by more than ± 10.

If not, pull out safety plug (4) by means of puller.

Insert screw driver (1) through cutout on air cleaner top onto adjusting device (2). Push with screw driver in downward direction against spring force of adjusting device, turn slightly until hexagon (3) engages in mixture control screw (61).

Turning counterlockwise = leaner
Turning clockwise = richer

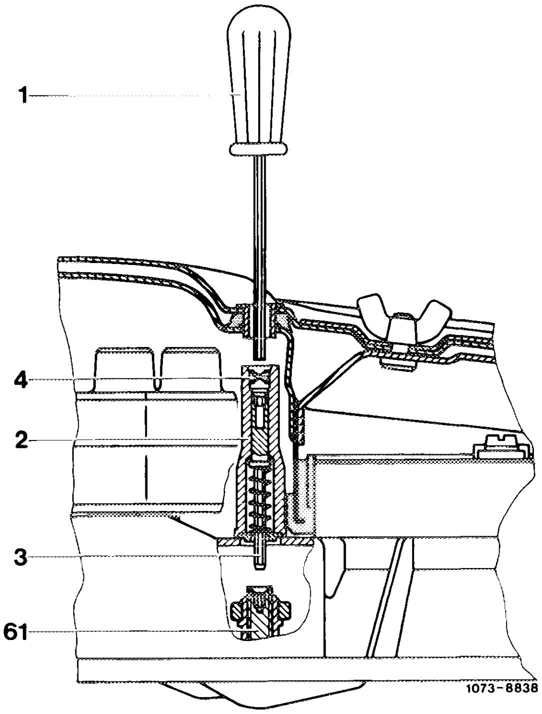

Release screw driver, compression spring will disengage adjusting device from mixture control screw.

Accelerate for a short moment and check on/off ratio and readjust, if required.

Following adjustment, install a blue safety plug (4), part no. 000 997 59 86 by means of installer.

Reconnect purge line.

(USA) starting 1981

Note: The adjusting device (2) is provided with a protective steel lock.

If upon completion of engine repairs or following exchange of a part of the CIS-E injection system, adjustment of on/off ratio is required, proceed as follows:

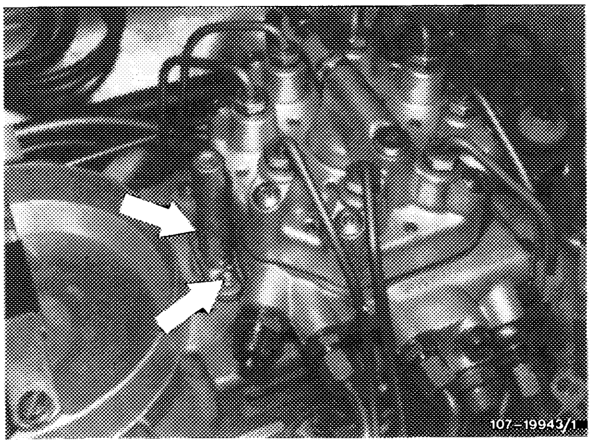

Remove air cleaner.

Punch mark tear-off bolts (arrow) in center and drill approx. 6–8 mm deep by means of a 2.5 mm twist drill.

Attention!
Do not drill completely through bolts, since metal chips may lead to engine damage. Remove metal chips thoroughly with rag.

Unscrew tear-off bolts with a lefthand drill.

Install new repair set, part no. 102 586 02 07. Tighten bolts until tear-off head breaks off.

Mount air cleaner.

Checking on/off ratio

Pull purge line toward throttle valve housing from purge valve and close.

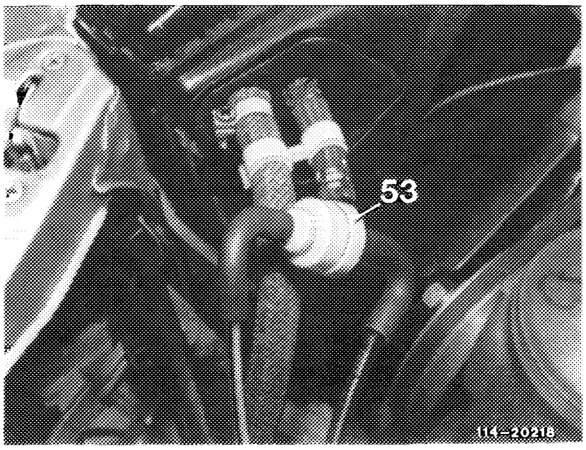

(USA) 1981

Read on/off ratio on tester. On/off ratio is in order if value is between 40–60 %.

(USA) starting 1982

Check on/off ratio at 2500 rpm and read mean value. Compare this value with idle speed value. Mean value at idle should not deviate more than ± 10 from value measured at 2500 rpm.

Adjusting on/off ratio

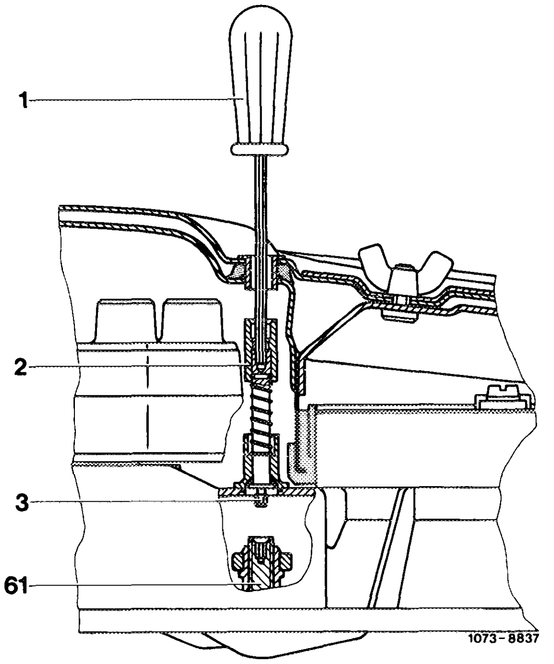

Insert screw driver (1) through cutout on air cleaner top onto adjusting device (2). Push with screw driver in downward direction against spring force of adjusting device, turn slightly until hexagon (3) engages in mixture control screw (61).

Turning counterclockwise = leaner
Turning clockwise = richer

Release screw driver, compression spring will disengage adjusting device from mixture control screw.

Accelerate for a short moment and check on/off ratio and readjust, if required.

Remove air cleaner.

Push in protective steel lock (included in repair set).

Mount air cleaner.

Connect purge line.

9 Check auxiliary units. For this purpose, move selector lever into driving position, switch on air conditioning, turn power steering to full lock, engine should be running smoothly. Adjust rpm, if required.

07.3–111 Performing comparison of cylinders with SUN 2110 engine tester

Job no. of flat rates or standard texts and flat rate data 07–1150.

Special tool

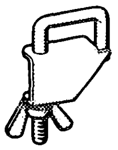

000 589 40 37 00

Conventional tester

Engine tester	SUN 2110

Shop-made tool

Qty.	Designation	Part no.	Test hose
2	Contour hose	117 094 12 82	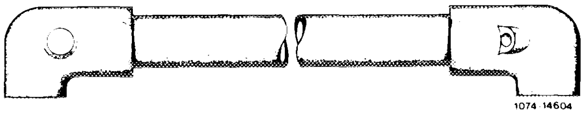 1074 14604
1	Hose approx. 300 mm long e.g. SUN exhaust hose	–	

Testing

1 Raise engine oil temperature to approx. 80 °C.

2 Connect SUN 2110 engine tester.

3 Remove contour hose (1) and seal bypass line (arrow).

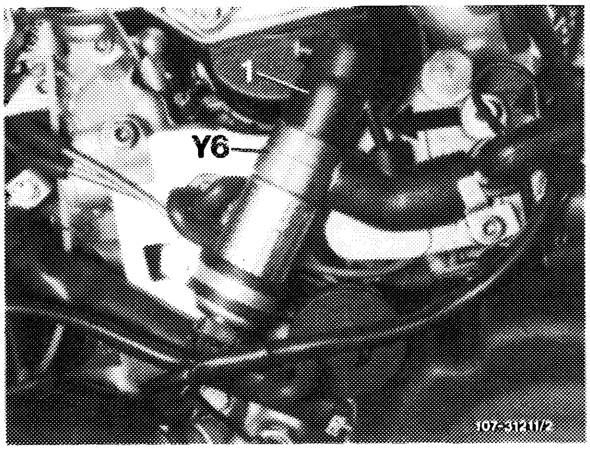

1 Contour hose
Y6 Idle speed adjuster

4 Install shop-made test hose. Detach connection cable at idle speed adjuster. Set previously measured idle speed with clamp (arrow). Likewise adjust idle emissions level.

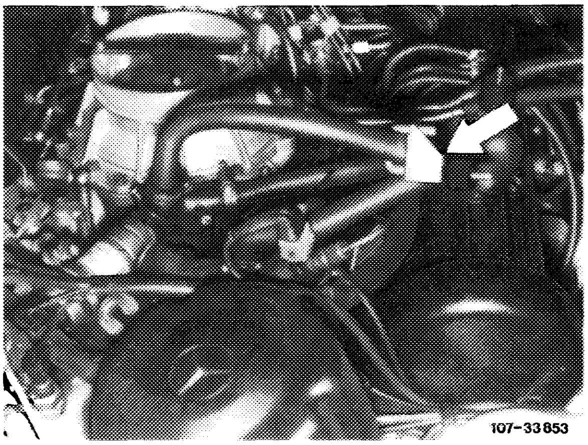

5 Select illustrated page "Starting, measuring engine" with # key.

6 Press "Engine stop" button. Start engine (does not run) until inscription "Data in memory" appears.

7 Again press "Engine stop" button, engine runs.

8 Select illustrated page "Comparison of cylinders" with key #. Run engine at idling speed until HC reading is constant. Perform comparison of cylinders and analyse.

07.3–112 Testing electronic idle speed control

Job no. of flat rates or standard texts and flat rate data 07–2006.

A. Basic version
Standard
Standard KAT (open-loop)
National version (AUS) (CH) (S)

Test data

Drive position	Coolant temperature	Idle speed
Without gear	> 42 °C < 42 °C	600–750/min 900–1000/min
With gear	> 42 °C < 42 °C	450–550/min 700–850/min
Current consumption at idle speed adjuster at operating temperature (approx. 80 °C engine oil temperature)		1050–1200 mA

Special tools

Test cable for measuring current	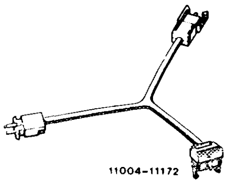	102 589 04 63 00

Conventional tools

Digital tester (rpm, dwell angle, ignition angle)	e.g. Bosch, MOT 001.03
Multimeter	e.g. Sun DMM–5

B. Basic version NV KAT (closed-loop)
National version Ⓙ Ⓤⓢⓐ

a) Engine 116 model year 1981/82

Test values

	Coolant temperature	Idle speed
	>42 °C <42 °C	approx. 500/min approx. 750/min

Conventional tools

Digital tester (rpm, dwell angle, ignition angle)	e.g. Bosch, MOT 001.03
Multimeter	e.g. Sun DMM–5

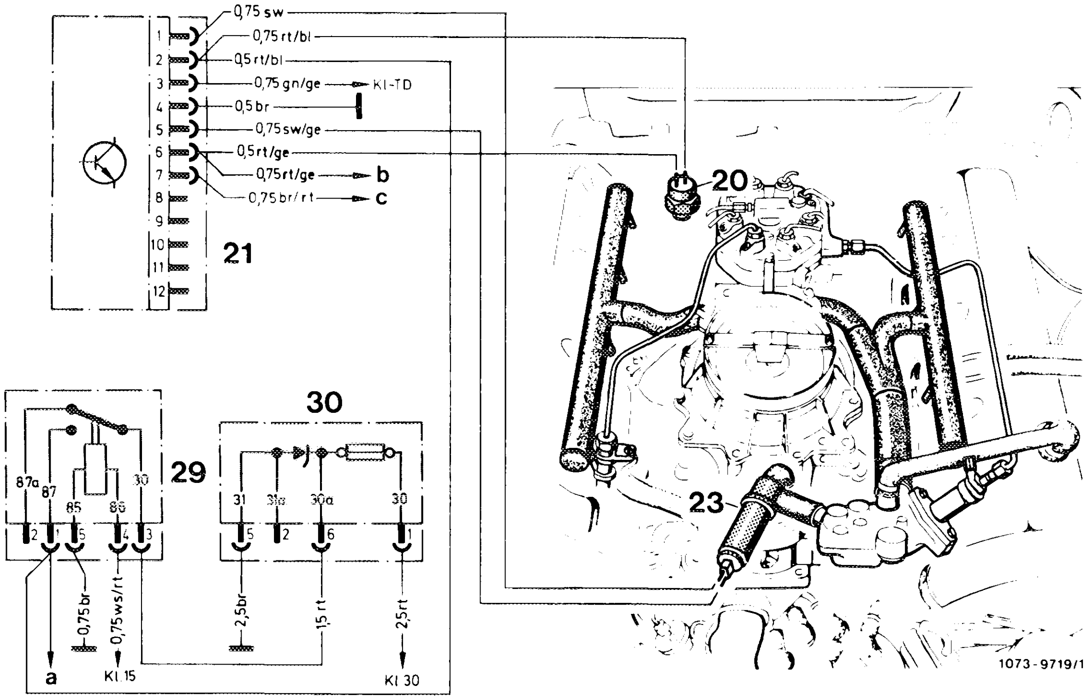

Function diagram

20	42 °C coolant temperature switch	a	To control unit lambda control, terminal 8
21	Control unit, electronic idle speed control	b	To relay air injection
23	Idle speed adjuster	c	To control unit lambda control, terminal 6, looped on lambda control to throttle valve switch
29	Relay voltage supply		
30	Overvoltage protection		

Checking electric activation of idle speed adjuster

Engine – operating temperature.
Ignition switched on.
Pull coupling from idle speed adjuster and measure voltage.

Readout approx. 12 V	Readout 0 V.

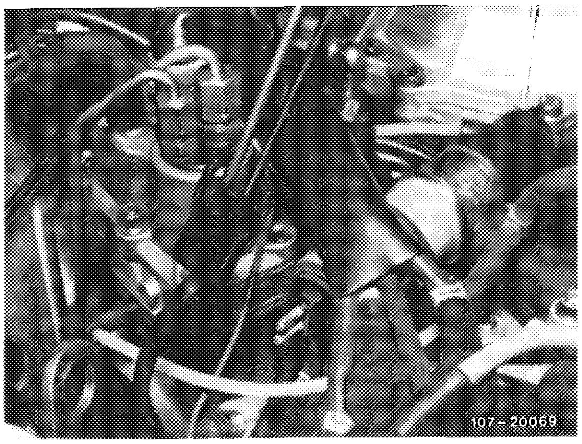

Pull coupling from control unit (21) and check voltage (approx. 12 Volts) on jacks 2 and 4.

If there is no voltage, check voltage supply according to electric wiring diagram and renew defective parts, if required.

If voltage is now available, check line (black/yellow) from coupling of control unit to coupling of idle speed adjuster for interruption and repair, if applicable.

Connect coupling to control unit and once again measure voltage on coupling of idle speed adjuster.

Readout 0 Volt, renew control unit.

End of test

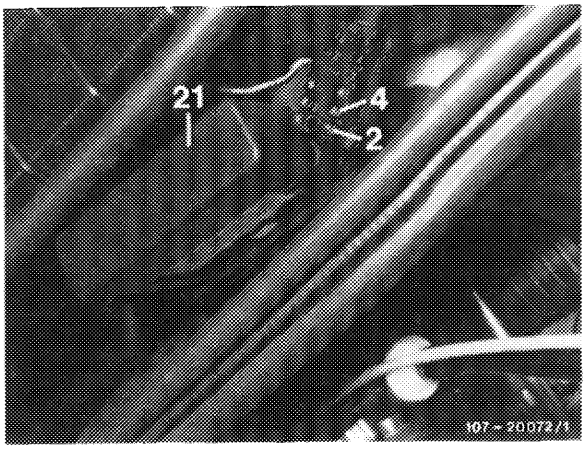

Checking regulation of control unit

Engine at idle at operating temperature. Plug on coupling at idle speed adjuster in such a manner that voltage can be measured on plug.

Readout 5 Volts ± 1.	No readout (no regulation).

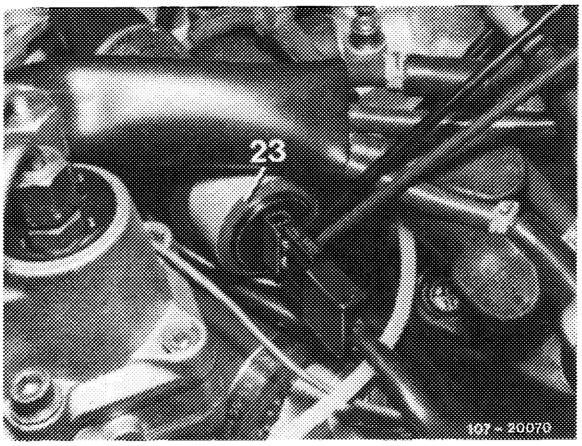

Renew control unit.

Check idle speed adjuster

Engine at idle.
Simulate coolant temperature < 42 °C, for this purpose, pull coupling from temperature switch (20) and bridge.

Idle speed increases to approx. 750/min	Idle speed not increasing.

Energize idle speed adjuster with battery voltage for a short period (no more than 5 seconds).

Idle speed drops or engine stops, renew control unit.

Idle speed not dropping, renew idle speed adjuster.

End of test

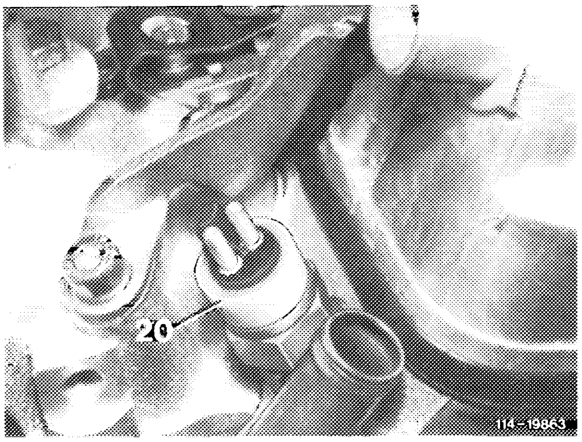

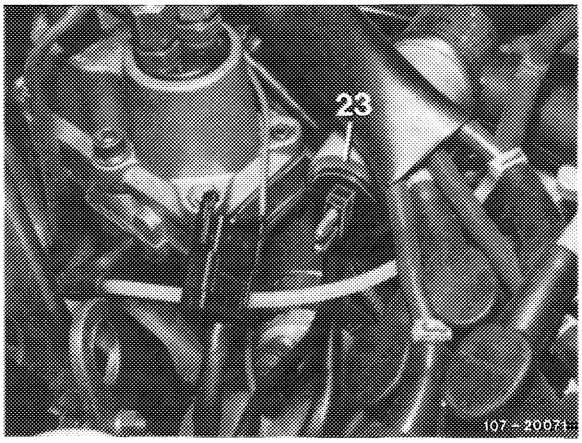

b) Engine 116 NV KAT (closed-loop)
Engine 116 starting model year 1983
Engine 117 starting model year 1984

Test values

Drive position	Engine oil temperature	Idle speed
Gear stop not engaged	<16 °C >16 °C	800–950/min 600–750/min
Gear stop engaged	<16 °C >16 °C	650–750/min 450–550/min

Special tool

Test cable for measuring current	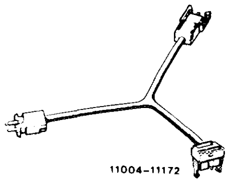	102 589 04 63 00

Conventional tools

Digital tester (rpm, dwell angle, ignition angle)	e.g. Bosch, MOT 001.03
Multimeter	e.g. Sun, DMM–5

Note

The switchover point for engine speed is tapped at the 16 °C oil temperature switch (19), which at the same time supplies a signal to the control unit of the lambda control.

It is not possible to fit the control unit from former model years.

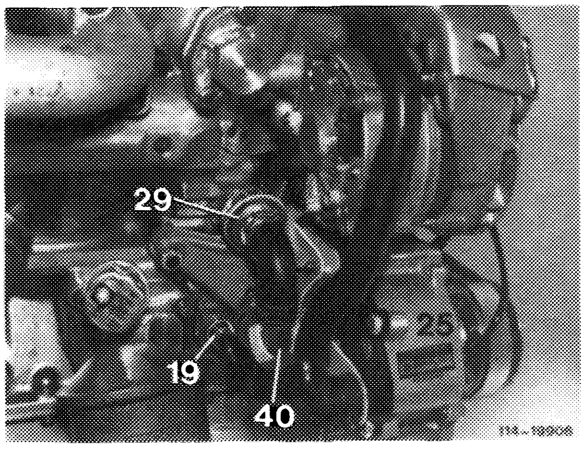

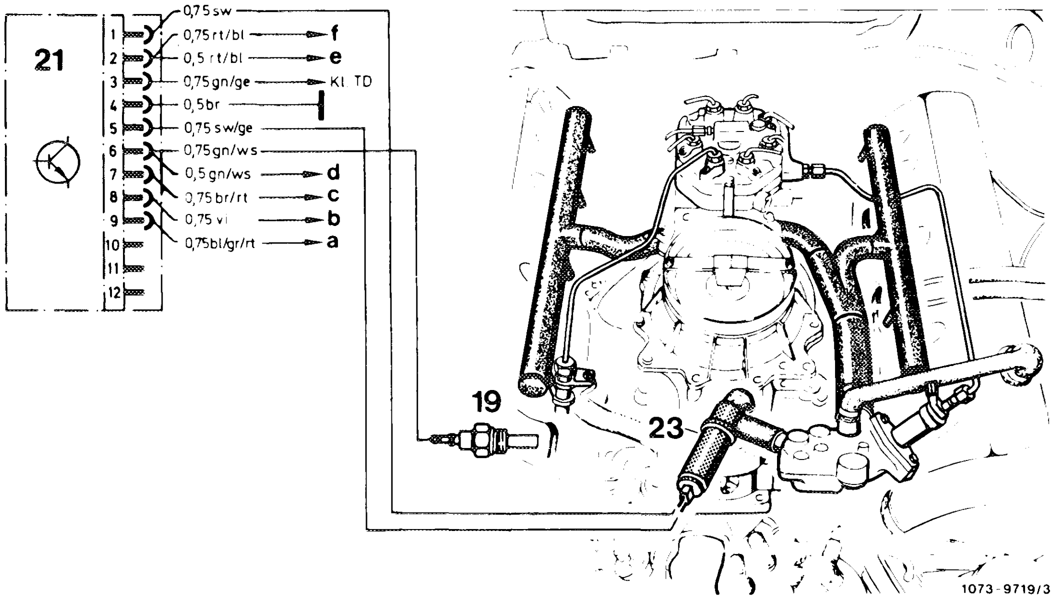

Function diagram

19	16 °C oil temperature switch
21	Control unit, electronic idle speed control
23	Idle speed adjuster
a	To lug (a) automatic climate control
b	To ignition starter switch terminal 50
c	To control unit lambda control terminal 6, looped on lambda control to throttle valve switch
d	To control unit lambda control terminal 7
e	To relay overvoltage protection
f	To 42 °C coolant temperature switch

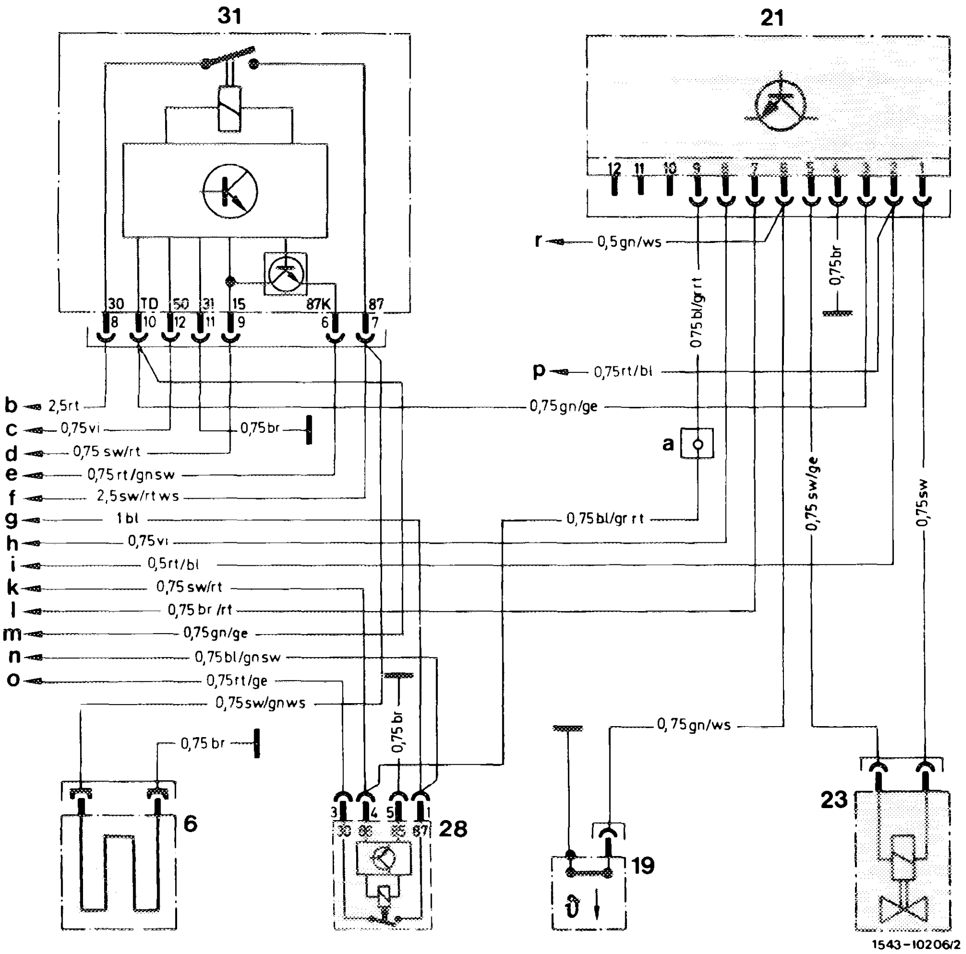

Electric wiring diagram idle speed control

6	Warm-up compensator
19	16 °C oil temperature switch
21	Control unit, electronic idle speed control
23	Idle speed adjuster
28	Relay air conditioning or automatic climate control
31	Fuel pump relay
a	Lug air conditioning or automatic climate control
b	To lug terminal 30, model 126 To cable connector engine, terminal 30, model 107
c	To cable connector engine, terminal 50
d	To fuse box terminal 15
e	To starter lockout and backup light switch, terminal 7
f	To tail lamp harness terminal 2
g	To coupling of refrigerant compressor
h	To ignition starter switch terminal 50
i	To relay lambda control with overvoltage protection, terminal 2
k	To low pressure switch refrigerant compressor
l	To control unit lambda control terminal 6
m	To cable connector terminal TD, model 126 To revolution counter, model 107
n	To switching unit temperature control
o	To fuse box terminal 15X
p	To 42 °C coolant temperature switch
r	To control unit lambda control terminal 7

Cable colour coding
bl = blue
br = brown
ge = yellow
gn = green
gr = grey
rt = red
sw = black
vi = purple
ws = white

Idle speed adjuster

Switch ignition on and off.

Idle speed adjuster is heard and felt to switch.	Idle speed adjuster does not switch.

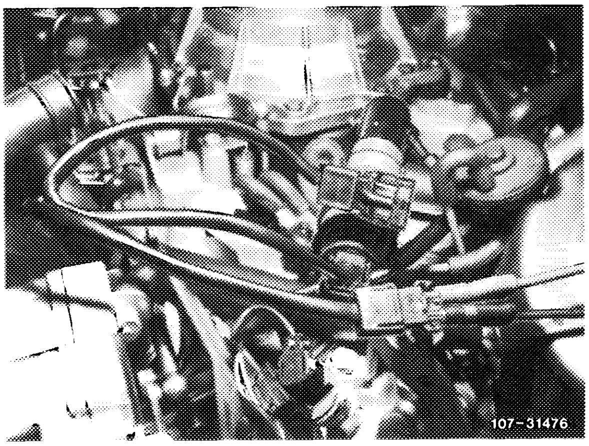

Connect test cable 102 589 04 63 00 into circuit at idle speed adjuster. Tester to mA. Connect revolution counter. Engine idling (approx. 80 °C engine oil temperature). Switch off air conditioning.

Current consumption

1050–1200 mA	< 1050 mA

Idle speed

600–750/min	< 600/min	> 1500/min

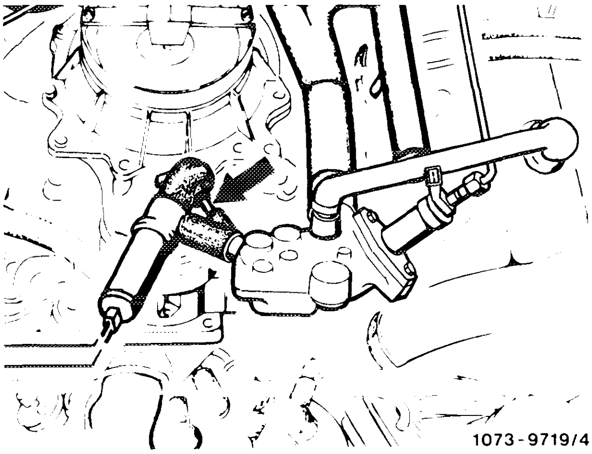

Check bypass line for passage, or cut off. Retrofit bypass line (arrow), as the case may be (Programmed repairs, Combustion II).

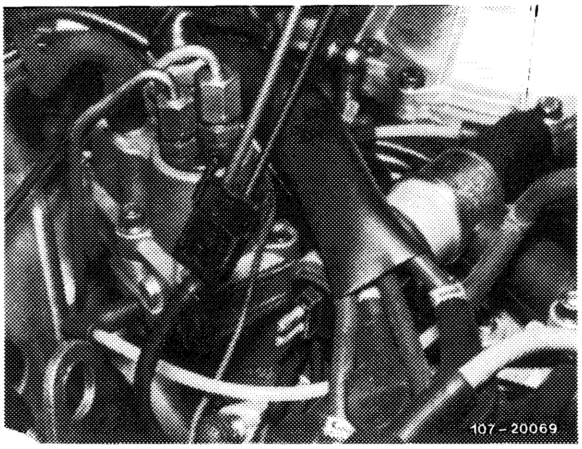

Switch off engine. Detach connector at idle speed adjuster. Switch on ignition. Test whether battery voltage exists at connector.

Yes	No

Renew idle speed adjuster.

Detach connector at control unit (21). Switch on ignition. Test whether battery voltage exists at contact 2 (positive) and 4 (ground)

If no voltage exists:

a) Test black/red cable between contact 2 and fuse 14 (terminal 15).

b) Test brown cable, contact 4, to ground (refer to wiring diagram).

If voltage exists:

Briefly jumper contacts 1 and 2 and 4 and 5 simultaneously (max. 5 seconds). Idle speed adjuster must be heard to switch.

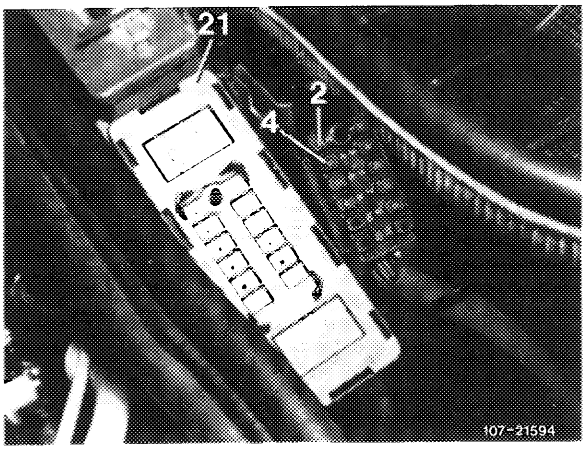

Idle speed adjuster switches.	Idle speed adjuster does not switch.

Check contour hoses for passage.
Renew control unit.

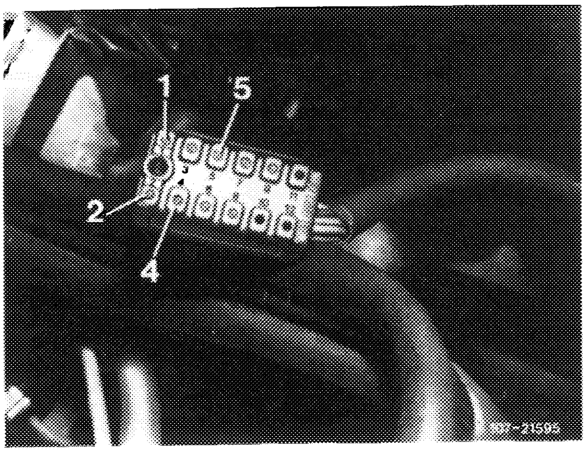

Test cables (contacts 1 and 5) between idle speed adjuster and control unit for continuity.

Resistance approx. 0 Ω.

Yes	No

Rectify cable interrupt according to wiring diagram.

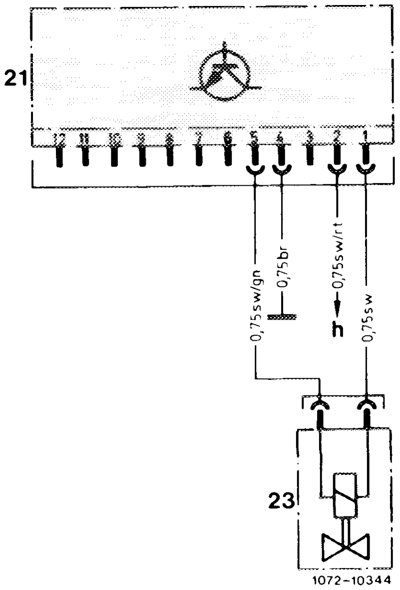

21 Control unit, electronic idle speed control
23 Idle speed adjuster
h Fuse box terminal 15 fuse 14

Check green/yellow TD cable from fuel pump relay to control unit for continuity.

Resistance 0 Ω

Yes

No

Rectify cable interrupt according to wiring diagram.

Additional functions
Test cutin signal of automatic transmission and air conditioning compressor.

Idle speed with and without drive position

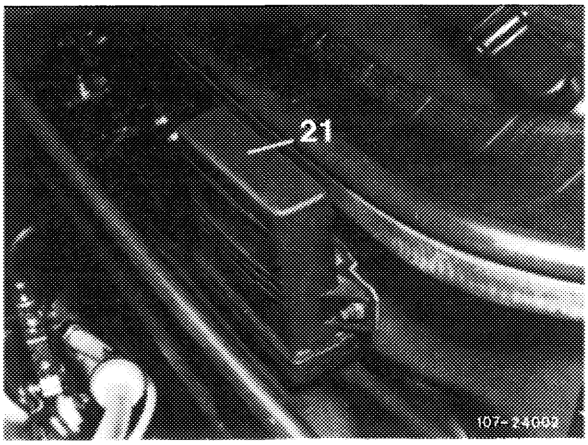

Engine idling at approx. 80 °C engine oil temperature, engage drive position.

Idle speed drops to 500 rpm.	Idle speed does not drop.

Engine switched off, switch on ignition. Detach connector at control unit (21).

Connect voltmeter between contacts 8 (negative) and 2 (positive). Battery voltage must exist in position "P" or "N".

In drive position contact 8 (negative) is interrupted via starter lockout and backup light switch.

if yes	if no

Renew control unit.

End of test

Test cable from control unit to ignition starter switch.

End of test.

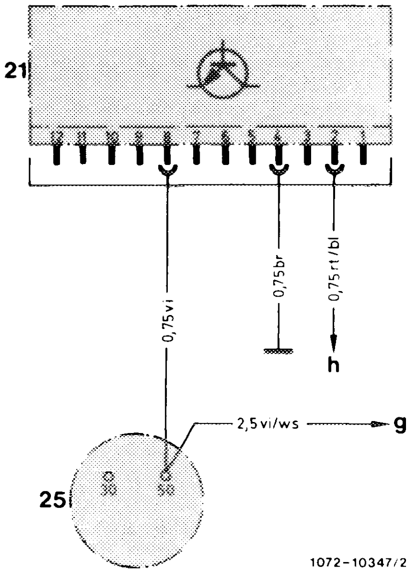

21	Control unit, electronic idle speed control
25	Ignition starter switch
g	Starter lockout and backup light switch
h	Fuse box terminal 15 input terminal 14

Idle speed stabilization on engines with refrigerant compressor

Engine idling at approx. 80 °C engine oil temperature. Switch on refrigerant compressor. Sharp drop in speed.

Yes	No

No: End of test

Yes:

Switch off engine. Switch on ignition. Detach connector at control unit. Battery voltage must exist at contact 9 (positive).

Battery voltage yes	Battery voltage no

Battery voltage yes: Renew delay relay (arrow) or control unit.

Battery voltage no: Test voltage supply according to wiring diagram.

End of test

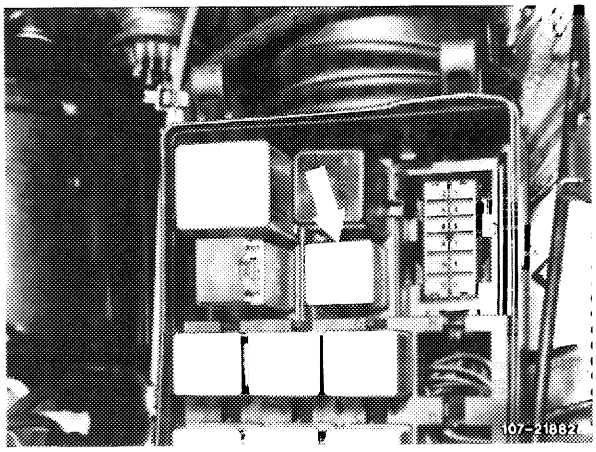

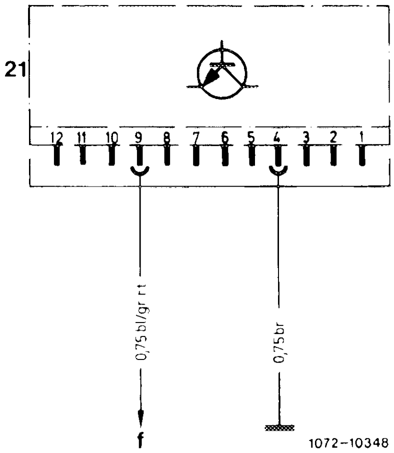

21 Control unit, electronic idle speed control
f Lug, air conditioning in fuse box

C. Idle speed and partial load identification

a) Vehicles with vacuum switch

Pull coupling (arrow) on vacuum switch (22) and bridge.

Idle speed 600–750/min.

Yes	No

Check coupling on vacuum switch and on control unit (21) according to wiring diagram.

Battery voltage Yes	Battery voltage No
Renew control unit.	Check voltage supply according to wiring diagram.

End of test

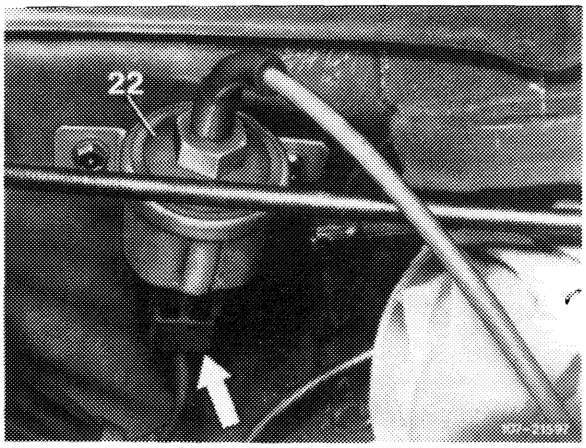

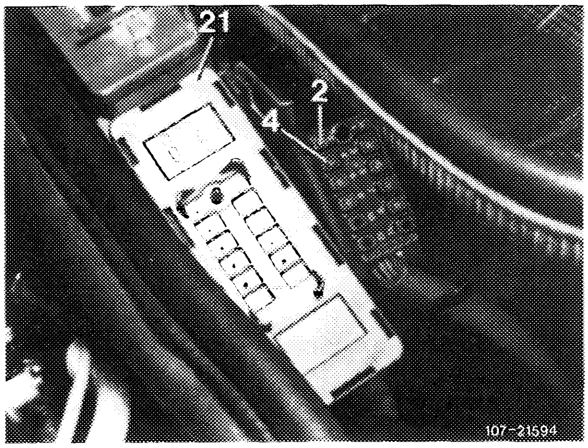

Plug on coupling at vacuum switch.
Energize vacuum switch with approx. 500 mbar.

Rpm increase by approx. 200/min.	No rpm increase.

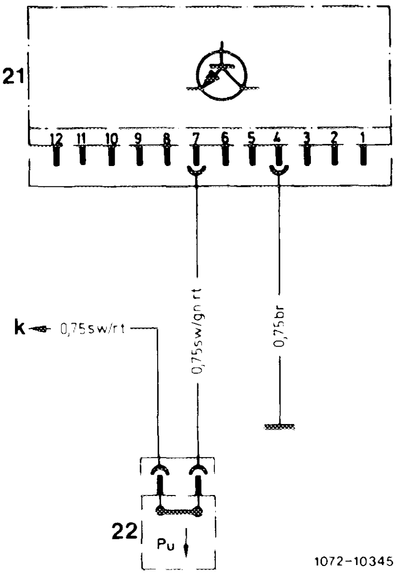

21 Control unit electronic idle speed control
22 Vacuum switch
k Fuse box terminal 15 fuse 12

Renew vacuum switch.

End of test

At slight acceleration, vacuum should be immediately established at white/yellow line.

Yes	No

End of test

Check white/yellow line and connection on throttle valve housing for passage. Possible mixup with EGR at throttle valve housing.

End of test

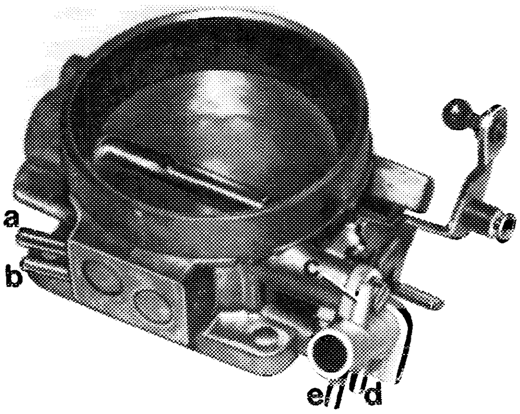

a EGR
b Vacuum switch

107-21700

b) Vehicles with throttle valve switch

Switch off engine.
Pull off coupling (arrow) between throttle valve switch and control unit.

Test resistance of throttle valve switch. Adjust throttle valve switch or renew or poles wrongly connected (see 07.3–152).

Throttle valve switch in order

Yes	No

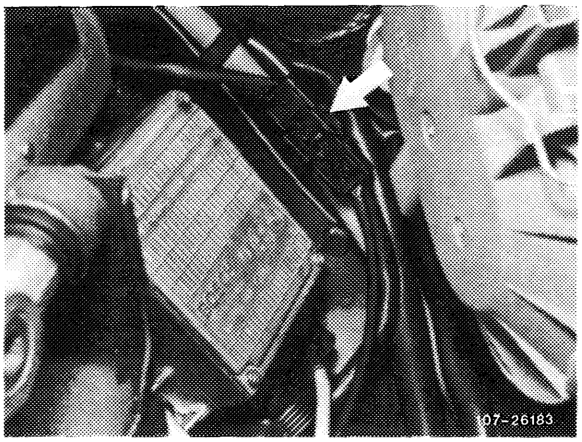

Renew throttle valve switch.

Test cables between throttle valve switch and control unit for interruption according to wiring diagram.

End of test

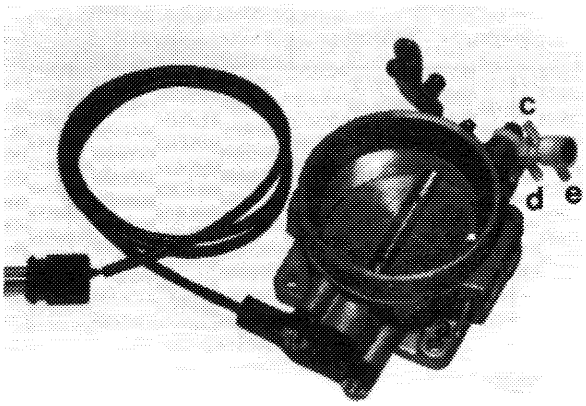

107-25806

D. Idle speed increase when engine cold

a) Vehicles with 42 °C coolant temperature switch

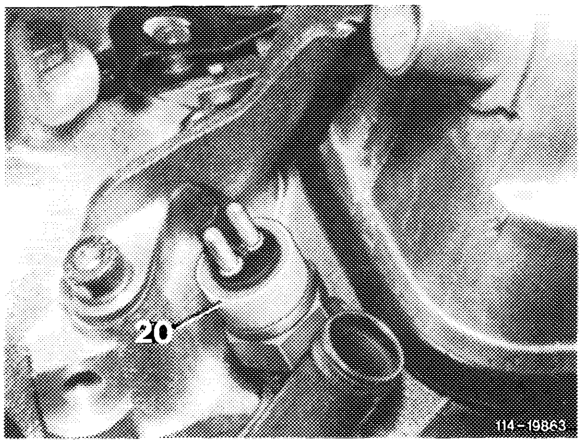

Engine idling at approx. 80 °C engine oil temperature. Simulate coolant temperature < 42 °C by detaching coupling at temperature switch (20) and jumpering.

Idle speed increases by approx. 250/min.	Idle speed does not increase.

Detach coupling at control unit and test whether battery voltage exists at contact 6 black/yellow or red/yellow cable.

Voltage

Exists.	Does not exist.

Renew control unit.

End of test

Test voltage supply according to wiring diagram.

End of test

Test or renew temperature switch.
< 42 °C coolant temperature – passage.
> 42 °C coolant temperature – no passage.

End of test

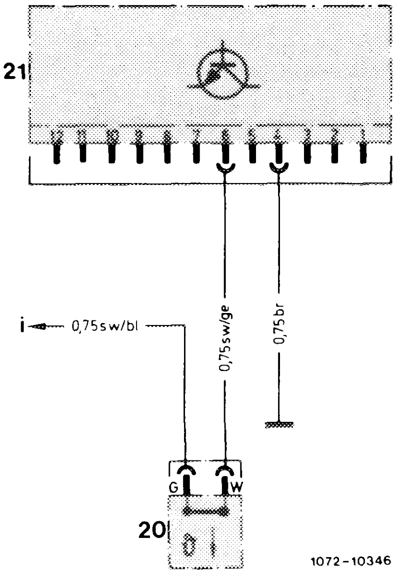

20 42 °C coolant temperature switch
21 Control unit, electronic idle speed control
i Fuse box terminal 15 fuse 12

b) Vehicles with 16 °C oil temperature switch

Engine at idle and engine oil temperature approx. 80 °C. Selector lever in position "P" or "N". Simulate engine temperature < 16 °C. For this purpose, pull coupling from temperature switch (19) and connect to ground.

Idle speed increasing to 800–900/min.	Idle speed not increasing.

Pull coupling from control unit and check line from jack 6 to temperature switch 16 °C oil for passage.

Readout

0 Ω	∞ Ω

Renew control unit.

End of test

Check line to temperature switch.

End of test

Check temperature switch or renew.
< 16 °C engine oil temperature – passage.
> 16 °C engine oil temperature – no passage.

End of test

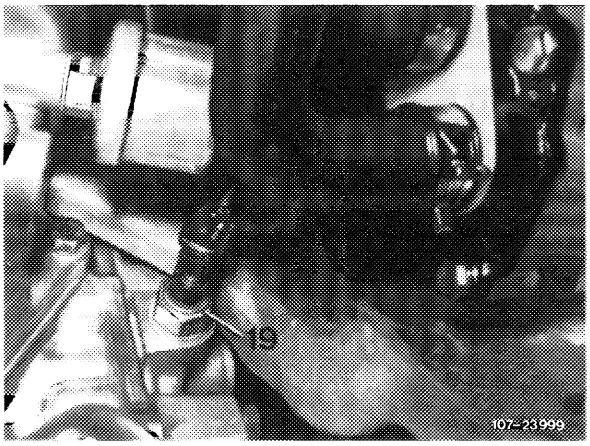

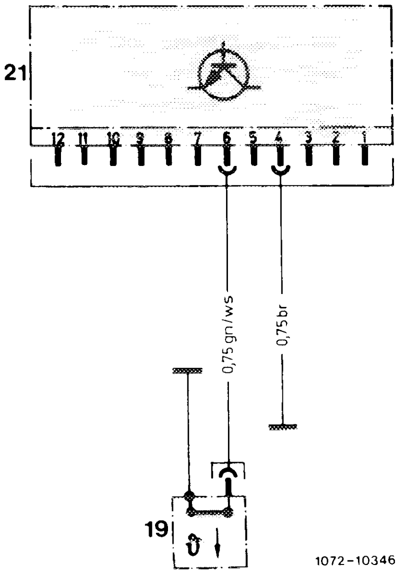

1072-10346/1

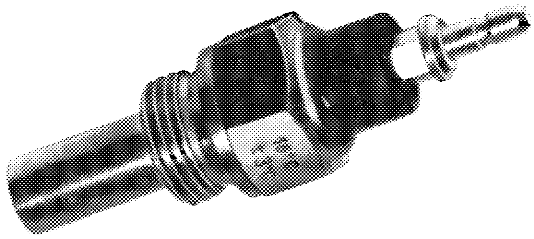

107-16798

E. Idle speed on warm engine too high

Engine at idle and engine oil temperature approx. 80 °C. Selector lever in position "P" or "N". Pull coupling from temperature switch (19).

Idle speed

dropping to approx. 500/min. | not dropping.

Renew temperature switch (19).

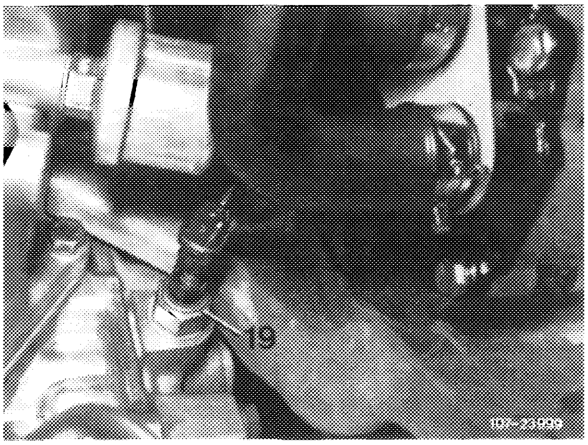

National version (USA) starting model year 1985
Pull coupling at pressure step switch.
Note: The pressure step switch for acceleration enrichment is connected in parallel to the oil temperature switch.

Idle speed

drops to approx. 500/min. | does not drop.

Renew pressure step switch.

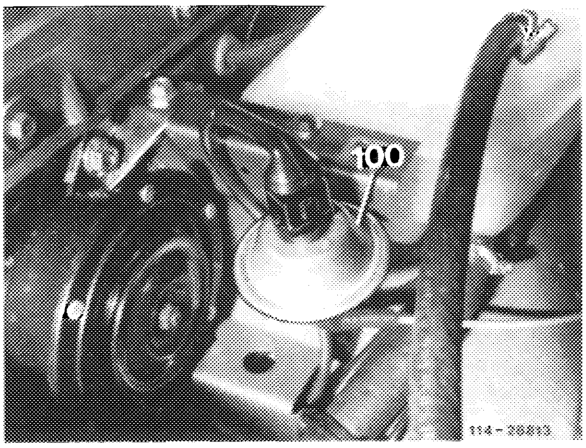

Pull coupling from control unit and check from jack 6 to temperature switch (19) for passage.

Readout

0 Ω | ∞ Ω

Renew control unit.

Check line to temperature switch (19).

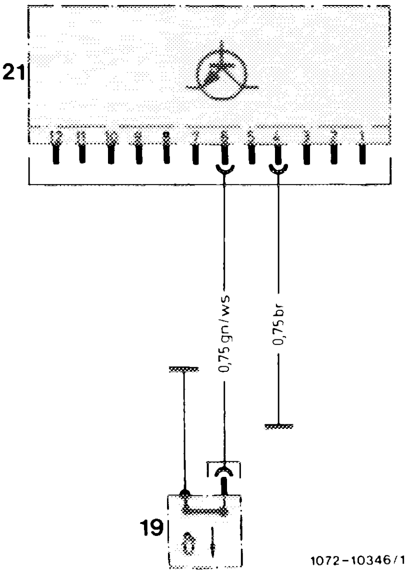

End of test

F. Assignment of auxiliary functions

Version	Idle speed and part load identification		Idle speed increase when engine cold by	
	Vacuum switch	Throttle valve switch	42 °C coolant temperature switch	16 °C oil temperature switch
Basic version starting September 1981 to April 1983 Standard Standard KAT (open-loop)	X	–	X	–
Basic version starting may 1983 Standard Standard KAT (open-loop) National version AUS CH S starting model year 1984	–	X	X	–
National version J USA Engine 116, model year 1981/82	–	X	X	–
National version J USA Engine 116 starting model year 1983 Engine 117 starting model year 1984 Basic version NV KAT (closed-loop)	–	X	–	X

07.3–120 Checking fuel pressures and for internal leaks

Job No. of flat rates or standard texts and flat rates data 07–1503.

A. Basic version

Standard

Standard KAT (open-loop)

Scope

Checking all fuel connections for leaks.
Checking air flow sensor plate and control piston for easy operation.
Checking control piston for leaks.
Connecting pressure measuring device.
Checking control pressure cold at idle.
Checking system pressure at idle.
Checking control pressure warm at idle.
Checking voltage and resistance on warm-up compensator.
Checking full load enrichment.
Checking acceleration enrichment (engine 116.962/963, 117.962/963 only).
Checking fuel distributor and fuel pump for leaks.

Test values in bar gauge pressure

Engine		116.960/961 117.960/961	116.962/963 117.962/963
System pressure at idle with engine cold or at operating temperature		5.0–5.6	
Control pressure at idle with engine at operating temperature	Warm-up compensator stabilized	3.4–3.8 at 530 mbar 1)	3.4–3.8 intake manifold vacuum independent
	Full load enrichment at idle (vacuum hose pulled off)	2.6–3.0	–
	Full load enrichment with engine stopped	–	2.6–3.0
	Acceleration enrichment at idle (both vacuum hoses pulled off)		
Control pressure according to ambient temperature at idle with cold engine		min. 0.5 (refer to diagram)	

---

1) If the control pressure is not attained, check intake manifold vacuum (section "Checking control pressure at idle with engine at operating temperature").

B. Basic version NV KAT (closed-loop)
National version (AUS)(CH)(J)(S)(USA)

Fuel pressures in bar gauge pressure

National version model year	Information plate	Warm-up compensator Bosch end No.	System pressure at idle with engine cold or at operating temperature	Control pressure at idle with engine cold or at operating temperature		
				Warm-up compensator stabilized at 530 mbar intake manifold vacuum [1]	Full load enrichment at idle (vacuum hose pulled off)	Acceleration enrichment with engine stopped and 0.5 bar vacuum on warm-up compensator
1981–1985	Color code silver	061, 134	5.0–5.6	3.4–3.8	2.6–3.0	–
1983–1985	Color code green					
1981–1985	Color code blue					
1981–1985	in Japanese	068			–	1.4–1.8
1981–1985	Color code black					
NV KAT (closed-loop) 1984–1985	–					

---

[1] In warm engine the control pressure values depend on intake manifold vacuum, in cold engine on ambient temperature. For this reason, in the event of deviations from nominal value, check intake manifold vacuum or ambient temperature and transmit to respective diagrams.

Transmit control pressure at idle on cold engine according to ambient temperature on diagram.

Special tools

Pressure measuring device[1]	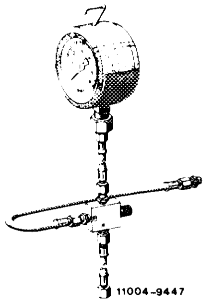	102 589 00 21 00
Clamp for hose lines	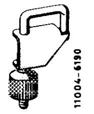	000 589 40 37 00
Hand vacuum pump	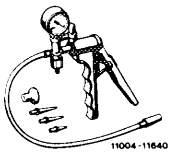	001 589 73 21 00

---

[1] The pressure measuring device 100 589 13 21 00 used up to now can be used again.

Conventional tools

Voltmeter, ohmmeter	
Screw driver element 992–T 30	e.g. Hazet, D-5630 Remscheid

Self-made tool

Contact bridge

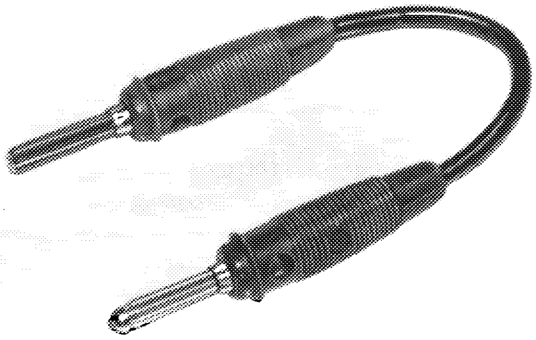

107–19204

Note

Perform leak test in the event of complaints about hot start only.

After stopping engine, the fuel pressure should still amount to 2.5 bar gauge pressure after 30 minutes.

Visual checkup

1 Remove air cleaner.

2 Check all fuel connections for leaks.

3 Check adjusting lever (1) in air flow sensor and of control piston (2) in fuel distributor for easy operation. For this purpose, pull off fuel pump relay and bridge the two jacks **for a short moment** to establish control pressure.

Model year 1981: jacks 1 and 2
Starting model year 1982: jacks 7 and 8

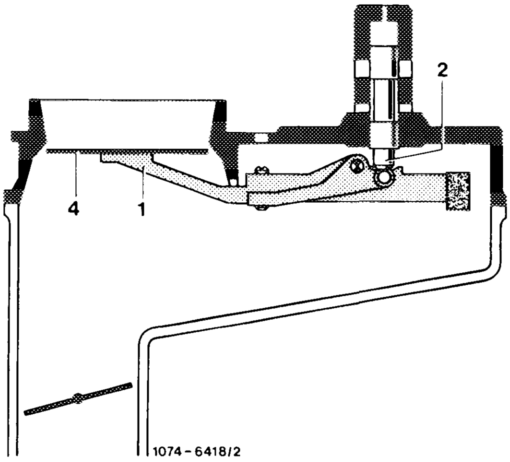

Push air flow sensor plate (4) down manually. A uniform resistance should be felt throughout. No resistance should be felt during quick upward movement, since the slowly following control piston lifts off from adjusting lever. During slow upward movement the control piston should closely follow.

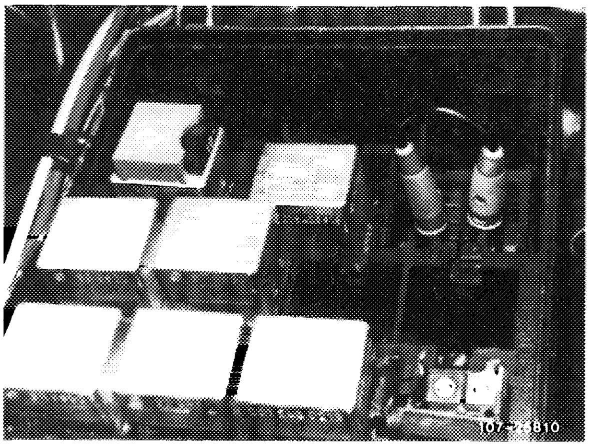

4 Check control piston in fuel distributor for leaks, push air flow sensor plate down for a short moment and hold in this position, no fuel should show up in air guide housing.

If fuel flows out, renew fuel distributor (07.3–205).

Connecting pressure measuring device

The pressure measuring device remains connected for all pressure measurements. To relieve sealing rings, keep valve screw or valve screws always opened. Connections of three-way valve are numbered.

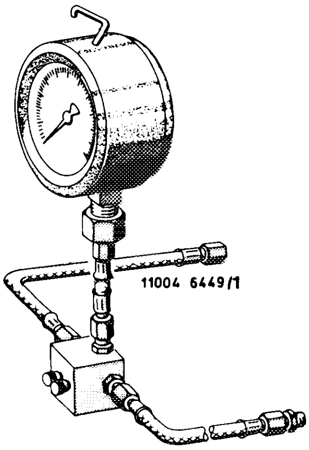

Pressure measuring device 1st version

Connection 1 = Hose line on fuel distributor
Connection 2 = Hose line on pressure gauge
Connection 3 = Hose line on released control pressure line

Pressure measuring device 102 589 00 21 00 is now provided with one valve screw on three-way valve only.

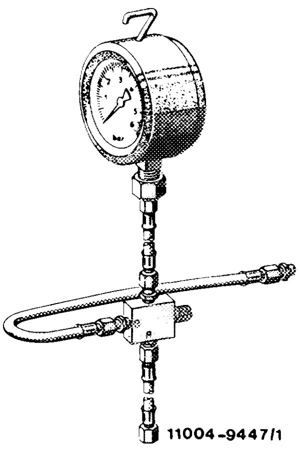

Pressure measuring device 2nd version

Connection A = Hose line on fuel distributor
Connection B = Hose line on released control pressure line

The pressure measuring device can be connected to warm-up compensator or to fuel distributor.

a) Connect pressure measuring device to warm-up compensator (air cleaner mounted).

Unscrew control pressure line (arrow) on warm-up compensator, while catching fuel with a rag.

Connect hose line with double thread connection of connection "1 or A" to control pressure line. Screw connecting line of connection "3 or B" to warm-up compensator.

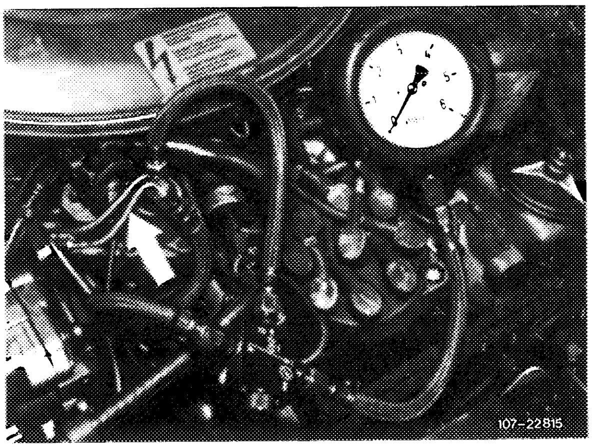

b) Connect pressure measuring device to fuel distributor (air cleaner removed).

Unscrew control pressure line (arrow) on fuel distributor, while catching fuel with a rag.

Connect hose line of connection "1 or A" to fuel distributor and connect hose lihne of connection "3 or B" to control pressure line (arrow).

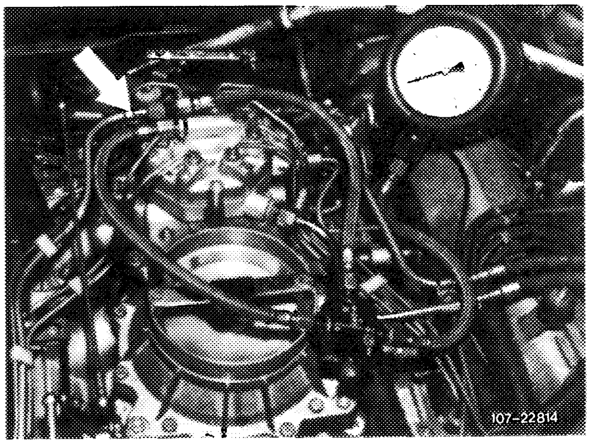

Checking control pressure at idle with engine cold

1 Open valve screw or valve screws on pressure measuring device.

2 Run engine at idle and immediately read control pressure.

Take nominal pressure in accordance with ambient temperature from control pressure diagram. If the nominal value is not attained, recondition system pressure regulator (07.3–210) or check inlet strainer in warm-up compensator. Renew warm-up compensator, if required.

(AUS) (S) starting 1981
(CH) starting 1983

Warm-up compensator Bosch end No. 061

Example:
Ambient temperature +20 °C = control pressure 1.6–2.0 bar gauge pressure.

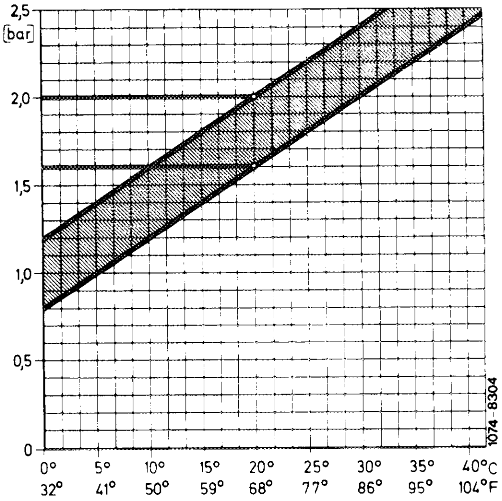

Basic version NV KAT (closed-loop)
(J) (USA) starting 1981

Warm-up compensator Bosch end No. 068

Example:
Ambient temperature +20 °C = control pressure 1.8–2.2 bar gauge pressure.

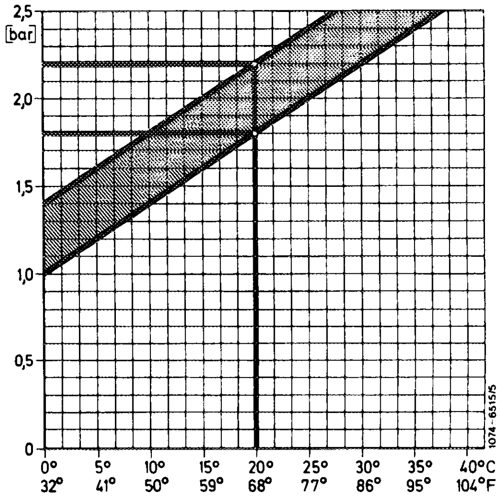

Note: Check stabilizing time of warm-up compensator. Read initial control pressure at +20 °C. At 3.4 bar, gauge pressure, stabilizing time should be within tolerance.

All additional electrical consumers switched off and a minimum voltage of 12 Volts.

Checking system pressure at idle with engine cold or at operating temperature

3 Close valve screw on pressure measuring device. On pressure measuring device with 2 valve screws, close valve screw on connection 3.

4 System pressure should amount to 5.0–5.6 bar gauge pressure.

5 If the system pressure of 5.0–5.6 bar gauge pressure is not attained or exceeded, perform the following checkups:

a) Checking fuel pump (07.3–130).

b) Recondition system pressure regulator (07.3–210).

c) Check fuel return line for passage.

6 Re-open valve screw.

Checking control pressure at idle with engine at operating temperature

7 Open both valve screws or valve screw on pressure measuring device.

8 Control pressure should increase to 3.4–3.8 bar gauge pressure (warm-up compensator stabilized).

If the control pressure of 3.4–3.8 bar gauge pressure is not attained, perform the following checkups:

AUS CH S

a) Check intake manifold vacuum. For this purpose, pull vacuum hose from warm-up compensator and attach a T-fitting for pressure gauge.

Read intake manifold vacuum and transfer to vacuum diagram.

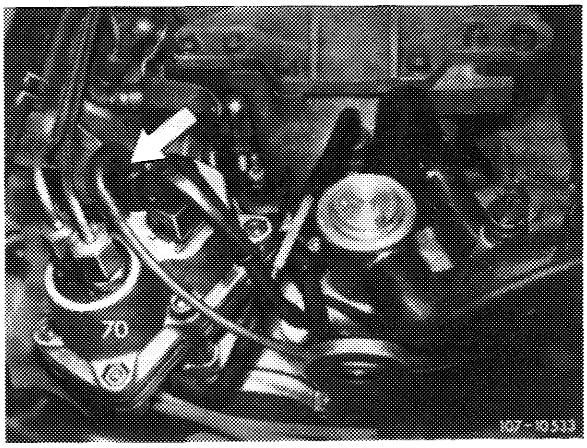

Example:
Intake manifold vacuum 400 mbar = 3.5–3.9 bar gauge pressure.

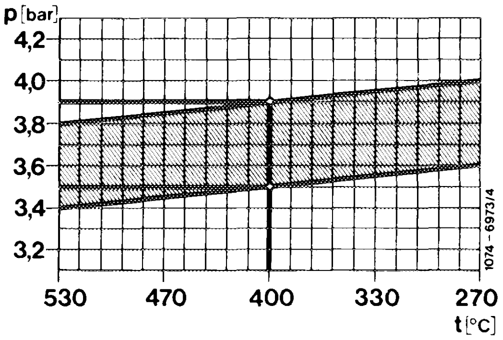

Basic version NV KAT (closed-loop)

J USA

The control pressure is not influenced by vacuum through change on warm-up compensator.

b) Check voltage on warm-up compensator with engine running. Pull electrical connection from warm-up compensator and check voltage. Minimum voltage 12 volts (without electrical consumers).

c) Check heater coil with an ohmmeter.

Renew arm-up compensator if interrupted.

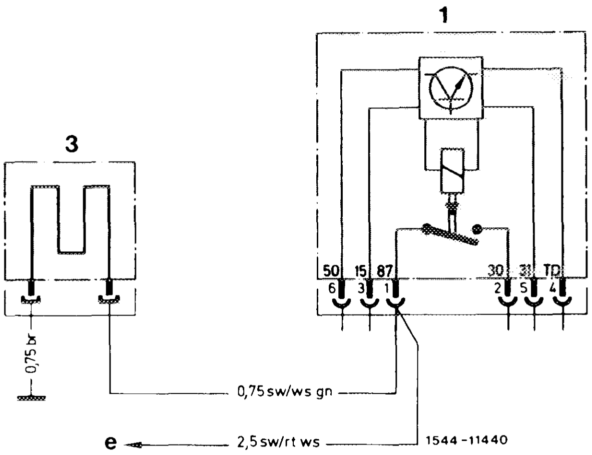

Model year 1981

1 Fuel pump relay
3 Warm-up compensator
e To fuel pump

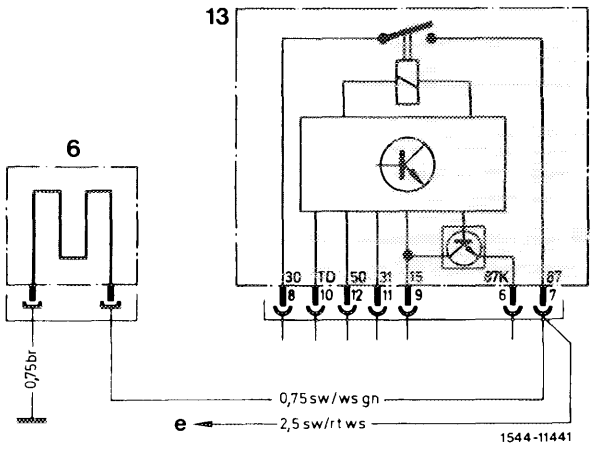

Starting Model year 1982

6 Warm-up compensator
13 Fuel pump relay
e To fuel pump

d) If the control pressure is above 3.8 bar gauge pressure, recondition system regulator (07.3–210).

Check full load enrichment AUS CH S

9 Pull vacuum hose from warm-up compensator, control pressure should now drop to 2.6–3.0 bar gauge pressure.

Renew warm-up compensator if the control pressure is not attained.

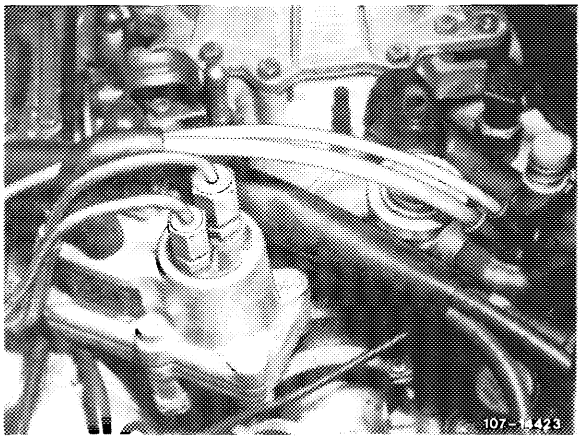

Checking acceleration enrichment
Basic version NV KAT (closed-loop), J USA

10 Check thermovalve 50 °C (37) for passage. For this purpose, pull off vacuum hose (arrow), below approx. 50 °C coolant temperature the thermovalve is closed, above approx. 50 °C temperature passage must be available. If not, renew thermovalve (37).

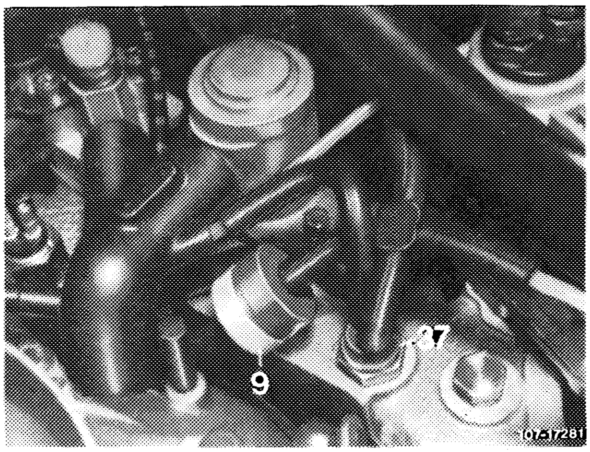

Check orifice (9) for passage. Stop engine. Pull black vacuum line from upper chamber of warm-up compensator. On 4-point distributor, disconnect connection to thermovalve. Start engine, control pressure should drop to 1.4–1.8 bar. If not, renew orifice.

11 Run engine until warm-up compensator is stabilized (3.4–3.8 bar gauge pressure).

12 Stop engine. Pull off fuel pump relay.

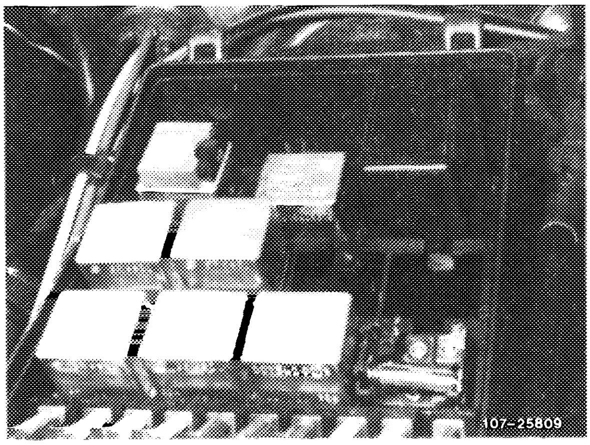

13 Pull vacuum line of vacuum chamber from warm-up compensator (2).

14 Plug on vacuum pump at contour hose (arrow) and energize warm-up compensator with 0.5 bar vacuum.

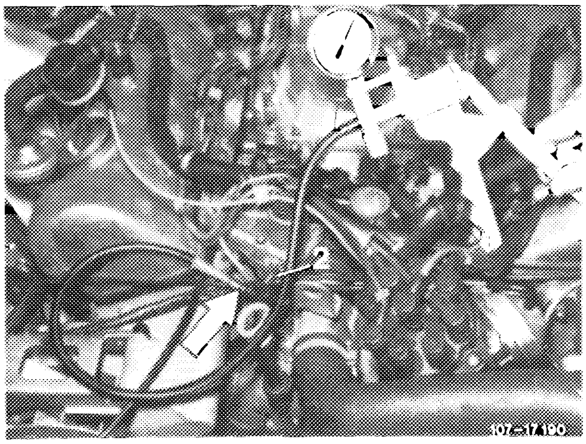

15 Bridge jacks 1 and 2 or 7 and 8.

Model year 1981: jacks 1 and 2.
Starting model year 1982: jacks 7 and 8.

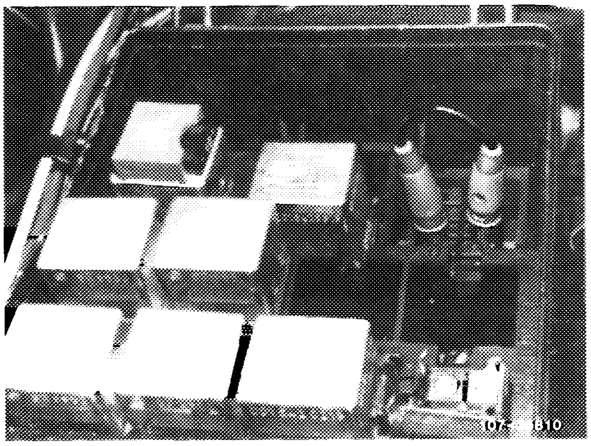

16 Control pressure should then amount to 1.4–1.8 bar gauge pressure. If control pressure deviates from nominal value, renew warm-up compensator.

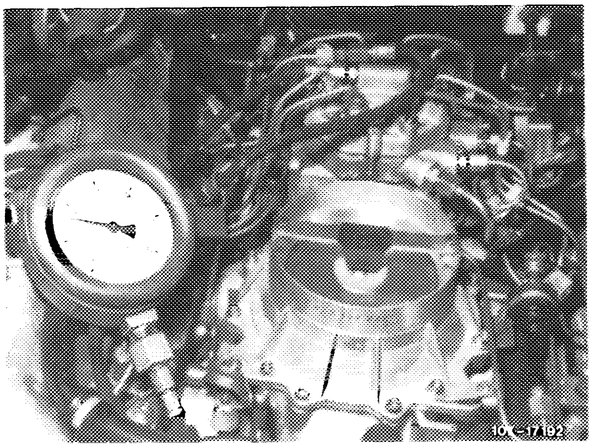

Checking fuel distributor and fuel pump for leaks

17 Stop engine. Control pressure will now drop below opening pressure of injection valves (approx. 2.8 bar gauge pressure).

18 If the control pressure drops immediately to 0 bar gauge pressure, renew check valve on fuel pump or subsequently install.

19 If the pressure drops slowly, unscrew fuel return line from fuel distributor. In the event of a leak on control piston or pressure compensating valve, fuel will flow out. If more than 1 drop flows out in 5 seconds, recondition system pressure regulator or pressure compensating valve (07.3–210).

Note: An additional leak may show up at fuel reservoir or cold start valve.

For leak test of fuel reservoir, disconnect leak line between fuel reservoir and suction damper. Then loosen leak line on suction damper and pull off. Loosen clamp, a pressureless leak quantity is permitted. Renew fuel reservoir, if required (07.3–210).

Remove cold start valve (98) for leak test (07.3–125 section "Checking for leaks").

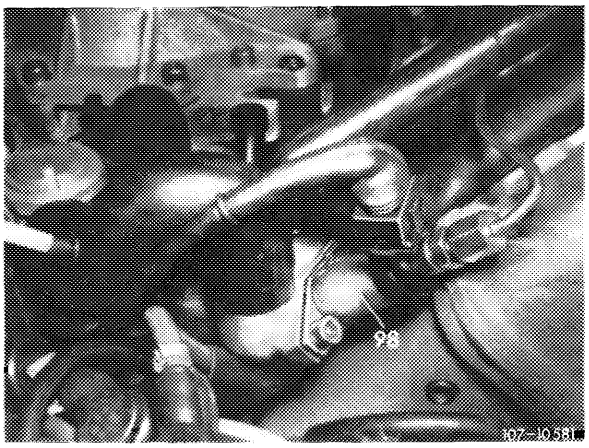

20 Disconnect pressure measuring device while catching fuel with a rag.

21 Connect fuel lines, run engine once again and check all fuel connections for leaks.

07.3–125 Checking choke system

Job No. of flat rates or standard texts and flat rates data 07–2353.

Scope

Checking series resistor of ignition system (TCI 4 prior to September 1981).
Checking fuel pressures and stabilizing time of warm-up compensator (07.3–120, section "Checking control pressure in idle when engine cold").
Checking cold start valve for function and leaks.
Checking thermo time switch.
Checking auxiliary air valve.

Test values in bar gauge pressure

Engine		116.960/961 117.960/961	116.962/963 116.963 NV KAT (closed-loop) 117.962/963
System pressure at idle with engine cold or at operating temperature		5.0–5.6	
Control pressure at idle with engine at operating temperature	Warm-up compensator stabilized	3.4–3.8 at 530 mbar[1])	3.4–3.8 intake manifold vacuum independent
	Full load enrichment at idle (vacuum hose pulled off)	2.6–3.0	–
	Full load enrichment with engine stopped	–	2.6–3.0
	Acceleration enrichment at idle (both vacuum hoses pulled off)		
Control pressure according to ambient temperature at idle with engine cold		min. 0.5 (refer to diagram)	

---

[1]) If the control pressure is not attained, check intake manifold vacuum (section "Checking control pressure at idle with engine at operating temperature" 07.3–120).

Transistorized ignition system TCI 4 (prior to September 1981[1])

Series resistor bridge (while starting)	10 Volts

---

[1]) Starting September 1981 TCI 8 z without series resistors.

Shop-made tool

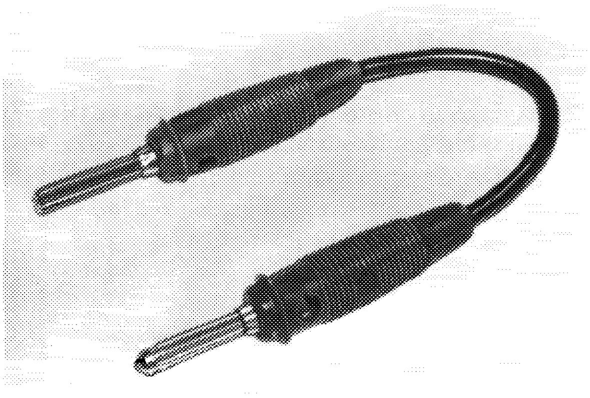

107–19204

Checking

1 Pull cable plug from warm-up compensator and on cold start valve.

2 Check series resistor bridge. For this purpose, connect positive cable of voltmeter to series resistor 0.4 Ω at output end. Start engine and read voltage during starting procedure. Nominal value 10 Volts.

If the nominal values are not attained, test ignition system (15–562).

Checking cold start valve for function and leaks

3 Remove cold start valve (98) with fuel line connected.

4 Hold cold start valve into a container.

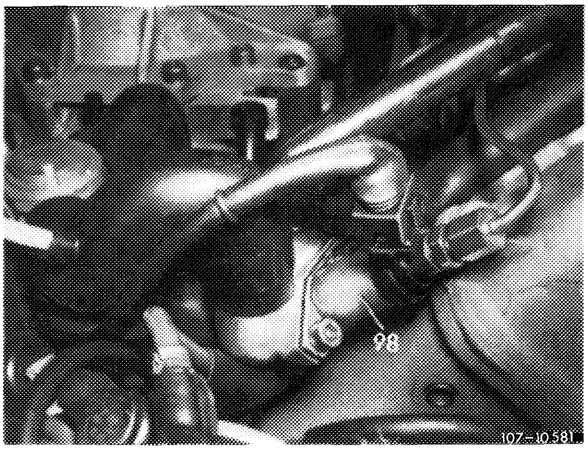

Checking for function

5 Switch on ignition.

6 Connect cold start valve to B + and ground with separate cable. Spray pattern of cold start valve should be cone-shaped.

Attention!
Connect cable first to cold start valve to prevent sparking.

No separate cable is required below + 15 °C, plug on cable plug instead and operate starter.

Checking for leaks

7 Loosen separate cable connection on cold start valve. Dry cold start valve on nozzle. No drop should be building up.

8 Switch off ignition.

9 Mount cold start valve with new seal.

10 Plug cable plug back again onto cold start valve.

Checking thermo time switch

Cold start valve is operated only at coolant temperatures below + 15 °C by means of closed thermo time switch.

The operating time increases with decreasing temperature and attains approx. 12 seconds at –20 °C.

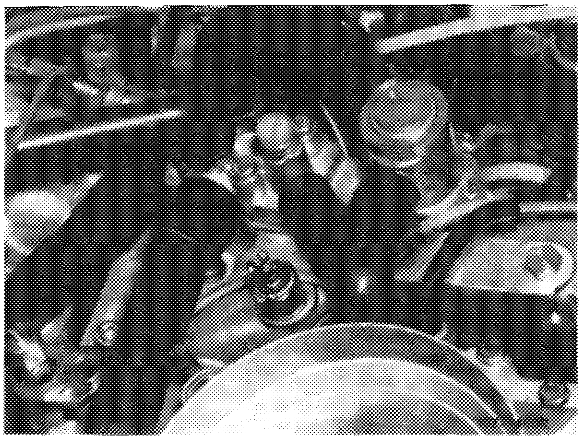

Checking below + 15 °C coolant temperature

11 Connect voltmeter to connection of cold start valve.

12 Actuate starter. Voltmeter should then indicate 10 volts for a definite period depending on coolant temperature.

The switching period increases by approx. 1.5 seconds per 5 °C under influence of decreasing temperature.

e.g. + 15 ° = 0 second
+ 15 ° = 1.5 seconds

During this test, an additional checkup of thermo time switch (99) with an ohmmeter is recommended.

Test value **below** +15 °C:
Connection G-ground = approx. 48
Connection W-ground = approx. 0
(contacts in switch closed).

Testing above +15 °C coolant temperature

Above +15 °C coolant temperature the thermo time switch (99) can be tested with an ohmmeter only. For this purpose, pull plug from thermo time switch.

Test value **above** +15 °C:
Connection G-ground = approx. 62
Connection W-ground = approx. 270
(contacts in switch open).

Put back plug on thermo time switch.

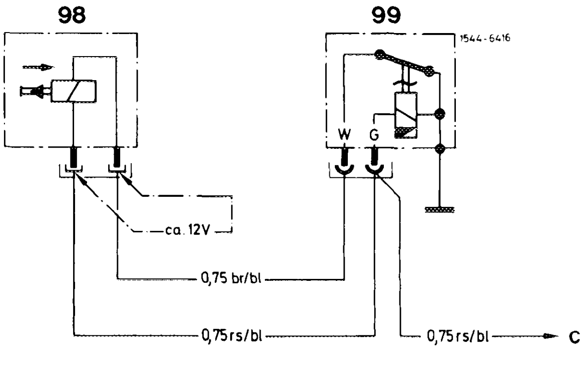

98 Cold start valve
99 Thermo time switch
c To terminal 50

Checking cutout point of auxiliary air valve

13 Following a cold start, the engine speed should amount to approx. 800–1000/min. Speed will subsequently increase to approx. 1200–1300/min and drop again to normal idle speed at approx. 70 °C coolant temperature.

14 Stop engine. Disconnect pressure measuring device while catching fuel with a rag.

15 Connect fuel lines, run engine once again and check all fuel connections for leaks.

07.3–127 Performing cold start

Job. No. of flat rates or standard texts and flat rate data 07–2320.

Special tool

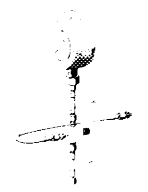

102 589 00 21 00

Test values in bar gauge pressure

Engine		116.960/961 117.960/961	116.962/963 116.963 NV KAT (closed-loop) 117.962/963
System pressure in idle with engine cold or at normal operating temperature		5.0–5.6	
Control pressure in idle with engine at normal operating temperature	Warm-up compensator stabilized	3.4–3.8 at 530 mbar[1])	3.4–3.8 not dependend on intake manifold pressure
	Full load enrichment in idle (vacuum hose detached)	2.6–3.0	–
	Full load enrichment when engine switched off	–	2.6–3.0
	Acceleration enrichment in idle (both vacuum hoses detached)		
Control pressure in line with ambient temperature in idle when engine cold		minimum 0.5 (see diagram)	

---

[1]) If the control pressure is not reached, test intake manifold vacuum (section "Testing control pressure in idle with engine at normal operating temperature" 07.3–120).

1 Connect pressure measuring device (07.3–120).

2 Run engine to build up pressure.

3 Cool engine with blower (or allow to stand overnight).

4 Perform cold start, keeping a check on pressure gauge. It may be necessary to test fuel pressures 07.3–120.

07.3–130 Checking fuel pump

Job No. of flat rates or standard texts and flat rates data 07–5700.

Test values

Voltage at fuel pump min.		11.5 volts
Delivery quantity min.		1 liter/40 seconds
Current input	prior to September 1981	approx. 11.2 amps
	starting September 1981	6–10 amps

Special tool

Clamp for hose lines	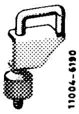	000 589 40 37 00

Conventional testers

Voltmeter, measuring glass or measuring cup (at least 1 liter), stop watch	
Multimeter	e.g. Sun DMM–5

Self-made tool

Contact bridge

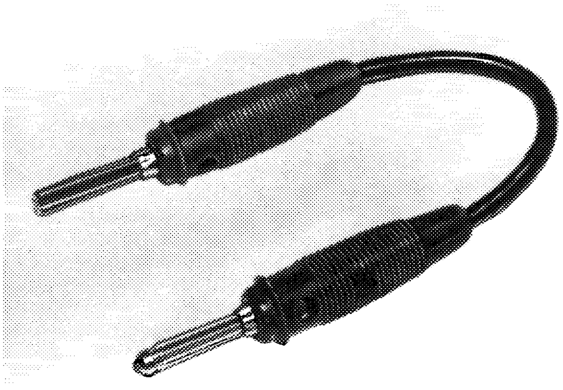

107–19204

Fuel hose Pipe with sealing cone Coupling nut	500 mm long M 14 x 1.5

Testing

1 Test power input with multimeter. For this purpose, detach fuel pump relay and connect multimeter to the following jacks.

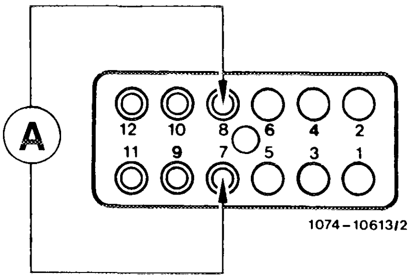

Prior to September 1981:	jacks 1 and 2.
Starting September 1981:	jacks 7 and 8.

Power input:

Prior to September 1981:	approx. 11.2 amps
Starting September 1981:	6–10 amps

If the amperage is above 15 or 10 amps, respectively, renew fuel pump.

2 Check delivery capacity of fuel pump during fuel return. For this purpose, unscrew fuel return hose (arrow) from fuel distributor.

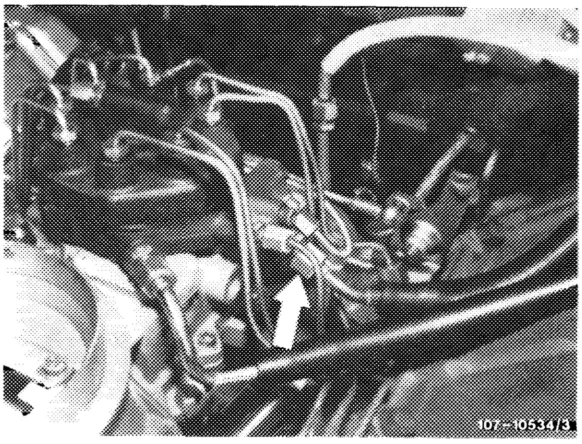

3 Screw self-made fuel hose to fuel distributor and hold into measuring glass or measuring cup.

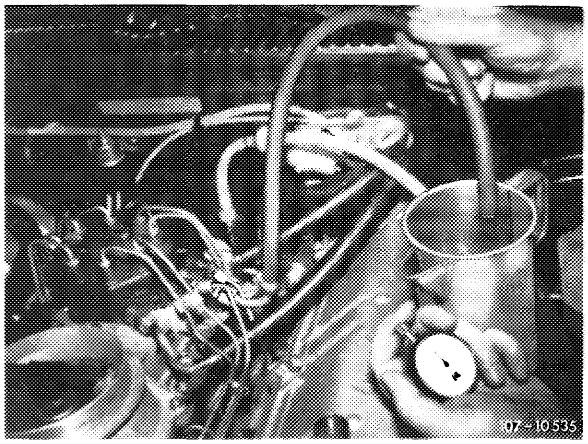

4 Check delivery capacity:

Mixture control unit **with** safety switch

Switch on ignition. Pull cable plug from safety switch on mixture control unit and put back cable plug after 40 seconds.

Mixture control unit **without** safety switch

Pull off fuel pump relay and bridge the two jacks (wiring diagram 07.3–120). This will energize the fuel pump.

Pull off contact bridge after 40 seconds.

Prior to September 1981: jacks 1 and 2.
Starting September 1981: jacks 7 and 8.

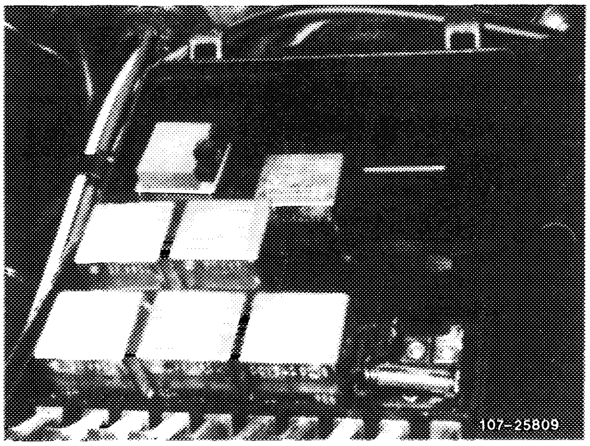

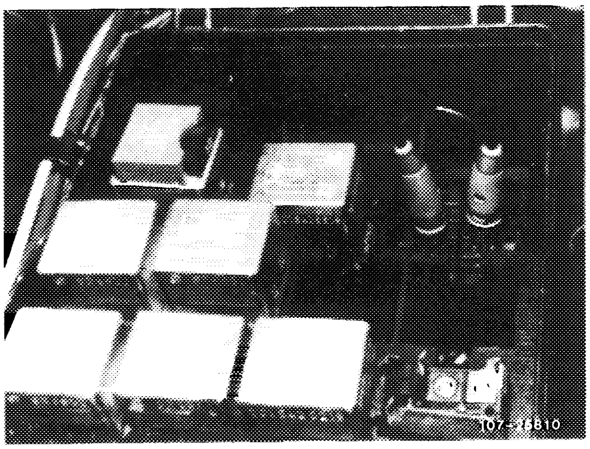

5 If the delivery quantity is less than 1 liter/40 seconds, check the following items:

a) Check voltage on fuel pump.
   Nominal value – min. 11.5 volts.

b) Check strainer in feed connection of fuel distributor for passage.

c) Check fuel lines for restrictions (pinched lines).

d) Pinch leak line between fuel reservoir and suction damper. Check delivery quantity once again. If the specified quantity is not attained, renew fuel reservoir.

e) Renew fuel filter.

6 If the delivery quantity is still too low, renew fuel pump.

7 Connect fuel return hose, mount relay.

07.3–135 Testing injection valves

Job No. of flat rates or standard texts and flat rates data 07–6500/6502.

Test values

Injection valves		Bosch No. 0 437 502 010
Opening pressure	with new injection valves	3.5–4.1 bar gauge pressure
	with used injection valves min.	3.0 bar gauge pressure

Tightening torques	Nm
Injection lines on fuel distributor (reference value)	10–12
Injection lines on injection valves (reference value)	10–15

Conventional testers and accessories

Testing injection valves Bosch KDJE 7452, or KDJE–P 400	Bosch order designation KDJE 7452, or KDJE–P 400
Nozzle tester EFEP 60 H[1]	Bosch No. 0 684 200 700
Pressure gauge 0–6 bar gauge pressure, housing dia. = 100 mm Quality class 1.0	Bosch No. 1 687 231 000
Pipe line	Bosch No. 1 680 750 001

[1]) Similar to nozzle testers used up to now. Testing of injection valves requires pressure gauge named above or pressure gauge of pressure measuring device 100 589 13 21 00.

Note

The nozzle or valve tester serves to test the opening pressure, buzzing, spray pattern, as well as testing injection valves for leaks.

Prior to testing injection valves, fill container of tester and vent testing device. For testing, use kerosene only.

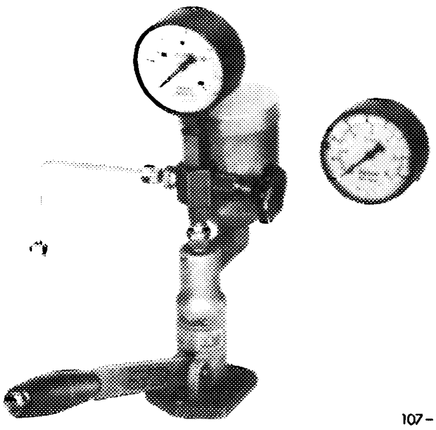

107–10592

Renew injection valves which are exceeding the tolerance. Injection valves can be individually replaced within a set.

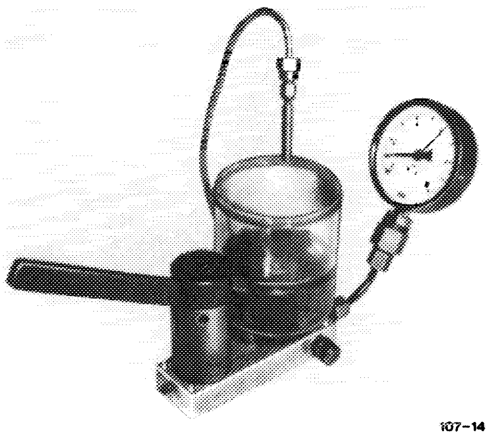

107–14212

Remove injection valves for test (07.3–215).

1 Coarse test for leaks:

a) Connect removed injection valves to tester. Vent pressure line with shutoff valve opened and coupling nut released. Then tighten coupling nut.

b) With shutoff valve opened, slowly actuate hand lever (4 s/stroke) and establish pressure up to max. 1.5 bar gauge pressure. If a leak shows up on injection valve, renew injection valve.

2 Checking opening pressure:

Close shutoff valve. Flush injection valve by means of several fast manual movements of hand lever.

Open shutoff valve and check opening pressure during slow movement of hand lever.

3 Precision test for leaks:

Close shutoff valve. Flush injection valve by a number of quick manual movements of hand lever, open shutoff valve and let pressure slowly increase up to 0.5 bar gauge pressure above the previously determined opening pressure and hold. No drop should be formed on injection valve within the next 15 seconds.

4 Buzzing test, evaluation of spray pattern:

Close shutoff valve and flush valve by moving lever several times (0.5 s/stroke). Then reduce lever speed to approx. 1 s/stroke. Valve should now buzz. No drop should be forming at mouth of valve. Jet should not be cord-like. One-sided, atomized formation of jet within a total spray angle of approx. 35° is permitted.

Damaged injection valves

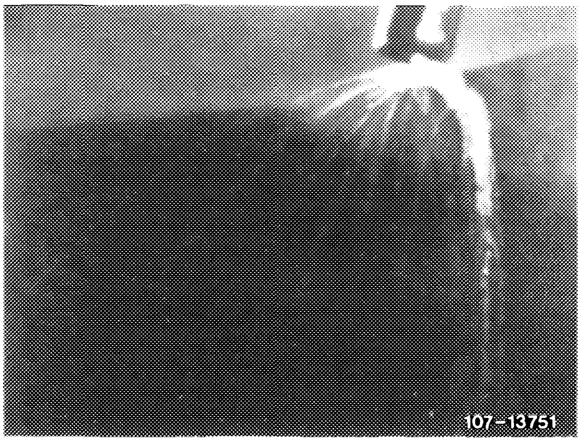

Drop formation

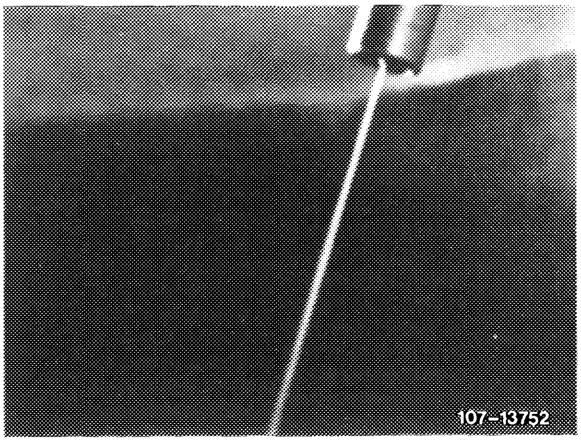

Cord-like jet

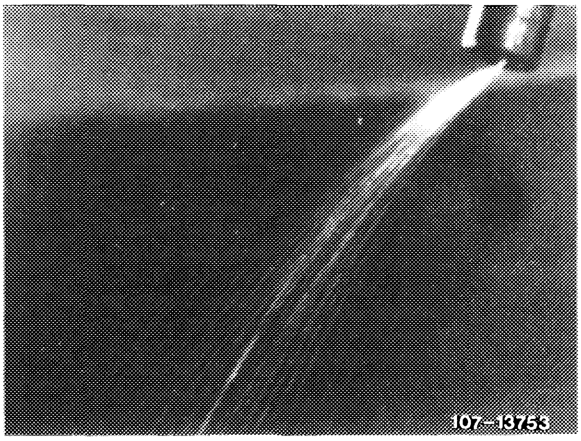

Spreading jet

Good injection valves

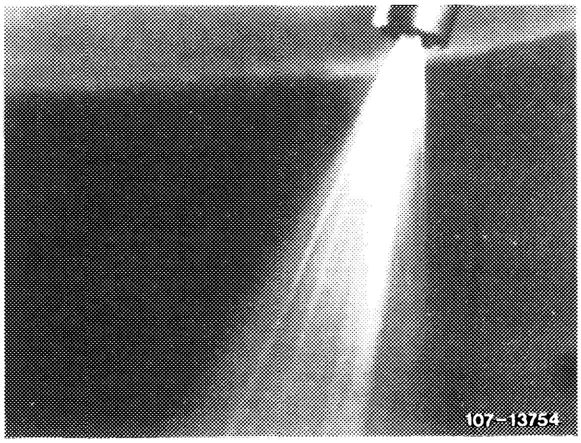

Good jet preparation

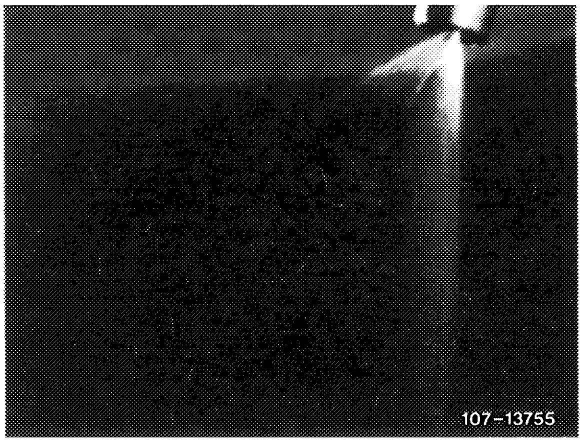

Slightly one-sided atmoization

07.3–152 Testing, adjusting throttle valve switch

Job number of job unit or standard text and flat rate documentation 07–1522.

A. Basic version Standard
Standard KAT (open-loop)

Conventional tool

Ohmmeter

Note

Remove throttle valve housing for renewing throttle valve switch (07.3–230).

Testing, adjusting

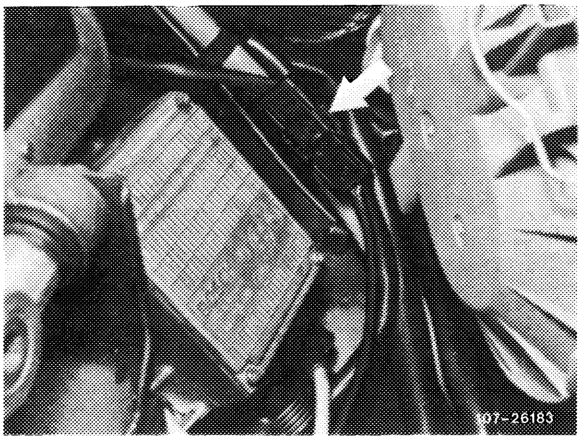

1 Detach connector (arrow).

Set ohmmeter to measuring range 0 – ∞ Ω.

2 Check idle speed stop by pushing throttle valve to idle speed stop. Connect to jacks 1 and 2.

3 Keep turning throttle valve switch until 0 ohms is indicated.

4 Lift throttle valve slightly, readout should move to ∞ Ω (insert 0.3 mm feller gauge).

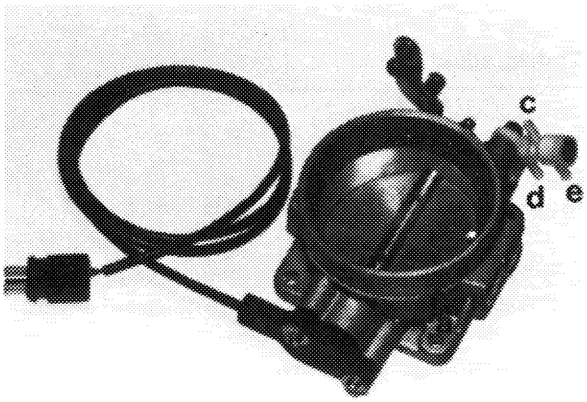

107–25806

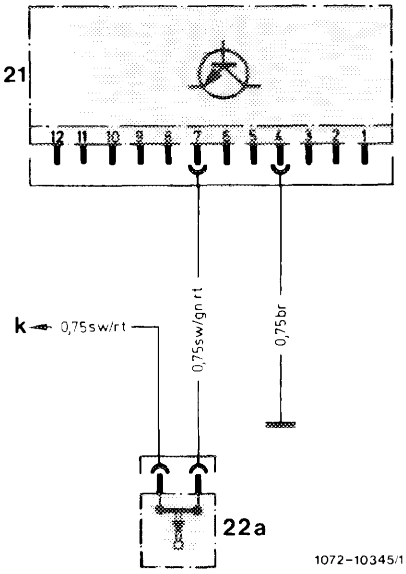

21	Control unit of electronic idle speed control
22a	Throttle valve switch
k	Fuse box terminal 15 fuse 12

B. Basic version NV KAT (closed-loop)
National version (J) (USA) 1981–1985
(AUS) (CH) (S) 1984/85

Conventional tool

Ohmmeter

Note

Remove throttle valve housing for renewing throttle valve switch (07.3–230).

Testing, adjusting

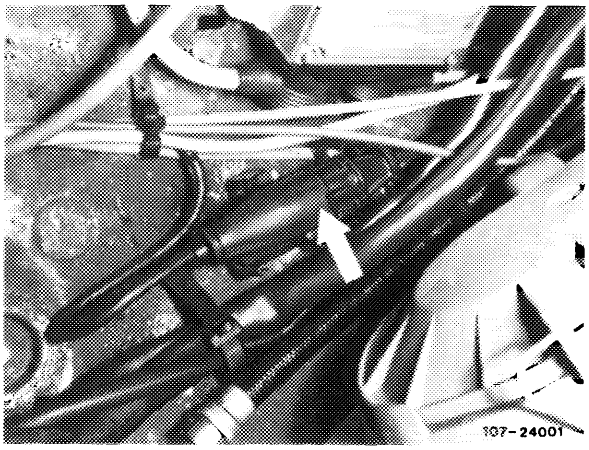

1 Detach connector (arrow).

Set ohmmeter to measuring range 0 – ∞ Ω.

2 Check idle speed stop by pushing throttle valve to idle speed stop. Connect ohmmeter to jacks 1 and 2.

3 Keep turning throttle valve switch until 0 ohms is indicated.

4 Lift throttle valve slightly, readout to ∞ ohms (insert 0.3 mm gauge).

5 Check full load stop pushing throttle valve against full load stop and connecting jacks 2 and 3, readout is then 0 ohms.

6 Turn throttle valve slightly in direction of idle speed, readout should move to ∞ ohms.

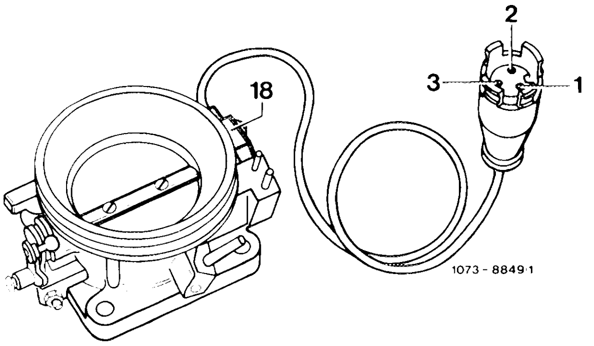

07.3–160 Checking constant delivery of fuel distributor

Job No. of flat rates or standard texts and flat rates data 07–1509.

Test values

Simulated operating condition	Air flow sensor plate fixed at approx. . . . cc/min	Max. dissipation in cc/min
Idle	6	0.4
Partial load	30	4.0
Full load	100	10.0

Conventional Bosch testers and accessories

Designation	Order designation
Fuel distribution reference unit	KDJE 7455
Tester carriage[1])	M 200/2 or KDJE 7470

1) If tester carriage is used for fuel distribution reference unit, an additional angle plate is required. The plate can be self-made or obtained from a Bosch representative.

Self-made tool

Contact bridge

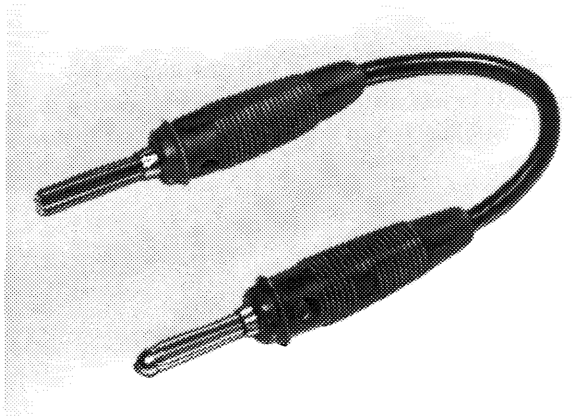

107–19204

Note

The fuel distribution reference unit is available for testing fuel distributor in vehicle. The unit serves to measure the individual amounts of fuel which the fuel distributor dispenses to the injection valves. Measurements are made with engine stopped. Operating conditions (idle, partial or full load) are simulated and set on air flow sensor plate by means of an adjusting device.

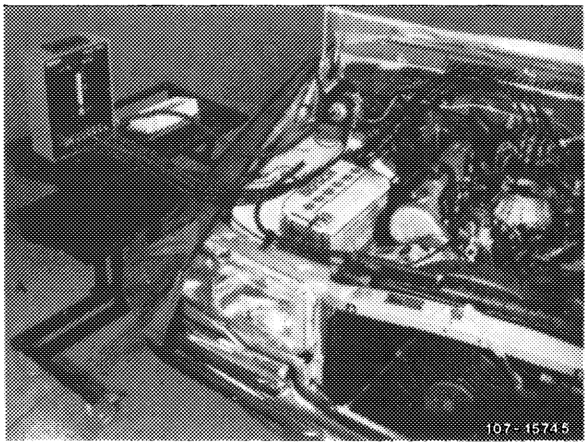

Testing

1 Set up fuel distribution reference unit horizontally adjacent to vehicle (tool or tester carriage).

2 Remove air cleaner.

3 Unscrew injection lines on fuel distributor and loosen at injection valves, unscrew if required.

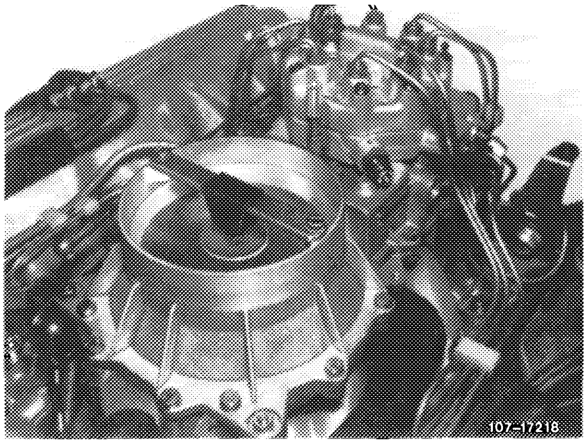

4 Connect connecting lines of fuel distribution reference unit to fuel distributor (sequence according to Fig.) and plug fuel return line into filter neck of fuel tank.

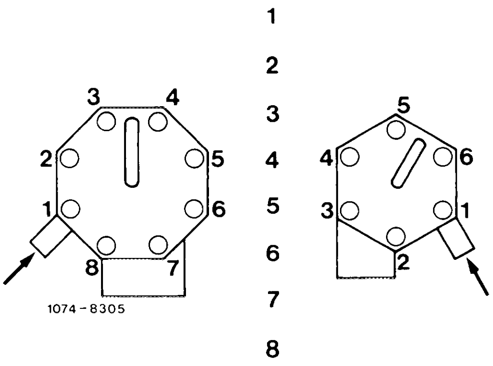

A 8-cylinder engine
B 6-cylinder engine

5 Clamp adjusting device for fixing air flow sensor plate to stop bracket of air funnel.

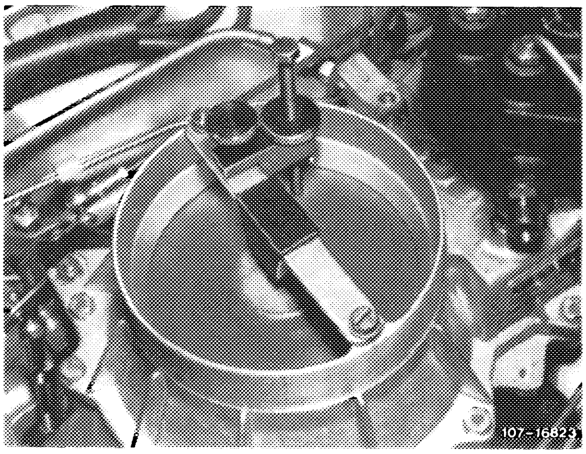

6 Switch on ignition.

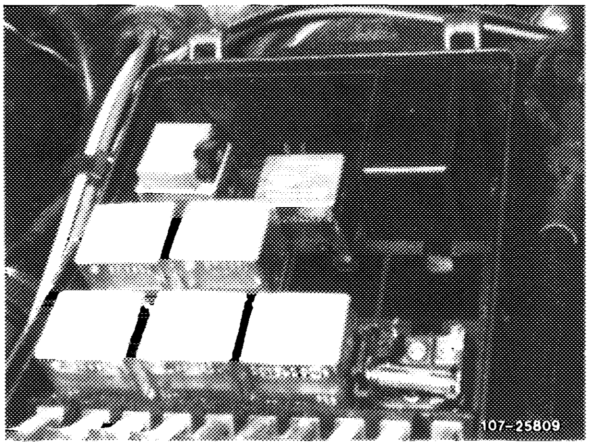

On vehicles without safety switch, pull off fuel pump relay and bridge the two jacks. This will energize the fuel pump:

Prior to September 1981: jacks 1 and 2.
Starting September 1981: jacks 7 and 8.

7 Deflect air flow sensor plate and push buttons 1 to 8 for venting unit individually for a short moment.

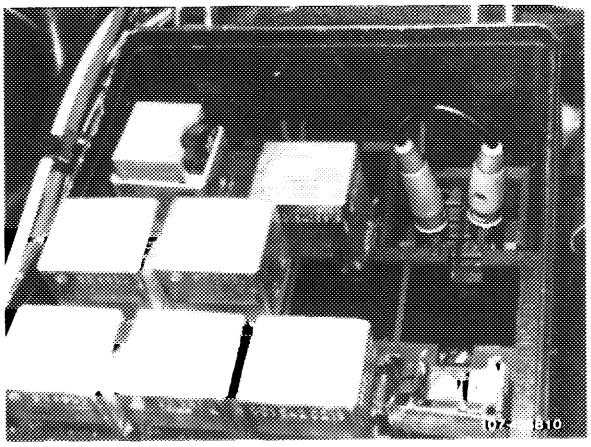

8 Keep one button pushed, deflect air flow sensor plate with adjusting device and fix at a flow rate of 6 cc/min (idle).

9 Push remaining buttons, read individual flow rates and enter on data sheet.

Note: Orders for data sheets, print No. 800.99.472.00 should be mailed by service establishments and representatives in the Federal Republic of Germany with punch cards to the "Drucksachen-Zentrallager" in Stuttgart-Untertürkheim, and by the general representative in export countries to VKT/LV, Stuttgart-Untertürkheim. Data sheets are supplied in blocks of 50 sheets each.

10 Calculate difference between lowest and highest flow rate and compare with tolerance value (refer to test values).

11 For partial and full load, fix air flow sensor plate as described under item 8 at a flow rate of 30 cc/min or 100 cc/min. Then also calculate difference between lowest and highest flow rate and compare with tolerance value.

12 If dispersion is outside teolerance, exchange fuel distributor.

13 Run engine and check all fuel connections for leaks.

14 Adjust idle speed (07.3–100).

07.3–165 Checking fuel pump relay with electronic rpm control (breakaway speed)

Job No. of flat rates or standard texts and flat rates data 07–5792.

Versions and regulating (breakaway) speeds

Engine	MB part No.	Breakaway speed 1/min	Kickdown 1/min	Remarks

Standard version

116.960 116.961	001 545 04 05 001 545 16 05	6600 ± 50	—	—
117.960 117.961	001 545 05 05 001 545 17 05	5950 ± 50		
116.962 116.963 117.962 117.963	001 545 34 05	5950 ± 50	5750 ± 50	with kickdown shutoff
116.963 NV KAT (closed-loop)	001 545 53 05	5500 ± 50	5300 ± 50	with kickdown shutoff

AUS S 1981

116.960 116.961	001 545 05 05 001 545 17 05	5950 ± 50	—	—

AUS S 1982–1985
CH 1983–1985

116.962 116.963	001 545 49 05	5950 ± 50	5750 ± 50	with kickdown shutoff

J USA 1981

116.960 116.961	001 545 06 05 001 545 15 05	5300 ± 50	—	—

J USA 1982

116.962 116.963	001 545 36 05	5300 ± 50	5100 ± 50	with kickdown shutoff

J USA 1983–1985

116	001 545 53 05	5500 ± 50	5300 ± 50	with kickdown shutoff

Conventional testers

Voltmeter, revolution counter

Note

The fuel pump relay is controlled via ignition impulses. The impulse number is computed as follows:

$$\frac{\text{Rpm x number of cylinders}}{2}$$

Example:
Breakaway of pump relay 001 545 07 05 for engine 110.98 (6650 ± 50/min) starts at approx. 19 950 impulses per minute; breakaway of relay 001 545 04 05 (6600 ± 50/min) for engine 116.96 will not start before 26 400 impulses. If these relays are mixed up, the engine 110 may rev up and breakaway for engine 116.96 would start too soon, even though the relay shows almost similar breakaway speeds.

Layout of fuel pump relay

Model 107

Lefthand steering

At the right inside vehicle behind glove box. For repair jobs, remove glove box and lining.

Righthand steering

At the right inside vehicle above pedals. For repairs, remove lining.

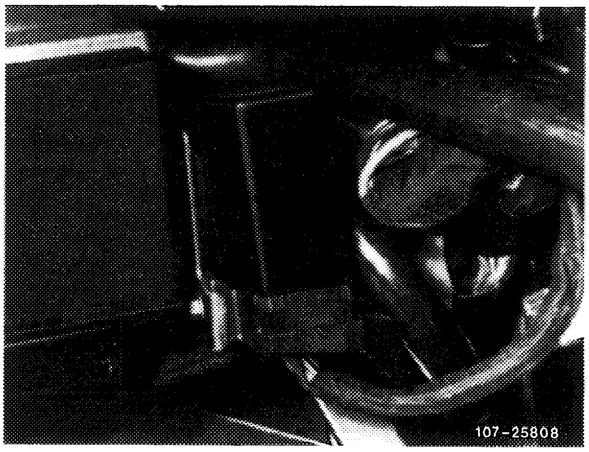

Model 126

Lefthand steering

At the left in fuse box.

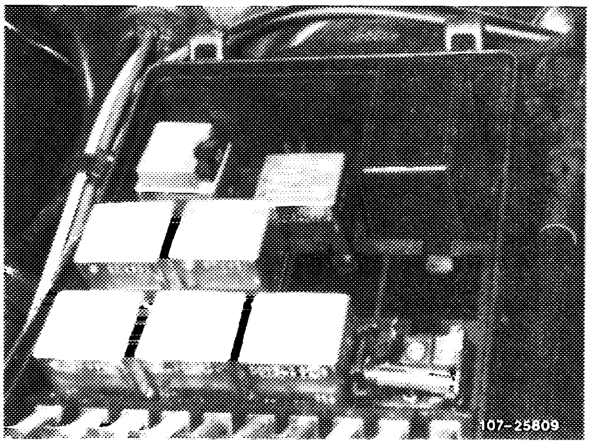

Righthand steering

At the right in fuse box.

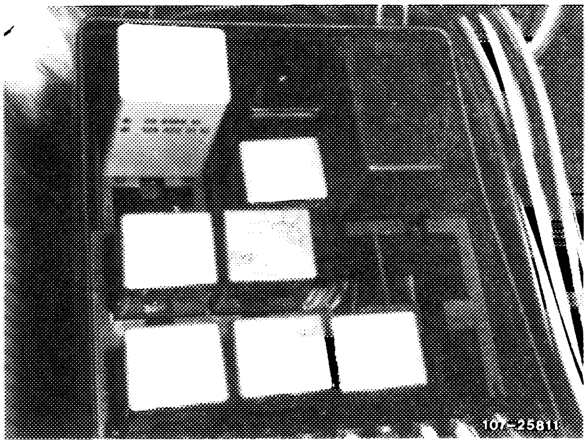

Testing

Test condition

Battery charged at least 60 %.

Note: For wiring diagram and test sequence for mixture control unit with safety switch refer to repair instructions engine 116 (3.5) and 117 (4.5).

A. Prior to September 1981

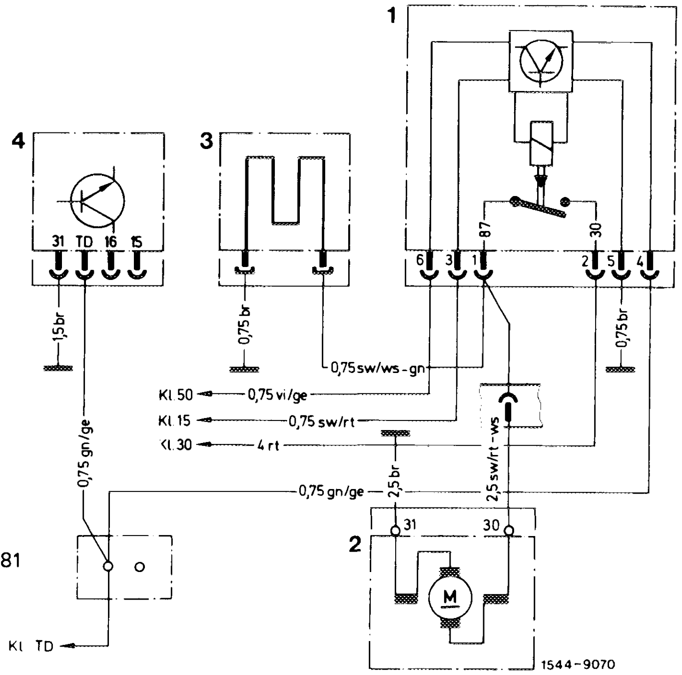

Wiring diagram prior to September 1981

1 Fuel pump relay
2 Fuel pump
3 Warm-up compensator
4 TCI switching unit

Checking activation of fuel pump relay

Remove fuel pump relay.
Connect negative cable of voltmeter to vehicle ground. Measure voltage with positive cable of voltmeter on jack 2 of coupling.

approx. 12 volts	0 volt

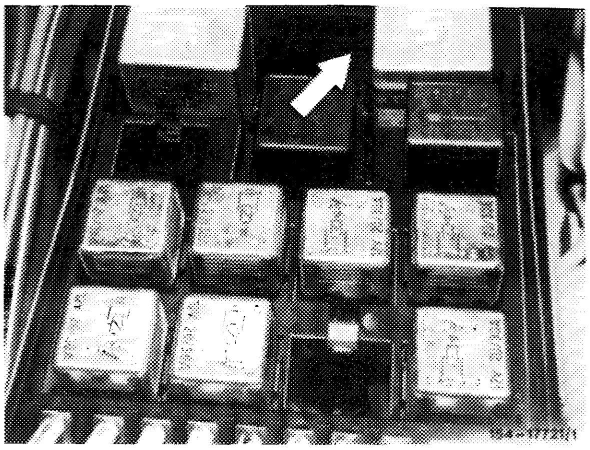

Check line (terminal 30, red) to cable connector of engine harness for interruption.

Repair interruption.

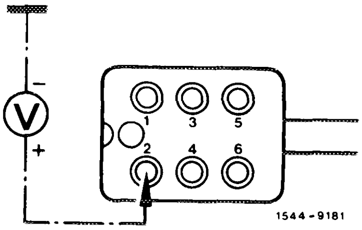

Switch on ignition.
Measure voltage on jack 3 of coupling with positive cable of voltmeter.

approx. 12 volts	0 volt

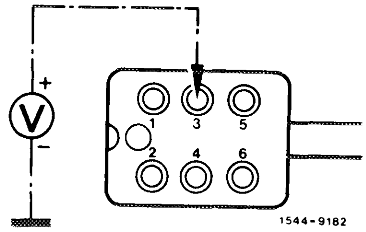

Test line (terminal 15, black/red) to ignition starter switch for interruption.

Repair interruption.

Connect positive cable of voltmeter to jack 2 and negative cable of voltmeter to jack 5 of coupling and measure voltage.

approx. 12 volts	0 volt

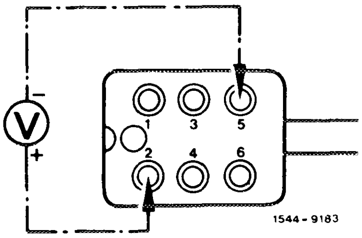

Test line (terminal 31, brown) to grounding point for interruption.

Repair interruption.

Connect revolution counter to jack 3 and jack 4 of coupling.

Actuate starter.

approx. 200/min.	0/min

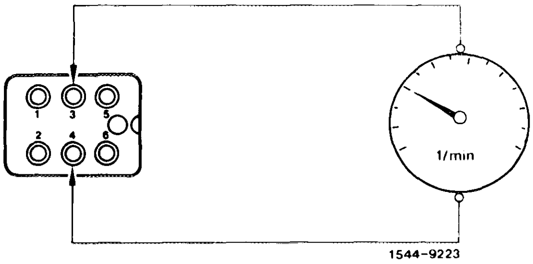

Test line (terminal TD, green/yellow) to TCI switching unit for interruption.

If line is in order, renew switching unit.

Checking function of fuel pump relay

Connect negative cable of voltmeter to vehicle ground. Plug fuel pump relay on coupling in such a manner that the voltage can be measured with positive cable of voltmeter. Actuate starter for this purpose.

approx. 12 volts	0 volt

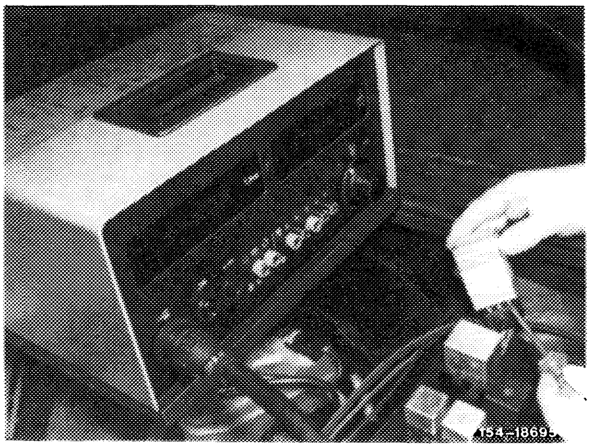

Renew fuel pump relay.

Run engine at idle.

Engine running.	Engine not running.

Renew fuel pump relay.

If the engine is not regulated (breakaway speed) after attaining engine max. speed, renew fuel pump relay.

The respective breakaway speed is punched into fuel pump relay.

End of test

B. Starting September 1981

Wiring diagram starting September 1981

2 Fuel pump
3 Coupling, 8-pole
5 Kickdown switch
6 Warm-up regulator
7 Coupling, tail lamp wiring harness
13 Fuel pump relay
23 Switch selector lever position "B"
a Lug terminal 30
b Cable connector terminal TD
c Control unit of electronic idle speed control
d Cable connector engine terminal 50
e Fuse capsule terminal 15
Access fuse 14
f Magnetic valve automatic transmission
g Model 107: Coupling, tail lamp wiring harness (7)
14-pole, jack 2
Model 126: fuel pump relay (13)
Terminal 87, jack 7

Line colors
br = brown
ge = yellow
gn = green
rt = red
sw = black
vi = purple
ws = white

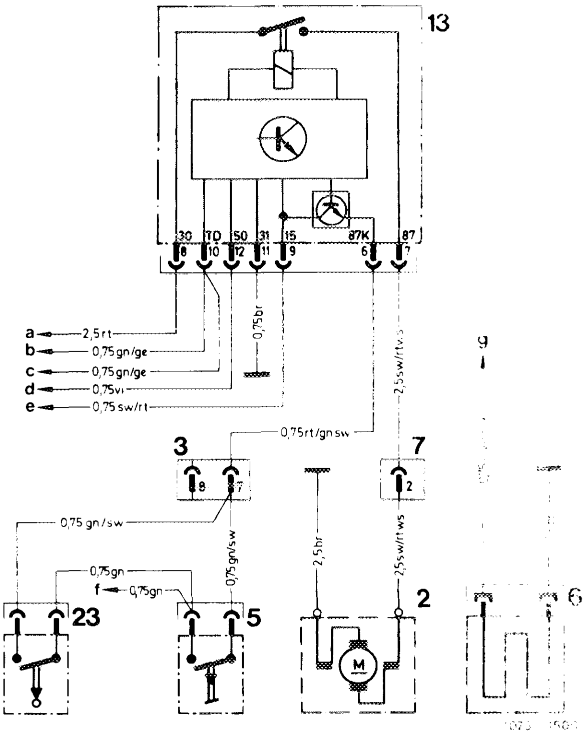

Testing activation of fuel pump relay

Remove fuel pump relay.
Connect negative cable (black) of voltmeter to vehicle ground. Measure voltage with positive cable (red) of voltmeter on jack 8 (terminal 30) of coupling.

approx. 12 volts	0 volt

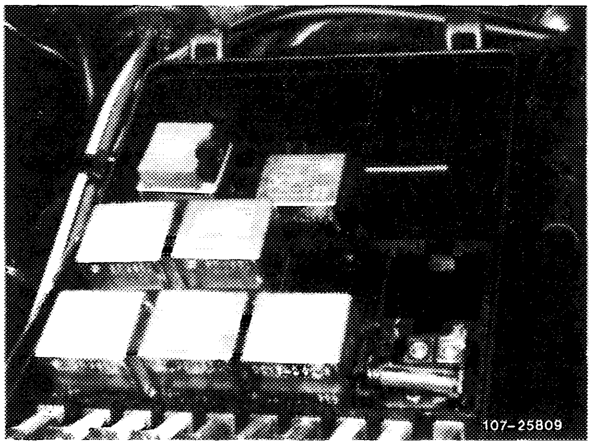

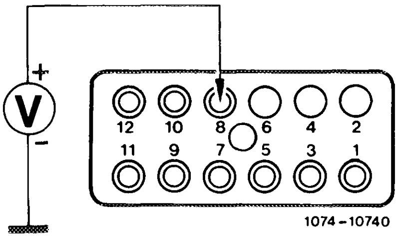

1074-10740

With jack 7 and 8 bridged, the fuel pump should run.	Repair interruption according to wiring diagram.
If not	

End of test

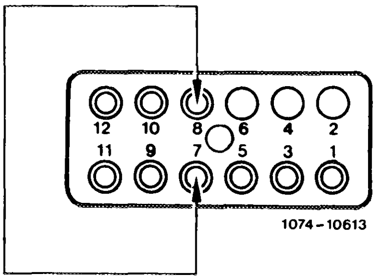

1074-10613

Switch on ignition.
Measure voltage with positive cable (red) of voltmeter on jack 9 (terminal 15) of coupling.

approx. 12 volts	0 volt

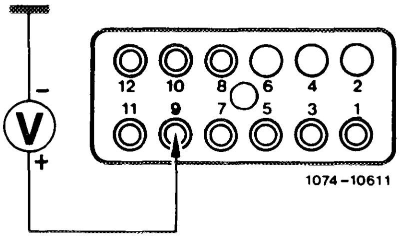

1074-10611

Repair interruption according to wiring diagram.

End of test

Connect positive cable (red) of voltmeter to jack 8 (terminal 30) and negative cable (black) of voltmeter to jack 11 (terminal 31) of coupling and measure voltage.	
approx. 12 volts	0 volt

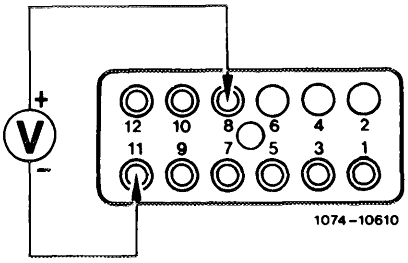

Repair interruption according to wiring diagram.

End of test

Connect engine tester. Connect dwell angle measuring cable to jack 10 (terminal TD). Operate starter. Dwell angle 7–34°.	
Yes	No

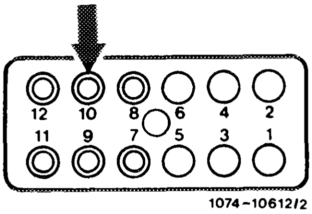

Test line (terminal TD, green/yellow) to TCI switching unit for interruption.

Test ignition system, if required.

End of test

Connect positive cable (red) of voltmeter to jack 12 (terminal 50) and negative cable (black) of voltmeter to jack 11 (terminal 31) of coupling and measure voltage. Operate starter for this purpose.

approx. 12 volts	0 volt

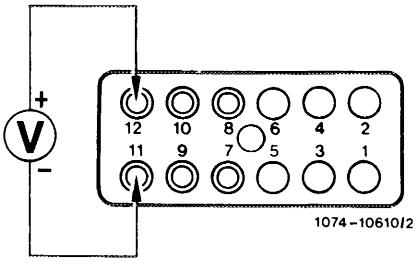

Repair interruption according to wiring diagram.

End of test

Check kickdown shutoff. With engine running, the 8-pole coupling (arrow) terminal 7 is energized. Voltage should drop at 200/min prior to breakaway speed.

No

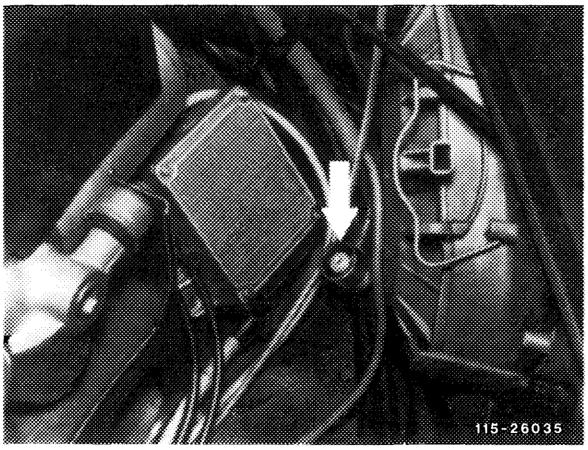

Renew relay.

End of test

If all tests are in order and the fuel pump activation is still at fault, renew relay.

If there is no breakaway after the engine max. speed has been attained, renew fuel pump relay.

The respective breakaway speed is punched into fuel pump relay.

End of test

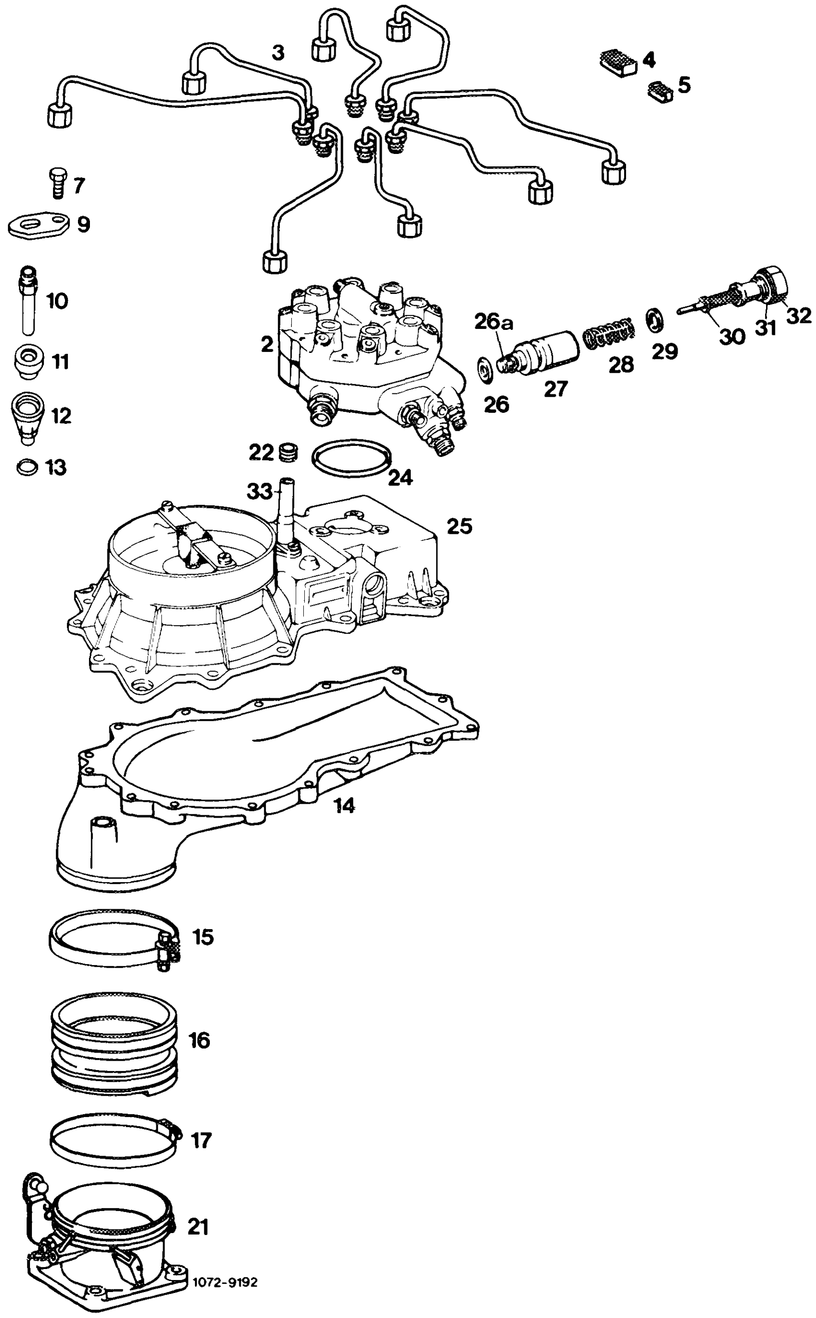

2	Fuel distributor
3	Injection lines
4	Plastic clip
5	Plastic clip
7	Hex. head screw
9	Fastening holder
10	Injection valve
11	Rubber ring
12	Plastic sleeve
13	O-ring
14	Air guide housing
15	Hose clamp
16	Rubber sleeve
17	Hose clamp
21	Throttle valve housing
22	Closing plug
24	O-ring
25	Air flow sensor
26	Contour ring
26a	Lock
27	Regulator piston
28	Compression spring
29	Adjusting washers
30	O-ring
31	Copper sealing ring
32	Closing plug
33	Idle speed adjusting device

Prior to September 1981

1	Cold start valve
2	Fuel distributor
3	Contour hose for venting at righthand cylinder head cover
3a	Leak connection
4	Warm-up compensator
5	Hose clamp
6	Control pressure line with Tecalan element
7	Control pressure line
8	Connecting hose
9	Leak line
10	Auxiliary air valve
11	Contour hose
12	Vacuum line
13	Plastic clip
14	Connecting hose
15	Leak line
16	Fuel line
17	Fuel line
18	Contour hose
18a	Connection for full load enrichment
18b	Connection for ignition retard
19	Contour hose
19a	Connection for leak line
20	Gasket
21	Idle speed air distributor
22	Contour hose
23	Idle speed air screw
24	Thermo time switch
25	Sealing ring
26	Pressure damper

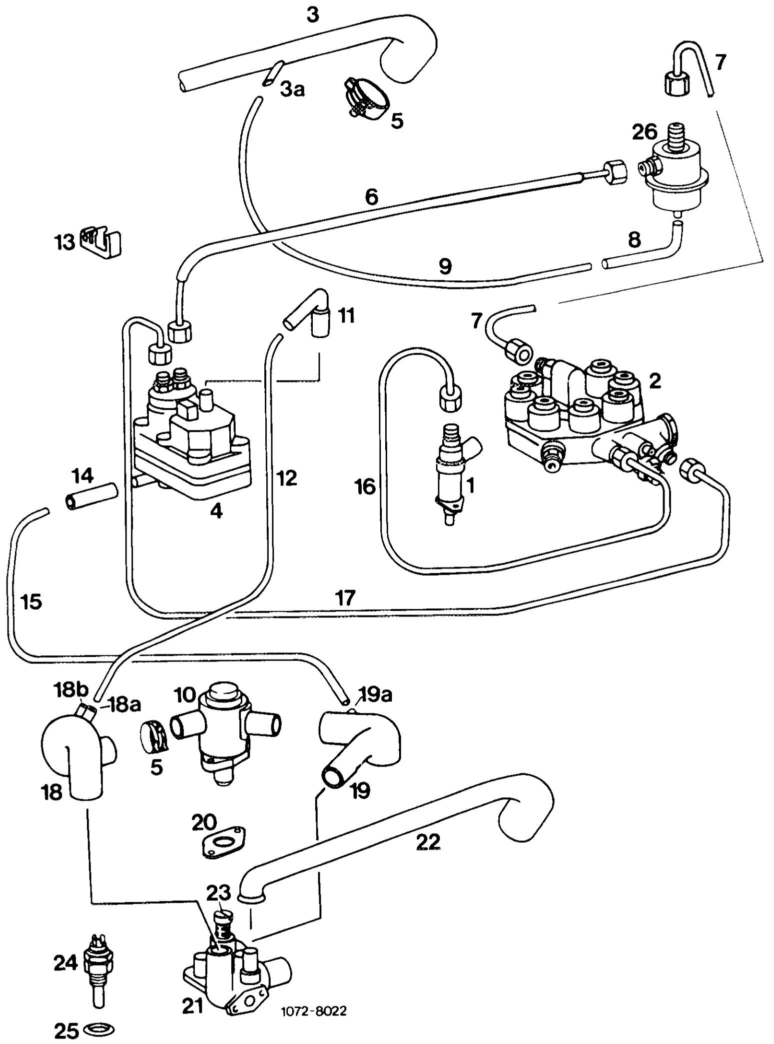

Starting September 1981

4	Warm-up compensator
18	Contour hose
19	Contour hose
21	Idle speed air distributor
23	Idle speed adjuster
30	Nut
31	Washer
32	Clamp
33	Vibration mount
34	Holder
35	Gasket
g	Connection upper chamber
h	Connection lower chamber
i	To contour hose (atmosphere)

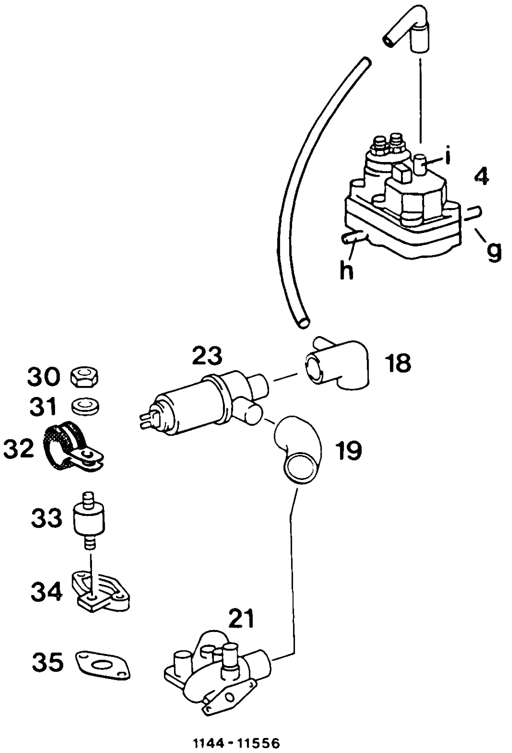

07.3–200 Removal and installation of mixture control unit

Job No. of flat rates or standard texts and flat rates data 07–1568.

Tightening torques	Nm
Hex. head screws mixture control unit on air guide housing	9–10
Hex. nuts mixture control unit on intake manifold (rubber buffer)	9–10
Injection lines and fuel lines on fuel distributor (reference value)	10–12
Injection lines on injection valves (reference value)	10–15

Special tool		
Torque wrench 1/4" square, 4–16 Nm	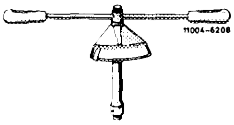	000 589 67 21 00

Removal

1 Remove air cleaner.

2 Unscrew all fuel and injection lines on fuel distributor and on injection valves. Catch fuel with a rag.

Close fuel feed and return line blind.

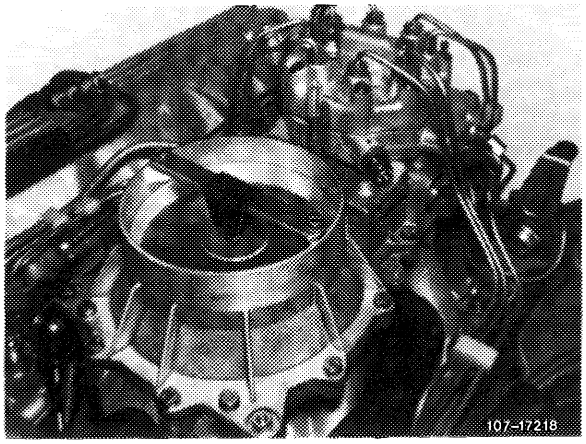

3 Unscrew all fastening screws and hex. nuts on mixture control unit.

4 Remove mixture control unit.

5 Renew air guide housing according to condition. For this purpose, loosen hose clamp on rubber sleeve and on contour hose for idle speed air.

Installation

6 Mount air guide housing.

7 Install mixture regulator in reverse sequence.

On metal air guide housing, use Curil K 2 or Hylomar.

Mount rubber air guide housing without sealing compound, since the sealing lip (arrow) performs the sealing.

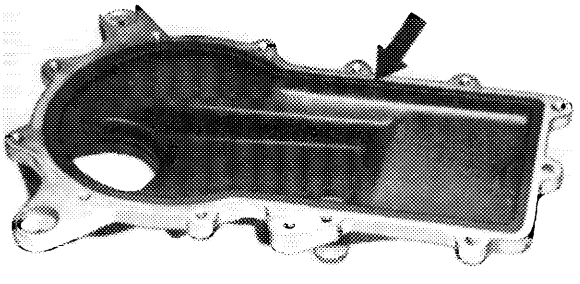
107-19215

Note: Starting September 1981, for better positioning of air cleaner, a stop nut (arrow) with part No. 117 070 00 41 is mounted at the front right instead of hex. nut. On vehicles with an earlier production date, install this stop nut in the event of repairs.

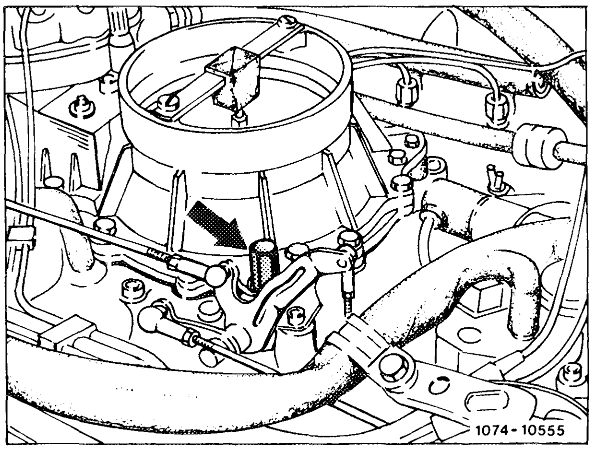

8 Tighten fastening screws and hex. nuts to 9–10 Nm.

9 Connect injection lines and fuel lines. Pay attention to tightening torques as reference values.

Attention!
When tightening injection lines and fuel lines, apply counterhold to injection valves as well as to double thread connections on fuel distributor.

10 Run engine and check all fuel connections for leaks.

11 Adjust idle speed (07.3–100).

07.3–205 Renewing fuel distributor

Job No. of flat rates or standard texts and flat rates data 07–1574.

Tightening torques (reference values)	Nm
Injection lines on fuel distributor	10–12
Fuel line for cold start valve on fuel distributor	
Fuel return line from warm-up compensator on fuel distributor	
Control pressure line on fuel distributor	
Control pressure line on pressure damper	
Injection lines on injection valves	10–15

Note

The fuel distributor is provided with a sheet metal lock (1) to prevent falling-out of regulating piston (2). The **sheet metal lock** serves to facilitate assembly and also as a transportation lock and **should not be removed.**

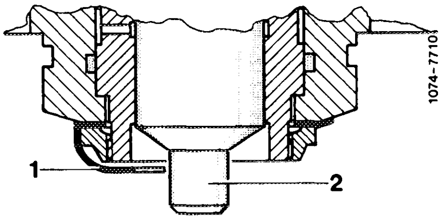

Starting September 1981 the idle speed has been lowered. A lower fuel quantity is therefore required. For this purpose, the width of the control slit (29) in slit carrier (28) had to be reduced.

The change of control slit (29) also required adaptation of air cone in air flow sensor.

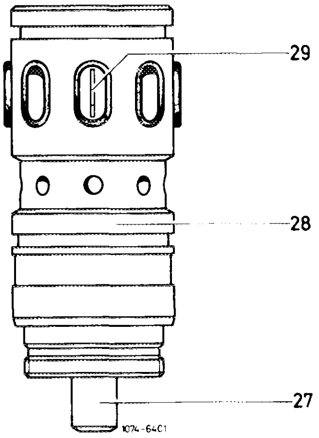

27	Control piston
28	Slit carrier
29	Control slit

Removal

1 Remove air cleaner.

2 Unscrew all fuel and injection lines on fuel distribotor and on injection valves. Catch fuel with a rag.

Close fuel feed and return line blind.

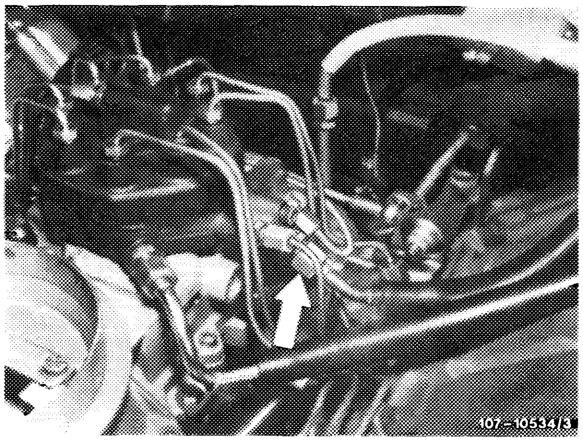
107–10534/3

3 Unscrew the three fastening screws on fuel distributor.

4 Remove fuel distributor by moving distributor back and forth.

Installation

5 Mount fuel distributor in vice versa sequence.

6 Slip new rubber ring on fuel distributor.

7 Slightly lubricate rubber ring and carefully mount fuel distributor.

Attention!
Do not damage rubber ring during assembly, so that no false air will be drawn in.

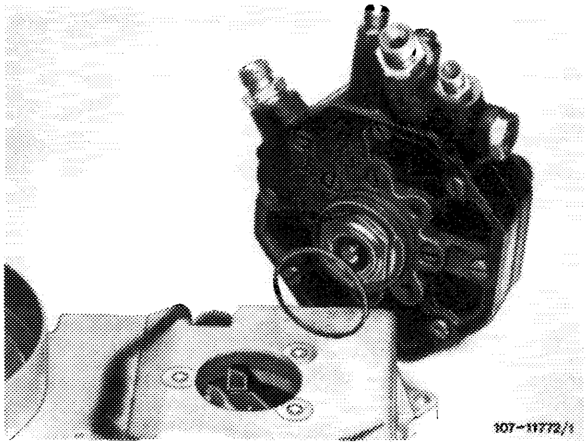
107–11772/1

8 Connect all fuel lines except injection lines.

9 Check for easy operation of adjusting lever (1) in air flow meter and of control piston (2) in fuel distributor. For this purpose:

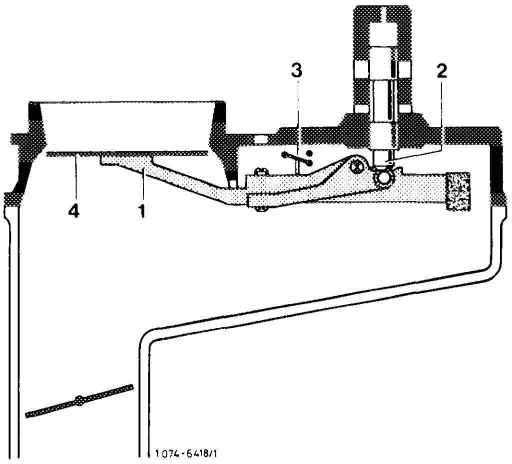

On mixture control unit **with** safety switch

pull plug from safety switch (3). Switch on ignition for a short moment to establish control pressure.

On mixture control unit **without** safety switch

pull off fuel pump relay and bridge the two jacks for a short moment to establish control pressure.

Prior to September 1981: jacks 1 and 2.
Starting September 1981: jacks 7 and 8.

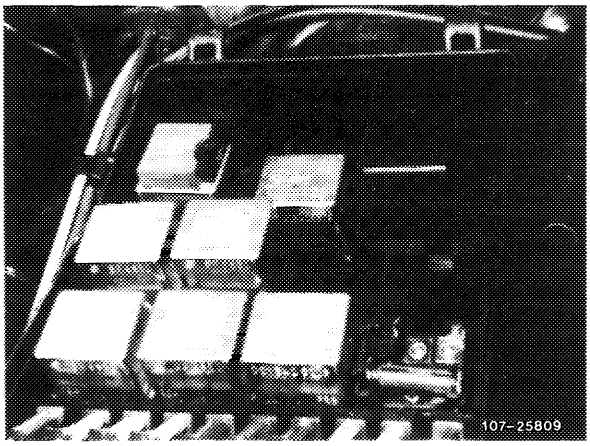

Push air flow sensor plate (4) manually in downward direction. A uniform resistance should be felt along entire distance. When plate is moving up fast, no resistance should be noticed, since the slowly following regulating piston lifts off from adjusting lever. When plate is slowly moving in upward direction, regulating piston should closely follow.

10 Check association of regulating piston in relation to air flow sensor plate and adjust, if required. For this purpose, switch on ignition, pull cable plug from safety switch or pull off fuel pump relay and bridge the two jacks. The fuel should now just stop flowing at outlet connection for injection lines or adjust by means of idle speed mixture control screw, if required.

Prior to September 1981: jacks 1 and 2.
Starting September 1981: jacks 7 and 8.

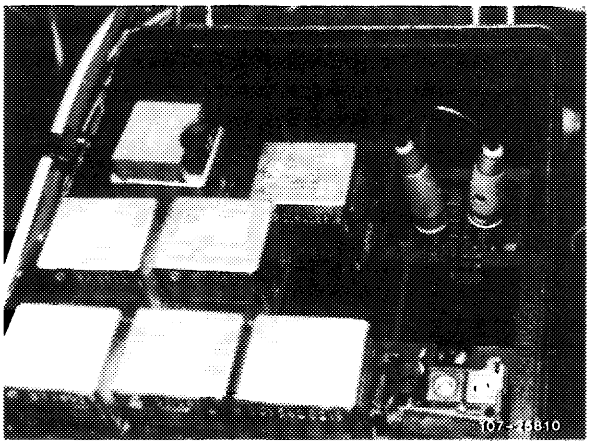

11 Mount injection lines and fuel pump relay.

12 Run engine and check all fuel connections, as well as rubber ring on fuel distributor for leaks by spraying.

13 Adjust idle speed (07.3–100).

07.3–210 Reconditioning system pressure regulator and pressure compensating valve

Job No. of flat rates or standard texts and flat rates data 07–1553.

Test values

System pressure (engine cold or warm) at idle	5.0–5.6 bar gauge pressure

Conventional tools

Screwdriver element 992–T 30	e.g. Hazet, D–5630 Remscheid

Note

The regulating piston of system pressure regulator is provided with a contour ring (1) with additional lock (1a). In the event of repairs, make sure that the O-ring or contour ring is mounted with correct regulating piston.

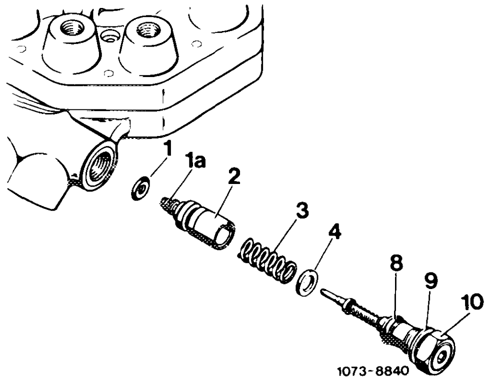

Reconditioning

1 Reduce fuel pressure. For this purpose, loosen fuel return hose (arrow) on fuel distributor. Catch fuel with a rag. Tighten fuel return hose again.

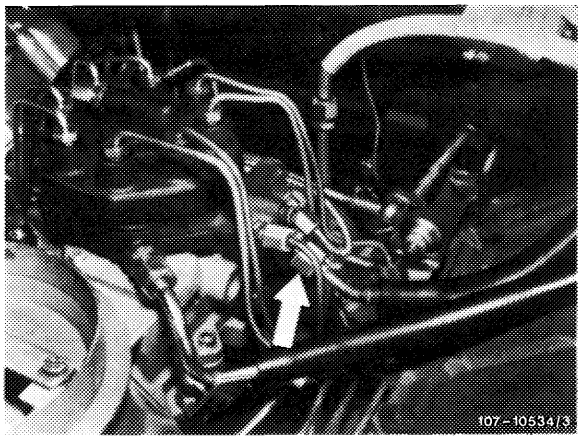

2 Disassemble system pressure regulator. Unscrew closing plug (10). When screwing out, make sure that compression spring (3) and adjusting washers (4) are not falling out.

3 Remove regulating piston (2) with a magnet or a wooden stick (pencil).

Note: For a defective O-ring (1) or contour ring (1) spare parts are individually available. In such a case, it is not necessary to renew the complete system pressure regulator.

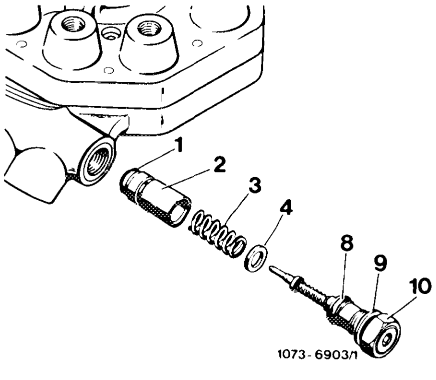

4 Cut through contour ring (1) and remove.

5 Install parts of repair set.

Attention!
The regulating piston (2) is fitted to fuel distributor and must not be replaced. If required, renew complete fuel distributor.

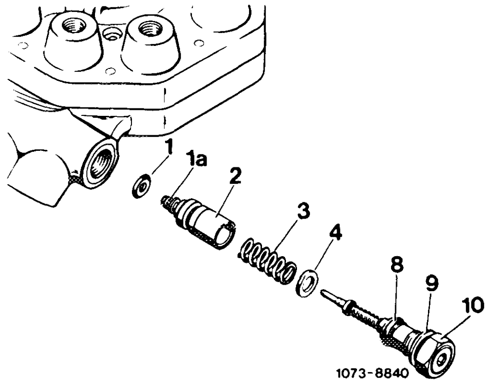

Plug new O-ring (1) on regulating piston (2) or slip new contour ring (1) carefully over lock (1a), lubricate slightly and mount regulating piston together with compression spring (3).

Mount assembly group with removed adjusting washers (4), the new O-ring (8) and the copper sealing ring (9) included in delivery.

6 Check system pressure (07.3–120). If system pressure deviates from nominal value, remove system pressure regulator again and adjust system pressure by adding or removing adjusting washers (4).

The following adjusting washers are available:

0.1 mm thick
0.15 mm thick
0.3 mm thick
0.4 mm thick
0.5 mm thick

Adjusting washers are contained in repair set.

0.1 mm provides approx. 0.2 bar system pressure.

Reconditioning pressure compensating valve

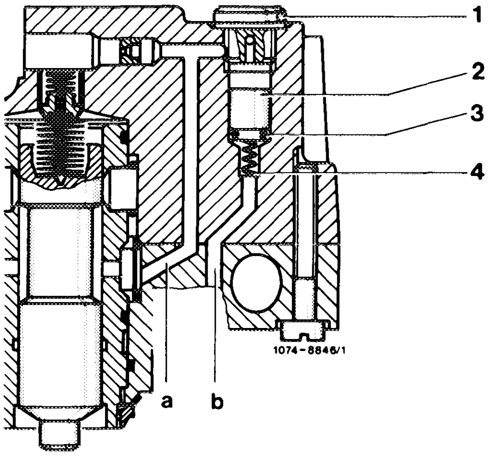

7 Unscrew closing plug (1). Remove piston (2) with contour ring (3).

8 Install parts of repair set.

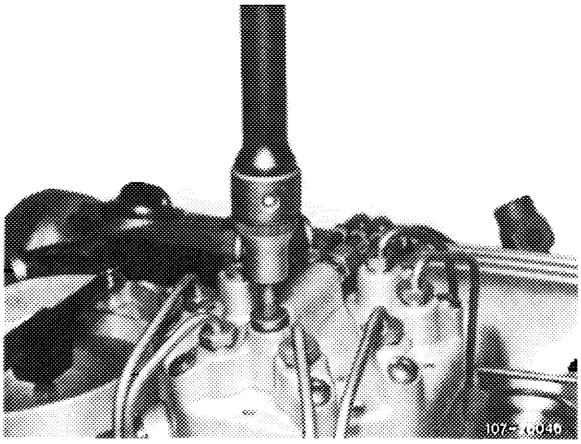

Loosen closing plug (1), use screwdriver element, e.g. made by Hazet, D–5630 Remscheid, order No. 992–T 30.

07.3-215 Removal and installation of injection valves

Job No. of flat rates or standard texts and flat rates data 07–6500.

Tightening torques (reference values)	Nm
Injection lines on fuel distributor	10–12
Injection lines on injection valves	10–15

Note

For better mixture preparation at idle speed the required air quantity is fed through the insulating sleeves in which the injection valves are fastened. The air is drawn in from each cylinder bank through distributor lines.

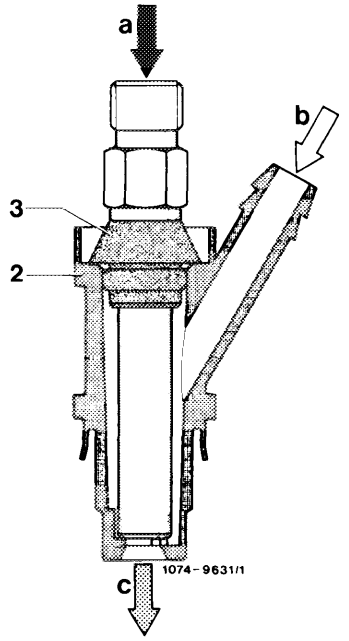

1st version

2 Insulating sleeve
3 Rubber sealing ring
a Fuel
b Air
c Fuel-air mixture

Application:

Basic version standard engine 116, 117 starting September 1981.

National version engine 116 AUS J S USA starting model year 1981.
CH starting model year 1983.

Since May 1983 the former rubber sealing ring (3) has been replaced by a rubber sealing ring with plastic support (3).

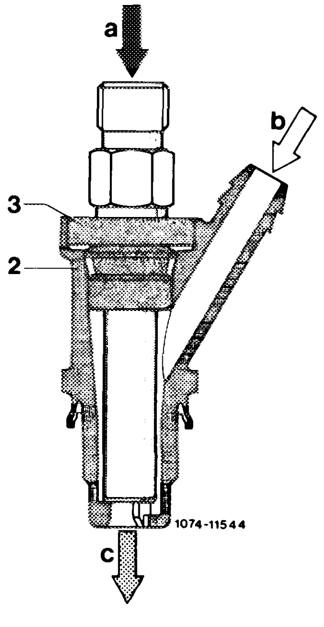

2nd version

2 Insulating sleeve
3 Rubber sealing ring
with plastic support

Removal

1 Remove air cleaner.

2 Unscrew injection lines on injection valves and on fuel distributor. Apply counterhold to injection valves when loosening injection lines.

3 Unscrew fuel line for cold start valve.

4 Unscrew lefthand and righthand bearing bracket for regulation.

5 Loosen fastening screws and remove fastening bridges.

Attention!
When removing fastening bridges apply counterhold to injection valves, so that the injection valves and the insulating sleeves are not moving along.

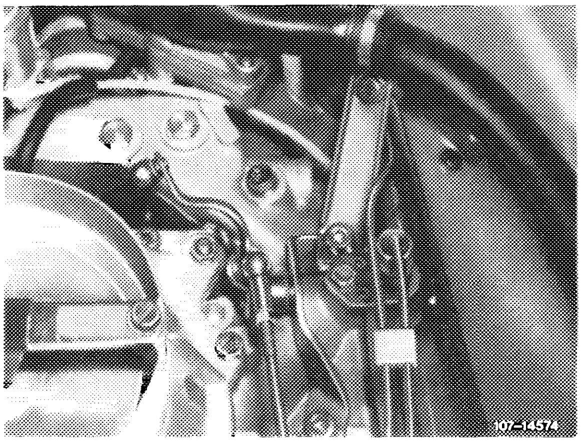

6 Pull out injection valves. Apply counterhold to insulating sleeves (2). Install new O-rings (1) if insulating sleeves are pulled out.

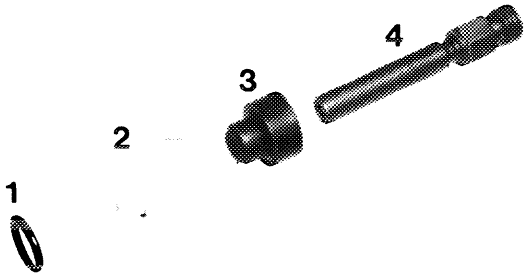

107-11773

Installation

7 Install injection valves in vice versa sequence. For this purpose, convert rubber sealing ring with plastic support (3) and renew, if required.

Note: Mount pulled-out insulating sleeves with O-rings. When mounting, ensure that the hole for the insulating sleeve is clear. Detach cylinder head cover, if necessary.

When installing, ensure that insulating sleeve is correctly located.

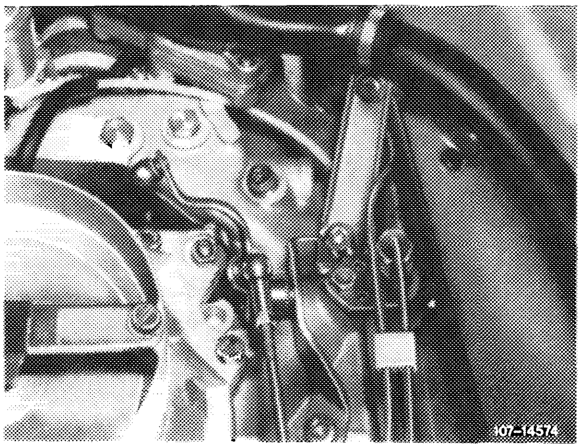

On 2nd version proceed as follows:

Slip sealing ring (3) on injection valve. Slightly lubricate rubber. Push injection valves in insulating sleeve (2) up to noticeable stop (sealing ring flush with insulating sleeve).

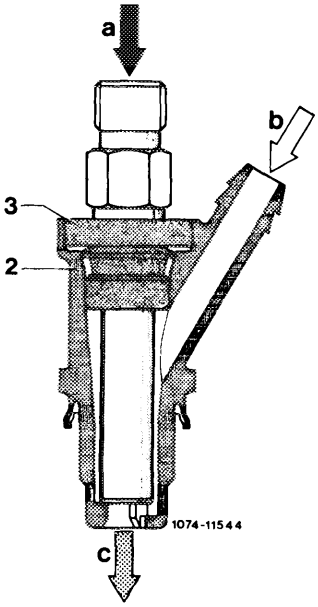

8 Connect injection lines, bearing bracket and fuel line for cold start valve while paying attention to tightening torques as reference values.

Attention!
When tightening injection lines, apply counterhold to injection valves.

9 Adjust regulating linkage (30–300).

10 Run engine and check all fuel connections for leaks.

07.3–220 Renewing air flow sensor

Job No. of flat rates or standard texts and flat rates data 07–1586.

Note

The safety switch on air flow sensor is no longer installed. Its function is now performed by an electronic relay (for functional description refer to 07.3–001). On vehicles with safety switch, convert switch when renewing air flow sensor (see 07.3–242).

On vehicles with optional trip computer, the air flow sensor is equipped with an air flow sensor potentiometer.

Renewing

1 Remove and install mixture control unit (07.3–200).

2 Remove and install fuel distributor (07.3–205).

3 Screw on adjusting device included in delivery. Tighten tear-off screws until screw heads are breaking off.

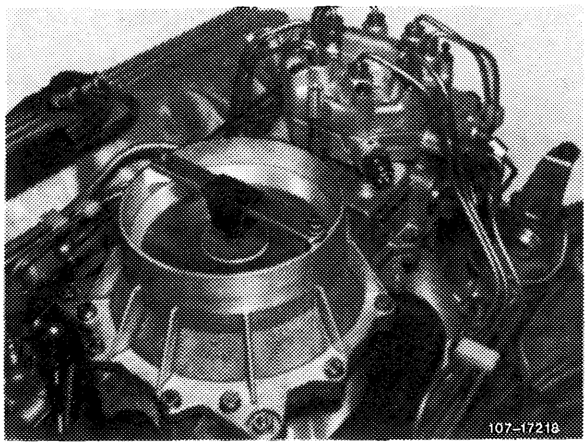

07.3–225 Removal and installation of mixture control unit with air guide housing

Job No. of flat rates or standard texts and flat rates data 07–1568.

Tightening torques	Nm
Hex. nuts mixture control unit on intake manifold (rubber buffer)	9–10
Injection lines and fuel lines on fuel distributor (reference value)	10–12
Injection lines on injection valves (reference value)	10–15

Special tool

Torque wrench 1/4" square, 4–16 Nm	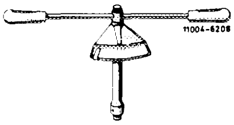	000 589 67 21 00

Note

The flange of the air guide housing is now made of light metal, the air guide housing of rubber (was previously light metal). Standard implementation: April 1981.

Since April 1985 a modified air guide housing with a light metal frame and a press-stud rubber base has been fitted.

Identified by reinforced frame.

Removal

1 Remove air cleaner.

2 Unscrew all fuel and injection lines on fuel distributor and on injection valves. Catch fuel with a rag.

3 Unscrew holder for fuel feed and return line and close lines blind.

4 Loosen hose clamp on rubber sleeve between air guide housing and throttle valve housing.

5 Pull off contour hose from air guide housing to auxiliary air valve.

6 Unscrew hex. nuts on rubber buffers.

7 Lift off mixture control unit with air guide housing.

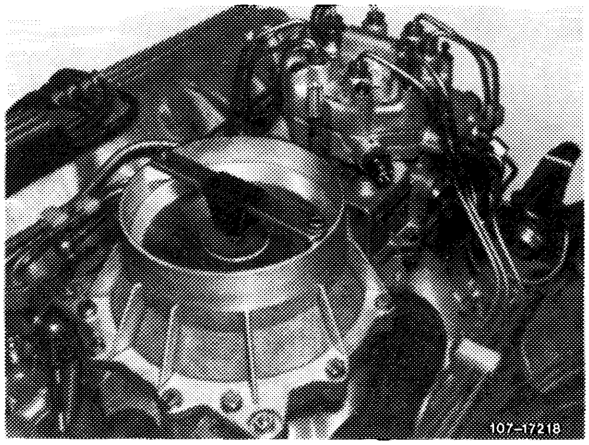

Installation

8 For installation proceed vice versa.

9 Tighten hex. nuts to specified tightening torques with torque wrench.

10 Connect injection lines and fuel lines. Use tightening torques as reference values.

Attention!
When tightening injection lines and fuel lines apply counterhold to injection valves as well as to double threaded connections on fuel distributor.

11 Run engine and check all fuel connections for leaks.

12 Adjust idle speed (07.3–100).

07.3–230 Removal and installation of throttle valve housing

Job No. of flat rates or standard texts and flat rates data 07–6210.

Note

Standard version

Starting April 1981 the throttle valve housing has been attached to the bottom section of the intake manifold with M6 bolt (hitherto M8).

Starting September 1981 the throttle valve housing has been modified as follows:

Bearing of throttle valve shaft in needle bearing.

Switchover valve for acceleration and full load enrichment.

Activation of EGR and of vacuum switch for idle speed and partial load identification.

a	To thermovalve for EGR
b	To vacuum switch
c	To warm-up compensator – lower chamber
d	To 4-point distributor
e	To reservoir for full load enrichment

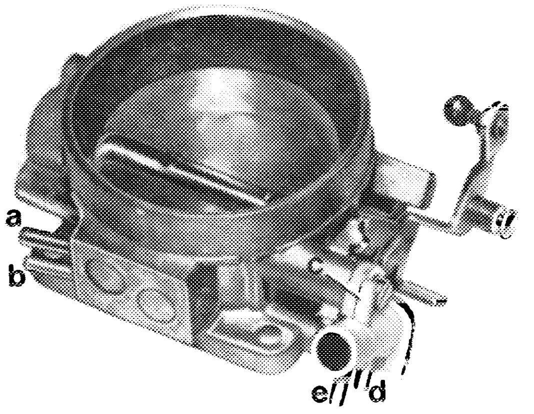

107-21700

Starting May 1983 connection "b" for vacuum switch is no longer installed. Instead, the throttle valve housing is provided with a throttle valve switch for idle speed and partial load identification.

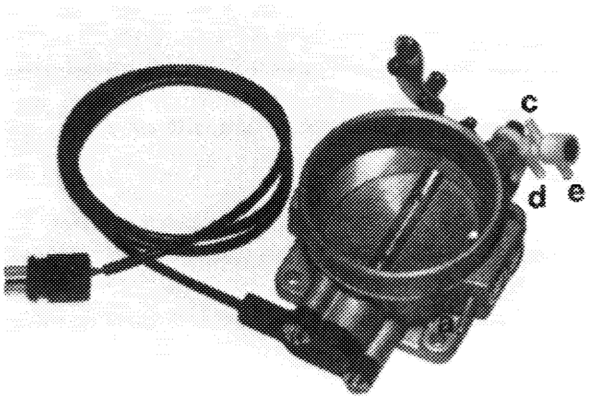

107-25806

Restoring spring

Engine 116.96 is provided with a reinforced restoring spring, part No. 116 993 17 10 since September 1980.

As from December 1981 engine 117.96 has a softer restoring spring, part No. 117 993 03 10. Wound length 60 mm (up to now 44 mm).

Material improvement of contour hoses (arrows) for 3/2-way valve on throttle valve housing.

Start of series: November 1982

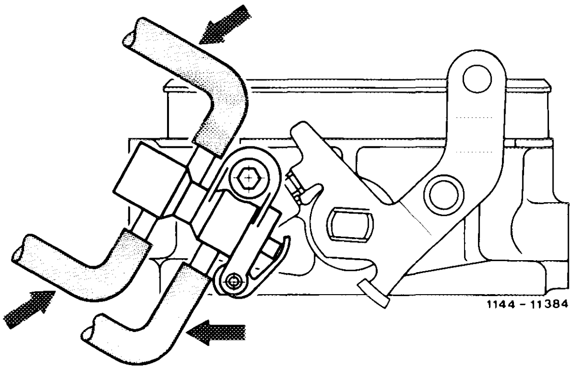

National version Ⓙ Ⓤⓢⓐ starting 1982

Bearing of throttle valve shaft in needle bearing.

Throttle valve switch fastened with 2 fastening screws (1 up to now).

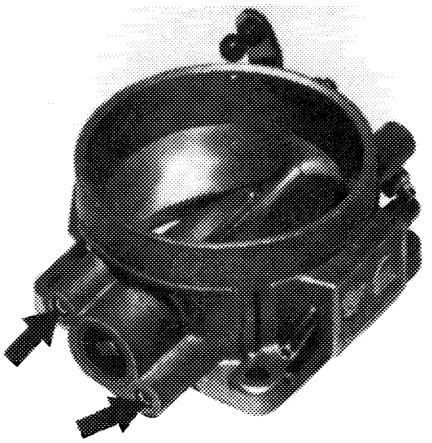

Removal

1 Remove mixture control unit with air guide housing (07.3–225).

2 Take off contour hose for idle speed adjuster. Slacken hose clip on throttle valve housing.

3 Disconnect regulating linkage and restoring spring.

4 Pull off vacuum connections.

5 Loosen fastening screws and remove throttle valve housing.

Installation

6 For installation proceed vice versa with new gasket.

7 Adjust regulating linkage (30–300).

8 Adjust ignition timing (firing point) (15–500).

9 Adjust idle speed (07.3–100).

Retrofitting safety switch to air flow sensor

When installing a new engine or reconditioned engine without safety switch (19) on the air flow sensor and distributor roto with engine speed limiter in vehicles which were previously equipped with such parts, the safety switch and the distributor rotor from the old engine should be used.

Installation

1 Remove mixture control unit from new engine.

2 Install safety switch (19) as shown in illustration opposite. Leave out the removed washer.

Attention!
When installing the safety switch, ensure that the insulating washer is correctly installed below the leaf spring.

3 Install distributor rotor with engine speed limiter in new engine.

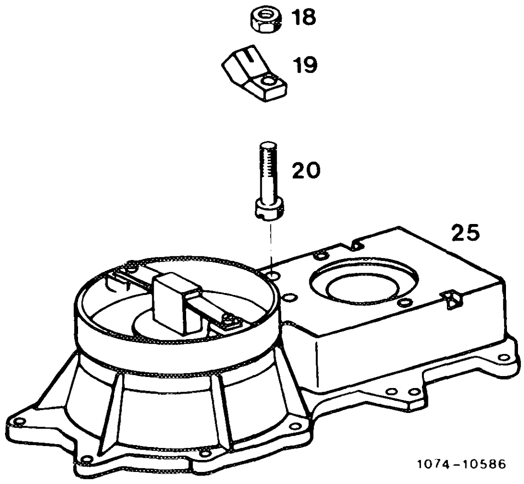

07.3–245 Renewing, centering air flow sensor plate, checking and adjusting zero position of air flow sensor plate

Job No. of flat rates or standard texts and flat rates data 07–1565.

Special tool

Torque wrench 1/4" square, 4–16 Nm	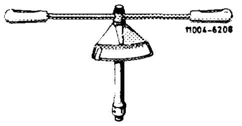	000 589 67 21 00

Conventional equipment and tools

Hot air blower, tap M 6

Tightening torque	Nm
Hex. head screw	5.0–5.5

Removal

1 Remove air cleaner.

2 Unscrew stop bracket.

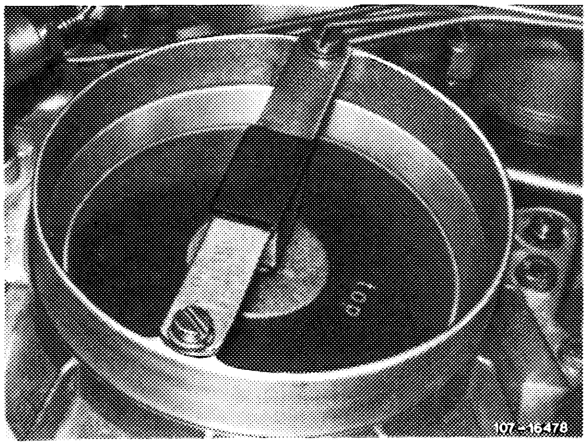

3 Heat fastening screw with a hot air blower and carefully unscrew (risk of tearing off).

Attention!
The fastening screw is micro-encapsulated.

4 Clean bore for fastening air flow sensor plate by means of tap M 6.

Installation

5 Install parts of repair set. Air flow sensor plate with letters "TOP" in upward direction, insert washer. Slightly tighten micro-encapsulated fastening screw (self-locking).

6 Center air flow sensor plate. For this purpose, pull off fuel pump relay (arrow) and bridge the two jacks for a **short** moment or pull plug from safety switch. Switch on ignition for a short moment to establish control pressure.

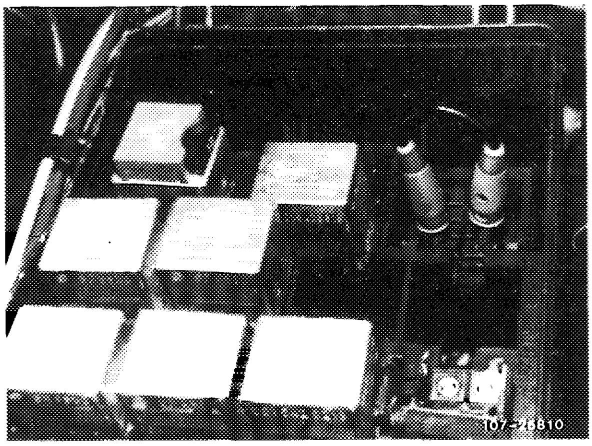

Prior to September 1981: jacks 1 and 2.
Starting September 1982: jacks 7 and 8.

Make sure with slip gauge 0.10–0.20 mm that air flow sensor plate is accurately centered. Even at light lateral pressure (bearing play cancelled) the air flow sensor plate should not bind.

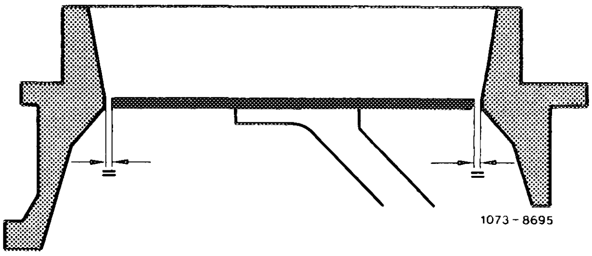

7 Tighten fastening screw to 5.0–5.5 Nm.

8 Check air flow sensor plate for easy operation. For this purpose, push air flow sensor plate down manually. Plate should not bind. Release plate. During return movement, air flow sensor plate should also not bind. Plate should audibly knock against resilient stop. Center air flow sensor plate once again, if required.

9 Check zero position (rest position) of air flow sensor plate. Upper edge of air flow sensor plate should be flush with upper edge of cylindrical part (arrow) on air funnel. A position higher by max. 0.5 mm is permitted.

Note: Bridge electric safety circuit to check zero position (refer to item 6). This will activate control piston with control pressure.

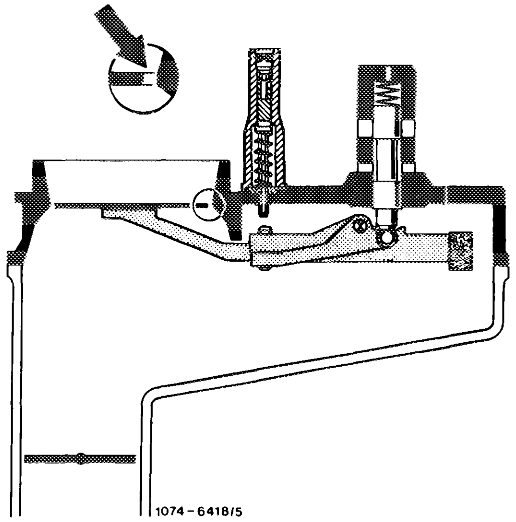

10 Adjust zero position of air flow sensor plate.

a) If too high, unscrew fuel feed connection, knock guide bolt (arrow) pertinently deeper by means of a mandrel.

b) If too low, remove mixture control unit and knock out guide bolt from below (07.3–200).

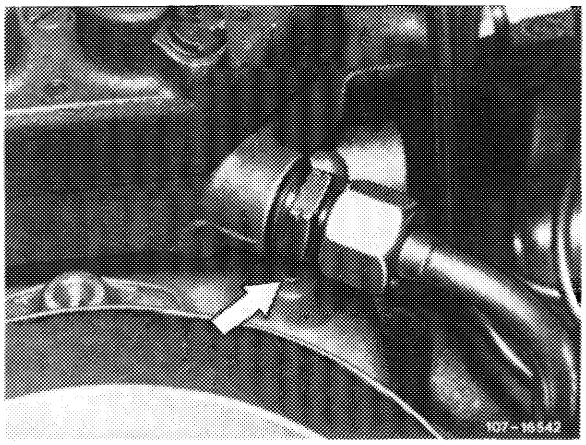

Attention!
Do not knock in guide bolt too deeply.

Be sure to avoid repeated displacement in both directions since the press fit of the bolt will be reduced.

11 Mount fuel feed connection, stop bracket and fuel pump relay or mount plug on safety switch.

12 Adjust idle speed (07.3–100).

07.3–269 Survey fuel pump assembly

Model 107, 1st version

2	Fuel feed line
4	Holder
5	Vibration mount
6	Holder
7	Snap ring
8	Nut
9	Hollow screw
10	Sealing ring
11	Fuel hose
12	Fuel hose
13	Hose clamp
14	Fuel reservoir
15	Holder
16	Nut
17	Screw
18	Protective box
19	Fuel hose
20	Fuel hose
21	Fuel filter
22	Fuel pump
23	Fuel hose
24	Damper

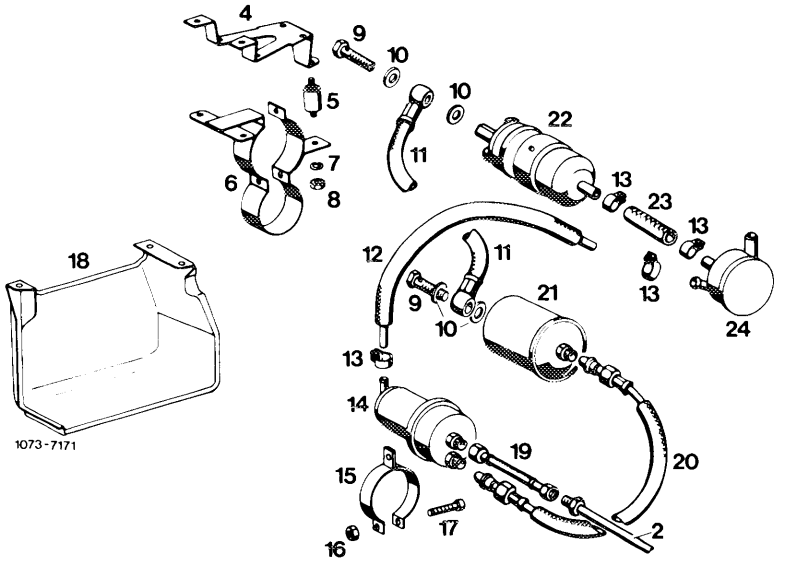

Model 107, 2nd version

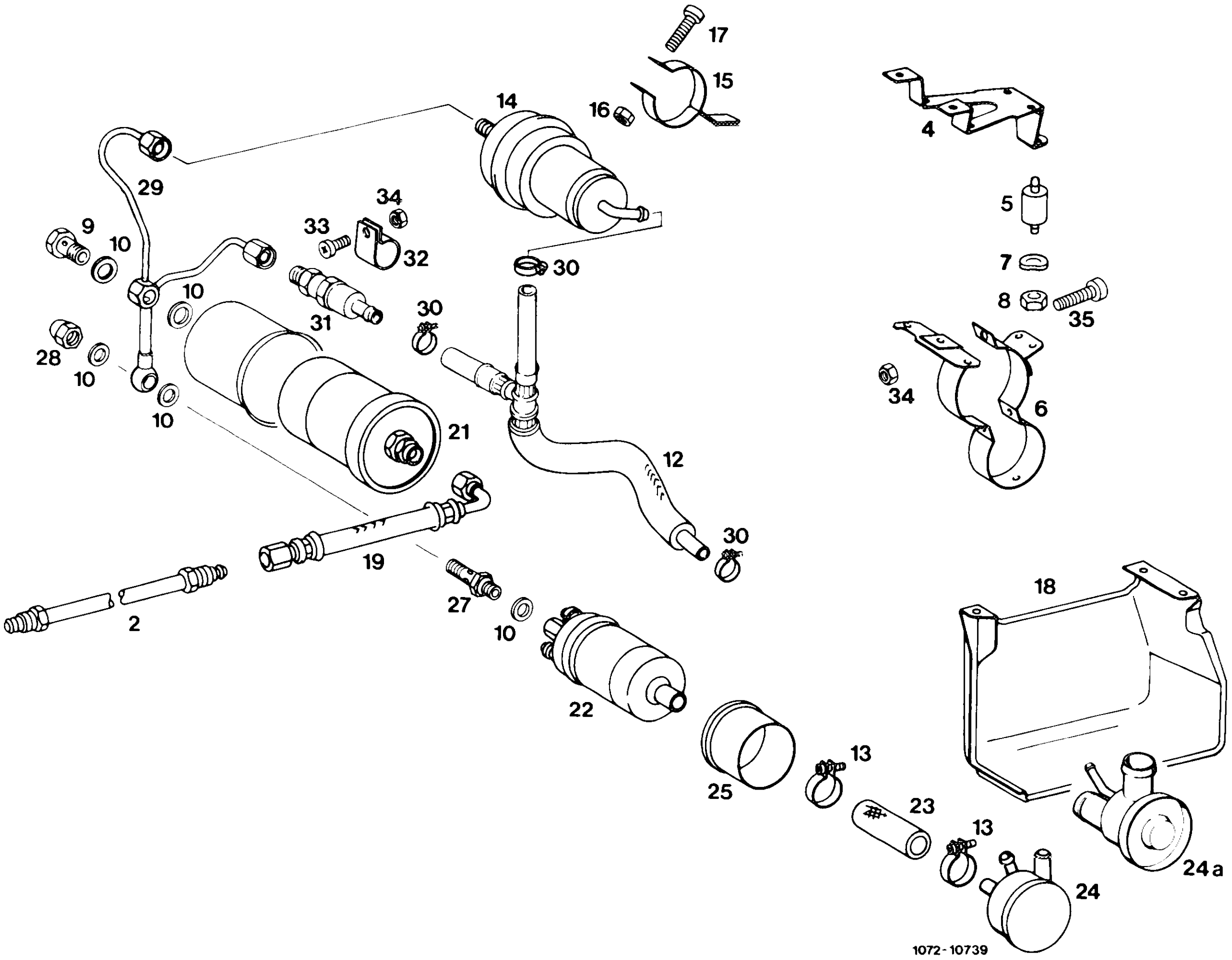

2	Fuel feed line
4	Holder
5	Vibration mount
6	Holder
7	Snap ring
8	Nut
9	Hollow screw
10	Sealing ring
12	Fuel hose
13	Hose clamp
14	Fuel reservoir
15	Holder
16	Nut
17	Screw
18	Protective box
19	Fuel hose
21	Fuel filter
22	Fuel pump
23	Fuel hose
24	Damper 1st version
24a	Diaphragm damper 2nd version
25	Plastic sleeve
26	Plastic sleeve
27	Check valve
28	Cap nut
29	Steel line
30	Hose clamp
31	Pressure relief valve
32	Clamp
33	Screw
34	Nut
35	Screw

Model 107, 3rd and 4th version
Model 126, 1st and 2nd version

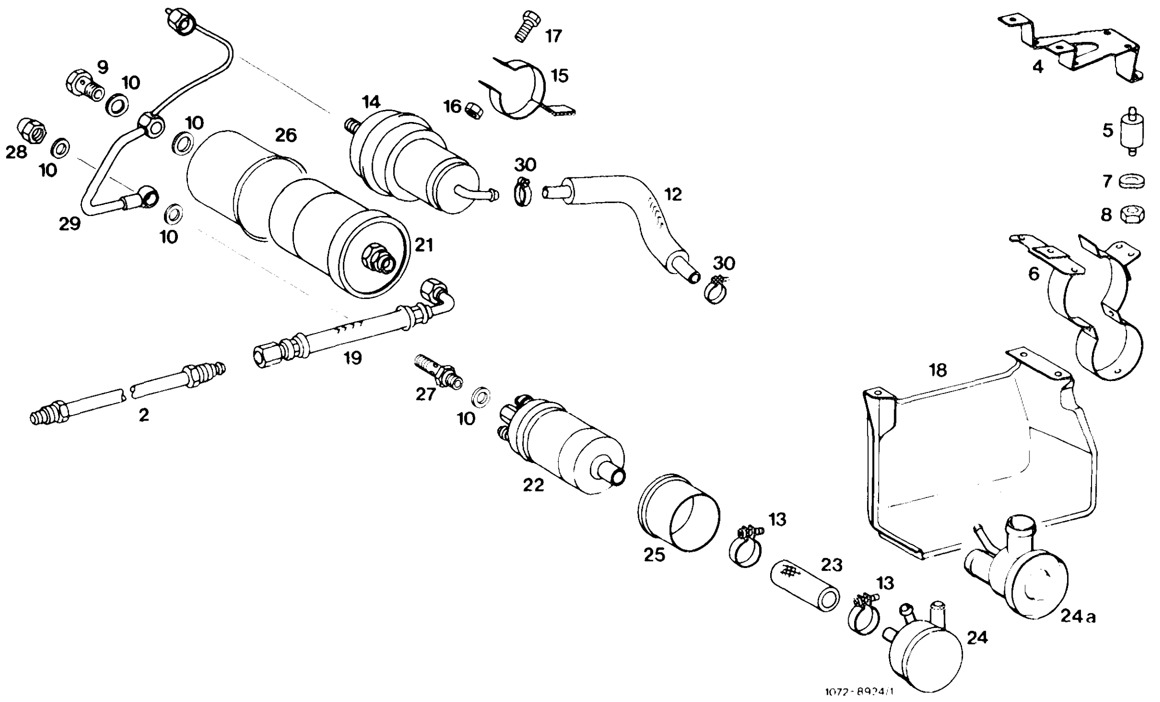

2	Fuel feed line
4	Holder
5	Vibration mount
6	Holder
7	Snap ring
8	Nut
9	Hollow screw
10	Sealing ring
12	Fuel hose
13	Hose clamp
14	Fuel reservoir
15	Holder
16	Nut
17	Screw
18	Protective box
19	Fuel hose
21	Fuel filter
22	Fuel pump
23	Fuel hose
24	Damper, 1st version
24a	Diaphragm damper, 2nd version
25	Plastic sleeve
26	Plastic sleeve
27	Check valve
28	Cap nut
29	Steel line
30	Hose clamp

Fuel pump assembly assembled

Model 107, 1st version

14	Pressure reservoir
21	Filter
22	Fuel pump
24	Suction damper

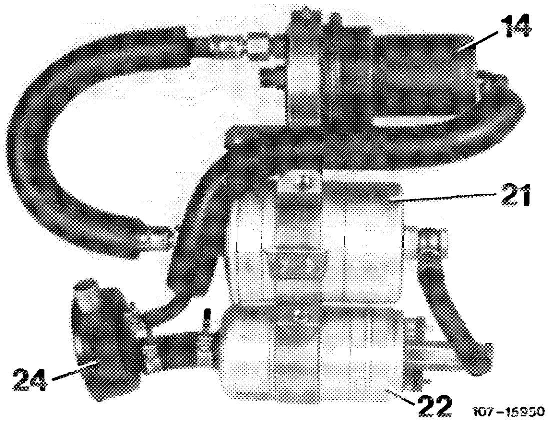

Model 107, 2nd version without check valve

6	Holder for fuel pump and filter
12	Leak line
14	Pressure reservoir
15	Holder for pressure reservoir
19	Fuel hose
21	Filter
22	Fuel pump
24	Suction damper
26	Fuel pressure line
27	Pressure compensating valve
28	Clamp for pressure compensating valve
29	Closing cone
30	Coupling nut

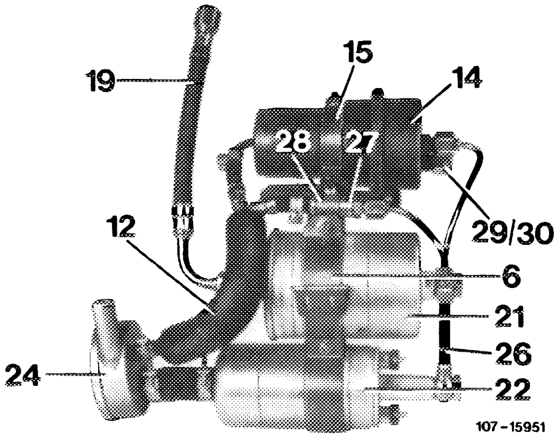

Model 107, 2nd version with check valve

31	Closing nut
32	Check valve

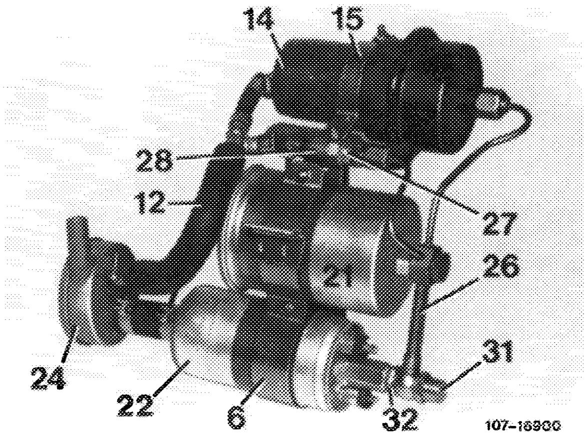

Model 107, 3rd version
Model 126, 1st version

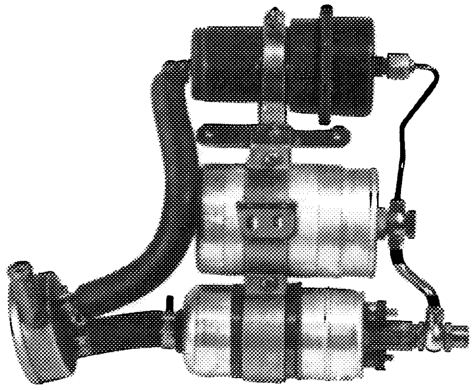

Note: On model 107 the holder for fuel reservoir is not offset.

Model 107, 4th version
Model 126, 2nd version

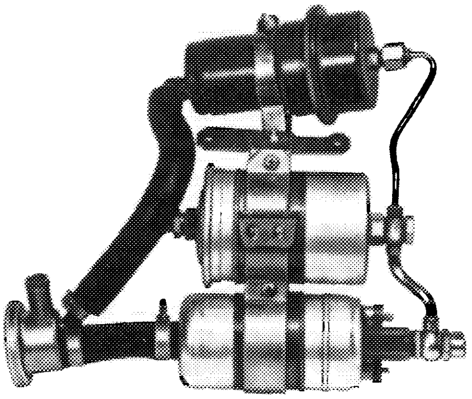

07.3–270 Removal and installation of fuel reservoir

Job No. of flat rates or standard texts and flat rates data 07–1583.

A. Engine 117.960 in model 107.026 (1st version up to chassis end No. 000644)

Special tool

Clamp for hose lines	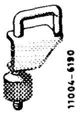	000 589 40 37 00

Removal

1 Unscrew protective box.

2 Pinch fuel suction hose (1) with a clamp.

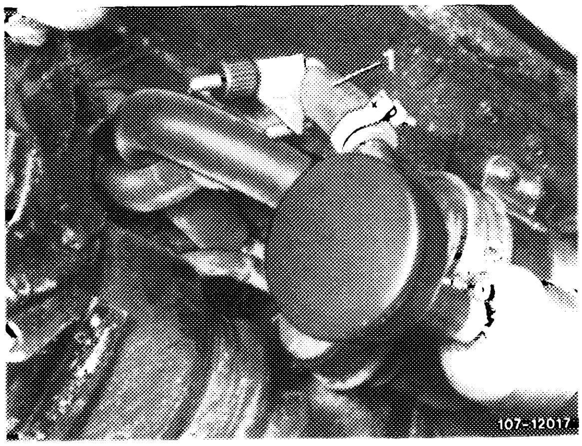

3 Pinch fuel feed hose.

4 Unscrew both fuel hoses on fuel reservoir, also pinch leak hose, loosen and pull off.

5 Loosen fastening screws (arrow) for clamp and remove fuel reservoir.

6 For installation proceed vice versa. Pay attention to correct connection of fuel hoses. Mount fuel feed hose on center connection of fuel reservoir.

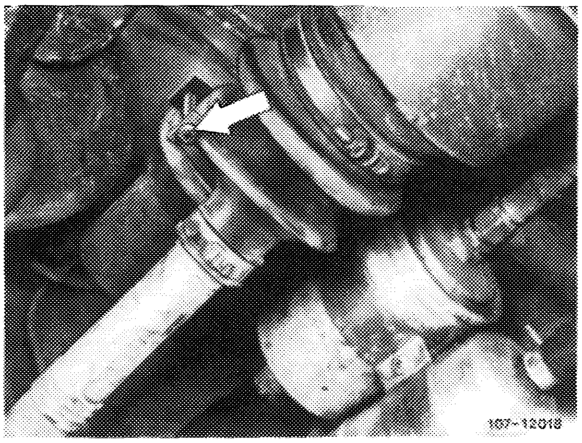

For survey of fuel pump assembly refer to 07.3–269.

Layout of pressure reservoir and subsequent installation of pressure compensating valve has been modified (07.3–282).

Note: Starting December 1983 the fuel reservoir is made from non-rusting material (hitherto galvanized).

B. Engine 117.960 in model 107.026 (2nd version starting chassis end No. 000645 up to 001628, 3rd version starting chassis end No. 001629) Engine 116, 117 in model 126 from start of series

Special tool

Clamp for hose lines	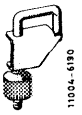	000 589 40 37 00

Removal

1 Unscrew protective box.

2 Pinch fuel suction hose (1) with a clamp.

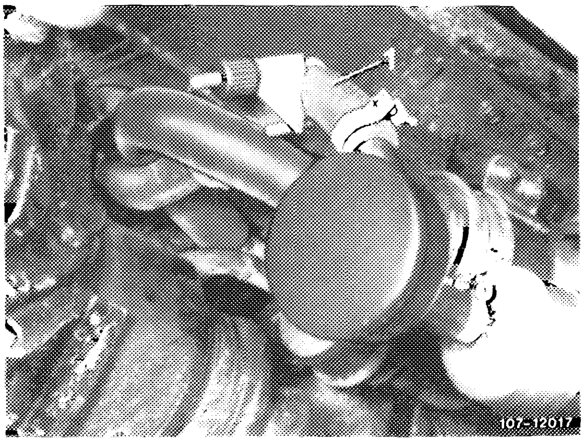

3 Unscrew fuel line on fuel reservoir, also loosen leak hose and pull off.

4 Loosen fastening screw (arrow) for clamp and remove fuel reservoir.

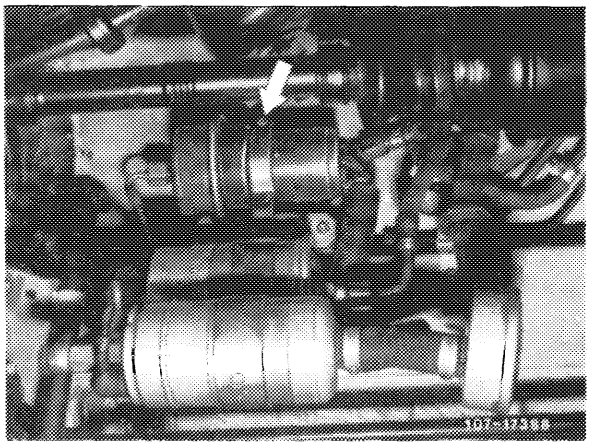

Installation

5 For installation proceed vice versa.

6 Remove clamp on fuel suction hose.

7 Run engine and pay attention to leaks.

8 Mount protective box.

Note: On model 126, measure distance between fuel reservoir and body floor as shown in Fig.

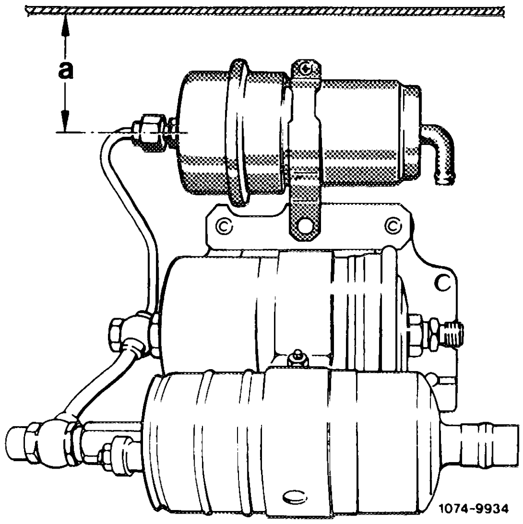

Nominal dimension a = 62 mm.

If required, push fuel reservoir in upward direction. For this purpose, apply manual counterhold to fuel pump.

Starting December 1983 the fuel reservoir is made from non-rusting material (hitherto galvanized).

For survey of fuel pump assembly refer to 07.3–269.

07.3–275 Removal and installation of fuel filter

Job No. of flat rates or standard texts and flat rates data 07–5563.

Special tool

Clamp for hose lines	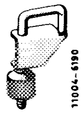	000 589 40 37 00

Note

A damper for noise reduction is additionally integrated in fuel filter. The fuel filter is provided with a plastic sleeve to prevent contact corrosion.

When changing fuel filter, make sure that the plastic sleeve is mounted between fuel filter and holder. The sleeve must project on both sides of holder, since contact corrosion may result in the event of direct contact of fuel filter with holder.

Removal

1 Unscrew protective box.

2 Pinch fuel suction hose (1) with a clamp.

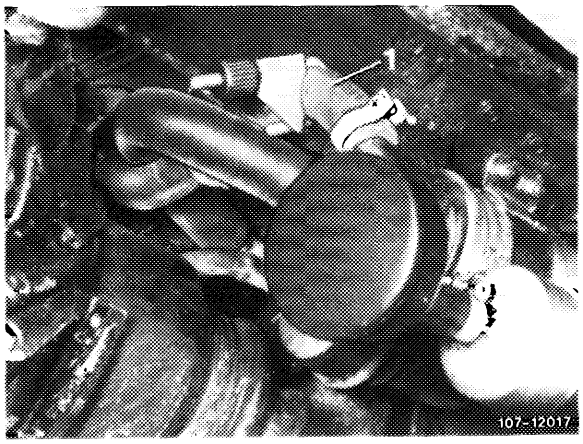

3 Unscrew fuel line and fuel hose on fuel filter.

4 Loosen both fastening screws (arrow) and remove fuel filter.

Note: For survey of fuel pump assembly refer to 07.3–269.

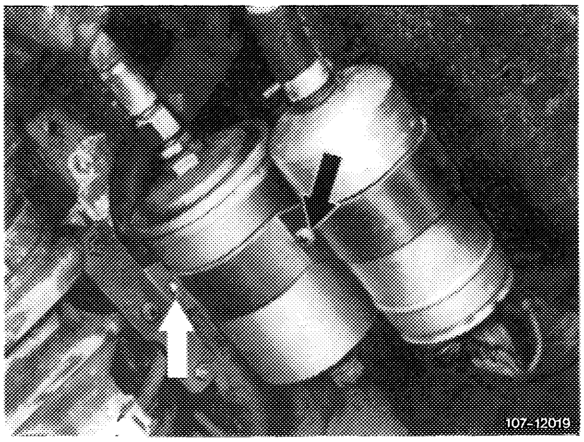

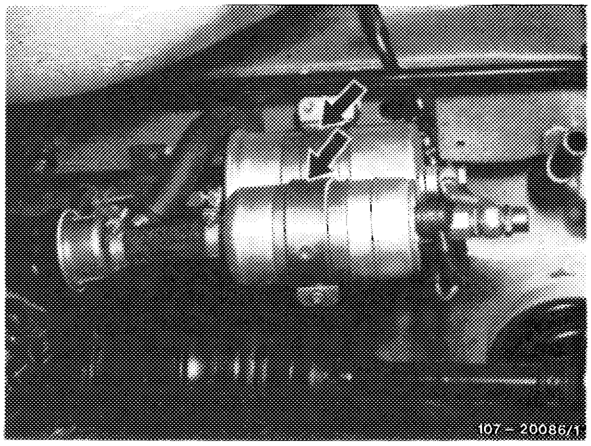

5 For installation use new sealing rings in vice versa sequence.

6 Locate fuel filter with plastic sleeve in holder. Plastic sleeve should project on both sides of holder, since direkt contact of fuel filter with holder may lead to contact corrosion.

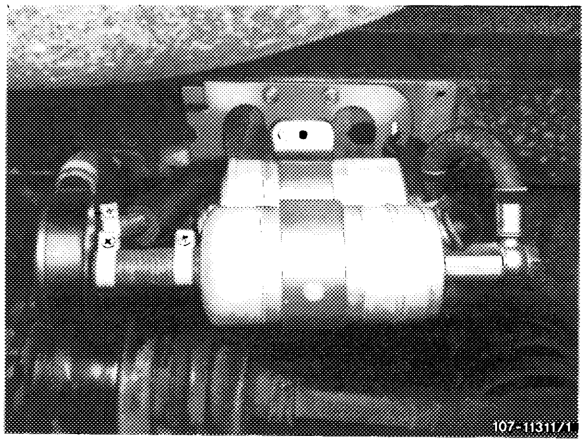

7 Remove clamp on fuel suction hose.

8 Run engine and check for leaks.

9 Mount protective box.

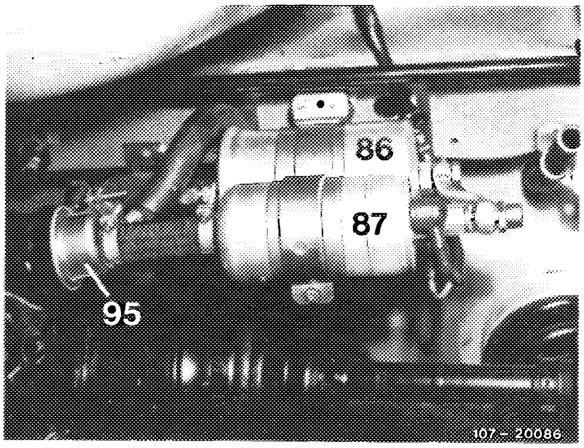

07.3–280 Removal and installation of fuel pump

Job No. of flat rates or standard texts and flat rates data 07–5710.

Special tool

Clamp for hose lines	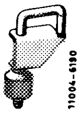	000 589 40 37 00

Note

The fuel pump is provided with a special coating on roller running surface, an exchangeable check valve, and with a plastic sleeve to prevent contact corrosion.

The check valve has been moved in outward direction and can be separately replaced in the event of a malfunction.

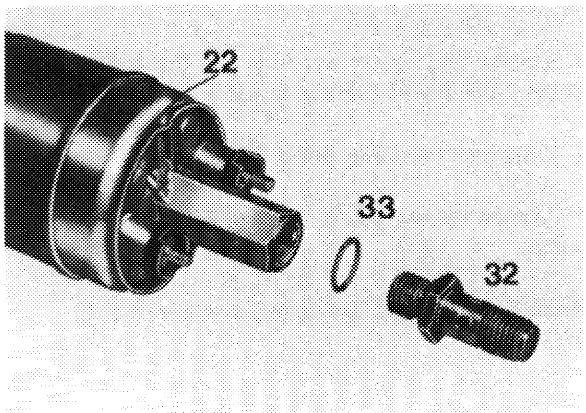

107-16909

22	Fuel pump
32	Check valve
33	Sealing ring

When changing fuel filter, make sure that the plastic sleeve is mounted between fuel filter and holder. The sleeve must project on both sides of holder, since contact corrosion may result in the event of direct contact of fuel filter with holder.

Starting October 1984 the fuel pump with suction noise damper is installed.

B. Engine 117.960 in model 107.026 (2nd and 3rd version) Engine 116, 117 in model 126

Removal

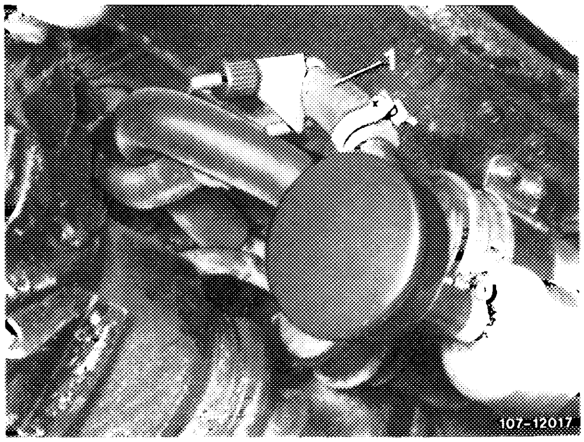

1 Unscrew protective box.

2 Pinch fuel suction hose (1) with a clamp.

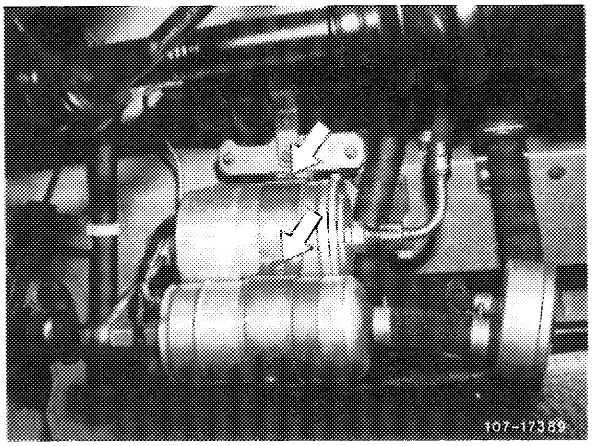

3 Loosen fuel line on fuel filter and fuel reservoir. Loosen fuel line on fuel pump, pull off and unscrew.

4 Disconnect electric connecting cable.

5 Loosen fastening screw (arrow) and remove fuel pump.

Note: For survey of fuel pump assembly refer to 07.3–269.

Installation

6 For installation use new sealing rings in vice versa sequence.

Pay attention to perfect installation of fuel hoses, as well as to correct polarity. Terminals must be horizontal in installation position.

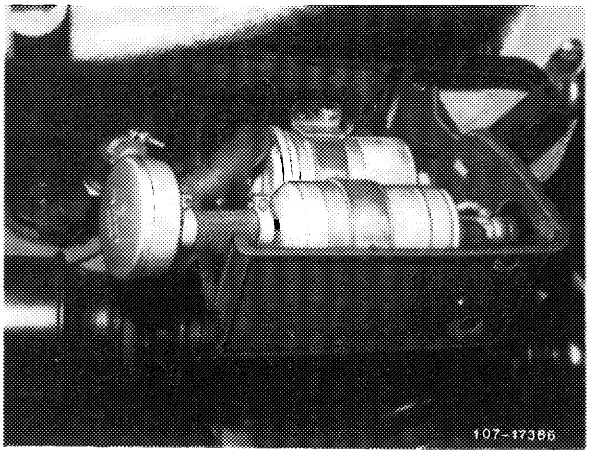

7 Locate fuel pump with plastic sleeve in holder. Plastic sleeve must project on both sides of holder, since direct contact of fuel pump with holder may lead to contact corrosion.

8 Remove clamp on fuel suction hose.

9 Run engine and check for leaks.

10 Mount protective box.

07.3–281 Renewing holder for fuel pump, fuel filter and fuel reservoir

For renewing holder,
remove

fuel reservoir	(07.3–270),
fuel filter	(07.3–275),
fuel pump	(07.3–280).

Note

The holder has been modified to improve installation position and to increase rigidity.

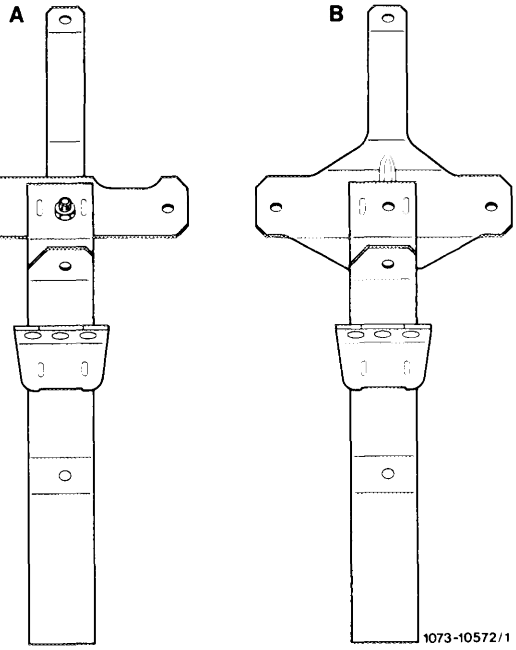

Model 107

A Former version
B Present version

Shape of fuel line between pump, filter and reservoir has also been modified on model 126.

Start of series: November 1981.

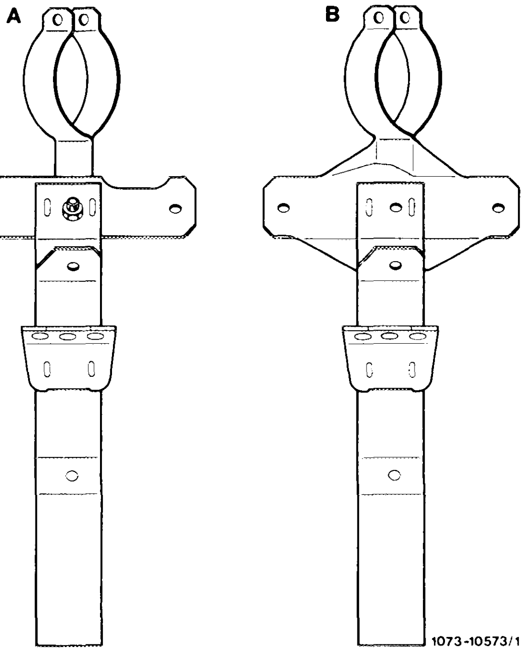

Model 126

A Former version
B Present version

07.3–283 Subsequent installation of separate check valve on fuel pump

Note

If in the event of a complaint concerning "Engine fires poorly when warm" an inner leak of fuel pump is showing up, a check valve can be subsequently mounted on fuel pump.

Installation

Fuel pump assembly with steel line between fuel pump and filter

1 Unscrew protective box.

2 Pinch fuel hoses (of fuel tank and to line toward engine) with one clamp each.

3 Unscrew fuel pump assembly on both front vibration mounts.

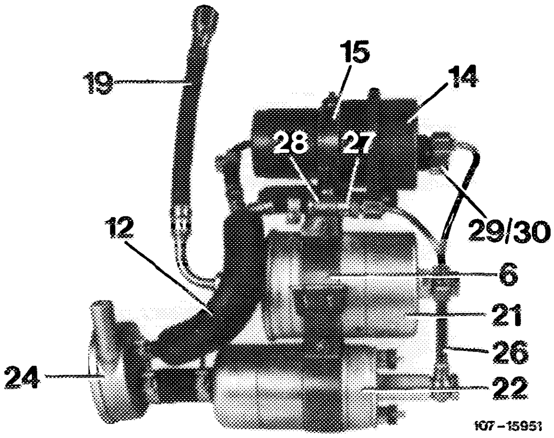

6	Holder for fuel pump and filter
12	Leak line
14	Pressure reservoir
15	Holder for pressure reservoir
19	Fuel hose
21	Filter
22	Fuel pump
24	Damper
26	Fuel pressure line
27	Pressure compensating valve
28	Clamp for pressure compensating valve
29	Closing cone
30	Coupling nut
31	Closing nut
32	Check valve
33	Sealing ring

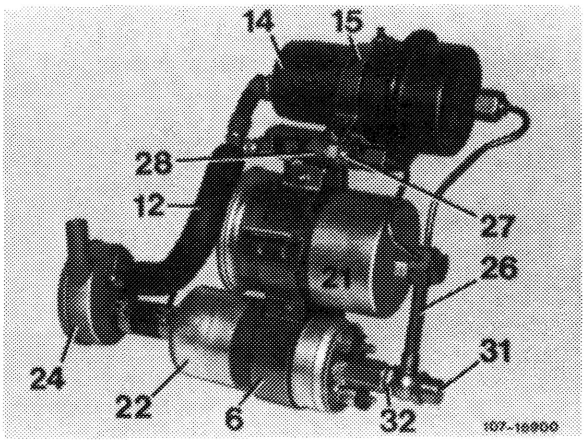

4 Unscrew steel line (26) on fuel pump, filter, reservoir and pressure compensating valve.

5 Screw check valve (32) with new copper sealing ring (33) to fuel pump.

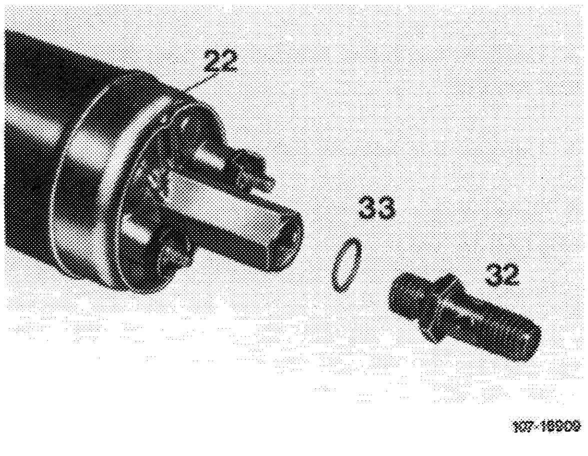

6 Mount steel lines. For this purpose, slip fuel pump up to bead into holder. Connect steel line with new copper sealing rings and closing nut (do not yet tighten nut). The hollow screw is no longer installed.

Note: The plastic sheet or plastic sleeve of pump and of filter must project on holder on both sides and must be replaced in the event of damage. For this purpose, remove pump and filter.

7 Mount fuel filter in holder in such a manner that the steel line is in alignment with fuel pump.

8 Mount steel line on reservoir and pressure compensating valve and tighten connections (apply counterhold at check valve).

9 Tighten fuel pump and filter in holder and screw holder to vibration mounts.

10 Remove clamps on fuel hoses.

11 Run engine and check connections for leaks.

12 Mount protective box. Make sure that steel line is not chafing against protective box.

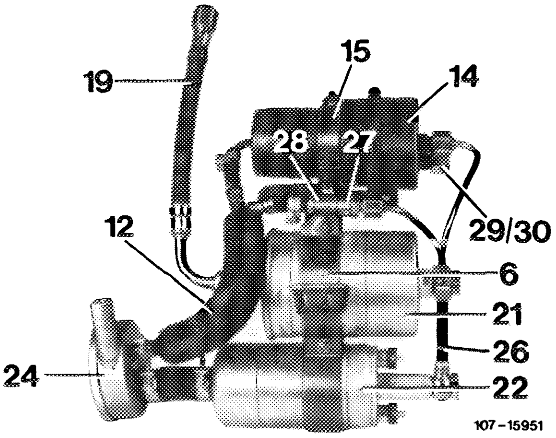

107-15951

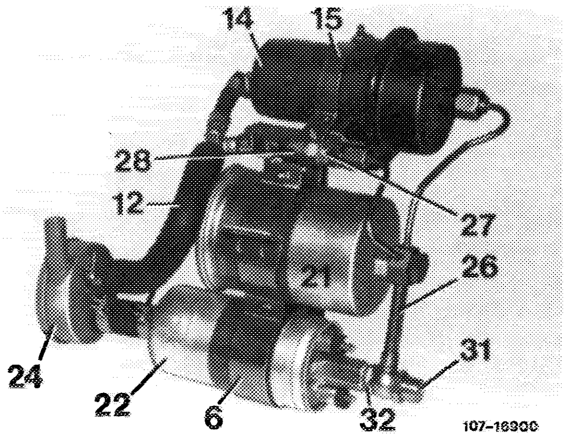

107-16900

Fuel pump assembly with hose between pump and filter

1 Unscrew protective box.

2 Pinch fuel hoses with clamps.

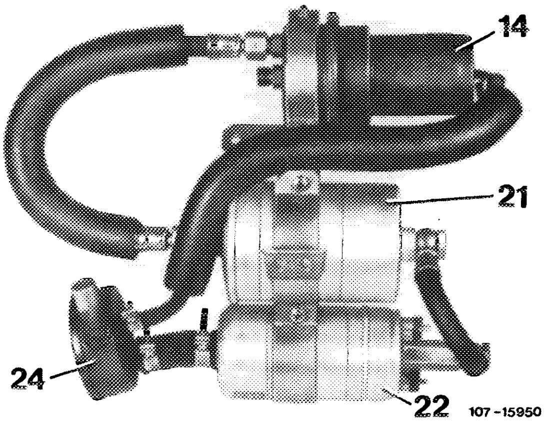

107-15950

14 Pressure reservoir
21 Filter
22 Fuel pump
24 Damper

3 Unscrew fuel pump assembly on both front vibration mounts.

4 Unscrew fuel hose on pump.

5 Screw check valve (32) with new copper sealing ring (33) to fuel pump.

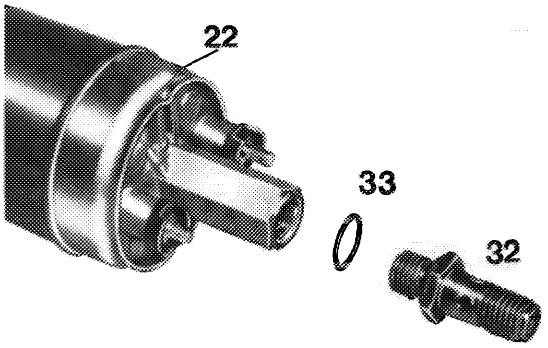

107-16909

6 Slide fuel pump in holder approx. 15 mm to the left (so that closing nut is not chafing against protective box) and mount fuel hose with two new copper sealing rings and closing nut on check valve (applying counterhold to check valve). Hollow screw is no longer installed.

Note: The plastic sheet or plastic sleeve of pump and of filter must project on holder on both sides and must be replaced in the event of damage. For this purpose, remove pump and filter.

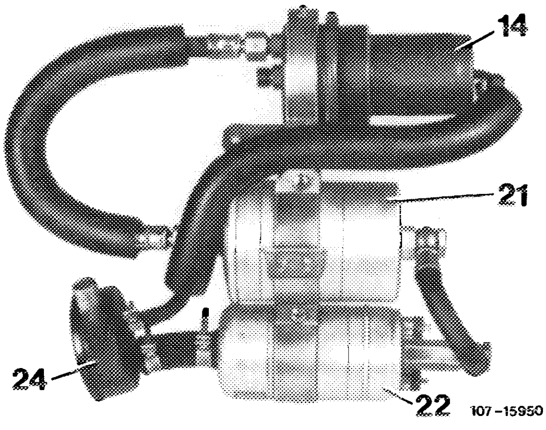

107-15950

7 Tighten fuel pump and filter in holder and mount holder on vibration mounts.

8 Remove clamps from fuel hoses.

9 Run engine and check system for leaks.

10 Mount protective box. Make sure that fuel hose is not chafing against protective box.

07.3–310 Checking inlet valves for deposits (coking), cleaning as necessary

Special tool

Lever pusher	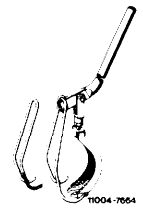	123 589 03 61 00

Conventional tools

Designation	Supplier
Spray for walnut shell granulate Order No. 1.486.601	Alfred Kärcher Leutenbacher Str. 30–40 D–7057 Winnenden
Walnut shell granulate (25 kg) Grain size 1–1.5 mm Order No. 10407	Eisenwerk Würth GmbH & Co. Friedrichshaller Straße D–7107 Bad Friedrichshall

Importer and exporter countries should send their orders to Plant 50, PEW Sindelfingen.

Transition faults during the warming-up phase on vehicles fitted with CIS injection system may be the result of coked inlet valves.

A pressure jet is available for cleaning the inlet valves. This provides a simple and cost-effective means of cleaning. It is not necessary to remove the inlet manifold and to clean the valves by hand.

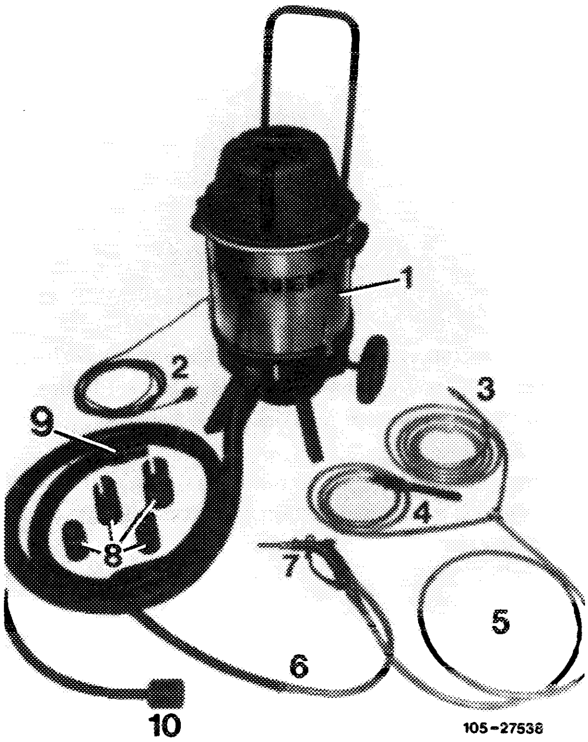

1 High pressure cleaner
2 Electric cable (220 V)
3 Compressed air connection
4 Blow-off valve
5 Compressed air supply line
6 Granulate supply line
7 Compressed air gun with jet
8 Adaptor
9 Suction line with plug connection
10 Suction pipe

Cleaning procedure

Walnut shell granulate is sprayed in at high pressure through the mounting hose of the injection valves onto the plates of the **closed inlet valves.** The coking residues are evacuated simultaneously with the granulate through the throttle valve housing into the high pressure cleaning equipment.

The valve plate is partially covered by the valve stem. The valve must therefore be turned once through 180° for cleaning the concealed part.

Instructions for maintaining and filling the high pressure cleaner

1 After approx. 20–30 cleaning operations, the coking residues on the outside of the filter bag should be shaken off (arrow).

2 Pay attention to marking (M) when fitting on the top section.

3 Fill bottom section of cleaning equipment with approx. 4 kg walnut shell granulate, size 1–1.5 mm, up to the bottom edge (arrow).

4 The granulate should be renewed if lumps form or if there is a high proportion of rust due to the poor cleaning effect.

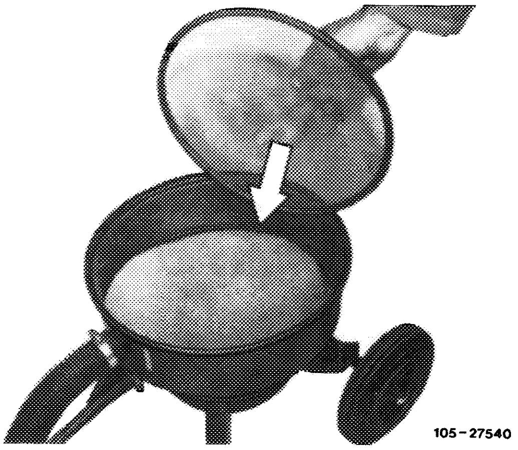

Scope of work

1 Remove mixture control unit with the air guide housing, install (07.3–225).

2 Remove, install injection valves (07.3–215).

3 Remove, install rocker arm and thrust pieces of inlet valves (05–230).

Attention!
Rocker arms and thrust pieces must be re-installed at the same points.

4 Cover over valve section and camshaft with cleaning cloth.

5 Fit on adapter (8) with throttle valve open.

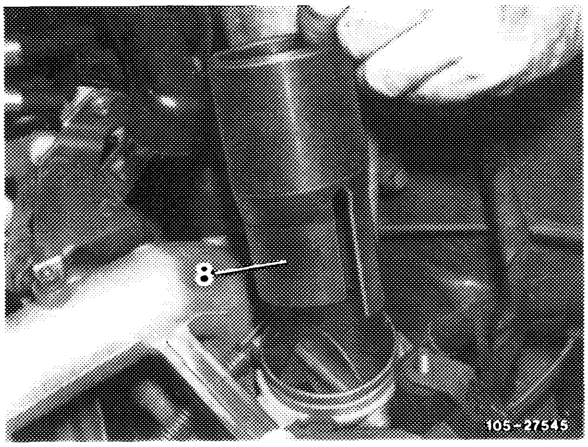

6 Connect suction line (9) onto the adaptor (8).

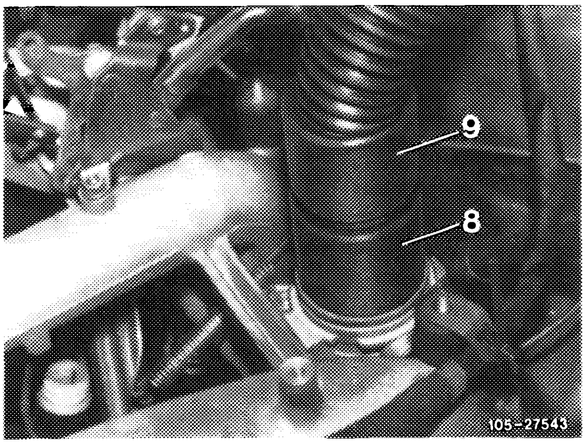

7 Position compressed air gun (7) with jet into the hole of the injection valve. Spray inlet valve for approx. 30–60 seconds.

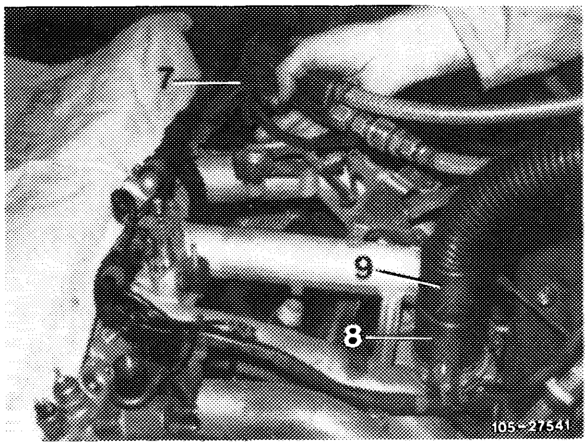

8 Blow out inlet passage with the blow-out valve (4) through the hole of the injection valve with the suction device switched on.

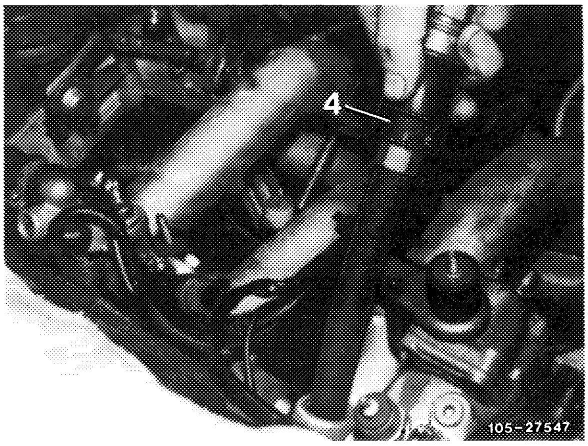

9 Use the lever presser 123 589 03 61 00 to press inlet valve down and at the same time turn the valve through 180°.

10 Spray inlet valve for approx. 15–30 seconds.

11 Blow out inlet passage with blow-out valve (4) through the hole of the injection valve with the suction device switched on.

12 Insert suction tube (10) through throttle valve housing and suck remaining granulate out of the bottom section of inlet manifold and out of the EGR line.

13 Illuminate the bottom section of the inlet manifold to check for any remaining granulate, suck out if necessary.

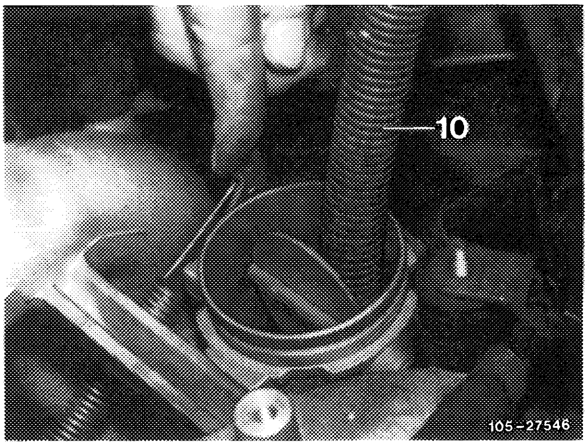

14 Clean inside of throttle valve housing and throttle valve with cleaning petroleum.

15 Install removed parts.

16 Adjust idle speed (07.3–100).

Flat rate

Basic	02–0507/03
Related job	02–0507/06

Removal and installation of air cleaner

Job No. of flat rates or standard texts and flat rates data 09–015.

Note

The air cleaner is made of light alloy. On model 126, intake is via a fresh air scoop and a plastic snorkel. The fresh air scoop is mounted at the right on radiator.

A cutout (arrow) is located in air cleaner top for adjusting idle speed mixture.

On model 107 the air intake is at the left.

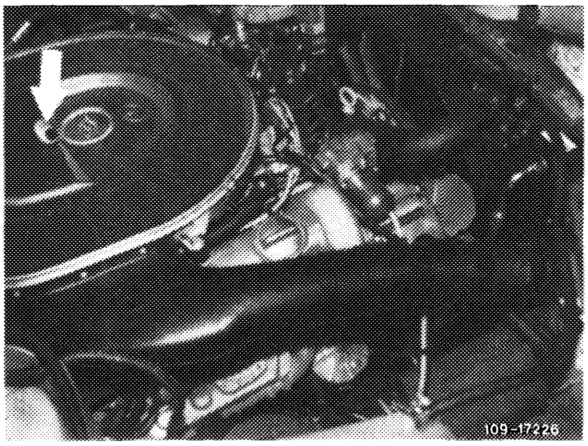

Model 126

Removal

1 Unscrew both fastening nuts on vibration mounts.

2 Remove air cleaner, while pulling off contour hose for crankcase breather.

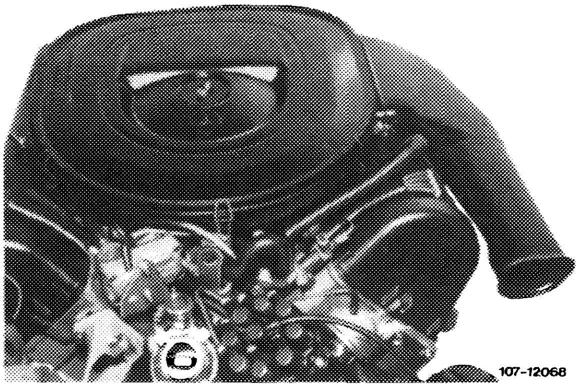

Model 107

Installation

3 Remove air cleaner cover.

4 Mount air cleaner. Pay attention to correct seat of sealing ring (arrow) between air flow meter and air cleaner.

5 Mount air cleaner cover.

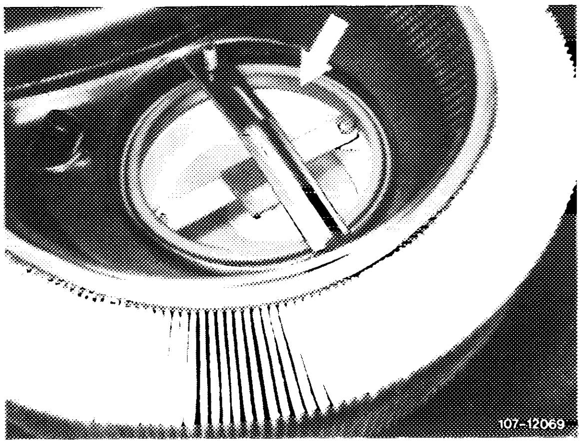

For better location of air cleaner install a stop nut (arrow), part No. 117 070 00 41, at the front right instead of hex. nut.

Installation: September 1981

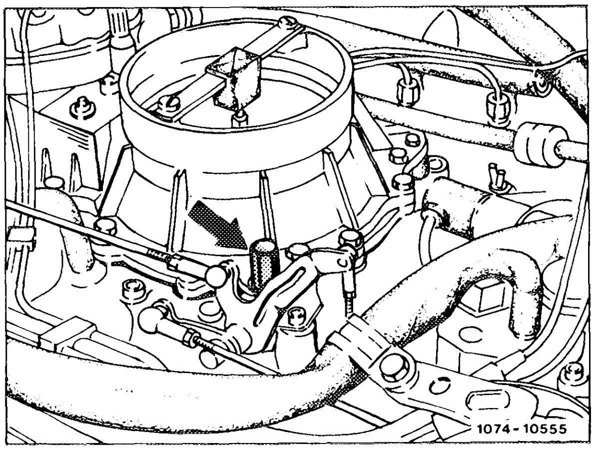

Air cleaner element

A perforated air cleaner element, Part No. 002 094 69 04, can be retrofitted for extremely dusty conditions.

Air cleaner
Engine 117 in model 107

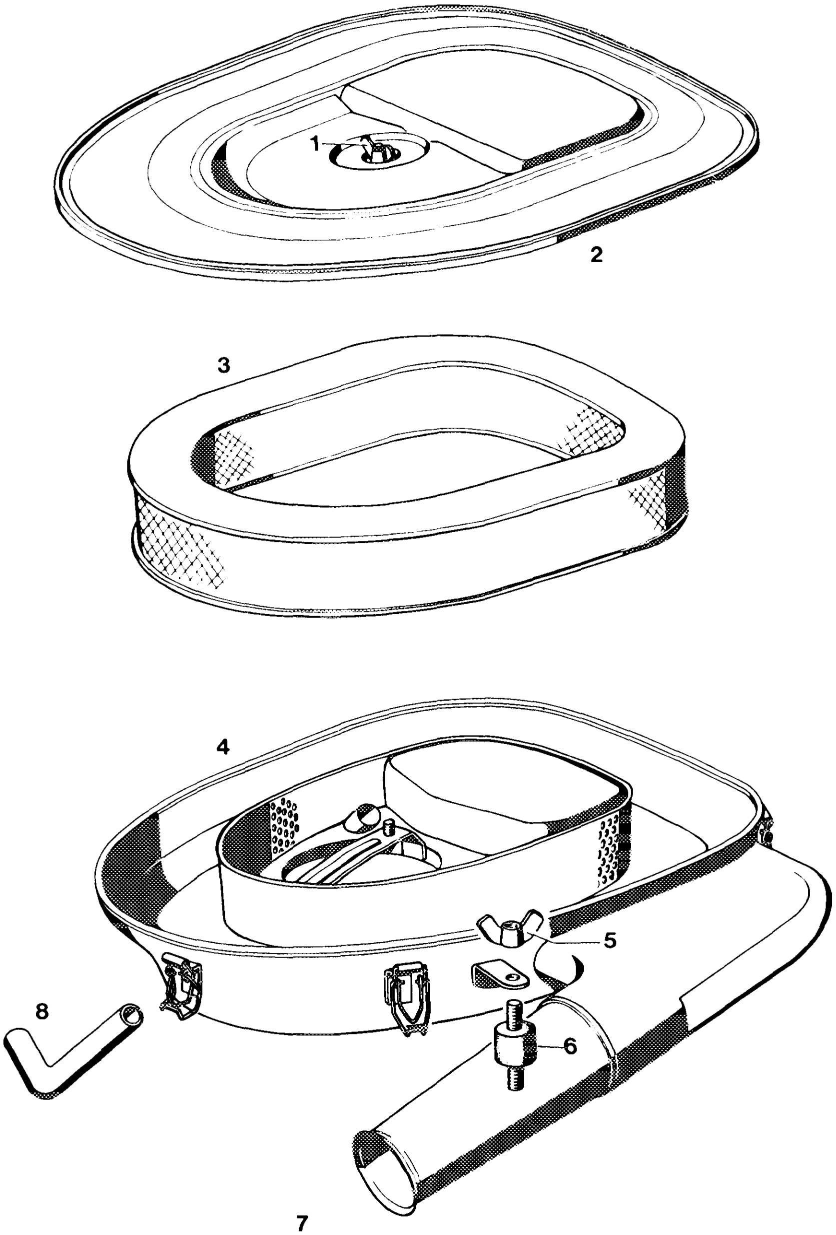

1	Wing nut
2	Air cleaner cover
3	Air cleaner element
4	Air cleaner lower half
5	Wing nut
6	Vibration mount
7	Rubber sealing ring
8	Contour hose for crankcase breather

Air cleaner
Engine 116, 117 in model 126

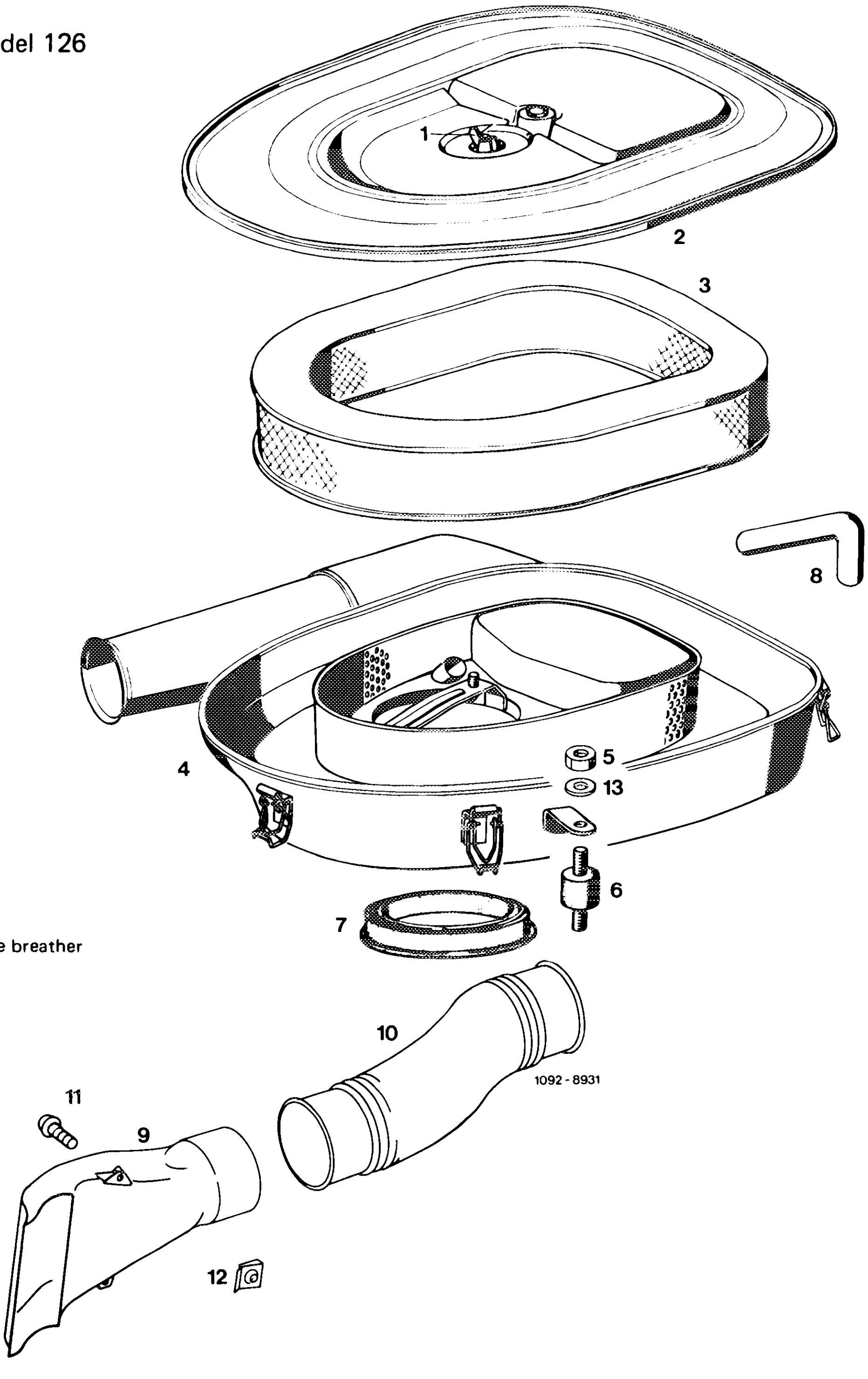

1 Wing nut
2 Air cleaner cover
3 Air cleaner element
4 Air cleaner lower half
5 Hex. nut
6 Vibration mount
7 Rubber sealing ring
8 Contour hose for crankcase breather
9 Intake scoop
10 Connecting hose
11 Screw
12 Plug nut
13 Washer

Note: National versions (AUS) (CH) (J) (S) (USA) are provided with 2 air cleaner elements.

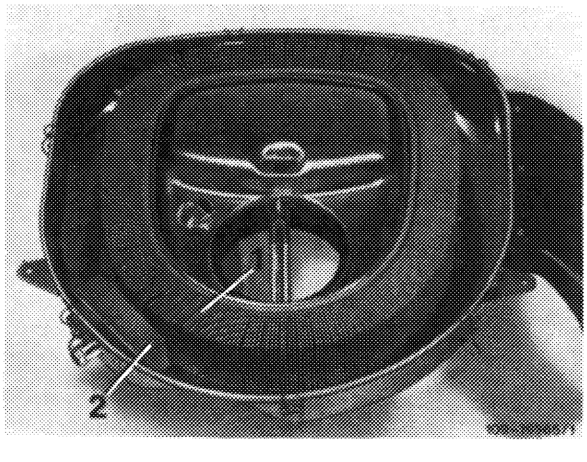

1 Air cleaner element engine
2 Air cleaner element air pump

Adjusting values

V-belt (width of section in mm)	New V-belts (KG scale on measuring instrument)	Used V-belts (KG scale on measuring instrument)
9.5	30	20–25
12.5	50	40–45

Special tool

Measuring instrument (Krikit) for measuring V-belt tension		001 589 69 21 00

Checking V-belt condition

Replace cracked, burnt or worn V-belts.

Checking tension

For handling of instrument refer to operating instructions and Replacing and tensioning V-belts (13–340).

The specified adjusting values refer to the KG scale of the measuring instrument (arrow).

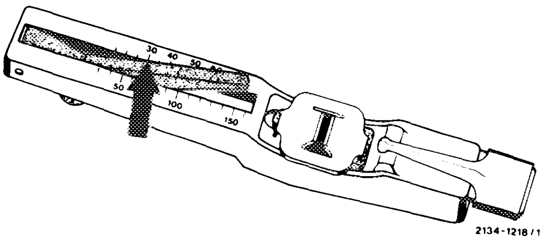

Used V-belts

Check tension of V-belt and compare with values named in table for used V-belts (e.g. V-belts, width of section 9.5 mm = adjusting value 20—25). Retension V-belt if required.

Mounting and tensioning of new V-belts

Proper mounting of a V-belt requires loosening of the respective auxiliary unit or tensioning device of V-belt to the extent that the belt can be mounted without any special effort. In addition, the running surface on the belt pulley should be free of burrs, rust and dirt.

Keep free of oil, grease and chemicals. Do not use belt waxing compound or the like. Optimal adjustment of belt tension (for adjusting data refer to table) as described below will eliminate any complaints such as squealing V-belts and short life.

Within the scope of maintenance jobs, mount the V-belt prior to checking the engine and tension to the value specified in the table for new V-belts (e.g. V-belt, width of section 9.5 mm = adjusting value 30).

If the V-belt tension is checked during final inspection or following a test drive, the measured value should be the same as the value named in the table for used V-belts (e.g. V-belt with width of section 9.5 mm = adjusting value 20—25). Retension V-belt if required.

V-belt dimensions

Engine	Version	A Coolant pump power steering pump	B Alternator	C Refrigerant compressor	D Air pump[4]
116.960 116.961	Standard	9.5 x 1140[1] 9.5 x 1150[2] (2 each)[5]	9.5 x 920	12.5 x 868[1] 12.5 x 880[2]	–
	AUS S 1981	9.5 x 1130 (2 each)[5]	9.5 x 950	12.5 x 920	
	J USA 1981	9.5 x 1100 (2 each)[5]	9.5 x 990 9.5 x 900[6]	12.5 x 930	9.5 x 750
116.962 116.963	J USA 1982				
	Standard AUS S 1982			12.5 x 920	
116.964 116.965				12.5 x 960[7]	
117.960	Standard	9.5 x 1150[1] 9.5 x 1130[2] 9.5 x 1110[3] (2 each)[5]	9.5 x 1000[1] 9.5 x 960[2]	12.5 x 868[1] 12.5 x 910[2] 12.5 x 920[3]	–
117.961		9.5 x 1100 (2 each)[5]	9.5 x 1005[1] 9.5 x 960[2]	12.5 x 910[1] 12.5 x 920[2]	–
117.962 117.963			9.5 x 1005 9.5 x 900[6]	12.5 x 920	–
117.964 117.965 117.967 117.968				12.5 x 960[7]	–

[1] 1st version
[2] 2nd version
[3] 3rd version
[4] Only AUS CH J S USA
[5] Install double V-belts only in pairs and made by one and the same manufacturer only.
[6] Special protection vehicles with 2nd alternator.
[7] With Nippondenso compressor and light alloy bracket as of August 1985.

V-belt	Arrangement	Adjusting value (KG scale on measuring device) New V-belts	Used V-belts
A	Coolant pump – power steering pump[1])	30	20–25
B	Alternator	35	30–35
C	Refrigerant compressor	50	40–45
D	Air pump	30	20–25

---

[1]) Double V-belt.

Special tools

Measuring instrument (Krikit) for measuring V-belt tension		001 589 69 21 00
Screwdriver 10 mm for internal socket head bolt tension roller V-belt – refrigerant compressor		117 589 03 07 00

Note

The measuring instrument ,,Krikit'' is recommended for testing V-belt tension.

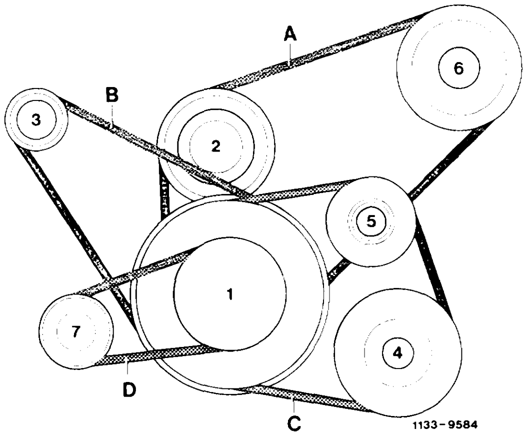

1 Crankshaft
2 Coolant pump
3 Alternator
4 Refrigerant compressor
5 Tension roller
6 Power steering pump
7 Air pump

Use of measuring instrument

To check V-belt tension, the measuring instrument can be held in several ways:

a) With thumb and index finger at rubber loop, with finger tips resting on push-button.

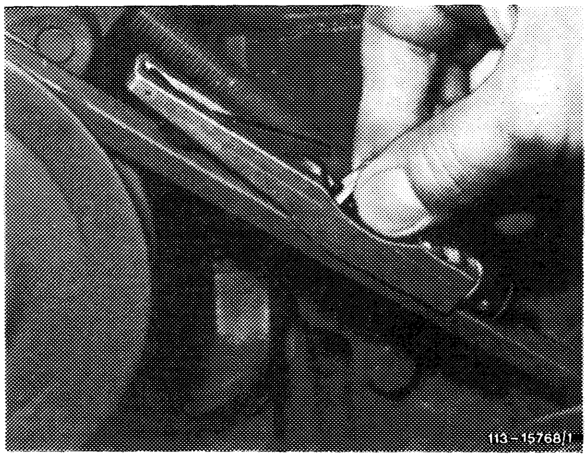

b) With index finger from above in rubber loop.

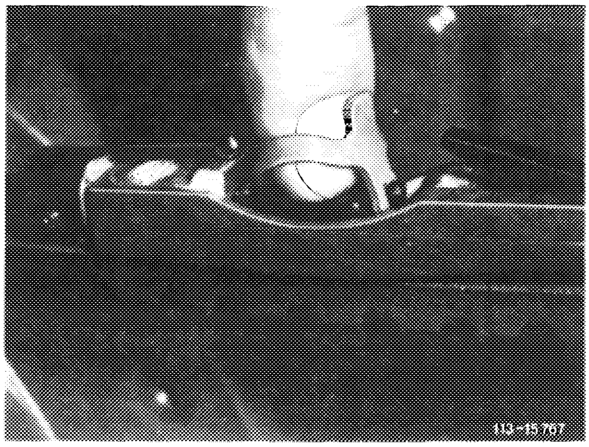

c) With index finger laterally between rubber loop and push-button.

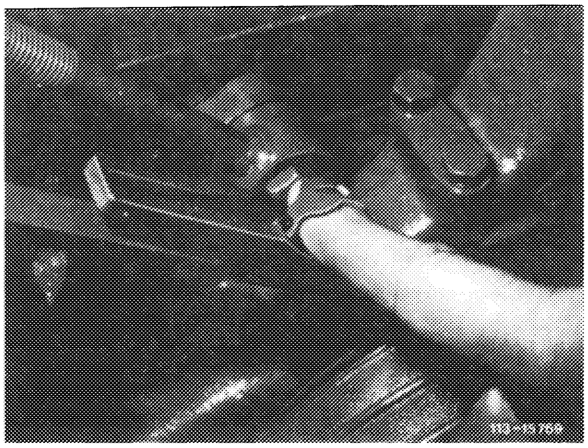

Checkup

1 Lower indicating arm on measuring instrument.

2 Place measuring instrument on V-belt in the center between the pulleys. The stop of the measuring instrument should rest laterally against the V-belt (arrow).

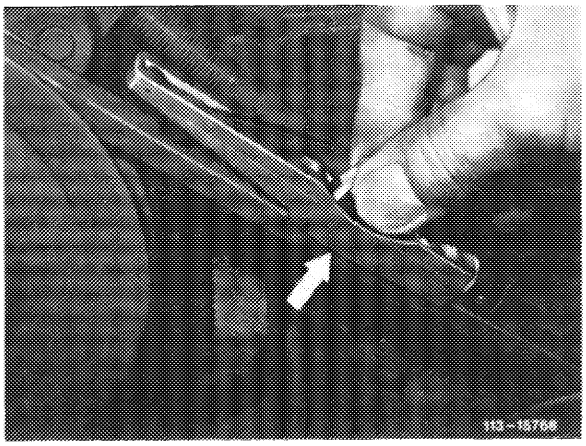

Caution!
On double belt drive, make sure that the measuring instrument rests on one V-belt only.

3 Exert even vertical pressure on the top of the V-belt with the push-button until the clicking spring disengages audibly or noticeably.

Note: Following disengagement of click spring, do not continue pushing with measuring instrument as this will indicate a wrong value.

4 **Carefully** lift measuring instrument off V-belt. Avoid knocks and do not change position of indicator arm.

5 Read adjusting value on intersection of indicating arm and upper scale (KG scale, arrow).

The specified adjusting values refer to the KG scale of the measuring instrument.

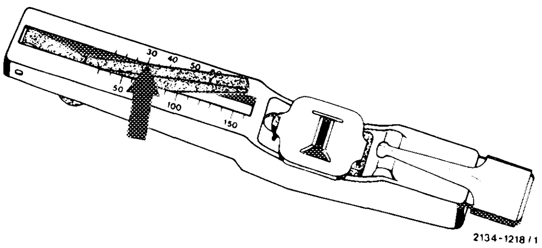

Replacement

Check condition of V-belt.

Replace cracked, burnt or worn V-belts.

Caution!
If on a double belt drive for coolant pump and power steering pump one of the two V-belts fails due to wear, make sure that both V-belts are replaced together.

Install only V-belts made by one and the same manufacturer.

V-belts as spare parts are available in pairs only.

1 Loosen tension devices or units.

2 Mount V-belt without using force.

3 Tension V-belt.

Tensioning

V-belt A Coolant pump – power steering pump

1 Loosen nuts (1, 2 and 3 [pivot point]), on power steering pump bracket.

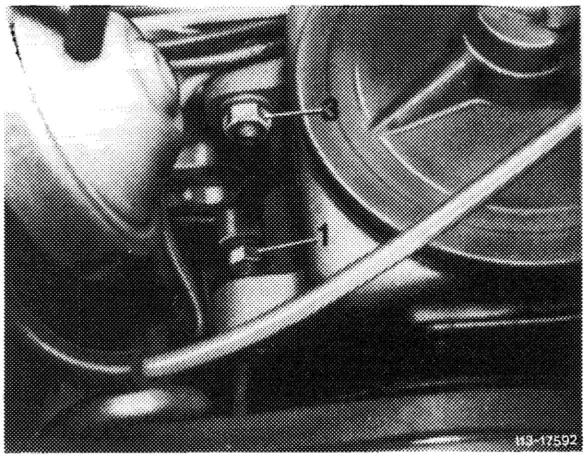

2 Tension V-belt with tension screw (arrow).

3 Tighten nuts (1, 2 and 3).

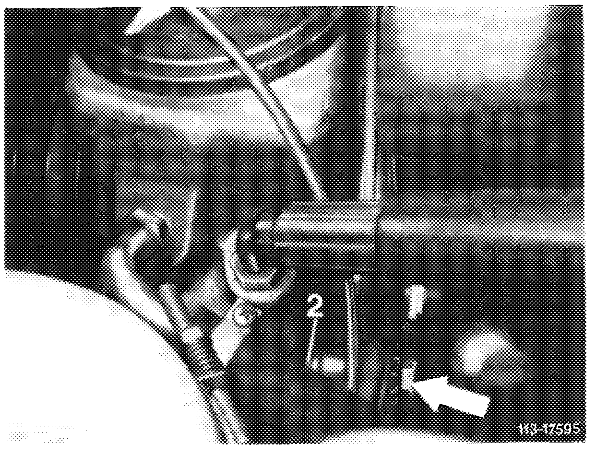

V-belt B Alternator

1 Slightly loosen fastening bolt (1) and nuts (2 and 3) on alternator bracket.

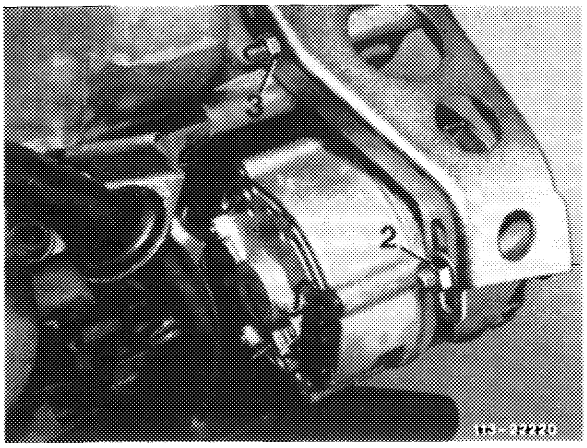

2 Tension V-belt with tension screw (4).

3 Tighten fastening bolt (1) and nuts (2 and 3).

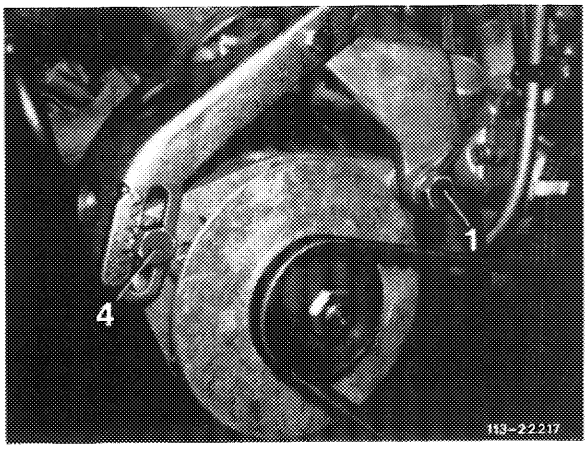

V-belt C Refrigerant compressor

1 Loosen fastening bolt (9) of tension roller (8).

2 Tension V-belt by swivelling tension roller (8). For this purpose, fit an open end wrench (19 mm) on the flat (10).

3 Tighten mounting bolt (9).

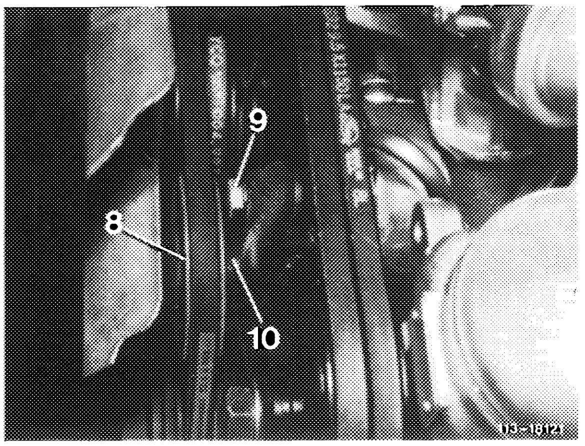

Note

Access to the attaching bolt (9) was improved by means of a changed bracket (version B).

This bracket is attached with a bolt M 12 x 1.5 x 35 (was M 12 x 1.5 x 40).

In the event of repairs, the tension roller and the bracket can be installed on the previous engines as well.

As of November 1985, the bracket for the tension roller is attached with an internal socket-head bolt. The internal socket-head bolt must be loosened with the 10 mm screwdriver 117 589 03 07 00.

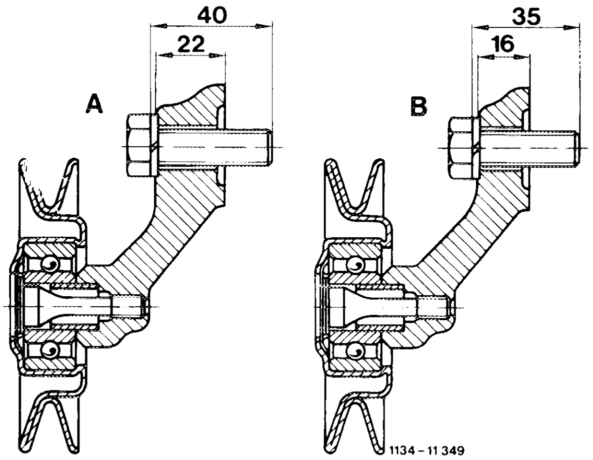

A 1st version
B 2nd version

V-belt D Air pump

KAT as of 1985
(AUS) (J) (S) (USA) as of 1981
(CH) as of 1983

1 Loosen mounting bolts (1 and 2).

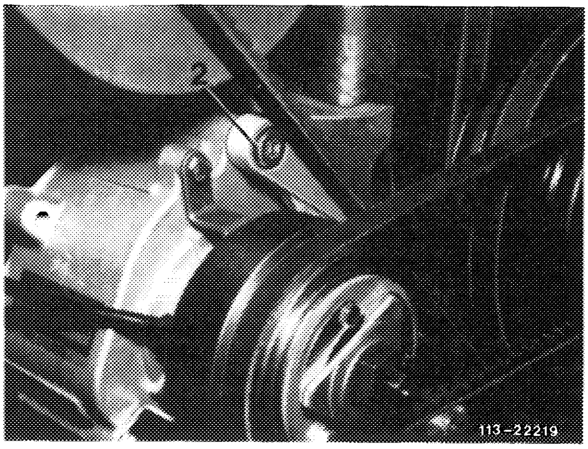

2 Tension V-belt with tension nut (3).

3 Tighten mounting bolts (1 and 2).

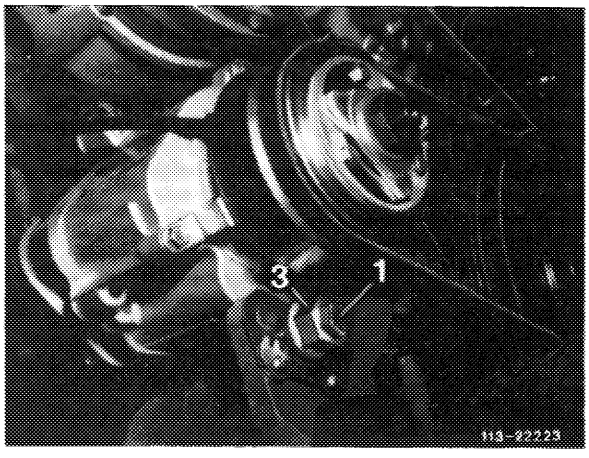

Standard KAT (open-loop)

Information label for engine data (KAT open-loop) is glued to the left of the upper front cross member. The engine settings should be entered in pen.

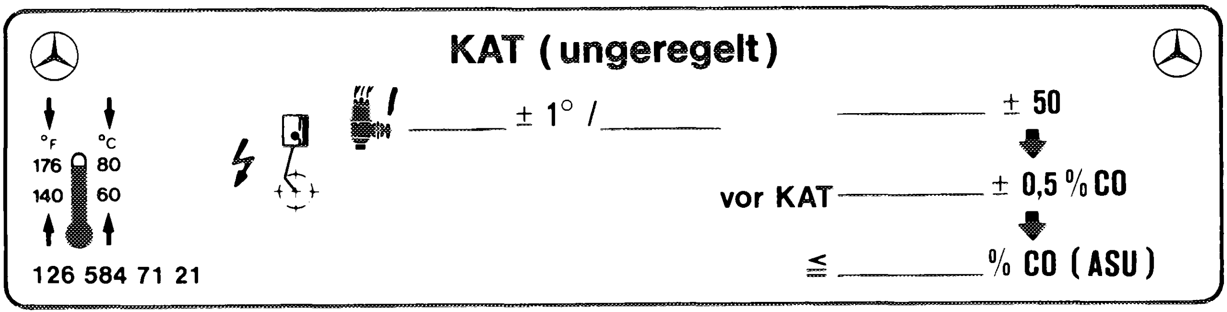

KAT (ungeregelt)

°F °C
176 80
140 60

____ ± 1° / ____

____ ± 50

vor KAT ____ ± 0,5 % CO

≦ ____ % CO (ASU)

126 584 71 21

1004 - 13 867

NV KAT (closed-loop) starting July 1984

The vehicles basically conform to the national version Ⓙ (USA). Variations from the basic version standard are:

Low compression ($\epsilon = 8.3$)

Output 120 kW (163 hp)

CIS injection system with lambda control

O_2 Sensor

Electronic controller

Frequency valve with pressure damper

Air injection

Fuel pump relay without decel fuel cutoff

Electronically controlled idle speed

Fuel evaporation control system

Ⓙ

On Japan version vehicles an information label for the emission control system in the national language is attached in the engine compartment in Japan. This label contains the principle engine adjusting data.

(USA) black

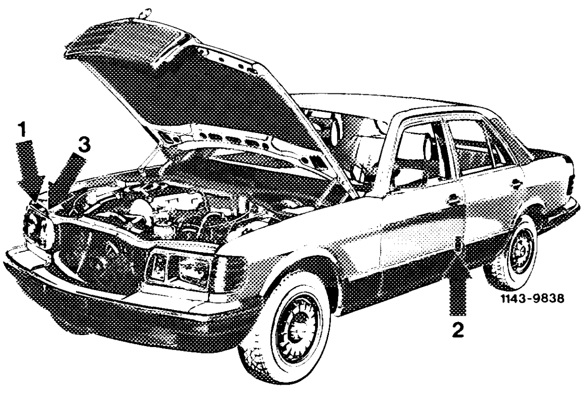

Information label for emission control system on cross member in front of radiator (1)

This label shows the engine identification data, as well as the most important engine adjusting data.

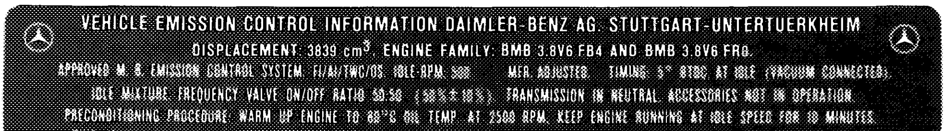

VEHICLE EMISSION CONTROL INFORMATION DAIMLER-BENZ AG. STUTTGART-UNTERTUERKHEIM
DISPLACEMENT: 3839 cm^3, ENGINE FAMILY: BMB 3.8V6 FB4 AND BMB 3.8V6 FR0.
APPROVED U. S. EMISSION CONTROL SYSTEM: FI/AI/TWC/OS. IDLE RPM: 500 MFR. ADJUSTED. TIMING: 5° BTDC AT IDLE (VACUUM CONNECTED).
IDLE MIXTURE: FREQUENCY VALVE ON/OFF RATIO 50:50 (50% ± 10%). TRANSMISSION IN NEUTRAL. ACCESSORIES NOT IN OPERATION.
PRECONDITIONING PROCEDURE: WARM UP ENGINE TO 80°C OIL TEMP. AT 2500 RPM. KEEP ENGINE RUNNING AT IDLE SPEED FOR 10 MINUTES.
THIS VEHICLE CONFORMS TO U. S. EPA AND STATE OF CALIFORNIA REGULATIONS APPLICABLE TO 1981 MODEL YEAR NEW MOTOR VEHICLES.
IT ALSO CONFORMS TO APPLICABLE CANADIAN EMISSION STANDARDS.

1144-9780

Engine identification data are encoded in a 10-digit code.

Example: Engine Family B MB 3.8 V 6 F B 4

B MB 3.8 V 6 F B 4

Model year
B = 1981, C = 1982 etc.

Manufacturer's code
Mercedes Benz

Displacement approx.
3800 cc

Vehicles class
V = passenger car with gasoline engine

Type of fuel supply
6 = injection, mechanical

Catalyst version
F = 3-way catalyst in combination with lambda control

Available for use as required

Test number

Information label on door post of driver's door (2)

This label shows whether the vehicle is equipped with or without catalysts.

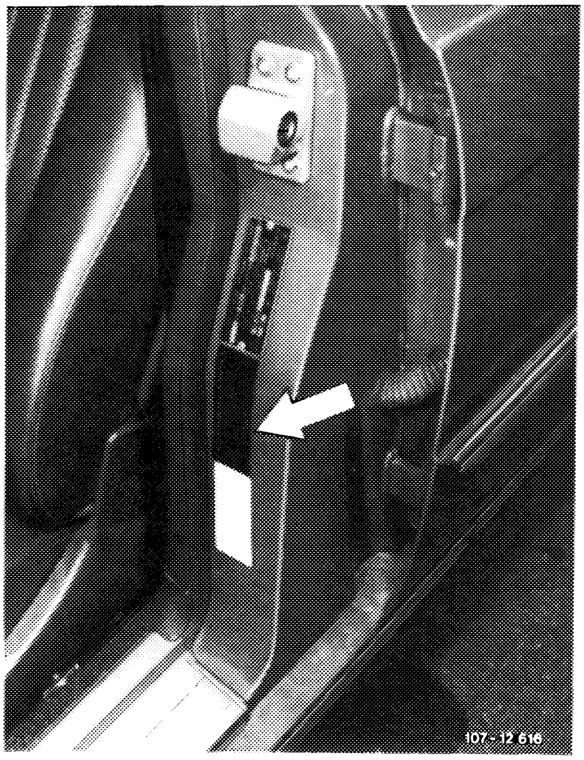

USA version

This vehicle is provided with catalysts.

Color code of information label:
Basic color black, lettering silver.

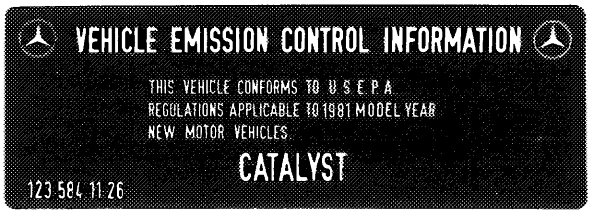

VEHICLE EMISSION CONTROL INFORMATION

THIS VEHICLE CONFORMS TO U S E P A.
REGULATIONS APPLICABLE TO 1981 MODEL YEAR
NEW MOTOR VEHICLES.

CATALYST

123 584 11 26

1144-10036

Tourist version

Tourist version vehicles are not provided with catalysts by manufacturer.

Color code of information label:
Basic color red, lettering silver.

Catalysts must be installed prior to import into USA.

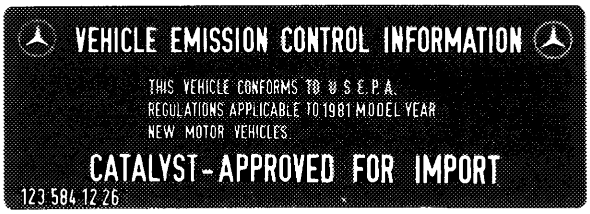

VEHICLE EMISSION CONTROL INFORMATION

THIS VEHICLE CONFORMS TO U S E P A.
REGULATIONS APPLICABLE TO 1981 MODEL YEAR
NEW MOTOR VEHICLES.

CATALYST-APPROVED FOR IMPORT

123 584 12 26

1144 -10037

Basic version NV KAT (closed-loop)
Engine 116.963 starting 1984 (optional version)

A. General

The CIS injection system is equipped with a lambda control. The principle components are O_2 sensor, electronic control unit and frequency valve.

The fuel pump relay does not feature decel fuel cutoff.

The vehicles must only be operated with unleaded regular or premium fuel to avoid damage to parts sensitive to lead (O_2 sensor and catalyst).

The engines are low-compression (ϵ = 8.3). The piston crown features a 6.5 mm deep recess.

A fuel evaporation control system is fitted to reduce the fuel vapours flowing to the atmosphere (see Group 47).

An air conditioning or automatic climate control system in combination with a fuel cooler (47—400) is fitted as standard.

Identification vacuum lines

The basic colour of vacuum lines for the emission control system is transparent (white).

Additional colour stripes are used to facilitate identification of the individual functions.

Lines originating at the vacuum source (suction lines) **have only one colour stripe.**

Lines terminating at the vacuum-operated device (function lines) **have two colour stripes.**

Emission control system	Colour coding of originating vacuum line	Colour coding of terminating vacuum line
Ignition		
Advance	red	—
Air injection	blue	blue/purple

National version

(J) (USA) Engine 116.96 starting model year 1981
(J) (USA) Engine 117.96 starting model year 1984

A. General information

Engines 116.96 and 117.96 are equipped with a standard emission control system for the (USA) national version for Federal and California vehicles.

Identification of vacuum lines

The basic colour of the vacuum lines for the emission control system is transparent (white).

Additional colour stripes are used to facilitate identification of the individual functions.

Lines originating at a vacuum source (suction lines) **have only one colour stripe.**

Lines terminating at the vacuum-operated device (function lines) **have two colour stripes.**

Emission control system	Color coding of originating vacuum line	Color coding of terminating vacuum line
Ignition		
advance	red	–
retard[1]	yellow	–
Air injection	blue	blue/purple

---

[1] Starting model year 1982 ignition retard is no longer installed.

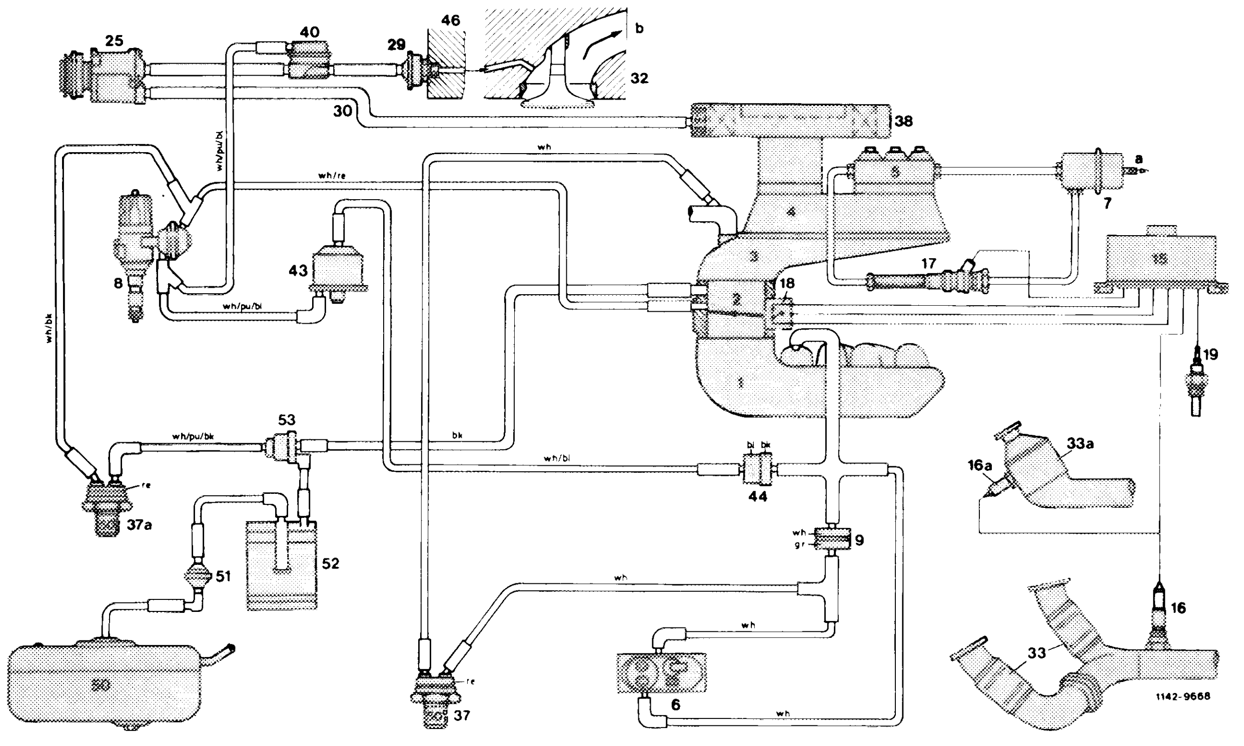

Function diagram engine 116 model year 1981

1	Intake manifold
2	Throttle valve housing
3	Air guide housing
4	Air flow sensor
5	Fuel distributor
6	Warm-up compensator
7	Damper
8	Ignition distributor
9	Throttle (orifice)
15	Control unit
16	O_2 probe (model 107)
16a	O_2 probe (model 126)
17	Frequency valve
18	Throttle valve switch
19	Temperature switch 16 °C oil
25	Air pump
29	Check valve (injected air)
30	Intake line
32	Cylinder head
33	Pre-catalyst (model 107)
33a	Pre-catalyst (model 126)
37	Thermovalve 50 °C
37a	Thermovalve 50 °C
38	Air cleaner
40	Air shutoff valve
43	Switchover valve
44	Check valve (vacuum)
46	Timing housing cover
50	Fuel tank
51	Vent valve
52	Charcoal canister
53	Purge valve
a	Leak connection
b	To exhaust manifold

bk = black
bl = blue
gr = green
pu = purple
re = red
wh = white

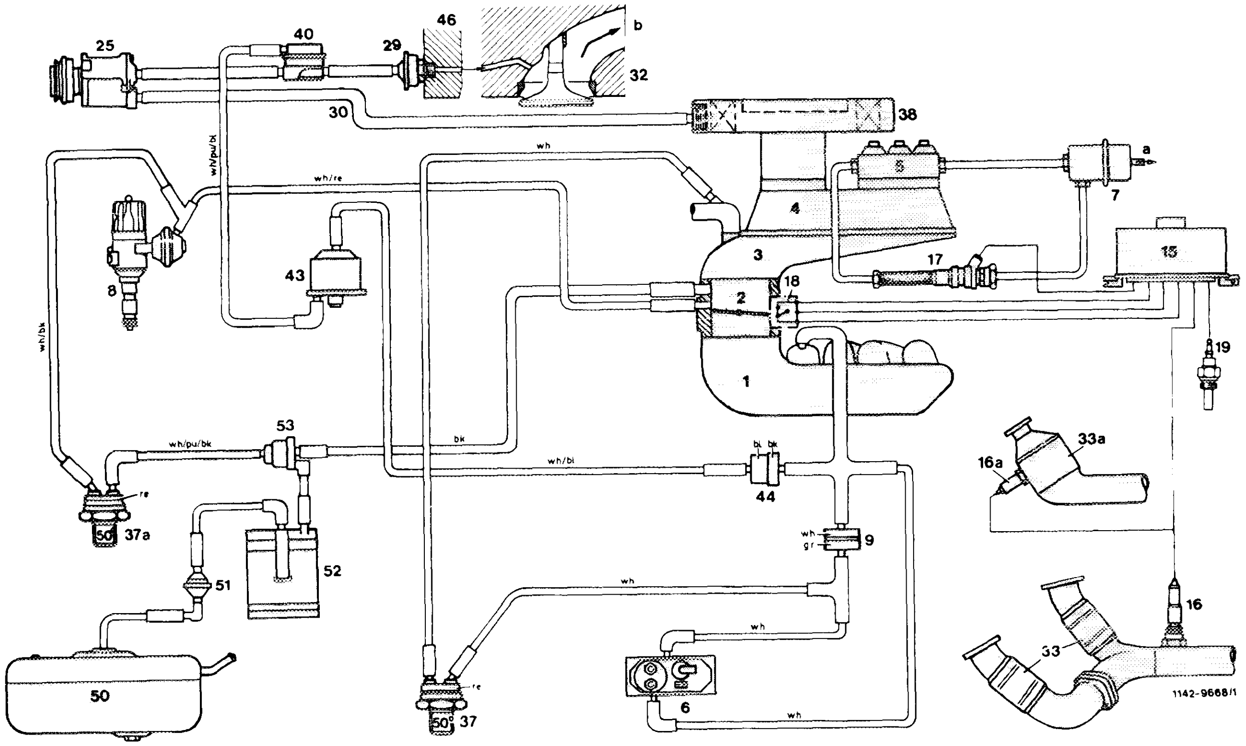

Function diagram engine 116 model year 1982

1	Intake manifold
2	Throttle valve housing
3	Air guide housing
4	Air flow sensor
5	Fuel distributor
6	Warm-up compensator
7	Damper
8	Ignition distributor
9	Throttle (orifice)
15	Control unit
16	O_2 probe (model 107)
16a	O_2 probe (model 126)
17	Frequency valve
18	Throttle valve switch
19	Temperature switch 16 °C oil
25	Air pump
29	Check valve (injected air)
30	Intake line
32	Cylinder head
33	Pre-catalyst (model 107)
33a	Pre-catalyst (model 126)
37	Thermovalve 50 °C
37a	Thermovalve 50 °C
38	Air cleaner
40	Air shutoff valve
43	Switchover valve
44	Check valve (vacuum)
46	Timing housing cover
50	Fuel tank
51	Vent valve
52	Charcoal canister
53	Purge valve
a	Leak connection
b	To exhaust manifold

bk = black
bl = blue
gr = green
pu = purple
re = red
wh = white

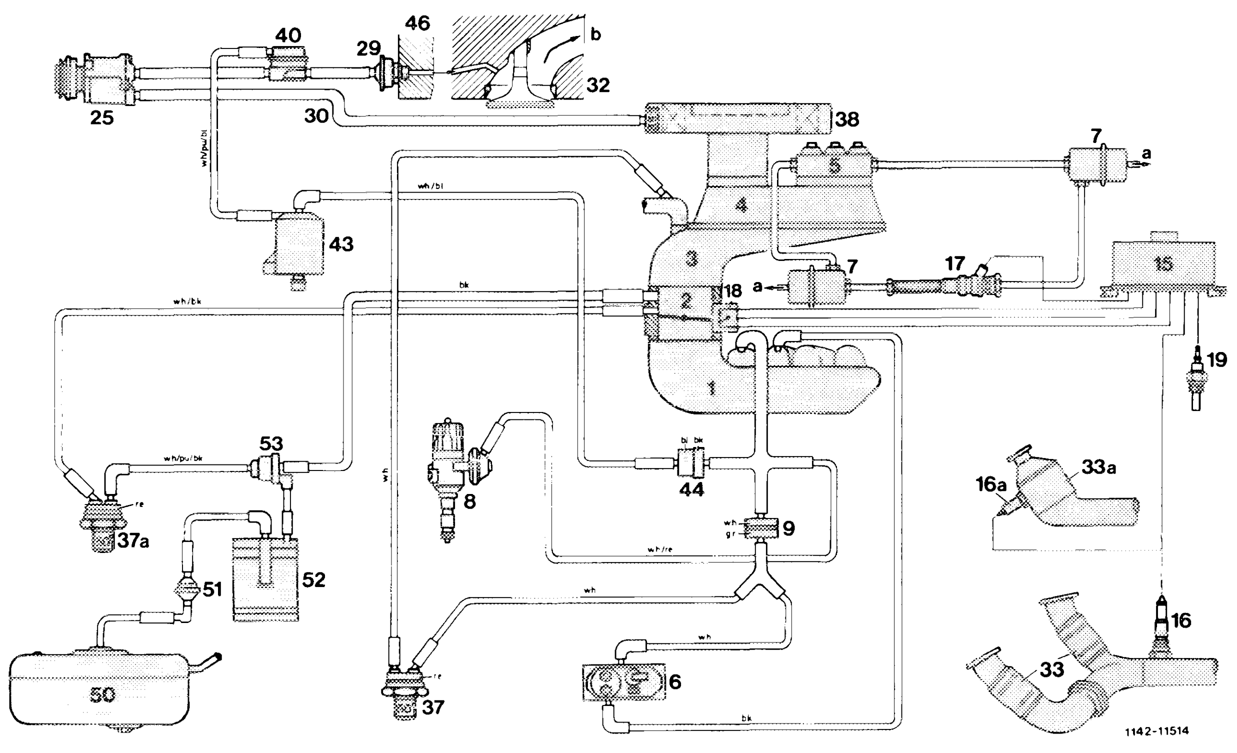

Function diagram engine 116 starting model year 1983, engine 117 starting model year 1984

1	Intake manifold
2	Throttle valve housing
3	Air guide housing
4	Air flow sensor
5	Fuel distributor
6	Warm-up compensator
7	Damper
8	Ignition distributor
9	Throttle (orifice)
15	Control unit
16	O_2 probe (model 107)
16a	O_2 probe (model 126)
17	Frequency valve
18	Throttle valve switch
19	Temperature switch 16 °C oil
25	Air pump
29	Check valve (injected air)
30	Intake line
32	Cylinder head
33	Pre-catalyst (model 107)
33a	Pre-catalyst (model 126)
37	Thermovalve 50 °C
37a	Thermovalve 50 °C
38	Air cleaner
40	Air shutoff valve
43	Switchover valve
44	Check valve (vacuum)
46	Timing housing cover
50	Fuel tank
51	Vent valve
52	Charcoal canister
53	Purge valve
a	Leak connection
b	To exhaust manifold

bk = black
bl = blue
gr = green
pu = purple
re = red
wh = white

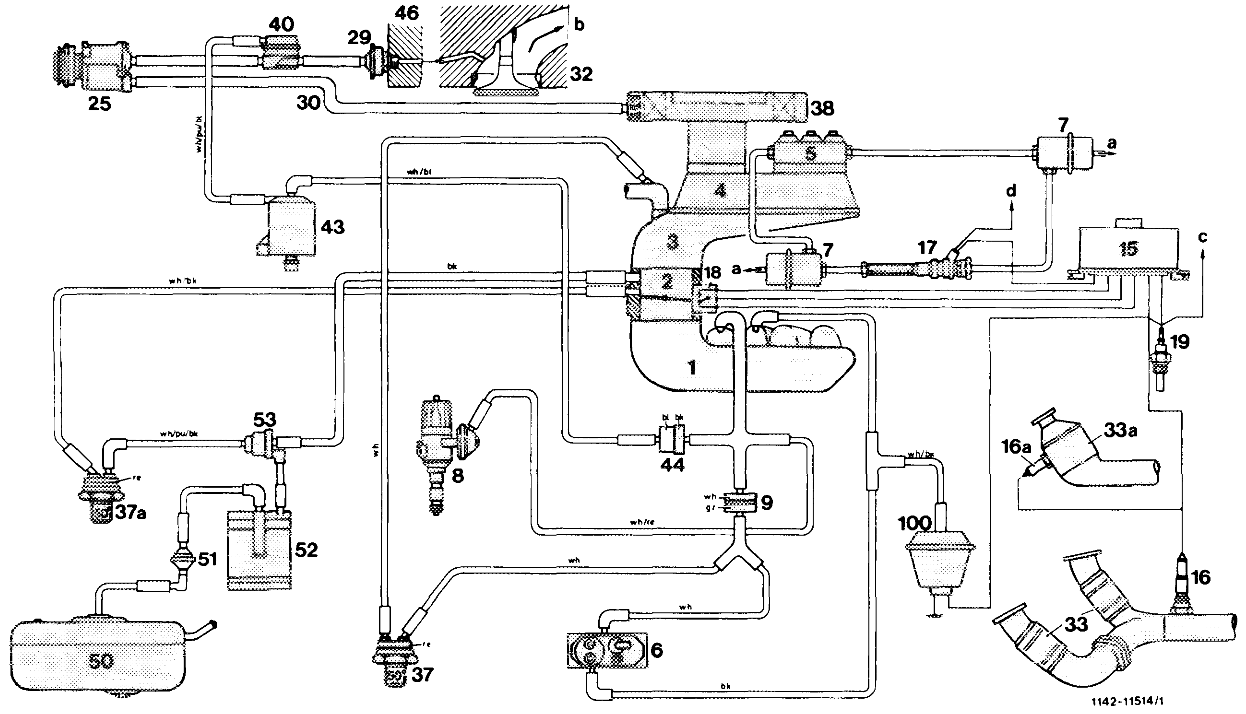

Function diagram with acceleration enrichment via pressure step switch, national version (USA)
Engine 116, 117 starting model year 1985

1	Intake manifold
2	Throttle valve housing
3	Air guide housing
4	Air flow sensor
5	Fuel distributor
6	Warm-up compensator
7	Damper
8	Ignition distributor
9	Throttle (Orifice)
15	Control unit (lambda control)
16	O_2 sensor (model 107)
16a	O_2 sensor (model 126)
17	Frequency valve
18	Throttle valve switch
19	Temperature switch 16 °C oil
25	Air pump
29	Check valve (injected air)
30	Intake line
32	Cylinder head
33	Pre-catalyst (model 107)
33a	Pre-catalyst (model 126)
37	Thermovalve 50 °C
37a	Thermovalve 50 °C
38	Air cleaner
40	Air shut-off valve
43	Switchover valve
44	Check valve (vacuum)
46	Timing housing cover
50	Fuel tank
51	Vent valve
53	Purge valve
100	Pressure step switch
a	Leak connection
b	to exhaust manifold
c	Control unit of idle speed control
d	Plug connection, tail lamp wiring harness (contact 2)

bk = black
bl = blue
gr = green
pu = purple
re = red
wh = white

B. Lambda control (λ = lambda)

The lambda control system ensures that a constant air-fuel weight ratio is maintained at approx. 14.5 : 1 (λ = 1). That means, that an exact proportioning between the injected fuel and the air drawn in can be obtained. This is the ideal mixture ratio, which reduces, in conjunction with the 3-way catalysts, the emissions of HC, CO and NO_x in the exhaust gas to a minimum.

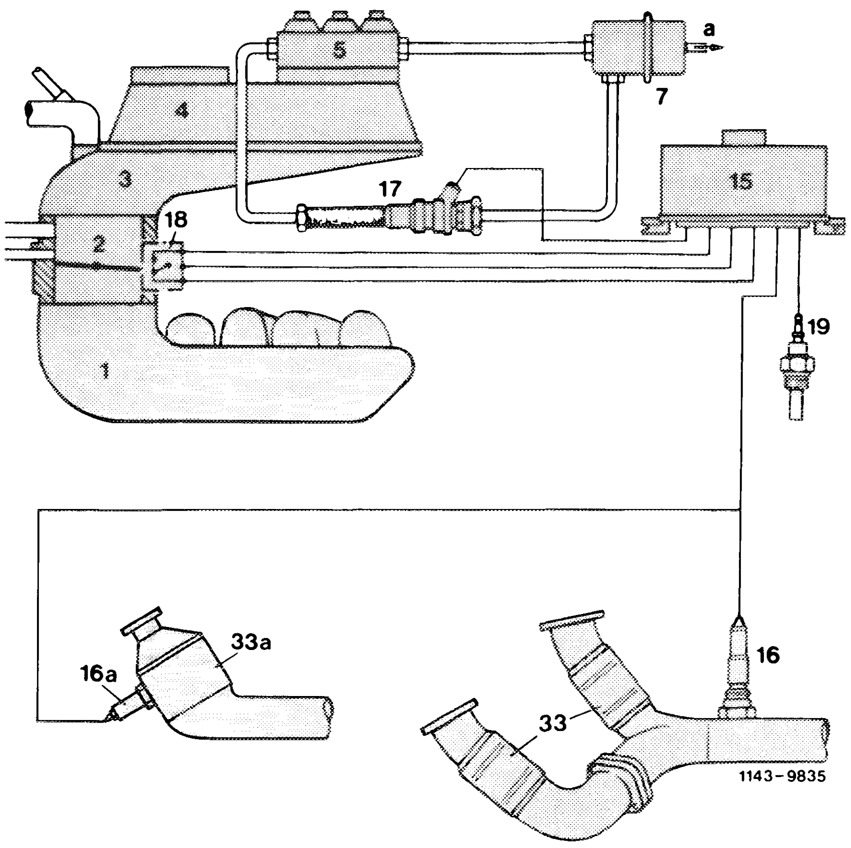

Function diagram lambda control
Engine 116 model year 1981/82

1	Intake manifold
2	Throttle valve housing
3	Air guide housing
4	Air flow sensor
5	Fuel distributor
7	Damper
15	Control unit
16	O_2 probe (model 107)
16a	O_2 probe (model 126)
17	Frequency valve
18	Throttle valve switch
19	Temperature switch 16 °C oil
33	Pre-catalysts (model 107)
33a	Pre-catalyst (model 126)
a	Leak connection

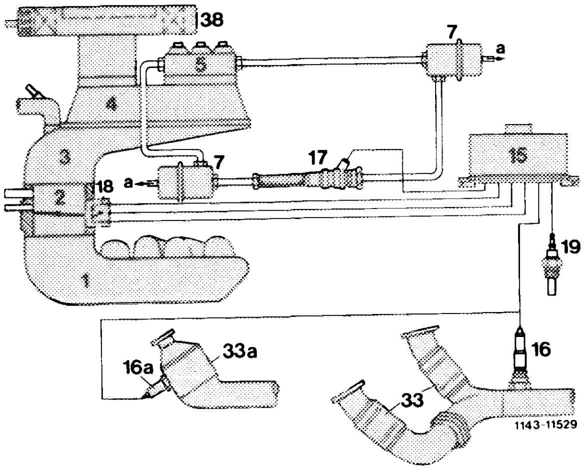

Function diagram lambda control
Engine 116 starting model year 1983
Engine 117 starting model year 1984

1	Intake manifold
2	Throttle valve housing
3	Air guide housing
4	Air flow sensor
5	Fuel distributor
7	Damper
15	Control unit
16	O_2 probe (model 107)
16a	O_2 probe (model 126)
17	Frequency valve
18	Throttle valve switch
19	Temperature switch 16 °C oil
33	Pre-catalysts (model 107)
33a	Pre-catalyst (model 126)
a	Leak connection

Components of lambda control:

O_2 probe (oxygen sensor)

The O_2 probe (oxygen sensor) is screwed into the front part of the exhaust pipe and on model 126 directly into pre-catalyst to measure the residual oxygen contents in the exhaust gases.

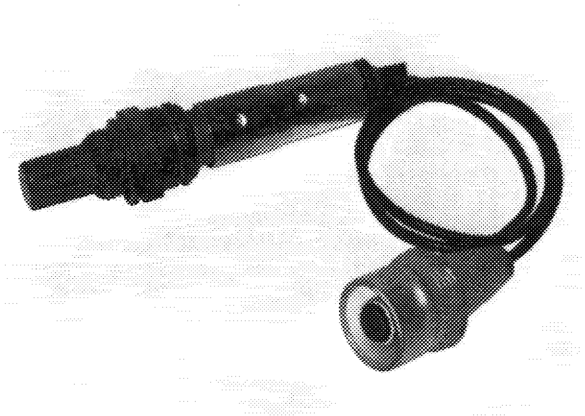

Model 107
Model year 1981/82

107–16795

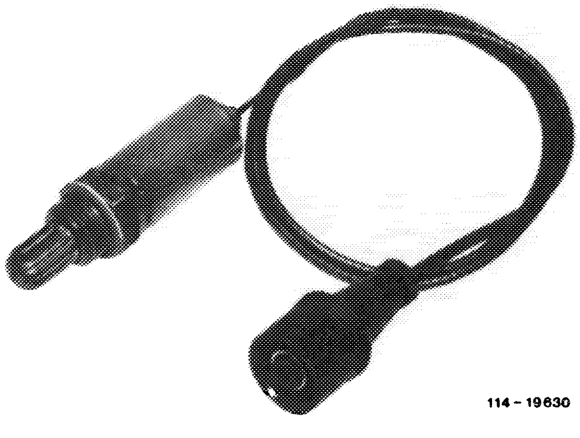

Model 126
Model year 1981/82

114 – 19630

Starting model year 1983, a uniform O_2 probe (oxygen sensor) with a new plug connection will be installed in models 107 and 126.

Model 107, 126
starting model year 1983

114–23991

The protective casing (12) protects the probe's ceramic insert (6) against mechanical damage. The outer part of the ceramic insert is in contact with the exhaust gases, the inner side with surrounding air. The ceramic surfaces are coated with a thin layer of gas-permeable platinum. In addition, a porous layer of ceramic is added on the exhaust side, which protects the platinum surface underneath against fouling from combustion materials, ensuring uniform long-life characteristics for O_2 probe (oxygen sensor).

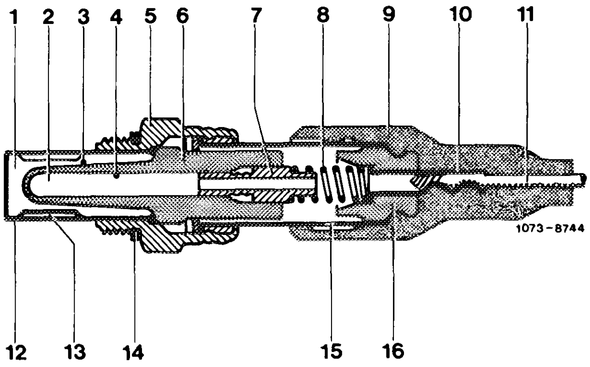

1 Exhaust gas side
2 Outside air side
3 Outer electro-conductive layer
4 Inner electro-conductive layer
5 Probe body with hexagon
6 Probe ceramic
7 Contact bushing
8 Contact spring
9 Protective cap
10 Crim connector
11 Connecting line
12 Protective tube
13 Exhaust gas intake slots
14 Sealing ring
15 Fresh air intake slot
16 Insulator

Operation

At a temperature of approx. 300 °C the ceramic material becomes conductive to the oxygen ions. A different amount of oxygen between either side (exhaust gas side and fresh air side) presents a chemical reaction between the adjoining surfaces and induces an electrical potential. The value of this potential represents the measurement for oxygen differential on both sides of the O_2 probe (oxygen sensor). The O_2 probe is highly sensitive at a range of $\lambda = 1$ and signals the electronic control unit that this is the desired value.

Control unit

On model 126 the control unit is located in righthand legroom behind lateral lining or on model 107 under leg support. A combination of printed circuits regulates the air-fuel mixture to an ideal value of $\lambda = 1$.

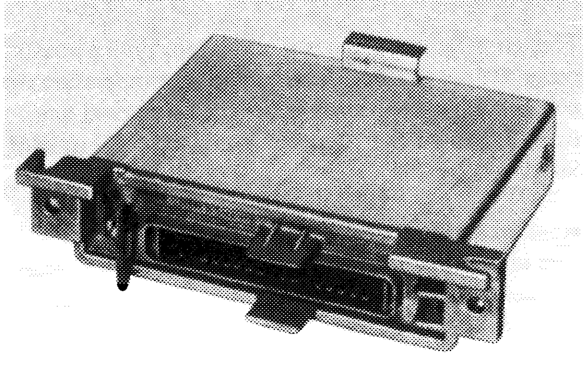

107–16791

Frequency valve

The frequency valve is attached to the air flow sensor. It is connected to the fuel line from lower chamber of fuel distributor via pressure damper to the return line of the warm-up compensator.

The frequency valve regulates the differential pressure in fuel distributor.

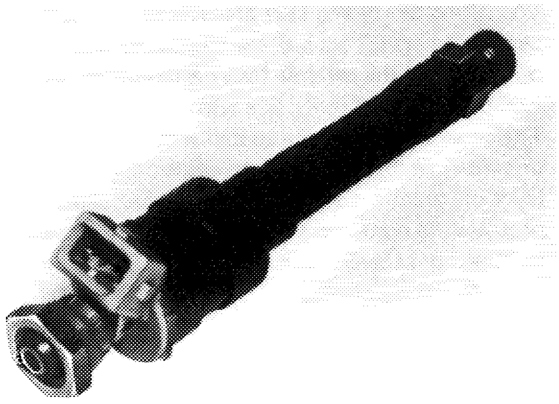

107–16794

Throttle valve switch

The Throttle valve switch is attached to throttle valve housing and has two functions: idle speed and full throttle contact.

107–17070

Idle speed contact

The idle speed contact on throttle valve switch serves to narrow the control amplitude in control unit to obtain a stabilization of idle speed.

Full throttle contact

When the vehicle is driven in full throttle range (throttle valve against full throttle stop) a firm on-off ratio of 60:40 (slightly richer) is set in control unit via full throttle contact.

Temperature switch oil 16 ± 3 °C

The temperature switch is screwed into timing housing cover. Below approx. 16 °C engine oil temperature the control unit is connected to negative via closed temperature switch and adjusted to a fixed on-off ratio of 60:40.

At approx. 16 °C engine oil temperature the temperature switch will open and thereby interrupt the negative connection. The control unit will continue to control the on-off ratio.

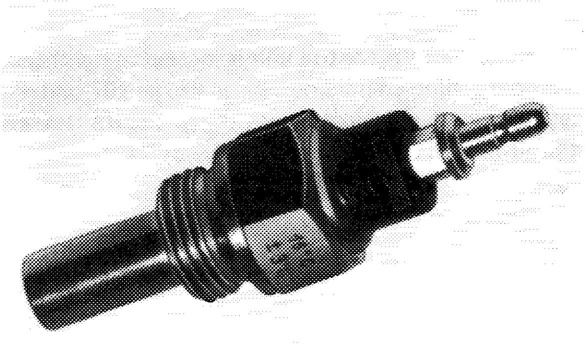

107–16798

Relay voltage supply

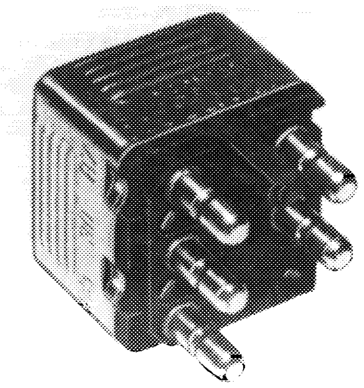
107-17461

For voltage supply of lambda control on model 126 a relay is installed in fuse box or on model 107 in righthand legroom above fuse box.

Note: Starting model year 1982 the relays voltage supply and overvoltage protection have been combined. The new designation is relay voltage supply with overvoltage protection (refer to electric wiring diagram).

Overvoltage protection

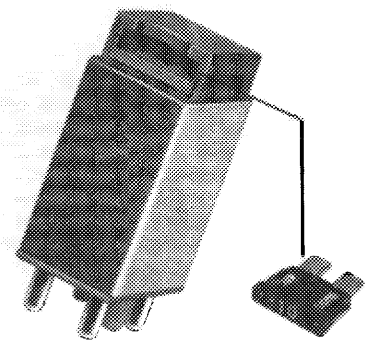
142-21756

To prevent damage to components of lambda control, caused by increased voltage of vehicle circuit (quick charging of battery, loose battery poles) an overvoltage protection is attached prior to relay for voltage supply.

Note: Starting model year 1982 the overvoltage protection has been integrated in the voltage supply relay. A 10A fuse is installed on the top.

Operation

At an operating temperature above 300 °C and depending on oxygen content in exhaust gases the O_2 probe indicates a voltage and thereby informs the control unit whether the air-fuel mixture is richer or leaner than $\lambda = 1$.

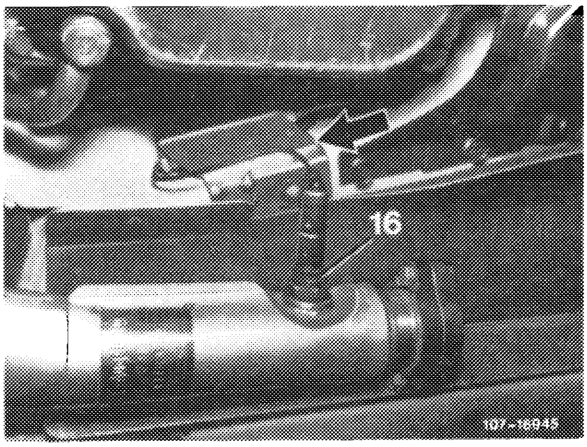

Model 107

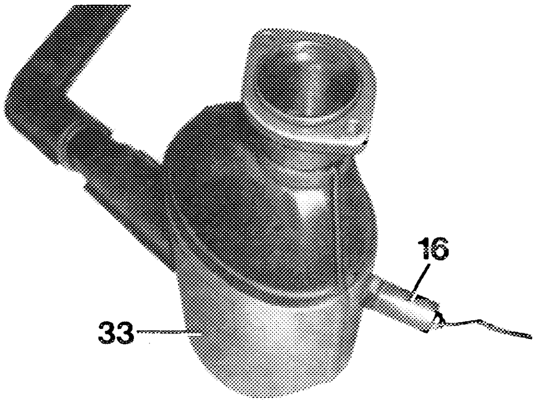

Model 126

114-19613

In control unit (15) the signal coming from the O_2 probe is converted into voltage impulses which are then transmitted to frequency valve (17).

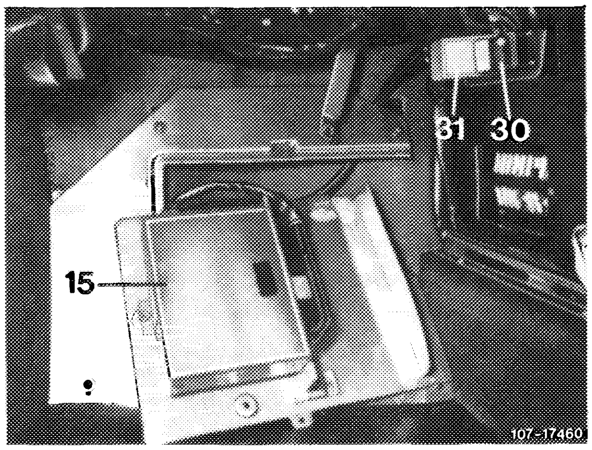

Model 107

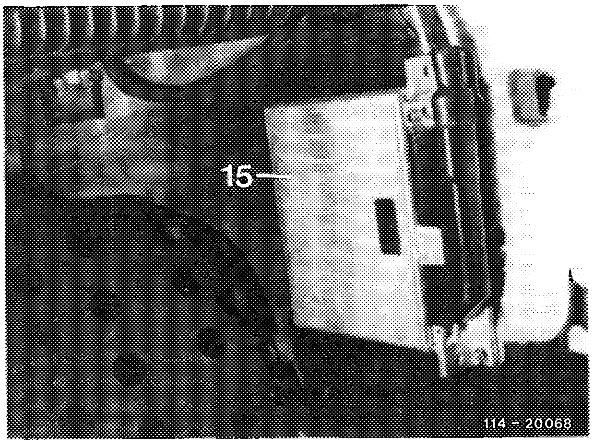

Model 126

The frequency valve is a magnetic valve which changes the differential pressure on control slit of slit carrier and thereby the injected fuel quantity in dependence of the arriving voltage signals (on-off ratio) (refer to 07.3 Fuel distributor).

When driving with opened throttle valve (full load) or at a temperature of engine oil below 16 °C, lambda control is inoperative. The frequency valve is operated via control unit at a fixed on-off ratio of 60:40. This means that the frequency valve is 60 % opened and 40 % closed.

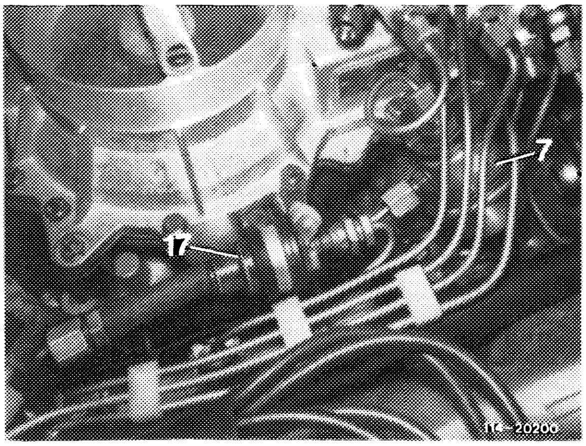

These two operating modes are activated by the throttle valve switch (18) or by oil temperature switch (19).

After 30 000 miles a warning lamp "O_2 probe" in instrument cluster indicates that the probe must be renewed.

In addition we recommend renewing the O_2 probe every 30 000 miles.

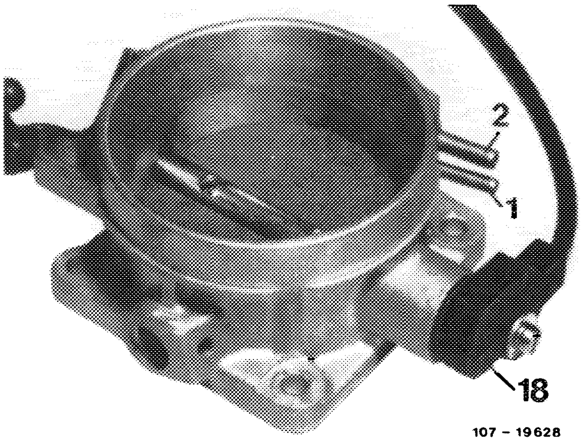

Pressure step switch (USA) starting model year 1985

An electropneumatic pressure step switch (100) is fitted for enriching the mixture when accelerating.

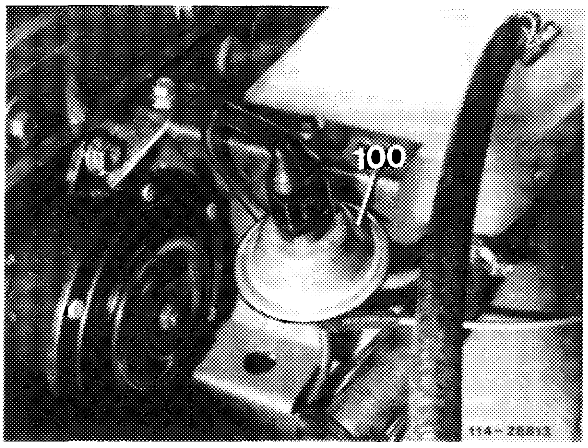

Operating

The change in pressure in the intake manifold which occurs when accelerating or when the accelerator pedal is depressed sharply is exploited by a pressure step switch to activate the control unit of the lambda control. It is also operational when the engine is at normal operating temperature.

When the engine is stationary, the switch (5) is opened by the spring (4). When the engine is running at a constant speed or load, the vacuum in the stop chamber (1) and in the bottom chamber (2) is identical as the orifice (2) balances the pressure.

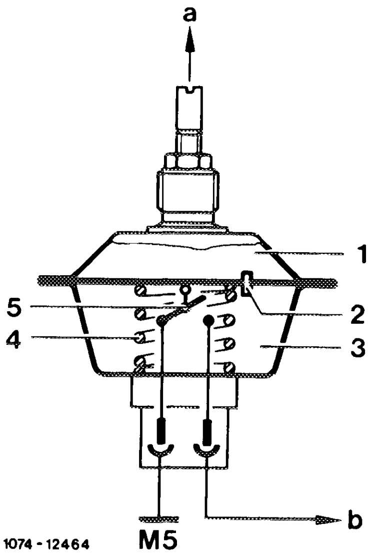

a To intake manifold
b To 16 °C oil temperature switch
M5 Engine ground

When the car is accelerated, the vacuum in the top chamber drops. The vacuum prevailing in the bottom chamber pulls the diaphragm down against the spring (differential pressure), the switch closes. The control unit of the lambda control is connected to ground, briefly applies a fixed on/off ratio 60 %, the mixture is enriched.

The switch remains closed until the vacuum in the top and bottom chambers is balanced through the orifice. Once the pressure is identical, the spring opens the switch, the ground to the control unit is interrupted, the mixture is no longer enriched.

C. Air injection

Air is injected into the hot zone behind the exhaust valves at certain engine operating conditions to improve emission levels.

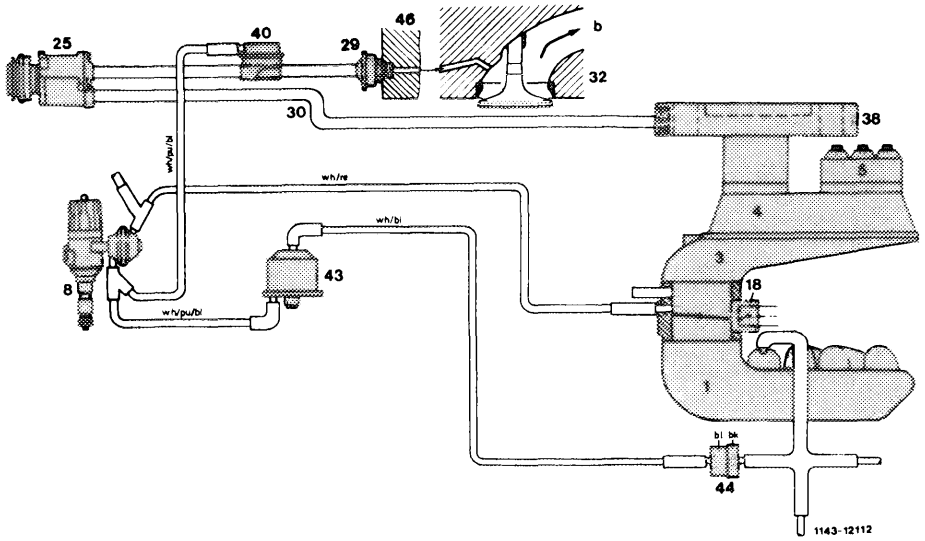

Function diagram engine 116 model year 1981

1 Intake manifold
3 Air guide housing
4 Air full sensor
5 Fuel distributor
8 Ignition distributor
18 Throttle valve switch
25 Air pump
29 Check valve (injected air)
30 Intake line
32 Cylinder head
38 Air cleaner
40 Air shut-off valve
43 Switchover valve
44 Check valve (vacuum)
46 Timing housing cover

b To exhaust manifold

bk = black
bl = blue
pu = purple
re = red
wh = white

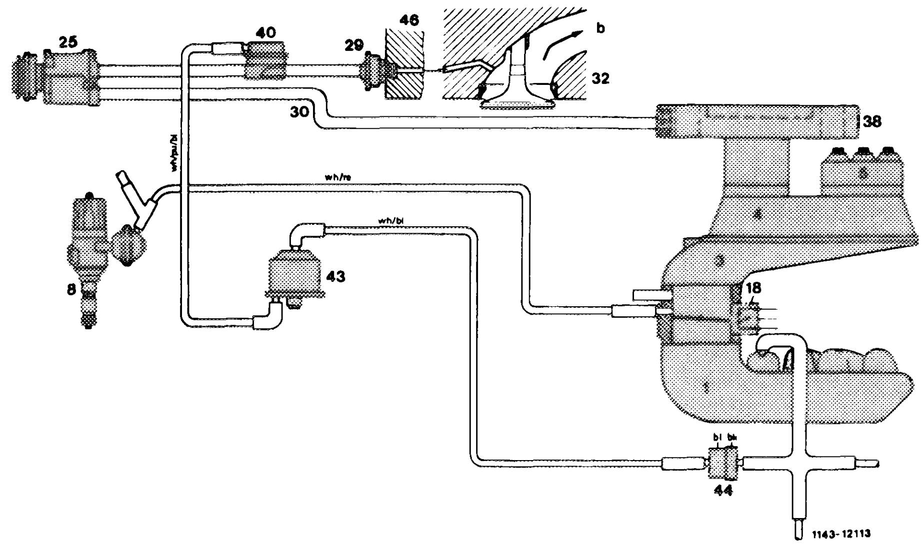

Function diagram engine 116 model year 1982

1	Intake manifold	30	Intake line
3	Air guide housing	32	Cylinder head
4	Air full sensor	38	Air cleaner
5	Fuel distributor	40	Air shut-off valve
8	Ignition distributor	43	Switchover valve
18	Throttle valve switch	44	Check valve (vacuum)
25	Air pump	46	Timing housing cover
29	Check valve (injected air)		
		b	To exhaust manifold

bk = black
bl = blue
pu = purple
re = red
wh = white

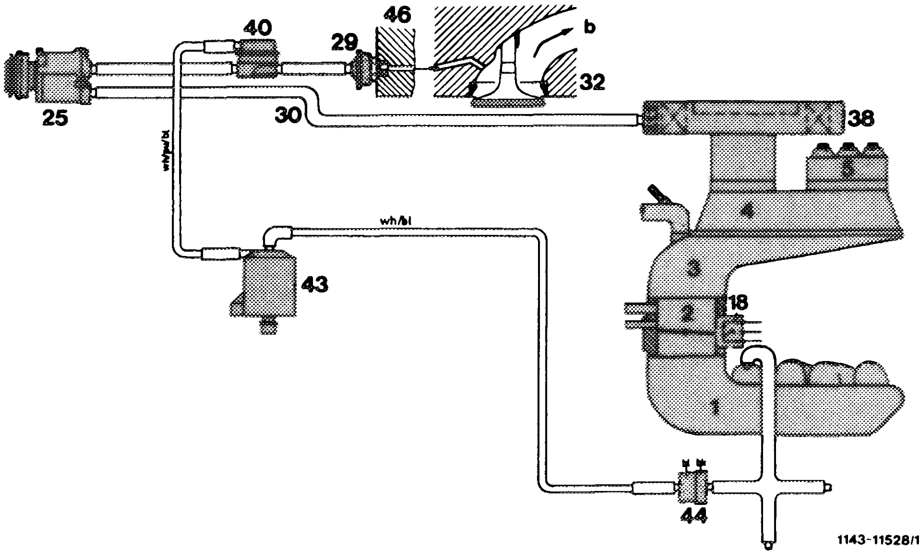

Function diagram engine 116 starting model year 1983, engine 117 starting model year 1984

1	Intake manifold	30	Intake line
3	Air guide housing	32	Cylinder head
4	Air full sensor	38	Air cleaner
5	Fuel distributor	40	Air shut-off valve
8	Ignition distributor	43	Switchover valve
18	Throttle valve switch	44	Check valve (vacuum)
25	Air pump	46	Timing housing cover
29	Check valve (injected air)		
		b	To exhaust manifold

bk = black
bl = blue
pu = purple
re = red
wh = white

Components of air injection:

Air cleaner with separate filter element

A separate filter element (arrow) is located inside air cleaner, through which the air pump draws in the required air free of noise.

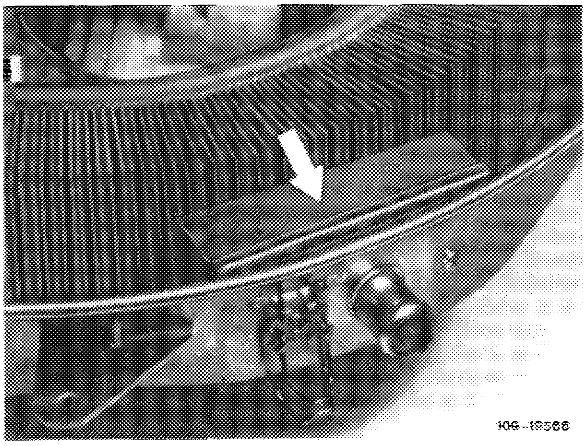

Air pump with electromagnetic clutch

The air pump is a maintenance-free vane-type pump which aspirates the air via two vanes. The electromagnetic clutch is switched on and off via control unit of lambda control and a relay (refer to electric wiring diagram).

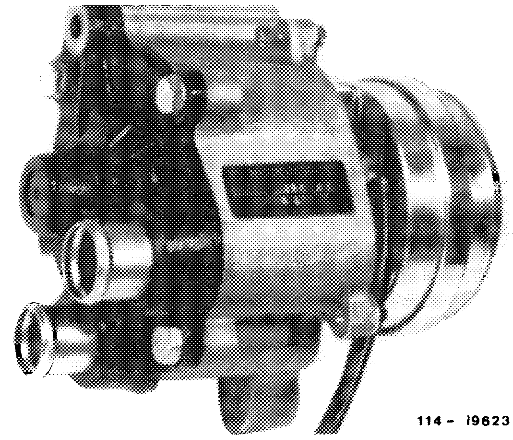

Air shutoff valve

The air shutoff valve is installed in contour hose between air pump and check valve and protects the air pump against backflow of exhaust gases, if any.

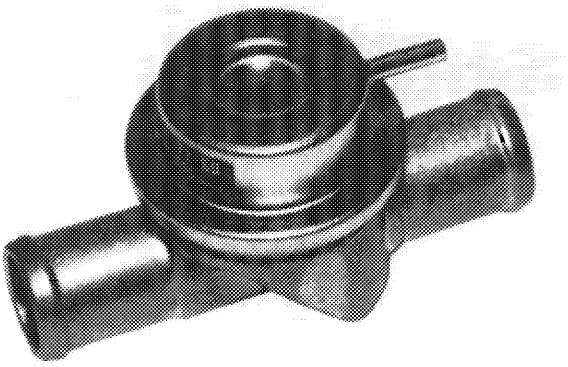

Note concerning installation position

On engine 116.961 the air shutoff valve (40) is offset by 180° for installation reasons.

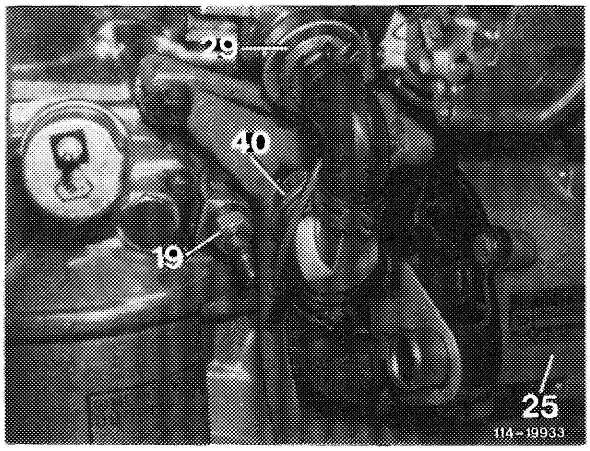

Installation position engine 116.960

Check valve (exhaust gas)

The check valve is screwed to timing housing cover and prevents hot exhaust gases from flowing back into system when the pump is switched off.

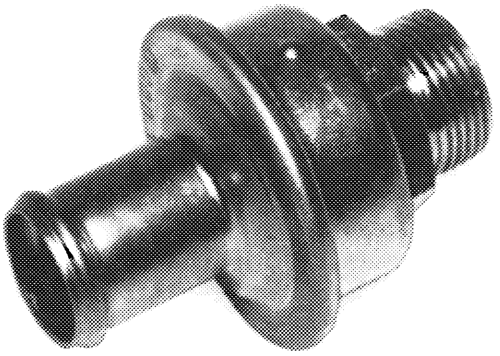

114 - 19621

Switchover valve

The switchover valve is attached to lefthand wheelhouse and identified by its blue cap. The valve controls the vacuum for the air shutoff valve and for ignition retard.

Ignition retard is no longer installed starting model year 1982.

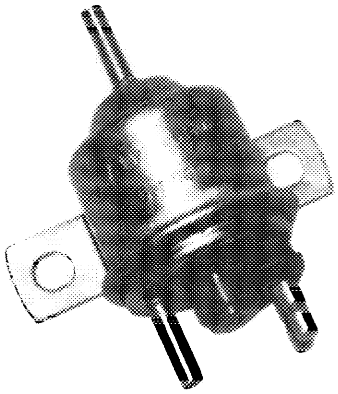

154 - 19622

Starting model year 1984 a new, standardized switchover valve will be installed.

In de-energized condition the small lateral and lower connecting pipes have a common passage. In energized condition, passage from upper to lateral connecting pipe should be open.

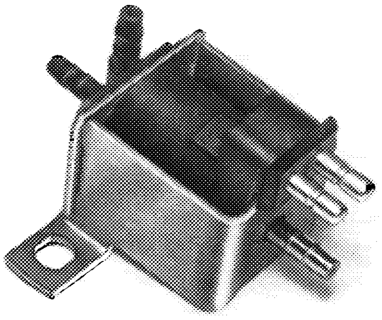

114-23813

Temperature switch 42 °C

The temperature switch is screwed at the rear into righthand cylinder head and opens at approx. 42 °C coolant temperature.

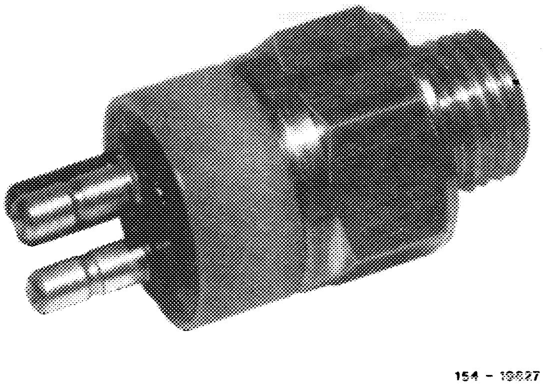

154 - 19627

Relay voltage supply

For voltage supply of switchover valve a relay is installed in fuse box or on model 107 in righthand legroom above fuse box.

Note: Starting model year 1982 the relay for voltage supply and for overvoltage protection have been combined. The new designation is relay voltage supply with overvoltage protection.

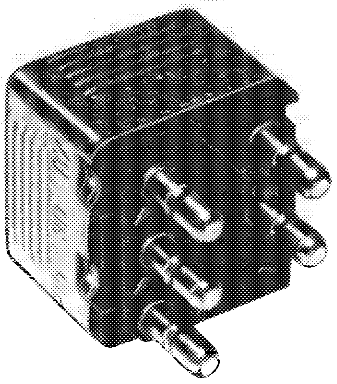
107-17461

Operation

Air injection proceeds only after all the three conditions named below have been met:

- Oil temperature $> 16\ ^\circ C$.
- Coolant temperature $< 42\ ^\circ C$.
- O_2 probe not operational (temperature $<$ approx. 300 °C).

At these conditions the electromagnetic clutch of the air pump is connected by means of a relay (33, refer to electric wiring diagram). Simultaneously, the same relay actuates the switchover valve (43), which in turn releases the vacuum for air shutoff valve (40) as well as to vacuum retard unit (up to 1982). The vacuum pulls the diaphragm against spring force in upward direction and lifts the valve off its seat. Now the air pump, which is driven by a V-belt, can inject the air drawn out of air cleaner via shutoff valve (40), check valve (29) through ducts of timing housing cover and crankcase into exhaust ducts of cylinder heads.

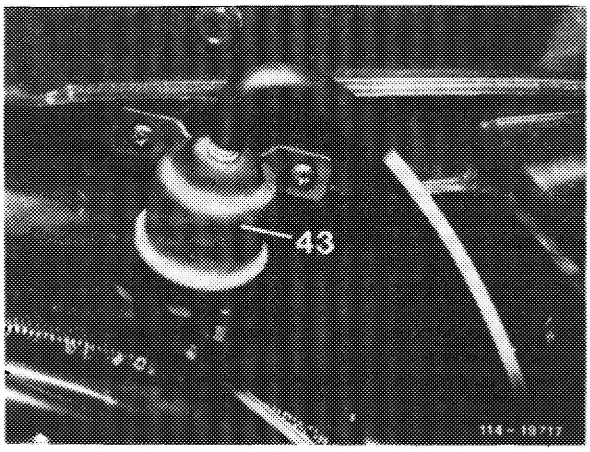

The oxygen in the injected air encounters the hot exhaust gases for reaction in pre-catalyst.

To protect the catalysts against thermic overloads and to eliminate any influence on control operation of lambda control, air will be injected only under the conditions named above.

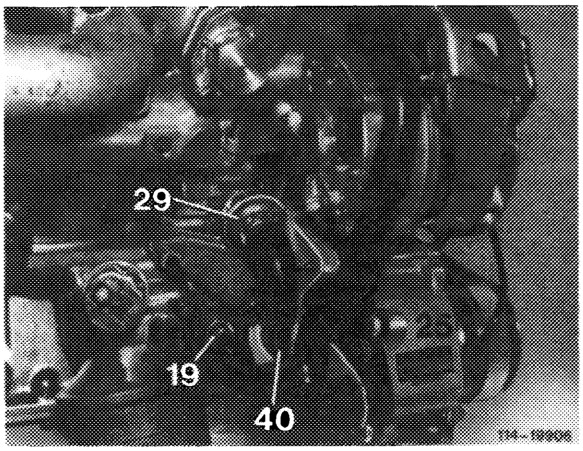

D. Catalysts

The catalysts are located in exhaust system in front of mufflers and are designed as 3-way catalysts. Constituents of CO (carbon monoxide), HC (hydrocarbons) and NO_X (nitric oxides) in exhaust gases are almost completely reduced or oxidized therein.

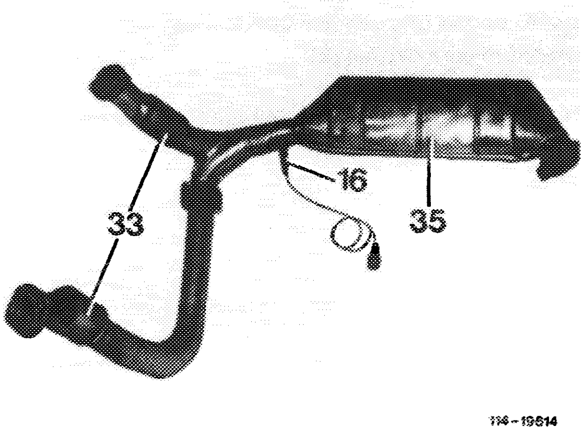

Model 107

16 O_2 probe
33 Pre-catalysts
35 Catalyst-muffler (silencer) combination

Model 107

Pre-catalyst

The pre-catalyst comprises a monolith, a honeycomb-shaped steel body (1), which is pressed into exhaust pipe and welded therewith.

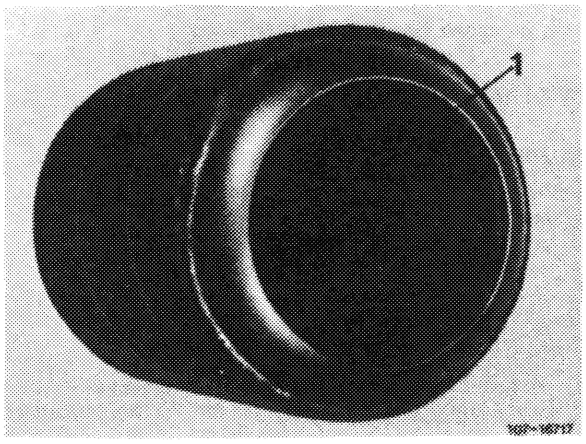

1 Monolith (steel body)

Catalyst-muffler combination or underfloor catalyst

The catalysts are made of monoliths (3), honeycomb-shaped bodies of ceramic material which are elastically located in wire netting (2).

The noble metal applied to monoliths, the actual catalyst, accelerates reduction or oxidation of pollutants.

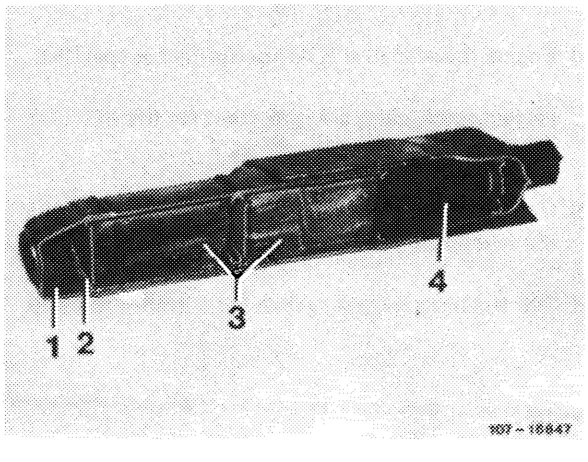

1 Housing
2 Wire netting
3 Monolith
4 Muffler

Primary and underfloor catalyst

Model 126 has a primary and an underfloor catalyst, which are similar in design and effect, but are different externally owing to the different installation position.

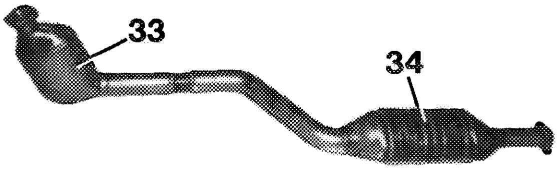

114-19612

The catalysts are made of monoliths (3), honeycomb-shaped bodies of ceramic material which are elastically located in wire netting (2).

The noble metal applied to monoliths, the actual catalyst, accelerates reduction or oxidation of pollutants.

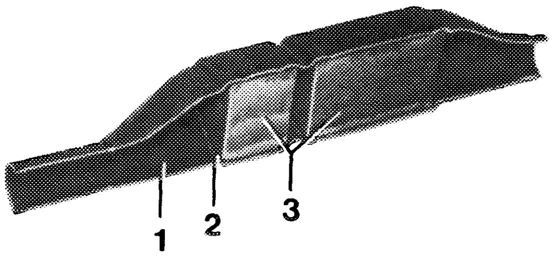

1 Housing
2 Wire netting
3 Monolith

107-16849

To keep the catalysts operational, operate engine with unleaded (leadfree) fuel only.

Avoid overheating of catalysts.

Extended overheating of catalyst will lead to catalyst damage, that is, the monoliths in catalyst are subject to melting.

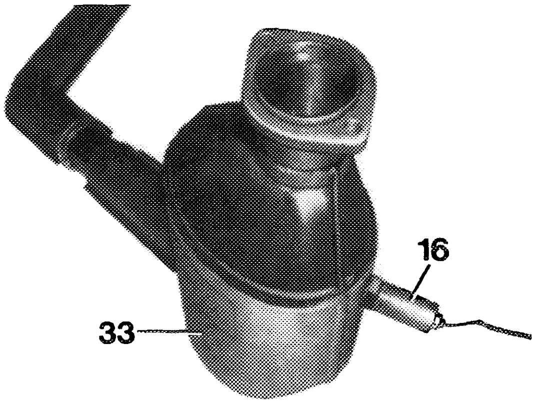

16 O_2 probe
33 Primary catalyst

114-19613

Overheating of caralyst may occur, if:

a) Engine maintenance is not performed as specified.

   Perfect spark plugs are important for life of catalyst.

b) Irregularities on engine are excessively enriching the fuel-air mixture.

c) The emission control system is arbitrarily changed.

F. O_2 probe change indicator USA

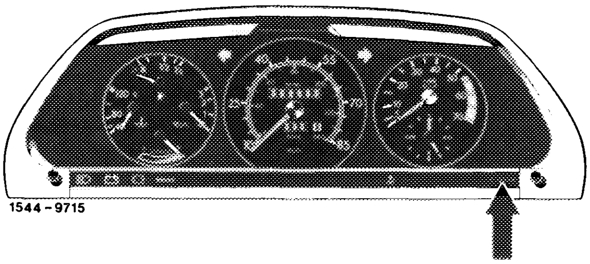

Legal specifications are that the O_2 probe must be changed once after 30 000 miles or on Canada vehicles after 50 000 km. The required change is indicated by "O_2 sensor" (arrow) warning lamp which lights up in instrument cluster.

Operation

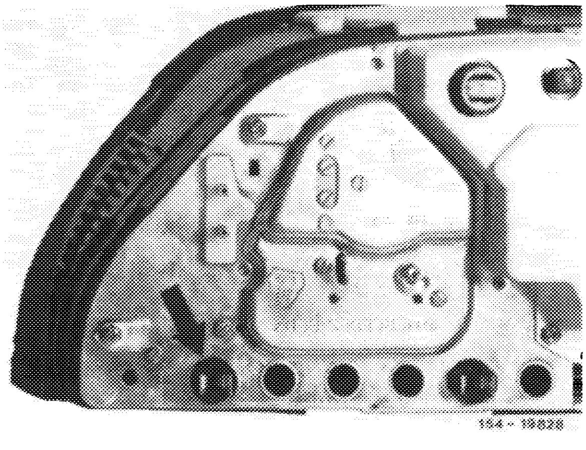

The mileage counter of tachometer generates a voltage by way of a magnetic field after attaining 30 000 miles or 50 000 km. The subsequently connected electronic system picks up this voltage and then switches on the indicator lamp in instrument cluster.

After changing the O_2 probe, make warning device inoperative by removing bulb (arrow). For this purpose, partially remove and install instrument cluster.

G. Electric wiring diagrams

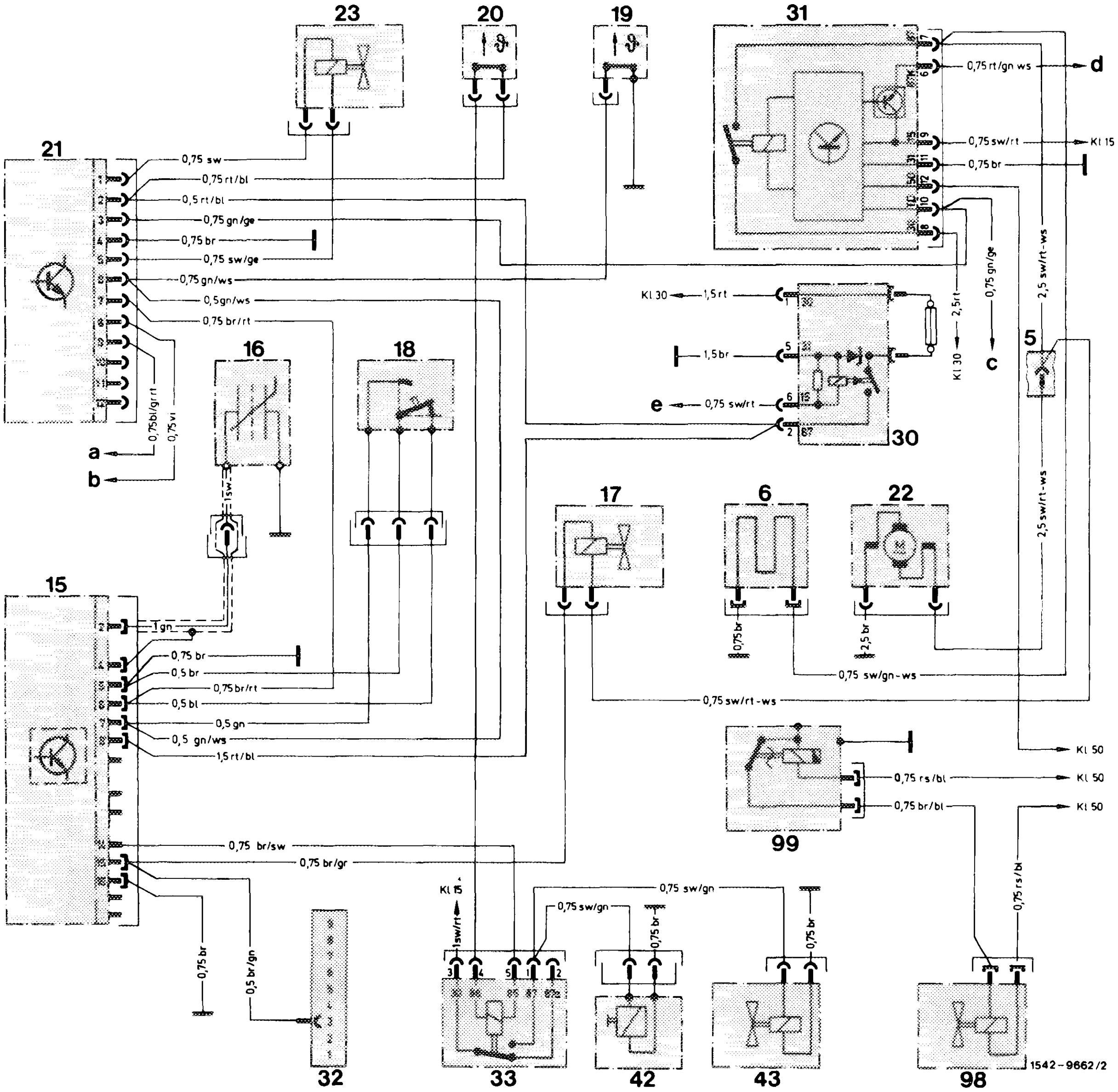

Lambda control, air injection and idle speed control engine 116 model year 1981

5 Clutch tail lamp harness
6 Warm-up compensator
15 Control unit lambda control
16 O_2 probe (oxygen sensor)
17 Frequency valve
18 Throttle valve switch
19 Temperature switch 16 °C oil
20 Temperature switch 42 °C coolant
21 Control unit electronic idle speed control
22 Fuel delivery pump
23 Idle speed adjuster
29 Relay voltage supply
30 Overvoltage protection
31 Relay fuel pump (electronic)
32 Diagnosis socket
33 Relay air injection
42 Magnetic clutch air pump
43 Switchover valve air injection
98 Cold start valve
99 Thermo time switch

bl = blue
br = brown
ge = yellow
gn = green
gr = grey
rs = pink
rt = red
sw = black
vi = purple
ws = white

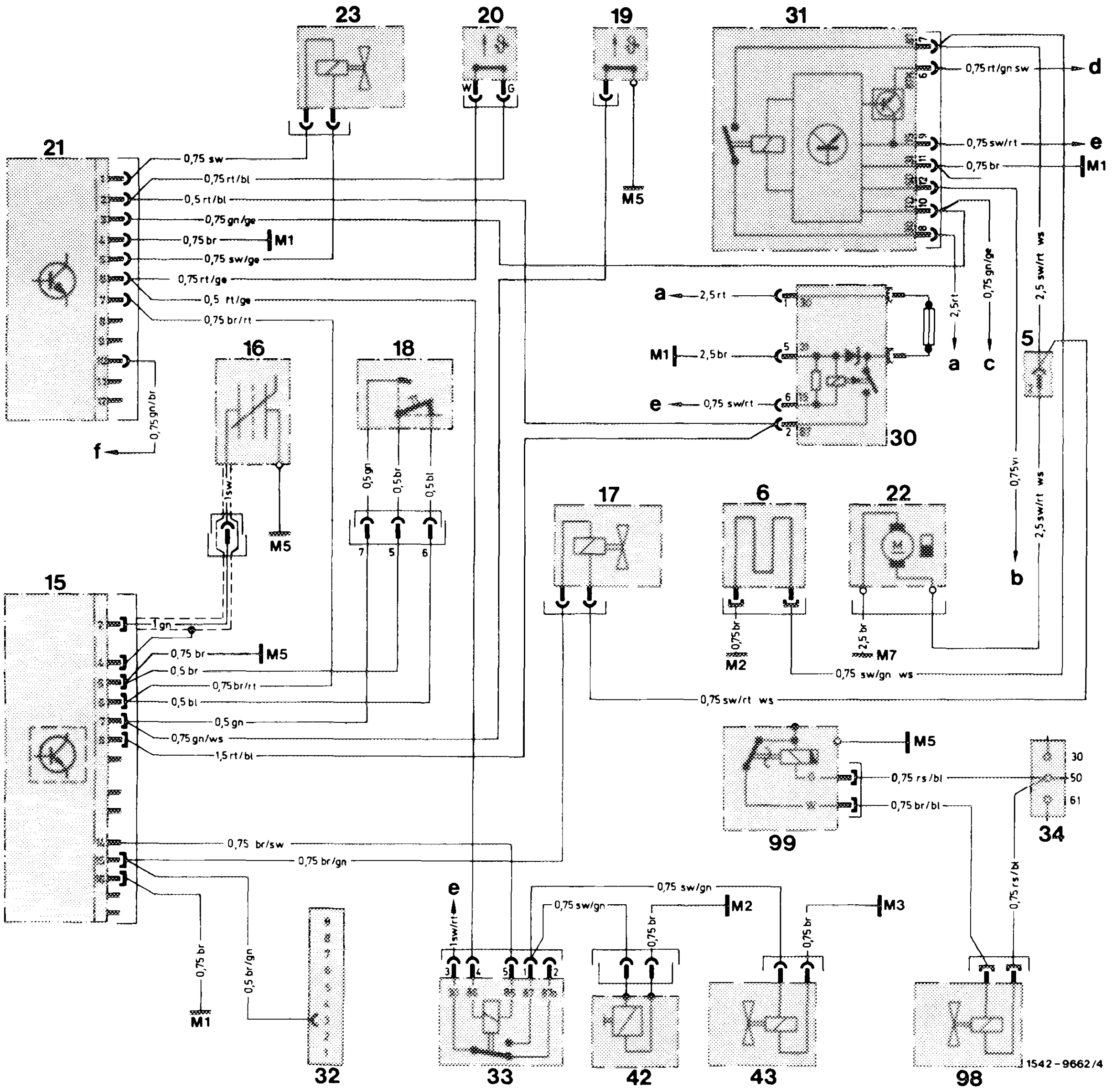

Lambda control, air injection and idle speed control engine 116, model year 1982

5	Plug connection, tail lamp harness (contact 2)
6	Warm-up compensator
15	Control unit, lambda control
16	O_2 sensor
17	Frequency valve
18	Throttle valve switch
19	16 °C oil temperature switch
20	42 °C coolant temperature switch
21	Control unit, idle speed control
22	Fuel pump
23	Idle speed adjuster
30	Overvoltage protection relay
31	Fuel pump relay
32	Diagnostic socket
33	Air injection relay
34	Engine terminal block
42	Air pump solenoid clutch
43	Air injection switchover valve
98	Cold start valve
99	Thermo time switch
M 1	Main ground (model 107 below right of instrument panel, model 126 behind instrument cluster)
M 2	Ground, front right (next to headlamp unit)
M 3	Ground, front left wheelhouse (ignition coil)
M 5	Ground, engine
M 7	Ground, right trunk (model 107 fuel tank bulkhead, model 126 on wheelhouse)
a	Model 107, engine terminal block term. 30 model 126, to supporting point fuse box term. 30
b	To ignition starter switch term. 50
c	To terminal block term. TD
d	To connector, starter lockout and backup light switch, contact 7
e	Model 107, fuse 5 term. 15 input Model 126, fuse 14 term. 15 input
f	To connector, starter lockout and backup light switch, contact 8

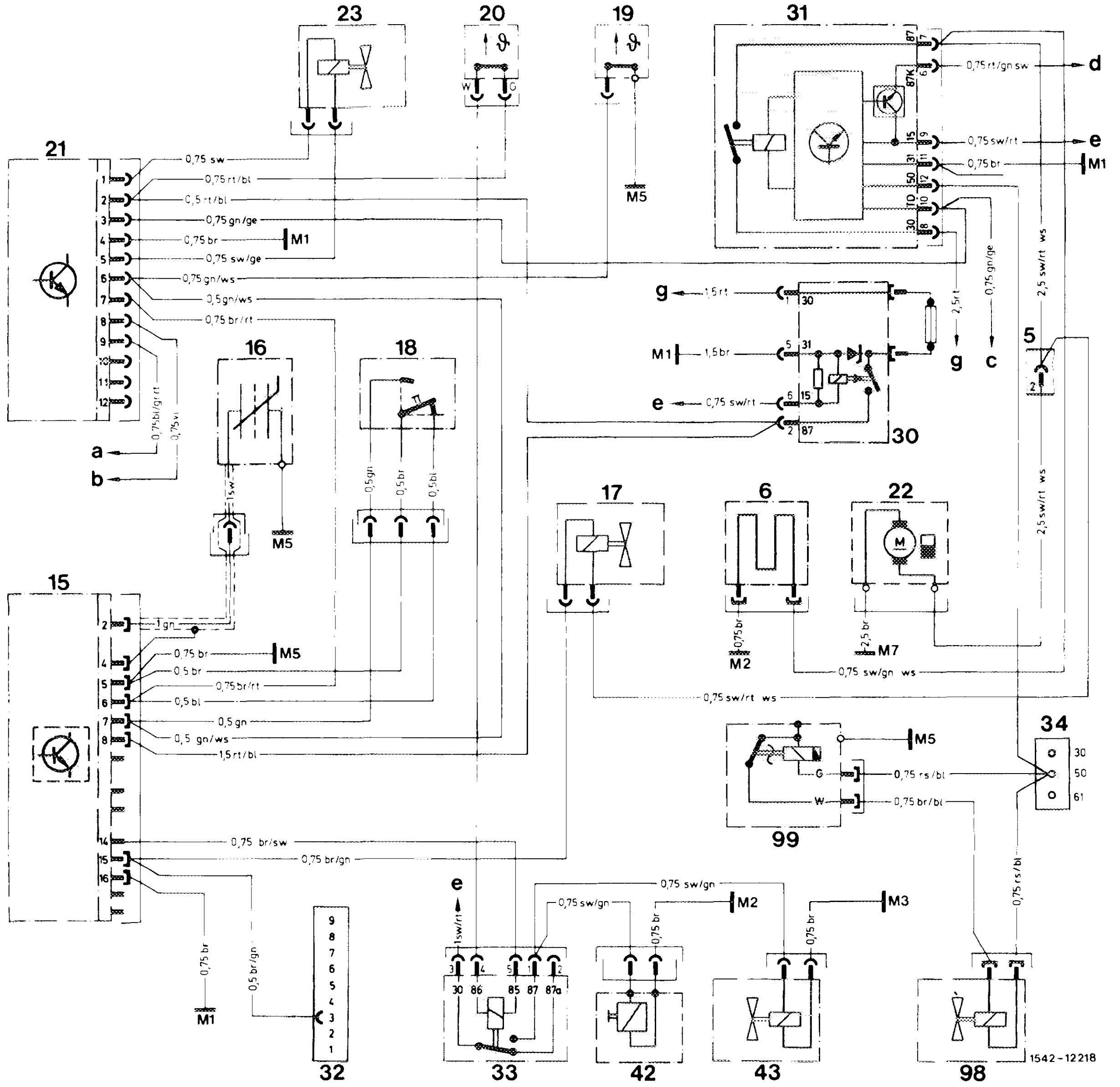

Lambda control, air injection and idle speed control engine 116 starting model year 1983, engine 117 starting model year 1984

5	Plug connection, tail lamp harness (contact 2)
6	Warm-up compensator
15	Control unit, lambda control
16	O_2 sensor
17	Frequency valve
18	Throttle valve switch
19	16 °C oil temperature switch
20	42 °C coolant temperature switch
21	Control unit, idle speed control
22	Fuel pump
23	Idle speed adjuster
30	Lambda control relay with overvoltage protection
31	Fuel pump relay
32	Diagnostic socket
33	Air injection relay
34	Engine terminal block
42	Air pump solenoid clutch
43	Air injection switchover valve
98	Cold start valve
99	Thermo time switch
M 1	Main ground (model 107 below right of instrument panel, model 126 behind instrument cluster)
M 2	Ground, front right (next to headlamp unit)
M 3	Ground, front left wheelhouse (ignition coil)
M 5	Ground, engine
M 7	Ground, right trunk (model 107 fuel tank bulkhead, model 126 on wheelhouse)
a	To supporting point, a/c system
b	To ignition starter switch term. 50
c	To terminal block term. TD
d	To connector, starter lockout and backup light switch, contact 7
e	Model 107, fuse 5 term. 15 input Model 126, fuse 14 term. 15 input
g	Model 107, engine terminal block term. 30 model 126, to supporting point fuse box term. 30

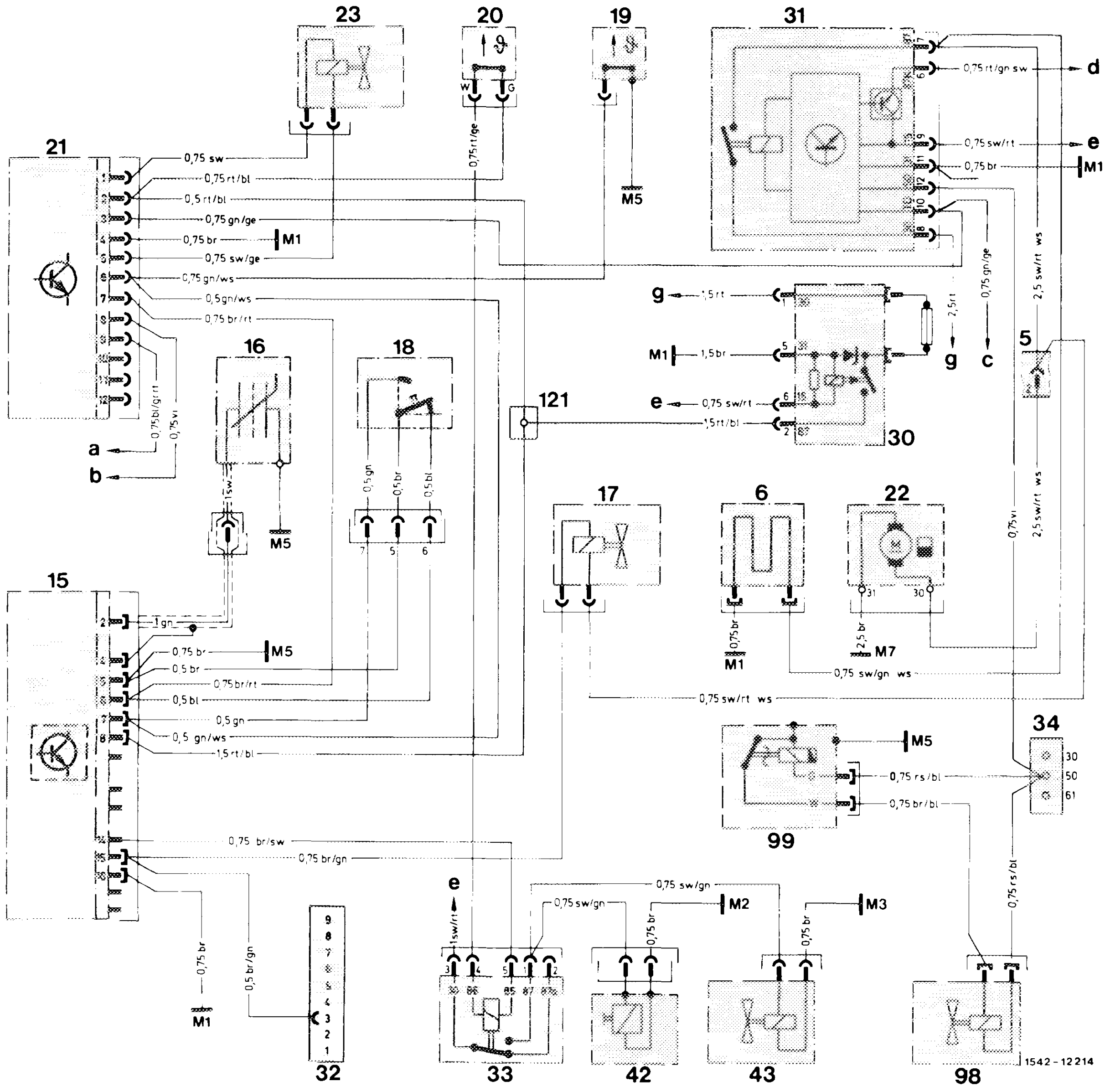

Lambda control, air injection and idle speed control engine 116 basic version NV KAT (closed-loop), engine 116 starting model year 1983, engine 117 starting model year 1984

5	Plug connection, tail lamp harness (contact 2)
6	Warm-up compensator
15	Control unit, lambda control
16	O_2 sensor
17	Frequency valve
18	Throttle valve switch
19	16 °C oil temperature switch
20	42 °C coolant temperature switch
21	Control unit, idle speed control
22	Fuel pump
23	Idle speed adjuster
30	Lambda control relay with overvoltage protection
31	Fuel pump relay
32	Diagnostic socket
33	Air injection relay
34	Engine terminal block
42	Air pump solenoid clutch
43	Air injection switchover valve
98	Cold start valve
99	Thermo time switch
121	Terminal block, terminal 87 ABS
M 1	Main ground (model 107 below right of instrument panel, model 126 behind instrument cluster)
M 2	Ground, front right (next to headlamp unit)
M 3	Ground, front left wheelhouse (ignition coil)
M 5	Ground, engine
M 7	Ground, right trunk (model 107 fuel tank bulkhead, model 126 on wheelhouse)
a	To supporting point, a/c system
b	To ignition starter switch term. 50
c	To terminal block term. TD
d	To connector, starter lockout and backup light switch, contact 7
e	Model 107, fuse 5 term. 15 input Model 126, fuse 14 term. 15 input
g	Model 107, engine terminal block term. 30 model 126, to supporting point fuse box term. 30

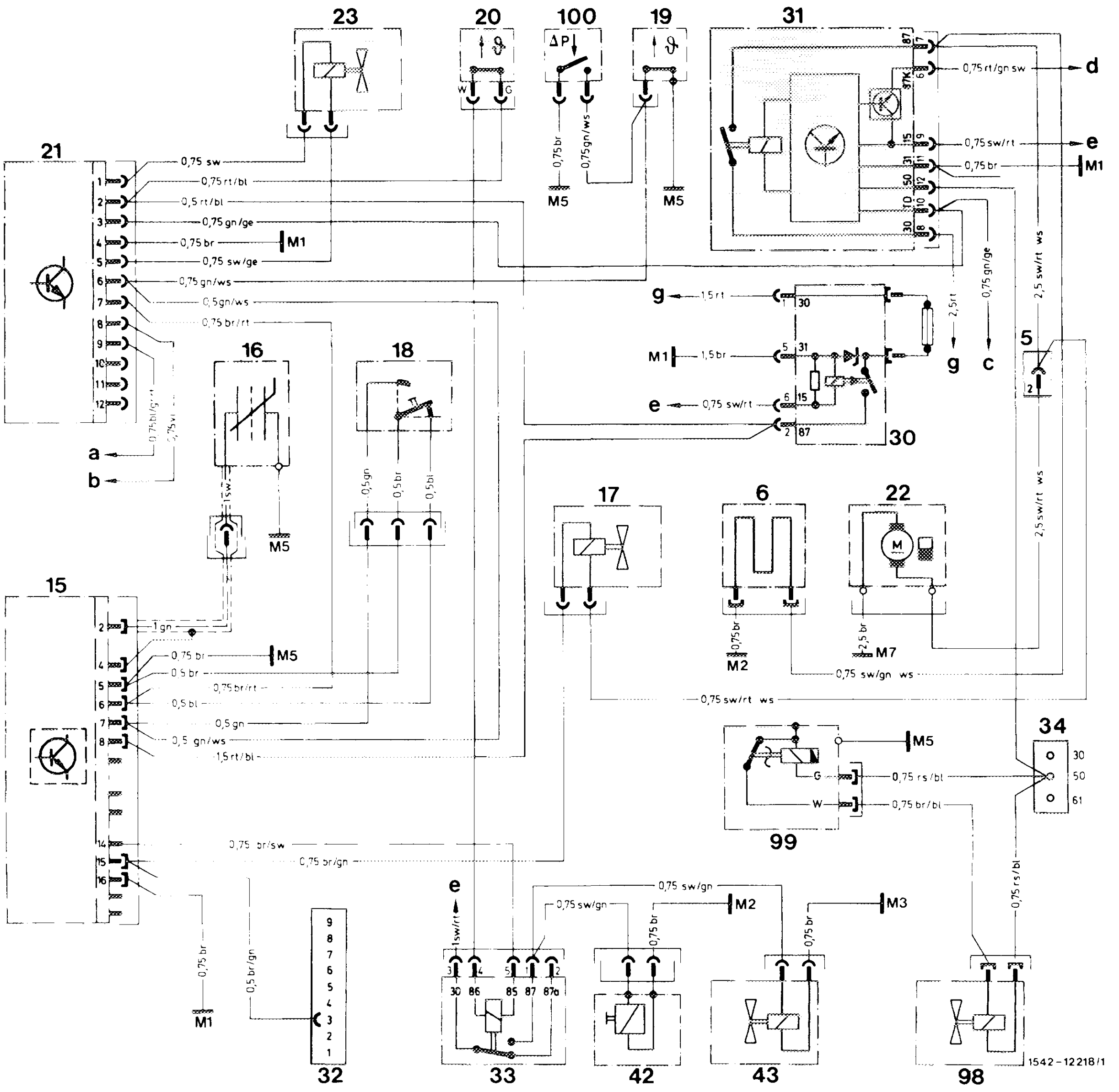

Lambda control, air injection and idle speed control with acceleration enrichment via pressure step switch.
Engine 116/117 national version USA model year 1985

5	Plug connection, tail lamp harness (contact 2)
6	Warm-up compensator
15	Control unit, lambda control
16	O_2 sensor
17	Frequency valve
18	Throttle valve switch
19	16 °C oil temperature switch
20	42 °C coolant temperature switch
21	Control unit, idle speed control
22	Fuel pump
23	Idle speed adjuster
30	Lambda control relay with overvoltage protection
31	Fuel pump relay
32	Diagnostic socket
33	Air injection relay

34	Engine terminal block
42	Air pump solenoid clutch
43	Air injection switchover valve
98	Cold start valve
99	Thermo time switch
100	Pressure step switch
M 1	Main ground (model 107 below right of instrument panel, model 126 behind instrument cluster)
M 2	Ground, front right (next to headlamp unit)
M 3	Ground, front left wheelhouse (ignition coil)
M 5	Ground, engine
M 7	Ground, right trunk (model 107 fuel tank bulkhead, model 126 on wheelhouse)

a	To supporting point, a/c system
b	To ignition starter switch term. 50
c	To terminal block term. TD
d	To connector, starter lockout and backup light switch, contact 7
e	Model 107, fuse 5 term. 15 input Model 126, fuse 14 term. 15 input
g	Model 107, engine terminal block term. 30 model 126, to supporting point fuse box term. 30

A. Standard version – NV CAT (controlled)

For complaints such as:	Poor warming-up characteristics of engine, poor idle speed, engine not accelerating, or splashing during accelerating, test emission control system for function.
Test conditions:	Engine at operating temperature, run engine at idle speed, electrical fuses in order. Mechanically controlled gasoline injection system and ignition system in order.

Special tools

Oil telethermometer	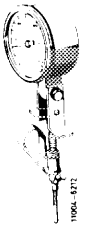	116 589 27 21 00
Allen wrench for hex. socket screw 3 mm, for regulating the idle exhaust emission value	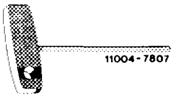	000 589 14 11 00
Extractor		123 589 05 33 00
Impression mandrel		123 589 00 15 00
Electrical connection set	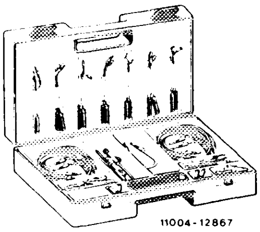	201 589 00 99 00

Conventional test equipment

Engine tester (speed, dwell angle, advance angle, oscilloscope, voltmeter)	e. g. Bosch MOT 001.03 or MOT 002.02 e. g. Sun 1019
Lambda control tester	e. g. Bosch, KDJE-P 600 Hermann, L 115
Multimeter	e. g. Sun DMM 5
Twin jack	e. g. Hermann ECD 53

C. National version

J USA 1981–1983 (Engine 116.96)
J USA 1984/85 (Engine 117.96)

For complaints such as:	On-off ratio cannot be regulated. Poor warming-up characteristics of engine, engine hunting at idle, engine not accelerating or splashing during acceleration, perform the following tests:
Test condition:	Engine at operating temperature, run engine at idle speed, electrical fuses, CIS injection system and ignition system in order.

Special tools

Oil telethermometer	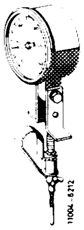	116 589 27 21 00
Allen wrench for hex. socket screw 3 mm for regulating the idle exhaust emission value or the lambda control	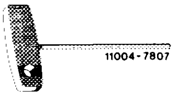	000 589 14 11 00
Adapter for testing electrical lines and components	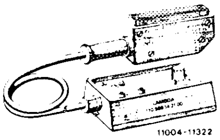	110 589 14 21 00
Electrical connection set	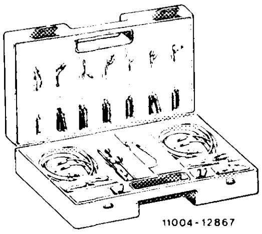	201 589 00 99 00

Conventional test equipment

Engine tester (speed, dwell angle, advance angle, oscilloscope, voltmeter)	e. g. Bosch MOT 001.03 or MOT 002.02
	e. g. Sun 1019
Lambda control tester	e. g. Bosch, KDJE-P 600 Hermann, L 115
Multimeter	e. g. Sun DMM 5
Twin jack	e. g. Hermann ECD 53

Self-made test cable

Test cable (0.75 mm^2)	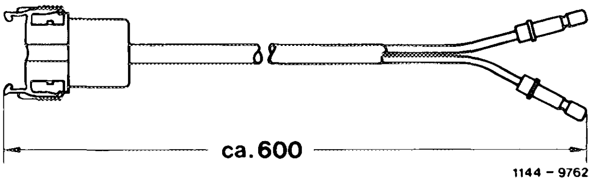

Test program

a) Quick test with lambda control tester

b) Quick test with adapter

c) Component testing with adapter

d) Testing air injection

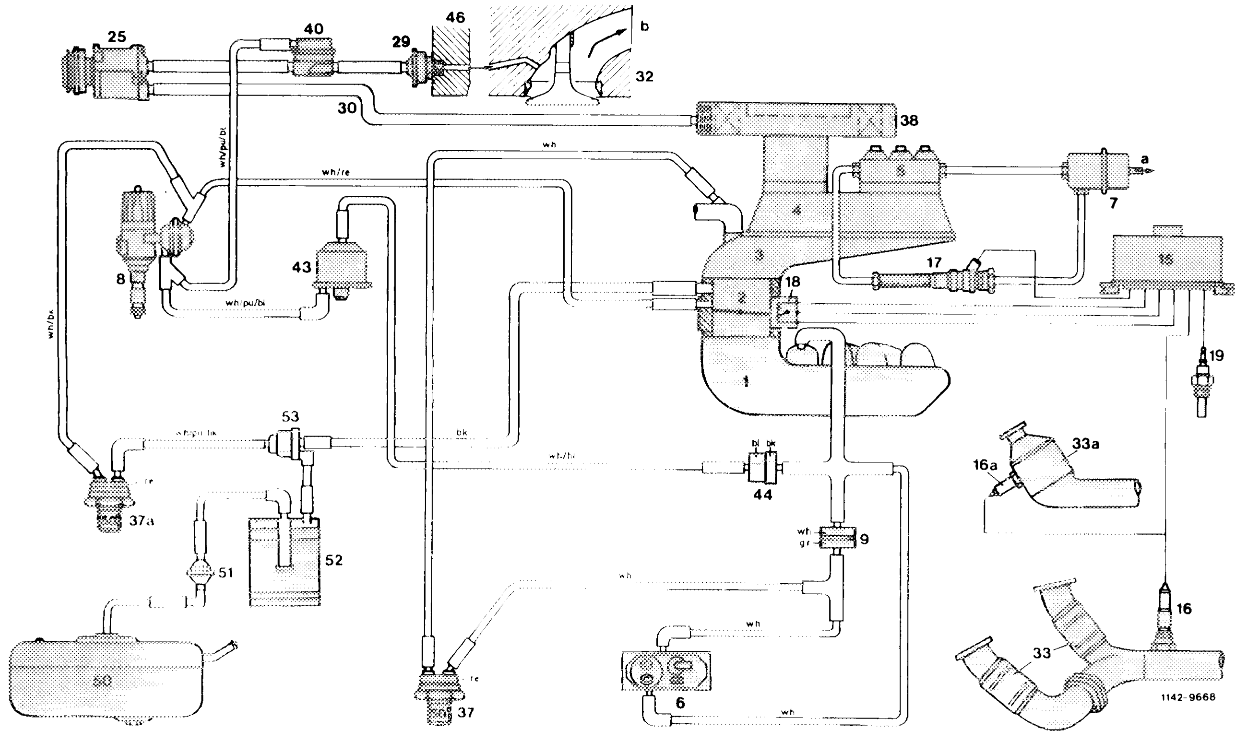

Function diagram engine 116 model year 1981

1	Intake manifold
2	Throttle valve housing
3	Air guide housing
4	Air flow sensor
5	Fuel distributor
6	Warm-up compensator
7	Damper
8	Ignition distributor
9	Throttle (orifice)
15	Control unit
16	O_2 probe (model 107)
16a	O_2 probe (model 126)
17	Frequency valve
18	Throttle valve switch
19	Temperature switch 16 °C oil
25	Air pump
29	Check valve (injected air)
30	Intake line
32	Cylinder head
33	Primary catalyst (model 107)
33a	Primary catalyst (model 126)
37	Thermovalve 50 °C
37a	Thermovalve 50 °C
38	Air cleaner
40	Air shutoff valve
43	Switchover valve
44	Check valve (vacuum)
46	Timing housing cover
50	Fuel tank
51	Vent valve
52	Charcoal canister
53	Purge valve
a	Leak connection
b	To exhaust manifold

bk = black
bl = blue
gr = green
pu = purple
re = red
wh = white

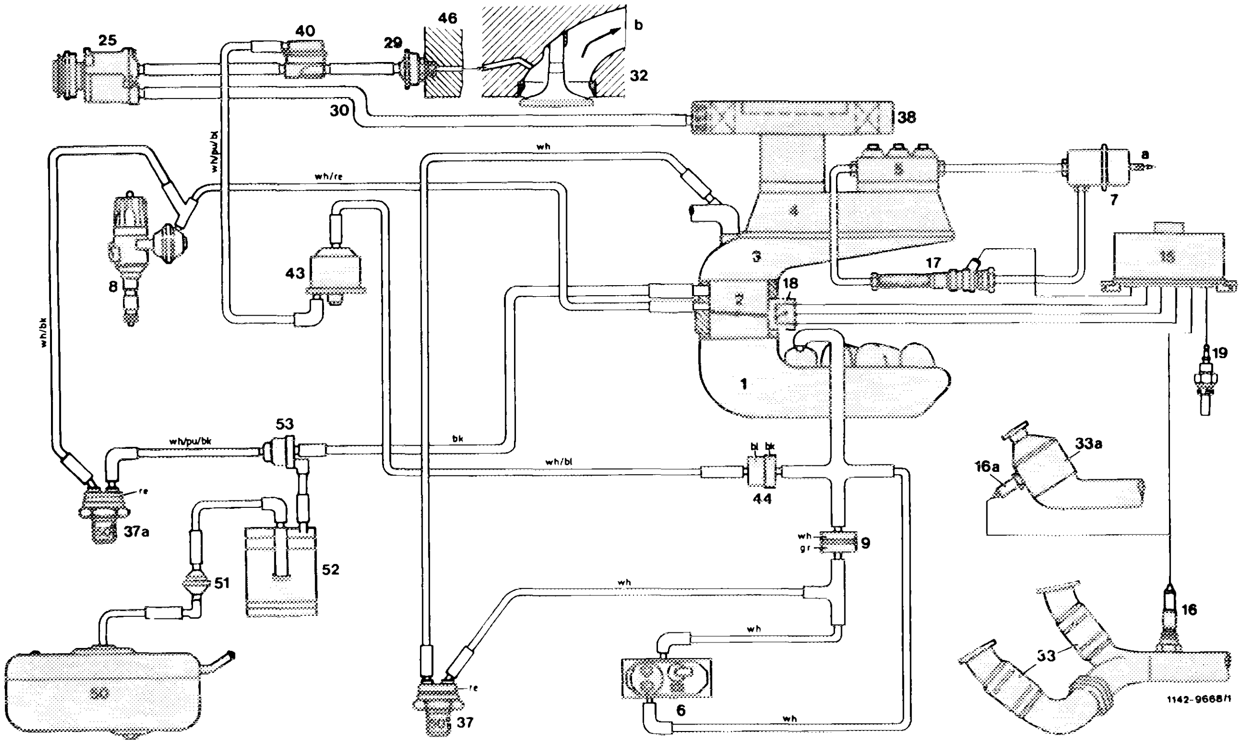

Function diagram engine 116 model year 1982

1 Intake manifold
2 Throttle valve housing
3 Air guide housing
4 Air flow sensor
5 Fuel distributor
6 Warm-up compensator
7 Damper
8 Ignition distributor
9 Throttle (orifice)
15 Control unit
16 O_2 probe (model 107)
16a O_2 probe (model 126)
17 Frequency valve
18 Throttle valve switch
19 Temperature switch 16 °C oil
25 Air pump
29 Check valve (injected air)
30 Intake line

32 Cylinder head
33 Primary catalyst (model 107)
33a Primary catalyst (model 126)
37 Thermovalve 50 °C
37a Thermovalve 50 °C
38 Air cleaner
40 Air shutoff valve
43 Switchover valve
44 Check valve (vacuum)
46 Timing housing cover
50 Fuel tank
51 Vent valve
52 Charcoal canister
53 Purge valve

a Leak connection
b To exhaust manifold

bk = black
bl = blue
gr = green
pu = purple
re = red
wh = white

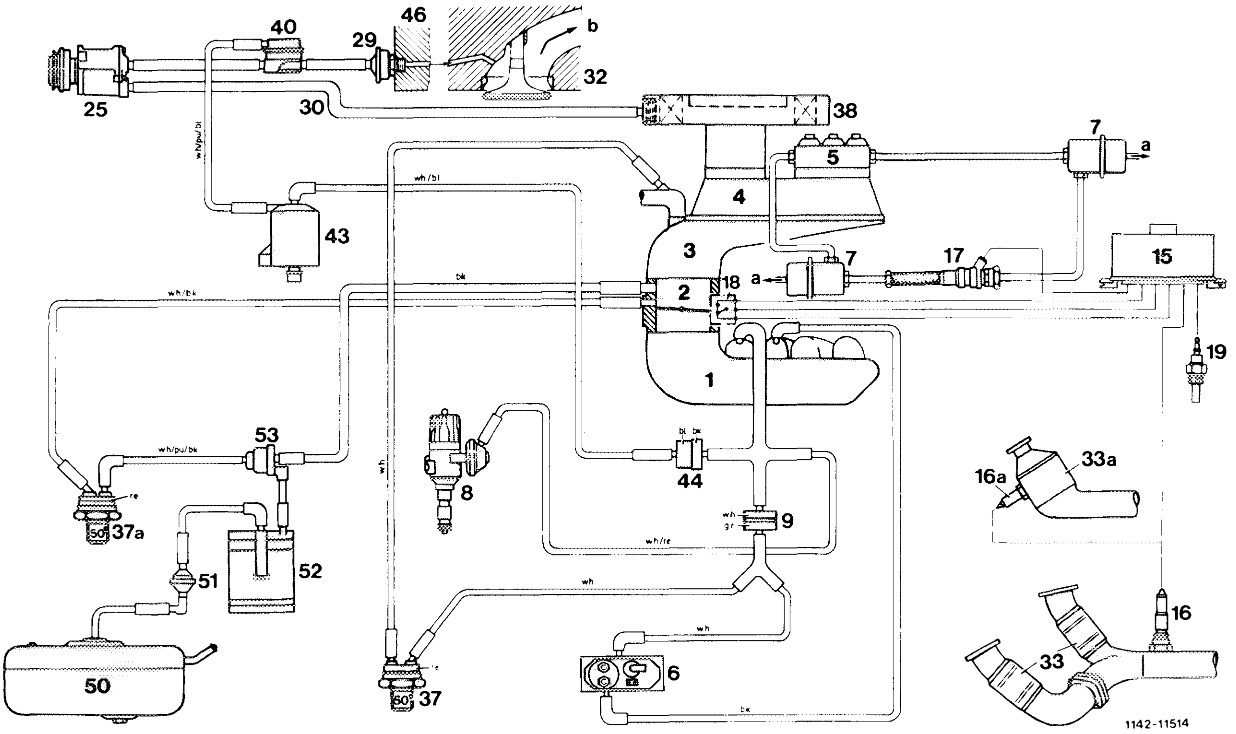

Function diagram engine 116 starting model year 1983, engine 117 starting model year 1984

1	Intake manifold
2	Throttle valve housing
3	Air guide housing
4	Air flow sensor
5	Fuel distributor
6	Warm-up compensator
7	Damper
8	Ignition distributor
9	Throttle (orifice)
15	Control unit
16	O_2 probe (model 107)
16a	O_2 probe (model 126)
17	Frequency valve
18	Throttle valve switch
19	Temperature switch 16 °C oil
25	Air pump
29	Check valve (injected air)
30	Intake line
32	Cylinder head
33	Primary catalyst (model 107)
33a	Primary catalyst (model 126)
37	Thermovalve 50 °C
37a	Thermovalve 50 °C
38	Air cleaner
40	Air shutoff valve
43	Switchover valve
44	Check valve (vacuum)
46	Timing housing cover
50	Fuel tank
51	Vent valve
52	Charcoal canister
53	Purge valve
a	Leak connection
b	To exhaust manifold

bk = black
bl = blue
gr = green
pu = purple
re = red
wh = white

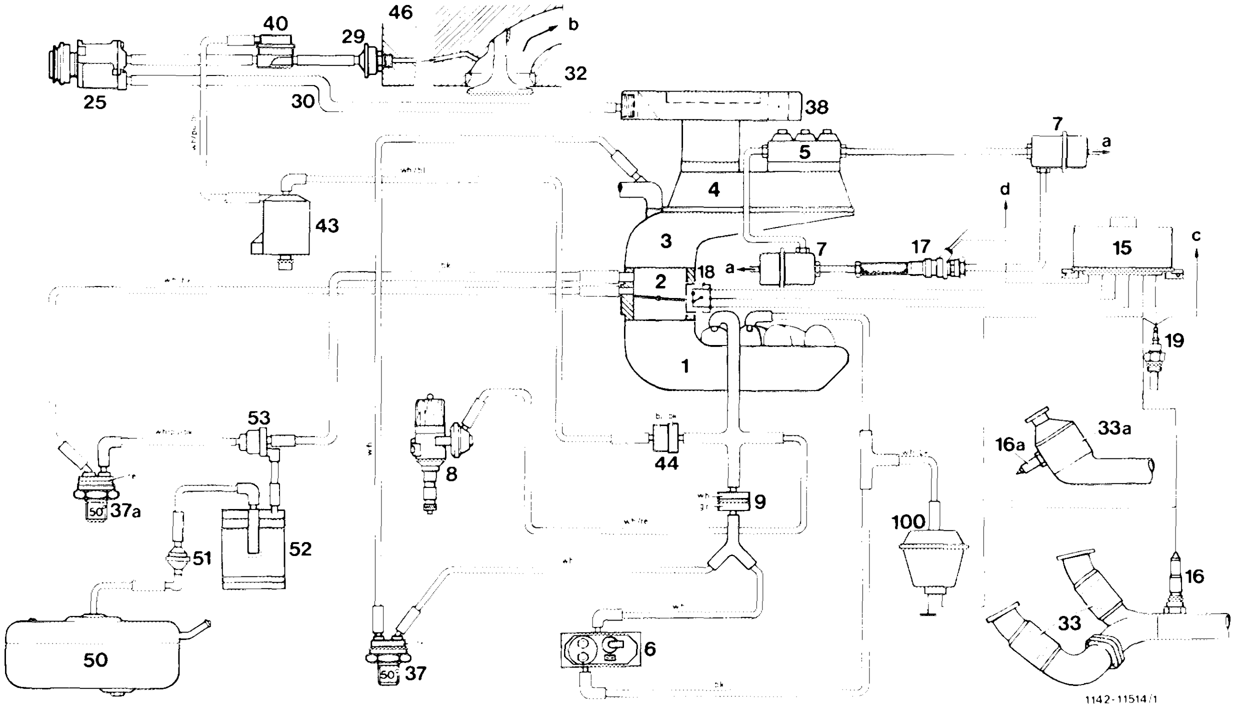

Function diagram with acceleration enrichment by sudden change of pressure switch national version USA
engine 116, 117 starting model year 1985

1 Intake manifold
2 Throttle valve housing
3 Air guide housing
4 Air flow sensor
5 Fuel distributor
6 Warm-up compensator
7 Damper
8 Ignition distributor
9 Throttle
15 Control unit (lambda control)
16 O_2 probe (model 107)
16a O_2 probe (model 126)
17 Frequency valve
18 Throttle valve switch
19 Temperature switch 16 °C oil
25 Air pump
29 Check valve (injected air)
30 Intake line
32 Cylinder head
33 Primary catalyst (model 107)
33a Primary catalyst (model 126)
37 Thermovalve 50 °C
37a Thermovalve 50 °C
38 Air cleaner
40 Air shutoff valve
43 Switchover valve
44 Check valve (vacuum)
46 Timing housing cover
50 Fuel tank
51 Vent valve
52 Charcoal canister
53 Purge valve
100 Sudden change of pressure switch

a Leak connection
b To exhaust manifold
c Control unit idle control
d Plug connection reverse light cable set (jacket 2)

bk = black
bl = blue
gr = green
pu = purple
re = red
wh = white

a) Quick test with lambda control tester

The lambda control tester can be used for adjusting on-off ratio at idle speed, as well as for a quick diagnosis of lambda control.

Test equipment	Lambda control tester	
Model	KDJE-P 600 Bosch	L 115 Hermann
Button/switch	100 %	100 % ∿

Connect lambda control tester to diagnosis socket and revolution counter. Connect oil telethermometer.

Note: If the specified nominal value is not attained, refer to quick test with adapter.

Test scope	Actuation	Readout/nominal value
Cold run control		
a) Engine oil temperature < 13 °C	Engine at idle	Constant between 56–64 %
b) Simulation	Pull coupling from temperature switch 16 °C and connect to ground.	Readout as above
Warm run control		
a) Engine oil temperature > 20 °C, O_2 probe not yet operational (< approx. 300 °C)	Engine at idle	Constant between 46–54 %
b) Simulation	Separate coupling O_2 probe	Readout as above
Control of operating temperature		
Engine oil temperature approx. 80 °C O_2 probe operational (> approx. 300 °C)	Engine at idle	Model year 1981: 50 % ± 10 % Starting model year 1982: between 30–70 % Light deflection of needle1)
Idle speed contact closed	Throttle valve at idle speed stop	Deflection of needle approx. 8–12 % around nominal value1)
Idle speed contact opened	Slightly open throttle valve	Deflection of needle approx. 13–23 % around nominal value1)
Full throttle contact closed	Apply full throttle for a short moment	Constant between 56–64 %
Lean stop control unit	Separate coupling O_2 probe **Temporarily** connect plug to control unit with 2-V output of tester.	Constant < approx. 20 %
Rich stop control unit	Separate coupling O_2 probe, **temporarily** connect plug to control unit with ground.	Constant > approx. 87 %
Sudden change of pressure switch (only for (USA) model year 1985)	Engine at idle Separate coupling O_2 probe, apply full throttle for a short moment.	On-off ratio constant 50 % Readout temporarily 60 %, drops again to 50 % ± 10

1) Lambda control and O_2 probe are in order if needle of measuring instrument is not hunting, but position of needle can be changed by short acceleration.

b) Quick test with adapter

Connect adapter to coupling of control unit and multimeter to adapter.

Note: Only disconnect and connect the coupling to the control unit when the ignition is switched off.

Test layout	Test scope	Actuation	Nominal value . . . . *In the event of deviations refer to component test program sections*
Adapter to position 1 with voltmeter	Voltage supply	Ignition on	U = 12 ± 2 V LED lighting up *Deviation section I.*
Adapter on position 2 with ohmmeter	Throttle valve switch	Ignition off Idle speed stop . . . Full throttle stop . . .	R = ∞ Ω R = 0 Ω *Deviations sections IV. and V.*
	Switch 16 °C	Ignition off	< 13 °C R = 0 Ω > 19 °C R = ∞ Ω *Deviations sections II. and III.*
Adapter to position 3 with ohmmeter	Throttle valve switch	Ignition off Idle speed stop . . . Lightly actuate regulating linkage . . .	R = 0 Ω R = ∞ Ω *Deviations sections IV. and V.*
Adapter to position 4 with voltmeter	Frequency valve	Ignition on Actuate starter	U = 12 ± 2 V *Deviations sections VI. and IX.*
Adapter on position 5 with ohmmeter	O_2 probe cable and plug control unit	Ignition off . . . . Pull off O_2 probe coupling and bridge plug to control unit . . .	R = ∞Ω R = 0 Ω *Deviations sections VII. and VIII.*
Remove adapter and plug coupling on control unit. Connect lambda control tester.	Lambda control	Start engine and run up to operating temperature.	On-off ratio Model year 1981: 50 % ± 10 %1) Starting model year 1982: between 30–70 %1) *Deviation section X.*
	Sudden change of pressure switch (only USA model year 1985)	Engine at idle Separate coupling O_2 probe. Depress accelerator for a short moment.	On-off ratio constant 50 % Readout temporarily 60 %, drops again to 50 % ± 10 *Deviation section XI.*

---

1) Lambda control and O_2 probe are in order if needle of measuring instrument is not hunting, but position of needle can be changed by short acceleration.

c) Components testing with adapter

Test section A

Test conditions:

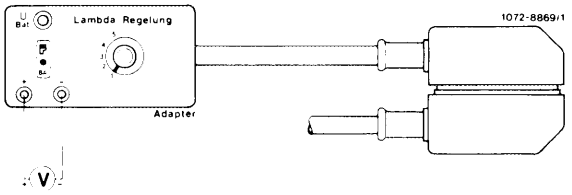

Connect adapter to coupling of control unit and multimeter to adapter.

Connect oil telethermometer.

I. Testing voltage supply of control unit

Rotary switch on adapter to position 1, multimeter to measuring range 0–30 volts, ignition switched on, read readout.

Indicator lamp of adapter:

Lighting up.	Not lighting up.

Readout

approx. 12 volts	0 volt

starting 1982

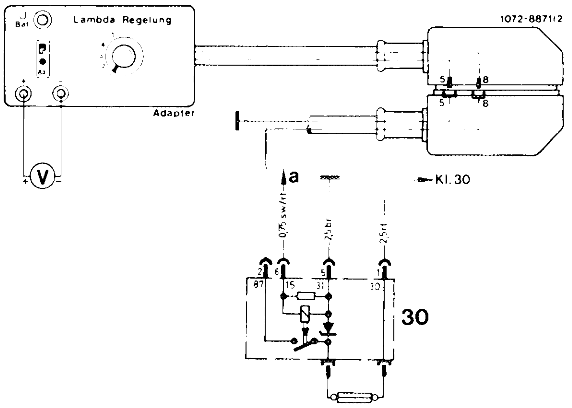

Power supply to electronic control unit interrupted.

Possible faults:

a) Overvoltage protection (30) defective.
b) Relay for voltage supply defective.
c) No ground connection.
d) Line to relay voltage supply or to control unit lambda control interrupted.
e) If no fault has been found, continue with diagnosis according to electric wiring diagram until readout of approx. 12 volts shows up.

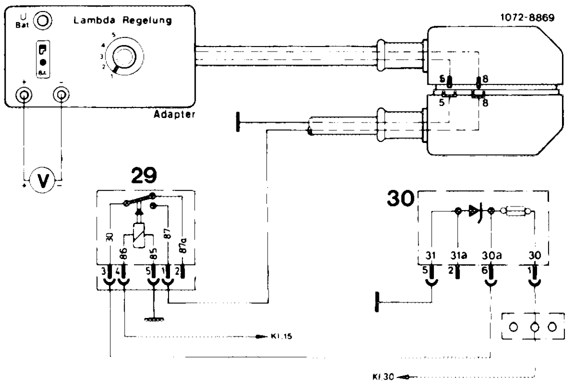

End of test

1980/81

II. Testing temperature switch 16 °C oil (engine oil temperature < 13 °C)

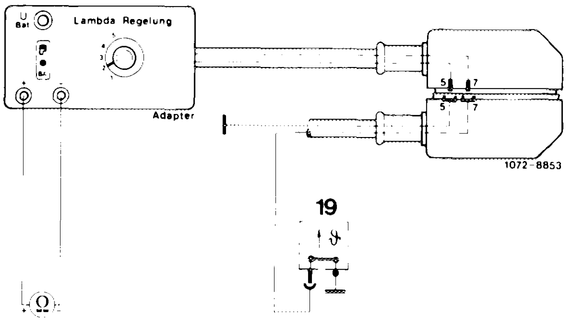

Rotary switch-on adapter to position 2, multimeter to measuring range 0—∞ ohm, ignition switched off. Separate coupling of throttle valve switch, read readout.

Readout

0 ohm | ∞ ohm

∞ ohm:

Pull off coupling of temperature switch (19) and connect to ground.

If readout is 0 ohm, renew temperature switch.

If readout is ∞ ohm, test line from coupling of control unit (terminal 7) to temperature switch for interruption.

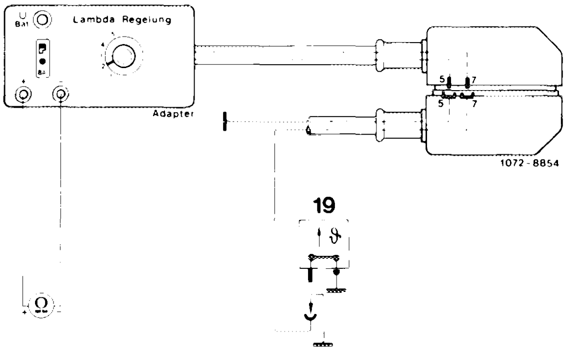

0 ohm:

End of test

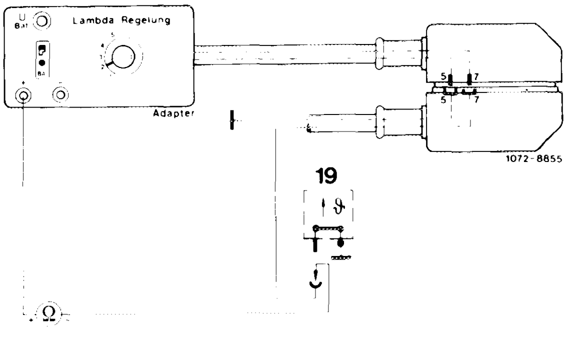

III. Testing temperature switch 16 °C oil (engine oil temperature > 20 °C)

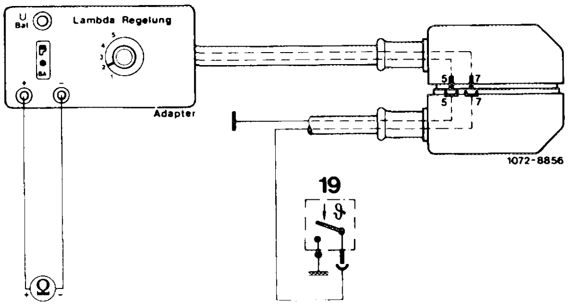

Rotary switch on adapter to position 2, multimeter to measuring range 0—∞ ohm, ignition switched off.

Separate coupling of throttle valve switch, read readout.

Readout

∞ ohm | 0 ohm

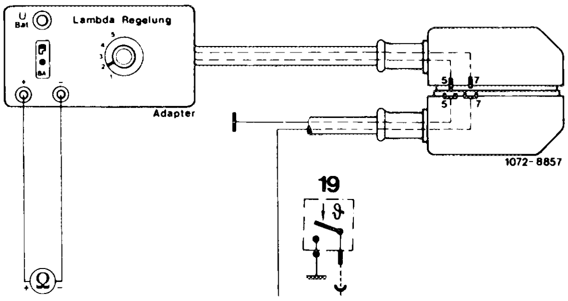

Pull coupling from temperature switch (19).

If readout is ∞ ohm, renew temperature switch.

If readout is 0 ohm, test line from coupling of control unit (terminal 7) to temperature switch for ground connection.

End of test

IV. Testing throttle valve switch (18) (idle speed stop), engine oil temperature > 20 °C

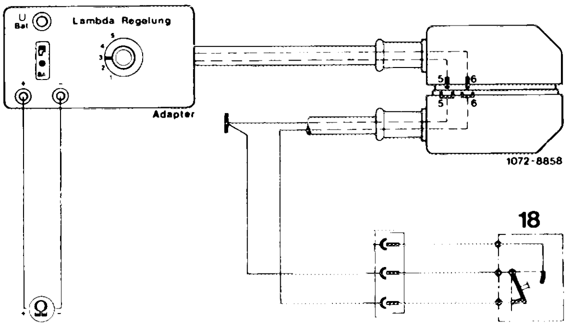

Rotary switch on adapter to position 3, multimeter to measuring range 0—∞ ohm, ignition switched off.

Regulating linkage against idle speed stop, read readout.

Readout

Idle speed stop 0 ohm	∞ ohm
Lightly operate regulating linkage ∞ ohm	0 ohm

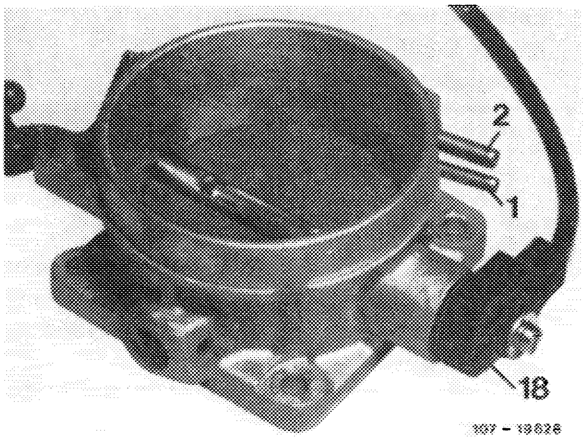

Separate coupling of throttle valve switch. Test lines from coupling (a) to coupling of control unit (terminal 6 or 5) according to wiring diagram for interruption.

If lines are in order, renew throttle valve switch.

End of test

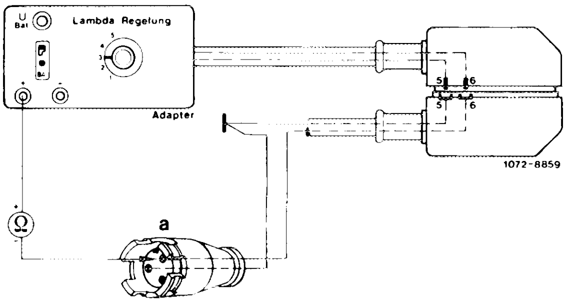

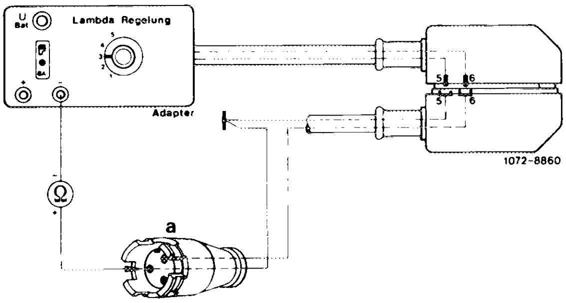

V. Testing throttle valve switch (18) (full throttle stop, engine oil temperature > 20 °C)

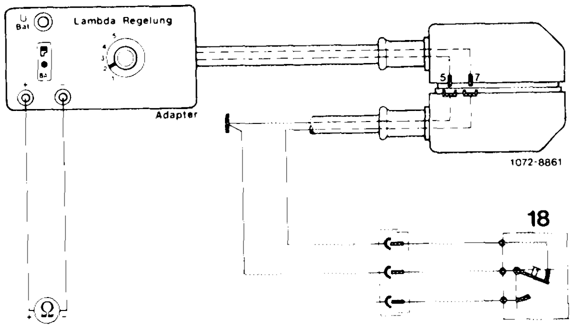

Rotary switch on adapter to position 2, multimeter to measuring range 0—∞ ohm, ignition switched off.

Regulating linkage to full throttle stop. Read readout.

Readout

Full throttle stop	
0 ohm Let regulating linkage slightly move back ∞ ohm	∞ ohm

Separate coupling of throttle valve switch. Test line from coupling (a) to coupling of control unit (terminal 7) for interruption. If line is in order, renew throttle valve switch.

End of test

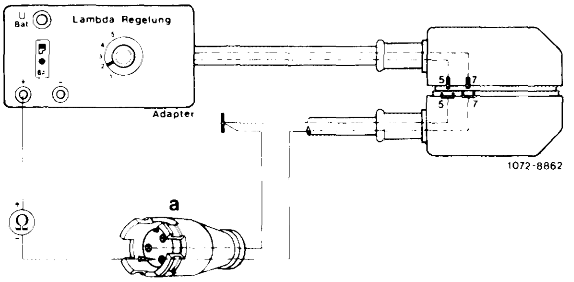

VI. Testing frequency valve (17)

Rotary switch of adapter to position 4, multimeter to measuring range 0–30 volts, ignition switched on, actuate starter. Read readout.

Readout

approx. 12 volts	0 volt

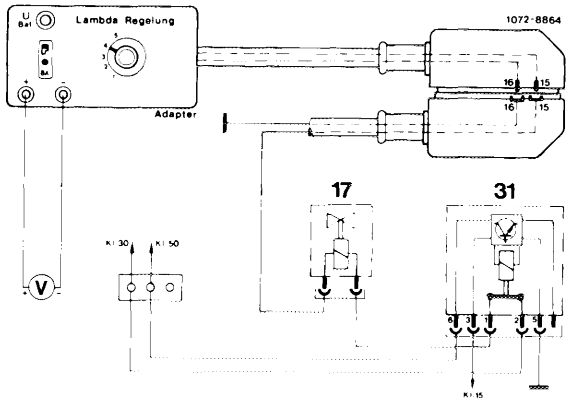

Pull coupling from frequency valve and bridge. Operate starter. Readout 12 volts: renew frequency valve.

Readout 0 volt: switch off ignition, multimeter to measuring range 0 – ∞ ohm.

Test line from coupling of control unit (terminal 15) to coupling of electronic fuel pump relay (31, terminal 1), as well as line from coupling of control unit (terminal 16) to grounding point in legroom right under instrument panel for interruption.

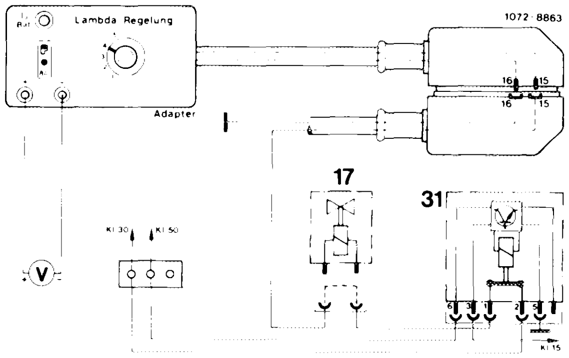

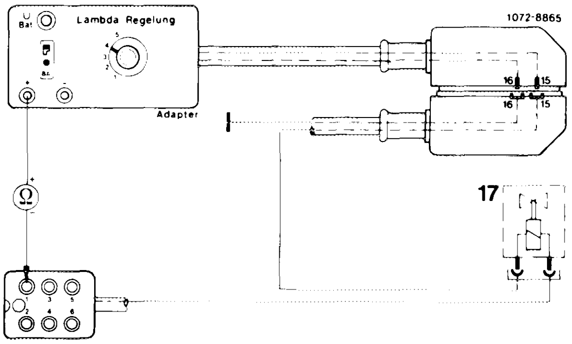

End of test

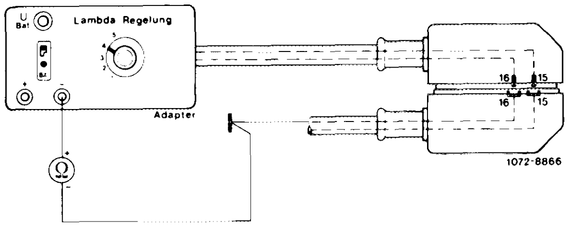

VII. Testing supply line to O_2 probe (16)

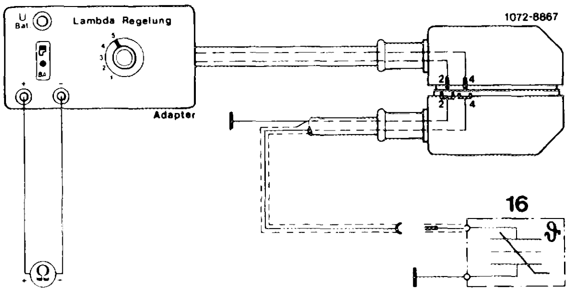

Rotary switch on adapter to position 5, multimeter to measuring range 0—∞ ohm, ignition switched off, coupling of O_2 probe separated. Read readout.

Readout

∞ ohm | 0 ohm

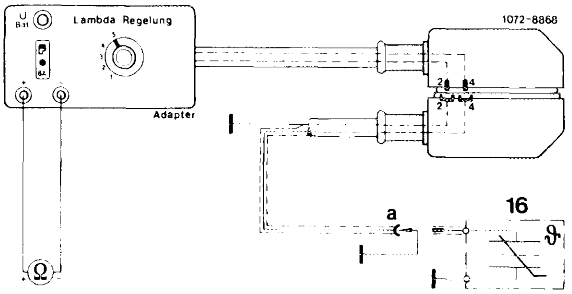

Short-circuit in line from coupling of O_2 probe to coupling of control unit.

Connect coupling member (a) to ground.

Readout 0 ohm, line in order.

Readout ∞ ohm, line interrupted.

End of test.

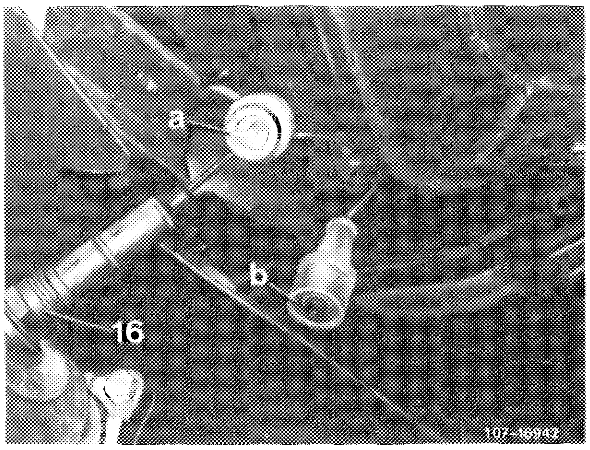

Test section B

Test conditions:

Remove adapter, connect coupling to control unit.

Connect tester on-off ratio to test socket. Start engine (coupling of O_2 probe connected).

VIII. Testing O_2 probe (16)

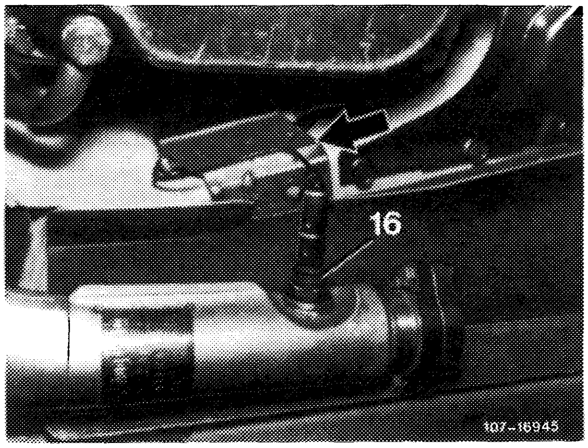

Temperature of O_2 probe below + 300 °C.
Read readout on-off ratio.

Readout

Constant between 46–54 %	Constant 92 %

Short-circuit in O_2 probe, renew O_2 probe.

End of test

IX. Testing frequency valve (17)

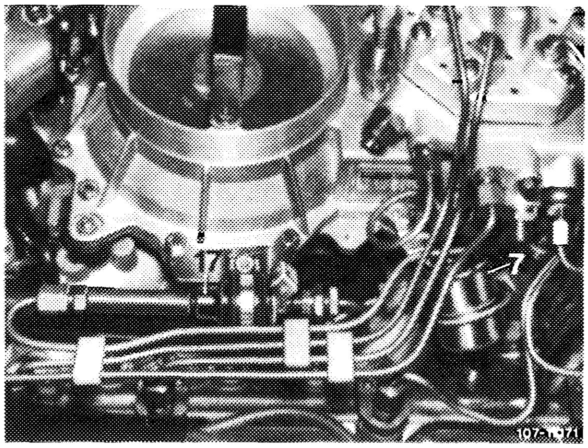

Engine oil temperature > 20 °C.
Engine at idle.

Place one hand on frequency valve.

Frequency valve should noticeably operate.	Frequency valve not operating.

Renew frequency valve.

End of test

X. Testing lambda control

Note: Lambda control and O_2 probe are in order if needle of measuring instrument is not hunting, but position of needle can be changed by short acceleration.

Model year 1981

Engine oil temperature approx. 80 °C.
Engine at idle (500 ± 50/min).
Read on-off ratio readout.

Readout

Between 40–60 %	40 % or 60 % Constant 50 %

On mixture regulating screw (1), adjust on-off ratio in such a manner that readout is around 50 ± 5 %.

Note: For distance of protective lock refer to 07.3–105.

If on-off ratio cannot be regulated, renew control unit.

If readout is constantly approx. 50 %, renew O_2 probe.

End of test

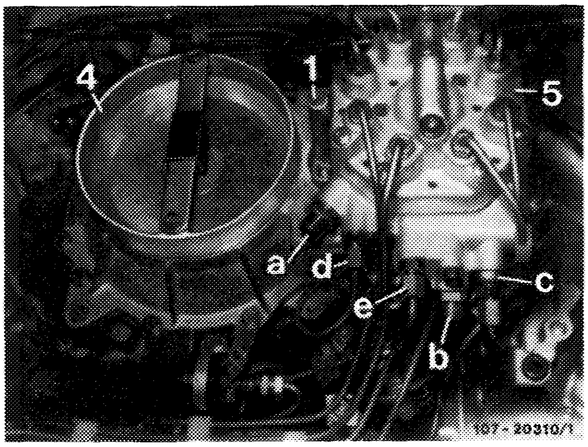

Starting model year 1982

1. Engine oil temperature approx. 80 °C.
2. Pull purge line to throttle valve housing from purge valve and close.
3. At engine speed 2500/min, read mean value of on-off ratio.
4. Run engine at idle and adjust to on-off ratio read under item 3.

   Note: For distance of protective lock refer to 07.3–105.
5. Repeat item 3 and 4 and readjust, if required, until mean value of the deflections at both points is less than 10 apart.
6. Connect purge line.

On-off ratio

in order	not in order

Renew control unit.
Readout constant approx. 50 %
Renew O_2 probe.

End of test

XI. Testing sudden change of pressure switch (100)

(only for national version (USA) model year 1985)

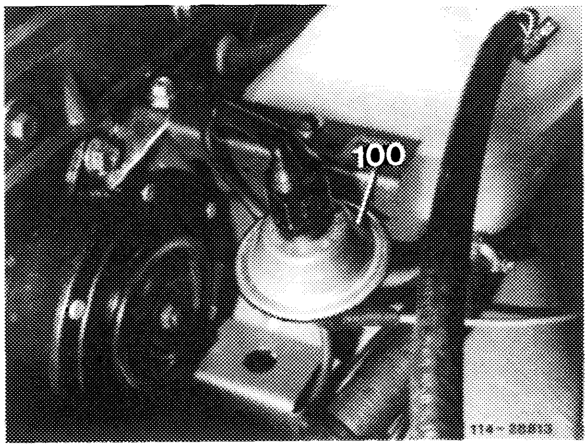

Connect lambda control tester to diagnosis socket. Button 100 % ∿. Separate coupling from O_2 probe. Start engine. Engine at idle (operating temperature).

On-off ratio display	50 % constant
Yes	No

No: Test step VII

Yes:

Depress accelerator.

On-off ratio display goes temporarily to 60 % and then immediately drops back again.

Yes	No

No:

Test vacuum line to sudden change of pressure switch in accordance with function diagram.

Test green/white line to control unit in accordance with electric wiring diagram.

Renew sudden change of pressure switch.

Yes:

End of test

d) Testing air injection

Note: CIS injection system and ignition system in order, engine at operating temperature.

Special tools

Test equipment 0—1000 mbar for vacuum	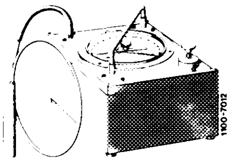	116 589 25 21 00
Electrical connection set	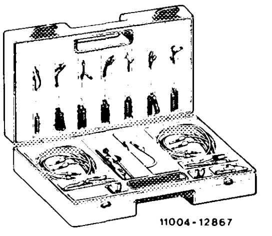	201 589 00 99 00

Conventional test equipment

Engine tester (speed, dwell angle, advance angle, oscilloscope, voltmeter)	e. g. Bosch, MOT 001.03 or MOT 002.02
	e. g. Sun 1019
Multimeter	e. g. Sun DMM 5
Lambda control tester	e. g. Hermann L 115

Visual testing	Start engine. Operating temperature	Magnetic clutch switched off
Pull off coupling from temperature switch (42 °C) and bridge. Place one hand on switchover valve. Observe magnetic clutch.	Switch ignition on and off.	Switchover valve must switch noticeably, magnetic clutch switches audibly and visibly.
Separate connection to air pump and connect test cable with plug for magnetic clutch, as well as terminal 30 to cable connector and ground.	Start engine.	On-off ratio Model year 1981: 50 % ± 10 %[1] Starting model year 1982: between 30—70 %[1]
Pull off vacuum lines at the switchover valve and connect with each other.		On-off ratio > 80 %

[1] Lambda control and O_2 probe are in order, if the needle of the measuring equipment is not hunting, but position of needle can be changed by short acceleration.

Visual checkup magnetic clutch

Engine at idle
Coolant temperature > approx. 42 °C

Magnetic clutch switched off.	Magnetic clutch switched on.

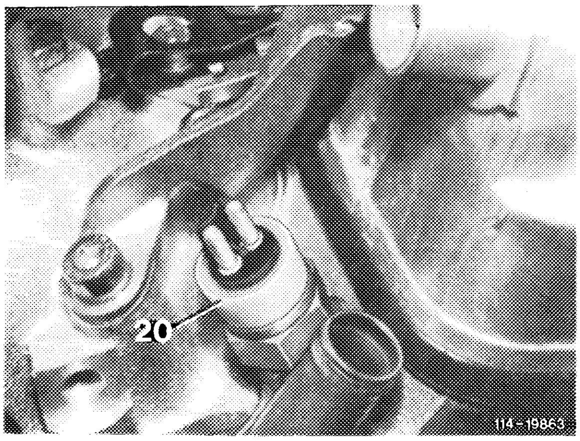

Check temperature switch 42 °C (20) for passage.

If passage exists, renew temperature switch.

No passage, renew relay (33).

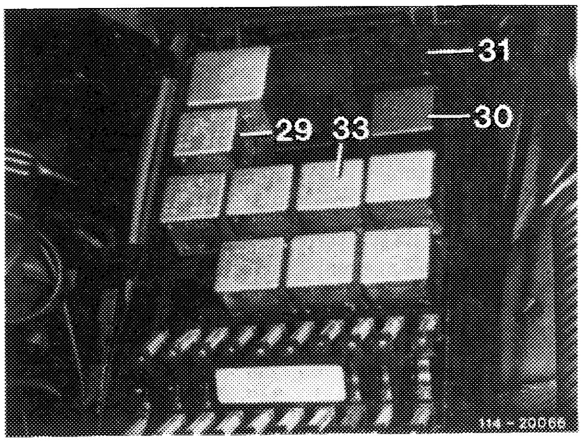

Testing magnetic clutch

Coolant temperature approx. 100 °C
Engine at idle, separate coupling of O_2 probe, pull off coupling of temperature switch 42 °C (20) and bridge (arrow).

Magnetic clutch switched on.	Magnetic clutch not switched on.

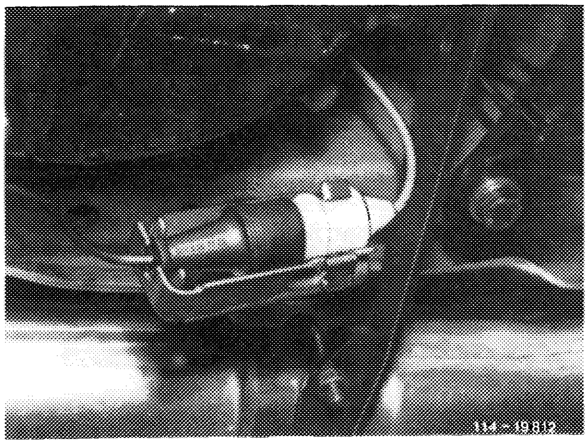

Check whether coupling of temperature switch (20) is energized.

If not, check voltage supply according to electric wiring diagram and renew defective parts, if required.

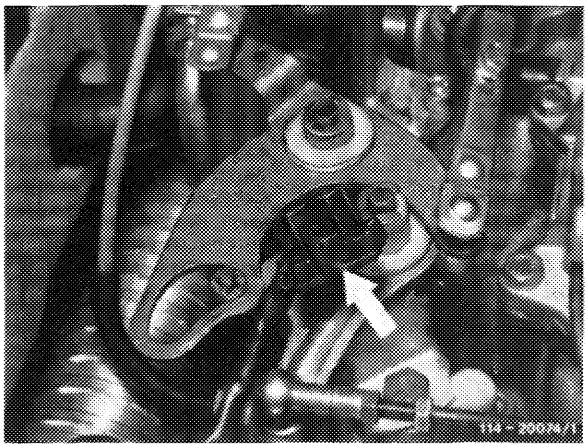

Testing temperature switch (20), relay (33) and switchover valve (43)

Engine at idle, coolant temperature approx. 100 °C.

Pull vacuum line from air shutoff valve (40) and connect vacuum tester to vacuum line.

Separate coupling of O_2 probe.

Vacuum readout 0 mbar.	Vacuum available.

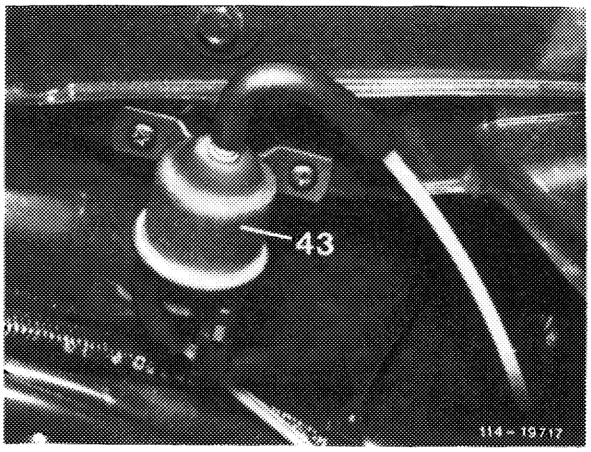

Pull coupling from temperature switch (20).

If vacuum drops to 0, renew temperature switch.

If vacuum is not dropping, test voltage supply relay (33) and switchover valve (43) according to electric wiring diagram and renew defective parts, if required.

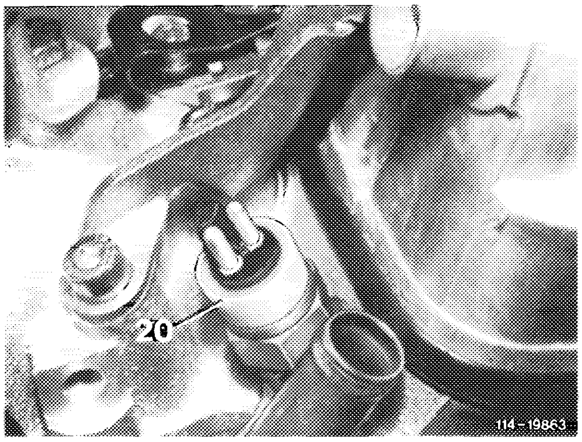

Testing vacuum control

Pull coupling from temperature switch (20) and bridge (arrow).

Vacuum should be available.

No vacuum indicated.

Test vacuum lines for correct connection, also test check valve and switchover valve for passage.

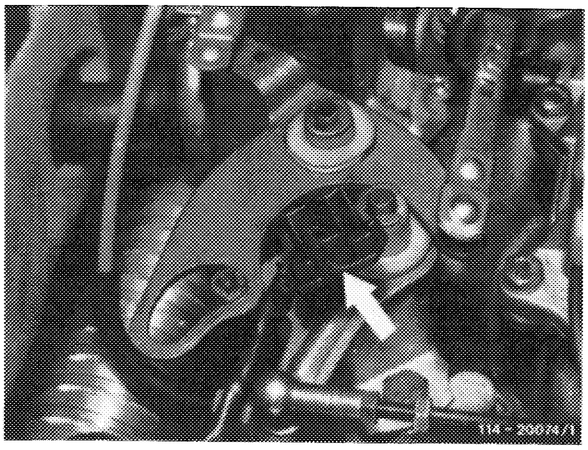

Testing air shutoff valve (40)

Connect vacuum tester to air shutoff valve (40) and test for leaks.

If leaking, renew valve.

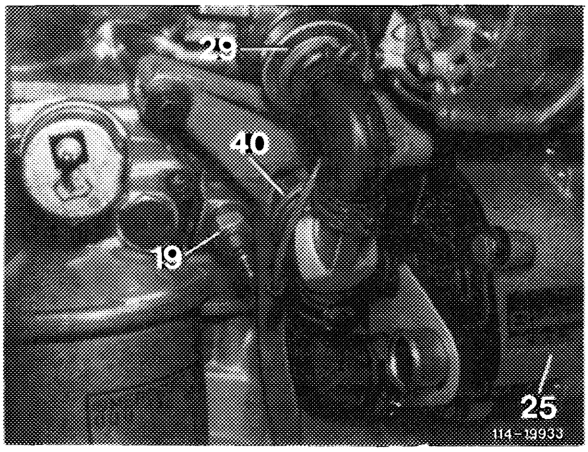

Testing air shutoff valve (40) and air pump (25)

Pull contour hose from air cleaner and keep lightly closed with finger.

Heavy air intake noticeable.	No or weak air intake noticeable.

No air intake noticeable.

Check contour hoses for correct connection and for leaks.

Check V-belt for tension and renew air pump, if required.

Weak air intake noticeable.

Pull white/purple/blue vacuum line from switchover valve (43) and check for presence of vacuum.

If vacuum is present, renew air shutoff valve.

End of test

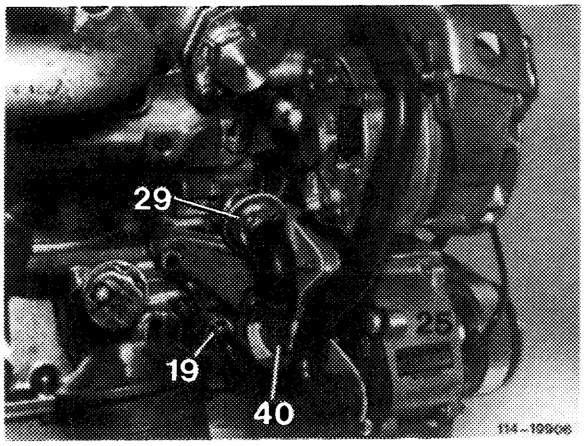

A. Model 107.025/045

Removal

1 Remove O_2 probe, pushing coupling out of holder (arrow) in upward direction for this purpose and separate. Unscrew O_2 probe (16).

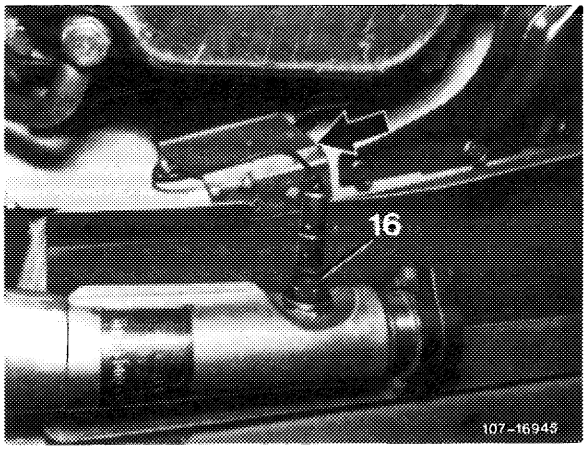

2 Loosen screws of flange connection (arrows) on exhaust manifolds and unscrew.

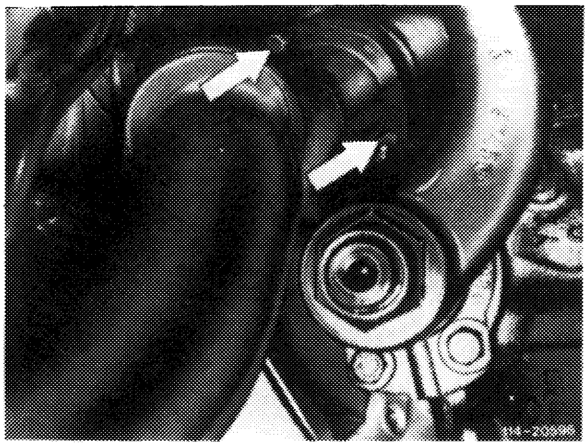

Flange connection left

Note: Second screw is consealed by guide lever.

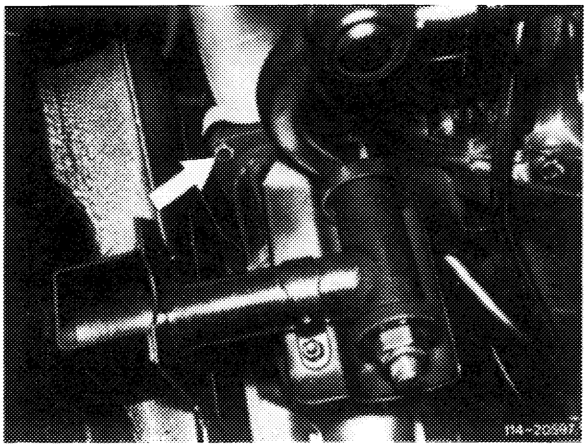

Flange connection right

3 Loosen screws of flange connection (arrows) and screw out.

4 Remove catalysts.

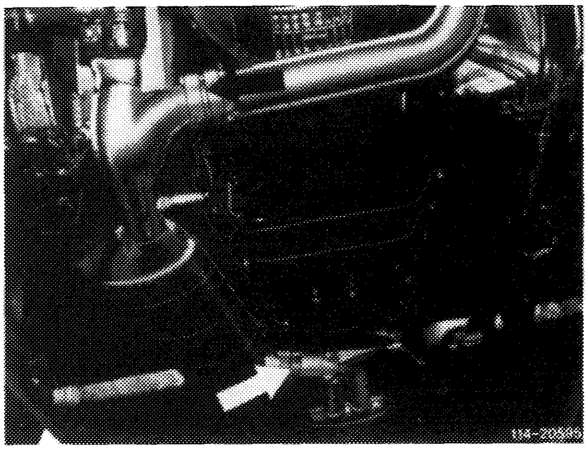

5 For installation proceed vice versa.

Note: Prior to installing O_2 probe, coat threads with hot lubricating paste, part No. 000 989 88 51.

Tightening torque of self-locking hex. nuts is 20 Nm.

B. Model 126

Removal

1 Remove O_2 probe, unscrewing holder (arrow) for this purpose, then push coupling in upward direction and separate. Unscrew O_2 probe (16).

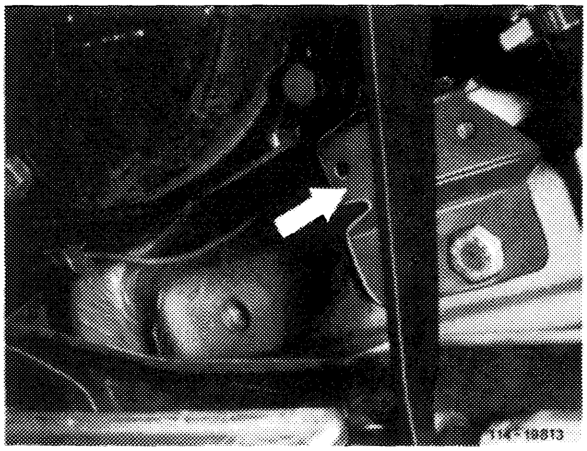

2 Loosen screws of flange connection (arrows) on exhaust manifold and unscrew.

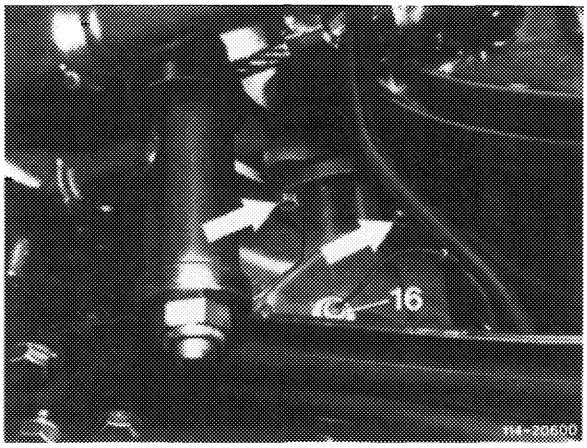

3 Remove lateral support on transmission.

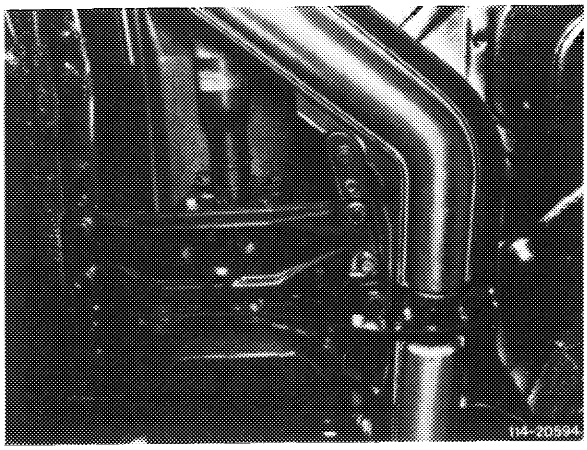

4 Loosen screws of flange connection (arrows) and unscrew.

5 Remove catalysts.

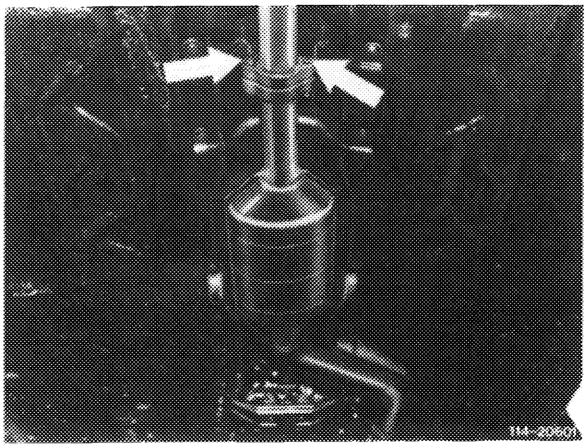

Installation

6 For installation proceed vice versa.

Note: Prior to installing O_2 probe, coat threads with hot lubricating paste, part No. 000 989 88 51.

Tightening torque of self-locking hex. nuts is 20 Nm.

Removal and installation of air pump

Adjusting values of V-belt (KG scale on measuring instrument)

V-belt	New V-belts	Used V-belts
Air pump	30	20–25

Special tool

Measuring instrument (Krikit)	 2134 1218-3	001 589 69 21 00

Note

For handling of measuring instrument refer to operating instructions.

Specified adjusting data refer to KG scale of measuring instrument (arrow).

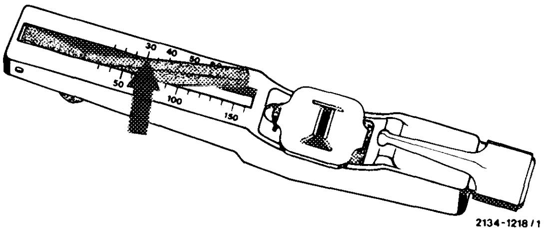

2134-1218/1

Removal

1 Separate coupling (arrow) for air pump and remove line from cable straps.

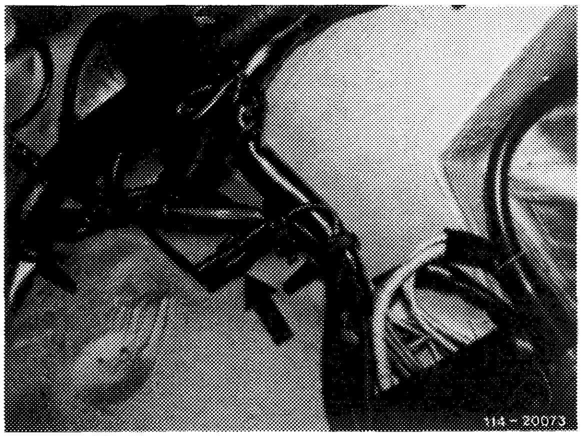

2 Remove contour hoses.

3 Loosen fastening screws (1 and 2) and unscrew.

4 Take off V-belt and remove air pump.

Note: Remove and install electromagnetic clutch (14–260).

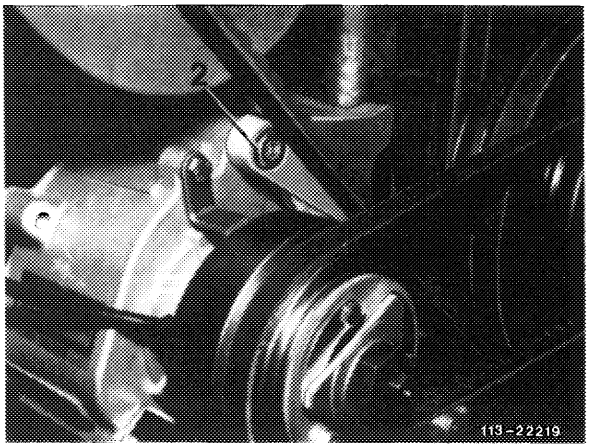

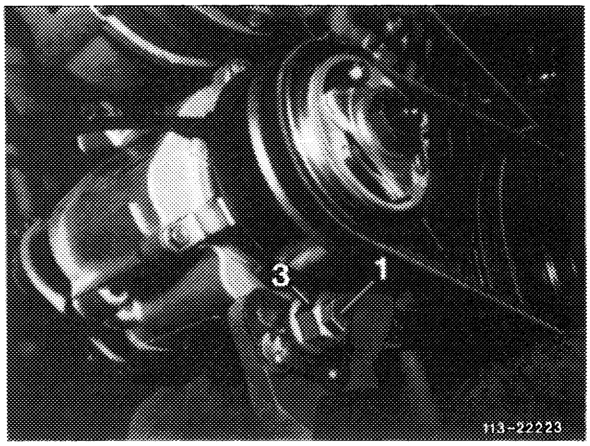

Installation

5 For installation proceed vice versa.

6 Tension V-belt with tensioning wheel (3) and tighten fastening screws (1 and 2).

Designation: Electromagnetic cut-off clutch 12 V

Test values

Power input	cold approx. +20 °C 2.4 A	Warm approx. +80 °C 2.0 A

Tightening torques	Nm
Hex. nut on pump shaft	35 ± 5
Hex. screws M 5	4.5 ± 0.3

Note

Prior to removing electromagnetic clutch, check power input. At a power input of more than 3.0 amps, renew clutch.

Remove air pump for renewing clutch (14–250).

Removal

1 Loosen hex. nut (arrow) and unscrew.

2 Unscrew hex. screws (1) and remove clutch.

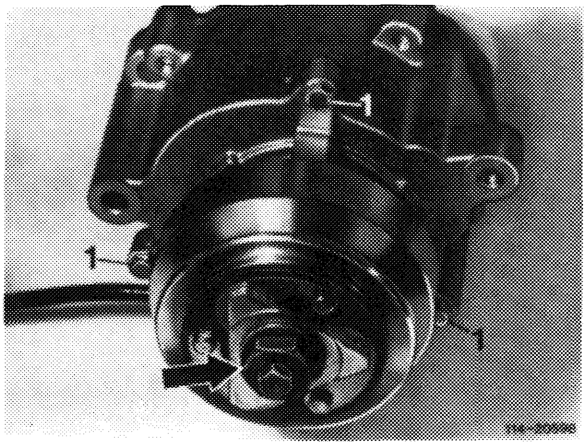

Installation

3 For installation proceed vice versa. Pay attention to correct assembly of components as shown in Fig.

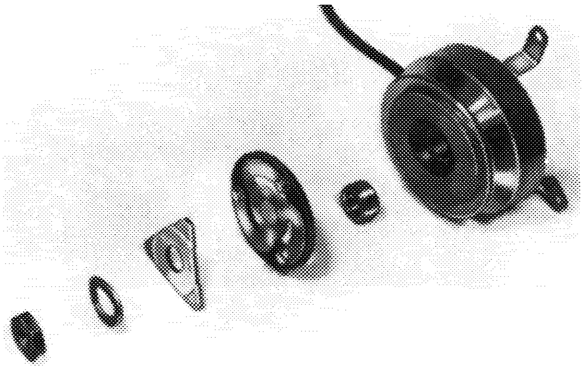

14–450 Removal and installation of intake manifold upper and lower part, renewing gaskets

Job No. of flat rates or standard texts and flat rates data 14–240.

Note

When removing and installing intake manifold the mixture control unit with air guide housing does not need to be removed.

Changes on intake manifold

In order to standardize with the USA design, the following parts have been changed:

a) Intake manifold upper part:
Vacuum connection for automatic transmission changed.

b) Intake manifold lower part and throttle valve housing:
Fixing of the throttle valve housing to the intake manifold lower part is effected with M6 screws (formerly M8).

c) Air guide housing:
The flange of the air guide housing is made of light alloy, the air guide housing of rubber.

Replacement parts

Engine	Designation	Former Part No.	Current Part No.
116	Intake manifold upper part	116 140 48 01/57 01	116 140 70 01
117	Intake manifold upper part	117 140 52 01/57 01	117 140 67 01
116/117	Intake manifold lower part	117 140 48 01	116 140 78 01
116/117	Throttle valve housing	001 140 19 53	001 140 29 53
116/117	Air guide housing	117 141 07 90	116 140 01 18

Supply responsibility: Werk 50 (PEW Sindelfingen)

The former parts are carried over.

Installation engine 116: April 1981

Model	Engine	Engine end number	Vehicle identification end number
107.025 107.045	116.960	009373	002861 006350
126.032 126.033	116.961	015686	015529

Installation engine 117

Installation on engine 117 took place in stages. The following listing shows the respective installation data for the current version.

First installation: April/May 1981

Model	Engine	Engine end number	Vehicle identification end number
107.026	117.960	003337–003363	002541–002551
107.046			000723–000737
126.036	117.961	010458–010654	010312–010509
126.037			

Second installation: June 1981

Model	Engine	Engine end number	Vehicle identification end number not recorded
107.026	117.960	003504–003710	–
107.046			–
126.036	117.961	012634–012636	–
126.037			

Final installation: starting August 1981

Model	Engine	Engine end number	Vehicle identification end number
107.026	117.960	003777	002731
107.046			000954
126.036	117.961	012996	012895
126.037			

d) Intake manifold gasket:
The cross-section of gasket had to be enlarged. When renewing the gasket, make sure that the respectively valid gasket for the respective engine is installed. The former gasket is still available in spare parts depot.

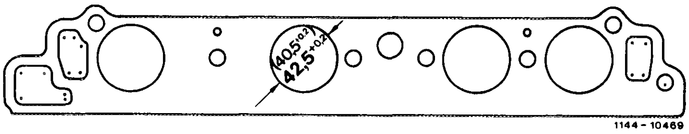

Start of series: August 1981

Engines without air injection

On engines with ET cylinder heads, which have 4 bores for the air injection to the exhaust valve (arrow), the latter have to be sealed with aluminium tapered plugs.

This ensures that no exhaust gas reaches the intake side via the bores (poor idle).

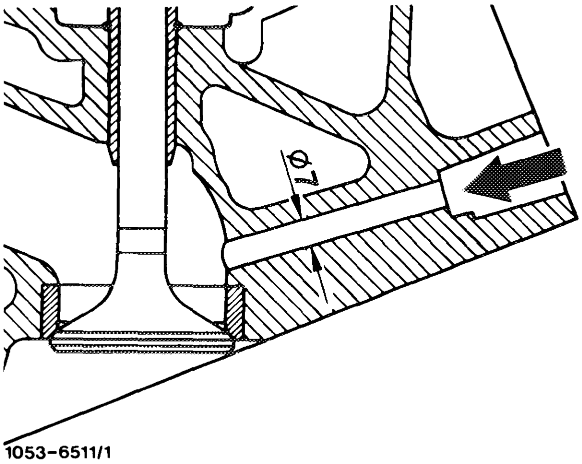

1053-6511/1

Removal

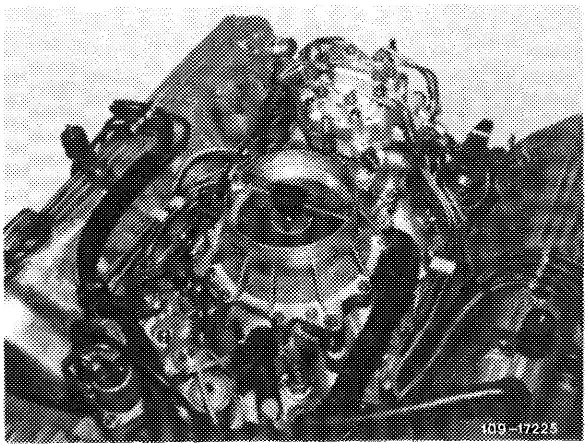

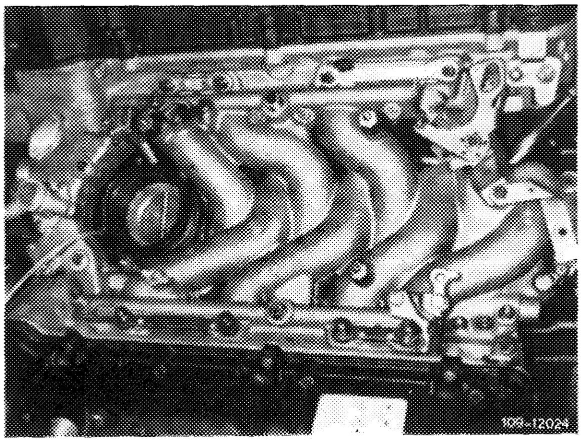

1 Disconnect battery.

2 Partially drain coolant (20–010).

3 Unscrew injection lines and fuel lines. Catch fuel with a rag.

Close fuel lines blind.

4 Pull off auxiliary air lines.

5 Force off Bowden wire for automatic transmission.

6 Unscrew bearing bracket for guide block control.

7 Unscrew bearing bracket for longitudinal regulating shaft.

8 Pull off all connecting cables and plug connections.

9 Pull off vacuum line for automatic transmission and unscrew for brake unit.

10 Loosen and pull off coolant hoses.

11 Unscrew all fastening screws and remove intake manifold toward the rear.

12 Clean intake manifold and check flange surfaces with straightedge, level on surface plate, if required.

Installation

13 Mount intake manifold in vice versa sequence with new gaskets.

Intake manifold gaskets are not graphited. Do not mix up graphited intake manifold gaskets of grey iron engine with those on light-alloy engine.

14 Adjust regulating linkage (30–300).

15 Connect battery.

16 Fill in coolant (20–010).

17 Run engine, check fuel lines for leaks. Check intake system, fuel distributor and injection valves for leaks by spraying with Iso-Oktan.

18 Adjust idle speed (07.3–100).

Intake manifold

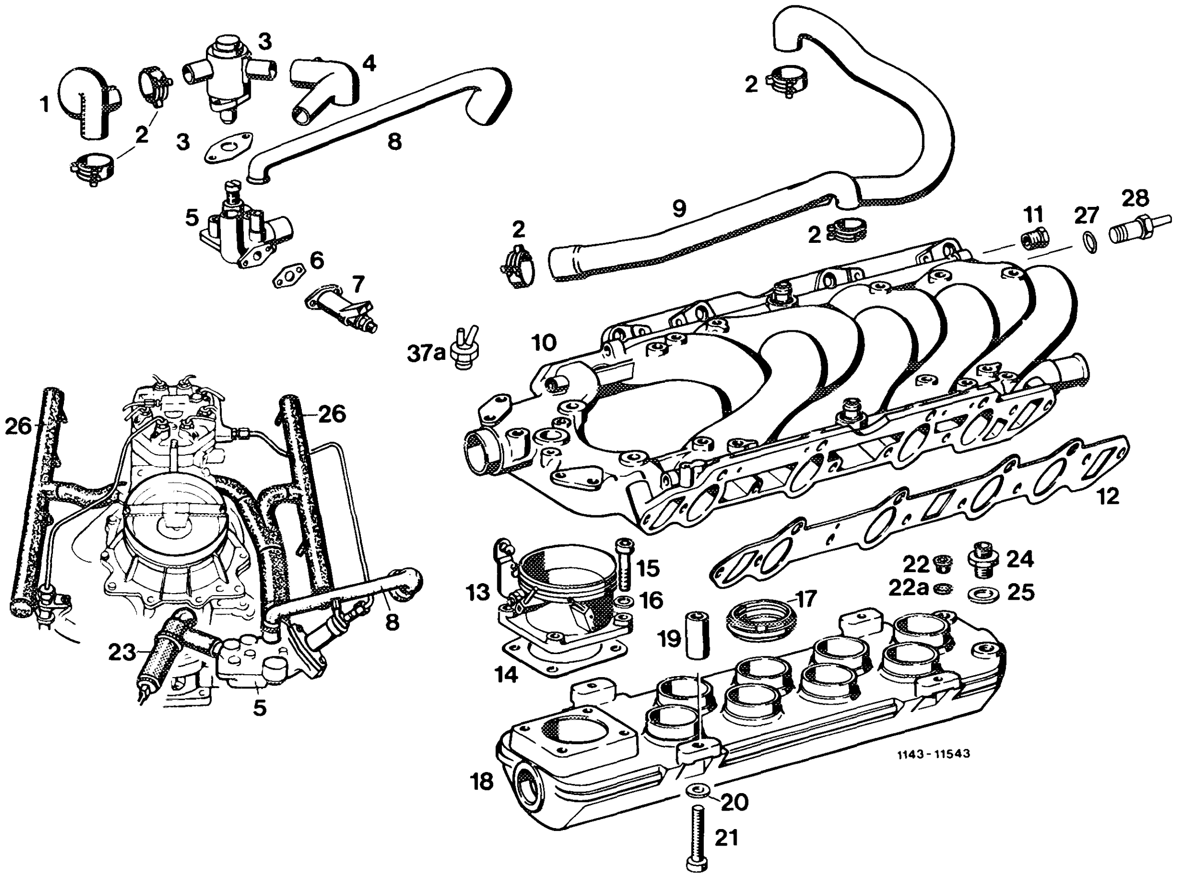

1 Contour hose
2 Spring hose clamps
3 Auxiliary air valve
3a Gasket
4 Contour hose
5 Idle speed air distributor
6 Gasket
7 Cold start valve
8 Contour hose
9 Auxiliary air line
10 Intake manifold upper half

11 Closing plug
12 Gasket
13 Throttle valve housing
14 Gasket
15 Hex. socket screw
16 Washer
17 Rubber connection
18 Intake manifold lower half
19 Spacing sleeve
20 Washer
21 Hex. socket screw

22 Closing plug
22a Sealing ring
23 Idle speed adjuster
24 Double thread connection
25 Sealing ring
26 Air feed for injection valves
27 Sealing ring
28 Connection for automatic transmission

14–455 Renewing intake manifold (intake manifold removed)

Job No. of flat rates or standard texts and flat rates data 14–255.

Renewing

1 Remove and install intake manifold (14–450).

2 Remove and install injection valves and insulating sleeves (07.3–215).

3 Remove and install mixture control unit with air guide housing (07.3–225).

4 Unscrew all unscrewable parts on removed intake manifold and mount on new intake manifold with new gaskets.

5 Unscrew intake manifold upper half from intake manifold lower half. For this purpose, loosen vacuum line for brake unit on intake manifold lower half, then unscrew fastening screw and pull from rubber adapters.

6 Mount intake manifold lower half with new rubber adapters to intake manifold upper half.

A. Model 107

Tightening torque	Nm
Screw for engine mount	75

Removal

1 Remove exhaust system (49–100).

2 Pull off ignition cable.

3 Unscrew shielding plates on exhaust manifold.

4 Unscrew engine shock absorber with fastening holder and shielding plates. For this purpose, unscrew screw for engine mount.

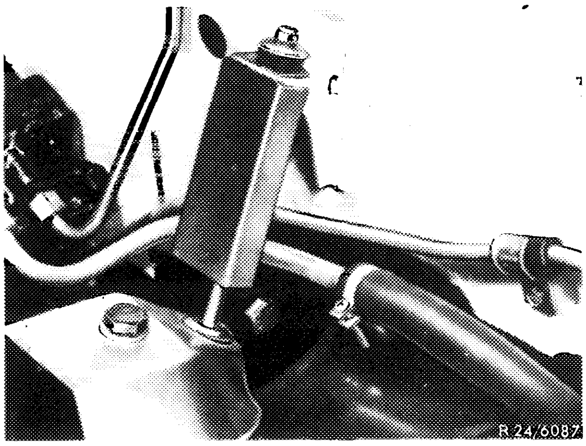

Exhaust manifold left

5 Remove air cleaner.

6 Unscrew exhaust nuts and screws and remove exhaust manifold.

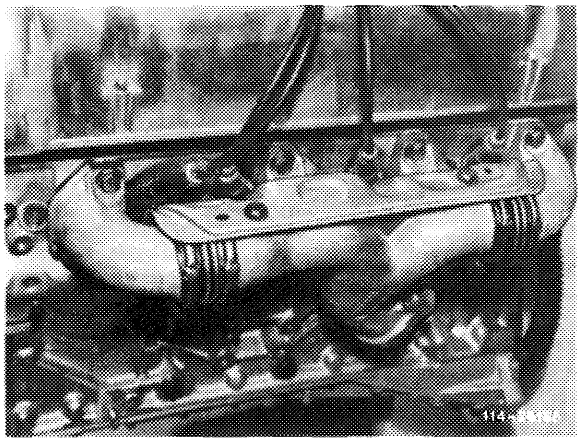

Exhaust manifold left

Exhaust manifold right

7 Remove windshield washer reservoir.

8 Unscrew coolant reservoir. Unscrew fastening clamp for cooling water hose. Loosen cable strap for electric line and put reservoir aside.

9 Remove battery, battery holder and shielding plate

Note: On vehicles with automatic climate control the battery is mounted at the right in trunk.

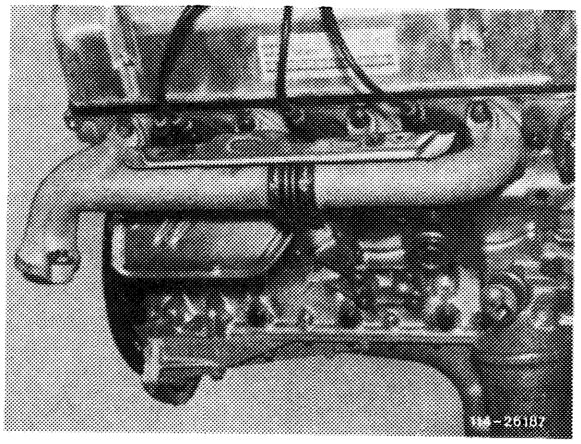

Exhaust manifold right

10 Unscrew exhaust nuts and screws and remove exhaust manifold.

Installation

11 For installation proceed vice versa. Renew all gaskets and exhaust nuts.

12 Mount flange gaskets with sheet metal in direction of cylinder head.

During assembly make sure that the exhaust manifold gaskets are not mixed up.

13 Tighten screws for engine mount to 75 Nm.

14 Mount exhaust system.

15 Mount air cleaner. Pay attention to correct seat of sealing ring between air flow sensor and air cleaner.

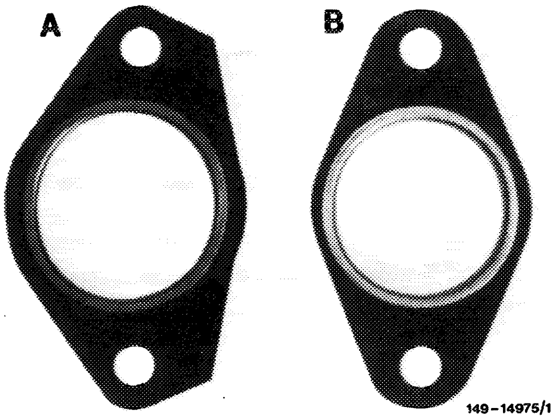

A Engine 117.96
B Engine 116.96

16 Run engine and check exhaust system for leaks.

B. Model 126

Note

Exhaust manifolds are single-flow pipes. Bellows are attached for compensation of heat expansion.

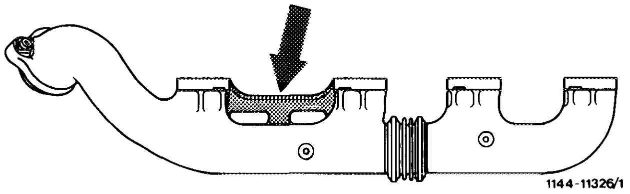

Engine 116.963

To prevent distortions, the exhaust manifold on engine 116.963 and 117.963 have been reinforced between exhaust ducts (arrows). The shielding plates have been simultaneously modified. When renewing modified exhaust manifolds, also renew shielding plates.

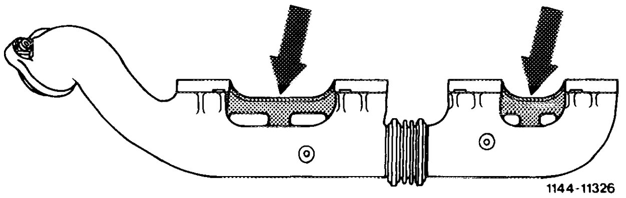

Engine 117.963

Replacement parts

Designation		Engine	Former part no.	Current part no.
Standard version, (CH) (S) before March 1983				
Exhaust manifold	left	116.963	116 140 25 14	116 140 35 14
	right		116 140 16 14	116 140 36 14
	left	117.963	117 140 52 14	117 140 57 14
	right		117 140 44 14	117 140 58 14
(CH) (S) **Engine 116.963 starting March 1983** **Engine 117.963 starting model year 1984**				
Exhaust manifold	left	116.963	–	116 140 43 14
	right		–	116 140 29 14
	left	117.963	–	117 140 64 14
	right		–	117 140 62 14
(J) (USA) starting model year 1984				
Exhaust manifold	left	116.963	–	116 140 20 14
	right		–	116 140 29 14
	left	117.963	–	117 140 61 14
	right		–	117 140 62 14
Shielding plates all versions			116 142 11 20	116 140 00 22

Supply responsibility: Works 50 (PEW Sindelfingen)

Removals

1 Pull off ignition cable.

2 Unscrew shielding plates on exhaust manifold.

Exhaust manifold left

3 Remove clamp for transverse tube.

4 Unscrew exhaust gas recirculation line on valve.

5 Unscrew exhaust nuts and screws and remove exhaust manifold.

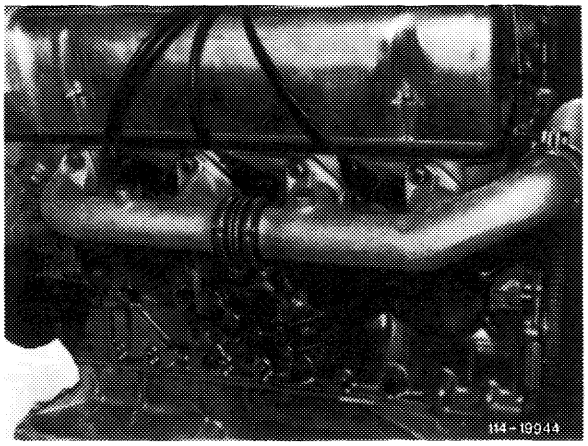

Exhaust manifold left

Exhaust manifold right

6 Remove exhaust system.

7 Remove clamp for transverse tube.

8 Remove air cleaner.

9 Unscrew exhaust nuts and screws and remove exhaust manifold.

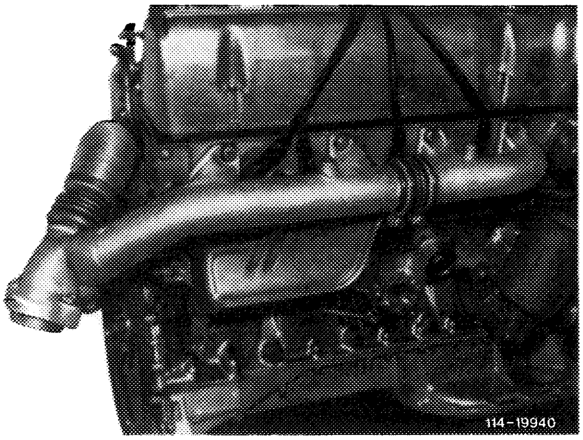

Exhaust manifold right

Installation

10 For installation proceed vice versa. Renew all gaskets and exhaust nuts. Before tightening put on screws for holder. Flange transverse tube before exhaust manifold is tightened.

11 Mount flange gaskets with sheet metal in direction of cylinder head.

During assembly make sure that the exhaust manifold gaskets are not mixed up.

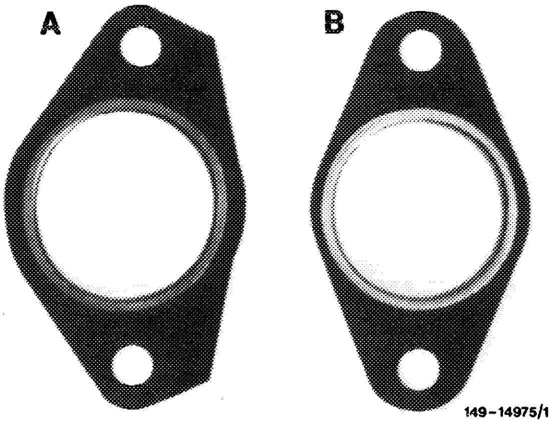

A Engine 117.96
B Engine 116.96

12 Mount exhaust system.

13 Mount air cleaner. Pay attention to correct seat of sealing ring between air flow sensor and air cleaner.

14 Run engine and check exhaust system for leaks.

14–475 Checking EGR

Job No. of flat rates or standard texts and flat rates data 14–500.

Standard version

Special tool

Vacuum tester	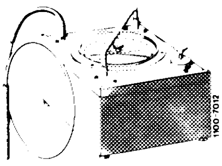	116 589 25 21 00

Conventional tool

Revolution counter

Testing EGR

1 Pull vacuum line (arrow) from EGR valve (60), plug on test hose and activate with vacuum. If engine is not clearly worsening, renew EGR valve.

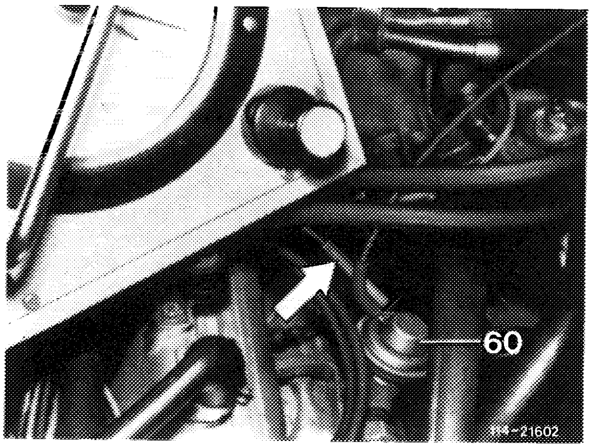

2 Check activation of EGR valve. Pull vacuum line (arrow) from EGR valve (60) and connect to vacuum tester. Slowly increase engine speed to approx. 3000/min. There should be no vacuum up to approx. 1800/min. Vacuum connections on throttle valve housing might be plugged in the wrong way.

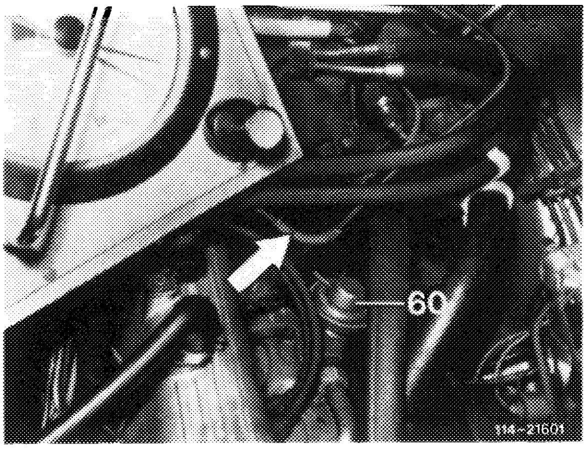

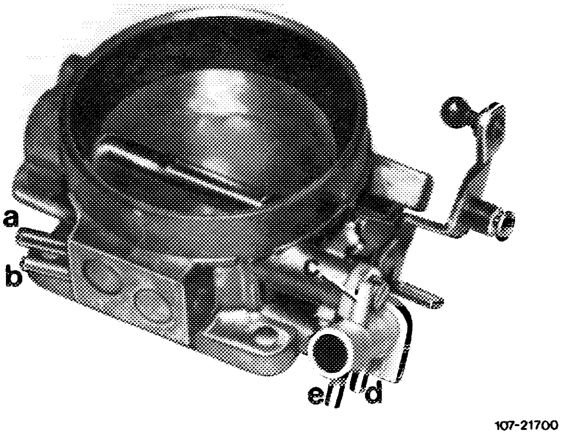

a	To thermovalve for EGR
b	To vacuum switch
c	To warm-up compensator lower chamber
d	To four-way distributor
e	To reservoir for full load enrichment

3 Test thermovalve 50 °C (37). Pull off white/brown/purple vacuum line on EGR valve and activate with vacuum. At coolant temperature < 50 °C, no passage on thermovalve.

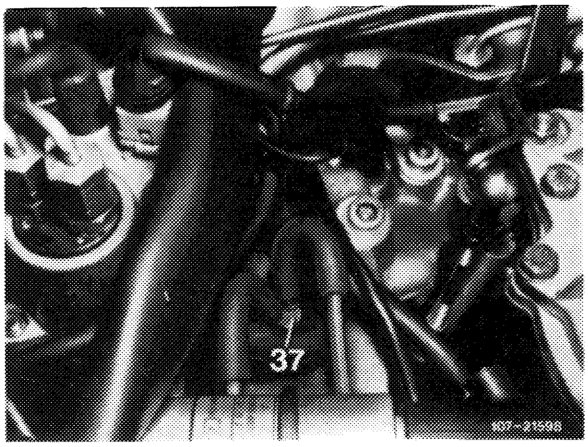

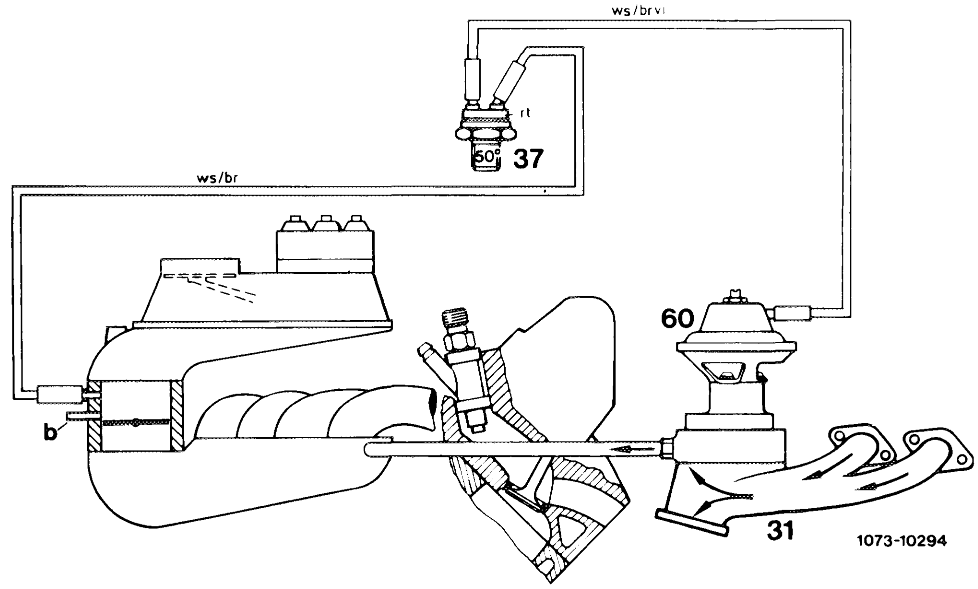

31	Exhaust manifold
37	Thermovalve 50 °C
60	EGR valve
b	To vacuum switch

br = brown
rt = red
vi = purple
ws = white

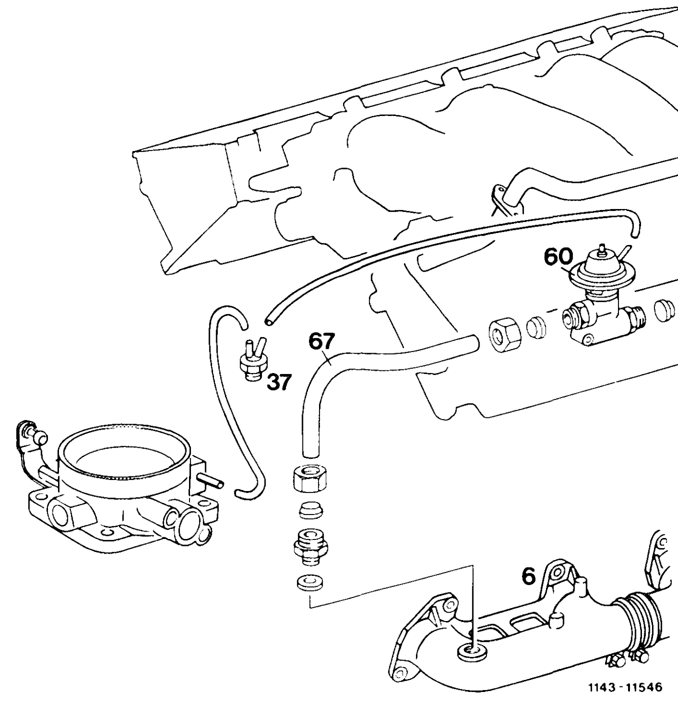

EGR

6 Exhaust manifold	67 EGR line
37 Thermovalve 50 °C	68 EGR line
60 EGR valve	

Start of series: September 1981

Note

The exhaust gas recirculation line (68) has been shortened since July 1984.

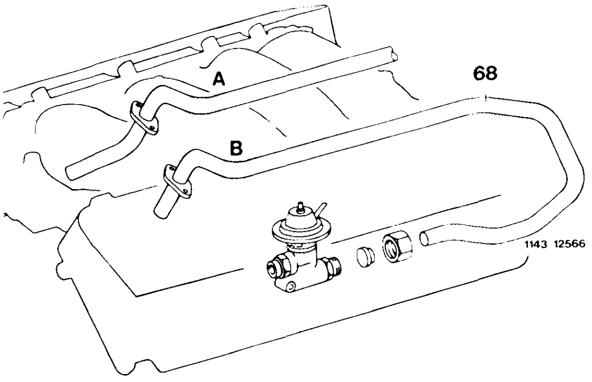

A Former design
B Current design

The exhaust gas recirculation valve has a steel diaphragm plate (1), formerly aluminium.

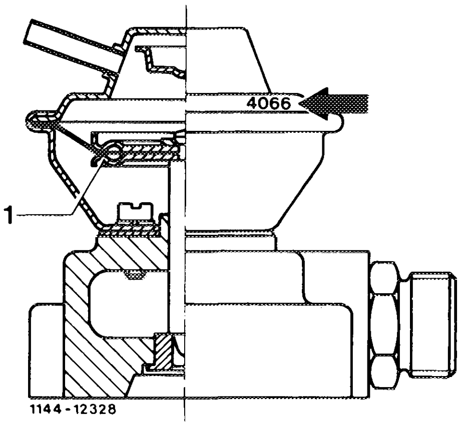

Identification:
From date of manufacture (arrow): 4054

Installation: March 1984

Model	Engine	Engine end No. Manual transmission	 Automatic transmission
107.042	110.990	002730	005958
123.033/053/093	110.988	009461	028294
126.022/023	110.989	011200	063155
126.032/033/043	116.963	–	048510
126.036/037/044	117.963	–	049341

Standard version

Operation

To reduce nitrogen oxides (NO_x) a portion of the gases from the exhaust manifold is returned to the intake manifold through a valve.

The quantity of the returned exhaust gases is adapted to load conditions in such a manner that no driving errors will result.

As from a coolant temperature of approx. 50 °C in cylinder head a portion of the exhaust gases will be returned to the intake manifold in middle and upper partial load range. The addition of exhaust gases to the fuel mixture reduces the combustion temperature and thereby the generation of nitrogen oxides. The quantity of the recirculated exhaust gases depends on throttle valve position (vacuum on throttle valve).

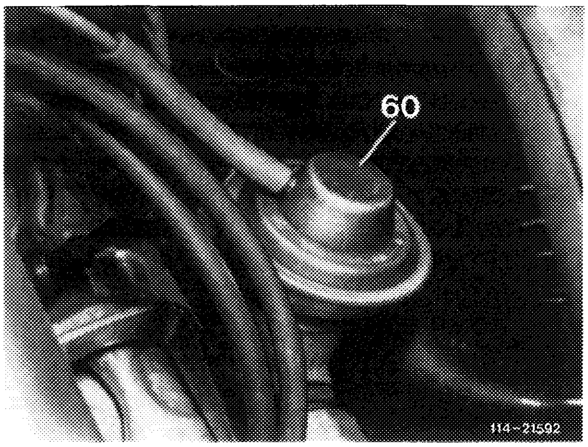

60 EGR valve

Depending on throttle valve position, the EGR valve (60) is activated with more or less vacuum.

The EGR valve (60) fastened to exhaust manifold opens and permits a given quantity of exhaust gases to flow back into intake manifold through recirculating line.

EGR is activated:

Above 50 °C coolant temperature.
In middle and upper partial load range.

No exhaust gas will be recirculated at idle, during decel operation and in lower partial load range. At full load, the vacuum will also not be able to keep the EGR valve open.

Below 50 °C coolant temperature the bimetallic plate rests against O-ring and closes connection "B".

As from 50 °C coolant temperature the bimetallic plate will snap downwards under influence of heat. Both connections are connected to each other.

The vacuum line to EGR valve must be plugged to connection "A", since this is the only way to guarantee absolute sealing between bimetallic plate and O-ring.

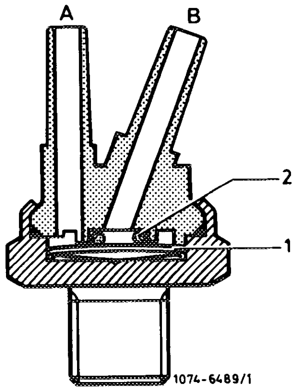

1	Bimetallic plate
2	O-ring
A	To EGR Valve
B	To throttle valve housing (vacuum side)

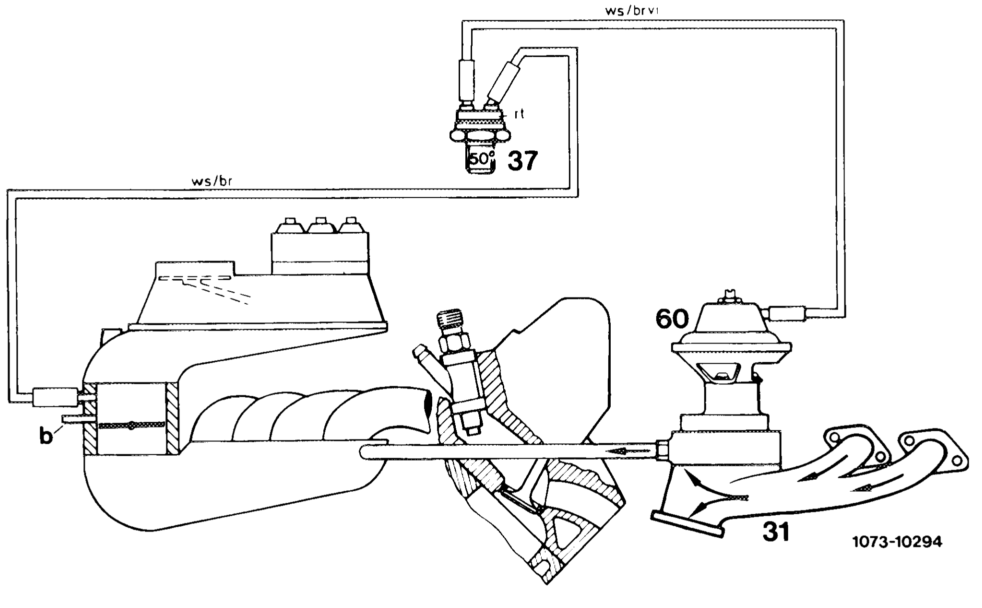

31	Exhaust manifold
37	Thermovalve 50 °C
60	EGR valve
b	To ignition distributor

br = brown
rt = red
vi = purple
ws = white

Job No. of flat rates or standard texts and flat rates data 15–100.

Testing and adjusting values

A. Standard version
Standard
Standard CAT (uncontrolled)

Ignition timing

Engine	Ignition distributor Bosch No.	Testing and adjusting value[1] of ignition timing without vacuum 3000/min	Ignition timing with/without vacuum			Vacuum adjustment in direction of		Installation value of ignition distributor at starting speed without vacuum
			Idle with	15oo/min without	3000/min without	"retard" at idle	"advance"	
116.960 116.960 NV 116.961 116.961 NV	0 237 404 003 0 237 405 014	30[2] [3]	TDC ± 3°	15–19°	30°	8–12°	8–12°	10° before TDC
116.962 116.963	0 237 401 010	25°[2] [4]	13–19°	11–15°	25°	–	15–17°	TDC
117.960 117.960 NV 117.961 117.961 NV	0 237 404 006 0 237 405 016	30°[2] [3]	TDC ± 3°	14–22°	30°	8–12°	8–12°	10° before TDC
117.962 117.963	0 237 401 010	25°[2] [4]	13–19°	11–15°	25°	–	15–17°	TDC

[1] If manually compressed engines are operated with fuel under 98 RON (min. 88 MON), or low-compression engines under 92 RON (min. 82 MON), adjust ignition timing (firing point) in direction of "retard" and match to octane rating of fuel used. The reference value for this adjustment is: Set firing point back by 1–2° crank angle per 1 RON. Max. setback should not exceed 6° crank angle.
Attention!
Taking firing point back is considered an **"emergency measure".** Reduced output and increased fuel consumption will result. In addition, the engine should not be operated under full load. **As soon as fuel with specified octane number is available, set again to full advance.**

[2] When adjusting ignition timing, pull off both vacuum lines for ignition adjustment. Switch off air conditioning.

[3] If manually compressed engines are operated with unleaded super fuel (RON 95), adjust ignition timing to **25°**. See information for use of unleaded fuels (15–509).

[4] If manually compressed engines are operated with unleaded super fuel (RON 95), adjust ignition timing to **20°**. See information for use of unleaded fuels (15–509).

Standard version NV CAT (controlled)

Ignition distributor Bosch No.	Testing and adjusting value of ignition timing with vacuum at idle[1]	Ignition adjustment		Vacuum adjustment in direction of		Installation value of ignition distributor at starting speed
		without vacuum		"retard"	"advance"	without vacuum
	at idle[1]	1500/min	3500/min	at idle	at idle	
0 237 401 010	TDC without vacuum	11–15°	22–26°	–	15–17°	TDC

[1] Switch off refrigerant compressor.

B. National version AUS CH J S USA

Testing and adjusting values

Ignition distributor Bosch	Testing and adjusting value of ignition timing with vacuum at idle 3)	Ignition timing without vacuum		Vacuum adjustment in direction of		Installation value of ignition distributor at starting speed without vacuum	Engine
		1500/min	3500/min	"retard" at idle	"advance" at 3500/min		

AUS 1981

Identification: silver information label on cross member in front of radiator

0 237 405 013	5° after TDC	7–13°	22–28°	9–11°	–	5° before TDC	116

AUS starting 1982

0 237 405 024	5° after TDC	8–12°	23–27°	9–11°	–	5° before TDC	

CH starting 1983

Identification: green information label on cross member in front of radiator

0 237 405 024	5° after TDC	8–12°	23–27°	9–11°	–	5° before TDC	116
0 237 405 028 4)	TDC	7–13°	21–28°	4–6°	14–18°		116, 117

J 1981/82

Identification: information label in Japanese language

0 237 405 021	5° before TDC 5)	10–14°	22–26°	9–11°	18–22°	5° before TDC	116
0 237 401 012							

J starting 1983

0 237 401 010	TDC without vacuum	11–15°	22–26°	–	15–17° at idle	TDC	116, 117

S 1981

Identification: blue information label in Swedish language on cross member in front of radiator

0 237 405 013	5° after TDC	7–13°	22–28°	9–11°	–	5° before TDC	116

S 1982/83

0 237 405 024	5° after TDC	8–12°	23–27°	9–11°	–	5° before TDC	116
0 237 504 028 4)	TDC	7–13°	21–28°	4–6°	14–18°		116, 117

USA 1981/82

Identification: black information label in English language on cross member in front of radiator

0 237 405 021	5° before TDC 5)	10–14°	22–26°	9–11°	18–22°	5° before TDC	116
0 237 401 012				–			

USA starting 1983

0 237 401 010	TDC without vacuum	11–15°	22–26°	–	15–17° at idle	TDC	116, 117

---

1) Switch off refrigerant compressor.

4) Starting March 1981

5) J USA 1981: adjustment at operating temperature of engine. Vacuum retard is switched off above approx. 50 °C engine temperature.

Dwell angle

Engine	Dwell angle at 1/min Ignition system TSZ 4		TSZ 8 z Terminal TD
	approx. 1500	approx. 5000[1]	Starting speed
116.960 116.961 117.960 117.961	25–39°	33–40°	–
116.962 116.963 117.962 117.963	–	–	5–23°

[1] Perform test at 5000/min. only in the event of complaints about misfiring and high engine speeds.

Conventional tools

Revolution counter, stroboscope	
Digital tester	e. g. Bosch, MOT 001.03

Testing and adjusting

1 Test ignition timing (firing point) with stroboscope or digital tester at specified speed with or without vacuum.

2 Loosen ignition distributor fastening, if required, and set adjusting value of ignition timing, (firing point) by turning ignition distributor.

Screw down ignition distributor and check ignition timing (firing point) once again.

3 Check centrifugal and vacuum adjustment of ignition distributor. For this purpose, run through specified test values with or without vacuum adjustment.

On vehicles with air conditioning or automatic climate control, switch off air conditioning for testing ignition timing at idle, since with air conditioning or automatic climate control engaged vacuum retard will be canceled via an electric switchover valve (vacuum adjustment of ignition timing 15–502).

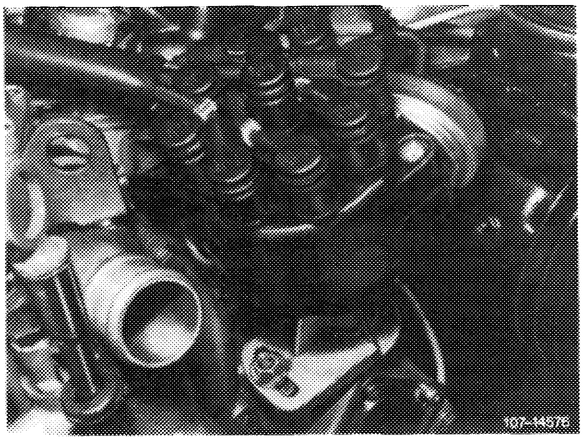

A. General information

The ignition distributor is provided with a single or a double vacuum control unit for vacuum adjustment of ignition timing. The single vacuum control unit serves for vacuum advance. The double unit is for vacuum advance and retard.

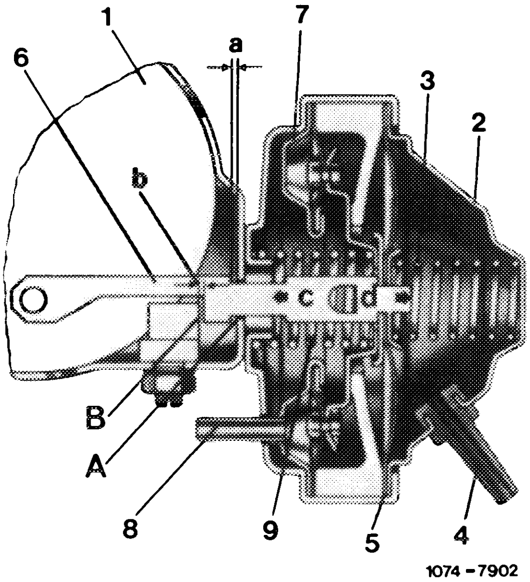

2	Vacuum advance unit
4	Hose connection vacuum advance unit
8	Hose connection vacuum retard unit
7	Vacuum retard unit

Vacuum advance

On singles as well as on double vacuum control unit the connection is pointing away from distributor (identified by a red ring). The other end of the vacuum line is directly connected to connection with red ring on throttle valve is sweeping over vacuum pickup bore.

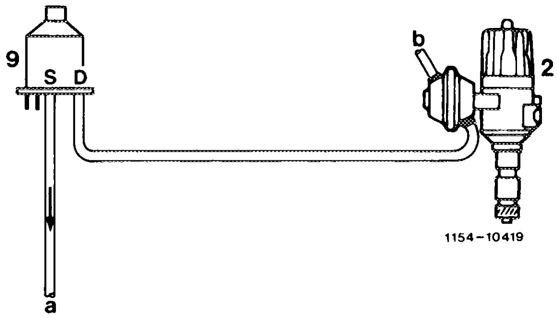

Vacuum retard

Connection for vacuum retard is pointing toward distributor.

The vacuum retard unit is connected to contour hose between auxiliary air valve and idle speed air distributor, so that the vacuum adjustment becomes effective only after the auxiliary air valve is closed.

C. National version (AUS) (CH) (J) (S) (USA)

Standard version NV CAT (controlled) starting 1984

Vacuum connections
(AUS) starting 1981
(S) 1981/82, 1983 (up to February 1983)

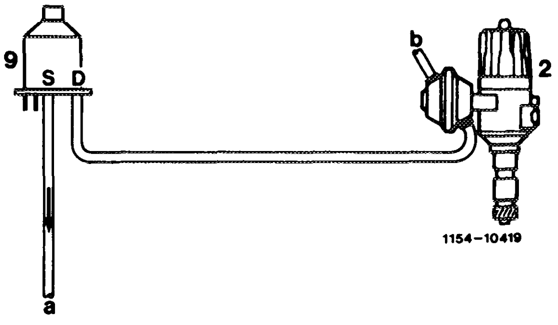

Similar to standard version the vacuum retard unit is connected to contour hose between auxiliary air valve and idle speed air distributor. A switchover valve is installed for rpm stabilization, which cancels the vacuum retard when the electromagnetic clutch of refrigerant compressor is switched on.

The vacuum control unit for vacuum advance on ignition distributor is not connected. The vacuum connection is open for connection of unit to atmosphere (arrow).

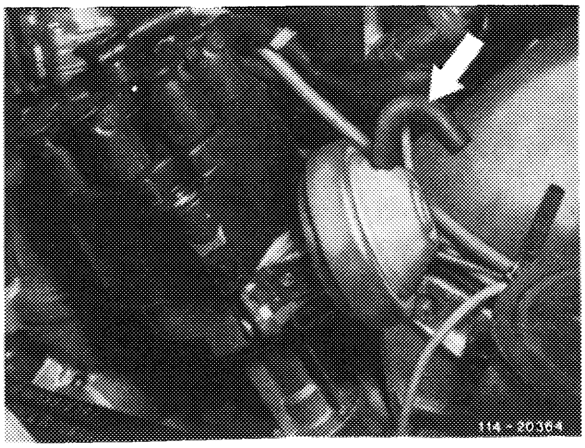

(CH) **starting 1983**
(S) **starting 1983** (starting March 1983)

The vacuum advance unit is now directly connected to intake manifold by way of a switchover valve (43a).

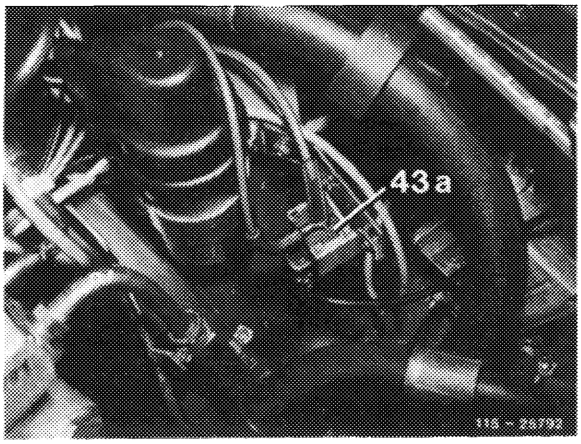

Model 107

The vacuum advance is activated under the following conditions:

1. At oil temperatures below approx. 16 °C.
2. At coolant temperatures above approx. 100 °C.
3. At engine speeds above approx. 2300/min in temperature range above 16 °C oil and below 100 °C coolant.

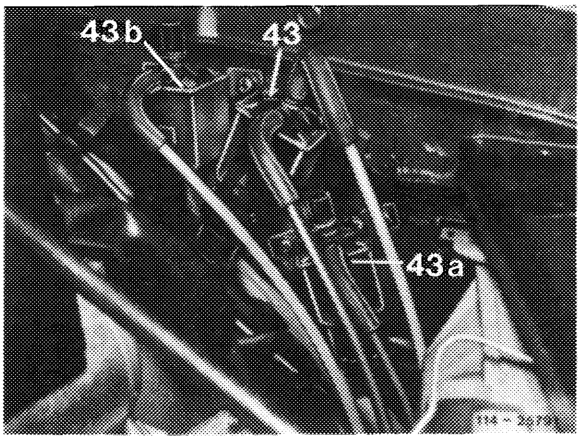

Model 126

Under these conditions the switchover valve is de-energized and switches the vacuum to vacuum advance unit on ignition distributor. Ignition timing is advanced approx. 14—18°. Since the advance unit also influences the retard unit, the ignition timing (firing point) is also advanced at idle.

Vacuum advance is de-activated:

1. At oil temperatures above approx. 16 °C.
2. At coolant temperatures below approx. 100 °C.
3. At engine speeds below approx. 2100/min in temperature range above approx. 16 °C oil and below approx. 100 °C coolant.

The switchover valve is energized via control unit for air injection. The switchover valve switches the vacuum off and connects the vacuum control unit to atmosphere.

The vacuum retard adjustment corresponds to that prior to 1983.

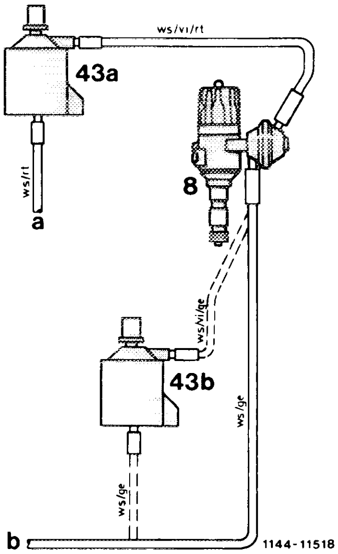

43a Switchover valve ignition adjustment
43b Switchover valve rpm stabilization
a To intake manifold
b Via bypass valve toward throttle valve housing.

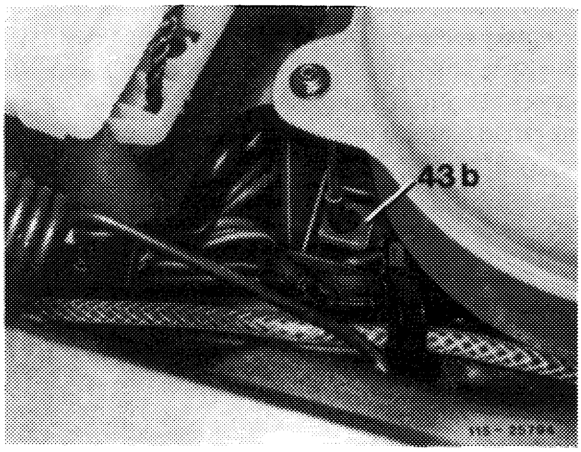

Model 107

43b Switchover valve rpm stabilization

(J) 1981
(USA) 1981

The vacuum advance unit is connected directly to throttle valve housing.

Vacuum retard will become effective only in temperature range above 16 °C oil and below 42 °C coolant temperature.

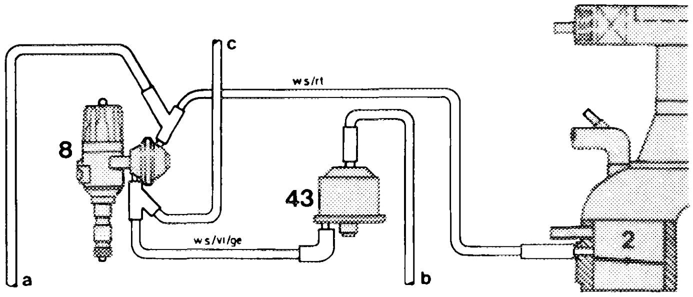

a To thermovalve 50 °C
b Through a check valve to intake manifold
c To air shutoff valve

(J) 1982
(USA) 1982

The vacuum advance unit is connected directly to throttle valve housing.

Vacuum retard is no longer installed.

(J) starting 1983
(USA) starting 1983
Standard version NV CAT (controlled)

The ignition distributor has only one vacuum control unit for vacuum advance. The vacuum control unit is connected directly to intake manifold, so that vacuum advance becomes effective already at idle.

A. Ignition systems with series resistors

"Go" image – Display

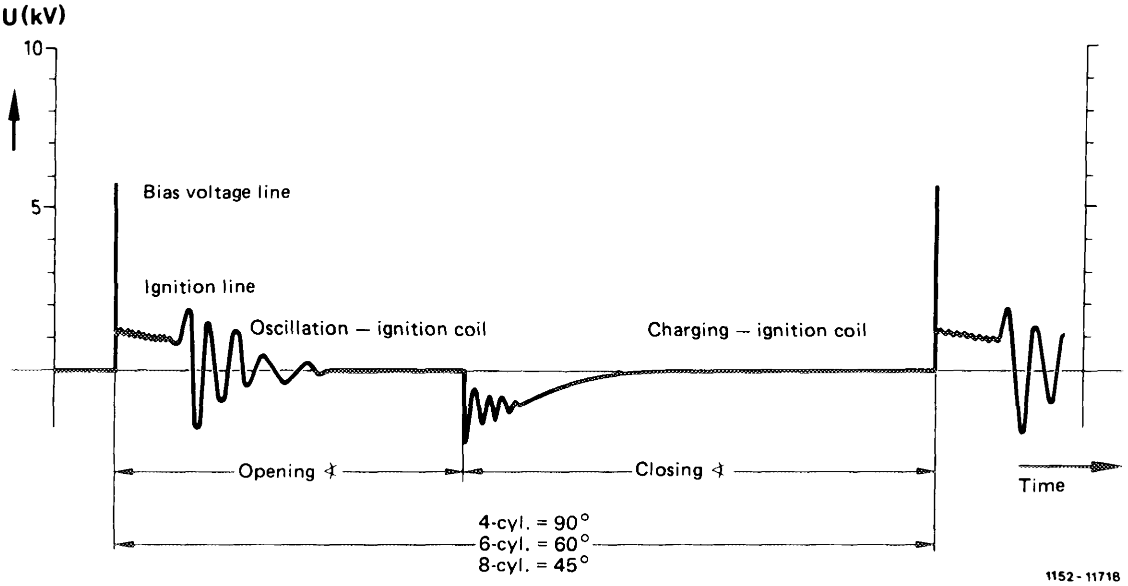

Image selection Display. Image is elongated in horizontal direction

"Go" image – Superposition

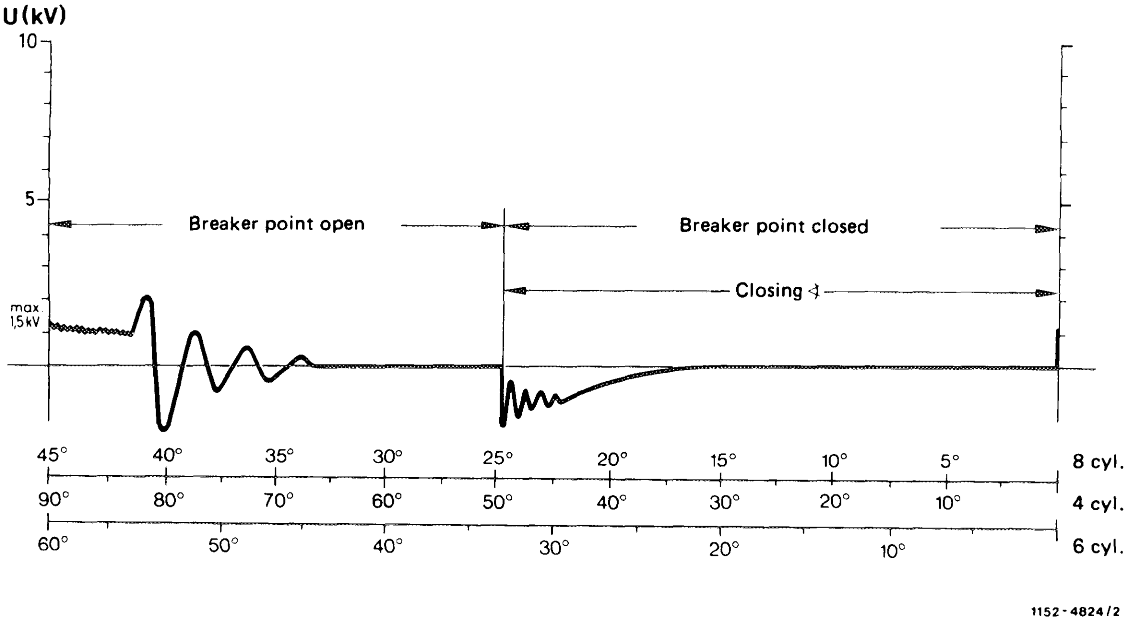

Image selection Superposition. For this purpose set begin and end of ignition procedure at left and right on calibration line

Jumping activation point of ignition line

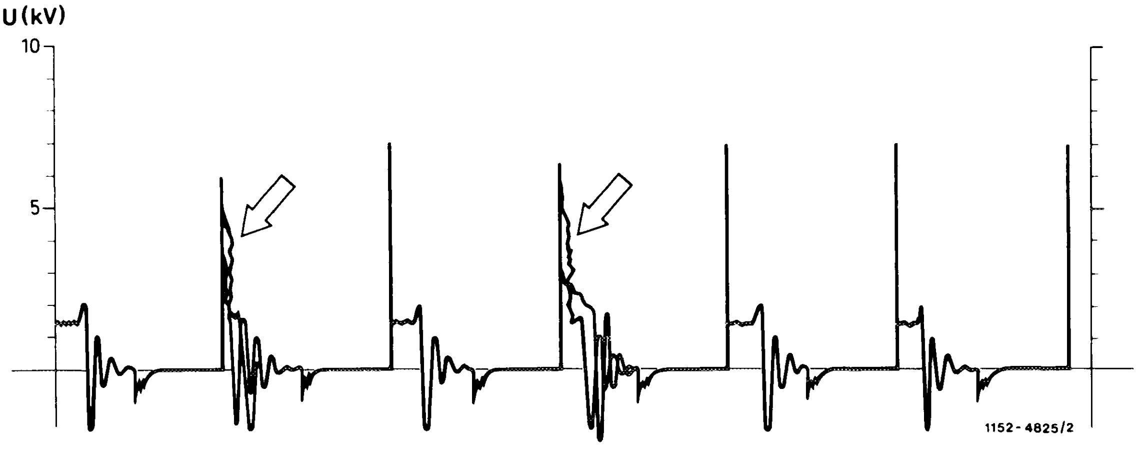

Image selection	Display
Image fault	Activation point of ignition line changes, jumps
Visible	Liable to occur at all speeds with or without engine load
Cause	Spark plug sooted, oiled up, lead-coated (lead or soot are conductive, ignition line is therefore jumping up and down)
Remedy	Clean or renew spark plug

Activation point of ignition line too high, but remaining constant

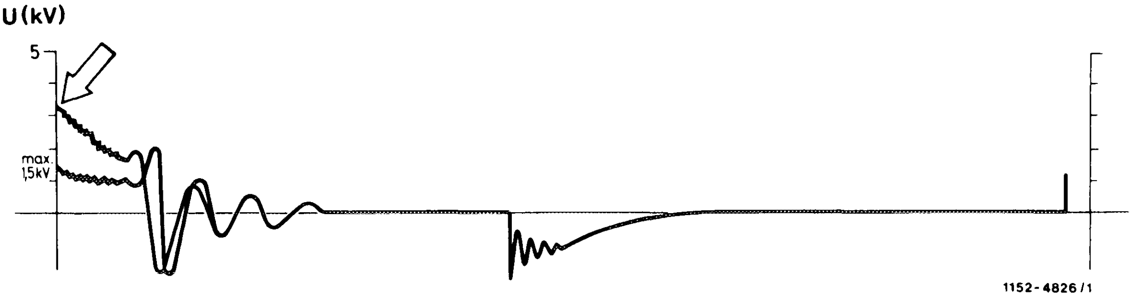

Image selection	Superposition
Visible	Idle speed, on one or several cylinders

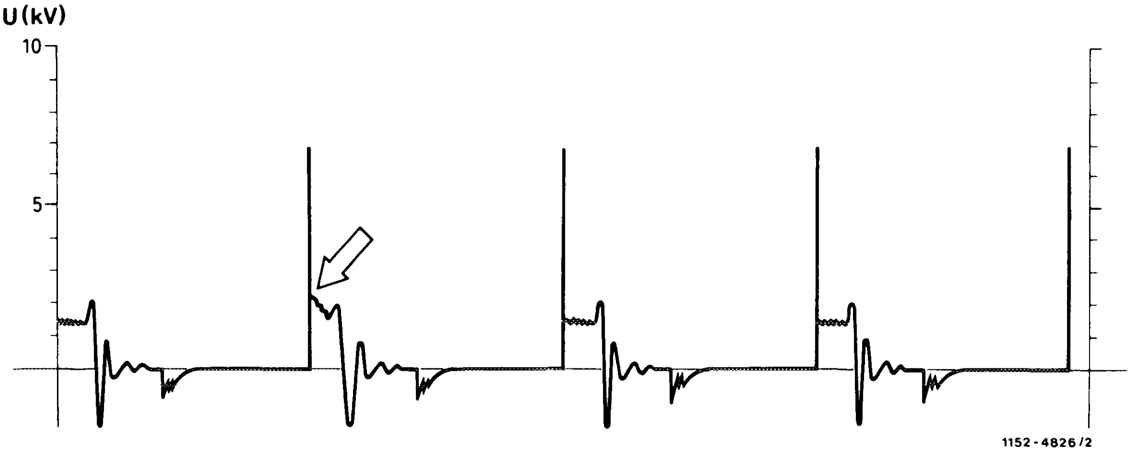

Image selection	Display
Image fault	Activation point of ignition line above 1.5 kV
Visible	Idle speed on one or several cylinders
Cause	Ohmic resistance too high at secondary end, caused by suppressor plug on spark plug or distributor cap, ignition cable, distributor rotor, spark plug
Remedy	Renew parts where ohmic resistance is too high (use ohmmeter)

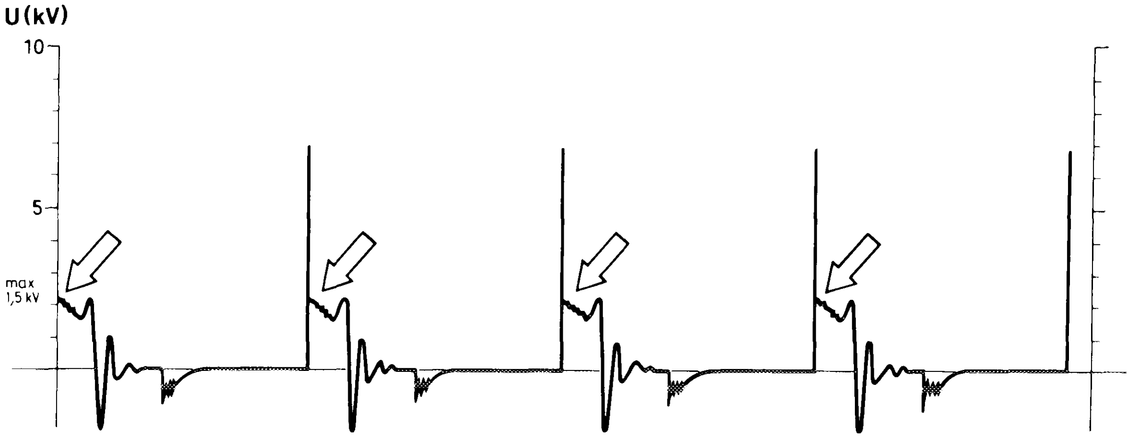

1152-4826/3

Image selection	Display
Image fault	Activation points of ignition lines above 1.5 kV
Visible	Idle speed on all cylinders
Cause	Ohmic resistance too high at secondary end caused by distributor rotor, distributor cap or high voltage cable No. 4 with plug
Remedy	Renew parts where ohmic resistance is too high (use ohmmeter)

Required ignition voltage

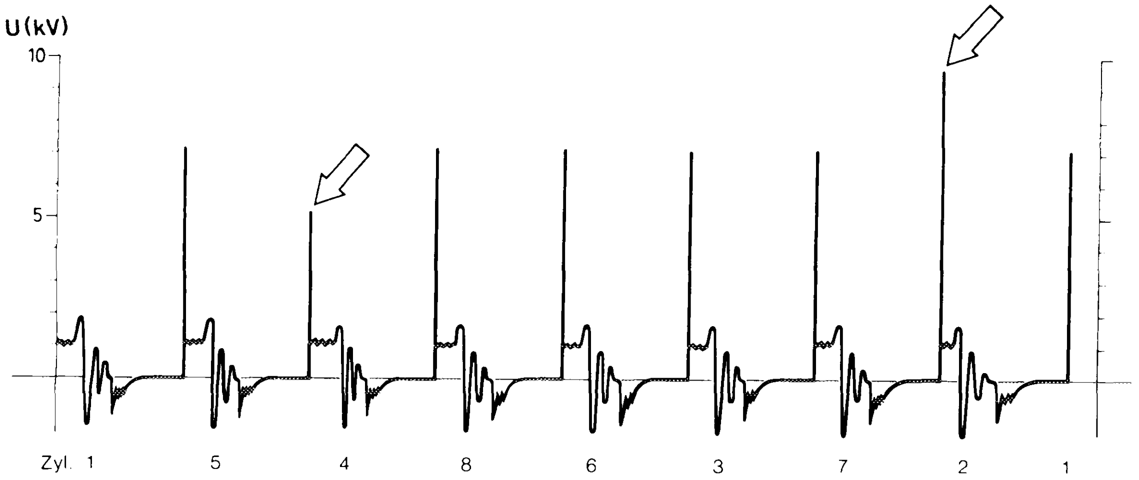

1152-4827/2

Image selection	Display
Image fault	Cylinder 4 bias voltage line too low – ignition line longer Cylinder 2 bias voltage line too high – ignition line shorter
Visible	Liable to occur at all speeds with or without engine load
Cause	Cylinder 4 spark plug – electrode gap too small, fuel-air mixture too rich, compression losses Cylinder 2 spark plug – electrode gap too large, fuel-air mixture too lean, additional sparking gap at secondary end
Remedy	Bias voltage line too low: Adjust spark plug – electrode gap, check cylinder for leaks Bias voltage line too high: Adjust spark plug – electrode gap, check distributor cap, ignition cable and spark plug for interruption (use ohmmeter)

Required ignition voltage, sudden, short acceleration

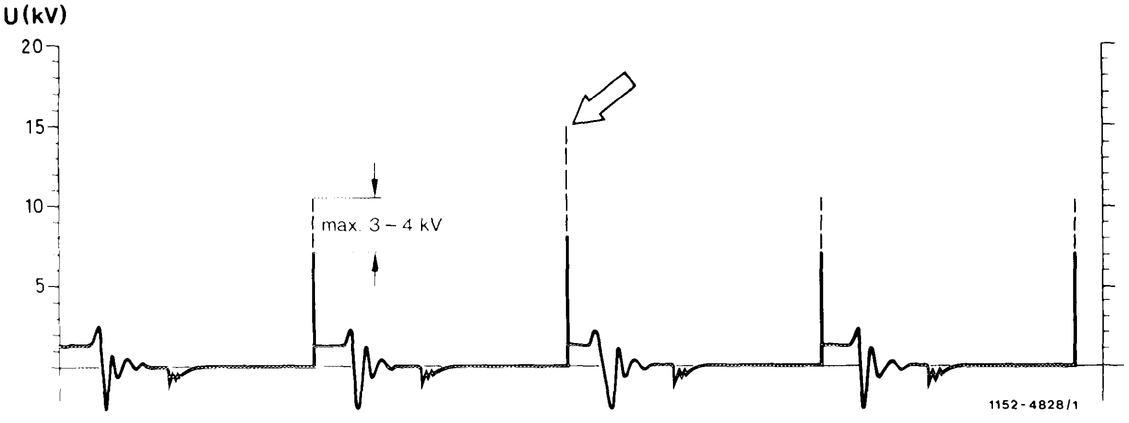

Image selection	Display
Image fault	Required ignition voltage increases by more than 4 kV
Visible	Accelerate engine repeatedly and suddenly to approx. 3000/min
Cause	Spark plug – electrode gap too large
Remedy	Adjust spark plug – electrode gap, renew spark plug, if applicable

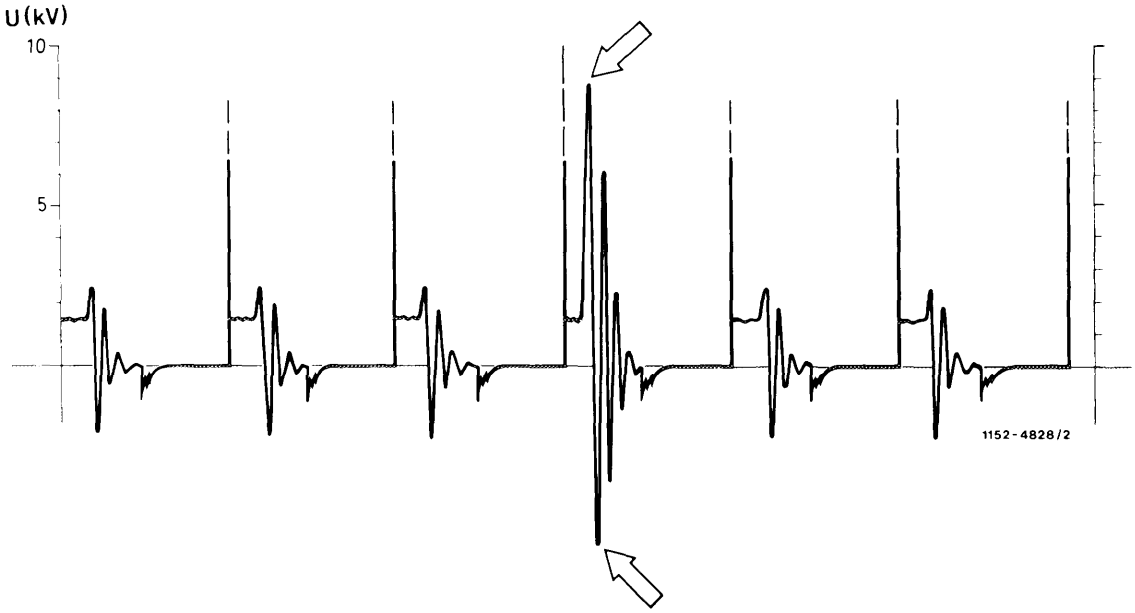

Image selection	Display
Image fault	Required ignition voltage increases by more than 4 kV, shortened ignition line, excessive increase of oscillations in opening section above and below zero line
Visible	After an extended stationary period, start engine with oscilloscope connected, accelerate engine repeatedly and suddenly to approx. 3000/min
Cause	Fuel-air mixture too lean
Remedy	Check injection valve and renew, if applicable

Ignition coil – starting voltage

good

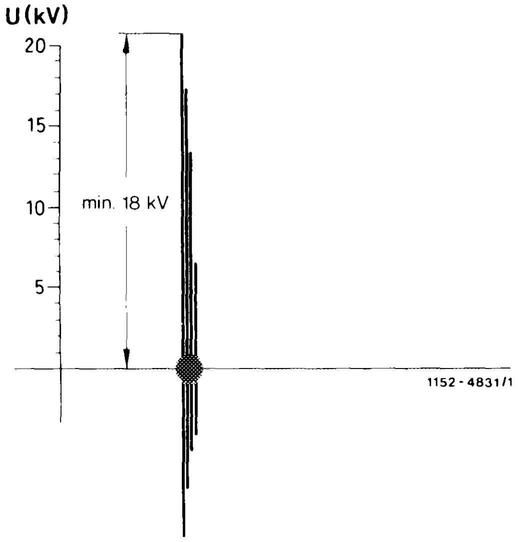

poor

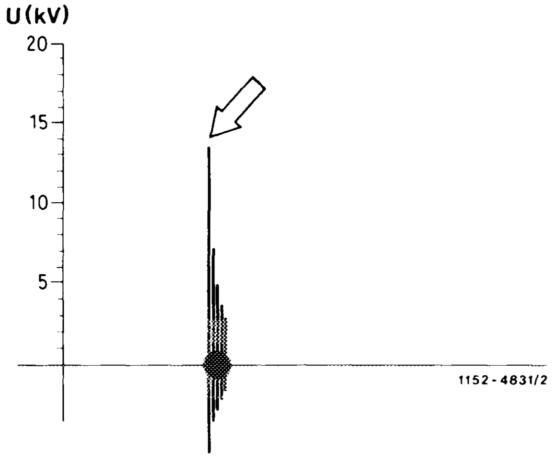

Image selection	Display, superposition
Image fault	Starting ignition voltage below 18 kV
Visible	Starter speed
Cause	Weak battery, resistance in primary circuit, primary resistance is not bridged, ignition coil defective
Remedy	Test battery, charge, test voltage drop battery – ignition coil, perform separate ignition coil and capacitor test
Note	Pull high voltage ignition cable No. 4 from distributor cap

Ignition coil – reserve voltage

good

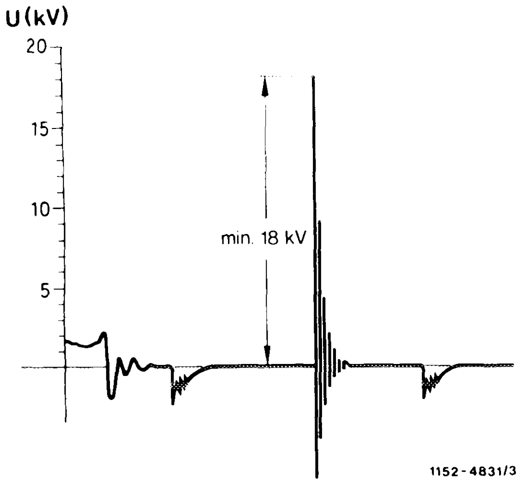

poor

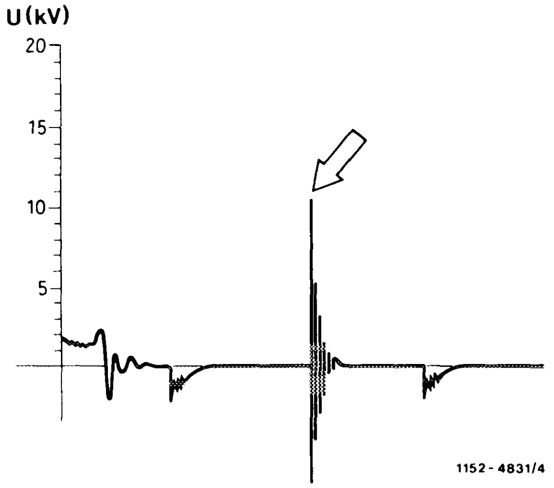

Image selection	Display
Image fault	Ignition coil – reserve voltage below 18 kV
Visible	Idle speed, spark plug connector pulled off
Cause	Resistance in primary circuit too high, dwell angle too small, ignition coil or capacitor defective
Remedy	Test voltage drop battery – ignition coil, perform separate ignition coil and capacitor test

Secondary insulation

good

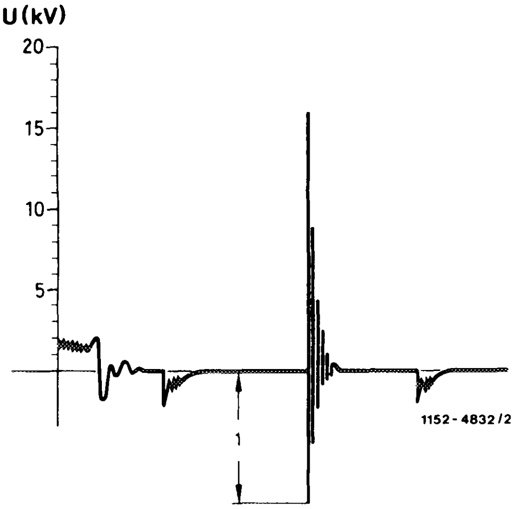

poor

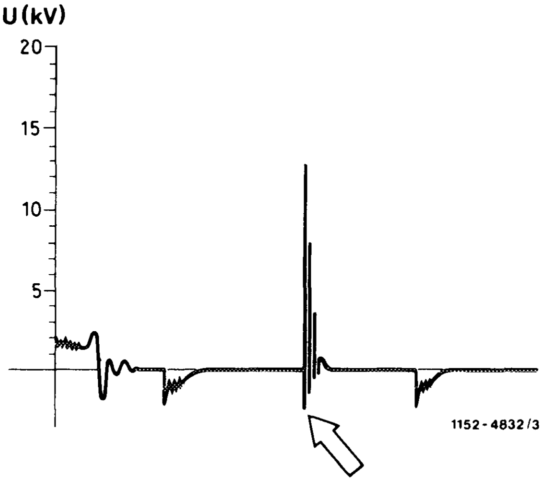

Image selection	Display
Image fault	Insulation line too short or completely missing
Visible	Idle speed, spark plug connector pulled off
Cause	Sparkover caused by cracks, moisture on ignition coil, ignition cable, distributor cap
Remedy	Clean moist and dirty parts, renew torn parts
	[1]) Deflection under zero line min. 1/3 of ignition coil reserve voltage

Ignition coil – separate test

good

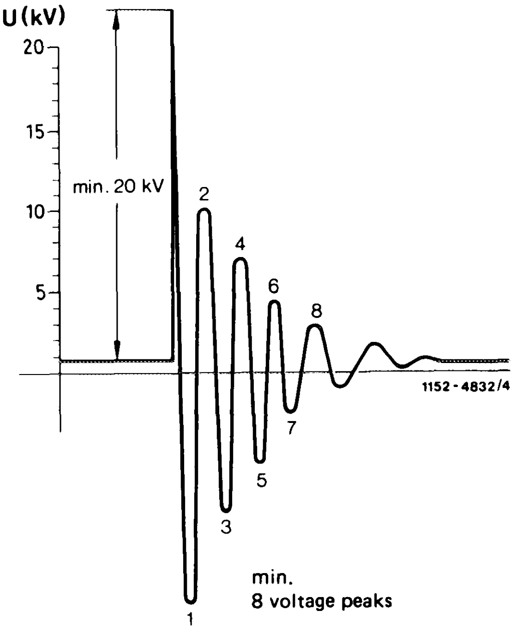

poor

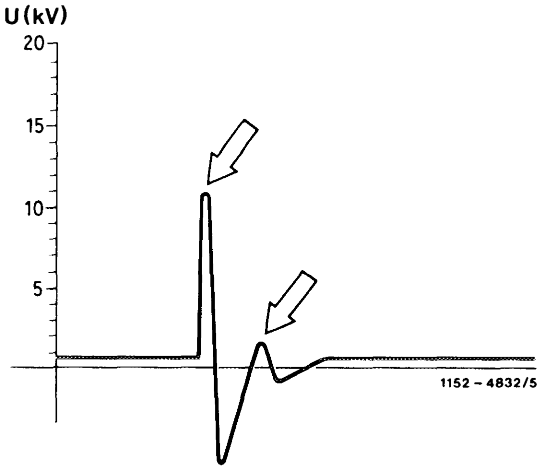

Image selection	Display
Image fault	Voltage below 20 kV, less than 8 voltage peaks
Cause	Interturn interruption, interturn short or insulation damage against ground
Remedy	Renew ignition coil

B. Ignition systems without series resistors

"Go" image – Display (engine speeds up to approx. 2000/min)

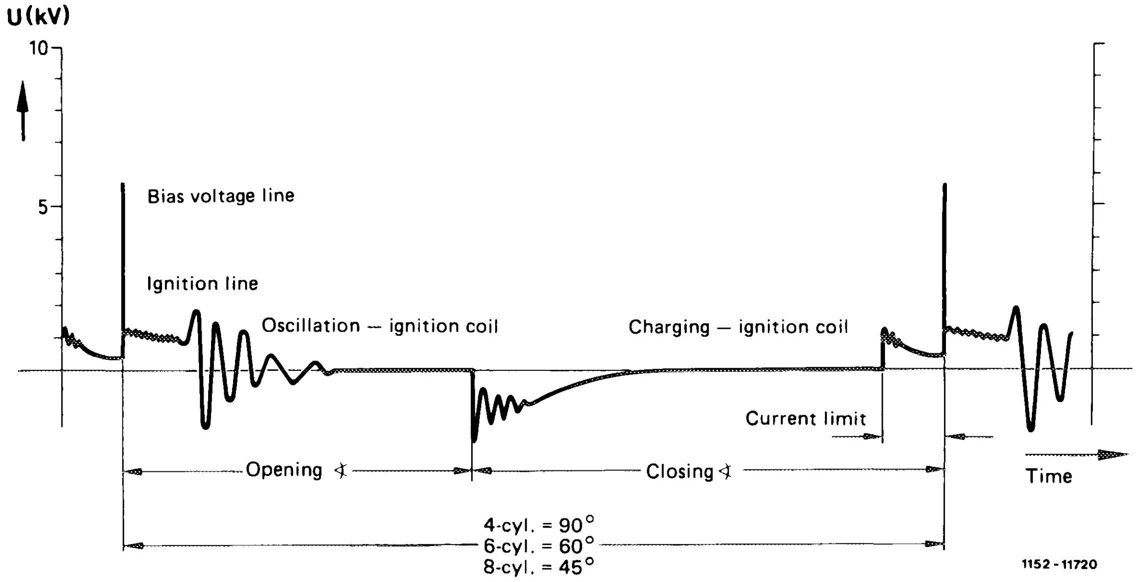

Image selection Display. Image is elongated in horizontal direction

"Go" image – Superposition (engine speeds up to approx. 2000/min)

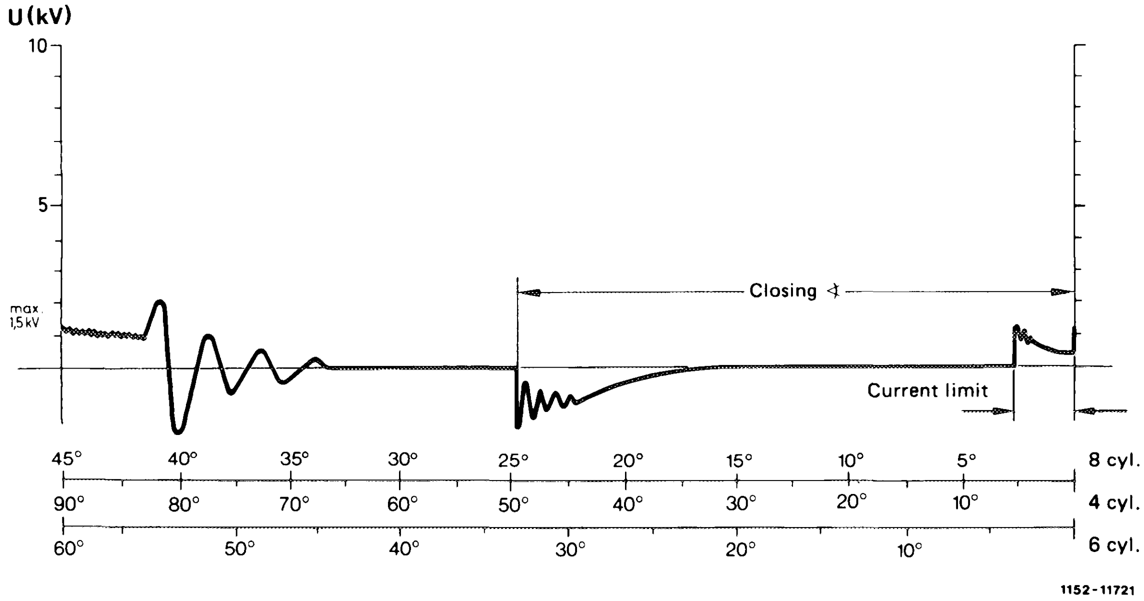

Image selection Superposition. For this purpose set begin and end of ignition procedure at left and right on calibration line

"Go" image – Display (engine speeds above approx. 2000/min)

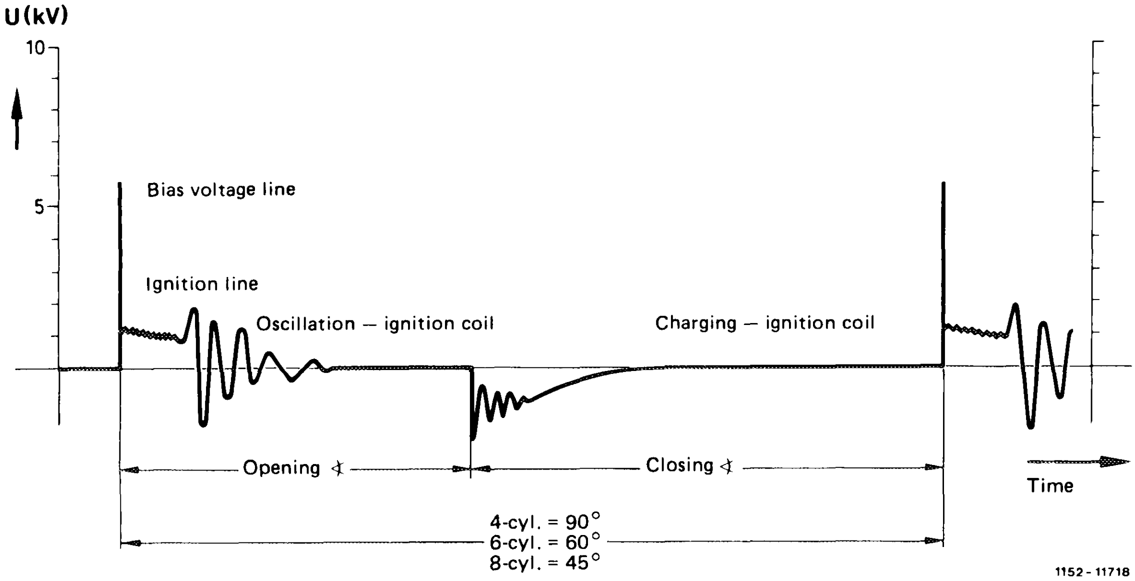

1152 - 11718

Image selection Display. Image is elongated in horizontal direction

"Go" image – Superposition (engine speeds above approx. 2000/min)

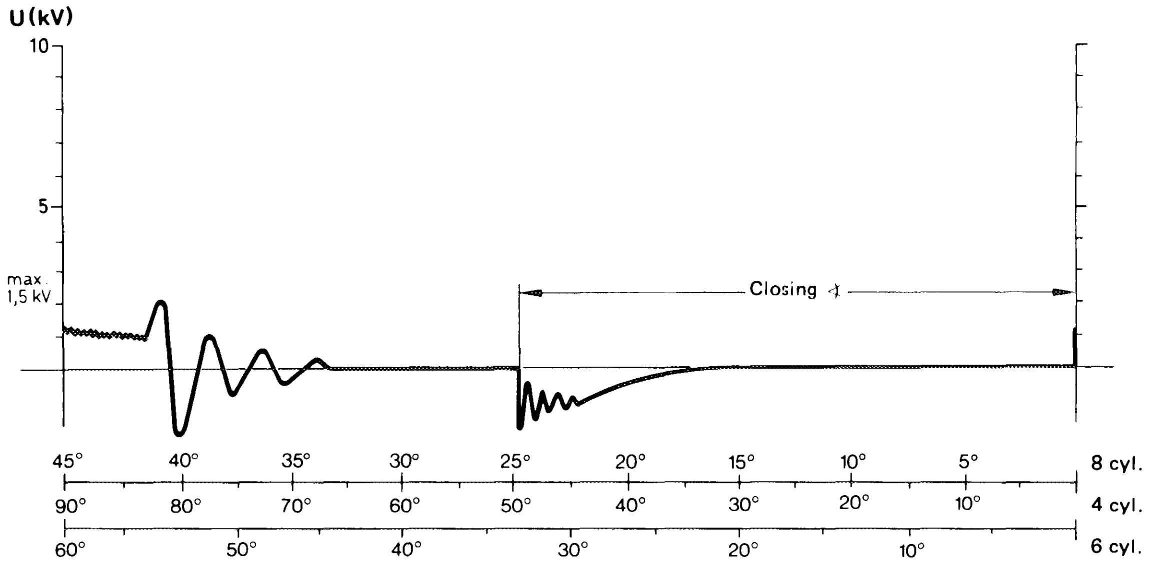

1152 - 11719

Image selection Superposition. For this purpose set begin and end of ignition procedure at left and right on calibration line

Activation point of ignition line too high, but remaining constant

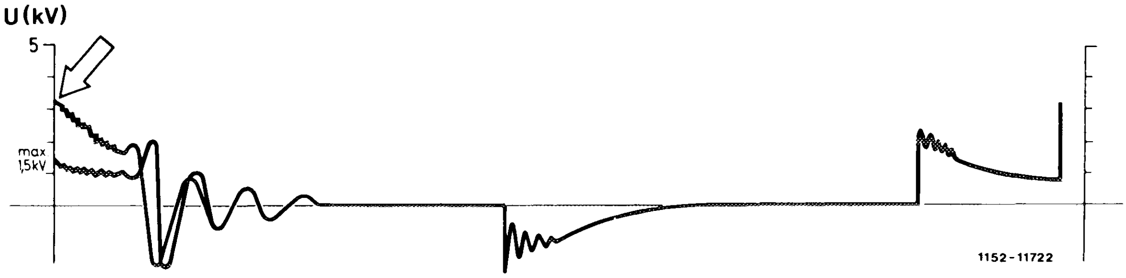

Image selection	Superposition
Visible	Idle speed, on one or several cylinders

Image selection	Display
Image fault	Activation point of ignition line above 1.5 kV
Visible	Idle speed on one or several cylinders
Cause	Ohmic resistance too high at secondary end, caused by spark plug connector, distributor cap, ignition cable, distributor rotor, spark plug
Remedy	Renew parts on which ohmic resistance is too high (use ohmmeter)

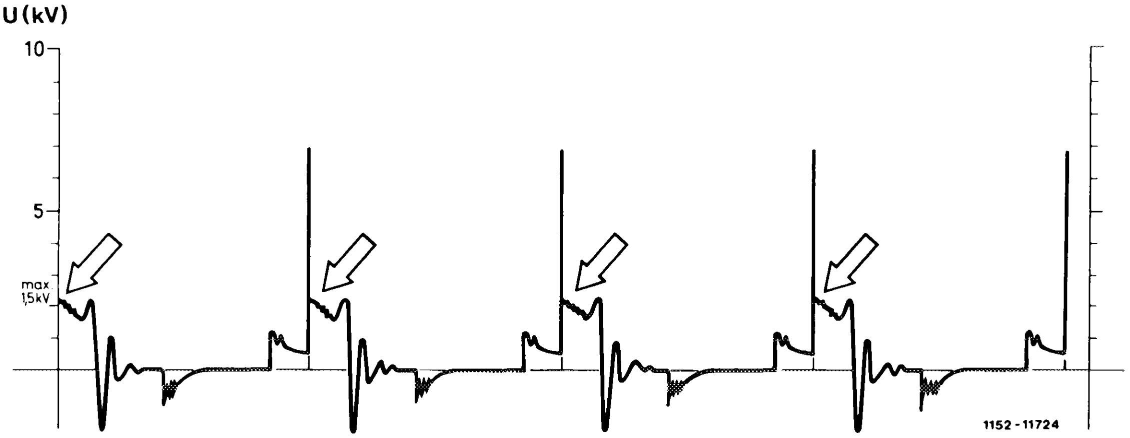

Image selection	Display
Image fault	Activation points of ignition lines above 1.5 kV
Visible	Idle speed on all cylinders
Cause	Ohmic resistance too high at secondary end, caused by distributor rotor, distributor cap or high voltage cable No. 4 with plug
Remedy	Renew parts on which ohmic resistance is too high (use ohmmeter)

Required ignition voltage

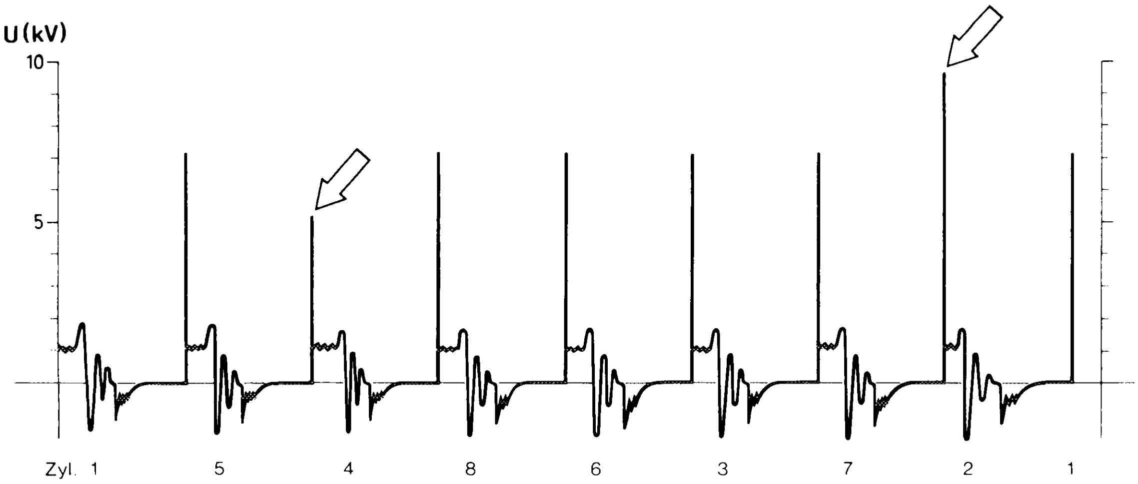

1152-4827/2

Image selection	Display
Image fault	Cylinder 4 bias voltage line too low – ignition line longer Cylinder 2 bias voltage line too high – ignition line shorter
Visible	Liable to occur at all speeds with or without engine load
Cause	Cylinder 4 spark plug – electrode gap too small, fuel-air mixture too rich, compression losses Cylinder 2 spark plug – electrode gap too large, fuel-air mixture too lean, additional spark gap at secondary end
Remedy	Bias voltage line too low: adjust spark plug – electrode gap, test cylinder for leaks Bias voltage line too high: adjust spark plug – electrode gap, test distributor cap, spark plug connector, ignition cable and spark plug for interruption (use ohmmeter)

Jumping activation point of ignition line

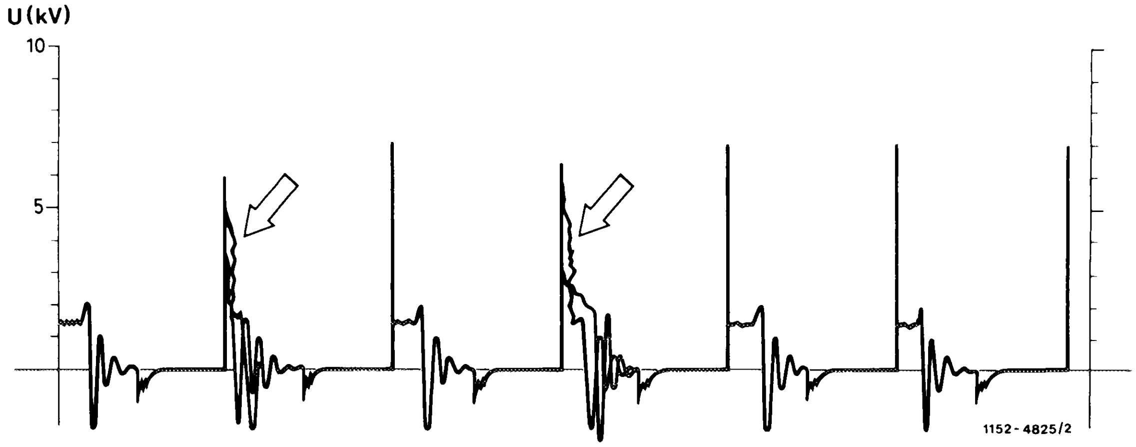

Image selection	Display
Image fault	Activation point of ignition line changes, jumps
Visible	Liable to occur at all speeds with or without engine load
Cause	Spark plug sooted, oiled up, burnt down, insulation damage on spark plug connector
Remedy	Clean or renew spark plug, renew spark plug connector

Required ignition voltage, sudden, short acceleration

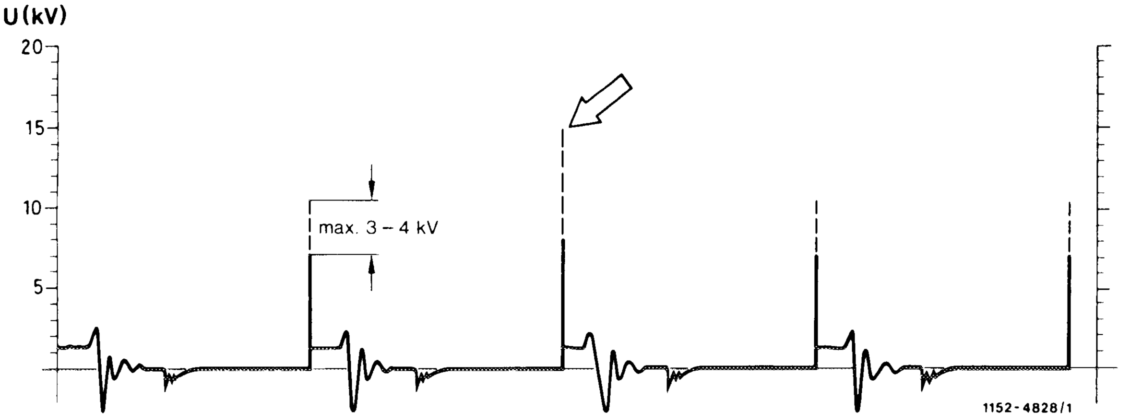

Image selection	Display
Image fault	Required ignition voltage increases by more than 4 kV
Visible	Accelerate engine repeatedly and suddenly to approx. 3000/min
Cause	Spark plug — electrode gap too large
Remedy	Adjust spark plug — electrode gap, renew spark plug, if applicable

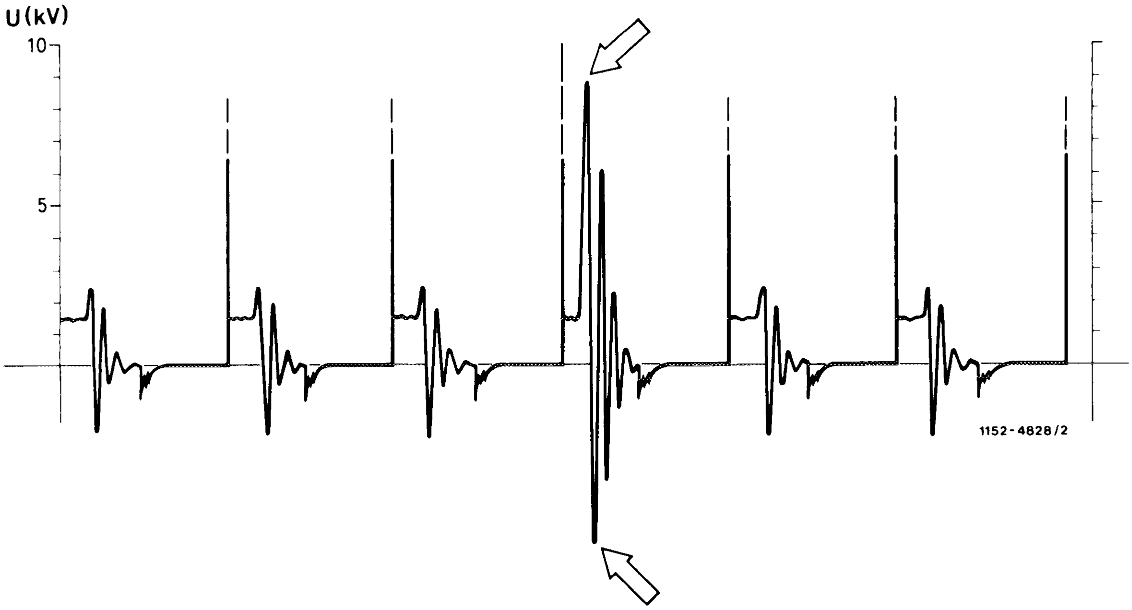

Image selection	Display
Image fault	Required ignition voltage increases by more than 4 kV, shortened ignition line, excessive increase of oscillations in opening section above and below zero line
Visible	After an extended stationary period, start engine with oscilloscope connected, accelerate engine repeatedly and suddenly to approx. 3000/min
Cause	Fuel-air mixture too lean
Remedy	Check injection valve and renew, if applicable

Ignition coil – separate test

good

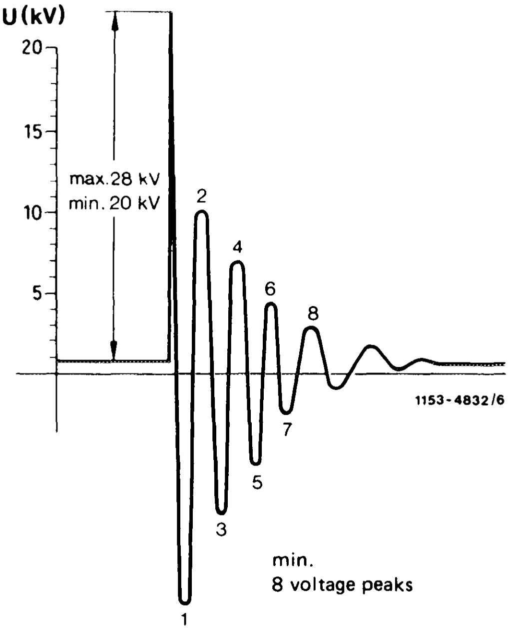

poor

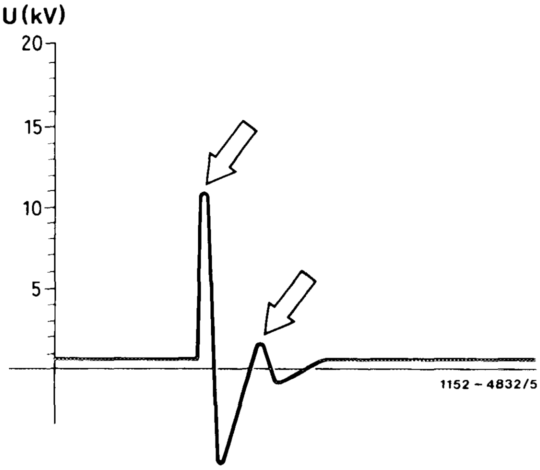

Image selection	Display
Image fault	Voltage below 20 kV, less than 8 voltage peaks
Cause	Interturn interruption, interturn short or insulation damage against ground
Remedy	Renew ignition coil
Note	Not above 28 kV, since otherwise ignition coil will be initially damaged

15–510 Removal and installation of ignition distributor

Job No. of flat rates or standard texts and flat rates data 15–130.

Note

Rotate crankshaft at central bolt at front (socket wrench element 27 mm) in engine direction of rotation only.

Removal

1 Remove distributor cap, cable plug connections and vacuum lines.

2 Set engine on ignition TDC of 1st cylinder. Make sure that the markings on distributor rotor and on distributor housing are in alignment.

3 Needle on timing housing cover should also be above TDC mark of vibration damper.

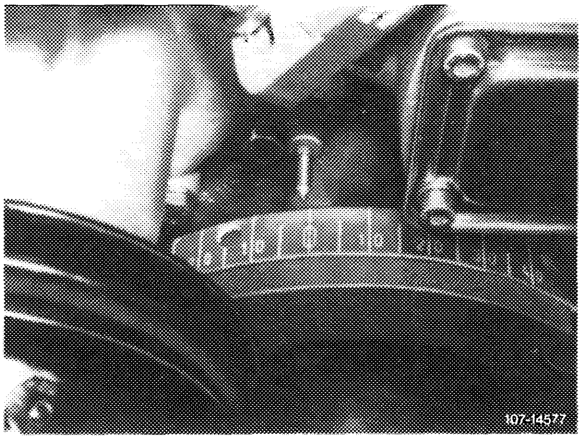

4 Unscrew ignition distributor fastening and remove ignition distributor.

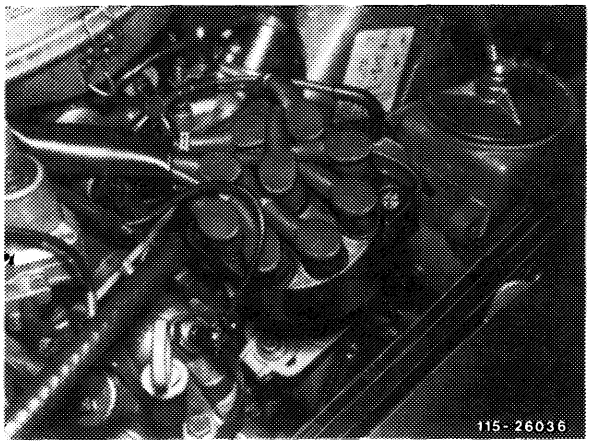

Installation

5 For installation proceed vice versa. Pay special attention to ignition TDC of 1st cylinder and to markings on distributor housing and vibration damper.

6 Adjust ignition timing (15–501).

15–528 Notes concerning jobs on breakerless transistorized ignition system

A. General information

Increased demands with regard to the ignition systems of modern engines and the desire to eliminate maintenance and service requirements resulted in the use of electronic ignition systems as standard equipment. As a rule, the ignition capacities of electronic systems are higher than those of conventional systems; additional increases in efficiency are indicated. As a result, electronic ignition systems are entering a performance range where contact with voltage-carrying components or terminals may be dangerous to life.

For this reason, strictest attention must be paid to the safety rules described below when working on breakerless transistorized ignition systems:

- Persons with heart stimulators should not work on such ignition systems.

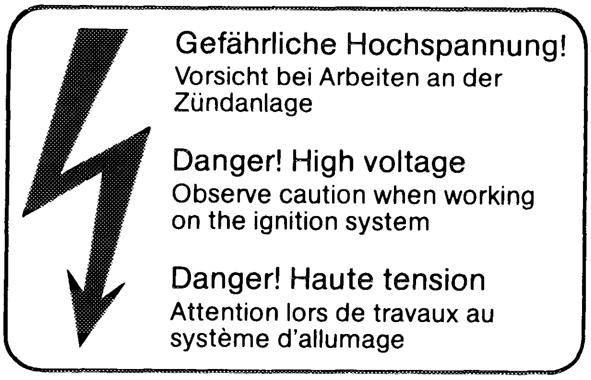

Gefährliche Hochspannung!
Vorsicht bei Arbeiten an der Zündanlage

Danger! High voltage
Observe caution when working on the ignition system

Danger! Haute tension
Attention lors de travaux au système d'allumage

Information label in engine compartment

1154-9352

- At starting speed or with engine running do not touch and pull off any of the components of an ignition system.
- Perform assembly jobs on ignition system or connect and disconnect transmitters on ignition cables only with engine stopped and ignition switched off.
- Do not install adapters or built-in transmitters which are metallically bright on outside into ignition cables, e.g. cylinder 1.

- Prior to working at starter speed, e.g. for checking compression pressure or prior to rotating engine e.g. for checking pressure loss, switching off ignition and pulling green control line from switching unit or for plugging protective plug, part No. 102 589 02 21 00 on diagnosis socket.

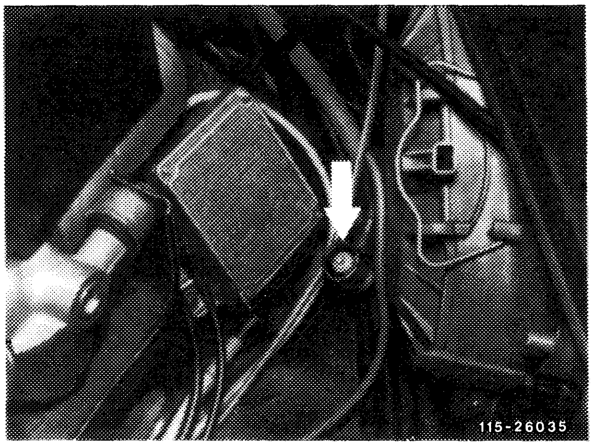

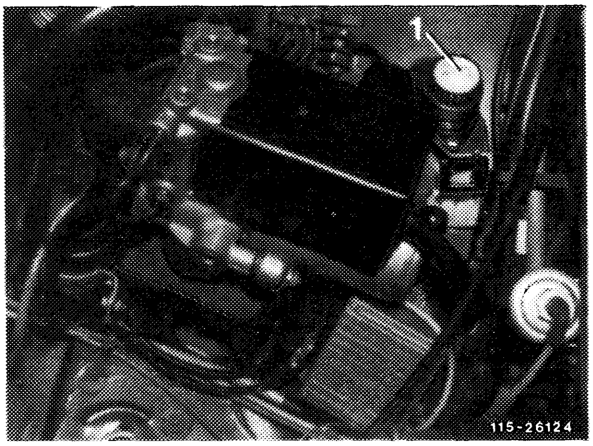

B. Notes concerning prevention of damage on ignition system

- Do not connect suppressor capacitor or test lamp on terminal 1 of ignition coil.
- Do not connect terminal 1 and 15 of ignition coil short against ground, e.g. as a protection against burglars.
- Install original components of ignition system only.
- Do not operate ignition system at starter speed without completely connected ignition harness.
- At starting speed or with engine running, do no longer make tests such as holding ignition cable 4 at some distance from ground (metal), pulling a spark plug connector or cable 4 out of ignition coil.

- Do not use short-circuit device in engine testers for this ignition system. If the short-circuit device (cylinder comparison) is actuated and the engine stops, the max. possible current will flow through ignition coil and coil may be destroyed.

- During separate ignition coil test use a relevant test adapter to prevent damage to ignition coil.

C. Notes concerning use of testing instruments

- Connect and disconnect voltage transmitter clamp to cable 4 and trigger clamp to cylinder 1 on stationary engine **only** and with ignition switched off.

- To avoid wrong measurements, the trigger clamp should be attached right behind ignition distributor on ignition cable cylinder 1.

- For tapping signals, connect test instruments for measuring engine speed and dwell angle, which cannot be connected to diagnosis socket, to cable connector of switching unit terminal TD and ground or to jack 1 of diagnosis socket and ground only.

A. Transistorized ignition system TSZ 4

Note

This ignition system is widely free of maintenance requirements and guarantees adequate ignition voltage even at max. engine speeds as well as a more accurate adherence to firing point.

Identification: Yellow dot on housing top of switching unit up to production date 930, as well as Bosch No. 0 227 100 001.

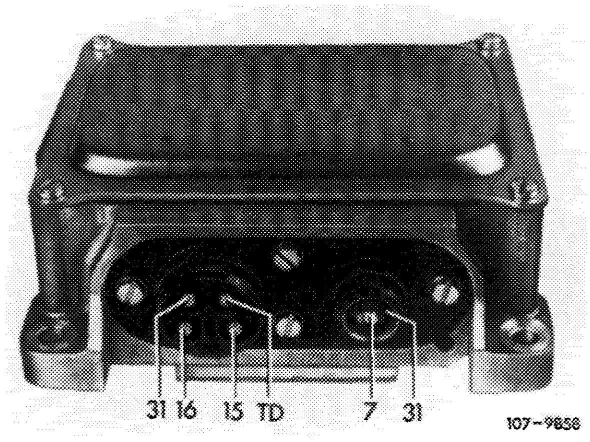

Components of ignition system:

Ignition coil

Design and outer dimensions are similar to a normal high-performance ignition coil, but the winding is different. Its ratio is 1:185 as compared with 1:100 on conventional ignition coils.

Identification: Blue paintwork and a sticker Transistor, Bosch No. 0 221 122 01.

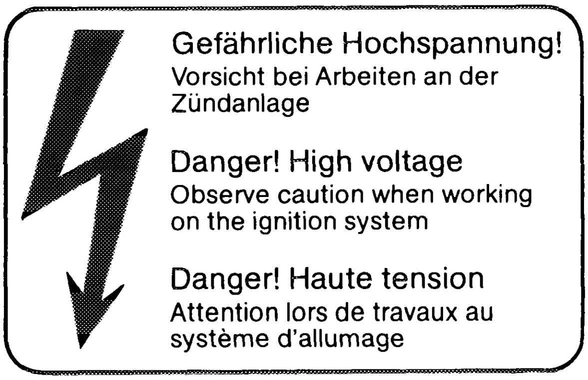

Gefährliche Hochspannung!
Vorsicht bei Arbeiten an der Zündanlage

Danger! High voltage
Observe caution when working on the ignition system

Danger! Haute tension
Attention lors de travaux au système d'allumage

1154-9352

Series resistors

Series resistors 0.4 Ω and 0.6 Ω are assembled like the ignition coil resistors used before: A ceramic body encloses the resistance winding, with extending connections.

A sheet metal clamp is placed around ceramic body for fastening. The color of this clamp provides information about the resistance value, which is additionally punched in as a number.

Color	Code number	Resistance
blue, anodized	0.4	0.4 Ω
metallic, anodized	0.6	0.6 Ω

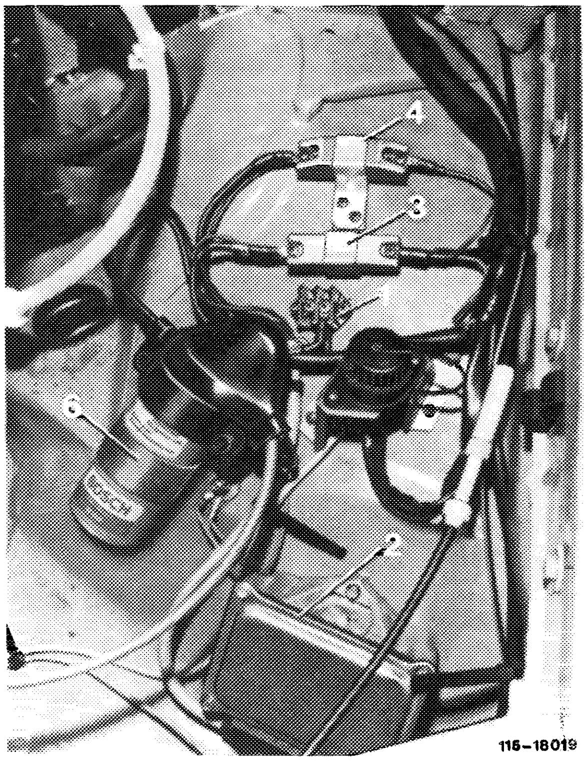

1 Cable connector
2 Switching unit TSZ 4
3 Series resistor 0.6 Ω
4 Series resistor 0.4 Ω
6 Ignition coil

Switching unit

The switching unit comprises several transistors, resistors and other electronic components in a metal housing. This housing protects these components against mechanical damage and splash water and serves simultaneously to dissipate electric heat losses. Contacting on switching unit is by means of a 4-point round plug connection and coaxial plug for activation.

In the event of repairs, exchange complete switching unit only.

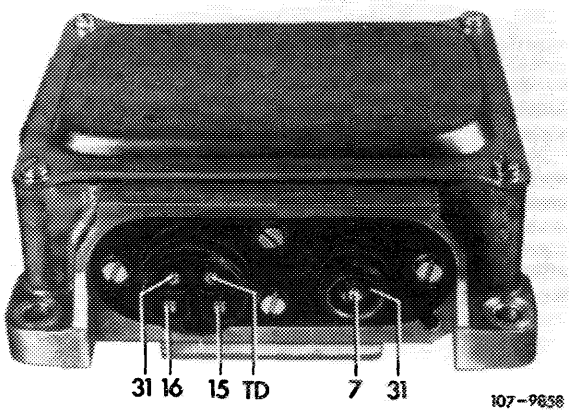

Ignition distributor

Instead of a breaker contact the ignition transmitter is provided with a transmitter section which operates according to the induction principle. Ignition timing (firing point) is adjusted by centrifugal force and vacuum similar to ignition distributors installed up to now.

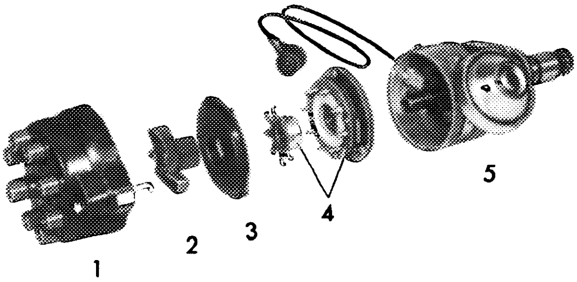

1 Ignition distributor cap
2 Ignition distributor rotor
3 Shield cap
4 Transmitter section
5 Ignition distributor housing

Operation of transmitter section

A rotor with its number of teeth corresponding with **number of cylinders** on engine, generates during its rotation a change of magnetic flux per tooth in a magnetic field established by a permanent magnet. As a result, a control voltage (0.3 V – 100 V) with a steep change from a positive to a negative half wave is established in the induction coil located in magnetic field, with its magnitude depending on engine speed. This steep change of polarity of control voltage is used, following zero passage, for impulse forming, impulse amplification and interruption of primary current in switching unit.

If the primary current is interrupted, the ignition voltage is induced in secondary winding of ignition coil. The dwell angle control in switching unit adapts the current flow time of the primary current to the engine speed, that is, at increasing speed the dwell angle will also increase so that adequate ignition voltage is assured also in upper speed range.

B. Transistorized ignition system without series resistors TSZ 8 z

Starting September 1981 the 8-cylinder engines of the standard version and starting model year 1982 of the national versions are provided with an ignition system without series resistors. This breakerless transistorized ignition system TSZ 8 z without rest potential differs from the ignition system of the 4- and 6-cylinder engines by a higher ignition capacity (identified by a green information label on ignition coil and on switching unit).

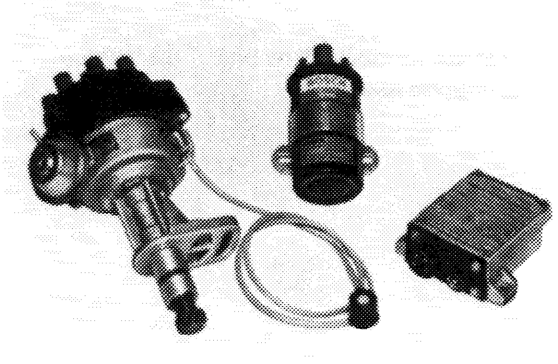

115–21387

Components of ignition system:

Ignition coil

The ignition coil is adapted to TSZ switching unit and designed for a higher ignition capacity.

Identification: Green information label, Bosch No. 0 221 118 329, DB part No. 000 158 45 03.

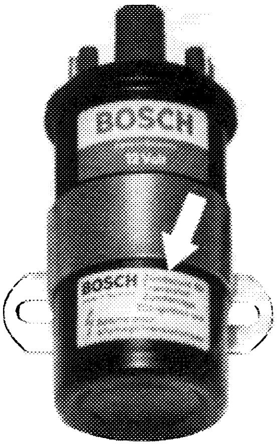

115 – 21515

Different characteristics with regard to former ignition coils:

1. Safety plug in cap of ignition coil.
2. A higher dome.
3. Cable connection on terminal 1 with thread M 5.
4. Cable connection on terminal 15 with thread M 6.

The cover of the ignition coil has a 5.5 mm opening (arrow) which is closed with a plug. This plug is released if a defective final stage in switching unit results in overpressure under influence of the considerable heat developed. To prevent uncontrolled emergence of the plug or the sealing compound out of ignition coil, the ignition coil is provided with a cap.

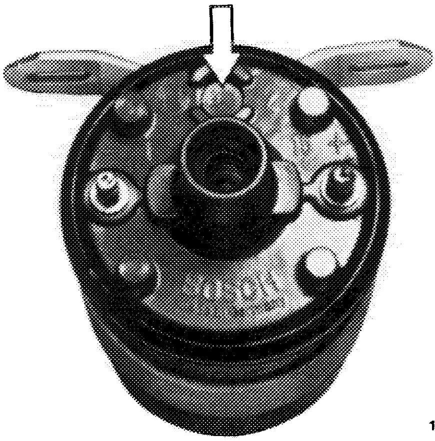

115–21386

Never replace ignition coil by one of the ignition coils used up to now.

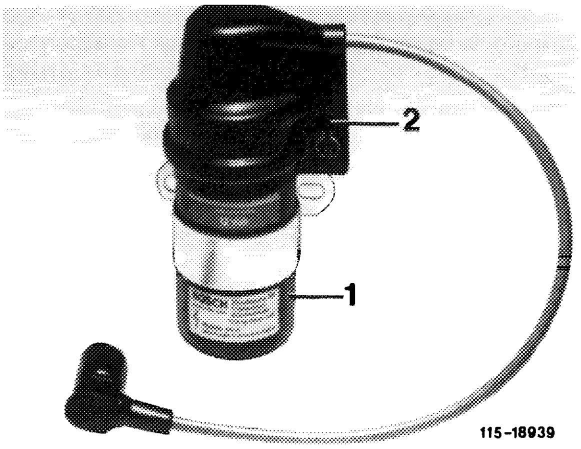

115–18939

Ignition distributor

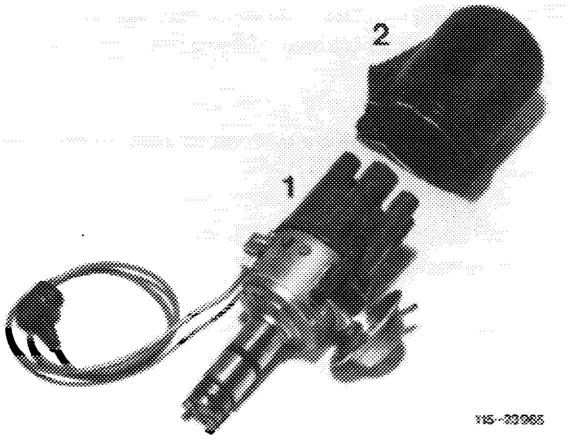

115-33965

This ignition distributor with inductance transmitter corresponds in principle to the version already known.

The green control line from distributor to switching unit is a single-core line. The shielding is used as a second line.

The distributor rotor has a suppressor resistor of 1 kΩ (code number R 1, on distributor rotor).

A suppressor resistance of 1 kΩ per cylinder is integrated in ignition distributor cap.

Ignition harness

The partially shielded spark plug connectors and offset distributor plugs are designed for the higher ignition voltage.

A suppressor resistor of 1 kΩ is installed in spark plug connectors.

They can be screwed off (threads M 3).

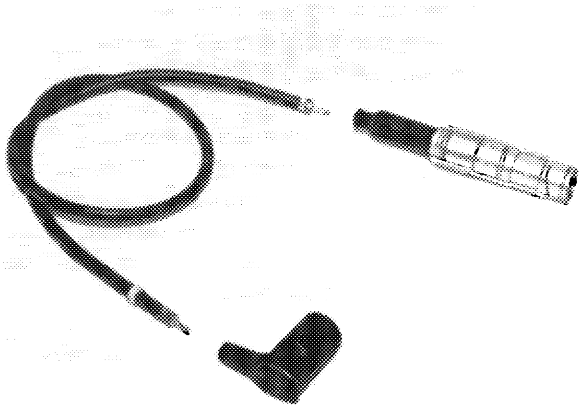

115-18940/1

Switching unit

Connections are similar to the version already known.

Identification: Green sticker (arrow), Bosch No. 0 227 100 042, DB part No. 002 545 26 32.

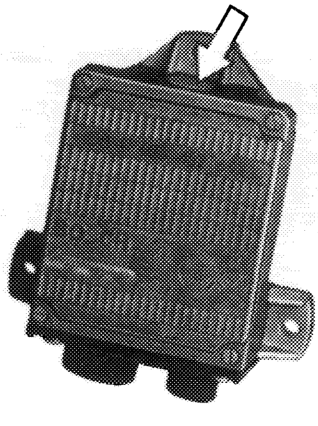

115-21389

This switching unit has been given new, special electronic components (control IC) with the following functions:

1. Limitation of primary current; as a result, elimination of series resistors.
2. Dwell angle control at varying battery voltage and engine speed by max. primary current.
3. Cutout of rest potential; no primary current will flow with ignition switched on and engine stopped.

Operation of switching unit

The max. primary current of the ignition coil is no longer determined by series resistors, but by a current limitation in switching unit. This current limitation is made after the max. possible primary current has been attained.

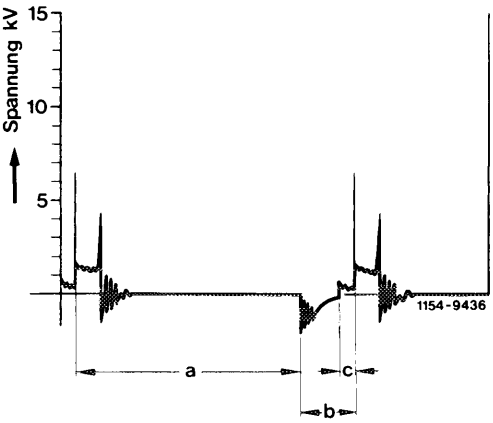

a Opening angle
b Dwell angle
c Current limitation

The current limitation is shown on oscilloscope at idle speed. The current limitation is no longer seen as from an engine speed of approx. 2000/min.

The optional output of the ignition system is attained by dwell angle control in switching unit. The dwell angle is regulated in possible range in such a manner that approximately the same primary current is always obtained in any operating condition, that is at different battery voltages and engine speeds.

As a result of the elimination of the series resistors the primary current will be switched off via the switching unit, with the engine stopped and the ignition switched on (rest potential cutout). The primary current is switched on only after a given impulse sequence from transmitter in ignition distributor.

The revolution counter in instrument cluster is connected to terminal TD, as before.

A. Transistorized ignition system TSZ 4

Test values

Voltages

Battery	Rest potential (ignition switched on)		approx. 12 V
	Starting voltage (starter actuated)		approx. 10 V
Input voltage series resistor (0.4 Ω)			approx. 12 V
Ignition coil	Terminal 1 and ground		0.5–2.0 V
	Terminal 15 and ground		approx. 4.5 V
Switching unit	Round plug 4-pole	Terminal 15 and terminal 31	battery voltage
		Terminal 16 and terminal 31	0.5–2.0 V

Resistors (test values with reference to +20 °C)

Ignition coil	primary (terminal 1 and 15)	0.33–0.46 Ω
	secondary (terminal 1 and 4)	7–12 kΩ
Series resistor	blue, anodized	0.4 ± 0.05 Ω
	metallic, anodized	0.6 ± 0.05 Ω
Distributor cap (per cylinder)		1 kΩ
Distributor rotor, spark plug connector		1 kΩ
Ignition distributor-transmitter section	Transmitter coil terminal 7 and terminal 31	600 ± 100 Ω
	Insulation terminal 7 and ground terminal 31 and ground	∞ or ≧ 200 kΩ
Dwell angle at	approx. 1500/min	25–39°
	approx. 5000/min1)	33–40°

1) Perform dwell angle test at 5000/min only in the event of complaints about misfiring at high engine speeds.

Conventional testers

Voltmeter, ohmmeter, dwell angle measuring instrument

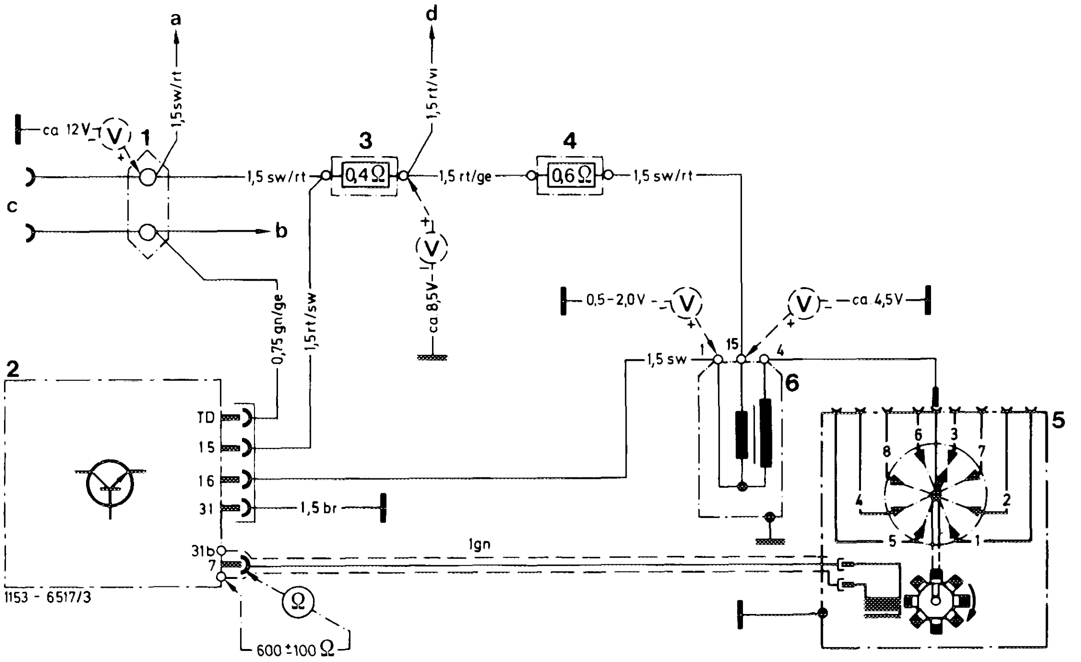

Wiring diagram breakerless transistorized ignition TSZ 4

1 Double cable connector
2 Switching unit
3 Series resistor 0.4 Ω
4 Series resistor 0.6 Ω
5 Ignition distributor with transmitter section
6 Ignition coil

a Ignition starter switch terminal 15
b Instrument cluster, revolution counter
c Diagnosis socket
d Terminal 16 starter

Line colors
br = brown
ge = yellow
gn = green
rt = red
sw = black

Note

During all jobs on ignition system, refer to "Notes concerning jobs on breakerless transistorized ignition system" (15–528).

Visual checkup

Check electric screw connections and plug connections of ignition system for tight seat.

Gefährliche Hochspannung!
Vorsicht bei Arbeiten an der Zündanlage

Danger! High voltage
Observe caution when working on the ignition system

Danger! Haute tension
Attention lors de travaux au système d'allumage

1154-9352

Testing voltages on battery

Rest potential

Switch on ignition and measure voltage on battery.

Nominal value: approx. 12 volts

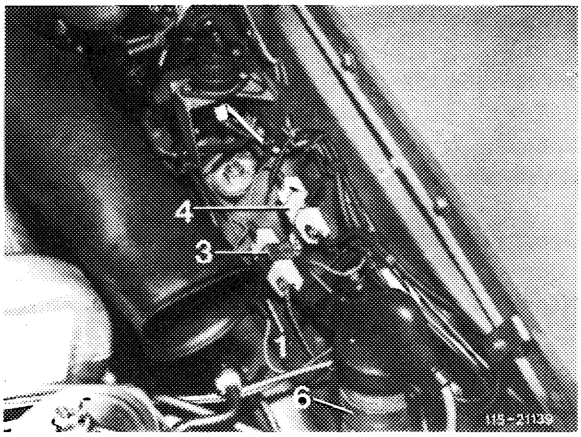

Model 107

Starting voltage

Pull high voltage ignition cable 4 out of distributor cap and connect to ground. Operate starter while reading voltage.

Nominal value: approx. 10 volts

Voltage test on ignition system

Note: On this ignition system, with ignition switched on and engine stopped, a primary current of approx. 8 amps will be constantly available.

1 Input voltage on series resistor 0.4 Ω
Cable color black/red:

Nominal value: approx. 12 volts

2 Voltage on ignition coil

Terminal 15 and ground = approx. 4.5 volts
Terminal 1 and ground = 0.5–2.0 volts

a) If the value on terminal 1 is exceeded, the switching unit is defective and must be replaced.

b) If the value is obtained on terminal 1, but there is no ignition voltage (ignition spark) induced while starting, test transmitter section in ignition distributor and secondary winding of ignition coil.

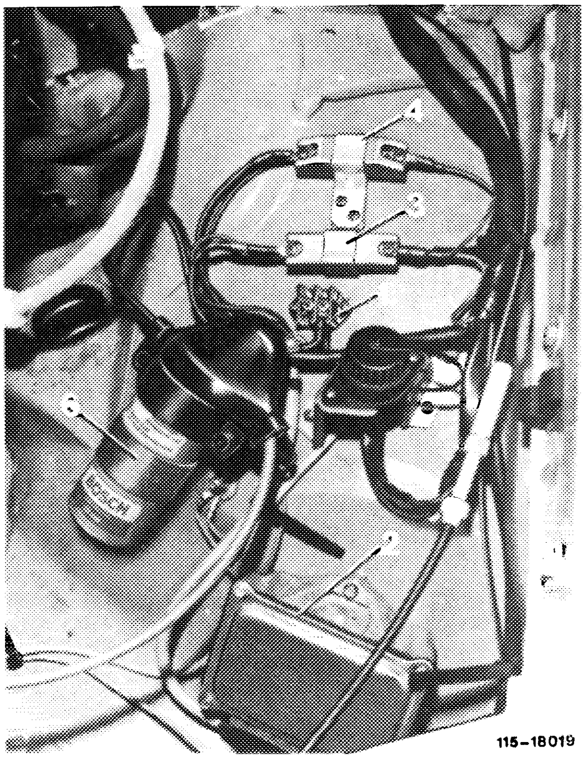

Model 126

Bridging of series resistance

Switch on ignition. Pull high voltage ignition cable 4 from distributor cap and connect to ground (metal). Voltmeter at output of resistor 0.4 Ω, cable color red/yellow, connect to ground.

Operate starter and read voltage.

Nominal value: approx. 8.5 volts.

Resistance test

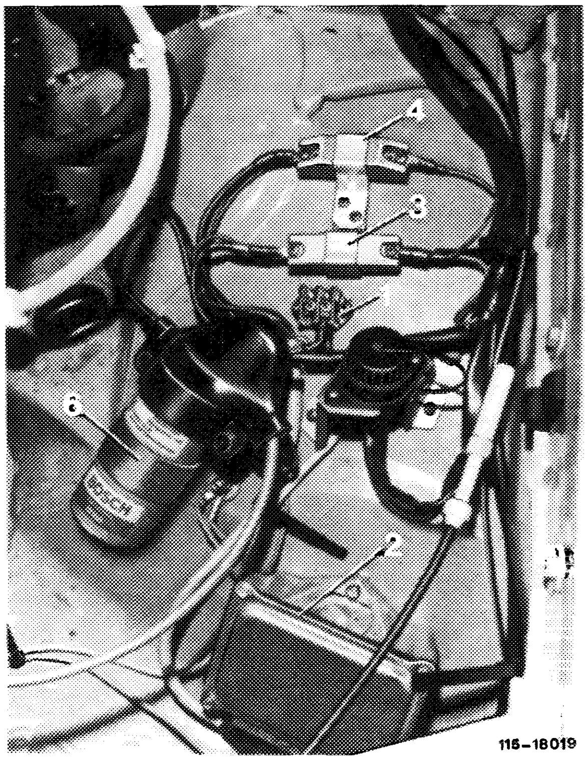

115–18019

Series resistors

Loosen line connection on one connection of resistor about to be tested.

Measure resistance with ohmmeter.

Series resistor	Resistance nominal value at 20 °C
blue, anodized	0.4 ± 0.05 Ω
metallic, anodized	0.6 ± 0.05 Ω

On warmer series resistors, measured values will be slightly higher.

Ignition coil:

Primary winding terminal 1 and terminal 15
= 0.33–0.46 Ω

Secondary winding terminal 1 and terminal 4
= 7–12 kΩ

Testing ignition distributor-transmitter section

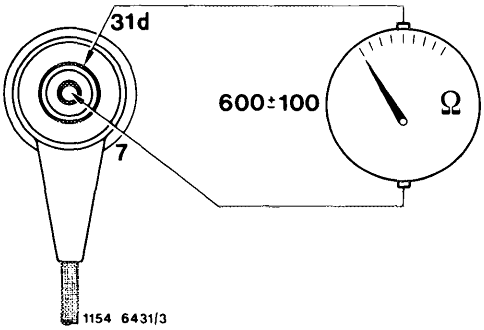

Pull control line of ignition distributor from switching unit and connect ohmmeter.

1 Test transmitter resistance between terminal 7 and 31.

Nominal value: 600 ± 100 Ω

Note: On cold engine, the ohmic value should be in lower half of specified value, on warm engine in upper half.

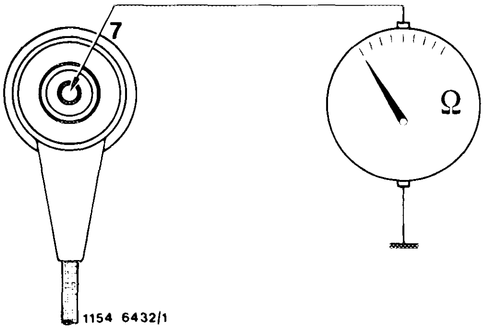

2 Test transmitter coil including control line for ground connection between terminal 7 or 31 and ground.

Nominal value: ∞ or ≧ 200 kΩ

3 Test transmitter section for mechanical damage. Make sure of air gap between rotor and stator.

Note: If a part of transmitter is defective, replace complete ignition distributor.

Testing dwell angle

Note: The dwell angle cannot be adjusted. Testing serves the purpose of checking operation of switching unit (dwell angle control).

Connect dwell angle measuring instrument.

Nominal value at

Engine speed	Dwell angle
1500 ± 50/min	25–39°
5000 ± 50/min [1]	33–40°

[1] Perform test at 5000/min only in the event of complaints about misfiring and high engine speeds.

If this value is not attained when measuring dwell angle, test ignition distributor-transmitter section first. If transmitter section is in order, replace switching unit.

B. Transistorized ignition system without series resistors TSZ 8 z

Test values

Voltages

Battery	Rest potential (ignition switched on)		approx. 12 V
	Starting voltage (starter actuated)		approx. 10 V
Ignition (engine stopped)	Terminal 15 (jack 5 diagnosis socket)		battery voltage
	between terminal 15 and 1 (jack 5 and 4 diagnosis socket)		0 V
	Round plug 4-pole	Terminal 15 and terminal 31	battery voltage
		Terminal 16 and terminal 31	battery voltage

Resistors (test values with reference to +20 °C)

Ignition coil	primary (terminal 1 and 15)	0.3–0.6 Ω
	secondary (terminal 1 and 4)	6–15 kΩ
Distributor cap (per connection)		1 kΩ
Distributor rotor, spark plug connector		1 kΩ
Ignition distributor-transmitter section	Transmitter coil terminal 7 and terminal 3	600 ± 100 Ω
	Insulation terminal 7 and ground terminal 3 and ground	∞ or $\geqq$ 200 kΩ

Dwell angle

Terminal TD at starting speed	5–23°

Conventional testers

Voltmeter, ohmmeter, dwell angle measuring instrument

Note

During all jobs on ignition system, pay attention to "Notes concerning jobs on ignition system" (15–528).

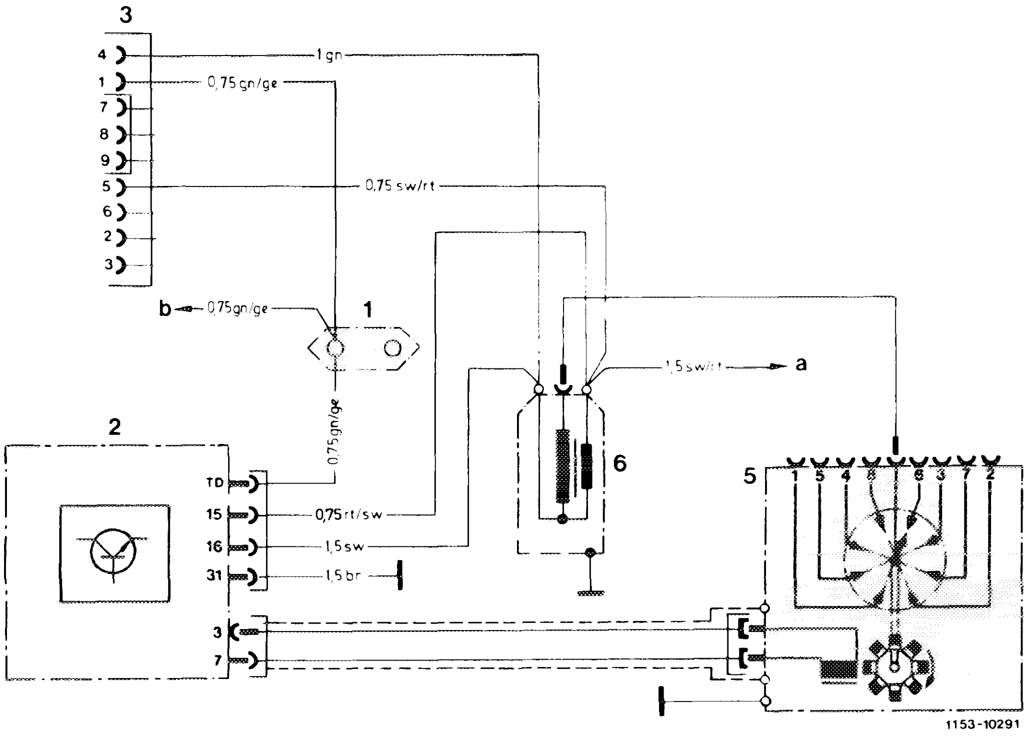

Wiring diagram breakerless transistorized ignition TSZ 8 z without series resistors

1 Line connector
2 Switching unit
3 Diagnosis socket
5 Ignition distributor
6 Ignition coil

a To fuse box, input terminal 15
b To fuel pump relay with rpm limitation

Line colors
br = brown
ge = yellow
gn = green
rt = red
sw = black

Testing

On jack 5 of diagnosis socket, test voltage (terminal 15) against ground. Ignition switched on.

Nominal value: battery voltage

Nominal value correct.	Nominal value wrong.

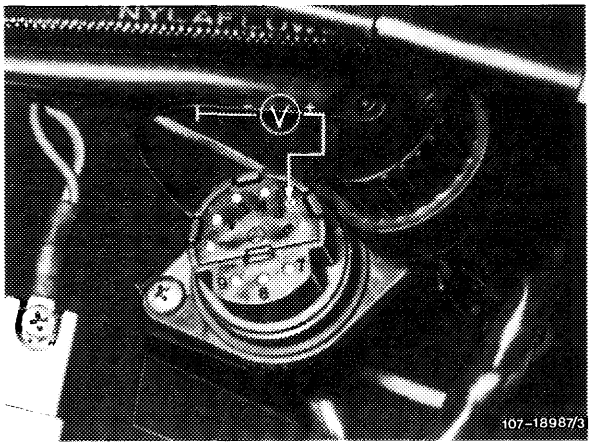

Nominal value wrong:

Test voltage supply via ignition lock.

Test voltage difference between jack 5 and 4 (terminal 15 and 1) of diagnosis socket.

Nominal value: 0 volt

Nominal value correct.	Nominal value wrong (voltage > 0.1 volt). Switch off ignition immediately.

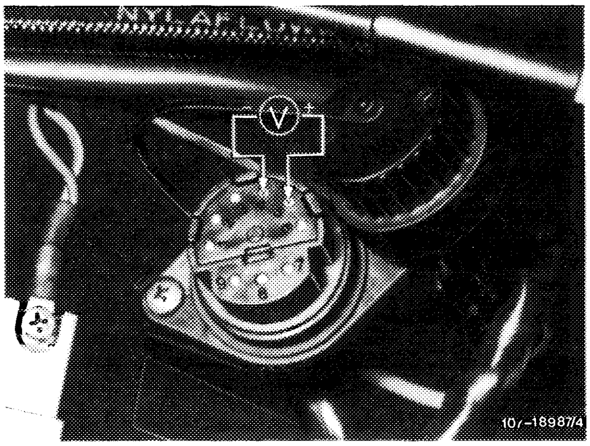

Nominal value wrong:

Renew switching unit.

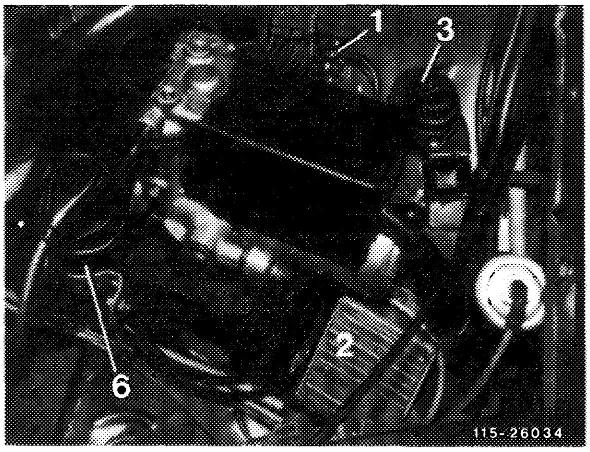

Check plug in ignition coil and test primary resistor of ignition coil (between terminal 1 and 15, 0.3–0.6 Ω).

With plug pushed out or if resistance is wrong, renew ignition coil.

End of test

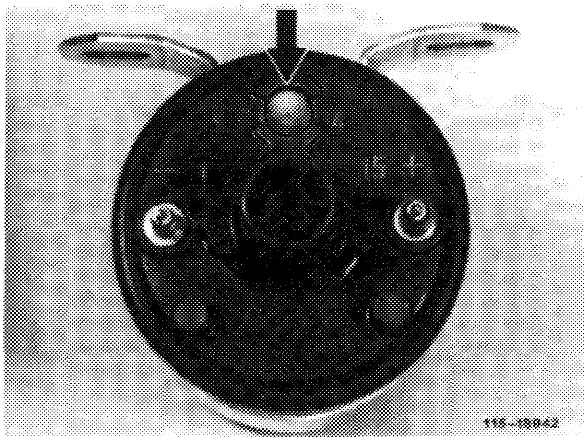

Test dwell angle at starting speed on diagnosis socket or terminal TD.

Nominal value: from 5–23°

Nominal value correct.	Nominal value no readout.	Nominal value above 23°.

End of test

Renew switching unit.

End of test

Test ignition distributor-transmitter section for interruption and interturn short-circuit.

Pull green control line from switching unit.
Test resistance between terminal 7 and 3 with ohmmeter.

Nominal value: 600 ± 100 Ω

Nominal value correct.	Nominal value wrong.

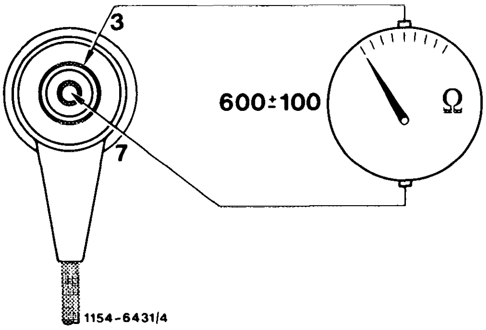

Pull plug connection of green control line from ignition distributor and test with ohmmeter on plugs whether 600 ± 100 Ω are indicated.

If nominal value is attained, renew green control line.

If nominal value is not attained, renew ignition distributor.

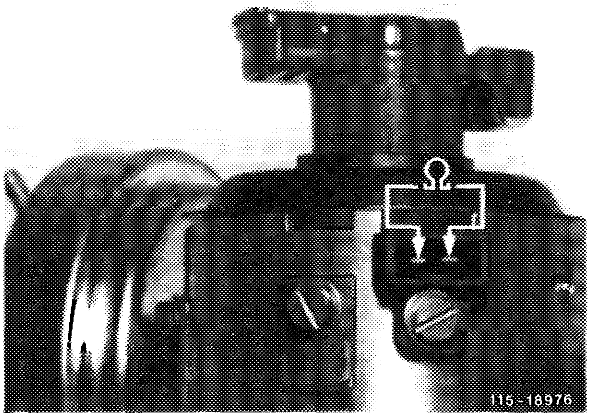

Test ignition distributor-transmitter section for short against ground.

Pull green control line from switching unit. Connect ohmmeter to terminal 3 and to ground, and connect terminal 7 and ground.

Nominal value: ≧ 200 kΩ or ∞.

Nominal value correct.	Nominal value wrong.

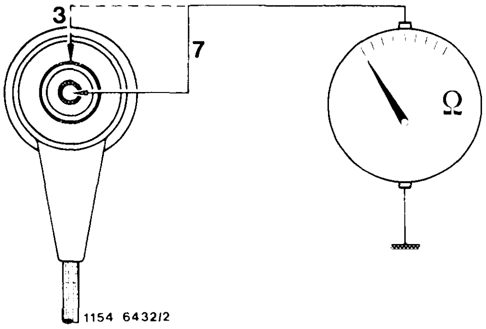

Pull plug connection of green control line from ignition distributor. Test resistance at one of the two plugs on ignition distributor against ground.

Nominal value on both plugs: ≧ 200 kΩ or ∞.

If the nominal value is not attained at a plug, renew ignition distributor.

End of test

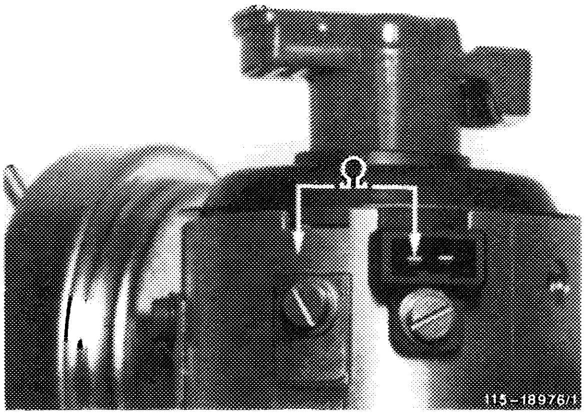

A. Model 107

Oil circuit with air oil cooler next to radiator
Engines 116.960 (except regional version), 117.960.

Oil circuit without air oil cooler
Engines 116.960 AUS J S USA 116.962/964
117.962/964, 117.967 AUS J USA

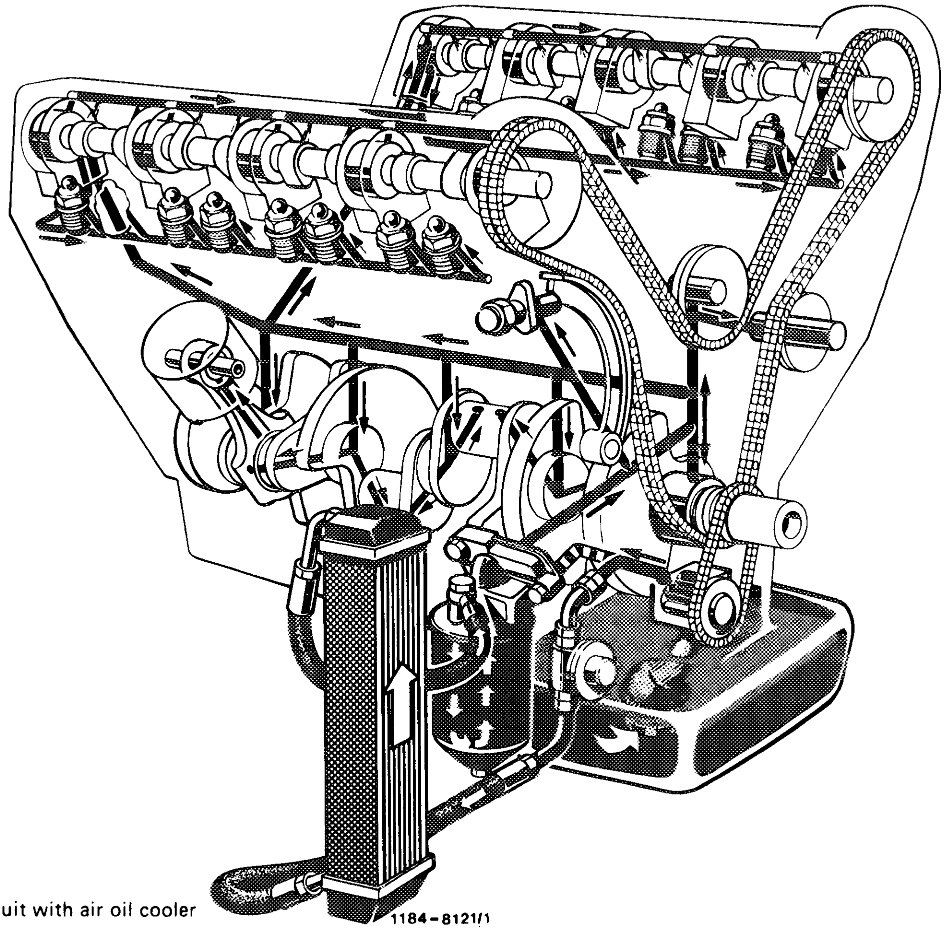

Oil circuit with air oil cooler

Note

The oil circuit is pressure-regulated via the air oil cooler.

B. Model 126

Oil circuit with air oil cooler next to radiator
(version A)
Engines 116.961, 117.961.

Oil circuit without air oil cooler
Engines 116.961 (AUS) (J) (USA) 116.963/965,
117.963/965/968 (AUS) (J) (USA)

Oil circuit with air oil cooler in right-hand wheelhouse
(version B)
Engines 117.968 and special protection vehicles.

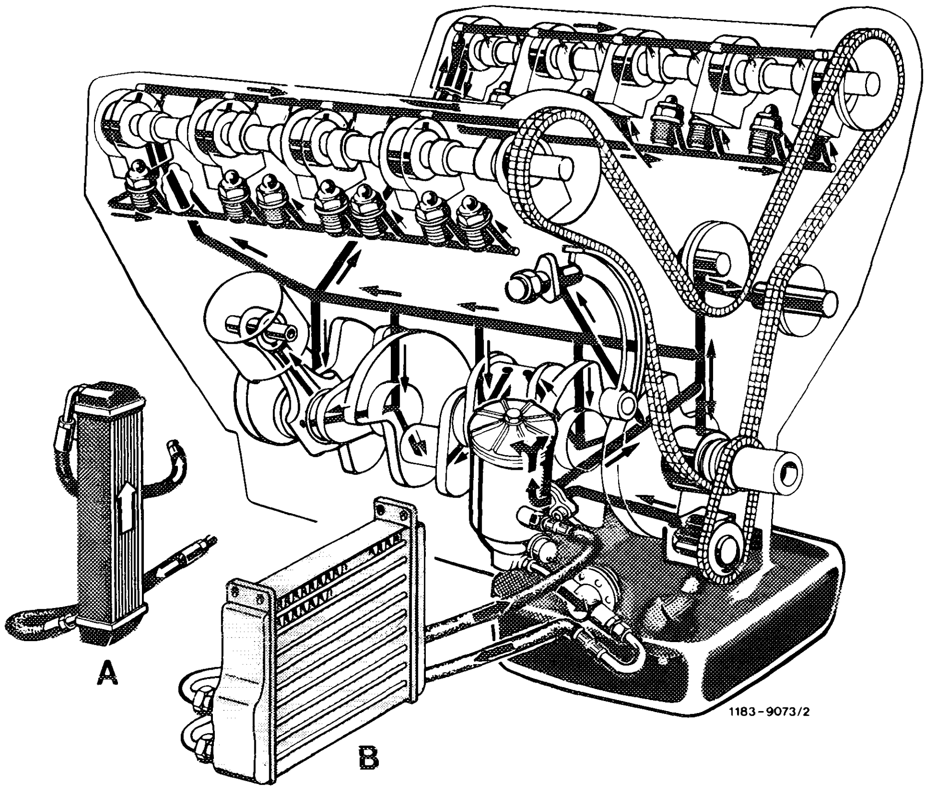

Oil circuit with air oil cooler

Note

The oil circuit via the air oil cooler is regulated by means of a thermostat and a control valve in the oil filter.

Oil pressure and oil pressure indication

At operating temperature, the oil pressure at idle speed may drop to 0.3 bar gauge pressure.

During acceleration, the oil pressure should immediately rise again and should reach a minimum of 3 bar gauge pressure at 3000 rpm.

The oil pressure indication in the instrument cluster is electrically controlled by oil pressure transmitter. The oil pressure transmitter on engines in the model 107 is screwed into the flange (between oil filter lower part and crankcase) and on the engines in the model 126 in the oil filter housing lower part.

The oil pressure transmitter was modified in March 1980 (improved housing seal) and in March 1981 (housing interior ventilation). In the event of repairs due to a fluctuating needle of the oil pressure indicator, install only oil pressure transmitter starting with production code number 3.80 (March 1980). The production code number is stamped into the hexagon screw connection.

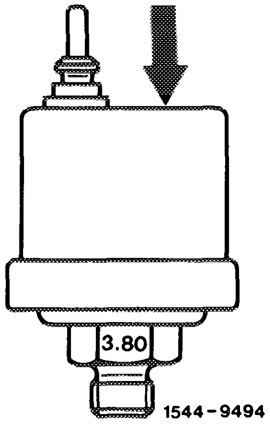

Oil pressure relief valve

The oil pressure relief valve is integrated in the oil pump cover.

At a gauge pressure of 8 bar (up to April 1985) and of 5.5 bar (as of April 1985), the oil from the feed opening (A) shifts the piston (2) against the force of the compression spring (3).

As soon as the control edge of the piston (2) arrives at the return flow opening (B), the oil pressure recedes towards the suction side of the oil pump (arrows).

The resulting control movements of the piston (2) are damped by oil which flows behind the piston into the damping chamber (C) across a flat on the piston (arrow).

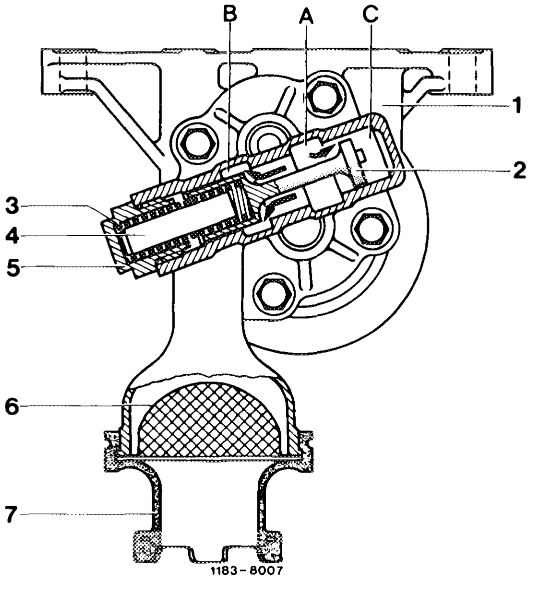

1 Oil pump housing
2 Piston
3 Compression spring
4 Guide pin
5 Plug
6 Strainer
7 Compensating piece
A Feed opening
B Return opening
C Damping chamber

Bypass valve oil filter insert

The bypass valve (3) for the oil filter insert is located in the oil filter flange in the crankcase and leads into the main oil gallery. When the differential pressure between clean and dirty oil filter sides exceeds approx. 4.0 bar, e.g. when the oil filter is severely contaminated, this valve opens and the oil reaches the bearing points in the unfiltered state.

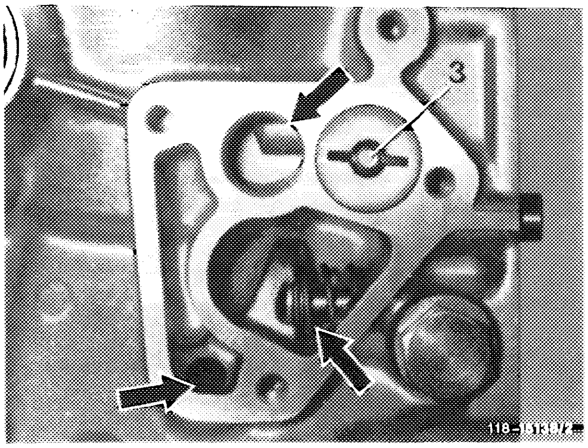

Bypass valve for oil filter insert

20 Valve housing
21 Valve cone
22 Compression spring
23 Circlip

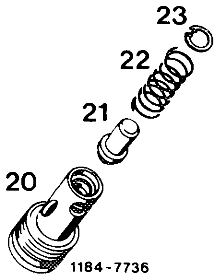

Bypass valve air oil cooler

The bypass valve (2) for the pressure-controlled air oil cooler in the face of the crankcase opens whenever the flow resistance in the air oil cooler exceeds 1.5 bar gauge pressure with cold oil. The oil will then flow directly to the oil filter, bypassing the air oil cooler.

The bypass valve is covered via plug in the timing case cover, or by the timing case cover without plug.

In the event of repairs (e.g. exchange engine) no bypass valve should be used on vehicles without air oil cooler.

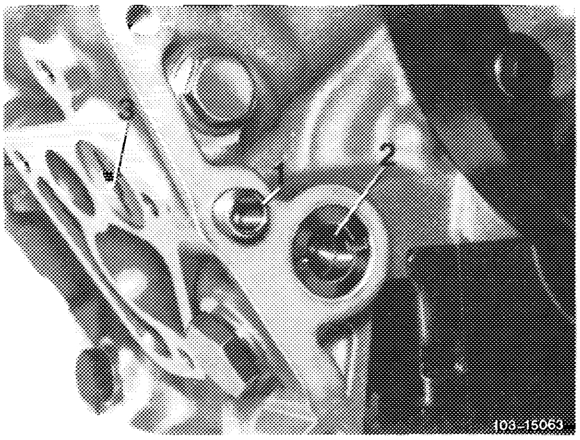

Bypass valve for air oil cooler

16 Valve seat ring
17 Valve cone
18 Compression spring
19 Valve guide

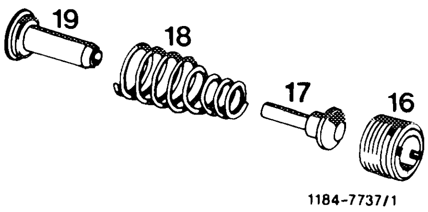

Oil filter and thermostat model 126

The oil filter is designed as a full flow filter. The engine oil flows through the oil filter element (6) from the outside to the inside and continues in a cleaned state via the riser (8) and the duct (b) to the main oil gallery and further to the bearings.

Vehicles with oil cooler:
Starting at an oil temperature of approx. 110 °C, the thermostat (10) starts to move the control valve (11) against the force of the compression spring (16) until the final position is reached at approx. 125 °C.

In the final position, the oil flows via the connection (A), an oil damper and oil hose to the air oil cooler, is cooled down there, returns to the oil filter housing via connection (B) and flows through the oil filter element from the outside to the inside.

Below 110 °C oil temperature, the oil flows in the oil filter via the short-circuit duct.

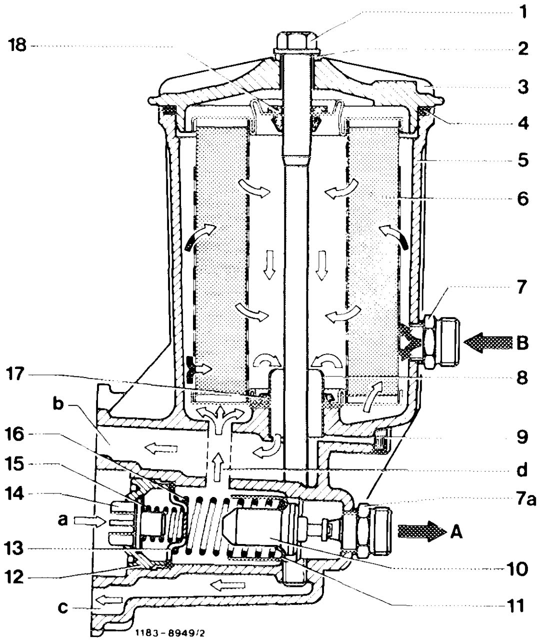

1 Center bolt
2 Sealing ring
3 Oil filter cover
4 O-ring
5 Oil filter housing
6 Oil filter element
7 Screw fitting[1]
7a Screw fitting[1]
8 Riser
9 Connection for electrical oil pressure transmitter
10 Oil thermostat[1]
11 Control valve[1]
12 Valve seat ring return shut-off valve
13 Valve retainer
14 Valve cone return shut-off valve
15 Compression spring
16 Compression spring[1]
17 Seal oil filter element bottom
18 Seal oil filter element top
A Uncleaned oil to the air oil cooler
B Uncleaned oil to the air oil cooler
a From the oil pump
b To the bearings
c Oil return to the sump

[1]) Not applicable on engines without air oil cooler.

Caution!
If for any reason the air oil cooler has to be disconnected or the connections on the oil filter to be blanked off, the thermostat (10), the control valve (11) and the compression spring (16) must be removed. Failure to do so will interrupt the oil supply to the bearings at an oil temperature above 110 °C.

18–110 Removal and installation of oil filter

A. Model 107

Oil filter,
engines 116.960/962 and
117.960/962/964/967

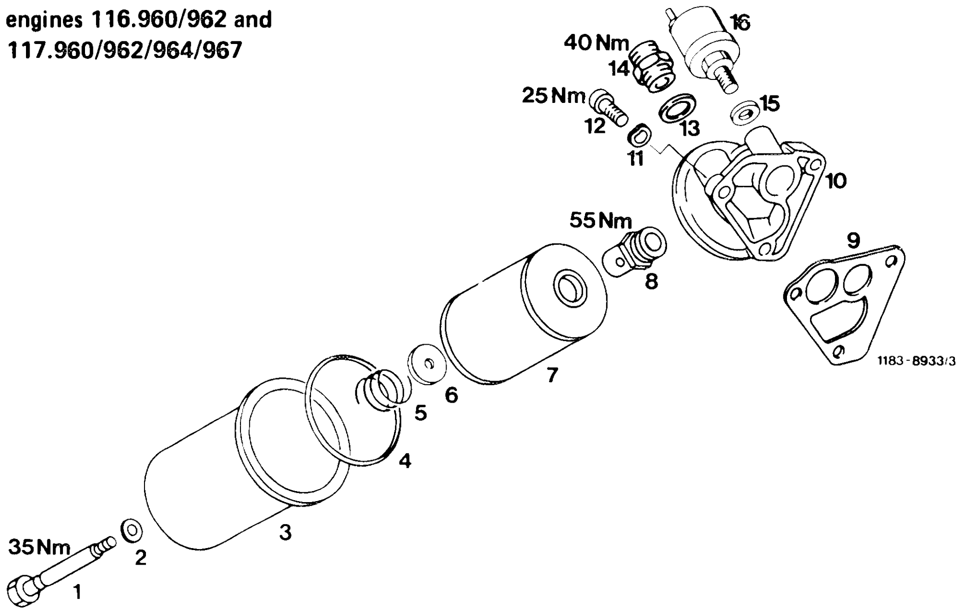

1	Center bolt	
2	Sealing ring	Check, renew if required
3	Oil filter housing	
4	O-ring	Renew
5	Compression spring	Observe installation position
6	Spring retainer	For oil filter element
7	Oil filter element	Ensure use of correct oil filter element
8	Screw fitting	
9	Gasket	Renew
10	Intermediate flange	
11	Spring washer	3 required
12	Internal socket head screw	3 required
13	Sealing ring[1]	
14	Screw fitting[1]	
15	Sealing ring	
16	Electric oil pressure transmitter	

[1] Not required for engines without air oil cooler: 116.960 (AUS) (J) (S) (USA) as from 1981, 116.962/964 and 117.962/964/967.

Note

New oil filters are supplied with initial operation filter elements which, on new engines, should be used up to the inspection at 1000–1500 km.

These filter elements have a limited service life and must be exchanged for filter elements part No. 000 180 05 09 if new oil filters are fitted to run-in engines.

Removal (model 107)

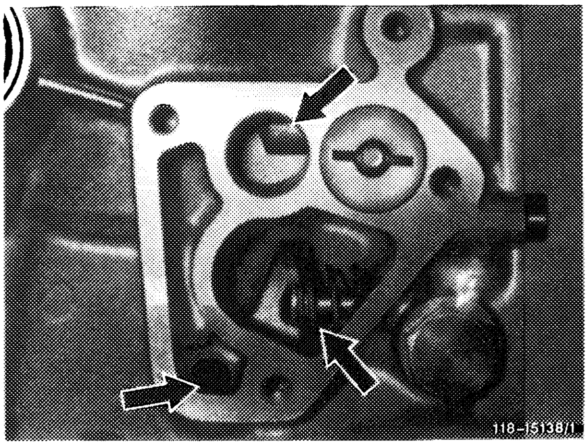

1 Remove oil filter housing.

2 On engines 116.960 standard version and 117.960, disconnect oil cooler line from intermediate flange.

3 Pull single-plug connection of electric line to the oil pressure indication in the instrument cluster from the oil pressure transmitter.

4 Unscrew fastening screws for intermediate flange and remove intermediate flange.

5 Remove remains of gasket from flange surface on crankcase.

First close the openings (arrows) in such a way that no remains of gasket can enter the oil ducts in the crankcase.

Installation

6 Position intermediate flange with new gasket and tighten fastening screws for intermediate flange to 25 Nm.

7 On engines 116.960 standard version and 117.960, connect oil cooler line to intermediate flange and tighten coupling nut to 25 Nm.

8 Plug single-plug connection of electric line to oil pressure indication in the instrument cluster to the oil pressure transmitter.

9 If required, renew sealing ring of center bolt and oil filter element. Position oil filter housing with new O-ring and tighten center bolt to 40 Nm.

Note: If compression spring with spring retainer has been removed, reinstall part in such a way that the spring retainer faces towards the oil filter element.

10 Run engine and check for leaks.

11 Check oil level, correct if necessary.

B. Model 126

Oil filter, engines 116.961, 116.963, 116.965, 117.961 and 117.963, 117.965, 117.968

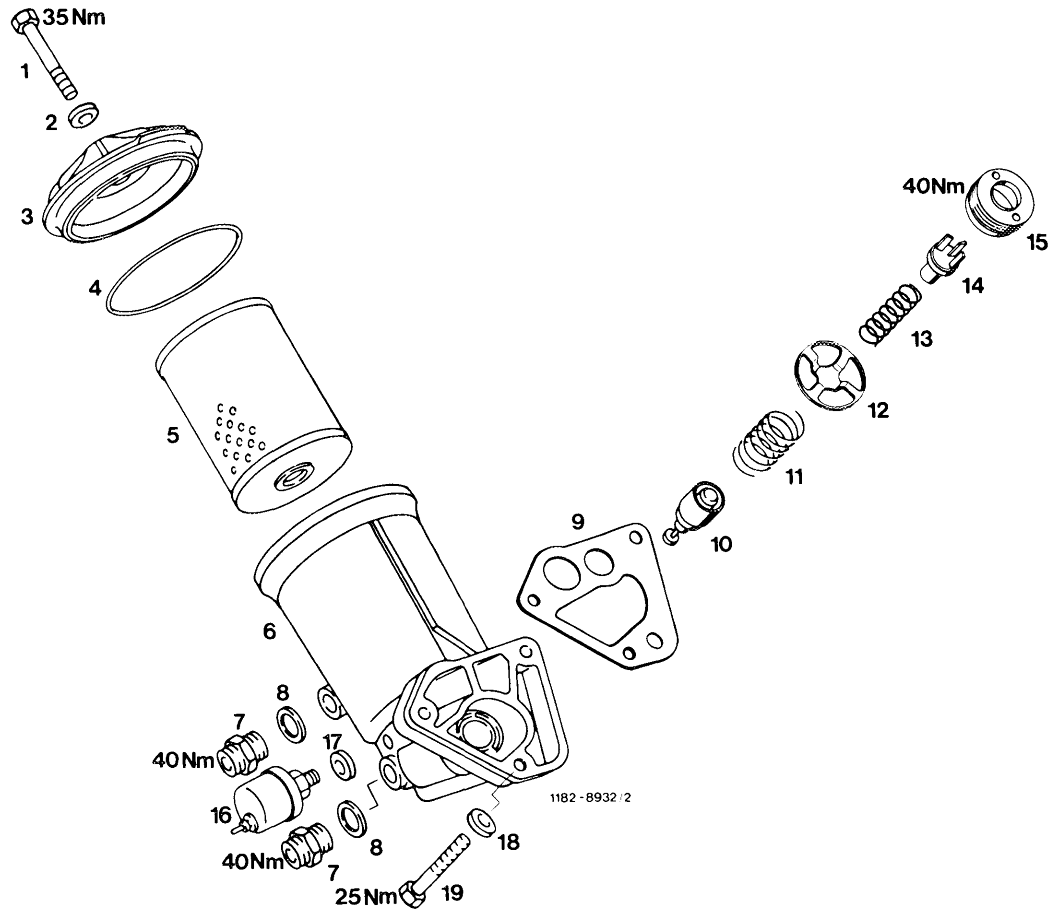

1	Center bolt	Tighten to 30 Nm
2	Sealing ring	Check and replace if required
3	Oil filter cover	
4	O-ring	Renew
5	Oil filter element	Ensure use of correct element
6	Oil filter housing	Clean
7	Screw fitting[1])	Tighten to 40 Nm
8	Sealing ring[1])	Renew
9	Gasket	Renew
10	Thermostat with control valve[1])	Beginning of control 110 ± 4 °C, end of control (fully opened) 125 ± 4 °C
11	Compression spring[1])	
12	Spring retainer[1])	
13	Compression spring	
14	Valve cone return flow shut-off valve	
15	Valve seat ring return flow shut-off valve	Tighten to 40 Nm
16	Electric oil pressure transmitter	
17	Sealing ring	Renew
18	Spring washer	3 required
19	Hex. head bolt	3 required, tighten to 25 Nm

[1]) Not required on engines without air oil cooler except for subsequent installation of an oil cooler: 116.961 (AUS) (J) (S) (USA) as of 1981, 116.963, 117.963/965/968

Note

New oil filters are delivered with initial operation filter elements which are used on new engines up to inspection at 1000–1500 km.

These filter elements have a limited service life and should be exchanged for filter elements part No. 000 180 06 09 if new oil filters are attached to run-in engines.

Removal (model 126)

1 Remove oil filter cover.

2 On engines 116.961 standard version and 117.961, unscrew both oil cooler lines on oil filter housing and remove pipe elbow between oil filter and damper.

3 Pull single-plug connection of electric line for oil pressure indication in instrument cluster from oil pressure transmitter.

4 Unscrew fastening screws for oil filter and remove oil filter.

5 Remove remains of gasket from flange surface on crankcase.

First close openings (arrows) so that no remains of gasket can enter the oil ducts in the crankcase.

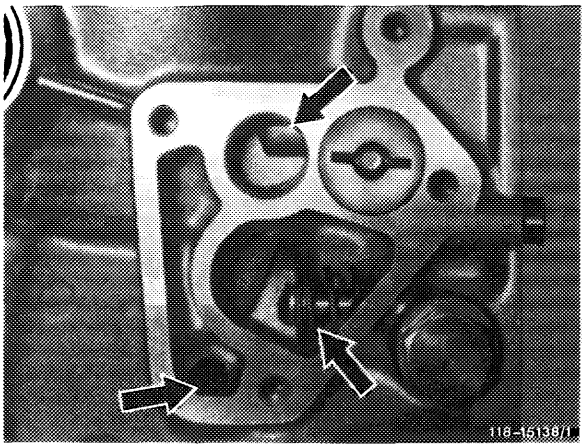

Installation

6 Position the oil filter with new gasket and tighten fastening screws to 25 Nm.

7 Plug single-plug connection of electric line for oil pressure indication in instrument cluster onto oil pressure transmitter.

8 On engines 116.961 standard version and 117.961/968 and special protection vehicles, connect oil cooler lines to oil filter housing and tighten coupling nuts to 25 Nm. Install pipe elbow between oil filter and damper.

9 If required, replace sealing ring of center bolt and oil filter element. Mount oil filter cover with new O-ring and tighten center bolt to 30 Nm.

10 Run engine and check for leaks.

11 Check oil level and correct if required.

18–210 Removal and installation of oil pump

Tightening torques			Nm
Oil drain plugs to oil pan	Model 107	M 26	50
	Model 126	M 12	40
Oil pump to timing case cover			25
Sprocket to oil pump			28
Fastening screws oil pan to crankcase		M 6	10
		M 8	25
Fastening screws oil pan lower part to oil pan			10

Special tools		
Torque wrench 25–130 Nm with plug-in ratchet 1/2" drive		001 589 66 21 00
Screwdriver (Allen wrench) 5 mm, 300 mm long for internal socket head screws	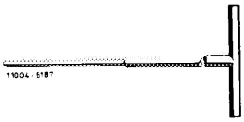	116 589 02 07 00
Socket insert 27 mm, 1/2" drive for turning the engine	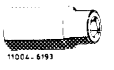	001 589 65 09 00

Note

During oil pump change, ensure uniform number of teeth on drive gear. If clamp for drive chain must be renewed, remove timing case cover (01–210).

The oil pump compensation piece version „B" was installed as standard from November to December 1982, and must be replaced with version „A" in the case of repairs.

Hardened oil pump compensation pieces must be renewed.

From October 1985, an oil level transmitter has been screwed to the oil pump. The plug connection of the electric line of the oil level transmitter passes through right-hand crankcase wall from inside to the outside and must be sealed with a sealing ring.

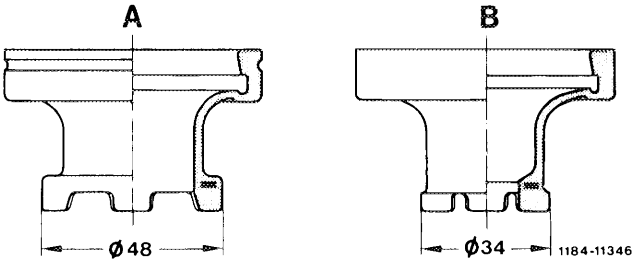

Removal

1 Drain engine oil.

2 On **model 107** remove **oil pan** (01–210), on **model 126** remove **oil pan lower part**.

3 Place compensation weight of first crank pin in horizontal position.

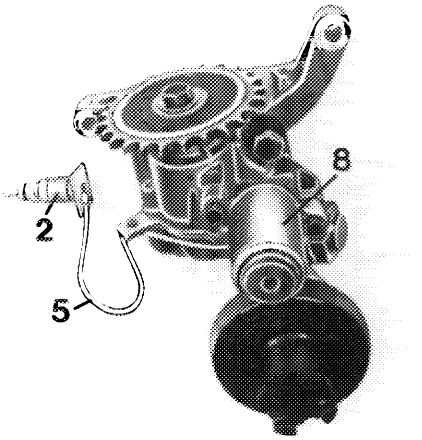

2 Connection plug
3 Oil level transmitter

Model 107

4 Unscrew fastening screws (1, 2 and 3), tilt oil pump forward, remove drive chain from drive sprocket and remove oil pump.

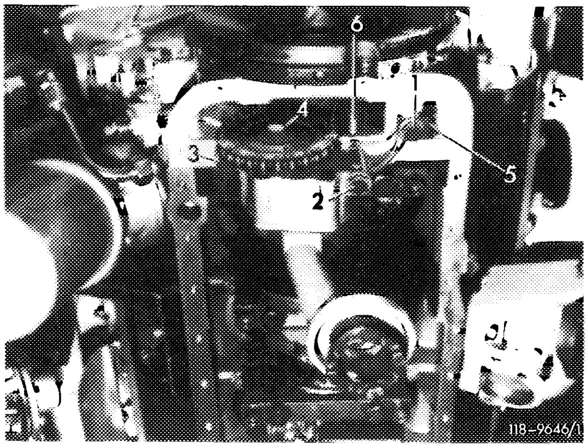

Model 126

5 Unscrew screws (1, 2 and 3).

6 Loosen screw (4) on drive sprocket, tilt oil pump toward the rear and remove the screw.

7 Push drive sprocket away from oil pump by means of a screwdriver and remove oil pump.

8 Lift drive sprocket out of drive chain.

Installation

Model 107

9 With oil pump tilted forward, place drive chain on drive sprocket, screw in fastening screws (1, 2 and 3) and tighten to 25 Nm.

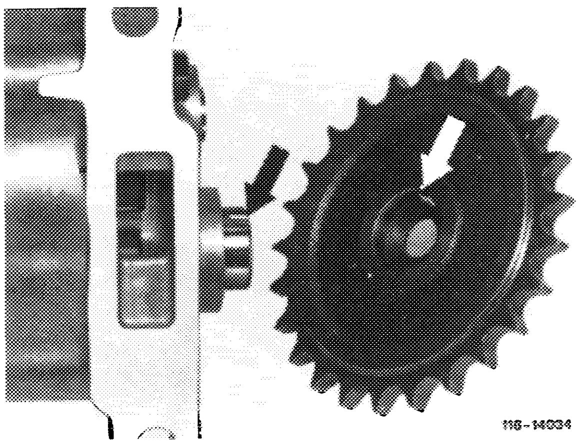

Model 126

10 Engage drive sprocket in drive chain.

11 Push oil pump onto drive sprocket. The dowel sleeve in the drive sprocket should enter the recess in the drive shaft (arrows).

12 Tilt oil pump to the rear, screw in screw (4) and tighten to 28 Nm.

13 Screw in fastening screws (1, 2 and 3) and tighten to 25 Nm.

Caution!
When tightening screw (1), secure tension spring (5) of clamp (6) with a screwdriver to prevent turning.

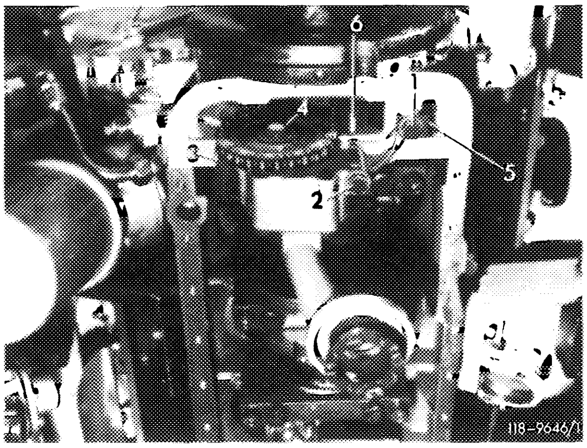

14 Install oil pan (model 107, 01–210) or oil pan lower part (model 126) with new gasket and tighten fastening screws to 10 Nm (thread M 6) or 25 Nm (thread M 8).

15 Fill in engine oil.

16 Run engine, check oil pressure, check for leaks.

17 Check oil level and correct if required.

18–215 Removal and installation of oil pressure relief valve

Tightening torques			Nm
Oil drain plug to oil pan	Model 107	M 26	50
	Model 126	M 12	40
Closing plug (oil pressure relief valve) to oil pump cover			40
Fastening screws oil pan to crankcase		M 6	10
		M 8	25
Fastening screws oil pan lower part to oil pan			10

Special tools

Torque wrench 25–130 Nm with plug-in ratchet 1/2" drive	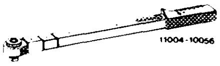	001 589 66 21 00
Screwdriver 5 mm, 300 mm long for internal socket head bolts	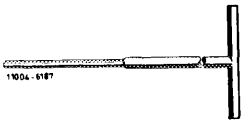	116 589 02 07 00

Removal

1 Drain engine oil.

2 On **model 107**, remove **oil pan** (01–210), on **model 126**, remove **oil pan lower part**.

3 Unscrew closing plug (10).

Caution!
The closing plug is under pressure from the compression spring.

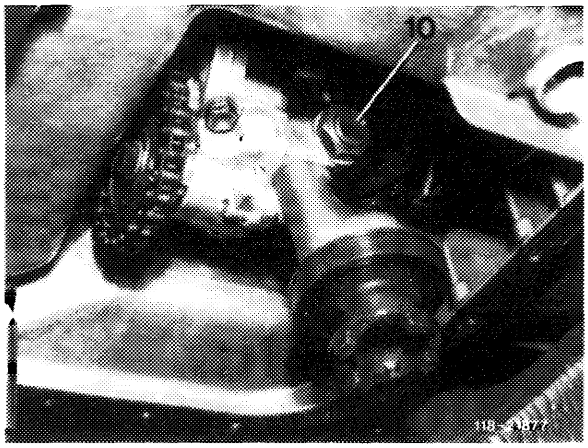

4 Remove compression spring (11), guide pin (12) and piston (13).

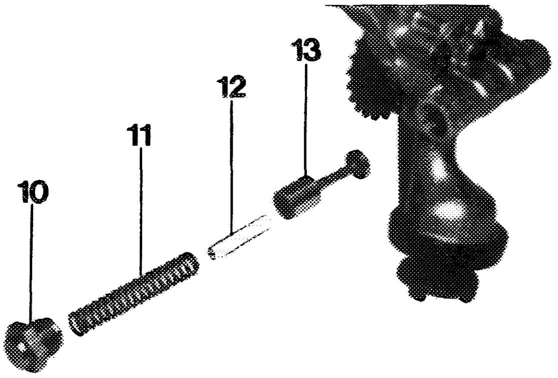

118-22064

Installation

5 Install piston (13), guide pin (12) and compression spring (11).

6 Screw in closing plug (10) with new sealing ring and tighten to 40 Nm.

7 Install oil pan (model 107, 01–210) or oil pan lower part (model 126) with new gasket and tighten fastening screws to 10 Nm (thread M 6) or 25 Nm (thread M 8).

8 Fill in engine oil.

9 Run engine, check oil pressure, check for leaks.

10 Check oil level and correct if required.

With complaints such as: A. Control lamp stays on with running engine and correct oil level.

B. Control lamp does not light up in key position „2".

C. Control lamp fails to light up with running engine, oil temperature > 60 °C and oil level below „min".

Test values

Resistance with oil level max	< 0.10 Ω
Resistance with oil level min	∞ Ω
Battery voltage	approx. 12 V

Conventional tool

Multimeter	e.g. Sun, DMM–5

Note

The oil level control lamp lights up with ignition switched on (control function) and goes out as soon as the engine runs.

During the control function the oil level control lamp lights up dimly and during faults brightly.

Checking

A. Control lamp stays on with running engine and correct oil level

Check oil level transmitter

Remove coupling. With multimeter, check plug connection against ground.

Display: < 0.10 Ω

Yes	No

No: Renew oil level transmitter.

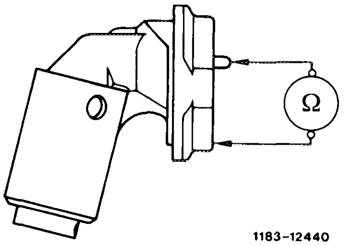

1183–12440

Yes:

Check line from the plug connection to the instrument cluster, for this purpose remove instrument cluster. With ohmmeter, check resistance between socket 4 of 15-pole coupling and the disconnected socket plug connection (coupling).

Display: < 0.10 Ω

Yes	No

No: Renew harness.

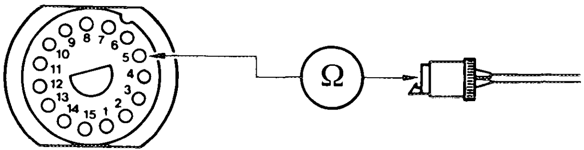

1184 - 12428

Yes:

Renew cluster unit (arrow) in instrument cluster.

End of test

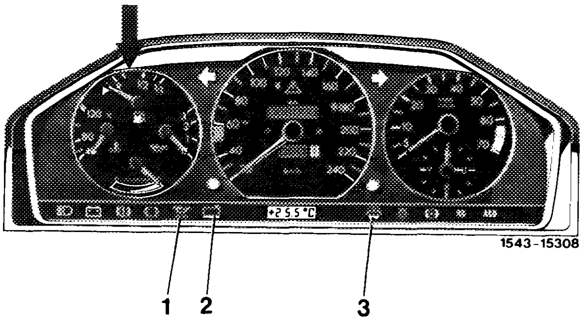

1543-15308

B. Control lamp does not light up in key position „2" (control function)

Check function of incandescent bulb.

Yes	No

No: Renew bulb.

Yes:

Remove instrument cluster. With multimeter measure voltage on sockets 6 and 9 of the 15-pole coupling.

Display: approx. 12 V

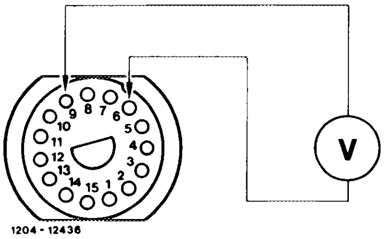

Yes	No

No: Renew harness.

Yes:

Renew indication instrument.

End of test

C. Control lamp fails to light up with running engine, oil temperature > 60 °C and oil level below „min", control function section „B" okay

Check oil level transmitter, pull off coupling.
With multimeter check plug against ground.

Display: ∞ Ω

Yes	No

No: Renew oil level transmitter.

Yes: Renew indication instrument.

End of test

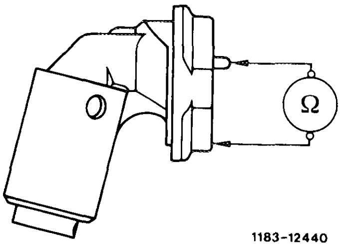

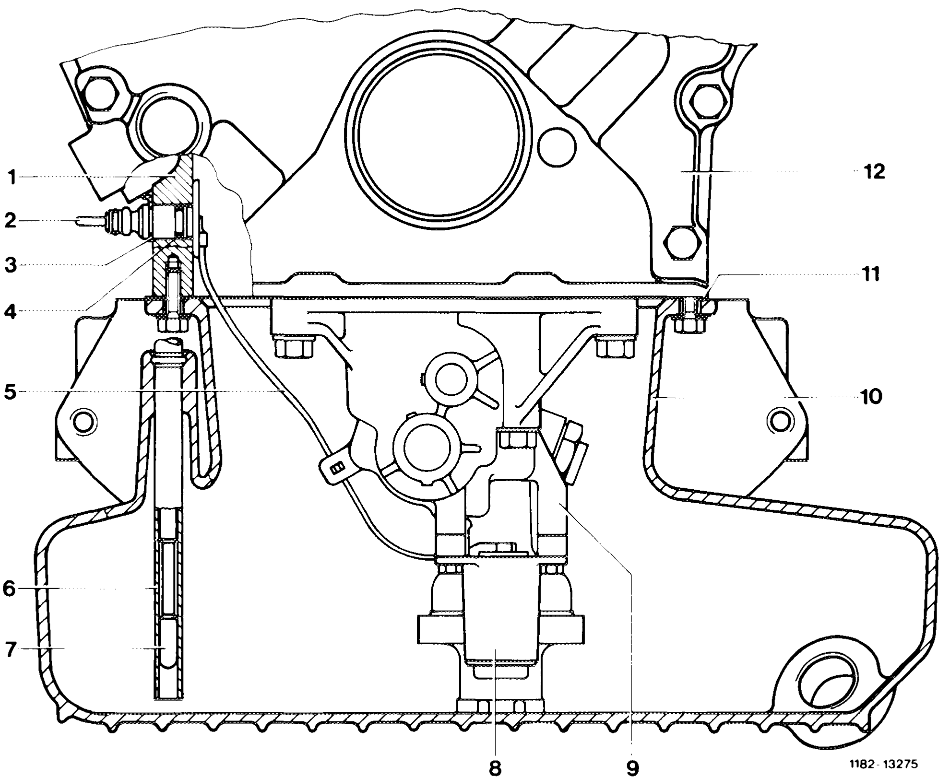

1	Crankcase	7	Oil dipstick
2	Connection plug	8	Oil level transmitter
3	Locking ring	9	Oil pump
4	Sealing ring	10	Oil pan
5	Connection cable	11	Oil pan gasket
6	Oil dipstick guide tube	12	Timing case cover

Note

The oil level transmitter (8) is bolted to the oil pump (9). The connection plug (2) of the connection cable (5) passes through a bore in the crankcase (1) from inside to the outside and is sealed with a sealing ring (4). On the outside the connection plug is attached with a locking ring (3).

Model 107 Remove oil level transmitter with connection cable and connection plug with oil pan removed (01–310).

Model 126 Remove oil level transmitter with connection cable and connection plug with oil pan lower part removed.

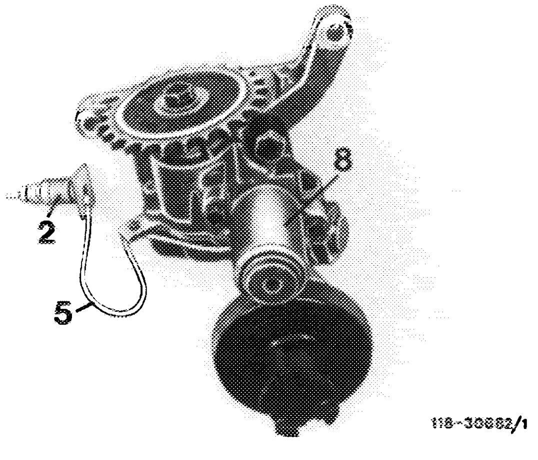

Coolant circuit

Engines 116.960 and 116.961 standard version
Engines 117.960 and 117.961

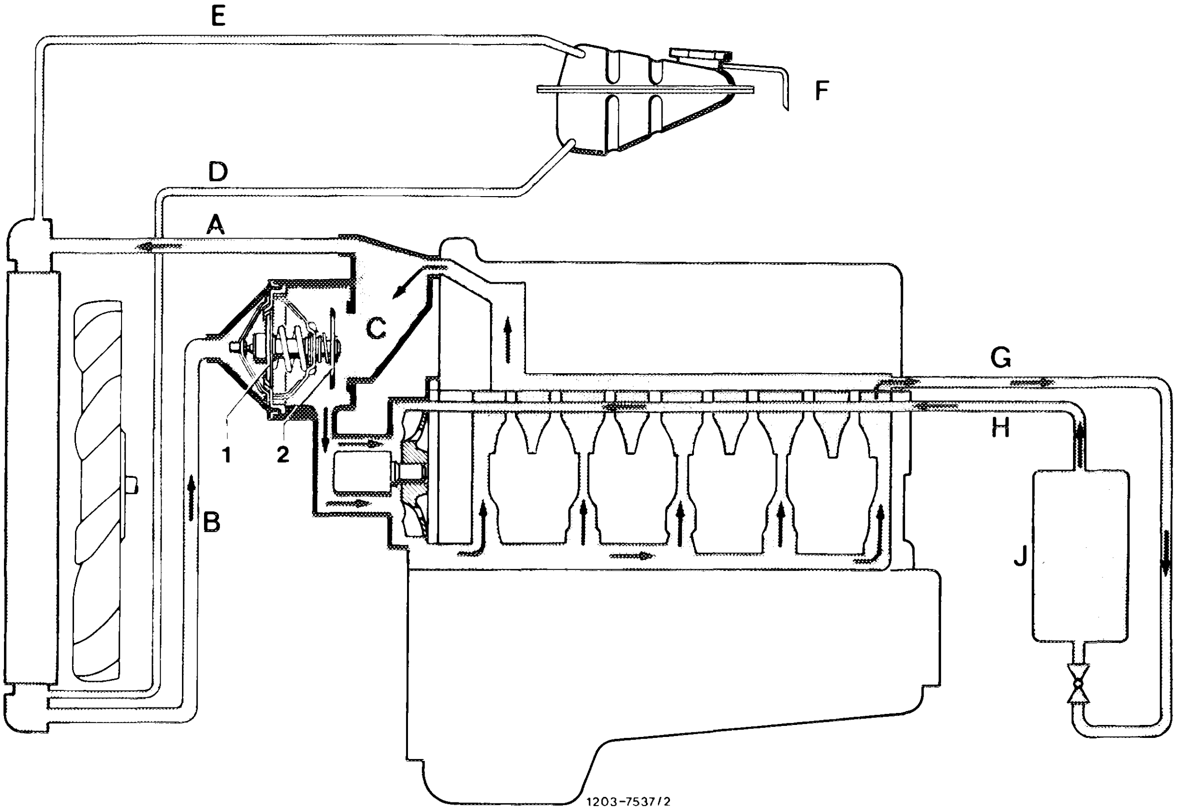

A From engine to radiator
B From radiator to coolant thermostat
C Bypass duct
D Coolant flow from expansion tank to radiator
E Vent line
F Overflow hose
G Heating water feed from cylinder head (intake manifold left) to heat exchanger
H Heating water return flow duct in cylinder crankcase right
J Heat exchanger

1 Main valve coolant thermostat
2 Bypass valve coolant thermostat

Operation

Warming-up period (coolant temperature up to approx. 75 °C)

The main valve (1) is closed up to a coolant temperature of approx. 75 °C and the bypass valve (2) is fully opened. Flow (B) from the radiator is interrupted and the coolant flows through the bypass duct (C) directly to the coolant pump.

Part-load operation (coolant temperature approx. 75 °C to max. 92 °C)

In the part-load range (engine at operating temperature), the main valve (1) as well as the bypass valve (2) are more or less open depending on engine load and outside temperature. The coolant is directed as a function of coolant thermostat position both via the radiator (A and B) and the bypass duct (C).

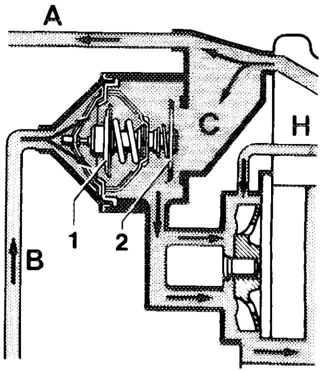

1204-7538

Full load operation – High outside temperatures (coolant temperature above 92 °C)

Main valve (1) is fully open. Bypass valve (2) closed.

Under severe engine load and high ambient temperatures, the bypass duct (C) is closed not later than at a coolant temperature of 92 °C. The entire coolant must flow through the radiator. It is therefore wrong to remove the thermostat for an „improved" cooling of the engine.

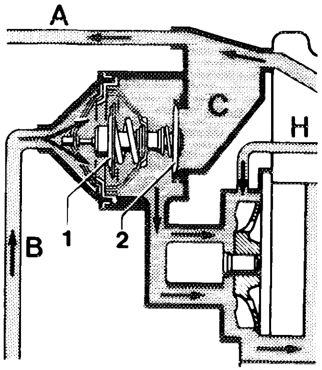

1204-7539

Coolant circuit (2-phase)

Engines 116.960 and 116.961 national versions (AUS) (J) (S) (USA) 1981
Engines 116.962, 116.963, 117.962 and 117.963

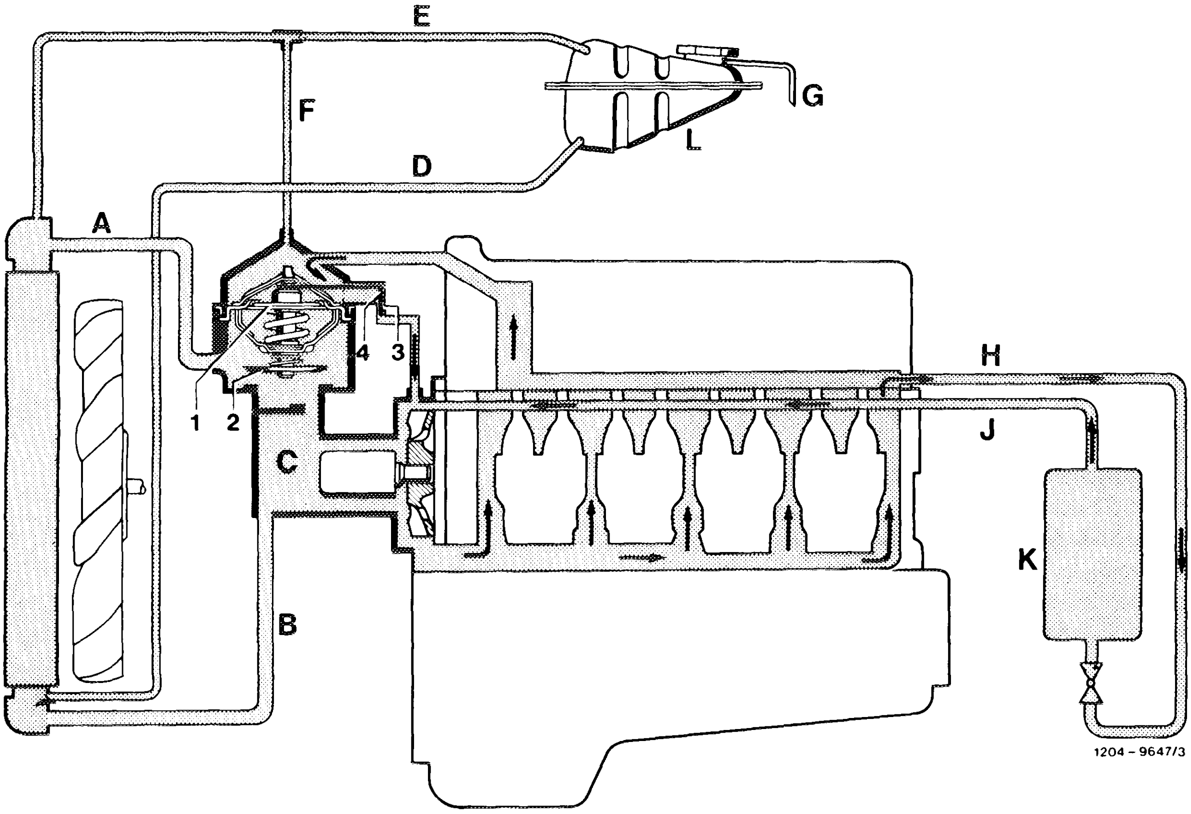

A From coolant thermostat to radiator
B From radiator to coolant pump
C Bypass duct
D Coolant flow from expansion tank to radiator
E Vent hose upper coolant box to expansion tank
F Vent hose inlet connection (thermostat housing) to vent hose between upper coolant box and expansion tank
G Overflow hose
H Heating water feed from cylinder head (intake manifold left) to heat exchanger
J Heating water return duct in cylinder crankcase right

K Heat exchanger
L Expansion tank

1 Main valve coolant thermostat
2 Bypass valve coolant thermostat
3 Control bore
4 Pin

Note

On the engines 116.960 and 116.961 national versions (AUS) (J) (S) (USA) 1981, the vent line (F) is installed with effect from August 1981.

Production breakpoint: August 1981

Model	Engine	Engine end No.	Chassis end No.
107.025	116.960	012479	003752
107.045			008644
126.032	116.961	019965	019854
126.033			

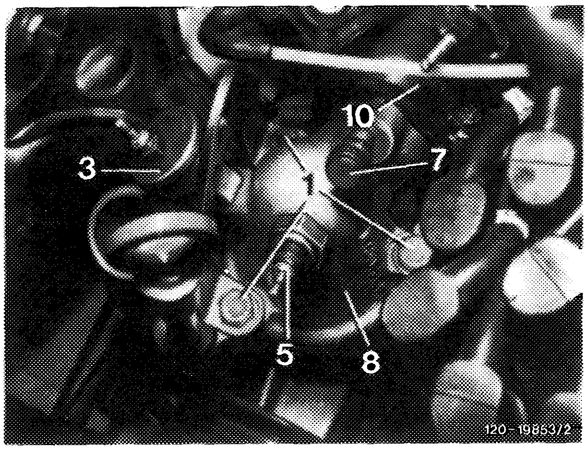

Instead of vent hose (arrow) by way of which the cooling system has been continuously and automatically vented during filling operation and also during operation of engine, the vent screw (7) has been used up to August 1981. This screw must be opened for venting when filling the cooling system. When using this vent screw, no automatic, continuous venting of cooling system will occur.

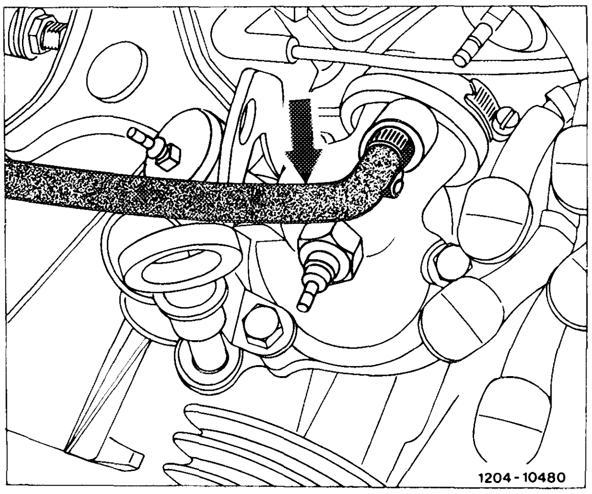

Operation

Note: Independent of coolant temperature or position of coolant thermostat, a small quantity of coolant will always flow through the control bore (3) to the coolant pump. The pin (4), connected to the wax element by means of a web, will move up and down with the stroke of the wax element in the control bore to keep the bore free of contamination.

Warming-up period (phase 1, coolant temperature up to approx. 84 °C)

The main valve (1) is closed up to a coolant temperature of approx. 84 °C and interrupts the coolant flow towards the radiator (A) and through the bypass duct (C). Only a small quantity of coolant will flow through the control bore (3) to the coolant pump during the warming-up period. This design provides faster heating of the engine during the warming-up period, especially in the combustion chamber region in the cylinder head.

Part-load operation (phase 2, coolant temperature approx. 84 °C to max. 99 °C)

In the part-load range (engine at operating temperature) the main valve (1) and the bypass valve (2) are more or less open depending on the engine load and ambient temperatures. The coolant flows as a function of coolant thermostat position both through radiator (A and B) as well as bypass duct (C) to the coolant pump.

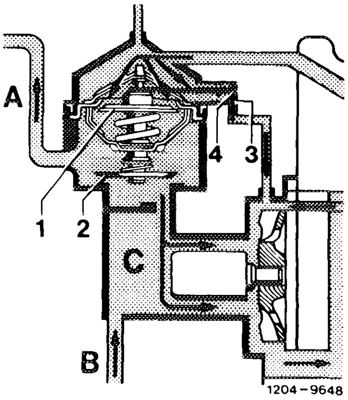

Full load operation – High ambient temperatures (coolant temperature above 99 °C)

Under heavy engine load and/or high ambient temperatures the main valve (1) is fully open at a coolant temperature of approx. 99 °C, and the bypass valve (2) is closed. The entire coolant will now flow through the radiator to coolant pump (A and B). It is therefore wrong to remove the coolant thermostat to obtain an „improved" engine cooling.

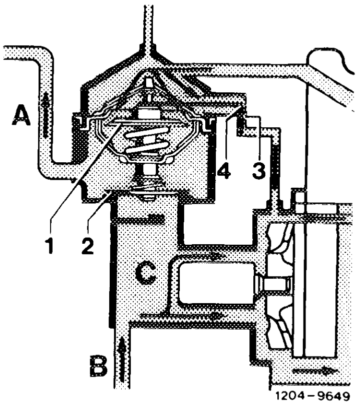

Coolant circuit (3-phase)

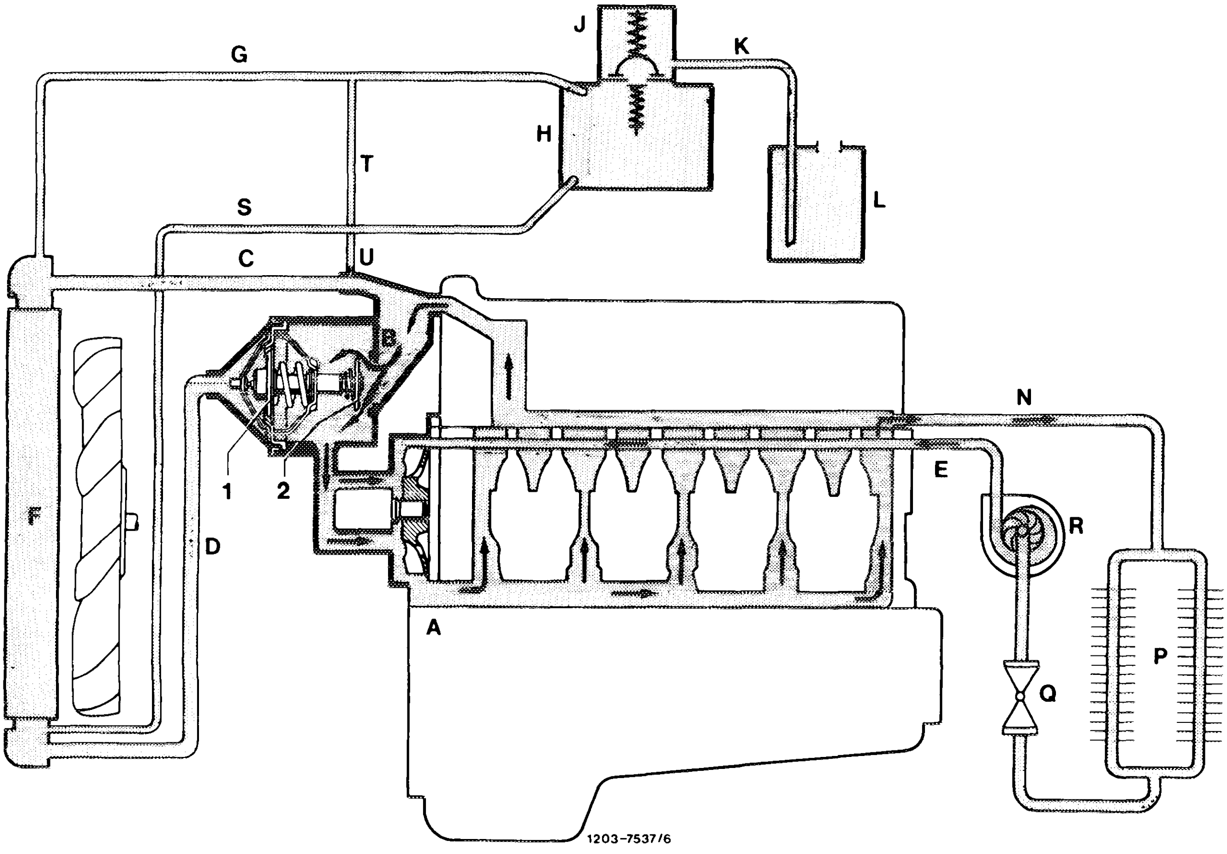

A	From the coolant pump to the crankcase
B	From the cylinder head to the inlet pipe and bypass duct
C	From the inlet pipe to the radiator
D	From the radiator to the thermostat
E	From the circulation pump to the coolant pump
F	Radiator
G	Vent hose from radiator to expansion tank
H	Expansion tank (in bypass circuit) with coolant level indication
J	Plug with pressure relief and vacuum valve
K	Overflow hose
L	Overflow tank (only with air conditioner/automatic climate control)
N	From cylinder head/intake manifold to heat exchanger
P	Heat exchanger
Q	Mono valve
R	Circulation pump electric
S	Coolant filling hose
T	Vent hose from inlet pipe
U	Vent valve
1	Main valve coolant thermostat 80 °C
2	Bypass valve

Coolant pump

with laterally arranged thermostat 80 °C in the coolant feed from the radiator:

Operation

Coolant temperature up to approx. 80 °C

The main valve (1) is closed and the bypass valve (2) fully open. The feed (D) from the radiator is interrupted and the coolant flows via the bypass duct (B) directly via the coolant pump to the crankcase.

Coolant temperature of approx. 80 °C up to max. 95 °C

In the part-load range (engine at operating temperature) the main valve (1) and the bypass valve (2) are more or less open depending on the engine load and ambient temperature. The coolant is directed via both the radiator (C and D) and also the bypass duct as a function of the thermostat position.

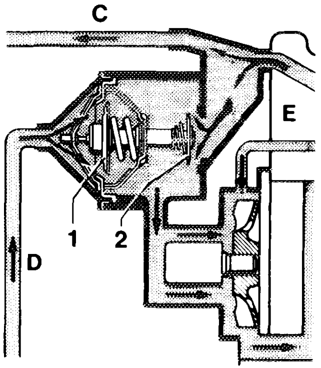

1204-7538/1

Coolant temperature above 95 °C

The main valve (1) is fully open and the bypass valve (2) is closed.

With heavy engine load and high ambient temperatures, the bypass duct is closed by the bypass valve (2) not later than at a coolant temperature of 95 °C. The entire coolant must flow through the radiator (C–D). It is therefore wrong to remove the thermostat for an „improved" cooling of the engine.

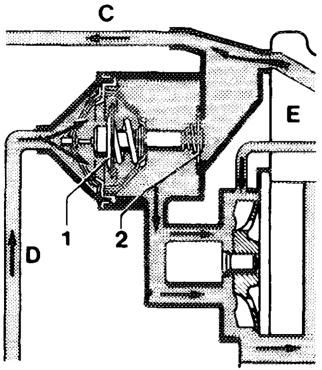

1204-7539/1

Expansion and overflow tank

Production breakpoint: September 1984

Only for vehicles with air conditioner or automatic climate control.

The drain hose at the filler neck of the expansion tank leads to the overflow tank.
The overflow tank collects the coolant forced out through the overflow hose at high ambient temperatures after the engine has been switched off.

After the coolant has cooled down, the coolant in the overflow tank returns to the expansion tank due to the vacuum created in the cooling system.

Coolant loss is largely eliminated in this way.

In order to prevent wrong air being drawn in at the expansion tank cap with vacuum in the cooling system, the cap (1.2 bar) was provided with a rubber seal. Only this cap, part No. 123 501 02 15, may be used.

Note on repairs

From the installation of the coolant level transmitter the expansion tank has been reinforced and can be used in place of the previous expansion tank together with a plug with gasket and locking ring.

Coolant level indication

The dynamic coolant level indication monitors the coolant level in the expansion tank with running engine.

Components

Coolant level transmitter (550) in the expansion tank

Control lamp in instrument cluster.
Symbol: symbolic radiator.

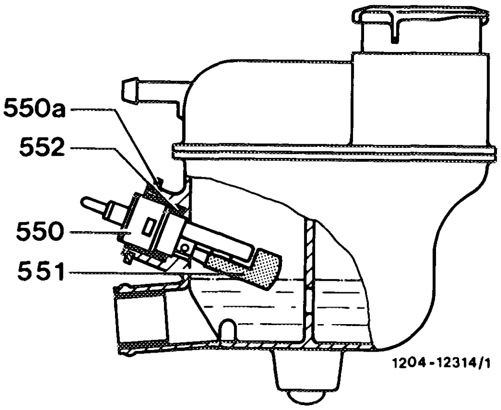

550	Coolant level transmitter
550a	Locking ring
551	Float
552	O-ring

Operation

With the ignition switched on (key position 2) the control lamp lights up dimly and goes out with running engine (function control of bulb).

The coolant level in the expansion tank is explored by a float with permanent magnet (551) attached to the coolant level transmitter.

As from a certain coolant level the contact is closed and the control lamp lights up.

Depending on the driving style, the control lamp will first light up for a short time and later on permanently. If the control lamp lights up, fill up coolant. Electrical circuit diagram see Group 54.

Note on repairs

In order to avoid wrong installation of the coolant level transmitter, it is provided with two lugs of different widths, which engage in corresponding slots in the expansion tank (arrows).

It is pressed into the expansion tank and sealed with an O-ring (552). To remove the coolant level transmitter, remove locking ring.

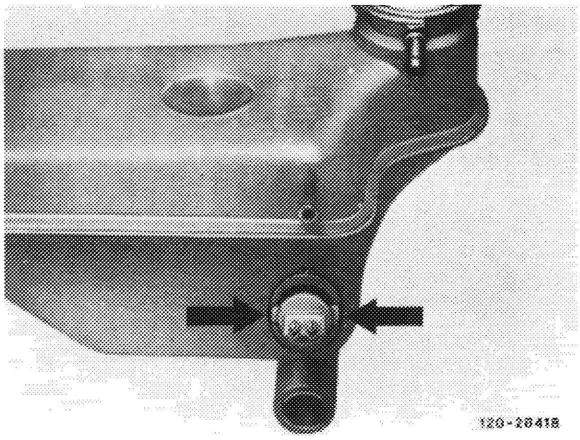

Engine cooling

The spring-loaded cap (code number 120) serves to establish a gauge pressure of approx. 1.2 bar in the cooling system.

Renew coolant every 3 years.

Use only approved corrosion protection/antifreeze agents (see Service Product Specifications sheet 325.1).

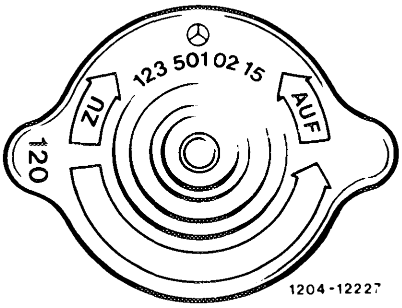

Use only the Mercedes-Benz corrosion protection/antifreeze agent, part No. 000 989 08 25.

For reasons of corrosion protection, the corrosion protection/antifreeze agent must be filled in under all operating conditions – even in tropical countries.

The water should be mixed with 40–45 % by volume of corrosion protection/antifreeze agent (corresponding to antifreeze protection up to –30 °C). A higher concentration is only practical with even lower ambient temperatures. Even at extremely low ambient temperatures not more than 55 % by volume of corrosion protection/antifreeze agent should be used (corresponding to antifreeze protection up to –45 °C), as the maximum antifreeze protection has been reached and an even greater percentage of corrosion protection/antifreeze agent will reduce the antifreeze protection and result in poorer heat dissipation.

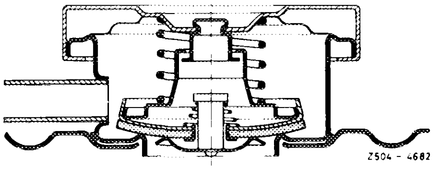

Use clean and not too hard water. Potable water frequently meets the requirements. More accurate specifications can be taken from the Specifications on Service Products sheet 310.

Caution!
Do not use any additives as these are not approved for use in passenger car engines. They do not increase the boiling point and offer no antifreeze protection. In addition, the necessary corrosion and cavitation protection is only partly obtained.

Draining and filling in coolant, see repair instructions on microfilms (20–010).

When driving under full load, on mountain roads and bumper to bumper, or following a fast ride on an express highway with subsequent traffic congestions, or when driving in areas with high outside temperatures, the coolant temperature indicator may rise up to the red mark if an antifreeze of at least –30 °C is filled in, without causing any ejection of coolant or faulty running of the engine.

When the engine is operated for an extended period with the vehicle stopped, e.g. during a congestion, it will be of advantage to move the selector lever of the automatic transmission into „N" position. This will reduce the heat developed in the transmission and consequently the additional heating-up of coolant by way of the transmission oil cooler.

When coolant is lost through leaks in the cooling system or as the result of overheating, add suitably prepared coolant. Losses caused by evaporation can be compensated by adding potable water.

Total filling capacities cooling system with heater and mixing ratio

Antifreeze/water in liters

Model	Engine	Total capacity cooling system with heater	Mixing ratio antifreeze/water for antifreeze protection up to –30 °C	–45 °C
107.025/045/047	116.960/962/964	12.5	5.50/7.00	7/5.5
107.026/046/048	117.960/962/964/ 967	13.5	6.00/7.50	7.5/6
126.032/033/034/ 035/043/046	116.961/963/965	12.5	5.50/7.00	7/5.5
126.036/037/039/ 044/045	117.961/963/965/ 968	13.5	6.00/7.50	7.5/6

Tightening torques	Model	Nm
Drain plug radiator	107	6–10
	126	1.5–2[1])
Drain plugs crankcase		25

[1]) This torque can be generated with a washer or a coin.

Conventional tool

Antifreeze tester
Prestone VU-Check (Union Carbide)
e.g. Philipp Gather, D–4020 Mettmann 2

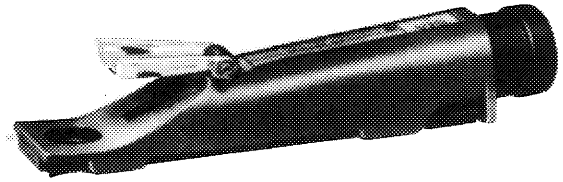

R-4789

Self-fabricated tool

Coupling (1), part No. 002 545 49 28
approx. 1 m cable 1.5 mm^2 black (b) +
approx. 1 m cable 1.5 mm^2 brown (c) –
1 cable terminal +
1 cable terminal –

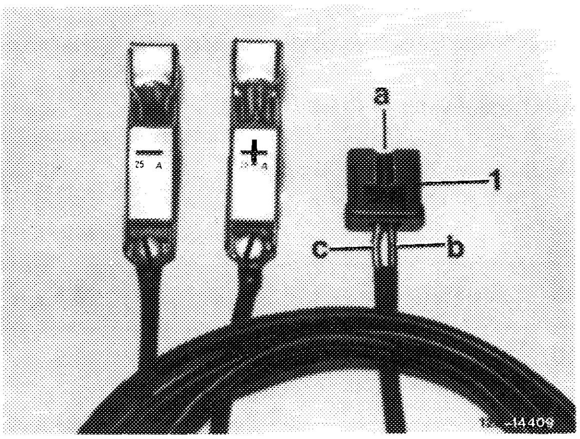

a Locating groove

Note

For reasons of corrosion protection and due to the raising of the boiling point, the corrosion/antifreeze protection agent should always be used in countries with warm climate all year round.

When renewing or adding coolant, a concentration of 44 % by volume should be aimed at, this corresponds to antifreeze protection of –30 °C.

If no corrosion-antifreeze protection agent is available and only water is added, 1 % of additives (corrosion protection oil), 10 cm^3/1 l water must be added.

Caution!
In order to avoid damage to light alloy components, only corrosion-antifreeze protection agents (Specifications on Service Products sheet 325.1 and 325.2) may be used.

Model 107 with automatic climate control requires special measures when filling in the coolant.

Draining

1 Open cap on expansion tank in stages **(only below 90 °C)**.

2 Unscrew drain plug in radiator.

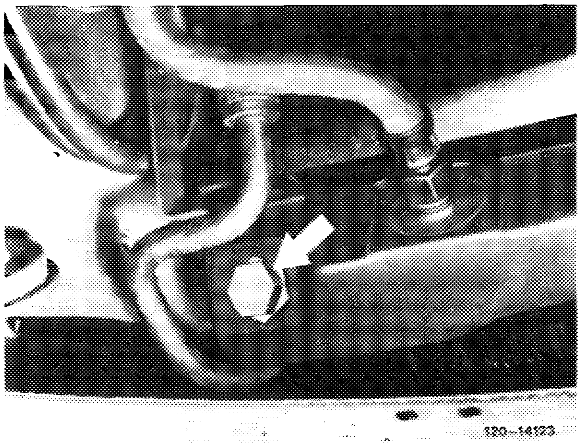

Drain plug model 107

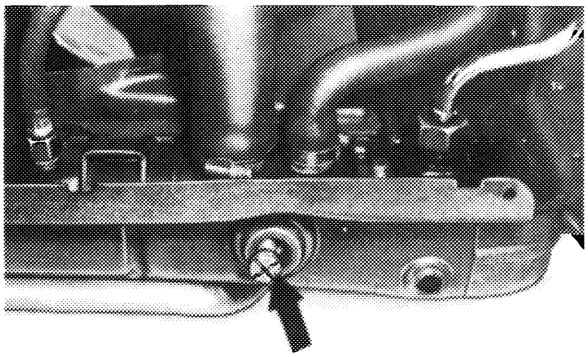

Drain plug model 126

120-17597

3 Unscrew drain plug at right and left of crankcase.

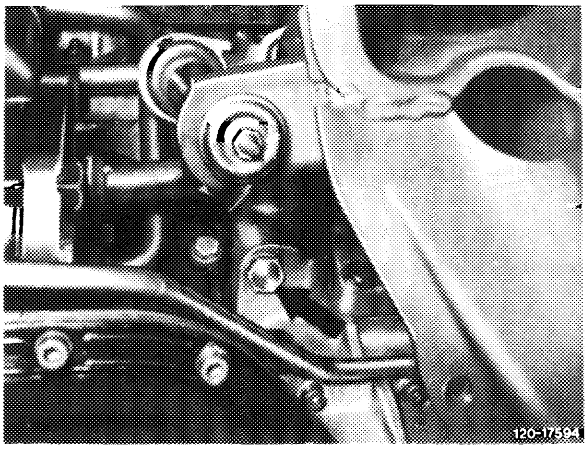

Drain plug left

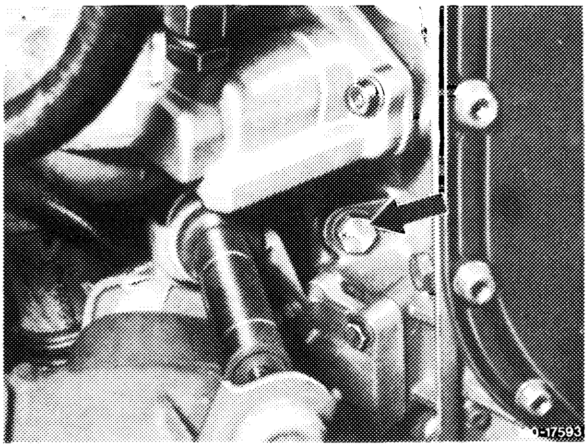

Drain plug right

Filling in

4 Fill in coolant slowly up to the mark on the expansion tank (arrow). Leave filler neck on expansion tank open.

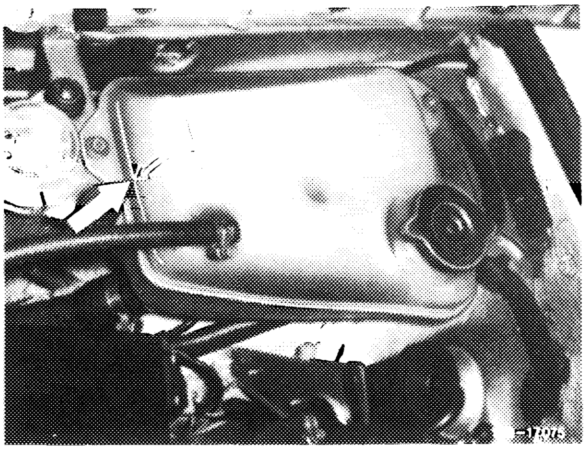

Expansion tank

Arrow = Coolant level cold

Model 107

On vehicles **with** or **without air conditioning system**, set both heater levers to maximum heating capacity.

On vehicles **with automatic climate control**, pull off plug of electric supply line on heating water pump. Connect heating water pump to battery by means of self-made tool.
Push „DEF" button.

Model 126

On vehicles **with automatic heater control**, set both temperature dials to „Max".

Push „DEF" button on vehicles with automatic climate control.

5 Warm up engine by intermittently pressing the accelerator until coolant thermostat opens.

For this purpose, likely open vent screw (7) on engines 116.960 and 116.961 (AUS) (J) (S) (USA) 1981.

Note: Fit expansion tank cap at a coolant temperature of approx. 60 °C.

6 Close vent screw (7) on engines 116.960 and 116.961 (AUS) (J) (S) (USA) 1981.

7 On model 107 with automatic climate control, refit plug of electric supply line to heating water pump.

8 Check coolant level and replenish up to specified level.

Caution!
Open cap only below 90 °C coolant temperature.

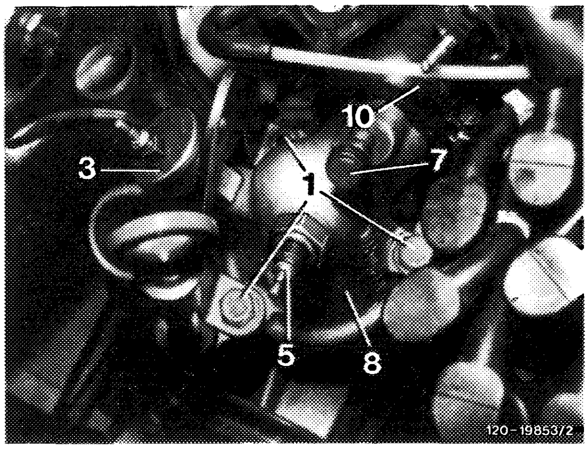

Total filling capacities cooling system with heater and mixing ratio

Corrosion-antifreeze protection agent/water in liter

Model	Engine	Total filling capacity cooling system with heater	Mixing ratio corrosion-antifreeze protection agent/water for antifreeze protection up to –30 °C	–45 °C
107.025/045/047	116.960/962/964	12.5	5.50/7.00	7/5.5
107.026/046/048	117.960/962/964/967	13.5	6.00/7.50	7.5/6
126.032/033/034/035/043/046	116.961/963/965	12.5	5.50/7.00	7/5.5
126.036/037/039/044/045	117.961/963/965/968	13.5	6.00/7.50	7.5/6

Tightening torques	Model	Nm
Drain plug radiator	107	6–10
	126	1.5–2[1])

[1]) This torque can be generated with a washer or coin.

Conventional tool

Antifreeze tester
Prestone VU-Check (Union Carbide)
e.g. Philipp Gather, D–4020 Mettmann 2

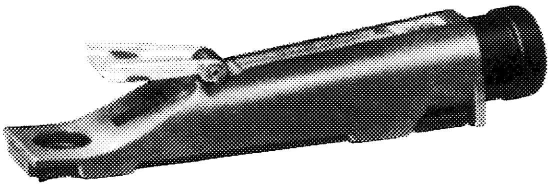

R-4789

Special tools

Flushing pipe connection with hose piece	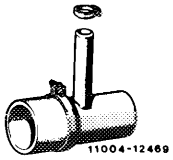 11004-12469	117 589 00 90 00
Thermostat positively opened for closing of bypass duct	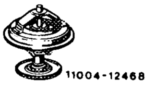 11004-12468	000 589 74 63 00

Service products

Corrosion-antifreeze protection agent	000 989 08 25
Citric acid powder (0.5 kg)	000 989 10 25

Note

High coolant temperatures and low heating capacity can be caused by deposits of corrosion products in the radiator or in the heat exchanger.

The deposits can be identified as a jelly-like substance or, with empty and dry radiator, by a grey layer at the radiator connection pipes.

In this case, the cooling and heating system can be cleaned with a 10 % citric acid solution.

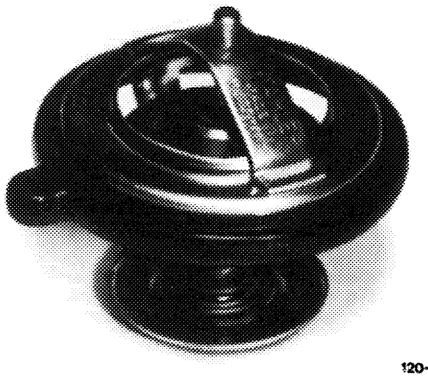

120-26436

Scope of work

1 Drain coolant from radiator. The coolant drain plug on the radiator remains open.

2 Remove thermostat and install positively opened thermostat 000 589 74 63 00 with sealing ring. Thus the bypass duct is closed and the flow is directed via the radiator to the coolant pump.

3 Connect flushing pipe connection 117 589 00 90 00 with connection hose (2) between radiator and coolant hose.

4 Connect a tap water hose (3) to the flushing pipe connection (1).

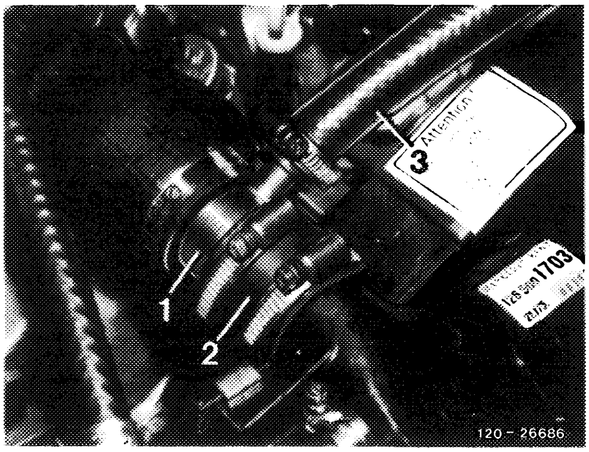

1 Flushing pipe connection
2 Connection hose
3 Tap water hose

5 Open expansion tank cap and pull off hose to the overflow tank.

6 Switch off circulation pump to flush the heat exchanger.

To do so, switch on ignition and:

a) On vehicles with automatic heater engage both temperature dials to position ,,Max".

b) On vehicles with automatic climate control, press the push-button ,,Defrost".

7 Open the vent valve of the supplementary heater.

8 With engine running (approx. 2500/min) flush cooling and heating system with running water for approx. 5 minutes to flush out the remaining corrosion-antifreeze protection agent.

Caution!
During the flushing process, the cooling system must always be full. Regulate additional quantity accordingly.

9 Drain flushing water in the radiator completely and screw in drain plug.

10 In a clean vessel, prepare a solution of 1.5 kg citric acid powder (0.5 kg, part No. 000 989 10 25) and approx. 5 l of water.

11 Fill the cleaning solution into the expansion tank and top up with water to the mark on the expansion tank.

12 Close the vent screw of the supplementary heater.

13 Close expansion tank cap.

14 Run engine for 15 minutes at approx. 2500/min. The solution must now flow through the heat exchanger (see figure 6).

15 Drain cleaning solution.

Caution!
Dispose of the cleaning solution (citric acid mixture) in an oil and water separator as used in workshops

16 Open vent screw of the supplementary heater.

17 Flush cooling and heating system with running engine (2500/min) for approx. 10 minutes with running water. The water must flow through the heat exchanger (see figures 6 and 8).

18 Remove flushing pipe connection and connect coolant hose to radiator.

19 Install normal thermostat.

20 Screw in coolant drain plug in radiator.

21 On vehicles with supplementary heater, connect plastic hose to vent valve and open valve.

22 Slowly fill in new coolant (observe corrosion-antifreeze protection agent) up to the mark.

a) On vehicles with automatic climate control press push-button „Defrost". With automatic heater, engage both temperature selector dials in position „Max".

b) Warm up engine while intermittently pressing the accelerator pedal. At approx. 60 °C, close the filler neck with a cap and switch supplementary heater to immediate heating.

c) Vent until the thermostat opens and the coolant runs out of the vent valve free of bubbles. Now close the vent valve.

23 Check coolant level below 90 °C and top up to the specified level if required.

Coolant pump, coolant thermostat, inlet connection

Engines 116.960 and 116.961 standard version, 117.960 and 117.961

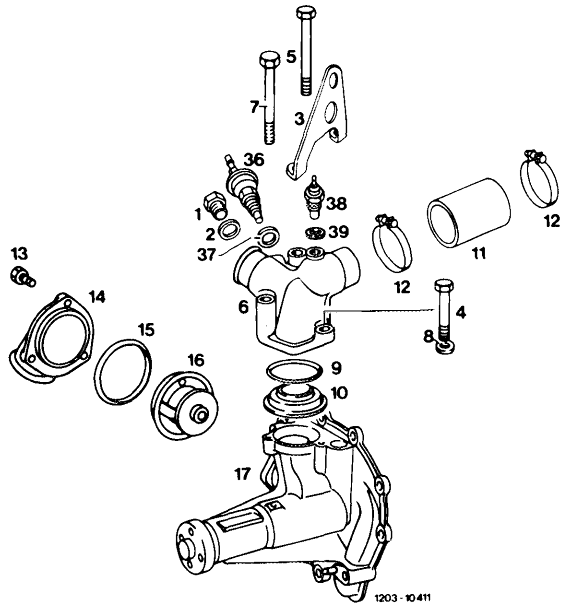

1	Closing plug	M 14 x 1.5, vehicles without air conditioner and automatic climate control
2	Sealing ring	A 14 x 18 – Cu
3	Suspension eye	
4	Hex. head bolt	M 8 x 30, 25 Nm
5	Hex. head bolt	M 8 x 65, 25 Nm
6	Inlet connection	
7	Hex. head bolt	M 8 x 85, 25 Nm
8	Washer	A 8, 4, 1 each
9	Sealing ring	Check, renew if required
10	Spacer ring .	
11	Coolant hose	42 x 51 x 40
12	Hose clamp	L 45–35, 2 each
13	Combination screw	M 6 x 20, 3 each, 10 Nm
14	Coolant thermostat cover	
15	Sealing ring	Check, renew if required
16	Coolant thermostat	Start of control 75^{+1}_{-3} °C, end of control (fully opened) max. 92 °C. Ensure correct installation position
17	Coolant pump	
36	Temperature switch	On: 110^{+2}_{-3} °C, Off: 105 ± 3 °C. Switches second stage supplementary fan on vehicles with air conditioner or automatic climate control
37	Sealing ring	A 14 x 18 – Cu
38	Temperature transmitter	For coolant temperature indicator in instrument cluster Installed in right-hand cylinder head up to the end of November 1980
39	Sealing ring	A 14 x 18 – Cu

Coolant pump, coolant thermostat, inlet connection

Engines 116.960 and 116.961 national versions (AUS) (J) (S) (USA) 1981
Engines 116.962, 116.963, 117.962 and 117.963

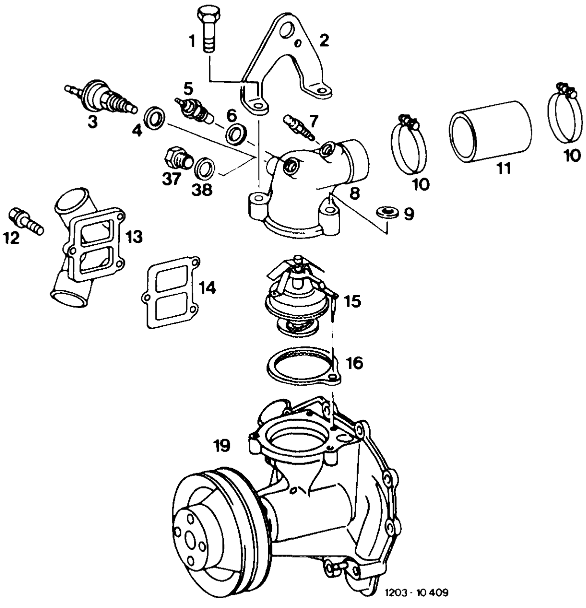

1	Hex. head bolt	M 8 x 35, 3 each, 25 Nm
2	Suspension eye	
3	Temperature switch	For second stage supplementary fan on vehicles with air conditioner or automatic climate control 100 °C On: 110 $^{+2}_{-3}$ °C, Off: 105 ± 3 °C
4	Sealing ring	A 14 x 18 – DIN 7603 – AL
5	Temperature transmitter	For coolant temperature indicator in instrument cluster
6	Sealing ring	A 14 x 18 – DIN 7603 – AL
7	Vent screw	Only engines 116.960 and 116.961 national versions (AUS) (J) (S) (USA) 1981 to August 1981
8	Inlet connection	
9	Washer	A 8, 4, 1 each
10	Hose clamp	L 45–35, 2 each
11	Coolant hose	45 x 51 x 58
12	Combination screw	M 6 x 22, 10 Nm
13	Cover	
14	Gasket	Renew
15	Coolant thermostat	Start of control 84 ± 2 °C, end of control (fully opened) max. 99 °C, no vent valve, observe installation instructions
16	Gasket	Check, renew if required
19	Coolant pump	
37	Closing plug	M 14 x 1.5 AL alloy, vehicles without air conditioner or automatic climate control
38	Sealing ring	A 14 x 18 – DIN 7603 – AL

Coolant pump, coolant thermostat inlet connection

Engines 116.964/965 standard version
117.964/965/967/968

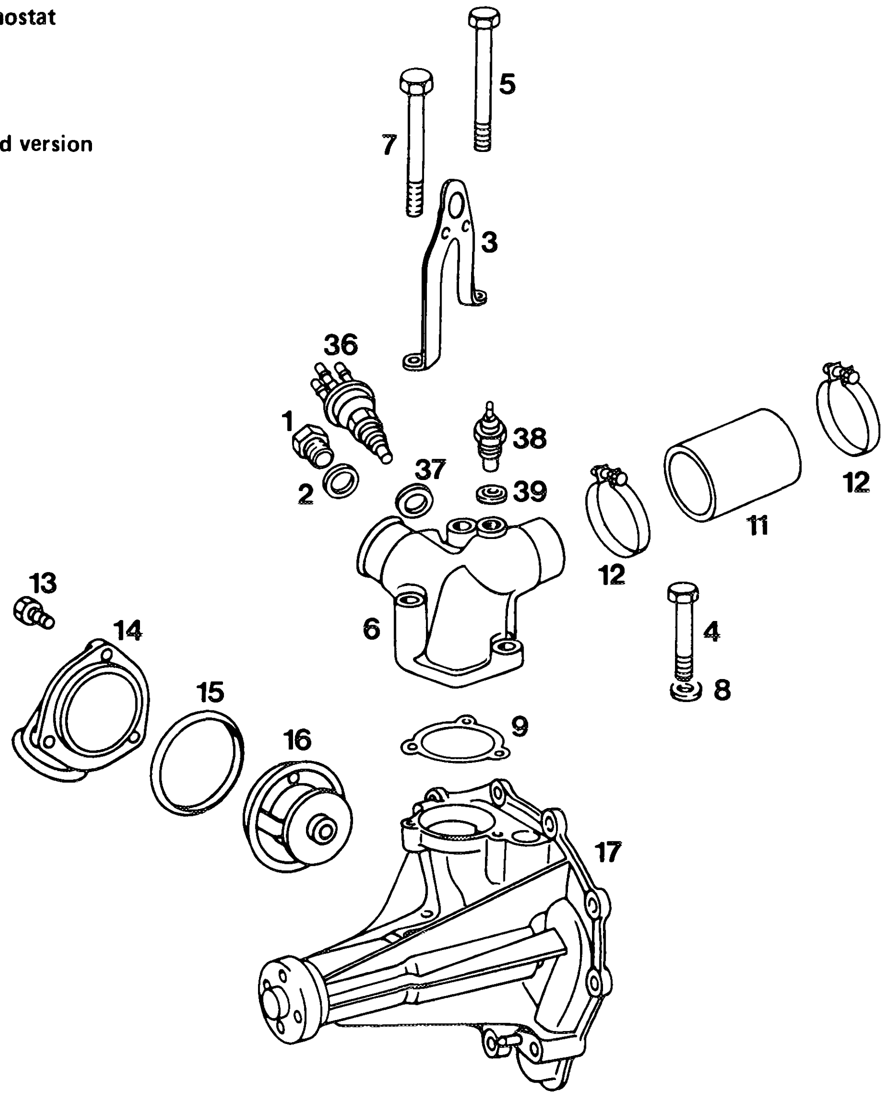

1203-14589

1	Closing plug	M 14 x 1.5, vehicles without air conditioner or automatic climate control
2	Sealing ring	A 14 x 18 – DIN 7603 – AL
3	Suspension eye	
4	Hex. head bolt	M 8 x 30, tightening torque 25 Nm
5	Hex. head bolt	M 8 x 65, tightening torque 25 Nm
6	Inlet connection	
7	Hex. head bolt	M 8 x 85, tightening torque 25 Nm
8	Washer	A 8, 4, 1 each
9	Gasket	Check, renew if required
11	Coolant hose	42 x 51 x 40
12	Hose clamp	L 45–35, 2 each
13	Combination screw	M 6 x 20, 3 each, tightening torque 10 Nm
14	Cover coolant thermostat	
15	Sealing ring	Check, renew if required
16	Coolant thermostat	Start of control 80^{+2}_{-2} °C, end of control (fully opened) max. 94 °C. Ensure correct installation position
36	Temperature switch	On: 110^{+2}_{-3} °C, Off: 105 ± 3 °C. Switches second stage supplementary fan on vehicles with air conditioner or automatic climate control
37	Sealing ring	A 14 x 18 – DIN 7603 – AL
38	Temperature transmitter	For coolant temperature indication in instrument cluster Installed in the right-hand cylinder head up to the end of 1980
39	Sealing ring	A 14 x 18 – DIN 7603 – AL

Tightening torques

			Nm
Fastening screws	Cover coolant thermostat	Engines 116.960 and 116.961 standard version 117.960, 117.961	10
	Inlet connection	Engines 116.960 and 116.961 national versions (AUS) (J) (S) (USA) 1981 116.962, 116.963, 117.962, 117.963	25
Drain plug radiator		Model 107	8
		Model 126	1.5–2[1]

---

[1] This torque can be generated with a washer or coin.

Special tools

Tester for cooling system	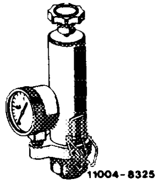	001 589 48 21 00
Radiator cap with hose for tester	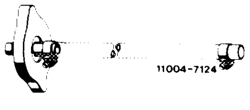	605 589 00 25 00

Conventional tool

7 mm socket insert on flexible shaft for hose clamps with worm drive	e.g. Hazet, D–5630 Remscheid Order No. 426–7

Note

For a more accurate indication of coolant temperature, the temperature transmitter has been moved from right-hand cylinder head into the inlet connection above the coolant pump.

Subsequent conversion on older vehicles is possible. For this purpose, install inlet connection 117 201 12 30. The existing electrical line from the temperature sensor to the coolant temperature indication in the instrument cluster can be used without change.

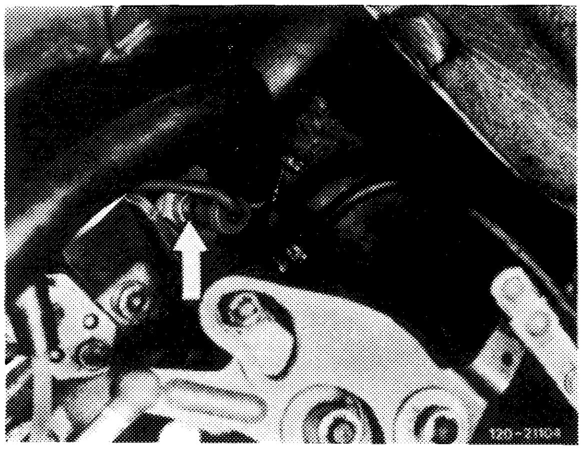

Previous installation position temperature transmitter (arrow)

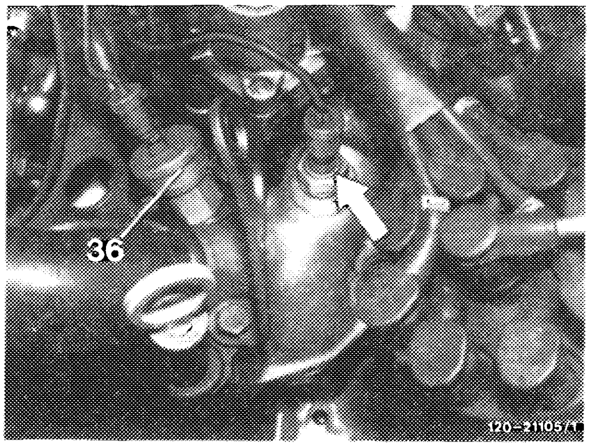

Current installation position temperature transmitter (arrow)

Removal

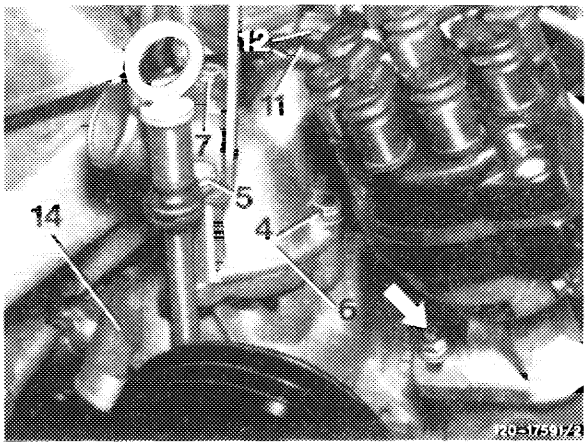

1 Drain coolant (20–010).

Engines 116.960, 116.961 standard version, 116.964, 116.965, 117.960, 117.961, 117.964, 117.965, 117.967 and 117.968

2 Disconnect coolant hose from cover (14).

3 Remove cover (14) and coolant thermostat.

Engines 116.960 and 116.961 national versions (AUS) (J) (S) (USA) 1981
116.962, 116.963, 117.962, 117.963

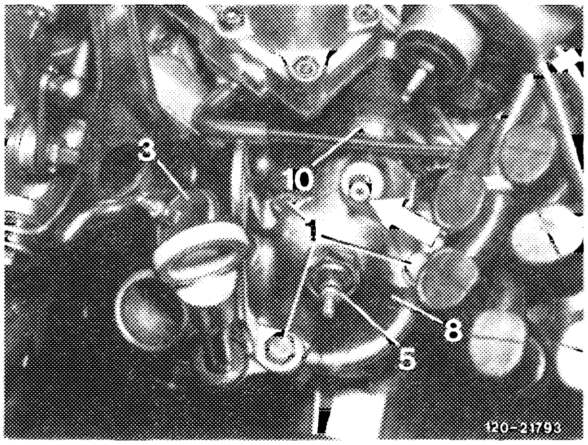

4 Pull off single plug of electric lines on temperature switch (3) and on temperature transmitter (5).

5 Disconnect vent hose on connecting pipe (arrow). (Not required on engines 116.960 and 116.961 (AUS) (J) (S) (USA) 1981 to August 1981).

6 Loosen hose clamp (10), unscrew fastening screws (1) and remove inlet connection (8) together with coolant thermostat.

Installation

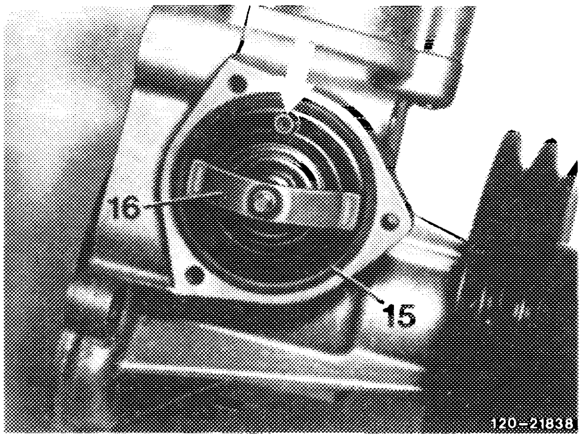

Engines 116.960, 116.961 standard version, 116.964, 116.965, 117.960, 117.961, 117.964, 117.965, 117.967 and 117.968

7 If required, install coolant thermostat (16) with a new sealing ring (15) in such a manner that the ball valve is on the top (arrow). During installation, ensure free movement of the ball in the valve.

8 Install cover (14) and tighten fastening screws (13) to 10 Nm.

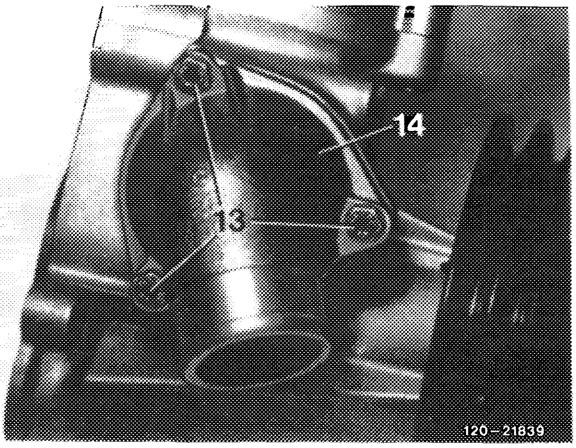

Engines 116.960 and 116.961 national versions
(AUS) (J) (S) (USA) 1981
116.962, 116.963, 117.962, 117.963

9 If required, fit new gasket (16) to coolant thermostat. Install coolant thermostat in inlet connection (8) in such a way that the lever (50) engages with pin (51) in the recess (arrow) and that the two ends of the spring (52) engage in the retaining lugs (dashed arrows).

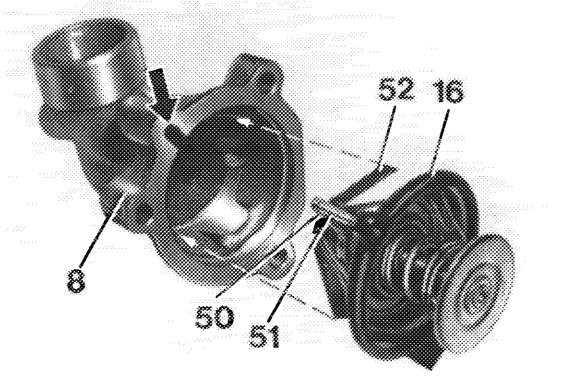

10 Install inlet connection with installed coolant thermostat in such a manner that the pin (51) engages in the control bore in the cooling pump housing (dashed arrow).

Tighten fastening screws for inlet connection to 25 Nm.

11 Refit single plug of electric lines to temperature switch and temperature transmitter and connect vent hose.

12 Fill in coolant (20–010).

13 Check cooling system for leaks by pressure-testing with tester (1 bar gauge pressure).

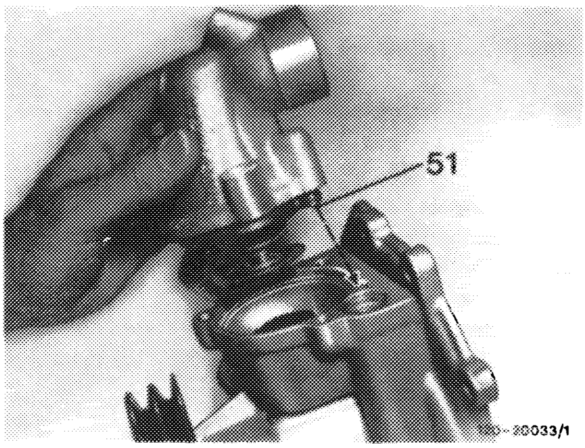

Coolant pump, coolant thermostat, inlet connection

Engines 116.960 and 116.961 standard version, 117.960, 117.961

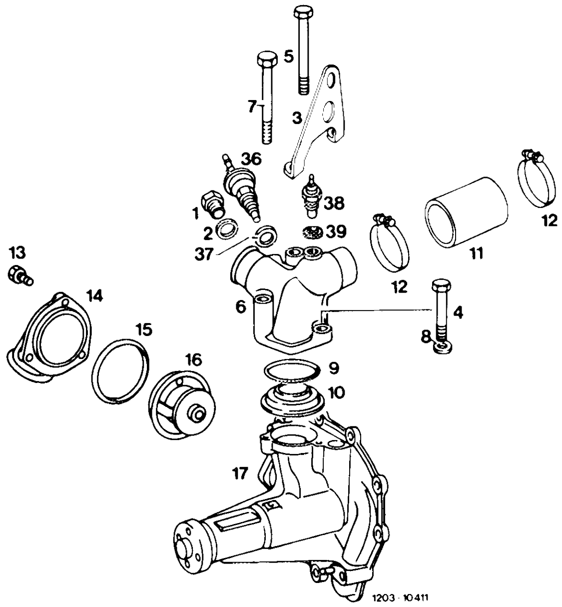

1	Closing plug	M 14 x 1.5, vehicles without air conditioner or automatic climate control
2	Sealing ring	A 14 x 18 – Cu
3	Suspension eye	
4	Hex. head bolt	M 8 x 30, 25 Nm
5	Hex. head bolt	M 8 x 65, 25 Nm
6	Inlet connection	
7	Hex. head bolt	M 8 x 85, 25 Nm
8	Washer	A 8, 4, 1 each
9	Sealing ring	Check, renew if required
10	Spacer ring	
11	Coolant hose	42 x 51 x 40
12	Hose clamp	L 45–35, 2 each
13	Combination screw	M 6 x 20, 3 each, 10 Nm
14	Cover coolant thermostat	
15	Sealing ring	Check, renew if required
16	Coolant thermostat	Start of control 75^{+1}_{-3} °C, end of control (fully opened) max. 92 °C. Ensure correct installation position
17	Coolant pump	
36	Temperature switch	On: 110^{+2}_{-3} °C, Off: 105 ± 3 °C. Switches second stage supplementary heater on vehicles with air conditioner or automatic climate control
37	Sealing ring	A 14 x 18 – Cu
38	Temperature transmitter	For coolant temperature indication in instrument cluster. Installed in right-hand cylinder head up to the end of November 1980.
39	Sealing ring	A 14 x 18 Cu

Fan, viscofan clutch, coolant pump

Engines 116.960 and 116.961 standard version, 117.960, 117.961

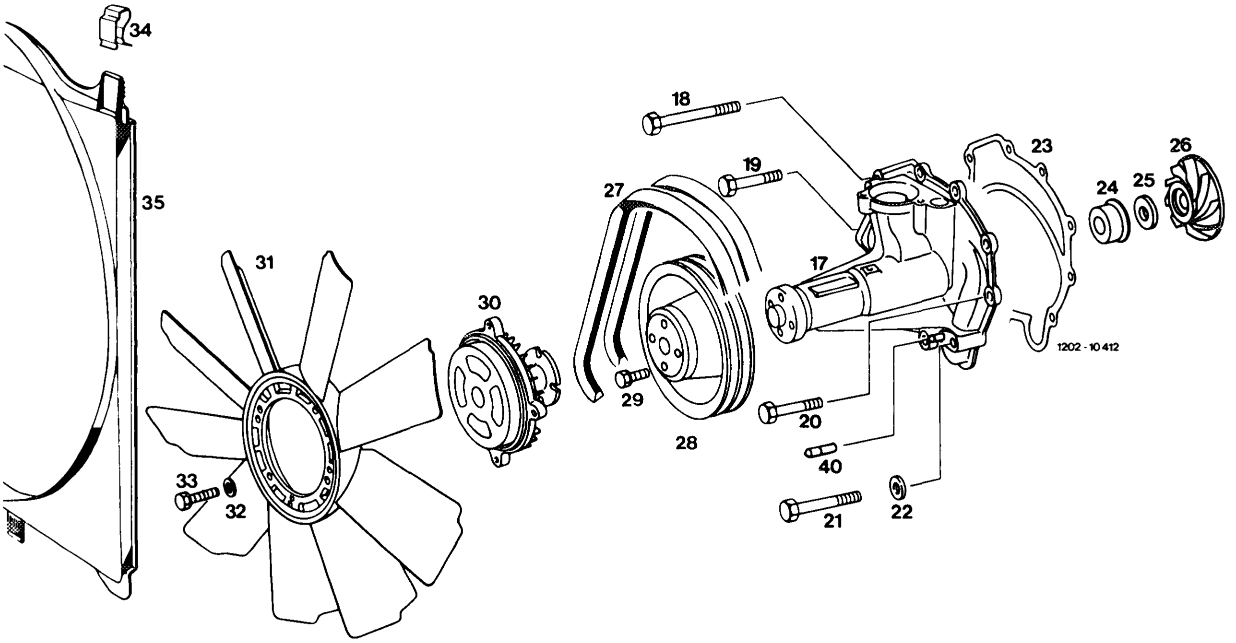

17	Coolant pump	
18	Hex. head bolt	M 8 x 135, 25 Nm
19	Hex. head bolt	M 8 x 65, 2 each, 25 Nm
20	Hex. head bolt	M 8 x 60, 4 each, 25 Nm
21	Hex. head bolt	M 8 x 85, 25 Nm
22	Washer	A 8, 4, 7 each
23	Gasket	Renew
24	Slide ring seal	Observe installation instructions
25	Counterring with sealing ring	Observe installation instructions
26	Impeller	Carefully clean seat for counter-ring
27	V-belt	2 each (dimensions, adjusting values, installation instructions 13–335, 13–340)
28	V-belt pulley	
29	Collar screw	M 8 x 18, 4 each, 25 Nm
30	Viscofan clutch	Speed-controlled
31	Fan	9 blades, 460 mm dia., light alloy
32	Spring washer	B 6, 4 each, standard up to March 1981 together with hex. head bolt M 6 x 22
33	Combination screw	M 6 x 20, 4 each, 11 Nm
34	Flat shaped spring	2 each
35	Fan shroud	
40	Adjusting pointer	

Coolant pump, coolant thermostat, inlet connection

Engines 116.960 and 116.961 national versions (AUS) (J) (S) (USA) 1981
116.962, 116.963, 117.962, 117.963

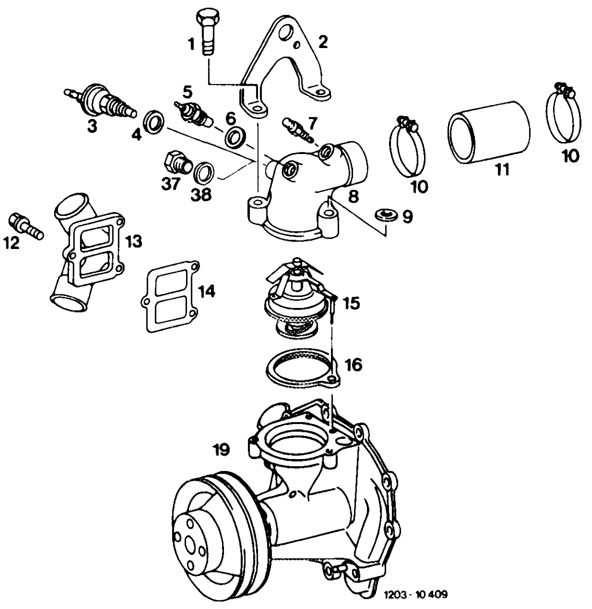

1	Hex. head bolt	M 8 x 35, 3 each, 25 Nm
2	Suspension eye	
3	Temperature switch	On: 110^{+2}_{-3} °C, Off: 105 ± 3 °C, switches second stage supplementary fan on vehicles with air conditioner or automatic climate control
4	Sealing ring	A 14 x 18 – DIN 7603 – AL
5	Temperature transmitter	For coolant temperature indication in instrument cluster
6	Sealing ring	A 14 x 18 – DIN 7603 – AL
7	Vent screw	Only engines 116.960 and 116.961 national versions (AUS) (J) (S) (USA) 1981 to August 1981
8	Inlet connection	
9	Washer	A 8, 4, 1 each
10	Hose clamp	L 45 – 35, 2 each
11	Coolant hose	42 x 51 x 58
12	Combination screw	M 6 x 22, 10 Nm
13	Cover	
14	Gasket	Renew
15	Coolant thermostat	Start of control 84 + 2 °C, end of control (fully opened) max. 99 °C, without vent valve Observe installation instructions
16	Gasket	Check, renew if required
19	Coolant pump	
37	Closing plug	M 14 x 1.5 aluminum alloy, vehicles with air conditioner or automatic climate control
38	Sealing ring	A 14 x 8 – DIN 7603 – AL

Fan, viscofan clutch, coolant pump

Engines 116.960 and 116.961 national versions (AUS) (J) (S) (USA) 1981
116.962, 116.963, 117.962, 117.963

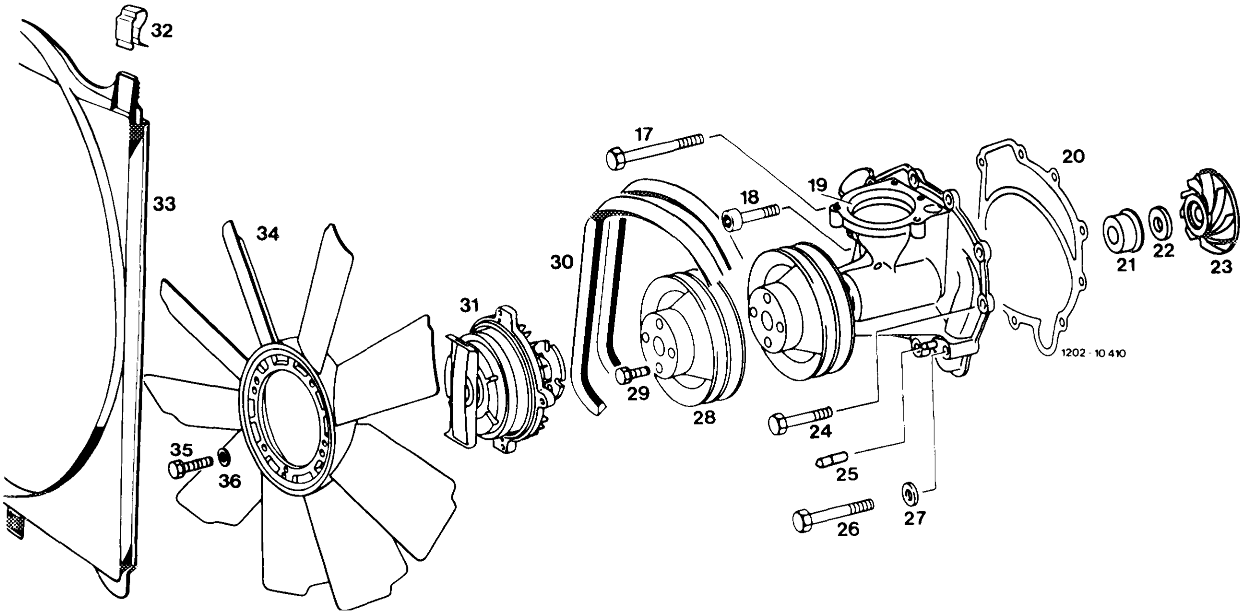

17	Hex. head bolt	M 8 x 135, 25 Nm
18	Hex. head bolt	M 8 x 65, 2 each, 25 Nm
19	Coolant pump	
20	Gasket	Renew
21	Slide ring seal	Observe installation instructions
22	Counter-ring with sealing ring	Observe installation instructions
23	Impeller	Carefully clean seat for counter-ring
24	Hex. head bolt	M 8 x 60, 4 each, 25 Nm
25	Adjusting pointer	
26	Hex. head bolt	M 8 x 85, 25 Nm
27	Washer	A 8, 4, 8 each
28	V-belt pulley	
29	Collar screw	M 8 x 18, 4 each, 25 Nm
30	V-belt	2 each (dimensions, adjusting values, installation instructions 13–335, 13–340)
31	Viscofan clutch	Speed and temperature-controlled
32	Flat shaped spring	2 each
33	Fan shroud	
34	Fan	9 blades, 460 mm dia., light alloy
35	Combination screw	M 6 x 20, 4 each, 11 Nm
36	Spring washer	B 6, 4 each, standard up to March 1981 together with hex. head bolt M 6 x 22 on engines 116.960 and 116.961 national versions (AUS) (J) (S) (USA) 1981

Coolant pump, coolant thermostat, inlet connection

Engines 116.964 and 116.965 standard version, 117.964, 117.965, 117.967 and 117.968

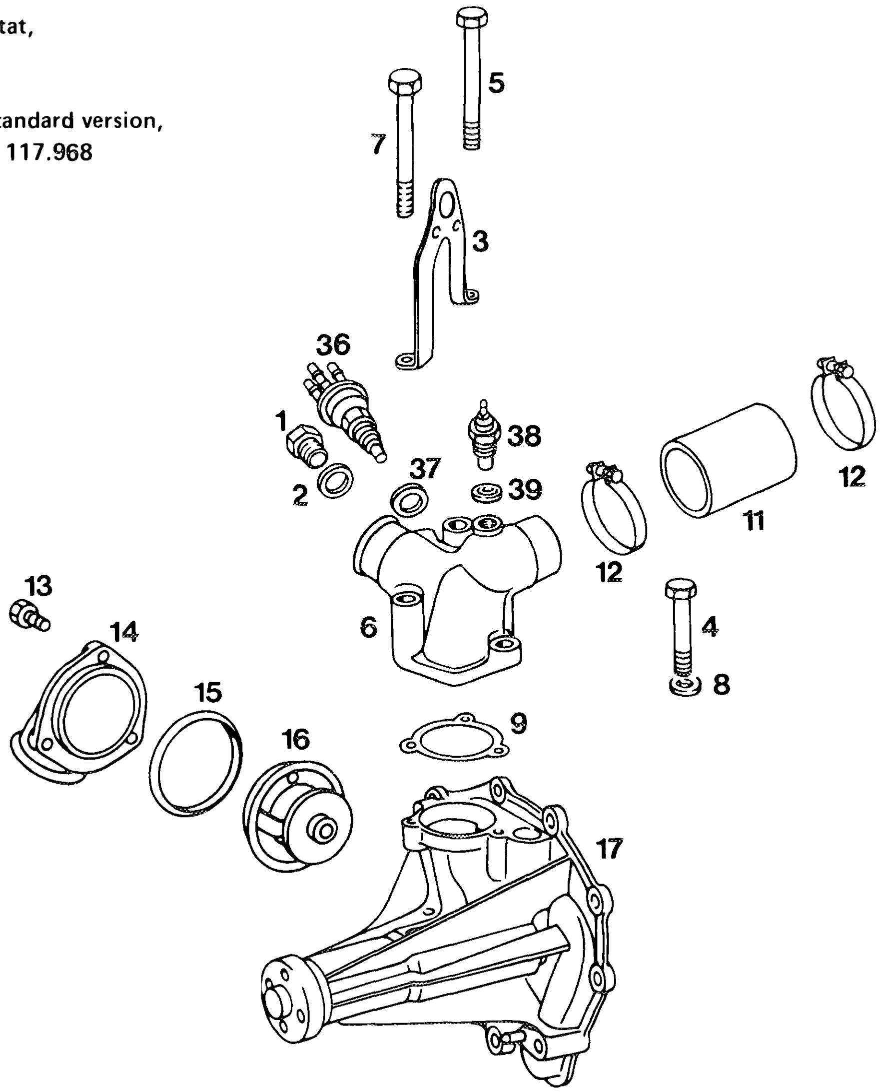

1203-14589

1	Closing plug	M 14 x 1.5, vehicles without air conditioner or automatic climate control
2	Sealing ring	A 14 x 18 – DIN 7603 – AL
3	Suspension eye	
4	Hex. head bolt	M 8 x 30, 25 Nm
5	Hex. head bolt	M 8 x 65, 25 Nm
6	Inlet connection	
7	Hex. head bolt	M 8 x 85, 25 Nm
8	Washer	A 8, 4, 1 each
9	Gasket	Check, renew if required
11	Coolant hose	42 x 51 x 40
12	Hose clamp	L 45–35, 2 each
13	Combination screw	M 6 x 20, 3 each, 10 Nm
14	Cover coolant thermostat	
15	Sealing ring	Check, renew if required
16	Coolant thermostat	Start of control 80^{+2}_{-2} °C, end of control (fully opened) max. 94 °C. Observe correct installation position
17	Coolant pump	
36	Temperature switch	Switches on 2nd stage supplementary fan at 105 °C – off at 98 °C, switches off refrigerant compressor at 115 °C (emergency off) – on at 108 °C
37	Sealing ring	A 14 x 18 – DIN 7603 – AL
38	Temperature transmitter	For coolant temperature indication in instrument cluster
39	Sealing ring	A 14 x 18 – DIN 7603 – AL

Tightening torques

			Nm
Fastening screws	Viscofan clutch and pulley to coolant pump		25
	Coolant pump to timing case cover or crankcase		
	Inlet connection to coolant pump		
Drain plug radiator		Model 107	8
		Model 126	1.5–2 1)

1) This torque can be generated with a washer or coin.

Special tools

Tester for cooling system	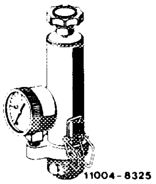	001 589 48 21 00
Radiator cap with hose for leak tester	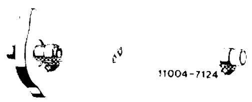	605 589 00 25 00
Socket insert 27 mm, 1/2" drive	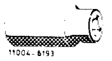	001 589 65 09 00

Conventional tool

7 mm hex. socket insert on flexible shaft for hose clamps with worm drive	e.g. Hazet, D–5630 Remscheid Order No. 426–7

Note

On the engines 116.962/963 and 117.962/963 the bypass duct below the thermostat was changed in the coolant pump housing.

This reduces fluctuations of the temperature indication between 80–100 °C. The opening (2 and arrow) in the shape of a circular section was converted into a circular opening with 30 mm dia. (1 and arrow).

This change is subsequently possible by drilling the web and the cast skin with a 3 mm drill. The aluminum chips must be extracted with a vacuum cleaner.

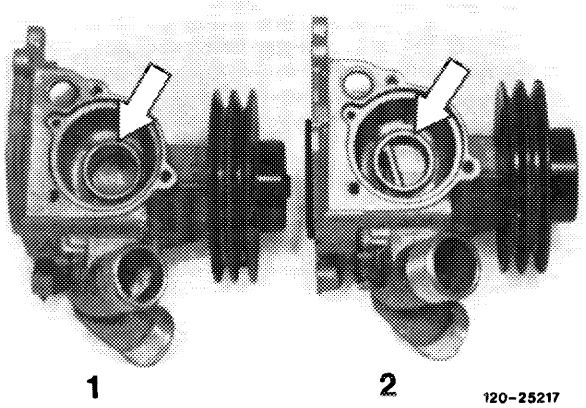

Production breakpoint circular opening: August 1982

Model	Engine	Engine end No.	Chassis end No.
107.045	116.962	009555	018918
107.046	117.962	001248	002196
126.032/033	116.963	017995	034984
126.036/037	117.963	014217	024413
126.043	116.963	017995	003653
126.044	117.963	014217	002959

A coolant thermostat from a 2nd manufacturer was optionally installed in the engines 116.962/963 and 117.962/963 as of August 1982.

Distinguishing features on coolant thermostat

Designation	1st manufacturer	2nd manufacturer
Coolant thermostat	Wahler	Behr-Thomson

Production breakpoint: optionally as of August 1982

Model	Engine	Engine end No.	Chassis end No.
107.045	116.962	009362	018804
107.046	117.962	001216	002168
126.032/033	116.963	017592	034707
126.036/037	117.963	013754	024024
126.043	116.963	017592	003562
126.044	117.963	013754	002893

Removal

1 Drain coolant (20—010).

2 Slacken V-belt for coolant and power steering pump and remove (13—340).

3 Remove coolant hoses between coolant pump and upper and lower coolant tanks.

4 On model 107, unscrew fan shroud from radiator top, lift out of the bottom retaining straps and place over the fan.

On model 126, pull off flat shaped springs (arrows), in upward direction, lift fan shroud out of retaining straps at the bottom and place over the fan.

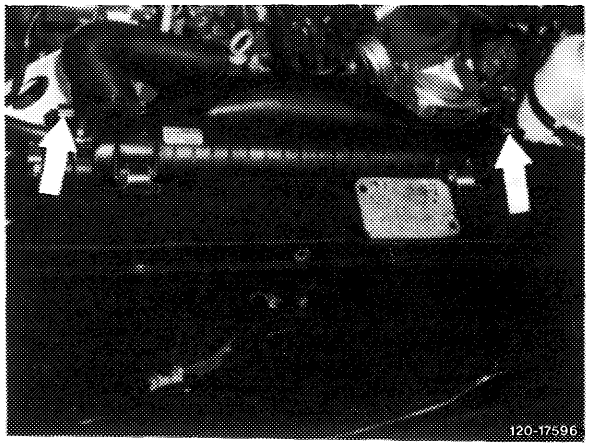

5 Unscrew fastening screws (arrow) for viscofan clutch and remove viscofan clutch with fan together with fan shroud.

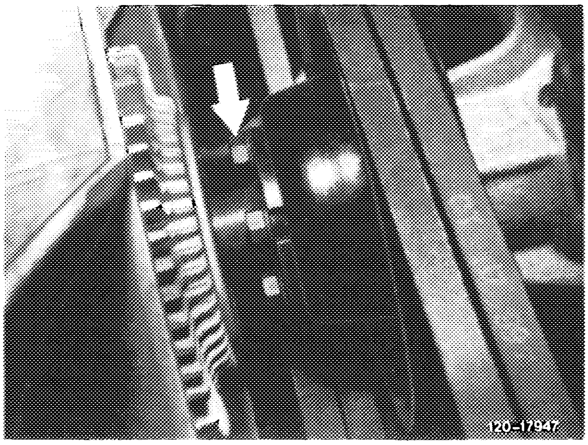

6 Remove distributor (15–530).

7 On engines 116.960, 116.961, 117.960 and 117.961 unscrew threaded pin (arrow).

8 Remove inlet connection of coolant pump:

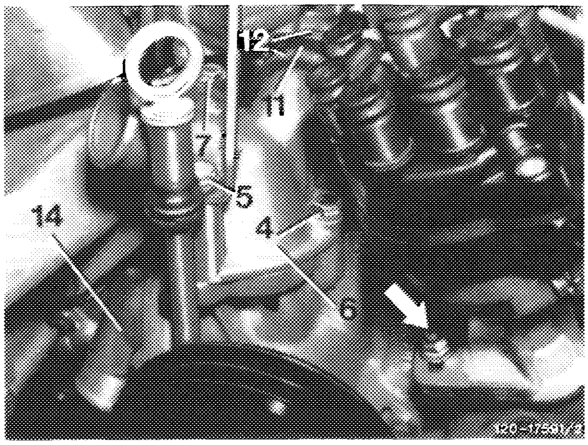

Engines 116.960, 116.961 standard version, 116.964, 116.965, 117.960, 117.961, 117.964, 117.965, 117.967 and 117.968

If screwed into inlet connection, pull single plug of electric line from temperature transmitter for coolant temperature indicator and from temperature switch for supplementary fan. Loosen front hose clamp (12) on coolant hose (11), unscrew fastening screws (4, 5 and 7) and remove inlet connection (6) with sealing ring and spacer ring.

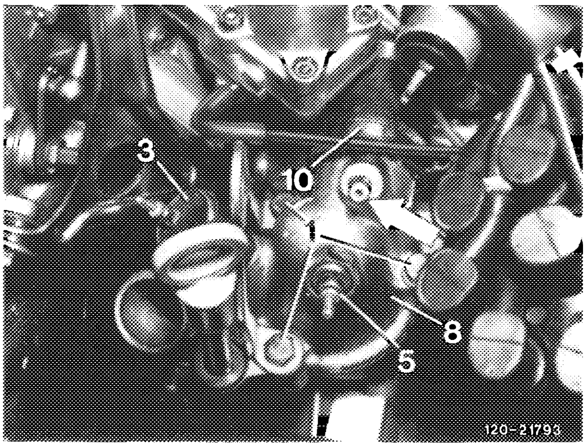

Engines 116.960 and 116.961 national versions
AUS J S USA 1981
116.962, 116.963, 117.962 and 117.963

Plug single plug of electric line from temperature transmitter (5) and, if screwed in, from temperature switch (3). If installed, disconnect vent hose on connecting pipe (arrow). Loosen hose clamp (10), unscrew fastening screws (1) and remove inlet connection (8) with sealing ring and coolant thermostat.

9 On vehicles with hydropneumatic suspension, unscrew hollow screw (5) on hydraulic oil pump and put high pressure line (6) aside.

10 Remove vibration damper (03–342).

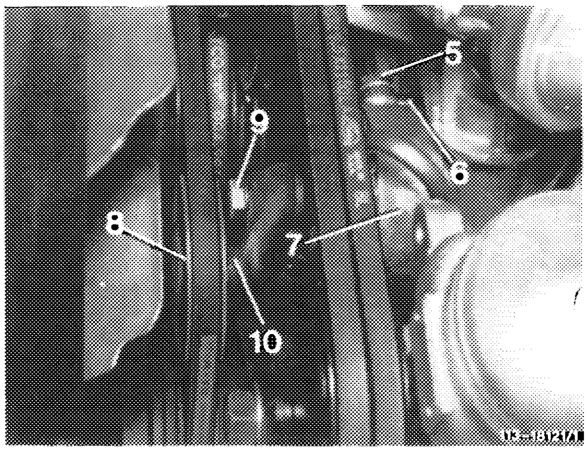

11 Unscrew fastening screws (1) and remove coolant pump.

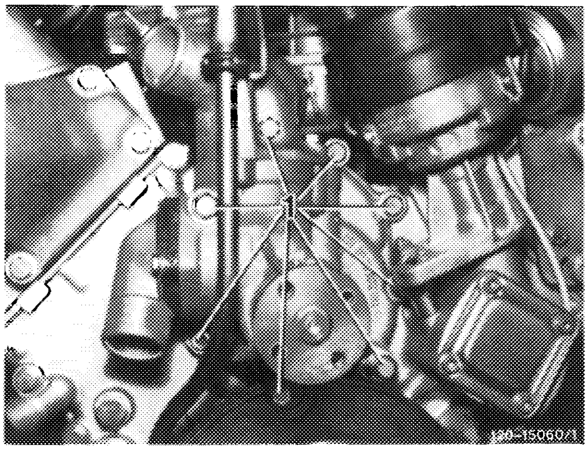

Installation

12 Carefully clean sealing surfaces and install coolant pump with new gasket. Tighten fastening screws to 25 Nm.

13 For further installation proceed vice versa to items 2–10.

Check seal or sealing ring for inlet connection and renew if required.

Tighten fastening screws of inlet connection and of viscofan clutch to 25 Nm.

14 Check firing point and adjust if required (15–501).

15 Fill in coolant (20–010).

16 Check cooling system for leaks by means of pressure test with tester (1.0 to 1.3 bar gauge pressure).

The coolant pump cannot be reconditioned. After pressing out coolant pump shaft with compact bearing, the tight fit of the new compact bearing in the light alloy housing of the coolant pump is no longer assured.

In the event of leaks on the coolant pump, the sliding ring seal and the counter-ring with sealing ring can be replaced after pulling off the impeller (20–225).

20–225 Sealing coolant pump

Special tool

Puller for impeller

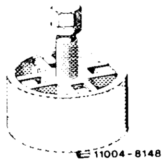

100 589 15 33 00

Self-fabricated tools

Pressing-in sleeve

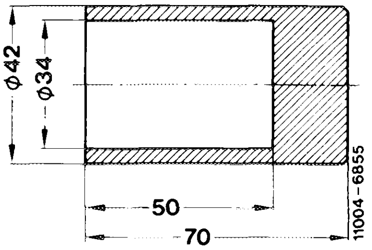

Tester for tight fit of impeller

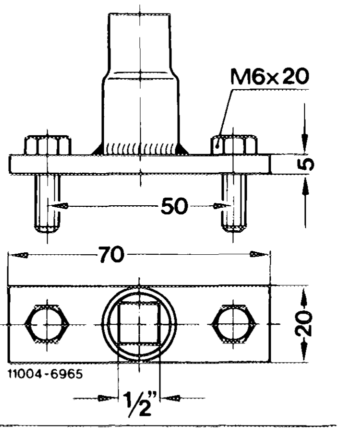

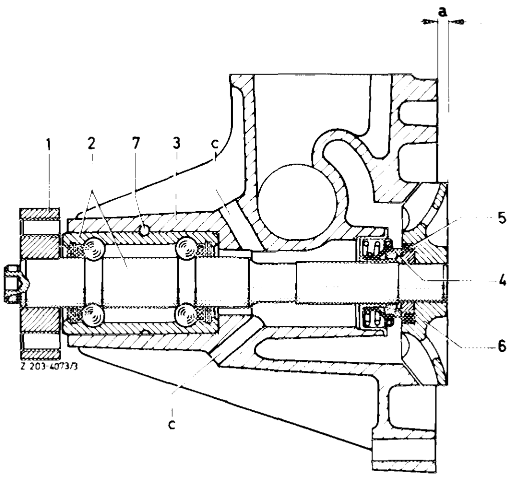

1 Flange
2 Coolant pump shaft with compact bearing
3 Coolant pump housing
4 *Sliding ring seal*
5 Counter-ring with sealing ring
6 Impeller
7 Dowel sleeve

a 5.3–5.7 mm
c Vent bores

Note

In October 1982 a modified sliding ring seal was temporarily installed in the coolant pump.

In the event of repairs, the parts must be installed according to the spare parts microfilm. The sliding ring seal must be renewed together with the counter-ring in the impeller in this case.

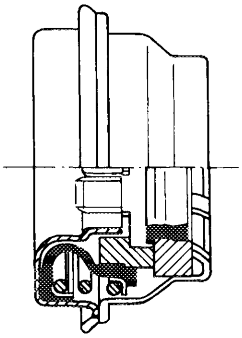

Modified sliding ring seal

1204–10595/1

Production breakpoint: October 1982

Model	Engine	Engine end No.	Chassis end No.
107.045	116.962	010568–011371	020008–020813
107.046	117.962	001409–001513	002344–002447
126.032/033	116.963	019968–021578	036525–037774
126.036/037	117.963	016596–017767	026056–026924
126.043	116.963	019968–021578	004095–004435
126.044	117.963	016596–017767	003634–003893

Disassembly

1 Pull off impeller.

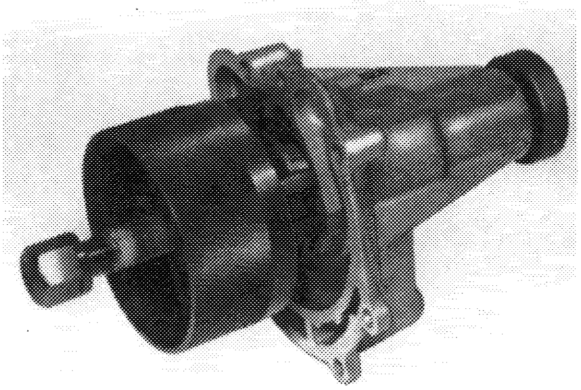

120–15133

2 Cancel preload at several points by means of light hammer blows between coolant pump housing and sliding ring seal and push out sliding ring seal.

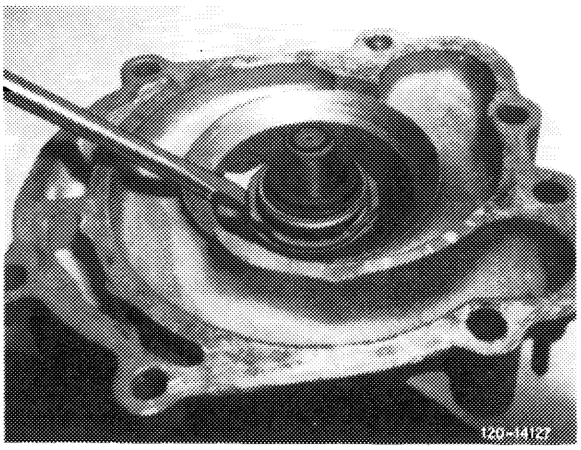

3 Force counter-ring out of impeller.

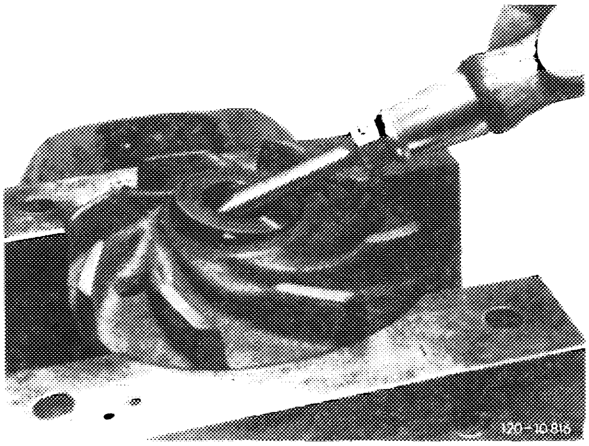

Assembly

4 Lightly coat housing jacket of sliding ring seal with sealing compound and drive or press sliding ring seal into bearing housing by means of pressing-in sleeve.

Caution!
Support at bearing housing only and not at coolant pump shaft.

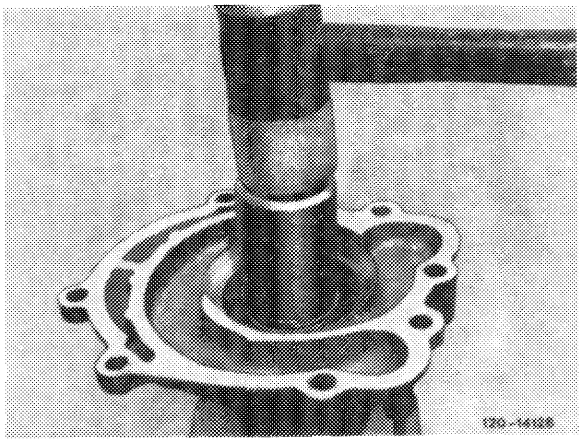

5 Coat sealing ring on counter-ring with brake cylinder paste and push counter-ring with chamfered side (arrow) into carefully cleaned mounting bore of impeller.

6 By means of a chamois leather, remove all dust from the sealing surface of the counter-ring and sliding ring seal.

7 Grease shaft stub of coolant pump shaft and bore in impeller.

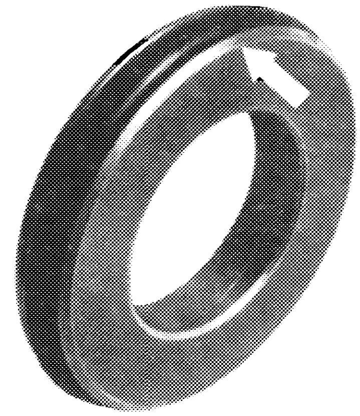

120 - 10863

8 Press on impeller while supporting the coolant pump shaft.

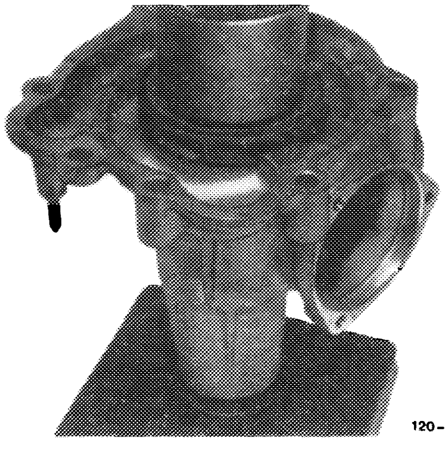

120–14125

9 Check impeller for tight seat, nominal torque minimum 35 Nm.

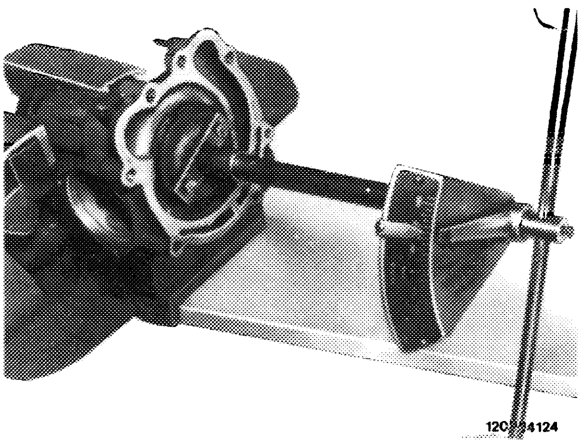

120[illegible]4124

Viscofan clutch speed-controlled

Engines 116.960 and 116.961 standard version, 117.960, 117.961

Operation

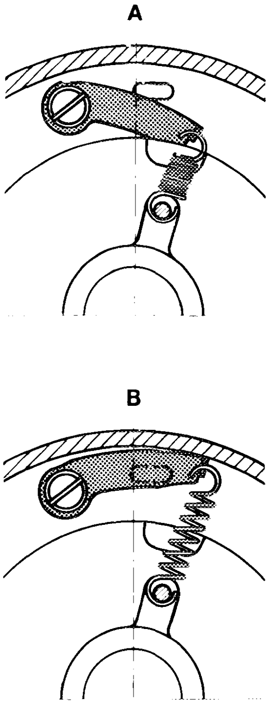

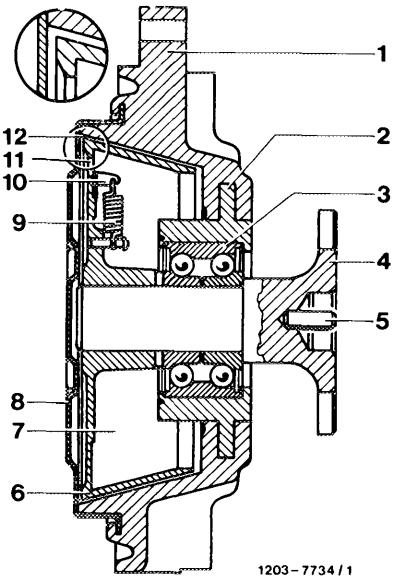

1	Secondary part
2	Steel bushing
3	Double row angular ball bearing
4	Flange shaft
5	Pin
6	Primary or drive disk
7	Supply chamber
8	Cover
9	Tension spring
10	Closing lever
11	Transfer bore
12	Working gap
A	Engaging position
B	Disengaging position

Up to an engine speed of approx. 4650/min (engines 116.960, 116.961) and of approx. 3850/min (engines 117.960, 117.961) the fan speed increases proportionally to the engine speed, during which a fan speed of approx. 3000/min caused by the reduction of the belt drive and by the slip in the viscofan clutch is not exceeded. If the engine speed increases still further, the fan speed will drop to approx. 400–600/min; but a fan speed of approx. 600/min will not be exceeded even at maximum speed of engine.

As soon as the engine speed drops to approx. 4100/min (engines 116.960, 116.961) and approx. 3400/min (engines 117.960, 117.961), the viscofan clutch will engage again.

Engagement and disengagement is controlled by the closing lever (10) which, at increasing speed under influence of centrifugal force acting against force of tension spring (9), is gradually pushed over the transfer bore (11) until that bore is completely covered, thereby interrupting the circulation of the viscous oil (B, cut-out position). Under the influence of dropping speed, the effect of the centrifugal force on the closing lever is gradually reduced so that the lever can be displaced by the force of the tension spring (9) against the centrifugal force, with the result that the transfer bore is gradually opened and the circulation of the viscous oil is re-established (A, cut-in position).

Viscofan clutch temperature and speed-controlled

Engines 116.960 and 116.961 national versions (AUS) (J) (S) (USA) 1981
116.962, 116.963, 116.964, 116.965, 117.962, 117.963, 117.964, 117.965, 117.967 and 117.968

Operation

At coolant temperatures below approx. 105 °C the bimetallic strip (1) pushes the spring plate (3) against the primary disk (4) by way of the pin (2). The transfer bore (5) will then be covered and the circulation of the viscous oil will be interrupted. The viscofan clutch is disengaged and the fan rotates independent of the engine speed at 400–600/min; but the fan speed will not exceed a maximum of approx. 600/min even at maximum engine speed.

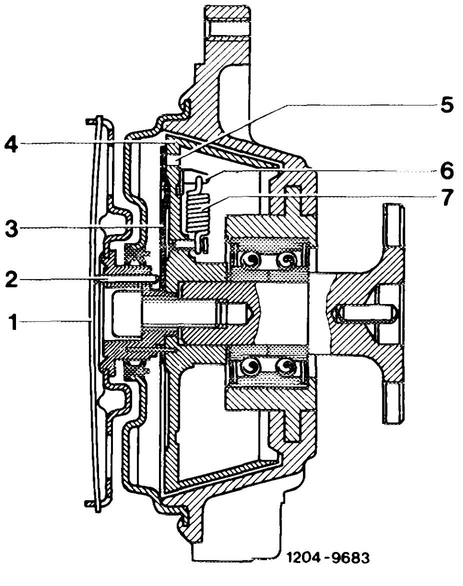

1 Bimetallic strip
2 Pin
3 Spring plate
4 Primary or drive disk
5 Transfer bore
6 Closing lever
7 Tension spring

Starting at a coolant temperature of approx. 105 °C, the bimetallic strip (1) is heated by the air flowing through the radiator so that it will change its shape and arch in an outward direction. The spring plate (3) can now clear the transfer bore (5), as a result of which the circulation of the viscous oil is established and the viscofan clutch is engaged.

The fan now rotates up to an engine speed of approx. 3850/min, proportionate to the engine speed, but not exceeding a fan speed of approx. 3000/min under influence of the transmission ratio of the belt drive and of the slip in the viscofan clutch. With further increasing engine speed, the fan clutch will disengage and the fan will rotate independent of the engine speed at 400—600/min, but will not exceed a maximum approx. fan speed of 600/min even at maximum engine speed.

If the engine speed drops to approx. 3400/min, the viscofan clutch will again engage.

A a coolant temperature of approx. 105 °C engagement and disengagement is controlled by the closing lever (6) which, at increasing speed under influence of centrifugal force acting against force of tension spring (7), is gradually pushed over the transfer bore (5) until the bore is completely covered, thereby interrupting the circulation of the viscous oil (B, cut-out position). Under influence of the dropping speed, the effect of the centrifugal force on the closing lever is gradually reduced so that the lever can be displaced by the force of the tension spring (7) against the centrifugal force, with the result that the transfer bore is gradually exposed and the circulation of the viscous oil is re-established (A, cut-in position).

A

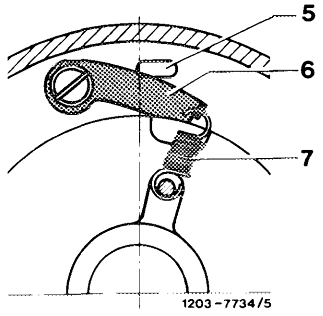

B

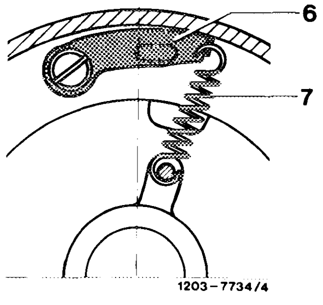

With decreasing coolant temperature the bimetallic strip (1) will gradually cool down and its changing shape will increasingly displace the spring plate (3) by way of the pin (2) in the direction of the primary disk (4) until the spring plate closes the transfer bore (5) not later than at a coolant temperature of approx. 95 °C. The circulation of the viscous oil is interrupted, the viscofan clutch will disengage.

Checkup

For checking the cut-out and cut-in point of the viscofan clutch, slowly increase or decrease the engine speed.

Disengagement and engagement of the viscofan clutch is acoustically indicated by the decreasing or increasing sound of the fan speed, visually, and also by the clearly noticeable increase or decrease of the air flow rate.

The viscofan clutch should disengage or engage not later than at the specified engine speeds or coolant temperature. Replace the viscofan clutch if it disengages or engages too late. A defective viscofan clutch cannot be repaired with workshop equipment.

Viscofan clutches should be transported and stored in an upright position. For short periods – e.g. for assembly purposes – the clutch may be set down on the flange, but not on its front end. This applies particularly to the temperature and speed-controlled viscofan clutch, since there is a risk of damaging the bracket holding the bimetallic strip which would render the clutch unfit for use.

Speed-controlled viscofan clutch

Engines 116.960 and 116.961 standard version, 117.960, 117.961

Checking disengagement and engagement

At an engine operating temperature (75–85 °C engine oil temperature) the viscofan clutch should disengage or engage at the following engine speeds.

Engine	Cut-out speed	Cut-in speed
	1/min of engine	
116	4650 ± 100	4100 ± 100
117	3850 ± 100	3400 ± 100

Temperature and speed-controlled viscofan clutch

Engines 116.960 and 116.961 national versions
AUS J S USA 1981,
116.962, 116.963, 116.964, 116.965, 117.962,
117.963, 117.964, 117.965, 117.967 and 117.968

Checking temperature and speed-controlled engagement

Run engine at approx. 4500/min until a coolant temperature of 100^{+5} °C has been reached. Reduce the engine speed to 3400^{+100}_{-200}/min. The viscofan clutch should engage.

Checking speed-controlled disengagement (coolant temperature $> 100^{+5}$ °C)

Increase engine speed to 3850^{+200}_{-100}/min. Viscofan clutch should disengage.

Caution!
While driving, and in addition to outside air temperature, the engine load and the driving speed play a decisive part. At low outside air temperatures, high engine load and low driving speed, the coolant temperature may increase to approx. 110 °C before the viscofan clutch engages.

The viscofan clutch is disengaged at coolant temperatures below approx. 95 °C.

Installation dimensions for radiator, fan and fan shroud

Model	Fan distance „a" to radiator, approx. mm	Fan distance to fan shroud, approx. mm A	B
107	43	20	15
126	20		

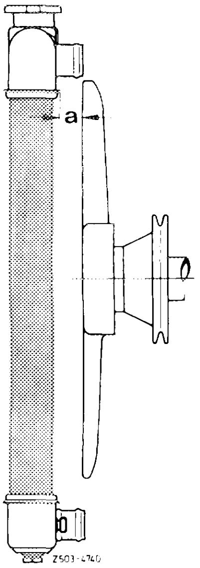

Radiator/Fan

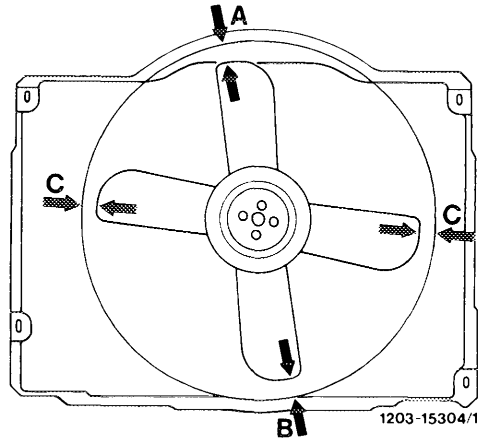

Fan shroud/Fan

Installation dimensions for radiator and radiator air-oil cooler

Model	Engine	Installation dimension „a" in mm
107	116.960, 116.962, 116.964 117.960, 117.962, 117.964 117.967	730 ± 1
126.03	116.961 standard version 117.961	698.6 ± 4
126.03 126.04	116.961 national versions 1981 116.963, 116.965, 117.963, 117.965, 117.968	700.4 ± 1.5

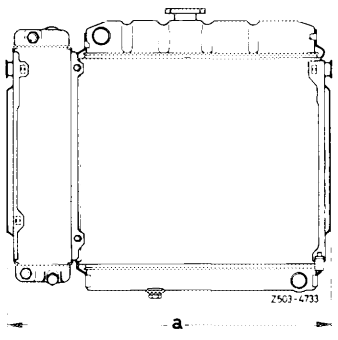

Tightening torques		Nm
Drain plug radiator	Model 107	8
	Model 126	1.5–2[1])
Coupling nut lube oil hose to air-oil cooler		25
Coupling nut gear oil hose to radiator		15
Fastening screws fan shroud to radiator	Model 107	2.5

---

[1]) This torque can be generated with a washer or coin.

Special tools		
Tester for cooling system	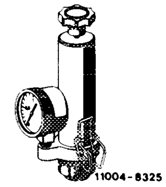	001 589 48 21 00
Radiator cap with hose for tester	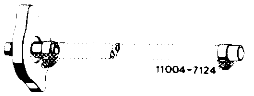	605 589 00 25 00
Hose clamp	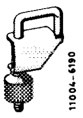	000 589 40 37 00

Conventional tool	
7 mm hex. socket insert on flexible shaft for hose clamps with worm drive	e.g. Hazet, D–5630 Remscheid Order No. 426–7

Note

As of the end of May 1982, a radiator with a core depth (a) of 42 mm (previously 34 mm) has been installed in the sedans and since the beginning of August 1982 into the coupes.

On models 126.043/044 with air conditioner or automatic climate control, a modified condenser is installed for space reasons.

Production breakpoint: As of May 1982

Model	as of chassis end No.
126.032/033	031420
126.036/037	021577
126.043	003564
126.044	002838

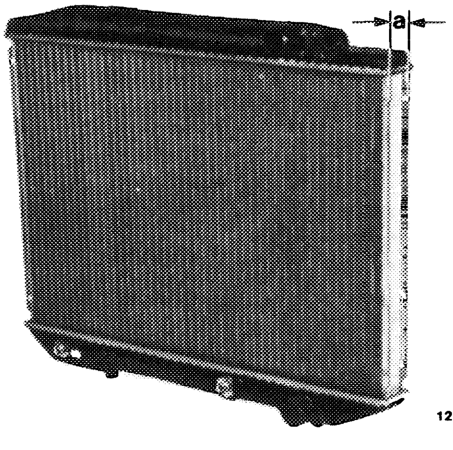

a = 42 mm

120–25226

The modified radiator can also be installed in vehicles with lower chassis end No. On models 126.043/044 with air conditioner or automatic climate control only in connection with the modified condenser (2nd version).

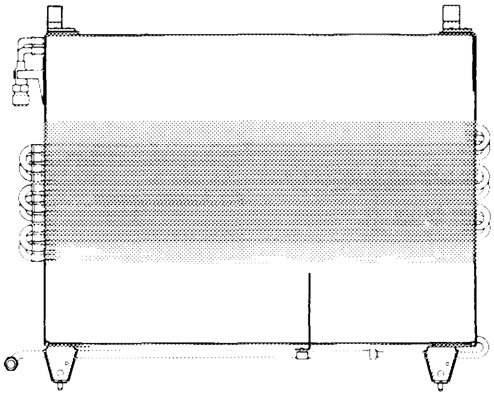

Modified condenser
(2nd version)

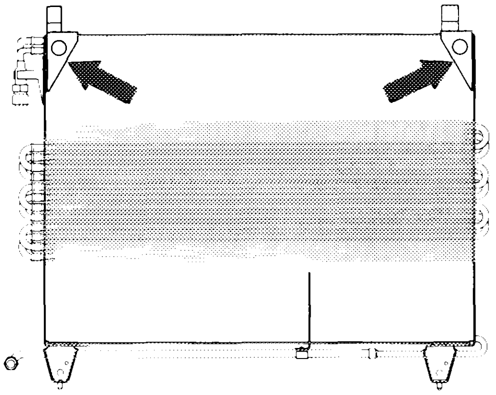

Previous condenser
(1st version)

As of the end of August 1984, a radiator (core depth 42 mm) with improved cooling capacity (66 cooling tubes) (previously 44 cooling tubes) is being installed on vehicles with energy concept. The distance from cooling tube to cooling tube is 10 mm (was 15 mm).

This radiator can also be installed in previously fabricated vehicles with energy concept.

In models 126.043/044 with air conditioner or automatic climate control up to May 1982, a modified condenser must be installed at the same time for space reasons.

Production breakpoint (radiator with 66 cooling tubes)

Model	As of chassis end No.
126	093 902

Removal

1 Drain coolant (20–010), loosen coolant hoses on radiator and pull off.

2 Disconnect gear oil and lube oil hoses and unscrew from radiator or air-oil cooler. Drain lube oil from air-oil cooler.

3 Close open connections of oil hoses as well as connections on radiator and cooler by means of plastic plug.

Model 107

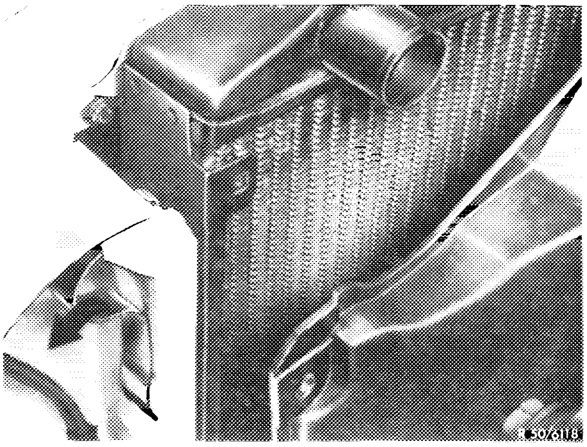

4 Unscrew fan shroud at the top, pull out of retaining brackets below and place on the fan.

5 Push holding springs in the direction of the arrow and remove.

6 Remove radiator.

Model 126

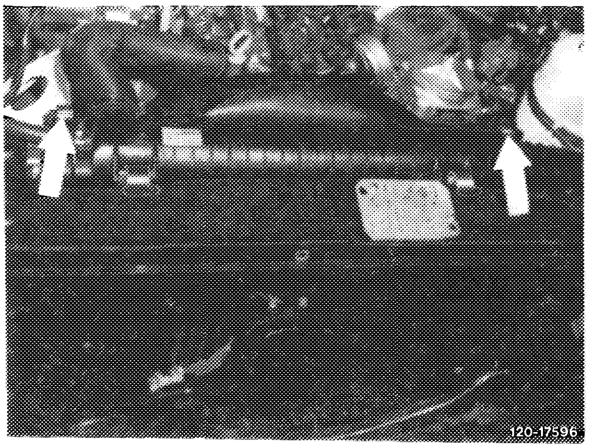

7 Pull the two flat shaped springs (arrows) out of the fan shroud in an upward direction.

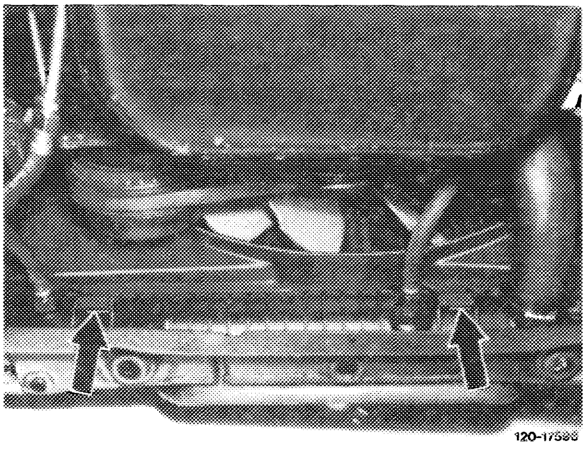

8 Lift the fan shroud out of the lower brackets (arrows) and place on the fan.

9 Pull off both flat shaped springs (arrows) in an upward direction.

10 Lift out radiator.

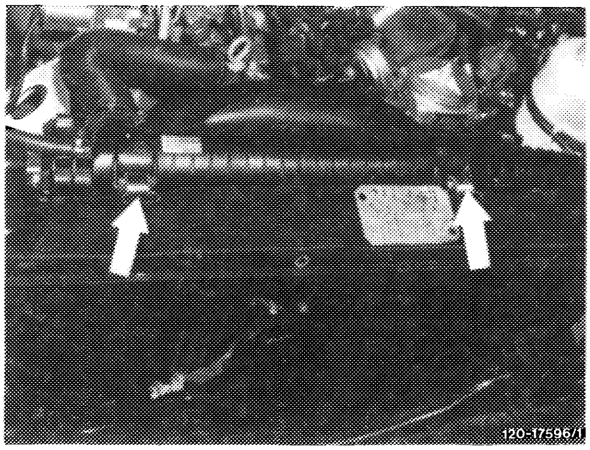

Installation

11 For installing proceed vice versa.

During installation, tighten coupling nuts of lube oil hoses on the air oil cooler to 25 Nm, the coupling nuts of the gear oil hoses on the radiator to 15 Nm and the fastening screws for the fan shroud to the radiator to 2.5 Nm. Counterhold when tightening the coupling nuts.

Pay attention to the specified distances of fan in relation to radiator and fan shroud.

12 After filling in coolant (20–010) check cooling system for leaks by pressure-testing with tester (1.0 to 1.3 bar gauge pressure).

20–425 Repairing radiator

Special tools

Tester for cooling system	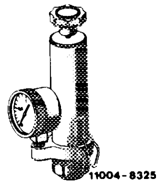	001 589 48 21 00
Radiator cap with hose for tester	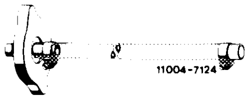	605 589 00 25 00

Conventional tool

7 mm hex. socket insert on flexible shaft for hose clamps with worm drive	e.g. Hazet, D–5630 Remscheid Order No. 426–7

Note

Since light-alloy radiators with plastic coolant tanks cannot be repaired by soldering, a sealing compound has been developed for this purpose.

This compound can also be used to seal heavy metal radiators (non-ferrous metal radiators).

The sealing compound is a product on a silicone-rubber base, which remains permanently elastic in its final condition. Temperature stability from –50 °C to + 200 °C.

Because of the varying accessibility to the radiator (e.g. in core more difficult than on coolant tank), sealing compound is available in a diluted and a non-diluted condition.

The varying sealing compound versions and the priming fluid are combined in a repair kit, part No. 123 989 00 20.

Designation	Purpose
Priming fluid	Preparation of the adhesive area
Sealing compound non-diluted	For sealing easily accessible areas
Sealing compound diluted	For sealing areas with poor access (e.g. laterally at cooling tubes)

Sealing compound and priming fluid have a shelf life of approx. 1 year if they are always closed air-tight after use.

Turbid priming fluid should no longer be used.

The following parts or areas in the cooling system can be sealed with sealing compound:

a) Plastic coolant tanks (3 and 4).

b) Heavy-metal coolant tanks (holes up to 1.5 mm dia.).

c) Light-alloy and heavy-metal cooling tubes (6).

d) Tube plate (2).

e) Bead flange (connection between radiator core and coolant tank).

f) Heat exchanger of heating system.

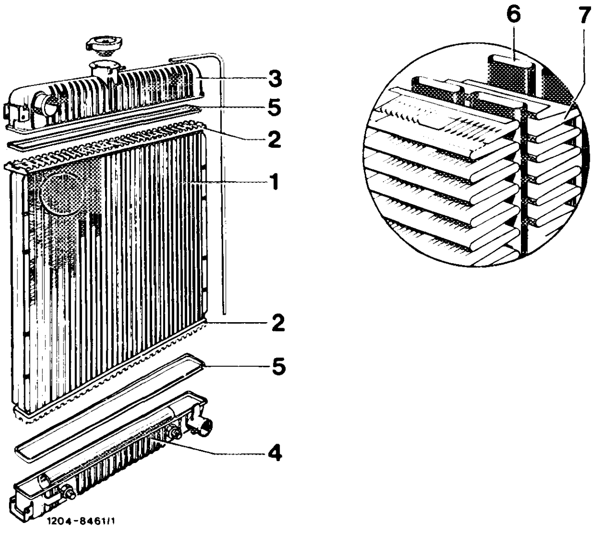

1 Radiator core
2 Tube base
3 Coolant tank top
4 Coolant tank bottom
5 Gasket
6 Cooling tubes
7 Gills

Damaged parts on the coolant tanks which are subject to higher loads, such as torn or broken fastening brackets, cracks in the fillet to the connections, breaks and very long or large cracks on the surface should not be repaired, since the sealing compound can take only a very low load.

Plastic coolant tanks of Behr radiators can be exchanged by means of special tools or fixtures in the Behr radiator repair shops or in Inter-Radia service stations. If required, contact the nearest Behr repair shop or Inter-Radia service station for this purpose and find out whether such repairs are possible.

If this is not possible, replace the radiator.

On heavy-metal radiators with plastic coolant tanks, soldering on the core may be performed only up to a distance of 20 mm from the coolant tank, as otherwise the high soldering temperature will damage the gasket (5) and the coolant tank (3 or 4). Leaks which are closer to the coolant tank should be sealed with sealing compound only.

If the leaking area cannot be clearly identified in the installed condition, the radiator need not be removed. In this case it will be sufficient to drain the coolant and to pressure-test the cooling system after sealing.

When handling priming fluid and sealing compound, observe the following:

The priming fluid is easily inflammable (observe safety regulations for dangerous materials class A 1).

Acetic acid will be released until the linking (setting) of the sealing compound has been completed. For this reason, any skin contact should be avoided. Clean affected areas immediately with water and soap. Rinse eyes with water and see a doctor if necessary.

Sealing

1 If the leaking area cannot be located properly in the installed condition, remove the radiator (20–420) and unscrew the air oil cooler from the radiator.

2 Clean the radiator.

3 Close the hose connections with self-made closing caps.

Required parts for upper hose connection:

15 2 clamps L 40–50, part No. 916026 040000
16 Coolant hose, part No. 126 501 02 82
17 Reducer made of two pipes
A 38 mm dia.
B 39 mm dia.
C 12 mm dia.

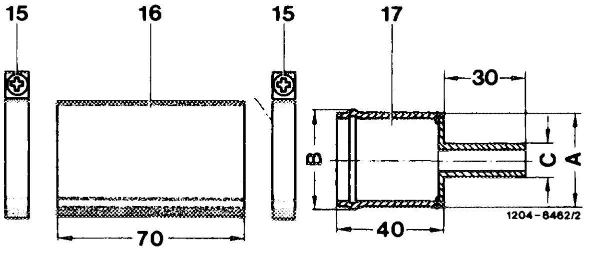

Required parts for lower hose connection:

18 2 clamps L 40–50, part No. 916026 040000
19 Coolant hose, part No. 126 501 02 82
20 Cap made from pipe
A 38 mm dia.
B 39 mm dia.

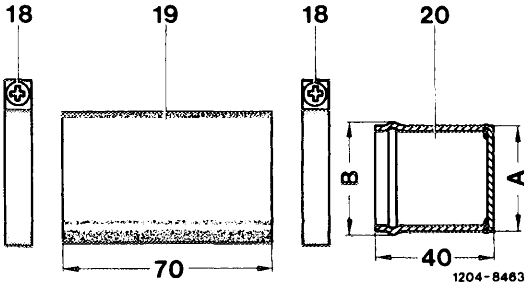

Close overflow connection on upper coolant tank.

Required parts for inlet from expansion tank:

18	2 clamps L 28–35, part No. 916026 028000
19	Coolant hose, part No. 126 501 10 82
20	Cap made from pipe
A	21 mm dia.
B	22 mm dia.

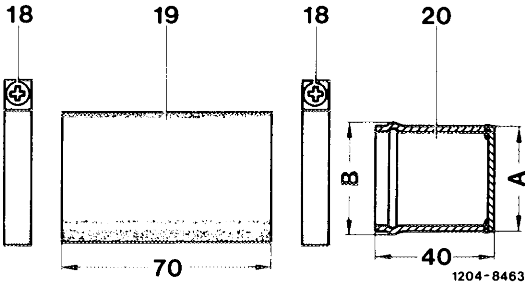

1204-8463

4 Close connections of gear oil cooler on lower coolant tank with plastic caps or plugs from used oil cooler lines. For this purpose, saw off oil cooler lines directly behind nipple and close with solder.

5 Connect tester to radiator.
For leak test, pull hose from radiator cap and attach to reducer on the upper hose connection of the radiator.

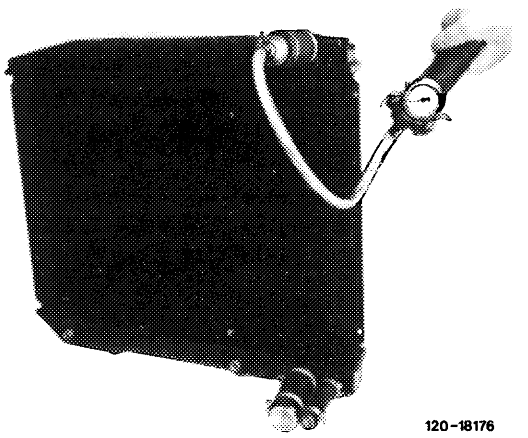

120-18176

6 Place radiator into a water bath.

7 Put the radiator under pressure by means of the tester and watch for air bubbles.

8 Mark leaking area.

9 Remove radiator and release pressure.

10 Blow radiator dry with compressed air.

11 Clean part to be sealed by means of a commercially available cleaning compound (e.g. Tri or benzine). Always clean a slightly larger area than the spot to be sealed (e.g. for cracks, approx. 20–30 mm beyond the end of the cracks).

There is no need to remove paint. The radiator can then be blown dry at the respective area by means of compressed air.

No dust or grease should remain.

12 Evenly and thinly distribute priming fluid with a brush.

Similar to cleaning, apply priming fluid beyond the area to be sealed. To prevent the priming fluid from becoming dirty in the container, pour the quantity required for the repair into a separate vessel.

Caution!
When handling priming fluid, pay attention to safety regulations. Dangerous materials class A 1, inflammable.

13 Allow priming fluid to dry for approx. 10 minutes at room temperature.

14 Position radiator in such a manner that the sealing compound cannot run off the spot to be sealed.

15 Apply diluted or non-diluted sealing compound depending on accessibility. Use brush, spatula or the like for distributing the sealing compound.

Caution!
During application and distribution make sure that no air pockets will occur.

Apply sealing compound similar to cleaning and priming beyond the spot to be sealed. If there are several leaking points on the beaded collar (arrows), it is recommended to seal the beaded collar all the way round.

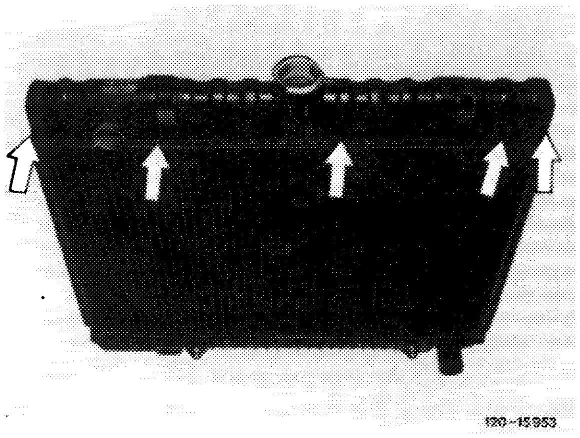

Seal leaks in the core from both sides.

At the end of the sealing procedure, close the tube again immediately. Acetic acid will be liberated until linking (setting) of sealing compound has been completed. Avoid skin contact. Clean affected areas immediately with water and soap, rinse eyes with water and see a doctor if required.

16 For drying of sealing compound, leave radiator lying or standing up for at least 3 hours. Depending on the quantity of sealing compound applied and the size of the area to be sealed, linking of sealing compound into a permanent, elastic bond will be completed after a maximum of 24 hours at room temperature.

17 Pressure-test the radiator in a water bath for approx. 5 minutes at 1.5 bar gauge pressure.

If there are still other leaks, repeat the sealing process starting with item 8.

18 Remove tester and plugs.

19 Attach air oil cooler to radiator and tighten fastening screws to 6 Nm.

20 Following the installation of radiator (20—420) and filling-in of coolant (20—010), pressure-test cooling system with tester (1.0 to 1.3 bar gauge pressure) to check for leaks.

Expansion tank cap

Part No.	Code figure	Pressure relief valve opens at bar gauge pressure
124 500 01 06 Production breakpoint as of November 87	140	1.4 ± 0.1
124 501 05 15¹) Production breakpoint and spare part as of October 86	140	1.4 ± 0.1
123 501 00 15 Production breakpoint as of June 1983	120	1.2 ± 0.1
123 501 02 15¹) Spare part until Oct. 86	120	1.2 ± 0.1
123 501 01 15	100	1.0 ± 0.2
Vacuum valve opens as of		0.1 bar vacuum

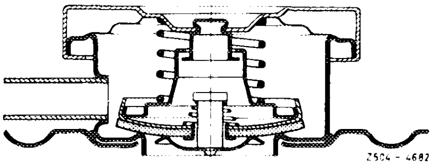

¹) Required on vehicles with overflow tank.

Special tools

Tester for cooling system and radiator cap	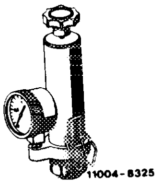	001 589 48 21 00
Double connection for expansion tank cap to tester	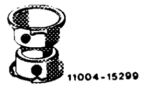	000 589 75 63 00

Note

Since June 1983, a cap with increased opening pressure has been installed. It can also be installed in previously manufactured vehicles.

The spare part cap (B) is provided with a spring-loaded seal and an additional rubber sealing ring and provides a better seal also on older-type expansion tanks with a possibly uneven contact surface.

On vehicles with overflow tank, a cap with higher opening pressure (1.4 bar) must be installed. (1.2 bar up to October 1986, 1.4 bar as of October 1986).

The caps with higher opening pressure ensure at least 1 bar gauge pressure in the cooling system even on older vehicles. This will provide increased protection against coolant ejection.

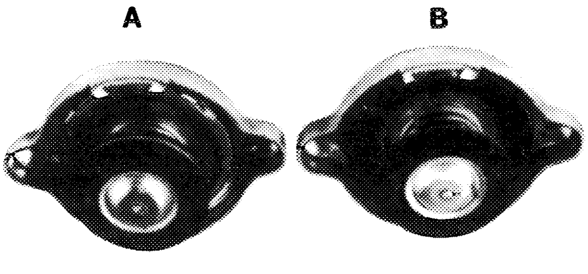

120-27353

Checking pressure relief valve

1 Attach double connector 000 589 75 63 00 to tester 001 589 48 21 00 with the retaining clamps.

2 Place expansion tank cap on the double connector.

3 Check the opening pressure by pumping.

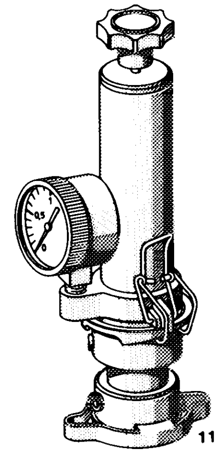

11004-8666

Checking vacuum valve

The vacuum valve (arrow) should rest against the rubber seal, be easily lifted and snap back upon release.

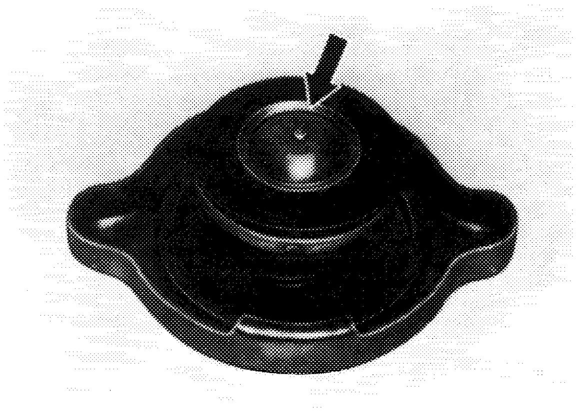

120-14497

22–211 Removal and installation of front engine mount

A. Model 107

Removal

1 Unscrew screw (20).

2 Unscrew engine mount (17) from cross member.

3 Lift engine at oil pan by means of pit lift.

Note: Use wooden base to prevent damage to the oil pan.

4 Remove engine mount.

Installation

5 For installation proceed vice versa.

6 Tighten screw (20) to 75 Nm.

Caution!
Check regulating linkage for proper function.

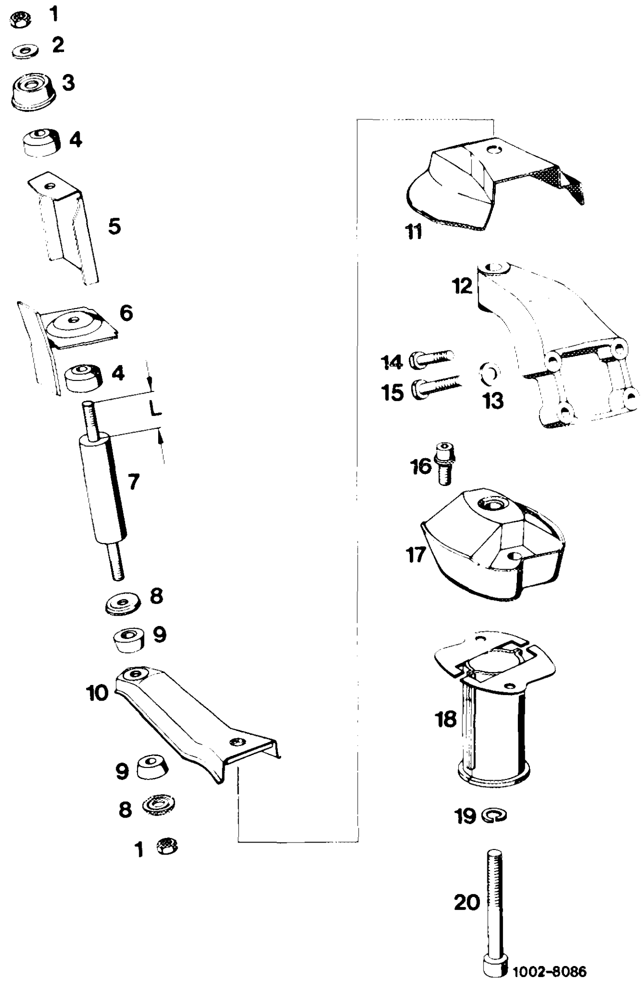

1	Nut M 6
2	Washer A 7.4
3	Cup washer 43 mm dia.
4	Rubber buffer 36 mm dia.
5	Shielding plate
6	Bracket on side member
7	Engine shock absorber, L = 45 mm
8	Cup washer 30 mm dia.
9	Rubber buffer 26 mm dia.
10	Bracket left Bracket right
11	Shielding plate
12	Engine carrier left 116 223 46 04 Engine carrier right 116 223 47 04
13	Washer A 8.4
14	Screw M 8 x 45
15	Screw M 8 x 60
16	Combination screw M 8 x 18
17	Engine mount left (1 white dot) Engine mount right (2 white dots)
18	Guide sleeve
19	Spring washer B 12
20	Screw M 12 x 80

B. Model 126

Removal

1 Unscrew screw (15, arrow) from underside of vehicle.

2 Unscrew nut (1) from engine shock absorber below.

3 Lift engine at oil pan by means of pit lift.

Note: Use wooden base to prevent damage to oil pan.

4 Unscrew screws (13) and remove engine mount.

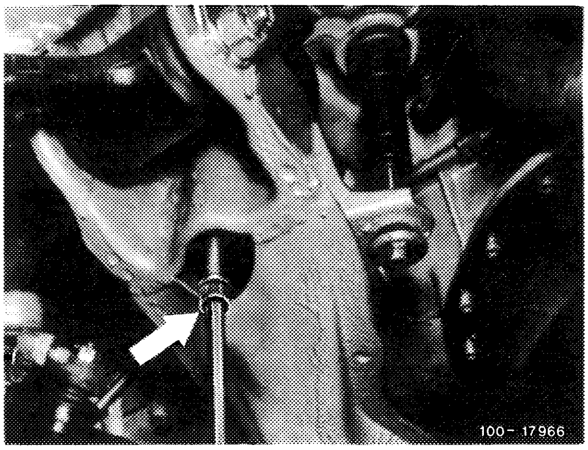

Installation

5 For installation proceed vice versa.

Note: The shielding plate is located at the left.

6 Tighten screw (15, arrow) to 70 Nm.

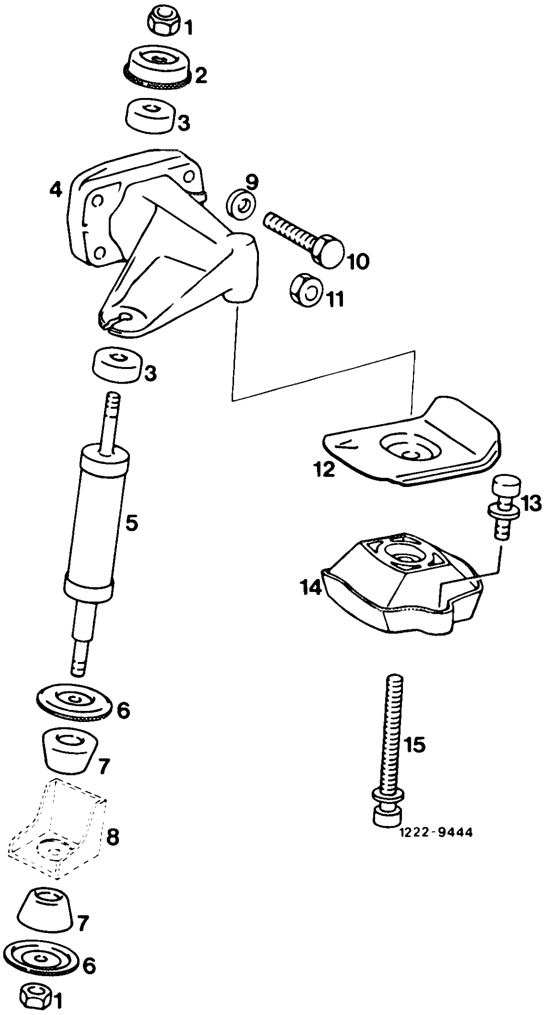

1	Nut M 6
2	Cup washer
3	Rubber buffer
4	Engine carrier
5	Engine shock absorber
6	Cup washer
7	Rubber buffer
8	Bracket
9	Washer
10	Screw
11	Nut
12	Shielding plate
13	Combination screw
14	Engine mount
15	Screw

22–212 Removal and installation of rear engine mount

A. Model 107

Caution!
Do not unscrew closing plate (11) when removing engine mount (4).

Attach engine mount to closing plate without tension.

Upon installation of engine mount, run engine for a short period at idle speed with adjusting screw loose. Tighten adjusting screw (9) to 30 Nm with engine stopped.

Caution!
Check regulating linkage for proper function.

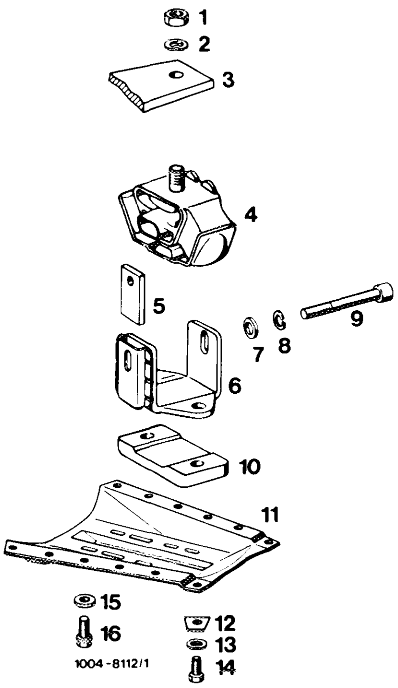

1	Nut M 12 x 1.5	9	Adjusting screw M 8 x 75
2	Spring washer B 12	10	Spacer
3	Transmission flange	11	Closing plate
4	Engine mount 123 240 04 13	12	Washer
5	Threaded plate	13	Spring washer A 8
6	Bracket	14	Screw M 8 x 32
7	Washer 8.4	15	Washer
8	Spring washer A 8	16	Screw M 8 x 20

B. Model 126

Caution!
Do not unscrew engine carrier (5) for removing engine mount (3).

When installing the engine mount (3), attach without tension by means of screws (9) to the engine carrier (5) with elongated holes.

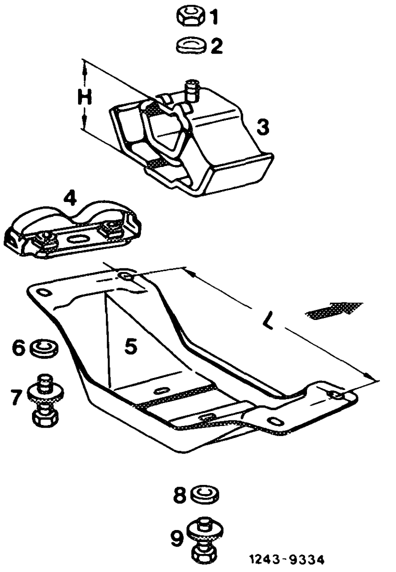

Engine mount H = 67–69 mm
Engine carrier L = 31 mm

Removal and installation of engine shock absorber

Tightening torque	Nm
Engine shock absorber attachment, hex. nut M 6	8–12

Note

For loosening and tightening the lower hex. nut apply counterhold to piston rod at flats (arrows) for wrench provided for this purpose.

Observe tightening torque 8–12 Nm, do not pull against the block.

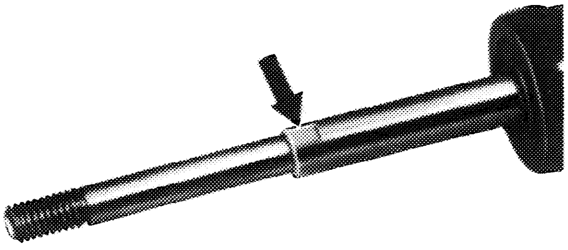

A. Model 107

Engine shock absorber left and right

1 Remove expansion tank for removing the right-hand engine shock absorber.

2 Remove the pressure regulator to permit removal of the left-hand engine shock absorber.

3 Unscrew engine fastening screw from engine mount and unscrew engine shock absorber.

4 Remove engine shock absorber together with bracket.

Caution!
During installation observe location of rubber buffers and cup washers (22–211).

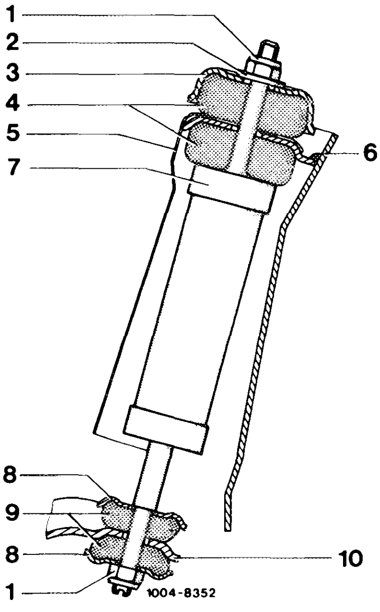

Engine shock absorber left seen from the front

1 Nut M 6
2 Washer A 7.4
3 Cup washer 43 mm dia.
4 Rubber buffer 36 mm dia.
5 Shielding plate
6 Bracket on side member
7 Engine shock absorber, L = 45 mm
8 Cup washer 30 mm dia.
9 Rubber buffer 26 mm dia.
10 Bracket left

B. Model 126

Engine shock absorber left and right

During installation, observe location of rubber buffers and cup washers.

Engine shock absorber and layout are the same at the left and right.

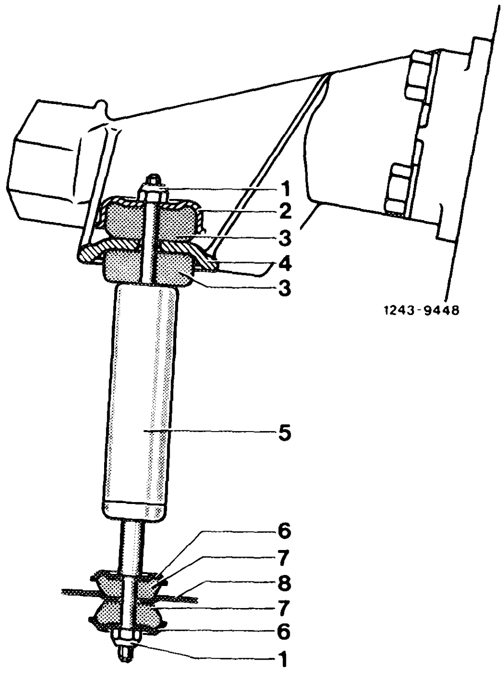

Engine shock absorber right seen from the front

A. Engine 116, 117 in model 107 (1st version)

Adjusting values in mm

Length of connecting rod from throttle valve housing to guide lever	104
Length of pushrod (5) from longitudinal regulating shaft to accelerator pedal	105

Adjusting

1 Check regulating linkage for easy operation and distortion. Renew linkage, if required.

2 Disconnect connecting rod (arrow) on guide lever. Check whether throttle valve rests against idle speed stop. Engage connecting rod again free of tension and adjust to specified length, if required.

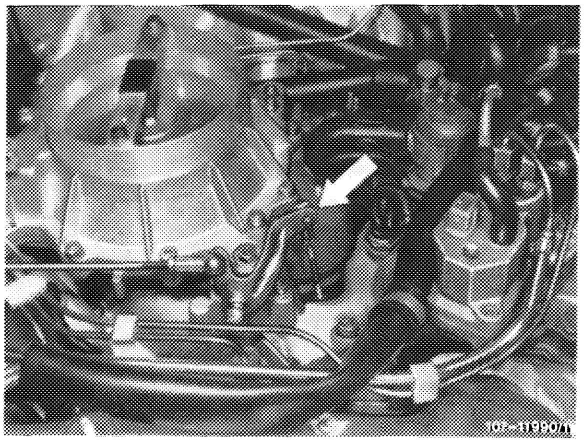

3 Adjust connecting rod (2) in such a manner that roller (3) in slotted lever (4) rests free of tension against end stop.

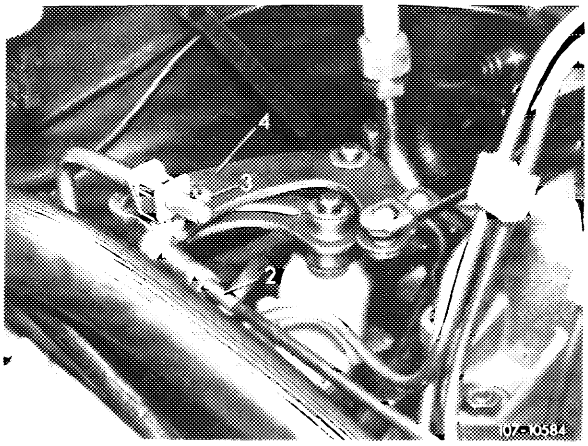

Testing full throttle stop

4 With engine stopped, step on accelerator pedal from inside vehicle down to stop on kickdown switch, with throttle valve lever resting against full throttle stop. Loosen adjusting screw (arrow) if required, adjust regulating linkage in such a manner that the throttle valve lever rests against full throttle stop.

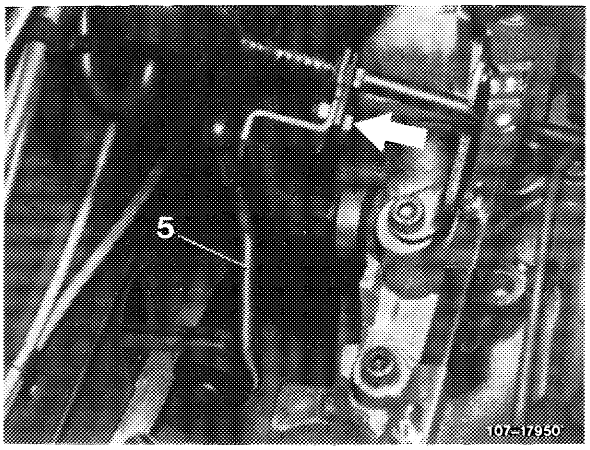

If the full throttle or idle speed stop is not attained with this adjustment, set pushrod (5) from longitudinal regulating shaft to accelerator pedal to specified length, measured from center of ball socket to center of damping ring.

If full throttle or idle speed stop is not attained with previous adjustment, adjust regulating lever inside vehicle. For this purpose, loosen fastening screw (arrow), release accelerator pedal slightly in upward direction and tighten fastening screw again.

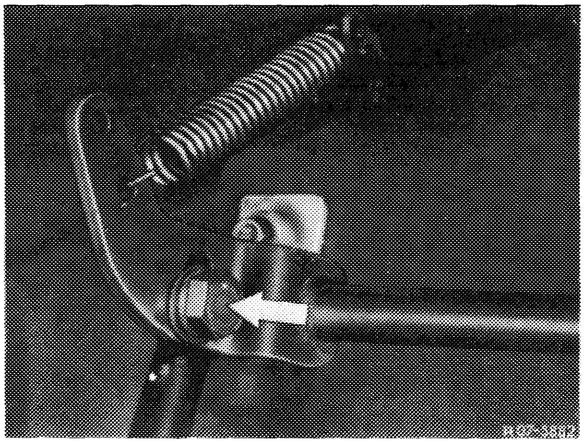

5 Adjust control pushrod (at idle speed position). For this purpose, compress adjusting clip (7) with pliers and push control pressure rod completely to the rear against stop.

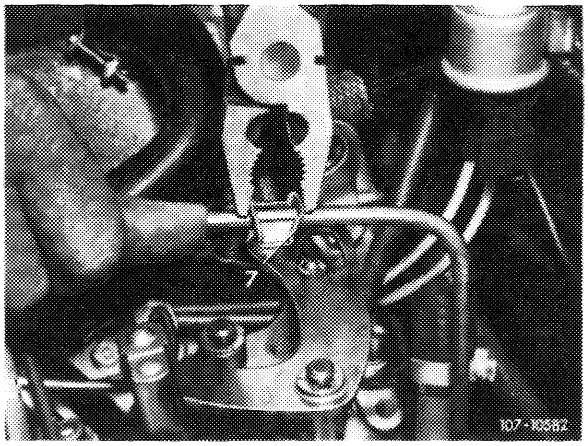

Engine regulation (1st version)
Engine 116, 117 in model 107

1	Regulating rod
2	Locking ring
3	Plastic bushing
4	Guide lever
5	Connecting rod
6	Throttle valve housing
7	Bearing bracket
8	Restoring spring
9	Connecting rod to longitudinal regulating shaft
10	Adjusting clip
11	Control pressure rod
12	Plastic bushing
13	Slotted lever
14	Locking ring
15	Roller
16	Angle lever
17	Bearing bracket
18	Screw
19	Holder
20	Screw

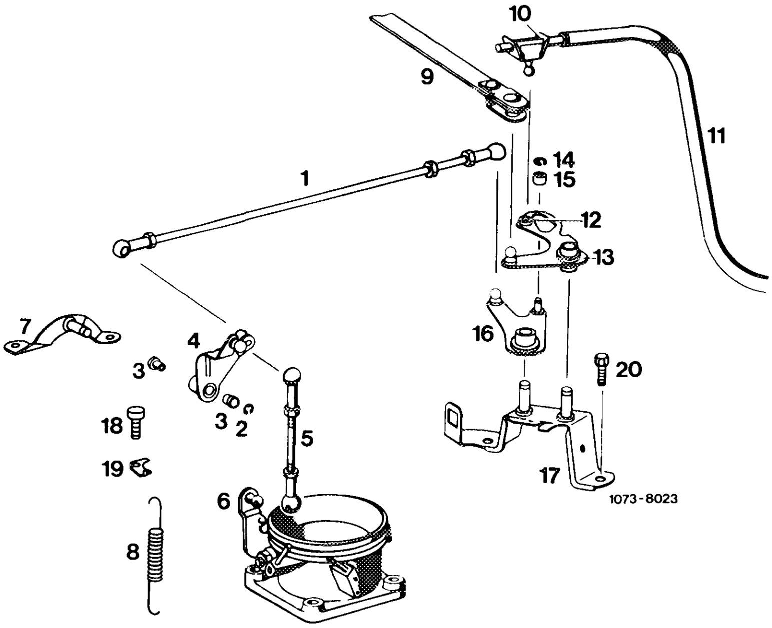

Note: Starting April 1984, a needle roller bearing has been installed for the support of the guide lever (4) (previously plain bearing).

B. Engine 116, 117 in model 107 (2nd version), engine 116, 117 in model 126

Adjusting values in mm

Model	107	126
Length of connecting rod from throttle valve housing to guide lever	104	
Length of pushrod (5) from longitudinal regulating shaft to accelerator pedal	105	222

Adjustment

1 Check regulating linkage for easy operation and distortion. Renew linkage, if required.

2 Disconnect connecting rod (arrow) and pullrod (21) on guide lever. Check whether throttle valve rests against idle speed stop. Re-engage connecting rod free of tension and adjust to specified length, if required.

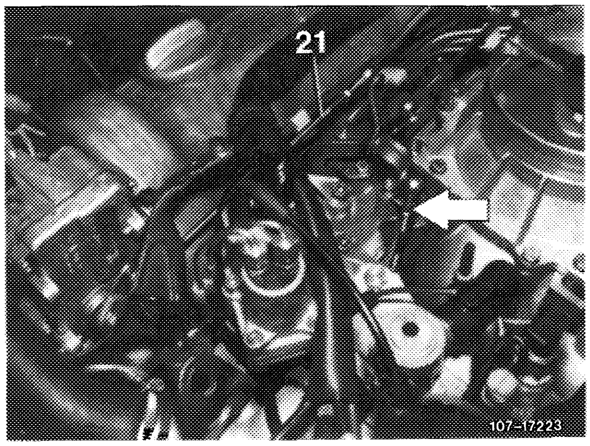

3 Check whether actuator rests against idle speed stop of cruise control/Tempomat. For this purpose, disconnect pullrod (21) and push lever of actuator clockwise to idle speed stop. When engaging pullrod (21) make sure that the lever of the actuator is pushed away from idle speed stop by approx. 1 mm. Adjust pullrod, if required.

4 Disengage connecting rod (22) for automatic transmission.

Adjust connecting rod (1) in such a manner that the roller (15) in slotted lever (13) rests free of tension against final stop.

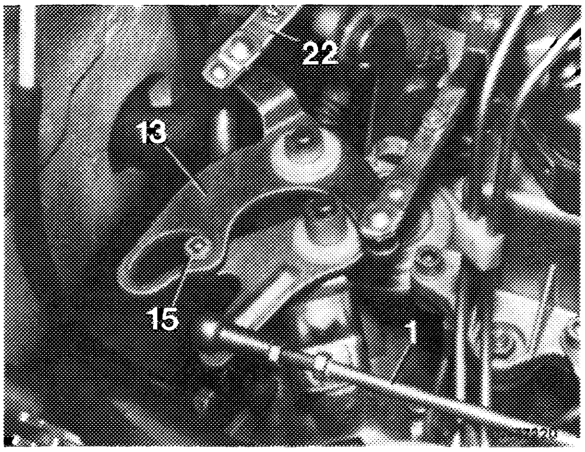

Checking full throttle stop

5 With engine stopped, step on accelerator pedal from inside vehicle down to stop on kickdown switch, with throttle valve lever resting against full throttle stop. Loosen adjusting screw (arrow) if required, adjust regulating linkage in such a manner that the throttle valve lever rests against full throttle stop.

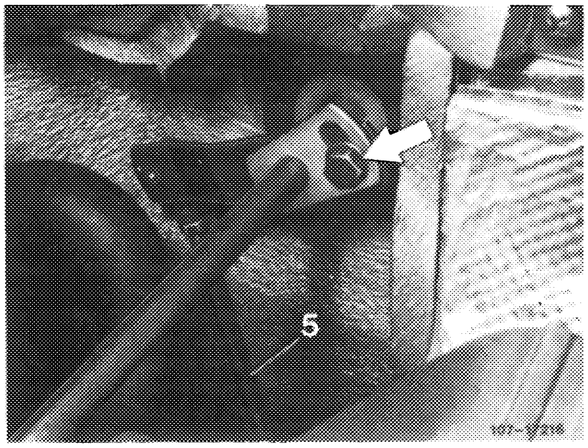

If the full throttle or idle speed stop is not attained with this adjustment, adjust pushrod (5) from longitudinal regulating shaft to accelerator pedal to specified length, measured from center of ball socket to center of damping ring.

6 Adjust Bowden wire (11) with engine stopped. For this purpose, pull guide lever (23) in direction of arrow against noticeable idle speed stop on automatic transmission. Engage connecting rod (22) free of tension and adjust, if required.

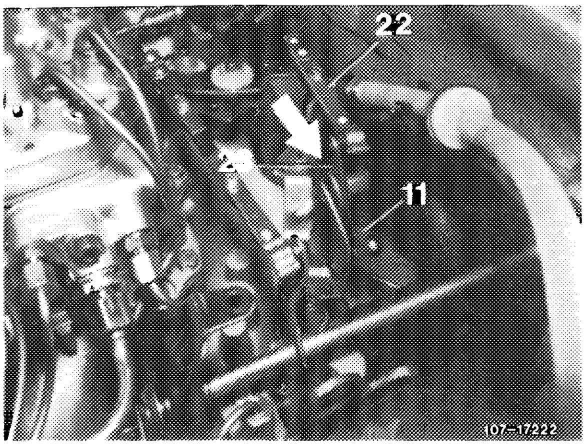

Engine regulation
Engine 116, 117 in model 107 (2nd version)
Engine 116, 117 in model 126

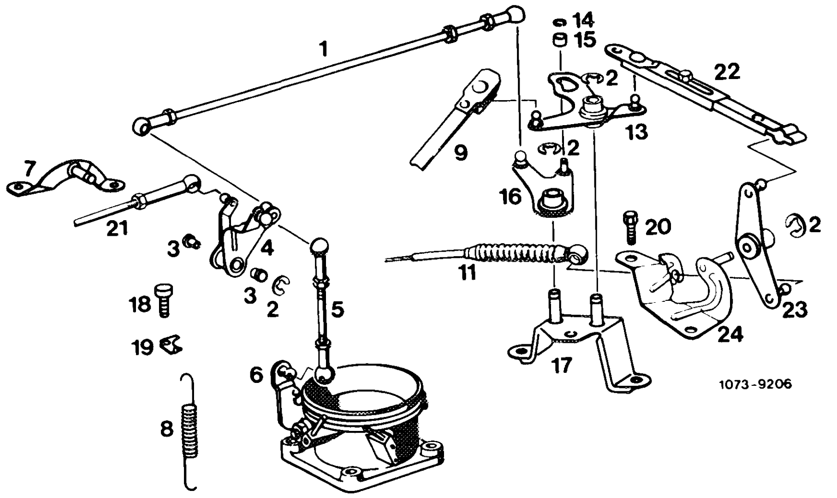

1	Regulating rod
2	Locking ring
3	Plastic bushing
4	Guide lever
5	Connecting rod
6	Throttle valve housing
7	Bearing bracket
8	Restoring spring
9	Connecting rod for longitudinal regulating shaft
11	Bowden wire for automatic transmission
13	Slotted lever
14	Locking ring
15	Roller
16	Angle lever
17	Bearing bracket
18	Screw
19	Holder
20	Screw
21	Regulating rod for cruise control/Tempomat
22	Connecting rod
23	Guide lever
24	Bearing bracket

Note: Starting April 1984, a needle roller bearing has been installed for the support of the guide lever (4) (previously plain bearing).

30–310 Removal and installation of longitudinal regulating shaft

A. Model 107

Removal

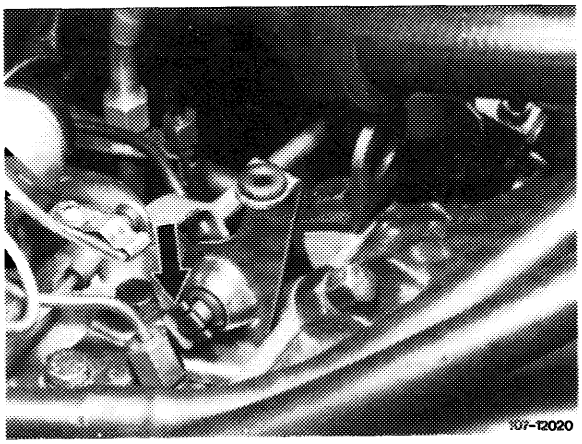

1 Disconnect regulating rods.

2 Force off lock (arrow).

3 Push longitudinal regulating shaft to the rear and remove. Pay attention to compressor spring, plastic bushings and joint balls.

Installation

4 For installation proceed vice versa. Grease bearing points as well as ball sockets of regulation with Molykote-Longterm 2.

5 Adjust regulating linkage (30–300).

B. Model 126

Removal

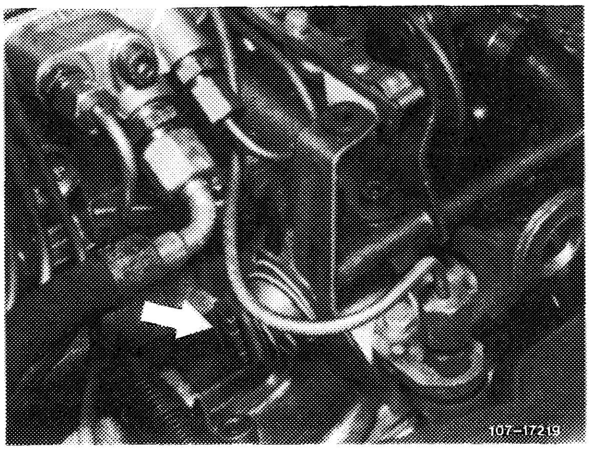

1 Disconnect regulating rods.

2 Force off lock (arrow). Remove spring retainer and compression spring.

3 Push longitudinal regulating shaft to the rear and remove. Pay attention to plastic bushing and joint ball.

Installation

4 For installation proceed vice versa. Grease bearing points as well as ball sockets of regulation with Molykote-Longterm 2.

5 Adjust regulating linkage (30–300).

A. Model 107

Adjusting values in mm

Length of pushrod (5)	105

Note

Since February 1981 the pushrod (5) is mounted to front wall regulating shaft (14) by means of a bearing bushing with collar (36).

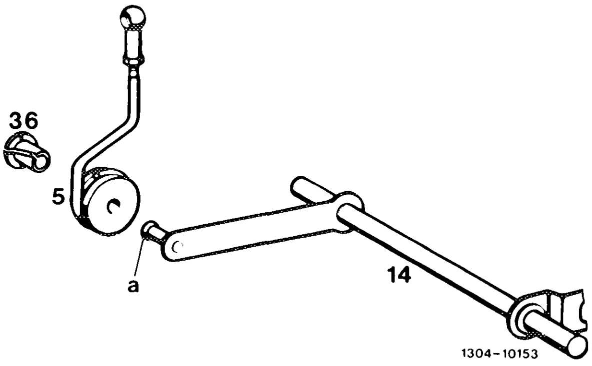

For subsequent installation proceed as follows:

1 Lightly grease knob bolt (a) with Molykote-Longterm 2.

2 Insert bearing bushing with collar (36) in pushrod (5) and force pushrod on knob bolt (a). Pay attention to correct seat of bearing bushing.

Removal

1 Force regulating rod with damping ring from lever of regulating shaft.

2 Remove accelerator pedal (30–330).

3 Remove heater box (83–100).

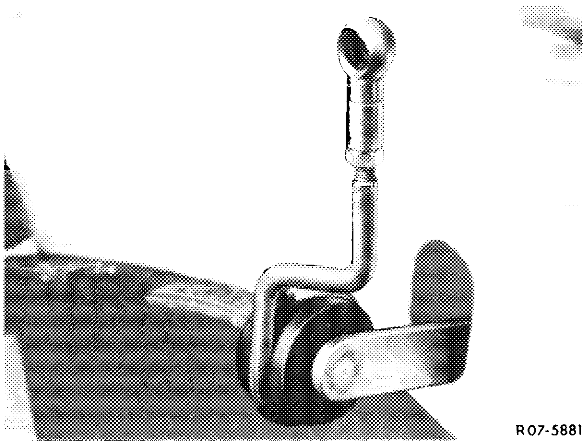

4 Disconnect restoring spring and screw hex. head sheet metal screws from plastic bearings.

5 Push out plastic bearing in upward direction and remove regulating shaft with bearing.

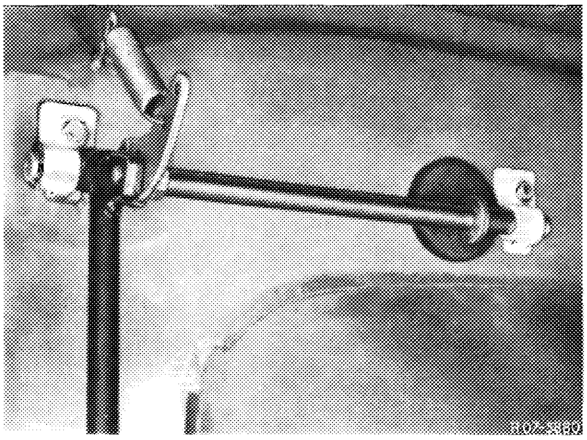

Installation

6 For installation proceed vice versa, while engaging restoring spring in inner hole. Grease bearing points as well as ball sockets of regulation with Molykote-Longterm 2.

Adjustment

7 With engine stopped, step on accelerator pedal from inside vehicle up to stop on kickdown switch. Throttle valve lever should rest against full throttle stop. Loosen adjusting screw (arrow) if required, adjust regulating linkage in such a manner that the throttle valve lever rests against full throttle stop.

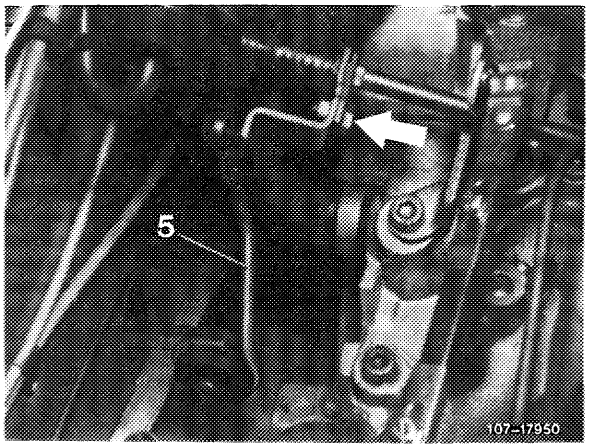

If the full throttle or idle speed stop is not attained with this adjustment, adjust pushrod (5) from longitudinal regulating shaft to accelerator pedal to specified length, measured from center of ball socket to center of damping ring.

If the full throttle or idle speed stop is not attained with the adjustment named above, loosen hex. head screw (arrow) inside vehicle, force regulating linkage up to full throttle stop on throttle valve housing and tighten hex. head screw again.

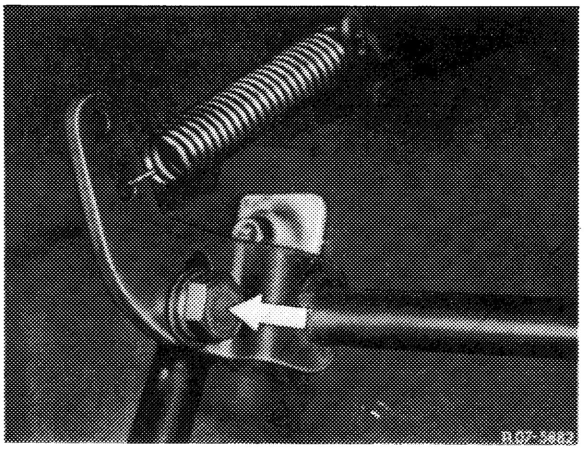

Chassis regulation
Model 107

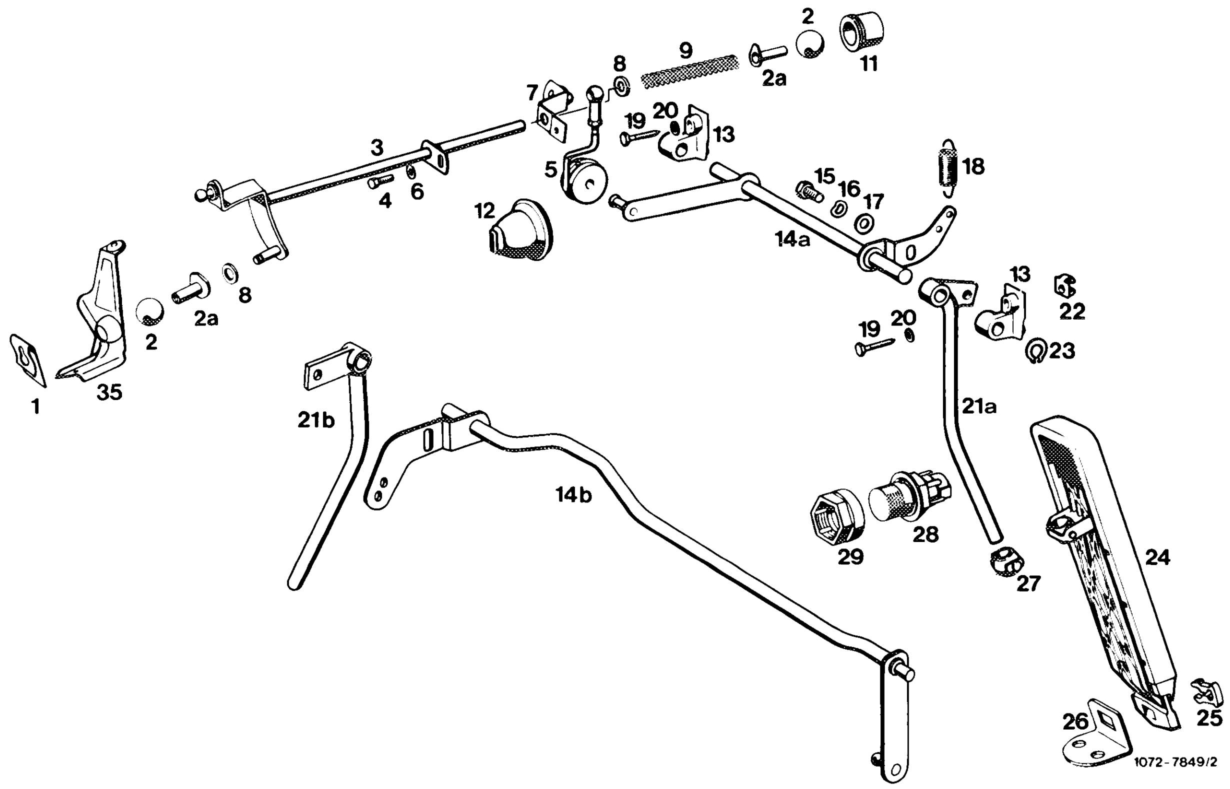

1	Clip
2	Joint ball
2a	Bearing bushing
3	Longitudinal regulating shaft
4	Hex. head screw
5	Pushrod
6	Washer
7	Guide lever for full throttle adjustment
8	Plastic spacing ring
9	Compression spring
11	Bearing for longitudinal regulating shaft
12	Rubber cement
13	Bearing
14a	Front wall regulating shaft for lefthand steering
14b	Front wall regulating shaft for righthand steering
15	Hex. head screw
16	Corrugated washer
17	Washer
18	Restoring spring
19	Screw
20	Washer
21a	Accelerator lever for lefthand steering
21b	Accelerator lever for righthand steering
22	Cage nut
23	Lock
24	Accelerator pedal
25	Clip
26	Fastening plate
27	Joint
28	Kickdown switch
29	Adjusting nut
35	Bearing for longitudinal regulating shaft

B. Model 126

Adjusting values in mm

Lefthand steering

Length of pushrod (5) from longitudinal regulating shaft to accelerator pedal	222

Righthand steering

Length of connecting rod (21) from accelerator pedal to guide lever	172
Length of connecting rod (40)	597

Removal

1 Disengage restoring spring (22) and force off connecting rod (5 or 21).

2 Remove accelerator pedal (30–330).

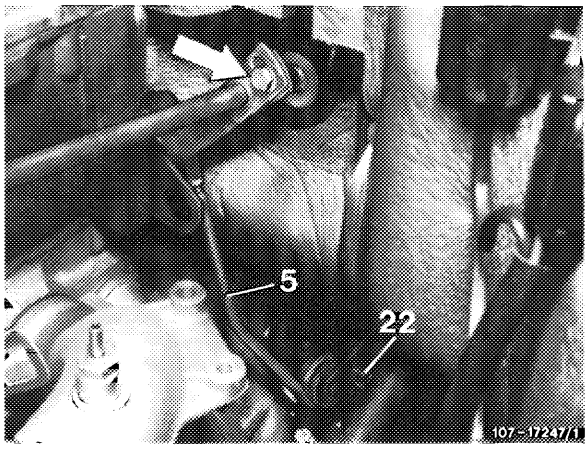

Lefthand steering

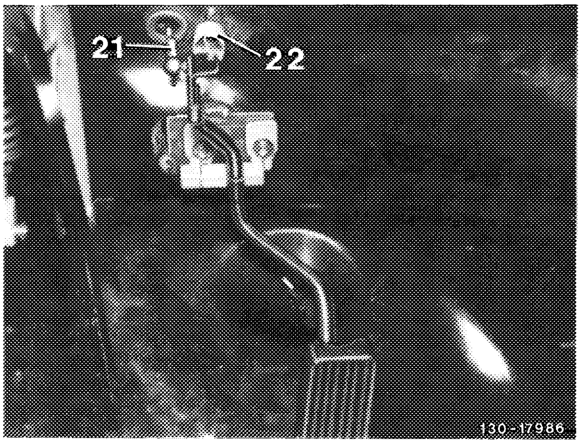

Righthand steering

3 Unscrew fastening screws on bearing bracket, remove bearing bracket and accelerator lever.

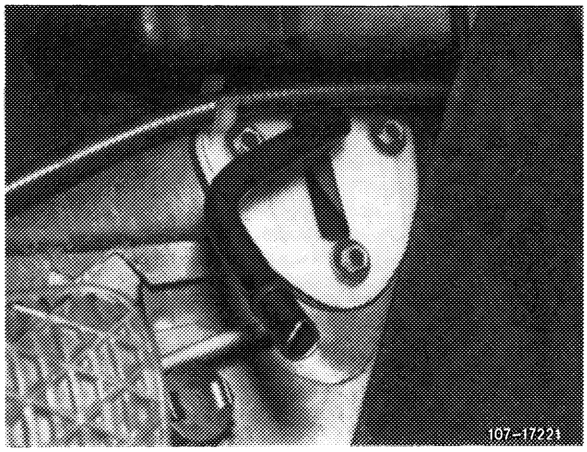

Lefthand steering

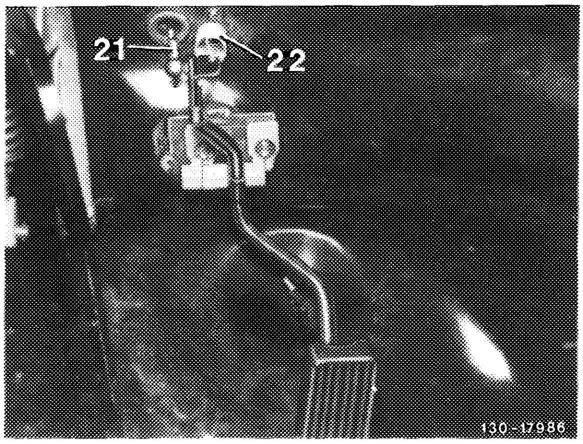

Righthand steering

Installation

4 For installation proceed vice versa.

Grease bearing points as well as ball sockets of regulation with Molykote-Longterm 2.

Connection from accelerator lever to accelerator pedal is maintenance-free and requires no lubrication.

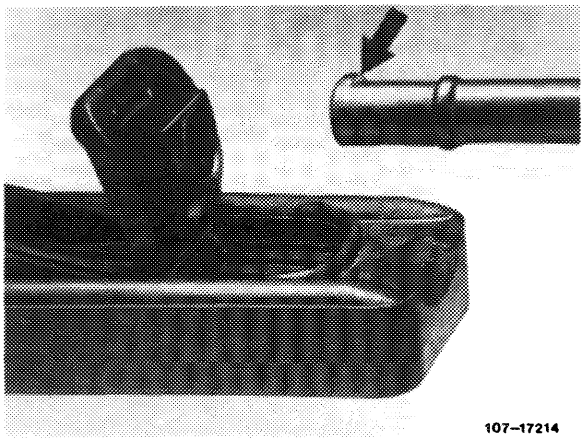

Adjustment

Lefthand steering

5 With engine stopped, step on accelerator pedal from inside vehicle down to stop on kickdown switch. Throttle valve lever should rest against full throttle stop. If required, loosen adjusting screw (arrow), adjust regulating linkage in such a manner that the throttle valve lever rests against full throttle stop.

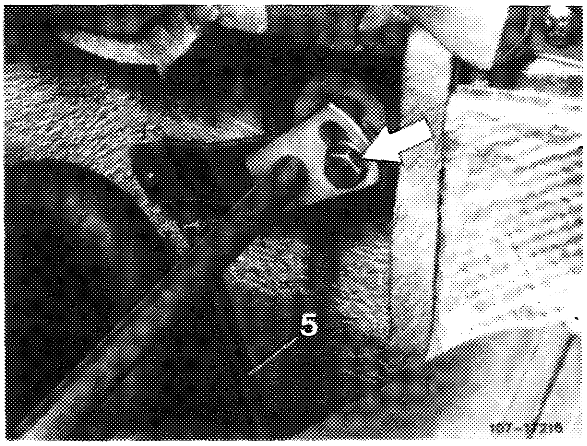

If the full throttle or idle speed stop is not attained with this adjustment, adjust pushrod (5) from longitudinal regulating shaft to accelerator pedal to specified length, measured from center of ball socket to center of damping ring.

Righthand steering

6 With engine stopped, step on accelerator pedal from inside vehicle down to stop on kickdown switch. Throttle valve lever should rest against full throttle stop. If required, loosen adjusting screw (arrow), adjusting regulating linkage in such a manner that throttle valve lever rests against full throttle stop.

If the full throttle or idle speed stop is not attained with the previous adjustment, adjust connecting rod (21) from guide lever in engine compartment to accelerator pedal and connecting rod (40) to specified length, measured from center of ball socket to center of ball socket.

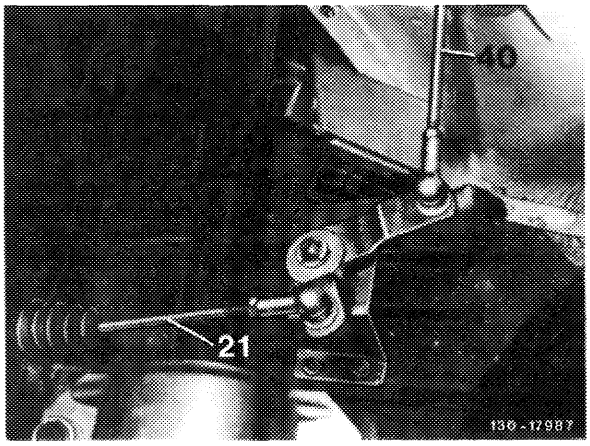

Chassis regulation lefthand steering
Engine 116, 117 in model 126

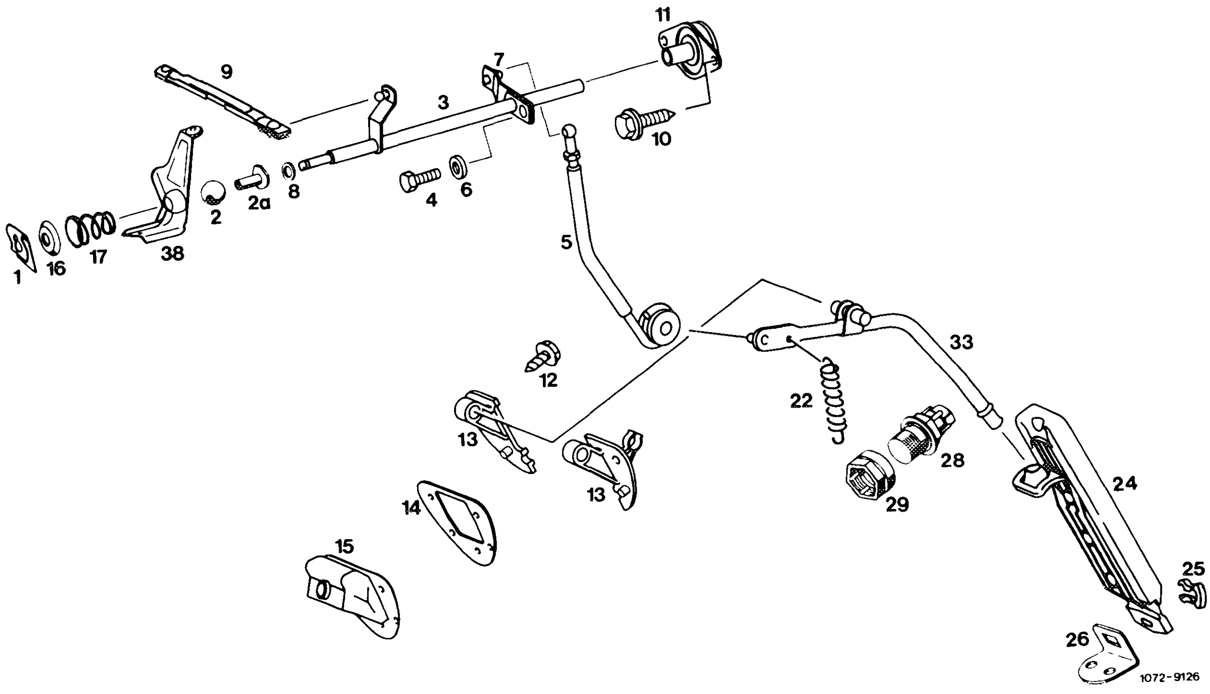

1	Clip
2	Joint ball
2a	Bearing bushing
3	Longitudinal regulating shaft
4	Hex. head screw
5	Pushrod
6	Washer
7	Guide lever for full throttle adjustment
8	Plastic spacing ring
9	Connecting rod
10	Hex. head screw
11	Bearing for longitudinal regulating shaft
12	Hex. head screw
13	Bearing
14	Intermediate plate
15	Rubber sleeve
16	Spring retainer
17	Compression spring
22	Restoring spring
24	Accelerator pedal
25	Clip
26	Fastening plate
28	Kickdown switch
29	Adjusting nut
33	Accelerator lever
38	Bearing for longitudinal regulating shaft

Note: Starting September 1985, the material of the joint ball (2) for the longitudinal regulating shaft has been changed.

Indication: anthracite (formerly: white)

Chassis regulation righthand steering
Engine 116, 117 in model 126
1st version

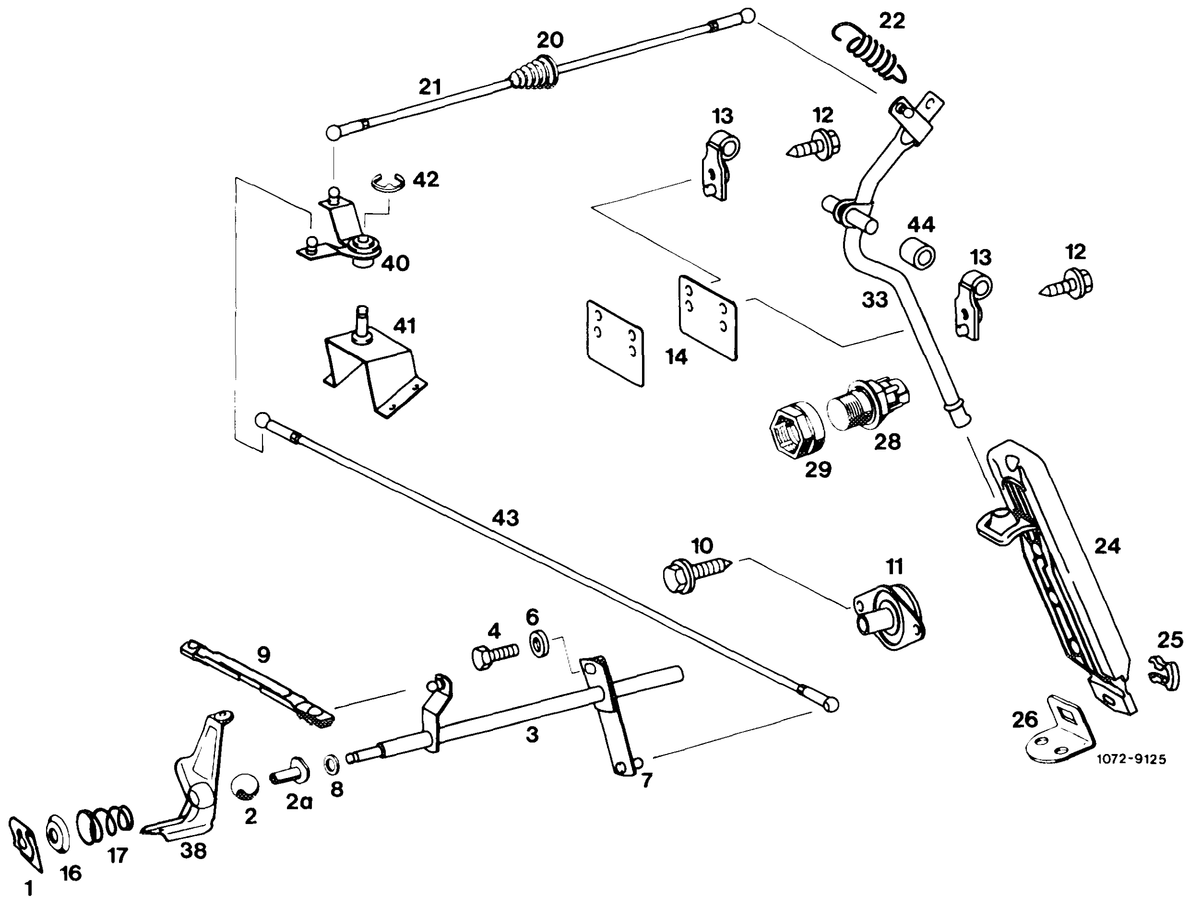

1	Clip
2	Joint ball
2a	Bearing bushing
3	Longitudinal regulating shaft
4	Hex. head screw
6	Washer
7	Guide lever for full throttle adjustment
8	Plastic spacing ring
9	Connecting rod
10	Hex. head screw
11	Bearing for longitudinal regulating shaft
12	Hex. head screw
13	Bearing
14	Intermediate plate
16	Spring retainer
17	Compression spring
20	Rubber sleeve
21	Connecting rod
22	Restoring spring
24	Accelerator pedal
25	Clip
26	Fastening plate
28	Kickdown switch
29	Adjusting nut
33	Accelerator lever
38	Bearing for longitudinal regulating shaft
40	Guide lever
41	Bearing bracket
42	Lock
43	Connecting rod
44	Spacing sleeve

Note: Starting September 1985, the material of the joint ball (2) for the longitudinal regulating shaft has been changed.

Indication: anthracite (formerly: white)

Chassis regulation righthand steering
Engine 116, 117 in model 126
2nd version

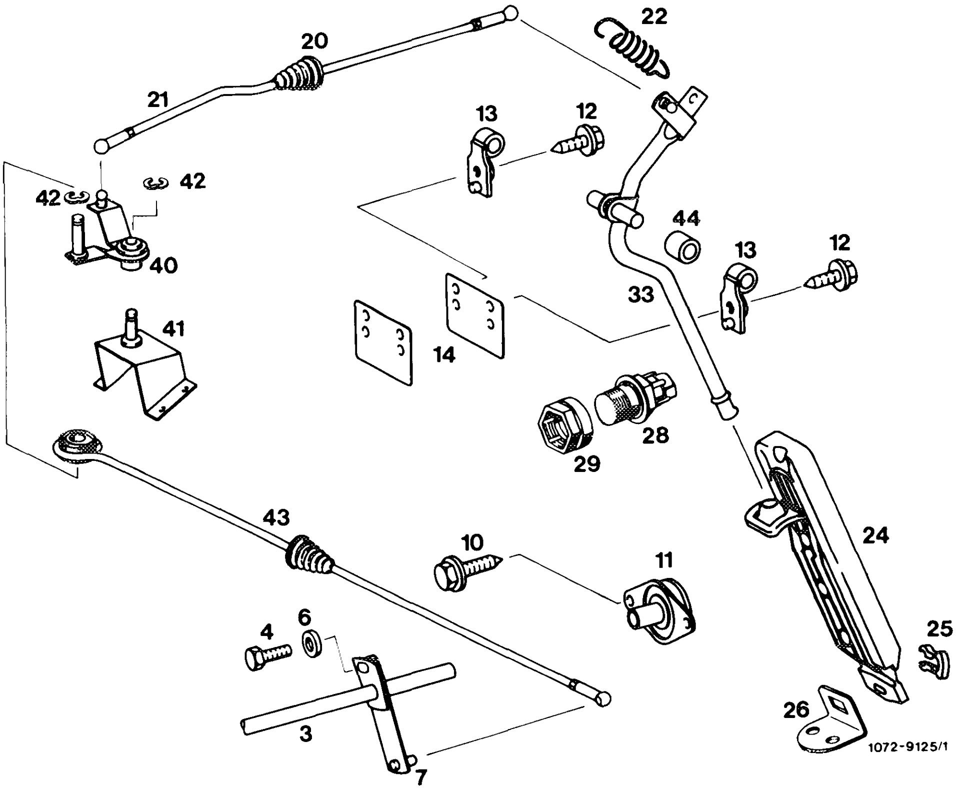

3	Longitudinal regulating shaft	14	Intermediate plate	33	Accelerator lever
4	Hex. head screw	20	Rubber sleeve	40	Guide lever
6	Washer	21	Connecting rod	41	Bearing bracket
7	Guide lever for full throttle adjustment	22	Restoring spring	42	Lock
10	Hex. head screw	24	Accelerator pedal	43	Connecting rod
11	Bearing for longitudinal regulating shaft	25	Clip	44	Spacing sleeve
12	Hex. head screw	26	Fastening plate		
13	Bearing	28	Kickdown switch		

A. Model 107

Removal

1 Compress expanding clip (arrow) behind accelerator pedal and pull out.

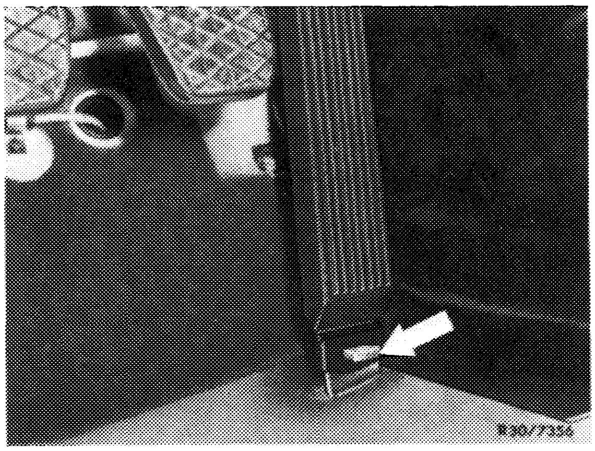

Installation

2 During installation, make sure that the expanding clip is reliably engaging.

B. Model 126

Removal

1 Compress expanding clip (arrow) behind accelerator pedal and pull out.

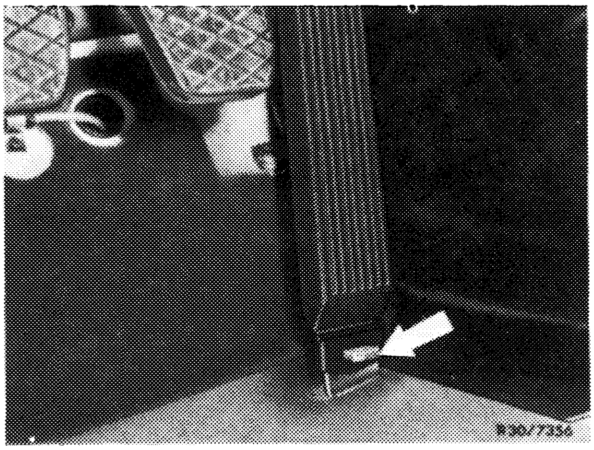

2 Move accelerator pedal in upward direction and turn by 180°.

3 Pull off accelerator pedal in downward direction, lug (arrow) on accelerator lever must be in alignment with groove in accelerator pedal.

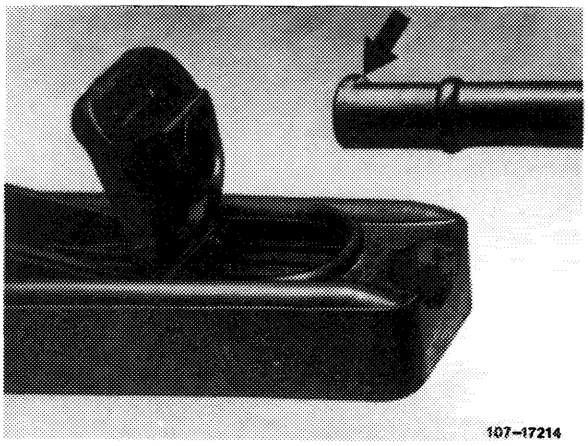

Installation

4 For installation proceed vice versa, making sure that the expanding clip is reliably engaging.

The connection from accelerator lever to accelerator pedal is maintenance-free and requires no lubrication.

Lubrication

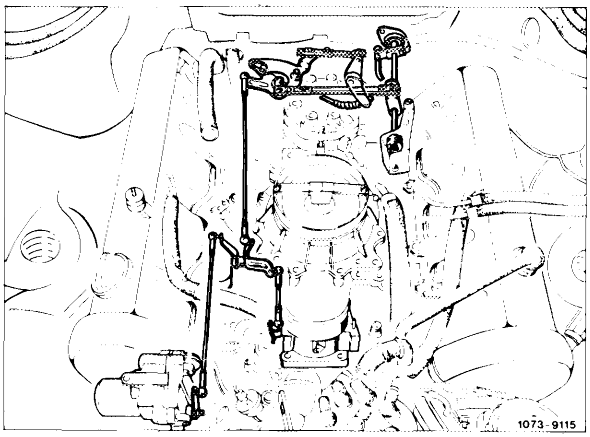

Following each engine wash and preservation of engine compartment, **lubricate all bearing points of all regulating shafts, regulating levers, joints of regulating linkage and cable controls by means of an oil-can.**

On **USA version** vehicles use the following hydraulic fluids only:

BP-Aero-Hydraulik 1
Castrol DB Hydraulik Fluid
Esso Univers J-13
Mobil Aero HFA
Shell Aero Fluid 4

A steadying bowl (67) is installed in the fuel tank. The bowl serves the purpose of supplying the engine reliably with fuel when the level in fuel tank is low and while driving around bends for extended periods.

With the fuel pump running, the returning fuel flows at high speed out of return flow nozzle (70a) into steadying bowl. The fuel located around return flow nozzle is carried along into steadying bowl (arrow).

The fuel level (h) remains intact in steadying bowl, even if the fuel level in fuel tank drops below level (h).

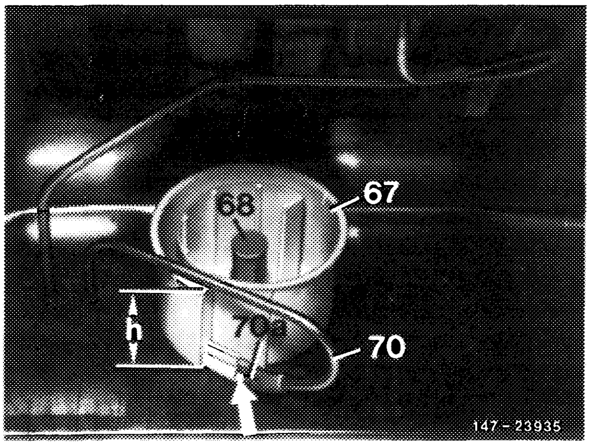

When the fuel level drops, the slide contact (1) on float (2) of immersion tube transmitter increases the resistance value, the voltage will drop and the indicating needle in instrument will therefore fall back.

When the fuel level drops still further, the reserve warning contact (5) in immersion tube transmitter is closed. The reserve warning lamp is connected to ground and will light up.

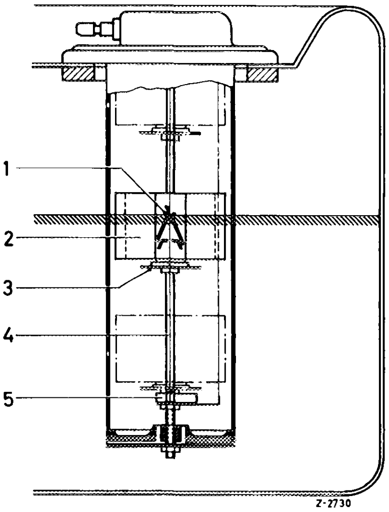

Transmitter

1 Sliding contact
2 Float
3 Contact plate
4 Guide and contact rod
5 Reserve warning contact

The circuit has been changed starting September 1982. The reserve warning lamp will light up when the ignition is switched on (controlling function). As soon as the engine is running, the lamp will go out if the fuel tank contains more than the reserve quantity.

Note: As a controlling function, the reserve warning lamp lights up weaker, and stronger for reserve.

Testing fuel readout (54–269).

A. All models

Cap

At a gauge pressure of 100–300 mbar, fuel evaporation vapors can escape through cap.

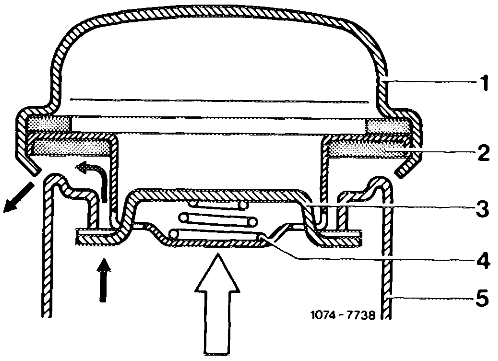

1 Cap
2 Sealing ring
3 Cap clip
4 Compression spring
5 Filler neck

B. Model 107.02

The fuel tank is provided with a separate expansion tank. Positive and negative venting of fuel tank proceeds by way of a vent line, with a protective sleeve (arrow) attached at its end.

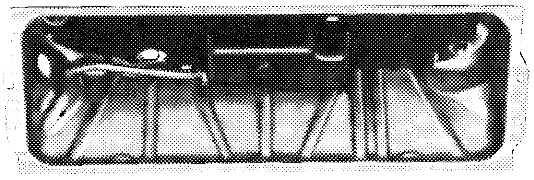

147–13629

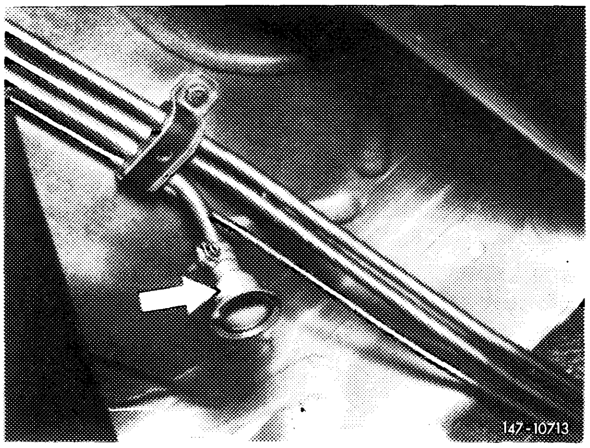

Starting March 1979 a vent sleeve with diaphragm is attached at end of vent line.

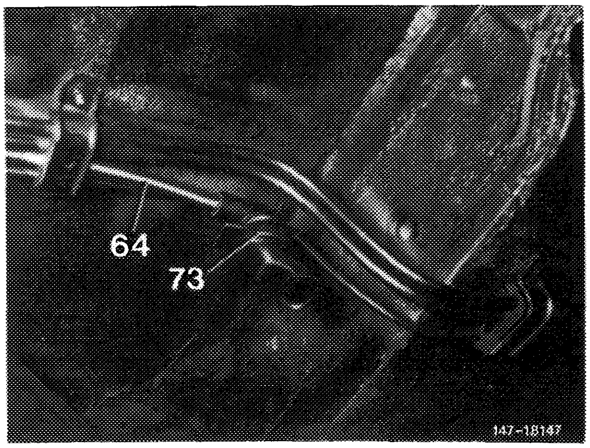

64 Vent line
73 Vent sleeve

In the event of repairs, older vehicles are also provided with a vent sleeve with diaphragm only. In such a case, the vent line must be rebent with a suitable mandrel so that the vent sleeve is pointing downwards.

Attention!
Do not kink vent line while bending.

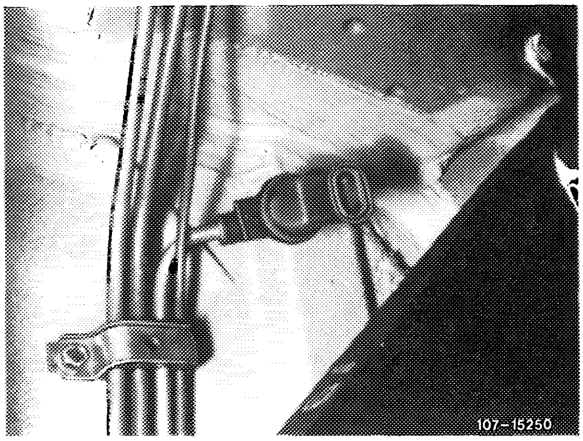

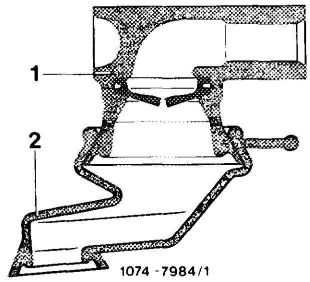

Vent sleeve with diaphragm

C. Model 107.04

A separate expansion tank (55) is located outside fuel tank.

The fuel expansion tank (55) is connected to five lines (64) entering fuel tank. In dependence of fuel level and fuel temperature in fuel tank these lines can become effective as overflow, drain or vent lines.

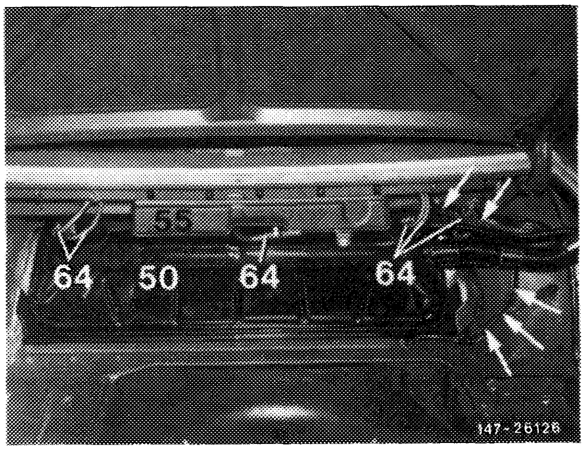

The vent line (64, arrow) leads from expansion tank (55) through rear floor in outward direction.

Positive or negative venting of fuel tank proceeds by way of this line. A protective sleeve (arrow) is attached at end of vent line.

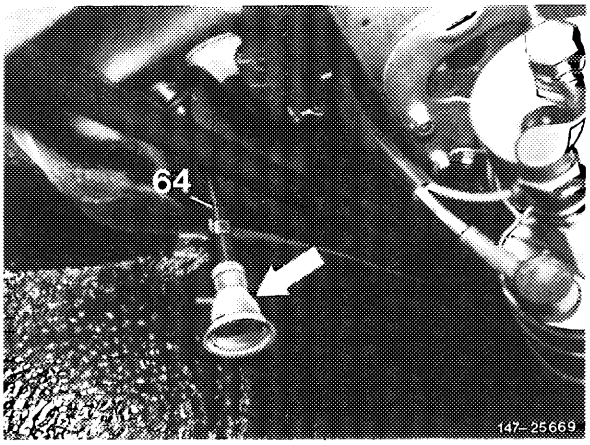

D. Model 126 sedan and coupe

Model 126 has a vent system, comprising a collecting tray and a tube system.

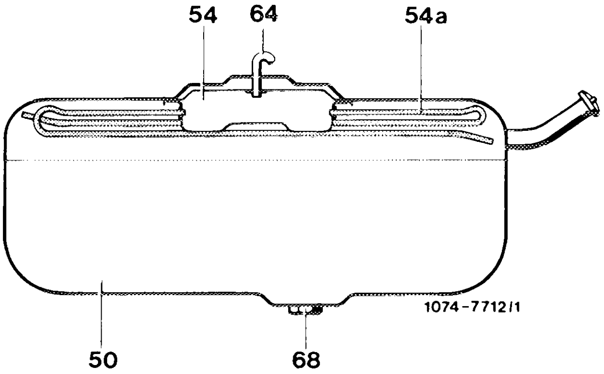

54 Collecting tray
54a Tube system
64 Vent line

Since April 1980 additional check vessels are installed at ends of tube system.

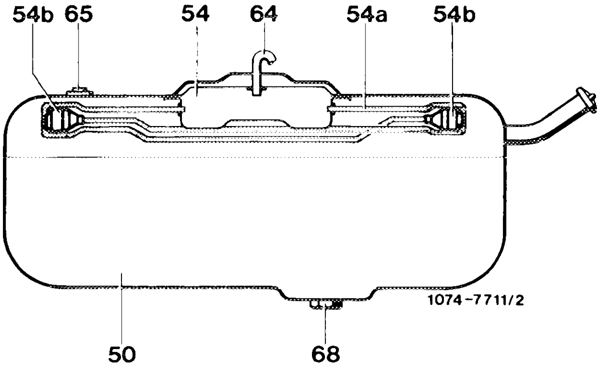

54b Check vessels

Positive and negative venting of fuel tank proceeds via vent line (64), with a protective sleeve (arrow) attached at its end.

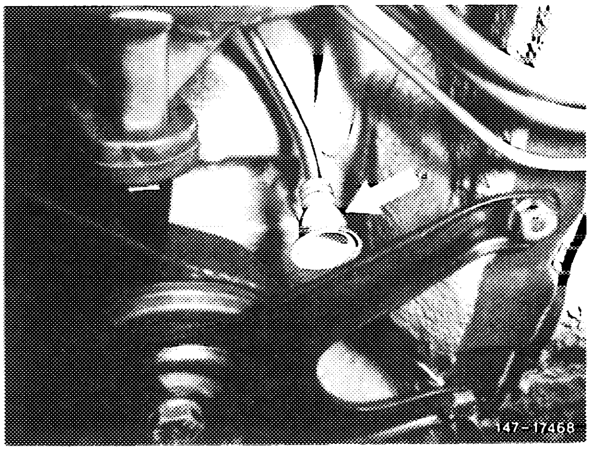

A. Model 107.02

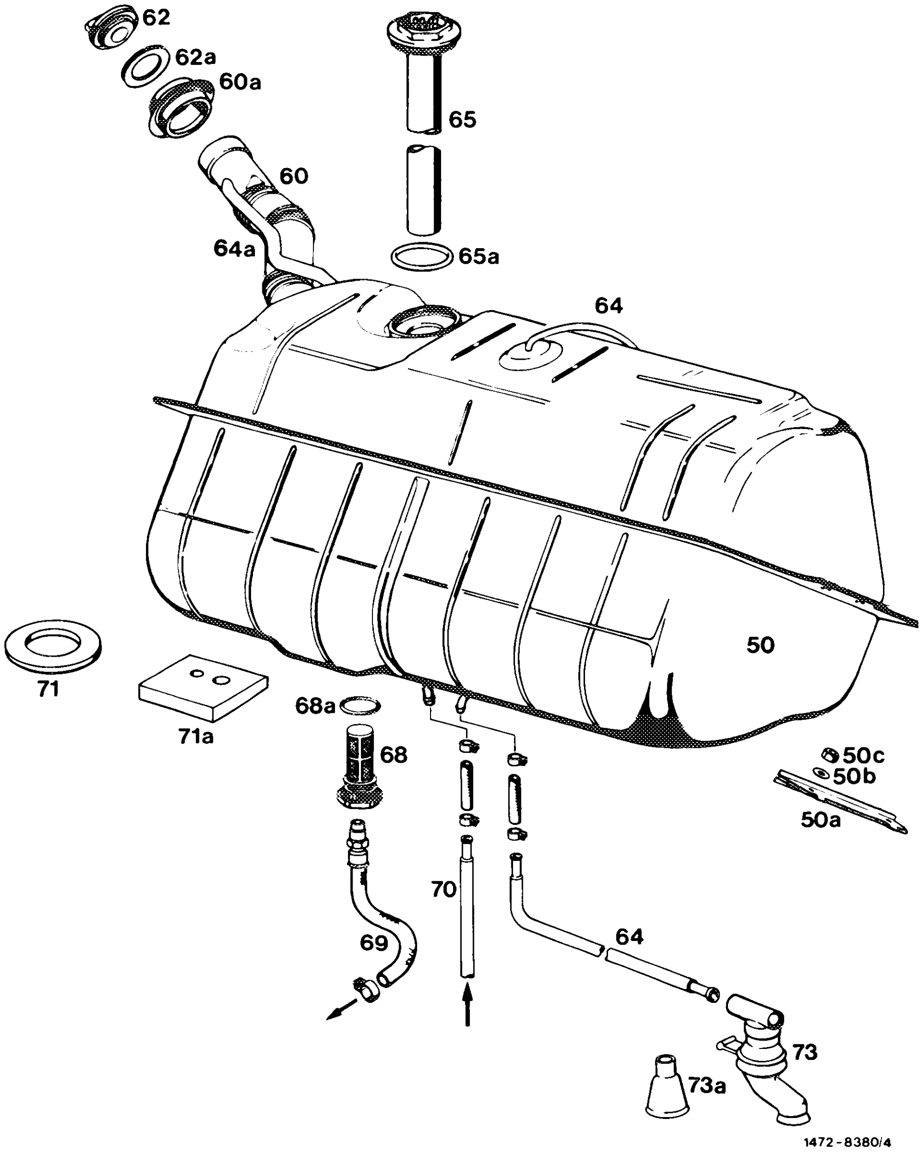

50 Fuel tank	Pump of fuel (item 2)
50a Reinforcing panel, 2 each	Be sure to use (risk of tearing)
50b Washer, 4 each	Use large washers only
50c Nut, 4 each	21 Nm
60 Filler neck	
60a Sealing sleeve	Pay attention to correct seat
62 Cap	
62a Sealing ring	
64 Vent lines	
64a Negative vent line	
65 Immersion tube transmitter	39 Nm, check function (battery connected)
65a Sealing ring	Renew
68 Fuel filter	Clean, check for re-use. 39 Nm
68a Sealing ring	Renew
69 Suction hose	Check for re-use. 28 Nm
70 Return flow	
71 Gasket	Item 7a
71a Gasket	Item 7a
73 Vent sleeve	Starting March 1979 (47–030)
73a Protective sleeve	(47–030)
74 Damping shim, 2 each	Item 7b

Filling capacity in liters

	Total	Reserve
Up to September 1981	approx. 90	approx. 13
Starting October 1981	approx. 85	approx. 11.5
AUS J starting 1982		
USA starting 1981		

Attention!
When removing fuel tank, pay attention to safety rules.

Removal

1 Disconnect grounding line on battery.

2 Drain fuel tank. Carefully pump off fuel, so that no residual quantity remains in fuel tank.

3 Loosen suction hose, return flow hose and vent hose (arrows). Catch residual fuel in hoses. Close hoses and connections.

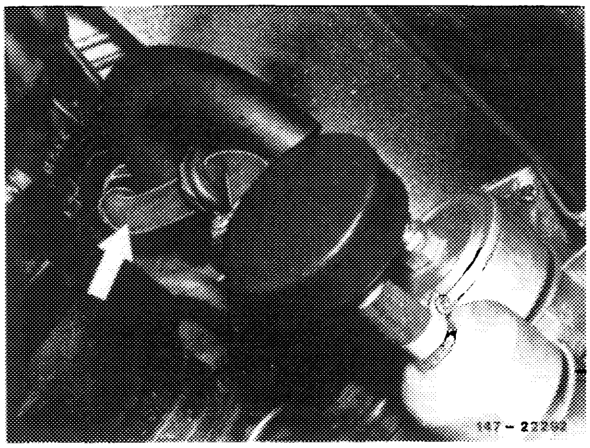

4 Remove partition trunk/fuel tank.

5 Pull off coupling for fuel gauge on immersion tube transmitter.

6 Unscrew nuts (arrows) and remove fuel tank.

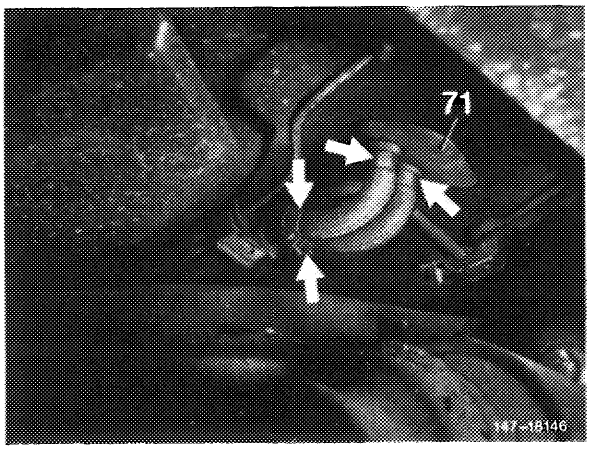

Installation

7 Install fuel tank in vice versa sequence, proceed as follows:

a) Glue down both gaskets on underside of fuel tank e.g. with MB universal glue, part No. 000 989 92 71. For installation, coat both gaskets on sealing surface or bead with sliding compound (talcum, wax or the like).

b) Check whether damping shims on fuel tank are tightly fastened, glue down with e.g. MB universal glue, part No. 000 989 92 71, if required.

c) Check fuel system for leaks.

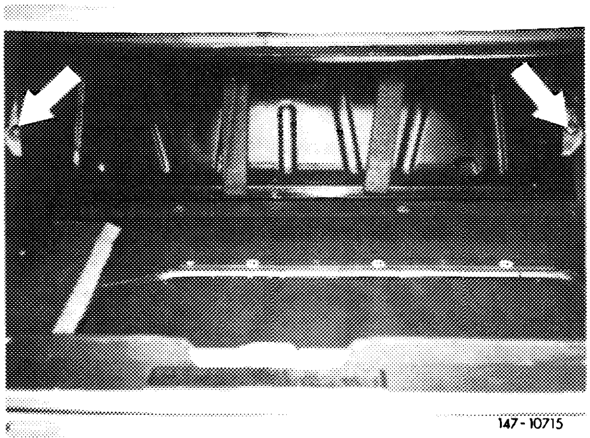

Vehicles with catalytic converter

A guide funnel (1) is installed in filler neck owing to the small filling nozzles for leadfree fuel of these vehicles.

If a fuel tank on these vehicles is renewed, simultaneously install a guide funnel. For this purpose, place guide funnel into filler neck and knock in fastening rivets (arrows) with a mandrel up to stop.

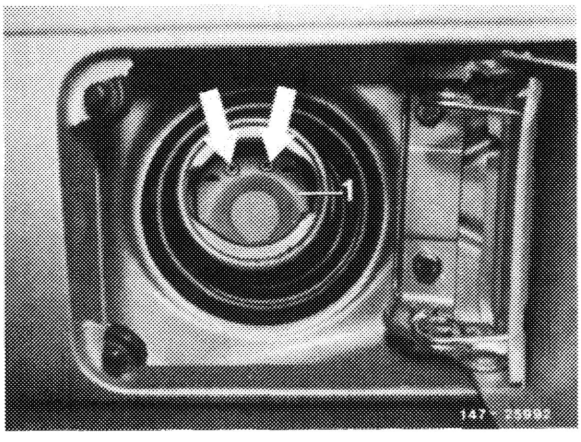

B. Model 107.04

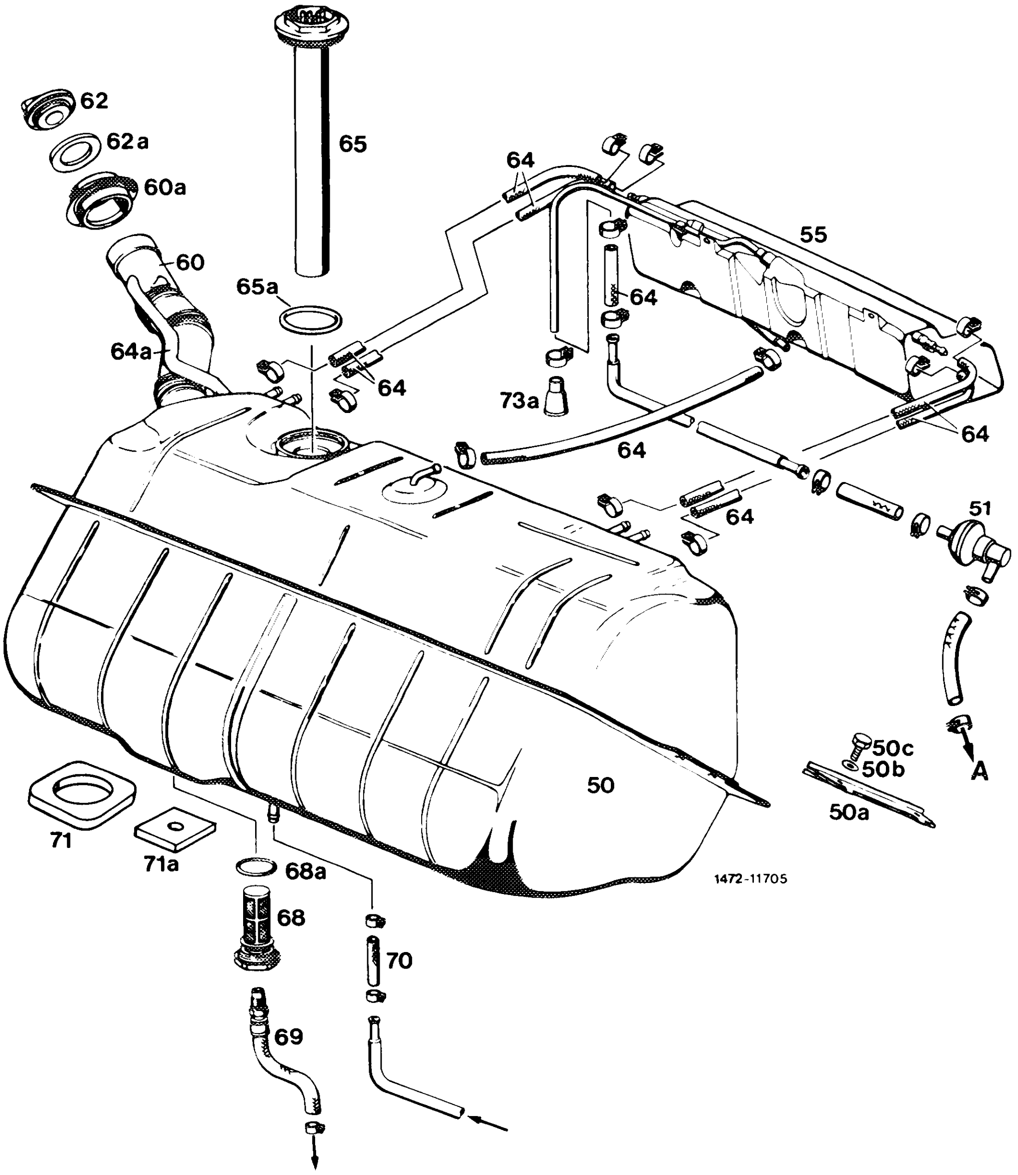

50	Fuel tank	Pump off fuel (item 2)
50a	Reinforcing panel, 2 each	Be sure to use (risk of tearing)
50b	Washer, 4 each	Use large washers only
50c	Screw, 4 each	21 Nm
51	Vent valve	On fuel evaporation control system
55	Expansion tank	Apply counterhold to connection when tightening hose clamps (risk of breaking off)
60	Filler neck	
60a	Sealing sleeve	Pay attention to correct seat
62	Cap	
62a	Sealing ring	
64	Vent lines	Check for re-use
64a	Negative vent line	
65	Immersion tube transmitter	39 Nm, check function (battery connected)
65a	Sealing ring	Renew
68	Fuel filter	Clean, check for re-use. 39 Nm
68a	Sealing ring	Renew
69	Suction hose	Check for re-use. 28 Nm.
70	Return flow hose	Check for re-use
71	Gasket	Item 7a
71a	Gasket	Item 7a
73a	Protective sleeve	
A	To charcoal canister	

Filling capacity in liters

	Total	Reserve
Up to September 1981	approx. 90	approx. 13
Starting October 1981	approx. 85	approx. 11.5
(AUS) (J) starting 1982		
(USA) starting 1981		

Attention!
When removing fuel tank, pay attention to safety rules.

Removal

1 Disconnect grounding line on battery.

2 Drain fuel tank. Carefully pump off fuel, so that no residual quantity remains in fuel tank.

3 Remove fuel expansion tank (47–110).

4 Pull coupling for fuel gauge from immersion tube transmitter (47–120).

5 Remove suction hose (69) and return flow hose (70). Catch residual fuel in hoses. Close connections and hoses.

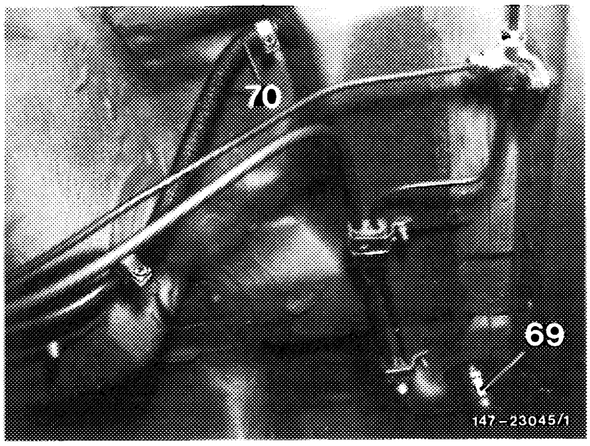

6 Unscrew screws (50c), remove fuel tank.

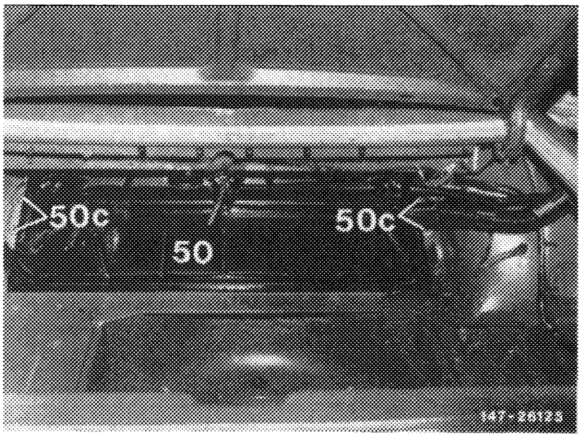

Installation

7 Install fuel tank in vice versa sequence and proceed as follows:

a) Glue down both gaskets on underside of fuel tank with MB universal glue, part No. 000 989 92 71. For installation, coat both gaskets on sealing surface or bead with sliding compound (talcum, wax or the like).

b) Check fuel system for leaks.

Vehicles with catalytic converter

A guide funnel (1) is installed in filler neck owing to the small filling nozzles for leadfree fuel of these vehicles.

If a fuel tank on these vehicles is renewed, simultaneously install a guide funnel. For this purpose, place guide funnel into filler neck and knock in fastening rivets (arrows) with a mandrel up to stop.

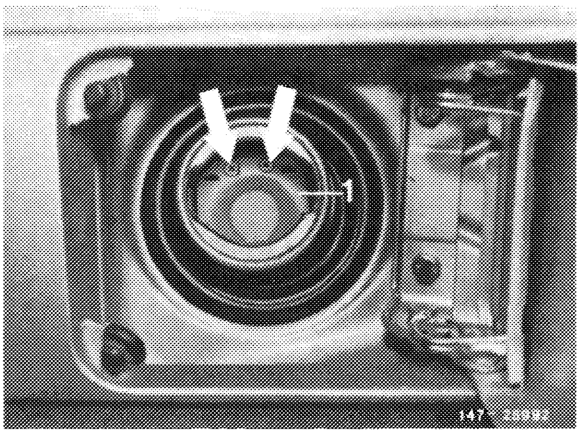

C. Model 126

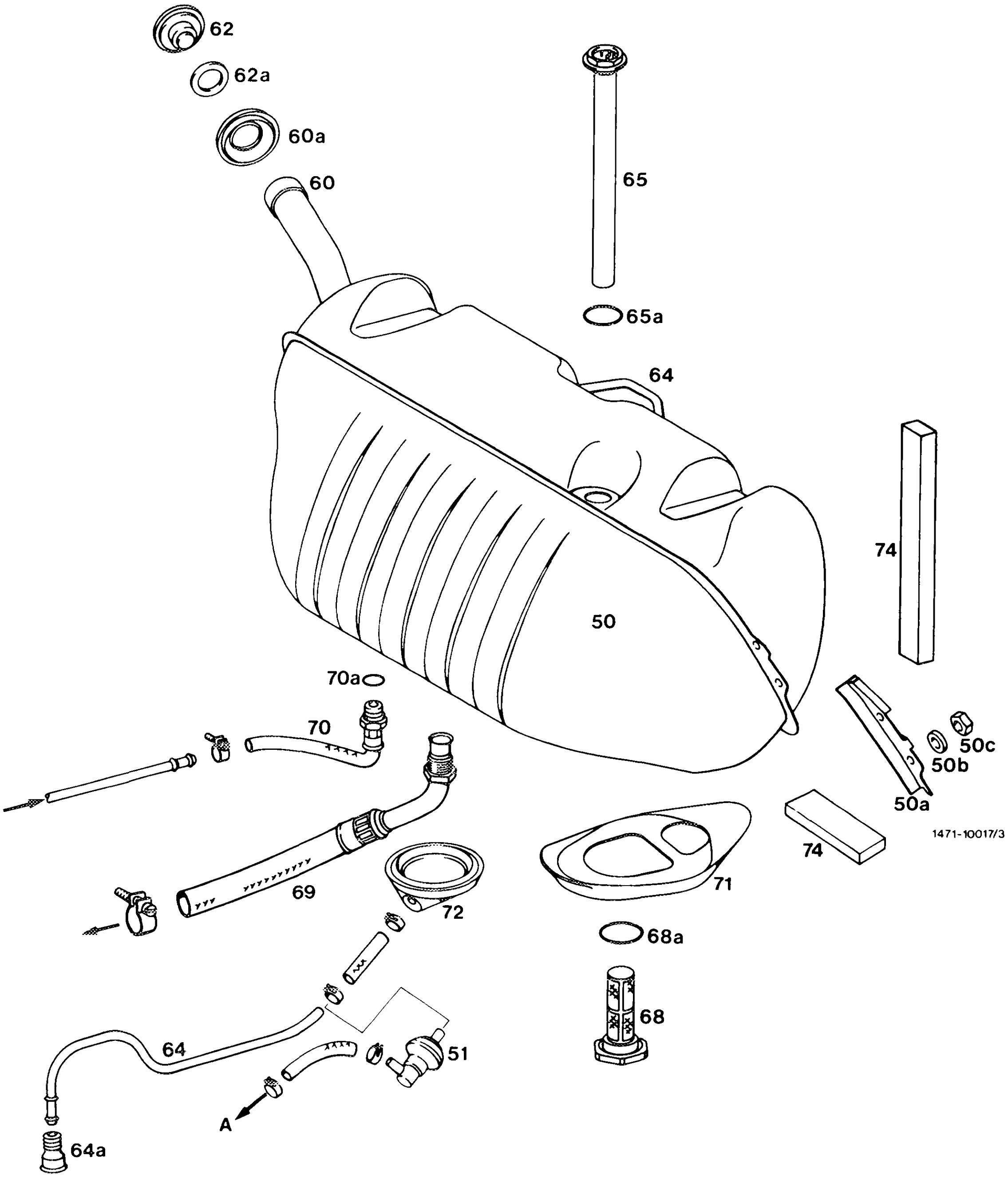
62
62a
60a
60
65
65a
64
74
50
70a
70
69
72
71
74
50c
50b
50a
1471-10017/3
68a
68
64
51
A
64a

50	Fuel tank	Pump off fuel (item 2)
50a	Reinforcing panel, 2 each	Be sure to use (risk of tearing)
50b	Washer, 4 each	Use large washers only
50c	Nut, 4 each	21 Nm
51	Vent valve	On fuel evaporation control system
60	Filler neck	
60a	Sealing sleeve	Pay attention to correct seat
62	Cap	
62a	Sealing ring	
64	Vent line	
65	Immersion tube transmitter	39 Nm
65a	Sealing ring	Renew
68	Fuel filter	Clean, check for re-use, 39 Nm, inside threads M 20 x 1
68a	Sealing ring	Renew
69	Suction hose	Check for re-use, 28 Nm, threads M 20 x 1
70	Return flow hose	Check for re-use, renew sealing ring
71	Gasket	Item 6a
72	Sealing sleeve	
73a	Protective sleeve	
74	Damping shim, 3 each or 1 each	Item 6b
A	Charcoal canister	On fuel evaporation control system

Filling capacity in liters

	Total	Reserve
	approx. 90	approx. 12.5

Self-made tool

Conventional, offset box-end wrench shorten according to drawing

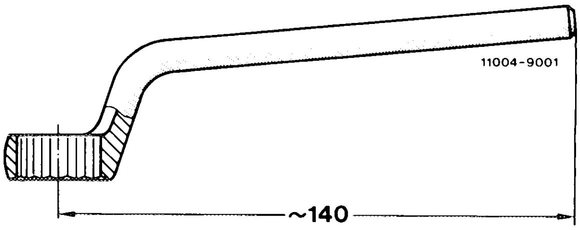

Attention!
When removing fuel tank, pay attention to safety rules.

Removal

1 Disconnect grounding line on battery.

2 Drain fuel tank. Carefully pump off fuel, so that no residual quantity remains in fuel tank.

3 Loosen suction hose, return flow hose and vent hose. Catch residual fuel in hoses. Close hoses and connections.

Note: For loosening or tightening return flow hose (70) use a shortened box-end wrench (refer to self-made tool).

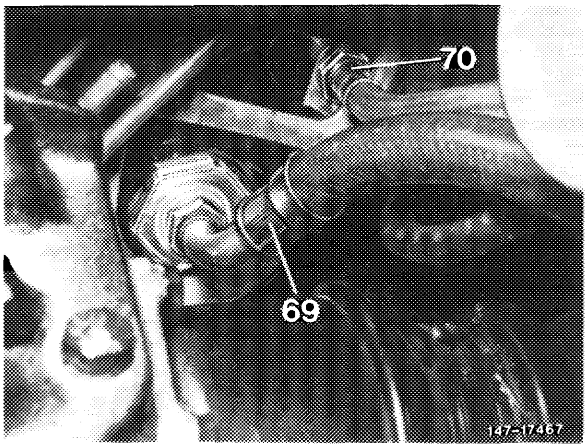

69 Suction hose
70 Return flow hose

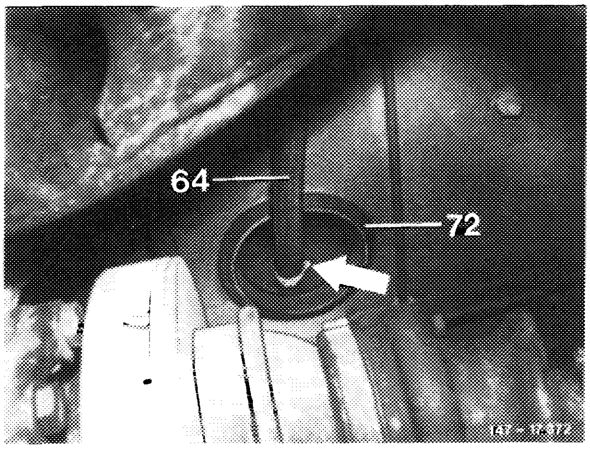

64 Vent hose
72 Sealing sleeve

4 Remove partition trunk/fuel tank.

5 Unscrew nuts (arrows), remove fuel tank.

Note: When removing or installing fuel tank, make sure that coupling (66) for fuel gauge is pulled from or plugged on immersion tube transmitter (65).

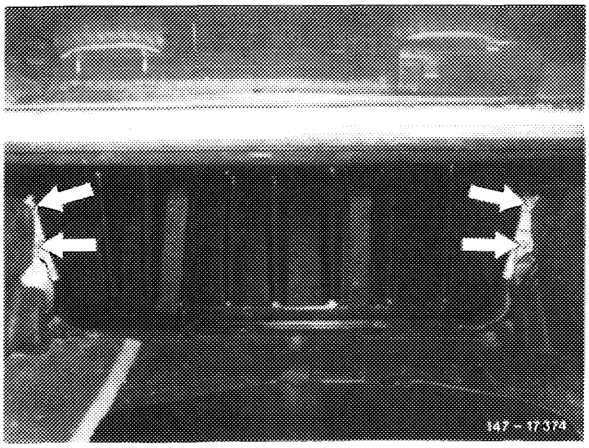

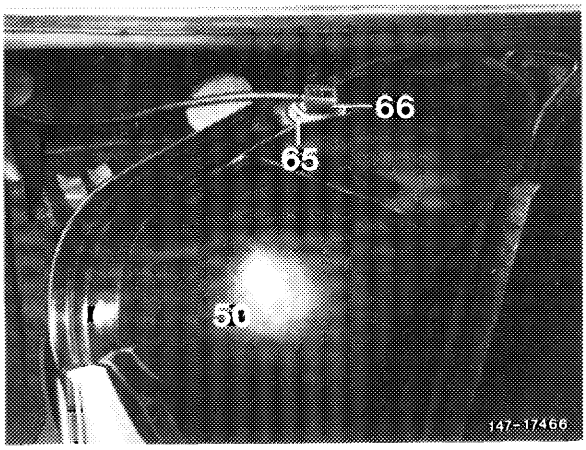

Installation

6 Install fuel tank in vice versa sequence. Proceed as follows:

a) Check gasket (71) for tight seat and glue down with MB universal glue, part No. 000 989 92 71, if required. For installation, coat sealing bead with sliding compound (talcum, wax or the like).

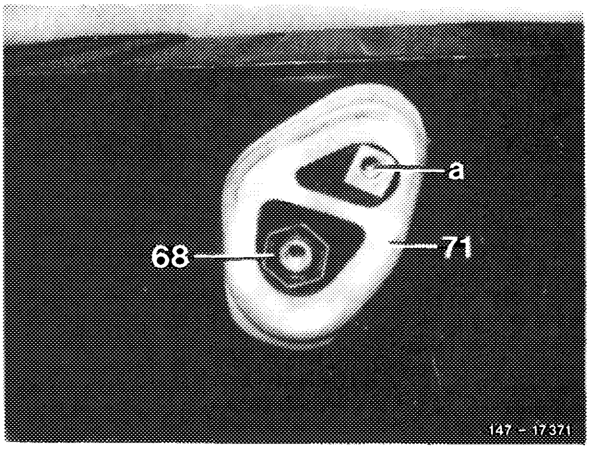

b) Check damping shims (74) for tight seat and glue down with MB universal glue, part No. 000 989 92 71, if required.

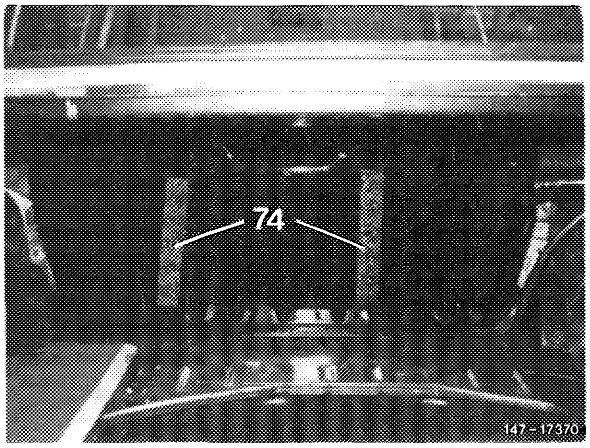

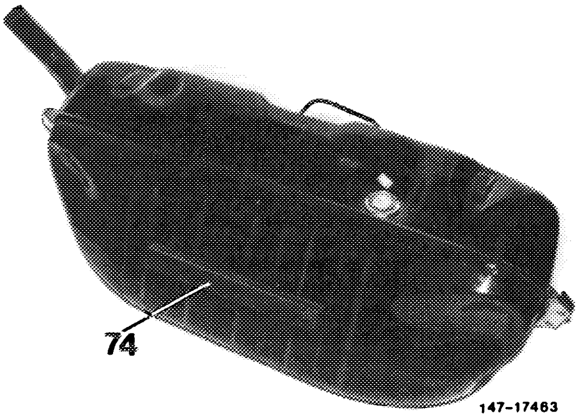

147-17463

The damping shim on underside of fuel tank is glued on vehicles starting February 1982.

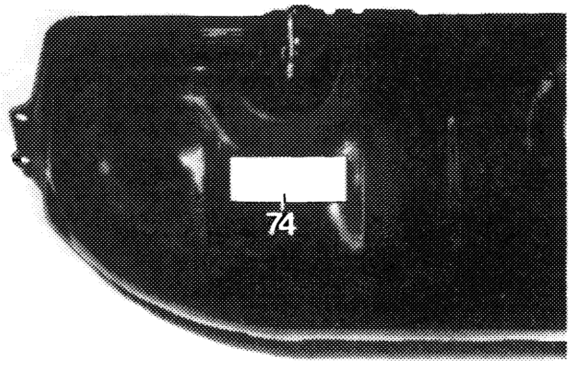

147-25269

Vehicles with catalytic converter

A guide funnel (1) is installed in filler neck owing to the small filling nozzles for leadfree fuel of these vehicles.

If a fuel tank on these vehicles is renewed, simultaneously install a guide funnel. For this purpose, place guide funnel into filler neck and knock in fastening rivets (arrows) with a mandrel up to stop.

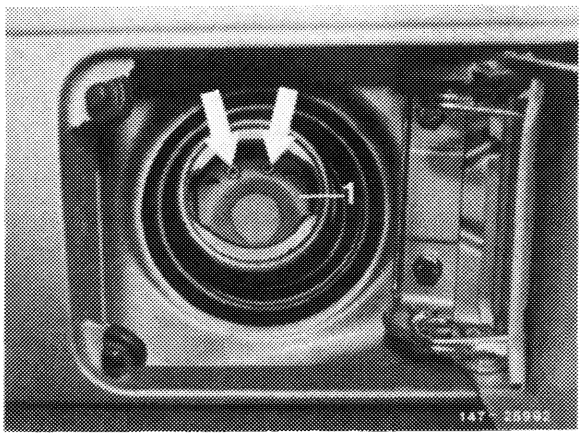

47–110 Removal and installation of fuel expansion tank

Model 107.04

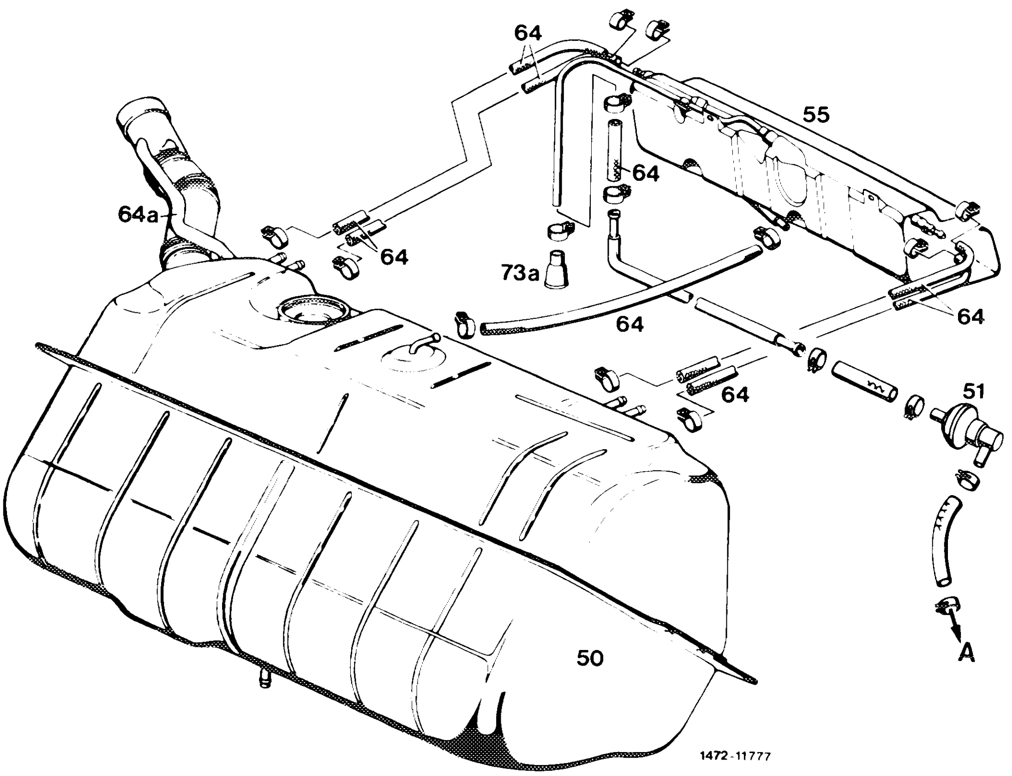

50	Fuel tank
51	Vent valve (AUS) (J) (USA) and CAT/RÜF
55	Expansion tank
64	Vent lines
64a	Negative vent line
73a	Protective sleeve
A	To charcoal canister (AUS) (J) (USA) and CAT/RÜF

Removal

1 Remove hard top. Unlock top locks and remove top.

2 Remove trunk floor mat.

3 Unscrew fastening screw (arrow) for expansion tank. On vehicles starting November 1982, loosen lining of partition in upper range to the extent that the fastening screw is accessible.

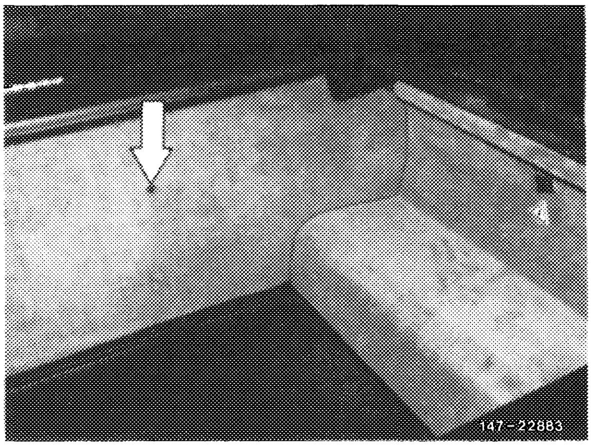

4 Unscrew partition and remove. For this purpose, loosen lining in range of edge at top and laterally, on vehicles starting November 1982 at top and bottom, and unscrew fastening screws (arrows).

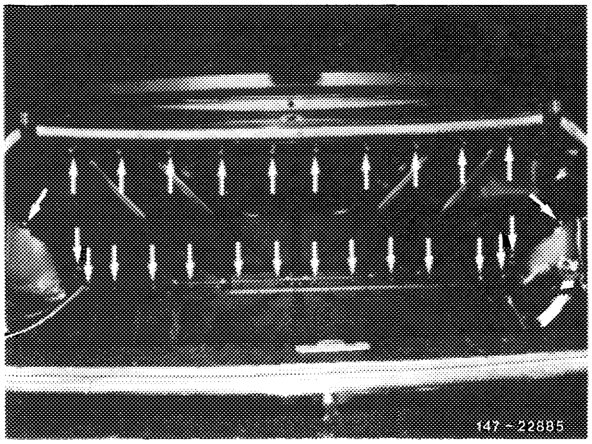

5 On vehicles with battery in trunk, remove battery and battery lining (arrows).

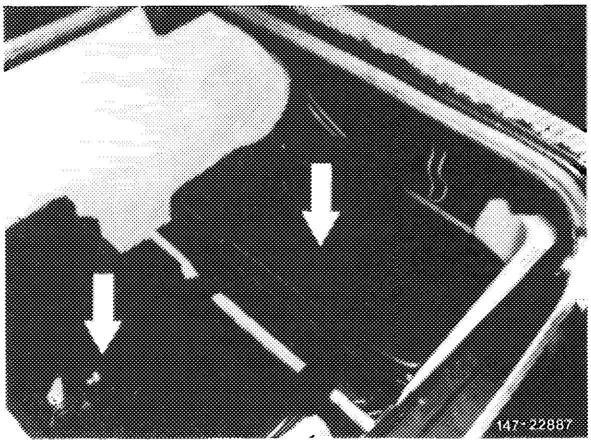

6 Remove protective sleeve (arrow) and unclip vent line from holding clamp.

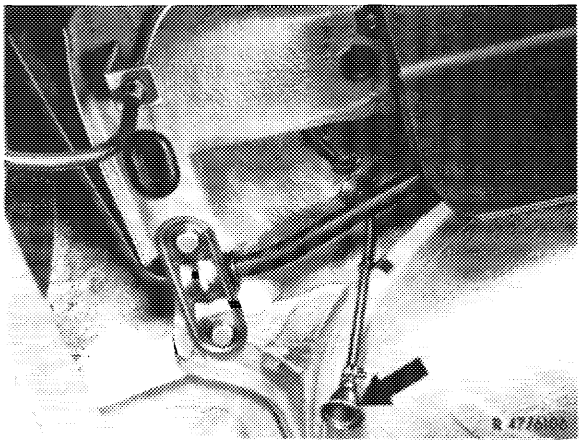

7 On vehicles with fuel evaporation control system, pull fuel hose (arrow) from vent line.

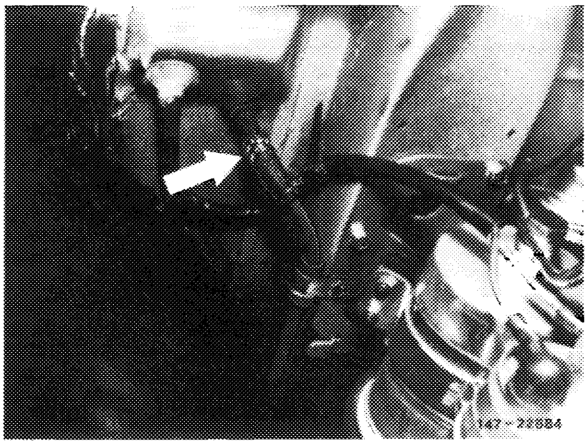

8 Remove vent lines on fuel tank or on expansion tank. Check for re-use.

Note: If fuel hoses are removed on or mounted from expansion tank, apply counterhold to connections on expansion tank when loosening or tightening hose clamps (risk of breaking off).

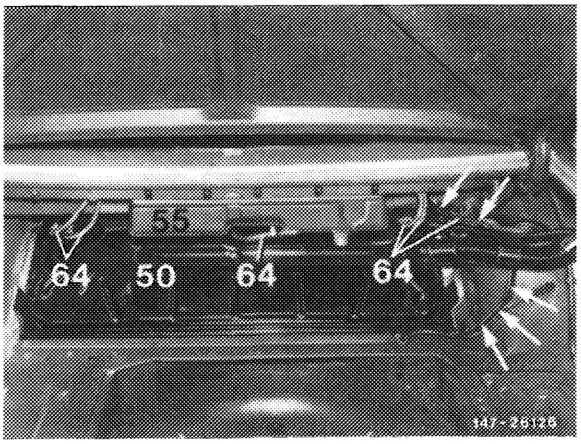

50 Fuel tank
55 Expansion tank
64 Vent lines

9 Unscrew fastening screws (arrows) and remove expansion tank (55), while pulling out black vent line (64, arrows) through trunk floor in upward direction.

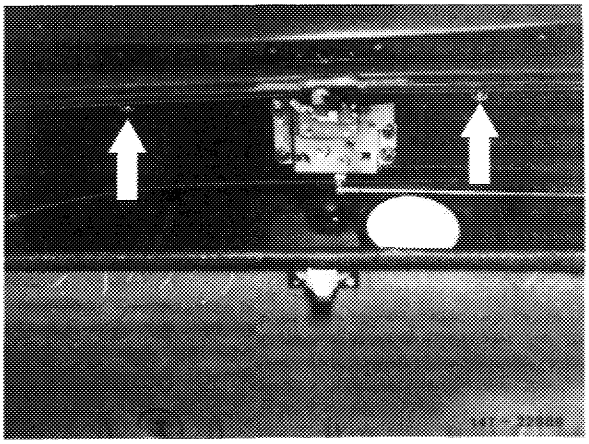

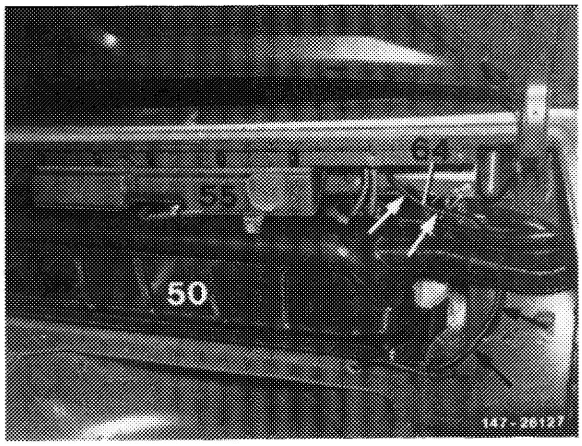

Installation

10 For installation proceed vice versa as follows:

a) Install vent line (64, arrows) first behind filler neck of fuel tank.

b) The spare parts department supplies now only the lining without opening for fastening screw (1). Glue on lining at top and bottom each time approx. 100 mm wide across entire width of partition with universal glue, part No. 000 989 82 71.

Note: Check fuel system for leaks.

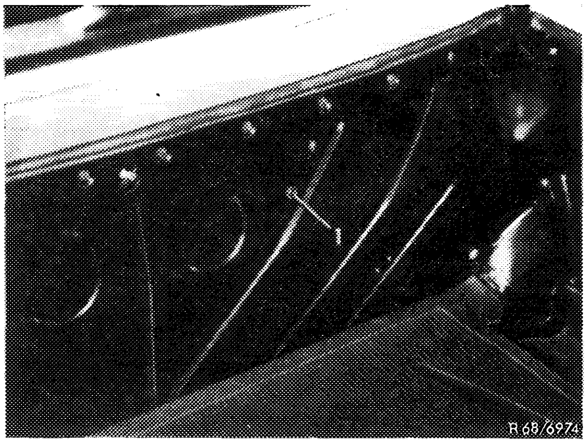

Removal and installation of transmitter for fuel readout

Tightening torque	Nm
Immersion tube transmitter	35–43

Removal

Model 107.02

1 Remove first aid kit and mounting tray (arrow).

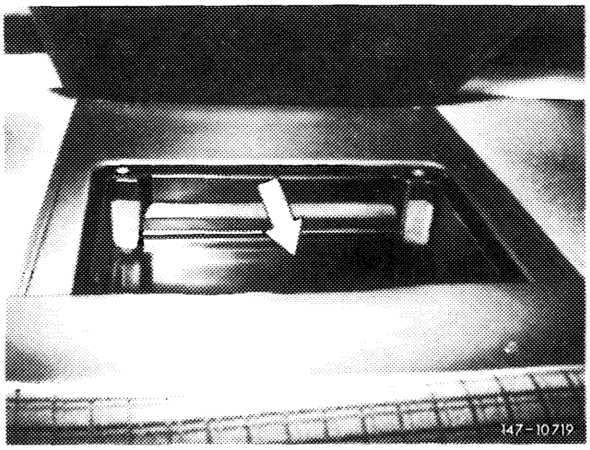

Model 107.04

Remove hard top, unfold top, remove closing cover.

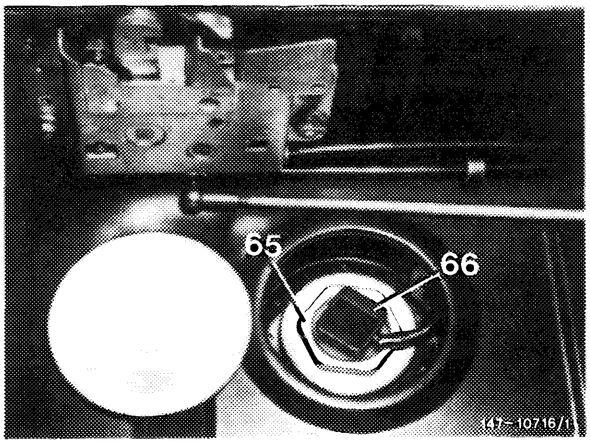

Model 126

Take off rear seat bench and backrest (91–170), remove cap.

All models

2 Pull off coupling (66) and protect against slipping off.

3 Unscrew immersion tube transmitter (65).

Note: Let immersion tube transmitter run empty, if required.

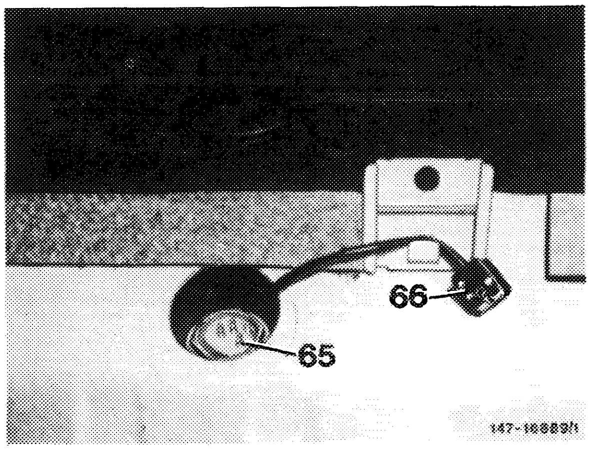

Installation

All models

4 For installation proceed vice versa as follows:

a) Use new rubber sealing ring.

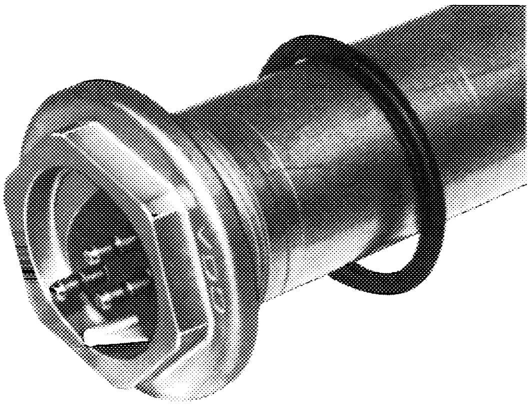

147-10810

b) Remove locking pin (arrow) prior to installing immersion tube transmitter.

c) Check function of fuel gauge.

d) Tighten immersion tube transmitter to 35–43 Nm.

e) Plug on coupling for fuel gauge.

f) Check for leaks.

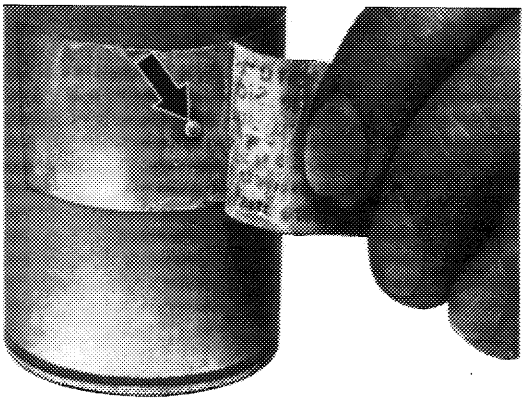

107-10702

AUS J USA starting 1981 and CAT/RÜF

Function diagram

36a Thermovalve
  AUS 40 °C, black
  J USA CAT/RÜF 50 °C, red
50 Fuel tank
51 Vent valve
52 Charcoal canister
53 Purge valve

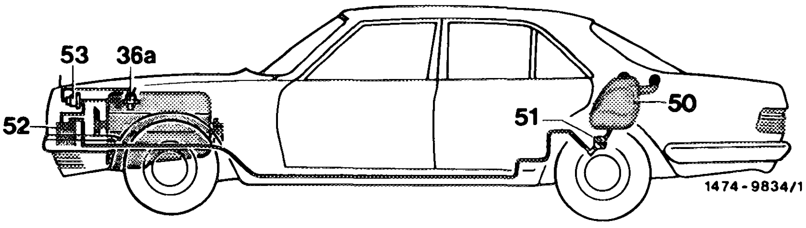

The fuel evaporation vapors are flowing from fuel tank (50) through vent valve (51) to charcoal canister (52). There, depending on operating conditions of engine, they will be stored or drawn off by the intake manifold vacuum via purge valve (53). In intake manifold, the evaporation vapors are uniformly distributed to all cylinders and burnt in engine.

Vent valve (51)

Vent valve is installed underneath vehicle and makes sure that a gauge pressure of 30–50 mbar is established in fuel tank. Fuel evaporation vapors will then be considerably reduced in quantity.

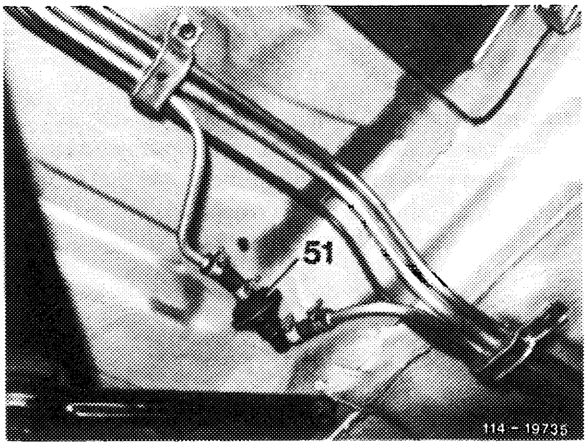

Model 107

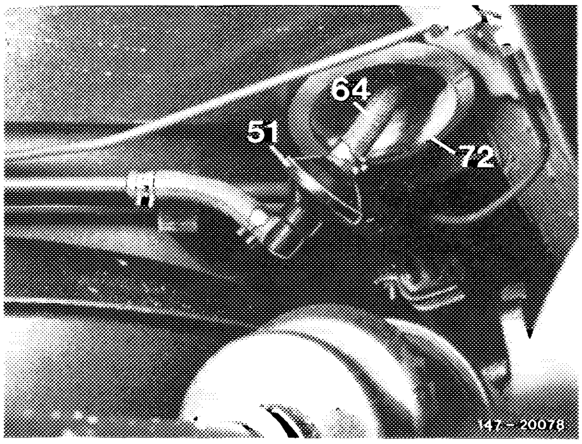

Model 126

If the pressure in fuel tank attains a gauge pressure of 30–50 mbar, vent valve (4) will open so that the fuel evaporation vapors can flow toward charcoal canister.

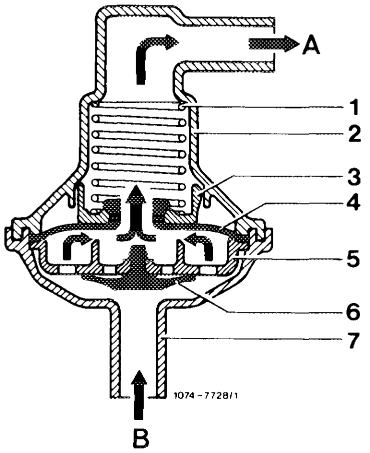

Vent valve to charcoal canister opened

1 Compression spring
2 Valve housing
3 Spring retainer
4 Negative vent valve
5 Valve plate
6 Positive vent valve
7 Connection

A Charcoal canister
B Fuel tank

When the fuel cools down, its volume is getting smaller and will be balanced by the intake of air or fuel evaporation vapors from charcoal canister via positive vent valve (6) starting at a vacuum of 1–16 mbar. The positive vent valve (6) closes when the vacuum in fuel tank drops below 1 mbar.

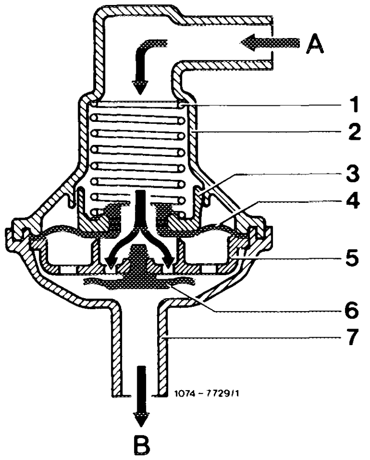

Vent valve open to fuel tank

Charcoal canister (52)

Located in engine compartment on lefthand radiator shell. Floor of charcoal canister is permeable to air (perforated sheet metal). When the stored fuel vapors are drawn off, the charcoal is regenerated.

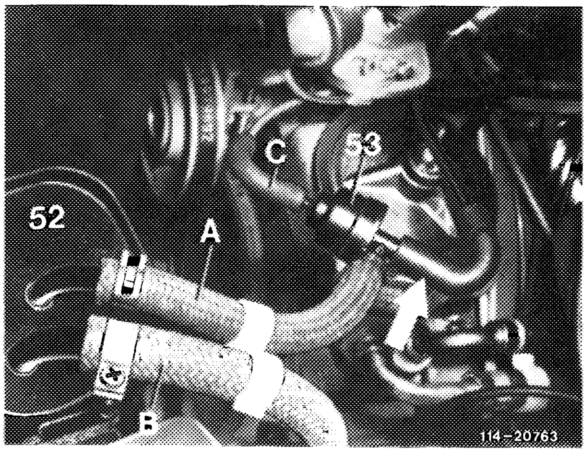

A Draw-off line to throttle valve housing
B Fuel tank negative vent

Purge valve (regenerating valve) (53)

The purge valve (regenerating valve) is installed in draw-off line (A and arrow) from charcoal canister to throttle valve housing. It is vacuum-controlled and opens in dependence of coolant temperature and throttle valve position.

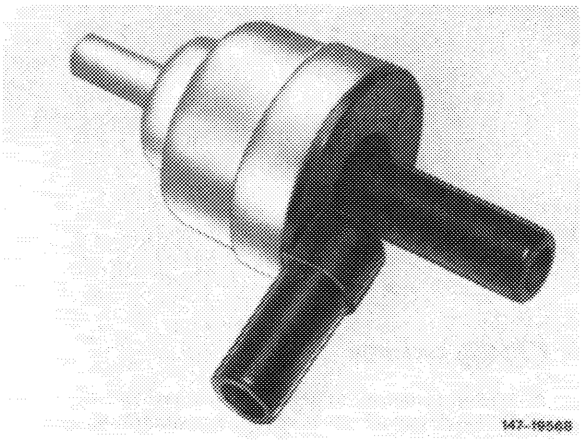

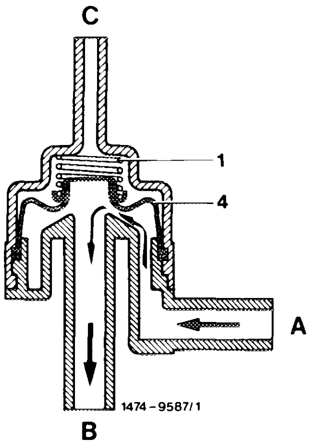

Purge valve (regenerating valve) opened

1 Compression spring
4 Diaphragm
A Connection charcoal canister
B Connection throttle valve housing
C Vacuum connection

Thermovalve (36a)

(AUS) 40 °C, color code black
(J) (USA) CAT/RÜF 50 °C, color code red

The thermovalve is installed in measuring sensor box of cylinder head and opens at approx. 40 °C or approx. 50 °C coolant temperature.

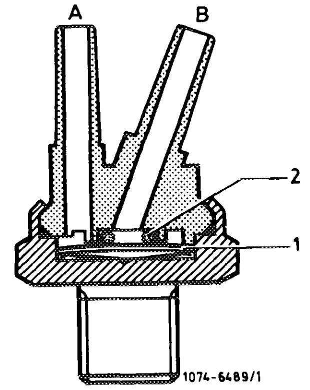

1 Bimetall plate A To purge valve (regenerating valve)
2 O-ring B To throttle valve housing

Throttle valve housing

Throttle valve housing has two draw-off bores (a) one above the other for drawing fuel evaporation vapors from charcoal canister. Both draw-off bores (a) are jointly entering a duct. This duct leads to connection (2). Connection (1) serves for vacuum activation of purge valve (regenerating valve).

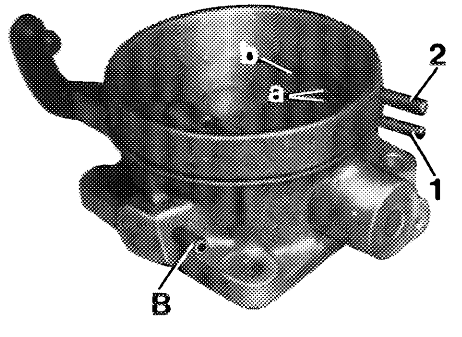

114-20198/1

(AUS)

1 Vacuum connection to purge valve (regenerating valve)
2 Draw-off connection purge valve (regenerating valve)

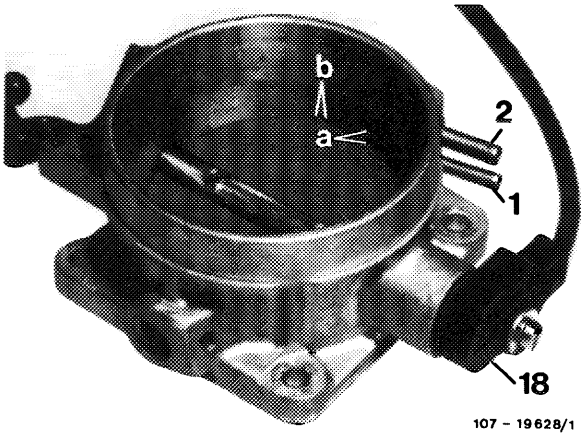

Ⓙ (USA) CAT/RÜF

1 Vacuum connection to purge valve (regenerating valve)
2 Draw-off connection purge valve (regenerating valve)

47–300 Checking fuel evaporation control system

In the event of complaints such as: Poor warm-up characteristics of engine, poor idle, no accelerator response or splashing during acceleration.

Test conditions: Run engine at operating temperature at idle.

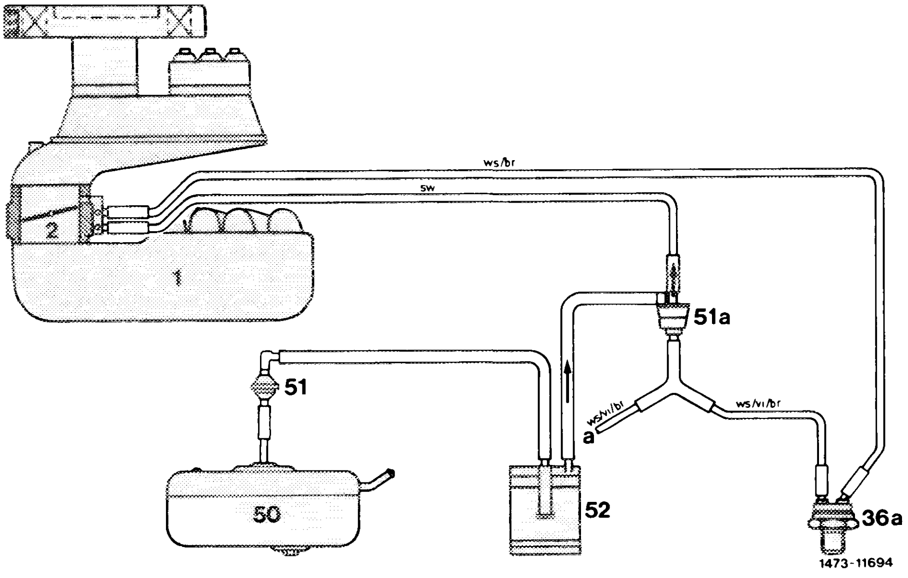

Function diagram fuel evaporation control system

1 Intake manifold
2 Throttle valve housing
36a Thermovalve
USA 40 °C, color code black
J USA CAT/RÜF 50 °C, color code red
50 Fuel tank
51 Vent valve
51a Purge valve (regenerating valve)
52 Charcoal canister
a To EGR valve (USA only)

br = brown
sw = black
vi = purple
ws = white

Pull draw-off hose (a) from charcoal canister (52) and check draw-off. For this purpose, slowly increase engine speed to approx. 3000/min.

No draw-off at idle; draw-off begins with increasing engine speed.	No draw-off with increasing engine speed.

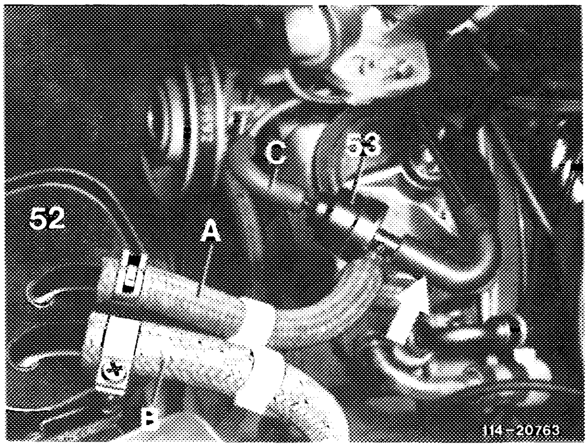

Check vacuum lines and draw-off line (arrow)

Check both vacuum lines as well as draw-off line for correct connection and passage. Renew damaged lines.

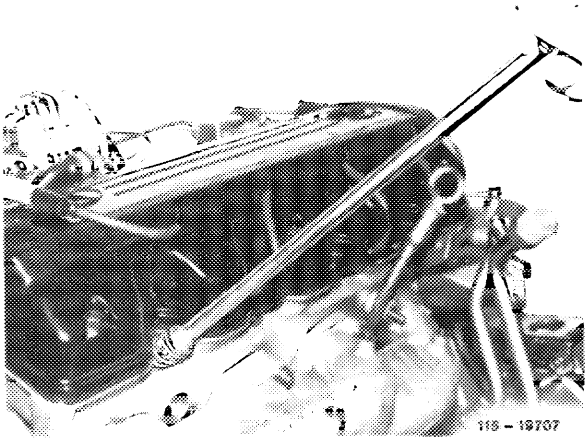

Check thermovalve (36a)

Valve must have passage. Renew thermovalve, if there is no passage.

(AUS)

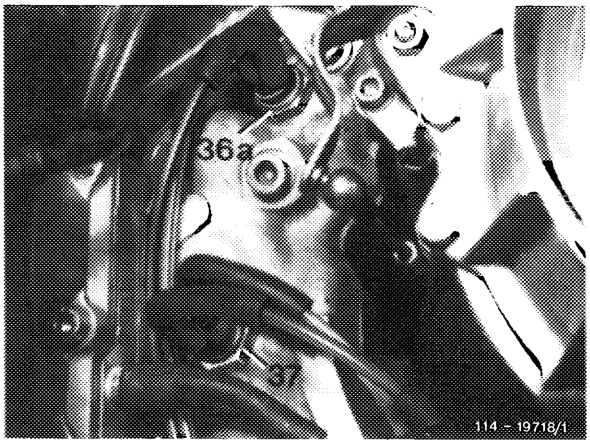

(J) (USA)
CAT/RÜF

Renew purge valve (regenerating valve) (36a)

Check draw-off on draw-off hose (A) again. If there is no draw-off with increasing speed, renew purge valve (regenerating valve).

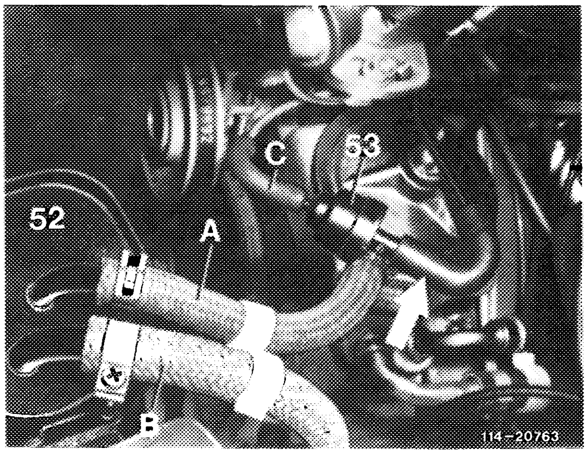

End of test

Operation of fuel cooler

(J) (USA) starting 1981

To keep temperature of fuel as low as possible even at high outside temperatures, a fuel cooler is installed in refrigerant line from evaporator to refrigerant compressor. The cooler is a double-tube version, with the refrigerant (R 12) flowing through inner tube and the fuel to be cooled through annular space between outer and inner tube.

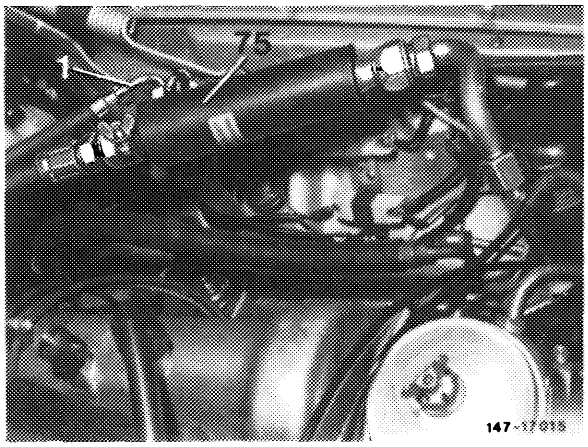

Model 126

With the engine running, the excess fuel in fuel distributor flows pressureless through return flow line (1) and fuel cooler (75) back into fuel tank.

As long as the refrigerant compressor is switched on, the gaseous refrigerant which flows through inner tube of fuel cooler will draw heat from fuel.

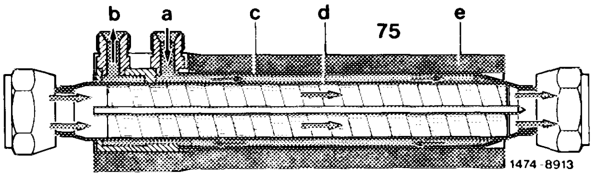

a Fuel inlet
b Fuel outlet
c Outer tube
d Inner tube
e Armaflex hose

Tightening torques	Nm
Self-locking nuts on compensating tube (model 107 only)	20–25
Self-locking nuts on exhaust manifold to exhaust flange	20–25
Self-locking hex. nuts on lateral support of clamp (model 126 only)	7
Hex. head screws of flange connection	20
Hex. head screws of lateral support on transmission (model 126 only)	20

Removal and installation of exhaust system is not explained completely but attention is called to particularly important items, which must be observed during removal and installation or when renewing parts, for example end muffler with plug connection.

The same procedure is adopted on vehicles fitted with a retrofit catalytic converter (uncontrolled).

Removal and installation of catalytic converter (controlled), see 14–200.

Removal

1 If separation at plug flange connection is not possible, spray exhaust pipes in range of flange connection with a corrosion solvent and let solvent penetrate.

2 Check suspension members for re-use and renew, if required.

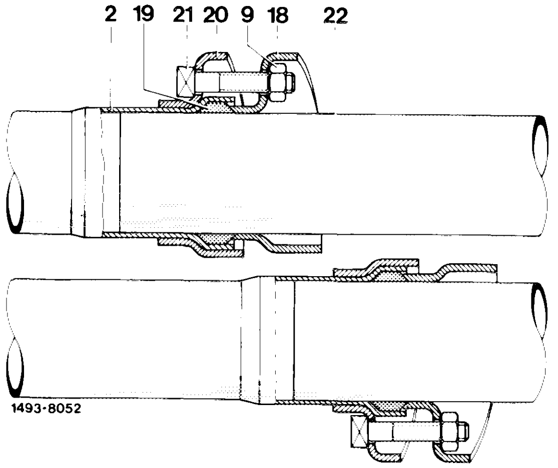

Model 107

2	Front exhaust pipe
4	Asbestos sealing ring
5	Sinter sealing ring
6	Self-locking hex. nut
7	Hex. head screw
9	Hex. nut
18	Two-hole flange
19	Graphite gasket
20	Counterflange
21	Square head screw
22	Rear exhaust pipe

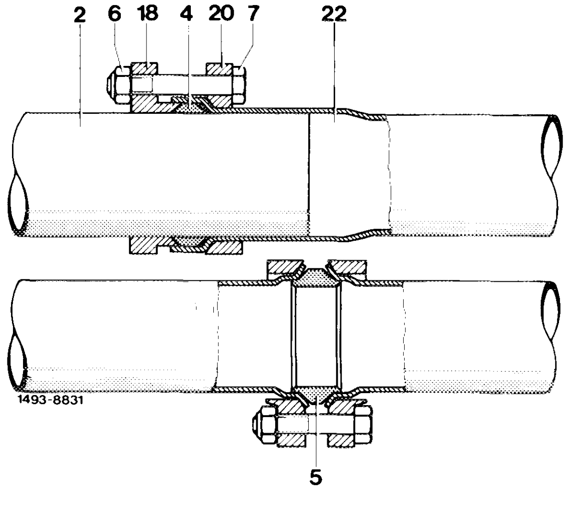

Model 126

3 Prior to assembly of exhaust system, make sure that the flanges are not distorted, align flanges, if required (refer to model 107 on compensating pipe). Clean cone connections of pipes, as well as sinter sealing ring (on model 126), if required, with emery cloth from combustion residue.

4 Renew self-locking hex. nuts and asbestos or graphite gasket after one-time use on principle.

Installation

5 For renewing end muffler, place new end muffler with plug connection accurately above removed installation and mark pipe length of new end muffler on removed installation.

Cut pipe 80 minus 10 mm from mark in direction of end muffler to guarantee a plug-in depth of 70–80 mm.

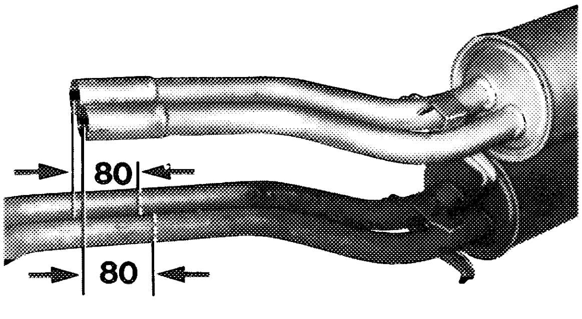

149-13369

6 Tighten flange connection to exhaust manifold only after the complete installation has been connected to rubber rings. Pay attention to correct seat of front exhaust pipe. Tightening torque of hex. bolts 20–25 Nm.

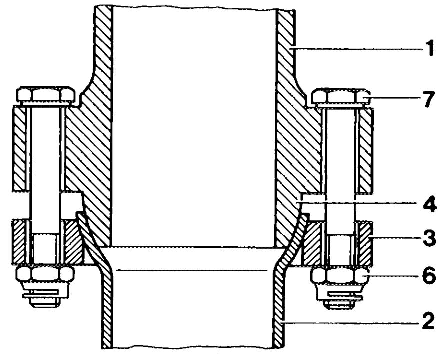

1074-7751

1 Exhaust manifold
2 Flared exhaust pipe
3 Two-hole flange
4 Ball connection connected firmly to exhaust manifold
6 Self-locking hex. nut
7 Hex. bolt

7 Prior to introducing rear exhaust system, position front exhaust pipes with clamp and lateral support first, but do not yet tighten (model 126 only).

8 Mount four disk springs on holding clamp in such a manner that the crowns are each time opposite each other.

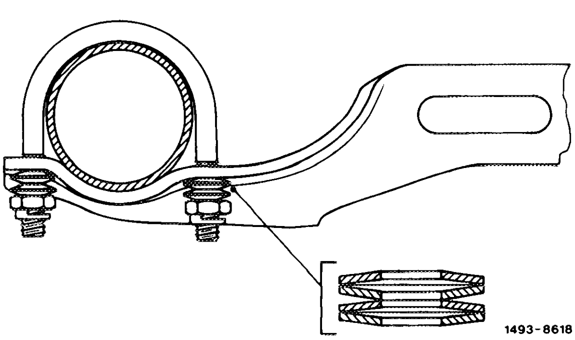

1493-8618

Model 126

9 Tighten flange connection on compensating pipe only after the complete exhaust system has been mounted. Then tighten pipe clamp. Tightening torque of self-locking nuts 20–25 Nm (model 107 only).

Note: Flanges must be in parallel with each other and should have no contact with each other.

10 Mount rear exhaust system with center and end muffler.

11 Mount end muffler in such a manner that clamps of end muffler are approx. 10 mm in front of holders on frame floor (arrow), so that the exhaust system is correctly located for elongation.

Note: The above refers to repair version mufflers only with plug connection between center and end muffler.

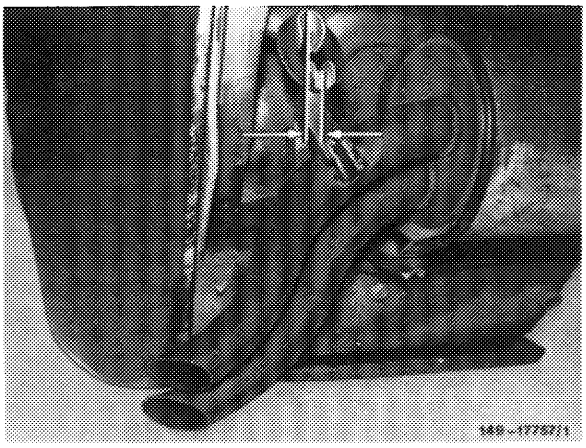

Model 126

12 Uniformly tighten hex. head bolts of flange connection to 20 Nm (arrows).

13 Mount exhaust lateral support free of tension. Tightening torque of self-locking hex. nuts on clamp 7 Nm, hex. bolts of lateral support on transmission 20 Nm.

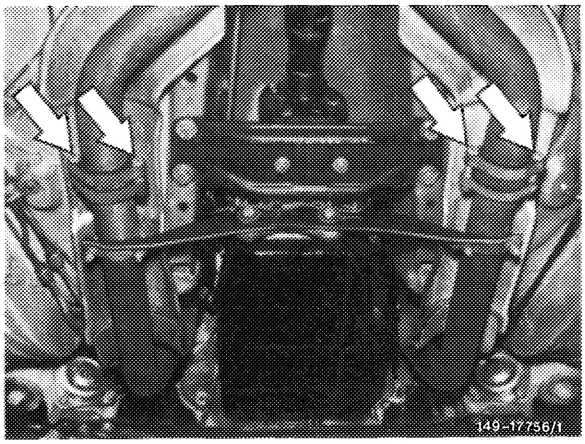

Model 126

14 Run engine and check exhaust system for leaks.

Exhaust system
Model 107.025/045

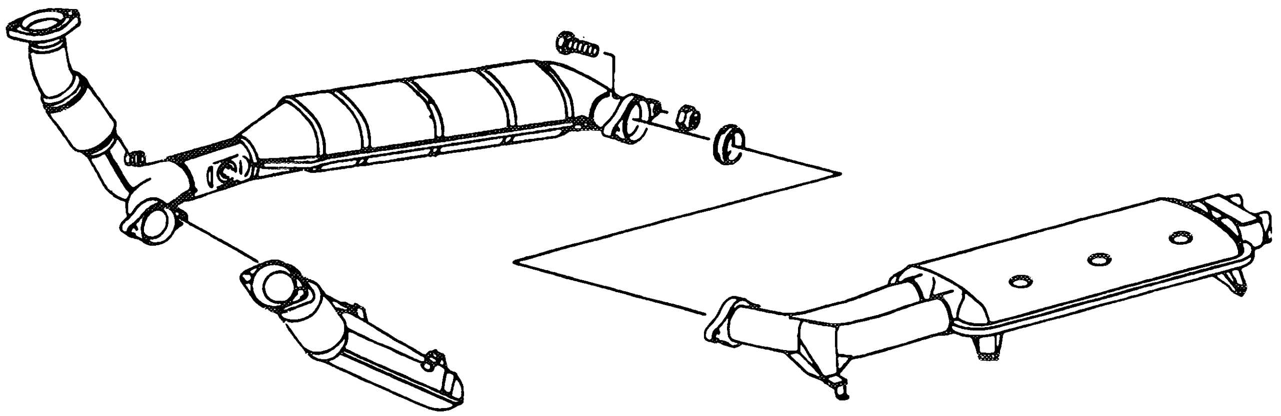

Exhaust system,
Model 126.032/033/037/043/044