TO 1-1A-1
NAVAIR 01-1A-1

TECHNICAL MANUAL

ENGINEERING HANDBOOK SERIES FOR AIRCRAFT REPAIR

GENERAL MANUAL FOR STRUCTURAL REPAIR

(ATOS)

THIS MANUAL SUPERSEDES AF TO 1-1A-1 AND NAVAIR 01-1A-1, DATED 1 APRIL 2015.

DISTRIBUTION STATEMENT A: Approved for public release; distribution is unlimited. HQ AFMC PA Case Number 070201. Submit recommended changes or problems with this technical order to 558 CBSS/GBHA, Bldg 3001/1AC1108B, Tinker AFB OK 73145-3041.

Published under authority of the Secretary of the Air Force

15 JANUARY 2016

INSERT LATEST CHANGED PAGES. DESTROY SUPERSEDED PAGES.

LIST OF EFFECTIVE PAGES

NOTE: The portion of the text affected by the changes is indicated by a vertical line in the outer margins of the page. Changes to illustrations are indicated by shaded or screened areas, or by miniature pointing hands.

Dates of issue for original and changed pages are:

Original..... 0 ..... 15 January 2016

TOTAL NUMBER OF PAGES IN THIS MANUAL IS 160, CONSISTING OF THE FOLLOWING:

Page No.	*Change No.	Page No.	*Change No.	Page No.	*Change No.
Title	0				
A	0				
i - ix	0				
x Blank	0				
1-1 - 1-10	0				
2-1 - 2-14	0				
3-1 - 3-26	0				
4-1 - 4-19	0				
4-20 Blank	0				
5-1 - 5-9	0				
5-10 Blank	0				
6-1	0				
6-2 Blank	0				
7-1 - 7-11	0				
7-12 Blank	0				
8-1 - 8-29	0				
8-30 Blank	0				
9-1	0				
9-2 Blank	0				
A-1 - A-7	0				
A-8 Blank	0				
B-1 - B-2	0				
C-1 - C-8	0				
Index 1 - Index 4	0				

*Zero in this column indicates an original page

TABLE OF CONTENTS

Chapter Page

INTRODUCTION v

SAFETY SUMMARY vii

1 A DESCRIPTION OF THE MAIN ELEMENTS IN AIRCRAFT STRUCTURE 1-1

1.1 Principal Structural Units 1-1
1.1.1 Fuselage 1-1
1.1.2 Engine Mounts 1-1
1.1.3 Nacelle 1-1
1.1.4 Wings 1-1
1.1.5 Stabilizers 1-1
1.1.6 Control Surfaces 1-1
1.1.7 Landing Gear 1-1
1.2 Fuselage 1-1
1.2.1 General 1-1
1.2.2 Structure 1-1
1.3 Engine Mounts 1-3
1.3.1 General 1-3
1.3.2 Structure 1-4
1.4 Nacelles 1-4
1.4.1 General 1-4
1.4.2 Structure 1-4
1.5 Wings 1-4
1.5.1 General 1-4
1.5.2 Structure 1-4
1.5.3 Inspection and Maintenance of the Wings, Fuselage, and Nacelles 1-5
1.6 Stabilizers 1-6
1.6.1 General 1-6
1.6.2 Structure 1-6
1.7 Control Surfaces 1-6
1.7.1 General 1-6
1.7.2 Structure 1-8
1.8 Landing Gear 1-10

2 DAMAGE ASSESSMENT 2-1

2.1 Causes of Aircraft Damage 2-1
2.2 Damage Classifications 2-2
2.3 Repair Classifications 2-5
2.4 Investigation of Damage 2-6
2.5 Nondestructive Inspection 2-6
2.5.1 Nondestructive Inspection (NDI) 2-6
2.5.2 Damage Types 2-6
2.6 NDI Techniques 2-7

3 GENERAL WORKING PRACTICE 3-1

3.1 Repair of Aircraft Structures 3-1
3.2 Aluminum Alloy Stressed Skin Structure 3-1
3.3 Aluminum Alloy Sheet Substitutions 3-1
3.3.1 Explanation of Substitution Table 3-1
3.3.2 Explanation of Rule 1 3-4
3.3.3 Explanation of Rule 2 3-4
3.4 Rivets and Riveting Practice 3-4
3.5 Replacement of Spot Welds and Worn Laminas 3-5
3.5.1 General 3-5
3.5.2 Removal of Spot Welds 3-5
3.5.3 Spot Weld Failures 3-6
3.6 Fasteners 3-9
3.7 Extracting Broken Screws 3-9
3.8 Advanced Composite Repair 3-10
3.9 Tubing Repair 3-11
3.9.1 General 3-11
3.9.2 Identification of Tubing Systems 3-11
3.9.3 Tubing Damage 3-12
3.9.4 Repairs 3-12
3.10 Repair of Threaded Installations 3-12
3.11 Stop-Drilling Cracks in Sheet Material (Low- and Medium-Stress Areas) 3-13
3.11.1 Crack inspection 3-13
3.11.2 Crack evaluation 3-13
3.11.3 Crack repair and treatment 3-14
3.12 Blending Scratches 3-14
3.13 Typical Repair Examples 3-14

4 MATERIALS AND THEIR IDENTIFICATION 4-1

4.1 Material Specifications 4-1
4.2 Terminology 4-1
4.2.1 Terms for the Study and Use of Materials 4-1
4.2.2 Steel 4-4
4.2.3 Aluminum 4-8
4.2.4 Titanium 4-11
4.2.5 Magnesium 4-16
4.2.6 Advanced Composites 4-17
4.2.7 Transparent Plastics 4-18
4.2.8 Safety Glass 4-19

5 FASTENERS 5-1

5.1 General 5-1
5.2 Threaded Fasteners 5-1
5.3 Rivets 5-4

6 WELDING 6-1

7 ADHESIVES AND BONDING 7-1

7.1 General 7-1
7.2 Advantages and Disadvantages of Adhesive Bonding 7-1
7.2.1 Advantages 7-1
7.2.2 Disadvantages 7-1
7.3 Classification of Adhesive Materials 7-2
7.3.1 Functional Classification 7-2
7.3.2 Type Classification 7-2
7.4 Types of Adhesive-Bonded Joints 7-4
7.4.1 Lap Joints 7-4
7.4.2 Joggle Lap Joints 7-4
7.4.3 Beveled Lap Joints 7-4
7.4.4 Butt Joints 7-4
7.4.5 Strap Joints 7-4
7.5 Design Considerations 7-4
7.5.1 Stresses 7-4
7.5.2 Compatibility 7-6
7.5.3 Fabrication 7-6
7.6 Surface Preparation 7-6
Table 7-3 Surface Preparation Treatments for Adhesive Bonding (Tank Immersion) 7-7
7.7 Selection of Adhesive 7-8
7.8 Curing of Adhesive Bonds 7-8
7.9 Adhesive Primer Selection 7-8
7.10 Debonding of Honeycomb with Dry Ice 7-10
7.10.1 Insulated enclosure 7-10
7.10.2 Packing 7-10
7.10.3 Removal Procedure 7-10
7.10.4 Dry Ice Substitute 7-10
7.11 Additional Information 7-11

8 METAL WORKING 8-1

8.1 General Shop Practices 8-1
8.2 Sheet Metal Forming 8-1
8.3 Forming Terminology 8-1
8.4 Flat Pattern Development 8-1
8.5 Bend Allowance 8-1
8.6 Setback 8-1
8.7 Minimum Sheet Metal Bend Radii 8-4
8.8 Flat Pattern Layout Procedures 8-4
8.9 Bend Line 8-4
8.10 Forming Operations 8-4
8.11 Box Pan or Cornice Brake Machine Forming 8-10
8.12 Slip Roll Machine Forming 8-10
8.13 Hand Forming 8-10
8.14 Joggling 8-24
8.15 Working Titanium Alloys 8-27
8.16 Cutting and Grinding Titanium Alloys 8-27
8.17 Drilling and Reaming Titanium Alloys 8-27
8.18 Dies and Joggle Blocks 8-27
8.19 Forming Titanium Alloys 8-27
8.20 Cold-Forming Titanium Alloys 8-28
8.21 Elevated-Temperature-Forming of Titanium Alloys 8-28
8.22 Titanium Stress-Relieving and Annealing 8-28
8.23 Locating Blind Holes 8-28

9 CABLE REPAIR 9-1

A GRIT BLAST SILANE (GBS) PROCESS A-1

A.1 Materials A-1
A.2 Equipment A-1
A.3 Process A-1

B PHOSPHORIC ACID NON-TANK ANODIZE (PANTA) PROCEDURES B-1

B.1 Materials B-1

C SPECIAL CONSIDERATIONS REGARDING FASTENER HOLES C-1

C.1 General Process Requirements C-1
C.2 Cutting Fluids (Sources) C-1
C.3 General Practices to Produce Quality Holes in Metallic Aircraft Structures C-1
C.4 Drill Motors C-2
C.5 Cutting Tools C-2
C.6 Cutting Speeds and Feeds C-2
C.7 Cutting Fluids C-2
C.8 Hole Quality C-3
C.9 Cold Working (CW) Of Fastener Holes; Split Sleeve Method C-3
C.10 Process Description C-3
C.11 Engineering Background and Justification C-3
C.12 Mandrels C-4
C.13 Nondestructive Inspection C-4
C.14 Lubricants C-4
C.15 Applied Expansion C-4
C.16 Edge Margin Requirements C-4
C.17 Hole Spacing Requirement C-4
C.18 Cold Worked Hole Diameter C-4
C.19 Post Sizing of Cold Worked Holes for Fastener Fit C-5
C.20 Oversizing C-5
C.21 Countersinking and Deburring C-5
C.22 Rework of Previously Countersunk Holes C-5
C.23 Hole Diameter vs. Sheet Thickness Ratio C-5
C.24 Shear Discontinuities C-5
C.25 Surface Upset C-5

INDEX ..... Index 1

LIST OF ILLUSTRATIONS

Number	Title	Page
1-1	Principle Structural Units	1-2
1-2	Semimonocoque Fuselage Design	1-3
1-3	Aircraft Wing Design	1-5
1-4	Typical Tail Structures	1-7
1-5	Typical Stabilizer Structures	1-7
1-6	Types of Wing Flaps	1-9
1-7	Leading Edge Flaps	1-10
2-1	Negligible Damage	2-3
2-2	Damage Repairable by Patching	2-4
2-3	Damage Repairable by Insertion	2-4
2-4	Damage Requiring Replacement	2-5
2-5	Typical Borescope	2-8
2-6	Types of Borescopes	2-8
2-7	Locating Cracks by Radiography	2-10
2-8	Eddy Currents Produced in a Conductor by a Varying Electromagnetic Field	2-11
2-9	Path of Eddy Currents Around a Crack	2-11
2-10	Detecting Flaw with Ultrasonic Inspection Method	2-11
2-11	Fluorescent Penetrant Action	2-12
2-12	Crack in Bar Magnet Attracting Magnetic Particles	2-13
2-13	Electric Current Creating a Circular Magnetic Field in a Part	2-13
3-1	Aluminum Alloy Sheet Substitution and Conversion Table for Commercial Temper Designations	3-2
3-2	Drill Sizes for Removal of Spot Weld	3-5
3-3	Method of Shearing Spot Welds for Riveting	3-6
3-4	Locating and Transcribing Tool	3-6
3-5	Spot Weld Shearing Chisel	3-7
3-6	Piloting Drill	3-7
3-7	Drilling Holes	3-7
3-8	Removing Spot Welded Skin from Structure	3-7
3-9	Repair for Sheared Spot Welds	3-8
3-10	Drilling a Hole in a Broken Screw	3-9
3-11	Removing a Broken Screw	3-11
3-12	Stress Concentration and Blending	3-15
3-13	Typical Splice Repair	3-16
3-14	Typical Splice Tee Repair	3-17
3-15	Typical Angle Repair	3-18
3-16	Typical Channel Repairs	3-19
3-17	Typical Zee Repair	3-22
3-18	Typical Rib Repair	3-24
3-19	Typical Aluminum Honeycomb Repair	3-25
4-1	Tension Load Example	4-1
4-2	Compression Load Example	4-2
4-3	Shear Load Example	4-2
4-4	Bending Load Example	4-3
4-5	Torsion Load Example	4-4
5-1	Parts of a Screw	5-2
7-1	Types of Adhesive-Bonded Joints	7-5
8-1	Technical Forming Terms	8-2
8-2	Bend Allowance	8-3
8-3	Setback Dimensions	8-5
8-4	Minimum Bend Radii	8-6
8-5	Layout Development	8-8
8-6	Use of Bend Lines on Cornice Brake	8-9
8-7	Cornice Brake Operation	8-11
8-8	Form Correction Chart	8-13
8-9	Forming Parts	8-14
8-10	Hand-Forming Concave Surfaces	8-15
8-11	Hand-Forming Convex Surfaces	8-16
8-12	Hand-Forming Extruded Shapes	8-17
8-13	Joggle Dimension Chart - Flat Sheet, Joggle Cold	8-18
8-14	Joggle Dimension Chart - Flanged Sheet, Rubber Formed and Joggle Cold	8-20
8-15	Joggle Dimension Chart - Extruded or Bent Sheet Sections, Die Joggle	8-22
8-16	Forming Joggle Using Cornice Brake	8-23
8-17	Forming Joggle Using Joggle Blocks	8-25
8-18	Forming Joggle Using Joggle Clip	8-26
8-19	Drills for Titanium	8-28
8-20	Locating and Transcribing Tool	8-29
A-1	Grit Containment Box Example	A-4
C-1	Split Sleeve Cold Working of Fastener Holes	C-7
C-2	Steps of the Cold Working Process	C-8

LIST OF TABLES

Number	Title	Page
1	Related Air Force (TO) and NAVAIR (TM) Publications	vi
2-1	Types of Damage	2-2
2-2	Advantages and Disadvantages of Common Aircraft NDI Techniques	2-14
3-1	Drill and Extractor Sizes	3-10
4-1	Cross-Reference of Steel Specifications	4-6
4-2	Basic Temper Designations and Subdivisions for Aluminum Alloys	4-10
4-3	Cross-Reference for Common Aluminum Alloys	4-12
4-4	Typical Mechanical Properties of Common Aluminum Alloys	4-13
4-5	Mechanical Properties of Titanium	4-15
4-6	Density of Structural Metals	4-16
4-7	Casting Specification	4-17
4-8	Fiber Reinforcement	4-18
4-9	Resins	4-18
4-10	Prepregs and Laminates	4-19
5-1	Hole Size Fits	5-3
5-2	Rivet Identification and Characteristics	5-7
5-3	Shear Strength of Aluminum Alloy Rivets (Pounds Per Rivet)	5-9
7-1	Types of Adhesives	7-3
7-2	Adhesives Classified by Form	7-4
7-3	Surface Preparation Treatments for Adhesive Bonding (Tank Immersion)	7-7
7-4	Non-Tank Surface Preparation Treatments for Adhesive Bonding on Aluminum, Titanium, Steel, and Fiberglass	7-9
7-5	Federal and Military Adhesive Specifications	7-10
7-6	Thermosetting Adhesives Classified by Activation and Cure Requirements	7-11
C-1	Maximum Recommended Drill Speeds for Holes up to 0.360 Inch Diameter	C-5
C-2	Maximum Recommended Reaming Speeds for Holes up to 0.360 Inch Diameter	C-6
C-3	Recommended Flex Honing Parameters	C-6
C-4	Recommended Speeds for Countersinking and Counterboring	C-6
C-5	Recommended Cutting Fluids	C-6

INTRODUCTION

1. GENERAL.

Technical Order (TO) 1-1A-1 is one of a series of manuals prepared to assist personnel engaged in the general maintenance and repair of military aircraft. This manual covers general aircraft structural repair.

This is a Joint-Service manual and some information may be directed at one branch of the service and not the other. Wherever the text of the manual refers to Air Force technical orders for supportive information, refer to the comparable Navy documents (see Table 1).

The satisfactory performance of aircraft requires continuous attention to maintenance and repair to maintain aircraft structural integrity. Improper maintenance and repair techniques can pose an immediate and potential danger. The reliability of aircraft depends on the quality of the design, as well as the workmanship used in making the repairs.

It is important that maintenance and repair operations be made according to the best available techniques to eliminate, or at least minimize, possible failures.

Navy and Marine Corps personnel SHALL submit changes/corrections at www.natec.navy.mil, the Technical Publication Discrepancy Reporting (TPDR) process online. Instructions for submission of TPDRs are in COMNAVAIRFORINST 4790.2 (NAMP), Volume V, Chapter 10.

2. SOURCES OF INFORMATION.

This manual contains up-to-date information and practices for aircraft structural repair. It has been compiled from information contained in AC-43.13-2A (Acceptable Methods, Techniques, and Practices: Aircraft Inspection and Repair), weapon system-specific structural repair manuals, and applicable military and commercial specifications. In addition, guidance published by the American Society for Metals (ASM), the American Society for Testing and Materials (ASTM), and the American Welding Society (AWS) has been included where appropriate.

3. INTENDED USE.

This manual is intended primarily for personnel who maintain and repair military aircraft under government contract or at military bases. Its use is mandatory for such personnel, except where any procedure contained in it conflicts with the weapon system-specific repair manuals. If a conflict occurs, the weapon system-specific repair manuals shall take precedence.

The procedures described in this manual are compatible with those currently used by airframe manufacturers. Repair and maintenance performed according to this manual should result in quality equivalent to that in the original installation.

Repairs are made under varying conditions. All materials, tools, and machinery needed to make repairs may be available, together with sufficient time and freedom from interruption, to ensure striving for perfection. At times, machinery, materials, and tools may not be available or adequate. Time may be a pressing factor. Combat conditions may also be a factor. Wherever possible, repairs covered in this manual keep two principal types of user in mind:

- Repair personnel operating under base repair conditions
- Repair personnel making repairs in combat areas

Under base repair conditions, the weapon system-specific repair manuals take precedence over any guidance presented in TO 1-1A-1.

Under combat conditions, the weapon system-specific battle damage repair TO takes precedence over any guidance presented in TO 1-1A-1.

For other repair instances, certain procedures must be used in all cases because special tools and machinery are required.

4. ARRANGEMENT OF MATERIAL.

This manual is divided into eight chapters. Each chapter describes and illustrates the recommended procedure for a single subject or a related series of operations.

The manuals listed in Table 1 supplement and form a part of TO 1-1A-1. These supplemental manuals contain general information for their respective application of topic and should be consulted first. For Navy, refer to the applicable aircraft specific or system specific technical manuals and Maintenance Requirements Cards (MRCs).

Table 1. Related Air Force (TO) and NAVAIR (TM) Publications

Agency	Number	Title
Air Force	TO 1-1-3	Preparation, Inspection, and Repair of Aircraft Fuel, Oil, and Water-Alcohol Cells and Integral Tanks
Navy	TM 01-1A-35	Maintenance Instructions Organizational, Intermediate, and Depot for Aircraft Fuel Cells and Tanks
Air Force	TO 1-1-4	Exterior Finishes, Insignia, and Markings Applicable to Aircraft and Missiles
Navy	-----	No single general series publication is available
Air Force	TO 1-1-8	Application of Organic Coatings (Paint and Allied Materials)
Navy	15-01-500	Organizational, Intermediate, and Depot Maintenance Preservation of Naval Aircraft
Air Force	TO 1-1-17	Storage of Aircraft and Missile Systems
Navy	-----	No single general series publication is available
Air Force	TO 1-1-24	Maintenance Repair and Electrical Requirements for Fiberglass Airborne Radomes
Navy	TM 01-1A-22	Maintenance Instructions Organizational, Intermediate, and Depot -Aircraft Radomes and Antenna Covers
Air Force	TO 1-1-689.3	Cleaning and Corrosion Prevention Control, Volume III, Avionics and Electronics
Navy	TM 01-1A-509-3	Cleaning and Corrosion Control, Volume III, Avionics and Electronics
Air Force	TO 1-1-690	General Advanced Composite Repair Process
Navy	TM 01-1A-21	Organizational and Intermediate Maintenance, General Composite Repair
Air Force	TO 1-1-698.2	Cleaning and Corrosion Control, Volume II, Aircraft
Navy	TM 01-1A-509-2	Cleaning and Corrosion Control, Volume II, Aircraft
Air Force	TO 1-1A-8	Engineering Manual Series for Aircraft and Missile Repair Structural Hardware
Navy	TM 01-1A-8	Engineering Manual Series for Aircraft and Missile Repair Structural Hardware
Air Force	TO 1-1A-9	Engineering Series for Aircraft Repair - Aerospace Metal General Data and Usage Factors
Navy	TM-01-1A-9	Engineering Series for Aircraft Repair - Aerospace Metal General Data and Usage Factors
Air Force	TO 1-1A-12	Fabrication, Maintenance, and Repair of Transparent Plastics
Navy	TM 01-1A-12	Fabrication, Maintenance and Repair of Transparent Plastics
Air Force	TO 1-1A-14	Installation and Repair Practices, Aircraft Electric and Electronic Wiring
Navy	TM 01-1A-505-1	Installation and Repair Practices, Aircraft Electric and Electronic Wiring
Air Force	TO 1-1A-15	General Maintenance Instructions for Support Equipment
Navy	-----	No single general series publication is available
Air Force	TO 33B-1-1	Nondestructive Inspection Methods
Navy	TM 01-1A-16	Nondestructive Inspection Methods
Air Force	TO 42A3-1-2	General Uses of Cements, Sealants, and Coatings
Navy	TM 01-1A-507	General Use of Cements, Sealants, and Coatings

SAFETY SUMMARY

1. GENERAL SAFETY INSTRUCTIONS.

Many of the repair practices described in this manual require technicians to use chemicals or perform physical actions that may cause injury or death, or damage to equipment when procedures are not followed properly. This safety summary includes general safety precautions and instructions. These precautions and instructions must be understood and applied during operation and maintenance to ensure personnel safety and to protect equipment. Before performing any task, all WARNINGS, CAUTIONS, and NOTES included in that task shall be reviewed and understood.

2. WARNINGS, CAUTIONS, AND NOTES.

WARNINGs and CAUTIONs are used in this manual to highlight operating or maintenance procedures, practices, conditions, or statements that are considered essential to the protection of personnel (WARNING) or equipment (CAUTION). WARNINGs and CAUTIONs immediately precede the step or procedure to which they apply. NOTEs are used in this manual to highlight operating or maintenance procedures, practices, conditions, or statements that are not essential to the protection of personnel or equipment. NOTEs may precede or follow the step or procedure, depending on the information to be highlighted. The headings used and their definitions are as follows.

WARNING

Highlights an essential operating or maintenance procedure, practice, condition, or statement that, if not strictly observed, could result in injury to or death of personnel, or long-term health hazards.

CAUTION

Highlights an essential operating or maintenance procedure, practice, condition, or statement that, if not strictly observed, could result in damage to or destruction of equipment, or loss of mission effectiveness.

NOTE

Highlights an essential operating or maintenance procedure, condition, or statement.

3. FLIGHT LINE SAFETY PRECAUTIONS.

Personnel working in or around aircraft on the flight line shall observe flight line safety precautions and regulations at all times.

4. CHEMICAL SAFETY.

Aircraft maintenance chemicals (e.g., abrasives, cleaners, corrosion preventatives, paint strippers, surface treatments, sealants, paints, and solvents) may be hazardous. Proper use of personal protective equipment is essential to prevent skin, eyes, and respiratory and digestive tracts from being exposed to these chemicals. Use the following safety precautions:

- Learn the warnings and cautions for using specific maintenance chemicals and procedures. Observe manufacturer's warning labels and the warnings and cautions in this manual and other applicable maintenance instructions manuals.
- Use personal protective equipment (e.g., goggles, respirators, gloves, boots, and aprons) as recommended by the local safety office, industrial hygienist, bio-environmental engineer, material safety data sheet (MSDS), DOD 6050-LR, or this manual.
- Make sure that sufficient ventilation exists. Cartridge respirators only filter out the airborne contamination for which they were designed. A respiratory hazard exists if oxygen is depleted or displaced.
- When flammable materials are used, make sure that all ignition sources have been removed from the area. Ensure that only explosion-proof or pneumatically powered equipment is used. Ensure that firelighting equipment is readily available and in working order.
- Do not mix maintenance chemicals unless written instructions specifically direct a mixing procedure. Many combinations of chemicals are incompatible and may produce toxic fumes and violent reactions. Liquid oxygen is not compatible with most organic materials. Explosions have occurred when liquid oxygen comes into contact with greases or oils.
- Use only the materials recommended by this manual and other applicable maintenance instruction manuals. Use only those chemicals and procedures recommended for specific aircraft components. Some chemicals are incompatible with certain aircraft materials. For example, acidic surface treatments can cause high-strength steel to become brittle, and chemical paint removers will dissolve canopy materials.

5. MECHANICAL SAFETY.

Without the proper safety devices and tools, aircraft maintenance procedures may present severe mechanical hazards

(e.g., loss of control of tools, falling, cuts from sharp surfaces, impact of flying debris from high-speed tools). The following safety precautions should always be followed:

- Learn the warnings and cautions required for specific maintenance procedures. Observe manufacturer's warning labels and the warnings and cautions in this manual and other applicable maintenance instruction manuals.
- Use personal protective equipment (e.g., goggles, respirators, gloves, boots, and aprons) as recommended by the local safety office, industrial hygienist, bio-environmental engineer, MSDS, DOD 6050-LR, or this manual.
- Use the necessary safety devices (e.g., safety harnesses, safety lines) and tools fitted with safety devices (e.g., chip guards, belt guards).
- Use only those procedures recommended by this manual and other applicable maintenance instruction manuals. Unauthorized procedures can result in personal injury, damage to equipment or property, or loss of aircraft flight-worthiness.
- Unless specifically allowed by shop safety procedures, remove rings, watches, and other metallic objects that may be caught in moving parts.
- Use compressed air carefully. Objects propelled by compressed air can cause severe personal injury.

6. HAZARDOUS MATERIALS.

Repair and maintenance activities must comply with local, state, and federal laws restricting the use and disposal of hundreds of chemical ingredients and thousands of chemical products. Base safety and environmental personnel are usually the best source of information concerning environmental restrictions.

7. MATERIAL SAFETY DATA SHEETS.

The following MSDS data provide the necessary information for the safe handling of hazardous substances when used:

- The MSDS of a substance describes its identity, relevant health hazard information, telephone numbers, precautions for use, personnel protective equipment, and safe handling information.
- The Occupational Safety and Health Administration (OSHA) Hazard Communications Standard requires that manufacturers and distributors provide MSDS to users of chemicals. For each chemical used in the workplace, a corresponding MSDSs must exist. Individuals must have access to the MSDS for each of the chemicals used in their work areas.
- An MSDS is a primary source of information when determining the risks associated with any substance used in the workplace. An MSDS includes useful information on toxicity, reactivity, and physical properties of a substance. The Department of Environmental Health and Safety will supply MSDSs to all departments, supervisors, or users upon request.
- Although no standard format exists for MSDSs, the National Commission's National Code of Practice for the Preparation of Material Safety Data Sheets [NOHSC:2011(1994)] 3 requires that each MSDS section contain certain information (see Table 1, Material Safety Data Sheet Section Requirements).

Section	Section Requirement
1	**Chemical Product and Company Identification**. This section includes the address, telephone number of the manufacturer, names of different grades of the material and any applicable generic names, and emergency phone numbers to use in the event of an accident or accidental release of this material.
2	**Composition and Information on Ingredients**. This section lists all ingredients that are hazardous, individually or in combination with other ingredients. Some MSDSs list only the hazardous ingredients. Some list hazardous ingredients plus other significant ingredients. Other MSDSs list hazardous ingredients present as 1 percent or more of the total formula (0.1 percent if they are carcinogenic). And others simply list all the ingredients.
3	**Hazards Identification**. This section describes the color, shape, odor, and vapors of the material. It also describes potential health risks to the eyes or skin, as well as the effects of inhalation or ingestion. This section also lists information about flammability, combustibility, and explosiveness.
4	**First-Aid Measures**. This section describes how to treat overexposure to a chemical, along with antidotes that can be administered to a victim. This section may also include information for physicians about clinical testing and treatment.
5	**Fire and Explosion Hazards**. This section covers fire-fighting measures, the use of appropriate fire extinguishers, and basic fire-fighting requirements. It also includes information about the flammable properties of the chemical, including the flash point, the upper and lower flammable limits, the flammability classification, the autoignition temperature, and the release of flammable vapors.
6	**Accidental Release Measures**. This section includes information about containment techniques, cleanup procedures, and emergency equipment required for spills and other releases of the chemical. The information in this section primarily benefits emergency response personnel.
7	**Handling and Storage**. This section emphasizes proper precautions for the unique properties of the material. This section lists practices that minimize contact between the worker and the material, as well as the risk of fire, explosion, or spills.
8	**Exposure Controls and Personal Protection**. This section may include information about practices or useful equipment for minimizing worker exposure, as well as guidance on personal protective equipment and exposure.
9	**Physical and Chemical Properties**. The following characteristics of the hazardous material are listed in this section: odor, physical state, pH level, vapor pressure, vapor density, boiling point, freezing or melting point, water solubility, and specific gravity or density. Some of the following information about a chemical may also be included (when appropriate): heat value, particle size, volatile organic compounds content, softening point, evaporation rate, viscosity, bulk density, molecular weight, and molecular formula.
10	**Stability and Reactivity**. This section describes conditions that could result in a hazardous chemical reaction. Also included here is information about chemical stability, incompatibility with other chemicals, hazardous polymerization, and hazardous materials created as the material decomposes.
11	**Toxicological Information**. This section includes background data (including the results of tests and studies involving the chemical) used to determine the hazards presented by this chemical.
12	**Ecological Information**. The information included in this section is intended to help environmental professionals determine the impact of the chemical on the environment in the event of a release.
13	**Disposal Considerations**. This section provides information about chemical classification under the waste disposal laws, chemical and physical properties of the material, and special disposal instructions.
14	**Transport Information**. This section contains basic shipping classification information.
15	**Regulatory Information**. This section contains information about the regulatory status of the materials, including its components and regulated uses. In addition to OSHA regulations, this section may discuss the regulations of other federal agencies or those regulations of other nations.
16	**Other Useful Information**. This section contains any additional information the manufacturer thinks might be useful to the user.

CHAPTER 1
A DESCRIPTION OF THE MAIN ELEMENTS IN AIRCRAFT STRUCTURE

1.1 PRINCIPAL STRUCTURAL UNITS.

The principal structural units of an aircraft consist of the fuselage, engine mount, nacelle, wings, stabilizers, control surfaces, and landing gear (see Figure 1-1).

1.1.1 Fuselage. The fuselage is the main structure (or body) of the aircraft. The wings and tail units are attached to the fuselage. On single-engine aircraft, the fuselage houses the crew, passengers, cargo, and power plant. On multi-engine aircraft, however, the power plants are normally mounted on nacelles. Nacelles are separate units that are similar in design and construction to the fuselage. Nacelles are attached to the wing structure or fuselage.

1.1.2 Engine Mounts. Engine mounts are used to attach the power plant to the aircraft. On most single-engine aircraft, they are mounted on the front end or nose of the fuselage. On most multi-engine aircraft they are attached to or incorporated into the nacelle structure. On jet-engine aircraft, engine mounts are incorporated into the fuselage, on the sides of the fuselage, or at the back of the aircraft.

1.1.3 Nacelle. The nacelle is a faired structure attached to the wing or fuselage. It supports the engine, engine mount, and its accessories, and may or may not incorporate provisions for retractable landing gear or provide space for additional useful load.

1.1.4 Wings. The wings constitute the main lifting surface of the aircraft while in flight and are designated as right and left. The right and left sides of an aircraft are relative to the right- and left-hand sides, respectively, of the pilot seated in the cockpit.

1.1.5 Stabilizers. Stabilizers (or tail surfaces) are airfoils whose primary purpose is to increase aircraft stability. They are mounted at the rear end of the fuselage and consist of the fin or fins and the horizontal stabilizer.

1.1.6 Control Surfaces. Control surfaces are movable surfaces used to control aircraft in flight. They consist of ailerons, elevators, and rudders. Auxiliary surfaces such as tabs, flaps, slats, and spoilers are also considered control surfaces.

1.1.7 Landing Gear. The structures that support the aircraft while on the ground or water are the landing gear. Landing gear may incorporate shock-absorbing struts, usually hydraulic.

1.2 FUSELAGE.

1.2.1 General. Fuselages for various types of aircraft have much in common from the viewpoint of outline and general design. They vary principally in size and in the arrangement of the compartments. Detail design varies with the manufacturer and mission requirements of the aircraft.

1.2.2 Structure.

1.2.2.1 Fuselage Designs. The fuselage is the main structure or body of an aircraft. It provides space for cargo, controls, accessories, passengers, and other equipment. In single- or multi-engine aircraft, its design may be such that it houses the power plant. Power plants may also be attached to the fuselage or suspended from the wing structure. The fuselages of modern military aircraft typically rely on some form of stiffened shell design. This design may be divided into two classes: monocoque and semimonocoque. Different portions of the same fuselage may belong to either class, however, semimonocoque design is most common (see Figure 1-2).

1.2.2.1.1 Monocoque Design. Monocoque design relies on the strength of the skin (also known as the shell or covering) to carry the various loads. True monocoque construction does not use formers, frame assemblies, or bulkheads to give shape to the fuselage. Instead, the skin carries all fuselage stresses. Since no bracing members are present, the skin must be strong enough to keep the fuselage rigid. Thus, the biggest challenge in monocoque design is maintaining enough strength while keeping the weight within allowable limits. The advantage of a monocoque design is that it is relatively easy to manufacture. Despite this advantage, the weight penalty makes it impractical and inefficient to use monocoque construction except in relatively small areas of the fuselage that carry only limited loads. To overcome the strength-to-weight problem of monocoque design, a modification called semimonocoque design was developed.

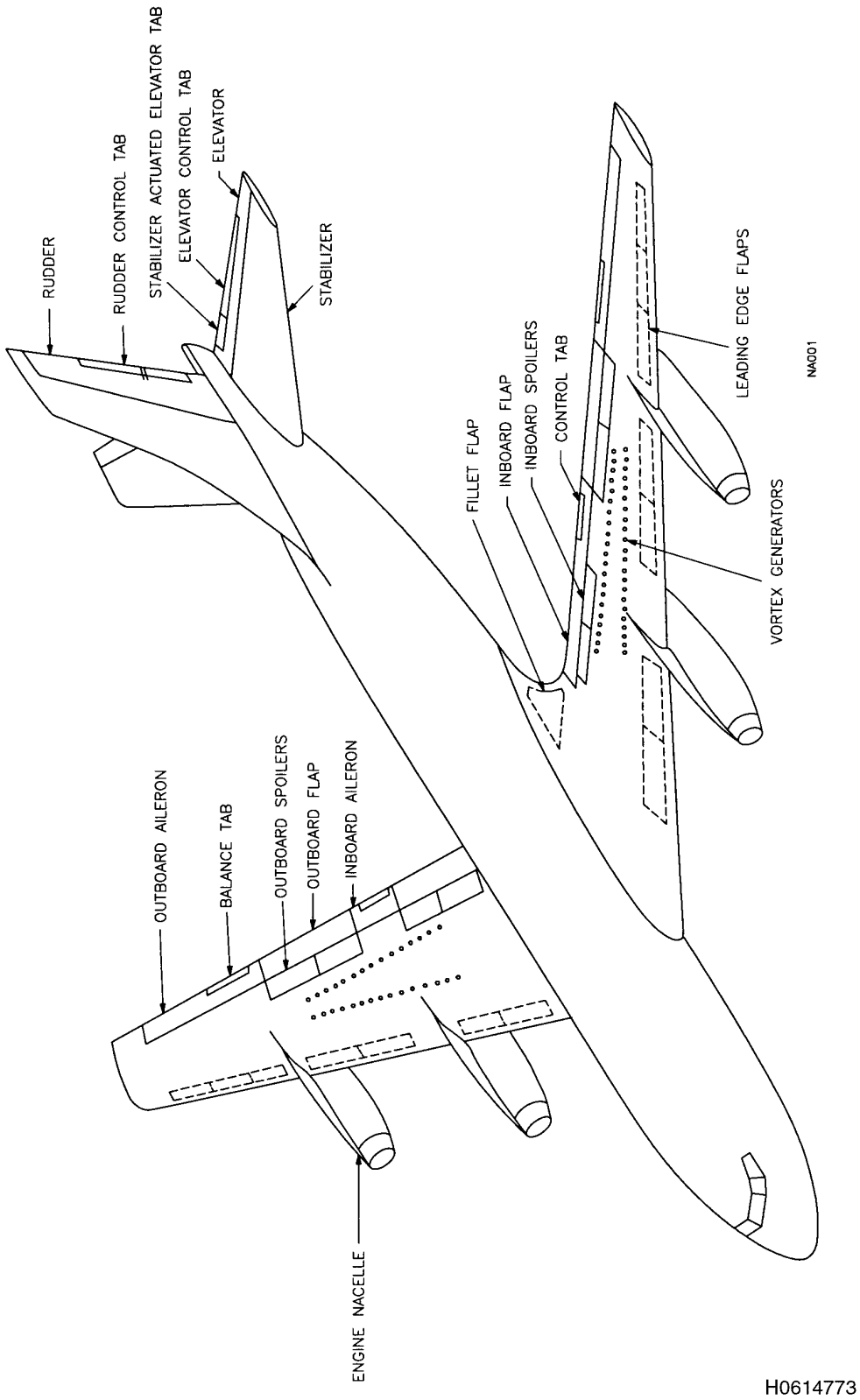

Figure 1-1. Principle Structural Units

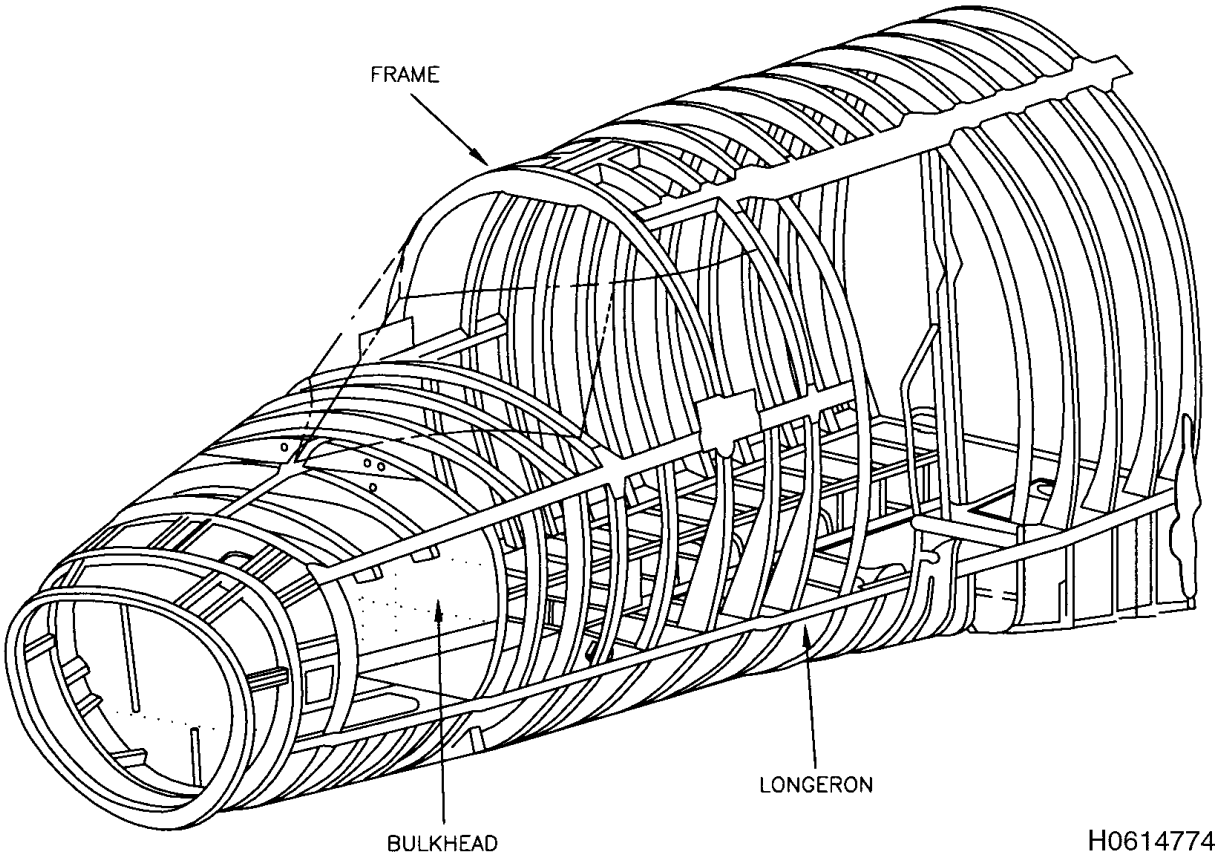

Figure 1-2. Semimonocoque Fuselage Design

1.2.2.1.2 Semimonocoque Design. Semimonocoque design may use any combination of longerons, stringers, bulkheads, and frames to reinforce the skin and maintain the cross-sectional shape of the fuselage. The skin, which is fastened to all of these members, helps resist shear load and, together with the longitudinal members, the tension and bending loads. Longerons resist the majority of fuselage bending loads. Stringers help resist fuselage bending and stabilize the skin in compression. Bulkheads are used where concentrated loads are introduced into the fuselage, such as those at wing, landing gear, and tail surface attach points. Frames are used primarily to maintain the shape of the fuselage and improve the stability of the stringers in compression.

1.2.2.2 Fuselage construction. Today's modern military aircraft are constructed from various materials. The most common material being used for fuselage construction is aluminum alloy. Common fuselage materials, such as 7075 and 2024 aluminum, are about three times lighter than steel. Following heat treatment, these alloys are approximately equal in strength to mild steel. For some uses (e.g., surface covering), the alloy is made in sheets with a thin covering of pure aluminum on both sides. In this form, it is commonly known by the trade name Alclad. The pure aluminum cladding on both sides serves as a protective coating to the base metal. Extrusions are generally of 2024; however, 2014 is being used for extrusions with web thickness greater than 1/8 inch. In addition to aluminum, stainless steel, titanium, and various composite materials are also used in fuselage structure.

1.3 ENGINE MOUNTS.

1.3.1 General. Engine mounts are designed to meet the specific conditions of a particular installation, such as location on aircraft, method of attachment, and size and type of the engine they were intended to support. Although they may vary widely in their appearance, the basic features of engine mount construction and structural intent are similar. Engine mounts are usually constructed as a single unit that may be detached quickly and easily from the supporting structure. In many cases, they are removed from the aircraft and replaced with the engine and its accessories as a complete assembly or power unit.

1.3.2 Structure.

1.3.2.1 Engine Mount Design. A primary consideration in the design of engine mounts and support fittings is to render the engine and its equipment accessible for maintenance and inspection. These mounts and support fittings are typically made of some type of corrosion-resistant steel with an ultimate strength of 180,000 to 200,000 psi.

1.3.2.2 The exact location of the engine mounts and their attachments are specific to the aircraft they have been designed for, but the conditions to which they are subjected are similar:

- Engine mounts and support fittings operate in a high-temperature environment.
- Engine mounts and support fittings are susceptible to fatigue failure caused by high-vibration inertial loads.
- Engine mounts and support fittings are also susceptible to stress corrosion attack due to the harsh environment and the quality of the materials used. Therefore, the material properties and surface finish of engine mounts and support fittings must be of the highest quality to help prevent stress corrosion failures. In addition, protective coatings are used to shield the engine mounts from the environment.

1.3.2.3 For corrosion removal limits and procedures, consult the applicable -3 (structural repair instructions) or -23 (aircraft-specific corrosion prevention and control handbook) TOs.

1.3.2.4 Inspection intervals for mount fittings can be obtained from the applicable -6 TO, Aircraft Scheduled Inspection and Maintenance Requirements Manual.

1.3.2.5 Engine mount installation and removal procedures can be found in the applicable -2 TO series manuals (organizational maintenance instructions).

1.3.2.6 For an illustrated parts breakdown of the engine mount and support structure, see the applicable -4 TO series (illustrated parts breakdown).

1.3.2.7 In conjunction with flight load, improper torquing of engine mount fasteners can cause fastener failure. This is a safety-of-flight matter.

1.3.2.8 Whenever damage or other discrepancies in the engine mount structure exceed the tolerance limits of the weapon system-specific repair manuals, contact the weapon system engineering organization for repair instructions.

1.4 NACELLES.

1.4.1 General. The nacelles of most military aircraft are of similar shape and general design. On multi-engine aircraft, nacelles are streamlined enclosures designed to house and protect the engines. On single-engine aircraft, the nacelle becomes a streamlined extension of the fuselage. These structures vary principally with the size of the aircraft and the size and number of engines. In certain cases, nacelles are designed to transmit engine loads to the wing.

1.4.2 Structure. The structure and materials used in nacelle construction are similar to those used for the fuselage. The nacelle consists of skin, cowling, structural members, a firewall, and engine mounts. Skin and cowling cover the outside of the nacelle. Both are usually made of sheet aluminum alloy, stainless steel, magnesium, or titanium. Regardless of the material used, the skin is usually attached to the framework by rivets. The structural members include lengthwise members, such as longerons and stringers, and widthwise or vertical members, such as bulkheads, rings, and formers. The firewall, which separates the engine compartment from the rest of the aircraft, is usually made of stainless steel sheet metal. In some aircraft, the firewall is made of titanium.

1.5 WINGS.

1.5.1 General. The wings of an aircraft are designed to provide lifting forces when moved rapidly through the air. The particular design for any given aircraft depends on a number of factors (e.g., size, weight, and mission of the aircraft; desired landing speed; and desired rate of climb). Some wings are designed to pivot or swing forward for low-speed maneuverability and swing rearward for high-speed capability. Frequently the larger compartments of the wings contain, or are themselves used as, fuel tanks (see Figure 1-3).

1.5.2 Structure.

1.5.2.1 Wing Design. Variations in design and construction depend upon the manufacturer and mission performance requirements. Wing structure is based on one of three fundamental designs: monospar, multispar, or box beam. Wing structures of most modern military aircraft are of cantilever design and constructed of metal or advanced composite. With few exceptions, the skin is a part of the basic load-bearing wing structure and carries part of the stresses.

1.5.2.2 Wing Construction. Generally, wing structures have two or more spars running the length of the wing and often through the fuselage. Ribs and bulkheads are placed chordwise, at frequent intervals between the spars, to maintain spar spacing and wing contour. Sheet aluminum or advanced composite skin covers the ribs and provides the airfoil surface. During flight, applied air loads are imposed directly on the wing skin. These loads are transmitted from the skin to the ribs and from the ribs to the spars. The spars support all distributed loads as well as concentrated weights from the fuselage and power plants.

1.5.2.3 Similar to fuselages, the metal generally used for wing structures is heat-treated aluminum alloy. The spars and ribs are generally 2000 or 7000 series extrusions or forgings. The smooth outer covering is usually Alclad aluminum alloy and is attached with rivets or other fasteners. Improvements in the processing of fiber-reinforced and honeycomb composites have made it possible to combine a wide variety of materials for specific applications. These improvements have greatly increased the use of advanced composites in wing structures.

1.5.3 Inspection and Maintenance of the Wings, Fuselage, and Nacelles.

1.5.3.1 Inspection Openings and Access Doors. The primary purpose of inspection openings and access doors is to provide accessibility to critical, high-stress, and corrosion-prone areas that require frequent inspection or maintenance. These inspection openings and access doors can be found just about anywhere on an aircraft but are generally located on the lower surface of the wings, fuselage, and nacelles. During inspection, evidence of corrosion may not appear on the outside but may be present on the inside. This is most likely to occur in areas where moisture and salt spray may accumulate. Drain holes are placed in these areas to prevent moisture accumulation and should be kept clean and free of debris at all times.

1.5.3.2 Walkways. Walkways are clearly marked on surfaces, such as the wing or horizontal stabilizer, where personnel are required to step or walk to perform repair and maintenance. The aircraft structure below walkways is stiffened or reinforced to resist loads imposed by foot traffic. Areas intended as walkways are usually covered with a nonskid surface coating.

1.5.3.3 Impact damage. Impact damage to a metal wing skin is usually plainly evident and readily identified by the presence of a dent, scratch, gouge, or puncture. An object impacting an advanced composite skin often causes delamination, disbonding, or other subsurface damage that is not visible on the surface. In either case, an impact that results in the distortion or failure of the substructure may not be apparent until some evidence develops on the surface (e.g., canted, buckled, or wrinkled skin, and loose rivets). When external indications of internal damage are found, perform a thorough investigation of the substructure in this vicinity and repair the damage immediately.

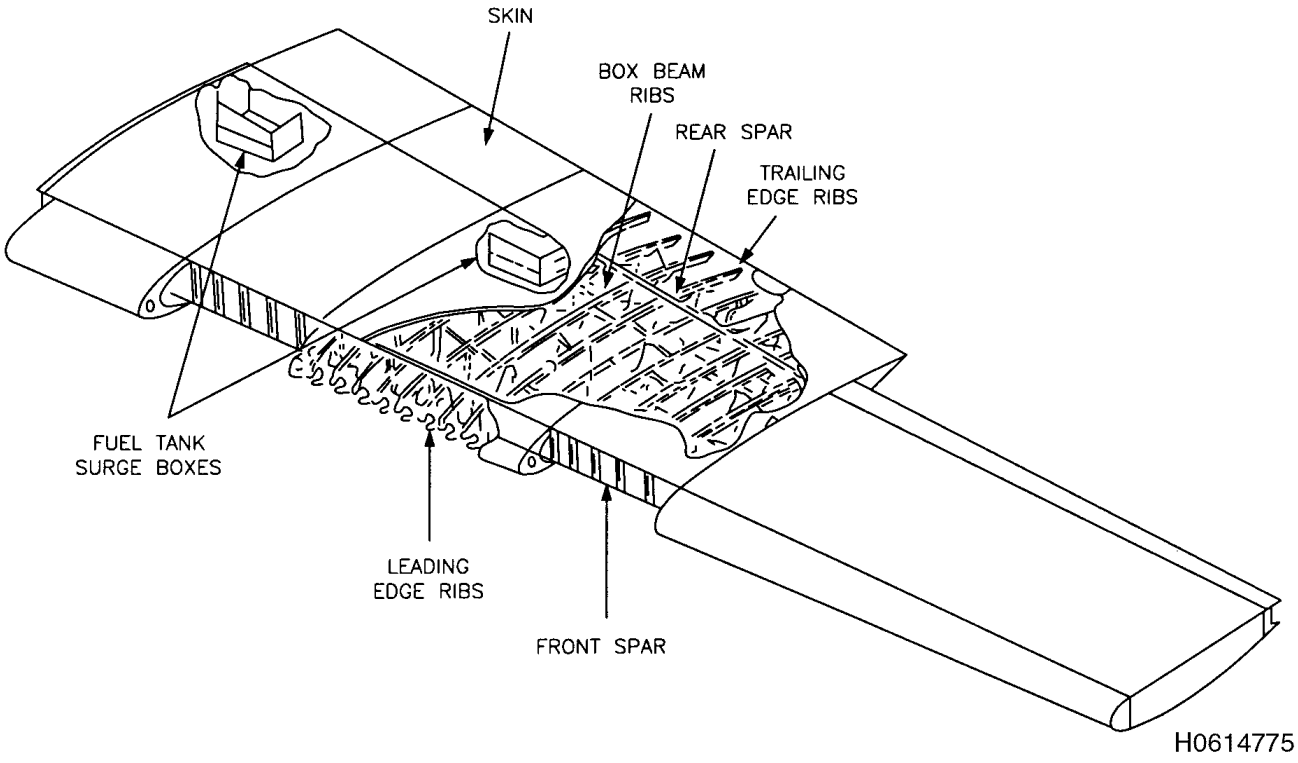

Figure 1-3. Aircraft Wing Design

1.5.3.4 Unusually violent maneuvers, extremely turbulent air, or hard landings may cause cracks or buckled skin on the upper or lower surface of metal wing structures. While no individual part may actually rupture, many parts may be distorted or weakened. In the case of advanced composites, damage such as delamination, disbonding, broken fibers, and core crushing may result. Similar failures may also occur in fuselages.

1.5.3.4.1 Small cracks may be caused by fatigue or overstressing. These small cracks are frequently found leading away from rivets.

1.5.3.4.2 Aluminum alloy surfaces with chipped protective coatings, scratches, or worn spots that expose metal surfaces should be recoated at once, or corrosion may rapidly develop. The same guidance applies to Alclad surfaces. Scratches that penetrate the pure aluminum surface layer will permit corrosion to take place in the alloy beneath. For more information about acceptable recoating practices, refer to TO 1-1-691.

1.6 STABILIZERS.

1.6.1 General. Stabilizers (or tail surfaces) of conventional aircraft consist of vertical and horizontal airfoils located at the rear portion of the fuselage. These airfoils are generally referred to as the tail section or empennage. They consist of the horizontal stabilizer or stabilator, elevators, vertical fins, and rudders (see Figure 1-4 and Figure 1-5).

1.6.2 Structure.

1.6.2.1 Construction features of tail surfaces are in many ways identical to those of wings. Tail surfaces are usually made of metal or advanced composite. The tail surface has a cantilever design, with the skin attached to a spar or spars and ribs.

1.6.2.2 The fin maintains directional stability of the aircraft in flight (i.e., about its turning or vertical axis). The fin also serves as the base or anchor point to which the rudder is attached.

1.6.2.3 The stabilizer or stabilator provides longitudinal stability of the aircraft in flight (i.e., about its lateral axis). The stabilizer is generally constructed in a continuous section mounted on or through the fuselage, although it is sometimes built in left- and right-hand sections. The stabilizer is similar to the fin in internal construction and serves as a support for the elevators.

1.7 CONTROL SURFACES.

1.7.1 General.

WARNING

Exercise care when repairing ailerons, rudders, and elevators to avoid disturbing static balance.

Flight control surfaces are hinged or movable airfoils designed to change or maintain the attitude of the aircraft during flight. They are usually divided into two major groups: primary and secondary control surfaces.

1.7.1.1 The primary or main group of flight control surfaces consist of ailerons, elevons, elevators, and rudders by which the aircraft is moved about its various axes.

1.7.1.2 Secondary or auxiliary groups include trailing edge flaps, leading edge flaps, speed brakes, spoilers, and leading edge slats. These devices are used to reduce the force required to operate main control surfaces or to trim and balance the aircraft in flight.

1.7.1.3 Wing flaps are generally used to increase lift at slow speeds. The use of flaps reduces the length of the takeoff run and the landing speed of fast aircraft. Flaps facilitate landing in small or obstructed areas by permitting the gliding angle to be increased without increasing landing speed. Speed brakes, slats, and spoilers are used to change the speed of the aircraft in flight.

1.7.1.4 Rudders and elevators are members of the empennage, and ailerons are hinged sections of the main wings. The rudder or rudders control the aircraft directionally about its vertical axis. The elevators control the aircraft longitudinally about its lateral axis. The ailerons control the aircraft laterally about its longitudinal axis. To reduce the effort required by the pilot to operate the controls, these primary control surfaces may be aerodynamically balanced. This involves hinging the surface so that a portion of the area is forward or ahead of the hinge line. As a result, the forces acting on this area tend to balance some of the forces acting on the area behind the hinge line. Control surfaces also may be balanced statically and dynamically by adding lead weights in front of the hinge line. Adding lead weights helps prevent any tendency of the control surfaces to flutter.

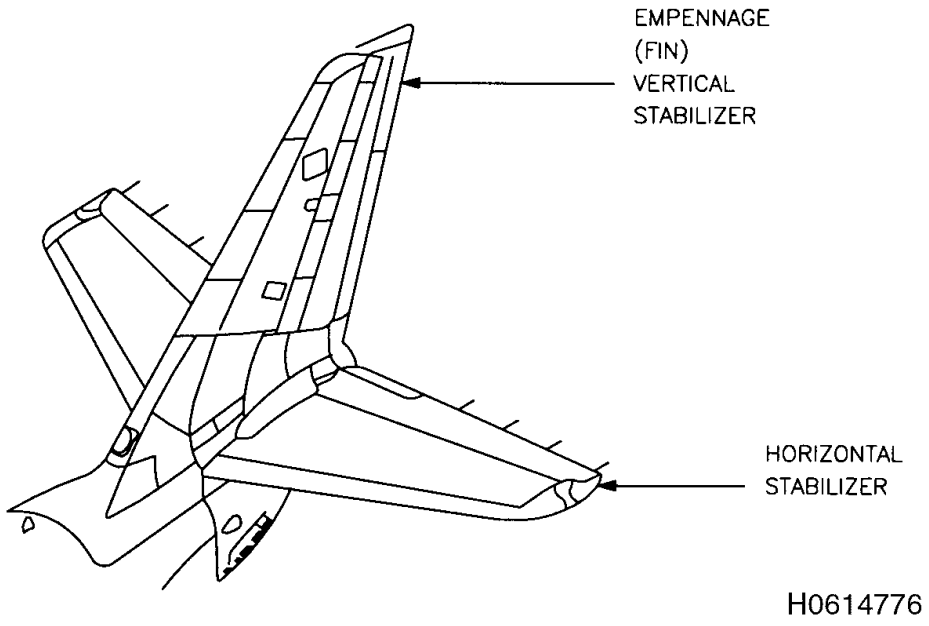

Figure 1-4. Typical Tail Structures

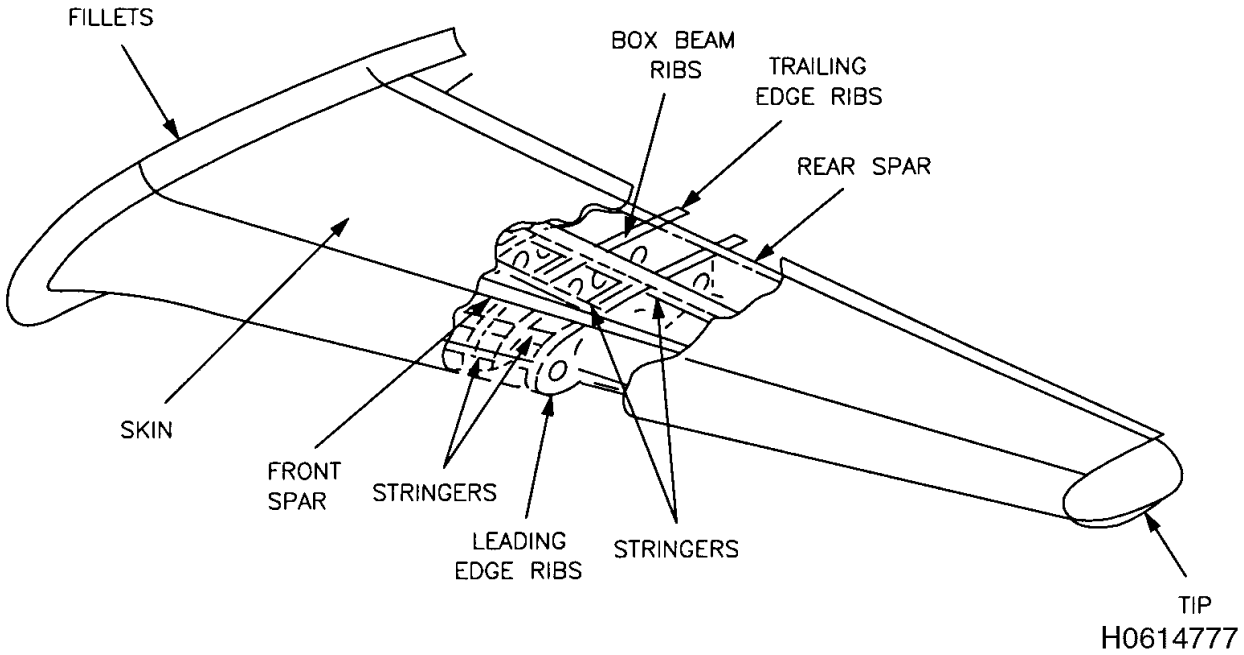

Figure 1-5. Typical Stabilizer Structures

1.7.2 Structure.

1.7.2.1 Main control surfaces are movable surfaces. These surfaces are usually made of an aluminum alloy structure built around a single spar member or torque tube. Ribs are attached to the spar at the leading edge and at the trailing edge. The leading edge or nose portion of the surface is covered with thin aluminum-alloy sheet back to the spar member and forms the front part of the structure.

1.7.2.2 Auxiliary control surfaces are relatively small airfoils attached to or recessed into the trailing edge of the main control surfaces. They consist of trim tabs, balancing tabs, and servo tabs. Flaps, speed brakes, slats, and spoilers are also considered auxiliary flight control surfaces.

1.7.2.2.1 Trim tabs are used to control the balance of an aircraft in flight so that it will maintain straight flight without pressure on the control stick or rudder pedals. Trim tabs are controlled from the cockpit.

1.7.2.2.2 Servo tabs are used primarily on large airfoils to help the pilot move main control surfaces.

1.7.2.2.3 Flaps are relatively large airfoils attached to the wing structure. Generally, the lower surface of the rear portion of the wing becomes the trailing edge flap. When closed, the trailing edge flap constitutes a section of the lower surface of the wing and usually swings downward to open. Some common types of trailing edge flaps systems are the plain, split, slotted, and Fowler flap systems. Aircraft requiring extra wing area to aid lift often use Fowler flaps. Like the split flap system, this system houses the flaps flush under the wings. Instead of using a stationary hinge line, however, Fowler flaps use worm-gear drives to move the leading edge of the flap rearward as it droops. In addition to increasing the camber of the wing, Fowler flaps increase wing area as the flaps are extended. Leading edge flaps are similar in operation to plain flaps. These flaps are hinged on the bottom side and, when actuated, the leading edge of the wing extends in a downward direction to increase the camber of the wing (see Figure 1-6 and Figure 1-7).

1.7.2.2.4 Speed brakes may be located on the upper or lower surface of each wing outer panel or may be located on the trailing edge of the wings as landing flaps are. Those found on the upper and lower surfaces of wing panels are either latticed or perforated. Each upper assembly is linked to its corresponding lower assembly to balance the air loads acting on each, with the result that comparatively little mechanical force is needed for operation. Trailing-edge speed brakes are located and operated in a similar manner as landing flaps. They are usually perforated and may be controlled electrically or hydraulically.

1.7.2.2.5 Slats are movable airfoils attached to leading edges of wings. When open, a slot is created between the slat and the leading edge of the wing. At high angles of attack, this nozzle-shaped passage through the wing improves the airflow conditions. When the slat is closed, it resumes the original contour of the wing.

1.7.2.2.6 Spoilers generally are hinged portions of the upper surfaces of wings, similar to flaps except much smaller, which interrupt wing lifting characteristics and cause an increase in drag. Fixed spoilers are sometimes used on wing leading edges to change the distribution of the air loads. Most spoiler systems can also be extended symmetrically to serve a secondary function as speed brakes and operate in conjunction with the ailerons to provide lateral control.

1.7.2.2.7 Vortex Generators. A vortex generator is a complementary pair of small low-aspect-ratio airfoils. Generally mounted at opposite angles of attack to each other and perpendicular to the aerodynamic surface they serve, vortex generators improve high- and low-speed characteristics. Like any airfoil, vortex generators develop lift and very strong tip vortices. These tip vortices cause air to flow outward and inward in circular paths around the ends of the airfoils. The vortices generated have the effect of drawing high-energy air from the outside boundary layer into the slower moving air close to the skin. The strength of the vortices is proportional to the lift developed by the airfoils of the generator.

1.7.2.2.7.1 Wing Vortex Generators. Rows of vortex generators located on the upper surface of the wing upstream of the ailerons delay at the onset of drag divergence at high speeds and aid in maintaining aileron effectiveness at high speeds.

1.7.2.2.7.2 Horizontal Vortex Generators. Rows of vortex generators placed on the underside and occasionally on the upper surface on the horizontal stabilizer upstream of the elevators prevent flow separation over the elevators at very low speeds.

1.7.2.2.8 Flight Control Mechanisms. Flight controls of an aircraft consist of the control stick (or column and wheel) and the rudder pedals with which the main control surfaces are operated, and the levers, wheels, and handles with which the auxiliary control surfaces are operated. Controls installed in the cockpit are connected to control surfaces installed on wings and empennage by a system of cables, rods, and bell cranks called flight control linkage. Some modern military aircraft are equipped with fly-by-wire flight control systems. This concept uses an electronic flight control system coupled with a digital computer and hydraulically powered servo actuators to replace conventional mechanical flight controls. Wires replacing cables and pushrods provide greater flexibility in configuration and in the size and placement of components such as tail surfaces and wings.

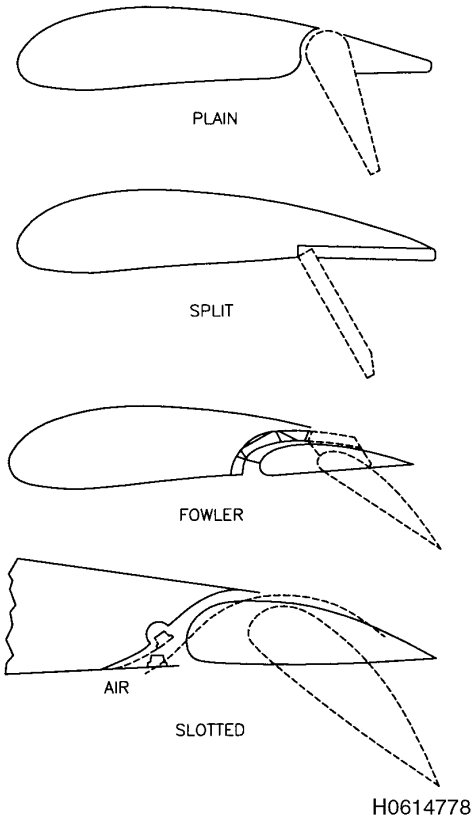

Figure 1-6. Types of Wing Flaps

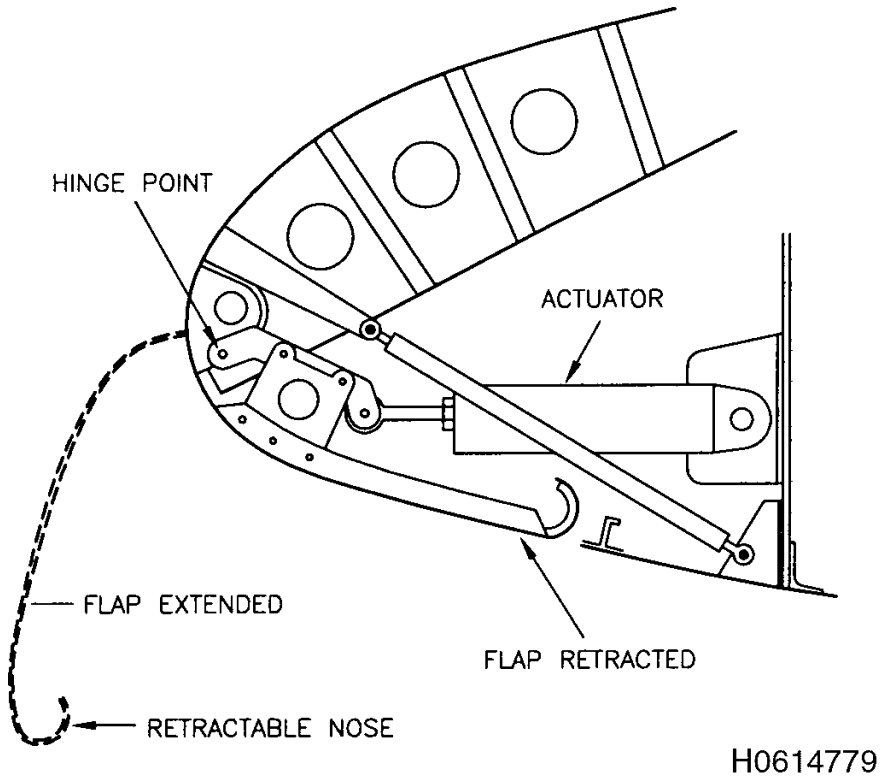

Figure 1-7. Leading Edge Flaps

1.8 LANDING GEAR.

1.8.1 The main landing gear consists of that portion of landing gear that supports the aircraft when landing or taxiing. It may include any combination of the following:

- Wheels
- Skids
- Skis
- Struts
- Brake and steering mechanisms
- Retracting mechanisms and their controls
- Warning devices
- Fairings
- Framing or structural members necessary to secure any of the above to the main structure

1.8.2 Auxiliary landing gear systems have been incorporated on some aircraft to improve landing or ground handling characteristics. These systems may be found in various arrangements and are usually aircraft-specific. They may consist of tail wheel installations, wing tip gears, or any other necessary fairing, bracing, or structural reinforcement.

CHAPTER 2
DAMAGE ASSESSMENT

2.1 CAUSES OF AIRCRAFT DAMAGE.

CAUTION

Consult aircraft-specific weapons system structural technical orders for the damage limitations and specific repairs. For any damage considered out of limits, consult the weapon system engineering authority.

Aircraft may be damaged by collision or impact, stress, fatigue, heat, corrosion, or erosion. Damage is any deformation, reduction in physical cross section, or degradation of material properties. The slightest damage could eventually affect the flight characteristics and the mission of the aircraft. Other types of damage can cause aircraft failure or crash. Damage should be repaired as soon as possible after discovery. Refer to the applicable aircraft- specific weapons system structural repair technical order to classify damage properly. Table 2-1 lists examples of the most common classes of damage.

CAUTION

Any composite structure that is suspected of impact damage should be inspected for evidence of ply delaminations, disbonding, or crushed core.

2.1.1 Collision or impact damage is the result of any solid object striking the aircraft. The damage may be as small as minor dents and holes or as large as extensively torn and crushed structural parts, causing misalignment of the aircraft. For composite materials, evidence of impacts may not be visible. The severity of the damage depends on the size and shape of the object that strikes the aircraft. Much of the foreign object damage (FOD) that is observed in military aircraft is caused by small items (e.g., loose hand tools, bolts, rivets, nuts) that are left on runways, taxiways, and parking areas. These areas should be kept clean at all times to prevent damage to the aircraft.

2.1.2 When external forces act upon the aircraft in flight, they create stresses within the structure. When aircraft are subjected to excessive flight maneuvers or hard landings, structures may experience stresses that exceed the design limitations. These abnormal stresses can cause structural cracks or distortions. Abnormal stresses can loosen, shear, or pop fasteners. They can also wrinkle or buckle skin and webs. Any aircraft that has reported violent flight maneuvers or hard landings must be thoroughly inspected in accordance with applicable aircraft manuals.

2.1.3 Fatigue cracks appear in aircraft structures as the operating time accumulates. Fatigue is caused by repeated cyclic stresses that are not sufficient to cause a structural failure in one loading. However, these stresses will induce cracks to grow over time. The damage will begin as small cracks at rivets, fasteners, or any point of attachment where stresses are concentrated or transferred.

2.1.4 Exposure to excessive heat causes a reduction in the strength of structural materials. Heat damage may be caused by a fire or bleed air (i.e., engine air leak). Heat damage may also occur in any area of the aircraft that is exposed to high operating temperatures. Heat causes buckling of skins and webs, delaminations, and distortion of structural members. Often, but not always, paint discoloration is an accurate indication of the extent of heat damage.

CAUTION

When heat damage is detected, hardness or conductivity tests must be performed on affected metal components in accordance with TO 33B-1-1.

2.1.5 Corrosion is the gradual electrochemical attack of metals by the atmosphere, moisture, or a variety of other agents. The attack produces a dulling or pitting of the metal surface, accompanied by a white powdery deposit on aluminum or a reddish rust coating on steel. Corrosion is not always detected by visual examination alone, but may be discovered after paint flakes off under pressure. See TO 1-1-691, Corrosion Prevention and Control Manual, for more extensive information about corrosion.

2.1.6 Galvanic corrosion is one of the most common types of corrosion and occurs when dissimilar metals with unprotected surfaces come in direct contact with each other in the presence of moisture. The small electrical potential difference established between the two materials drives the corrosion process. The more active metal serves as an anode (i.e., positive pole) and is attacked by the corrosion. Properly applied sealants provide a barrier between dissimilar materials and help prevent the attack of galvanic corrosion.

2.1.7 Graphite-epoxy composites create a similar galvanic corrosion problem with many structural metals. Metal in

contact with graphite fiber material must have a proper barrier coating.

2.1.8 Intergranular corrosion occurs along the grain boundaries of metals. It results from a difference in the electrochemical potential between the material at the grain boundary and that at the center of the grain. Intergranular corrosion is not easily recognized during surface examination until a large area is involved or actual cracks have formed.

2.1.9 Stress corrosion cracking occurs when externally applied loads, quenching, welding, severe forming, and improper "fit-up"cause internal stresses. These stresses cause the corroded surface to be under tension. The tensile stresses will drive the crack through the material until either failure occurs or the stress is relieved.

2.1.10 Erosion is mechanical wear caused by hail, rain, wind, or blowing sand. It can damage fiber-reinforced composites and plastics such as antennas, radomes, wing fairings, leading edges, and tips or clear plastic components such as canopies, windshields, and windows.

Table 2-1. Types of Damage

Damage	Description
Dents	Depressed or hollow deformations without removal of material that are caused by impact or other means, which are not stress wrinkles caused by the failure of a fasteners should not be adversely affected by the dent.
Nicks	Broken edges without cracks, but with portions of material removed. Negligible damage limits will vary with structure, material, and loading.
Scratches	Marks penetrating the surface that reduce the structural cross section of the material but do not penetrate the complete thickness. The depth of a scratch may micrometer. Generally, scratches in Alclad aluminum alloy sheet that do not penetrate the protective Alclad layer are classified as negligible.
Cracks	Fractures that would not separate the material into two parts if the surrounding supports were removed; usually originating at edges, holes, or points where concentrated loads are applied or where abrupt changes in cross-sectional area occur. The length of cracks that may be tolerated varies widely with material, structure, and application. No crack should be regarded as negligible until the damage limits for the affected structure have been determined.
Holes	Punctures or penetrations that breach the complete thickness of the material. The size, shape, and distance from edges and supporting structures must be considered when evaluating hole damage.
Corrosion	Deterioration of a metal because of an electrochemical reaction with its environment. Depending on the type of corrosion, this deterioration may take the form cracking, exfoliation, or erosion of the corroding material. Corrosion damage is typically classified as light, moderate, or severe, depending on the extent of the corrosion and the loading requirements of the corroded part. Aircraft-specific structural manuals should be consulted for the correct classification of corrosion damage on a given part.
Delaminations	Separation of the layers of material in a laminate, either local or covering a wide area, that occurs during manufacturing or in service. Fiber-reinforced and composites may delaminate when impacted and not exhibit visible damage.
Disbonds	An area within a bonded interface between two adherents in which an adhesion failure or separation has occurred. If the separation is performed deliberately f referred to as a debond.

2.2 DAMAGE CLASSIFICATIONS.

Damage is generally classified as negligible, repairable by patching, repairable by insertion, or requiring part replacement. Figure 2-1 through 2-4 are examples of damage classification. The aircraft-specific weapons system structural technical order should be consulted for the damage limitations and specific repairs. For any damage that is out of these limits, consult the weapon system engineering authority.

2.2.1 Negligible damage consists of visually apparent, surface damage that does not affect the structural integrity of the component involved. Negligible damage may be left as is or may be corrected by a simple procedure without restricting flight. In most cases, some corrective action must be taken to keep the damage from spreading. Negligible or minor damage areas must be inspected frequently to ensure that the damage does not spread. Permissible limits for negligible damage will vary for different components of different aircraft and should be carefully researched on an

individual basis. Failure to ensure that damage is within the specified limits of negligible damage may result in insufficient structural strength of the affected support member for critical flight conditions. Table 3-1 includes some examples of negligible damage.

2.2.2 Damage that is repairable by patching may be repaired by installing splice members to bridge the damaged portion of a structural part. The splice members are designed to span the damaged areas and to overlap the existing undamaged surrounding structure. Structural fasteners or adhesives are applied to members and the surrounding structure to restore the original load-carrying characteristics of the damaged area. The use of patching depends on the extent of the damage and the accessibility of the component to be repaired.

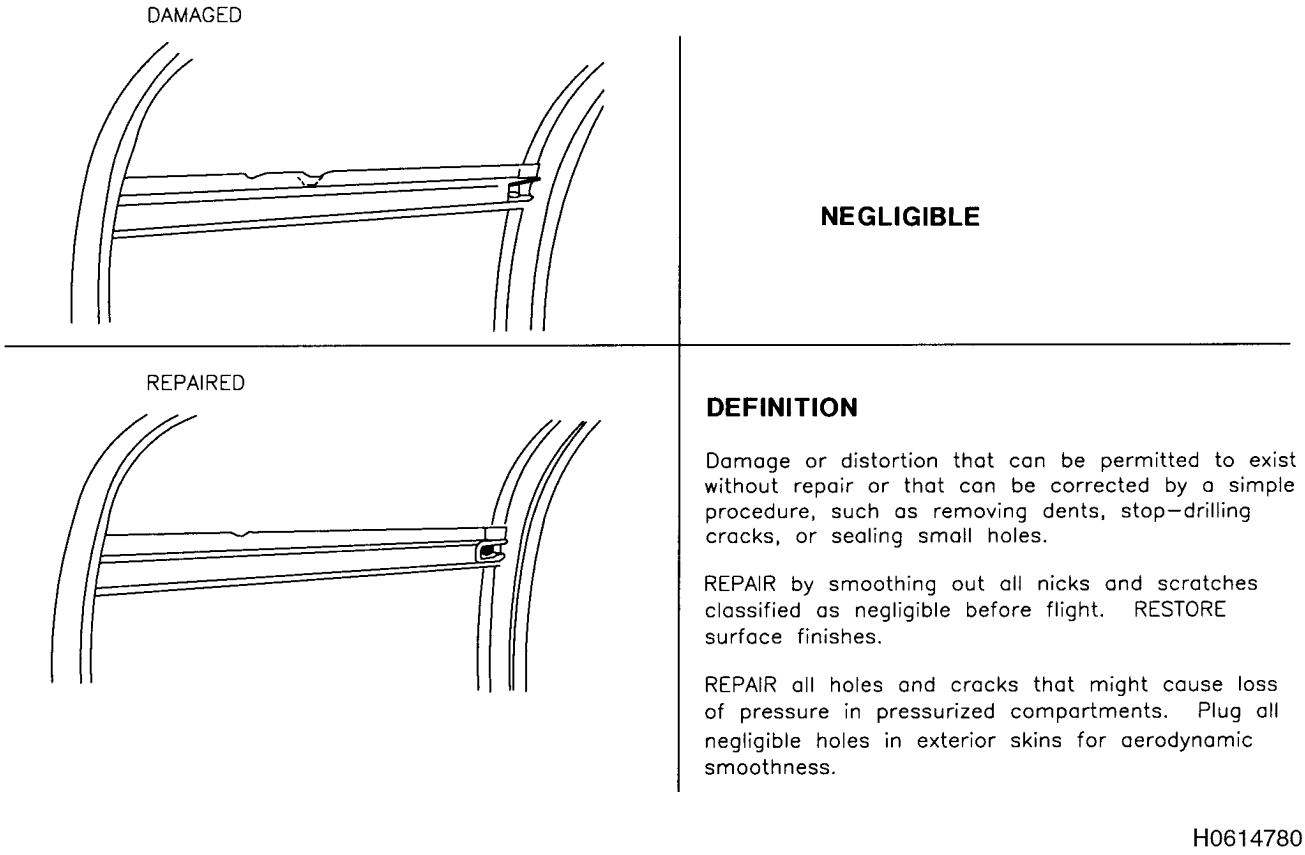

Figure 2-1. Negligible Damage

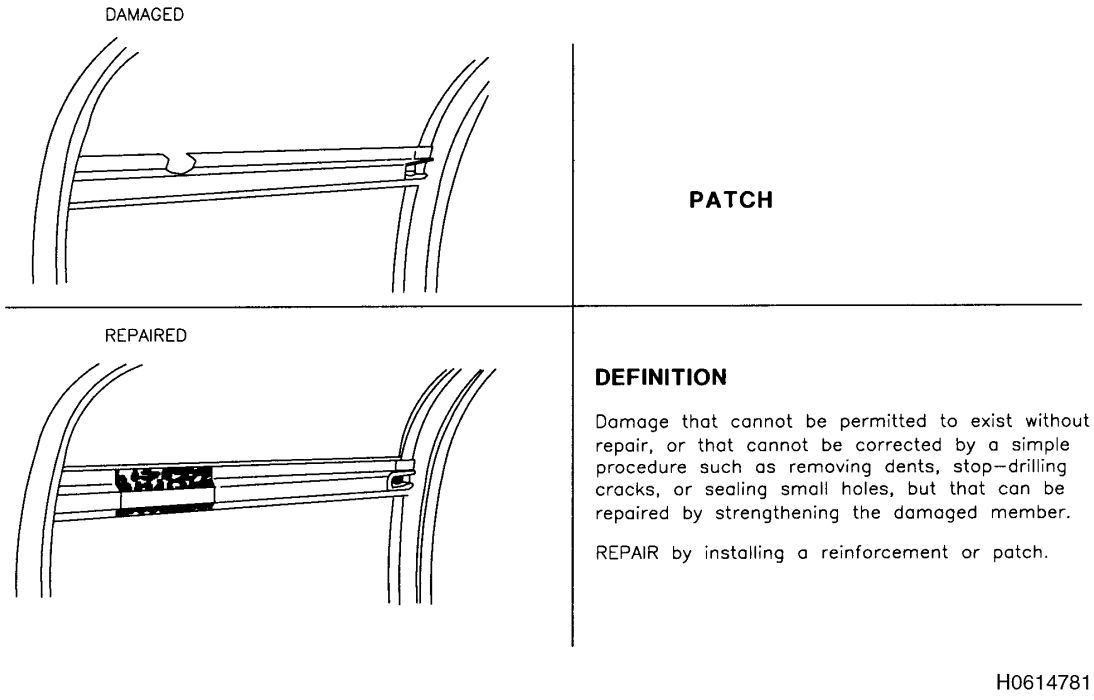

Figure 2-2. Damage Repairable by Patching

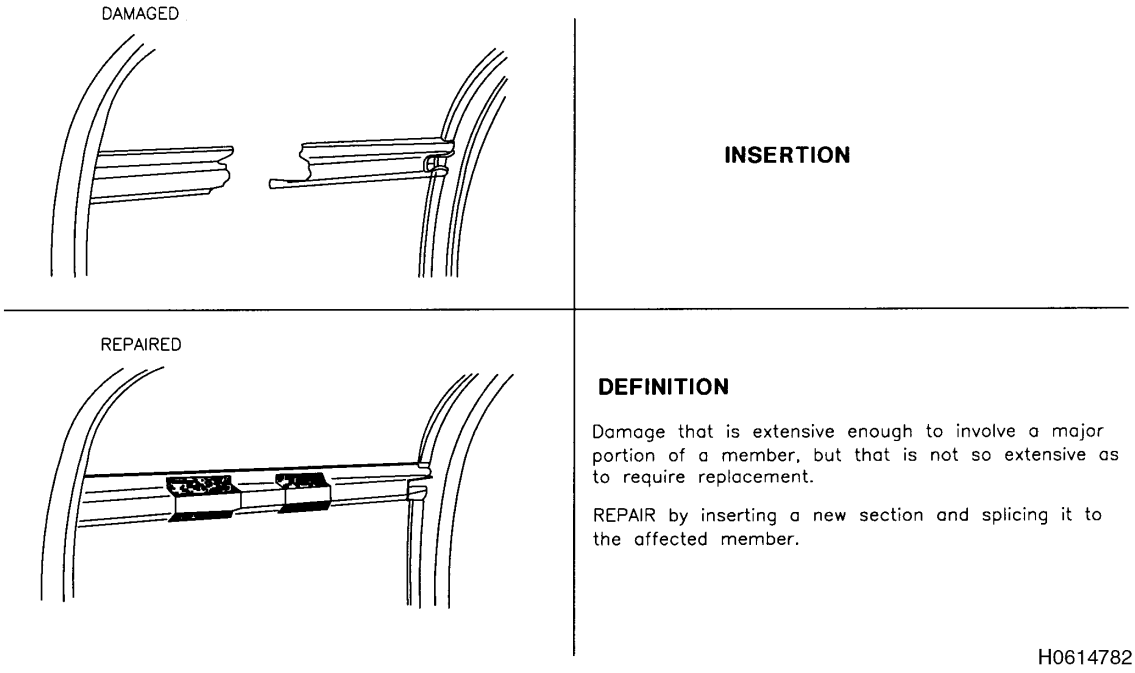

Figure 2-3. Damage Repairable by Insertion

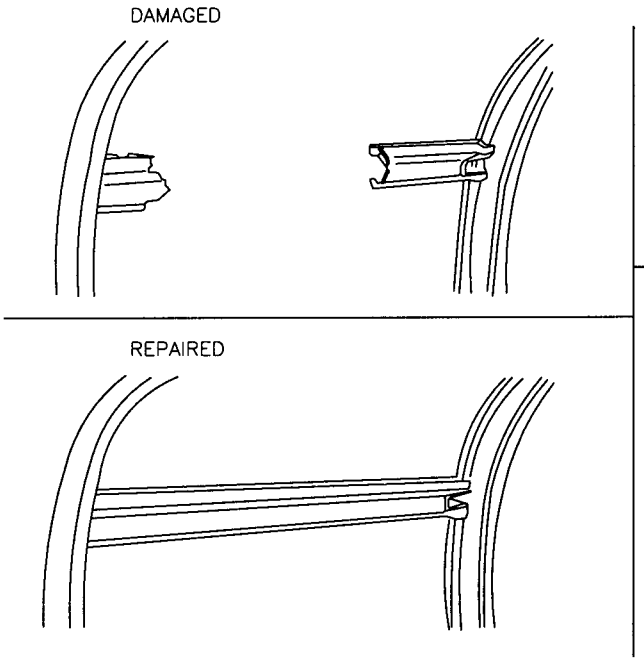

REPLACEMENT

DEFINITION

Severe damage to a member involving such extreme distortion or destruction as to make repair impractical. Any damage to a nonrepairable part (such as a fitting) that is in excess of that allowable as negligible damage. In general, damage to fittings for which negligible damage is not specifically outlined. Damage to items that are not indexed on the reference diagrams. Damage to parts whose location makes repair impractical.

REPLACE affected items.

H0614783

Figure 2-4. Damage Requiring Replacement

2.2.3 Damage must be repaired by insertion when the area is too large to be patched or the structure is arranged such that repair members would interfere with structural alignment (e.g., in a hinge or bulkhead). In this type of repair, the damaged portion is removed from the structure and replaced by a member identical in material and shape. Splice connections at each end of the insertion member provide for load transfer to the original structure.

2.2.4 Components must be replaced when their location or extent of damage makes repair impractical, or when replacement is more economical than repair. Replacing damaged castings, forgings, hinges, and small structural members, when available, is more practical than repairing them. Some highly stressed members must be replaced because repair would not restore an adequate margin of safety.

2.3 REPAIR CLASSIFICATIONS.

The type of repair depends on the materials, the tools, the amount of available time, and the level of maintenance. Temporary and one-time flight repairs are generally made only at the field level, where making a permanent repair is impractical.

2.3.1 Temporary repairs restore the static strength of the aircraft to its original configuration. However, a life-cycle repair should be made at the first opportunity. External (scab) patches with protruding-head fasteners are temporary repairs unless otherwise noted. When the wings, vertical stabilizer, or control surfaces have been repaired in any manner that could possibly affect flight characteristics, consult the appropriate weapon system engineering authority to determine if flight restrictions are necessary.

2.3.2 One-time flight repairs are designed to restore a severely damaged aircraft to a flyable condition so that the aircraft may be safely flown (under flight restrictions) to a depot or prime contractor for repairs. When a ferry flight is made using an aircraft with onetime flight repairs, a statement must be placed in the aircraft forms stating the flight restrictions.

2.3.3 A permanent repair makes the strength of the repaired structure equal to or greater than its original strength and also satisfies aerodynamic, fatigue, thermal, and interchangeability requirements. Permanent repairs generally fall under one of the following types of repair:

- A splice across, or completely encircling, the damaged area with splice material of the same type as the original
- Replacement of the damaged material with a splice section of new and equal material
- Replacement of the damaged part or assembly with a new part or assembly
- Permanent doublers that span or encircle the damaged area with material of the same type and thickness as the original

2.4 INVESTIGATION OF DAMAGE.

To determine the extent of damage, clean the suspect areas thoroughly and examine the structures in a methodical and logical manner. Before starting any repairs, examine all of the structural components involved, including substructure, such as the frames, bulkheads, longerons, and stringers that are adjacent to the obvious damage. After repairs to the damaged structure have begun, continue examining and inspecting as new areas become accessible.

2.4.1 Secondary damage is a failure that is usually far removed from the primary damage and is caused by the transmission of shock loads along structures. To estimate the extent of the primary damage, make certain that no secondary damage escapes detection.

2.4.2 The evaluation should begin with a detailed visual inspection. Examine the skin of the fuselage and larger airfoils such as the wings and stabilizers for evidence of stress wrinkles, buckling, breaks, and leaking fuel. Subtle damage such as distortion or failure of the substructure may not be apparent until some evidence develops on the surface. Warped wings usually have parallel wrinkles running diagonally across the wing and extending over a major area. These conditions indicate the possibility of damaged or distorted structure caused by fatigue, or severe load applications. If necessary, access panels and major components should be removed or have portions of the skin cut away to examine these areas properly.

2.4.3 Inspect for attachment damage at all riveted, bolted, and bonded joints. Pay particular attention to the critical attachment points for the wings, engine mounts, stabilizers, and landing gear. Check for sheared or popped fasteners, loose rivets, elongated holes, and cracks. Small cracks in the skin may be caused by fatigue and are frequently found leading away from fastener holes. Chipped or cracked paint around a fastener may indicate a failure. If there is any doubt about the integrity of an attachment, remove it for closer inspection.

2.4.4 Inspect all fittings for cracks or shifts in position. Also check the fitting attachments for shearing, bending, or elongation of holes.

2.4.5 Inspect all spot welds near the damaged area for cracks and shearing.

2.4.6 Corrosion may occur in any metal component. Take care to ensure that all corrosion is detected, especially in areas on the inside that will not be visible after the repair is complete. Corrosion occurs most often in parts of the structure that are poorly drained and inadequately ventilated, as well as in areas with inaccessible corners or internal joints that allow salt spray and moisture to accumulate. Aluminum alloy surfaces with missing or chipped protective coatings, scratches, or worn spots, which expose bare metal, should be recoated at once, because corrosion can develop rapidly. The same applies to Alclad surfaces. Scratches that penetrate the pure aluminum surface layer will permit corrosion of the alloy beneath.

2.4.7 Landing gear assemblies are particularly sensitive to damage. The main support structures of the gear are manufactured from steel alloys that have been heat-treated to achieve high strengths. These materials, while strong, are brittle. A surface flaw (e.g., scratch, pit, or dent) on one of the highly stressed areas of a landing gear strut could easily lead to the formation of cracks.

2.4.8 Fiber-reinforced and aluminum/titanium metal matrix composites may delaminate when impacted without exhibiting visible damage. Carefully check composite structures that have been impacted, but are not deformed, for evidence of delaminations by using a tap test and the appropriate nondestructive inspections that may be called out for that area by specific aircraft technical orders (-36 or -6).

2.5 NONDESTRUCTIVE INSPECTION.

2.5.1 Nondestructive Inspection (NDI). Nondestructive inspection (NDI) techniques are used on aircraft to locate various forms of damage that may affect the structural integrity of a part. This section will review some of the types of damage generally detectable through NDI and describe the basic capabilities of aircraft NDI techniques.

2.5.2 Damage Types. NDI techniques are commonly used to inspect for cracks, corrosion, inclusions, and damage in aircraft structure.

2.5.2.1 Fatigue Cracks. Fatigue cracks occur in parts that have been in service under repeated stress reversals or stress variations. These cracks start in highly stressed areas and gradually propagate through the part cross section until failure occurs. A fatigue crack will start more readily where the design or surface condition provides a point of stress concentration (i.e., fillet, seam, crack, rough surface finish, or fastener hole).

2.5.2.2 Heat-treat Cracks. Heat-treat cracks are caused by faulty heat-treat processing of a part. They can be caused during the heating or quenching cycle, or may be an enlargement of a fault resulting from a previous operation. Heat-treat cracks generally occur where a sudden change of section causes an uneven cooling rate, or at fillets and notches that act as stress concentration points.

2.5.2.3 Grinding Cracks. Grinding cracks are caused by faulty grinding operations. These cracks are quite critical because they usually occur on surfaces that are highly stressed. Grinding cracks appear as very fine, sharp cracks at right angles to the grinding marks.

2.5.2.4 Plating Cracks. Plating cracks are found only in areas where high residual stresses remain from some previous operation, such as hardening. When such parts are

plated, the operation may cause stresses that crack the plated surface.

2.5.2.5 Stress Corrosion Cracks. Stress corrosion cracking is caused by exposure to a corrosive environment while subjected to a sustained tensile stress. This tensile stress may be because of a load that is applied directly to the part, or it may be residual tensile stress caused by cold-working or improper heat treatment. A mild environment (e.g., a damp atmosphere) is quite capable of causing stress corrosion cracking. However, such cracks will generally develop much faster in a severe environment.

2.5.2.6 Corrosion. Although the use of highly corrosion-resistant metals such as aluminum clad sheet helps minimize airframe corrosion, all metals are susceptible to corrosion under certain conditions. The environment, material composition, protective coating, and fabrication process can influence the amount and degree of corrosion significantly. Environmental influences such as the presence of salts in moist air and high temperatures tend to increase the corrosion rate in most metals. Differences in material composition between alloys result in varying degrees of corrosion resistance. Fabrication processes such as forging, heat treating, bending, and shot peening influence the capability of a part to resist corrosion by changing the microscopic structure or surface condition of the material. Refer to TO 1-1-691 or the weapon system-specific -23 TO for more detailed information concerning corrosion.

2.5.2.7 Inclusions. Inclusions are impurities that are embedded in the material during the forming stage. The inclusions can be deep in the part or near the surface. Normally, inclusions will not have any effect on the strength of the part. When inclusions occur in high-stress areas or in certain critical locations or directions, they may cause the part to be rejected.

2.5.2.8 Discontinuities. A discontinuity is an interruption in the normal physical structure of a part. It may be a crack, forging lap, fold, seam, or porosity. A discontinuity may or may not affect the usefulness of the part.

2.6 NDI TECHNIQUES.

2.6.1 The following NDI techniques are available to locate cracks, corrosion, inclusions, delaminations, disbonds, crushed core, and other discontinuities: visual, radiographic, eddy current, ultrasonic, fluorescent penetrant, shearography, and magnetic particle. Consult weapon system-specific technical orders such as the -6 and the -36 to define the inspection locations, intervals, and procedures (including accept/reject criteria) applicable to a given aircraft. The -6 defines inspection locations and intervals, and the -36 lists the inspection procedures by location. This section provides general information only. If the weapon system-specific -36 does not specify an inspection procedure for a given location, contact the appropriate weapon system engineering authority.

CAUTION

The results of nondestructive inspections should be interpreted only by appropriately trained NDI personnel. Misinterpretation can result in serviceable parts being rejected and damaged, or otherwise defective parts being accepted.

2.6.1.1 Visual. Visual inspection is the most common form of examination. Perform a visual inspection by viewing the area with the naked eye and viewing the area using a magnifier, mirrors, lighting, or a precision optical instrument called a borescope (see Figure 2-5).

2.6.1.1.1 Insert the borescope through access holes to inspect internal areas that may be hidden from the naked eye. Borescopes contain prisms and lenses (and in some instances, optic fibers), as well as a light source to illuminate the inspection area. The image is viewed either through the eyepiece at the ocular lens or on a video screen. Borescopes are available in a variety of sizes, lengths, and configurations for angle of view (see Figure 2-6).

2.6.1.2 Radiographic. Radiographic inspection is used to show internal and external structural details of all types of parts and materials. This method is used for the inspection of airframe structures that are inaccessible or otherwise unsuitable for other NDI techniques. Radiographic inspection is performed by passing x-rays through the part or assembly being tested and exposing a radiographic film. The processed film shows the structural details of the part or assembly using variations in film density. The radiograph is examined for indications of structural defects or damage.

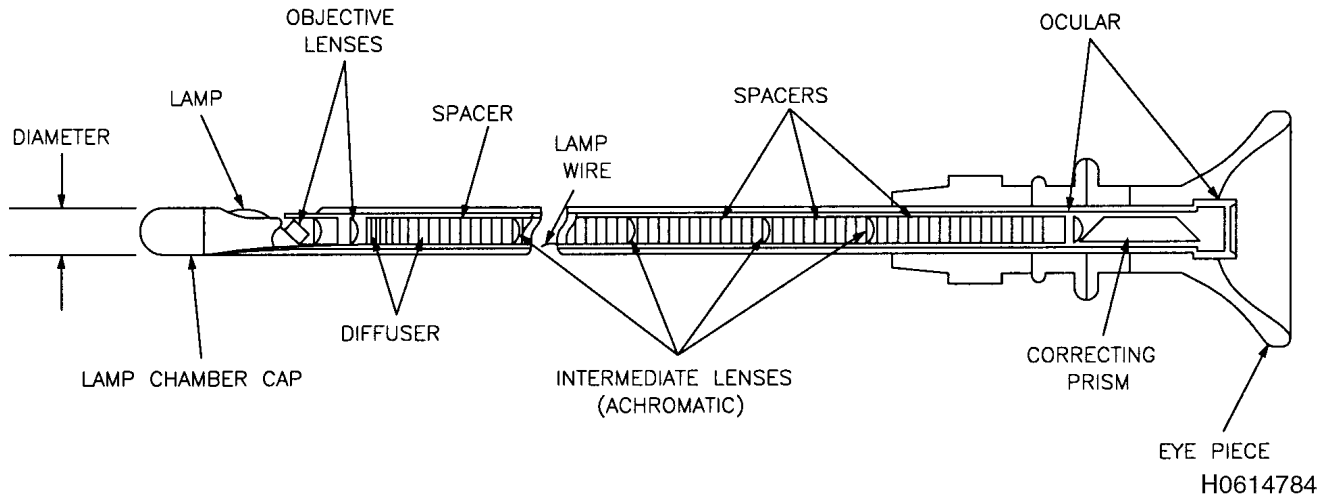

Figure 2-5. Typical Borescope

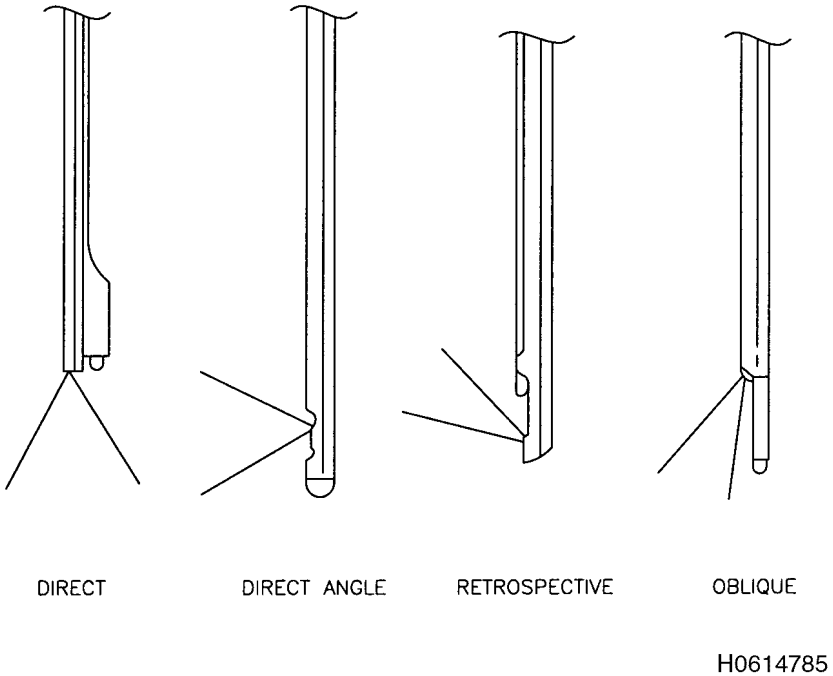

Figure 2-6. Types of Borescopes

2.6.1.3 Eddy Current. Eddy current inspection is often used to detect surface or near-surface cracks and corrosion in most metals. In addition, eddy current inspection can be used to distinguish different types of metals or alloys and different heat-treat conditions. This technique can be

applied to airframe parts and assemblies where the defective area is accessible to contact with the eddy current probe. Eddy current inspection is performed by inducing eddy currents into a part and electronically monitoring variations in the induced field. The NDI technician interprets the character of the observed field change to determine the nature of the defect (see Figure 2-8 and Figure 2-9).

2.6.1.4 Ultrasonic. Ultrasonic inspection is used to detect many types of surface and subsurface defects in metals and composite materials. Ultrasonic inspection requires accessibility to at least one surface of the part in the vicinity of the suspected damage. The inspection of an airframe structure is performed by launching ultrasonic waves into the part, using a contacting probe and monitoring reflections or attenuation of this sound caused by the geometry and defects within the structure. This reflection and attenuation information is displayed electronically and interpreted for indications of defects (see Figure 2-10).

2.6.1.5 Fluorescent Penetrant. Fluorescent penetrant inspection is used to detect small cracks or discontinuities that are open to the surface but may not be detectable by normal, visual inspection. Penetrant inspection can be used on most airframe parts and assemblies accessible for its application. Fluorescent penetrant inspection is performed by applying a liquid that penetrates into surface defects through capillary action. Excess penetrating liquid is removed, and suitable developers are applied to draw the penetrant from the surface defects so that visual fluorescent indications can be seen under a black light (see Figure 2-11).

2.6.1.6 Magnetic Particle. Magnetic particle inspection is used to detect surface or near-surface defects in ferromagnetic parts. It may be performed on assembled or disassembled parts. The inspection is performed by inducing a magnetic field in the part and applying a liquid suspension of iron oxide particles. Local magnetic fields, formed by defects in the part, attract the oxide particles so that they may be viewed and evaluated by color contrast in natural light or by fluorescence under black light (see Figure 2-12 and Figure 2-13).

2.6.1.7 The inspection method chosen for a given application depends on accessibility, portability of equipment, type of defect sought, material of the part, and degree of required sensitivity. Table 2-2 lists the advantages and disadvantages of the common aircraft NDI techniques.

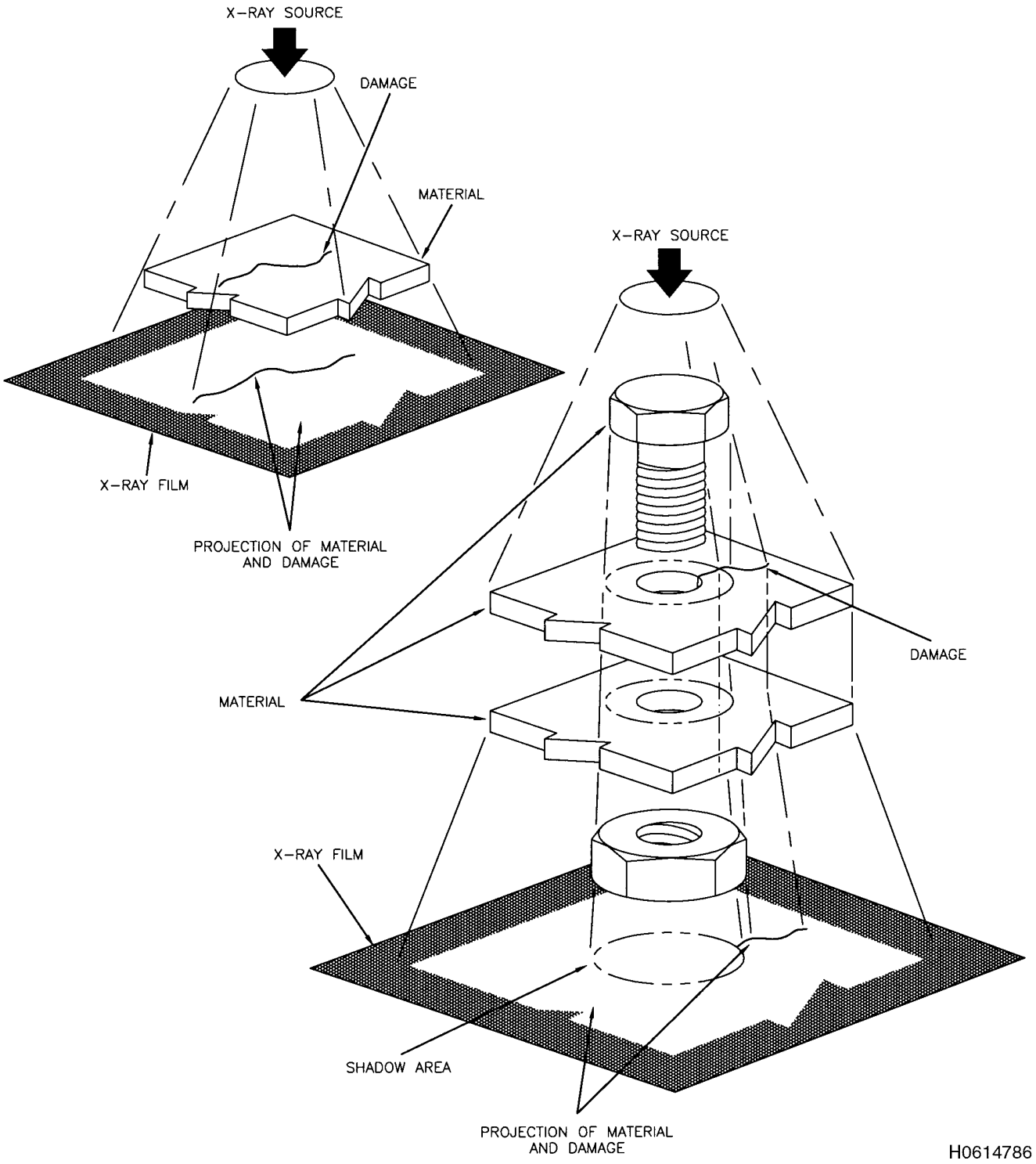

Figure 2-7. Locating Cracks by Radiography

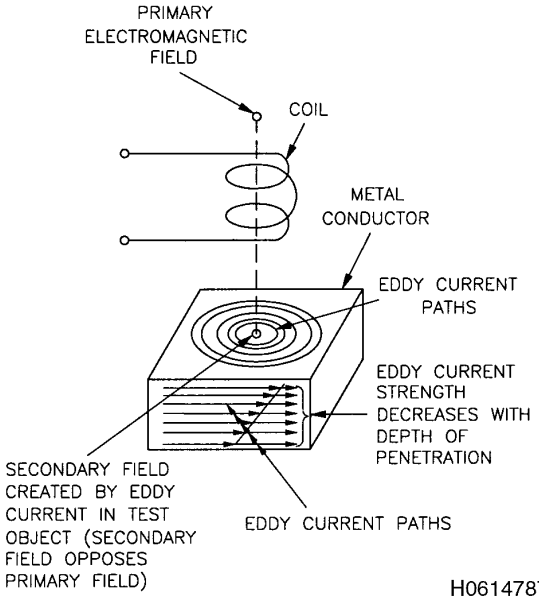

Figure 2-8. Eddy Currents Produced in a Conductor by a Varying Electromagnetic Field

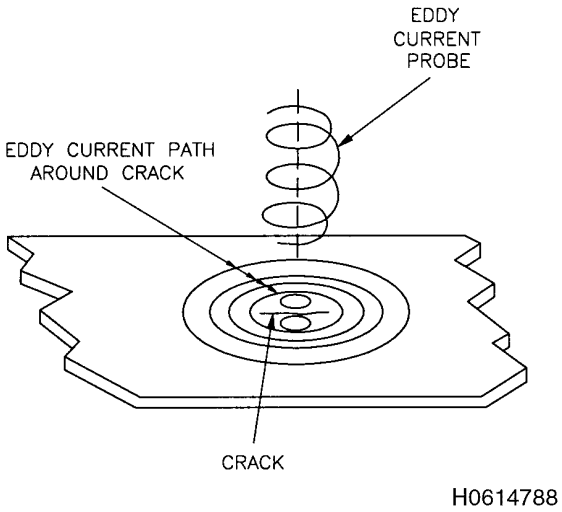

Figure 2-9. Path of Eddy Currents Around a Crack

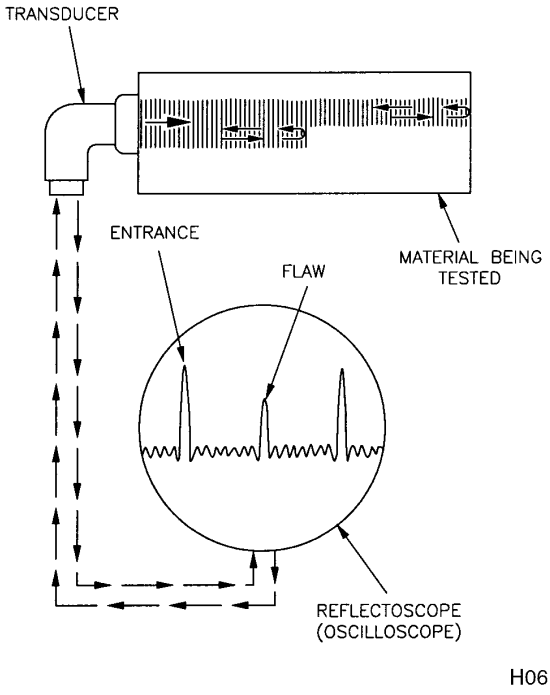

Figure 2-10. Detecting Flaw with Ultrasonic Inspection Method

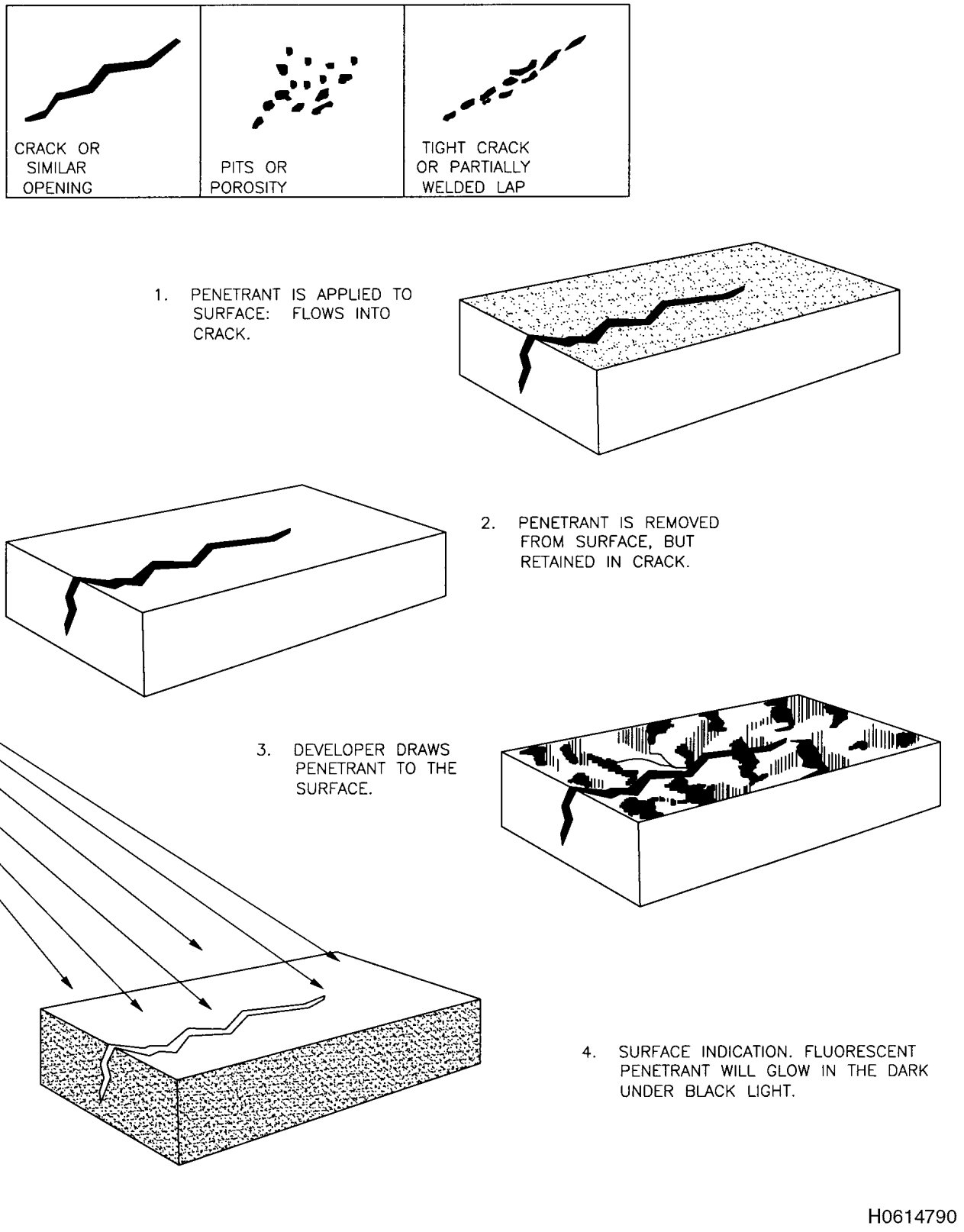

Figure 2-11. Fluorescent Penetrant Action

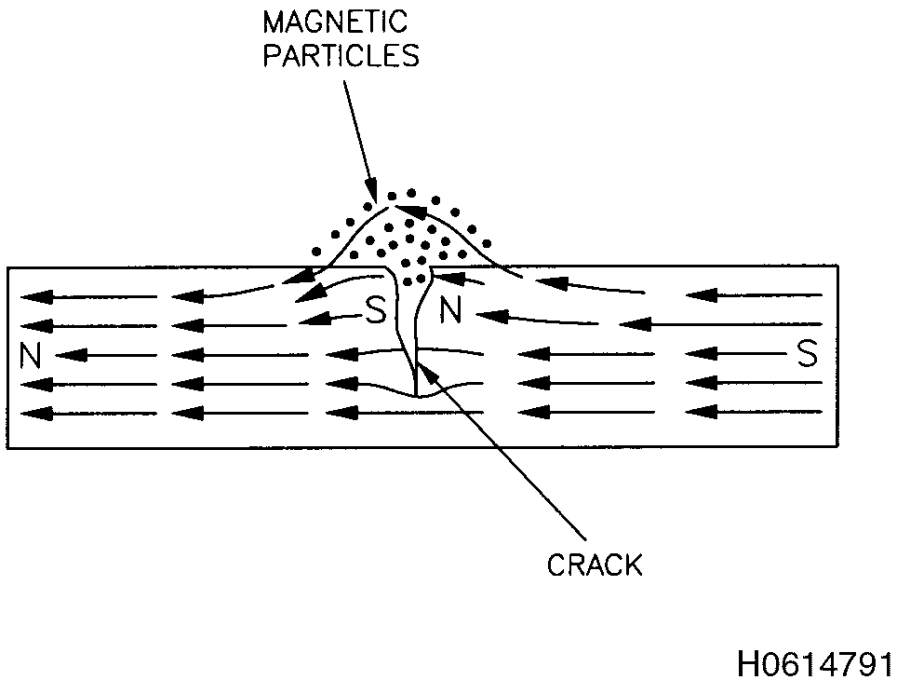

Figure 2-12. Crack in Bar Magnet Attracting Magnetic Particles

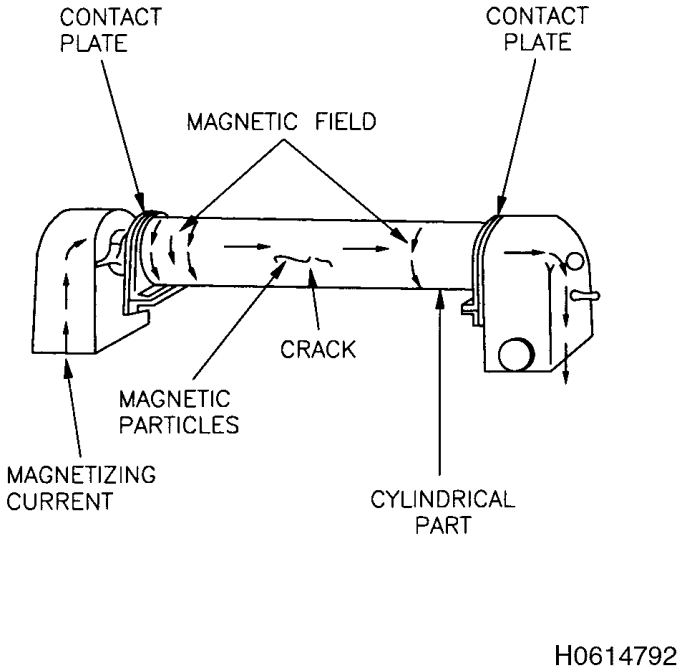

Figure 2-13. Electric Current Creating a Circular Magnetic Field in a Part

Table 2-2. Advantages and Disadvantages of Common Aircraft NDI Techniques

Method	Advantages	Disadvantages
Visual	1. Inexpensive 2. Portable equipment 3. Immediate inspection results 4. Minimum inspector skill required 5. Minimum part preparation required	1. Suitable only for surfaces that can be viewed 2. Generally detects only larger defects 3. Subject to misinterpreting scratches as cracks
Radiographic	1. Ability to detect both surface and internal defects 2. Ability to inspect parts that are covered or hidden by other structure 3. Permanent record of test produced 4. Minimum part preparation required	1. Expensive 2. Aircraft may have to be defueled 3. Area around the aircraft must be cleared of other personnel to avoid x-ray exposure 4. High degree of inspector skill required for technique development and interpretation of inspection results
Eddy Current	1. Portable equipment 2. Moderate cost 3. Immediate inspection results 4. Sensitive to small defects 5. Minimum part preparation required	1. Generally effective for surface and near-surface defects only 2. Inspection surface must be accessible to contact by the eddy current probe 3. Rough surfaces interfere with sensitivity of the inspection 4. Suitable for inspection of metals only (primarily nonferrous) 6. Considerable inspector skill and familiarity required in handling inspection equipment
Ultrasonic	1. Suitable for detecting surface and subsurface defects 2. Sensitive to small defects 3. Minimum part preparation required	1. Surface of the part to be inspected must be accessible to the ultrasonic transducer 2. Rough surfaces interfere with sensitivity of the inspection 3. Typically no permanent record of the inspection results is produced 4. High degree of inspector skill required for technique development and interpretation of inspection results
Fluorescent Penetrant	1. Inexpensive 2. Portable equipment 3. High sensitivity 4. Immediate inspection results 5. Minimum inspector skill required	1. Sensitive only to defects that are open to the surface 2. Surface of the part to be inspected must be accessible to penetrant application 3. Part preparation such as removal of finishes and sealant is required
Magnetic Particle	1. Sensitive to small defects 2. Detects surface and near-surface defects 3. Sensitive to inclusions as well as cracks 4. Moderate inspector skill required	1. Suitable only for ferromagnetic materials 2. Sensitive only to defects that are open to the surface 3. Removal of most surface coatings and sealant is required

CHAPTER 3
GENERAL WORKING PRACTICE

3.1 REPAIR OF AIRCRAFT STRUCTURES.

For field repairs, the service engineer is seldom available to determine the various design loads acting in the structural parts of an aircraft. Therefore, when a structural member fails for any reason, the service repair person must try to duplicate the original strength of the failed part. Remember that the cross-sectional area of a splice or patch plate should at least equal that area of the damaged part. In the members subject to compression or bending, it is desirable to have the splice on the outside of the repaired member to get higher bending strength. If this is not possible, the next higher gage material must be used.

3.1.1 To eliminate dangerous stress concentration, avoid abrupt changes in cross-sectional areas. To do this, taper splices and make small skin patches round or elliptical instead of rectangular. For the same reason, avoid sharp corners by allowing generous corner radii at all holes and edges and make sure completed parts are free from cracks, tool marks, rough edges, and notches caused by cutting or grinding operations. Any part of the structure that has buckled will not be able to carry its load again, no matter how well it may be straightened. It must be replaced or reinforced by a member of equal strength.

3.2 ALUMINUM ALLOY STRESSED SKIN STRUCTURE.

Stressed skin is made from high-strength rolled sheet. Bulkheads and ribs are made from formed sheet. The material in all replacements or reinforcements should be chosen on the same basis as the material in the original structure. If it is necessary to substitute an alloy that is weaker than the original, a larger gage must be used to give the cross section equivalent strength. The reverse, however, is not a safe practice. All contacting surfaces, regardless of the composition of the materials, must be prepared in accordance with TO 1-1-691, Aircraft Weapons Systems Cleaning and Corrosion Control, before permanent installation.

3.2.1 Take particular care when selecting material for which forming is required. The heat-treated and cold-worked alloys will stand very little bending without cracking. Soft alloys are easily formed but are not strong enough for primary structures. Strong alloys can be formed in their annealed condition and heat-treated to develop their strength before assembling. Where annealed metal is not available, it is possible to heat the metal, quench it according to regular heat-treating practice, and then form it before the age-hardening sets in. The forming must be completed within 30 minutes after quenching or the material will become too hard to work. If a brake is used to form sections, a thin piece of soft metal must be placed between the brake jaws and the material to prevent scraping, scratching, or damaging the surface of the sheet. Cold-rolling and forming operations that can be made on steel without injuring the sheet will sometimes, as in the case of aluminum alloy sheet, cause the metal to flow away from the point of maximum pressure, resulting in a sheet that is thinner at certain points.

CAUTION

- Bend lines must be drawn with a non-graphite pencil that conforms with Military Specification MIL-P-83953 to avoid galvanic corrosion. Do not use a sharp, pointed, metal instrument such as an awl or scribe to scratch bend lines.

- Wherever possible, bends should be across the grain of the metal.

3.2.2 To eliminate hand-straightening operations and reduce costs during fabrication, W-condition bend radii should be used with items such as flanged webs or frames whenever possible. Use W-condition bend radii rather than O-condition bend radii, unless O-condition bend radii are specifically required by engineering drawings.

3.3 ALUMINUM ALLOY SHEET SUBSTITUTIONS.

3.3.1 Explanation of Substitution Table. Figure 3-1 gives multiplying factors that, when multiplied by the thickness of the sheet to be replaced, give the thicknesses of equivalent strength substitutes. The following rules were used to prepare this table:

Rule 1: The substitute material shall provide cross-sectional strength in tension, compression, shear, and bearing to at least equal that of the original material.

Rule 2: Never substitute a material that is thinner than the original material or that has a cross-sectional area less than the original.

Table 4-1. Aluminum Alloy Sheet Substitution and Conversion Table for Commercial Temper Designations

EXISTING MATERIAL	NEW OR SUBSTITUTE MATERIAL																														
	7178-T6	7075-T6	7178-T6C	7475-T61	7075-T76	7075-T6C	7475-T61C	7075-T73	2024-T81C	2024-T861C	2014-T6C	2024-T361	2024-T62C	2024-T361C	2024-T3	2024-T4	2024-T4C	6061-T6	5052-H38	5052-H36	5052-H34	5052-H32	5456-O	5083-O	6061-T4	5454-O	5450-O	6061-T4	5083-O	5456-O	5052-H32
7178-T6		1.09	1.11	1.14	1.19	1.19	1.25	1.32	1.32	1.38	1.36		1.48																		
7075-T6	1.00		1.02	1.06	1.11	1.11	1.13	1.23	1.28	1.27	1.33	1.44	1.44																		
7178-T6C		1.00		1.04	1.10	1.10	1.11	1.21	1.26	1.25	1.32	1.42	1.43																		
7475-T61		1.01	1.01		1.11	1.11	1.09	1.18	1.25	1.25	1.29	1.36	1.40	1.45																	
7075-T76				1.00	1.04	1.04	1.04	1.15	1.17	1.22	1.21	1.29	1.28	1.38																	
7075-T6C					1.01	1.01	1.01	1.10	1.15	1.16	1.20	1.29	1.30	1.38																	
7475-T61C							1.10	1.14	1.16	1.16	1.18	1.27	1.28	1.36																	
7075-T73						1.04		1.09	1.06	1.05	1.12	1.17	1.21	1.25	1.41	1.50															
2024-T81C							1.01		1.05	1.05	1.12	1.17	1.16	1.25	1.41	1.42															
2024-T861C							1.07	1.07		1.05	1.12	1.25	1.21	1.34		1.50															
2014-T6C									1.05			1.14	1.10	1.22	1.38	1.35	1.50			1.50											
2024-T361						1.02		1.10	1.16	1.16	1.19		1.19	1.10	1.20	1.46															
2024-T62C									1.02	1.02		1.04		1.11	1.25	1.23	1.36	1.47		1.50											
2024-T361C									1.05	1.05	1.08		1.13		1.12	1.39	1.47			1.42											
2024-T3								1.02	1.08	1.08	1.11		1.11	1.03		1.30	1.30			1.27	1.41										
2024-T4										1.02					1.02		1.11	1.47	1.00	1.25	1.36										
2024-T4C										1.02	1.03		1.03			1.12		1.43		1.13	1.25										
6061-T6																	1.00		1.00	1.09	1.13	1.40									
5052-H38																		1.00		1.00	1.10	1.24	1.40								
5052-H36																					1.00	1.12	1.28								
5052-H34																						1.00	1.15	1.36	1.44						
5052-H32																							1.00	1.22	1.27	1.45					
5456-O																							1.30		1.05	1.45					
5083-O																							1.25	1.36	1.31	1.00	1.00				
6061-T4																								1.00	1.05		1.00	1.33			
5454-O																												1.03			

1. Locate the horizontal row containing the designation of the material to be replaced.
2. Locate the vertical column containing the designation of the substitute material.
3. To obtain the minimum thickness of the substitute material, multiply the thickness of the material to be replaced by the factor at the intersection of the row and column found by steps 1 and 2, respectively.

EXAMPLE PROBLEM:
Find the minimum thickness of 2024-T62C that is to replace 7075-T6C of 0.032 inch thickness.

1. 7075-T6C is the sixth horizontal row of factors.
2. The substitute 2024-T62C is in the thirteenth vertical column of factors.
3. The required factor is 1.30. The minimum thickness of the substitute 2024-T62C is 1.30 × 0.032 = 0.0416 inch.

(NOTE: Alclad materials in this table are denoted by a capital C following the designation callout.)

H0616777

Figure 3-1. Aluminum Alloy Sheet Substitution and Conversion Table for Commercial Temper Designations (Sheet 1 of 2)

Table 4-1. Aluminum Alloy Sheet Substitution and Conversion Table for Commercial Temper Designations - Continued

NOTE

1. When substituting bare aluminum alloy sheets for clad sheets, the surfaces must be adequately protected from corrosion through application of an effective surface coating. See TO 1-1-691, Cleaning and Corrosion Control.
2. Do not substitute non-heat-treated alloys for heat-treated materials.

Conversion Table for Commercial Temper Designations

This table cross-references new commercial temper designations with temper designations that were previously used by industry. The new temper designations, developed to differentiate between the aluminum's various conditions after production at the mill and after any retreatment by the user, have been accepted by suppliers of aluminum alloys, by the aircraft industry, and by the government as standard designations.

New Commercial Temper Designation	Previous Commercial Temper Designation
1100-H112	2S-H112
3003-O	3S-O
ALCLAD2014-T6	ALCLAD14S-T6
2017-T	17S
2024-T3	24S-T3
2024-T4	24S-T4
ALCLAD2024-T4	ALCLAD24S-T4
2024-T6	24S-T6
ALCLAD2024-T6	ALCLAD24S-T6
2024-T36	24S-T36
ALCLAD2024-T36	ALCLAD24S-T36
ALCLAD2024-T81	ALCLAD24S-T81
ALCLAD2024-T84	ALCLAD24S-T84

New Commercial Temper Designation	Previous Commercial Temper Designation
ALCLAD2024-T86	ALCLAD24S-T86
2025	25S
2117-T	A17S
5052-O	52S-O
5052-H32	52S-H32
5052-H34	52S-H34
5052-H36	52S-H36
5052-H38	52S-H38
6061-T4	61S-T4
6061-T6	61S-T6
7075-T6	75S-T6
ALCLAD7075-T6	ALCLAD75S-T6

H0616780

Figure 3-1. Aluminum Alloy Sheet Substitution and Conversion Table for Commercial Temper Designations (Sheet 2)

NOTE

Use the information in Figure 3-1 only in emergencies. Consult the appropriate weapon system engineering authority before replacing aircraft skins.

3.3.2 Explanation of Rule 1. Most parts in an aircraft structure carry a tension, compression, shear, and bearing load at some time during the operation of the aircraft. The magnitudes of these loads are seldom known when repairs are made. Therefore, the tensile, compression, shear, and bearing strengths of a part made of a substitute material must be at least equal to those of the original part. Strict adherence to rule 1 leads to the following paradox: If in one application 2024-T3 is substituted for 2014-T6 and if in another application 2014-T6 is substituted for 2024-T3, a substitute thicker than the original must be used in either application. This seeming inconsistency, which also occurs with other combinations of aluminum alloys, is explained by the following comparison of mechanical properties:

	2024-T3 (bare)	2014-T6 (clad)
Ultimate Tensile Strength	64,000 psi	62,000 psi
Compressive Yield Strength	39,000 psi	54,000 psi

If 2024-T3 were substituted for 2014-T6, the substitute material would have to be thicker unless the reduction in compressive strength is known to be acceptable. On the other hand, if 2014-T6 were substituted for 2024-T3, the substitute material would have to be thicker unless the reduction in tensile strength is known to be acceptable.

3.3.3 Explanation of Rule 2. The buckling and torsional strengths of many sheet metal and tubular parts depend primarily on thickness rather than allowable compressive and shear strengths of the material. Therefore, a substitute that is thinner than the original will considerably reduce the buckling and torsional strengths of a part even though the thinner substitute material has higher allowable compressive and shear strengths.

3.4 RIVETS AND RIVETING PRACTICE.

Allowable rivet strengths for various aluminum alloys and iron are listed in Table 5-2 of this TO. TO 1-1A- 8, Engineering Manual Series for Aircraft and Missile Repair Structural Hardware, contains more comprehensive information about rivets.

3.4.1 Rivets manufactured from 1100-F aluminum, alloy 2117-T4 aluminum, and alloy 5053 aluminum have been heat-treated by the manufacturer. No further treatment is necessary before installation. Always use heat-treated aluminum alloy rivets for joining highly stressed parts. Never use annealed aluminum alloy rivets, such as 1100-F rivets, for joining highly stressed parts.

3.4.2 Alloy 2017-T4 rivets have high shear strength and are used for joining aluminum alloy sheets. Alloy 2024-T4 rivets should be used for replacement wherever called for because of their higher strength. However, 2024-T4 rivets may be used for replacement of 2017-T4 or 2117-T4 rivets.

3.4.3 Alloy 2117-T4 rivets are medium-strength, solid rivets and may be used for many purposes. Like 2017-T4 rivets, 2117-T4 rivets are used for joining aluminum alloy sheets.

3.4.4 Alloy 2219-T6 rivets are intended for use where high strength at high temperature is required.

3.4.5 Alloy 5056-H32 rivets are used only for magnesium alloy structures and structures with magnesium and other alloys to minimize galvanic corrosion.

3.4.6 Alloy 7050-T73 rivets are high-shear-strength, high-temperature rivets for use with aluminum alloy sheets and are intended as a substitute for alloy 2024-T4 rivets.

3.4.7 Titanium-columbium (45Cb) rivets are used to join structures of titanium and aluminum or a combination of the two. These rivets are used where material compatibility and cold formability are desired. They are suitable for use in high-strength and high-temperature applications.

3.4.8 Never use aluminum alloy rivets 2017-T4 and 2024-T4 in the hardened condition. Perform driving immediately after quenching, unless the rivets are held at a low temperature for later use. Replace 2017-T4-A rivets only in accordance with the handbook of instructions for the structural repair of a particular aircraft. Aluminum alloy rivets 2017-T4 and 2024-T4 may be reheat-treated repeatedly without injury, provided the treatment is carefully and properly performed. The number of reheat treatments should be controlled based on proper workability after repeated reheat treatments.

3.4.9 Parts to be riveted together will be heat-treated before riveting because heat treating after riveting causes warping. Also, when rivet assemblies are heated in a salt bath, the salt cannot be completely washed out of the cracks and will cause corrosion.

3.4.10 Rivets that have a diameter smaller than 3/32 inch will not be used for any structural parts, control parts, wing skin, or similar aircraft parts.

3.4.11 Steel rivets should not be used in place of aluminum rivets unless authorized by the weapon system engineering activity. In some cases, steel rivets are appropriate for highly stressed skin areas when the proper aluminum rivets are not available.

3.4.12 When possible, rivet patterns shall have the same configuration as the original installation or as called out in the applicable repair manual. Repair manuals present specific repairs for various regions of the aircraft. However, some general procedures will apply in all instances.

3.4.12.1 Edge Distance. Rivet edge distance is measured from the centerline of the rivet to the nearest edge of the part through which it passes. The recommended minimum edge distance for rivets is two times the rivet diameter plus 0.06 inch. This minimum edge distance may be used except where specified differently in the specific repair procedure or when replacing existing rivets.

3.4.12.2 Rivet Spacing. Rivet spacing is measured between the centerlines of adjacent rivets. The minimum spacing between protruding head rivets shall not be less than three and one-half times the rivet diameter. The minimum spacing between flush head rivets shall not be less than four times the diameter of the rivet. These dimensions may be used as the minimum spacing except when specified differently in a specific repair procedure or when replacing existing rivets.

3.5 REPLACEMENT OF SPOT WELDS AND WORN LAMINAS.

3.5.1 General. Spot welding is performed by passing a very low-voltage, high-amperage current through two sheets of metal at a point where two specially formed, pointed electrodes (or irons) press the sheets together. The heat produced by the current flowing between the sheets of metal is sufficient to melt a portion of both sheets at the point of contact. This point of welded contact is known as the nugget. Figure 3-2 illustrates drill sizes for removal of spot welds, relative to sheet metal thickness. Nuggets react against shear loads in the same manner as rivets.

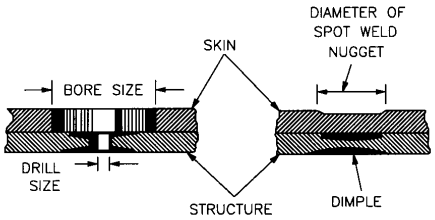

Sheet Gage	Nugget Diameter	Bore Size
0.016	1/8	1/4
0.020	9/64	1/4
0.025	5/32	1/4
0.032	3/16	1/4
0.040	7/32	1/4
0.045	15/64	1/4
0.051	1/4	1/4
0.064	9/32	3/8
0.072	19/64	3/8
0.081	5/16	3/8
0.091	11/32	3/8
0.109	3/8	3/8
0.125	3/8	3/8

Rivet Diameter	Drill Number
3/32	41
1/8	30
5/32	22
3/16	12

H0614793

Figure 3-2. Drill Sizes for Removal of Spot Weld

3.5.2 Removal of Spot Welds. Spot-welded surfaces can be removed using the following procedures.

3.5.2.1 Figure 3-2 illustrates the method used for shearing spot welds (or nuggets) between two pieces of metal. By using the spot weld locating tool (Figure 3-4), the center of the nugget can be located and punched prior to the drilling. Note that instead of drilling holes that equal the full size of the nugget, a clearance hole is drilled for the rivet size that would ordinarily be used. This does not completely remove the spot weld nugget, but when a chisel (Figure 3-5) is inserted between the two sheets on the centerline of the spot weld nugget and struck lightly with a hammer, the remainder of the nugget bond will break. This procedure permits all sheared spot welds to be riveted back as would normally be done for rivets. When a worn piece of lamina needs to be replaced with a new piece, the methods outlined in Figure 3-4 through 3-8 save a considerable number of parts that would otherwise have been scrapped. These methods are invaluable when repairing or replacing damaged parts on otherwise serviceable aircraft. The method used depends on the size and shape of the surface being repaired and the type of repair that is most practical.

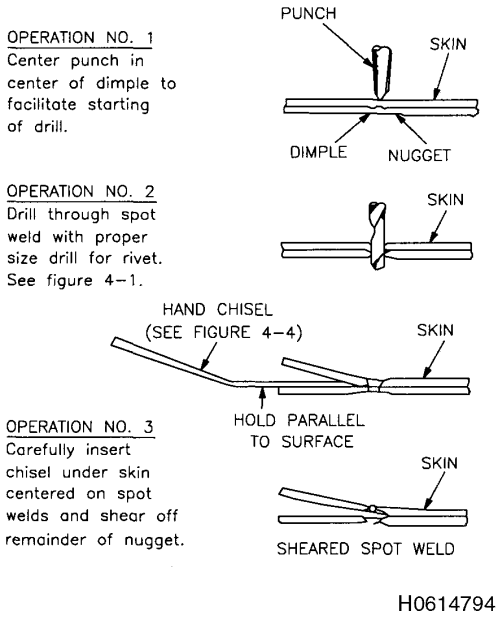

Figure 3-3. Method of Shearing Spot Welds for Riveting

3.5.3 Spot Weld Failures.

3.5.3.1 When spot welds fail or the skin separates from the structure, the nugget portion of the skin, or a button, is left on the framing member. Mill off the button using a counterbore as shown in Figure 3-2. Prepare a spacer that has the same gage as the skin and install as shown in Figure 3-9. Then prepare a washer. The washer should be at least six times the diameter of the rivet size, with beveled edges, and countersunk for the rivet, as shown in Figure 3-9. When more than two spot weld failures exist at the same spot or if the breaks exceed the 3/8-inch diameter, repair the area in question in the same manner as for a complete break (i.e., use a flush patch procedure).

3.5.3.2 In cases where spot welds fail or shear and there are no visible cracks or breaks on the spot weld dimples, the area of skin should be tapped with a hammer until the two surfaces have been brought solidly together. Figure 3-9 shows the steps for riveting. If the area of sheared spot welds cannot be brought down so that the skin lays flat, remove and repair that portion of the skin in the same manner as for a complete skin break (i.e., use a flush patch procedure).

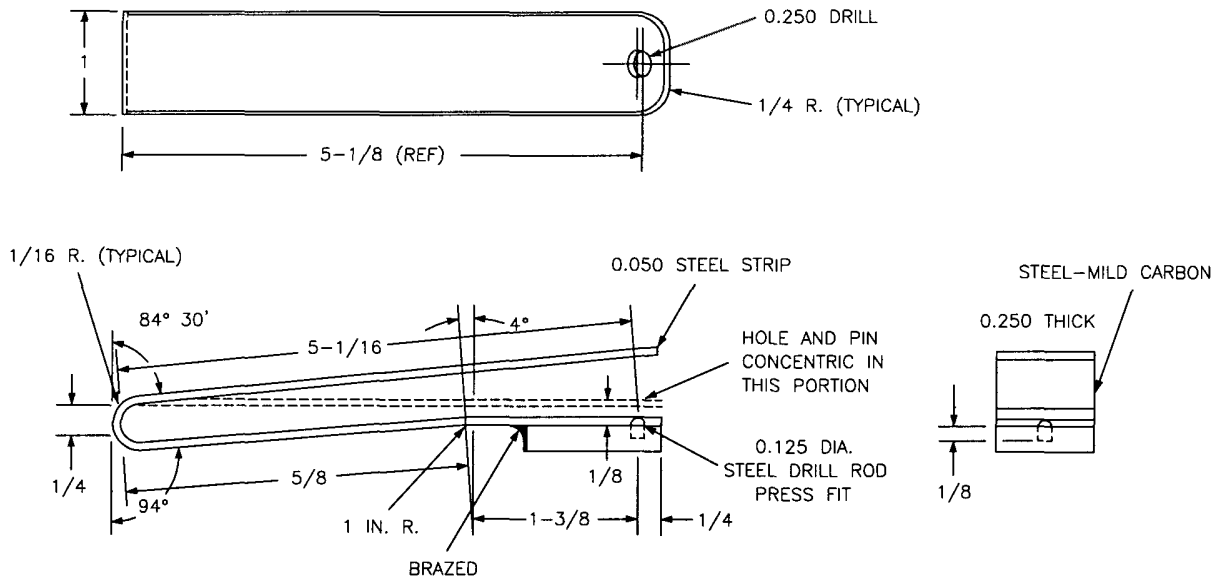

Figure 3-4. Locating and Transcribing Tool

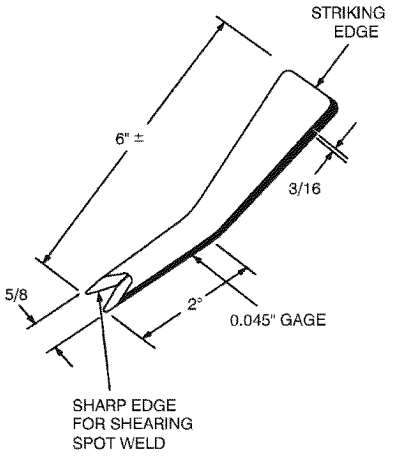

NOTE:
Use a good grade of tool steel with a hardened cutting edge. A heat-treated tool should be a little harder than spring steel.

H0614236

Figure 3-5. Spot Weld Shearing Chisel



NOTE:
The tip of the #10 pilot drill should rest in the center punch indentation.

H0614237

Figure 3-6. Piloting Drill

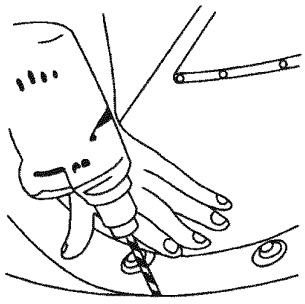

NOTE:
Exert slight prying force with fingers as illustrated. Withdraw drill immediately upon separation of metal to prevent damage to reusable parts.

H0614238

Figure 3-7. Drilling Holes

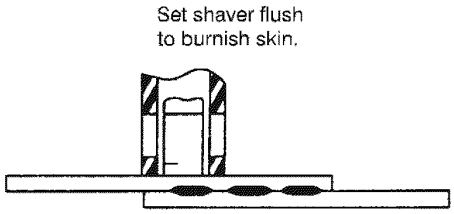

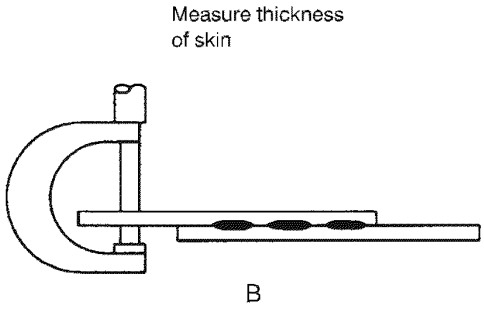

1. Overset shave to thickness determined in illustration B.
2. Counterbore skin.

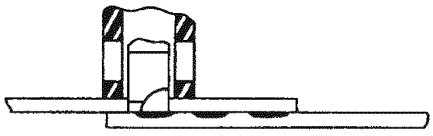

1. Remove shaver and lift or pull sheets apart.
2. If necessary, reshave or spot lower sheet before reusing.

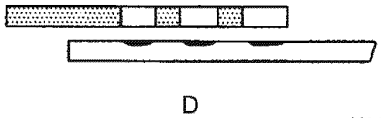

H0614239

Figure 3-8. Removing Spot Welded Skin from Structure

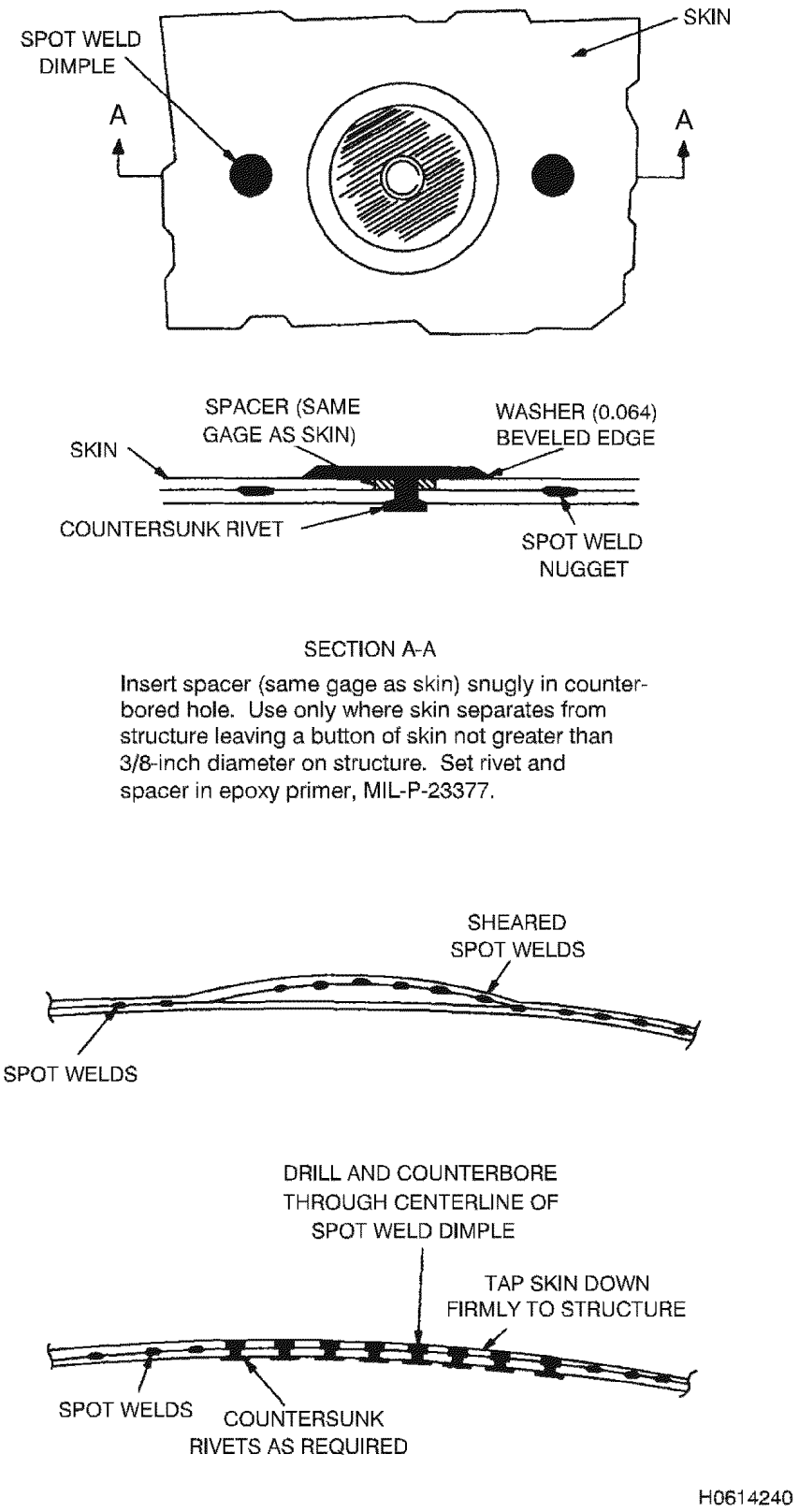

Figure 3-9. Repair for Sheared Spot Welds

3.6 FASTENERS.

NOTE

For Navy personnel, see 1.2.2.1.1, Special Considerations Regarding Fastener Holes, for information about hole machining using hand tools.

Fasteners other than bolts or rivets are used to connect loose or hinged parts of the aircraft to the structure. They are used particularly for inspection hole covers, fuel and oil covers, access hole and wheel disc covers, baggage compartments, cowlings, and fairings. Several types of patented fasteners are used for these purposes. Some of these types are covered in this TO: Dzus, Camloc, and Airloc (refer to Chapter 5, Fasteners). Consult TO 1-1A-8, Engineering Manual Series Aircraft and Missile Repair Structural Hardware, for additional information about fasteners.

3.6.1 Fastener fatigue failure accounts for the majority of all load transfer problems. The stresses that lead to fatigue cracks in fasteners are caused by insufficient tightening and the lack of proper preload or clamping force. These stresses cause movement between the parts of the assembly and bending or cyclic stressing of the fastener. Eventually, cracks form at high stress points. These cracks will progress to the point where the fastener can no longer support its designed load.

3.6.1.1 For the nut to properly load the bolt and prevent premature failure, a designated amount of torque must be applied. Proper torquing will reduce the possibility of the fastener loosening in service. Distributing the stresses applied to each fastener safely throughout the structure will also reduce the possibility of the fastener loosening in service.

NOTE

The correct torque values for specific fasteners can be obtained from the torque tables in TO 1-1A-8, Engineering Manual Series for Aircraft and Missile Repair Structural Hardware.

3.6.1.2 The correct torque to apply when tightening an assembly is based on many variables. The fastener undergoes several stresses when it is tightened (e.g., torsion, tension). Tension is the desired stress, while torsion is the necessary evil caused by friction. A large percentage of applied torque is used to overcome this friction so that only tension remains after tightening.

3.7 EXTRACTING BROKEN SCREWS.

Use a screw extractor to quickly and easily remove broken screws. Screw extractions may be performed in the following manner:

CAUTION

When the fastener recess is damaged (stripped) to the point the bit is unable to engage the fastener's recess, fastener extractor should be used. Use of cross-cut ball grinders before drilling to break off the points of screws and left-handed twist drill bits can sometimes be beneficial. Reference TO 1-1A-8 for fastener extractor procedures.

a. Center punch the screw. Screw head may be ground out or removed if necessary for center punching.

CAUTION

Exercise care when grinding out or removing the screw head to avoid damaging surrounding material.

b. Drill a pilot hole in the broken screw (see Figure 3-10). A drill fixture may be used to ensure that the hole follows the center of the screw.

c. Select the proper screw extractor for the screw size (see Table 3-1).

d. Drive the screw extractor into the hole drilled in the screw.

e. Remove the broken screw, using a tap wrench (see Figure 3-11).

f. Always use the largest screw extractor possible. For ordinary conditions, use the size drill listed opposite the screw extractor size in Table 3-1. Unusual conditions may, however, require a smaller or larger drill, depending on the length of the broken part or its depth in the hole.

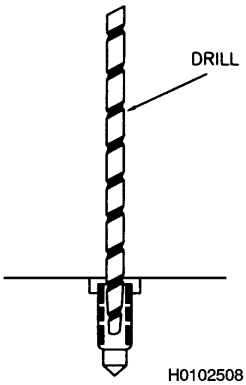

Figure 3-10. Drilling a Hole in a Broken Screw

3.8 ADVANCED COMPOSITE REPAIR.

Aircraft structures are being manufactured using the latest materials available. Materials such as, carbon epoxy, Kevlar, and spectra, and advanced resin systems offer improved performance, exceptional strength at reduced weight, durability, and design flexibility. Advanced composite materials, including advanced polymer composites, advanced ceramics, and metal matrix composites, are currently being used in both military and civilian aircraft manufacturing. These materials are relatively expensive and usually involve complex manufacturing processes.

Table 3-1. Drill and Extractor Sizes

Extractor No.	Diameter at Small End (inches)	Diameter at Large End (inches)	Overall Length (inches)	Sizes for Screws and Bolts (inches)	For Pipe Sizes (inches)	Size Drill To Use (inches)
1	.054	5/32	2	3/16 to 1/4		5/64
2	.080	3/16	2-3/8	1/4 to 5/16		7/64
3	1/8	1/4	2-11/16	5/16 to 7/16		5/32
4	3/16	21/64	2-7/8	7/16 to 9/16		1/4
5	1/4	7/16	3-3/8	9/16 to 3/4	1/8, 1/4	17/64
6	3/8	19/32	3-3/4	3/4 to 1	3/8	13/32
7	1/2	3/4	4-1/8	1 to 1-3/8	1/2	17/32
8	3/4	1	4-3/8	1-3/8 to 1-3/4	3/4	13/16
9	1	1-9/32	4-5/8	1-3/4 to 2-1/8	1	1-1/16
10	1-1/4	1-9/16	5	2-1/8 to 2-1/2	1-1/4	1-5/16
11	1-1/2	1-7/8	5-5/8	2-1/2 to 3	1-1/2	1-9/16
12	1-7/8	2-5/16	6-1/4	3 to 3-1/2	2	1-15/16

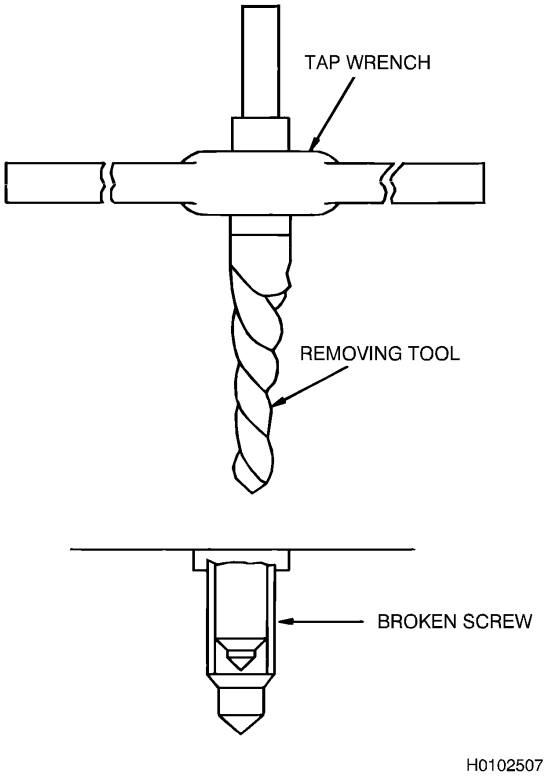

Figure 3-11. Removing a Broken Screw

3.8.1 While composite materials offer numerous benefits to military aircraft design, repairs to damaged composite components are substantially more complex, time consuming, and expensive than on traditional metals.

NOTE

TO 1-1-690, General Advanced Composite Repair Processes, contains general information of advanced composite repairs. For additional information about specific repairs, consult the appropriate weapons system structural technical order or weapon system engineering authority before repair.

3.9 TUBING REPAIR.

3.9.1 General. Generally, tubing systems are used in aircraft to transport fuel, oil, oxidizers, coolant, breathing oxygen, hydraulic fluid, and vent air. Tubes are sometimes used to protect wire bundles. The most commonly used tube materials are aluminum alloy and stainless steel. For additional information on the repair and replacement of aircraft system tubing, refer to TO 42E1-1-1 or NAVAIR 01-1A-20, Engineering Manual Series Aircraft and Missile Repair Structural Hardware.

WARNING

The use of aluminum alloy tubing is limited in certain areas of airborne hydraulic systems by MIL-H-5440. Consult the applicable drawing or illustrated parts breakdown to determine the correct tubing for a particular system. Tubing that conforms to Federal Specifications WW-T-700/1 and WW-T-700/6 will not be used in hydraulic systems.

3.9.1.1 Aluminum Alloy Tubing. Aluminum alloy tubing that conforms to Federal Specification WW-T-700/1 is used for general-purpose lines and conduits of low or negligible fluid pressure, such as instrument lines and electrical and ventilating conduits. Aluminum alloy tubing that conforms to Federal Specifications WW-T-700/4 and WW-T-700/6 is the most widely used for general-purpose lines of low and medium pressures. It is easily flared and soft enough to be formed with hand tools. Handle it with care to prevent scratches, dents, and nicks. Aluminum alloy tubing is used with either of two connection types: a flared joint for mechanical connectors or the beaded end for clamps and flexible hoses. In hydraulic systems, 5052-O aluminum alloy tubing that conforms to Federal Specification WW-T-700/4 is used for reduced pressure (1,500 psi maximum) and return lines. For high-pressure lines (3,000 psi), MIL-T-7081 aluminum alloy tubing (6061) is in considerable use.

3.9.1.2 Stainless Steel Tubing. Corrosion-resistant steel (CRES) tubing, MIL-T-8504 and MIL-T-6845, is used in high-pressure hydraulic systems (3,000 psi) such as landing gear, wing flaps, and brakes. It is preferred that external brake lines be made of stainless steel components (i.e., tubing, sleeves, nuts) to prevent damage caused by flying gravel and stones and ground-handling accidents. In other systems where stainless steel tubing is used (regardless of the tube size), it is preferred that only stainless steel nuts be used. This will minimize sleeve and nut cracking, which may be induced by overtorque of “B” nuts and vibration. CRES tubing does not have to be annealed for flaring or forming. In fact, the flared section is somewhat strengthened by the cold working and consequent strain hardening. The high tensile strength of stainless steel tubing permits the use of a thinner wall than does aluminum alloy tubing. Therefore, the weight is about the same as thicker-walled aluminum alloy tubing.

3.9.2 Identification of Tubing Systems. To assist in the rapid identification of the various tubing systems and the pressure under which they operate, code bands of varicolored tape should be attached to the tubing near the joints. These bands are also placed at intermediate points,

as necessary, to allow identification of the tubing system throughout the aircraft. Consult the weapon system-specific technical orders for code band marking for tubing and hoses.

3.9.3 Tubing Damage. Damage such as chafing, galling, or fretting produces mechanical property changes in metal tubing that greatly reduce its ability to withstand internal pressure and vibration. Any visible penetration of the tube wall surface -that is, any damage to or removal of metal from the tube wall by chafing, galling, or fretting - is cause for correction and replacement. Careful handling of tubing will help avoid damage such as nicks and scratches. Most damage occurs from careless handling of tools during maintenance of the aircraft.

3.9.4 Repairs. Minor dents and scratches in tubing may be repaired. Scratches or nicks no deeper that 15 percent of the wall thickness on straight sections of aluminum, aluminum alloy, copper, or steel tubing that are not in the heel of a bend may be repaired. Repair these types of scratches or nicks by burnishing with hand tools. Replace lines with severe die marks, seams, or splits in the tube. Any crack or deformity in a flare is also unacceptable and cause for rejection. Any dent that is less than 20 percent of the tube diameter is allowable, unless it is in the heel of a bend with less than the recommended bend radius. Dents may be removed by using a length of cable to draw a bullet of the proper size through the tube. For severe damage, replace the tube. For correct bend radius and acceptable limits for flatness, kinks, wrinkles, and scratches in tubing bends, refer to TO 1-1A-8, Engineering Manual Series Aircraft and Missile Repair Structural Hardware.

3.10 REPAIR OF THREADED INSTALLATIONS.

NOTE

When heli-coil inserts cannot be used, as outlined in TO 1-1A-8, threaded bushings may be installed.

Install threaded bushings using the following procedure:

a. Drill and Installation:

(1) To repair tapped thread holes with weak, worn, or stripped threads, drill out the damaged hole and install a threaded bushing.

(2) The diameter of the drill that is used to drill holes before tapping should be equal to the smallest diameter of the tap threads that will be cut into the drilled hole. This will produce full-depth threads.

(3) After drilling out stripped threads, retap with a tap of the desired size and thread. Pipe threads are preferred, particularly where a pressure seal is required. However, in applications that do not involve pressure seals, or those in which pipe threads are impractical, standard threads may be used.

(4) The outside diameter (OD) of the bushing will be provided with threads to match those in the retapped hole. Install bushings before tapping out the inside diameter (ID) to prevent thread distortion and subsequent difficulty.

(5) Chrome stainless steel, nickel steel, or phosphor bronze bushings are the most desirable, particularly where heavy or intermittent loads will be encountered. However, the bushing material will be determined by load-carrying requirements, dissimilar metals, and other criteria.

(6) All bushings shall be pinned or staked in two places, approximately 180© apart. Bushings that are subjected to fluid pressure will be sealed with an appropriate sealant on the outside surface threads.

b. Minimum wall thickness that should remain after drilling and tapping for the installation of a threaded bushing are as follows:

(1) For all bolts, studs, plugs, and fittings up to and including an OD of 1/2 inch, installed in aluminum, magnesium, or brass, a minimum 3/32-inch (0.0937) wall thickness is permissible after drilling and tapping.

(2) For all bolts, studs, plugs, and fittings up to and including an OD of 3/4 inch, installed in aluminum, magnesium, or brass, a minimum 1/8-inch (0.125) wall thickness is permissible after drilling and tapping.

(3) For all bolts, studs, plugs, and fittings up to and including an OD of 1-1/4 inch, installed in aluminum, magnesium, or brass, a minimum 3/16-inch (0.1875) wall thickness is permissible after drilling and tapping.

(4) For all bolts, studs, plugs, and fittings up to and including an OD of 2 inches, installed in aluminum, magnesium, or brass, a minimum 1/2-inch (0.500) wall thickness is permissible after drilling and tapping.

(5) For all bolts, studs, plugs, and fittings up to and including an OD of 1/2 inch, installed in steel, a minimum 1/10-inch (0.100) wall thickness is permissible after drilling and tapping.

(6) For all bolts, studs, plugs, and fittings up to and including an OD of 3/4 inch, installed in steel, a

minimum 2/10-inch (0.200) wall thickness is permissible after drilling and tapping.

(7) For all bolts, studs, plugs, and fittings up to and including an OD of 1-1/4 inch, installed in steel, a minimum 21/64-inch (0.3281) wall thickness is permissible after drilling and tapping.

(8) For all bolts, studs, plugs, and fittings up to and including an OD of 2 inches, installed in steel, a minimum 13/32-inch (0.4062) wall thickness is permissible after drilling and tapping.

c. Thread engagement:

(1) The threaded depth in a bushing for a bolt or stud must be at least equal to one diameter of the bolt or stud.

EXAMPLE: If the diameter of the bolt or stud is 1/4 inch, the minimum threaded length in the bushing must be 1/4 inch.

(2) When a stud or bolt will be subjected to high stresses and the bushing is installed in aluminum or magnesium, the threads of the stud or bolt must engage the bushing threads for a length equal to, or greater than, twice the diameter of the stud or bolt.

(3) If the stud or bolt will be subjected to lower stresses or is installed in a harder metal with greater tensile strength, the length of thread engagement may be reduced proportionately.

d. If a bushing does not have a flange, it should be installed so that the top (i.e., exposed) face of the bushing is flush to 0.002 inch below the surface of the boss material in which the bushing is installed.

3.11 STOP-DRILLING CRACKS IN SHEET MATERIAL (LOW- AND MEDIUM-STRESS AREAS).

3.11.1 Crack inspection. Cracks may be caused by nicks, scratches, corrosion, vibrations, or metal fatigue. Metal fatigue results from repeated loads. Items most often affected are skins, fairings, formers, frames, and fittings. Carefully inspect these items, particularly around cutouts, formed areas, fastener locations, and adjoining parts of varying thickness. Some cracks may not be visible. Any indications or suspected locations of cracks should be carefully examined, using an appropriate nondestructive inspection method. The following may indicate cracked areas:

- Wrinkles in the primary surface
- Working rivets
- Corrosion
- Deformed members
- Leakage around fluid-tight areas
- Broken or missing fasteners
- Protective finish cracking or flaking

3.11.2 Crack evaluation.

WARNING

Do not neglect or dismiss any cracks. What may appear to be a minor crack could jeopardize the structural integrity of the aircraft and the safety of the crew.

The severity of a crack can be determined by assessing the length and geometry of the crack, the area in which the crack occurs, the rate of propagation, and the depth. Cracks in secondary structures such as fairings should be called to the attention of the maintenance officer for appraisal. Cracks in primary structures such as highly loaded skins and the understructure must be repaired according to weapon system-specific repair manuals. These manuals generally include allowable damage charts for structures such as fairings, webs, honeycomb panels, splice plates, landing gear, body skins, and frames.

3.11.3 Crack repair and treatment.

WARNING

Drilling operations create metal chips, which may fly into the eye. Drill operators must wear proper eye protection.

CAUTION

In blind areas, use a drill stop to prevent damage to underside equipment. If the edge margin of any associated part is 1.5D or less at any time during the stop-drilling process, contact the weapon system engineering authority for further repair instructions.

3.11.3.1 If a crack is suspected, clean up the area and mark the limits of the crack. Use fluorescent penetrant inspection to verify the end of the crack.

NOTE

- Any crack found in potential critical areas should be reported to the weapon system engineering authority.
- Examine the structure carefully to determine if this area has been previously reworked. All cases of cracks in reworked areas should be reported to the weapon system engineering authority.

3.11.3.2 Determine if patching or replacement of parts is necessary. If patching is required, refer to the applicable structural repair manual. Unless the part is completely severed, stop-drill the ends of the crack if practical.

NOTE

The size of stop-drill holes may be reduced to a diameter of 0.125 inch for material that is 0.04 inch (or less) thick.

3.11.3.3 To prevent crack propagation, drill or counterbore a 0.25-inch diameter crack stop hole through the structure at each end of the crack so that the center of the hole is 0.10 inch beyond the visible end of the crack.

3.11.3.4 Minor cracks may be stopped by drilling a 0.125-inch hole at each end. After stop-drilling, make a dye-penetrant inspection to ensure that the end of the crack was contained in the stop hole. If the crack extends beyond the stop hole, enlarge the hole by 1/16-inch diametrical increments until the crack indication is removed. Stop-drilled holes may be filled with rivets or aerodynamic filler to keep out moisture and corrosive elements. If necessary, perform split-sleeve cold expansion according to a weapon system-specific structural repair manual. Blend damaged areas smooth. Remove all burrs, nicks, and sharp edges from the cracked part.

WARNING

- Alodine, MIL-C-5541 (same as Chemical Film, Iridite-14), is moderately toxic to skin, eyes, and respiratory tract. Eye and skin protection is required. Good general ventilation is normally adequate.
- Epoxy primer, MIL-P-23377, is highly toxic to skin, eyes, and respiratory tract. Eye and skin protection is required. Good general ventilation is normally adequate.

3.11.3.5 Chemically treat exposed surfaces with alodine (brush or manual application) to prevent corrosion. Apply MIL-P-23377 primer to a minimum dry-film thickness of 0.0012 inch.

3.11.3.6 Cracks detected beyond repair boundaries shall be referred to the appropriate weapon system engineering authority for repair procedures.

3.12 BLENDING SCRATCHES.

Figure 3-12 illustrates the importance of blending scratches on load-bearing structures to reduce stress concentrations. Refer to the appropriate weapon system structural repair manual for blend allowances and acceptable surface finish after blending.

3.13 TYPICAL REPAIR EXAMPLES.

Figure 3-12 through 3-19 are examples of repairs for various structural members. Specific dimensions are not included because the illustrations are intended to present the basic design philosophy of general repairs rather than be used as repair guidelines for actual structures. Consult the appropriate weapon system structural repair manual to obtain information about maximum allowable damage, which may be repaired, and the suggested repair methods.

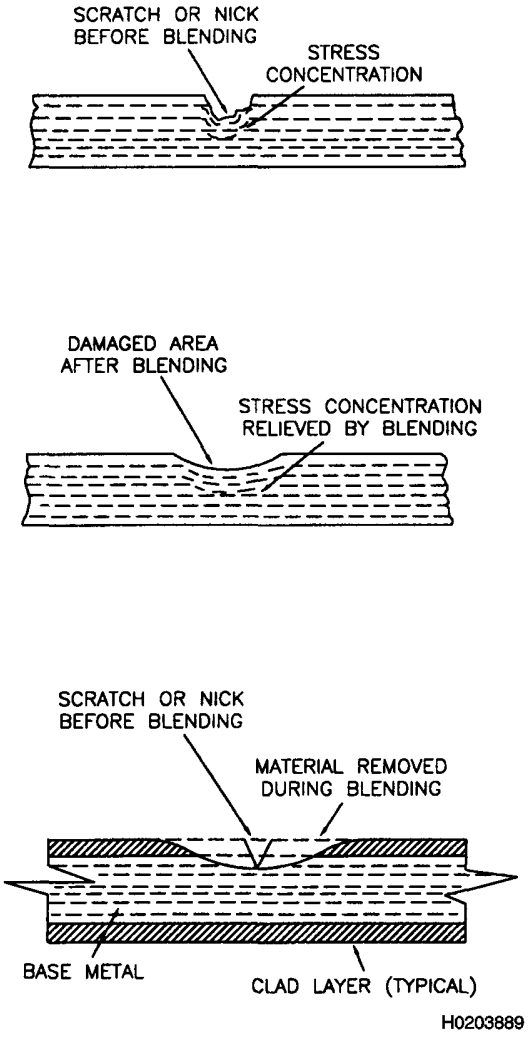

Figure 3-12. Stress Concentration and Blending

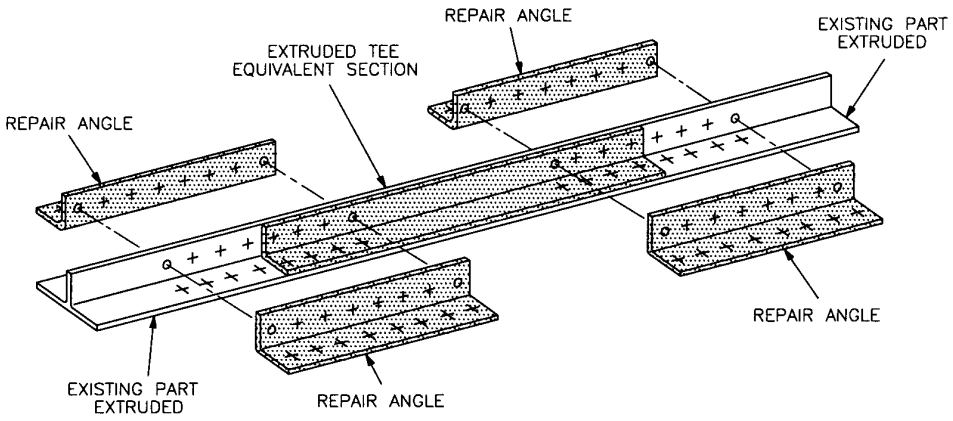

A

TYPICAL SPLICE FOR EXTRUDED TEE EQUIVALENT SECTION

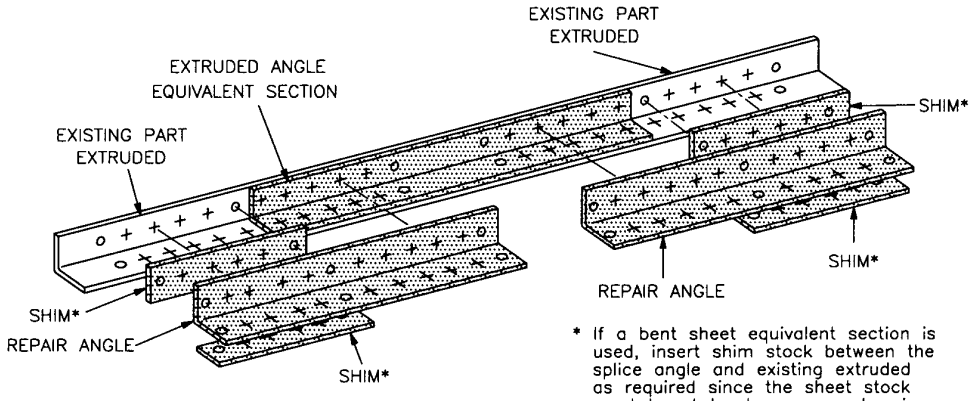

B

TYPICAL SPLICE FOR EXTRUDED ANGLE EQUIVALENT SECTION

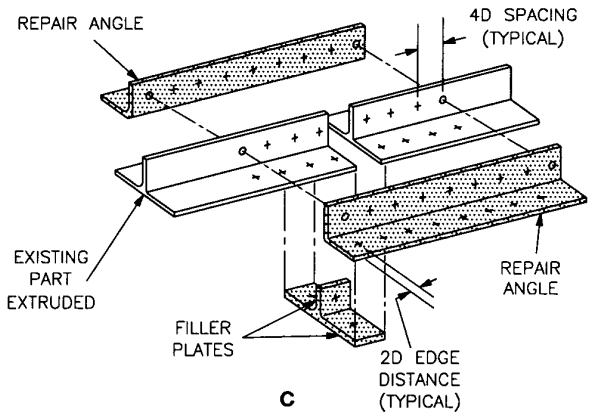

C

TYPICAL SPLICE FOR EXTRUDED TEE WITH FILLER

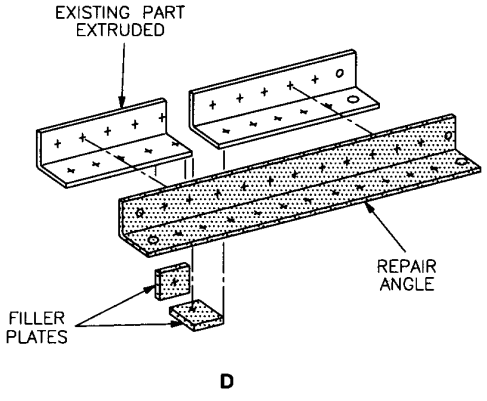

D

TYPICAL SPLICE FOR EXTRUDED ANGLE WITH FILLER

NOTE:
Install with faying surfaces and all fasteners wet with MIL–S–81733, type I or IV sealant.

H0614796

Figure 3-13. Typical Splice Repair

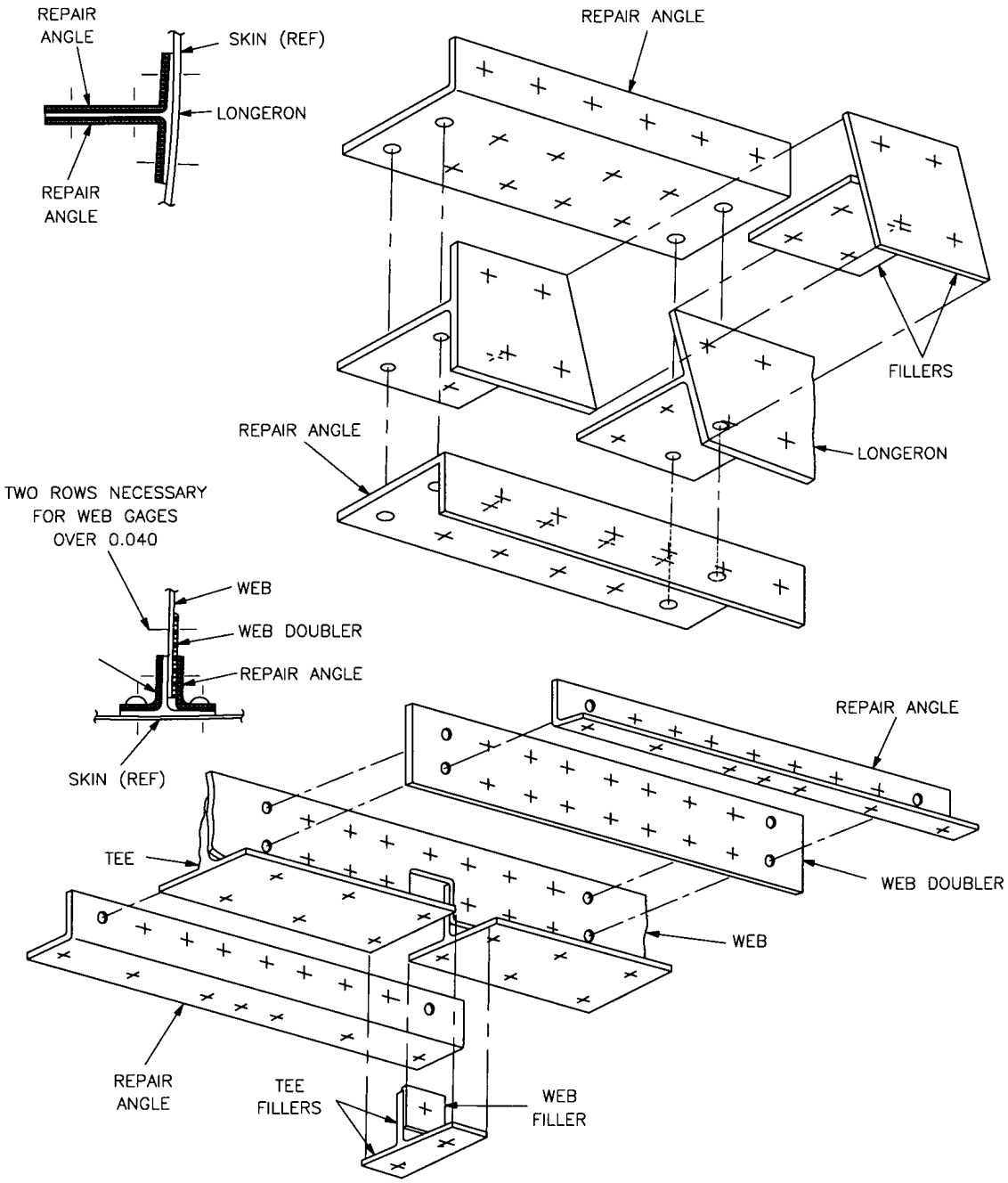

NOTES:

1. Cut out damage between skin rivets to give 2D minimum edge distance. Add filler where damage exceeds 1/4 inch in length.
2. Minimum edge distance is 2D. Minimum rivet spacing is 4D.
3. Heat-treat doublers and fillers after forming, as applicable.
4. Install with faying surfaces and all fasteners wet with MIL-S-81733, type I or IV sealant.

H0614797

Figure 3-14. Typical Splice Tee Repair

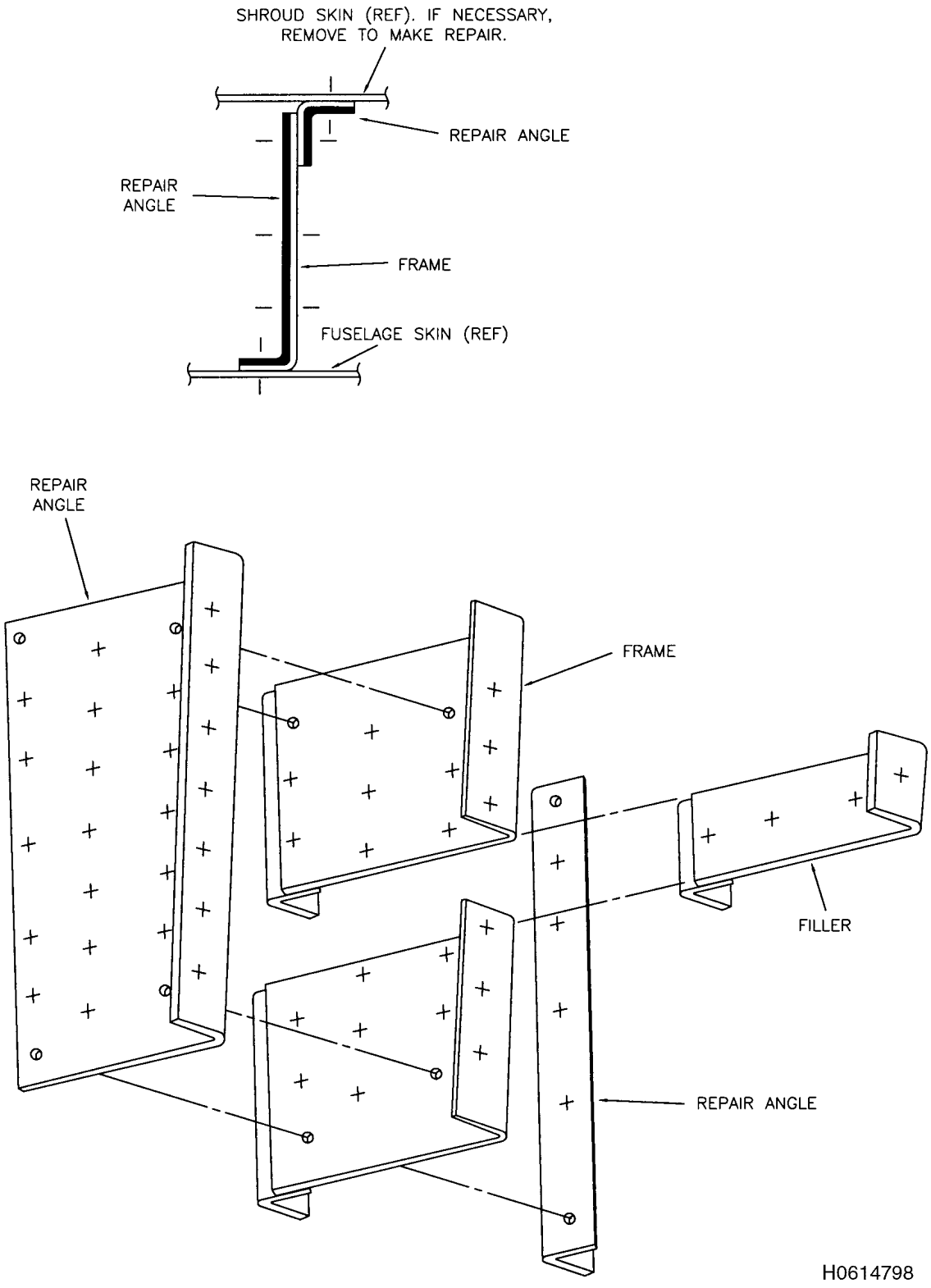

Figure 3-15. Typical Angle Repair

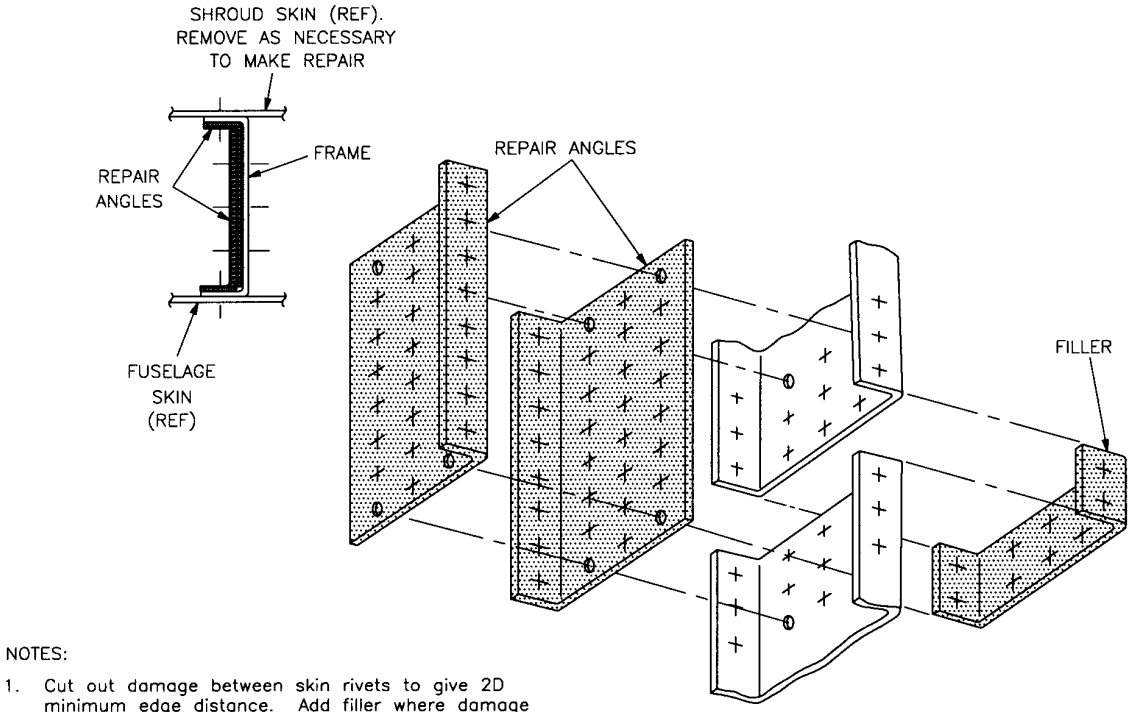

NOTES:

1. Cut out damage between skin rivets to give 2D minimum edge distance. Add filler where damage exceeds 1/4 inch in length.
2. Minimum edge distance is 2D. Minimum rivet spacing is 4D.

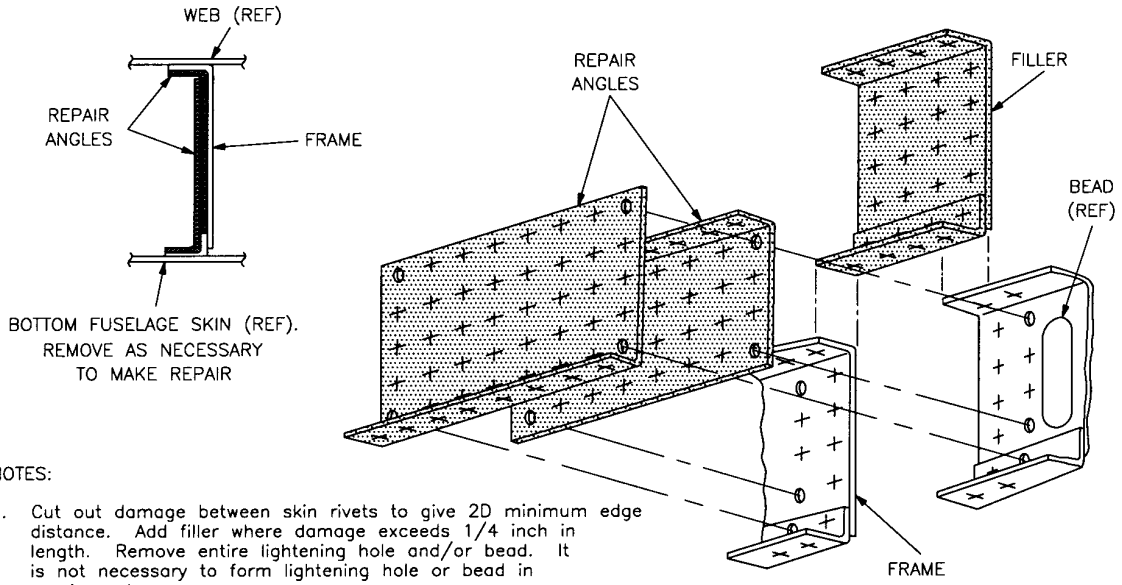

NOTES:

1. Cut out damage between skin rivets to give 2D minimum edge distance. Add filler where damage exceeds 1/4 inch in length. Remove entire lightening hole and/or bead. It is not necessary to form lightening hole or bead in repair angles.
2. Minimum edge distance is 2D. Minimum rivet spacing is 4D.
3. Heat-treat repair angles and filler after forming, as applicable.
4. Install with faying surfaces and all fasteners wet with MIL-S-81733, type I or IV sealant.

H0614799

Figure 3-16. Typical Channel Repairs (Sheet 1 of 3)

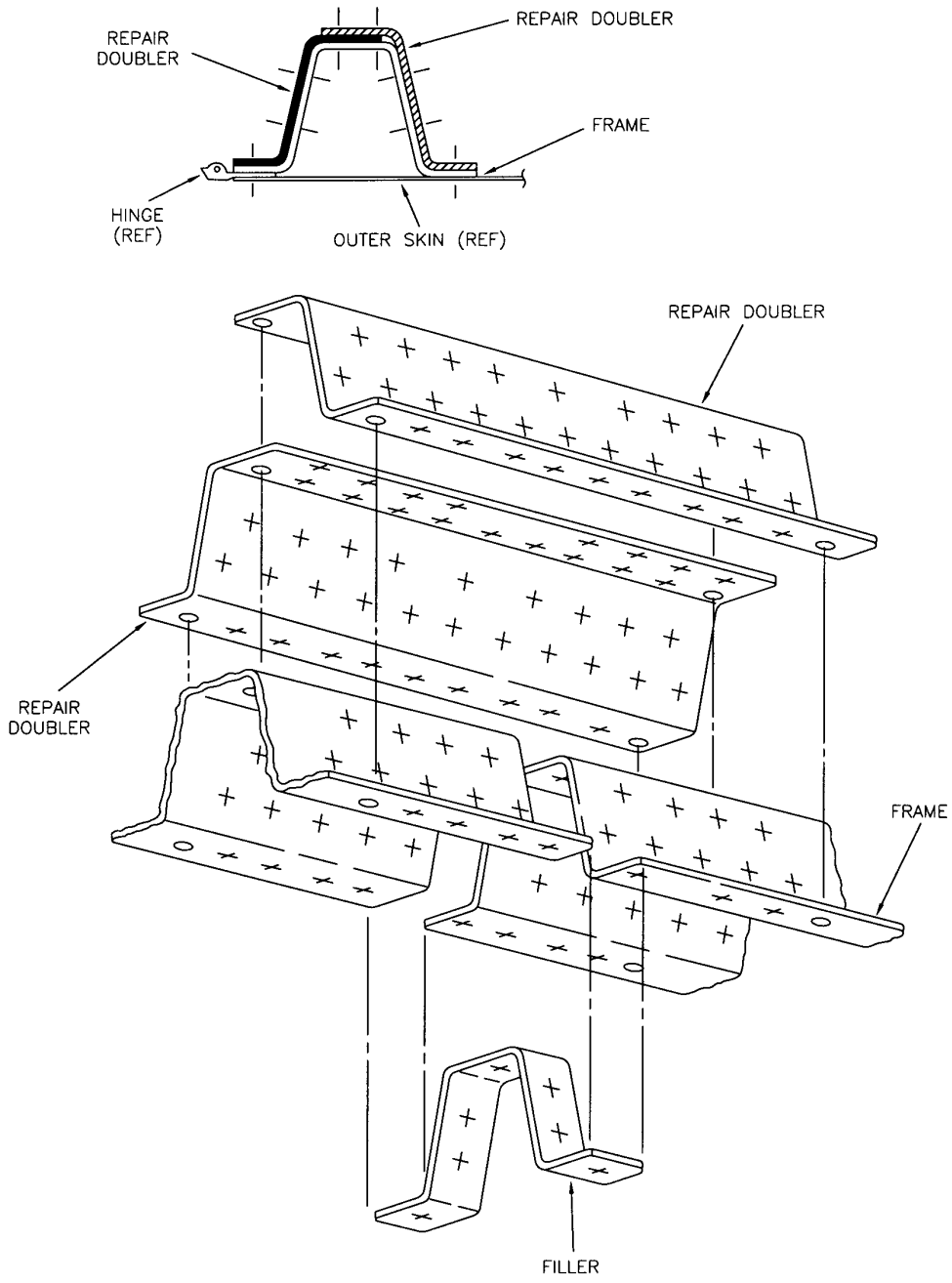

NOTES:

1. Cut out damage between skin rivets to give 2D minimum edge distance. Add filler where damage exceeds 1/4 inch in length.
2. Minimum edge distance is 2D. Minimum rivet spacing is 4D.
3. Install with faying surfaces and all fasteners wet with MIL–S–81733, type I or IV sealant.

H0616781

Figure 3-16. Typical Channel Repairs (Sheet 2)

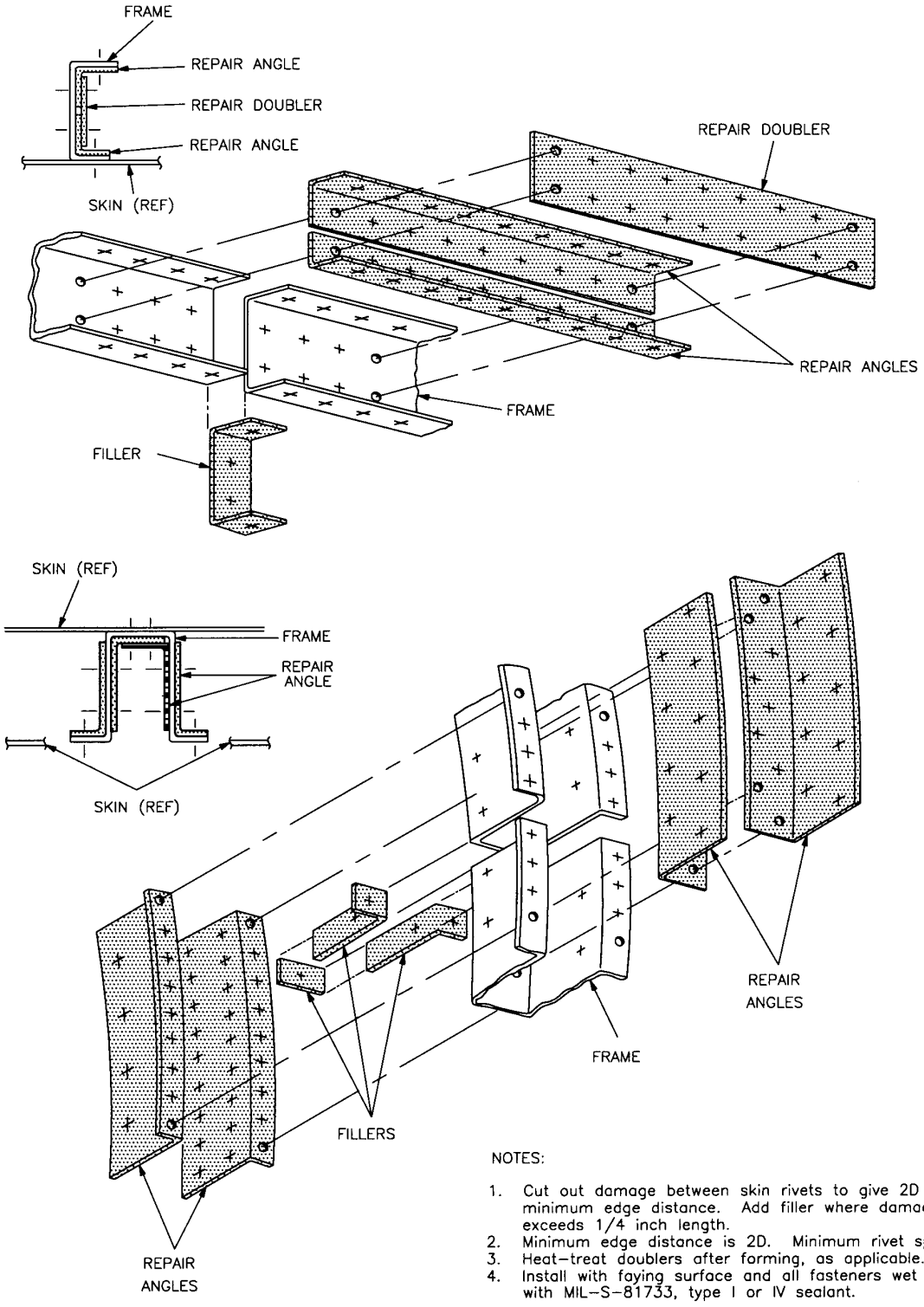

Figure 3-16. Typical Channel Repairs (Sheet 3)

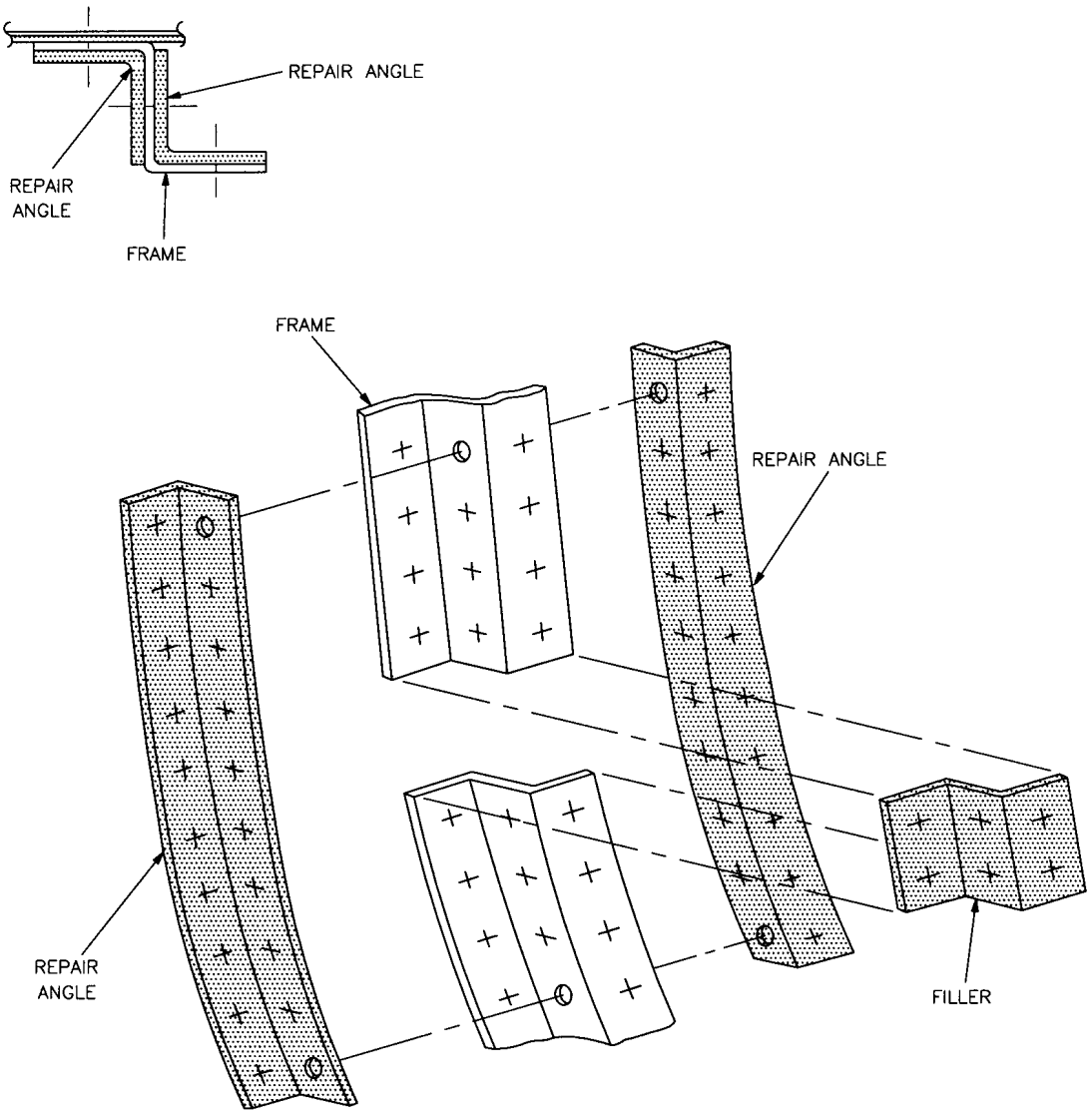

NOTES:

1. Cut out damage to give 2D minimum edge distance. Add filler where damage exceeds 1/4 inch in length.
2. Minimum edge distance is 2D. Minimum rivet spacing is 4D.
3. Install with faying surfaces and all fasteners wet with MIL–S–81733, type I or IV sealant.

H0614800

Figure 3-17. Typical Zee Repair (Sheet 1 of 2)

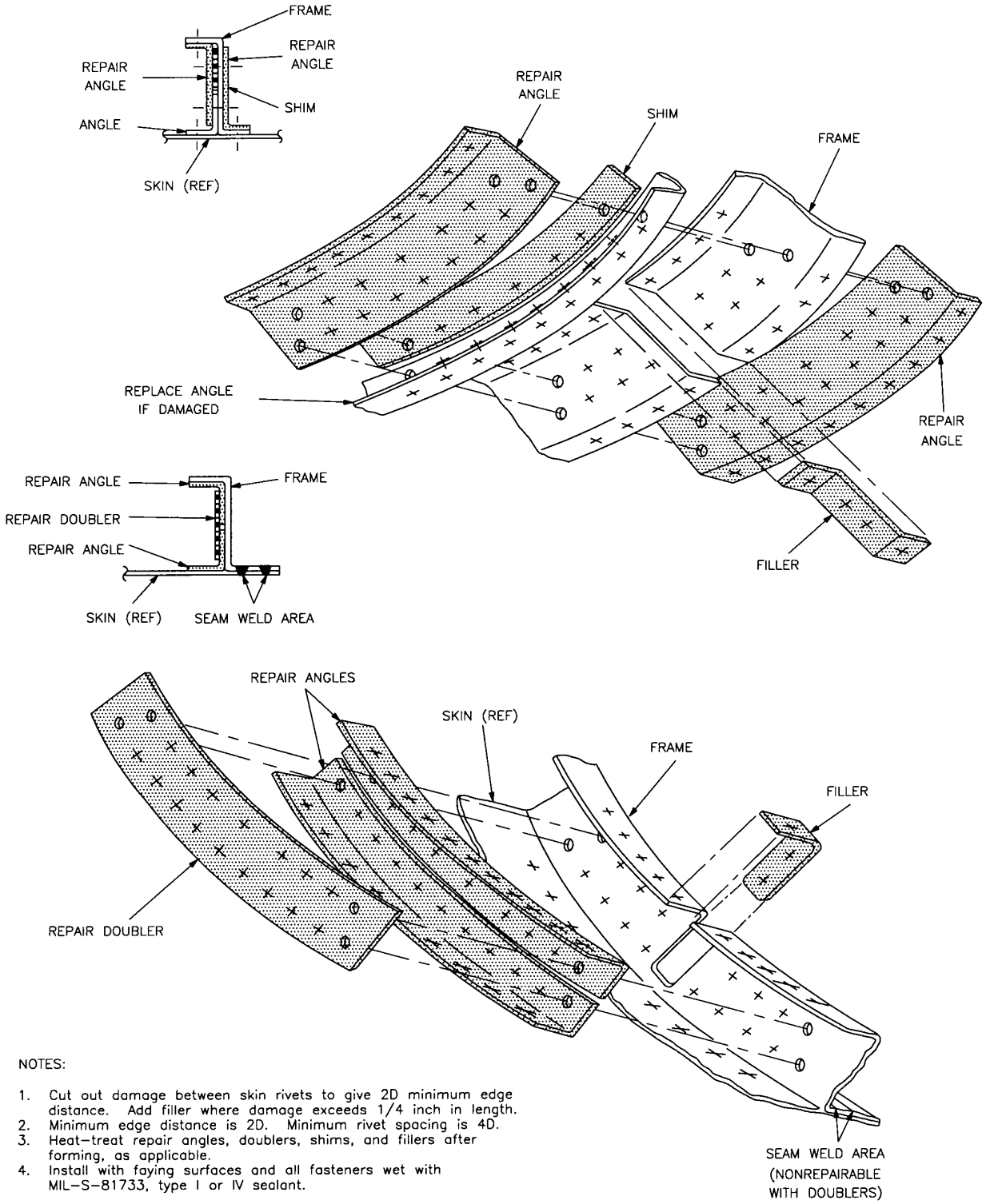

NOTES:

1. Cut out damage between skin rivets to give 2D minimum edge distance. Add filler where damage exceeds 1/4 inch in length.
2. Minimum edge distance is 2D. Minimum rivet spacing is 4D.
3. Heat-treat repair angles, doublers, shims, and fillers after forming, as applicable.
4. Install with faying surfaces and all fasteners wet with MIL-S-81733, type I or IV sealant.

H0616783

Figure 3-17. Typical Zee Repair (Sheet 2)

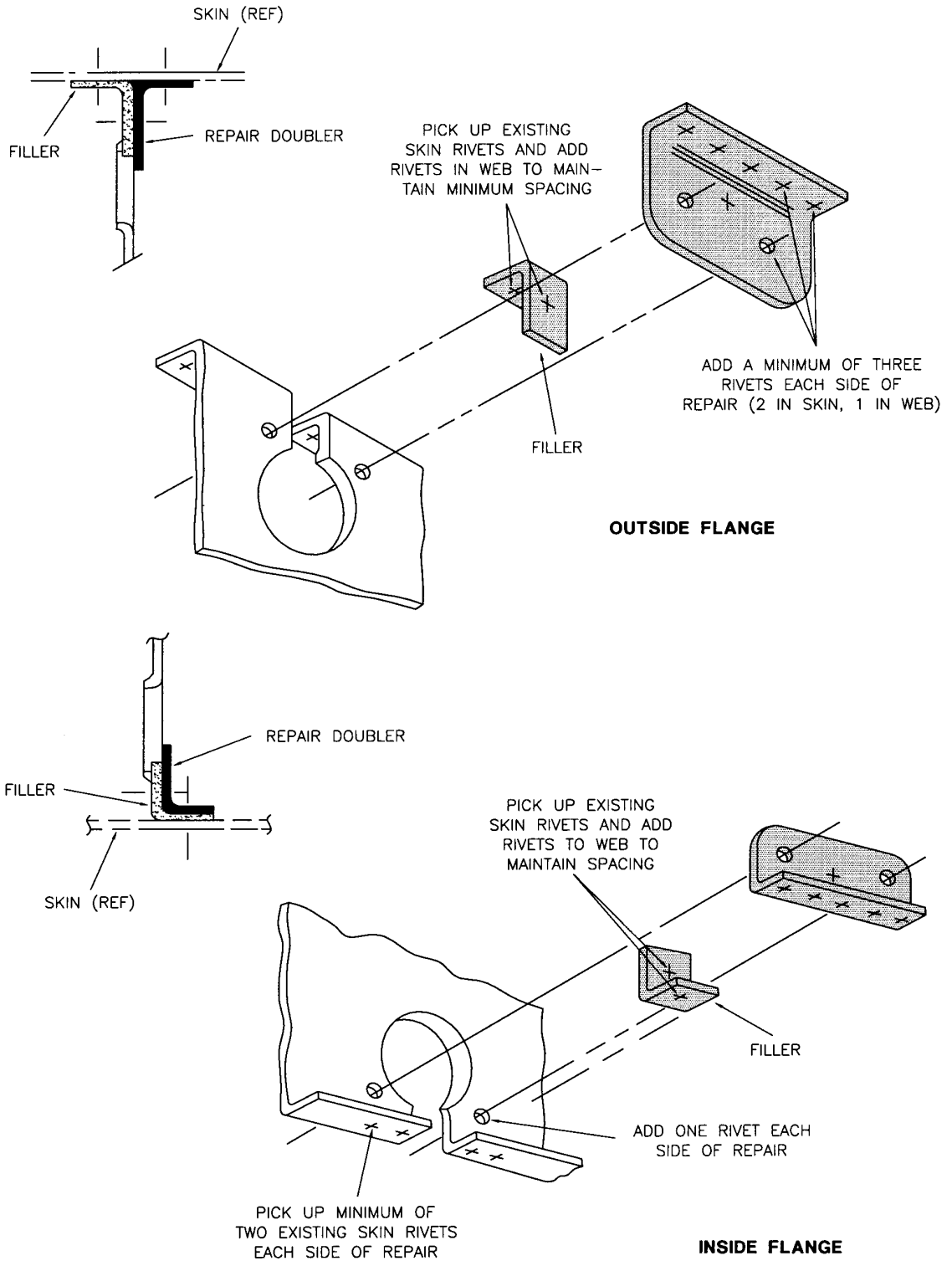

Figure 3-18. Typical Rib Repair

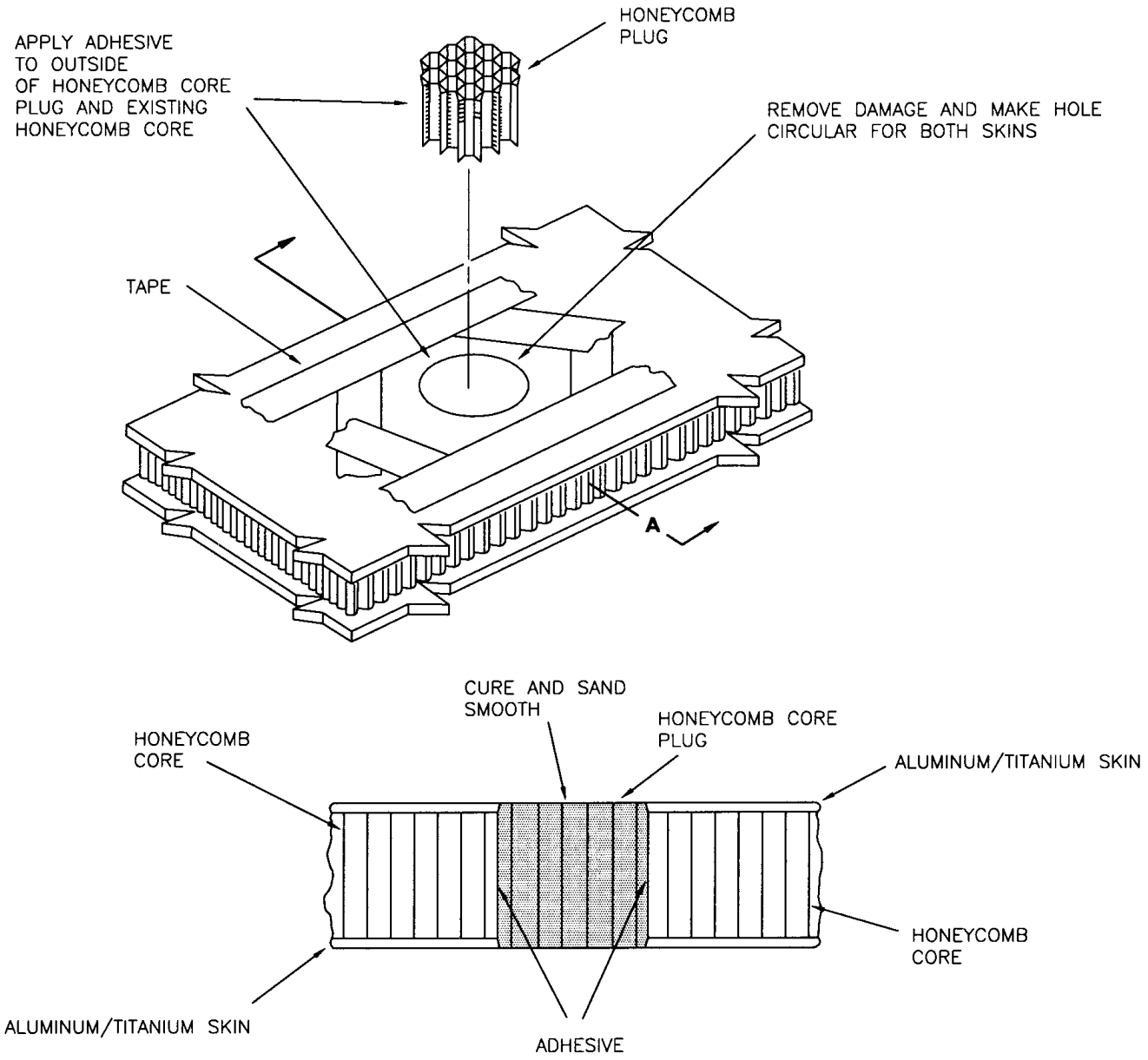

DAMAGED SKIN AND HONEYCOMB CORE REPLACEMENT REPAIR USING ADHESIVE

H0614802

Figure 3-19. Typical Aluminum Honeycomb Repair (Sheet 1 of 2)

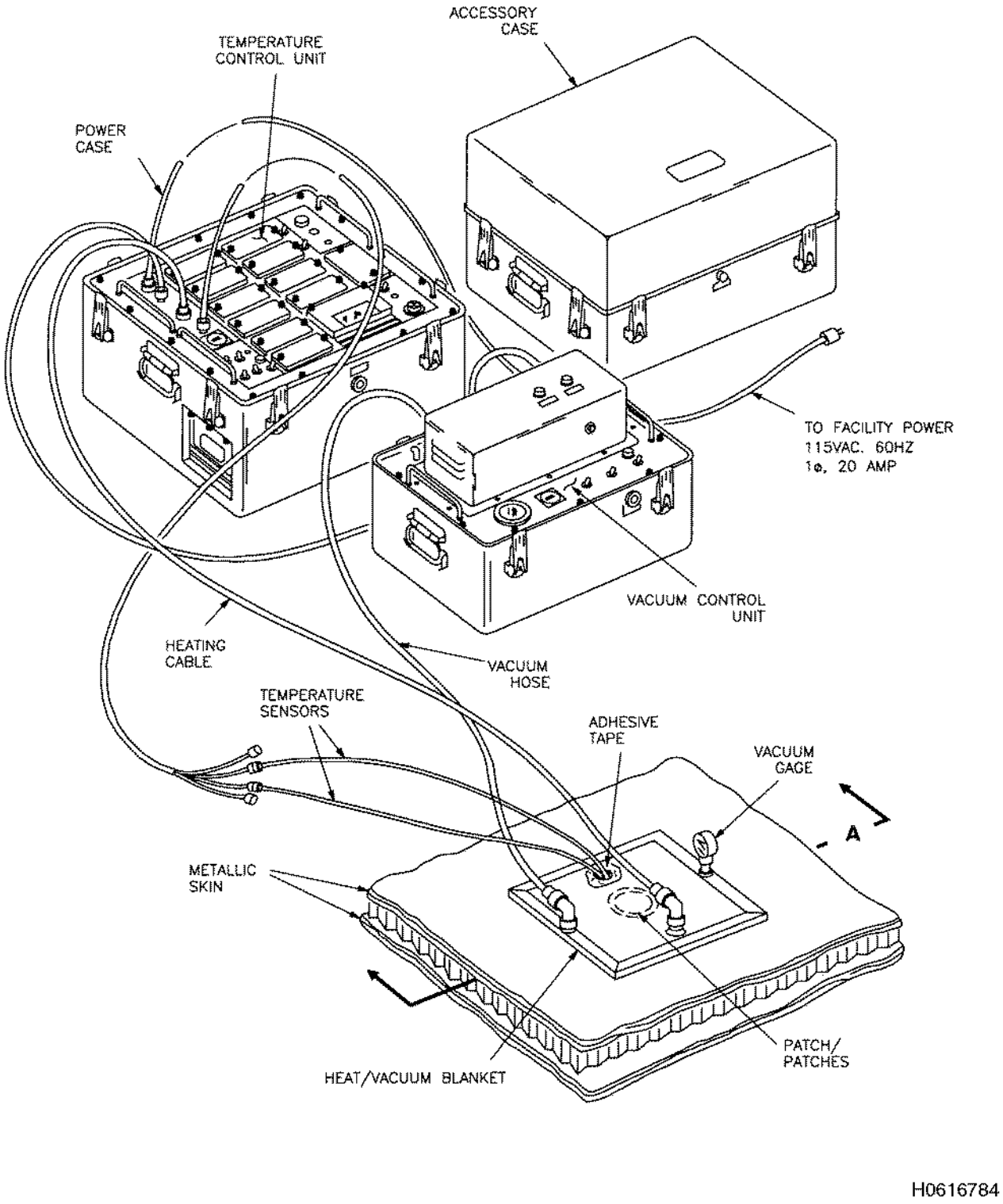

Figure 3-19. Typical Aluminum Honeycomb Repair (Sheet 2)

CHAPTER 4
MATERIALS AND THEIR IDENTIFICATION

4.1 MATERIAL SPECIFICATIONS.

No attempt is made in this chapter to cover all the materials used in aircraft construction. The materials that are discussed are the steels, aluminum alloys, titanium, magnesium, advanced composites, and plastics generally used in structural repair. For additional information about general data and usage factors, refer to TO 1-1A-9.

4.2 TERMINOLOGY.

4.2.1 Terms for the Study and Use of Materials. An understanding of the following terms is necessary when studying materials and their uses in aircraft construction. The terms described in the following paragraphs relate to physical characteristics:

4.2.1.1 Hardness. Hardness refers to the ability of a material to resist abrasion, penetration, indentation, or cutting. The wearing qualities of a material depend on its hardness. Hardness and strength are closely related properties. Parts such as bearings and stressed shafts must possess hardness to resist wear and strength to sustain loads.

4.2.1.2 Brittleness. Brittleness is that property of a material that permits little bending or deformation without fracture. Brittleness and hardness are closely associated.

4.2.1.3 Malleability. A metal that can be hammered, rolled, or pressed into various shapes without fracturing or sustaining other detrimental effects is said to be malleable. Malleability is necessary in sheet metal that is worked into curved shapes such as cowlings, fairings, and wing tips. Malleability and brittleness are opposite characteristics.

4.2.1.4 Ductility. Ductility is that property of a material permitting it to be permanently drawn, bent, or twisted into various shapes without resulting in a fracture. Wire used in control cables and electrical conductors is drawn from ductile material. Ductility is similar to malleability.

4.2.1.5 Elasticity. The property of elasticity enables a material to return to its original shape when the force that causes the shape change is removed. Elasticity is especially desirable in springs.

4.2.1.6 Toughness. A material that possesses toughness will withstand tearing or shearing. It may be stretched or otherwise deformed without fracturing. Toughness is a desirable property for aircraft materials.

4.2.1.7 Heat Conductivity. The heat conductivity of a material determines the heat-transfer rate within the material. Metals vary in their ability to conduct heat. Aluminum alloy has a relatively high rate of heat conductivity compared with most common aircraft metals.

4.2.1.8 Tension Stress. Tension stress is the force per unit area resulting from a tension load, which tends to stretch a structural member (refer to Figure 4-1). The strength of a member in tension is determined by the net area of the cross section that the tension stress acts upon. Net area is defined as the gross area minus that removed by drilling holes or by making other changes in the section. Placing rivets or bolts in holes does not make an appreciable difference in added strength, as the rivets or bolts will not transfer tensional loads across the holes into which they are inserted.

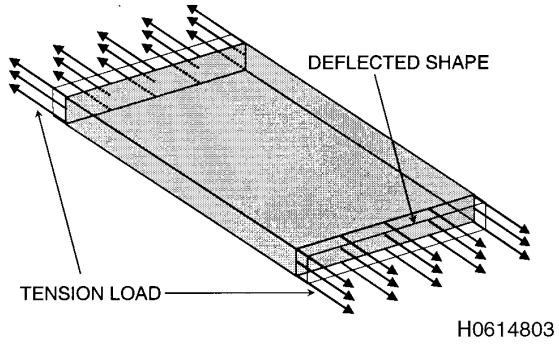

Figure 4-1. Tension Load Example

4.2.1.9 Tensile strength. The tensile strength of a material is its resistance to a force that tends to pull it apart. The ultimate tensile strength is measured in pounds per square inch and is calculated by dividing the load (in pounds) required to pull the material apart by its cross-sectional area (in square inches).

4.2.1.10 Compression stress. Compression stress is the force per unit area, resulting from a compression load, which tends to shorten (or compress) a structural member (refer to Figure 4-2). Under a compression load, an undrilled member will be stronger than an identical member with holes drilled through the thickness. However, if a plug of equivalent or stronger material is fitted tightly in the drilled hole, it will transfer compressive load across the hole. Thus, for compressive loads, the gross or total area may be used to determine the stress in a member if all holes are tightly plugged with equivalent or stronger material.

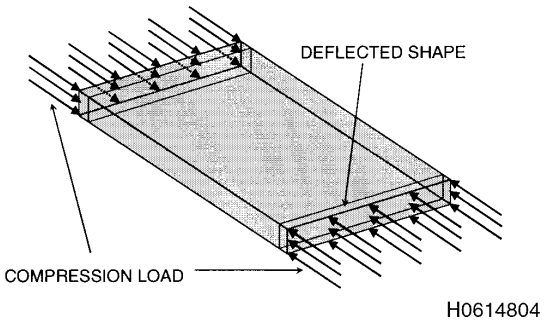

Figure 4-2. Compression Load Example

4.2.1.11 Compression Strength. The compression strength of a material is its resistance to a compression load. Compression strength is measured in pounds per square inch. Landing gear shock struts are subjected to compressive forces.

4.2.1.12 Shear Stress. Shear stress is the force per unit area, resulting from a shear load, which causes adjacent particles of material to slide past each other (refer to Figure 4-3). The term shear is used because it is a sideways stress similar to the type of stress that is put on a piece of paper or a sheet of metal when it is cut with a pair of shears. Shear stress concerns the aviation mechanic chiefly from the standpoint of rivet and bolt applications, particularly when attaching sheet stock. When a rivet or bolt used in a shear application gives way, it causes the riveted or bolted parts to slide sideways.

4.2.1.13 Shear Strength. The shear strength of a material is its resistance to a force that tends to cause one layer of material to slide over an adjacent layer. Two riveted plates that are under tension subject the rivets to a shear stress.

4.2.1.14 Bending Stress. Bending stress is a combination of tension and compression stresses. These stresses act on the cross section of the beam on opposite sides of the neutral axis. The neutral axis is the axis along the length of the beam, about which the beam bends. With tension on one side of the neutral axis and compression on the other, bending also results in shear stresses along the length of the beam. The largest shear stress occurs at the neutral axis (refer to Figure 4-4).

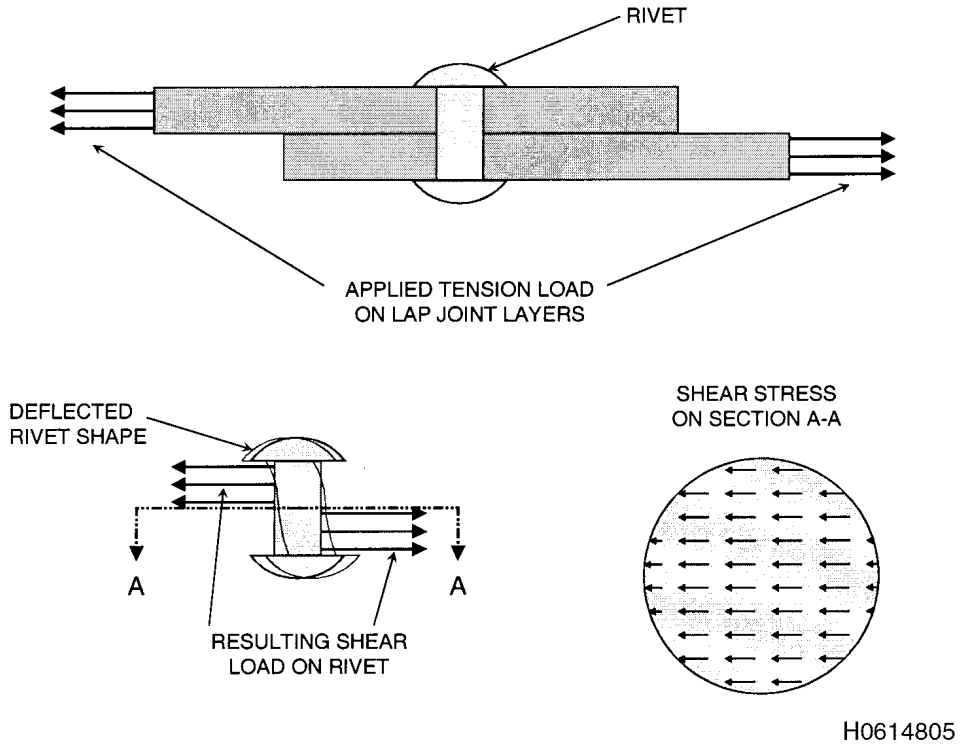

Figure 4-3. Shear Load Example

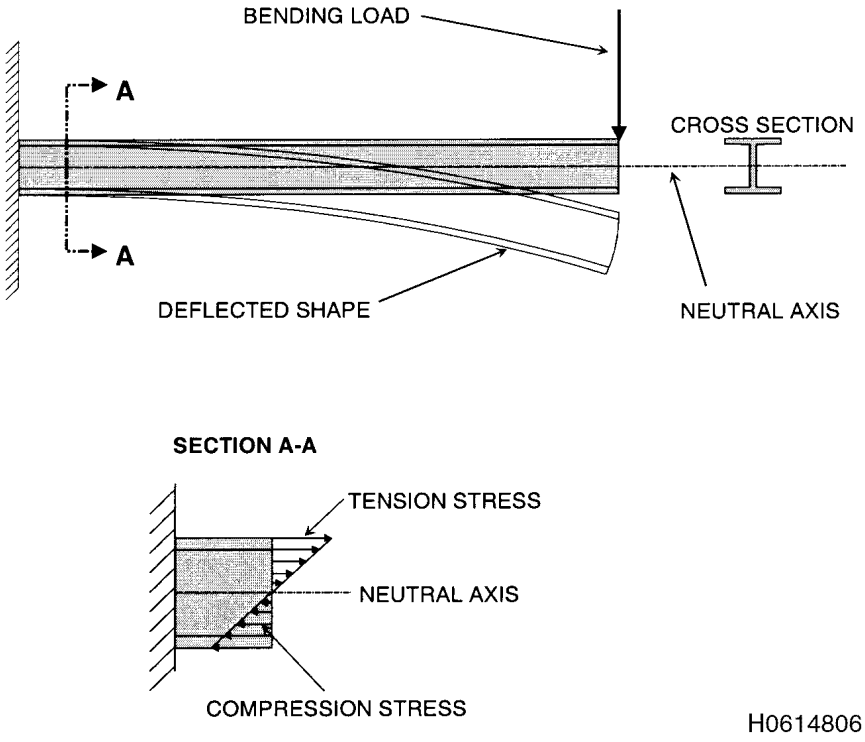

Figure 4-4. Bending Load Example

4.2.1.15 Bending Strength. The bending strength of material is the resistance it offers to the deflection caused by a bending load. Bending may be described as the deflection or curving of a member as a result of forces acting upon it.

4.2.1.16 Torsion Stress. Torsion stress is the force per unit area resulting from a torsion load, which tends to twist a structural member. The stresses arising from this action are shear stresses. These shear stresses are caused by the rotation of adjacent planes past each other around a common reference axis at right angles to these planes. This action may be illustrated by a rod that is fixed solidly at one end and twisted by a weight placed on a lever arm at the other. A shearing action is set up all along the rod, with the center line of the rod representing the neutral axis (refer to Figure 4-5).

4.2.1.17 Torsional Strength. The torsional strength of a material is its resistance to torsion. Torsion is a twisting force such as would occur in a member that is fixed at one end and twisted at the other.

4.2.1.18 Fatigue Resistance. Fatigue occurs in materials that are subjected to frequent reversals of loading or repeatedly applied loads. Repeated vibration or bending will ultimately cause a minute crack to occur at the weakest point of a material. As vibration or bending continues, the crack grows until the part fails completely. This is known as fatigue failure. The resistance to fatigue failure is known as fatigue resistance.

4.2.1.18.1 Fatigue Failure. Fatigue failures in aircraft parts may originate from a number of causes, which depend on design or processing. Many instances of failure may be traced to nicks, scratches, corrosion, or other damage to the surface of metals. To prevent fatigue failures, exercise care and avoid tool marks or other damage to metals.

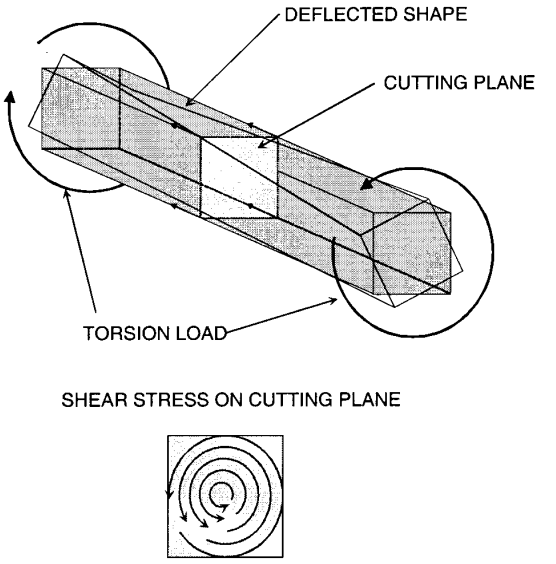

Figure 4-5. Torsion Load Example

4.2.1.19 Strength-Weight Ratio. The relationship between the strength of a material and its weight per cubic inch, expressed as a ratio, is known as the strength-weight ratio. This ratio helps determine the desirability of various materials designated for use in aircraft construction. Neither strength nor weight alone can be used as a means of true comparison or determination.

4.2.1.20 Work-hardening. The hardening of metals by cold-working or forming is called work-hardening. Stainless steel is hardened by cold-working and heat-treating. Bending or hammering copper tubing produces undesirable work-hardening characteristics. Vibration also produces undesirable work-hardening effects. To lessen the possibility of fracturing, these undesirable effects may be removed by annealing.

4.2.1.21 Heat Treatment. Heat treatment is a process that involves the heating and cooling of a metal (in its solid state) to obtain certain desirable properties. By heat treatment, a hard metal may be made soft, a ductile metal may be made elastic, or a soft metal may be made tough and strong. Heat treatment includes the processes of hardening, annealing, tempering, normalizing, case-hardening, and aging. For additional information about heat treatment, refer to TO 1-1A-9, Aerospace Metals — General Data and Usage Factors.

4.2.1.22 Ferrous Metals. The term ferrous applies to the group of metals having iron as the principal constituent (i.e., steels).

4.2.1.23 Nonferrous Metals. The term nonferrous refers to all metals where iron is not the principal constituent (e.g., aluminum, magnesium, titanium).

4.2.2 Steel.

4.2.2.1 Iron obtained directly from the smelting process contains an excess of carbon and other impurities that renders it undesirable for commercial use. After refining, only small amounts of carbon and impurities remain in the iron. This refining process greatly improves the physical properties of the metal, making it adaptable for industrial use.

4.2.2.2 The presence of limited quantities of carbon greatly affects the useful properties of iron. If carbon, in percentages ranging up to approximately 1 percent, is added to iron, the resulting product is vastly superior to iron in toughness, strength, and hardness and is classified as carbon steel. Heat-treating the various metals having carbon contents within this range can produce numerous types of carbon steels, ranging from mild to very hard. Small percentages of magnesium, silicon, sulfur, and phosphorous are also present in steel.

4.2.2.3 Carbon steel forms the base of the alloy steels that are produced by combining carbon steel with sufficient quantities of certain other elements known to improve the properties of steel. Silicon, manganese, nickel, vanadium, tungsten, molybdenum, and chromium are the common elements used. These elements are known as alloying elements. Each element imparts special properties to the alloy in which it is used. These elements alter the rate and temperature at which internal structural changes take place during the heat treatment, resulting in a finer quality of alloy. Except in rare instances, the superiority of steel alloys over carbon steels is demonstrated only after proper heat treatment.

4.2.2.4 Forms and Shapes of Steel. Steel stock is manufactured in the following forms: sheets, bars, rods, tubing, extrusions, formings, forgings, and castings. Refer to Table 4-1 for cross-references of steel specifications.

4.2.2.4.1 Sheet metal is made in a number of sizes and thicknesses. Specifications designate thickness in thousandths of an inch.

4.2.2.4.2 Bars and rods are supplied in a variety of cross-sectional shapes such as round, square, rectangular, hexagonal, and octagonal.

4.2.2.4.3 Tubing can be obtained in round, oval, rectangular, and streamlined cross-sectional shapes. The size of tubing is generally specified by outside diameter and wall thickness.

4.2.2.4.4 Extrusions are produced by forcing metal, under pressure, through dies having the desired cross-sectional shape.

4.2.2.4.5 Formings are manufactured from sheet metal, which is usually cold-formed in machines such as presses, bending brakes, draw benches, and rolls. Small angles, U-channels, and large, curved sections are produced in this manner.

4.2.2.4.6 Forgings are shaped or formed by pressing or hammering heated metal into dies. The forging process compresses the metal and increases the hardness.

4.2.2.4.7 Pouring molten metal into molds produces castings. Various machining operations are required to finish a casting before it is used.

4.2.2.4.8 Methods of Identifying Steel Stock. A numerical index system devised by the Society of Automotive Engineers (SAE) identifies the composition of SAE steels. Each SAE number consists of a group of digits. The first digit represents the type of steel; the second digit, the percentage of the principal alloying element; and the last 2 (or 3) digits, the percentage (in hundredths of one percent) of carbon in the alloy.

The common SAE symbols used to identify steel stocks are as follows:

Type of Steel	Classification
Carbon	1000 series
Nickel	2000 series
Nickel-chromium	3000 series
Molybdenum	4000 series
Chromium	5000 series
Chromium-vanadium	6000 series
Tungsten	7000 series
Silicon-manganese	9000 series

Examples of the application of SAE numbers are as follows:

- The SAE number 4150 indicates a molybdenum steel containing 1 percent molybdenum and 0.50 percent carbon.
- The SAE number 1010 denotes a carbon steel containing 0.10 percent carbon. The first zero indicates the lack of a principal alloying element, hence a plain carbon steel.
- The percentages indicated in the SAE number are average; for example, the carbon content of SAE 1050 steel may vary from 0.45 to 0.55 percent and is therefore indicated as 0.50 percent.

4.2.2.5 Aircraft Steels and their Uses.

4.2.2.5.1 Carbon Steels. Steel that contains carbon in percentages ranging from 0.10 to 0.30 percent is classified as low-carbon steel. Equivalent SAE designations range from 1010 to 1030. Steels of this grade are used for the manufacture of articles such as safety wire, certain nuts, cable bushings, and threaded rod ends. Low-carbon steel, in sheet form, is used for secondary structural parts and clamps and in tubular form for moderately stressed structural parts.

4.2.2.5.1.1 Steel that contains carbon in percentages ranging from 0.30 to 0.50 percent is classified as medium-carbon steel. This steel is especially adaptable for machining, forging, and areas where surface hardness is important. Certain rod ends, light forgings, and parts such as Woodruff keys are made from SAE 1035 steel.

4.2.2.5.1.2 Steel that contains carbon in percentages ranging from 0.50 to 1.05 percent is classified as highcarbon steel. The addition of other elements in varying quantities adds to the hardness of this steel. In its fully heat-treated condition, high-carbon steel is very hard and will withstand high shear and wear with little deformation. It has limited use in aircraft construction. SAE 1095, in sheet form, is used for making flat springs and, in wire form, is used for making coil springs.

4.2.2.5.2 Nickel Steels. Combining nickel with carbon steel produces various nickel steels. Steel that contains from 3.00 to 3.75 percent nickel is commonly used. Nickel increases the hardness, tensile strength, and elastic limit of steel without appreciably decreasing the ductility. It also intensifies the hardening effect of heat treatment. SAE 2330 steel is used extensively for aircraft parts such as bolts, terminals, keys, clevises, and pins.

4.2.2.5.3 Chromium Steels. Chromium steel has high hardness, strength, and corrosion resistance properties. SAE 51335 steel is particularly adaptable for heat-treated forgings, which require greater toughness and strength than may be obtained in plain carbon steel. Chromium steel may be used for articles such as the balls and rollers of antifriction bearings.

4.2.2.5.4 Chrome-nickel Steels. Chromium and nickel in various proportions, when mixed with steel, form the chrome-nickel steels. The general ratio for nickel to chromium is approximately 2.5:1. For all ordinary steels in this group, the chromium content ranges from 0.45 to 1.25 percent, while the nickel content ranges from 1 to 2 percent. Both nickel and chromium influence the properties of steel. Nickel toughens it, while chromium hardens it. Chrome-nickel steel is used for machined and forged parts that require strength, ductility, toughness, and shock-resistance. Parts such as crankshafts and connecting rods are made of SAE 3140 steel.

4.2.2.5.4.1 Chrome-nickel steel that contains approximately 18 percent chromium and 8 percent nickel is known as corrosion-resistant steel. In plate and sheet form, it is used extensively in the fabrication of engine exhaust stacks, collector rings, and manifolds.

Table 4-1. Cross-Reference of Steel Specifications

SAI/AISI	Form	Federal	Military	SAE AMS	ASTM
1020	Bars		MIL-S-11310		A108
	Bars and Slabs		DOD-F-24669		
	Bars Plate (Carbon)				
	Sheet and Strip	QQ-S-698	MIL-S-7952	5046	A827
	Tubing		MIL-T-3520		A568
	Wire			5032E	A853
	Wire (Carbon)	QQ-W-405			A809
1022	Bars		MIL-S-11310		
	Bars, Blooms, and Billets		DOD-F-24669		
	Bars and Forgings			5070	
	Plate				A515
	Sheet and Strip	QQ-S-698 (Low-carbon)	MIL-S-46049		
	Sheet and Strip	QQ-S-698 (Carbon)			
		QQ-S-700			
		QQ-S-777			
1025	Bars		MIL-S-11310		A108
	Castings		MIL-C-24707		A27
	Sheet and Strip	QQ-S-698	MIL-S-7952		
	Tubing			5075	
			MIL-T-5066	5077	
1035	Bars, Forgings, and Tubing			5080	
	Bars, Blooms, and Slabs		MIL-S-16788		
	Bars and Forgings			5122	A29
	Sheet and Strip	QQ-S-698	MIL-S-7947	5121	
	Wire	QQ-W-428			A228
4130	Bars and Slabs		DOD-F-24669		
	Bars, Rods, and Forgings		MIL-S-6758	6370	A304
	Plate, Sheet, and Strip			6350/6351	A829
	Tubing			6361	
	Wire				A547
4135	Bars and Blooms		DOD-F-24669		
	Tubing		MIL-T-6735	6365	
4140	Bars, Blooms, and Billets		DOD-F-24669		
	Bars, Rods, and Forgings			6382/6349	
	Tubing			6381	
4340	Bars, Blooms, and Billets		DoD-F-24669		

Table 4-1. Cross-Reference of Steel Specifications - Continued

SAI/AISI	Form	Federal	Military	SAE AMS	ASTM
	Bars and Forgings			6415	
	Plate, Sheet, and Strip			6415	
	Tubing			6415	
8630	Bars and Slabs		DoD-F-24669		
	Bars and Forgings		MIL-S-6050	6280	
	Plate, Sheet, and Strip			6350/6351	
	Tubing		MIL-T-6736	6360/6361	
8735	Bars and Forgings		MIL-S-6098		
	Plate, Sheet, and Strip			6357	
	Tubing			6282	
8740	Bars and Forgings		MIL-S-6049	6322	
	Plate, Sheet, and Strip			6358	
	Tubing			6323	
Type 301	Plate, Sheet, and Strip			5901	A240/ A665/ A693
Type 302	Bars, Shapes, and Forgings	QQ-S-763			
	Cotter Pins	FF-P-386		7210	
	Plate, Sheet, and Strip				A167
	Rivets			7228	
Type 303	Bars, Shapes, and Forgings	QQ-S-763		5640	
Type 304	Plate, Sheet, and Strip		MIL-S-4043	5564/5566	A240
	Tubing		MIL-T-6845	5567	
			MIL-T-8504	5560	
			MIL-T-8506	5565	
			MIL-T-5695		
	Wire			5913	A167
Type 316	Bar, Shapes, and Forgings	QQ-S-763	MIL-S-7720	5648	
	Castings			5361	
	Plate, Sheet, and Strip		MIL-S-5059	5524/5907	
	Tubing			5573	
Type 321	Bars and Shapes	QQ-S-1053		5570/5560	
	Forgings and Tubing				
	Plate, Sheet, and Strip			5510	
	Tubing	WW-H-1053	MIL-T-8606	5570/5560	
Type 347	Bars and Shapes	QQ-S-763			
	Forgings and Tubing		MIL-T-8606	5560	
	Plate, Sheet, and Strip				
	Rivets			7729	
	Welding Rods and Wire (AWS A5.9 and A5.14)			5681	

Table 4-1. Cross-Reference of Steel Specifications - Continued

SAI/AISI	Form	Federal	Military	SAE AMS	ASTM
Type 416	Bars, Shapes, and Forgings	QQ-S-763		5610	
Type 431	Bars, Shapes, and Forgings	QQ-S-763			
	Castings			5372	
Type 440	Bars, Shapes, and Forgings	QQ-S-763		5631	
	Castings			5352	
Tool Steels					
High Speed	Classes T and M				A600
Alloy	Classes H, A, D, O, S, F, and L				A681
Carbon	Class W				A686
Precipitation-Hardened Stainless Steels					
15-5PH	Bars, Wire, and Forgings			5659	
	Rings and Extrusions				
	Plate, Sheet, and Strip			5862	
	Investment Castings			5400	
17-4PH	Plate, Sheet, and Strip			5604	
	Bars, Forgings, and Rings			5643	
	Investment Castings			5342	
	Sand Castings			5398	
17-7PH	Bars and Forgings			5644	
	Sheet and Strip			5529	

4.2.2.5.5 Chrome-vanadium Steels. Chrome-vanadium steel contains approximately 0.18 percent of vanadium and approximately 1 percent of chromium. Chrome-vanadium steels, when heat-treated, have strength, toughness, and resistance to wear and fatigue. A special grade of this steel in sheet form can be cold-formed into intricate shapes. It can be folded and flattened without signs of breaking or failure. Chrome-vanadium steel that has medium-high carbon content (SAE 6150) is used to make springs. Chrome-vanadium steel with high carbon content (SAE 6195) is used for ball and roller bearings.

4.2.2.5.6 Chrome-molybdenum steels. Molybdenum in small percentages is used in combination with chromium to form chrome-molybdenum steel. The molybdenum content of chrome-molybdenum steels is only 0.15 to 0.25 percent. The chromium content ranges from 0.80 to 1.10 percent. This steel has important applications for aircraft. Molybdenum raises the ultimate strength of steel without affecting ductility or workability. Molybdenum steels are tough, wear-resistant, and hardened throughout from heat treatment. They are especially adaptable for welding and, for this reason, are used principally for welded structural parts and assemblies. Tubing made from SAE 4130 steel is used for structural parts such as welded fuselages, engine mounts, and gear structures.

4.2.3 Aluminum.

4.2.3.1 Aluminum and its Alloys.

4.2.3.1.1 In its pure state, aluminum is lightweight, lustrous, and corrosion-resistant. The thermal conductivity of aluminum is very high. It is ductile, malleable, and nonmagnetic. Commercial aluminum, usually referred to as pure aluminum, ordinarily contains not more than 1 percent of other elements (e.g., iron, silicon). These elements in such small percentages are regarded as impurities.

4.2.3.1.2 Aluminum, when combined with various percentages of other metals (generally copper, manganese, and

magnesium), forms the aluminum alloys that are used in aircraft construction. Aluminum alloys are lightweight and strong. They do not possess the corrosion resistance of pure aluminum and are usually treated to prevent deterioration. Alclad aluminum is an aluminum alloy with a protective cladding of aluminum to improve its corrosion resistance.

4.2.3.1.3 To provide a visual means for identifying the various grades of aluminum and aluminum alloys procured and stored by the services, such metal is marked with symbols. The symbols that are used consist of either the service specification number and the temper or condition furnished, or the commercial code marking. The commercial code marking consists of a letter and a number. The letter, which precedes the number, indicates a modification of the alloy. The number identifies the particular composition of the metal (refer to Table 4-2).

4.2.3.1.4 The aluminum and various aluminum alloys, in wrought form, used in aircraft construction are as follows:

- Aluminum designated by the symbol 1100 is used where strength is not an important factor but where weight economy and corrosion resistance are desired. This aluminum is used for fuel tanks, cowlings, and oil tanks. It is also used for repairing wing tips and tanks. This material is weldable.
- Alloy 3003 is similar to 1100 and is generally used for the same purposes. It contains a small percentage of manganese and is stronger and harder than 1100 aluminum.
- Alloy 2014 is used for heavy-duty forgings, plates, extrusions for aircraft fittings, wheels, and major structural components. This alloy is often used for applications requiring high strength and hardness, as well as for service at elevated temperatures.
- Alloy 2017 is used for rivets. This material is now in limited use.
- Alloy 2024, with or without Alclad coating, is used for aircraft structures, rivets, hardware, machine screw products, and other miscellaneous structural applications. In addition, this alloy is commonly used for heat-treated parts, airfoil and fuselage skins, extrusions, and fittings.
- Alloy 2025 is used extensively for propeller blades.
- Alloy 2219 is used for fuel tanks, aircraft skin, and structural components. This material has high fracture toughness and is readily weldable. Alloy 2219 is also highly resistant to stress corrosion cracking.
- Alloy 5052 is used where good workability, very good corrosion resistance, high fatigue strength, weldability, and moderate static strength are desired. This alloy is used for fuel, hydraulic, and oil lines.
- Alloy 5056 is used for making rivets and cable sheathing and in applications where aluminum comes into contact with magnesium alloys. Alloy 5056 is generally resistant to the most common forms of corrosion.
- Cast aluminum alloys are used for cylinder heads, crankcases, fuel injectors, carburetors, and landing wheels.
- Various alloys, including 3003, 5052, and 1100 aluminum, are hardened by cold-working rather than by heat treatment. Other alloys, including 2017 and 2024, are hardened by heat treatment, cold-working, or a combination of the two. Various casting alloys are hardened by heat treatment.
- Alloy 6061 is generally weldable by all commercial procedures and methods. It also maintains acceptable toughness in many cryogenic applications. Alloy 6061 is easily extruded and is commonly used for hydraulic and pneumatic tubing.
- Although higher in strength than 2024, alloy 7075 has a lower fracture toughness and is generally used in tension applications where fatigue is not critical. The T6 temper of 7075 should be avoided in corrosive environments. However, the T7351 temper of 7075 has excellent stress corrosion resistance and better fracture toughness than the T6 temper. The T76 temper is often used to improve the resistance of 7075 to exfoliation corrosion.

Table 4-2. Basic Temper Designations and Subdivisions for Aluminum Alloys

Nonheat-Treatable Alloys		Heat-Treatable Alloys	
TD*	**Description**	**TD***	**Description**
-F	As-fabricated (wrought products) or as-cast (cast products). For wrought products, there are no mechanical-property limits.	-F	As-fabricated (wrought products) or as-cast (cast products). For wrought products, there are no mechanical-property limits.
-O	Annealed, recrystallized (wrought products only).	-O	Annealed, recrystallized (wrought products only).
-H111	Strain-hardened less than the amount required for a controlled -H11 (eighth-hard) temper.	-T2	Annealed (castings only).
-H112	As-fabricated, with specified mechanical-property limits	-T3	Solution heat-treated and then cold-worked by the flattening or straightening operation.
-H12	Strain-hardened to quarter-hard temper.	-T36	Solution heat-treated and then cold-worked by reduction of approximately 6%.
-H14	Strain-hardened to half-hard temper.	-T4	Solution heat-treated and then naturally aged to a substantially stable condition.
-H16	Strain-hardened to three-quarter-hard temper.	-T42	Solution heat-treated by the user (regardless of prior temper) and then naturally aged to a substantially stable condition.
-H18	Strain-hardened to full-hard temper, approximately 75% reduction of area.	-T6	Solution heat-treated and then artificially aged.
-H22	Strain-hardened, then partially annealed to quarter-hard temper.	-T61	Modification of -T6 temper resulting in significantly altered characteristics in the product.
-H24	Strain-hardened, then partially annealed to half-hard temper.	-T62	Solution heat-treated by the user (regardless of prior temper) and then artificially aged.
-H26	Strain-hardened, then partially annealed to three-quarter-hard temper.	-T73	Solution heat-treated and then artificially aged for acceptable resistance to stress-corrosion cracking.
-H28	Strain-hardened, then partially annealed to full-hard temper.	-T74	Solution heat-treated, stress relieved, and then overaged for improved resistance to intergranular corrosion and stress-corrosion cracking.
-H311	Strain-hardened less than the amount reuired for a controlled -H31 (eighth-hard) temper and then stabilized.	-T76	Solution heat-treated, stress relieved, and then overaged for improved resistance to exfoliation corrosion and stress-corrosion cracking.
-H32	Strain-hardened and then stabilized, resulting in a quarter-hard temper.	-T81	Solution heat-treated, cold-worked by the straightening or flattening operation, and then artificially aged.
-H321	Strain-hardened less than the amount required for a controlled -H32 temper and then stabilized.	-T86	Solution heat-treated, cold-worked by reduction of approximately 6%, and then artificially aged.
-H323	For alloys containing over 4% magnesium, a variation of an -H32 temper for acceptable resistance to stress-corrosion cracking.	-T87	Solution heat-treated, cold-worked by reduction of approximately 7%, and then artificially aged.
-H34	Strain-hardened and then stabilized, resulting in a half-hard temper.	-TX51	Stress-relieved by stretching to produce up to 3% permanent set (depending on product), following solution heat treatment.

Table 4-2. Basic Temper Designations and Subdivisions for Aluminum Alloys - Continued

Nonheat-Treatable Alloys		Heat-Treatable Alloys	
TD*	**Description**	**TD***	**Description**
-H343	For alloys containing over 4% magnesium, a variation of an -H34 temper for acceptable resistance to stress-corrosion cracking.	-TX510	For extrusions, products that receive no further straightening after stress-relieving by stretching.
-H36	Strain-hardened and then stabilized, resulting in a three-quarter-hard temper.	-TX511	For extrusions, products that receive minor straightening after stress-relieving by stretching.
-H38	Strain-hardened and then stabilized, resulting in a full-hard temper.	TX52	Stress-relieved by compressing to product up to 5% permanent set, following solution heat treatment.
*Temper designation			

4.2.3.1.5 Refer to Tables 4-3 and 4-4 for additional information about aluminum alloys and their properties.

4.2.3.1.6 All aluminum base sheets will be marked with the specification number or code on approximately every square foot of material. If this identification is not on the material, it is possible to separate the heat-treatable alloys from the non-heat-treatable alloys by immersing a sample of the material in a 10 percent solution of caustic soda (sodium hydroxide). The heat-treatable alloys will turn black because of the copper content, whereas the others will remain bright. This test applies to the alloys containing copper. For Alclad, the surface will remain bright, except for a dark area in the middle when viewed from the edge.

4.2.4 Titanium.

4.2.4.1 Titanium and its Alloys. Titanium, in its mineral state, is the fourth most abundant structural metal in the earth's crust. It is light, nonmagnetic, strong, corrosion-resistant, and ductile. Titanium lies between the aluminum alloys and stainless steels insofar as modulus, density, and strength at intermediate temperatures are concerned. At normal atmospheric temperatures, commercially pure titanium and titanium alloys have excellent corrosion resistance to sea water and marine atmospheres. Most alloys are subject to stress corrosion cracking at elevated temperatures.

4.2.4.1.1 Titanium and its alloys are used chiefly for parts that require good corrosion resistance, moderate strength up to 600°F (315°C), and light weight. Because of its relatively high cost, titanium is used only where outstanding advantages will be realized.

4.2.4.1.2 Commercially pure titanium is formed at temperatures that range from 400© to 600°F (204° to 315°C), particularly where large deformations are necessary. Commercially pure titanium sheet may be formed by hydropress, stretch press, brake roll forming, drop hammer, and other similar operations. It is more difficult to form than annealed stainless steel.

4.2.4.1.3 If titanium is not available for a repair, the substitute material should be 4130, 4140, 4340, or 8630 steel of the same gage.

4.2.4.1.4 Monel rivets or standard close-tolerance steel fasteners should be used when installing titanium parts.

4.2.4.1.5 Titanium alloy, 6AL-4V, has the following nominal chemical composition:

- Aluminum - 6 percent
- Vanadium - 4 percent
- Titanium - balance

The alloy sheet can be formed, to a limited extent, at room temperature. Severe deformation occurs at elevated temperatures up to 1500°F (805°C). Because quenching introduces serious distortion, the material is formed in the annealed condition if the strength of the finished part is acceptable without subsequent heat treatment. Stress relieving is required after forming. Mechanical properties for titanium can be found in Table 4-5.

4.2.4.2 Titanium Use. Avoid using titanium and its alloys in contact with either liquid oxygen or gaseous oxygen at cryogenic temperature, because a crack, rupture, or impact may start a violent reaction. In gaseous oxygen, a partial pressure of about 50 psi is sufficient to ignite a fresh titanium surface over the temperature range from -250°F (-157°C) to room temperature or higher.

Table 4-3. Cross-Reference for Common Aluminum Alloys

Alloy	Form	Federal	Military	SAE AMS	ASTM
2014	Bars, Rods, and Shapes	QQ-A-225/4		4121	B211
	Plate and Sheet (Clad)	QQ-A-250/3		4028	B209
2024	Bars, Rods, and Shapes (Extruded)	QQ-A-200/3		4152	B221
	Bars, Rods, and Shapes (Rolled)	QQ-A-225/6		4120	B211
	Plate and Sheet (Clad)	QQ-A-250/6		4040	B209
	Tubing	WW-T-700/3		4087	B210
2219	Plate and Sheet	QQ-A-250/30		4031	B209
3003	Bars, Rods, and Shapes (Extruded)	QQ-A-200/1			B221
	Bars, Rods, and Shapes (Rolled)	QQ-A-225/2			B211
	Plate and Sheet	QQ-A-250/2		4006	B209
	Tubing	WW-T-700/2		4065	B210
5052	Bars, Rods, and Wire	QQ-A-225/7		4114	B234
	Plate and Sheet	QQ-A-250/8		4015	B209
	Tubing (Drawn seamless)	WW-T-700		4070	B210
6061	Bars, Rods, Shapes, and Tubing (Extruded)	QQ-A-200/8 and 16		4150	B221
	Bars, Rods, and Shapes (Rolled)	QQ-A-225/8		4115	B211
	Forgings	QQ-A-367			
	Plate and Sheet	QQ-A-250/11			B209
	Plate and Sheet (Clad)			4022	B209
	Tubing (Drawn)	WW-T-700/6	MIL-T-7081	4080	B210
7050	Forgings			4050/4107/4108	
	Plate			4050/4201/4108	
	Extrusions			4340/4341/4342	
7075	Bar, Rod, and Shapes	QQ-A-200/11		4154	B221
	Bar, Rod Shapes and Wire	QQ-A-225/9		4122	B211
	Forgings	QQ-A-367	MIL-A-22771		B247
	Plate and Steel	QQ-A-250/12		4044	B209
	(Clad)	QQ-A-250/13			B209
	(Clad-1 side)	QQ-A-250/18		4046	B209
		WW-T-700/7			
7079	Forgings	QQ-A-367			
	Plate and Sheet (Clad)	QQ-A-250/17 and 23			
7150	Plate			4306/4252	
	Forgings			4333	
	Extrusions			4307/4345	

Table 4-3. Cross-Reference for Common Aluminum Alloys - Continued

Alloy	Form	Federal	Military	SAE AMS	ASTM
7178	Bars and Shapes	QQ-A-200/14			B221
	Plate and Sheet	QQ-A-250/14, 21, and 22			B209
	Plate and Sheet (Clad)	QQ-A-250/15		4051	
355	Sand Cast			4210	B26
	Mold Cast			4280	B108
	Die Cast				B85
C355			MIL-A-21180		
356	Casting	QQ-A-596/ QQ-A-601	MIL-A-21180	4285	4217
A356					4218
357	Welding Wire		MIL-A-21180		4246

Table 4-4. Typical Mechanical Properties of Common Aluminum Alloys

(All Properties Are Measured in the Longitudinal Direction)

Alloy Temper (Form)	Tensile Strength (ksi)	Yield Strength (ksi)	Shear Strength (ksi)	Elongation (%)
2014-T6 and 2014-T62 (Sheet)	70	60	42	13
2014-T62 (Plate)	69	61	41	6
2014-T6 and T62 (Clad-Sheet)	68	60	41	10
2014-T6 (Die Forging)	65	56	40	6
2014-T6 (Extrusion)	61	55	42	7
2024-T3	70	50	40	18
2024-T4	68	47	41	20
2024-T42	68	49	41	20
2024-T861 (Sheet)	75	71	45	6
2024-T3	65	45	40	18
2024-T4 (Clad-Sheet)	64	42	40	19
2024-T62	61	48	37	5
2024-T81	65	60	40	6
2024-T861 (Clad-Sheet and Plate)	65	60	42	6
2024-T3 (Extrusion	60	45	31	12
2024-T3 (Tubing)	64	43	39	12

Table 4-4. Typical Mechanical Properties of Common Aluminum Alloys - Continued

Alloy Temper (Form)	Tensile Strength (ksi)	Yield Strength (ksi)	Shear Strength (ksi)	Elongation (%)
2219-T62 (Sheet)	60	42	37	10
2219-T851 (Sheet and Plate)	66	51	41	10
3003-H12	17	12	10	7
3003-H14	22	21	14	8
3003-H16	24	21	13	4
3003-H18 (Sheet and Plate)	29	27	16	4
5052-H32	31	23	19	7
5052-H34	38	31	21	10
5051-H36	37	29	22	4
5052-H38 (Sheet and Plate)	42	37	24	7
6061-T4 (Sheet)	35	21	24	22
6061-T6 and T62 (Sheet and Plate)	45	40	30	12
6061-T6 and T652 (Die Forging)	38	35	25	7
6061-T4	30	16	20	16
6061-T6 (Tubing)	42	35	27	10
6061-T4	26	16	16	16
6061-T6 (Extrusion)	38	35	26	10
7050-T7451 (Plate)	74	65	42	13
7050-T74 (Die Forging)	75	66	42	15
7050-T7451 (Extrusion)	73	63	41	7
7075-T6 and T62	83	73	47	11
7075-T73	73	63	38	13
7075-T76 (Sheet and Plate)	72	62	44	8
7075-T6 and T62	74	67	43	8
7075-T76 (Clad-Sheet and Plate)	67	57	40	8
7075-T6 and T652	77	64	43	7
7075-T73 (Die Forging)	66	56	41	7
7079-T6 (Die Forging)	74	64	43	7
7150-T6151	85	79	45	9

Table 4-4. Typical Mechanical Properties of Common Aluminum Alloys - Continued

Alloy Temper (Form)	Tensile Strength (ksi)	Yield Strength (ksi)	Shear Strength (ksi)	Elongation (%)
7150-T7751 (Plate)	80	74	46	8
7150-T61511	87	82	44	8
7150-T77511 (Extrusions)	85	78	44	7
7178-T6 (Sheet and Plate)	83	72	50	7
7178-T6 (Clad-Sheet and Plate)	78	68	47	8
355-T6	37	23	26	1.5
C355-T6 (Casting)	41	31	29	3
356-T6	32	21	25	3
A356-T6 (Casting)	39	29	27	4
A357-T6 (Casting)	47	37	33	4
Note: 1 ksi = 1000 psi				

Table 4-5. Mechanical Properties of Titanium

				Minimum Mechanical Properties					
Form	Alloy	Specification	Condition [1]	Ultimate Tension (ksi [2])	Tension Yield (ksi)	Comp. Shear (ksi)	Ultimate Shear (ksi)	Ultimate Bearing (ksi)	Percent Elong.
Sheet, Strip, and Plate	Com. Pure	MIL-T-9046 CP-2 ASTM B265 SAE AMS 4900	A	65	55	50	40	105	18
Sheet, Strip, and Plate	Com. Pure	MIL-T-9046 CP-1	A	80	70	70	50	120	15
Bars and Forgings	Com. Pure	MIL-T-9046 ASTM B381 ASTM F620	A	80	70	70	50	120	15
Sheet, Strip, and Plate	6AL-4V	MIL-T-9046 AB-1	A	130	120	125	75	190	8

Table 4-5. Mechanical Properties of Titanium - Continued

				Minimum Mechanical Properties					
Bars and Forgings	6AL-4V	MIL-T-9047 SAE AMS 4920		130	120	125	80	195	10
Sheet and Plate	6AL-4V	AB-1	STA	160	150	150	95	230	6
Strip	6AL-4V	MIL-T-81566	STA	160	145	150	150	230	6
Extrusions	6AL-4V	SAE AMS 4933	STA	160	150	155	90	225	6
Bars and Forgings	6AL-4V	MIL-T-9047 SAE AMS 4920	STA [3]	160	150	155	95	230	6
			STA [4]	150	140	150	90	225	6
			STA [5]	140	130	135	85	210	

[1] Conditions: A = annealed; STA = solution-treated and aged
[2] 1 ksi = 1000 psi
[3] Sections up to 1 inch thick and less than 10 square inches in cross-sectional area
[4] Sections 1 inch to 2 inches thick and less than 10 square inches in cross-sectional area
[5] Sections 2 inches to 3 inches and less than 10 square inches in cross-sectional area

4.2.4.3 Titanium Characteristics. Titanium has an unusually high attraction for oxygen, nitrogen, and hydrogen at temperatures above 1050°F (565.6°C). This makes the titanium brittle. Thus, usage should be limited to temperatures below 1050°F (565.6°C). Titanium is susceptible to stress corrosion cracking by sodium chloride or chloride solutions at elevated temperatures. Cleaning titanium parts that are used above 450°F (232.2°C) with nonchlorinated solvents is recommended. Additional chemical reactivity or stress corrosion cracking between titanium and selected environments, such as methyl alcohol, chloride salt solutions, hydrogen, and liquid metal, can take place at lower temperatures.

4.2.4.4 Under certain conditions, when in contact with cadmium, silver, mercury, or their compounds, titanium may become brittle. Refer to MIL-S-5002 and MIL-STD-1568 for restrictions concerning applications with titanium when in contact with these metals or their compounds.

4.2.5 Magnesium.

4.2.5.1 General Information.

4.2.5.1.1 Magnesium is the world's lightest structural metal. Like many other metals, this silvery-white element is not used in its pure state for stressed application. Instead, magnesium is alloyed with certain other metals (i.e., aluminum, zinc, zirconium, manganese, thorium, and rare earth metals) to obtain the strong, lightweight alloys needed for structural uses.

4.2.5.1.2 Light weight is the best known characteristic of magnesium. In comparison, aluminum weighs 1-1/2 times more, iron and steel weigh 4 times more, and copper and nickel alloys weigh 5 times more. In addition to light weight, magnesium has other desirable properties that give it a place among our common metals (refer to Table 4-6).

Table 4-6. Density of Structural Metals

Material	Density	
	lb/cu in	lb/cu ft
Magnesium Alloys	0.065	112
Aluminum Alloys	0.101	175
Zinc	0.256	443
Cast Iron	0.260	450
Tin	0.264	456
Steel	0.285	493
Brass	4.307	531
Bronze	0.318	550
Nickel	0.322	556
Lead	0.408	706

4.2.5.2 Alloys

4.2.5.2.1 Magnesium, when alloyed with small amounts of other metals such as aluminum, manganese, zirconium,

zinc, rare earth metals, and thorium, yields alloys with excellent properties and high strength-toweight ratios. Proper combinations of these alloying constituents provide alloys suitable for sand, permanent mold and die-castings, forgings, extrusions, rolled sheet, and plate with good properties at room temperature as well as at elevated temperatures. Certain magnesium alloys, in cast and wrought forms, can be heat-treated to improve mechanical properties. Some magnesium alloys have been developed specifically for elevated temperature service. Because these alloys contain thorium, a low-level radioactive material, there has been some concern about safety precautions in their handling and fabrication. The use and handling of thorium is regulated by the United States Atomic Energy Commission (refer to Table 4-9).

4.2.5.2.2 Corrosion. Refer to TO 1-1-691 or NAVAIR 01-1A-509, Cleaning and Corrosion Control, for additional information on the corrosion of magnesium.

Table 4-7. Casting Specification

Alloy Ingot	Casting Specification
Magnesium ingot and stick for remelting	ASTM B92M
Magnesium alloy ingot	ASTM B93M
Magnesium sand castings	ASTM B80 QQ-M-56
Magnesium alloy ez33a-t5 sand castings	MIL-M-9433
Magnesium permanent mold castings	ASTM B199 QQ-M-55
Magnesium die castings	ASTM B94 QQ-M-38

4.2.5.2.3 When in contact with dissimilar metal surfaces, magnesium is severely prone to corrosion unless it is adequately protected. The level of protection required is determined by the severity of the corrosive environment and the metal with which the magnesium is in contact. For interior use, the ordinary paint coatings applied for decorative purposes provide adequate protection against any unusual conditions.

4.2.5.2.4 Galvanic Corrosion. For all practical purposes, galvanic corrosion between the various magnesium alloys is negligible. However, good assembly practices require that the magnesium faying surfaces be given one or more coats of epoxy primer and sealant.

4.2.5.2.5 Prevention. Performing the following actions alone or in combinations can prevent galvanic attack between magnesium and dissimilar metals:

- Protect both the dissimilar metal and the magnesium.
- Separate one from the other so the corroding medium cannot complete an electrical circuit.
- Electroplate the magnesium.
- Use moisture-impervious films on the dissimilar metal.

4.2.5.2.6 Surface Treatment.

4.2.5.2.6.1 A number of processes are available for the decorative and protective treatment of magnesium alloys. These processes fall into three main groups:

- Chemical Treatment
- Electroplating
- Painting

4.2.5.2.6.2 Some surface treatments are used alone; however, combinations of various surface treatments are more commonly used. Service requirements usually determine the method for surface treating. For specific information on magnesium, refer to TO 1-1A-9, Aerospace Metals General Data and Usage Factors.

4.2.6 Advanced Composites.

4.2.6.1 In general terms, a composite is defined as any combination of two or more different materials at the macroscopic level. The typical composites that are used in aircraft applications consist of a resin matrix that surrounds reinforcing fibers. The fibers supply the basic strength and stiffness of the composite material. Many kinds of fibers and resins may be used in a variety of combinations.

4.2.6.2 Fibers used on aircraft may be made from glass, boron, graphite, or Kevlar. Kevlar is a brand name for the aramids, a group of plastic fibers in the nylon family. Individual fibers are called filaments. When bundled together into a single compact unit, without twist, these filaments form a strand. If the untwisted bundle is large, containing more than 3,000 continuous filaments, it is referred to as a tow. Strands are often twisted together to form yarn suitable for weaving into fabric. A collection of bundles is called a roving (see Table 4-10).

4.2.6.3 Thermosetting resins are the most common type of resin used with these fibers. Thermosetting resins are fluid plastics that irreversibly change into a fused material when cured by chemical reaction, which usually involves applying heat and pressure. The most common thermosets are the epoxies and polyesters. Polyamides and bismaleimides are thermosetting resins that have better properties at higher temperatures than the epoxies and polyesters but have a larger tendency to form voids during curing. As composite fabrication techniques improve, the imides will become more common in aircraft use (see Table 4-10).

4.2.6.4 A single layer of fabric in a composite is called a ply. Generally, multiple plys are cured together to form a laminate. The direction of the ply filaments in a laminate

will determine the directions in which the composite is strong because the fibers, not the matrix, carry the majority of the loads. This directionality allows composites to be tailored to specific applications.

Table 4-8. Fiber Reinforcement

Specification	Fiber Reinforcement
MIL-C-9084C	Cloth, Glass, Finished, for Polyester Resin Laminates
MIL-M-43248A	Mats, Reinforcing, Glass Fiber
SAE AMS 3892B	Tow or Yarn, Carbon (Graphite) Fibers for Structural Composites
SAE AMS 3901B	Organic Fiber (Para-Aramid), Yarn, and Roving, High Modulus
SAE AMS 3902D	Cloth, Organic Fiber, High Modulus for Structural Composites
SAE AMS 3904A	Organic Fiber, Yarn, and Roving

Table 4-9. Resins

Specification	Resins
MIL-R-21607E	Polyester, Low-Pressure Laminating, Fire-Retardant Resin
MIL-R-25042B	Polyester, High-TemperatureResistant, Low-Pressure Laminating Resin
MIL-R-46198	Polyamide Hot-Pressed, Or Pressed And Sintered Resin
MIL-R-7575C	Polyester, Low-Pressure Laminating Resin
MIL-R-82664	Epoxy, Low Viscosity Resin
MIL-R-83330	Heat-Resistant, Laminating Resin
MIL-R-9299C	Phenolic, Laminating Resin
MIL-R-9300B	Epoxy, Low-Pressure Laminating Resin

4.2.6.5 The most common form of composite raw materials found in aircraft construction and repair are unidirectional fibers or cloths that are preimpregnated with resin and then partially cured. These preimpregnated fibers are referred to as prepregs and are available in a variety of fiber-resin systems. If a prepreg of woven fabric is less than 12 inches wide, it is designated as a tape. Wide prepregs are broad goods. The usable life ofthe typical prepreg is approximately one week, but this may be extended by cold storage, usually at or below 0°F (-17.8°C). Carefully record and control the length of time that the prepreg is not refrigerated (i.e., out time) to ensure that unsatisfactory materials are not used in critical constructions (see Table 4-10).

4.2.6.6 When a composite repair patch or new part is fabricated, the prepreg plys are “laid up” on tooling that shapes the material to the desired form, or onto the structure to be repaired. Usually this process is performed by hand, and the skill of the artisan is an important factor in the quality of the finished product. As each ply is laid up, take care to maintain the proper fiber directions and prevent voids from forming between the individual layers. After layup, the composite plys are vacuum-bagged and cured using heat. Curing is a chemical reaction that solidifies resins.

4.2.7 Transparent Plastics. Acrylics and poly-carbonates are the two most common types of transparent plastics used in aircraft windows, canopies, and similar transparent enclosures of military aircraft. These materials are thermoplastic polymers, which are capable of being heated and formed.

4.2.7.1 Acrylics. The acrylics are made from methyl methacrylate and are by far the most widely used transparent plastic materials for military aircraft purposes. The unmodified, unstretched grades have been available for approximately 50 years and have outstanding optical properties and resistance to the weathering effects of sunlight and exposure to the elements.

4.2.7.1.1 The modified grades of acrylic were evolved to improve resistance to heat (MIL-P-5425) and reduce the crazing (microcracking) caused by solvents and stress (MIL-P-8184). The products that were modified by the addition of other polymers were further improved by stretching (MIL-P-25690). Modern aircraft now use the stretched and modified acrylics almost exclusively. When stretched biaxially (i.e., parallel to the surface of the sheet), the long-chain acrylic molecules take on a preferred orientation, which gives the material an increased resistance to crazing and crack propagation, and greater resistance to impact damage. However, stretching does reduce abrasion resistance and tensile strength.

4.2.7.1.2 The acrylics are used in the as-cast, singlesheet form (monolithic) or as laminated multiple sheets bonded by a flexible inner layer material, usually plasticized polyvinyl butyral. Many pressurized aircraft use laminated enclosures for improved shatter resistance and reliability. Some aircraft use windows that layer glass over acrylic for the superior resistance to abrasions and scratches that glass offers. Often, laminated windows will use heating elements or conductive coatings for anti-icing and antifogging purposes, in which case, the flexible inner layer also compensates for thermal expansion.

4.2.7.1.3 In addition to conductive coatings, transparent plastics are often coated to:

- Resist abrasion
- Repel rain
- Resist antistatic or static discharge
- Reflect radar
- Protect against radiation and solar damage
- Reduce light reflection

These coatings are usually proprietary to the sheet processor.

4.2.7.2 Polycarbonates. The polycarbonates are a polyester of carbonic acid, which is based on the Bisphenol A molecule. This thermoplastic has exceptionally high impact strength, clarity, heat resistance, and dimensional stability. However, the surfaces are sensitive to solvent attack, have a low abrasion resistance, and therefore must be coated, often with a heat-fused thin sheet of acrylic.

4.2.7.3 Damage to transparent plastics.

4.2.7.3.1 Scratches. Scratches are the most common type of damage that occurs to transparent plastics. The relatively soft surface of these thermoplastics makes them susceptible to dust and particle erosion in the field. In addition, mishandling during routine cleaning and maintenance is a source of surface damage.

4.2.7.3.2 Crazing. Crazing is a network of ultrafine cracks that form on or under the surface of a transparent plastic. With loading, the cracks gradually enlarge and extend in area, as well as through the sheet thickness. If the crazing is in a random pattern, the cause can usually be attributed to the attack of a variety of non-approved solvents or solvent vapors. If the crazing has a parallel orientation, the cause is most likely directional stresses induced by excessive loads, too low a forming temperature, incorrect annealing after forming, improper machining and cutting which leaves rough edges, or improper installation. Refer to TO 1-1A-12, Fabrication, Maintenance, and Repair of Transparent Plastics, and MIL-HDBK-17, Aerospace Plastics, for more detailed information about transparent plastics.

Table 4-10. Prepregs and Laminates

Specification	Prepregs and Laminates
MIL-P-46187 (1)	Prepreg, Unidirectional Tape, Carbon (Graphite) Fiber, Polyamide Resin Impreg (600 ft)
SAE AMS 3894E	Carbon Fiber Tape and Sheet, Epoxy Resin Impregnated
SAE AMS 3895B	Broad Goods and Tape, Carbon Multi-Ply, Fiber/Epoxy Resin Impregnated, Uniform Fiber
SAE AMS 3899B	Carbon Fiber Tape and Sheet, Polysulfone Resin Impregnated
SAE AMS 3903A	Cloth, Organic Fiber, (Para-Aramid) High Modulus, Epoxy Resin Impregnated
SAE AMS 3906B	Glass, Tape, and Nonwoven Fiber Sheet Cloth, Epoxy Resin Impregnated for Hand and Machine Layup
Miscellaneous	
ASTM D2563	Standard Practice for Classifying Visual Defects in Glass Reinforced Plastic Laminated Parts

4.2.8 Safety Glass. . Safety glass (i.e., non-shatterable glass) consists of two pieces of sheet or plate glass firmly cemented to a transparent sheet of plastic. This construction produces a stronger sheet than ordinary glass and provides a higher level of safety. The plastic sheet adheres to the glass and prevents it from shattering under impact. Safety glass is manufactured in standard flat sheets. The thickness of these sheets ranges from 1/8 to 1/2 inch. Safety glass is used for windshields, windows, and door glass when forming is not required.

CHAPTER 5
FASTENERS

5.1 GENERAL.

Many types of fasteners are used in aircraft maintenance. This chapter addresses fasteners primarily in terms of definitions and general use. There are two broad classifications of fasteners: threaded fasteners and rivets.

5.1.1 To find more detailed information about fasteners, rivets, and their applications and uses, refer to TO 1-1A-8, Aircraft and Missile Repair Structural Hardware.

5.2 THREADED FASTENERS.

Threaded fasteners use a circular ramp to transfer or support a load. The threads are actually a curved inclined plane or wedge. This wedge gives these fasteners a tremendous mechanical advantage. Threaded fasteners normally fall into two categories: screws and bolts.

5.2.1 Screws. Screws are the most common type of fasteners used on aircraft. They differ from other types of threaded fasteners, such as bolts, by usually having a lower material strength, a looser thread fit, and shanks that are threaded along their entire length. However, several types of structural screws are available that differ from structural bolts only in the thread type; the material is equivalent, and there is a definite grip. The brazier, round head, and countersunk screws are available with several types of recesses. Each type of recess requires a particular screwdriver for installation.

NOTE

To maximize performance and to prevent the mutilation of the screw head or screwdriver, always use the proper type screwdriver.

5.2.1.1 Screws are composed of three parts, with three additional combinations of these parts (see Figure 5-1):

- The head of a screw is that portion into which the screwdriver is inserted.
- The body of a screw is that portion from the bottom of the head to the beginning of the thread.
- The threads are the helical portion of the screw.
- The screw length is the combination of the three lengths above: head, body, and threads. The length extends from the top of the head to the bottom of the threads.
- The grip length is the distance from the underhead bearing surface to the beginning of the bevel just before the threads. On protruding head screws, the grip length is the same as the body. On flush head screws, the grip length includes the screw head.
- The shank of a screw is the body and thread lengths combined.

5.2.1.2 Screws may be divided into four groups: structural screws, machine screws, self-tapping screws, and set screws.

5.2.1.2.1 Structural screws. Structural screws are used in the primary aircraft structural applications. They are manufactured from high-tensile and high-shear strength materials. Structural screws are available in fillister, pan, and 100© flush head styles.

5.2.1.2.2 Machine screws. Machine screws are manufactured in several different types: flush head, round head, fillister head, socket head, pan, and truss head. Head markings for screws, as well as sizes and callouts, are discussed in TO 1-1A-8, Aircraft and Missile Repair Structural Hardware.

5.2.1.2.2.1 Flush head screws. Flush head machine screws are used where a flush surface is desired. They are made from carbon steel, corrosion-resistant steel, aluminum alloys, or brass and are available in several recess types. Countersunk flat head machine screws are available in 82’ and 100’ measurements.

5.2.1.2.2.2 Round head screws. Round head machine screws are used in electrical applications. They are manufactured from carbon steel and brass.

5.2.1.2.2.3 Fillister head screws. Fillister head machine screws are drilled-head machine screws designed for general and light-duty applications. They are made from alloy steel or brass.

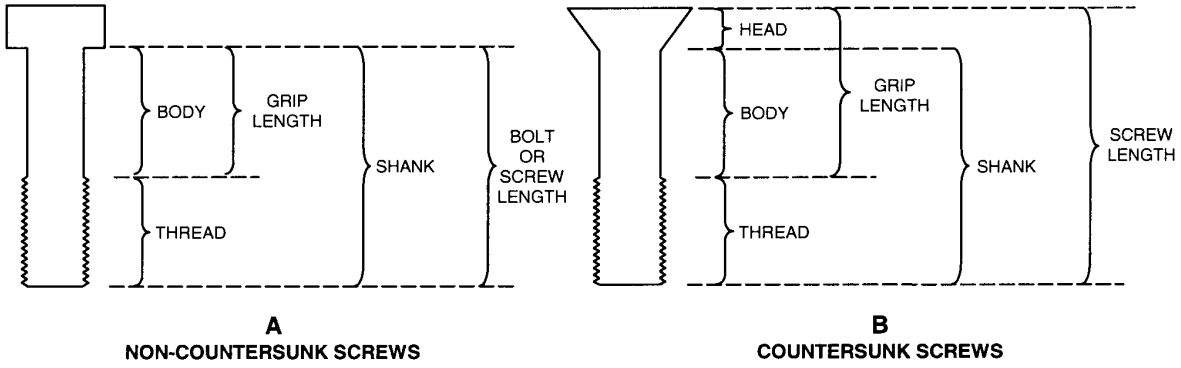

NOTE: All dimensions shown are in inches.

H0614808

Figure 5-1. Parts of a Screw

Table 5-1. Hole Size Fits

Bolt Diam. and Limits		Clearance Fit		Loose Fit		Tight Fit		Close Tol. Bolt Diam. and Limits		Drive or Interference Fit	
Size	Limits	Hole Size	Clearance	Hole Size	Clearance	Hole Size	Clearance	Hole Size	Limits	Hole Size	Clearance
#4	.112 Max	.113 .116	.001 .004	.120 .125							
#6	.138 Max	.140 .144	.002 .006	.147 .152							
#8	.164 .161	.166 .170	.002 .006	.173 .177	.009 .016						
#10	.189 .186	.190 .194	.001 .008	.199 .204	.010 .018	.1895 .1905	.0005 .0045	#10	.1894 .1889	.1891 .1907	- .0003 .0018
1/4	.249 .246	.250 .254	.001 .008	.261 .266	.012 .020	.2495 .2505	.0005 .0045	1/4	.2492 .2487	.2489 .2505	- .0003 .0018
5/16	.312 .309	.312 .316	.000 .007	.328 .332	.016 .023	.3120 .3130	.0005 .0040	5/16	.3117 .3112	.3114 .3130	- .0003 .0018
3/8	.374 .371	.375 .379	.001 .008	.390 .397	.016 .023	.3745 .3755	.0005 .0045	3/8	.3742 .3737	.3739 .3755	- .0003 .0018
7/16	.437 .433	.438 .442	.001 .009	.453 .469	.016 .036	.4370 .4380	.0000 .0050	7/16	.4367 .4362	.4364 .4380	- .0003 .0018
1/2	.499 .495	.500 .505	.001 .010	.516 .531	.017 .036	.4995 .5005	.0005 .0055	1/2	.4991 .4986	.4988 .5005	- .0003 .0019

5.2.1.2.2.4 Socket Head Screws. Socket head machine screws are designed for applications that require high strength and compactness. They are driven into tapped holes using internal wrenches. Socket head machine screws are used in applications that require high-strength precision products, compact assembled parts, or heads sunk below surfaces into fitted holes. Socket head machine screws are made from steel or corrosion-resistant steel.

5.2.1.2.2.5 Pan Head and Truss Head Screws. Pan head and truss head machine screws are used in general applications where head height is not restricted. They are available with cross-recessed heads only and are made from steel, carbon steel, corrosion-resistant steel, or aluminum alloy.

5.2.1.2.3 Self-tapping Screws. Self-tapping screws tap their own mating thread when driven into untapped drilled or punched holes slightly smaller than the outside diameter of the screw itself. These screws are made with a milled thread-cutting slot placed off the center of the screw at the entering end. This slot produces a thread-cutting edge similar to a tap. These screws are used in non-structural applications that do not require fastener removal, such as attaching nameplates and sealing drain holes.

5.2.1.2.4 Set Screws. Set screws are used to position aircraft components, such as gears, on a shaft. They are manufactured with sockets, rather than heads, and may be self-locking.

5.2.2 Bolts. Bolts are threaded fasteners that support loads through pre-drilled holes. Hex, close-tolerance, and internal wrenching bolts are used in aircraft structural applications. Head markings for bolts, as well as sizes and callouts, are discussed in TO 1-1A-8, Aircraft and Missile Repair Structural Hardware.

5.2.2.1 Grip Length. The grip length of a bolt is the distance from the underhead bearing surface to the first thread. The grip is the total thickness of material joined by the bolt. Ideally, the grip length should be a few thousandths of an inch less than the actual grip to avoid bottoming the nut. As a rule, a minimum of two and a maximum of four complete threads, including the chamfered end, shall protrude through the nut. Bolts of slightly

greater grip length may be used if a washer is placed under the nut or bolt head.

5.2.2.2 Bolt Hole Size. Bolt holes using the first drill size larger than the nominal bolt diameter, up to 1/2 inch in diameter, are used for noninterference fits. Diameters larger than 1/2 inch use drill bits of the same size. Bolt holes should not be oversized or elongated.

5.2.2.3 Wet Installation. Wet installation of threaded fasteners is often necessary during or after installation to help prevent corrosion.

5.2.2.4 Hex Head Bolts. Hex head machine bolts are designed for use in applications under tension and shear loads. The standard machine bolts are manufactured from alloy steel, corrosion-resistant steel, or aluminum alloy. Machine bolts made of a nonmagnetic corrosion-resistant steel alloy are also available. Engine machine bolts are manufactured from alloy steel or corrosion-resistant steel and are designed specifically for use in aircraft engines.

5.2.2.5 Close-tolerance Bolts. Close-tolerance machine bolts provide interference fit and are designed for use in applications where the bolted joint is subject to severe load reversals and/or vibration. Close-tolerance machine bolts are manufactured in hex and flush head styles from alloy steel, corrosion-resistant steel, high-strength steel, aluminum alloy, and titanium.

5.2.2.6 Internal Wrenching Bolts. Internal wrenching bolts are designed for use in tension applications. Standard hex bolts shall not be substituted for internal wrenching bolts because of differences in heat treatment processes for high-strength steel. Internal wrenching bolts are available in socket head and drilled socket head styles.

5.2.2.7 External Wrenching Bolts. A 12-point external wrenching bolt is used primarily for high-tensile-strength applications. A hole is formed in the head to reduce weight. These bolts are available in high-strength and machine types. Standard bolts should not be substituted.

5.2.2.8 Close-tolerance Shear Bolts. Close-tolerance shear bolts are high-strength bolts with drilled shanks, designed for use in shear applications only.

5.2.2.9 Full Threaded Bolts. Full threaded bolts are manufactured from alloy steel heat treated to 160 to 180 ksi tensile strengths.

5.2.2.10 Clevis Bolts. Clevis bolts have round heads with a slotted recess and are designed for use in shear applications only.

5.2.2.11 Eye Bolts. Eye bolts are used to carry external tension loads for the attachment of devices such as turnbuckle forks or cable shackles.

5.2.2.12 Self-locking Bolts. Self-locking bolts incorporate a nylon pellet or strip locking device into a slot in the threads. The pellet or strip is compressed as the bolt is threaded. Do not reuse self-locking bolts.

5.3 RIVETS.

NOTE

When installed, rivets are permanently deformed, which means that the fastener must be destroyed during removal.

5.3.1 There are two types of fastening systems: nonblind and blind.

5.3.1.1 Nonblind fasteners. Conventional nonblind fastening systems used in aircraft structural and non-structural applications include the following:

- Solid rivets
- Tubular rivets
- Pin (Hi-Shear) rivets
- Swage-locked fastenerS
- Lockbolt fasteners
- Hi-Lok fasteners
- Hi-Tigue fasteners
- Huckrimp fasteners

5.3.1.1.1 Solid rivets are used to join aircraft structures. Other types of fastening systems are used in applications where fastener strength, ease of installation, or temperature properties of the fastener require consideration.

5.3.1.1.2 Solid Rivets. Solid rivets are available in universal, flat, brazier, and flush head styles. Universal head rivets are used in interior and exterior applications. Round head rivets are used in interior applications. Flat head rivets are used in restricted clearance areas. Brazier head rivets are used in exterior applications where a flush surface is not required. Flush head rivets are used in exterior applications where a smooth, aerodynamic surface is desired. Flush head rivets permit dimpling of the surface in applications that require higher shear strength.

5.3.1.1.3 Tubular Rivets. Tubular rivets are available in oval and 150© flush head styles and are manufactured from carbon steel, aluminum alloy, Monel, brass, or copper. Tubular rivets shall not be used in aircraft structural applications.

5.3.1.1.4 Pin Rivets. Pin rivets, commonly referred to as Hi-Shear rivets, are essentially threadless bolts locked by a swaged metal collar. They are designed for use in shear applications. Because of the high shear strengths of these rivets relative to aluminum alloys, they are generally used only in thicker gage sheets. Pin rivets shall not be used in applications where the shank diameter exceeds the grip length.

5.3.1.1.5 Swage-locked Fasteners. Swage-lock fasteners consist of a pin and swaged collar. They are available in pull-type and stump-type designs.

5.3.1.1.6 Lockbolts. Lockbolts are high-strength, swage-locked fasteners available in pull-type and stump-type designs. Pins are available in protruding and flush head styles, manufactured from alloy steel, CRES, and titanium.

5.3.1.1.7 Hi-Lok Fasteners. A Hi-Lok fastener is a two-piece fastener that consists of a threaded pin and collar. Hi-Loks use a regulated breakoff groove, which provides uniform preload values by causing collar separation when the proper torque level is attained.

5.3.1.1.8 Hi-Tigue Fasteners. Hi-Tigue fasteners are similar to Hi-Loks, except that the fatigue life and overall performance of the fastened joint are improved through a controlled interference fit. Insertion of the Hi-Tigue pin into the prepared hole causes plastic deformation, resulting in a cold-worked hole.

5.3.1.1.9 Huckrimp Fasteners. A Huckrimp fastener is a two-piece threaded fastener consisting of a fatigue-resistant pin and a cylindrical nut.

5.3.1.2 Blind fasteners. Blind fasteners include the following:

- Self-plugging rivets
- Mechanically locked rivets
- Bulbed rivets
- Friction-locked rivets
- Cherrylock rivets
- Cherrymax rivets
- Olympic-Lok rivets
- Jo-Bolts (Visu-Loks)
- Huckbolt fasteners
- Tapered shank bolts
- Composi-Loks
- Rivnuts

5.3.1.2.1 Blind rivets are designed for applications where only one side of the work is accessible. Detailed information on many types of blind rivets can be found in TO 1-1A-8, Aircraft and Missile Repair Structural Hardware.

5.3.1.2.2 Self-plugging Rivets. Standard self-plugging blind rivets consist of a hollow sleeve and a spindle with an increased diameter in the plug section. The blind head is formed as the spindle is pulled into the sleeve.

5.3.1.2.3 Mechanically Locked Rivets. Self-plugging, mechanically locked blind rivets consist of a multiple-piece construction and rely on a mechanical means of locking the spindle to the sleeve.

5.3.1.2.4 Bulbed Rivets. When installed, bulbed, self-plugging, mechanically locked blind rivets form a large, blind head that provides higher strength in thin sheets. Bulbed rivets may be used in applications where the blind head is formed against a dimpled sheet.

5.3.1.2.5 Friction-locked Rivets. Self-plugging, friction-locked blind rivets have a multiple-piece construction and rely on friction to lock the spindle to the sleeve.

5.3.1.2.6 Cherrylock Rivets. Cherrylock blind rivets are locked-spindle rivets that have a rivet sleeve, stem, and lock ring collar. The stem, sleeve, and lock-ring are available in several combinations of aluminum alloys, CRES, Monel, and inconel. Bulbed cherrylock rivets are designed for thin sheet and dimpled applications.

5.3.1.2.7 Cherrymax Rivets. Cherrymax blind rivets consist of a fully serrated stem with break notch, shear ring, integral grip adjustment cone, driving anvil, and rivet sleeve.

5.3.1.2.8 Olympic-Lok Rivets. Olympic-Lok blind rivets are non-shifting rivets that have a sleeve, stem, and spindle-locking collar.

5.3.1.2.9 Jo-Bolt (Visu-Lok) Fasteners. Jo-Bolt fasteners are used in severe fatigue applications, close-tolerance straight-shank interference configurations, and reduced head configurations. They have a preassembled nut, a threaded bolt, and a sleeve. Jo-Bolt fasteners are manufactured from alloy steel, aluminum alloy, high-strength steel, CRES, titanium, and inconel.

5.3.1.2.10 Huckbolt Fasteners. Huckbolt fasteners are two-piece, threaded fasteners that feature a bolt and rivet consisting of a grooved pin and a locking collar that is swaged into grooves to lock the assembly. These fasteners provide a permanent, rigid install with consistency and control. These fasteners resist vibration by providing a high, uniform clamping force and can be readily adapted to high-speed production methods. The fastener is designed to meet or exceed the high preload, tensile strength, and shear strength requirements of SAE grade 5 or ASTM A-325, and it can be used on curved or slanted surfaces. The Huckbolt fastener is best suited for applications requiring high shear strength and resistance to vibration.

5.3.1.2.11 Tapered Shank Bolts. Tapered shank bolts are lightweight, high-strength, shear or tension bolts. The bolt has a tapered shank designed to provide an interference fit upon installation. Taper shank bolts can be identified by a round head (rather than a screwdriver slot or wrench flats) and a threaded shank. Properly installed, these bolts become tightly wedged and will not turn while torque is applied to the nut. The use of tapered shank bolts is limited to special applications. It is important that a tapered bolt not be substituted for any other type of fastener in repairs. It is equally as important not to substitute any other type of fastener for a tapered bolt. Consult the weapon system engineering authority for specific instructions and approval for exceptions to substitution.

5.3.1.2.12 Composi-Lok Fasteners. Composi-Lok fasteners are specifically designed for fastening graphite/epoxy composite structures. Composi-Lok fasteners are installed by torque feed control rather than by impact driving, which reduces the possibility of matrix crushing or delaminations of the structure. Also, the blind head forms a larger footprint against the composite skin. They are manufactured from titanium, which does not induce corrosion when used with composite structures.

5.3.1.2.13 Rivnuts. Rivnuts are internally threaded, counter-bored, tubular fasteners manufactured from alloy steel, aluminum alloy, or CRES. The blind end of the shank may be closed or open.

5.3.2 Rivet Material. Rivet material depends on substrate, corrosion resistance, strength limitations, and magnetic properties.

5.3.2.1 Use 1100-F aluminum rivets to join non-structural parts made of 1100-F, 3003, and 5052 aluminum alloys; fiberglass/epoxy; or Kevlar/epoxy.

5.3.2.2 Use 2117-T4 aluminum alloy rivets to join aluminum alloy structures. 2017-T4 or 7050-T73 aluminum alloy rivets are used to join aluminum alloy and composite structures where greater strength is required.

5.3.2.3 Because they have good corrosion resistance, 5056-H32 aluminum alloy rivets are used to join magnesium structures. Except in emergencies, rivets made from other materials shall not be used to join magnesium structures.

5.3.2.4 Mild steel rivets are used primarily to join steel structures. Galvanized rivets shall not be used to join steel parts that are subjected to high temperatures.

5.3.2.5 CRES rivets are used primarily to join CRES structures.

5.3.2.6 Monel rivets, used to join nickel alloys and high-nickel steel alloys, are interchangeable with CRES rivets. However, CRES rivets are recommended for use in CRES structures.

5.3.2.7 Titanium rivets are used to join advanced composite materials where strength, weight, and hole tolerance requirements are critical. Titanium rivets have a high resistance to heat and corrosion.

5.3.2.8 Copper rivets, used for joining copper alloys, leather, and other nonmetallic materials, are rarely used on aircraft.

5.3.2.9 For rivet identification and characteristics, refer to Tables 5-2 and 5-3, respectively. For additional information about rivets consult TO 1-1A-8, Aircraft and Missile Repair Structural Hardware.

5.3.3 Blind Nuts. Blind nuts are high-strength blind fasteners consisting of a two-piece assembly. A self-retaining expander is pulled into a ductile sleeve using a special mandrel in a pneumatic or hydraulic installation gun. The expanders swell the sleeve wall to tightly fill the hole and secure the nut in the work. The nuts are manufactured from A-286 alloy, CRES, or aluminum alloys.

5.3.4 Clinch Nuts. Clinch nuts are permanently attached to a structure by pressing the nut shank or collar into a single hole. Anti-rotation and push-out resistance results from either cold flow of the structure material into the shank or collar of the nut or the flaring over the nut shank.

Table 5-2. Rivet Identification and Characteristics

Rivet Head Marking	Physical Characteristics	Material	Classification of Specification
 Indented		Steel, carbon	ASTM A575, A576, A675, A108
(E2) Raised or Indented Revised to Δ	Hardness: Maximum-Rockwell B60 or equal	Steel	AS7225
 Indented Dash	Shear strength: 45,000 to 55,000 psi Hardness: Maximum-Rockwell B60 or equal	Steel, corrosion resistant (F)	ASTM A580, A313
 Raised or Indented Mark "H1" only on.062 rivets		Steel, heat- and corrosion-resistant	AS7229
 Raised or Indented Mark "H1" only on.062 rivets	Hardness: Maximum-Vickers 151 HV	Nickel steel, heat- and corrosion-resistant InconeI 600	AS7232
Indented		Nickel Steel	ASTM A304
Projected Cross	Tensile strength: 53,000 to 68,000 psi - Heat treat	Steel, medium	
 Plain	No shear test required	Aluminum alloy 1100-F (A)	MIL-R-5674 QQ-A-430 AMS-H-6088 AS 7220
 Indented Dimple	Shear strength of driven rivet - 26,000 psi Recommended safe shear design stress - 9,500 psi	Aluminum alloy 2117-T4 (AD)	MIL-R-5674 QQ-A-430 AMS-H-6088 MIL-R-8814
Raised Teat	Shear strength of driven rivet - 33,000 psi Recommended safe shear design stress -11,000 psi	Aluminum alloy 2017-T4 (D)	MIL-R-5674 QQ-A-430 AMS-H-6088
 Raised Double Dash	Shear strength of driven rivet - 37,000 psi Recommended safe shear design stress -12,000 psi	Aluminum alloy 2024-T4 (DD)	MIL-R-5674 QQ-A-430 AMS-H-6088
(1) Indented, Blind Explosive (2) Raised Solid	Shear strength of driven rivet - 24,000 psi	Aluminum alloy 5056-H32 (B)	MIL-R-5674 QQ-A-430 AMS-H-6088 MIL-R-7885 MIL-R-8814
 Projected Flutes	Tensile strength: 68,000 to 83,000 psi Yield point: 38,000 Heat treat Shear strength: Min 64,000 psi	Steel, grade HT	MIL-R-1223A

Table 5-2. Rivet Identification and Characteristics - Continued

Rivet Head Marking	Physical Characteristics	Material	Classification of Specification
 Indented Square	Heat treatment: 160,000 to 180,000 psi for MIL-H-6875	Steel, Cr, Ni, Mo Steel, Cr, Ni, Mo Steel, Cr, V Steel, Ni, Cr Steel, Cr, Ni, Mo Steel, Mo Steel, Cr, Mo	MIL-S-6098 for #8735 MIL-S-6049 for #8740 AMS 6448 ASTM A545 A546, A547, A548, A549 AMS 6382, AMS6349 AMS 6415, AMS6484 AMS 6300 MIL-S-6758 for #4130
 Twin Teats or Dimples	Shear strength: 49,000 to 59,000 psi	Monel	QQ-N-281, Class A, annealed
 Raised Square	Shear strength of driven rivet - 32,000 psi	Aluminum alloy 2219-T81 (E)	MIL-R-5674 MIL-R-8814 QQ-A-430 AMS H-6088
 Indented Triangle	Shear strength of driven rivet - 32,000 psi	Aluminum alloy 2219-T62 (J)	MIL-R-5674 QQ-A-430 AMS H-6088 AMS 4341
 Indented Square	Shear strength of driven rivet - 32,000 psi	Aluminum alloy 2219-T81 (K)	MIL-R-5674 QQ-A-430 AMS H-6088
 Raised Circle	Shear strength of driven rivet - 41,000 psi	Aluminum alloy 7050-T73 (E, KE)	MIL-R-5674 QQ-A-430 AMS H-6088
Indented Diamond	Shear strength of driven rivet - 50,000 psi	Titanium columbium alloy 45Cb (T)	MIL-R-5674 QQ-A-430 AMS-4982

Table 5-3. Shear Strength of Aluminum Alloy Rivets (Pounds Per Rivet)

Raised Head Rivets								
	Rivet Diameter							
Rivet Material	1/16	3/32	1/8	5/32	3/16	1/4	5/16	3/8
2117-T4	106	217	389	596	860	1556	2458	3511
2017-T4	120	246	441	675	974	1764	2786	3979
2024-T4	144	296	532	814	1175	2127	3359	4798
5056-H32	95	195	347	536	774	1400	2210	3160
100° Dimple Countersink								
2117-T4		276	480	735	1020			
2017-T4		300	530	810	1130			
2024-T4		350	620	950	1325			
100° Machine Countersink								
2117-T4		186	331	518	745			
2017-T4		206	368	574	828			
2024-T4		241	429	670	966			
Shear Strength of Protruding and Flush Head Aluminum Alloy Rivets								
5056	99	203	363	556	802	1450	2290	3280
2117-T3	106	217	388	596	862	1550	2460	3510
2017-T31	120	247	442	675	977	1760	2790	3970
2017-T3	135	275	494	755	1090	1970	3110	4450
2024-T31	145	296	531	815	1180	2120	3360	4800
2219-T62 (J)			478	741	1063			
7050-T73 (E)	145	296	531	814	1175	2125	3360	4800
7050-T731 (KE)	145	311	558	854	1230	2230	3525	5030

CHAPTER 6
WELDING

6.1 For welding information, please refer to TO 00-25-252 (NAVAIR 01-1A-34).

CHAPTER 7
ADHESIVES AND BONDING

7.1 GENERAL.

The general information concerning adhesive bonding contained in this chapter will assist in the selection of adhesives for both structural and non-structural uses. This information does not include all available adhesives. For more information about adhesives, see TO 42A3-1-2, General Use of Cements, Sealants, and Coatings, and MIL-HDBK-337, Military Standardization Handbook, Adhesive Bonded Aerospace Structure Repair.

7.1.1 Adhesive bonding is the process of fastening materials with the aid of adhesives or substances that are capable of holding materials together by surface treatment. There are two principal types of adhesive bonding: structural and non-structural.

7.1.1.1 Structural adhesive bonds must be capable of transmitting operating stress between primary and secondary load-bearing members without losing structural integrity.

7.1.1.2 The important types of non-structural bonding for aircraft include adhesives or sealants and conductive adhesives used in applications where no significant loading is applied.

CAUTION

Some chemicals are incompatible with certain aircraft materials. For example, acidic surface treatments can make high-strength steel brittle, and chemical paint removers will dissolve canopy materials.

7.1.2 The use of structural adhesives is becoming widespread within the aircraft field, both for repair and for initial fabrication. It is important to follow all necessary precautions, procedures, or steps when using these adhesives to prevent bond failures.

7.2 ADVANTAGES AND DISADVANTAGES OF ADHESIVE BONDING.

7.2.1 Advantages. There are many advantages to using adhesive bonding in place of mechanical fasteners. Advantages will vary between applications.

7.2.1.1 More Uniform Stress Distribution. The stress in an adhesive joint is distributed over the entire bonded area. Welds and rivets concentrate stresses at the weld lines, spot welds, or rivet holes.

7.2.1.2 Weight Saving and Optimum Strength-to-Weight Ratio. Adhesive joints generally weigh less than welds or mechanical fasteners. In addition, thin sections may be joined to thick sections with a favorable stress distribution, which allows the full strength and rigidity of the thin member to be used. In mechanical fastening or spot welding, the contact area of the fasteners or the welds limits the strength of the structure.

7.2.1.3 Improved Fatigue Resistance. The stress distribution characteristics and inherent toughness of adhesives provide bonds that have superior fatigue resistance. In well-designed joints, the parts which are joined together by the adhesive (i.e., the adherents) will fail in fatigue before the adhesive will fail. A flexible adhesive will dampen vibration and shock and help accommodate differences in thermal expansion.

7.2.1.4 Joining of Dissimilar Materials. Provided that proper surface treatments are used and the exposed bond line has a sealant overcoat, non-conductive adhesives may be used to join and insulate materials that would normally form a galvanic corrosion couple when placed in contact with each other. Rivet holes and welds, which are areas that promote corrosion, are eliminated. It is also possible to join metals to plastics, ceramics, rubber, glass, or a combination of materials.

7.2.1.5 Aerodynamic Smoothness. Smooth surfaces are an advantage of joined adhesive structures. Exposed surfaces are not defaced, and contours are not disturbed as they are with other types of fastening processes. Aerospace structures require external smoothness for minimum drag and to keep temperatures as low as possible.

7.2.1.6 Environmental Protection. Adhesives may serve as sealants, providing a thermal or electrical insulation and barrier, provided that the area is protected from fluids and moisture that result from high humidity.

7.2.1.7 Faster and Cheaper. For some, but not all, applications, time and money are saved by using adhesives for joining materials.

7.2.2 Disadvantages. The disadvantages of adhesive bonding vary from application to application.

7.2.2.1 Inspection Difficulties. Adhesive bonds are difficult to examine for quality after they are completed.

7.2.2.2 Surface Preparation. Successful bonding requires careful surface preparation, often with corrosive chemicals.

7.2.2.3 Process Control. Process control must be rigid, with emphasis on cleanliness, environmental and material control, and personnel training.

7.2.2.4 Cure Time. Long cure times may be required, particularly where high cure temperatures are not used.

7.2.2.5 Specialized Equipment. Holding fixtures, heat blankets, ovens, or autoclaves that are not usually needed for other fastening systems are often required when using adhesives.

7.2.2.6 Useful Joint Life. The useful life of the joint depends on the surface preparation, adhesive type, primer, and surface environment. The upper limit of temperature for most adhesives is 350°F.

7.2.2.7 Degradation Over Time. Natural-or vegetable- origin adhesives are subject to attack by bacteria, mold, rodents, or insects.

7.3 CLASSIFICATION OF ADHESIVE MATERIALS.

7.3.1 Functional Classification. Functional classification defines adhesives as structural or non-structural. Structural adhesives are high in strength and permanence. Structural bonding requires designs that can be easily and reliably fabricated. It also requires greater control over materials and bonding techniques because of the need for bond integrity and high load-carrying capacity. Non- structural adhesives are not required to support substantial loads but merely to hold materials in place. Sealing adhesives usually have a non-structural function, primarily to fill gaps between adherents and provide seals without requiring a high degree of strength.

7.3.2 Type Classification. Type classification describes synthetic adhesives as thermosetting, thermoplastic, elastomeric, or any combination of these materials (see Table 7-1). Various adhesives may also be classified by product forms and application methods (see Table 7-2).

7.3.2.1 Thermosetting Adhesives. Thermosetting adhesives are materials that cannot be heated and softened repeatedly after the initial cure. Adhesives of this type are cured by chemical reaction at room temperature or at elevated temperatures, depending on the type of adhesive. Substantial pressure may also be required with some thermosetting adhesives, while others can provide strong bonds with only contact pressure. This type of adhesive is sometimes provided as a solvent to promote application. Thermosetting adhesives are also commonly available as liquids, pastes, and films. They may be supplied as multiple- and single-part systems. Single-part adhesives generally require elevated-temperature cure and refrigeration, and have a limited shelf life. Multiple-part adhesives have a longer shelf life and can be cured at room temperature or more rapidly at elevated temperatures. Multiple-part adhesives, however, must be weighted and mixed before application. Once the adhesive is mixed, the working life is limited. Because molecules of thermosetting resins are heavily cross-linked, they are resistant to heat and fuel. They show little elastic deformation under load at elevated temperatures.

7.3.2.2 Thermoplastic Adhesives. Thermoplastic adhesives do not cross-link during application. They can be resoftened after heating. They are single-part systems that harden by cooling after a melt or by evaporation of a solvent or water vehicle. Thermoplastic adhesives have a more limited temperature range than thermosetting adhesives. They should not be used at temperatures over 150°F (66°C). Their physical properties vary over a wide range because several polymers are used to form a single adhesive.

7.3.2.3 Elastomeric Adhesives. Elastomeric adhesives are based on synthetic or natural polymers, resulting in outstanding toughness and elongation. They may be supplied as solvent solutions, latex cements, dispersions, pressure-sensitive tapes, or single- or multiple-part solvent-free liquids or pastes. The curing requirements vary according to the type and form of elastomeric adhesive.

7.3.2.4 Adhesive Alloys. Adhesive alloys are made by combining thermosetting, thermoplastic, and elastomeric adhesives. Adhesive alloys take advantage of the most useful properties of each constituent type. However, the adhesive alloy is usually as weak as the weakest component. Thermosetting resins provide a very strong cross-linked structure. Impact, bend, and peel strength are provided by adding thermoplastic or elastomeric materials. Adhesive alloys are commonly available in solvent solutions and as supported or unsupported film.

Table 7-1. Types of Adhesives

Classification	Thermoplastic	Thermosetting	Elastomeric	Alloys
Types Within Group	Cellulose acetate Cellulose acetate butyrate Cellulose nitrate Polyvinyl acetate Vinyl vinylidene Polyvinyl acetal Polyvinyl alcohol Polyamide Acrylic Phenoxy resin	Cyanoacrylate Polyester urea formaldehyde Melamine formaldehyde Resorcinol and phenol-resorcinol formaldehyde Epoxy Polyamide Polybensimidazole Acrylate acid diester Urethane	Natural rubber Reclaimed rubber Butyl Polyisobutylene Nitrile Styrene-butadiene Polyurethane Polysulfide Silicone Neoprene	Epoxy-phenolic Epoxy-polysulfide Epoxy-nylon nitrile phenolic Neoprene-phenolic Vinyl-phenolic
Form Most Used	Liquid, some dry film	Liquid, paste, and film	Liquid, some film	Liquid, paste, and film
Further Common Classifications	By vehicle (most are solvent dispersion or water emulsions)	By cure requirements (heat or pressure most common, but some are catalyst types)	By cure requirements (all are common) or by vehicle (most are solvent dispersions or water emulsions)	By cure requirements (usually heat and pressure except some epoxy types), by vehicle (most are solvent dispersions or 100% solids), or by type of adherents or end-service conditions
Temperature Performance	Good to 150°-200°F (66°-43°C), poor creep strength; fair peel strength	Good to 200°-500°F (93°-26O°C), good creep strength; fair peel strength	Good to 150°-400°F (66°-204°C), never melts completely; low strength; high flexibility	Balanced combination of properties of other chemical groups, depending on formulation; generally higher strength over wide temperature range
Most Common Application	Unstressed joints; designs with caps, overlaps, stiffeners	Stressed joints at slightly elevated temperatures	Unstressed joints on lightweight materials; joints in flexure	Where highest and strictest end-service conditions must be met, sometimes regardless of cost; military uses
Most Commonly Bonded Materials	Formulation range covers all materials, but emphasis on nonmetallic, especially on wood, leather, cork, paper, etc.	For structural uses of most materials	Few used straight for rubber, fabric, foil, paper, leather, plastics, films, also as tapes; most modified with resins	Metals, ceramics, glass, thermosetting plastics; nature of adherents often not as vital as design or endservice conditions (i.e., high strength temperature)

Table 7-2. Adhesives Classified by Form

Type	Remarks	Advantages
Liquid	Most common form; practically every formulation available. Principally solvent-dispersed.	Easy to apply. Viscosity often under control of user. Major form of hand application.
Paste	Wide range of consistencies. Limited formulations; principally 100% solids modified epoxies.	Lends itself to high-production setups because of shorter waiting periods. High shear and creep strengths.
Film, Tape	Limited to flat surfaces, wide ranges of curing ease.	Quick and easy application. No waste or runover; uniform thickness.
Other	Rods, supported tapes, pre-coated copper for printed circuits.	Ease of application and cure for particular use.

7.4 TYPES OF ADHESIVE-BONDED JOINTS.

7.4.1 Lap Joints. Lap joints are the most common type of joint. They are also the simplest type of joint to make. The load at the joint is primarily shear, which is the strongest direction for adhesive bonding. However, some tension and cleavage stresses result because the offset of adherents causes misalignment of loads, particularly in bending (see Figure 7-1).

7.4.2 Joggle Lap Joints. The joggle lap joint design is the easiest method to use to align loads. It can be made simply by bending the adherents. It also provides a surface to which pressure can be easily applied. The joggle lap joint is more costly than other types of joints because it requires forming.

7.4.3 Beveled Lap Joints. The beveled lap joint is more efficient than the plain lap joint. The beveled edges allow the adherents to conform during loading. This conforming results in reduced peeling stress at the ends of the joint.

7.4.4 Butt Joints. Butt joints are unsatisfactory when subjected to tension or bending stresses. When possible, use one of the lap joint configurations. If the adherents are too thick for lap joints, use the tongue-and-groove joint or the scarf joint. These types of joints reduce the peeling effect caused by side-loading. Tongue-and-groove joints are advantageous because they are self-aligning, and they act as a reservoir for the adhesive. The scarf joint keeps the axis of loading in line with the joint and significantly reduces peeling stress.

7.4.5 Strap Joints. Strap joints keep the operating loads aligned and are generally used where overlap joints are impractical because of adherent thickness. As in lap joints, the single strap joint is subjected to peeling stress. The double strap joint is better than a single strap joint under bending stresses. The beveled double strap and recess double strap joints are the best joint designs. These joint designs, however, require expensive machining.

7.5 DESIGN CONSIDERATIONS.

7.5.1 Stresses. The loading that the adhesive joint will be required to endure must be understood before choosing a joint type. The following questions must be considered to understand the loading:

- What tensile, compressive, and shear loads will the joint support?
- What level of peel, creep, and fatigue strength will be required of the joint?

The bond area must be proportional in size to the strength required of the joint, and the loads must be evenly distributed. Apply stress at the joint in shear. Avoid flatwise tension or peel loads.

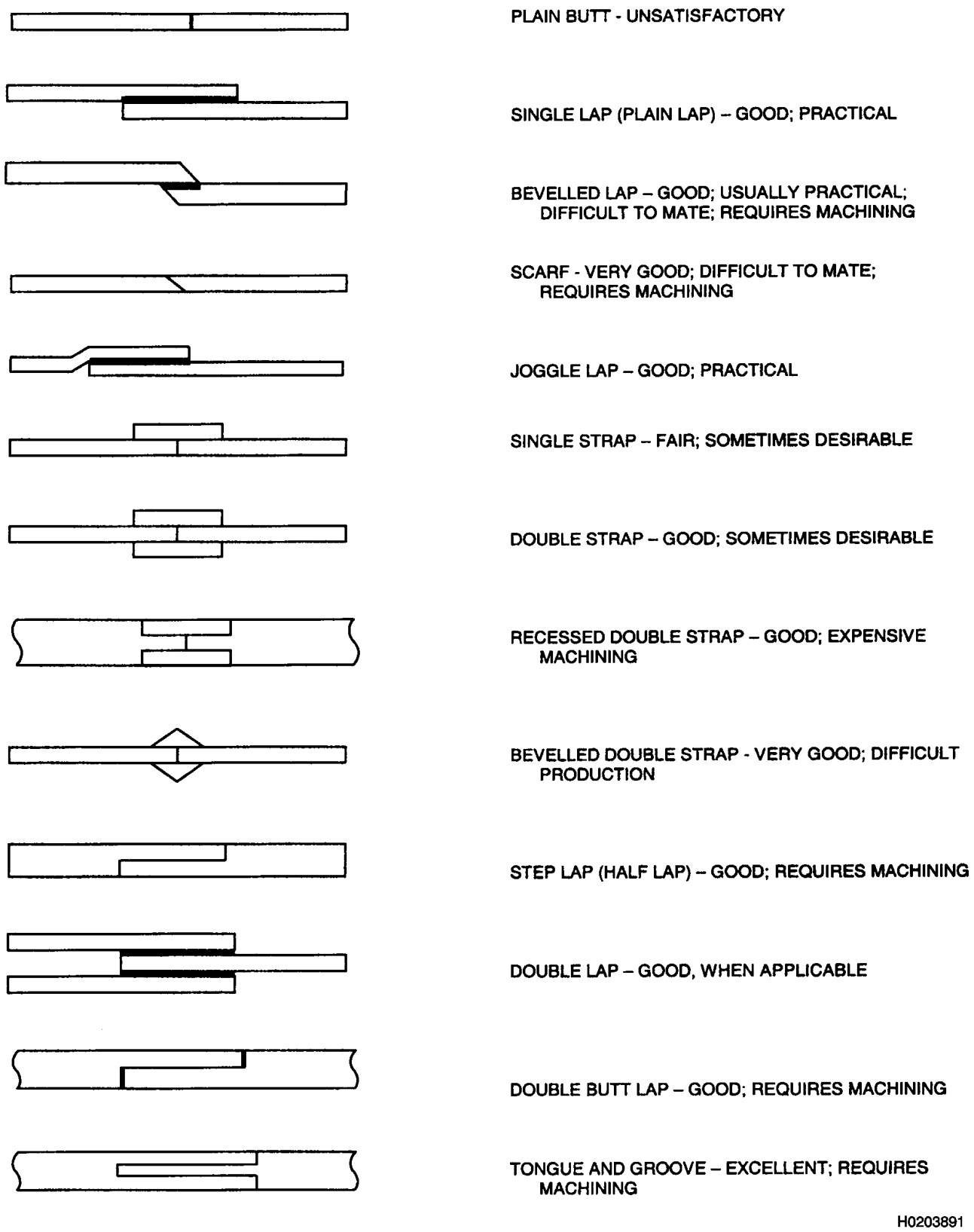

Figure 7-1. Types of Adhesive-Bonded Joints

7.5.2 Compatibility. The adhesive joint must fit into the operating environment. The bond must maintain material properties and remain stable throughout the operating temperature range. Flexibility and vibration damping must be possible at low temperatures, if necessary, just as strength and rigidity may be required at elevated temperatures. The adhesive material must not be corrosive or degrading to the adherents and must be resistant to decomposition from the environment.

7.5.3 Fabrication. The adhesive joint must be practical to produce. The parts and details should be sufficiently easy to manufacture. The pressure and elevated temperature required for some cure cycles must be considered in the assembly geometry if thermosets are used. Fasteners should not be located near the bond.

7.6 SURFACE PREPARATION.

CAUTION

- Some chemicals are incompatible with certain aircraft materials. For example, acidic surface treatments can make high-strength steel brittle, and chemical paint removers will dissolve canopy materials.
- Use only the materials recommended by this manual and other applicable maintenance instruction manuals. Use only the maintenance chemicals and procedures recommended for specific aircraft components.

Surface preparation is perhaps the most critical step in ensuring a repeatable, reliable, high-strength bond. In addition, surface preparation is a significant contributor to the overall cost of bonding. Chemical treatments are required for structural bonding.

7.6.1 It is important that the best method of surface treatment that is available be used. The two most common surface preparation methods used are tank immersion and non-tank immersion procedures.

7.6.1.1 Tank Immersion Method. The tank immersion method is the preferred method of surface preparation. However, if no surface preparation tanks are available, non-tank procedures can be used. For cleaning selected metals using the tank immersion procedures, see Table 7-3.

WARNING

Pasa Jell 105, Alodine, and solvent-wipe surface preparations should never be used for structural adhesive bonding. They do not produce long-term, durable bonds.

7.6.1.2 Cleanliness of the surface will affect the quality of the surface preparation and thus the strength of the bond. Solvent wipe must be repeated with clean wipes until there is no sign of dirt. Follow the last wet wipe with a clean dry wipe before the solvent evaporates.

7.6.1.3 Non-tank Immersion Method. The non-tank immersion method of surface preparation is considered an alternative method. Use immersion tank methods where tank facilities are available. The preferred acid non-tank methods are phosphoric and non-tank anodize (PANTA) and phosphoric acid containment system (PACS).

CAUTION

The grit blast silane method uses high pressure for grit application. Containment of grit during surface preparation is essential since some chemicals are incompatible with certain work.

7.6.1.4 The preferred nonacid method is the grit blast silane (GBS) method. Silane is a non-acidic adhesive promoter made by Dow Corning and Union Carbide. It produces bonds and strengths comparable to the tank PANTA method. GBS is preferable over the preferred acid non-tank procedures. The solvent method should never be used, since this procedure produces bonds with greatly reduced durability. For information about surface preparation of selected metals using the non-tank procedures, see Table 7-4.

7.6.2 The extent of surface preparation required to produce satisfactory adhesive joints can best be determined by experimenting with test samples that have been produced in accordance with ASTM D3762 and that have been deliberately failed. If failure is cohesive (within the adhesive itself), then the surface preparation was satisfactory. If the failure is adhesive (at the interface of the adhesive and the adherent material), the surface preparation must be improved.

Table 7-3. Surface Preparation Treatments for Adhesive Bonding (Tank Immersion)

Metal	Treatment
Steels and Stainless	Degrease-Solvent washing.
Steels	Descale-Grit blast, vapor blast, or use wire brush.
	Thoroughly rinse off abrasives with water.
	Etch for 10 minutes at 160°F (71°C) in the following solution: Water (H_2O) 90 parts by weight (pbw) Sulfuric acid (H_2SO_4) (sp. gr. 1.84) 37 pbw
	Rinse thoroughly in water and remove smut with a stiff brush if necessary.
	Immerse for 10 minutes at room temperature in the following solution: Water (H_2O) 88 pbw Nitric acid (HNO_3) (sp. gr. 1.42) 15 pbw Hydrofluoric acid (sp. gr. 1.15, 35%) 2 pbw
	Rinse thoroughly in water.
	Dry in an oven not over 200°F (93°C)
Aluminum Alloys	Degrease-Solvent washing.
(Phosphoric Acid	Alkaline Clean.
Anodized is the only approved method authorized)	Immerse for 10 minutes at 67°-77°F in the following solution: Maintain the total acid concentration equivalent to 13-16 oz/gal Phosphoric acid (H_3PO_4)
	Rinse thoroughly in hot water not over 110°F for 5 minutes.
	Deoxidize in sulfuric-dichromate solution for 10-15 minutes and rinse without delay.
	Anodize in the phosphoric acid solution for 20-25 minutes at 10 volts ±1 volt.
	Cold water rinse without delay.
	Dry at 160°F (71°C) maximum.
	Examine for anodic coating after dried. (If no color is observed, repeat.)
	Prime within 72 hours following drying.
Copper and Copper	Degrease-Solvent washing.
Alloys (Brass and Bronze) (ASTM D2651-79)	Immerse for 1–2 minutes at room temperature in the following solution: Water (H_2O) (deionized) 197 pbw Nitric acid (HNO_3) (sp. gr. 1.42) 30 pbw Ferric chloride ($FeCl_3$) (42%) 15 pbw
	Rinse thoroughly in distilled water.
	Dry as quickly as possible.
	Apply adhesive immediately.
Titanium and	Degrease–Solvent washing.
Titanium Alloys	Immerse for 15 minutes at 150°F (62°C) in the following solution: Sulfuric acid (H_2SO_4) (sp. gr. 1.84) 100 pbw Sodium dichromate ($Na_2Cr_2O_7 \cdot 2H_2O$) saturated solution 30 pbw
	Rinse in distilled water at 150°-160°F (65.5°-71°C).
	Air dry 5 to 10 minutes at 80°-90°F.
Magnesium and	Degrease–Solvent washing.
Magnesium Alloys	Immerse for 10 minutes at 160°F (71°C) in an alkaline detergent solution.
	Rinse in water at 160°F (71°C).
	Rinse in distilled water at 160°F (71°C).

Table 7-3. Surface Preparation Treatments for Adhesive Bonding (Tank Immersion) - Continued

Metal	Treatment
	Immerse for 10 minutes at 160°F (71°C) in the following solution: Water (H_2O) 4 pbw Chromic acid (H_2CrO_4) 1 pbw
	Rinse thoroughly in distilled water.
	Dry at 140°F (60°C).
Zinc and Fresh	Degrease-Solvent or vapor washing.
Galvanized Metal	Etch for 3 to 6 minutes at 100°F (38°C) in the following solution: Sulfuric acid (H_2SO_4) (sp. gr. 1.84) 2 pbw Sodium dichromate, crystalline ($Na_2 Cr_2O_7 \cdot 2H_2O$) 1 pbw Water (H_2O) (distilled) 8 pbw
	Rinse in running tap water.
	Rinse in distilled water.
	Air dry at 104°F (40°C).

CAUTION

Solvents are flammable and solvent vapors are toxic. Keep solvents away from open flames and use only in a well-ventilated area. Avoid solvent contact with skin. Wear chemical or splash-proof goggles and rubber gloves.

7.6.2.1 Solvents. In bonding composite or plastic adherents, the solvent used should not attack the adherents. Follow the adhesive manufacturer's directions for preparation of the surface.

7.6.2.2 Mechanical Abrading. Preparation may require mechanical cleaning (e.g., abrasive blasting, sanding, grinding, wire brushing) to remove corrosion products or other surface contaminants. Mechanical methods also roughen the surface of the adherents and promote superior bonding.

7.7 SELECTION OF ADHESIVE.

WARNING

Before selecting any adhesive, ensure that all environmental regulations and restrictions are being followed.

NOTE

Regulations have been developed that identify and limit the use of hazardous materials. These regulations also cover workplace practices, emissions of volatiles to the atmosphere, discharge to waste treatment systems, and disposal requirements. Activities must comply with these local, state, and federal regulations that often cover hundreds of chemical ingredients and thousands of chemical products. Base safety and environmental personnel are usually the best source of information for local environmental restrictions.

After determining the operating environment and materials involved, select the desired adhesive from Table 7-5.

7.8 CURING OF ADHESIVE BONDS.

NOTE

Mix only the amount of material that can be used according to the specified working life. Mixing a large quantity of adhesive material may result in an exothermic reaction that will hasten the gel time and shorten the working life.

Curing of adhesive bonds should be performed in strict accordance with manufacturer instructions or specification-driven procedures for a given adhesive. (See Table 7-6).

7.9 ADHESIVE PRIMER SELECTION.

Adhesive primers associated with each adhesive material should be used following surface preparation. Both standard (noncorrosion-inhibiting) primers and corrosion–inhibiting primers are available for repair applications. Corrosion–inhibiting primers typically require recirculating spray equipment. Corrosion-inhibiting adhesive primers, however, are preferred because of the bond's improved resistance to the environment. Air-drying, noncorrosion-inhibiting primers may be applied by nonspray methods such as brushing or wiping.

Table 7-4. Non-Tank Surface Preparation Treatments for Adhesive Bonding on Aluminum, Titanium, Steel, and Fiberglass

Metal	Method Used	Treatment
Aluminum Alloys	PANTA Process	1. Solvent-wipe and abrade with nonwoven abrasive (nylon abrasive pads). 2. Dry-wipe with clean gauze to remove dust and debris. 3. Apply solution: • Apply uniform coat of gelled 12% phosphoric acid to surface. • Place 2 to 3 layers of gauze over top of coating. • Apply another coat of gelled phosphoric acid to completely saturate the gauze. • Apply a dc potential of 6 volts for 10 minutes. 4. Rinse: • Lightly wipe off gelled acid and spray rinse, if possible. • Apply epoxy primer conversion coating within 15 minutes. 5. Air dry.
	PCS process	See PACS user manual.
Aluminum Alloys, Titanium and Titanium Alloys, Steels	GBS process	1. Solvent-wipe. 2. Abrade with Scotchbrite red (fine) disk. 3. Grit blast with 240-grit white aluminum oxide to a find matte finish using a minimum of 30 psi pressure of oil/water-free nitrogen gas or oil/water-free air. 4. Remove excess grit form repair area with oil/water-free nitrogen gas or oil/water-free air. 5. Apply 1% silane solution mixed with distilled water with a clean acid brush to entire repair surface. Entire surface must remain wet continuously for 10 minutes minimum. No water breaks allowed. 6. Remove silane solution with oil/water-free nitrogen gas or oil/water-free compressed air. 7. Within 30 minutes of removal of silane, heat-cure the surfaces at 200°F (93°C) for 60 minutes. 8. Apply corrosion-inhibiting primer (i.e., BR-127) to a thickness of 0.0001 to 0.0003 inch and air dry for 30 minutes. Cure primer 1 hour at 250°F (121°C), or 90 min at 200°F (93°C).
Fiberglass		1. Lightly abrade with 180-grit abrasive paper or equivalent. 2. Remove debris with vacuum. 3. Solvent-wipe clean. Wipe surfaces before solvent evaporates. 4. Protect surface with wax-free paper until the assembly is bonded.

Table 7-5. Federal and Military Adhesive Specifications

Specification	Description
A-A-1936	Adhesive, contact, neoprene rubber
MIL-A-21366A	Adhesive, for bonding plastic tabletop material to aluminum
MIL-A-24179	Adhesive, flexible unicellular plastic thermal insulation
MIL-A-3316	Adhesive, fire–resistant, thermal insulation
MIL-A-48611A(2)	Adhesive epoxy, elastomeric for glass to metal
MIL-A-52194A	Adhesive, epoxy for bonding glass–reinforced polyesters
MIL-A-81236	Adhesive, epoxy resin for use with polyamide curing agent
MIL-A-83376A	Adhesive, bonded metal–faced sandwich structures
MIL-A-8576(2)	Adhesive, acrylic base for acrylic plastic
MIL-A-9076C	Adhesive bonding, process and requirement
MIL-A-9117D	Adhesive, sealing for aromatic fuel cell and general repair
MMM-A-121	Adhesive, bonding vulcanized synthetic rubber
MMM-A-130B	Adhesive, contact
MMM-A-131	Adhesive, heat–resistant, airframe structural, metal to metal
MMM-A-132	Adhesive, glass to metal
MMM-A-134	Adhesive, epoxy resin for metal–to–metal structural bonding
MMM-A-139	Adhesive, natural or synthetic–natural rubber
MMM-A-1617B	Adhesive, Rubber Based, General Purpose
MMM-A-1754	Adhesive and sealing compound, epoxy, metal–filled
MMM-A-1931	Adhesive, epoxy, silver–filled, conductive

7.9.1 Corrosion-inhibiting primers must always be used when manufacturing and handling operations make the bond more prone to contamination.

7.10 DEBONDING OF HONEYCOMB WITH DRY ICE.

7.10.1 Insulated enclosure.

CAUTION

Because of its very low temperature, dry ice will cause severe frostbite. Therefore, use protective gloves to handle dry ice, and cooled parts and bond separation.

This procedure requires a properly insulated enclosure that will keep the bond and adherents cool and prevent excessive evaporation and loss of dry ice. Where such an enclosure is not available, a blanket or several layers of woven fiberglass cloth may be used to cover the part during the cooling period.

7.10.2 Packing. The part to be debonded is packed in chipped or finely crushed dry ice. An insulating material is placed over the entire container to maintain a cold temperature. Depending on the size of the assembly to be debonded, the part is allowed to cool for 10 to 30 minutes.

7.10.3 Removal Procedure. The dry ice is carefully removed, and a micarta or phenolic wedge is driven between the elements to be separated to accomplish debonding. An impact chisel may be used for bond separation. It is imperative that the debonding operation be performed while the part is very cold. At this stage, the cured adhesive is hardened to such a degree that its peel strength is much lower than the ambient valve. After parts are separated, the cured adhesive residue may be removed from the usable parts by careful abrasion.

7.10.4 Dry Ice Substitute. Where no dry ice is available, carbon dioxide gas under high pressure may be used to cool small parts to a suitable temperature.

7.11 ADDITIONAL INFORMATION.

NOTE

For additional information about adhesives, contact the Materials and Test Engineering Branch (OC-ALC/ENFLL), Tinker Air Force Base, Oklahoma 73145, DSN 336-5008. The NAVAIR contact for adhesives is located at the Materials Lab at Patuxent River, Maryland and may be reached at (301) 342-8094.

Table 7-6. Thermosetting Adhesives Classified by Activation and Cure Requirements

Requirement	Types Available	Forms Used	Remarks
Heat	Room temperature, 250° to 350°F (121° to 177°C); 450°F (232°C) types available.	Formulated in all forms; liquid is most common.	Applying heat will usually increase bond strength of any adhesive, even room temperature types.
Pressure	Contact to 500 psi (3447.5 kPa) types available; 25 to 200 psi (172.4 to 1379 kPa) types most common for structure adhesives.	Formulated in all forms.	Pressure types usually have greater strength (not true of modified epoxies).
Time	Types requiring a few seconds to a week available; 1/2- to 24-hour types most common for structural adhesives.	Formulated in all forms.	Time required varies with pressure and temperature applied and immediate strength.
Catalyst	Extremely varied in terms of chemical catalyst required. May also contain thinners.	Two components: paste (or liquid) and liquid.	Sometimes catalyst types may require elevated temperature <212°F (100°C) and/or pressure instead of, or in addition to, a chemical agent.

CHAPTER 8
METAL WORKING

8.1 GENERAL SHOP PRACTICES.

This chapter covers general and special shop practices used in aircraft structural repair. For weapon system- specific information, refer to the applicable structural repair technical order.

8.1.1 Many methods and techniques are used to repair aircraft structural damage. The methods and techniques that are used depend on the following criteria:

- Type of damage
- Type of material
- Location of the damage
- Available tools and equipment to make the repair

To make a sound structural repair, use good shop practices. Maintenance personnel shall have a good working knowledge of sheet metal forming methods and techniques, as well as a working knowledge of the proper use of tools and equipment.

8.2 SHEET METAL FORMING.

All repair parts shall be shaped to fit in place before they are attached to the aircraft or component. This shaping process is called forming. Forming may be a very simple operation, such as making a single bend or a single curve, or it may be a complex operation, requiring a compound curvature. Before forming a part, the technician must give some thought to the complexity of the bends, the material type, the material thickness, the material temper, and the size of the part being fabricated. In most cases, these factors will determine which forming method to use.

8.2.1 Tempered sheet stock shall be used in forming operations whenever possible in typical repairs. Forming that is performed in the tempered condition is known as cold-forming. Cold-forming eliminates heat treatment and the straightening and checking operations required to remove the warp and twist caused by the heat treating process. If the material shows signs of cracking during cold-forming over small radii, the material shall be formed in the annealed condition.

8.2.2 Annealing removes the temper from metal, making it softer and easier to form. Parts containing small radii or compound curvatures must be formed in the annealed condition. After forming, the part shall be heat-treated to a tempered condition before use on the aircraft.

8.3 FORMING TERMINOLOGY.

Terms commonly used in sheet metal forming and flat pattern layout are listed in Figure 8-1.

8.4 FLAT PATTERN DEVELOPMENT.

Construction of interchangeable structural and nonstructural parts is achieved by forming flat sheet stock to make channel, angle, zee, and hat section members. Before a sheet metal part is formed, make a flat pattern to show how much material is required in the bend areas, at what point the sheet must be inserted into the forming tool, or where bend lines are located. Bend lines must be determined to develop a flat pattern for sheet metal forming.

8.5 BEND ALLOWANCE.

When a bend in sheet metal is made, the metal on the outside of the radius stretches and the metal on the inside shrinks. To find the amount of material used in the bend, refer to the bend allowance chart shown in Figure 8-2. The bend allowances chart lists the amount of material needed for one degree of bend when the material thickness and the bend radius are known. To find the amount of material needed to make a bend, multiply the bend allowance per degree by the number of degrees in the bend.

8.6 SETBACK.

To lay out a flat pattern accurately, the bend allowance for each bend must be known, as well as the length of the legs, flanges, and flat portions between the bends. If these measurements are not known, calculations for these lengths must be made. To determine the length of the flat portions, the setback (also known as bend tension adjustment) for each bend must be found. The setback is then subtracted from the mold line measurement. The setback can be calculated by adding the bend radius to the thickness of the material and multiplying the result by the setback of K value (refer to Figure 8-3).

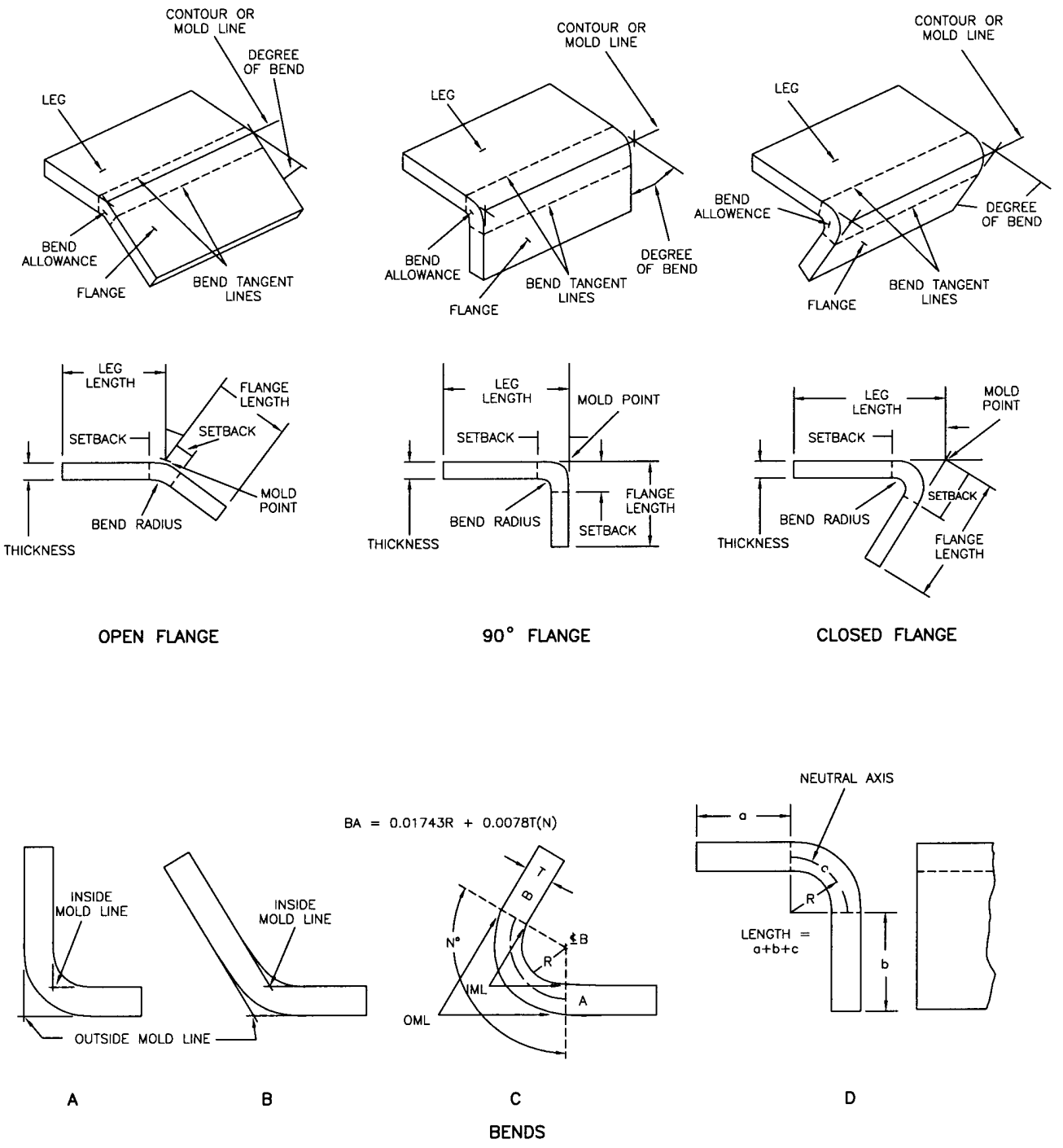

H0614819

Figure 8-1. Technical Forming Terms

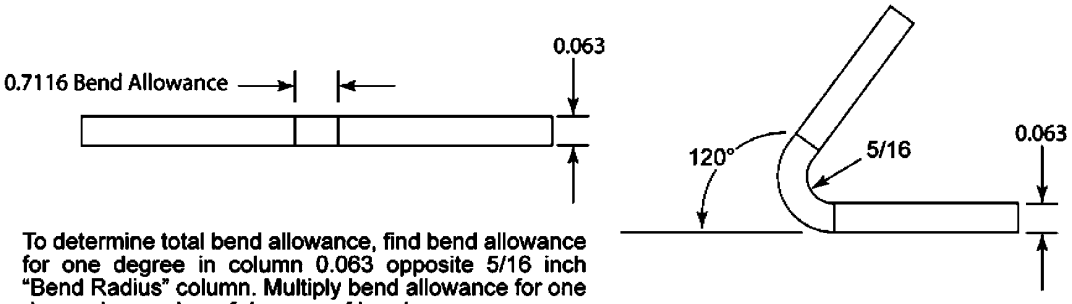

To determine total bend allowance, find bend allowance for one degree in column 0.063 opposite 5/16 inch "Bend Radius" column. Multiply bend allowance for one degree by number of degrees of bend.

Example: 0.00593 x 120 = 0.7116
(total bend allowance).

Bend Radius (Inches)	Material Thickness (Inches)											
	0.020	0.025	0.032	0.040	0.050	0.063	0.071	0.080	0.090	0.100	0.125	0.190
1/32	0.00070	0.00074	0.00079	0.00085	0.00093	0.00104	0.00110	0.00117	0.00125	0.00132	0.00154	0.00202
1/16	0.00125	0.00129	0.00134	0.00140	0.00148	0.00158	0.00164	0.00171	0.00180	0.00187	0.00209	0.00256
3/32	0.00179	0.00183	0.00188	0.00195	0.00202	0.00212	0.00219	0.00225	0.00233	0.00242	0.00263	0.00312
1/8	0.00233	0.00237	0.00243	0.00249	0.00257	0.00267	0.00273	0.00282	0.00288	0.00296	0.00315	0.00366
5/32	0.00288	0.00292	0.00297	0.00303	0.00311	0.00321	0.00327	0.00334	0.00342	0.00350	0.00370	0.00420
3/16	0.00342	0.00347	0.00352	0.00358	0.00366	0.00375	0.00382	0.00389	0.00397	0.00404	0.00424	0.00475
7/32	0.00397	0.00401	0.00406	0.00412	0.00420	0.00430	0.00436	0.00443	0.00451	0.00459	0.00479	0.00529
1/4	0.00451	0.00455	0.00461	0.00467	0.00475	0.00484	0.00491	0.00498	0.00505	0.00513	0.00533	0.00583
9/32	0.00506	0.00510	0.00515	0.00521	0.00529	0.00539	0.00545	0.00552	0.00560	0.00568	0.00588	0.00638
5/16	0.00560	0.00564	0.00570	0.00576	0.00584	0.00593	0.00599	0.00606	0.00614	0.00622	0.00642	0.00692
11/32	0.00615	0.00619	0.00624	0.00630	0.00638	0.00647	0.00654	0.00661	0.00669	0.00676	0.00697	0.00747
3/8	0.00669	0.00673	0.00679	0.00685	0.00693	0.00702	0.00708	0.00715	0.00723	0.00731	0.00751	0.00774
13/32	0.00724	0.00728	0.00733	0.00739	0.00748	0.00756	0.00763	0.00770	0.00777	0.00785	0.00806	0.00856
7/16	0.00778	0.00782	0.00788	0.00794	0.00802	0.00811	0.00817	0.00824	0.00832	0.00840	0.00840	0.00910
15/32	0.00833	0.00837	0.00842	0.00848	0.00856	0.00865	0.00871	0.00878	0.00886	0.00894	0.00914	0.00964
1/2	0.00887	0.00891	0.00896	0.00903	0.00910	0.00919	0.00926	0.00933	0.00941	0.00948	0.00969	0.01019
17/32	0.00941	0.00945	0.00951	0.00957	0.00965	0.00974	0.00980	0.00987	0.00995	0.01003	0.01023	0.01073
9/16	0.00996	0.01000	0.01005	0.01012	0.01019	0.01028	0.01034	0.01042	0.01049	0.01057	0.01078	0.01127
19/32	0.01050	0.01054	0.01060	0.01066	0.01074	0.01083	0.01089	0.01096	0.01104	0.01112	0.01132	0.01182
5/8	0.01105	0.01109	0.01114	0.01121	0.01128	0.01137	0.01143	0.01150	0.01158	0.01166	0.01187	0.01236
21/32	0.01159	0.01163	0.01169	0.01175	0.01183	0.01191	0.01198	0.01205	0.01213	0.01220	0.01241	0.01291
11/16	0.01214	0.01218	0.01223	0.01230	0.01238	0.01248	0.01258	0.01261	0.01269	0.01281	0.01298	0.01351
23/32	0.01268	0.01273	0.01276	0.01283	0.01291	0.01301	0.01310	0.01316	0.01322	0.01333	0.01351	0.01403
3/4	0.01323	0.01327	0.01332	0.01338	0.01347	0.01357	0.01363	0.01370	0.01378	0.01385	0.01407	0.01455
25/32	0.01378	0.01381	0.01386	0.01392	0.01401	0.01411	0.01415	0.01425	0.01432	0.01437	0.01461	0.01508
13/16	0.01432	0.01436	0.01441	0.01447	0.01456	0.01466	0.01471	0.01479	0.01487	0.01493	0.01516	0.01564
27/32	0.01486	0.01490	0.01494	0.01501	0.01509	0.01519	0.01520	0.01534	0.01540	0.01542	0.01569	0.01612
7/8	0.01541	0.01545	0.01550	0.01556	0.01565	0.01575	0.01582	0.01588	0.01596	0.01619	0.01625	0.01682
29/32	0.01595	0.01599	0.01604	0.01610	0.01619	0.01629	0.01639	0.01643	0.01650	0.01664	0.01679	0.01734
15/16	0.01650	0.01654	0.01659	0.01665	0.01674	0.01684	0.01693	0.01697	0.01705	0.01716	0.01734	0.01786
31/32	0.01704	0.01708	0.01712	0.01718	0.01727	0.01737	0.01746	0.01752	0.01758	0.01769	0.01787	0.01839
1	0.01759	0.01763	0.01768	0.01774	0.01783	0.01793	0.01798	0.01806	0.01814	0.01821	0.01843	0.02191

H1500307

Figure 8-2. Bend Allowance

8.7 MINIMUM SHEET METAL BEND RADII.

The sheet metal bend radii listed in Figure 8-4 are minimums. Use these minimums as guidelines when it is necessary to fabricate sheet metal formed sections for repairs. However, bend radii specified in the weapon system-specific repair manual shall supersede those listed in Figure 8-4.

8.8 FLAT PATTERN LAYOUT PROCEDURES.

When it is necessary to duplicate an aircraft part and blueprints or drawings are not available, take measurements directly from the original or a duplicate part. Bend allowances and bend tangent adjustments (setback) for a part being fabricated are necessary for the part being duplicated. The amount of material needed for a flat pattern layout requires locating and calculating bend tangent lines. Assuming the part to be developed is made of 0.071-inch thick material with bend angles of 120°, 60°, and 90°, respectively, the flat pattern of the part would be developed as shown in Figure 8-5 and described below:

a. Compute for adjustment at points A, B, and C, using the K value from Figure 8-3.

b. Compute for the flat areas D, E, F, and G by subtracting the adjustment from respective mold line measurement.

c. Compute for finding bend allowances for 60°, 90°, and 120° bends, using information from Figure 8-2.

CAUTION

To avoid galvanic corrosion, bend lines must be drawn with a non-graphite pencil that conforms to MIL-P-83953. Do not use a sharp, pointed, metal instrument, such as an awl or scribe, to scratch bend lines.

d. The result is the flat pattern layout of the part.

8.9 BEND LINE.

NOTE

The radius of the V-brake die, cornice brake jaw, or hand-forming blocks shall be the same as the bend radius of the flat pattern.

After the flat pattern has been cut to shape with the bend tangent lines indicated, bend lines need to be marked on the part to indicate where the edge of the forming tool must be aligned on the part to make the bend. Bend lines are located differently for a cornice or V-brake, as listed below. It is still not possible to accurately form the part unless it is known where the bend tangent lines should lie in relation to the bend radius over which the part is to be bent. This requires using a bend line (refer to Figure 8-6).

8.9.1 When the cornice brake is used, the bend line shall be a distance equal to the bend radius away from one of the bend tangent lines, depending on the direction in which the part is to be bent. This rule holds regardless of the angle of bend. The procedure for lining up the material in the bending tool is shown in Figure 8-6. Line up the bend line with the nose of the bending tool by using a combination square. If the bend is made with form blocks, the bend line must line up with the edge of the form blocks.

8.9.2 On parts formed on the V-brake, the bend line is midway between bend tangent lines and is located at the center of the brake anvil and upper die.

8.10 FORMING OPERATIONS.

Forming tends to change the shape or contour of a flat sheet or extruded shape. This change in contour is accomplished by either stretching or shrinking the material in a certain area to produce curves, flanges, and various irregular shapes. Since the operation involves altering the shape of the stock material, the amount of shrinking and stretching almost entirely depends on the type of material used. Fully annealed material can withstand considerably more stretching and shrinking and can be formed at a much smaller bend radius than when it is in any of the tempered conditions.

EXAMPLE

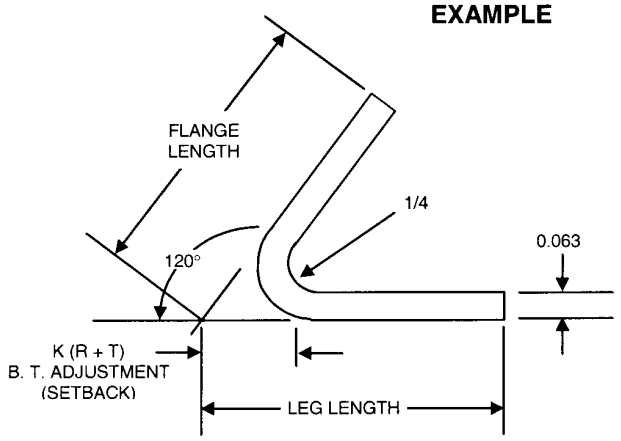

ANGLE OF BEND ..... 120 DEGREES
MATERIAL THICKNESS (T)..... 0.063
BEND RADIUS (R) 0.250
K FROM TABLE 1.7320
BEND TANGENT ADJUSTMENT
= K (R + T)
= 1.7320 (0.250 + 0.063)
= 1.7320 x 0.313
= 0.542 INCH

Use the table below to determine the distance between the mold line and the bend line of sheet metal flanges.

Angle Degrees	K	Angle Degrees	K	Angle Degrees	K	Angle Degrees	K	Angle Degrees	K	Angle Degrees	K
1	0.0873	31	0.27732	61	0.58904	91	1.0176	121	1.7675	151	3.8667
2	0.01745	32	0.28674	62	0.60086	92	1.0355	122	1.8040	152	4.0108
3	0.02618	33	0.29621	63	0.61208	93	1.0538	123	1.8418	153	4.1653
4	0.03493	34	0.30573	64	0.62487	94	1.0727	124	1.8807	154	4.3315
5	0.04366	35	0.31530	65	0.63707	95	1.0913	125	1.9210	155	4.5107
6	0.05241	36	0.32492	66	0.64941	96	1.1106	126	1.9626	156	4.7046
7	0.06116	37	0.33459	67	0.66188	97	1.1303	127	2.0057	157	4.9151
8	0.06993	38	0.34433	68	0.67451	98	1.1504	128	2.0503	158	5.1455
9	0.07878	39	0.35412	69	0.68728	99	1.1708	129	2.0965	159	5.3995
10	0.08749	40	0.36397	70	0.70021	100	1.1917	130	2.1445	160	5.6713
11	0.09629	41	0.37388	71	0.71329	101	1.2131	131	2.1943	161	5.9758
12	0.10510	42	0.38386	72	0.72654	102	1.2349	132	2.2460	162	6.3137
13	0.11393	43	0.39391	73	0.73996	103	1.2572	133	2.2998	163	6.6911
14	0.12278	44	0.40403	74	0.75355	104	1.2799	134	2.3558	164	7.1154
15	0.13165	45	0.41421	75	0.76733	105	1.3032	135	2.4142	165	7.5957
16	0.14054	46	0.42447	76	0.78128	106	1.3270	136	2.4751	166	8.1443
17	0.14945	47	0.43481	77	0.79543	107	1.3514	137	2.5386	167	8.7769
18	0.15838	48	0.44523	78	0.80978	108	1.3764	138	2.6051	168	9.5144
19	0.16734	49	0.45573	79	0.82434	109	1.4019	139	2.6746	169	10.385
20	0.17633	50	0.46631	80	0.83910	110	1.4281	140	2.7475	170	11.430
21	0.18534	51	0.47697	81	0.85408	111	1.4550	141	2.8239	171	12.706
22	0.19438	52	0.48773	82	0.86929	112	1.4826	142	2.9042	172	14.301
23	0.20345	53	0.49858	83	0.88427	113	1.5108	143	2.9887	173	16.350
24	0.22169	55	0.52057	85	0.91633	115	1.5697	145	3.1716	175	22.904
25	0.23087	56	0.53171	86	0.93251	116	1.6003	146	3.2708	176	26.636
27	0.24008	57	0.54295	87	0.94896	117	1.6318	147	3.3759	177	38.188
28	0.24933	58	0.55431	88	0.96569	118	1.6643	148	3.4874	178	57.290
29	0.25862	59	0.56577	89	0.98270	119	1.6977	149	3.6059	179	114.590
30	0.26795	60	0.57737	90	1.00000	120	1.7320	150	3.7320	180	INFINITE

H0616789

Figure 8-3. Setback Dimensions

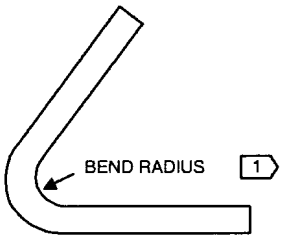

Tolerances for Formed Parts

Bend Radius	Tolerance
0.03 to 0.06	+0.03 - 0.00
0.07 to 0.25	±0.03
0.26 to 0.50	±0.06
0.51 to 1.00	±0.07
1.01 to 2.00	±0.13
2.01 to 3.00	±0.19
3.01 to 5.00	±0.25

Material Thickness	Aluminum						Material Thickness	Titanium	
	2014-O [2] 2024-O [2] 5052-O 6013-T4 [7] 6061-O 6061-T4	5052-H34 6061-T6	2014-T4 [4] 2024-T3 [3] 2024-T351 [3] 2024-T4 [4]	2014-T6 [4] 2024-T81 2024-T851 2024-T6 2024-T72 2024-T76	7075-O [5] 5052-H32	7075-T76 7075-T6		Unalloyed	6AL-4V [6] 6AL-4V-ELI [6] 6AL-6V-2Sn [6]
	Room Temp	Room Temp	Room Temp	Room Temp	Room Temp	Room Temp		Room Temp	Room Temp
0.010							0.010		
0.012	0.03	0.06	0.06	0.06	[2] 0.03	0.06	0.012	0.06	0.06
0.016	0.03	0.06	0.06	0.09	[2] 0.03	0.06	0.018	0.06	0.09
0.020	0.03	0.06	0.06	0.13	0.06	0.09	0.020	0.09	0.13
0.025	0.06	0.09	0.09	0.16	0.06	0.13	0.025	0.09	0.13
0.028							0.028	0.13	0.16
0.032	0.06	0.13	0.13	0.19	0.06	0.16	0.032	0.13	0.16
0.036							0.036	0.13	0.19
0.040	0.06	0.13	0.13	0.25	0.09	0.22	0.040	0.16	0.22
0.045							0.045	0.16	0.25
0.050	0.09	0.16	0.16	0.31	0.13	0.25	0.050	0.19	0.25
0.056							0.056	0.19	0.31
0.063	0.13	0.22	0.22	0.38	0.13	0.31	0.063	0.22	0.33
0.071	0.13	0.25	0.25	0.44	0.16	0.38	0.071	0.25	0.38
0.080	0.13	0.28	0.26	0.50	0.19	0.41	0.080	0.28	0.44
0.090	0.13	0.31	0.36	0.56	0.19	0.47	0.090	0.31	0.50
0.100	0.16	0.38	0.41	0.63	0.22	0.56	0.100	0.38	0.56
0.112							0.112	0.41	0.63
0.125	0.19	0.44	0.50	0.88	0.28	0.69	0.125	0.44	0.72
0.140							0.140	0.50	0.88
0.160	0.25	0.56	0.66	1.00	0.38	0.88	0.160	0.56	1.00
0.180							0.180	0.63	1.13
0.190	0.31	0.75	0.81	1.31	0.44	1.13	0.190	0.69	1.25
0.200							0.200		
0.224									
0.250	0.50	1.00	1.13	2.00	0.63	1.50			
0.313	0.63	1.25	1.50		0.81	2.00			
0.375	0.75	1.50	1.88		1.00	2.50			
0.500	1.00	2.00	2.50		1.50	3.25			

NOTES:

[1] BEND RADII ARE MEASURED ON THE INSIDE SURFACE
[2] AFTER FORMING, HEAT TREAT TO -T72
[3] AFTER FORMING, AGE TO -T81
[4] AFTER FORMING, AGE TO -T72
[5] AFTER FORMING, AGE TO -T6 (±0.080), -T76(+0.080)
[6] SINGLE ANNEALED
[7] IF - T6 IS REQUIRED, AGE 4-5 HOURS AT 375F

H0616790

Figure 8-4. Minimum Bend Radii (Sheet 1 of 2)

Material Thickness	Stainless Steel										Alloy Steels T-1		Material Thickness
	Ph 15-7 Mo		17-7 Ph		301 ANLD. 302 ANLD. 304 ANLD. 316 ANLD. 321 ANLD. 347 ANLD.	301 (1/4H) 316 (1/4H)	301 (1/2H)	301 (3/4H)	301 (H)	A-286 (SOL. TR)	1010 – 1025 (Comm. Steels) 1095 4130 4340 (ANLD. - NORM.)	(Low Alloy Extra High Strength Steel)	
	(COND. A ANLD.)	(COND. TH 1050)	(COND. A ANLD.)	(COND. TH 1050)									
	Room Temp		Room Temp		Room Temp		Room Temp			Room Temp	Room Temp		
0.010													
0.012	0.03	0.12	0.03	0.13	0.03	0.06	0.06	0.09	0.09	0.03	0.03	0.06	0.12
0.016	0.03	0.12	0.03	0.13	0.03	0.06	0.06	0.09	0.09	0.03	0.03	0.06	0.16
0.020	0.03	0.12	0.06	0.16	0.03	0.06	0.06	0.09	0.12	0.03	0.06	0.09	0.20
0.025	0.03	0.16	0.06	0.16	0.03	0.06	0.09	0.12	0.16	0.03	0.06	0.09	0.25
0.028	0.03	0.25	0.06	0.25	0.03	0.06	0.09	0.16	0.16	0.03	0.06	0.13	0.28
0.032	0.03	0.25	0.06	0.25	0.03	0.06	0.09	0.16	0.19	0.03	0.06	0.13	0.32
0.036	0.06	0.25	0.09	0.25	0.06	0.09	0.13	0.19	0.22	0.06	0.09	0.13	0.36
0.040	0.06	0.25	0.09	0.31	0.06	0.09	0.13	0.19	0.22	0.06	0.09	0.16	0.40
0.045	0.06	0.28	0.09	0.34	0.06	0.09	0.13	0.22	0.22	0.06	0.09	0.16	0.45
0.050	0.06	0.31	0.13	0.38	0.06	0.13	0.16	0.22	0.22	0.06	0.13	0.16	0.50
0.056	0.06	0.34	0.13	0.47	0.06	0.13	0.19	0.25	0.25	0.06	0.13	0.19	0.56
0.063	0.09	0.38	0.13	0.50	0.06	0.13	0.19	0.25	0.25	0.06	0.13	0.22	0.63
0.071	0.09	0.44	0.16	0.56	0.09	0.16	0.22	0.28	0.28	0.09	0.16	0.25	0.71
0.080	0.12	0.50	0.16	0.63	0.09	0.16	0.25	0.31	0.31	0.09	0.16	0.28	0.80
0.090	0.16	0.56	0.19	0.75	0.09	0.19	0.31	0.38	0.38	0.09	0.19	0.31	0.90
0.100	0.19	0.62	0.22		0.13	0.22	0.31	0.47	0.47	0.13	0.22	0.34	0.100
0.112	0.19	0.75	0.22		0.13	0.22	0.34	0.47	0.47	0.13	0.22	0.38	0.112
0.125	0.22	0.75	0.25		0.13	0.25	0.38	0.50	0.50	0.13	0.25	0.41	0.125
0.140	0.22	0.86	0.28		0.16	0.28	0.44	0.50	0.50	0.16	0.28	0.47	0.140
0.160	0.25	1.00	0.34		0.16	0.31	0.50	0.50	0.50	0.16	0.31	0.56	0.160
0.180	0.28	1.12	0.38		0.19	0.38	0.56	0.69	0.69	0.19	0.36	0.63	0.180
0.190	0.34	1.25	0.38		0.19	0.38	0.63	0.75	0.75	0.19	0.36	0.63	0.190
0.200	0.44	1.25			0.22	0.41	0.63	0.88	0.88	0.22	0.41	0.69	0.200
0.224	0.47	1.38			0.22	0.44	0.69	0.88	0.88	0.22	0.44	0.75	0.224
0.250	0.50	1.50			0.25	0.50	0.75	1.00	1.00	0.25	0.50	0.98	0.250
0.315					0.31						0.63	1.25	0.313
0.375					0.38						0.75	1.50	0.375
0.500					0.50						1.00	2.00	0.500

H0616791

Figure 8-4. Minimum Bend Radii (Sheet 2)

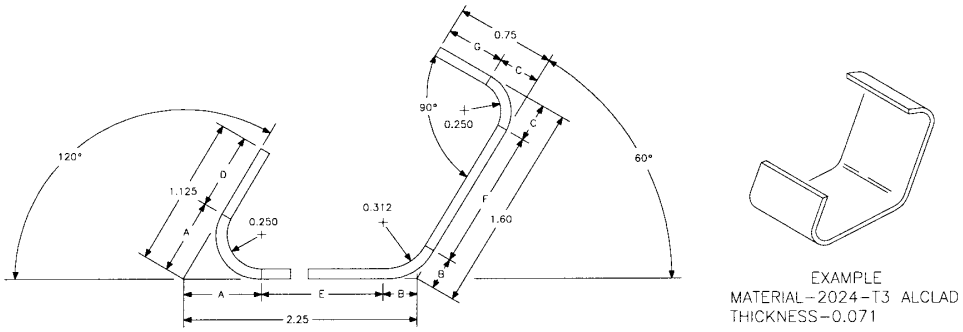

STEP 1

DETERMINE BEND TANGENT ADJUSTMENT.

ADJUSTMENT COMPUTATIONS:

ADJUSTMENT = "K" VALUE x BEND RADIUS (R) +
MATERIAL THICKNESS (T)
(SEE TABLE 9-2 FOR "K" VALUE)
BTA AT A = K (R + T)
BTA AT A = 1.7320 (0.250 + 0.071)
BTA AT A = 1.7320 x 0.321
BTA AT A = 0.556

BTA AT B = K (R + T)
BTA AT B = 0.5773 (0.312 + 0.071)
BTA AT B = 0.5773 x 0.363
BTA AT B = 0.221

BTA AT C = K (R + T)
BTA AT C = 1 (0.250 + 0.071)
BTA AT C = 1 x 0.321
BTA AT C = 0.321

STEP 2

DETERMINE FLAT AREAS.

FLAT AREAS COMPUTATIONS:

FLAT AREA = MOLD LINE MEASUREMENT (MLM) - BEND
TANGENT ADJUSTMENT
FLAT D = MLM - A
FLAT D = 1.125 - 0.556
FLAT D = 0.569

FLAT E = MLM - A - B
FLAT E = 2.250 - 0.556 - 0.221
FLAT E = 1.473

FLAT F = MLM - B - C
FLAT F = 160 - 0.221 - 0.321
FLAT F = 1.058

FLAT G = MLM - C
FLAT G = 0.750 - 0.321
FLAT G = 0.429

STEP 3

DETERMINE BEND ALLOWANCE.

BEND ALLOWANCE COMPUTATIONS:

BEND ALLOWANCE (BA) = NUMBER OF DEGREES IN BEND x BEND ALLOWANCE PER
DEGREE (SEE TABLE 9-1 FOR BEND ALLOWANCE PER DEGREE)

BA FOR 120° BEND = 120 (BA PER DEGREE)
BA FOR 120° BEND = 120 x 0.00491
BA FOR 120° BEND = 0.589

BA FOR 60° BEND = 60 (BA PER DEGREE)
BA FOR 60° BEND = 60 x 0.00599
BA FOR 60° BEND = 0.359

BA FOR 90° BEND = 90 (BA PER DEGREE)
BA FOR 90° BEND = 90 x 0.00491
BA FOR 90° BEND = 0.442

STEP 4

LAYOUT.

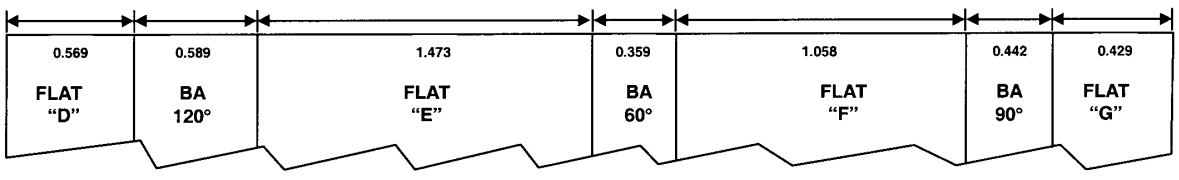

H0614820

Figure 8-5. Layout Development

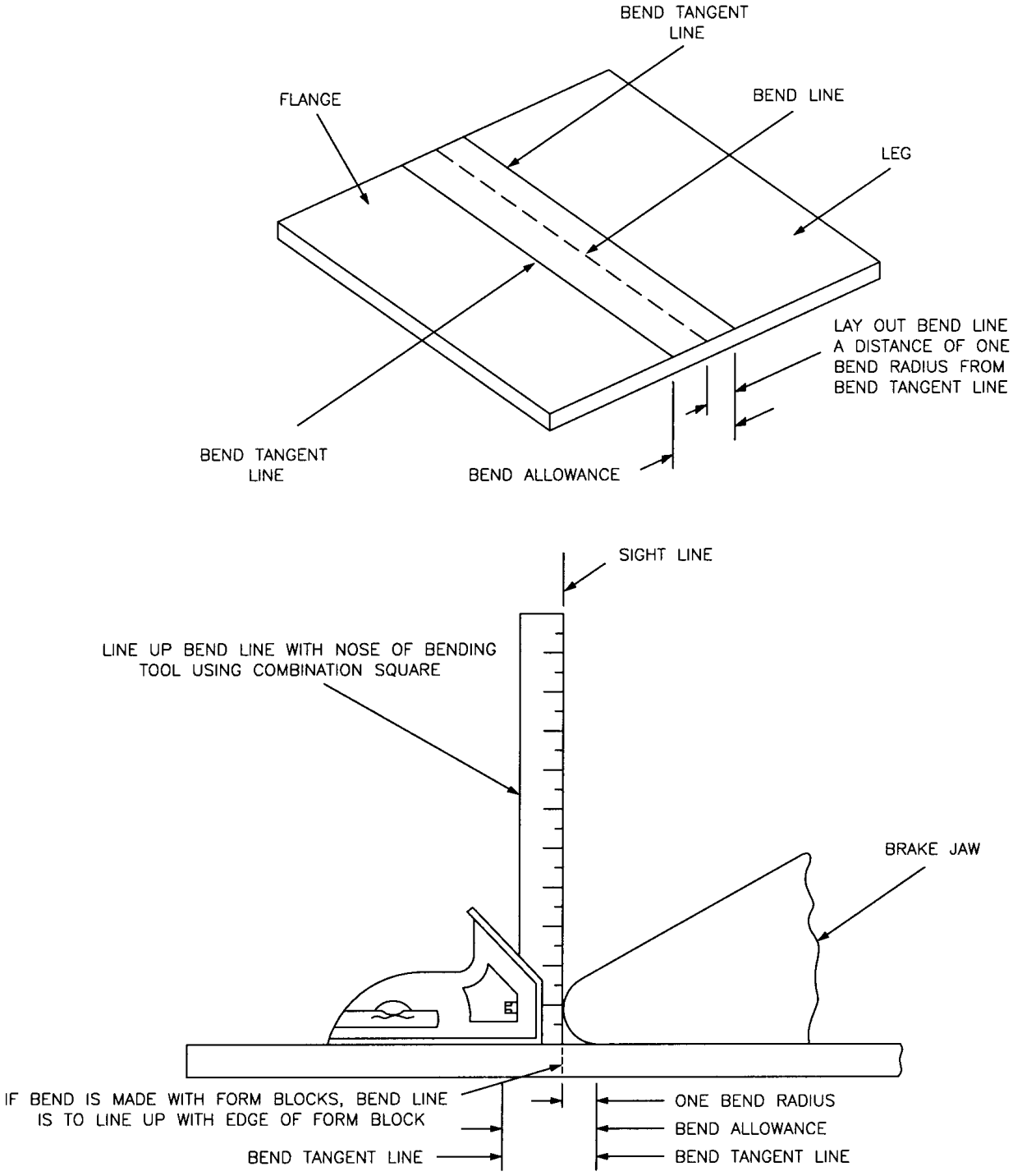

Figure 8-6. Use of Bend Lines on Cornice Brake

8.11 BOX PAN OR CORNICE BRAKE MACHINE FORMING.

WARNING

If the box pan or cornice brake machine has a power drive, one or more methods of machine guarding shall be provided.

The easiest and most accurate method of making straight-line bends on a piece of sheet metal is by the use of a box pan or cornice brake.

8.11.1 Before bending any material requiring an accurate bend radius and definite leg length, the settings of the brake should be checked with a piece of scrap metal. When making an ordinary bend on a brake, place the sheet to be bent on the bed so that the bend line is directly under the jaw or clamping bar. Pull down the clamping bar handle to hold the sheet firmly in place. Set the stop for the proper angle or amount of bend. Make the bend by raising the bending leaf until it strikes the stop. If more than one bend is to be made, bring the next bend line under the clamping bar and repeat the bending procedure (refer to Figure 8-7).

8.12 SLIP ROLL MACHINE FORMING.

WARNING

If the slip roll machine has a power drive, one or more methods of machine guarding shall be provided.

With the exception of the brake, the slip roll former is probably used more than any other machine in the shop. This machine is for forming sheets into cylinders or other straight curved surfaces. It consists of right and left end frames with three solid rolls mounted between these frames. Gears, which are operated by either a hand crank or a power drive, connect the two gripping rolls. These rolls can be adjusted to the thickness of the metal by using the two adjusting screws located on the bottom of each frame. When the metal is started into the machine, the rolls grip the metal and carry it to the rear roll, which curves it. The desired radius of a bend is obtained by the rear roll. The bend radius of the part can be checked as the forming operation progresses by using a circle board or radius gage. The gages can be made by cutting a piece of material to the required finished radius and comparing it to the radius being formed by the rolling operation. On some material the forming operation must be performed by passing the material through the rolls several times, with progressive settings on the forming roll. On most machines, the top roll can be released on one end, permitting the formed sheet to be removed from the machine without distortion.

8.13 HAND FORMING.

All hand forming revolves around the processes of stretching and shrinking metal. Stretching means to lengthen or increase a particular area. Shrinking means to reduce the area of a piece of metal. Several methods of stretching and shrinking may be used, depending on the size, shape, and contour of the part being formed.

8.13.1 Straight-line bends of comparatively short sections can be made by hand with the aid of wooden or metal bending blocks. After the part has been laid out and cut to size, clamp it rigidly along the bend line between two forming blocks held in a vise. The forming blocks shall have one edge rounded to give the desired bend radius. Bend the metal that protrudes beyond the bending block to the desired angle by tapping lightly with a rubber, plastic, or rawhide mallet. Start tapping at one end and work back and forth along the edge, making the bend gradually and evenly. Continue this process until the protruding metal is bent to the desired angle. If a large amount of metal extends beyond the bending blocks, maintain enough hand pressure against the protruding sheet to prevent the metal from bouncing. Remove any irregularity in the flange by holding a straight block of hardwood edgewise against the bend and striking it with heavy blows of a hammer or mallet. If the amount of metal that protrudes beyond the bending blocks is too small, make the entire bend by using the hardwood block and striking the block with a hammer.

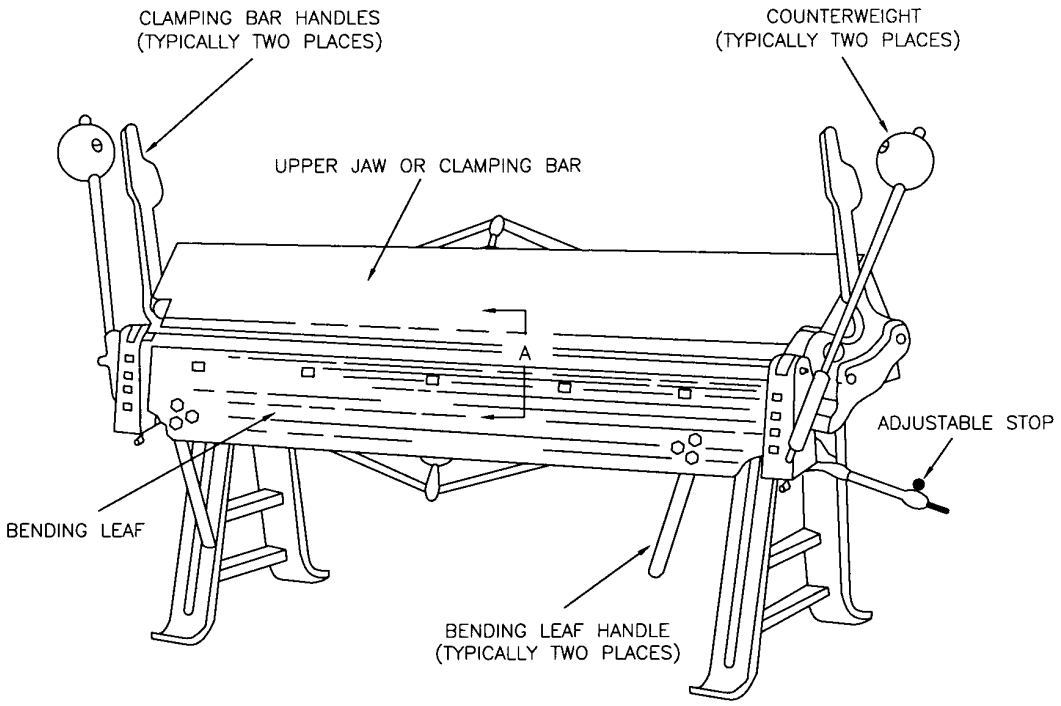

BENDING OPERATION

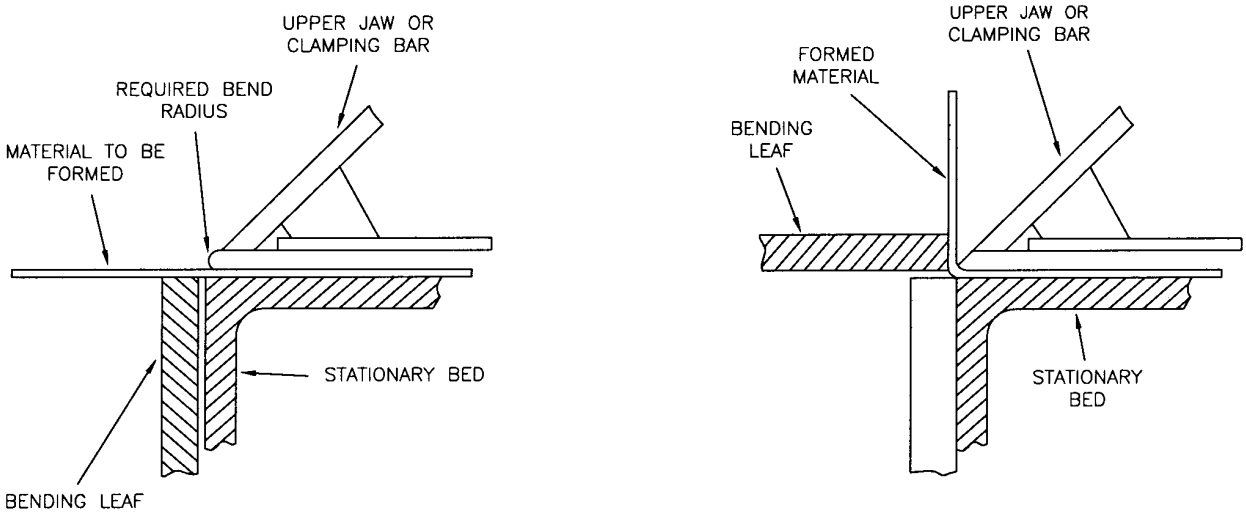

A

H0614822

Figure 8-7. Cornice Brake Operation

8.13.2 Curved Flanged Parts. Curved flanged parts have mold lines that are either concave or convex. The concave flange is formed by stretching, while the convex flange is formed by shrinking. Such parts are shaped with the aid of hardwood or metal form blocks. These blocks are made in pairs and are designed specifically for the shape of the part being formed. Each pair fits exactly and conforms to the actual dimension and contour of the finished article. The mating blocks may be equipped with small aligning pins to help line up the blocks and to hold the material in place. The blocks may be held together by C-clamps or a vise. The edges of the form blocks are rounded to give the correct radius of bend to the part and are undercut approximately 5° to allow for springback of the metal. This undercut is especially important if the material is hard or if the bend must be accurate. To accurately lay out and cut the form blocks to the proper size when only the mold line dimensions of the part are known, use the form correction chart shown in Figure 8-8 for locating the edge of the form block. The chart gives a correction parameter, C, which is the amount to be subtracted from the mold line dimension of the part to be formed. This corrected measurement is the size to which the form block shall be cut. The major steps in forming a curved flange are shown in Figure 8-9 and described below:

a. Cut the material to size, allowing about 1/4 inch excess material for trim and drill holes for alignment pins.

b. File and sand the edges of the material to remove all nicks caused by the cutting tools. This reduces the possibility of the material cracking at the edges during the forming operation.

c. Place the material between the form blocks and clamp tightly in a vise so that the material will not move or shift. Clamp the work as closely as possible to the particular area being formed to prevent strain on the form block and to keep the material from slipping.

8.13.3 Concave Surfaces. Concave surfaces are formed by stretching the material over a form block (see Figure 8-10). Using a plastic or rawhide mallet with a smooth, slightly rounded face, start hammering at the extreme ends of the part and continue toward the center of the bend. This procedure permits some of the material at the ends of the part to be worked into the center of the curve where it will be needed. Continue hammering until the metal is gradually worked down over the entire flange and is flush with the form block. After the flange is formed, trim off the excess material and check the part for accuracy.

8.13.4 Convex Surfaces. Convex surfaces are formed by shrinking the material over a form block (see Figure 8-11). Using a wooden or plastic shrinking mallet and a backup or wedge block, start at the center of the curve and work toward both ends. Hammer the flange down over the form, striking the metal with glancing blows at an angle of approximately 45° and with a motion that will tend to pull the part away from the radius of the form block. Use the backup block to keep the edge of the flange as nearly perpendicular to the form block as possible. The backup block also lessens the possibility of buckles, splits, or cracks. Another method of hand forming flanges is by using a lead bar or strap. While secured in the form block, the material is struck by the lead strap, which takes the shape of the part being formed and forces it down against the form block. One advantage to using this method is that the metal is formed without marring or wrinkling and is not thinned out as it would be by other methods of hand forming.

8.13.5 Formed and extruded type angle can be curved, not bent sharply, by stretching or shrinking one of the flanges. In this forming process, place the flange to be stretched in the groove of a V-block, as shown in Figure 8-12. If the flange is to be shrunk, place the flange across the V-block. Using a stretching mallet, strike the flanges directly over the V-portion with light, even blows and gradually force it down into the V-cutout. A blow that is too heavy will buckle the angle strip. Keep moving the angle strip across the V-block, but always strike the spot directly above the V. Form the curve gradually and evenly by moving the strip slowly back and forth, distributing the hammer blows at equal spaces on the flange. Lay out a full-sized, accurate pattern on a sheet of paper and periodically check the accuracy of the curve by comparing the part with the pattern. Doing this makes it possible to determine exactly how the curve is progressing and just where it needs to be increased or decreased. Form the part roughly to the desired shape before attempting to finish any one portion, because the finishing or smoothing of the angle may cause some other portion of the angle to change shape. If any section of the part is curved too much, reduce the curve by reversing the part on the V-block and striking lightly with a mallet. Form the curve with a minimum amount of hammering, because excessive hammering will work-harden the metal. Work hardening can be recognized by a lack of bending or springiness in the metal. In some cases, the part may have to be annealed before the forming can continue.

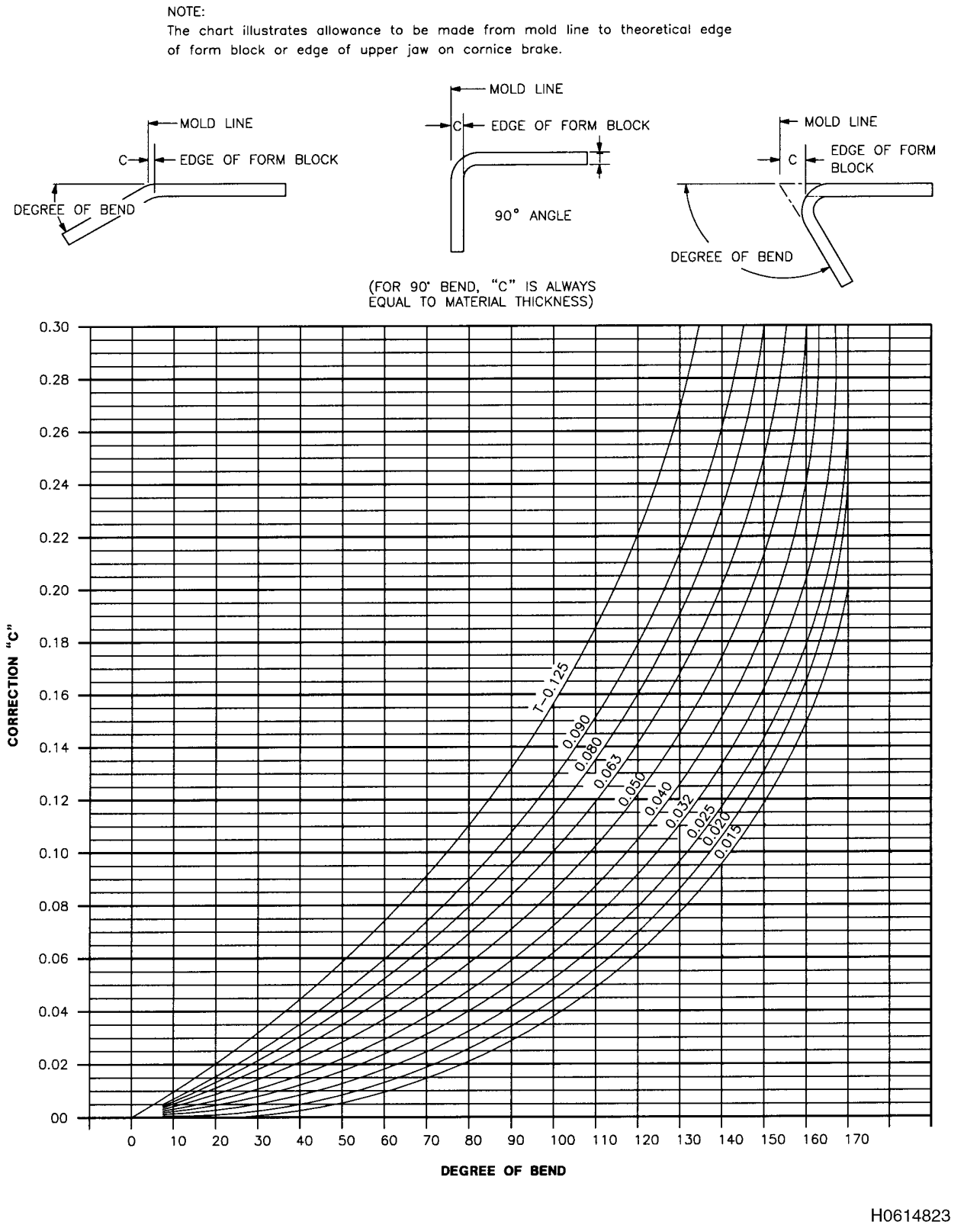

Figure 8-8. Form Correction Chart

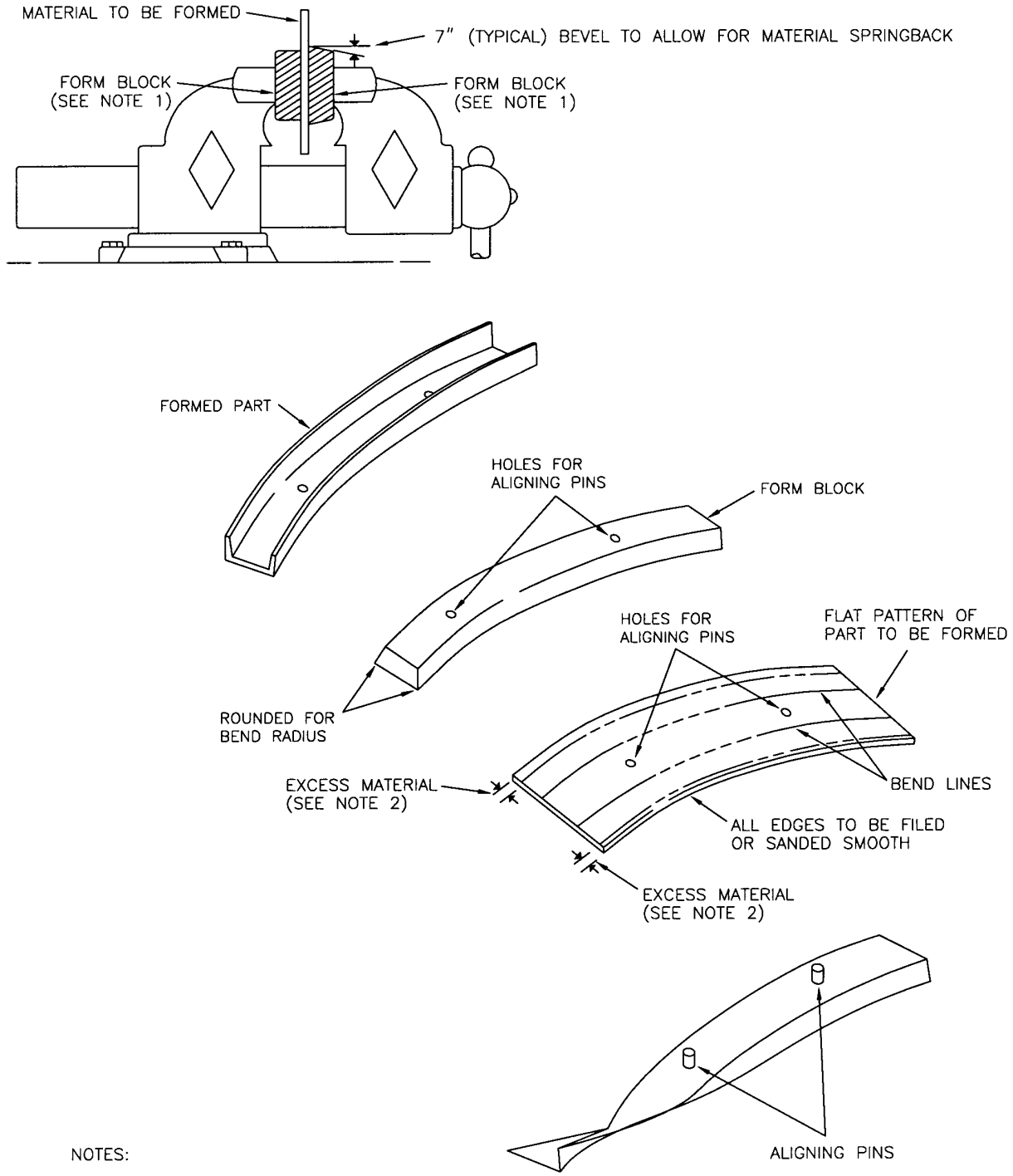

NOTES:

1. Form blocks may be made from any hard wood, phenolic, steel, or aluminum alloy.
2. A minimum of 1/4 inch excess material shall be allowed for trimming after the part has been formed.

H0614824

Figure 8-9. Forming Parts

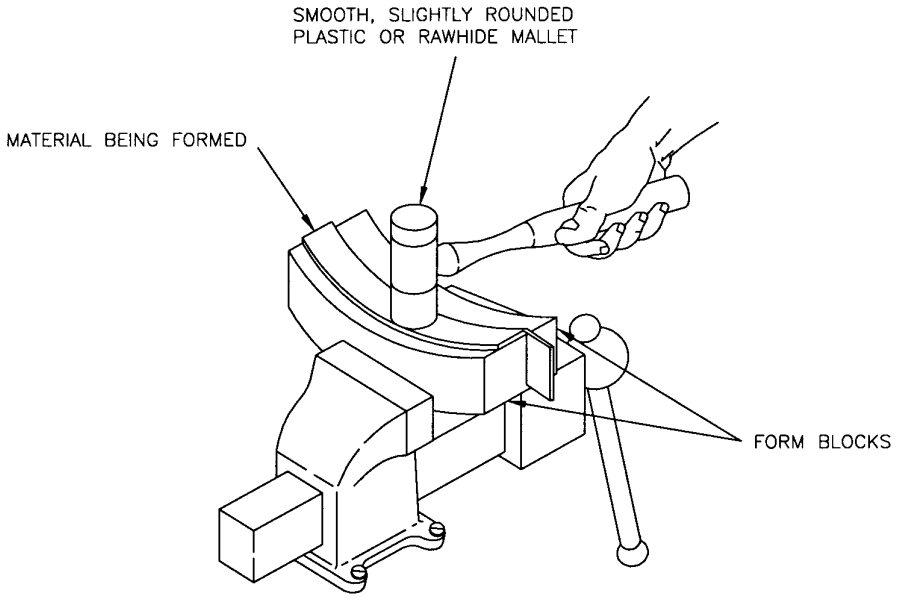

NOTE:

The edges of the part should be smooth and free from any nicks or burrs that would cause the part to crack during the forming operation.

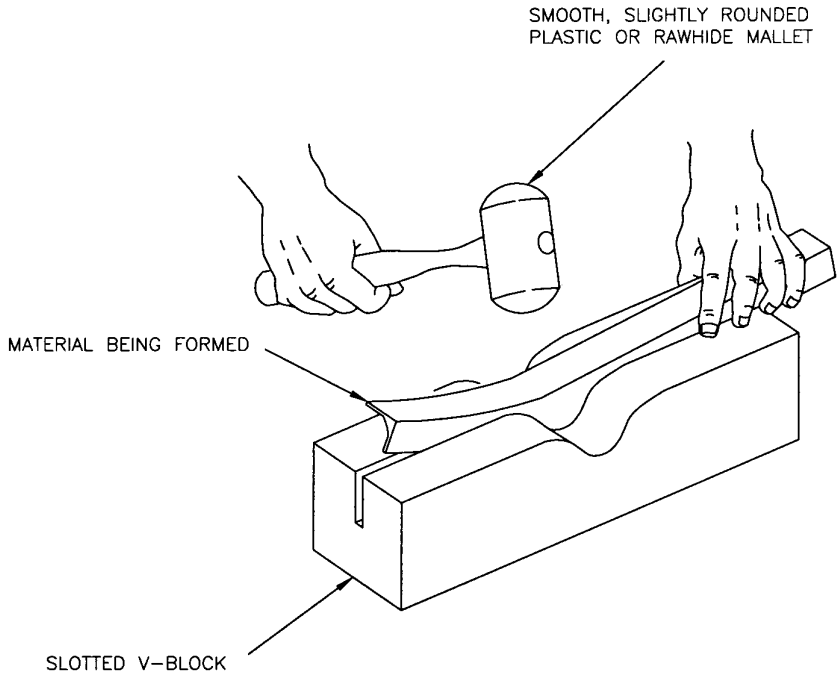

Figure 8-10. Hand-Forming Concave Surfaces

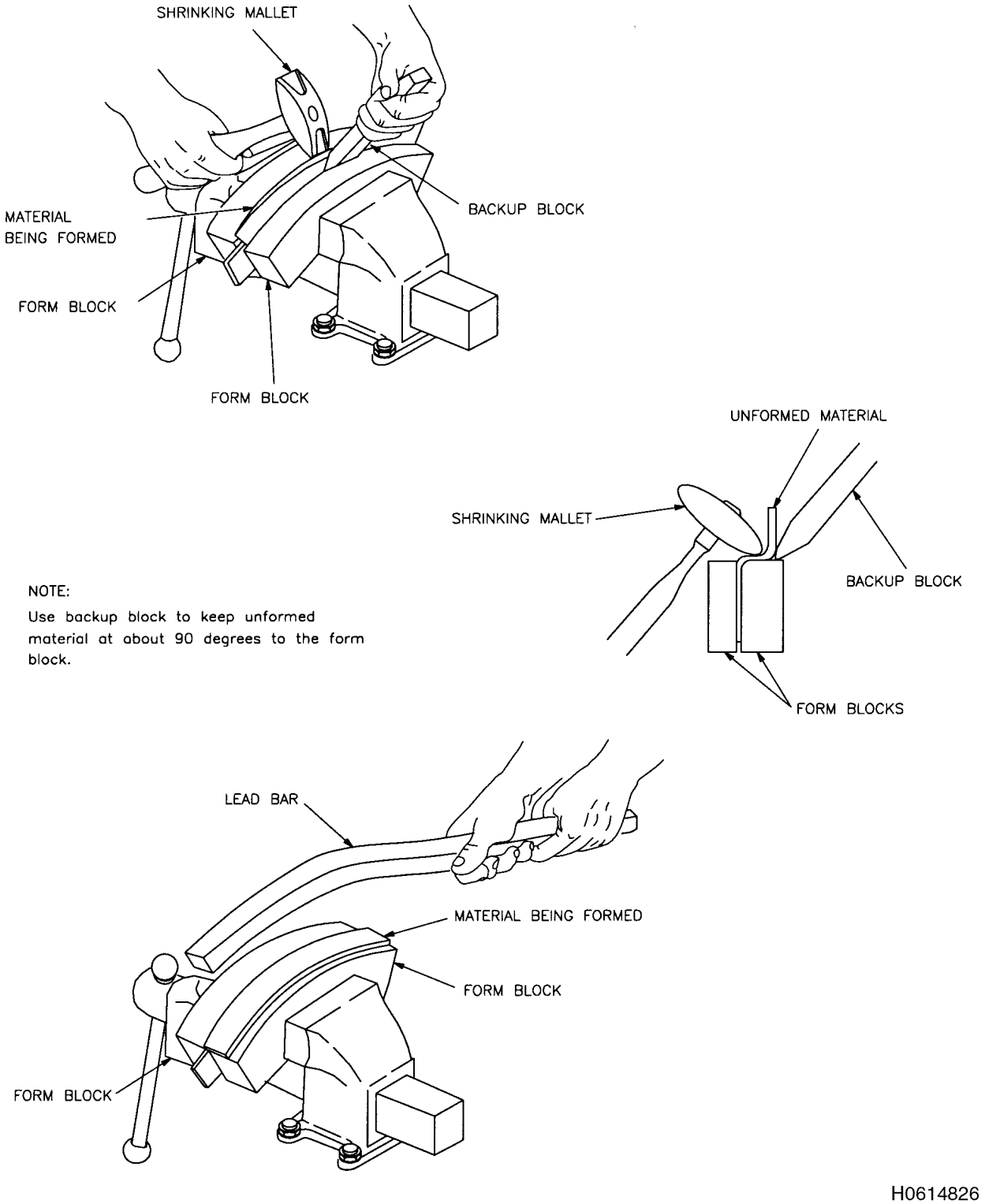

Figure 8-11. Hand-Forming Convex Surfaces

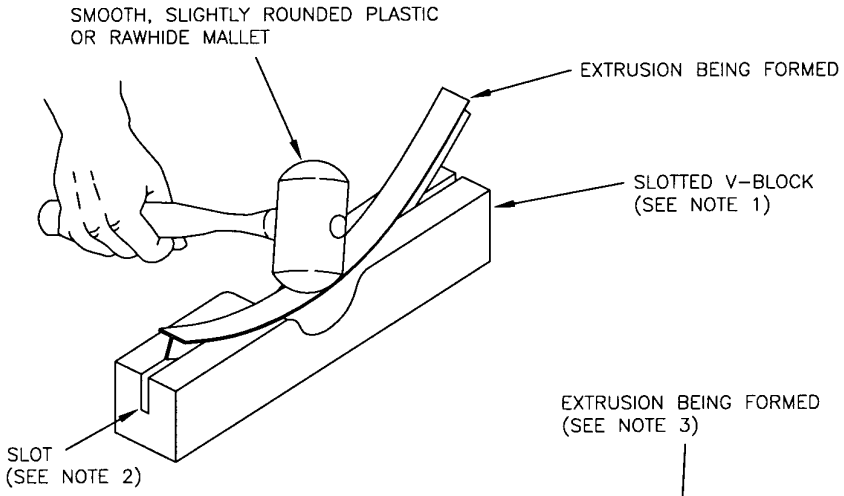

STRETCHING OPERATION

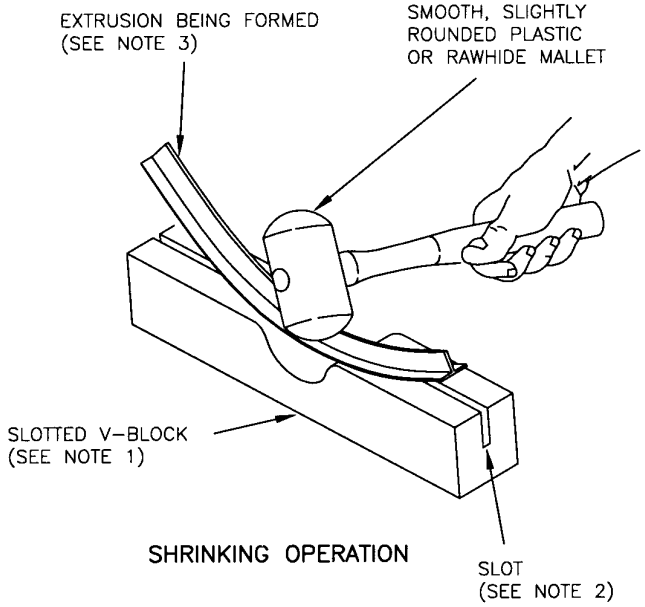

SHRINKING OPERATION

NOTES:

1. The slotted V-block can be made from any hard wood, steel, or aluminum alloy.
2. The slot cut in the V-block should be just wide enough to receive the flange of the extrusion.
3. To form the part, strike the extrusion directly over the V of the block while moving the part back and forth over the block.

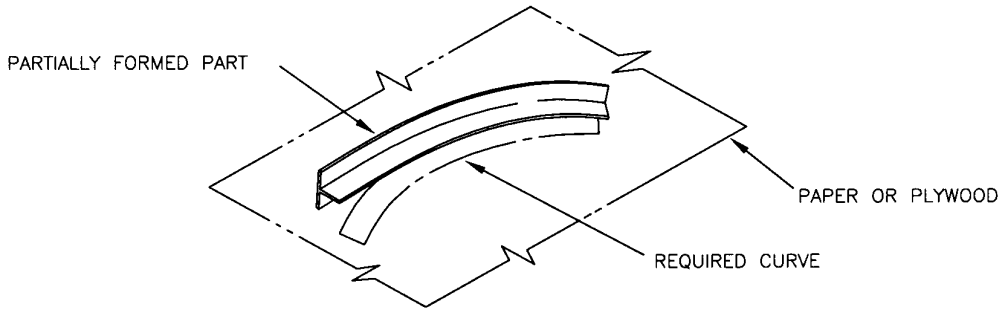

CHECKING FORMED PART FOR ACCURACY

H0614827

Figure 8-12. Hand-Forming Extruded Shapes

NOTES:

1. For R (radius), refer to forming operations figures showing minimum radii for applicable materials to be joggled.
2. Tolerances for depth of offset "D" in flat sheet:

   D $\begin{pmatrix} +0.030 \\ -0.010 \end{pmatrix}$ in. for a sheet thickness of 0.068 in. or less

   D $\begin{pmatrix} +0.020 \\ -0.010 \end{pmatrix}$ in. for a sheet thickness of 0.069 in. or greater
3. Joggle length is determined from column A or B as applicable for material to be joggled.
4. Joggling sheet at room temperature should be performed in the O or W temper, unless joggles will be penetrant inspected. Refer to technical order 33B-1-1 or specific NDI manual for penetrant inspection procedures.

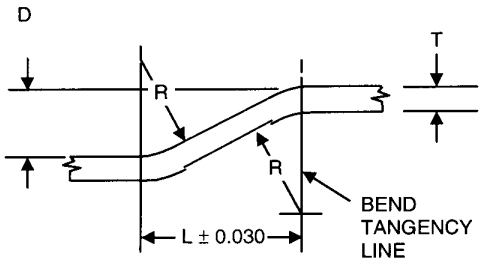

Material	Use Column
2024-0	A
2024-T3, T42	A
6061-0	A
6061-T6	A
TITANIUM	B
STAINLESS STEEL (HARD)	B
STAINLESS STEEL (ANNEALED)	A
ALLOY STEEL (ANNEALED)	A

JOGGLE LENGTH "L"
For Sheet Thickness "T"

Depth of Offset "D"	Sheet Thickness "T"													
	UP – 0.022		0.023 – 0.027		0.028 – 0.035		0.036 – 0.044		0.045 – 0.054		0.055 – 0.068		0.069 – 0.075	
	A	B	A	B	A	B	A	B	A	B	A	B	A	B
UP – 0.022	0.14	0.17	0.16	0.18	0.17	0.19	0.18	0.21	0.19	0.22	0.21	0.24	0.22	0.24
0.023 – 0.027	0.15	0.18	0.17	0.19	0.19	0.22	0.19	0.22	0.21	0.24	0.23	0.25	0.24	0.27
0.028 – 0.035	0.16	0.19	0.18	0.20	0.20	0.26	0.20	0.24	0.22	0.26	0.25	0.28	0.26	0.29
0.036 – 0.044	0.17	0.20	0.20	0.22	0.22	0.30	0.22	0.26	0.24	0.28	0.27	0.30	0.28	0.32
0.045 – 0.054	0.20	0.21	0.21	0.23	0.24	0.37	0.24	0.28	0.26	0.31	0.29	0.33	0.31	0.35
0.055 – 0.068	0.21	0.24	0.24	0.25	0.25	0.44	0.25	0.30	0.28	0.33	0.32	0.36	0.34	0.38
0.069 – 0.075	0.22	0.25	0.25	0.26	0.26	0.49	0.26	0.32	0.29	0.34	0.31	0.38	0.35	0.41
0.076 – 0.084	0.22	0.26	0.26	0.29	0.27	0.54	0.27	0.33	0.30	0.36	0.35	0.40	0.37	0.42
0.085 – 0.097	0.23	0.26	0.27	0.29	0.30	0.59	0.30	0.35	0.31	0.38	0.36	0.41	0.38	0.44
0.098 – 0.113	0.23	0.27	0.27	0.30	0.31	0.65	0.31	0.36	0.32	0.39	0.37	0.43	0.39	0.46
0.114 – 0.139	0.24	0.28	0.29	0.32	0.33	0.78	0.33	0.39	0.37	0.42	0.40	0.47	0.43	0.50
0.140 – 0.172	0.24	0.30	0.30	0.34	0.35	0.96	0.35	0.45	0.39	0.46	0.46	0.51	0.47	0.55
0.173 – 0.219	0.24	0.30	0.31	0.35	0.36	1.13	0.36	0.47	0.41	0.51	0.48	0.54	0.52	0.59
0.220 – 0.262	0.24	0.30	0.31	0.37	0.37	1.49	0.38	0.51	0.44	0.56	0.53	0.62	0.57	0.68

H0614828

Figure 8-13. Joggle Dimension Chart - Flat Sheet, Joggle Cold (Sheet 1 of 2)

JOGGLE LENGTH "L"
For Sheet Thickness "T"

Depth Of Offset "D"	Sheet Thickness "T"											
	0.076 – 0.097		0.098 – 0.113		0.114 – 0.139		0.140 – 0.172		0.173 – 0.219		0.220 – 0.262	
	A	B	A	B	A	B	A	B	A	B	A	B
UP – 0.022	0.23	0.27	0.24	0.28	0.27	0.32	0.30	0.34	0.34	0.38	0.37	0.38
0.023 – 0.027	0.25	0.29	0.26	0.30	0.29	0.35	0.34	0.38	0.37	0.41	0.41	0.43
0.028 – 0.035	0.27	0.31	0.29	0.33	0.32	0.38	0.37	0.42	0.41	0.46	0.44	0.49
0.036 – 0.044	0.30	0.34	0.31	0.36	0.36	0.42	0.40	0.46	0.45	0.50	0.49	0.51
0.045 – 0.054	0.33	0.37	0.34	0.39	0.39	0.46	0.44	0.50	0.49	0.56	0.54	0.61
0.055 – 0.068	0.35	0.40	0.37	0.43	0.43	0.51	0.47	0.55	0.54	0.61	0.58	0.68
0.069 – 0.075	0.37	0.42	0.39	0.45	0.45	0.53	0.50	0.59	0.57	0.65	0.62	0.72
0.076 – 0.084	0.38	0.44	0.41	0.47	0.47	0.56	0.53	0.62	0.60	0.69	0.66	0.77
0.085 – 0.097	0.40	0.47	0.42	0.50	0.48	0.59	0.55	0.65	0.63	0.72	0.69	0.80
0.098 – 0.113	0.42	0.49	0.44	0.52	0.51	0.62	0.58	0.69	0.66	0.75	0.72	0.85
0.114 – 0.139	0.45	0.53	0.48	0.56	0.55	0.68	0.63	0.75	0.71	0.82	0.79	0.94
0.140 – 0.172	0.51	0.58	0.53	0.62	0.62	0.74	0.69	0.83	0.79	0.91	0.87	1.03
0.173 – 0.219	0.53	0.56	0.56	0.66	0.66	1.80	0.74	0.89	0.85	0.99	0.94	1.12
0.220 – 0.262	0.60	0.64	0.64	0.74	0.76	1.90	0.84	1.01	0.96	1.12	1.07	1.29

H0616786

Figure 8-13. Joggle Dimension Chart - Flat Sheet, Joggle Cold (Sheet 2)

NOTES:

1. For R (radius), refer to forming operations figures showing minimum radii for applicable materials to be joggled.
2. Tolerances for depth of offset "D" in flat sheet:

   D $\begin{pmatrix} +0.030 \\ -0.010 \end{pmatrix}$ in. for a sheet thickness of 0.044 in. or less

   D $\begin{pmatrix} +0.020 \\ -0.010 \end{pmatrix}$ in. for a sheet thickness of 0.045 in. or greater
3. Joggle length is determined from column A or B as applicable for material to be joggled.
4. Joggling sheet at room temperature should be performed in the O or W temper, unless joggles will be penetrant inspected. For penetrant inspection procedures, refer to technical order 33B-1-1 or specific NDI manual.

CAUTION

When the part will be press formed, use these joggle lengths. Otherwise, design must allow for joggle lengths given under extruded and bent sheet sections.

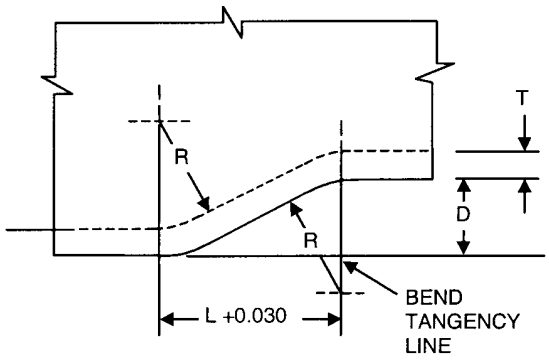

Material	Use Column
2024-0	A
2024-T3	A
6061-0	A
6061-T6	A
TITANIUM	B
STAINLESS STEEL (HARD)	B
STAINLESS STEEL (ANNEALED)	A
ALLOY STEEL (ANNEALED)	A

JOGGLE LENGTH "L"
For Sheet Thickness "T"

Depth of Offset "D"	Sheet Thickness "T"													
	UP – 0.022		0.023 – 0.027		0.028 – 0.035		0.036 – 0.044		0.045 – 0.054		0.055 – 0.068		0.069 – 0.075	
	A	B	A	B	A	B	A	B	A	B	A	B	A	B
UP – 0.022	0.12	0.18	0.13	0.19	0.15	0.19	0.15	0.20	0.15	0.21	0.18	0.22	0.19	0.24
0.023 – 0.027	0.14	0.21	0.15	0.22	0.16	0.22	0.16	0.23	0.17	0.24	0.20	0.25	0.21	0.27
0.028 – 0.035	0.15	0.25	0.17	0.26	0.18	0.26	0.18	0.27	0.19	0.28	0.22	0.29	0.23	0.31
0.036 – 0.044	0.18	0.29	0.19	0.30	0.20	0.30	0.20	0.31	0.21	0.32	0.24	0.33	0.25	0.35
0.045 – 0.054	0.21	0.36	0.22	0.37	0.23	0.37	0.23	0.38	0.25	0.39	0.27	0.40	0.28	0.42
0.055 – 0.068	0.24	0.43	0.25	0.44	0.27	0.44	0.27	0.45	0.28	0.46	0.31	0.47	0.32	0.49
0.069 – 0.075	0.26	0.43	0.27	0.49	0.29	0.49	0.29	0.50	0.30	0.51	0.33	0.52	0.34	0.54
0.076 – 0.084	0.29	0.53	0.30	0.54	0.32	0.54	0.32	0.55	0.33	0.56	0.35	0.57	0.37	0.59
0.085 – 0.097	0.32	0.58	0.33	0.59	0.34	0.59	0.34	0.60	0.36	0.61	0.38	0.62	0.39	0.64
0.098 – 0.113	0.35	0.64	0.36	0.65	0.37	0.65	0.37	0.66	0.39	0.67	0.41	0.68	0.42	0.70
0.114 – 0.139	0.41	0.77	0.42	0.78	0.44	0.78	0.44	0.79	0.44	0.80	0.47	0.81	0.49	0.83
0.140 – 0.172	0.51	0.95	0.52	0.96	0.53	0.96	0.53	0.97	0.55	0.98	0.57	0.99	0.59	1.01
0.173 – 0.219	0.60	1.12	0.61	1.13	0.62	1.13	0.62	1.14	0.64	1.15	0.66	1.16	0.68	1.18
0.220 – 0.262	0.77	1.48	0.79	1.49	0.79	1.49	0.79	1.50	0.81	1.51	0.83	1.52	0.85	1.54

H0614829

Figure 8-14. Joggle Dimension Chart - Flanged Sheet, Rubber Formed and Joggle Cold (Sheet 1 of 2)

JOGGLE LENGTH "L"
For Sheet Thickness "T"

Depth Of Offset "D"	Sheet Thickness "T"													
	0.076 – 0.084		0.085 – 0.097		0.098 – 0.113		0.114 – 0.139		0.140 – 0.172		0.173 – 0.219		0.220 – 0.262	
	A	B	A	B	A	B	A	B	A	B	A	B	A	B
UP – 0.022	0.20	0.24	0.21	0.25	0.23	0.27	0.24	0.30	0.27	0.33	0.31	0.36	0.34	0.37
0.023 – 0.027	0.22	0.27	0.23	0.28	0.25	0.30	0.26	0.32	0.31	0.36	0.34	0.40	0.38	0.42
0.028 – 0.035	0.24	0.31	0.26	0.32	0.27	0.34	0.29	0.36	0.34	0.41	0.38	0.44	0.41	0.48
0.036 – 0.044	0.27	0.35	0.28	0.36	0.30	0.38	0.33	0.40	0.37	0.44	0.42	0.49	0.46	0.53
0.045 – 0.054	0.30	0.42	0.31	0.43	0.34	0.45	0.36	0.47	0.41	0.51	0.46	0.55	0.51	0.60
0.055 – 0.068	0.33	0.49	0.35	0.50	0.37	0.52	0.40	0.54	0.44	0.58	0.51	0.62	0.55	0.66
0.069 – 0.075	0.35	0.54	0.37	0.55	0.39	0.57	0.42	0.59	0.47	0.63	0.54	0.67	0.59	0.71
0.076 – 0.084	0.38	0.59	0.39	0.60	0.42	0.62	0.44	0.64	0.50	0.68	0.57	0.72	0.63	0.76
0.085 – 0.097	0.41	0.64	0.42	0.65	0.44	0.67	0.47	0.69	0.52	0.73	0.60	0.77	0.66	0.81
0.098 – 0.113	0.44	0.69	0.45	0.71	0.47	0.73	0.50	0.75	0.56	0.79	0.61	0.83	0.69	0.82
0.114 – 0.139	0.50	0.83	0.51	0.84	0.54	0.86	0.56	0.88	0.62	0.92	0.69	0.96	0.76	1.00
0.140 – 0.172	0.60	1.01	0.61	1.02	0.64	1.04	0.66	1.06	0.71	1.10	0.78	1.14	0.85	1.18
0.173 – 0.219	0.69	1.18	0.70	1.19	0.73	1.21	0.75	1.23	0.80	1.27	0.86	1.31	0.94	1.35
0.220 – 0.262	0.86	1.54	0.87	1.55	0.90	1.57	0.92	1.59	0.97	1.63	1.04	1.67	1.11	1.71

H0616787

Figure 8-14. Joggle Dimension Chart - Flanged Sheet, Rubber Formed and Joggle Cold (Sheet 2)

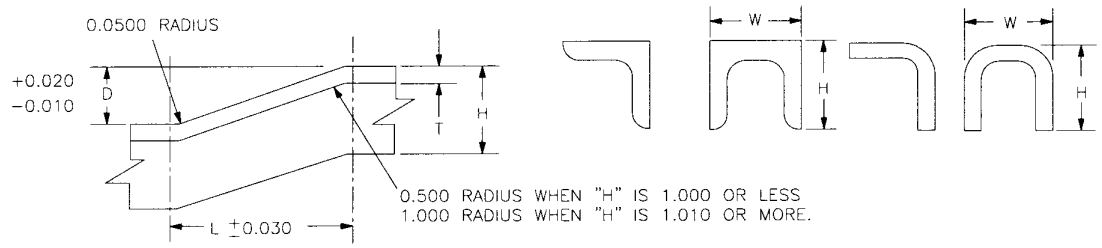

NOTE:

This chart is based on the commonly used shapes illustrated above; however, it may be specified for variations of these shapes provided the joggle dimensions are based on the same proportions of "H" to "T" as shown here. Do not specify for channels where "W" is less than "2H". Where a section has webs or flanges of different thicknesses, or where the thickness varies in the joggle area, use the greatest thickness to determine "T".

JOGGLE LENGTH "L"

Depth Of Offset "D"	When "H" is 0.50 thru 1.00 and when "T" is			When "H" is 1.01 thru 1.50 and when "T" is			When "H" is 1.51 thru 2.00 and when "T" is		
	0.040 – 0.078	0.079 – 0.094	0.095 – 0.125	0.063 – 0.102	0.103 – 0.156	0.157 – 0.188	0.063 – 0.125	0.126 – 0.188	0.189 – 0.250
UP – 0.022	0.22	0.23	0.25	0.27	0.28	0.29	0.27	0.28	0.29
0.023 – 0.027	0.27	0.27	0.27	0.32	0.32	0.32	0.33	0.32	0.33
0.028 – 0.035	0.31	0.31	0.31	0.36	0.36	0.36	0.37	0.36	0.37
0.036 – 0.044	0.34	0.34	0.34	0.41	0.41	0.41	0.44	0.41	0.42
0.045 – 0.054	0.37	0.38	0.38	0.44	0.44	0.44	0.50	0.44	0.45
0.055 – 0.068	0.43	0.41	0.41	0.52	0.49	0.49	0.59	0.52	0.50
0.069 – 0.075	0.47	0.43	0.42	0.56	0.52	0.52	0.64	0.56	0.53
0.076 – 0.084	0.51	0.46	0.43	0.62	0.57	0.57	0.70	0.62	0.58
0.085 – 0.097	0.57	0.51	0.48	0.69	0.63	0.59	0.80	0.69	0.64
0.098 – 0.113	0.65	0.57	0.52	0.78	0.70	0.65	0.90	0.78	0.71
0.114 – 0.139	0.77	0.67	0.61	0.93	0.82	0.75	1.08	0.93	0.83
0.140 – 0.172	0.93	0.80	0.71	1.13	0.98	0.89	1.33	1.13	0.99
0.173 – 0.219	1.15	0.97	0.85	1.40	1.20	1.07	1.65	1.40	1.21
0.220 – 0.262	1.36	1.14	0.98	1.64	1.42	1.25	1.95	1.64	1.43

Depth Of Offset "D"	When "H" is 2.01 thru 2.50 and when "T" is			When "H" is 2.51 thru 3.00 and when "T" is		
	0.078 – 0.125	0.126 – 0.188	0.189 – 0.250	0.125 – 0.188	0.189 – 0.250	0.251 – 0.312
UP – 0.022	0.28	0.28	0.29	0.28	0.29	0.31
0.023 – 0.027	0.28	0.32	0.33	0.32	0.33	0.35
0.028 – 0.035	0.35	0.36	0.37	0.36	0.37	0.39
0.036 – 0.044	0.43	0.41	0.43	0.41	0.43	0.44
0.045 – 0.054	0.51	0.49	0.50	0.49	0.50	0.47
0.055 – 0.068	0.61	0.57	0.52	0.59	0.58	0.54
0.069 – 0.075	0.67	0.62	0.57	0.65	0.63	0.59
0.076 – 0.084	0.74	0.67	0.61	0.71	0.68	0.64
0.085 – 0.097	0.85	0.76	0.68	0.81	0.77	0.72
0.098 – 0.113	0.97	0.85	0.75	0.91	0.86	0.81
0.114 – 0.139	1.18	1.01	0.89	1.09	1.02	0.96
0.140 – 0.172	1.46	1.22	1.06	1.34	1.23	1.16
0.173 – 0.219	1.83	1.51	1.30	1.66	1.52	1.43
0.220 – 0.262	2.18	1.78	1.51	1.96	1.79	1.66

NOTE:

Unless penetrant inspection will be performed, cold joggling shall be accomplished only on 2024-O or -W tempers. T3-T42 or -T3511 may be hot joggled, and then artificially aged. Hot joggled - T3511 extrusion with joggle length to height ratio less than 5 must be penetrant inspected. For penetrant inspection procedures, refer to technical order 33B-1-1 or specific NDI manual.

H0614830

Figure 8-15. Joggle Dimension Chart - Extruded or Bent Sheet Sections, Die Joggle

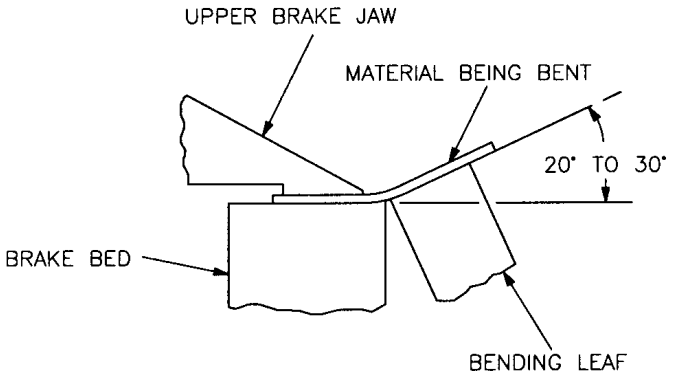

STEP 1

Clamp material in brake and bend up 20 to 30 degrees.

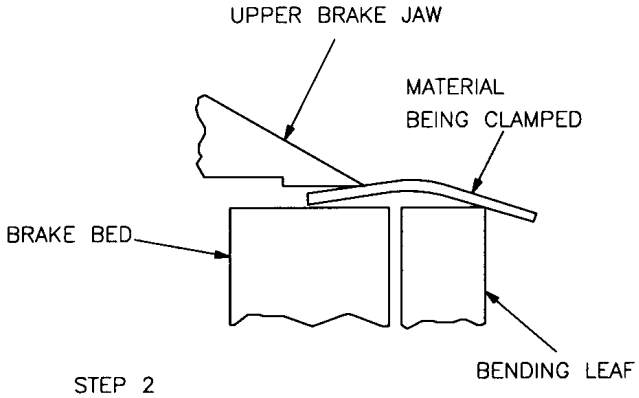

STEP 2

Turn material over and clamp in brake.

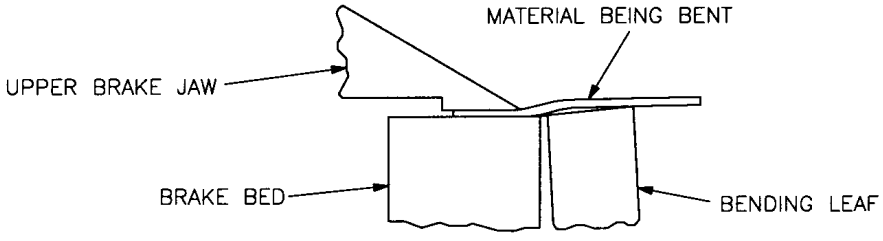

STEP 3

Raise bending leaf of brake until correct offset is produced.

H0614831

Figure 8-16. Forming Joggle Using Cornice Brake

8.14 JOGGLING.

A joggle is an offset formed on a part to allow clearance for a sheet or another mating part. Joggle dimensions are given in Figure 8-13 through Figure 8-15.

8.14.1 If the joggle is to be made on a straight flange or flat piece of metal, it can be formed on a cornice brake (see Figure 8-16). To form the joggle, use the following procedure:

a. Lay out the boundary lines of the joggle where the bends are to occur on the sheet.

b. Insert the sheet in the brake and bend the metal up approximately 20° to 30°; then release the brake and remove the part.

c. Turn the part over and clamp it in the brake at the second bend line.

d. Bend the part up until the correct height of the joggle is attained.

e. Remove the part from the brake and check the joggle for correct dimensions and clearance.

When a joggle is necessary in a curved part or on a part having a flange, joggle blocks made of hardwood, steel or aluminum may be used. The forming procedure consists of placing the part to be joggled between the two joggle blocks and squeezing them in a vise or some other suitable clamping device. After the joggle is formed, the joggle blocks are turned over in the vise and the bulge on the opposite flange is flattened with a wooden or rawhide mallet (see Figure 8-17).

NOTE

To prevent scratching the material during the forming operation, the jaws of the vise used for clamping the clip and material shall be machined smooth or covered with a soft metal such as brass.

8.14.2 On small parts or parts having a relatively short-width joggle, the fastest and easiest method of forming the joggle is by using a joggle clip. The joggle clip can be made easily and quickly for any size joggle required. For test results, make the joggle clip from material that is as hard or harder than the material being joggled and is one gage thicker than the required depth of the finished joggle. The width of the slot to be cut in the joggle clip shall be the dimension (taken from Figure 8-14) minus the thickness of the joggle clip. The procedure for using a joggling clip is shown in Figure 8-18 and described below:

a. Lay out the bend lines of the joggle on the part to be formed.

b. Insert the part into the joggling clip.

c. Clamp the clip and part in a vise or other pressure-applying device.

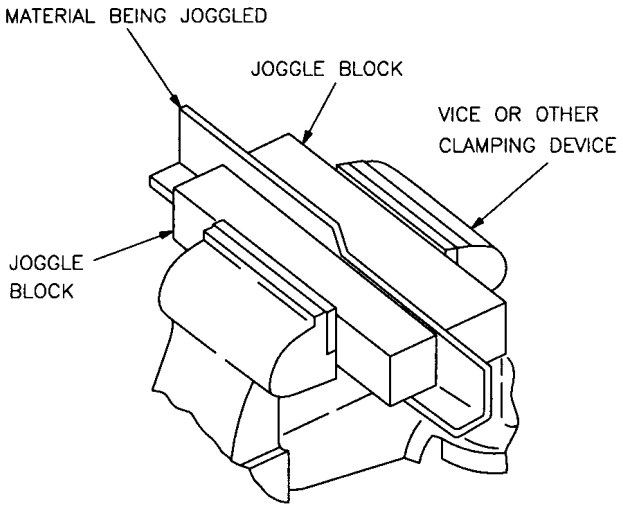

STEP 1

Place material between joggle blocks and squeeze in a vice or other clamping device.

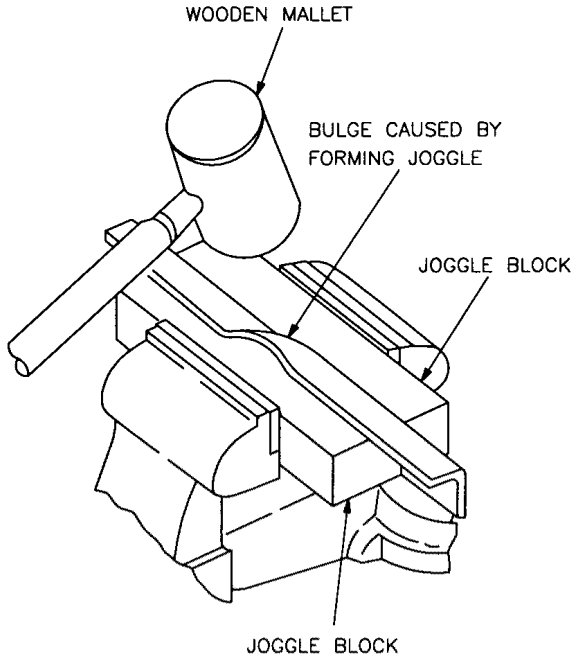

STEP 2

Turn joggle blocks over in vice and flatten bulge with wooden mallet.

H0614832

Figure 8-17. Forming Joggle Using Joggle Blocks

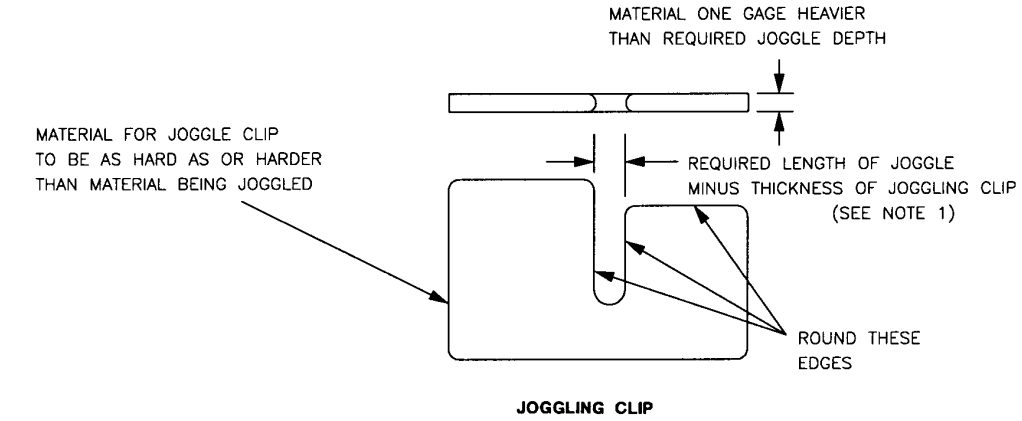

JOGGLING CLIP

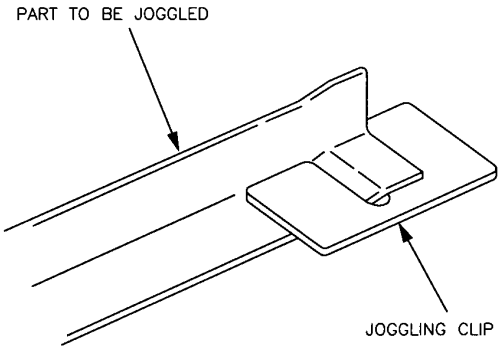

JOGGLE CLIP IN PLACE

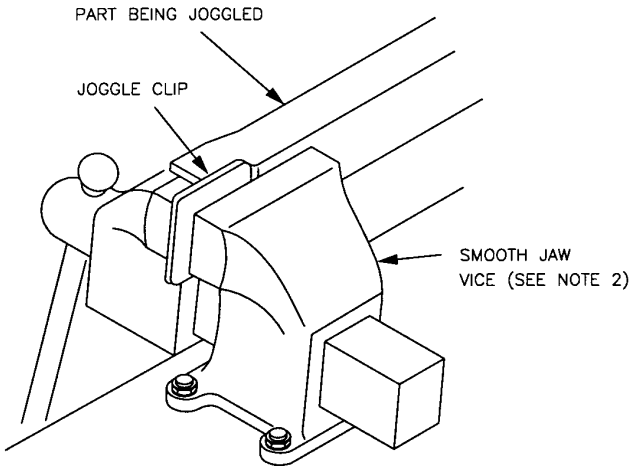

FORMING JOGGLE

NOTES:

1. For correct length of joggles see joggle dimension charts.
2. The jaws of the vice shall be machined smooth or be covered with a soft metal, such as brass, to prevent scratching the part during the forming operation.
3. After forming the joggle, check the joggled area for cracks.

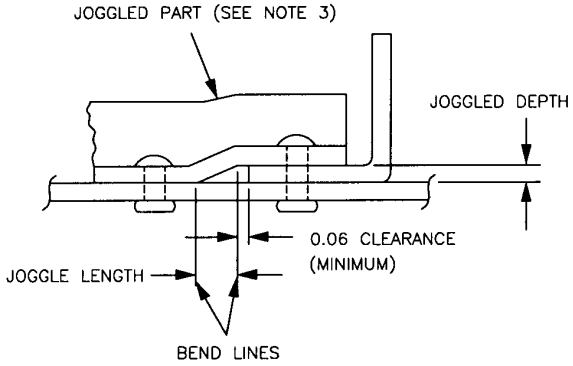

JOGGLE PART INSTALLED

H0614833

Figure 8-18. Forming Joggle Using Joggle Clip

8.15 WORKING TITANIUM ALLOYS.

Titanium alloy is a relatively lightweight, corrosion-resistant metal that, because of its physical properties, requires special techniques when being worked.

WARNING

Titanium dust can easily be ignited when dry; therefore, a fire hazard exists when grinding titanium.

CAUTION

- Do not use halogenated substances on titanium alloys. Halogenated substances are those substances that contain any of these five elements: astatine, bromine, chlorine, fluorine, or iodine. Rinse using distilled or deionized water only.
- The following tools are prohibited when working on titanium: cadmium or ti-cad-plated, tin or terne-plated, cerro alloys, zinc (kirksite or galvanized), or lead-silver-plated.

8.16 CUTTING AND GRINDING TITANIUM ALLOYS.

When care is taken while applying pressure, conventional sawing equipment can be used to cut titanium alloys. The surface of the material tends to work-harden if the saw blade is allowed to ride across the material; therefore, a fairly heavy pressure must be applied when sawing titanium alloys. If sharp and in good operating condition, shears used for cutting steel may also be used to cut titanium alloys.

CAUTION

Titanium is susceptible to cracking. Edges must be free of burrs, grooves, scratches, and sharp corners before forming.

8.16.1 Grinding of titanium alloys shall be performed only on machines equipped with controllable speed and silicone carbide wheels. Wheels shall be kept sharp by redressing to prevent load-up and discoloration, smearing, or glazing of metal surfaces. Coolant fluid (a mixture of mineral oil or soluble oil with water) should be used to facilitate the grinding of titanium alloys.

8.16.2 A yellow discoloration is normal and acceptable when grinding titanium. A blue or purple discoloration indicates an overheat condition. If the blue or purple discoloration cannot be removed with methyl ethyl ketone (MEK), the part shall be replaced.

8.17 DRILLING AND REAMING TITANIUM ALLOYS.

Standard high-speed drill bits may be used to drill titanium if the bits are sharp, if sufficient force is applied, and if a low-speed drill motor is used. If the drill bit is dull, or if it is allowed to ride in a partially drilled hole, an overheat condition will be created, making further drilling extremely difficult. When working titanium, it is recommended that carbide or 8 percent cobalt drill bits, reamers, and countersinks be used. When using a reamer, the reamer shall be used at one-half the drill speed. When removing from a hole, the drill or reamer shall be rotating to prevent scoring the sides of the hole. Coolant fluid (a mixture of mineral oil or soluble oil and water) should be used to facilitate drilling or reaming. For drill shapes and speeds to be used for drilling titanium, see Figure 8-19.

8.18 DIES AND JOGGLE BLOCKS.

Dies and joggle blocks made only of steel or ferrous metals are to be used to obtain the desired shape. Joggle blocks, dies, and bend radius bars used in bending titanium shall not be allowed to become coated with rust or heavy scale.

8.19 FORMING TITANIUM ALLOYS.

The forming of titanium alloys is divided into the following three classes:

- Cold-forming with no stress relief
- Cold-forming with stress relief
- Elevated-temperature-forming (built-in stress relief)

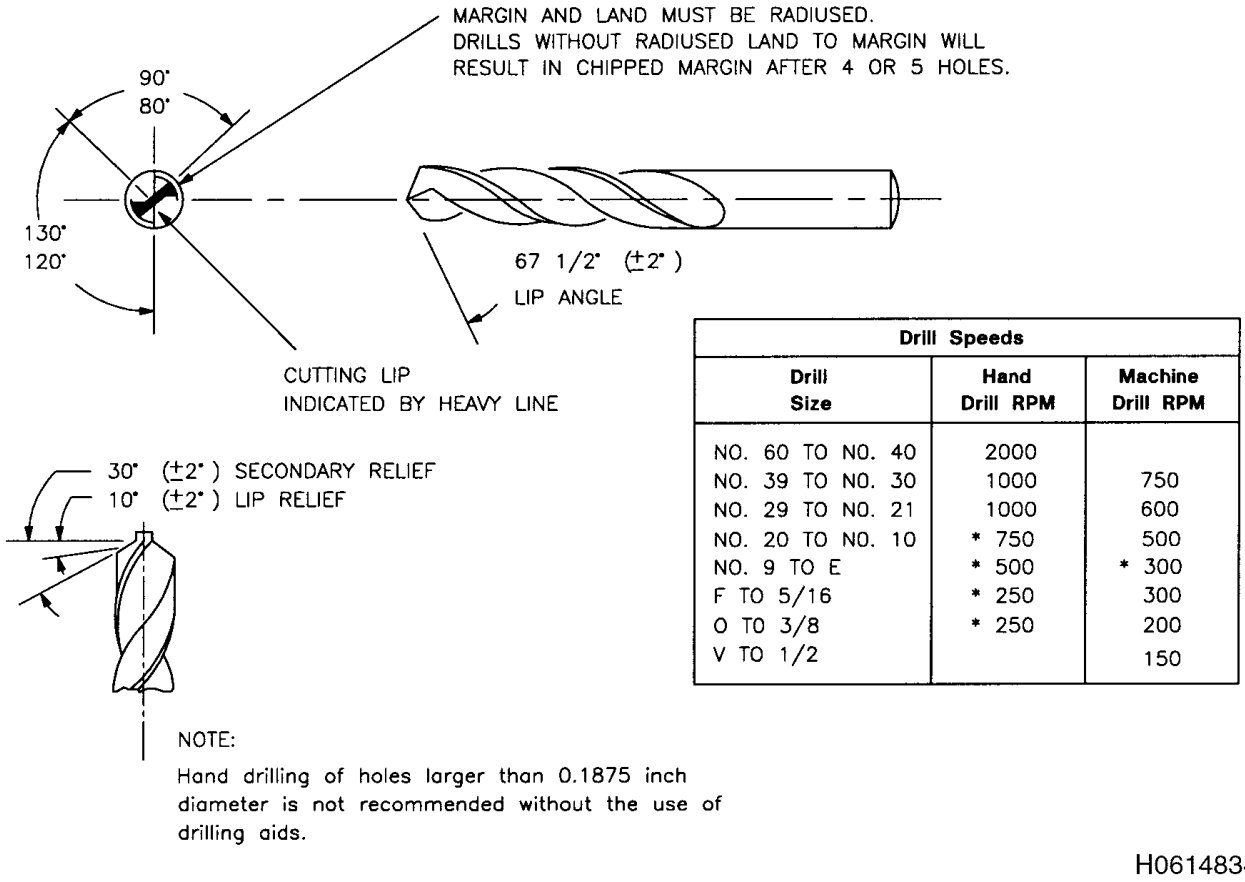

Drill Speeds		
Drill Size	Hand Drill RPM	Machine Drill RPM
NO. 60 TO NO. 40	2000	
NO. 39 TO NO. 30	1000	750
NO. 29 TO NO. 21	1000	600
NO. 20 TO NO. 10	* 750	500
NO. 9 TO E	* 500	* 300
F TO 5/16	* 250	300
O TO 3/8	* 250	200
V TO 1/2		150

Figure 8-19. Drills for Titanium

8.20 COLD-FORMING TITANIUM ALLOYS.

Dimpled sheets, parts with bends less than 15°, roll-formed or bent parts with radii greater than 15 times the thickness of the metal, and parts lined up with less than 1 percent permanent set do not require stress-relieving or annealing.

8.21 ELEVATED-TEMPERATURE-FORMING OF TITANIUM ALLOYS.

Forming titanium alloys at elevated temperatures is advantageous because it is possible to produce smaller bend radii with less springback and increased elongation. The requirements and procedures for forming titanium and titanium alloys at elevated temperatures are as follows:

a. Forming (initial or final) in heated tools such as creep form blocks or from preheated sheet

b. Stress-relieving in a furnace after forming

c. Annealing after a partial forming operation to remove the effects of work-hardening

8.21.1 By relieving internal strains, all of these procedures counteract the tendency to crack or to creep back toward the original shape of the sheet. Refer to TO 1-1A-9 for specific times, temperatures, and additional information.

8.22 TITANIUM STRESS-RELIEVING AND ANNEALING.

If parts are cold-formed and the requirements of paragraph 8.20 are not followed, or if hot-forming temperatures are not held within the specified temperature range, the parts must be stress-relieved. Refer to TO 1-1A-9 for stress-relieving and annealing procedures. Annealing is used on parts formed in several different steps. Stress-relieving is used on finished formed parts to remove any internal stresses caused by forming.

8.23 LOCATING BLIND HOLES.

When patching or replacing sections of aircraft structure, the holes in the repair member or patch must be drilled to match existing holes in the structure. Existing holes may be located by using a locating and transcribing tool (or hole

duplicator) similar to that shown in Figure 8-20. The peg on the bottom leg of the hole duplicator fits into the existing rivet hole. A pilot hole in the new part is drilled in alignment by drilling through the bushing in the top leg. A separate hole duplicator must be used for each diameter of rivet used.

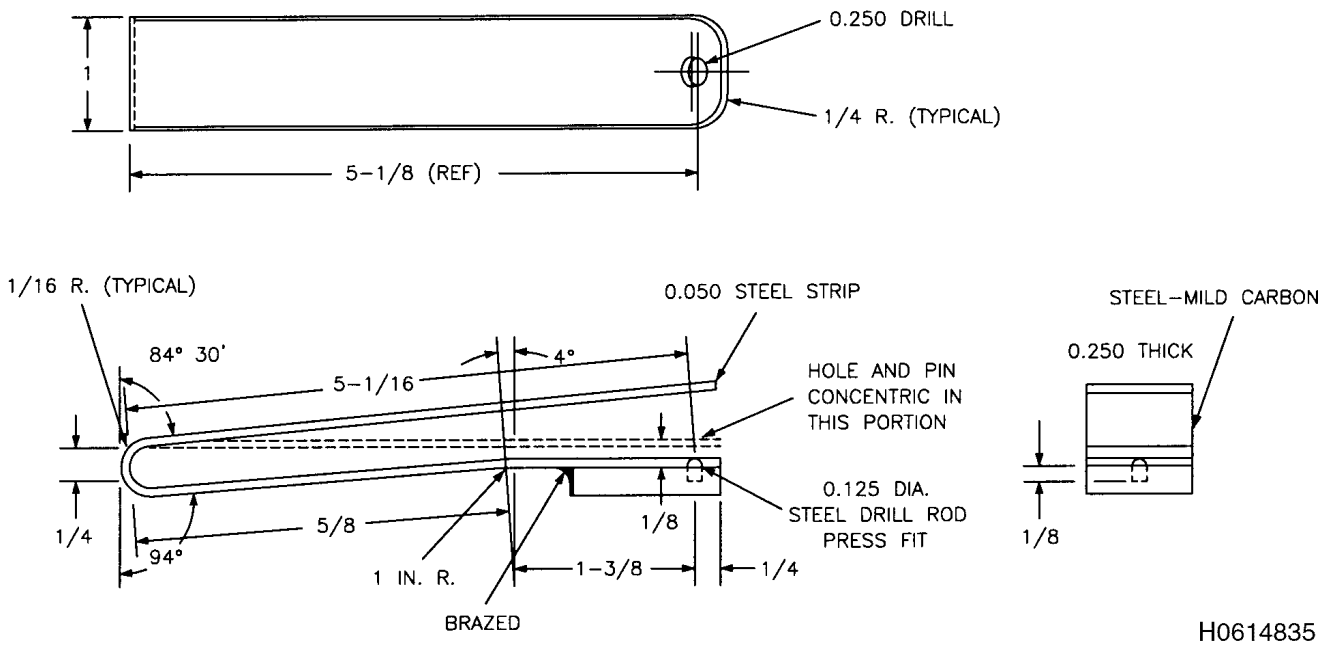

Figure 8-20. Locating and Transcribing Tool

CHAPTER 9
CABLE REPAIR

9.1 For cable repair information, please refer to TO 1-1A-8 (NAVAIR 01-1A-8).

APPENDIX A
GRIT BLAST SILANE (GBS) PROCESS

A.1 MATERIALS.

- Solvent (MEK, MPK, acetone or isopropyl alcohol [for initial cleaning]).
- Reagent grade MEK, reagent grade MPK, or reagent grade acetone (for final cleaning).
- Rubber Gloves (to conform to applicable safety regulations).
- Dust Mask (to conform to applicable safety regulations).
- Goggles (to conform to applicable safety regulations).
- Respirator (to conform to applicable safety regulations).
- Aerospace Wipes (NSN 7920-01-180-0557/0556), or equivalent approved for bonding operations.
- Nitrogen (dry, oil-free, water pumped) or certified highly filtered dry air.
- Scotch-Brite Roloc discs, 3M Company (2- or 3-in diameter; medium, fine and very fine grades).
- Aluminum Oxide Grit (50 micron, white, unused).
- Tape (high temperature, such as Teflon and aluminum-backed).
- Silane Coupling Agent (γ-glicidoxypropyltrimethoxysilane: Dow Corning Z-6040 or Union Carbide A 187).
- Distilled or deionized water (pH range 4-6).
- Glass Beaker/Flask.
- Graduated Cylinder (to measure distilled water).
- Pipette (to measure silane).
- Natural Bristle Brush (such as camel's hair) - acid brushes are an alternate.
- BR 127 Adhesive Primer (Cytec Fiberite, Inc.)

A.2 EQUIPMENT.

- High Speed Grinder*
- Magnetic Mixer and Magnet
- Grit Blaster*
- Adhesive Primer Spray Gun*
- Infrared Heat Lamps
- Thermocouples
- Hot Bonder or Thermocouple Reader
- Isoscope (or equivalent) or Color Standards to Measure Primer Thickness
- Air Hoses*

NOTE

- Specific new nozzles, hoses, die grinders, etc. are only to be dedicated for use with the nitrogen or clean air. Be aware that certain rubber hoses may require cleaning - flushing with solvent - prior to use since they contain plasticizers that may be carried in the nitrogen or air stream and leave an oily residue.

- Personnel performing surface preparations must be properly trained. All process steps must be followed carefully since process control is the primary means to assure proper surface preparation. Otherwise, bond strength and/or bond durability will likely be unacceptable. The ability of the personnel to properly perform the process must be demonstrated prior to conducting actual repairs. Grit blasting and priming steps require practice. Capability should be demonstrated by preparing wedge test (ASTM D 3762) panels. Expected wedge test results can be found in WL-TR-94-4111.

- Timing throughout the process is critical. Preplanning as to thermocouple locations, heat sinks, bagging, equipment condition, etc. can save a lot of confusion and panic later and possibly avoid a lot of wasted time through having to restart the effort due to problems that could have been easily avoided.

A.3 PROCESS.

a. Solvent wipe an area extending a minimum of 2 feet in all directions around the repair area with one of the following solvents: methyl ethyl ketone (MEK), methyl propyl ketone (MPK), acetone, or isopropyl alcohol. The above list is in order of preference. Choose a solvent that is approved at the repair location. Continue until no residue appears on a clean Aerospace wipe. On the last wipe, remove the solvent with a clean, dry wipe prior to its evaporation.

CAUTION

- Rubber gloves and eye protection must be worn during this operation. An approved respirator may be needed, depending on the application.
- If moisture is suspected in honeycomb sandwich panels, perform moisture removal per T.O. 1-1-690 prior to surface preparation procedures.
- Aircraft must be grounded and properly prepared for maintenance per applicable procedures. Fuel tanks must be purged or inserted as required.

b. Remove all surface coatings (organic and inorganic) down to bare metal in an area that exceeds the patch dimensions in all directions by at least one inch and preferably two inches. This can be accomplished using a medium grade Scotch-Brite Roloc disc on a high-speed grinder driven by 90 psi (approximate) oil-free nitrogen (or certified highly filtered dry air). Other removal methods are acceptable.

NOTE

- Alternate methods may be used to remove organic and inorganic coatings. Chemical paint strippers typically remove organic coatings, leaving inorganic coating (anodize or conversion coating) to be removed mechanically. In all cases, be sure to use locally approved removal techniques.
- Surface coating removal adjacent to the repair area must be minimized in order to maintain as much of the existing corrosion protection scheme as possible.

c. Solvent wipe the repair area (at least 4 inches in all directions beyond the repair area) using Aerospace wipes moistened with reagent grade MEK, reagent grade MPK, or reagent grade acetone. Wipe until all residue is removed (new Aerospace wipe remains clean after wiping). Be careful not to drag contaminants into the repair area from the surrounding structure. On the last wipe, remove the solvent with a clean, dry wipe prior to its evaporation.

CAUTION

Rubber gloves, dust mask and eye protection must be worn during this operation. An approved respirator may be needed, depending on local regulations.

d. Connect high-speed grinder to 90 psi oil-free nitrogen (or certified highly filtered dry air) and abrade the repair area using a new Scotch-Brite Roloc disc (fine or very fine grade).

NOTE

Only verified oil-free, water-pumped nitrogen or certified highly filtered dry air are to be used in this entire repair process or contamination of bond surface could result (specific new nozzles, hoses, etc. are only to be dedicated for use with the nitrogen clean air. Be aware that certain rubber hoses may require cleaning - flushing with solvent - prior to use since they contain plasticizers that may be carried in the nitrogen or air stream and leave an oily residue.

CAUTION

Rubber gloves and eye protection must be worn during this operation. An approved respirator may be needed, depending on the application and/or local regulations.

e. Solvent wipe the repair area per directions of step 3.

NOTE

From this point forward, extreme care must be taken to ensure that the repair area is not touched by anything, including fingers, except as outlined below.

CAUTION

From this point, the repair process cannot be stopped until, as a minimum, the primer is cured. Preferably, the process will not be stopped prior to patch curing.

f. In a clean glass or polyethylene beaker or flask, mix a solution of 100 parts (by volume) of distilled or deionized water and 1-2 parts of silane; this hydrolyzes the silane. A 100ml of solution is sufficient to treat a 60 square inch repair area. This step may be performed at any time as long as the time restraints of Step 7 are met. The water must have a pH between 4 and 6.

g. Place a clean mixing magnet in the beaker, cover to keep from contaminating, and agitate on a magnetic mixer for a minimum of 1 hour prior to use. Continue agitating until the solution is actually used.

NOTE

Maximum solution life for best performance is 1 hour after the initial 1-hour mix time. Four hours after mix is the maximum solution life.

CAUTION

Due to the abrasive nature of aluminum oxide grit and its effect on fuel system components, containment procedures must be developed and followed. Contact the applicable Weapon Systems Manager before grit blasting in fuel tanks.

h. Install a grit containment arrangement around the perimeter of the abraded area. It is important (critical for some applications) that the grit is completely contained so it cannot contaminate aircraft systems. The containment should be airtight. An acrylic box with airtight ports for the blaster, the workers' hands, etc. is a good containment setup (an on-aircraft "glove box"). A vacuum cleaner, with appropriate filter for 50 micron aluminum oxide, may be necessary to remove grit from the containment unit during blasting in order to maintain adequate visibility.

The following guidelines can be used to construct a grit containment box (see Figure A-1):

Use aluminum or acrylic sheet. A window is necessary to view the working area. Use adjustable vacuum feet to allow positioning over the repair area. Include a port for the blast nozzle and ports for working gloves. Incorporate a shop vacuum manifold with HEPA filter to collect used grit. Seal the periphery of the box to the surrounding structure with tape.

CAUTION

Rubber gloves must be worn during this operation. Eye protection and a dust mask must also be worn. If the grit containment arrangement is not airtight, an approved respirator may be needed, depending on local regulations.

i. Grit blast an area one inch in all directions greater than the repair patch with 50 micron aluminum oxide grit using 30-100 psi oil-free nitrogen (or certified highly filtered dry air) pressure. Slightly overlap with each pass across the surface.

NOTE

A fine, matte finish is required. This is a light grit blast - do not dwell in any one area. Ideal blast pressure is dependent on the angle of the nozzle to the surface and the speed at which the blaster traverses the surface. An angle of 45° to the surface presents a less narrow blast stream; this is helpful in obtaining a uniformly blasted surface, especially if small, circular nozzles are used. Each operator must find the combination of blasting parameters that result in a uniform, matte finish.

j. Remove as much excess grit from the repair area as possible by blowing off with dry, oil-free nitrogen (or certified highly filtered dry air), then remove the grit containment arrangement. All grit will not be removed from the surface.

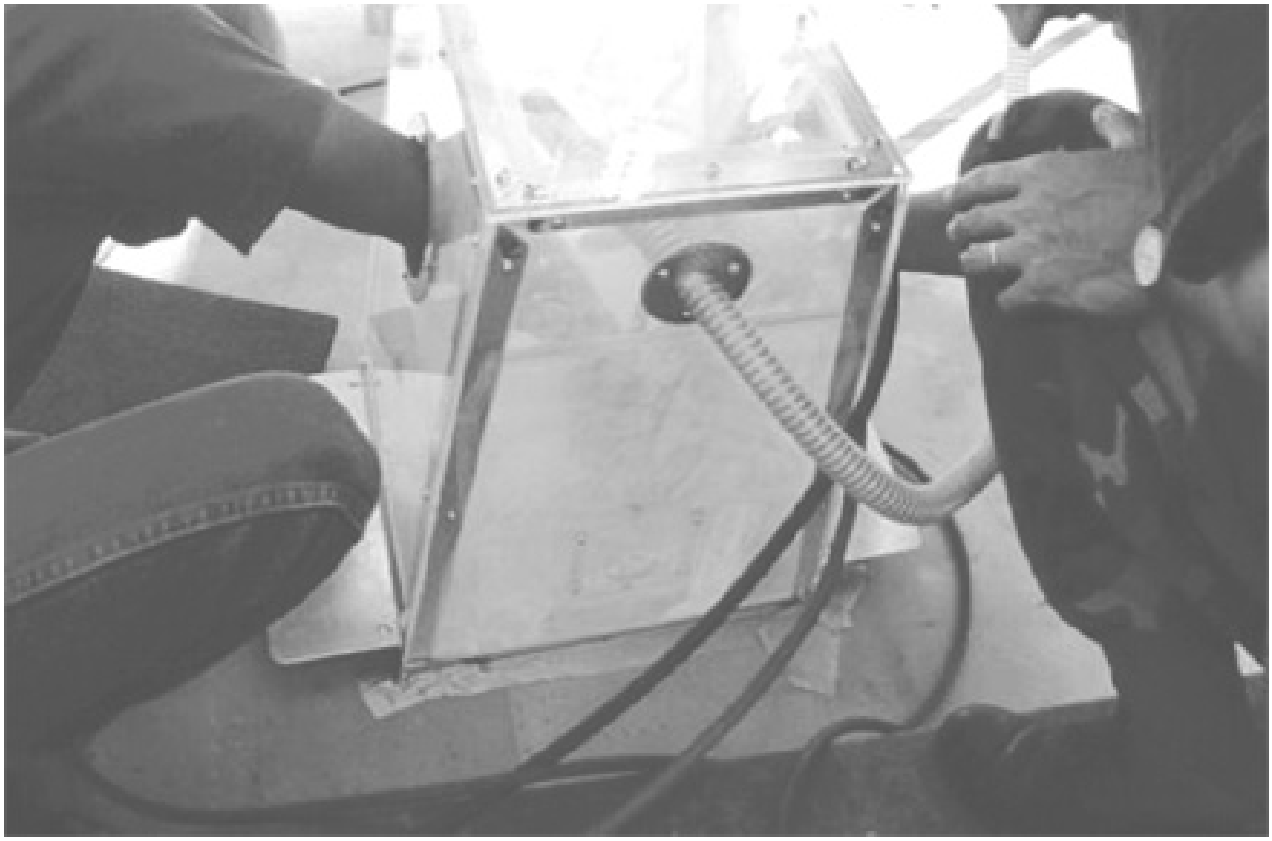

Figure A-1. Grit Containment Box Example

CAUTION

- If a "water-break-free surface" is not achieved during silane application, the process must be restarted at step 3. See T.O. 1-1-8 for definition of "waterbreak-free surface."
- Rubber gloves and eye protection must be worn during this operation.
- Rubber gloves must be worn during this operation. If the grit containment arrangement is not airtight, eye protection and a dust mask must also be worn. An approved respirator may be needed, depending on local regulations.

k. Rinse a clean natural bristle brush with distilled or deionized water and use it to apply the silane solution to the repair area for a minimum of 10 minutes after the entire repair area is wet. Apply a thin film of the solution to the entire repair area and check for water breaks. Continue to apply silane solution to the repair area to maintain a film of solution on the surface throughout the 10-minute period. Brush the silane from the center toward the edges of the repair area. Do not allow the surface to dry. The solution will pick up grit from the surface as the brush is continually dipped into the mixture.

NOTE

Ensure that the brush does not touch the surrounding unclean structure.

CAUTION

Rubber gloves and eye protection must be worn during this operation.

l. Connect an air nozzle to dry and oil-free nitrogen (or certified highly filtered dry air, about 30 psi) and blow the silane solution from the repair area by starting at the center of the repair area and working outward in all directions. A small amount of streaking may be noticeable on the surface after the silane is blown off and the surface is dry.

NOTE

Do not allow anything to be blown onto the silane-treated surface from the surrounding areas.

m. Place a sufficient number of thermocouples to accurately monitor the temperature around the perimeter of the silane-treated area, but not touching the area to receive adhesive. On large repairs, a minimum of 1 thermocouple for every foot of circumference should be used. Thermocouples must be placed over the various types of substructure that are present (soft skin, stiffeners, etc.) since each of these will conduct heat differently. Thermocouple placement should be tied to a previous thermal survey of the area (see TO 1-1-690 for procedures). The thermocouple ends must be in contact with the skin and must be taped in place with high temperature tape (such as Teflon tape). The thermocouples must also be insulated, such as covering them with aluminum-backed tape, so they are reading the surface temperature and are not directly heated by the heat lamps. A recording of the thermocouple locations must be made so meaningful adjustments to the power settings, or repositioning of the lamps, can be accomplished after heating starts in order to obtain the optimal temperature spread across the repair area. Plug thermocouples into hot bonder controller or thermocouple reading device.

n. Insulate substructure if required. Thermal surveys (on the actual part or an identical part) should have been conducted previously in order to ascertain that the heating method(s) selected, coupled with the proper insulation, will produce the desired temperatures and tolerances.

CAUTION

Be sure the heat lamp set-up is electrically insulated from the aircraft structure.

o. Center the heat lamps over the repair area and bring shroud to within 1/4 inch of the repair surface in all directions.

NOTE

MLSA uses a heat lamp set-up containing several independently controlled lamps within a shroud. This arrangement has proven to be effective for many applications. Independent lamp control is important for repair areas that heat unevenly. The shroud helps produce uniform heating and minimizes airflow over the repair area. Alternate heating methods are acceptable provided they do not touch or contaminate the repair area and yield the required repair area temperatures. Thermal surveys must be conducted to develop the heating arrangement for a given application.

p. Plug heat lamps into power supply and apply heat to the repair area raising the highest thermocouple reading to 210°F. Heat-up rate can be rapid (there is no upper limit on heat-up rate). Do not allow the temperature to exceed 215°F on the repair surface. When all thermocouples are in the range of 170°F to 210°F, maintain heat for 60 +5/-0 minutes. The power setting(s) will need to be adjusted to ensure thermocouples remain in the desired temperature range; monitor the thermocouples and adjust the power setting(s) as necessary. Record temperatures throughout the cure cycle at 10-minute intervals. Prevent cross ventilation to the repair area as much as possible.

NOTE

The recommended time allowed between silane application and application of heat is 30 minutes. In no case can the time exceed 60 minutes.

q. After the 60-minute silane heat dry, turn off power supply, remove the heat lamp set-up, and allow the repair area to cool to a maximum temperature of 90°F.

CAUTION

- Rubber gloves, eye protection, and an approved respirator must be worn during this operation.
- The primer must be warmed to ambient temperature prior to opening the container. A good indicator of this is when moisture no longer condenses on the can.
- Primer thickness is critical. If too thin, the primer will not cure. If too thick, the bond strength will be severely degraded.

r. Connect a primer spray gun to dry, oil-free nitrogen (or certified highly filtered dry air). Spray BR 127 adhesive primer onto the repair area per the manufacturer's instructions to obtain a cured film thickness of 0.0001 to 0.0003 inches.

s. Allow primer to dry at ambient conditions for a minimum of 30 minutes.

t. Center heat lamps over the repair area and bring the shroud to within 1/4 inch of the repair surface in all directions.

u. Plug heat lamps into power supply and apply heat to the repair area raising the lowest thermocouple reading above 200°F. Heat-up rate can be rapid (there is no upper limit on heat-up rate). Do not allow the temperature to exceed 260°F on the repair surface (lower if dictated by the particular structure being repaired). When all thermocouples read 200°F or higher, maintain heat for 60 to 90 minutes, depending on the repair surface temperature, as shown below. The power setting(s) will need to be adjusted to ensure thermocouples remain in the desired temperature range; monitor the thermocouples and adjust the power setting(s) as necessary. Record temperatures throughout the cure cycle at 10-minute intervals. Prevent cross ventilation to the repair area as much as possible.

BR 127 Adhesive Primer Cure Schedule:

Lowest Thermocouple Reading (°F)	Cure Time (Minutes)
200-239	90+5/-0
240-260 - see paragraph above	60+5/-0

v. After primer cure, turn off power, remove heat lamp set-up and allow the repair area to cool to a maximum temperature of 90°F.

CAUTION

If adhesive primer thickness is outside of the desired range, the process must be restarted at Step 3.

w. Check adhesive primer thickness using an Isoscope (or similar eddy current device) properly calibrated for the 0.001- to 0.003-inch primer thickness, or verify primer thickness by the use of color standards. The eddy current device tends to have some problems producing consistent readings on the grit blasted surface. This can be resolved by measuring the thickness of primer sprayed onto a non grit-blasted area adjacent to the repair. This area must have been cleaned and abraded per Steps 1-5 and must be sprayed at the same time and in the same way as the repair area (by overlapping from the repair area into this adjacent structure). Color standards must be made (with verified thicknesses) on a surface prepared and primed in the same manner as the repair area. Use of color standards to aid primer application prior to cure can be difficult Since the color of the cured primer differs somewhat from the uncured condition.

Additional Comments

x. The first two steps in the procedure involve removal of organic coatings and/or inorganic corrosion protection schemes, so they are not applicable to preparation of new aluminum specimens in the laboratory. However, abrasion using the medium grade Scotch-Brite Roloc disc may be desired if adherents are scratched or pitted.

y. The above procedures are based on heat application by infrared lamps. Any heating method can be used as long as the required temperature ranges can be obtained and held for the required times in a safe manner without touching or contaminating the repair surface.

z. Thermal surveys must be conducted on representative structure in order to be sure the heat lamps (or any other device) can properly heat the repair surface (within acceptable tolerances). The distance of the bulbs/elements from the surface is one important variable. Since they will be some distance (for example, 6-8 inches) from the surface, a shroud is usually required to protect the surface from air flow which would cool the area and provide for inconsistent heating. A metal shroud attached to the heat lamp must be electrically insulated from the aircraft surface.

aa. Grit blasting off-aircraft is best conducted in a glove box. A vacuum cleaner is helpful in removing grit during blasting in order to maintain good visibility during the blasting process.

ab. Silane drying off-aircraft is best conducted by placing the components in a preheated (225°F ±5°F) circulating air oven for 60 minutes. Adhesive primer cure is best conducted in an oven per standard off-aircraft procedures (after the 30-minute air dry at ambient temperature).

ac. Brushing with a clean, soft brush may be useful (in conjunction with the forced nitrogen or air) during Step 10 in order to remove the maximum amount of residual grit. Care must be taken not to damage the blasted surface.

ad. Personnel performing surface preparations must be properly trained. All process steps must be followed carefully since process control is the primary means to assure proper surface preparation. Otherwise, bond strength and/or bond durability will likely be unacceptable. The ability of the personnel to properly perform the process must be demonstrated prior conducting actual repairs. Grit blasting and priming steps require practice. Capability should be demonstrated by preparing wedge test (ASTM D 3762) panels. Expected wedge test results can be found in WL-TR-94-4111.

ae. It is most convenient to prepackage 1- or 2-ml amounts of silane coupling agent in clean vials. Glass vials can be used without adverse effect of silane reaction with the glass. The vials must not contaminate the silane solution. The caps are the concern in this regard. A 1-ml pipette can be used to measure the silane. During the repair process, water can be measured into the mixing beaker/flask using a graduated cylinder, and the appropriate number of prepackaged silane vials can be added to make the 1-2% solution of Step 6.

APPENDIX B
PHOSPHORIC ACID NON-TANK ANODIZE (PANTA) PROCEDURES

B.1 MATERIALS.

- Phosphoric acid, Fed Spec 0-0-670, 75%, NSN 6810-00-264-6722 or equivalent.
- Cab-O-Sil M-5, Cabot Corp, Boston, MA, 1-800-222-6745.
- Polarizing filter, linear, available from photography or scientific supply retailers.
- Wire Screen, #16 mesh, CRES, 0.016 nominal diameter wire, NSN 5335-01454-7615.
- 6V DC Power Supply, Model H 6 volt, Epsco Inc., Itasca, IL. CAGE 53003

NOTE

- Prior to the start of processing, be sure undamaged areas, crevices, and fasteners are protected from acid contamination by masking off these areas with aluminum tape and plastic film. Protect working bench tops and surrounding areas by placing plastic film (e.g., Mylar) between the part and the bench tops and other working areas.
- The recommended temperature range is 70°F to 85°F; do not perform the PANTA procedure if the temperature is below 60°F or above 100°F.

CAUTION

Do not allow the acid to contact high strength steel fasteners. Phosphoric acid will cause hydrogen embrittlement in high strength steel.

a. Solvent wipe the surfaces surrounding the repair area to remove oil, dirt, grease, etc. per paragraph 8.6.2.

b. Remove paint using mechanical methods.

c. Isolate all areas not to be repaired and high strength steel fasteners with aluminum foil tape and plastic.

d. Solvent-wipe with reagent grade solvent per paragraph 8.6.2 with reagent grade MEK or acetone.

e. Abrade with nonwoven abrasive such as 3M ScotchBrite or other nylon abrasive pad, fine grade.

f. Dry wipe to remove dust and debris (be sure not to drag contaminants into the repair area).

CAUTION

Use rubber gloves, protective clothing and eye protection when working with phosphoric acid. If acid contacts your skin or eyes, immediately flush with large amounts of water and get medical attention.

g. Apply a uniform coat of gelled 12% phosphoric acid to aluminum surface. Gelled phosphoric acid can be made in advance by diluting the acid with deionized water to a concentration of 12% and then adding Cab-O-Sil M-5. Note that the mixture will thicken over the next 24 hours.

h. Place 2 or 3 layers of gauze over top of coating; apply another coat of gelled phosphoric acid to completely saturate and wet out the gauze.

i. Secure a piece of stainless steel screen over the coating. The screen shall extend a minimum of 1/4 inch beyond the area requiring anodizing. Apply another coating of the gelled phosphoric acid over the screen.

NOTE

Be sure that the stainless screen DOES NOT CONTACT any part of aluminum surface being anodized.

j. Connect screen as cathode (-) and aluminum as anode (+).

NOTE

Check this set-up before proceeding: Screen as cathode (-) and aluminum as anode (+).

k. Apply a DC potential of 6 volts for 10 minutes (4 to 6 volts DC for 10 to 12 minutes is satisfactory).

NOTE

- A rectifier may be used to supply the voltage and current during anodizing. Current density should be in the range of 1 to 7 amps/ft^2. In an emergency, a fresh or fully charged dry or wet cell battery may be used to anodize small areas.
- Do not allow the assembly to become dry; add acid if necessary.

l. At the end of the anodizing time, open the circuit, remove the screen and gauze; discard both into an approved container. Do not reuse the screen; it will become corroded with use and will provide unsatisfactory results.

m. Moisten clean gauze with water. Lightly wipe off the gelled acid (do not rub) with moistened gauze without delay; use a gentle spray of water to aid in the process; The rinse delay time is limited to less than 2.5 minutes after shutoff of power supply, preferably within one minute. Do not rub the anodized surface. Immersion or spray rinsing should be used if possible. Flush the area for at least five minutes.

n. Air dry a minimum of 30 minutes at room temperature or force-air oven dry at 140° to 160°F.

CAUTION

Do Not Touch the Dried Anodized Surface. Do Not Apply Tape to the Surface.

o. Protect dried anodized surface from contamination. Handle parts with clean, white cotton gloves.

p. Apply primer within two hours after anodizing if bonding is not going to occur before then.

q. Check quality of the prepared surface. While looking at the surface through a polarizing filter, rotate the filter 90 degrees. Use a florescent light or daylight; the angle between the part surface and the light source should be between 5 and 15 degrees; your eye should be positioned opposite the light source and at an angle of 5 to 15 degrees. A properly anodized surface will show an interference color and a slight color change when rotating the filter. For example, the color should change from purple to yellow green or slight variations of these colors. If there is no color, no color change, or sudden color changes (result of stains, fingerprints, contamination) the coating is unsatisfactory; repeat the PANTA process.

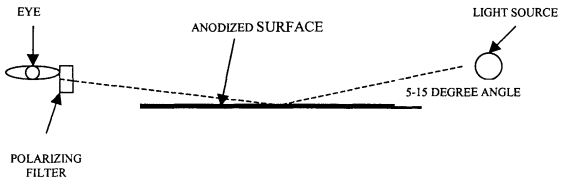

NOTE

Machined surfaces or abraded surfaces sometimes are difficult to inspect for color. Rotation of the polarizing filter is required because some pale shades of yellow or green are so close to white that without a color-change inspection, they might be considered "no color," which would falsely indicate no anodic coating.

H0203893

Figure B-1.

APPENDIX C
SPECIAL CONSIDERATIONS REGARDING FASTENER HOLES

C.1 GENERAL PROCESS REQUIREMENTS.

This appendix provides recommendations for the general process requirements and procedures for machining quality holes in metallic aircraft structures. The term "machining" includes drilling, reaming, flex honing, deburring, countersinking, and counter-boring operations performed on holes. The term "quality hole" refers to an actual hole, while the term "hole quality" refers to the process of making a hole.

C.1.1 Improper machining of holes in aircraft structure has caused and will continue to cause premature failure of components in service. The damage to a hole caused by improper machining is often microscopic and not readily apparent to the observer but will result in structural failure. The use of higher strength and exotic metals for aircraft structure has brought hole quality into the forefront of critical manufacturing processes.

C.1.2 This appendix applies to aircraft hole machining operations where high strength steels (160 ksi and above), CRES, or titanium are used; or aluminum where the machining process is fatigue sensitive, or where critical inspection, dimensioning, or specialized fit-ups are required.

C.1.3 Copper or magnesium requires separate instructions not included in this material. The machining of holes in composite materials or the combination of composite and metallic materials is also not covered. This material covers only quality holes machined using hand tools. The use of stationary tools, whether temporarily installed on the aircraft or permanently fixed for component work, is not covered. Stationary tool requirements should be set forth in specific engineering documents concerning specific repairs. While the principles set forth in this material apply to any size hole, the cutting speeds listed in Tables C-1 through C-4 apply only to holes up to 0.360 inch in diameter (second oversized 5/16-inch fastener size). Holes larger than this require different cutting speeds and should be calculated on an individual basis.

C.1.4 Hole quality is a skill that requires special training.

C.2 CUTTING FLUIDS (SOURCES).

Tri-Cool
Trico Manufacturing Corp.
1235 Hickory Street
Pewaukee, WI 53072

Boelube 70104/70106
The Orelube Corp.
201 East Bethpage Road
Plainview, NY 11803

Daracool 706LF
Grace Metalworking Fluids
55 Hayden Avenue
Lexington, MA02173

Cimstar 40F
Cincinnati Milacron
3720 Santa Fe Avenue
Los Angeles, CA 90058

Anchorlube G-771
Anchor Chemical Co.
777 Canterbury Road
Westlake, OH 44145

Moly-Dee
Withrow Industrial
Lubricants
Van Straaten Corp.
Los Angeles, CA

C.3 GENERAL PRACTICES TO PRODUCE QUALITY HOLES IN METALLIC AIRCRAFT STRUCTURES.

WARNING

This process requires the use of a chemical or material, which may necessitate special safety precautions. Consult the applicable Material Safety Data Sheet (MSDS) before beginning the process or contact local Safety Offices for guidance.

a. Inspect all cutting tools for wear, chipping, straightness, etc., prior to every use. Dull cutting tools will result in holes of unacceptable quality.

b. Use rigid blocks and drill guide bushings whenever possible.

c. Do not exceed the maximum cutting speed for any machining operation.

d. For holes that are finished with a reamer, machine the pilot hole approximately 0.015 inch smaller than the size of the reamer.

e. Use the recommended lubricant for all machining operations.

f. When drilling or reaming holes through a combination of dissimilar metals such as aluminum and steel, use the cutting speed for the harder alloy. Whenever possible, drill from the harder alloy side.

g. A drill or reamer should always be rotating in the cutting direction (clockwise) when it is removed from a hole to prevent scoring.

h. Flex honing may be used for holes that require a surface finish that cannot be obtained by reaming.

C.4 DRILL MOTORS.

a. Drill motors with rated speeds below the specified maximum limit are to be used when machining holes in aircraft structures. Variable speed drill motors may be used as long as the speed is verified.

b. Do not throttle higher speed rated drill motors to reduce the speed below the maximum permitted.

c. For fixed speed drill motors, the drill motor speed rating should be clearly marked on the drill motor.

d. Drill motors with wobbly chucks or worn bearings are not to be used.

e. Check drill motors regularly to ensure the rated speed is accurate using a calibrated tachometer or other similar device. Drill motors should be checked at the beginning of each shift and every time the speed is changed.

C.5 CUTTING TOOLS.

a. Use high-speed steel (HSS) drills and reamers to machine aluminum alloys. HSS grades M1, M7, and M10 are suitable for aluminum alloys.

b. Use 8% cobalt HSS for drilling or reaming titanium or steel alloys with a Rockwell C scale hardness (HRC) of 50 is approximately equal to a tensile strength of 255 ksi. Cobalt HSS grades M33, M34, M36, M42, M44, and M46 all contain a minimum of 8% cobalt.

c. Use carbide drills and reamers to drill out broken drills or to machine steel that has an HRC greater than 50. HRC 50 is approximately equal to a tensile strength of 255 ksi. Carbide grades C-5 through C-8 are suitable for most applications.

d. Use aluminum oxide abrasive media when flex honing aluminum alloys.

e. Use silicon carbide abrasive media when flex honing titanium.

f. Use boron carbide abrasive media when flex honing steel.

g. Use twist drills that conform to NAS 907 Type J for drilling steel and titanium.

h. Use twist drills that conform to NAS 907 Type A for drilling aluminum alloys.

i. Stoveburner drills should not be used. Stoveburner drills have no margins and are usually copper coated. The drills will burnish the walls of the hole and can cause material degradation resulting in a hole that will not meet hole quality standards.

j. Copper plating of drill bits is unsatisfactory. The transfer of the copper coating to the metal being drilled can cause galvanic corrosion in aluminum alloys.

k. Use reamers that conform to NAS 897 Type B or F for reaming steel and titanium.

l. Use reamers that conform to NAS 897 Type A or E for reaming aluminum alloys.

C.6 CUTTING SPEEDS AND FEEDS.

No cutting feeds are recommended. If a feed rate is required, it will be called out in a specific engineering document along with specific tools that will provide the feed rate for a specific repair.

C.6.1 The maximum recommended drilling speeds for metals are listed in Table C-1. Check specific engineering documents for required speeds used in specific repairs. If no speeds are given, use Table C-1 for drilling speeds.

C.6.2 The maximum recommended reaming speeds for metals are listed in Table C-2. Check specific engineering documents for required speeds used in specific repairs. If no speeds are given, use Table C-2 for reaming speeds.

C.6.3 Apply sufficient pressure on the work piece to produce uniform sharp chips, especially when drilling or reaming titanium or steel. Do not allow cutters to dwell.

C.6.4 The recommended flex honing parameters are listed in Table C-3.

C.6.5 The maximum recommended countersinking and counter-boring speeds are listed in Table C-4.

C.7 CUTTING FLUIDS.

The recommended cutting fluids are listed in Table C-5. Cutting fluids numbered 1 through 4 are applied by a mist lube system. Cutting fluids numbered 5 and 6 are manually applied from a squeeze bottle.

NOTE

Drilling aluminum may be accomplished with or without a cutting fluid (dry). Reaming aluminum must be accomplished with a cutting fluid.

C.7.1 Apply the cutting fluid directly on the cutting edge. Adjust the mist lube apparatus before any machining is attempted. When using cutting fluids numbered 5 and 6 in Table C-5, the fluid may have to be reapplied to the cutting edge to produce the desired results.

C.7.2 When drilling or reaming through a combination of dissimilar metals such as aluminum and steel, use the cutting fluid recommended for the harder metal.

C.8 HOLE QUALITY.

C.8.1 Unless otherwise specified on the engineering drawing, holes should be perpendicular to the surface upon which the fastener head will seat within ±3°.

a. Inspection criterial for fasteners are shown in individual fastener specifications or maintenance manuals.

b. Inspect the hole for proper diameter, location, edge distance, roundness, taper, etc., using precision measuring equipment. Hole inspection criterial will be called out in the specific engineering documents.

c. Examine the surfaces around the hole for discoloration due to excessive heat generated during machining. Any discoloration requres engineering evaluation.

d. Inspect the hole for required surface finish. A surface finish gauge may be needed to help determine the actual surface finish of holes based on a visual examination. Unless otherwise specified in the applicable technical directive, the average surface roughness is recommended be 125 microinches or less for a drilled hole and 63 microinches or less for a reamed hole. Tool marks or scratches having directions with are 45°, or less with respect to the axis of the hole are unsatisfactory.

e. All measuring equipment should be properly calibrated.

C.8.2 The requirement for nondestructive inspection (NDI) of holes and the appropriate NDI technique will be specified in separate technical directives or engineering documents.

C.9 COLD WORKING (CW) OF FASTENER HOLES; SPLIT SLEEVE METHOD.

The split Sleeve Cold Working of Fastener Holes in aluminum, titanium and steel is a method of improving the fatigue performance of aircraft structures. This process is generally referred to as “Cold Working” (CW); however, it may also be called the Cold Expansion process.

C.10 PROCESS DESCRIPTION.

The process consists of the insertion of a mandrel into the hole with a disposable solid film lubricated sleeve on the mandrel and then pulling the mandrel back through the sleeve (Figure C-1). The internally lubricated split sleeve precludes damage to the hole and allows use of a one-sided process. The action of drawing the mandrel through the pre-lubricated split sleeve causes a plastic flow of material that results in a region of residual compressive stresses around the periphery of fastener holes. The desired final diameer of the hole is normally obtained by reaming of the cold worked hole.

C.11 ENGINEERING BACKGROUND AND JUSTIFICATION.

The reduction of structural weight to improve aircraft performance has increased stress levels in the aircraft structure to a point where the stress concentrations must be offset to reduce the effective stress intensity factor and thereby reduce the chance of fatigue failures. The most common stress concentration in mechanically fastened aircraft structures are ones that cannot be avoided. These are the fastener holes. One method that is used to reduce the chance of fatigue in a structure is to produce compressive residual stresses in the critical area. Since a material must be plastically yielded in order to initiate a crack or to enlarge a crack, the presence of residual compressive stresses helps to reduce the chances of the material in the critical area of the structures from being stressed into the tensile plastic yeld zone of the metal. The use of residual compressive stresses in a structure has been known for years and is used in many areas to prevent the failure of a structure that could result in a catastrophic accident. Shot peening is a well known method of producing compressive residual stresses in a part. The ordnance industry uses a process called autofrettage on the barrels of large caliber guns to double the resistance of the gun to withstand firing pressures.

C.11.1 Sleeve cold working creates a zone of compressive residual stress. The magnitude of the compressive stress zone is at least two-thirds of the material’s tensile yield strength and extends radially outward from the edge of the hole to a distance at least equal to the radius of the hole, and more typically, to about one diameter. Since it is unusual for applied cyclic tensile stresses to exceed this value, the hole is effectively shielded from tensile loading. From a fracture mechanics viewpoint, the effective stress

intensity factor is significantly reduced. Typically, minimum life improvement factors of 3:1 (cold worked life: non-cold worked life) have been shown for both fatigue and crack growth, with higher factors common. This increase in fatigue life is only around the immediate area of the hole and does not extend to other structures of the aircraft. It is a very localized effect.

C.11.2 Typically, high interference cold working is accomplished by drawing an oversized mandrel through a fastener hole, using a pre-lubricated stainless steel split sleeve. The sleeve protects the hole from damage, ensures the hole expansion is in a radial direction, minimizes the pull force required to cold expand the hole, and allows one-sided (blind) processing. Optimal fatigue performance is achieved when the hole is expanded at least 3% for aluminum or mild steel, and at least 4.5% for titanium and high strength steel.

C.12 MANDRELS.

The cold working mandrels are the heart of the cold working operation. The mandrel is the tool that actually forces the expansion of the metal around the hole. Mandrels are manufactured from a high strength tool steel which is resistant to shrinkage, wear, galling and retains its elasticity to prevent breakage. The major diameter of the mandrel is allowed to wear, through use, to a minimum size before the mandrel must be replaced. Worn out mandrels cannot be reworked and must be replaced with new mandrels. Mandrels used for cold working of titanium and high strength steel are stronger than those used for aluminum and mild steel. Mandrels used for aluminum and mild steel cannot and shall not be used for titanium and high strength steel. However, mandrels used for titanium and high strength steel can also be used for aluminum and mild steel. A typical mandrel lasts from 1000 to 5000 workings before wearing out and requiring replacement.

CAUTION

All mandrels must be checked for proper part number and have the major diameter reassured for wear before use. If there is ever any doubt as to the part number and/or the size of a mandrel, the mandrel should be replaced.

C.12.1 All mandrels shall be inspected and measured prior to beginning any cold working procedures.

C.13 NONDESTRUCTIVE INSPECTION.

The current Nondestructive Inspection (NDI) method generally used to inspect cold worked holes for cracks is the scanning eddy current inspection method. The specific system, probes and setup parameters are to be specified in the appropriate engineering documents for each specific cold working application.

C.13.1 All cold worked holes should be honed using an appropriate Flex-O-Lap hone or other approved honing tools before eddy current inspection.

C.14 LUBRICANTS.

Lubrication is an important part of the cold working process. Because of the intimate metal-to-metal contact, the correct lubrication is required during drilling, reaming and the cold working process.

C.15 APPLIED EXPANSION.

The optimal applied expansion of a hole is determined primarily from the tensile and comprehensive yield strengths of the material and also upon engineering trade-offs relating to surface upset, standardization of tooling and manufacturing variables. Two ranges of applied expansion are recommended. The traditional 3-6% range (4.0% nominal) applies to aluminum and mild steels (75 KSI max.). The 4.5-6.7% range (5.5% nominal) applies to titanium and high strength steels (240 KSI max.). The range variation is due to the starting hole and tooling tolerances. The standardized system of starting hole diameters, mandrel diameters, and sleeve dimensions for producing the required applied expansions are to be specified in the applicable engineering documents.

C.16 EDGE MARGIN REQUIREMENTS.

Edge margin is defined as the ratio of the distance between the center of the hole and the edge of the part to the nominal finished hole diameter. If an edge margin is not specified in the engineering documentation, then an edge margin ratio of 1.75 diameters or greater is recommended.

C.17 HOLE SPACING REQUIREMENT.

Hole spacing is defined as the distance between the centerline of two adjacent holes. Hole spacing should be a minimum of three times the diameter of the hole.

C.18 COLD WORKED HOLE DIAMETER.

The cold worked hole can be characterized as having a slight hourglass shape, with an axial edge, which corresponds with the position of the split in the sleeve. The shape of the hole and the presence of the axial ridge does not adversely effect the fatigue performance of the cold worked hole. The cold worked hole diameter is determined by the starting hole diameter, the applied expansion provided by the mandrel and sleeve and by the elasticity of the material. The hole diameter should be called out in the applicable engineering documentation.

C.19 POST SIZING OF COLD WORKED HOLES FOR FASTENER FIT.

The cold worked holes specified in engineering documents can be characterized as being smaller than the desired fastener diameter, having an hourglass shape, and an axial ridge, which corresponds with the position of the split in the sleeve. The shape of the hole and the presence of the axial ridge does not adversely affect fatigue performance of the cold worked hole. Post sizing is required in order to size the hole for the desired fastener fit. The maximum metal removal is limited to 16 to 21% of the starting diameter of the hole or 0.065 inch (1.64 mm), whichever is less. Post sizing within this limit does not reduce fatigue performance. The maximum allowable finish hole diameters which may be used without re-cold working are to be specified in the applicable engineering documents and shall take precedence of this material.

C.20 OVERSIZING.

A cold worked hole shall only be oversized if allowed by the applicable engineering documents.

C.21 COUNTERSINKING AND DEBURRING.

Machining of countersinks shall be performed after cold working of the straight hole in order to provide the required compressive stresses in the countersink area. Deburring, if required, should be accomplished after the hole has been cold worked.

C.22 REWORK OF PREVIOUSLY COUNTERSUNK HOLES.

Split sleeve cold working of holes with an existing countersink provides only marginal fatigue improvement. To obtain a satisfactory fatigue improvement, it is necessary to remove part of the existing countersink prior to cold working of the hole. Special cold working procedures exist for re-cold working previously countersunk holes. These procedures should be requested from the responsible engineering organization. Regular cold working should not be performed if at least 80% of the cold worked area around the hole is still available.

C.23 HOLE DIAMETER VS. SHEET THICKNESS RATIO.

Split sleeve cold working of holes in thin, single sheets may cause buckling of the sheet material around the hole and a consequent reduction in fatigue performance. The minimum material thickness should generally not be less than 1/5 of the diameter of the hole being cold worked.

C.24 SHEAR DISCONTINUITIES.

A shear discontinuity is a small, non-fatigue critical defect, which occurs at the edge of the hole adjacent to the axial ridge caused by the split in the sleeve. This defect is generally very shallow and normally only occurs in certain high strength aluminum alloys such as 7075-T6. Extensive fatigue tests have shown that this non-critical defect does not adversely affect the fatigue performance of a cold worked hole. The presence of shear discontinuities is not cause for rejection of a cold worked hole.

C.25 SURFACE UPSET.

Upset of the material surrounding the hole is acceptable and does not normally affect the expected fatigue improvement. The magnitude of the surface upset is dependent upon material and hole diameter. If the size of the surface upset is abnormal, contact the responsible engineering organization for instructions.

Table C-1. Maximum Recommended Drill Speeds for Holes up to 0.360 Inch Diameter

Metal to be Drilled	Strength in ksi	Drilling Speed (rpm)	
		HSS	Cobalt
Aluminum	All	900	900
Titanium	All	N/A	500
Steel	<260	N/A	500
Steel (D6AC)	All	N/A	500
NOTE: Steels greater in strength than 260 ksi will require special instructions from engineering.			

Table C-2. Maximum Recommended Reaming Speeds for Holes up to 0.360 Inch Diameter

Metal to be Reamed	Strength in ksi	Reaming Speed (rpm)	
		HSS	Cobalt
Aluminum	All	700	700
Titanium	All	N/A	250
Steel	<260	N/A	250
Steel (D6AC)	All	N/A	250
NOTE: Steels greater than 260 ksi in strength require special instructions from engineering.			

Table C-3. Recommended Flex Honing Parameters

Metal to be Honed	Strength in ksi	Flex Honing Parameters			
		Abrasive Media	Grit Size	Feed Rate Sec/Pass	RPM
Aluminum	All	Aluminum Oxide	180	5	350
Titanium	All	Silicon Carbide	120	5	350
Steel	<220	Boron Carbide	180	5	350
Steel	>220	Boron Carbide	120	5	350
Steel (D6AC)	All	Boron Carbide	120	5	350

Table C-4. Recommended Speeds for Countersinking and Counterboring

Metal to be Machined	Strength in ksi	Speed in RPM
Aluminum	All	500
Titanium	All	150
Steel	All	150

Table C-5. Recommended Cutting Fluids

Metal to be Machined	Recommended Cutting Fluid
Aluminum	1. Tri-Cool diluted with water 15:1
	2. Boelube 70104/70106 (premixed)
	3. Caracool 706LF diluted with water 15:1
	4. Cimstar 40F diluted with water 15:1
	5. Anchorlube G-771
	6. Moly-Dee
	7. Dry
Titanium	1. Tri-Cool diluted with water 20:1
	2. Boelube 70104/70106 (premixed)
	3. Daracool 706LF diluted with water 20:1
	4. Cimstar 40F diluted with water 20:0
	5. Anchorlube G-771

Table C-5. Recommended Cutting Fluids - Continued

Metal to be Machined	Recommended Cutting Fluid
Steel	6. Moly-Dee 1. Tri-Cool diluted with water 20:1 2. Boelube 70104/70106 (premixed) 3. Daracool 706LF diluted with water 20:1 4. Cimstar 40F diluted with water 20:1 5. Anchorlube G-771 6. Moly-Dee

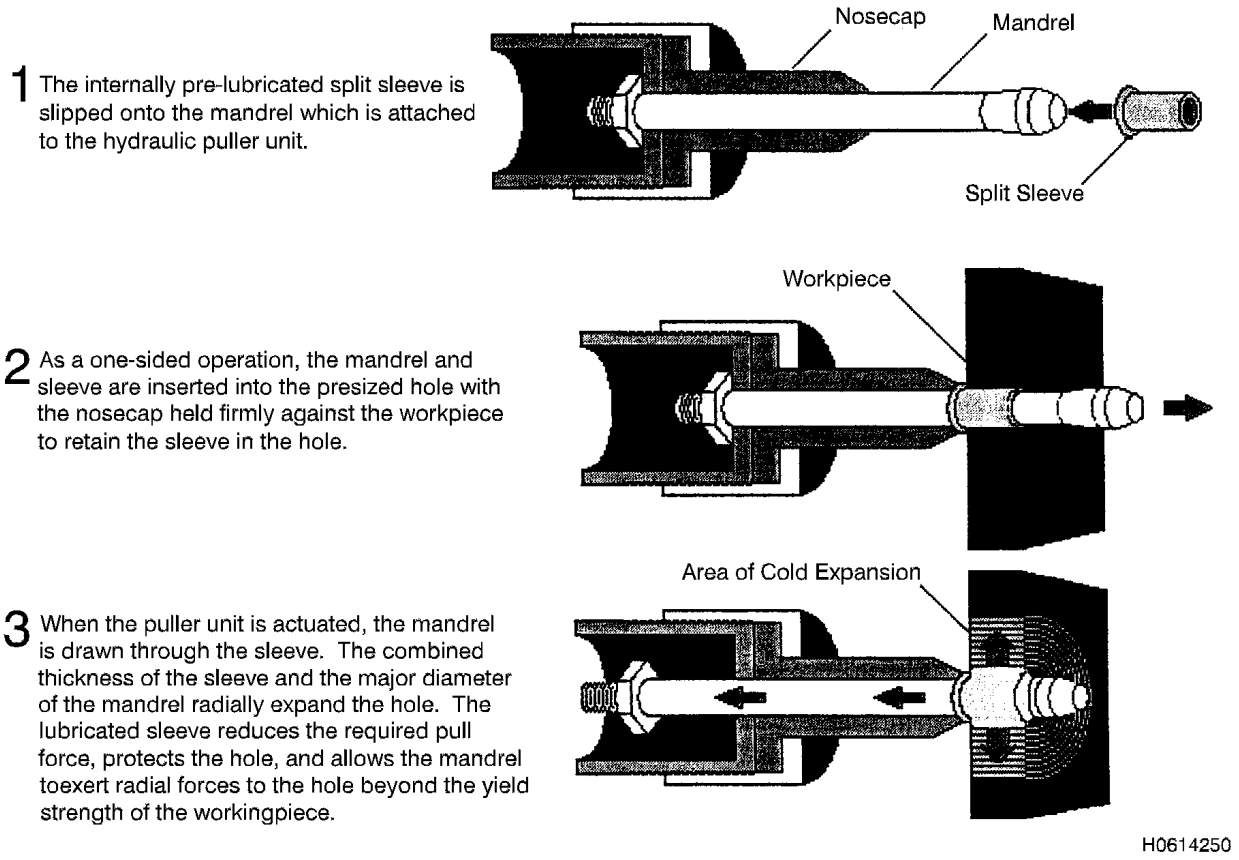

Figure C-1. Split Sleeve Cold Working of Fastener Holes

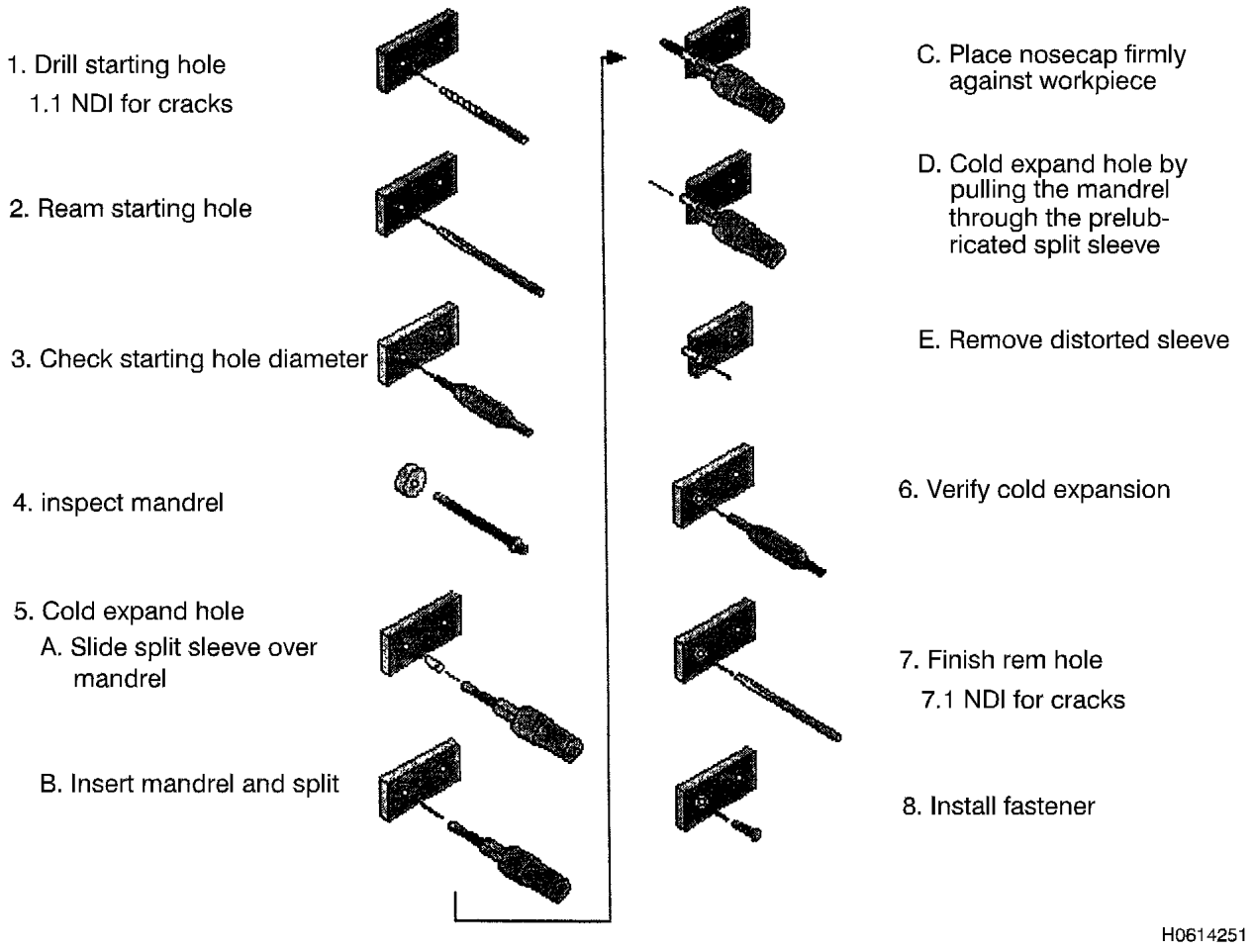

Figure C-2. Steps of the Cold Working Process

INDEX

Subject	Paragraph, Figure Table Number
A	
Acrylics	4-18
Additional Information (adhesives)	7-11
Alloys	7-2
Bonds, Curing of	7-8
Materials, Classification of	7-2
Primer Selection	7-8
Selection of	7-8
Strength Characteristics	7-6
More Uniform Stress Distribution	7-1
Weight Saving and Optimum Strength-to-Weight Ratio	7-1
Improved Fatigue Resistance	7-1
Joining of Dissimilar Materials	7-1
Aerodynamic Smoothness	7-1
Environmental Protection	7-1
Faster and Cheaper	7-1
Adhesives and Bonding, General	7-1
Elastomeric	7-2
Thermoplastic	7-2
Thermosetting	7-2
Advanced Composite Repair	3-10
Advanced Composites	4-17
Advantages (adhesive bonding)	7-1
Advantages and Disadvantages of Adhesive Bonding	7-1
Aerodynamic Smoothness	7-1
Steels and Their Uses	4-5
Alloys	4-16
Aluminum	4-8
Aluminum Alloy Sheet Substitutions	3-1
Aluminum Alloy Stressed Skin Structure	3-1
Aluminum Alloy Tubing	3-12
Aluminum and Its Alloys	4-8
Annealing, Titanium	8-27
B	
Bend Allowance	8-1
Bend Line	8-3
Bending Strength	4-3
Bending Stress	4-2
Beveled Lap Joints	7-4
Blending Scratches	3-15
Blind Fasteners	5-5
Blind Nuts	5-6
Bolt Hole Size	5-4
Bolts	5-3
Clevis	5-4
Close-Tolerance	5-4
Close-Tolerance Shear	5-4
Eye	5-4
Full Threaded	5-4
Hex Head	5-4
Internal Wrenching	5-4
Self-Locking	5-4
Box Pan or Cornice Brake Machine Forming	8-9
Brazing	6-1
Brittleness	4-1
Broken Screws, Extracting	3-10
Bulbed Rivets	5-5
C	
Carbon Steels	4-5
Causes of Aircraft Damage	2-1
Cherrylock Rivets	5-5
Cherrymax Rivets	5-5
Chrome-Molybdenum Steels	4-8
Chrome-Nickel Steels	4-5
Chrome-Vanadium Steels	4-8
Chromium Steels	4-5
Classification of Adhesive Materials	7-2
Clevis Bolts	5-4
Clinch Nuts	5-6
Close-Tolerance Bolts	5-4
Close-Tolerance Shear Bolts	5-4
Cold-Forming Titanium Alloys	8-27
Compatibility	7-6
Composi-Lok Fasteners	5-6
Compression Strength	4-2
Compression Stress	4-1
Concave Surfaces	8-11
Corrosion	2-7, 4-17
Crack Evaluation	3-14
Crack Inspection	3-14
Crack Repair and Treatment	3-14
Fatigue	2-6
Grinding	2-6
Heat-Treat	2-6
Plating	2-6
Stress Corrosion	2-7
Crazing	4-19
Cure Time	7-2
Curing of Adhesive Bonds	7-8
Curved Flanged Parts	8-11
Cutting and Grinding Titanium Alloys	8-26
D	
Damage Classifications	2-2
Damage to Transparent Plastics	4-19
Damage Types	2-6
Debonding of Honeycomb with Dry Ice	7-10
Degradation Over Time	7-2

Subject	Paragraph, Figure Table Number
Design Considerations	7-4
Engine Mount	1-4
Monocoque	1-1
Semimonocoque	1-3
Wing	1-4
Dies and Joggle Blocks	8-26
Disadvantages (adhesive bonding)	7-1
Discontinuities	2-7
Drilling and Reaming Titanium Alloys	8-26
Dry Ice Substitute	7-10
Ductility	4-1
E	
Eddy Current	2-8
Edge Distance	3-5
Elasticity	4-1
Elastomeric Adhesives	7-2
Elevated-Temperature-Forming of Titanium Alloys	8-27
Engine Mount Design	1-4
Environmental Protection	7-1
Explanation of Rule 1	3-4
Explanation of Rule 2	3-4
Explanation of Substitution Table	3-1
External Wrenching Bolts	5-4
Extracting Broken Screws	3-10
Eye Bolts	5-4
F	
Fabrication	7-6
Fasteners	3-10
Faster and Cheaper	7-1
Fatigue Cracks	2-6
Fatigue Failure	4-3
Fatigue Resistance	4-3
Ferrous Metals	4-4
Fillister Head Screws	5-1
Flat Pattern Development	8-1
Flat Pattern Layout Procedures	8-3
Flight Control Mechanisms	1-8
Fluorescent Penetrant	2-9
Flush Head Screws	5-1
Forming Operations	8-3
Forming Terminology	8-1
Forming Titanium Alloys	8-26
Forms and Shapes of Steel	4-4
Friction-Locked Rivets	5-5
Full Threaded Bolts	5-4
Functional Classification	7-2
Fuselage Construction	1-3
Fuselage Designs	1-1
G	
Galvanic Corrosion	4-17
General	
Adhesives and Bonding	7-1
Advanced Composite Repair	3-10
Control Surfaces	1-6
Engine Mounts	1-3
Fasteners	5-1
Fuselage	1-1
Nacelles	1-4
Spot Welds and Worn Laminas	3-5
Stabilizers	1-6
Tubing Repair	3-12
General Information (magnesium)	4-16
General Shop Practices	8-1
Grinding Cracks	2-6
Grip Length	5-3
H	
Hand Forming	8-9
Hardness	4-1
Heat Conductivity	4-1
Heat Treatment	4-4
Heat-Treat Cracks	2-6
Hex Head Bolts	5-4
Hi-Lok Fasteners	5-5
Hi-Tigue Fasteners	5-5
Horizontal Vortex Generators	1-8
Huckbolt Fasteners	5-5
Huckrimp Fasteners	5-5
I	
Identification of Tubing Systems	3-12
Improved Fatigue Resistance	7-1
Inclusions	2-7
Inspection Difficulties	7-1
Insulated Enclosure	7-10
Internal Wrenching Bolts	5-4
Investigation of Damage	2-6
J	
Jo-Bolt (Visu-Lok) Fasteners	5-5
Joggle Blocks, Dies and	8-26
Joggle Lap Joints	7-4
Joggling	8-23
Joining of Dissimilar Materials	7-1
L	
Landing Gear	1-1, 1-10
Lap Joints	7-4
Locating Blind Holes	8-27
Lockbolts	5-5
M	
Machine Screws	5-1
Magnesium	4-16
Magnetic Particle	2-9
Malleability	4-1
Material Specifications	4-1
Mechanical Abrading	7-8

Subject	Paragraph, Figure Table Number
Mechanically Locked Rivets	5-5
Metal Working	8-1
Methods of Identifying Steel Stock	4-5
Minimum Sheet Metal Bend Radii	8-3
Monocoque Design	1-1
More Uniform Stress Distribution	7-1
N	
Nacelle	1-1
Nacelles	1-4
NDI Techniques	2-7
Nickel Steels	4-5
Nonblind Fasteners	5-4
Nondestructive Inspection	2-6
Nonferrous Metals	4-4
Non-Tank Immersion Method	7-6
O	
Olympic-Lok Rivets	5-5
P	
Packing	7-10
Pan Head and Truss Head Screws	5-3
Pin Rivets	5-4
Plating Cracks	2-6
Polycarbonates	4-19
Prevention (galvanic corrosion)	4-17
Principal Structural Units	1-1
Process Control	7-2
R	
Radiographic	2-7
Removal of Spot Welds	3-5
Removal Procedure	7-10
Repair Classifications	2-5
Repair of Aircraft Structures	3-1
Repair of Threaded Installations	3-13
Repairs (tubing)	3-13
Replacement of Spot Welds and Worn Laminas	3-5
Rivet Material	5-6
Rivet Pattern Layout	3-5
Rivet Spacing	3-5
Rivets	5-4
Rivets and Riveting Practice	3-4
Rivnuts	5-6
Round Head Screws	5-1
S	
Safety Glass	4-20
Scratches	4-19
Screws	5-1
Selection of Adhesive	7-8
Self-Locking Bolts	5-4
Self-Plugging Rivets	5-5
Self-Tapping Screws	5-3
Semimonocoque Design	1-3
Set Screws	5-3
Setback	8-1
Shear Strength	4-2
Shear Stress	4-2
Sheet Metal Forming	8-1
Slip Roll Machine Forming	8-9
Socket Head Screws	5-3
Solid Rivets	5-4
Solvents	7-8
Specialized Equipment	7-2
Spot Weld Failures	3-6
Stainless Steel Tubing	3-12
Steel	4-4
Steel Rivets	3-4
Stop-Drilling Cracks in Sheet Material	3-14
Strap Joints	7-4
Strength-to-Weight Ratio, Weight Saving and Optimum	7-2
Strength-Weight Ratio	4-4
Stress Corrosion Cracks	2-7
Stresses	7-4
Structural Screws	5-1
Surface Preparation	7-1, 7-6
Surface Treatment (magnesium alloys)	4-17
Swage-Locked Fasteners	5-5
T	
Tank Immersion Method	7-6
Tapered Shank Bolts	5-5
Tensile Strength	4-1
Tension Stress	4-1
Terminology	4-1
Terms for the Study and Use of Materials	4-1
Thermoplastic Adhesives	7-2
Thermosetting Adhesives	7-2
Threaded Fasteners	5-1
Titanium	4-11
Titanium and Its Alloys	4-11
Titanium Characteristics	4-16
Titanium Stress Relieving and Annealing	8-27
Titanium Use	4-11
Torquing Nuts and Bolts	3-10
Torsion Stress	4-3
Torsional Strength	4-3
Toughness	4-1
Transparent Plastics	4-18
Tubing Damage	3-13
Tubing Repair	3-12
Tubular Rivets	5-4
Type Classification	7-2
Types of Adhesive-Bonded Joints	7-4

Subject	Paragraph, Figure Table Number
Typical Repair Examples	3-15
U	
Ultrasonic	2-9
Useful Joint Life	7-2
V	
Visual	2-7
W	
Walkways	1-5
Weight Saving and Optimum Strength-to-Weight Ratio	7-1
Wet Installation	5-4
Wing Construction	1-4
Wing Design	1-4
Wing Vortex Generators	1-8
Work-Hardening	4-4
Working Titanium Alloys	8-26