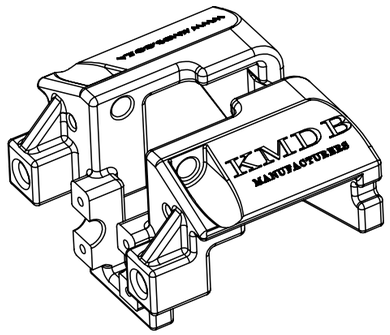

KMDB™
manufacturers
(pty) ltd.

Reg. No. 2009/020286/07

www.kmdb.co.za

2016 Catalogue

Tel: 011 814 6705
Fax:011 814 1440
Email: Info@KMDB.co.za

Knuckle, Mechanical Disc Brake Manufacturers (Pty) Ltd.

The KMDB disc brake and its components are SABS certified and patented globally. KMDB reserves the right of sale, as well as the right to manufacture. Patent No. PCT/ZA2012/000021

Tel: 011 814 6705
Fax:011 814 1440
Email: Info@KMDB.co.za
Web: www.kmdb.co.za

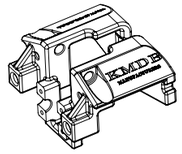

KMDB™
manufacturers
(pty) ltd.
Reg. No. 2009/020286/07
www.kmdb.co.za

Product & Parts Index

02 History

Products

3 Unbraked Axles
5 Disc Braked Axles
9 Drum Braked Axles
11 Rubber Axles
12 Couplers/Hitches
15 Leaf Springs & Kits
18 Jockey Wheels & Stands
20 Rims & Tyres
21 Winches & Rollers
23 Accessories
25 Electrical Accessories
26 Parts & Spares

Disclaimer: Please note that prices are excluding VAT and subject to change due to Rand fluctuations and supplier changes. For exact pricing, please contact Nicola in our sales office.

KMDB manufacturers (pty) ltd.
Reg. No. 2009/020286/07

History

KMDB Manufactures evolved from Global Manufacturers, one of South Africa's largest and oldest names in trailer components with over 30 years of experience within the industry.

KMDB's vision is to bring safer and superior products to the trailer market, as well as offering competitive and viable pricing to the South African market.

KMDB is also the only company, globally, to have developed a viable alternative to the drum brake on trailers and light trucks.

The Knuckle Mechanical Disk Brake, or KMDB for short, is the world's first successful, floating calliper mechanical disc brake that can be used on trailers. The company's co-founders Brian Anthony Paulsen and Flip de Klerk, with over 30 years of experience within the trailer market, have developed the ultimate disc brake and have finally brought it to the South African market.

Axles & Components

Inventory Category : 008 - AXLES UNBRAKED (900KG)	
CODE	**DESCRIPTION**
G106	AF40. 900KG 4/100PCD 1,170M
G106A	AF40. 900KG 4/100PCD 1,220M
G106B	AF40. 900KG 4/100PCD 1,250M
G106C	AF40. 900KG 4/100PCD 1,300M
G106D	AF40. 900KG 4/100PCD 1,330M
G106E	AF40. 900KG 4/100PCD 1,365M
G106F	AF40. 900KG 4/100PCD 1,420M
G106G	AF40. 900KG 4/100PCD 1,450M
G106H	AF40. 900KG 4/100PCD 1,500M
G106I	AF40. 900KG 4/100PCD 1,560M
G106J	AF40. 900KG 4/100PCD 1,600M
G106K	AF40. 900KG 4/100PCD 1,650M
G106L	AF40. 900KG 4/100PCD 1,675M
G106M	AF40. 900KG 4/100PCD 1,700M
G106N	AF40. 900KG 4/100PCD 1,750M
G106O	AF40. 900KG 4/100PCD 1,805M
G106P	AF40. 900KG 4/100PCD 1,850M
G106P/1	AF40. 900KG 4/100PCD 1,900M
G106Q	AF40. 900KG 4/100PCD 1,950M
G106R	AF40. 900KG 4/100PCD 2,000M
G106S	AF40. 900KG 4/100PCD 2,100M
G106T	AF40. 900KG 4/100PCD 2,200M
G106U	AF40. 900KG 4/100PCD 2,300M

KMDB manufacturers (pty) ltd.
Reg. No. 2009/020286/07

Inventory Category : 011 - STD HIGH SPEED AXLES UNBRAKED	
CODE	**DESCRIPTION**
G129A	AF38A-1 (1250KG) 5/114PCD 1,800M
G129B	AF38A-1 (1250KG) 5/114PCD 1,850M
G129C/1	AF38A-1 (1250KG) 5/114PCD 1,900M
G129D	AF38A-1 (1250KG) 5/114PCD 2,000M
G129E	AF38A-1 (1250KG) 5/114PCD 2,100M
G129F	AF38A-1 (1250KG) 5/114PCD 2,200M
G129G	AF38A-1 (1250KG) 5/114PCD 2,300M

G130	AF45A (1600KG) 5/114PCD 45SQ 1,420M
G131	AF45A (1600KG) 5/114PCD 45SQ 1,500M
G131A	AF45A (1600KG) 5/114PCD 45SQ 1,510M
G131B	AF45A (1600KG) 5/114PCD 45SQ 1,520M
G131C	AF45A (1600KG) 5/114PCD 45SQ 1,550M
G131D	AF45A (1600KG) 5/114PCD 45SQ 1,575M
G132	AF45A (1600KG) 5/114PCD 45SQ 1,675M
G132A	AF45A (1600KG) 5/114PCD 45SQ 1,600M
G132B	AF45A (1600KG) 5/114PCD 45SQ 1,700M
G132C	AF45A (1600KG) 5/114PCD 45SQ 1,750M
G133	AF45A (1600KG) 5/114PCD 45SQ 1,805M
G133A	AF45A (1600KG) 5/114PCD 45SQ 1,850M
G134	AF45A (1600KG) 5/114PCD 45SQ 1,900M
G134A	AF45A (1600KG) 5/114PCD 45SQ 1,940M
G135	AF45A (1600KG) 5/114PCD 45SQ 2,000M
G136	AF45A (1600KG) 5/114PCD 45SQ 2,100M
G136A	AF45A (1600KG) 5/114PCD 45SQ 2,200M
G136B	AF45A (1600KG) 6/140PCD 45SQ 1,420M
G136C	AF45A (1600KG) 6/140PCD 45SQ 1,500M
G136D	AF45A (1600KG) 6/140PCD 45SQ 1,675M
G136F	AF45A (1600KG) 6/140PCD 45SQ 1,805M

Unbraked Axles cont.

G136G	AF45A (1600KG) 6/140PCD 45SQ 1,900M
G136H	AF45A (1600KG) 6/140PCD 45SQ 2,000M
G136I	AF45A (1600KG) 6/140PCD 45SQ 2,100M
G136J	AF45A (1600KG) 6/140PCD 45SQ 2,200M
G136K	AF45A (1600KG) 6/140PCD 45SQ 2.300M
G136L	AF50A (2500KG) 6/140PCD 45SQ 1,420M
G136M	AF50A (2500KG) 6/140PCD 45SQ 1,675M
G136N	AF50A (2500KG) 6/140PCD 45SQ 1,805M
G136O	AF50A (2500KG) 6/140PCD 45SQ 2,000M
G137	AF50A (2500KG) 6/140PCD 45SQ 2,100M
G138	**AF38A (900KG) 4/61/100 40ROUND AXLE**
G139	**AF38A-1 (1250KG) OPT. 40SQ AXLE**
G140	**AF45A (1600KG) OPT.45SQ LENGTH?**
G140A	**AF50A (2500KG) OPT.50SQ LENGTH?**

KMDB manufacturers (pty) ltd.
Reg. No. 2009/020286/07

Disc Braked Axles

DISC BRAKED AXLES	
Code	Description
BA001	DISC BRAKE (1600KG)5/114PCD. 1 640M
BA002	DISC BRAKE (1600KG) 5/114PCD 1 690M
BA003	DISC BRAKE (1600KG) 5/114PCD 1 740M
BA004	DISC BRAKE (1600KG) 5/114PCD 1 790M
BA005	DISC BRAKE (1600KG) 5/114PCD 1 840M
BA006	DISC BRAKE (1600KG) 5/114PCD 1 890M
BA007	DISC BRAKE (1600KG) 5/114PCD 1 940M
BA008	DISC BRAKE (1600KG) 5/114PCD 1 990M
BA009	DISC BRAKE (1600KG) 5/114PCD 2 040M
BA010	DISC BRAKE (1600KG) 5/114PCD 2 090M
BA011	DISC BRAKE (1600KG) 5/114PCD 2 140M
BA012	DISC BRAKE (1600KG) 5/114PCD 2 190M
BA013	DISC BRAKE (1600KG) 5/114PCD 2 240M
BA014	DISC BRAKE (1600KG) 5/114PCD 2 290M
BA015	DISC BRAKE (1600KG) 5/114PCD 2 340M

DISC BRAKED AXLES	
BA016	(2700KG) DISC BRAKE 6/140PCD LENGTH?

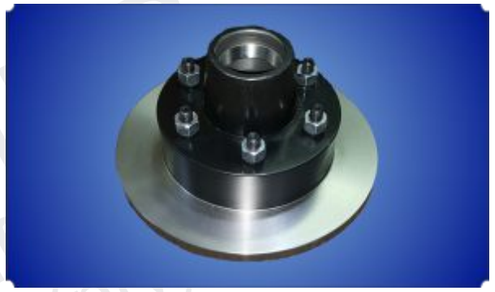

Please note that the KMDB disc brake system uses a fully mechanical caliper, with brake rods. The axle is supplied complete and ready for use. The disc brake itself does not have a reverse mechanism, which is why we recommend our auto-reverse solenoid couplers.

Spares are available as per below

CENTRE PIECE (Disc Braked Axle)	
CP001	CENTRE PIECE
CP002	DOUBLE CLEVIS FOR CENTRE PIECE LH/THREAD
CP003	SINGLE CLEVIS FOR CENTRE PIECE LH/THREAD
CP004	CENTRE PIECE COMP.
CP005	STAR WASHER

KMDB manufacturers (pty) ltd.
Reg. No. 2009/020286/07

INDIVIDUAL COMPONENTS (DISC BRAKE)	
DB001	BRAKE CALIPER & CLEVIS
DB002	MOUNTING PLATE
DB003	HUB DISC - 5 STUD
DB004	SINGLE CLEVIS FOR BRAKE R/H THREAD
DB005	STUB AXLE
DB006	DICS BRAKE COMP.
DB007	WHEEL NUTS
DB008	GREASE CAP(DUST CAP)
DB009	OIL SEALS
DB010	SPLIT PIN
DB011	CASTLE NUT(HEX NUT)
DB012	L68149 BEARING
DB013	LM12749 BEARING
DB014	AXLE WASHER

Drum Braked Axles

Inventory Category: 12 - Axle braked cable	
G107B	AFC40A-1 (900KG) 5/114PCD 1700M
G107C	AFC40A-1 (900KG) 5/114PCD 1750M
G107D	AFC40A-1 (900KG) 5/114PCD 1805M
G107E	AFC40A-1 (900KG) 5/114PCD 1950M
G107G	AFC40A-1 (900KG) 5/114PCD 2000M
G107H	AFC40A-1 (900KG) 5/114PCD 2100M
G141A	AFC45A (1600KG) 5/114PCD SQ 1,420M
G141B	AFC45A (1600KG) 5/114PCD SQ 1,500M
G141C	AFC45A (1600KG) 5/114PCD SQ 1,805M
G142A	AFC45A (1600KG) 5/114PCD SQ 1,560M
G142B	AFC45A (1600KG) 5/114PCD SQ 1,600M
G142C	AFC45A (1600KG) 5/114PCD SQ 1,650M
G142D	AFC45A (1600KG) 5/114PCD SQ 1,675M
G142E	AFC45A (1600KG) 5/114PCD SQ 1,740M
G142F	AFC45A (1600KG) 5/114PCD SQ 1,850M
G142G	AFC45A (1600KG) 5/114PCD SQ 1,940M
G144	AFC45A (1600KG) 5/114PCD SQ 1,900M
G145	AFC45A (1600KG) 5/114PCD SQ 2,000M
G146	AFC45A (1600KG) 5/114PCD SQ 2,100M
G147	AFC45A (1600KG) 5/114PCD SQ 2,200M
G149	AFC45A (1600KG) 6/140PCD SQ 1,420M
G150	AFC45A (1600KG) 6/140PCD SQ 1,500M
G151	AFC45A (1600KG) 6/140PCD SQ 1,675M
G152	AFC45A (1600KG) 6/140PCD SQ 1,805M
G152A	AFC45A (1600KG) 6/140PCD SQ 1,900M
G152B	AFC45A (1600KG) 6/140PCD SQ 2,000M
G152C	AFC45A (1600KG) 6/140PCD SQ 2,100M
G152D	AFC45A (1600KG) 6/140PCD SQ 2,200M
G152E	AFC50B (1800KG) 6/140PCD SQ 2,100M
G152F	AFC50B (1800KG) 6/140PCD SQ 2,300M
G152G	AFC50A (2500KG) 6/140PCD SQ 2,000M

KMDB manufacturers (pty) ltd.
Reg. No. 2009/020286/07

Drum Braked Axles (cont.)

Inventory Category : 012 - CUSTOM AXLE BRAKED CABLE	
CODE	DESCRIPTION
G154	AFC38A-1(1250KG) OPT. 40SQU. LEGNTH?
G155	AFC40A-1(900KG) OPT. 40 ROUND LENGTH?
G156	AFC45A (1600KG) OPT. 45 SQU. LENGTH?
G157	AFC50B (1800KG) OPT. 50 SQU. LENGTH?
G158	AFC50A (2500KG) OPT. 50SQU. LENGTH?
G200	BRAKE CABLE FOR AXLES

Axle accessories (Drum brake)

G126	BEARING SET WITH SEAL & GREASE CAP
G127A	900KG HUB 4/100PCD ONLY
G127B	1250KG HUB 5/114PCD ONLY
G127C	1600KG HUB 6/140PCD ONLY
G127D	1600KG DRUM 4/100PCD ONLY
G127E	1600KG DRUM 5/100PCD ONLY
G127F	1600KG DRUM 6/140PCD ONLY
G127G	2500KG DRUM 6/140PCD ONLY
G128	SPRING BUSH WITH BOLT & NUT
G129C	HUB ONLY

Rubber Axles (Drum brake)

Inventory Category : 016 - RUBBERRISED STUB AXLES UNBRAKED	
CODE	**DESCRIPTION**
G161	AR0550/750L+R (550-750KG PER PAIR) 4/61/100
G163	AR0900/1150 L+R (900-1150KG PER PAIR) OPT.
G166	AR1200/1600L+R(1200-1600KG PER PAIR) OPT.
G167	AR2000/2500 L+R (2000-2500KG PER PAIR) OPT.

Inventory Category : 017 - RUBBERRISED FULL BEAM AXLE UNBRAKED	
CODE	**DESCRIPTION**
G172	AR0550/0750-1 (550-750KG) 4/61/100PCD, LENGTH?
G173	AR0900/1150-1 (900-1150KG) OPT. LENGTH?
G174	AR1200/1600-1 (1200-1600KG) OPT. LEGNTH?
G177	AR2000/2500-1 (2000-2500KG) OPT. LE

Inventory Category : 018 - RUBBERRISED STUB AXLES BRAKED	
G192	ARC0900/1150L+R(900-1150KG PER PAIR) OPT.
G195	ARC1200/1600L+R(1200-1600KG PER PAIR)OPT.
G196	ARC2000/2500L+R(2000-2500KG PER PAIR)OPT.
G199	TANDEM BRAKE COMPENSATOR
G199/1	SINGLE BRAKE COMPENSATOR

Inventory Category : 019 - RUBBERRISED FULL BEAM BRAKED AXLES	
CODE	**DESCRIPTION**
G202	ARC0900/1150-1 (900-1150KG) OPT.
G205	ARC1200/1600-1 (1200-1600KG) OPT.
G206	ARC1300/1800-1(1300-1800KG) OPT.
G206A	ARC2000/2500-1 (2000-2500KG) OPT.
G210	BRAKE COMPENSATOR

KMDB manufacturers (pty) ltd.
Reg. No. 2009/020286/07

Couplers/Hitches

Inventory Category : 002 - COUPLERS		
CODE	**DESCRIPTION**	
G030	LEVER COUPLER (750KG)	**UNBRAKED COUPLER**
G034	SAFARI COUPLER (1.8TON)	**UNBRAKED COUPLER**
G034/2	SOCKET COUPLER ONLY (1.8TON)	
G034/1	SOCKET & DAMPER (1.8TON)	
G034/3	76 ADAPTER COUPLER (1.8TON) ONLY	
G034/4	DELTA COUPLER (1.8TON) ONLY	

Inventory Category : 003 - EYE COUPLERS		
CODE	**DESCRIPTION**	
G037	EYE SWIVEL SAFARI	**UNBRAKED COUPLER**
G037/1	EYE & DAMPER (1.8TON)	
G037/2	EYE COUPLER (1.8TON) ONLY	
G037/3	76 EYE ADAPTER COUPLER (1.8TON) ONLY	
G037/4	EYE DELTA COUPLER (1.8TON)	
G039	CUK0750 CLIP ON KNOTT GALV.	
G042	COUPLER 2000KG DELTA WITH BALL	
G043	COUPLER 2700KG DELTA	
G045	CBK2000D DELTA WITH EYE 2000KG	
G046	CBK2700D DELTA WITH EYE 2700KG	
EC019	5 TON SWIVEL COUPLER	

Disc Brake Couplers
(Solenoid Auto Reverse)

Inventory Category : 002 - DISC BRAKE COUPLERS	
CODE	**DESCRIPTION**
EC017	EYE COUPLER COMP.PATENT NO 2013/04036
EC018	SOCKET WITH AUTO REVERCE & SOLENIOD
EC019	5 TON SWIVEL COUPLER

Brake Levers

Inventory Category : 004 - BRAKE LEVERS	
CODE	**DESCRIPTION**
G055	UNIVERSAL BRAKE LEVERS
G056/1	BRAKE LEVER FOR DELTA COUPLER
G059	SHOCK ABSORBER (DAMPER)
G059/1	YELLOW 11MM COIL LIGHT TRAILERS UP TO **(1500KG)**
G059/2	RED 12MM COIL HEAVY DUTY TRAILERS TO **(3000KG)**
EC005	HANDBRAKE (DISC BRAKE COUPLER)

KMDB manufacturers (pty) ltd.
Reg. No. 2009/020286/07

Tow Balls

Inventory Category : 001 - TOW BALLS	
CODE	**DESCRIPTION**
G010	GALV.GOOSE NECK GALLS 1.26TON
G010/1	GOOSENECK BALLS - BLACK
G011/1	BALL COVER
G011/2	BALL COVER WITH REFLECTOR
G012	4 HOLE DROP PLATE 12MM
G013	6 HOLE DROP PLATE 12MM
G014	6 HOLE DROP PLATE 20MM
G015	BRACKET PIN & BALL FORGED ASSEMBLY 1.7TON
G022	FEMALE COVER
EC015	TOW BRACKET PIN & PADLOCK (5 TON - STEEL)
EC016	PADLOCK

Turntables

Inventory Category : 022 - TURNTABLES	
CODE	**DESCRIPTION**
G236	400kg(OD-400mm)(ID-300mm)(H-50mm)
G237	1100kg(OD-650mm)(ID-550mm)(H-55mm)
G238	3500kg(OD-900mm)(ID-780mm)(H-65mm)
G239	5000kg(OD-1050mm)(ID-925mm)(H-70mm)
G241	8000kg(OD-1100mm)(ID-970mm)(H-80mm)

Leaf Springs & Mounting Kits

Leaf Springs

Inventory Category : 009 - LEAF SPRING	
CODE	**DESCRIPTION**
G108	27"X3 BLADE LEAF SPRING (560KG)
G109	27"X4 BLADE LEAF SPRING (750KG)
G110	27"X5 BLADE LEAF SPRING (960KG)
G111A	27"X6 BLADE LEAF SPRING (1150KG)
G111B	27"X7 BLADE LEAF SPRING (1350KG)
G112A	27"X8 BLADE LEAF SPRING (1500KG)
G113	27"X10 BLADE LEAF SPRING (1800KG)
G114	36"X4 BLADE LEAF SPRING (560KG)
G114A	36"X5 BLADE LEAF SPRING (700KG)
G114B	36"X6 BLADE LEAF SPRING (840KG)
G114C	36"X7 BLADE LEAF SPRING (980KG)
G114D	36"X8 BLADE LEAF SPRING (1120KG)
G114E	36"X10 BLADE LEAF SPRING (1400KG)
G115	40MM 5 HOLE SPRING PLATE
G115A	45MM 5 HOLE SPRING PLATE
G117	50MM 5 HOLE SPRING PLATE
G117/1	S5HP40 5HOLE SPRING PLATE 40MM
G117/2	S5HP55 SPRING PLATE 55MM
G117/3	S5HP60 SPRING PLATE 60MM
G117/4	S5HP70 SPRING PLATE 70MM
G117/5	S5HP80 SPRING PLATE 80MM
G486D	36"X8 BLADE (50X8X915) (2000KG)
G486F	36"X10 BLADE (50X8X915) (2500KG)
G128	SPRING BUSH WITH BOLT & NUT

KMDB manufacturers (pty) ltd.
Reg. No. 2009/020286/07

Mounting Kits

OUR MOUNTING KITS
DESCREPTION
40 ROUND MOUNTING KIT
40 SQUARE MOUNTING KIT
45 SQUARE MOUNTING KIT
50 SQUARE MOUNTING KIT
CONSISTS OF 1XHANGER 1XSLIPPER 1XU BOLT SETS

U" BOLT SETS
DESCREPTION
40 ROUND U BOLT SETS
40 SQUARE U BOLT SETS
45 SQUARE U BOLT SETS
50 SQUARE U BOLT SETS
CONSISTS OF 2XU BOLT

Mounting Kit components...

Inventory Category : 010 - LEAF SPRING MOUNTING KIT COMP	
G118	40 ROUND U BOLT & NUT
G118/1	40 SQ U BOLT & NUT
G118/2	45 SQ U BOLT & NUT
G118/3	50 SQ U BOLT & NUT
G118/4	SU40R M10 ROUND U BOLT
G118/5	SU40S M10 SQ U BOLT
G118/6	SU45S M12 45SQ U BOLT
G118/7	SU50S M12 50SQ U BOLT
G118/8	SU55S 55SQ U BOLT
G118/9	SU60S 60SQ U BOLT
G118/A	SU70S 70SQ U BOLT
G118/B	SU80S 80SQ U BOLT
G119	GREASE CAPS
G119/1	47MM GREASE CAP
G119/2	52MM GREASE CAP
G119/3	62MM GREASE CAP
G120	SADDLES
G121	45 ROUND U BOLT AND NUT
G121/1	50 ROUND U BOLT AND NUT
G122	HANGER BRACKET
G122/1	50MM SPRING BRACKET
G123	SLIPPER BRACKET
G123/1	SH70 SPRING BRACKET FOR LEAF SPRING
G124	SPRING BUSH
G125	M12 STUD & NUT

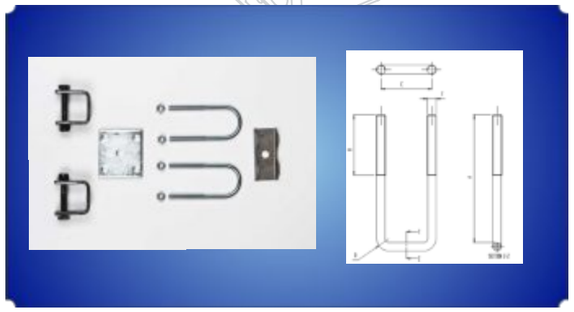

KMDB manufacturers (pty) ltd.
Reg. No. 2009/020286/07

Jockey Wheels & Stands

Inventory Category : 005 - JOCKEY WHEELS	
CODE	DESCRIPTION
G065	INDUSTRIAL SINGLE JOCKEY WHEEL
G066	INDUSTRIAL DOUBLE JOCKEY WHEEL
G067	MILITARY PAINTED JOCKEY WHEEL
G068	MILITARY GALVERNISED JOCKEY WHEEL
G080	LIGHT JOCKEY WHEEL 800LB 8"
G080/1	JOCKEY WHEEL 8" LIGHT
G080/2	JOCKEY WHEEL LIGHT WITH BRACKET
G080/3	JOCKEY WHEEL WITH RUBBER
G080/4	JOCKEY WHEEL SWIVEL
G080/5	JOCKEY WHEEL 800LB SWIVEL BRACKET
G080/6	JOCKEY WHEEL 1000LB SWIVEL BRACKET
G080/7	JOCKEY WHEEL HEAVY DUTY SINGLE
G080/8	JOCKEY WHEEL DOUBLE
G080/9	JOCKEY WHEEL DOUBLE LONG
G080/A	42MM SINGLE 5.5 SPECIAL (BLUE)
G080/B	48MM SINGLE 8" SPECIAL (BLUE) J/WHEEL
G080/C	48MM SINGLE 8" (GALV.) J/WHEEL
G080/D	60MM SINGLE 8" SPECIAL (BLUE) J/WHEEL
G080/E	60MM DOUBLE 8" SPECIAL (BLUE) J/WHEEL
G080/F	60MM DOUBLE 8" (GALV.) J/WHEEL
G081	42MM CLAMP ASSY GATE TYPE CAST
G081/1	48MM CLAMP GATE TYPE - SWIVEL
G081/2	48MM CLANP ASSY GATE TYPE
G081/3	60MM CLAMP ASSY TCO

Landing Legs

Inventory Category : 006 - LANDING LEGS	
CODE	**DESCRIPTION**
G073	48MM PROPSTAND
G073/1	PARKING JACK HD P575
G074	LIGHT LOCKSCREW
G075	LIGHT BRACKET
G076	LIGHT CLAMP BLOCK
G077	INDUSTRIAL BRACKET
G078	INDUSTRIAL CLAMP BLOCK
G079	INDUSTRIAL LOCKSCREW
G079/1	IMP.JOCKEY WHEEL BRACKET
G082	NYLON WHEEL ONLY
G083	6X2 RUBBER WHEEL ONLY 150X50MM
G084	8X2 RUBBER WHEEL ONLY 200X50MM
G084/1	IND. RUBBER WHEEL 200X50X25B
G085	IND. SINGLE BUSH ONLY
G085/1	6X2 WHEEL BUSH
G085/2	8X2 WHEEL BUSH
G086	JOCKEY WHEEL KNOB NUT & SCREW
G087	MILI. BRACKET PAINTED
G088	MILI. CLAMP CLOCK PAINTED
G089	MILI. LOCK SCREW PAINTED
G090	MILI. GALVERNISED BRACKET
G091	MILI. GALVERNISED CLAMP BLOCK
G092	MILI. GALVERNISED LOCKSCREW

KMDB manufacturers (pty) ltd.
Reg. No. 2009/020286/07

Rims & Tyres

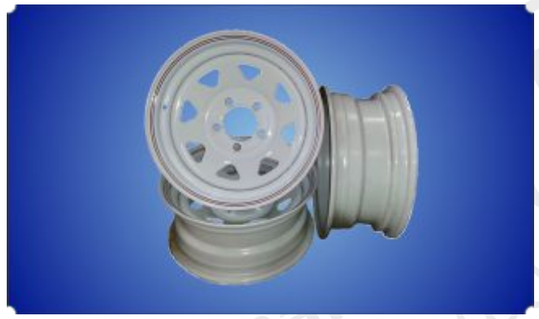

Inventory Category : 020 - WHEELS HIGH SPEED TRAILER	
G212	4.1/2JX13 WHITE SPOKE 5/72.5/114 PCD
G213	4.1/2JX13 WHITE SPOKE 4/67/100 PCD
G214	6J X 14 WHITE SPOKE 5/83.5/114 PCD
G215	6J X 14 WHITE SPOKE 6/105/140 PCD
G216	7J X 15 WHITE SPOKE 6/105/140 PCD
G217	14" RIM 4/100PCD WHITE SPOKE
G219A	13" WHITE SPOKE RIM 5/114PCD WITH TYRE
G219B	13" WHITE SPOKE RIM 4/100PCD WITH TYRE
G219C	14" WHITE SPOKE RIM 5/114PCD WITH TYRE
G219D	14" WHITE SPOKE RIM 6/140PCD WITH TYRE
G219E	15" WHITE SPOKE RIM 6/140PCD WITH TYRE

CODE	DESCRIPTION
G406	10" SINGLE MUDGUARD
G408	10" DOUBLE MUDGUARD
G407	13" SINGLE MUDGUARD
G409	13" DOUBLE MUDGAURD
G415	14" DOUBLE MUDGUARD
G416	14" SINGLE MUDGUARD

Boat Rollers

Sizes available on request

Inventory Category : 026 - BOAT ROLLERS	
CODE	**DESCRIPTION**
G340	320 X 8 BOAT ROLLER
G341A	NO 4 BOAT ROLLER
G341B	NO 5 BOAT ROLLER
G342	NO 6 BOAT ROLLER
G343A	NO 8 BOAT ROLLER
G343B	NO 9 BOAT ROLLER
G344	NO 10 BOAT ROLLER
G345	NO 11 BOAT ROLLER
G346	NO 12 BOAT ROLLER
G347	NO 13 BOAT ROLLER
G348	NO 14 BOAT ROLLER
G349	V-BLOCK 90
G450	V-BLOCK 18
G452	V-BLOCK 190
G454	V-BLOCK 19
G455	NO 3 BOAT ROLLER
G456	V-ROLLER
G457	ST1 BOAT ROLLER
G458	Q.V.1 ROLLER
G459	WOBBLE ROLLER NO 15
G460	WOBBLE ROLLER NO 7
G461	SPIRAL ROLLER NO 17
G462	SPIRAL ROLLER NO 16

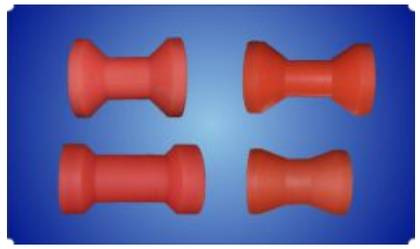

KMDB manufacturers (pty) ltd.
Reg. No. 2009/020286/07

Winches

Inventory Category : 025 - TRAILER WINCHES	
CODE	**DESCRIPTION**
G327	800 LB ZINC FINISH WINCH
G328	1200LB WINCH WITH BRAKE
G329	1400LB WINCH WITH BRAKE
G330	1200LB HAND TYPE WINCH
G331	1400LB HAND TYPE WINCH
G331/1	2000LB HAND TYPE WINCH
G332	2500LB 2 WAY WINCH
G332/1	3200LB DOUBLE GEAR WINCH
G333	2000LB DOUBLE GEAR WINCH
G334	WINCH STRAP W/FITTING 4.5M
G335	WINCH STRAP W/FITTING 6.0M
G336	1600LB WINCH WITH BRAKE
G337	1600LB WINCH HAND TYPE
G364	WINCH CABLE WITH HOOK 5M
G365	WINCH STRAP/HOOK HAND
G468	STEEL WINCH CABLE W/HOOK 10 X 6MM

Winch Spares & Accessories

Inventory Category : 027 - WINCH SPARES	
CODE	**DESCRIPTION**
G367	73 WINCH HANDLE SERIES
G368	79 WINCH HANDLE SERIES
G369	HEAVY DUTY WINCH HOOK ONLY
G374	DATA PLATES
G402	HEAVY DUTY TOGGLE AND LATCH
G403	BATTERY BOX 275 X 180 X 200M
G404	LID STAY - THICKNESS 1.6
G438	BULGE PUMP

Inventory Category : 024 - TRAILER EQUIPMENT	
CODE	**DESCRIPTION**
G275	EMERGENCY WARNING TRIANGLE
G279	METAL HEAVY DUTY LICENCE DISC HOLDER
G280	BOLT ON PLASTIC LICENCE DISC HOLDER
G281	O RING & LICENCE DISC
G282	BUMP STOP RUBBER
G283	CANOPY CLIP
G284	ANTI-LUCE SHORT THREAD
G285	ANTI-LUCE WELD ON
G286	ANTI-LUCE LONG THREAD
G287	ANTI-LUCE 15mm THREAD (SMALL)
G288	ANTI-LUCE 15MM WELD ON (SMALL)
G289	SPRING LOADED LOCK BOLT
G291	55MM DROP SIDE HINGE
G292	66MM DROP SIDE HINGE
G293	EYE LEAVE DROP SIDE HINGE
G294	SLIDE ON/OFF HINGE
G295	178MM VAN DOOR HINGE
G296	203MM VAN DOOR HINGE
G297	292MM VAN DOOR HINGE
G298	343MM VAN DOOR HINGE

KMDB manufacturers (pty) ltd.
Reg. No. 2009/020286/07

Electrical Accessories & Reflectors

Inventory Category : 023 - ELECTRICAL EQUIPMENT	
CODE	**DESCRIPTION**
G250	7 CORE LIGHT CABLE
G251	7 PIN MALE PLUG
G252	7 PIN FEMALE SOCKET
G252A	FEMALE SOCKET BLACK BRACKET
G252B	FEMALE SOCKET GAL.BRACKET PLATE
G253	TRUCKLITE(AMBER S/C)
G254	TRUCKLITE(RED D/C)
G255	12V S/C BULB
G256	12V D/C BULB
G257	NUMBER PLATE LAMP(LUCAS)
G258	VENTER TAIL LAMP
G259	VIN PLATE
G260	HONEYCOMB REF. TAPE
G261	STICK ON REFLECTOR(AMBER)
G262	STICK ON REFLECTOR(CLEAR)
G263	STICK ON REFLECTOR(RED)
G265	BOLT ON REFLECTOR(CLEAR)
G266	PLASTIC 2 HOLE BRACKET
G267	FULLY REFL. CHEVRON BOARD (168CM)
G268	2 HOLE METAL BRACKET
G269	PLASTIC NO PLATE HOLDER
G272	TRIANGLE REFLECTOR (RED)
G273	TRIANGLE REFLECTOR (AMBER))
G350	TL 8 LENS

KMDB manufacturers (pty) ltd.
Reg. No. 2009/020286/07

Parts & Spares

Inventory Category : 084 - PARTS & SPARES	
G500	SOCKET HEAD AND LONG SHAFT
G501	SAFARI HEAD AND SHORT SHAFT
G502	EYE WITH LONG SHAFT
G503	EYE WITH SHORT SHAFT
G504	EYE ONLY MACHINED
G505	2 TON UNMACHINED BOX
G506	2 TON MACHINED BOX
G507	LONG SHAFT ONLY
G508	SHORT SHAFT ONLY
G509	SOCKET HEAD COMPLETE
G510	HANDLE ONLY UNMACHINED
G511	HANDLE ONLY MACHINED
Z.C004	BOOT RUBBER
G512	CROSS PIECE
G513	SOCKET RUBBER
G514	SOCKET RUBBER WITH 2 X WASHERS
G515	REVERSE PLATE
G516	BIG UNMACHINED BOX
G517	BIG MACHINED BOX
G518	DAMPER COVER

Parts & Spares (cont...)

Inventory Category : 024 - TRAILER EQUIPMENT	
CODE	**DESCRIPTION**
G518	DAMPER COVER
G519	LEVER COUPLER TRIGGER
G520	SOCKET COUPLER TRIGGER
G521	IND. OUTER PIPE ONLY
G522	IND. OUTER PIPI WITH HANDLE
G523	IND. OUTER PIPI WITH HANDLE AND KNOB COMPL.
G524	IND. SINGLE FORK ONLY
G525	IND. SINGLE FORK WITH WHEEL
G526	IND. DOUBLE FORK ONLY
G527	IND. DOUBLE FORK WITH WHEELS
G528	IND. BUSH,WASHER AND SPLIT PIN
G529	MILI. HANDLE ONLY
G530	MILI. OUTER PIPE ONLY
G531	MILI. OUTER PIPI WITH HANDLE COMPL.
G532	MILI. FORK ONLY
G533	MILI. FORK WITH WHEELS
G534	SAFARI BUSH WITH SELLOCK PIN
G535	SAFARI BUSH ONLY
G536	BUSH FOR STRAIGHT TOW BALL
G537	STEP BUSH FOR TOW BALL
G540	MILI. NUT THREADED 60MM
G541	MILI. SCREW ONLY
G542	65 X 25 X 5MM WASHER GALV.
G544	DAMPER LUGS ONLY

KMDB manufacturers (pty) ltd.
Reg. No. 2009/020286/07

Technical Information

KMDB Disc Braked Axle (5 Stud) Axle Length - Chassis Width	
Axle Length (mm)	Chassis Width (mm)
2340	1950
2290	1900
2240	1850
2190	1800
2140	1750
2090	1700
2040	1650
1990	1600
1940	1550
1890	1500
1840	1450
1790	1400
1740	1350
1690	1300
1640	1250
1590	1200
1540	1150
1490	1100
1440	1050
1390	1000
1340	950
1290	900
1240	850
1190	800
1140	750
1090	700
1040	650
990	600

KMDB Disc Braked Axle (6 Stud) Axle Length - Chassis Width	
Axle Length (mm)	Chassis Width (mm)
2340	TBD
2290	TBD
2240	TBD
2190	TBD
2140	TBD
2090	TBD
2040	TBD
1990	TBD
1940	TBD
1890	TBD
1840	TBD
1790	TBD
1740	TBD
1690	TBD
1640	TBD
1590	TBD
1540	TBD
1490	TBD
1440	TBD
1390	TBD
1340	TBD
1290	TBD
1240	TBD
1190	TBD
1140	TBD
1090	TBD
1040	TBD
990	TBD