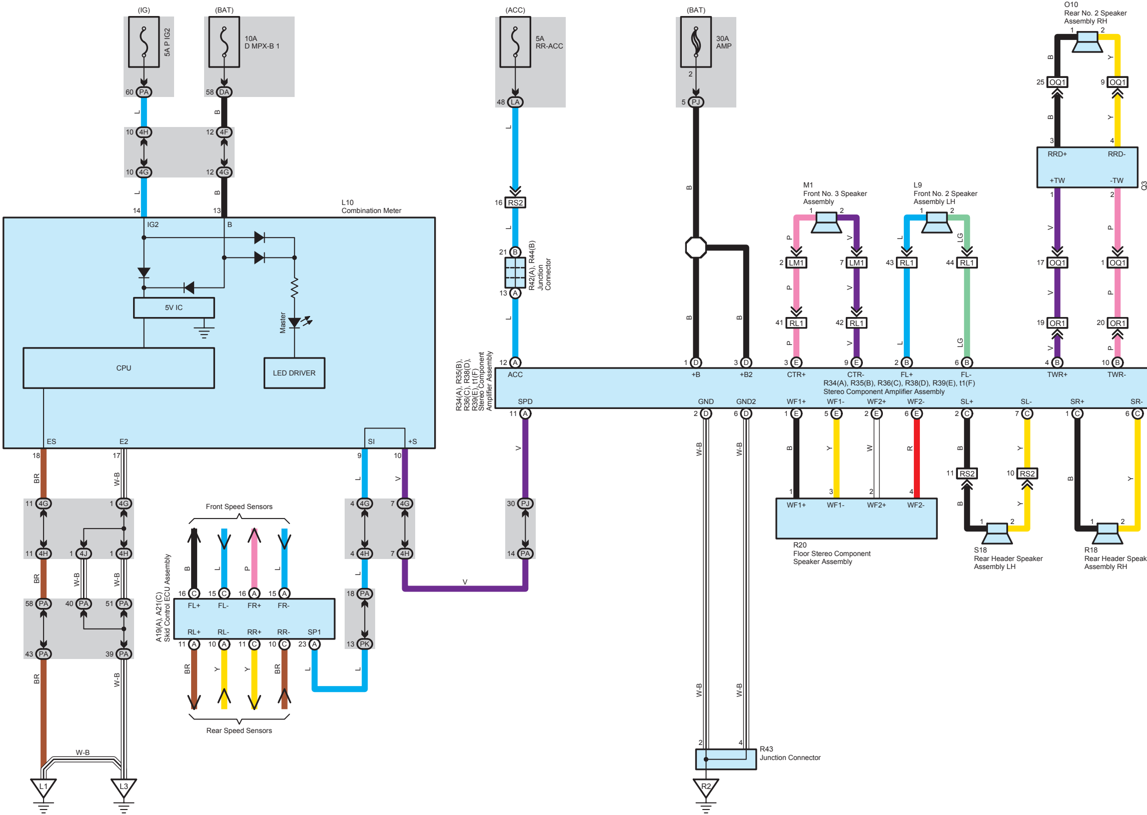
(IG)
5A P IG2
60 PA
(BAT)
10A D MPX-B 1
58 DA
(ACC)
5A RR-ACC
48 LA
(BAT)
30A AMP
2
5 PJ
O10
Rear No. 2 Speaker Assembly RH
10 4H
12 4F
10 4G
12 4G
L10
Combination Meter
IG2
B
5V IC
Master
CPU
LED DRIVER
ES
E2
SI
+S
16 RS2
21 B
13 A
R42(A), R44(B) Junction Connector
M1
Front No. 3 Speaker Assembly
L9
Front No. 2 Speaker Assembly LH
RRD+
RRD-
+TW
-TW
Q3
25 OQ1
9 OQ1
17 OQ1
1 OQ1
19 OR1
20 OR1
2 LM1
7 LM1
43 RL1
44 RL1
41 RL1
42 RL1
R34(A), R35(B), R36(C), R38(D), R39(E), t1(F) Stereo Component Amplifier Assembly
ACC
+B
+B2
CTR+
CTR-
FL+
FL-
TWR+
TWR-
SPD
GND
GND2
WF1+
WF1-
WF2+
WF2-
SL+
SL-
SR+
SR-
11 RS2
10 RS2
R20
Floor Stereo Component Speaker Assembly
S18
Rear Header Speaker Assembly LH
R18
Rear Header Speak Assembly RH
11 4G
1 4G
11 4H
1 4J
1 4H
58 PA
40 PA
51 PA
43 PA
39 PA
4 4G
7 4G
4 4H
7 4H
30 PJ
14 PA
18 PA
13 PK
Front Speed Sensors
Rear Speed Sensors
A19(A), A21(C) Skid Control ECU Assembly
FL+
FL-
FR+
FR-
RL+
RL-
RR+
RR-
SP1
W-B
L1
L3
R43
Junction Connector
R2
BR
W-B
L
B
V
P
LG
Y
W
R

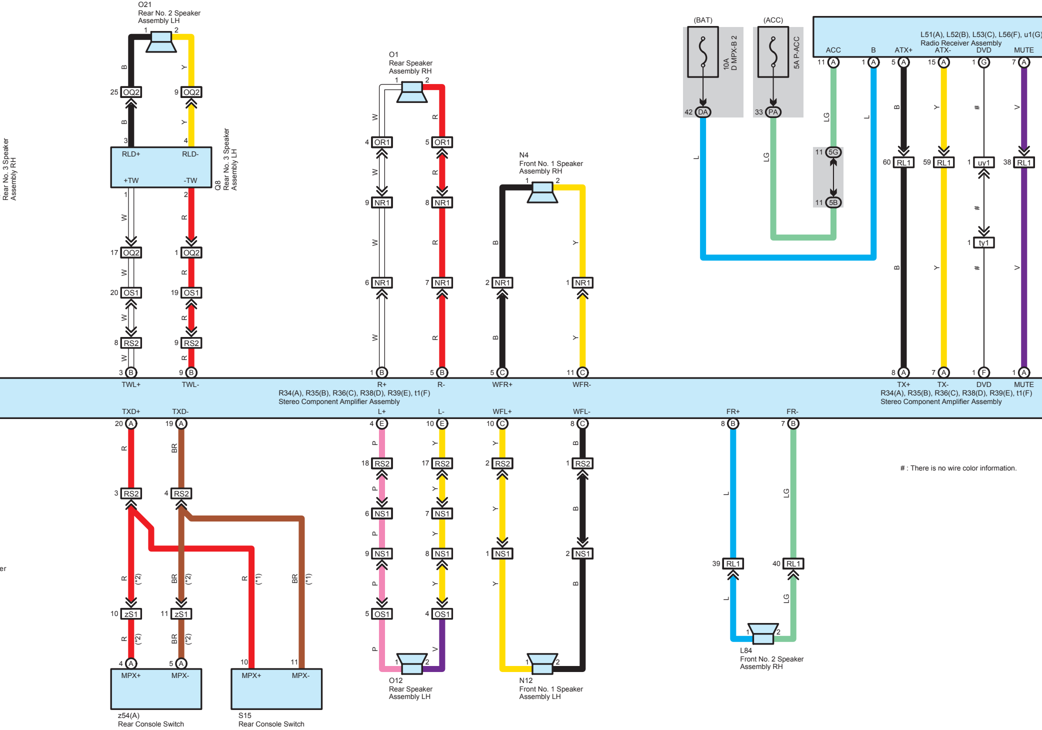
O21
Rear No. 2 Speaker
Assembly LH
O1
Rear Speaker
Assembly RH
N4
Front No. 1 Speaker
Assembly RH
(BAT)
(ACC)
10A
D MPX-B 2
5A P-ACC
42 DA
33 PA
11 5G
11 5B
L51(A), L52(B), L53(C), L56(F), u1(G)
Radio Receiver Assembly
ACC
B
ATX+
ATX-
DVD
MUTE
11 A
1 A
5 A
15 A
1 G
7 A
60 RL1
59 RL1
1 uy1
38 RL1
1 ty1
25 OQ2
9 OQ2
RLD+
RLD-
+TW
-TW
Q8
Rear No. 3 Speaker
Assembly LH
Rear No. 3 Speaker
Assembly RH
17 OQ2
1 OQ2
20 OS1
19 OS1
8 RS2
9 RS2
3 B
9 B
4 OR1
5 OR1
9 NR1
8 NR1
6 NR1
7 NR1
1 B
5 B
2 NR1
1 NR1
5 C
11 C
8 A
7 A
1 F
1 A
TWL+
TWL-
R+
R-
WFR+
WFR-
TX+
TX-
DVD
MUTE
R34(A), R35(B), R36(C), R38(D), R39(E), t1(F)
Stereo Component Amplifier Assembly
R34(A), R35(B), R36(C), R38(D), R39(E), t1(F)
Stereo Component Amplifier Assembly
TXD+
TXD-
L+
L-
WFL+
WFL-
FR+
FR-
20 A
19 A
4 E
10 E
10 C
8 C
8 B
7 B
3 RS2
4 RS2
18 RS2
17 RS2
2 RS2
1 RS2
6 NS1
7 NS1
9 NS1
8 NS1
1 NS1
2 NS1
39 RL1
40 RL1
10 zS1
11 zS1
5 OS1
4 OS1
(*2)
(*1)
4 A
5 A
10
11
MPX+
MPX-
MPX+
MPX-
z54(A)
Rear Console Switch
S15
Rear Console Switch
O12
Rear Speaker
Assembly LH
N12
Front No. 1 Speaker
Assembly LH
L84
Front No. 2 Speaker
Assembly RH
B
Y
W
R
L
LG
P
BR
V
#
er

: There is no wire color information.

* 1 : w/ Ottoman
* 2 : w/o Ottoman

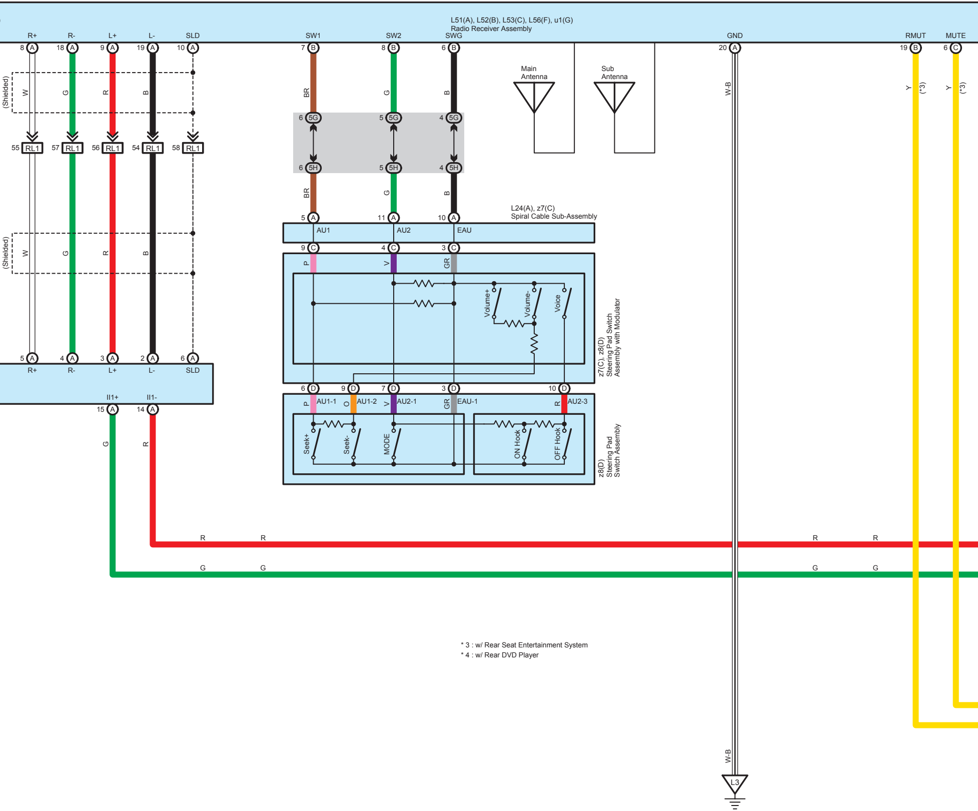
L51(A), L52(B), L53(C), L56(F), u1(G)
Radio Receiver Assembly
R+
R-
L+
L-
SLD
SW1
SW2
SWG
GND
RMUT
MUTE
(Shielded)
W
G
R
B
RL1
BR
5G
5H
Main Antenna
Sub Antenna
W-B
Y
(*3)
L24(A), z7(C)
Spiral Cable Sub-Assembly
AU1
AU2
EAU
P
V
GR
Volume+
Volume-
Voice
z7(C), z8(D)
Steering Pad Switch Assembly with Modulator
AU1-1
AU1-2
AU2-1
EAU-1
AU2-3
O
Seek+
Seek-
MODE
ON Hook
OFF Hook
z8(D)
Steering Pad Switch Assembly
II1+
II1-
L3

* 3 : w/ Rear Seat Entertainment System
* 4 : w/ Rear DVD Player

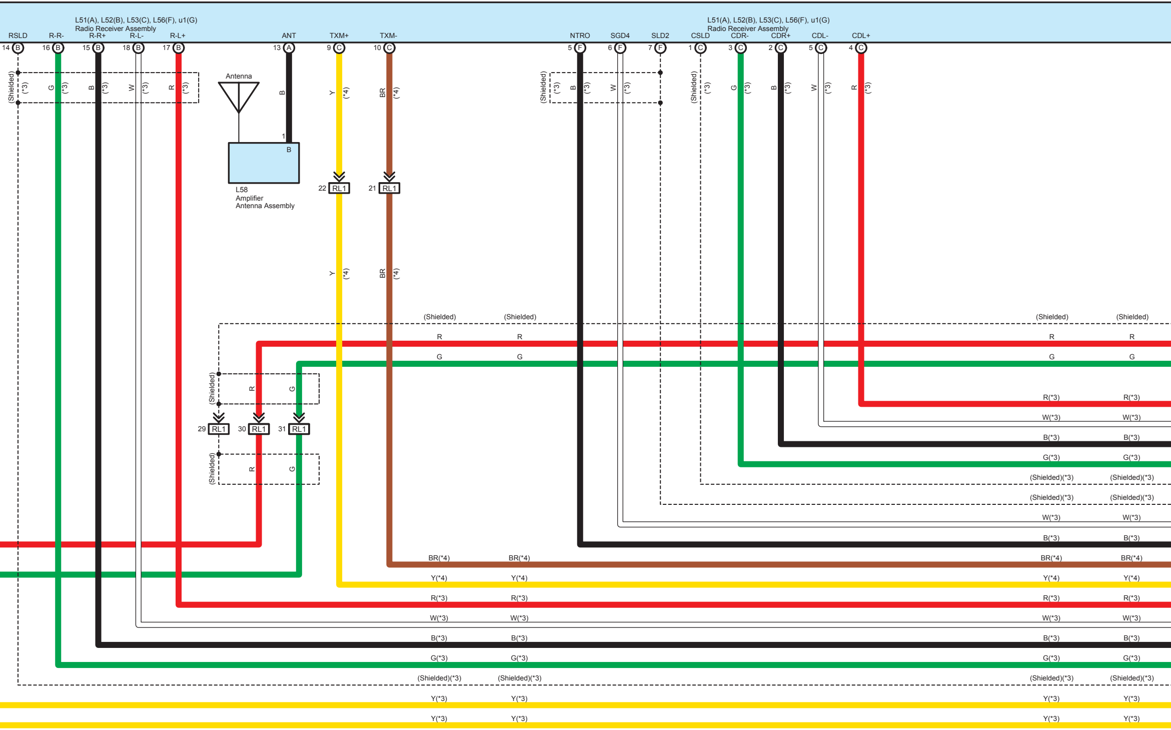
L51(A), L52(B), L53(C), L56(F), u1(G)
Radio Receiver Assembly
RSLD
R-R-
R-R+
R-L-
R-L+
ANT
TXM+
TXM-
14 B
16 B
15 B
18 B
17 B
13 A
9 C
10 C
(Shielded)
(*3)
G
B
W
R
Antenna
1
B
L58
Amplifier
Antenna Assembly
Y
(*4)
BR
22 RL1
21 RL1
L51(A), L52(B), L53(C), L56(F), u1(G)
Radio Receiver Assembly
NTRO
SGD4
SLD2
CSLD
CDR-
CDR+
CDL-
CDL+
5 F
6 F
7 F
1 C
3 C
2 C
5 C
4 C
(Shielded)
R
G
29 RL1
30 RL1
31 RL1
R(*3)
W(*3)
B(*3)
G(*3)
(Shielded)(*3)
BR(*4)
Y(*4)
Y(*3)

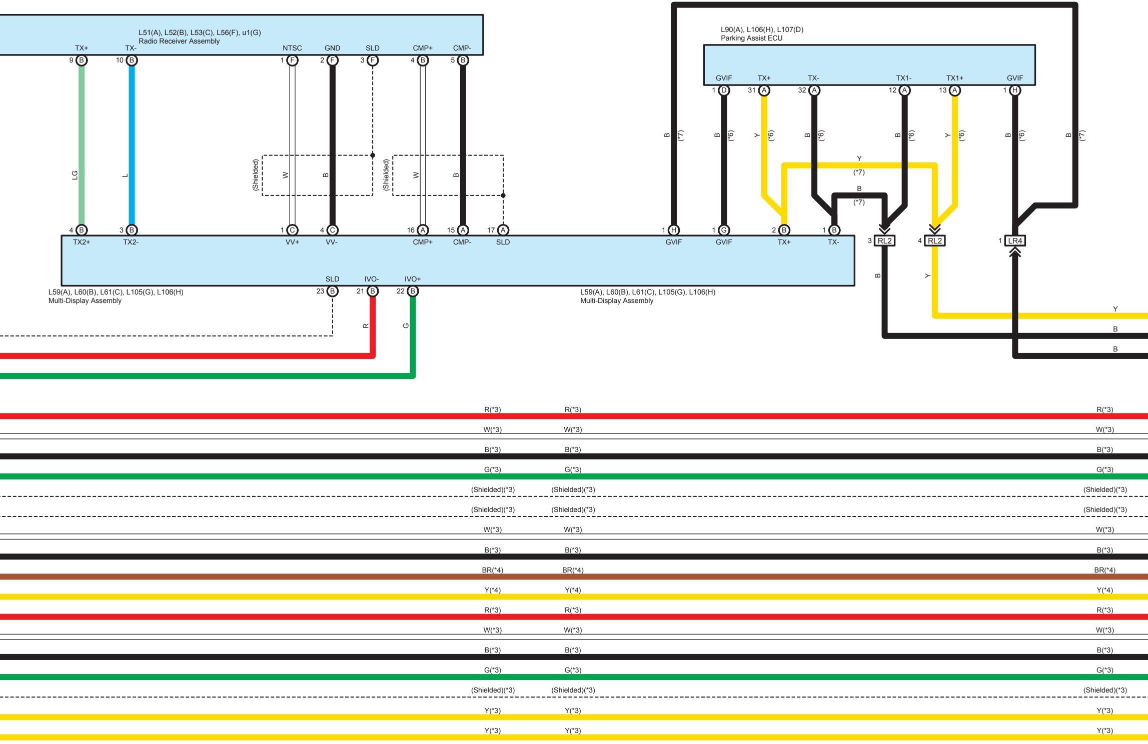
L51(A), L52(B), L53(C), L56(F), u1(G)
Radio Receiver Assembly
TX+
TX-
NTSC
GND
SLD
CMP+
CMP-
9 B
10 B
1 F
2 F
3 F
4 B
5 B
LG
L
(Shielded)
W
B
(Shielded)
W
B
4 B
3 B
1 C
4 C
16 A
15 A
17 A
TX2+
TX2-
VV+
VV-
CMP+
CMP-
SLD
SLD
IVO-
IVO+
23 B
21 B
22 B
R
G
L59(A), L60(B), L61(C), L105(G), L106(H)
Multi-Display Assembly
L90(A), L106(H), L107(D)
Parking Assist ECU
GVIF
TX+
TX-
TX1-
TX1+
GVIF
1 D
31 A
32 A
12 A
13 A
1 H
B (*7)
B (*6)
Y (*6)
B (*6)
B (*6)
Y (*6)
B (*6)
B (*7)
Y
(*7)
B
(*7)
1 H
1 G
2 B
1 B
GVIF
GVIF
TX+
TX-
3 RL2
4 RL2
1 LR4
L59(A), L60(B), L61(C), L105(G), L106(H)
Multi-Display Assembly
B
Y
Y
B
B
R(*3)
W(*3)
B(*3)
G(*3)
(Shielded)(*3)
(Shielded)(*3)
W(*3)
B(*3)
BR(*4)
Y(*4)
R(*3)
W(*3)
B(*3)
G(*3)
(Shielded)(*3)
Y(*3)
Y(*3)

* 3 : w/ Rear Seat Entertainment System
* 4 : w/ Rear DVD Player

* 3 : w/ Rear Seat Entertainment System
* 4 : w/ Rear DVD Player
* 6 : w/ Parking Assist ECU
* 7 : w/o Parking Assist ECU

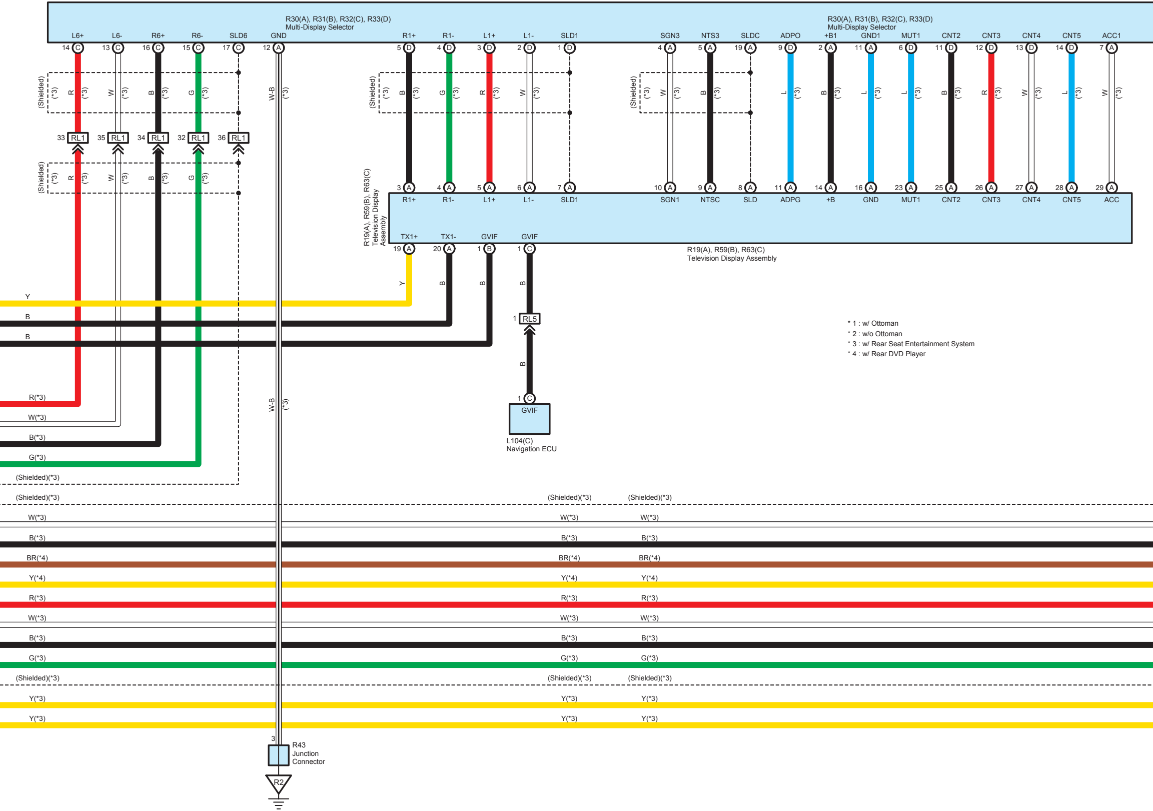
R30(A), R31(B), R32(C), R33(D)
Multi-Display Selector
L6+
L6-
R6+
R6-
SLD6
GND
R1+
R1-
L1+
L1-
SLD1
SGN3
NTS3
SLDC
ADPO
+B1
GND1
MUT1
CNT2
CNT3
CNT4
CNT5
ACC1
(Shielded)
(*3)
RL1
RL5
W-B
R19(A), R59(B), R63(C)
Television Display Assembly
SGN1
NTSC
SLD
ADPG
+B
GND
CNT2
CNT3
CNT4
CNT5
ACC
TX1+
TX1-
GVIF
L104(C)
Navigation ECU
R(*3)
W(*3)
B(*3)
G(*3)
(Shielded)(*3)
BR(*4)
Y(*4)
Y(*3)
R43
Junction
Connector
R2

* 1 : w/ Ottoman
* 2 : w/o Ottoman
* 3 : w/ Rear Seat Entertainment System
* 4 : w/ Rear DVD Player

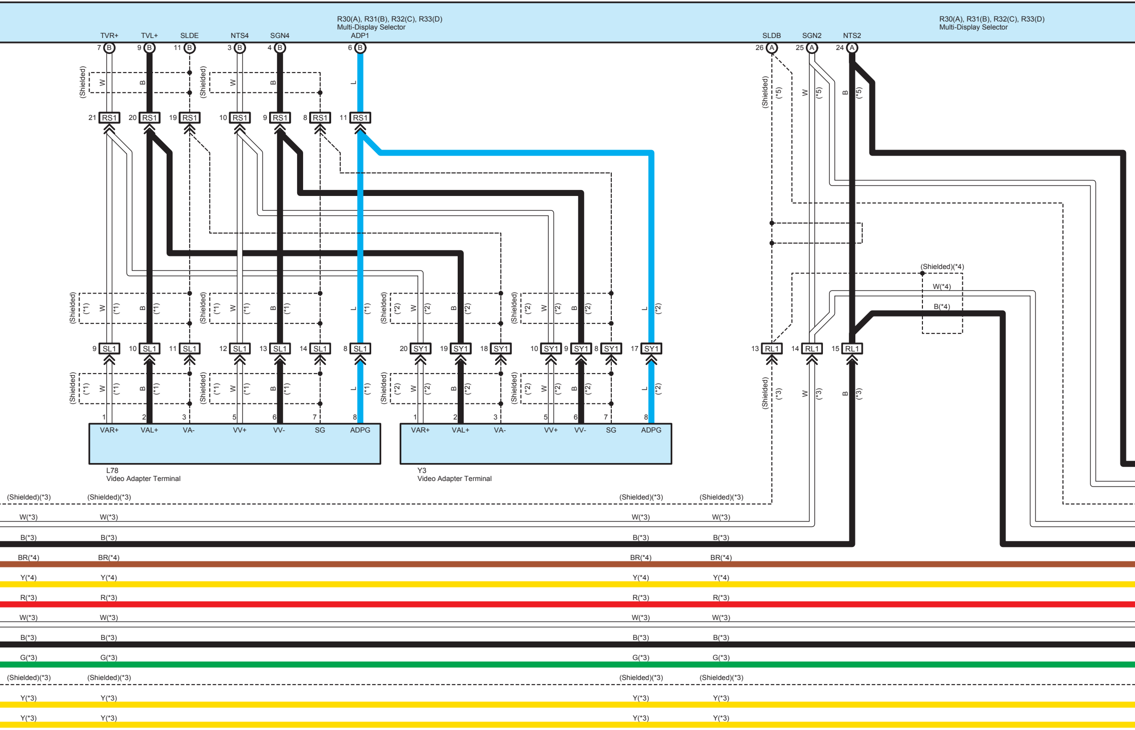
R30(A), R31(B), R32(C), R33(D)
Multi-Display Selector
TVR+
TVL+
SLDE
NTS4
SGN4
ADP1
7 B
9 B
11 B
3 B
4 B
6 B
(Shielded)
W
B
L
21 RS1
20 RS1
19 RS1
10 RS1
9 RS1
8 RS1
11 RS1
(*1)
(*2)
9 SL1
10 SL1
11 SL1
12 SL1
13 SL1
14 SL1
8 SL1
20 SY1
19 SY1
18 SY1
10 SY1
9 SY1
8 SY1
17 SY1
VAR+
VAL+
VA-
VV+
VV-
SG
ADPG
L78
Video Adapter Terminal
Y3
Video Adapter Terminal
R30(A), R31(B), R32(C), R33(D)
Multi-Display Selector
SLDB
SGN2
NTS2
26 A
25 A
24 A
(*5)
(Shielded)(*4)
W(*4)
B(*4)
13 RL1
14 RL1
15 RL1
(*3)
(Shielded)(*3)
W(*3)
B(*3)
BR(*4)
Y(*4)
R(*3)
W(*3)
B(*3)
G(*3)
(Shielded)(*3)
Y(*3)
Y(*3)

* 3 : w/ Rear Seat Entertainment System
* 4 : w/ Rear DVD Player
* 5 : w/o Rear DVD Player

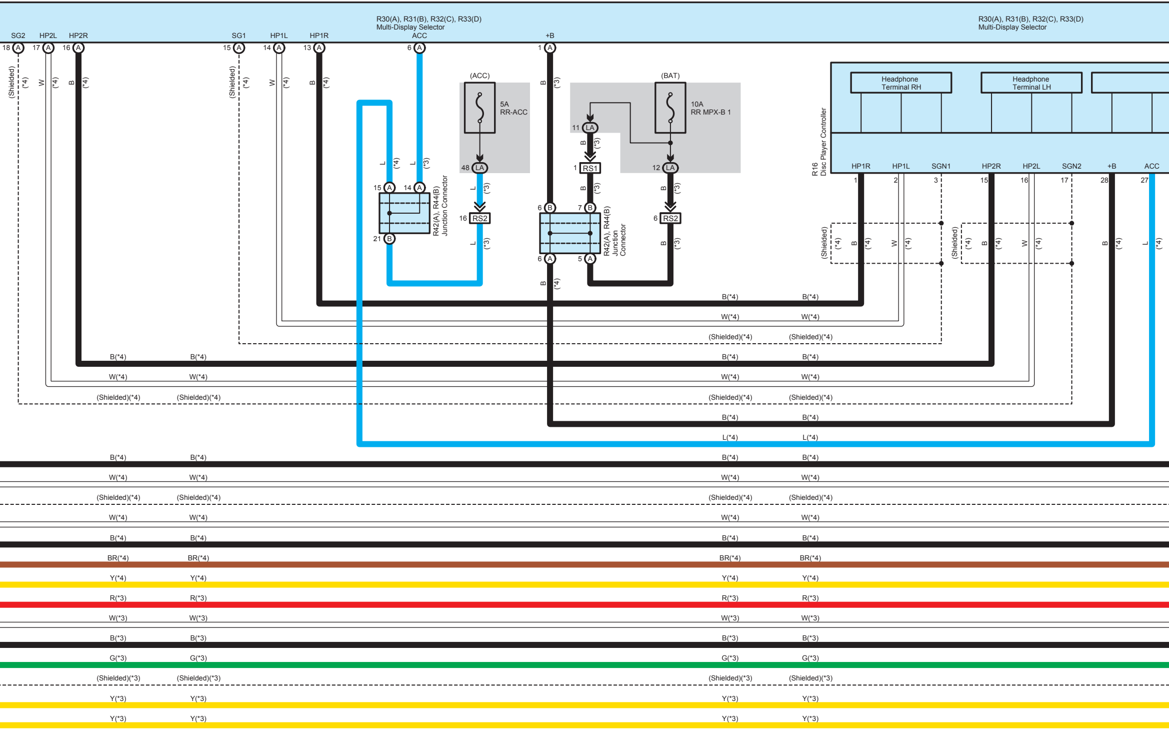
R30(A), R31(B), R32(C), R33(D)
Multi-Display Selector
R30(A), R31(B), R32(C), R33(D)
Multi-Display Selector
SG2
HP2L
HP2R
SG1
HP1L
HP1R
ACC
+B
18
17
16
15
14
13
6
1
A
(Shielded)
(*4)
W
B
(ACC)
5A
RR-ACC
(BAT)
10A
RR MPX-B 1
L
(*3)
48
LA
11
LA
12
1
RS1
16
RS2
6
RS2
15
14
21
R42(A), R44(B)
Junction Connector
R42(A), R44(B)
Junction
Connector
7
5
R16
Disc Player Controller
Headphone
Terminal RH
Headphone
Terminal LH
HP1R
HP1L
SGN1
HP2R
HP2L
SGN2
+B
ACC
1
2
3
15
16
17
28
27
B(*4)
W(*4)
(Shielded)(*4)
L(*4)
BR(*4)
Y(*4)
R(*3)
W(*3)
B(*3)
G(*3)
(Shielded)(*3)
Y(*3)

* 3 : w/ Rear Seat Entertainment System
* 4 : w/ Rear DVD Player
* 5 : w/o Rear DVD Player

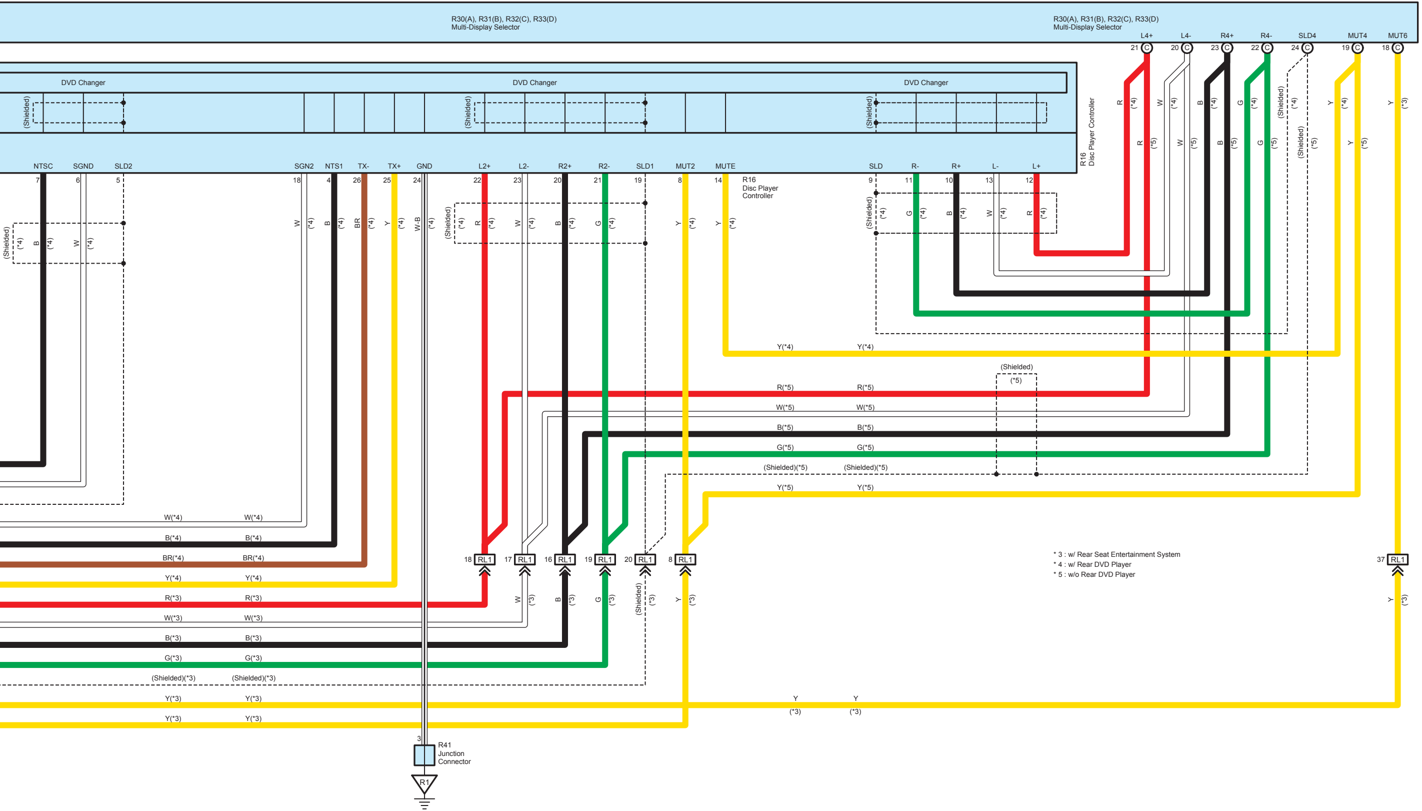
R30(A), R31(B), R32(C), R33(D)
Multi-Display Selector
R30(A), R31(B), R32(C), R33(D)
Multi-Display Selector
L4+
L4-
R4+
R4-
SLD4
MUT4
MUT6
DVD Changer
DVD Changer
DVD Changer
R16
Disc Player Controller
NTSC
SGND
SLD2
SGN2
NTS1
TX-
TX+
GND
L2+
L2-
R2+
R2-
SLD1
MUT2
MUTE
SLD
R-
R+
L-
L+
R16
Disc Player
Controller
(Shielded)
R(*5)
W(*5)
B(*5)
G(*5)
(Shielded)(*5)
Y(*5)
Y(*4)
W(*4)
B(*4)
BR(*4)
R(*3)
W(*3)
B(*3)
G(*3)
(Shielded)(*3)
Y(*3)
RL1
R41
Junction
Connector
R1

* 3 : w/ Rear Seat Entertainment System
* 4 : w/ Rear DVD Player
* 5 : w/o Rear DVD Player