# Front End Sheet Metal Cross Brace Package Installation (Instruction ID: 84385664)

## Installation Instructions Part Number

84385664

**Kit Contents**

| Qty | Description |
|---|---|
| 1 | Strut Tower Brace |
| 2 | Front End Sheet Metal Diagonal Brace Bolt |
| 2 | Front Suspension Strut Upper Mounting Bolts |
| 1 | Chevy Performance Emblem |
| 1 | Installation Instructions |

## Procedure

1. Open the hood.

© 2019 General Motors. All rights reserved.

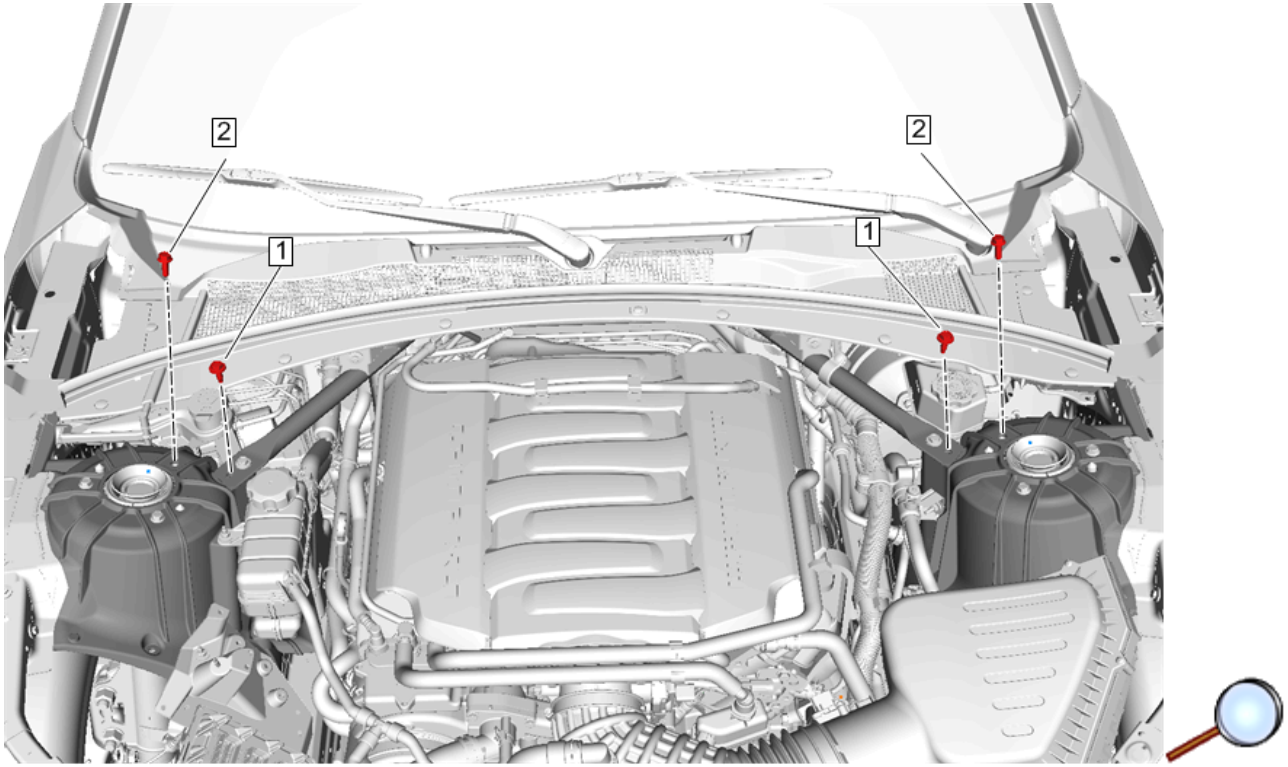


2. Remove and discard the two front end sheet metal diagonal brace bolts (1).
3. Remove and discard the two front suspension strut upper mounting bolts (2).

© 2019 General Motors. All rights reserved.

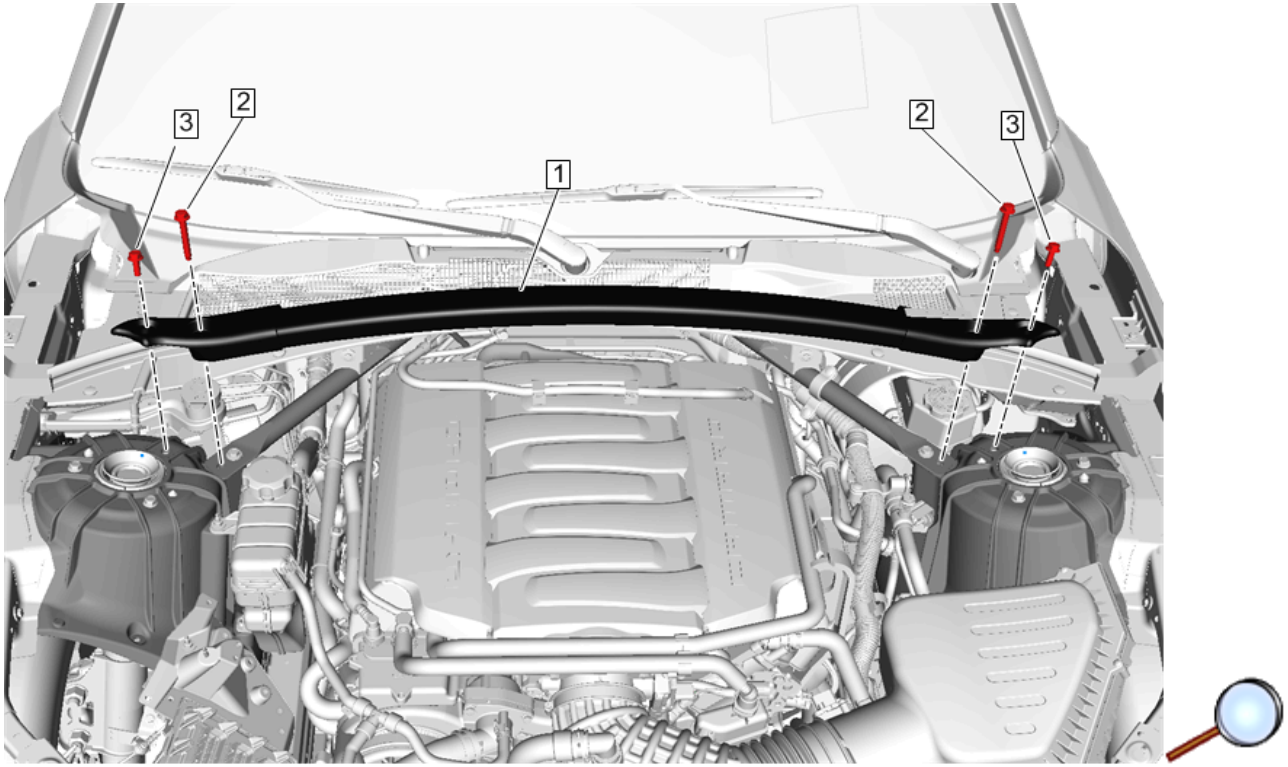


4. Install the strut tower brace (1).
5. Install the two new front end sheet metal diagonal brace bolts (2) and the two new front suspension strut upper mounting bolts (3).

   **Tighten**

   Tighten Tighten the bolts to 35 N.m (26 lb ft).
6. Close the hood.

© 2019 General Motors. All rights reserved.