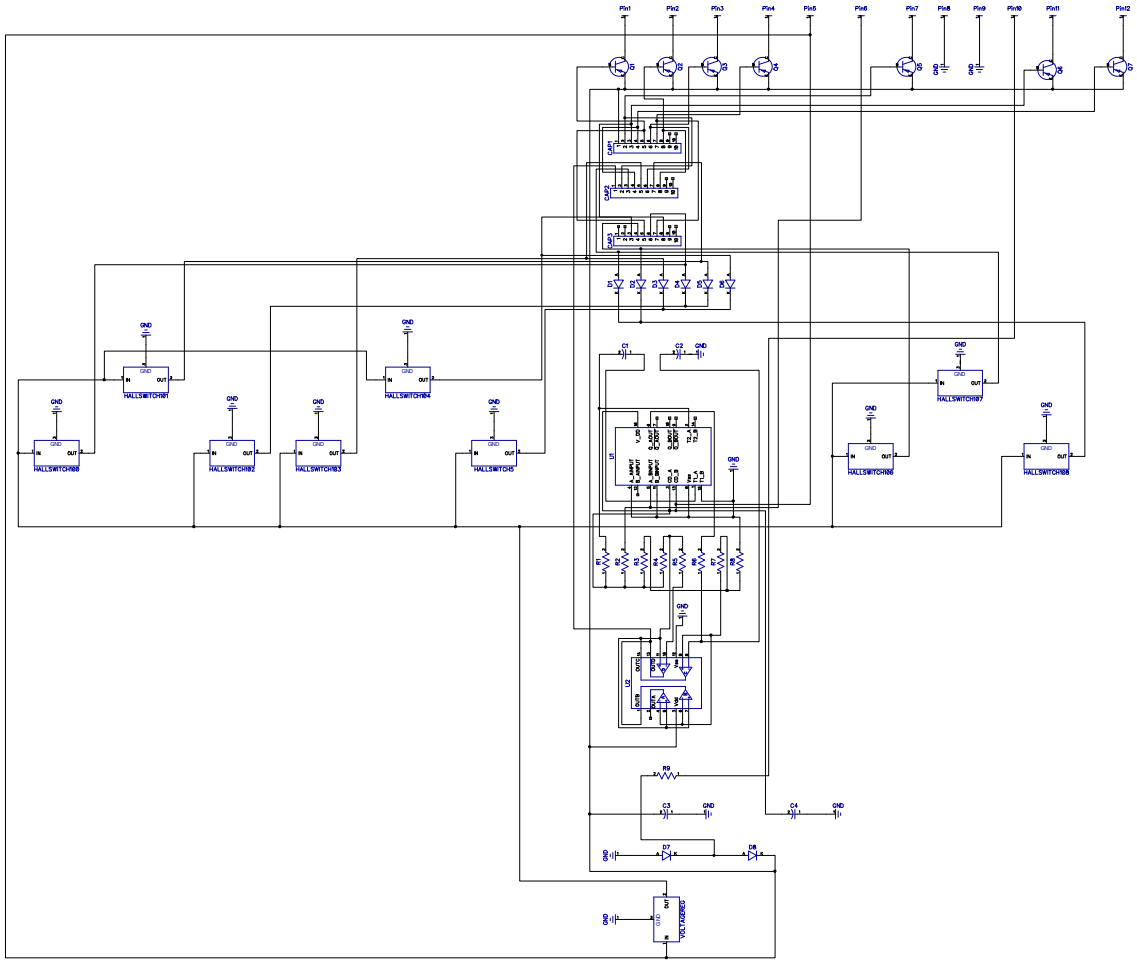
Pin1
Pin2
Pin3
Pin4
Pin5
Pin6
Pin7
Pin8
Pin9
Pin10
Pin11
Pin12
Q5
Q3
Q3
Q3
Q5
Q5
Q5
Q3
CAP1
CAP2
CAP3
D5
D3
D2
D1
D5
GND
HALLSWITCH87
HALLSWITCH84
HALLSWITCH88
HALLSWITCH82
HALLSWITCH83
HALLSWITCH85
HALLSWITCH87
HALLSWITCH86
HALLSWITCH88
C1
C2
U1
V_CC
A_INPUT
A_INPUT
B_INPUT
B_INPUT
C_INPUT
C_INPUT
GND
R1
R2
R3
R4
R5
R6
R7
R8
U2
OUTA
OUTB
R9
C3
C4
D7
D8
D9
VOLTAGEREG