A/c 28

Copy No. 4

SECRET AND CONFIDENTIAL

C104/DELTA

AN ALL-WEATHER SUPERSONIC FIGHTER

A.V. ROE CANADA LIMITED
JANUARY 1952

INTRODUCTION

The advances in bomber performance to be anticipated over four or five years will give rise to a much more difficult fighter interception problem than hitherto.

The fighter which will intercept a bomber flying at 50,000 ft. at 500 knots (M.N. = .85) must have a speed advantage which takes it into the supersonic region.

Furthermore there is the possibility that the bomber will be made capable of supersonic evasion tactics, which again emphasizes the importance of speed and manoeuverability.

This brochure describes preliminary proposals for a supersonic fighter capable of speeds in excess of M 1.4 over a considerable altitude range up to 55,000 ft.

The aircraft configuration is a Delta and is powered by two A.V. Roe Canada Limited TR.9 turbojets of 12,950 lbs. sea level static thrust augmented by afterburners.

Combat Performance

The high thrust loading and low wing loading associated with this configuration has resulted in a service ceiling of over 55,000 ft., afterburners lit, and 50,000 ft. with afterburners not lit, with corresponding times to height of 4.0 minutes and 10 minutes respectively.

The manoeuverability is seen also to be very adequate.

Range

In view of the importance of range and endurance in Canada every effort has been made to meet this requirement adequately, hence an operational radius of 500 nautical miles has been assumed and fuel allowances have been made for combat and 10% reserve.

Crew

A two place cockpit is provided for the pilot and radar operator/navigator.

Airframe and engine de-icing is provided for all weather operation.

Cabin airconditioning and pressurization are provided, of which refrigeration for supersonic combat will be the most important problem.

Aerodynamic Features

The mainplane is of delta plan form having 62.5° sweepback on the leading edge, and a thickness of 3%.

The ailerons are in the normal position on the mainplane with the elevators inboard, and the dive brakes between the elevators and the fuselage. The fin and rudder are mounted on the rear upper surface of the wing. All control surfaces are unbalanced and power operated.

Hydraulic System

A high pressure system is provided for the operation of all control surfaces, undercarriage, and wheel brakes.

Electrical System

The electrical system consists of a 24V D.C. system and a 110V 400 cycles A/C system.

Undercarriage

The tricycle undercarriage comprises a twin wheel nose unit retracting forwards into the fuselage nose, and main tandem wheel retracting sideways into the mainplane on either side of the fuselage. Toe operated hydraulic brakes have been adopted, while the tires have an inflation pressure of 215 p.s.i.

Armament

A large armament bay 15' x 5' x 2' is provided in the fuselage, giving a very adaptable arrangement suitable for guns, cannon, air-to-air rockets, or air-to-air guided missiles. Air-to-air missiles may also be carried externally on the mainplane.

The radar fire control equipment is housed within the Radome nose and in the front and rear cockpits.

LEADING PARTICULARS

Span	ft.	48
Length Overall	ft.	58.6
Height over Canopy	ft.	13.5
Height over Fin	ft.	14.3
Track	ft.	26
Tread	ft.	23
Gross Wing Area	sq. ft.	1183.5
Aspect Ratio		1.95
Sweep (1/4 chord)	deg.	55.18 & 56.74
Operational Weight Empty	lb.	35,624
Combat Weight	lb.	44,000
Maximum Gross Weight	lb.	51,979
Fuel Capacity	Imp. gals	2,050

Static Thrust at Sea Level

- without afterburners	lb. 12,950
- with afterburners (1800°K)	lb. 17,580

Wing Loading

- maximum gross weight	lb./sq. ft. 43.9
- combat weight	lb./sq. ft. 37.2

Power Loading with Afterburners

- maximum gross weight	lb./lb. thrust 2.96
- combat weight	lb./lb. thrust 2.50

DIMENSIONS

GENERAL		
Wing Span	ft.	48
Length, Overall	ft.	58.66
Height over Canopy	ft.	13.5
Height over Fin	ft.	14.3
Ground Angle, Static (to wing root chord)	deg.	20
Track	ft.	26
Tread	ft.	23
WING		
Area Gross	sq. ft.	1183.5
Span	ft.	48
Aspect Ratio		1.95
Thickness/Chord Ratio (parallel to fuselage)		.03
Sweep (1/4 chord)	deg.	55.18 & 56.75
Standard Mean Chord	ft.	24.65
Root Chord (C_L of A/C)	ft.	47
Tip Chord	ft.	4
Incidence (root chord to A/C datum)	deg.	1.00
Anhedral, Inboard Panel	deg.	3.00
Dihedral, Outboard Panel	deg.	3.75
FIN & RUDDER		
Area (above fuselage)	sq. ft.	67
Area (above C_L)	sq. ft.	114.0
Height (above C_L)	ft.	9.5
Taper Ratio		.091
Thickness/Chord Ratio		.03
Sweep (1/4 chord)	deg.	67.0
Standard Mean Chord	ft.	12
Root Chord	ft.	22
Tip Chord	ft.	2
FUSELAGE		
Length	ft.	53.9
Max. Depth	ft.	6
Max. Width	ft.	8.1

WEIGHT SUMMARY

	WEIGHT - lb.	% GROSS WEIGHT
STRUCTURE GROUP		
Wing (tip to tip)	13,883	
Front Fuselage (incl. ducts)	2,620	
Fin & Rudder	450	
TOTAL	16,953	32.62
LANDING GEAR GROUP		
Main Undercarriage	1,575	
Nose Wheel	495	
Tail Bumper	30	
TOTAL	2,100	4.04
POWER PLANT GROUP		
2-TR9 Gas Turbine Engines (bare)	6,600	
Accessory Gear Boxes & Drives	100	
2 - Afterburners	1,800	
Oil Coolers	45	
De-Icing System	185	
Controls	20	
Fire Extinguisher System	65	
Firewalls and shrouds	702	
Engine Mounting	40	
Fuel Tanks and System	865	
TOTAL	10,422	20.05
FIXED EQUIPMENT GROUP		
Exterior Finish	70	
Radar	74	
Radio	42	
Airconditioning & Pressurization	140	
Electrical	1091	
Hydraulic	440	
Oxygen	60	
Rocket Armament Equipment	150	
De-icing	325	
IFF	14	
Emergency Provisions	5	
L.P. Pneumatic System	13	
Instruments	46	
Dynamic Damper System	26	
TOTAL	2,496	4.80

	WEIGHT - lb	% GROSS WEIGHT
FLYING CONTROLS	600	1.15
TARE WEIGHT	32,571	62.66
REMOVEABLE EQUIPMENT		
Safety Equipment	12	
Emergency Provisions	7	
Ejector Seats	264	
Gun Camera	6	
Radar	465	
Radio	102	
IFF	93	
TOTAL	949	1.83
BASIC WEIGHT	33,520	64.49
OPERATIONAL LOAD		
Crew	414	
Rocket Missiles	1,400	
Residual Fuel	250	
Oil	40	
TOTAL	2,104	4.05
OPERATIONAL WEIGHT EMPTY	35,624	68.54
FUEL USABLE TOTAL	16,355	31.46
MAXIMUM GROSS WEIGHT	51,979	100.00

NOTE: The structure weight has been estimated for a combat weight of 44,000 lb. with an ultimate load factor of 11

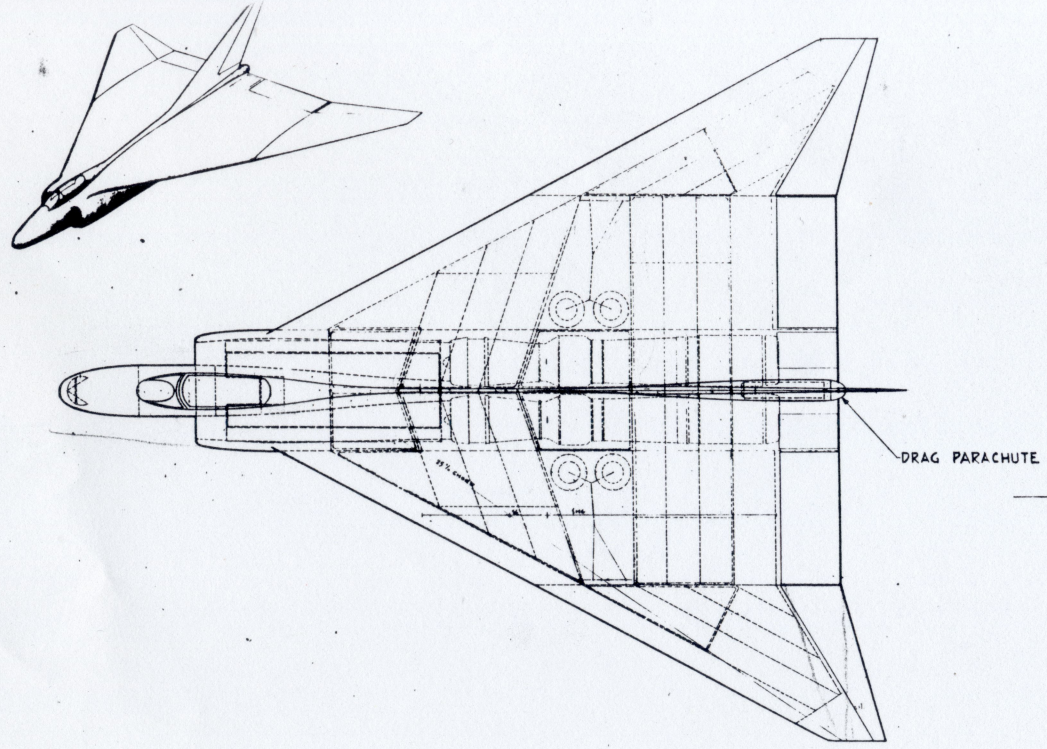

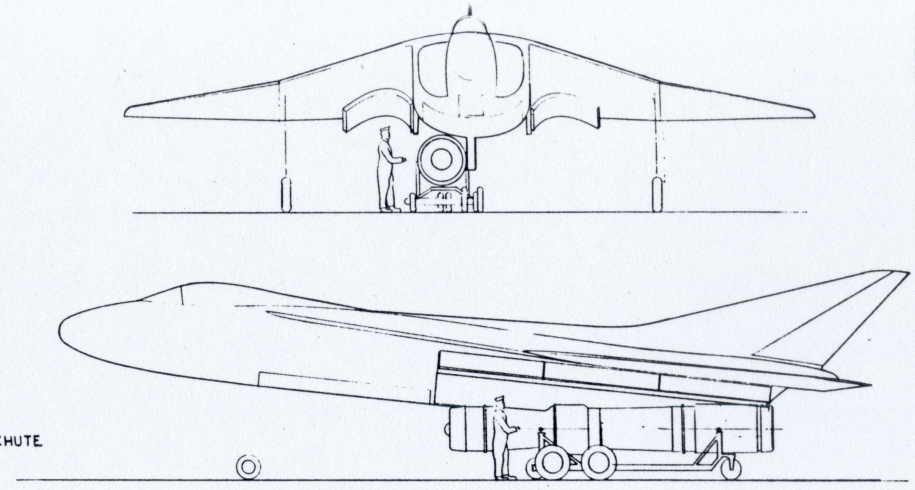

ENGINE REMOVAL

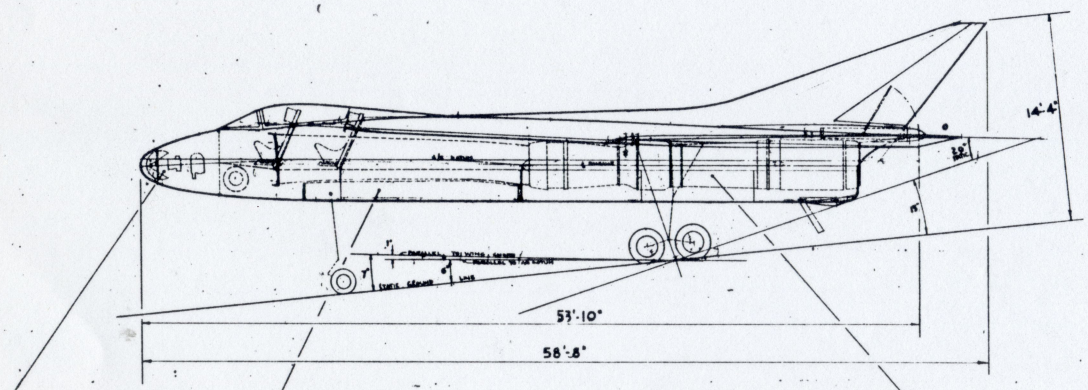

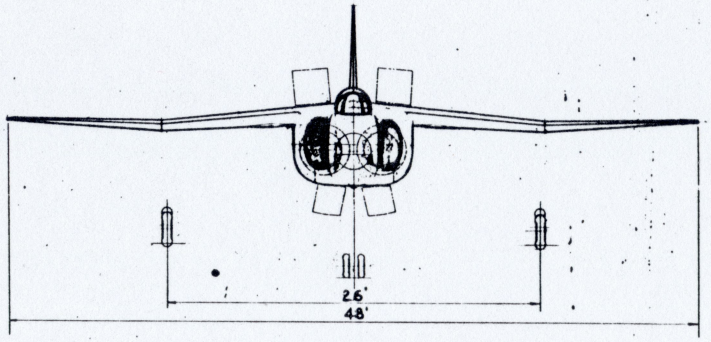

RADAR APG 40

ARMAMENT BAY
15' x 5'-4" x 2'-2"

2 TR9 ENGINES + AFTERBURNERS

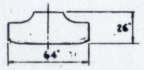

TYPICAL CROSS SECTION

ISSUE No.	1			
MOD. No.				
D.O.I. No.				
DRAWN BY	[illegible]			
DATE	JAN 3-83			
CHECKED				
STRENGTH APP.				
DESIGN APP.				
CONTRACT. APP.				

—A. V. ROE CANADA LTD.—

MALTON ONTARIO

CLASS	LONG RANGE ALL WEATHER	SCALE 1/4" = 12'	CLOG A / VERSION C
DESCRIPTION	TWO SEAT FIGHTER		TYPE
GROUP	2 TR9 ENGINES		DRAWING No. SK 20398
COMPONENT			

PERFORMANCE

The performance specified is for the completely equipped aircraft at a combat weight of 44,000 lbs. (unless otherwise stated), powered by two AVRO TR9 turbo-jet engines of 12,950 lb. static thrust each and fitted with afterburners providing re-heat to 1800°K. I.C.A.N. Standard atmospheric conditions are assumed throughout.

PERFORMANCE SUMMARY

Description	Units	
Maximum Level True Airspeeds		
a) Altitude: 40,000 ft.		
i) Afterburners unlit	mach no.	1.30
	knots	746
ii) Afterburners lit	mach no.	1.93
	knots	1,106
b) Altitude: 50,000 ft.		
i) Afterburners unlit	mach no.	1.18
	knots	676
ii) Afterburners lit	mach no.	1.92
	knots	1,100
Time to Climb to 50,000 feet from a flying start		
a) Afterburners unlit	minutes	9.8
b) Afterburners lit	minutes	2.9
Operational Ceiling (R/C = 500 ft/min.)		
a) Afterburners unlit	feet	49,000
b) Afterburners lit	feet	57,000
Take-off Distance to clear 50 ft. in still air at sea level at maximum gross weight (51,979 lb.)		
a) Afterburners unlit	feet	5,540
b) Afterburners lit	feet	3,390
Landing Speed at sea level	knots	128
Landing Distance from 50 ft. at sea level	feet	5,900
Minimum Radius of Turn and corresponding normal acceleration at 50,000 ft. with afterburners lit		
a) Level - radius	feet	24,900
- normal acceleration	'g'	1.38
b) Sinking - radius	feet	10,100
- normal acceleration	'g'	6.40
Combat Radius	nautical miles	487

PERFORMANCE

Cruise Performance

Cruising at the speed for 99% maximum air miles per pound of fuel.

Altitude	A/C weight pound	True airspeed		Nautical air miles per pound of fuel
		mach no.	knots	
30,000	35,000	.65	373	.102
	50,000	.82	470	.082
40,000	35,000	.86	492	.121
	50,000	.96	550	.090
45,000	35,000	.96	550	.131
	50,000	.96	550	.071
50,000	35,000	.96	550	.123
	50,000	.96	550	--

Maximum Level True Airspeeds

Altitude feet	Afterburner unlit		Afterburner Lit	
	mach no.	knots	mach no.	knots
0	1.01	666	1.48	980
20,000	1.17	719	1.84	1,130
30,000	1.27	748	1.90	1,124
40,000	1.30	746	1.93	1,106
50,000	1.18	676	1.92	1,100
55,000	--	--	1.91	1,093