LOWSPEC

Spectroscopie en 3D printer

Paul Gerlach

Oudenbosch 26 november 2016

Leven na StarAnalyser

DADOS (R≈700 - 3000)

€ 1845,-

Leven na StarAnalyser

ALPY 600 (R≈600)

€ 695 ,-

€ 785 ,-

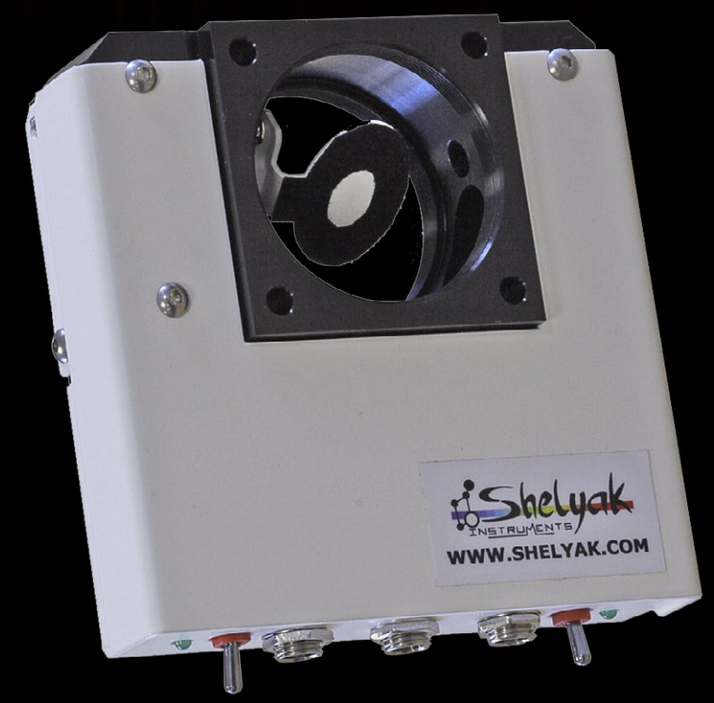

€ 645 ,-

Leven na StarAnalyser

LISA (R≈1000)

LISA	€ 3150,-
Kalibratie-unit	€ 339,-

Doel

- Een betaalbare ‘klassieke’ spleet-spectrograaf
  - autoguiding
  - kalibratie-unit (als optie)
- Eenvoudig te bouwen met off-the-shelf optische componenten
- Onderdelen simpel te printen met een 3D printer

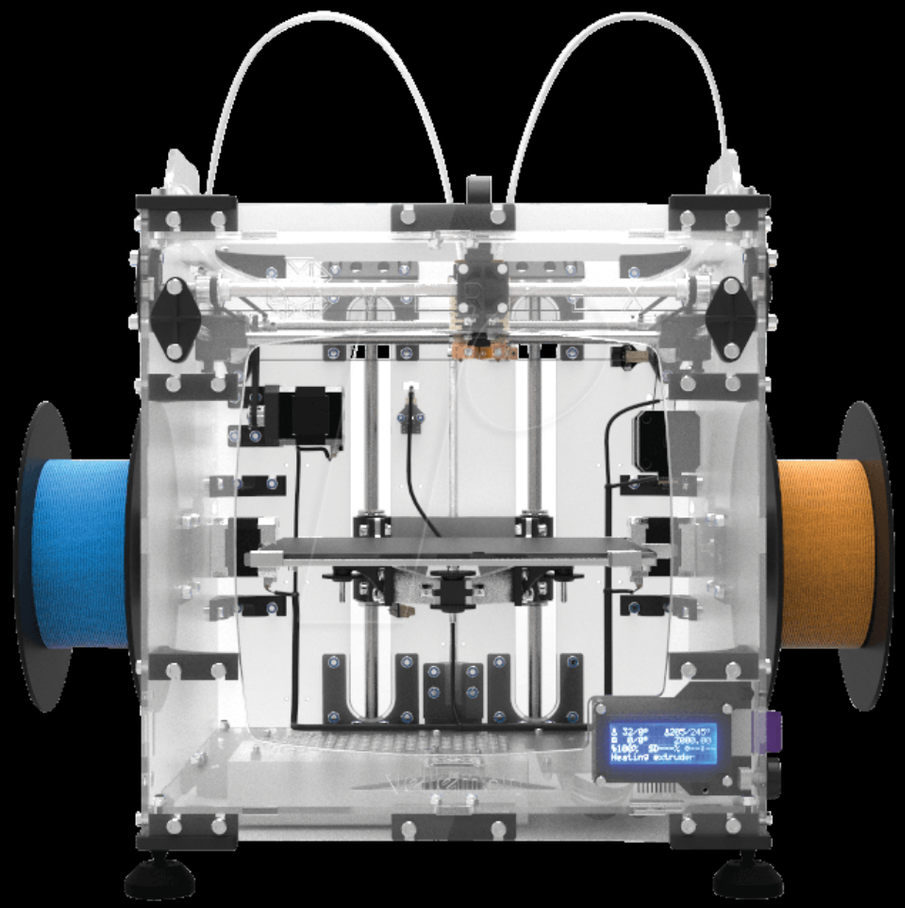

Het begin

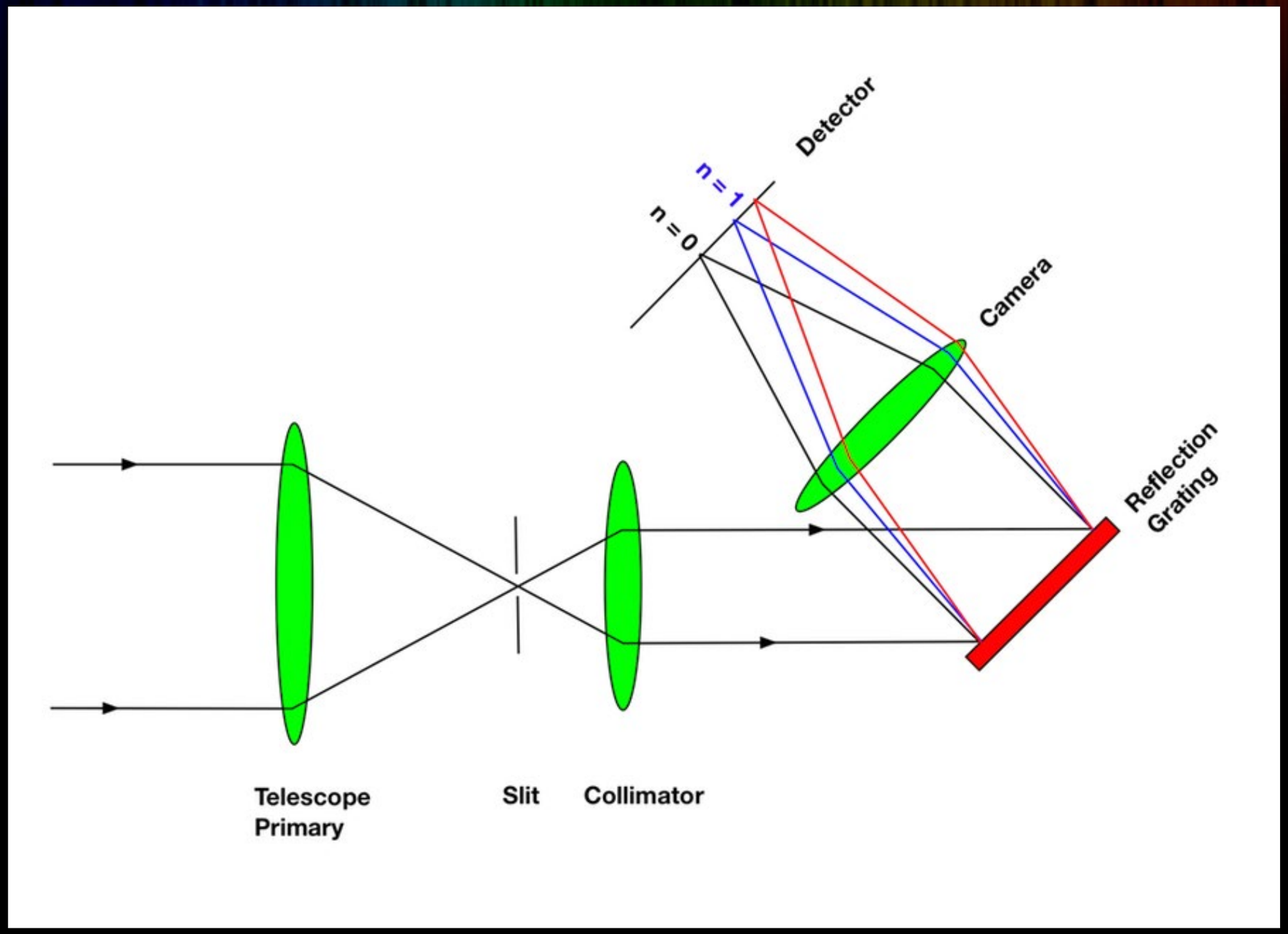
Detector
n = 1
n = 0
Camera
Reflection
Grating
Telescope
Primary
Slit
Collimator

Het begin

SIMSPEC V4.3 english version, by Ken Harrison , original version by Christian Buil

Latest Revision: 11-16

Enter data in highlighted cells

Telescope

Diameter (D) :	203	mm
Focal Ratio, F/D (F#) :	8,0	
Focal length (f) :	1624	mm
Secondary Diameter	165	mm
Central obstruction (ε) :	0,8	
Telescope throughput (To) :	0,95	

Seeing/ Atmosphere

Seeing (ϕ) :	4	"
Atmospheric transmission (Ta) :	0,8	
Sky magnitude (mag/arc sec^2) :	17	
Star size at focus (FWHM):	31,5	microns

NOTES:

See www.astrosurf.org/buil/us/spe2/hresol1.htm
www.astrosurf.org/buil/us/stage/calcul/design_us.htm
(explanatory notes and worked example)

SUMMARY

Resolving power R	1021	
Spectral resolution	6,43	Å
Wavelength range	3682	Å
Grating-Lines/ mm	600	
Grating-Diffraction order	1	
Slit width	25	microns
Target Mag.	8,0	
Signal/Noise (SNR/pixel)	246	
Signal/Noise (SNR/Δλ)	384	

Other Results

Angle of incidence (α) :	34,80	°
Angle of diffraction (β) :	-10,20	°
Anamorphic factor (r) :	0,83	
diffraction limit grating, FWHMd :	2,92	microns
Slit/ image width on CCD, FWHMt :	15,67	microns

Spectrograph

Collimator

Collimator-Focal length (f1) :	60	mm
Collimator-Required Focal ratio (Fc):	8,0	
Collimator-Minimum diameter (d1) :	7,5	mm
Resolution of Collimation lens-FWHMo :	1	microns

Camera

Camera-Focal length (f2) :	40	mm
Camera-Distance to grating (T) :	45	mm
Camera-Minimum lens diameter (d'2) :	19,1	mm
Camera-Maximum focal ratio (Fo) :	2,1	
Resolution of Camera lens-FWHMc :	1	microns
Collimator/Camera -Total angle (γ) :	45	°
Slit width (w) :	25	microns

Grating

Grating-Lines/ mm (n) :	600	
Grating-Diffraction order (k) :	1	
Grating - Actual width	25	mm
Grating - Actual height	25	mm
Grating- Minimum height (H) :	7,5	mm
Grating- Minimum width (W) :	9,1	mm
Dispersion (ρ) :	2,65	Å/ pixel
Resolving power (R) :	1021	
Spectral resolution (Δλ) :	6,43	Å
Dispersion (r) :	410,09	Å/ mm

Wavelength Range

Reference wavelength (λ0) :	6563	Å
Lambda min. (λ1) :	4722	Å
Lambda max. (λ2) :	8404	Å
Wavelength range/ image frame:	3682	Å

Throughput efficiency

Transmission efficiency- guide system:	1
Transmission efficiency -transfer mirror:	0,98
Transmission efficiency-Collimator lens (To) :	0,96
Transmission efficiency-Camera lens (Tc) :	0,96
Transmission efficiency-Grating (Tg) :	0,8
Entrance slit transmission(Tf):	0,59
% efficiency due to undersized grating -width	1,00
% efficiency due to undersized grating -height	1,00
Total Transmission of Spectrograph (Ts) :	0,320

Camera

Camera (Select from list)	ATiK314L	
pixel sizel (p) :	6,45	microns
number of X pixels(Nx) :	1392	
quantum efficiency (η) :	52,80	%
Read noise (RON) :	1	e-/pixel
Dark noise (Nd) :	0,0005	e-/s/pixel
Binning, X axis (fx) :	1	
Binning, Y axis (fy) :	1	
Sampling Factor :	2,45	

Exposure

Subs, exposure time (ts) :	600	secs
number of subframes (n) :	6	
Total exposure time (t):	3600	secs

Spectrum size/ spread

Height of Spectrum (n) :	15	pixel

Target Star

Magnitude (m) :	8	
Effective temperature (Te) :	10800	K
Bolometric Correction (BC) :	-0,4	

SNR (Theoretical)

Signal/Noise (SNR/pixel) :	240
Signal/Noise (SNR/Δλ) :	384

Limiting Mag

Limiting Mag.(Bowen-mod):	14,80

SNR Calculations

Number of photons (E) :	0,46	photons/cm2/s
Sky background(Ed) :	0,000116	photons/cm2/s
Final Efficiency (R) :	4,35	%
Useful signal (Nm) :	62045	e-/pixel
Background noise (Ns) :	89036	e-/pixel
Noise(σ) :	252	e-/pixel
Signal/Noise by interval Δλ :	384	e-/pixel
Noise from Signal :	*389*	*e-/pixel*
Noise from Electronics :	*37*	*e-/pixel*

Note: Actual SNR obtained will be influenced by the guiding (total time the target star is held on the slit gap)
A good estimate of actual SNR is 50% - 80% the theoretical.

https://groups.yahoo.com/neo/groups/astronomical_spectroscopy/

Optische componenten

• 25 Micron spleet (Lenox Laser)	€ 120,-
• Componenten van Edmund Optics	
– Spiegel (diam. 10mm)	
– Spiegel (diam. 20mm)	
– 2x lens achromaat (12.5mm x 45mm FL)	
– 1x lens achromaat (25mm x 40mm FL)	
– 1x lens achromaat (20mm x 60mm FL)	€ 160,-
– Reflectietralie 600l/mm (25x25mm)	€ 152,-
• Micrometer	€ 15,-
Totaal	**€ 447,-**

Ontwerp

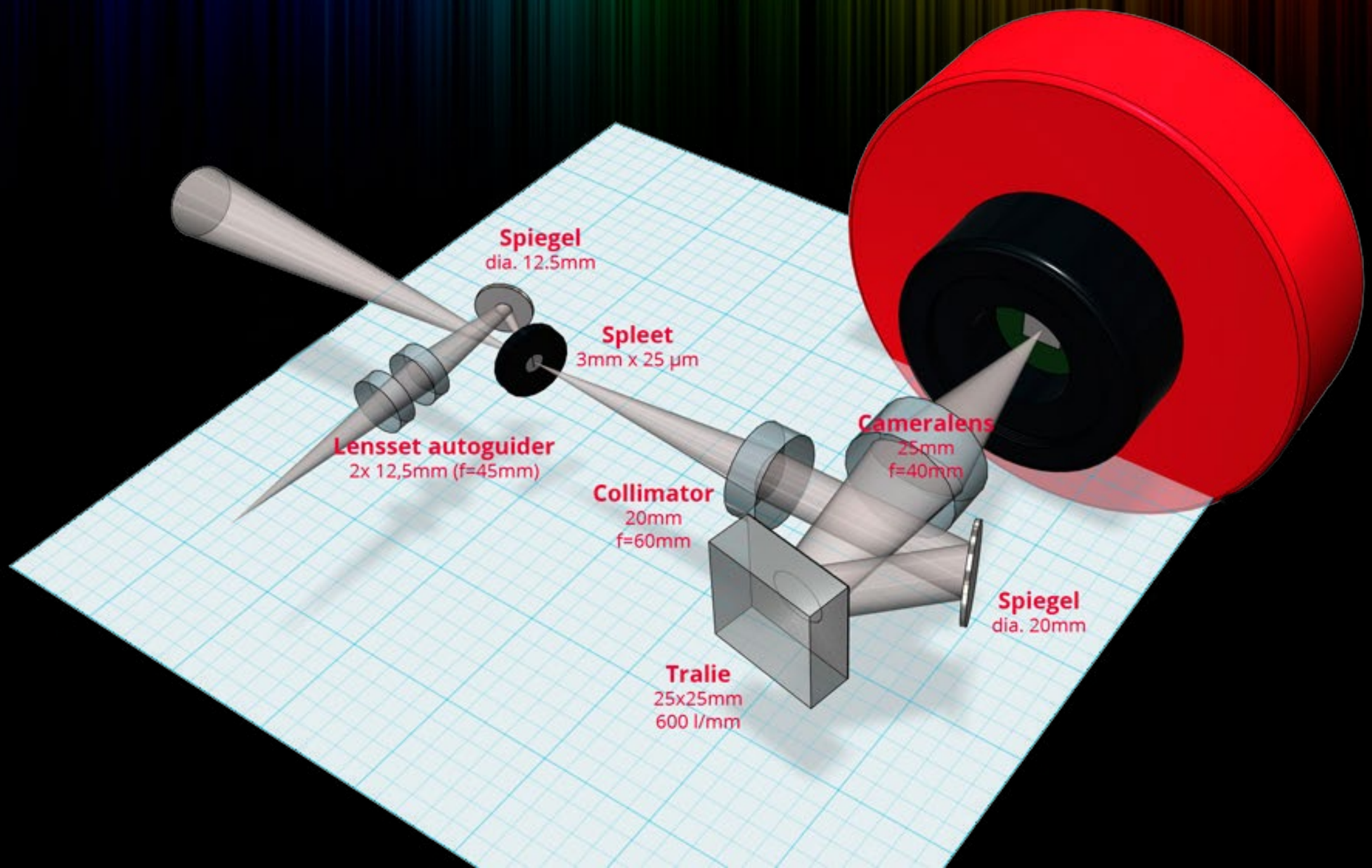
Spiegel
dia. 12.5mm
Spleet
3mm x 25 µm
Lensset autoguider
2x 12,5mm (f=45mm)
Cameralens
25mm
f=40mm
Collimator
20mm
f=60mm
Spiegel
dia. 20mm
Tralie
25x25mm
600 l/mm

Ontwerp

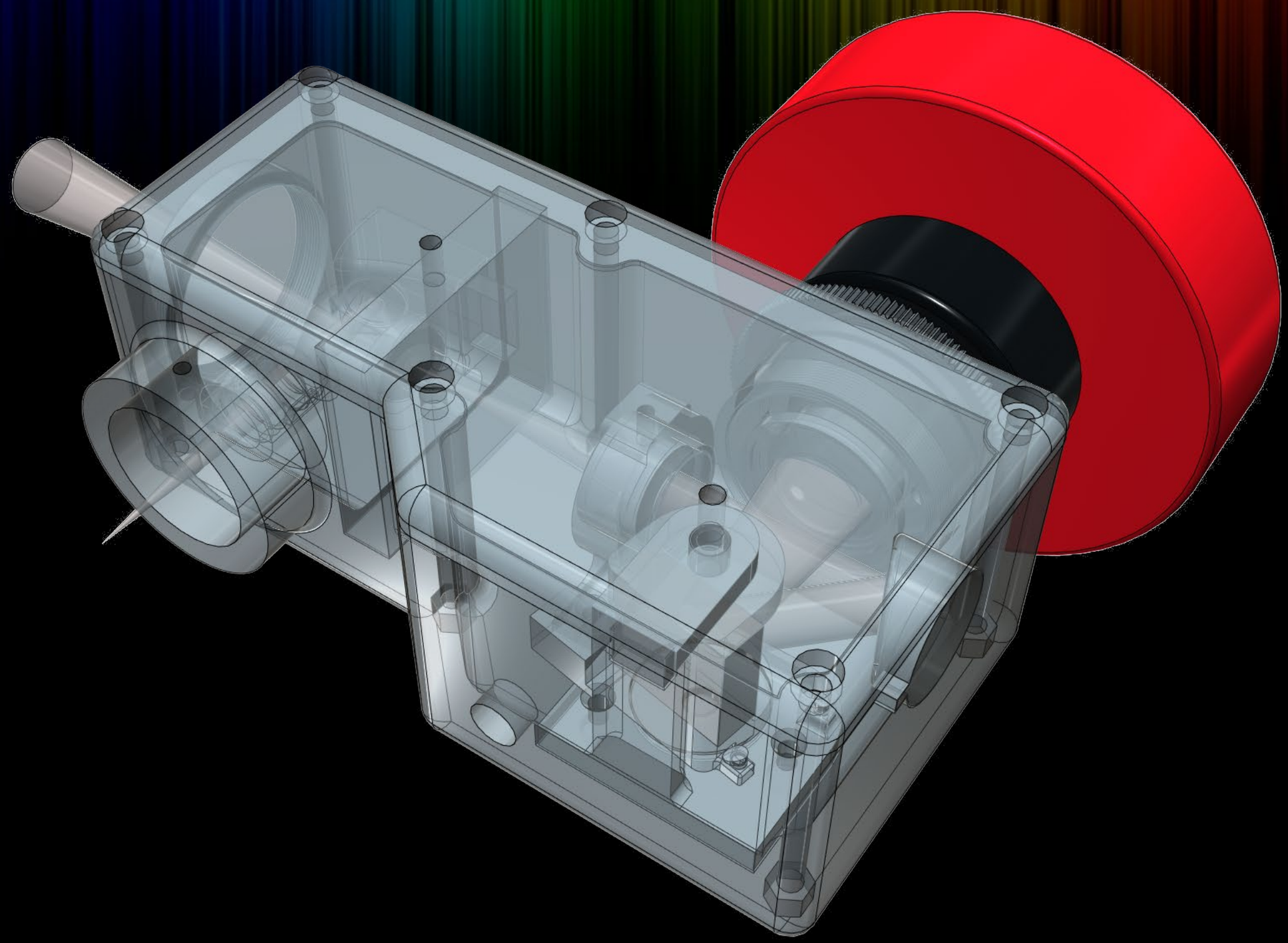

3D printen

- Materiaalkeuze
  - PLA (Polyactide): Stijf, breekbaar, wordt zacht bij >50°C
  - ABS (Acrylonitril-butadieen-styreen): LEGO-steentjes
- Keuze is voor mijn printer beperkt tot PLA

3D printen

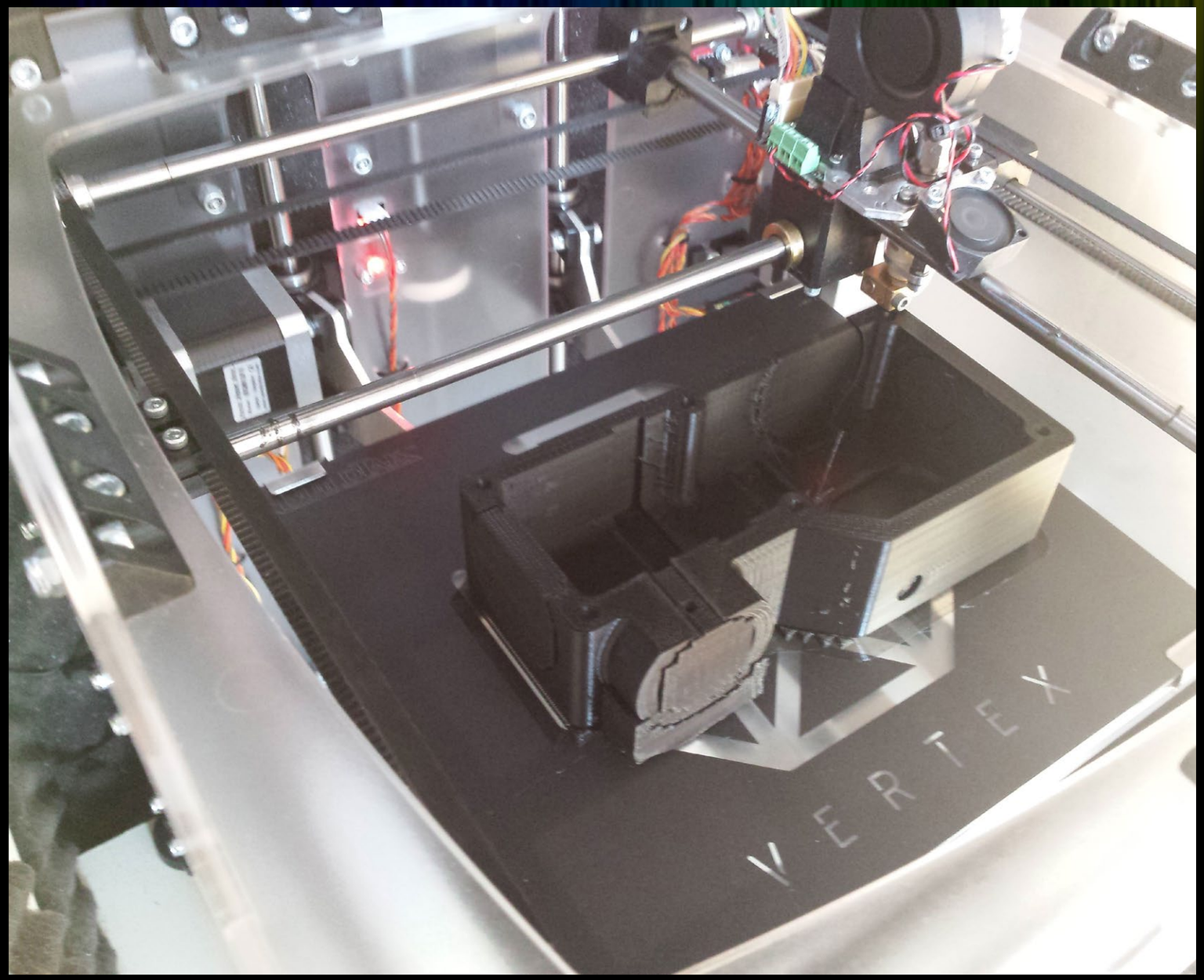

First light

Spectrograaf heeft bril nodig...

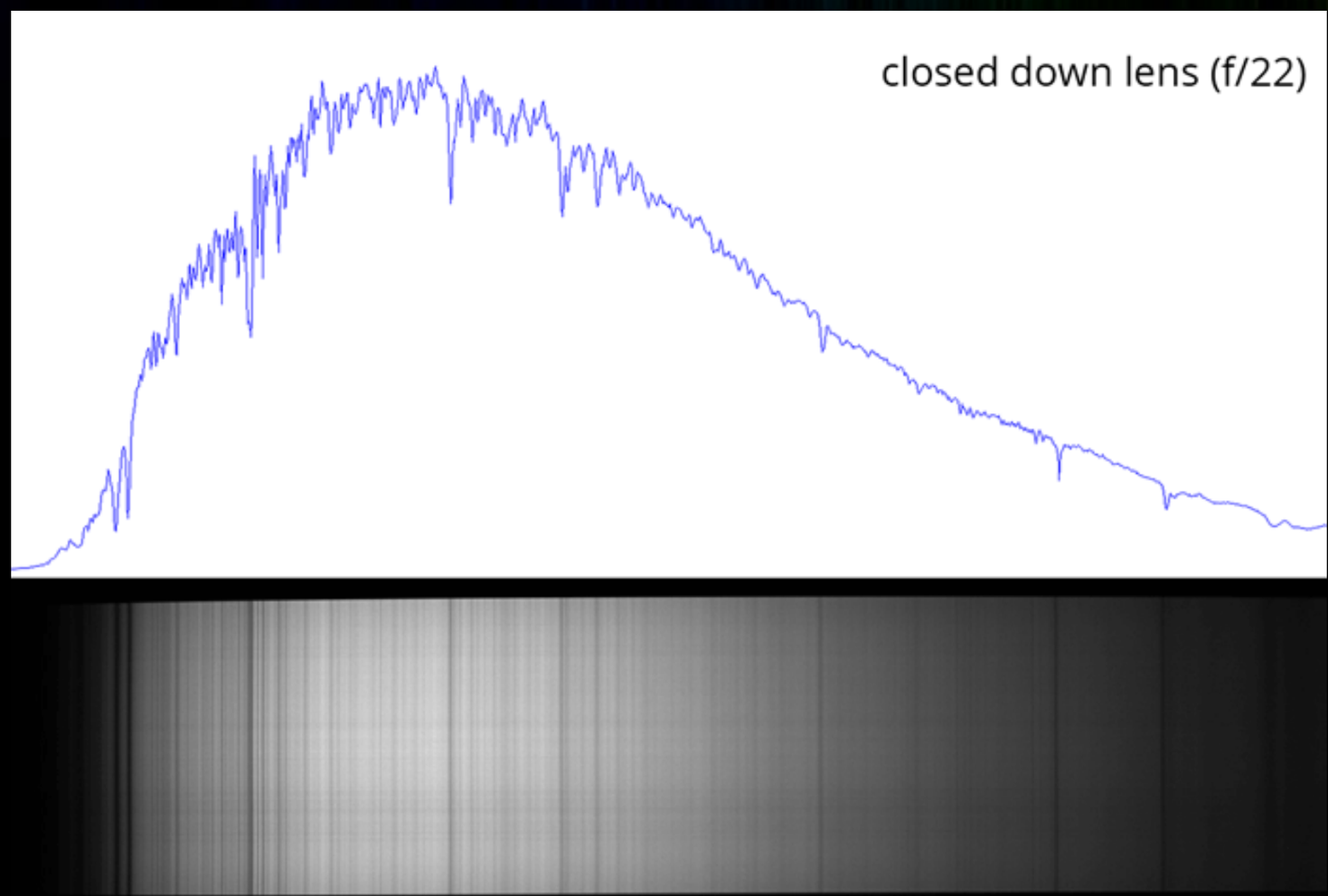

Wat is er aan de hand?

- Aberratie
  - Chromatische aberratie
  - Veldkromming
  - ...
- Oplossing?
  - Dure multi-lens-systemen?
  - Tragere optiek?
  - ....

Problemen met de spleet

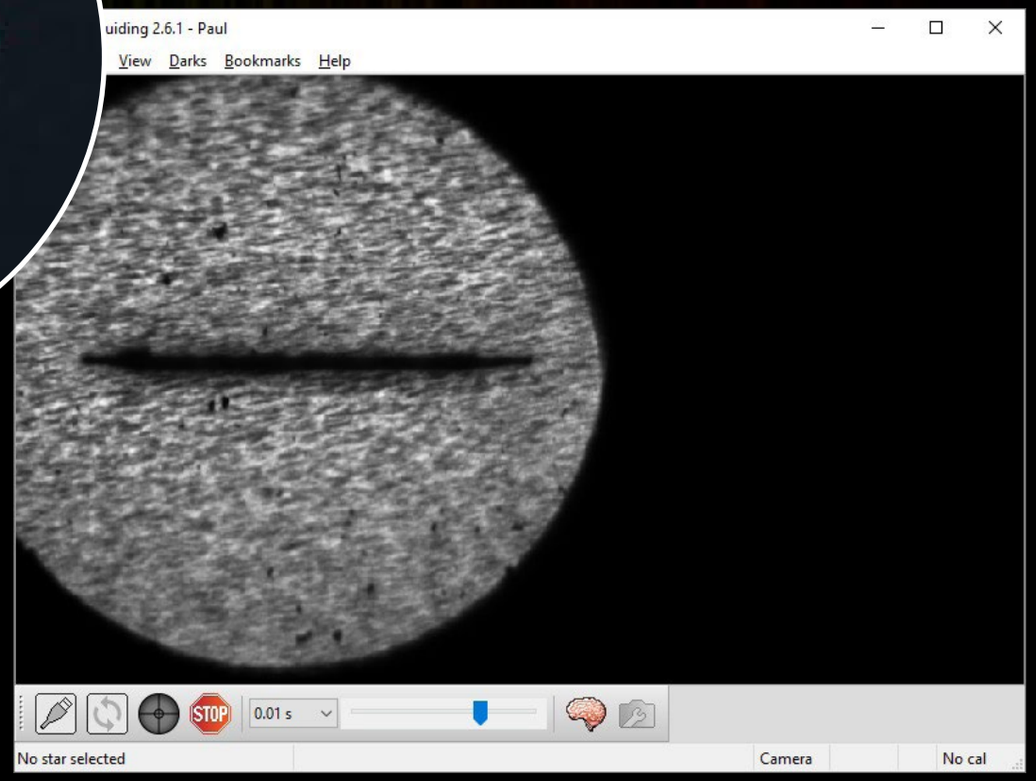

Nieuwe poging

SIMSPEC V4.3 english version, by Ken Harrison , original version by Christian Buil — Latest Revision: 11-16

Enter data in highlighted cells

Telescope		
Diameter (D) :	203	mm
Focal Ratio, F/D (F#) :	8,0	
Focal length (f) :	1624	mm
Secondary Diameter	165	mm
Central obstruction (ε) :	0,8	
Telescope throughput (To) :	0,95	

Seeing/ Atmosphere		
Seeing (ϕ) :	4	"
Atmospheric transmission (Ta) :	0,8	
Sky magnitude (mag/arc sec^2) :	17	
Star size at focus (FWHM):	31,5	microns

NOTES:

See www.astrosurf.org/buil/us/spe2/hresol1.htm
www.astrosurf.org/buil/us/stage/calcul/design_us.htm
(explanatory notes and worked example)

SUMMARY		
Resolving power R	1004	
Spectral resolution	6,54	Å
Wavelength range	3589	Å
Grating-Lines/ mm	300	
Grating-Diffraction order	1	
Slit width	25	microns
Target Mag.	8,0	
Signal/Noise (SNR/pixel)	243	
Signal/Noise (SNR/Δλ)	387	

Other Results		
Angle of incidence (α) :	28,62	°
Angle of diffraction (β) :	-16,38	°
Anamorphic factor (r) :	0,91	
diffraction limit grating, FWHMd :	3,07	microns
Slit/ image width on CCD, FWHMt :	16,35	microns

Spectrograph		
Collimator		
Collimator-Focal length (f1) :	125	mm
Collimator-Required Focal ratio (Fc):	8,0	
Collimator-Minimum diameter (d1) :	15,6	mm
Resolution of Collimation lens-FWHMo :	1	microns
Camera		
Camera-Focal length (f2) :	80	mm
Camera-Distance to grating (T) :	45	mm
Camera-Minimum lens diameter (d'2) :	22,1	mm
Camera-Maximum focal ratio (Fo) :	3,6	
Resolution of Camera lens-FWHMc :	1	microns
Collimator/Camera -Total angle (γ) :	45	°
Slit width (w) :	25	microns
Grating		
Grating-Lines/ mm (n) :	300	
Grating-Diffraction order (k) :	1	
Grating - Actual width	25	mm
Grating - Actual height	25	mm
Grating- Minimum height (H) :	15,6	mm
Grating- Minimum width (W) :	17,8	mm
Dispersion (ρ) :	2,58	Å/ pixel
Resolving power (R) :	1004	
Spectral resolution (Δλ) :	6,54	Å
Dispersion (r) :	399,75	Å/ mm
Wavelength Range		
Reference wavelength (λ0) :	6563	Å
Lambda min. (λ1) :	4768	Å
Lambda max. (λ2) :	8358	Å
Wavelength range/ image frame:	3589	Å
Throughput efficiency		
Transmission efficiency- guide system:	1	
Transmission efficiency -transfer mirror:	0,98	
Transmission efficiency-Collimator lens (To) :	0,96	
Transmission efficiency-Camera lens (Tc) :	0,96	
Transmission efficiency-Grating (Tg) :	0,8	
Entrance slit transmission(Tf):	0,59	
% efficiency due to undersized grating -width	1,00	
% efficiency due to undersized grating -height	1,00	
Total Transmission of Spectrograph (Ts) :	0,320	

Camera		
Camera (Select from list)	ATiK314L	
pixel sizel (p) :	6,45	microns
number of X pixels(Nx) :	1392	
quantum efficiency (η) :	52,80	%
Read noise (RON) :	1	e-/pixel
Dark noise (Nd) :	0,0005	e-/s/pixel
Binning, X axis (fx) :	1	
Binning, Y axis (fy) :	1	
Sampling Factor :	2,51	
Exposure		
Subs, exposure time (ts) :	600	secs
number of subframes (n) :	6	
Total exposure time (t):	3600	secs
Spectrum size/ spread		
Height of Spectrum (n) :	15	pixel

Target Star		
Magnitude (m) :	8	
Effective temperature (Te) :	10800	K
Bolometric Correction (BC) :	-0,41	
SNR (Theoretical)		
Signal/Noise (SNR/pixel) :	245	
Signal/Noise (SNR/Δλ) :	387	
Limiting Mag		
Limiting Mag.(Bowen-mod):	14,61	

SNR Calculations		
Number of photons (E) :	0,46	photons/cm2/s
Sky background(Ed) :	0,000116	photons/cm2/s
Final Efficiency (R) :	4,35	%
Useful signal (Nm) :	60481	e-/pixel
Background noise (Ns) :	90407	e-/pixel
Noise(σ) :	249	e-/pixel
Signal/Noise by interval Δλ :	387	e-/pixel
Noise from Signal :	388	e-/pixel
Noise from Electronics :	37	e-/pixel

Note: Actual SNR obtained will be influenced by the guiding (total time the target star is held on the slit gap)
A good estimate of actual SNR is 50% - 80% the theoretical.

Optische componenten

- 25 Micron spleet (Lenox Laser) € 120,-
- Componenten van Thorlabs
  - 1x lens achromaat (25,4mm x 125mm FL)
  - 1x lens achromaat (25,4mm x 80mm FL)
  - Reflectietralie 300l/mm (25x25mm) € 280,-
- Componenten van Edmund Optics
  - 1x lens achromaat (12,5 x 35mm FL) € 75,-
  - 1x spiegel (20mm dia) € 20,-

Totaal € 495,-

Ontwerp

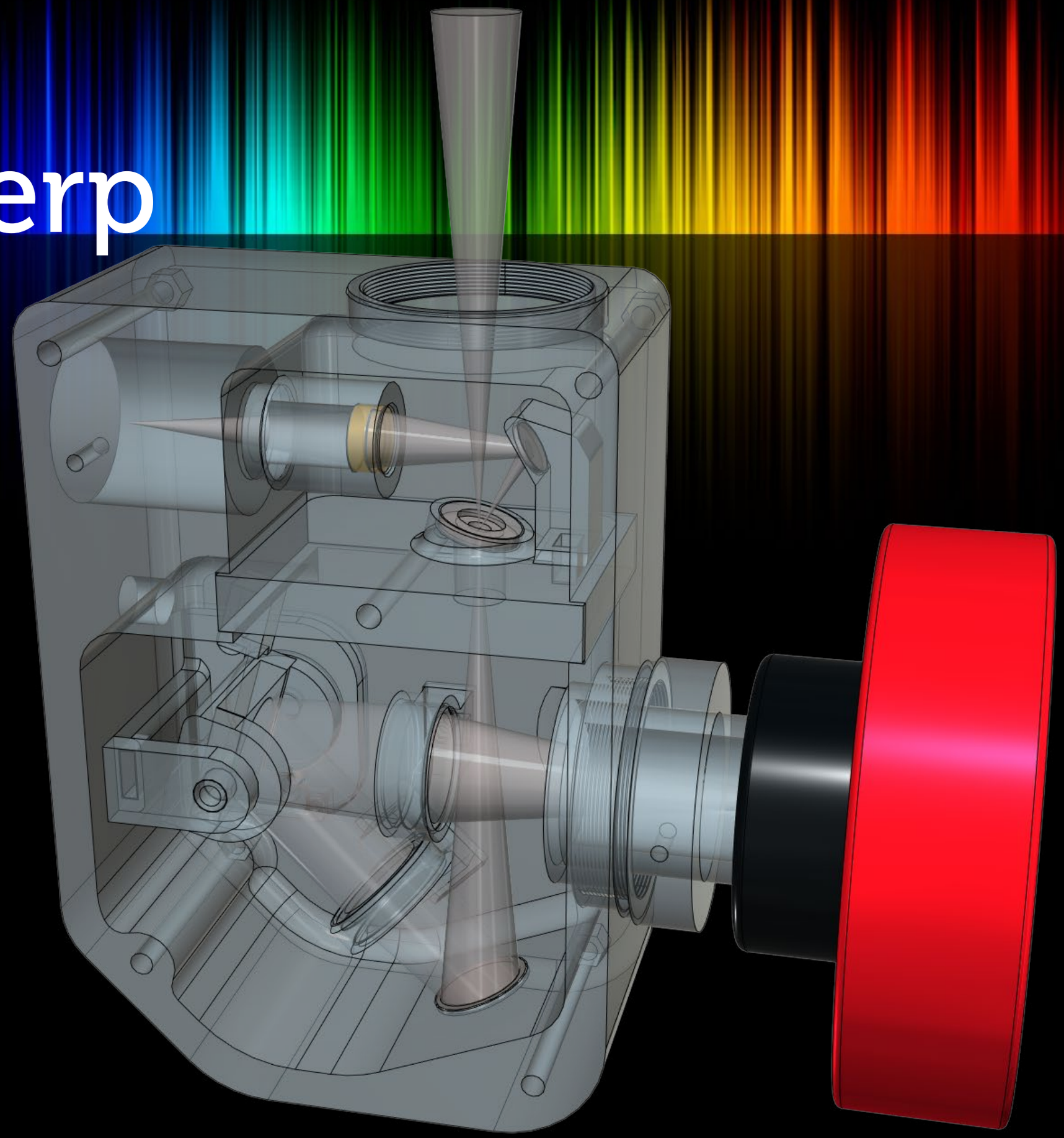

First light

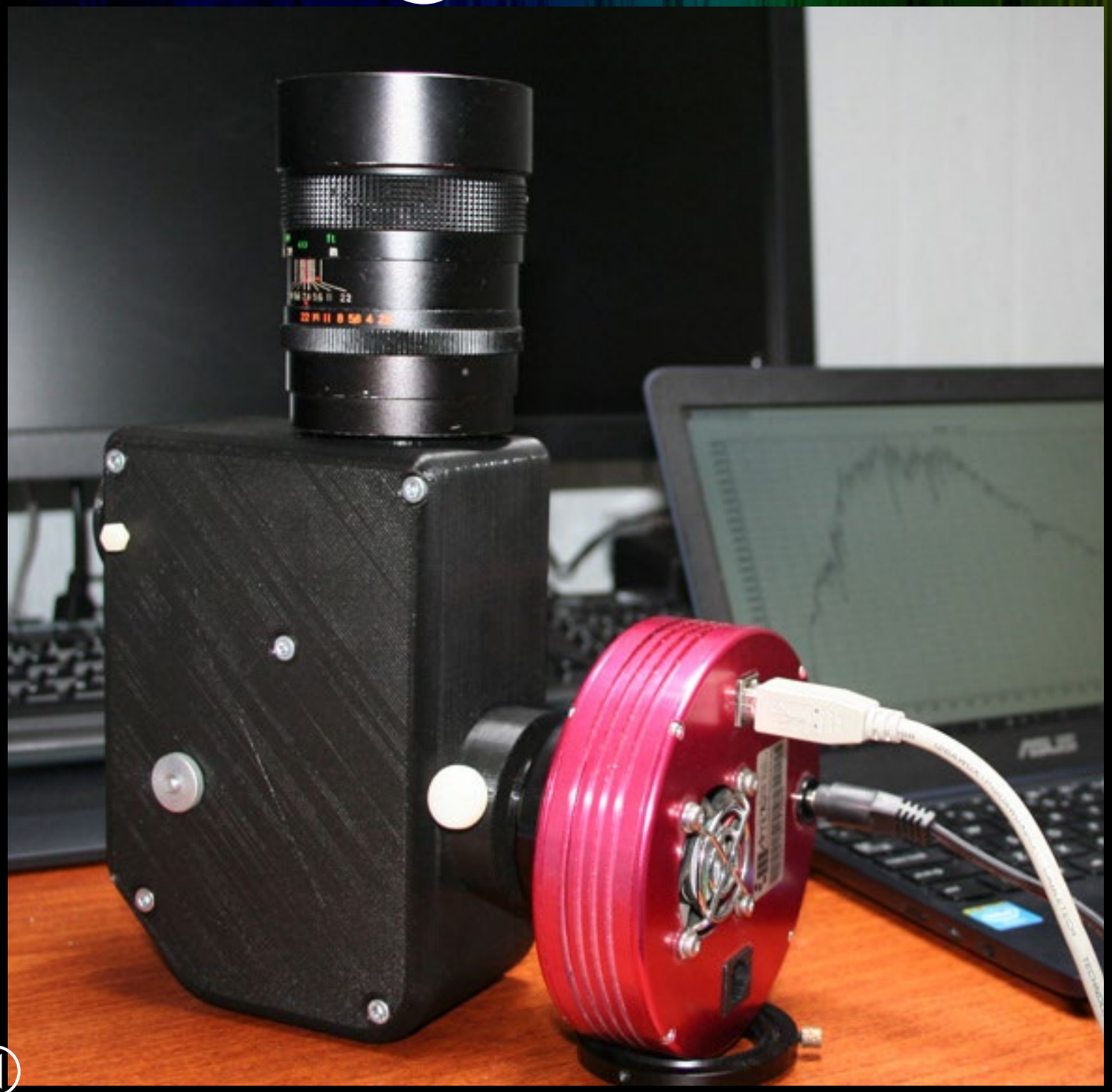

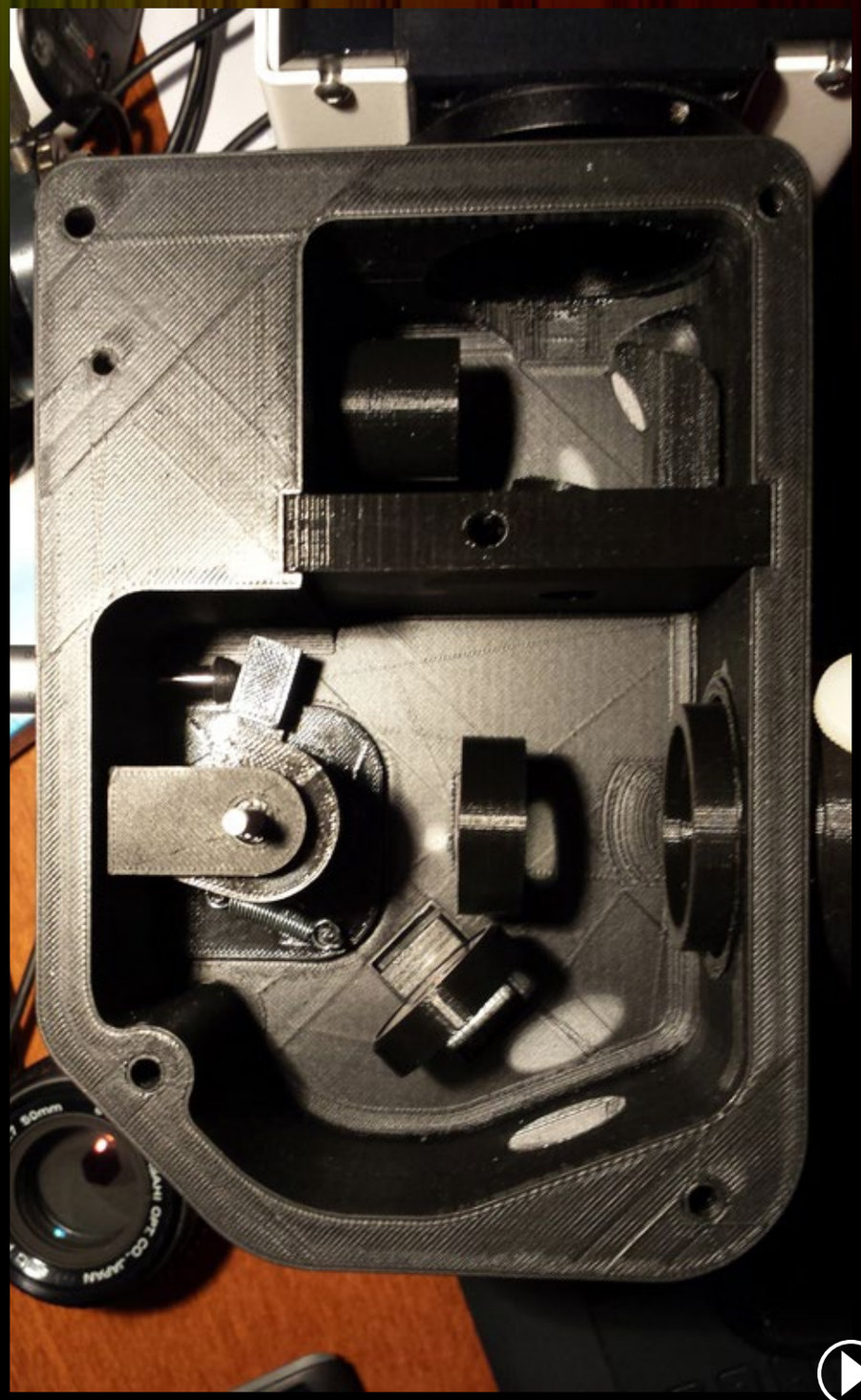

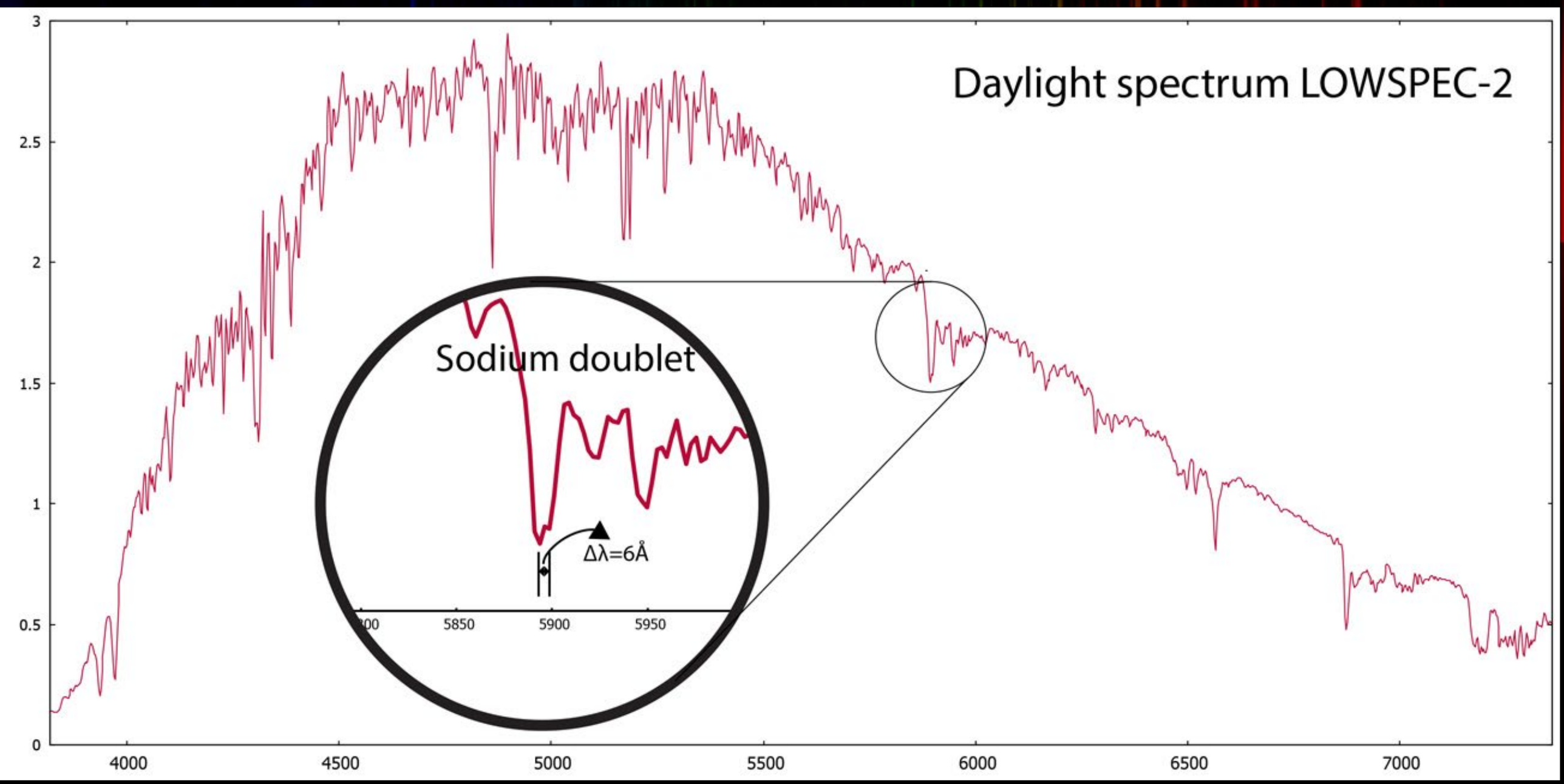
Daylight spectrum LOWSPEC-2
Sodium doublet
Δλ=6Å
5850
5900
5950
0
0.5
1
1.5
2
2.5
3
4000
4500
5000
5500
6000
6500
7000

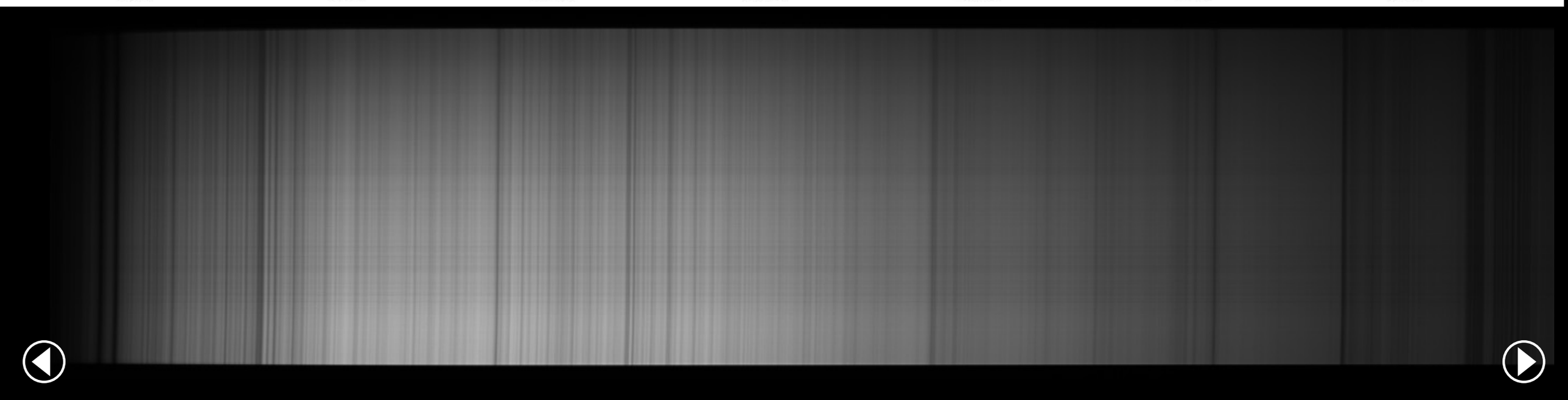

Installatie

First star (Vega)

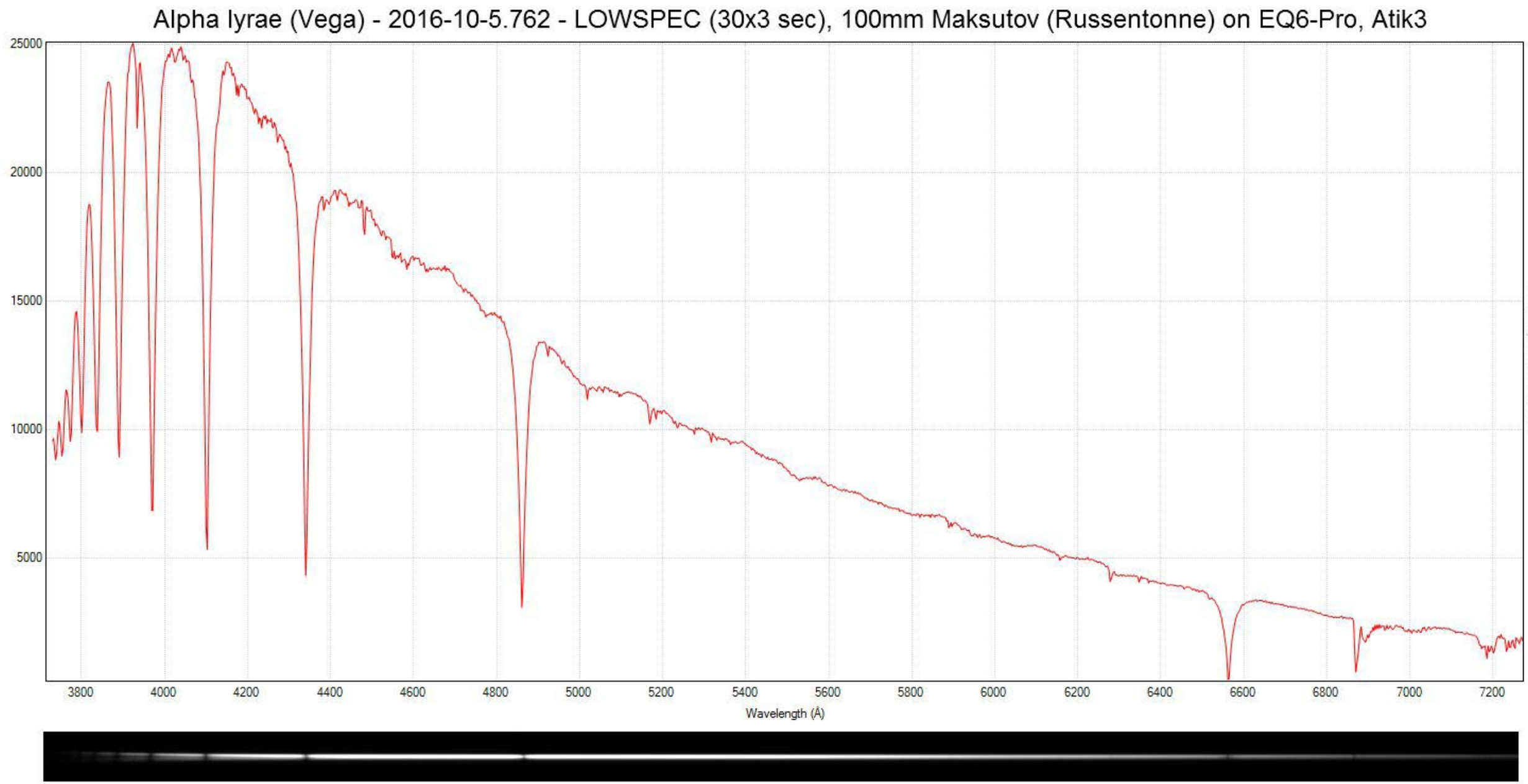

Problemen

- De spleet van Lenox Laser voldoet niet
  - oppervlak is te ruw
  - randen an de spleet lijken niet vlak
- Focuseren is een ramp (d.m.v. verschuiven van camera)
- Focus verloopt bij kleine temperatuurschommeling

Aanpassingen

- Spleet vervangen door een ALPY 600 spleet (fotometrische spleet)

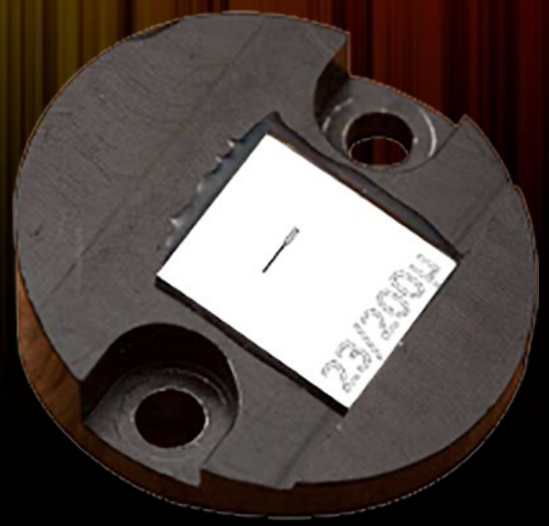

- Focuseren d.m.v. verschuiven van cameralens en camera zelf fixeren.

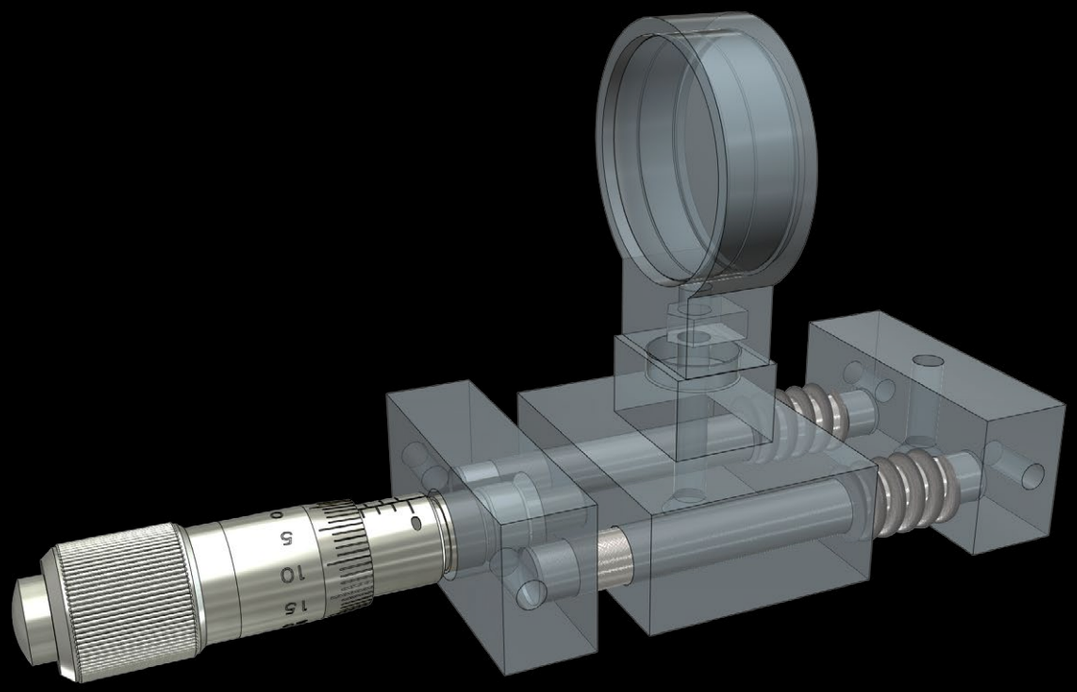

Aanpassingen

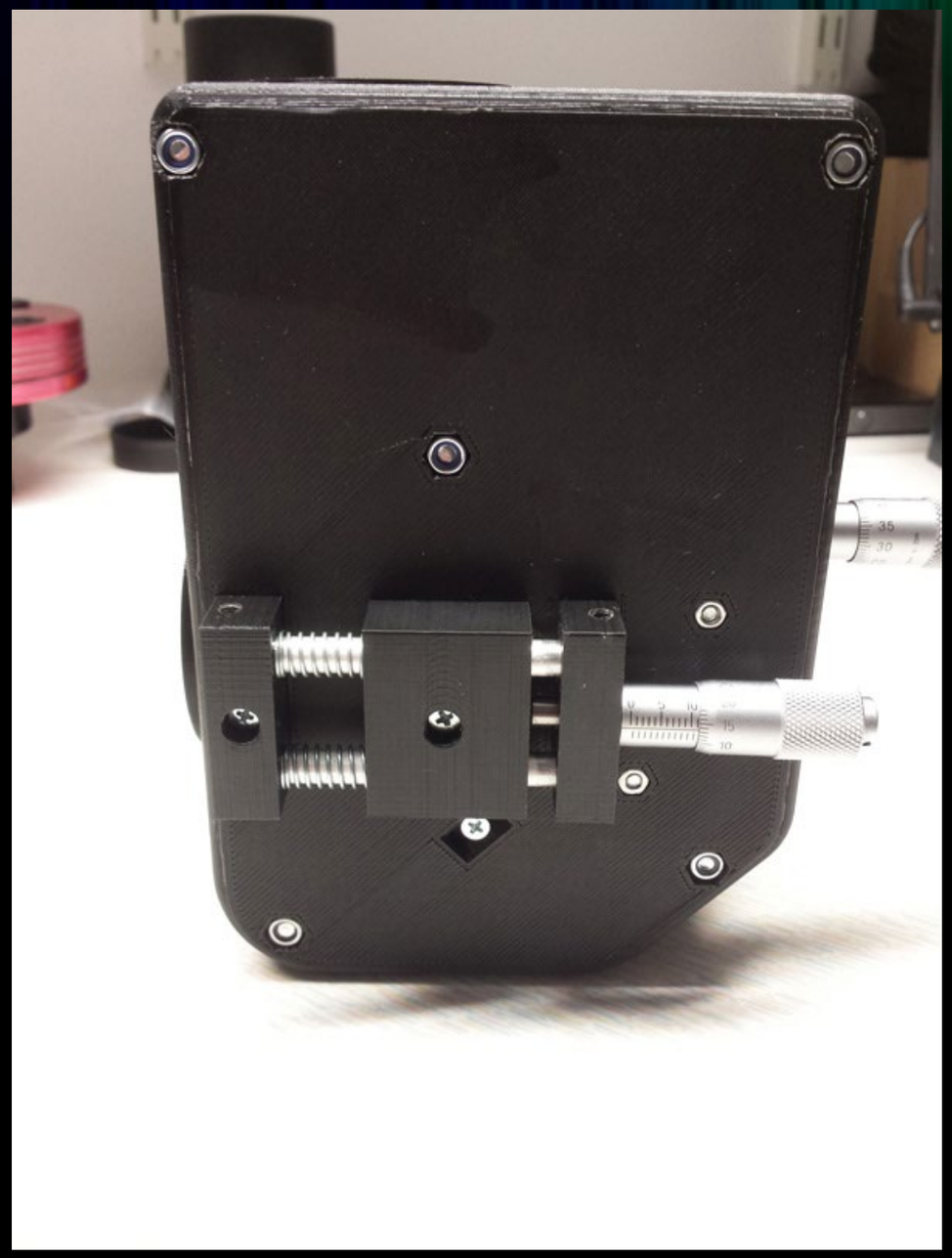

Ontwerp

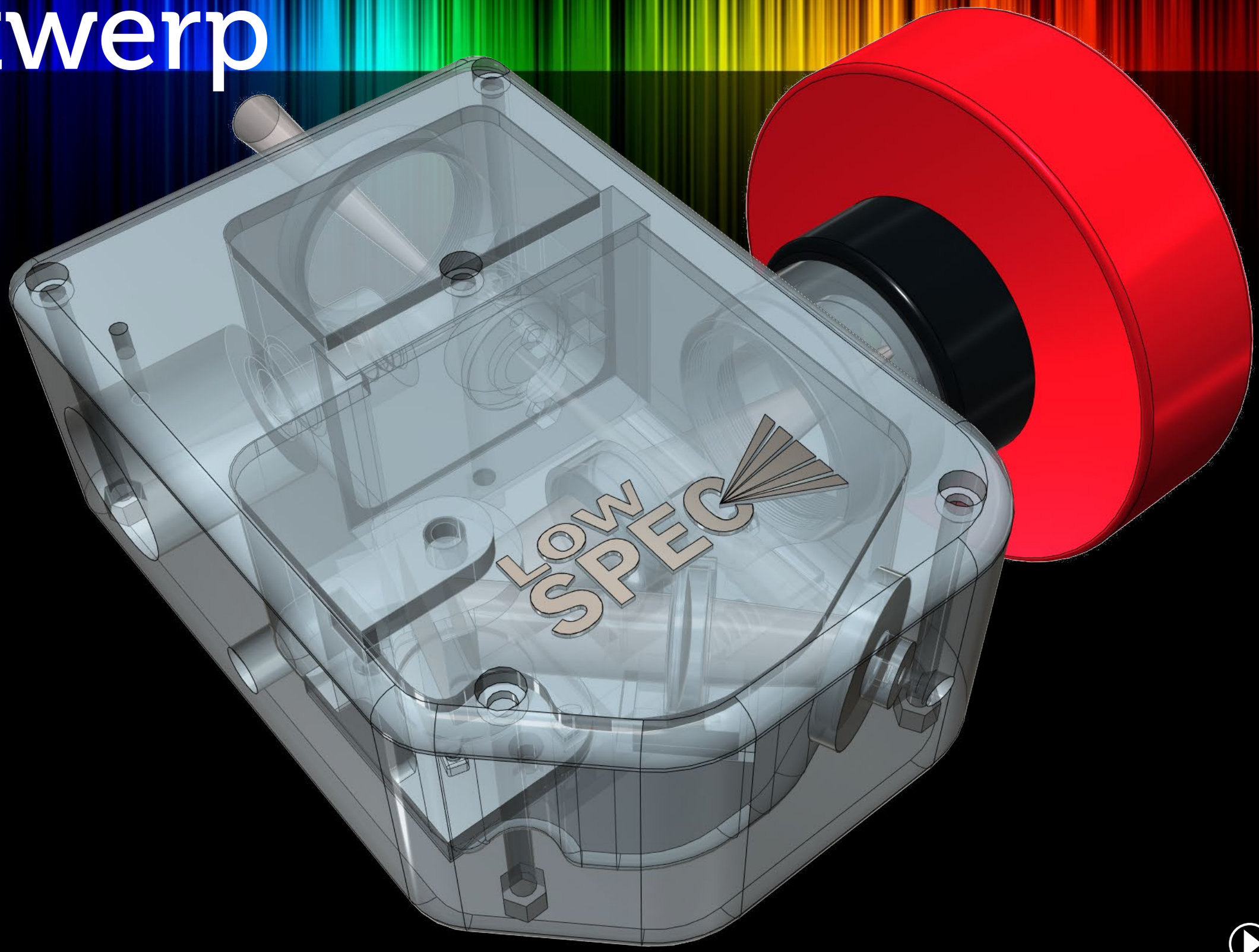

Autoguiding

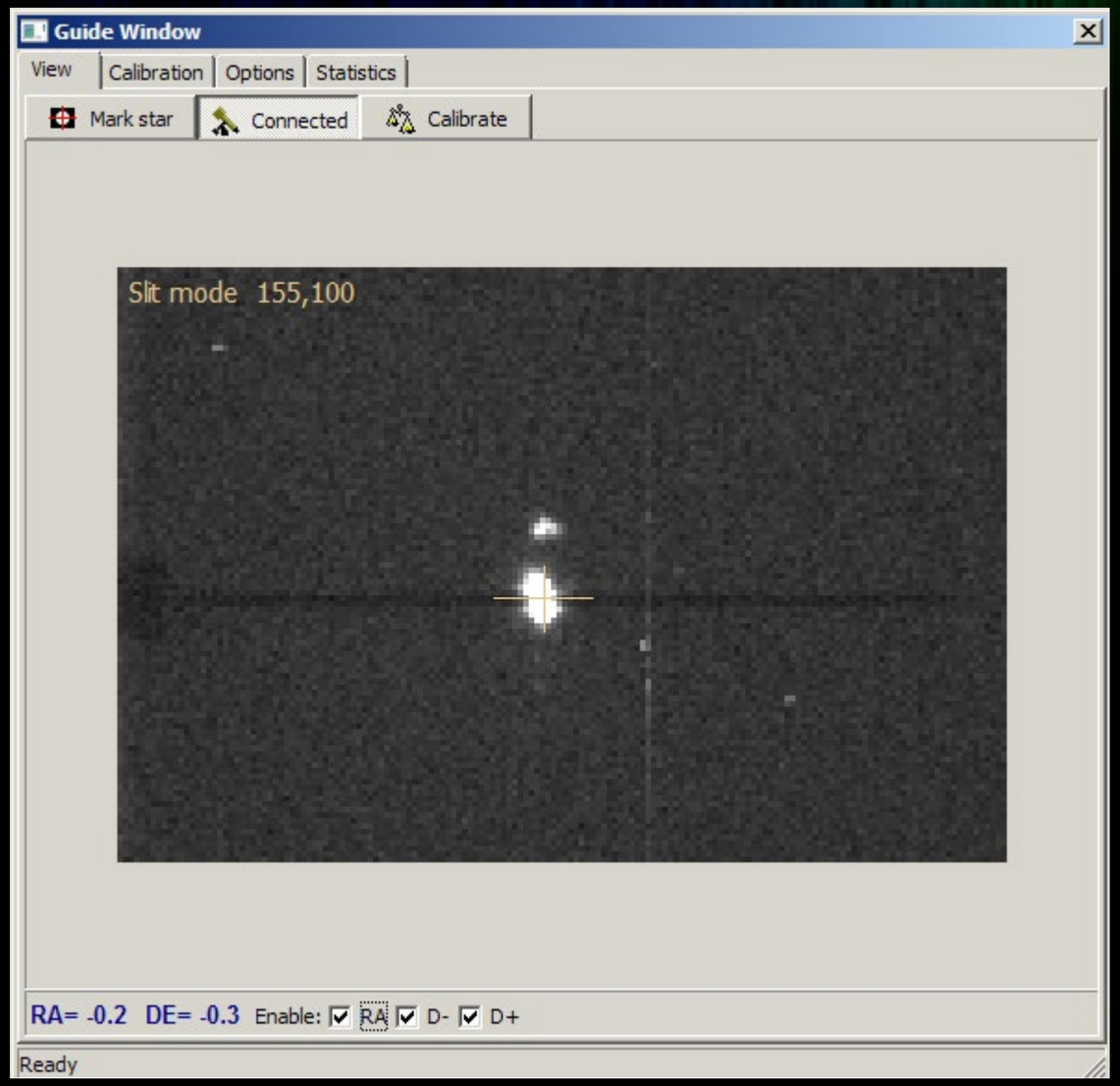

Zeta Tau

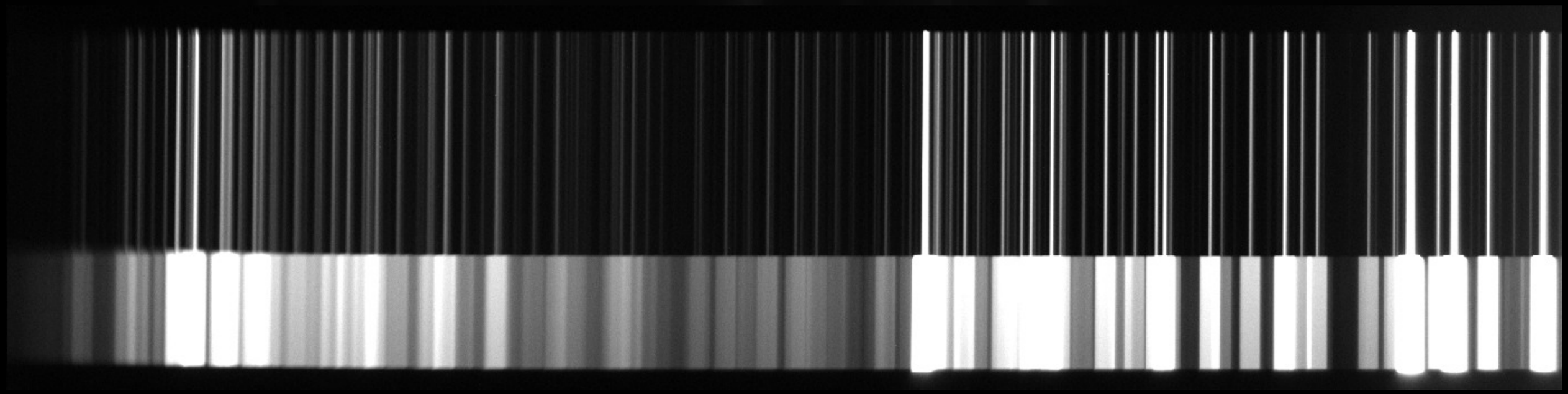

Zeta Tau

X Profile : Y = 216
5800
5600
5400
5200
5000
4800
4600
4400
4200
4000
3800
3600
3400
3200
3000
2800
2600
2400
2200
2000
1800
1600
1400
1200
1000
800
600
400
0 50 100 150 200 250 300 350 400 450 500 550 600 650 700 750 800 850 900 950 1000 1050 1100 1150 1200 1250 1300 1350

Alpha Cygni

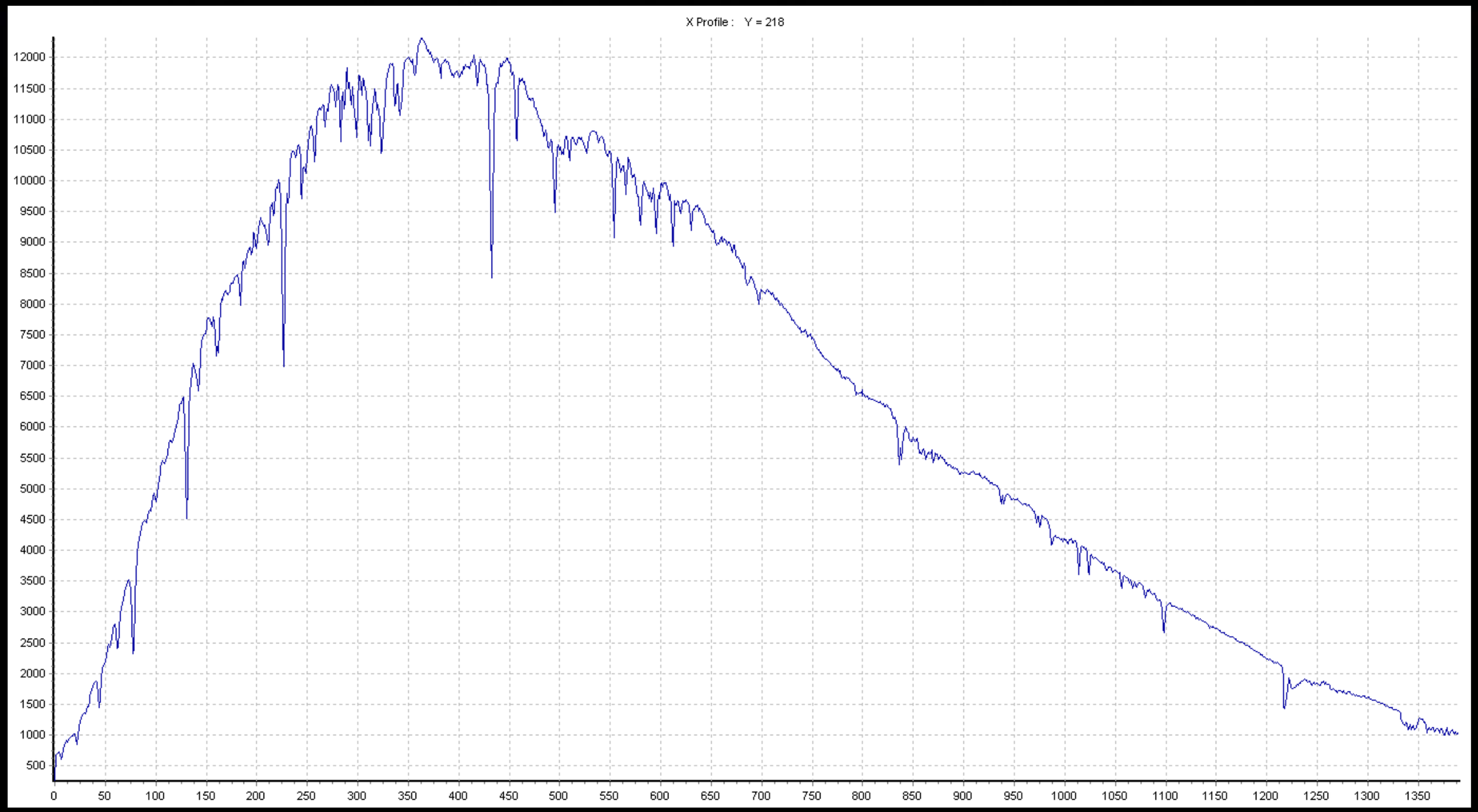
X Profile : Y = 218
12000
11500
11000
10500
10000
9500
9000
8500
8000
7500
7000
6500
6000
5500
5000
4500
4000
3500
3000
2500
2000
1500
1000
500
0
50
100
150
200
250
300
350
400
450
500
550
600
650
700
750
800
850
900
950
1000
1050
1100
1150
1200
1250
1300
1350

En verder?

- Focus nog steeds gevoelig voor temperatuurschommeling
  – Printen met andere materialen? Carbon Fibre
- Suggesties voor verbetering. Graag input van mensen met meer verstand van zake (optica, materiaalkunde)
- Kalibratie-unit
- Uiteindelijk een Open Source 3D print model voor iedereen beschikbaar maken.