LARGE FORMAT
COLLECTION

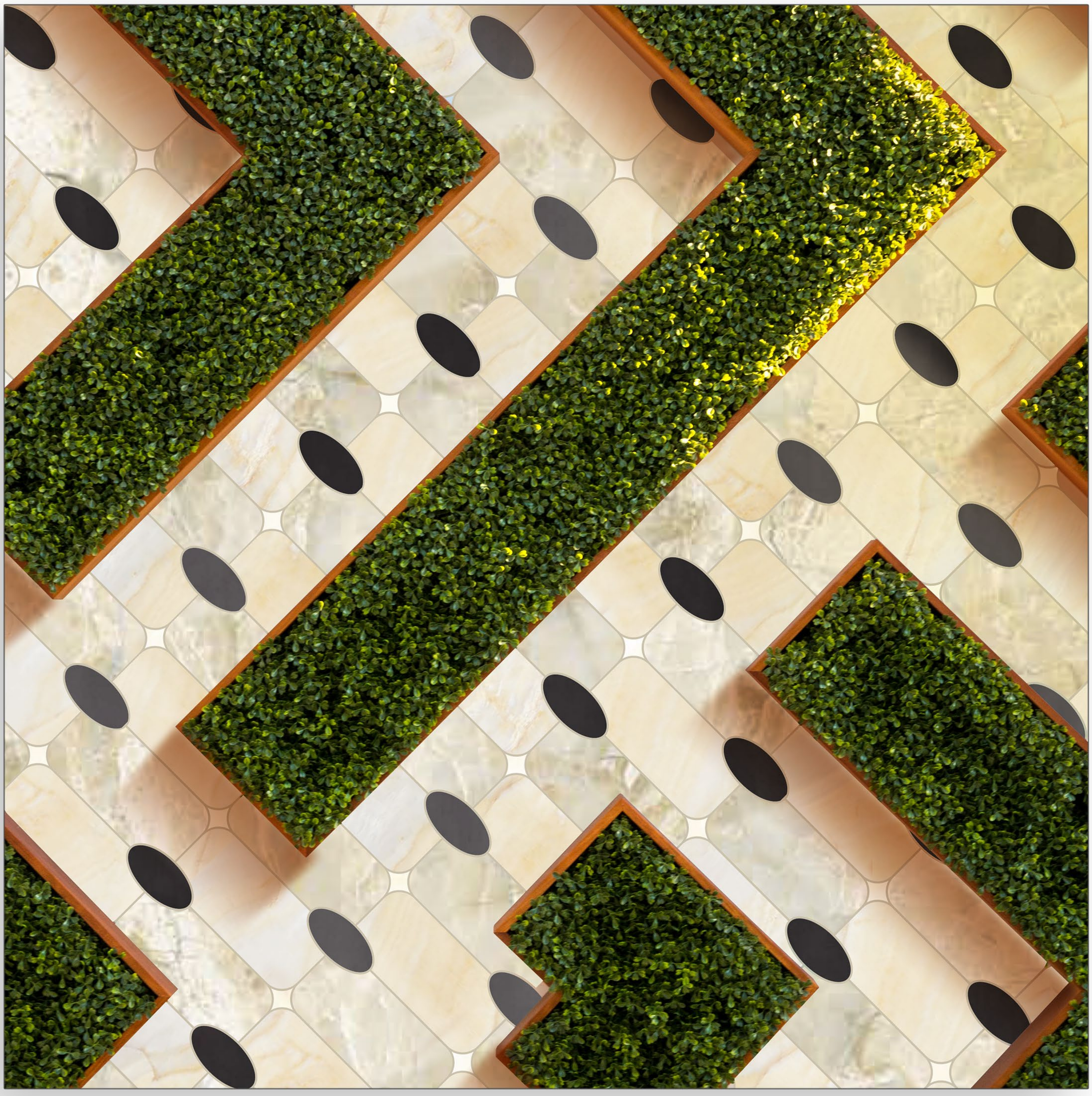

M

GALERIA

LARGE FORMAT
C O L L E C T I O N

Large format by Galeria Marble Mosaics propose, at the same time than postmodernism the importance of the aesthetics, the compromise of innovation and the brake up of the traditional. We get our inspiration from the past to create something that brings security, mixed with the best new tendencies and technologies.

Bigger is better, the large format offers mosaics with continuity in design. It looks beautiful on walls and floors, you can also use them on commercial and residential applications to make spaces look fantastic.

GALERIA
marble mosaics
the artist, the craftman

LARGE FORMAT

OVALS

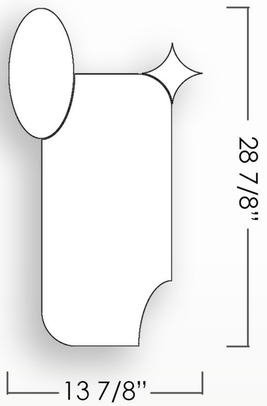

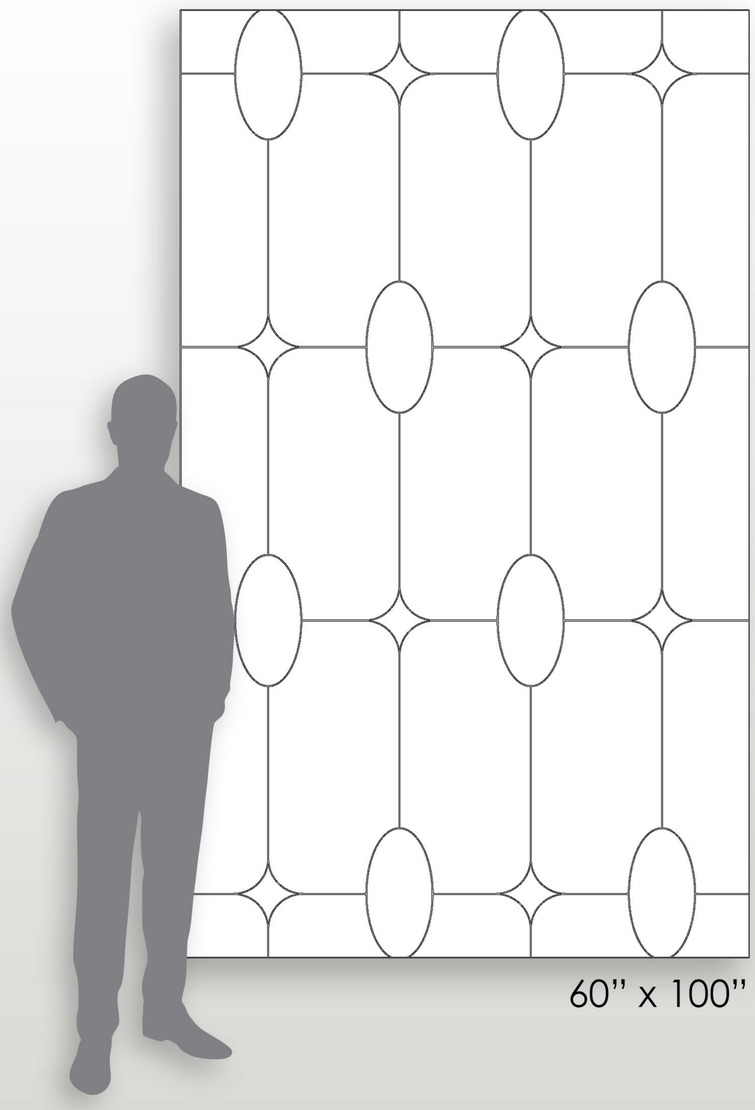

18OVAH
18OVAP

GALERIA
marble mosaics
the artist, the craftman

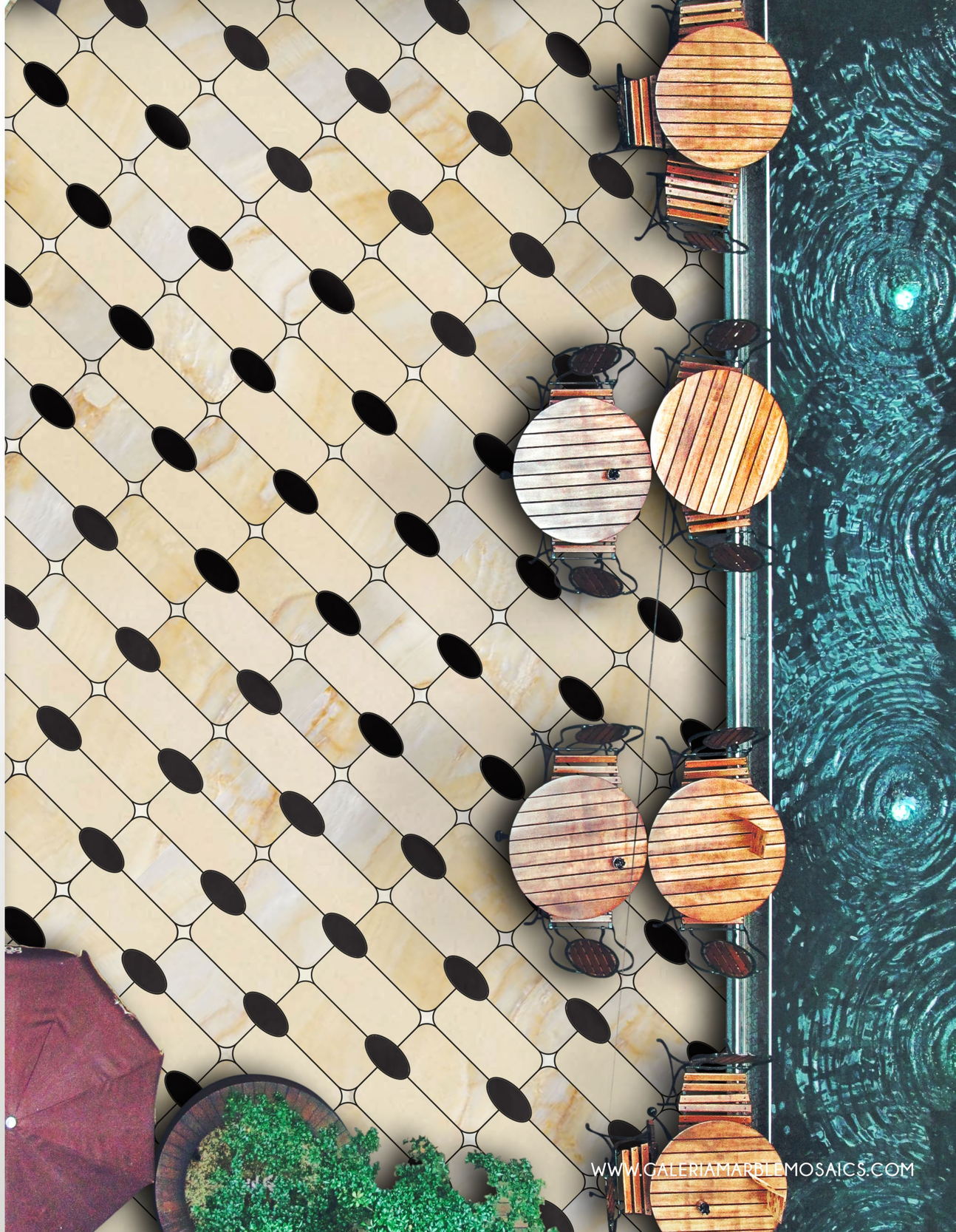

LARGE FORMAT

FLOWERS

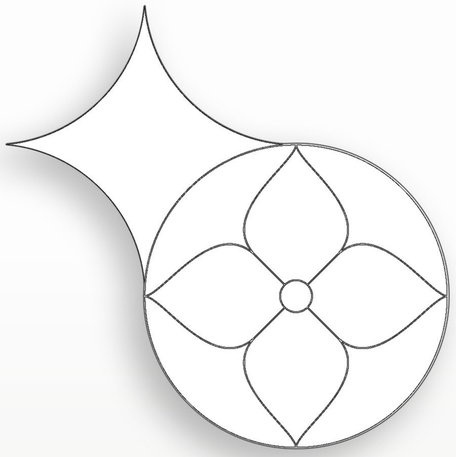

18FLOH
18FLOP

GALERIA marble mosaics
the artist, the craftman

WWW.GALERIAMARBLEMOSAICS.COM

LARGE FORMAT

BLOSSOM NIGHT MOS

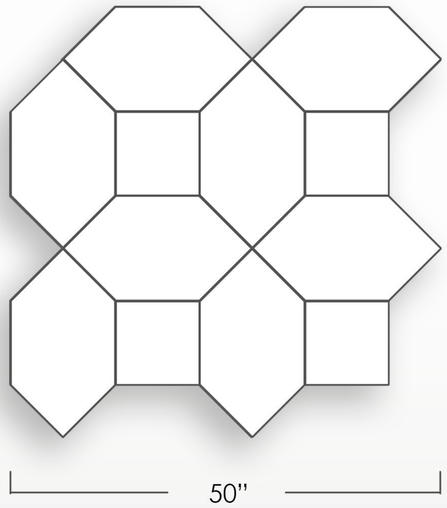

18BLOH
18BLOP

GALERIA marble mosaics
the artist, the craftman

LARGE FORMAT

TESSELLATION

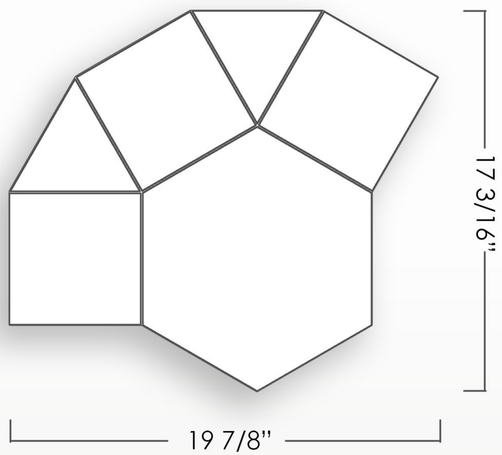

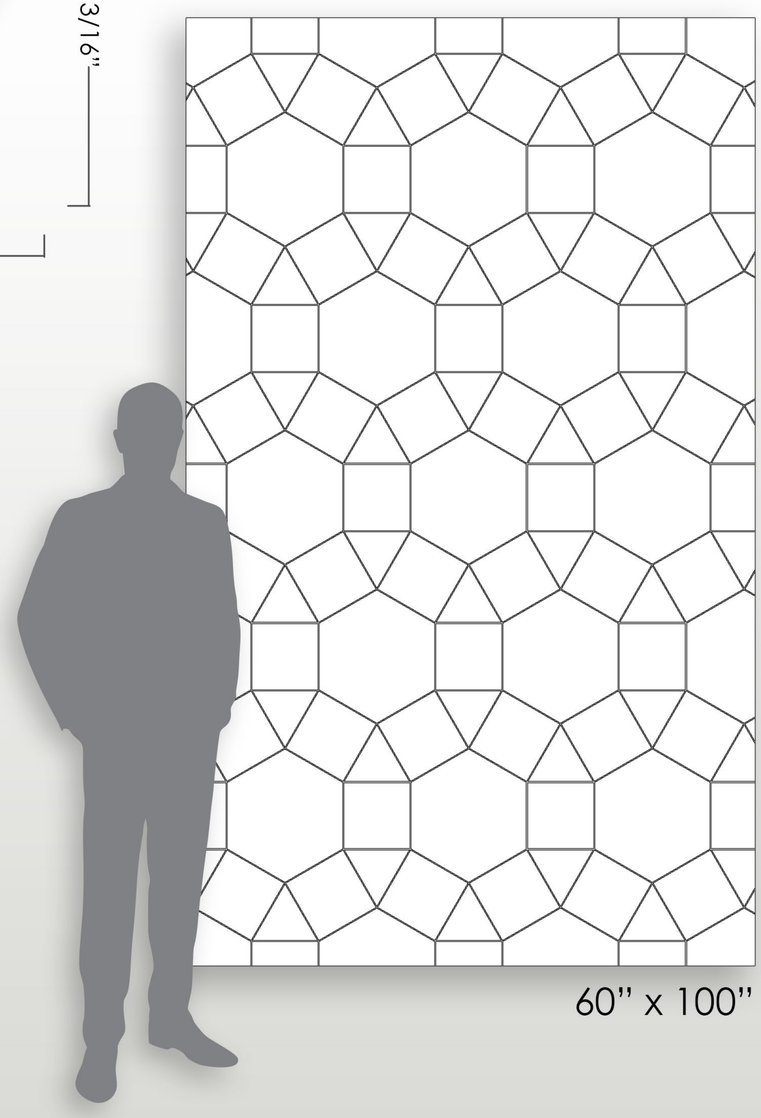

18TESH
18TESP

GALERIA
marble mosaics
the artist, the craftman

LARGE FORMAT

QUATREFOIL

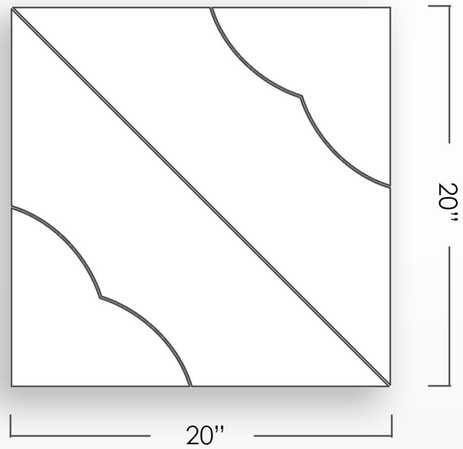

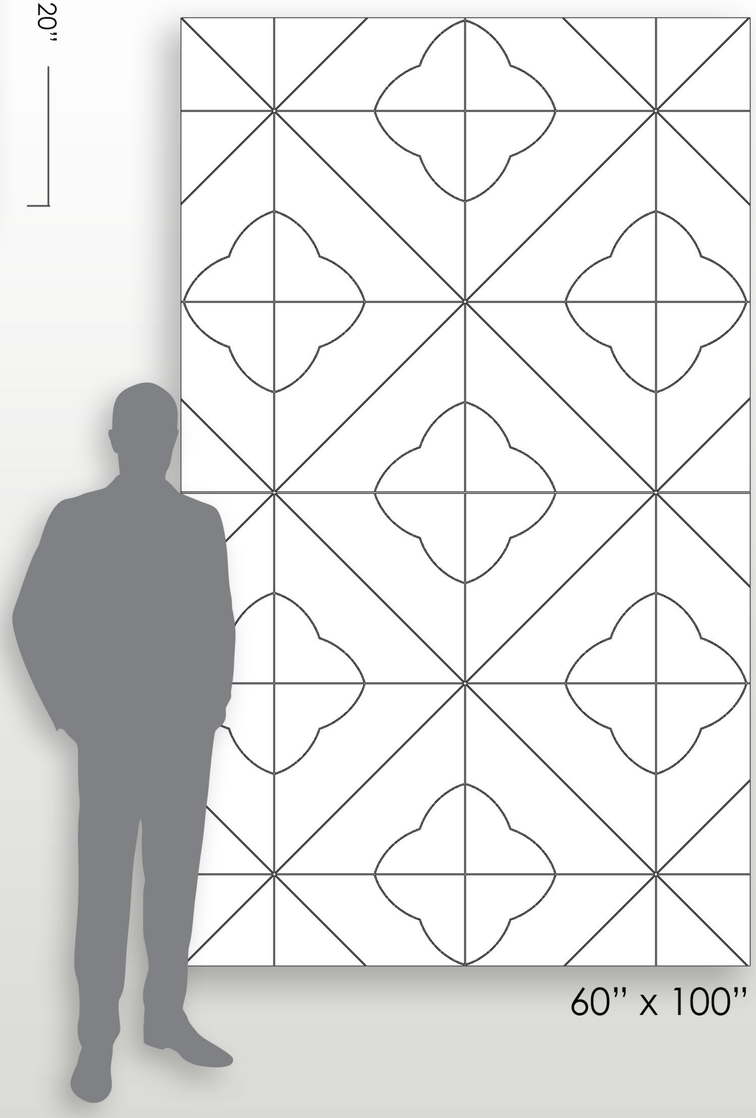

18QUAH
18QUAP

GALERIA marble mosaics
the artist, the craftman

LARGE FORMAT

WAVES

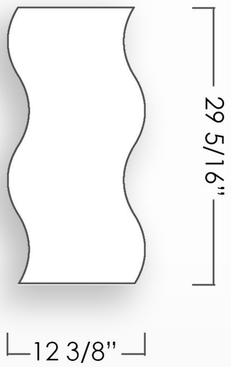

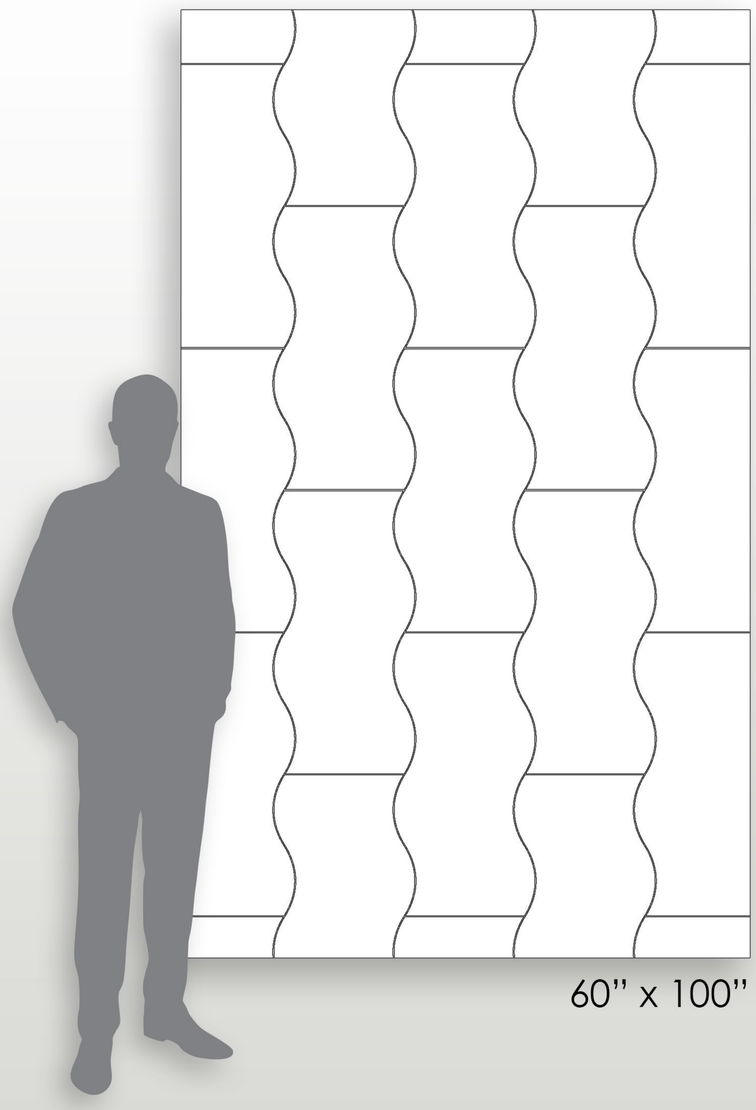

18WAVH
18WAVP

PETALS

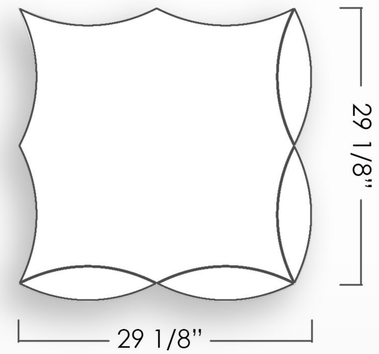

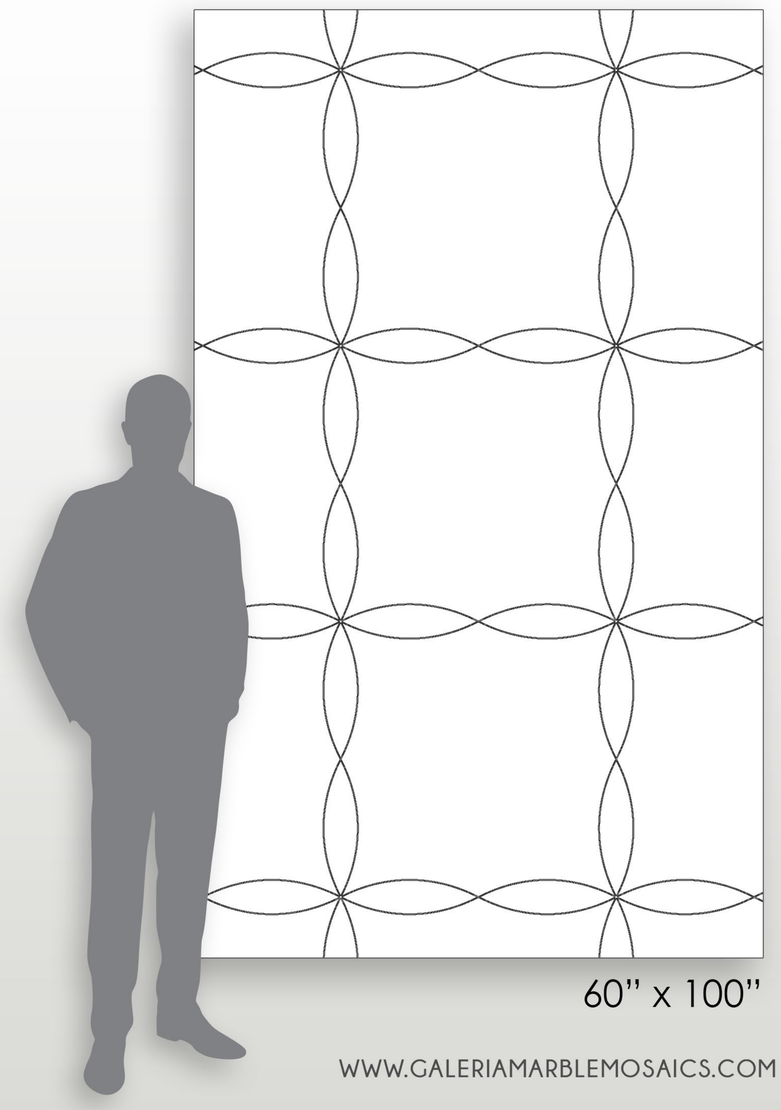

18PETH
18PETP

GALERIA marble mosaics
the artist, the craftman

WWW.GALERIAMARBLEMOSAICS.COM

LARGE FORMAT

SUNFLOWERS

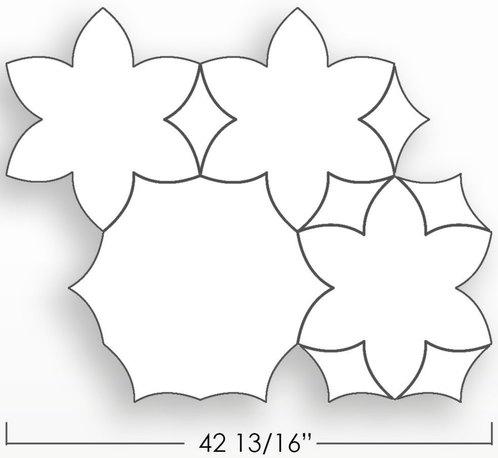

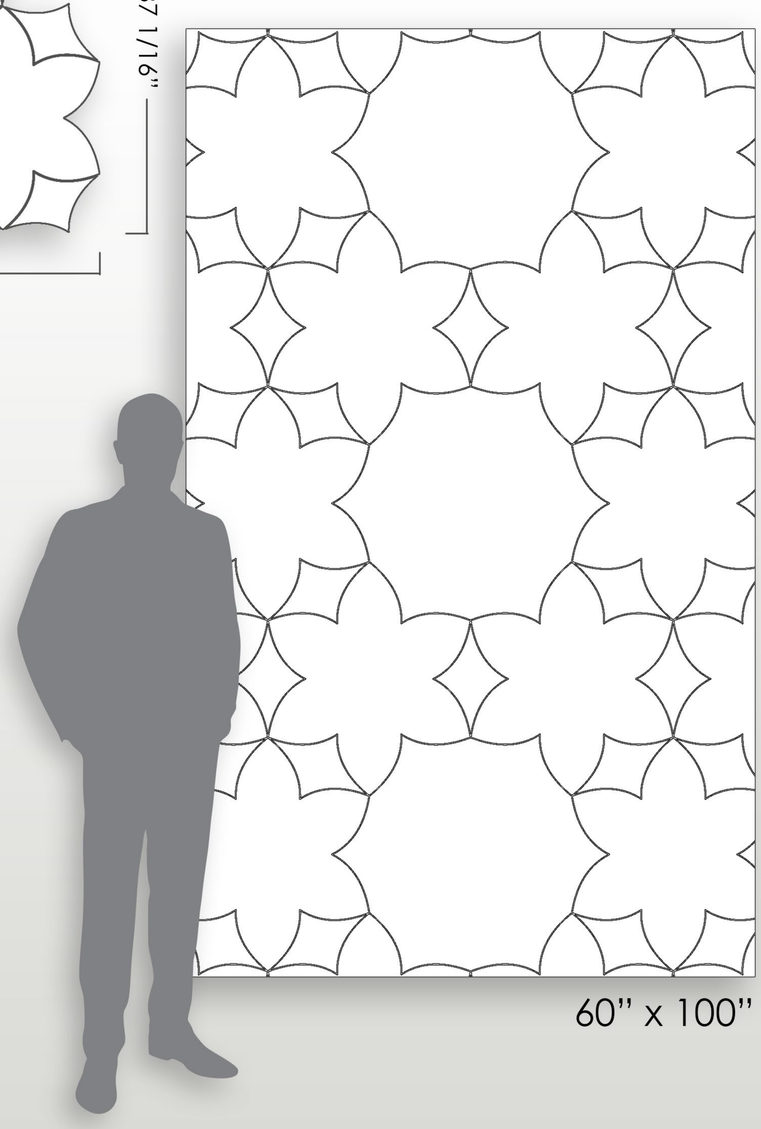

18SUNH
18SUNP

TRIANGLES

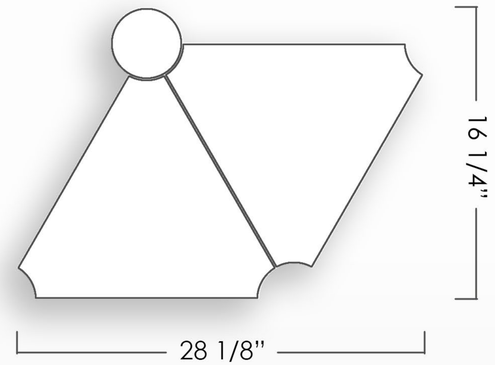

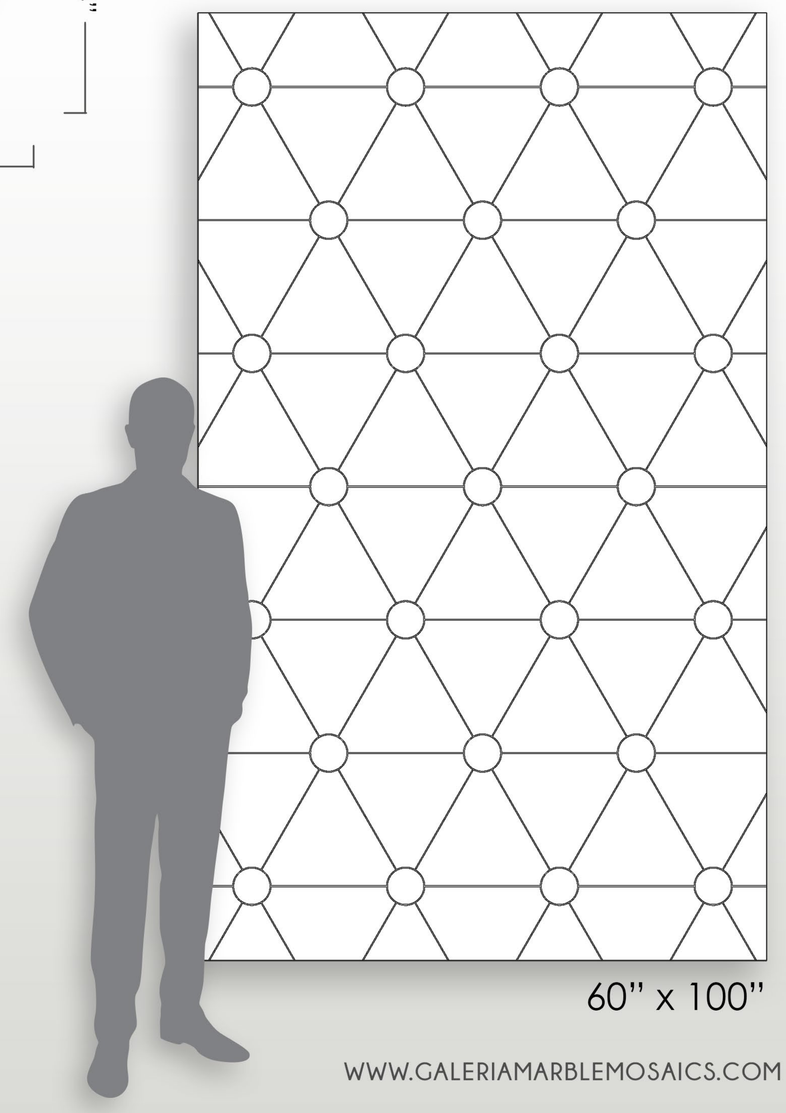

18TRIH
18TRIP

GALERIA marble mosaics
the artist, the craftman

WWW.GALERIAMARBLEMOSAICS.COM

LARGE FORMAT
FINISHES AND FORMATS

GROUP 1

Calacatta Vena Classico
Polished / Honed

Fantasy Bright
Polished

Fantasy Gold
Polished

Fantasy Cloud
Polished

Crystal Vena
Polished / Honed

White Sand Plane
Honed

White Plane
Polished / Honed

Black Plane
Chromed

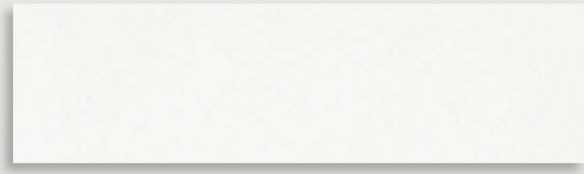

True White
Polished / Honed

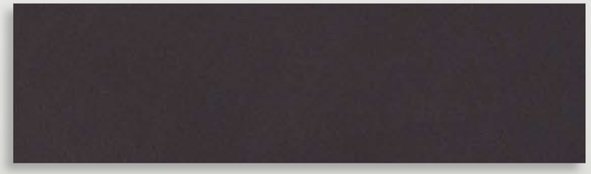

True Black
Polished / Honed

GROUP 2

Statuarietto
Polished / Honed

Cremino
Polished / Honed

Bardiglietto
Polished / Honed

Calacatta Oro
Polished / Honed

Bianco Carrara
Polished / Honed

LARGE FORMAT

C O L L E C T I O N

CONTACT US
ADDRESS:
4506 Modern Ln, Laredo, TX. 78041 USA

PHONE NUMBER:
(801) 2108513, (956) 2426905

E-MAIL:
info@galeriamarblemosaics.com

M

GALERIA