Two-wheel self-levelling suspension system: Self-diagnosis

General notes

The self-levelling suspension system (air-spring system) in the A6 assures vehicle suspension and oscillation behavior virtually independent of the load carried.

The air-spring system consists of the following principal components:

- Air-supply unit, with control unit, compressor and control valves.
- G84 sender for self-levelling suspension system
- Air-springs on the rear axle
- Air-pressure-dependent shock absorbers

Depending on the load carried by the vehicle (in the boot), the control unit determines the distance between the axle and the bodywork using the measured data supplied by the self-levelling suspension system sender. Within 5 sec. in stationary mode and within 50 sec. in travelling mode, the system starts to adjust the height of the vehicle's tail to the target vehicle height.

With the engine not running, the operating-time monitoring system (integrated into the control unit) switches off after the compressor has been running for a total of 60 sec., in order to spare the battery. Complete control immediately becomes possible again as soon as the ignition is switched on and the engine started.

If the ignition is on and the compressor has been running for 120 sec. without stopping, thermal tripping (with a fault message) occurs. Complete regulation is then only possible after 48 min. A sporadic fault message is then recorded in the control unit => Page 01-74. This fault can be erased only after 6 min. Pump operation for 15 sec. is possible again after a cooling-down period of 6 min., however.

The vehicle remains in after-running mode for 15 min. once the ignition has been switched off. Level monitoring is then deactivated and changes to sleep mode. The system is reactivated, however, if a door or the rear hatch is opened. The transition from sleep mode to after-running mode can take place only four times without activation of the ignition, however.

The control unit detects faults and malfunctions in the system and stores them in a non-volatile memory unit.

The basic setting procedure (system initialization) must be performed via the log-in procedure when the control unit is changed => Page 01-50.

Two-wheel self-levelling suspension system: Self-diagnosis
Final control diagnosis

Notes:

- Final control diagnosis can be performed only with the vehicle stationary and the engine switched off!
- If a fault is ascertained during the final control diagnosis, find cause of fault and eliminate it!
- Switch on ignition.

The following final control elements are activated one after the other during the final control element test:

- Activation of self-levelling suspension system indicator light K134
- Raising of the vehicle
  - Indicator light,
  - Self-levelling suspension system compressor relay J403 and compressor motor V66,
  - Both suspension-strut valves, N150 and N151, are activated.
- Checking of attitude
  - Indicator light activated

- Lowering of the vehicle
  - Indicator light,
  - Both suspension-strut valves -N150 and -N151 are activated
  - -Self-levelling suspension system release valve -N111 is activated
- Check vehicle inclination
  - Indicator light is activated.

Objective of the final control test:

- Compressor function
- Check valves
- Check line for blockage and leaks

Perform Function "03 - Final control diagnosis"

→ Display:

Fast data transfer HELP Select function XX

- Press Buttons -0- and-3-.-.

→ Display:

Fast data transfer Q 03 - Final control diagnosis

- Confirm the entry using the Q button.

→ Display:

Final control diagnosis Self-levelling suspension system indicator light -K134

The indicator light on the dash panel insert flashes at 3 Hz.

- Press the button.

Note:

The indicator light flashes at 3 Hz

throughout the final control test.

→ Display:

Final control diagnosis □
Vehicle is raised

The vehicle is raised until the □button is pressed or until the stop time (approx. 30 s).

The vehicle is raised until the +50 mm high level is reached.

□ Press the □button.

→ Display:

Final control diagnosis □
Vehicle inclination check

Check visually whether the vehicle is horizontal

□ Press the □button.

→ Display

Final control diagnosis □
Vehicle is lowered

The vehicle is lowered by releasing air until the ® button is pressed or until the stop time (approx. 30 s).

The vehicle is lowered until the -50 mm low level is reached.

□ Press the □button.

→ Display:

Final control diagnosis □
Vehicle inclination check

Check visually whether the vehicle is horizontal

□ Press the □button.

→ Display:

Final control diagnosis □
End

□ Press the □button.

The tester is now in the basic function mode again

→ Display:

Fast data transfer HELP
Select function XX

Two-wheel self-levelling suspension system: Self-diagnosis
Read measured value block

Note:

Current system status can be determined using the "Read measured value block" function.

Perform Funct. "08 - Read measured value block"

→ Display:

Fast data transfer HELP Select function XX

- Press Buttons -0- and -8-

→ Display:

Fast data transfer Q 08 - Read measured value block

- Confirm the entry using the Q button.

→ Display:

Read measured value block Enter display group number XXX

- Enter the display group number 001 and confirm it using the Q button.

The selected measured value block is now displayed in standardized form => Page 01-45.

Two-wheel self-levelling suspension system: Self-diagnosis
Measured value block overview

Measured value block 001

Display	Display value	Designation
Read measured value block 1 1 2 3	actuated 1)	1 = Transverse check valve
	not actuated 1)	2 = Release valve
	Relay ON 1)	3 = Compressor relay

1)Example of display.

Display value table

The following combinations of the display values 1 to 3 can occur:

1	2	3	Function
actuated	not actuated	Relay ON	"raise"
actuated	actuated	Relay OFF	"lower"
not actuated	not actuated	Relay OFF	"0"

Possible causes and rectification of faults => from Page 01-74 onward.

Measured value block 002

Display	Display value	Designation
Read measured value block 2 1 2 3 4	Deviation from1)	1 = Text
	Reference level1)	2 = Text
	10 mm1)	3 = Vehicle height deviation from the reference level or text
	177 1)	4 = Level

1)Example of display

Display value table

1	2	3	4
Deviation. from	Reference level	-110 to 111 mm3)	Level in increments
Reference level2)	not 2)	learnt 2)	

Possible causes and rectification of faults => from Page 01-74 onward.

2) Display, if no basic setting has been performed => Basic setting, Page 01-50.

3) In rest position: Display approx. 0 mm. In case of load change: Value changes and stabilizes back to approx. 0 mm again.

Measured value block 003

Display	Display value	Designation
Read measured value block 3 1 2 3 4	5.100 V1)	1 = Supply voltage for sender
	1.400 V 1)	2 = Signal voltage for sender

	0 km/h 1)	3 = Speed signal
		4 = not assigned

1) Example of display

Display value table

1	2	3	4
0 to 15 V2)	0 to 5 V3)	0 to 255 km/h4)	

Possible causes and rectification of faults=> from Page 01-74 onward.

2) See Test Step 3, Target Value 4.5 to 5.5 V; in case of divergence perform electrical check => Page 01-57, Test Step 3.

3) See Test Step 4, Target value in rest position approx. 2 -3 V; in case of load change voltage change with subsequent stabilization to approx. 2.5 V

4) Compare display against tachometer indication; if necessary, check dash panel insert. Poll fault memory if no indication=> from Page 01-72.

Measured value block 004

Display	Display value	Designation
Read measured value block 4 1 2 3 4	Tml. 50 ON1)	1 = Starter (Ignition on)
	Tml. 30 ON	2 = Terminal 30, permanently positive
	12.4 V1)	3 = Battery voltage on Terminal 30
		4 = not assigned

1) Example of display

Display value table

1	2	3	4
Tml. 50 ON2) Tml. 50 OFF2)	Tml. 30 ON	approx. battery voltage	

Possible causes and rectification of faults => from Page 01-74 onward.

2) Perform Test Step 5 if the display shows "Tml. 50 ON" or "Tml. 50 OFF" continuously.

Measured value block 005

Display	Display value	Designation
Read measured value block 5 1 2 3 4	Adjustment pause1)	1 = Text status
	off 1)	2 = Text
	WSC 067891)	3 = Workshop code
	open 1)	4 = Doors or rear hatch

1) Example of display

Display value table

1	2	3	4

Adjustment pause Malfunction2) Adjustment	raising lowering off " " = space	WSC xxxxx	open 3) closed 3)

Possible causes and rectification of faults => from Page 01-74 onward.

2) Poll fault memory => from Page 01-72 onward.

3) If no display value appears in display box 4; Poll fault memory => from Page 01-70 onward, and also poll central locking system control unit fault memory.

=> Bodywork self-diagnosis; Repair Group 01

Two-wheel self-levelling suspension system: Self-diagnosis
Basic setting

Basic setting must be performed if the control unit, the self-levelling suspension system sender or the entire air-supply unit has been changed.

The reference level must be set.

Test preconditions

- Power supply and fuses for the particular system O.K.

=> "Circuit diagrams" file, fault detection - Electrical system and fitting location

- Connect Fault Reader V.A.G 1551
  => Page 01-4
- Use special tool T 40002 (wooden block)

Working procedure

- Position the vehicle on an elevating platform
- Prefill the air-springs using the final control diagnosis procedure
- Position the vehicle on special tool T 40002.

=> Running gear, Front- and four-wheel drive vehicles; Repair Group 43; Pneumatic self-levelling system, four-wheel pneumatic suspension

- Perform basic settings
- Basic setting is accomplished using Function 11, "Log-in"

Perform Function "11 - Log-in"

→ Display:

```
Fast data transfer      HELP
Select function XX
```

- Press Buttons -1- and-1-.

→ Display:

```
Fast data transfer    Q
11 - Log-in procedure
```

- Confirm the entry using the Q button

→ Display:

```
Log-in procedure
Enter code number XXXXX
```

- Press Buttons 3, 1, 5, 6 and 4.

→ Display:

```
Log-in procedure    Q
Code 31564
```

- Confirm the entry using the Q button.

Note:

The system "forgets" the old reference level after confirmation. An entry in the

fault memory occurs (fault 01437).

→ Display:

Fast data transfer HELP
Select function XX

- Press Buttons -0- and -4-.

→ Display:

Fast data transfer Q
04 Basic setting

- Confirm the entry using the Q button

→ Display:

Basic setting
Display group number enter XXX

- Press Buttons 0, 0 and 1

→ Display:

Basic setting Q
Display group number 001

- Confirm the entry using the Q button.

→ Display

System in Basic setting
Wait

The system releases air and lowers the tail down to special tool T 40002.

→ 1 appears on the display after completion of the basic setting:

System in basic setting
Continue with basic setting 2

- Only press Button -3- now.

→ Display

System in basic setting
Control position learnt

- Press the button.
- The basic setting is then completed
- Now clear the fault memory
  => Page 01-9.

Two-wheel self-levelling suspension system: Self-diagnosis
Adaption: Activate and deactivate self-levelling suspension system

The self-levelling suspension system can be deactivated and reactivated using the Adaption function.

Note:

The indicator light flashes at 3 Hz during deactivation if the ignition is on.

The system is reactivated at a travelling speed of >20 km/h.

Perform Function "10 - Adaption"

→ Display:

```
Fast data transfer     HELP
Select function XX
```

- Press Buttons -1- and-0-.

→ Display:

```
Fast data transfer     Q
10 - Adaption
```

- Confirm the entry using the Q button.

→ Display:

```
Adaption    Q
Enter channel number XX
```

- Press Buttons -0- and -1-.

→ Display:

```
Adaption    Q
Enter channel number 01
```

- Confirm the entry using the Q button.

→ Display: The current status of the self-levelling suspension system is displayed (e.g. deactivated).

```
Channel 1    Adaption 1
Control system deactivated WSC 06812
```

0 - Self-levelling suspension system active
1 - Self-levelling suspension system deactivated

- Press the button.

Activate self-levelling suspension system

→ Display:

```
Channel 1    Adaption 1
Enter adaption value XXXXX
```

- Press Button -0- five times.

→ Display:

```
Channel 1    Adaption 1    Q
Enter adaption value 00000
```

- Confirm the entry using the Q

button.

→ Display:

```
Channel 1    Adaption 0    Q
Control system activated        WSC 06812
```

- Confirm the entry using the Q button.

→ Display:

```
Channel 1    Adaption 0    Q
Store changed value?
```

- Confirm the entry using the Q button..

→ Display:

```
Channel 1    Adaption 0
Changed value has been stored
```

- Terminate adaption using the button.

→ Display:

```
Fast data transfer    HELP
Select function XX
```

Deactivate self-levelling suspension system

→ Display:

```
Channel 1    Adaption 0
Enter adaption value XXXXX
```

- Enter the adaption value 00001.

→ Display

```
Channel 1    Adaption 0    Q
Enter adaption value 00001
```

- Confirm the entry using the Q button.

→ Display:

```
Channel 1    Adaption 1    Q    Control system deactivated WSC 06812
```

- Confirm the entry using the Q button.

→ Display:

```
Channel 1    Adaption 1    Q
Store changed value?
```

- Confirm the entry using the Q button.

→ Display:

```
Channel 1    Adaption 1
Changed value has been stored
```

- Terminate Adaption using the button.

→ Display:

```
Fast data transfer    HELP
Select function XX
```

- Switch the ignition off.
- Disconnect the connections to the

Fault Reader V.A.G 1551.

Electrical/electronic components and fitting locations

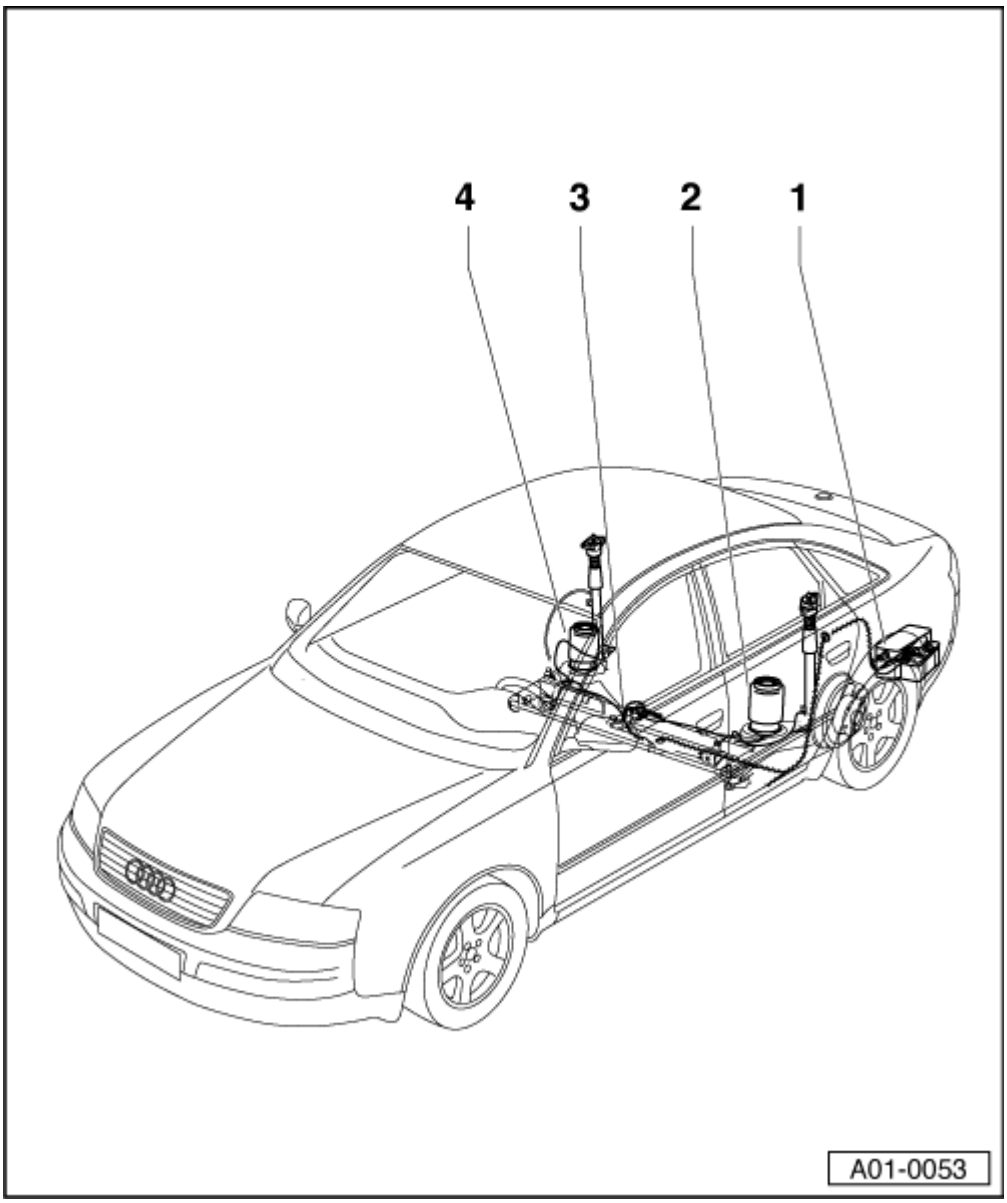

1 - Air supply unit

The air supply unit consists of the following components:

- Adaptive suspension control unit -J197-
- Adaptive suspension compressor relay -J403-
- Adaptive suspension compressor motor -V66-
- Adaptive suspension drain valve -N111-
- Rear left suspension strut valve -N150-
- Rear right suspension strut valve -N151-
- Multi-pin connectors with contact assignment
- If the control unit is to be replaced, select the “Replacement” function for the appropriate control unit in the “Guided fault-finding” routine.

The vehicle diagnostic, testing and information system -VAS 5051- is to be used for this purpose.

2 - Rear left air spring

3 - Levelling system sender -G84-

- Checked by self-diagnosis

4 - Rear right air spring

Air supply unit

1 - VOSS connections (air connection)

2 - Multi-pin connector

- In the event of malfunctions, check connector for corrosion.
- The 20-pin wiring harness connector is plugged into the control unit in the air supply unit until the connector is felt to engage.

3 - Noise insulation box

4 - Two-pin connector (power supply for adaptive suspension compressor motor -V66-)

- The two-pin round connector for the compressor supply is plugged in until the connector is felt to engage.

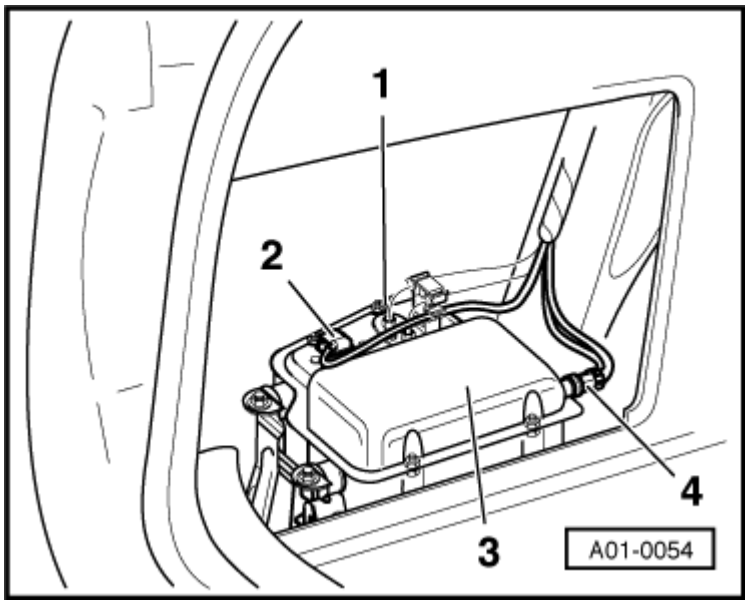

Design of noise insulation box

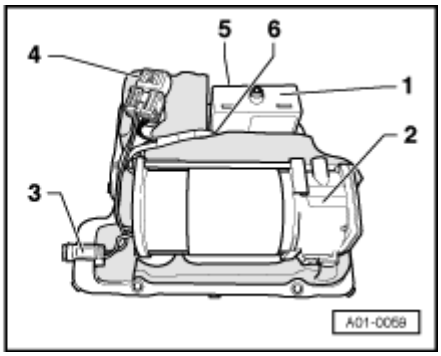

1 - Adaptive suspension control unit -J197-
2 - Adaptive suspension compressor motor -V66- and compressor
3 - Two-pin connector
4 - Adaptive suspension compressor relay -J403-
5 - Multi-pin connector at adaptive suspension control unit -J197- (on back)
6 - Twelve-pin connector at adaptive suspension control unit -J197-

The valves are located beneath the grey foam.

Exploded view: Air supply unit

The tightening torque for all the air pipes on the Audi A6 is 2 Nm.

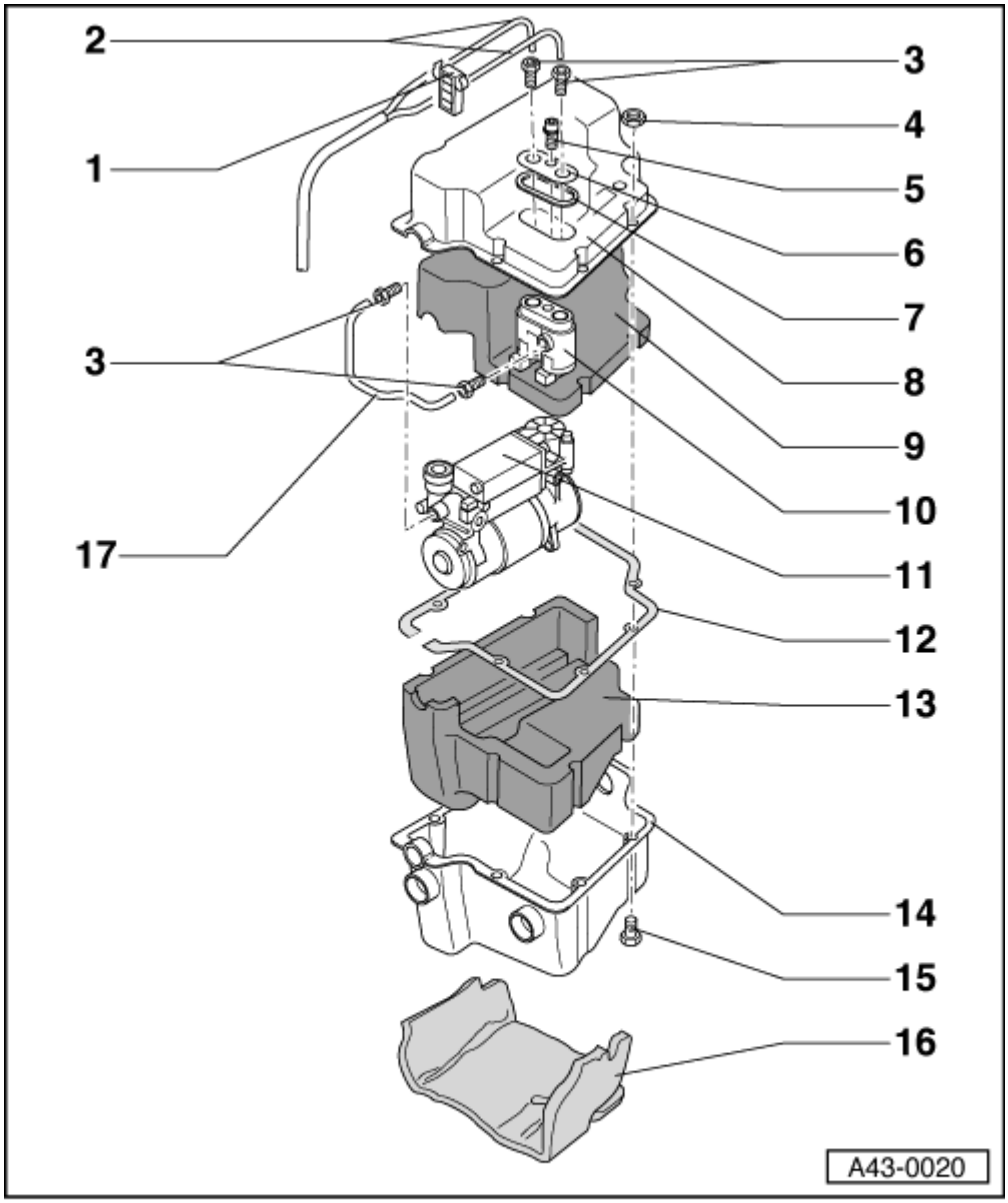

1 - Clip

2 - Air pipe

Heed the note → Fig.

3 - Connection piece

4 - Hexagon nut M 6

5 - Self-tapping screw

6 - Shim

- For centring valve unit

7 - Rubber seal

8 - Housing cover

9 - Top part of foam pad

10 - Valve unit

11 - Air compressor

12 - Seal

- Always replace

13 - Bottom part of foam pad

14 - Unit housing

15 - Hexagon bolt, 10 Nm

- If re-used, apply locking compound - D 000 600 A2-

16 - Fleece mat

- A6 Avant only
- Formed fleece mat bonded onto lower shell of unit

17 - Air pipe

- From compressor to solenoid valve

Heed the note → Fig.

Basic setting procedure

Heed the test requirements for wheel alignment on vehicles with adaptive suspension (1BG) → .

Test requirements:

- Vehicle kerb weight
- For inflation pressure, refer to inflation pressure label or → Wheels/tyres catalogue; Section 2 for summer tyres and Section 4 for winter tyres.
- Correct tread depth (set 1 mm less for each 1 mm of wear).
- Wait for completion of the adaption process (observe compressor operation).
- Measure the vehicle level relative to the ground at the appropriate points (specified jacking points).

Basic setting must be performed if the control unit, the turn angle sensor or the entire unit is replaced.

– Set the special tool to the appropriate length (refer to assignment of ground clearances → Chapter).

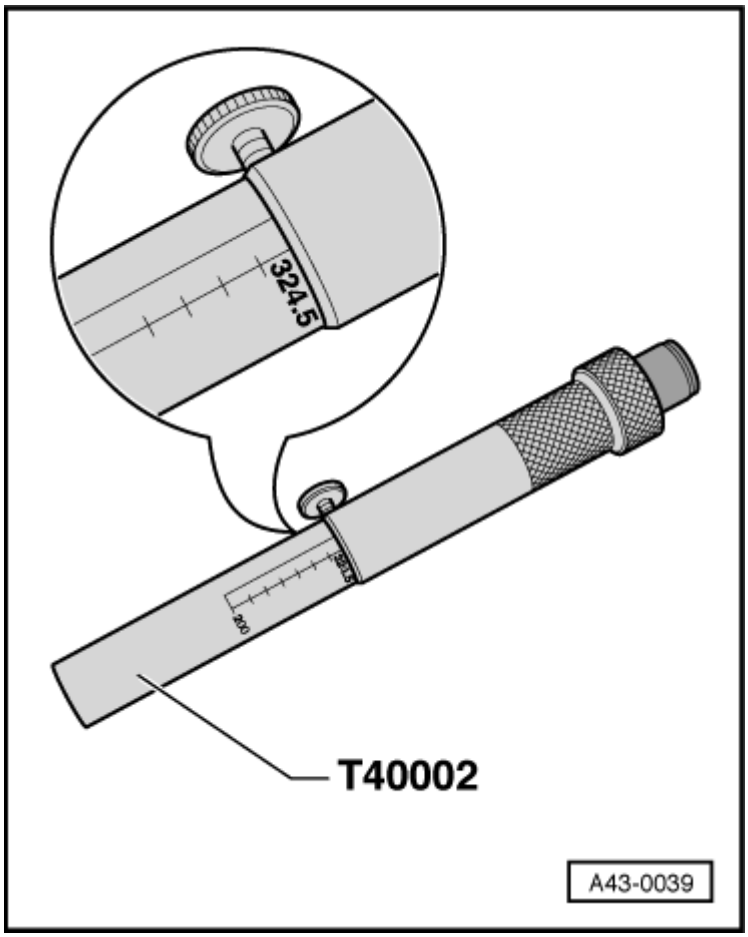

Assignment of ground clearances (setting dimensions) for adaptive suspension

Applicable to tyres:	195/65 R15 205/60 R15 205/55 R16	215/55 R16 235/45 R17	Applicable to all tyres
FWD Saloon/Avant	324,5 → Note1	333 → Note1	-
4WD Saloon/Avant	324,5 → Note1	333 → Note1	-
FWD/4WD Saloon/Avant V8	-	-	333 → Note1

1) 1/ Test dimension ± 8 mm

Special tools and workshop equipment required

- Spacer gauge -T40002-

– Raise the vehicle (rear suspension fully extended).

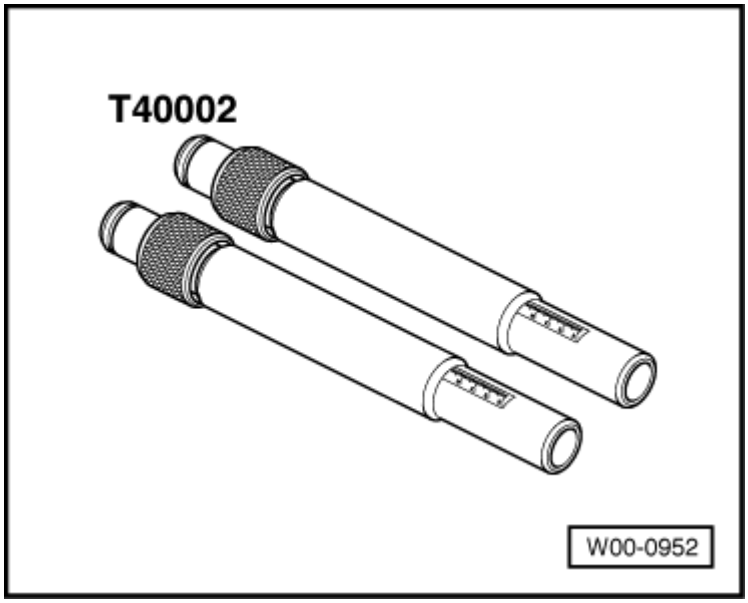

– Insert the spacer gauge -T40002- in the specified jacking points -arrows- at the rear.

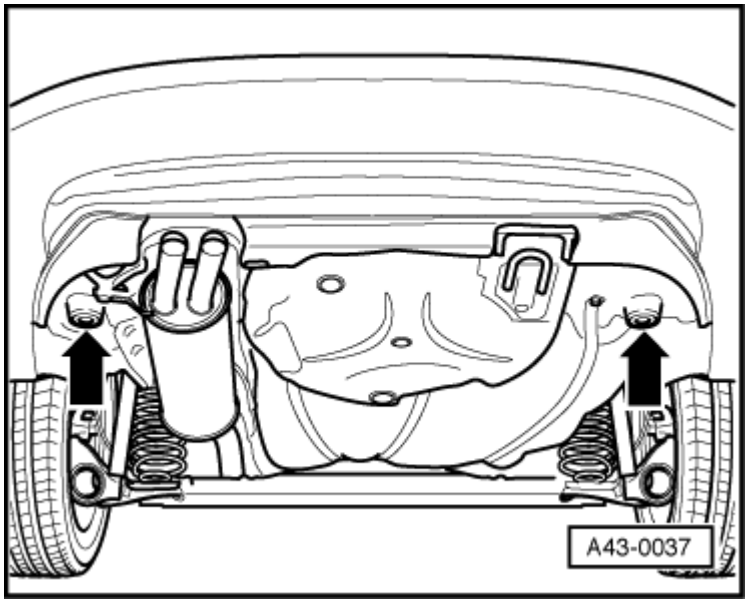

– Turn the two knurled screws so that the

rubber bead at the specified jacking point is compressed and the spacer gauge is held in position.

– Lower the vehicle.

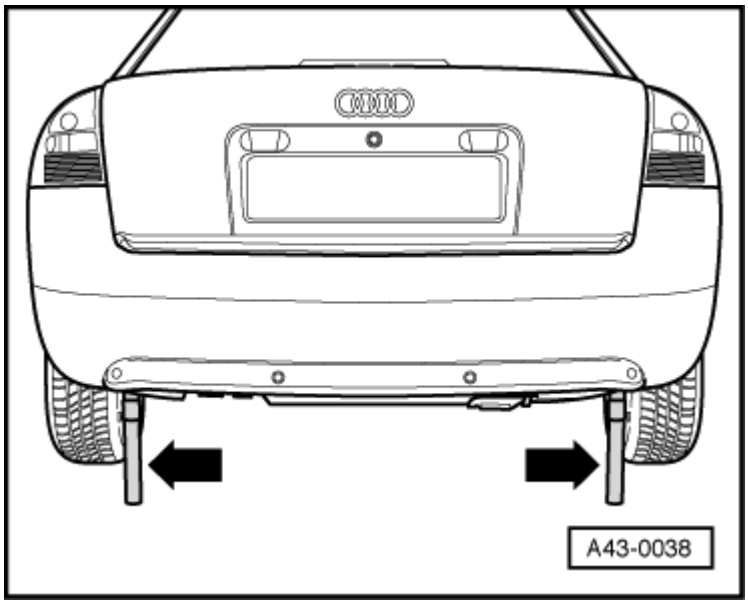

Note

The vehicle must be standing on a flat surface.

Four-wheel drive vehicles only:

– Move the vehicle approx. 1 m forwards and backwards and bounce at the rear. This eliminates the torsion of the rear tyres.

– Refer to the table to check the clearance dimension (specified jacking points/workshop floor) and repeat basic setting if necessary in the event of deviation. Allowance is to be made for the deviation determined at the spacer gauge -T40002-. If the vehicle is too low, this amount is to be added to the setting dimension (see table).

Basic setting must be performed if the control unit, the turn angle sensor or the entire unit is replaced.

The drive position is set.

Test requirements:

- Power supply and fuses for corresponding system OK → Current flow diagrams, Electrical fault finding and Fitting locations
- Connect up vehicle diagnostic, testing and information system -VAS 5051- or fault reader -V.A.G 1551- and select functions → Running gear, self-diagnosis; Rep. Gr.01.
- Use the spacer gauge -T40002- (blocks).

Sequence of operations

– Basic setting is implemented by way of function 11 “Login”.

– Insert the spacer gauge -T40002-

Implementing function 11 “Login”

Indicated on display:

```
Rapid data transfer                    HELP
Select function   XX
```

– Press keys 1 and 1.

Indicated on display:

```
Rapid data transfer                    Q
11 - Login procedure
```

– Confirm entry with Q key.

Indicated on display:

```
Login procedure
Enter code number XXXXX
```

– Press keys 3, 1, 5, 6 and 4.

Indicated on display:

```
Login procedure                        Q
```

– Confirm entry with Q key.

```
Code 31564
```

Indicated on display:

```
Rapid data transfer                HELP
Select function   XX
```

– Press keys 0 and 4.

Indicated on display:

```
Rapid data transfer                Q
04 - Basic setting
```

– Confirm entry with Q key.

Indicated on display:

```
Basic setting
Enter display group number XXX
```

– Press keys 0, 0 and 1.

Indicated on display:

```
Basic setting                      Q
Display group number 001
```

– Confirm entry with Q key.

Indicated on display:

```
System in basic setting            ->
Wait
```

– Press → key.

The system discharges air and lowers the rear end of the vehicle as far as the spacer gauge -T40002-.

At the same time, the old drive position is cancelled in the control unit. An entry is made in the fault memory (fault 01437).

The following appears on the display on completion of “basic setting 1”:

```
System in basic setting            ->
Continue with basic setting 2
```

– Now press key 3.

Indicated on display:

```
System in basic setting            ->
Drive position learnt
```

– Press → key.

– This completes the basic setting procedure.

– Then erase the fault memory → Running gear, self-diagnosis; Rep. Gr.01.

Charging system - 2-wheel air suspension

The system must be re-charged if the shock absorber, the air spring or the air pipe is replaced (or air pressure dissipated).

Before charging the system, the vehicle must not be standing on its wheels (if suspension system repairs have been performed beforehand), as otherwise the air spring will be damaged.

– Raise the vehicle (fully extend the rear suspension).

– Make sure there are no folds in the air springs.

– Charge the air springs by way of the final control diagnosis function → Running gear, self-diagnosis for adaptive suspension, TPM; Rep. Gr.01.

– Check the system for leaks.

– Check that the air springs/suspension struts are correctly positioned.

– Lower the vehicle.

– Check the level and set if necessary → .

Checking operation

Switch on the ignition, interrogate the fault memory and erase it if necessary → Running gear, self-diagnosis; Rep. Gr.01.

System faults are indicated by continuous lighting of the yellow warning lamp in the rev counter.

Then check operation by subjecting the rear axle to load (e.g. by opening the rear lid and sitting in the luggage compartment).

After max. 10 seconds, the system must start to provide lifting/pumping action as compensation for the load-induced rear axle compression.

Max. pumping time: 30 seconds

If the clearance dimension decreases by more than 6 mm within 24 hours, the system is leaking and must be checked.

The adaptive suspension system monitors the compressor "ON" time to prevent possible overheating or excessive battery discharge. Proceed as follows if lifting action does not take place despite being necessary:

– Wait approx. 6 minutes. After this time at the latest, lifting action is possible for approx.15 s in the event of overheating.

– Normal lifting action can be implemented again after starting the engine regardless of the battery condition.

Exploded view: Unit mount

The tightening torque for all the air pipes on the Audi A6 is 2 Nm.

1 - Air supply unit

2 - Rubber bush

- Kidney-shaped recess faces upwards

3 - Holder for air supply unit

- Installing →

4 - Self-locking hexagon nut

5 - Rubber grommet

6 - Hexagon bolt, 25 Nm

7 - Holder, support section 1

8 - Hexagon nut, 25 Nm

9 - Speed nut M 8 x 25 x 17

10 - Holder, support section 2

A - Black connector

B - Red connector

C - Air connections

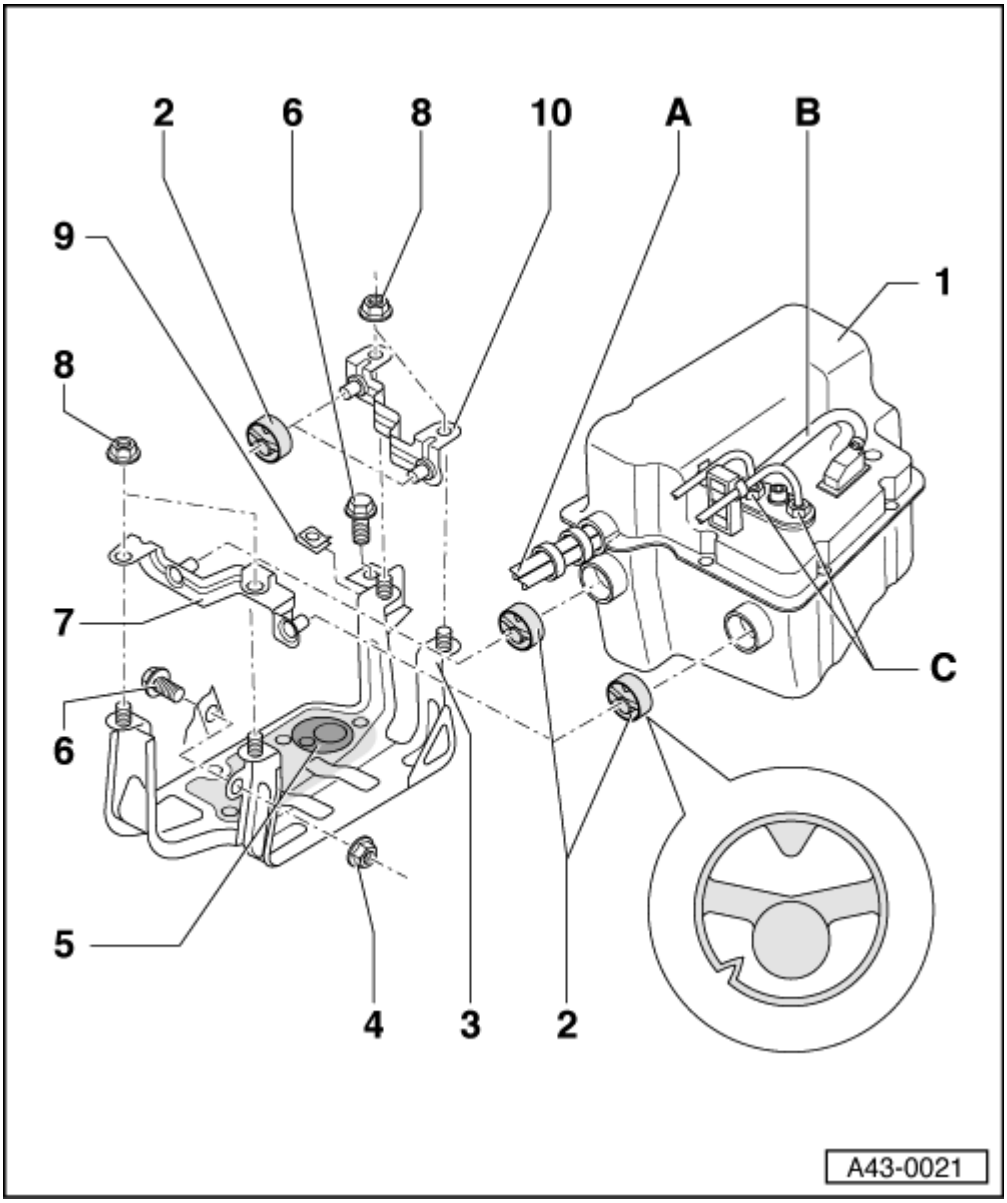

Removing

– Switch off ignition.

– Disconnect the earth strap from the battery.

Before removing the air supply unit with mount, take out the tool kit (tool box) and the navigation unit or CD changer → Radio, telephone, navigation; Rep. Gr.91.

– Unplug the black connector -A-.

– Unplug the red connector -B-.

– Unscrew the air connections -C-.

♦ When pulling out the compressed air pipes, take care not to alter the position of the cutting rings at the front of the pipe, as otherwise leaks may occur on re-installation.

– Unscrew the hexagon nuts -8-.

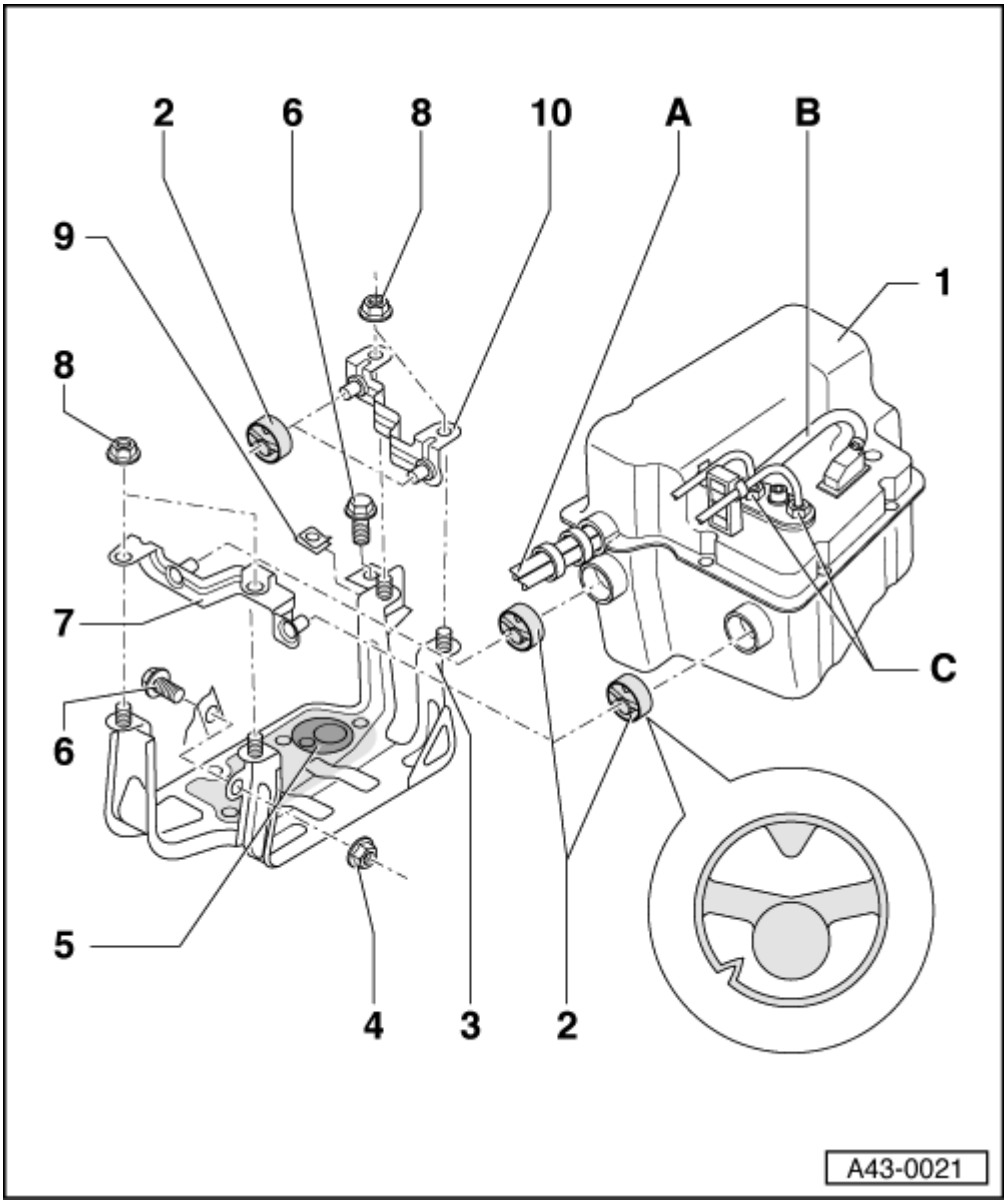

Installing

– Instead of the bonded joint, additional attachment points are required on installing the holder -3-.

– Remove dirt (wax etc.) on the inside in the holder support area of the body.

– Remove the grommet in the bottom section of the unit mount.

– Insert the unit mount in the body and screw to the wheel housing flange and longitudinal member.

– Make three Ø 8.5 mm holes in the unit mount and body at the marked locations (mount).

– Remove the unit mount and deburr the holes.

– Remove the corrosion protection (PVC) on the outside of the body in the nut contact area.

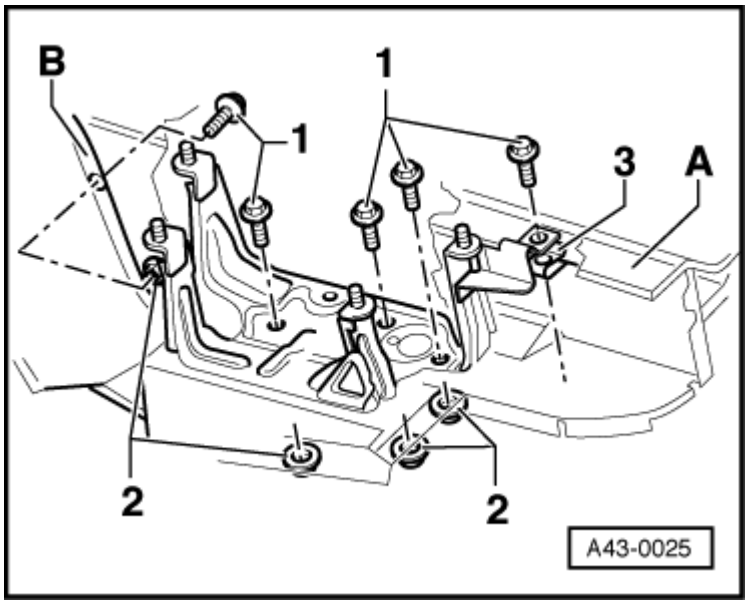

– Insert the unit mount and screw on as follows.

Tightening sequence:

– Mount to longitudinal member -A-

– Mount to wheel housing flange -B-

– -1- Hexagon bolt 25 Nm

– -2- Hexagon flange nut

– -3- Speed nut

– Insert the rubber grommet.

– Seal the bolting points on the outside of the body (black Terolan).

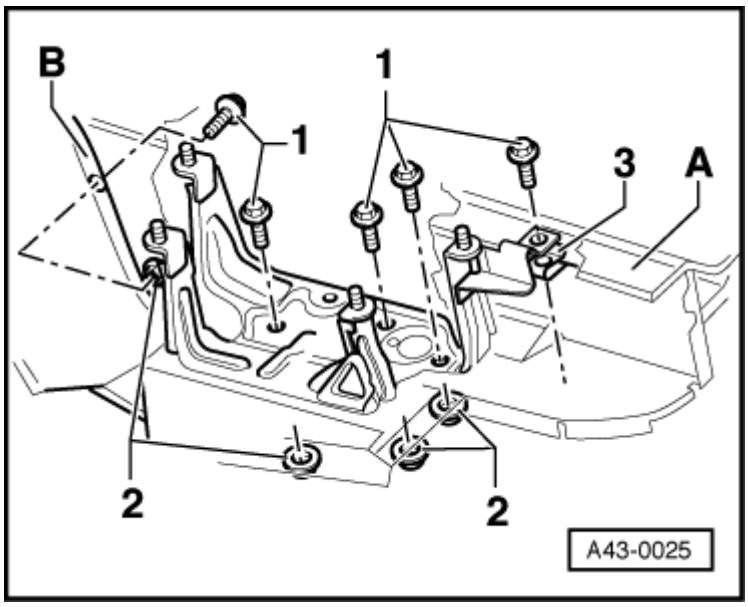

– Insert the unit with support section in the unit mount and screw on -1- and -2-.

– Pay attention to the installation position of the rubber bushes → Item.

– The connectors must be heard to engage fully.

– When inserting the valves, take care not to alter the position of the cutting rings on the compressed air pipes, as otherwise the screw connection may leak.

Perform the remaining installation operations in reverse order.

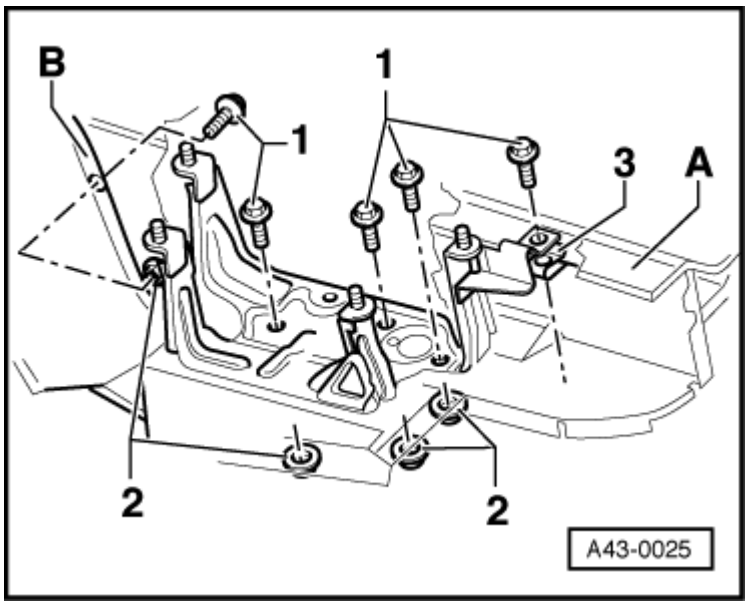

Exploded view: Pipe routing (four-wheel drive)

The tightening torque for all the air pipes on the Audi A6 is 2 Nm.

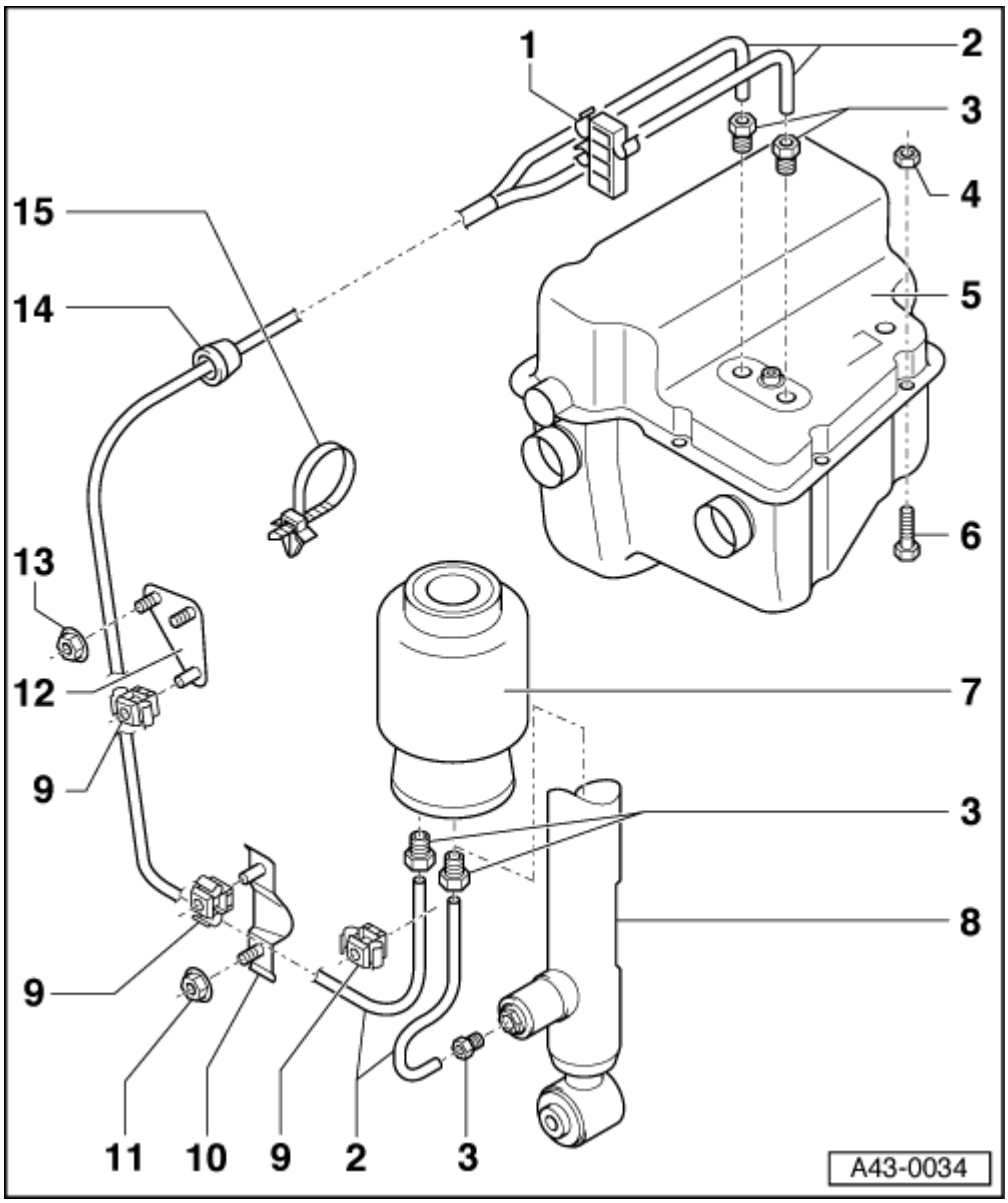

1 - Clip

2 - Air pipe

- Clip in the air pipes at the marked locations
- Heed the note → Fig.

3 - Connection piece

- Heed the note → Fig.

4 - Hexagon nut M 6

5 - Air supply unit

- Removing and installing → Chapter

6 - Hexagon bolt, 10 Nm

7 - Air spring

8 - Damper

9 - Clip

10 - Left sensor holder

- Removing and installing → Fig.

11 - Hexagon nut, 10 Nm

12 - Holder

- Removing and installing → Fig.

13 - Hexagon nut, 10 Nm

14 - Grommet

15 - Cable tie

- Left 1x
- Right 3x

Air pipe from sensor to air spring damper

1 - Left sensor holder

2 - Holder

3 - Hexagon nut, 10 Nm

Note

- *The air pipes are colour-coded:*
- *Black on left side*
- *Blue on right side*

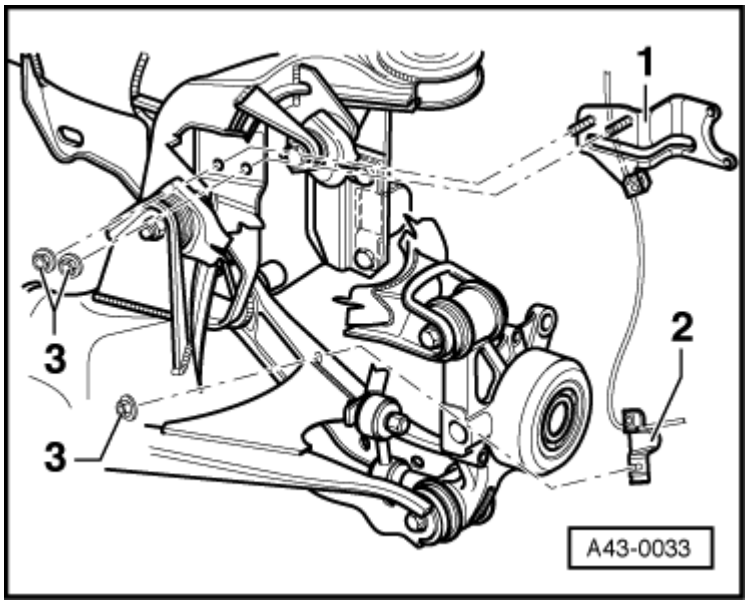

Exploded view: Air spring damper (four-wheel drive)

The tightening torque for all the air pipes on the Audi A6 is 2 Nm.

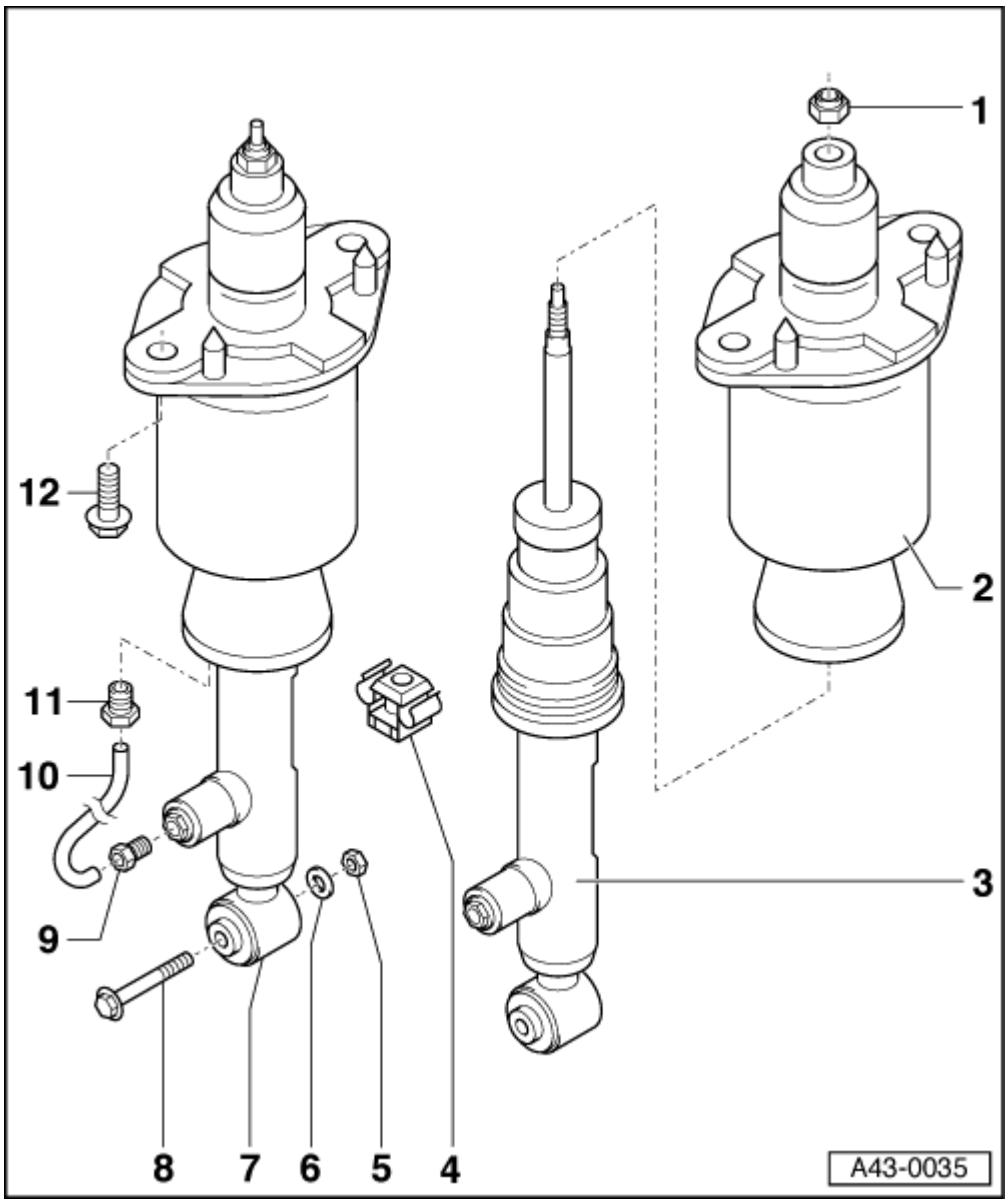

1 - Self-locking hexagon nut, 27 Nm

- Always replace after removing
- Remove air-tight sealing plug beforehand

2 - Air spring

- Fitting → Fig.

3 - Damper

4 - Clip

5 - Self-locking nut, 70 Nm + further 90° turn

- Always replace after removing

6 - Washer

7 - Air spring damper

8 - Hexagon bolt M 12 x 1.5 x 95

- Always replace after removing

9 - Connection piece

- Heed the note → Fig.

10 - Air pipe

- Clip in the air pipes at the marked locations.
- Heed the note → Fig.

11 - Connection piece

- Heed the note → Fig.

12 - Hexagon bolt, 45 Nm

Fitting air spring strut

The bayonet catch must be absolutely clean.

– Coat the rubber seals -1- and -2- with

lithium grease -G 052 150 A2-.

– Fasten the bayonet catch by simultaneously pressing and turning.

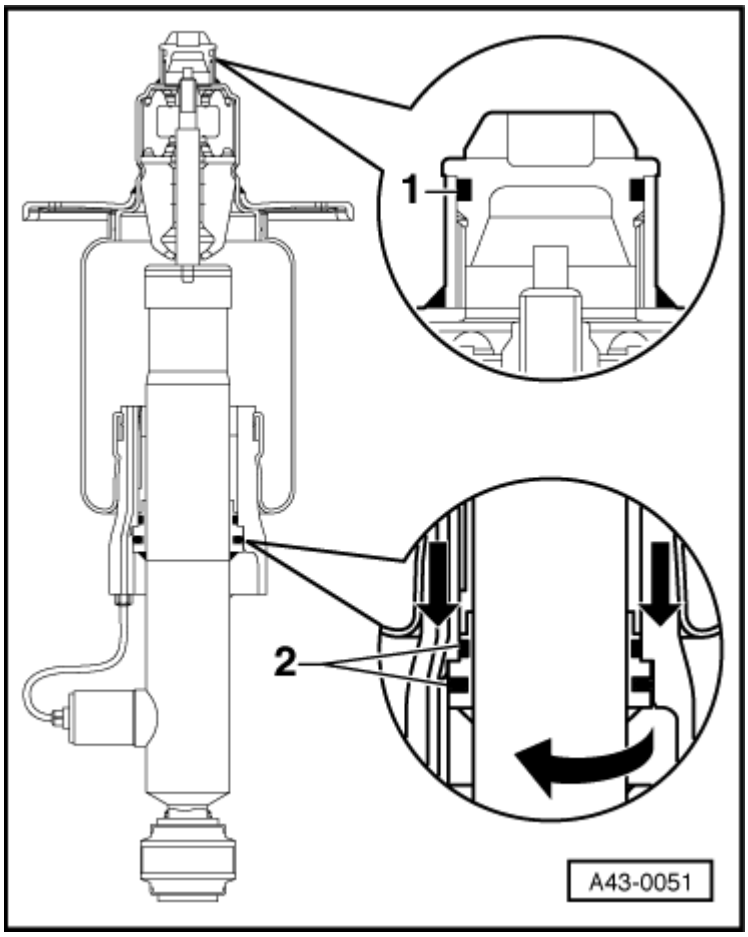

Removing and installing damper/spring

Removing

– Remove the wheels.

– Remove both the subframe/lower link bolts -E-.

A - Hexagon bolt
B - Handbrake cable
C - Holder for handbrake cable
D - Link

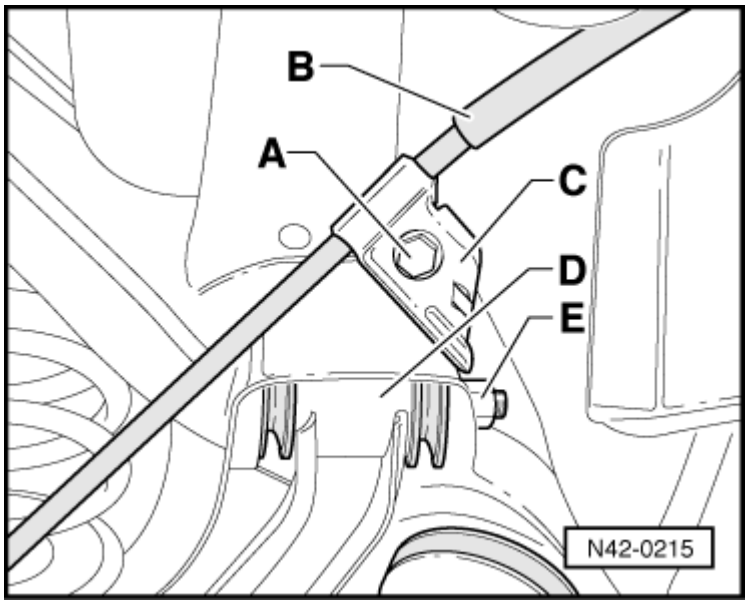

– Disengage the handbrake cables at the brake calipers.

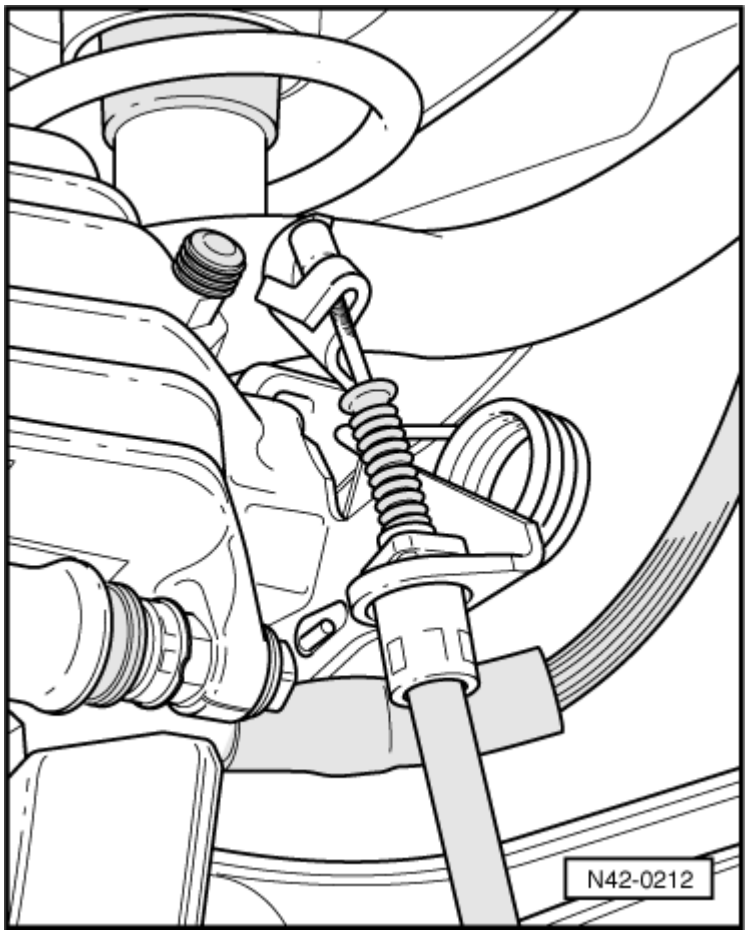

– Slacken off the bolt -A- on both sides.

– Disengage the handbrake cables -B- from the holder -C-.

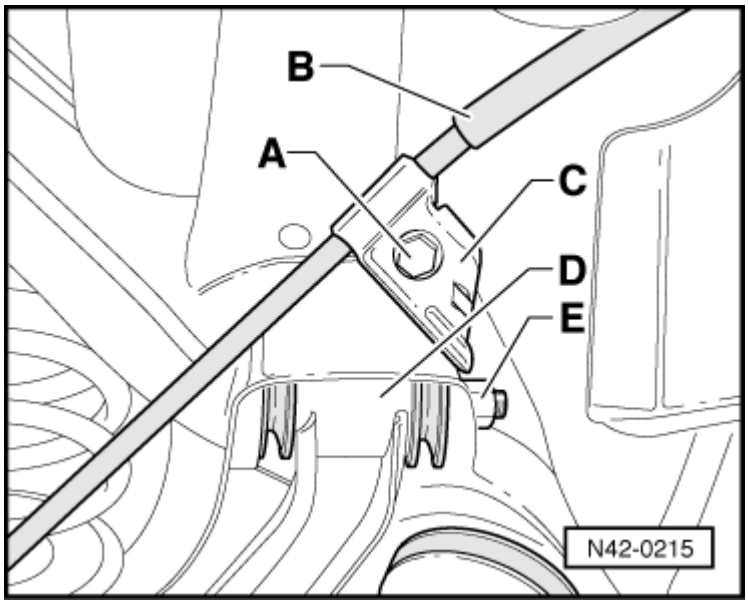

– Squeeze the retainer tabs -A- and slide the handbrake cables -2- out of the link -1-.

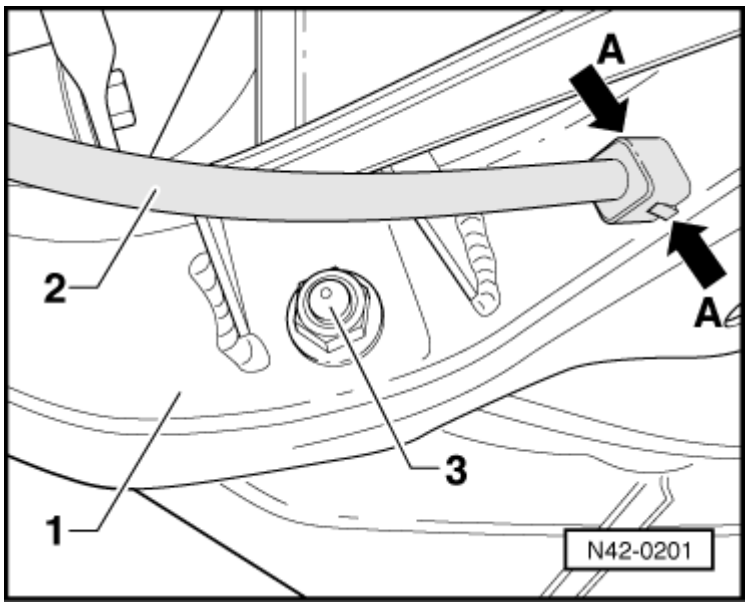

– Unclip the speed sensor wire at the subframe.

3 - Attachment point at subframe

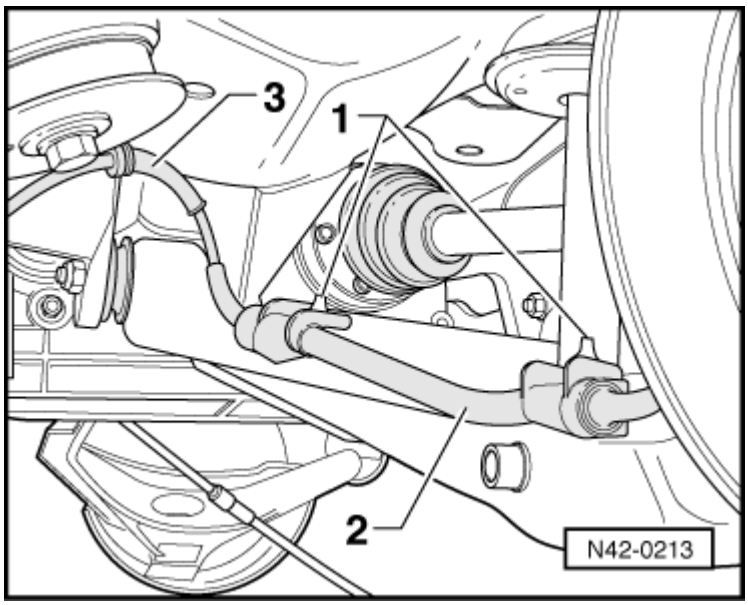

– Unscrew the link from the damper.

1 - Link
2 - Handbrake cable
3 - Bolt for damper
A - Retaining clip for handbrake cable

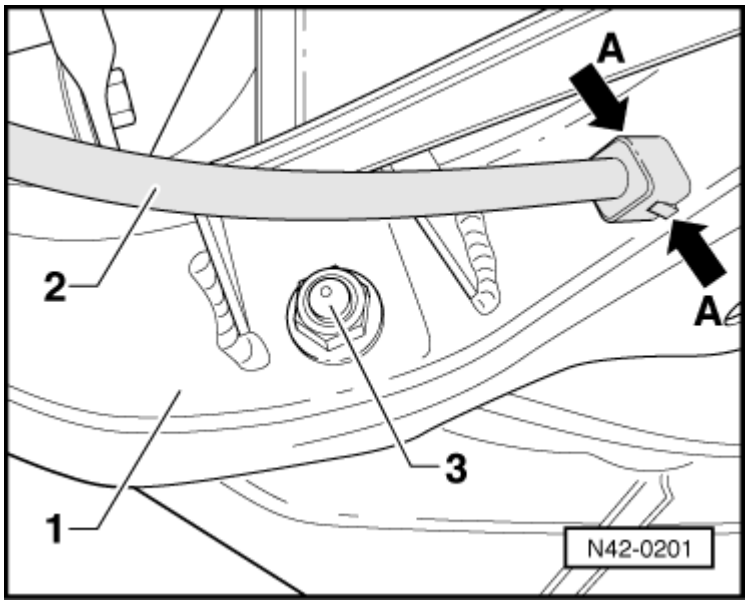

– Screw out the damper hexagon bolts - arrows- at the body.

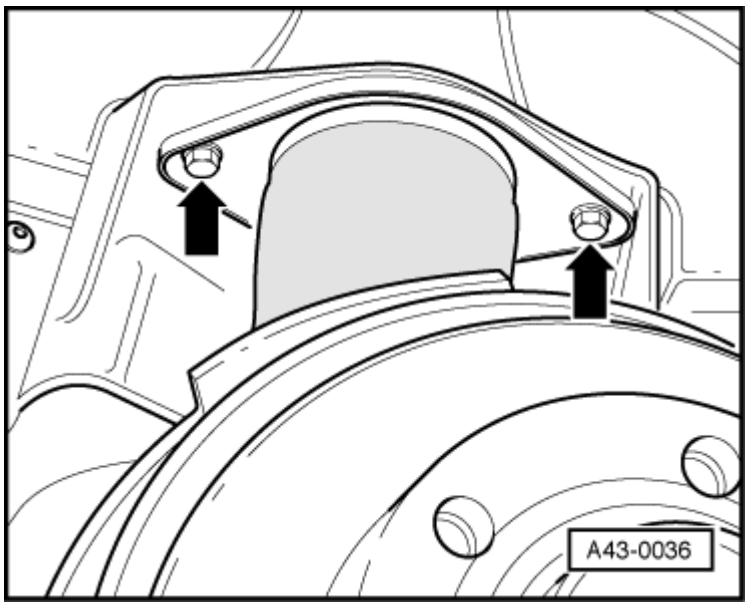

Installing

Following removal and installation of the air spring dampers, the system must be charged again.

Charging system → Chapter

– Bonded rubber bushes can only be turned to a limited extent. The bolted joint is therefore only to be tightened when the vehicle is standing on the ground.

Otherwise, the bonded rubber bush will be strained and its service life shortened.

– Adjust the handbrake → Rep. Gr.46.

Tightening torques:	
Link to subframe Use new bolts	70 Nm + 90°
Link to wheel bearing housing	95 Nm
Damper to link Use new bolts	70 Nm + 90°

Exploded view of vehicle level sender (four-wheel drive)

1 - Coupling rod

2 - Vehicle level sender

3 - Holder for vehicle level sender

4 - Hexagon socket head bolt, 4 Nm

5 - Washer

6 - Self-locking hexagon nut, 40 Nm

7 - Hexagon nut, 3 Nm

- Pay attention to → Anchor

8 - Hexagon nut, 3 Nm

- Pay attention to → Anchor

9 - Anti-roll bar

10 - Combi bolt, 10 Nm

11 - Clamp

12 - Lever

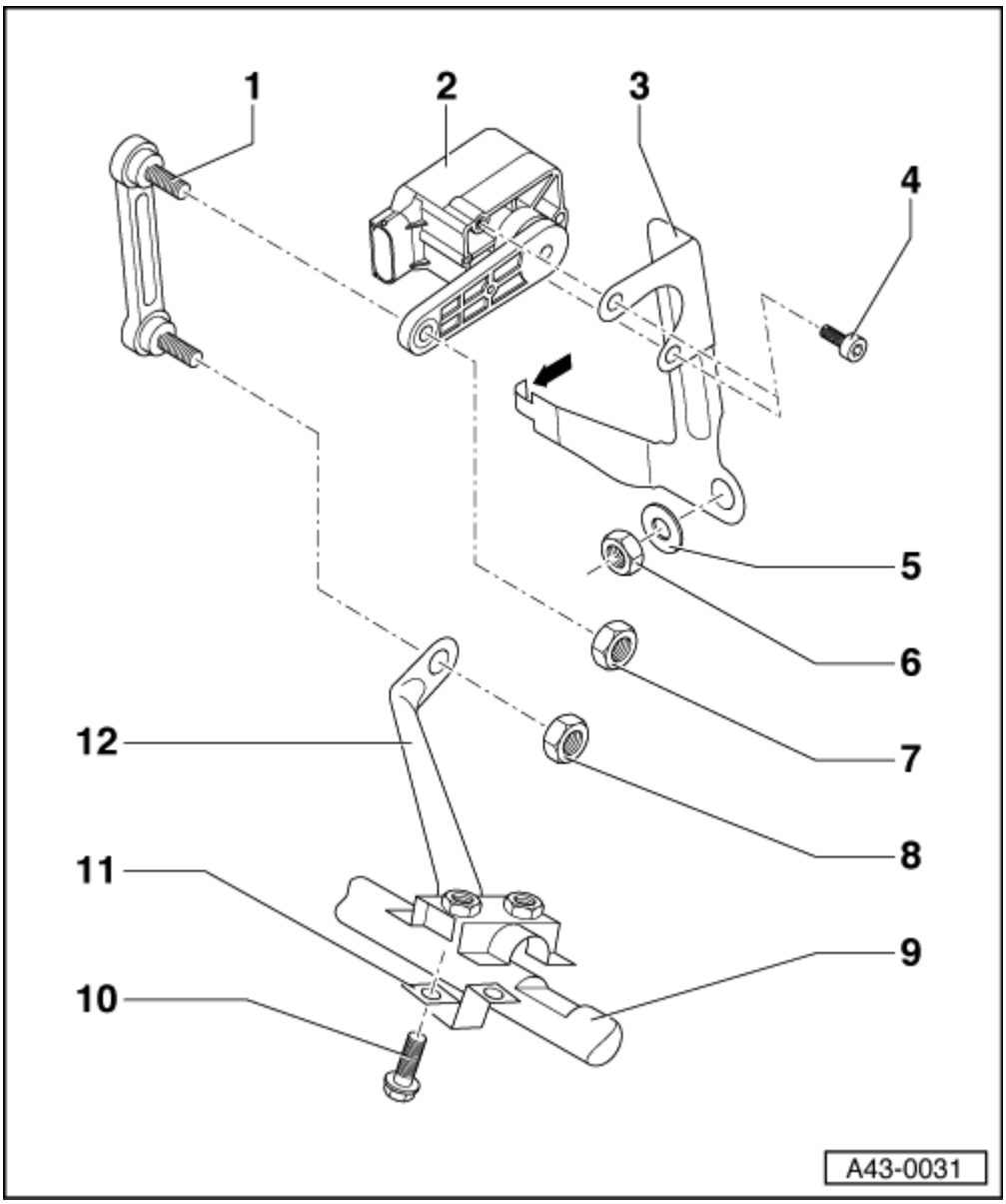

Removing and installing vehicle level sender (four-wheel drive)

Removing

– Switch off ignition.

– Disconnect the earth strap from the battery.

– Unplug the connector -1- from the vehicle level sender.

– Slacken off the hexagon bolt -3-.

– Unfasten the hexagon nut -4-.

Make sure the sensor crank does not turn through 180°, as otherwise basic setting must be performed again → Running gear, self-diagnosis; Rep. Gr.01.

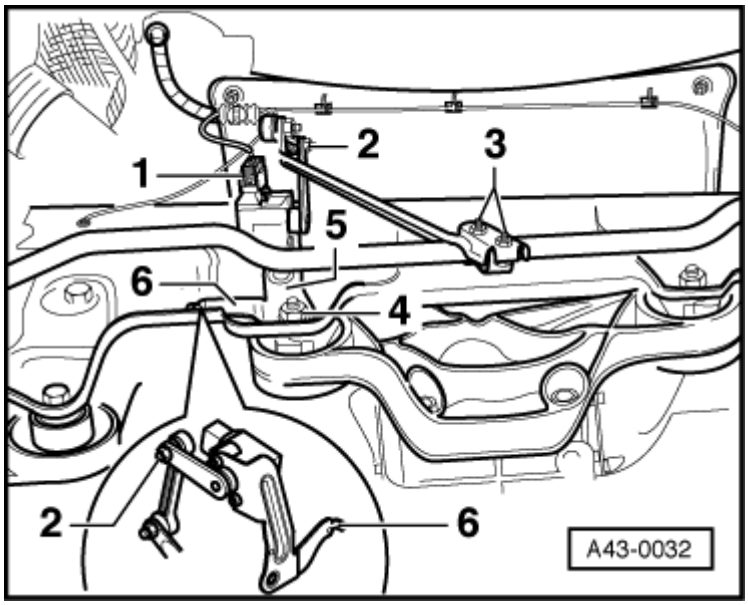

Note

- *So as not to damage the seal when fitting the linkage -6- at the vehicle level sender, use an open-ended wrench (w.a.f. 8 mm) with dimension -A-.*
- *Dimension -A-: 4 mm*

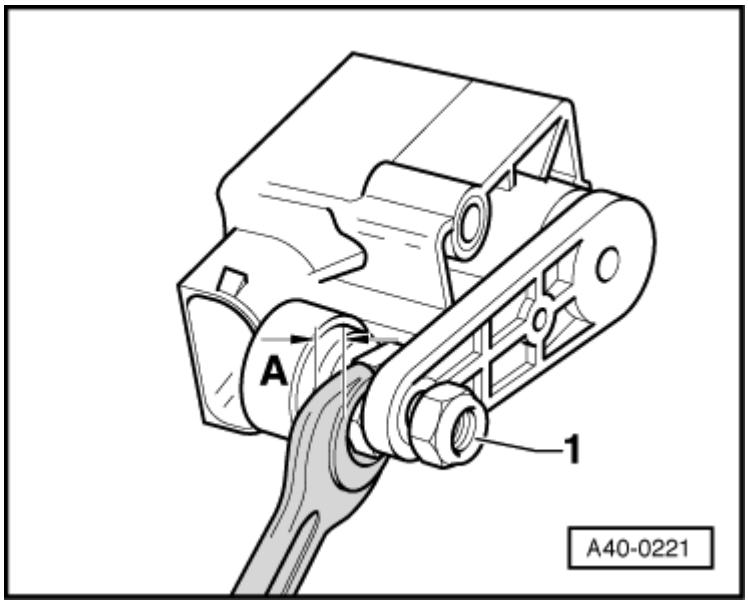

Installing

Note

- *Make sure the lug at the holder → Item, -arrow-, engages in the subframe.*
- *The connecting link must be vertical.*
- *The sensor crank (arm) must face to the rear and downwards.*
- *Make sure the holder and clamp are bolted to the flat section of the anti-roll bar.*

Perform further installation operations in the reverse order of removal.